YAMAHA

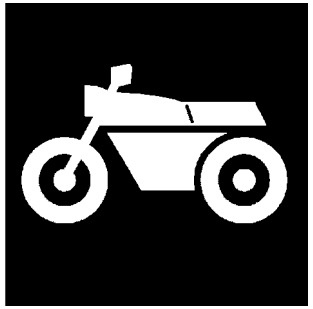

PARTS CATALOGUE
CATALOGO DE REPUESTOS

YZF155 (B1L1) COLOMBIA

YAMAHA GENUINE Parts & Accessories

1UB1L-261S1

( )

YZF155
CATALOGO DE REPUESTOS
©2018 por Yamaha Motor Co., Ltd.
1ª edición, septiembre 2018
Todos los derechos reservados.
Toda reproducción o uso no autorizado
sin el consentimiento escrito de
Yamaha Motor Co., Ltd.
quedan expresamente prohibidos
Impreso en Japón.

YZF155
PARTS CATALOGUE
©2018 by Yamaha Motor Co., Ltd.
1st edition, September 2018
All rights reserved.
Any reprinting or unauthorized use
without the written permission of
Yamaha Motor Co., Ltd.
is expressly prohibited.
Printed in Japan.

PROLOGO

Este catálogo de repuestos corresponde a las piezas para el o los modelos que figuran en la página de portada. Al formular el pedido de repuestos, se ruega citar este catálogo y especificar correctamente el número y el nombre de las piezas.

1. Las modificaciones y agregados que se hayan realizado después de la edición de este Catálogo de Repuestos, serán anunciados en las Informaciones de Recambios.
   Es recomendable que se hagan las correcciones necesarias en el Catálogo de Repuestos de acuerdo con las Informaciones de Recambios.

2. Abreviaciones
   En este. Catálogo de Repuestos se emplean las siguientes abreviaciones.

   “UR” Usar el número de partes especificado

   “UN” Usar la cantidad necesaria

   “AP” Piezas sustitutivas

   “LM” Fabricación local (Hay que pedir los repuestos en las cercanías)

   “F#” Nº de bastidor (Nº aplicable a la máquina)

   “O/S” Sobredimensionado

3. La cantidad de componentes para el montaje
   - Los componentes, suministrados como conjunto, se describen con un punto (.) que precede al nombre del parte como se indica a continuación.
   - La numeración que aparece a la derecha de cada descripción indica la cantidad de partes por cada unidad de conjunto.

CODIGO Nº	DESCRIPCION	CANT.	OBSERVACIONES
2F5–83310–60	ENSAMBLAJE DE LA LUZ	2	
115–83311–60	.BOMBILLA (6V–18W)	1	

4. Los colores de los componentes se indican como sigue en la columna de “OBSERVACIONES”.

CODIGO Nº	DESCRIPCION	CANT.	OBSERVACIONES
2N4–24110–00–X5	COMP. DEL TANQUE	2	MXR
3J1–24240–10	.GRAFICO, DEL TANQUE	1	PARA MXR

5. Debe tenerse en cuenta que las ilustraciones sirven como guia para la búsqueda de los números de partes y no deben usarse para el montaje. Durante el montaje, se recomienda usar el manual de taller correspondiente.

6. EL asterisco (*) antes del número de referencia indica los elementos modificados después de la primera edición.

FOREWORD

This Parts Catalogue is related to the parts for the model(s) on the cover page. When you are ordering replacement parts, please refer to this Parts Catalogue and quote both part numbers and part names correctly.

1. Modifications or additions which have been made after the issue of the Parts Catalogue will be announced in the Parts News.
   It is advisable that you make the necessary corrections to the Parts Catalogue according to the Parts News.

2. Abbreviations
   The following abbreviations are used in this Parts Catalogue.

   "UR" Use specified parts number.

   "UN" Use as many as needed.

   "AP" Alternate Parts

   "LM" Locally Made (Parts need to be ordered locally)

   "F#" Frame No. (Applicable machine No.)

   "O/S" Over Size

3. The number of components for assembly
   - Parts, which are to be supplied in an assembly, are listed with a dot (.) in front of the part name as shown below.
   - The numeral appearing to the right of each component part indicates the quantity of parts for each assembly unit.

PART NO.	DESCRIPTION	Q'TY	REMARKS
2F5–83310–60	FRONT FLASHER LIGHT ASSY	2	
115–83311–60	.BULB (6V–18W)	1	

4. Applicable colours of graphics are represented in the "REMARKS" as shown below.

PART NO.	DESCRIPTION	Q'TY	REMARKS
2N4–24110–00–X5	FUEL TANK COMP.	2	MXR
3J1–24240–10	.GRAPHIC, FUEL TANK	1	FOR MXR

5. Note that the illustrations for reference in finding parts numbers are not to be used for assembling. When assembling, please use the applicable service manual.

6. The asterisk (*) before a reference number indicates modified items after the first edition.

7. Números de serie

Nº de Serie del bastidor

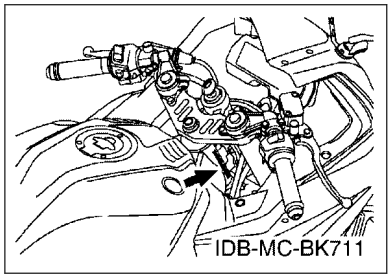

Nº de Serie del motor

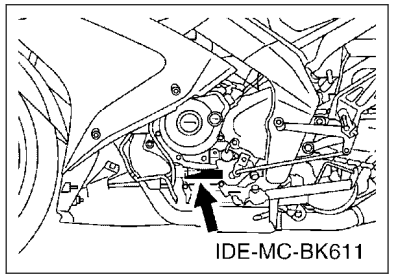

8. Códigos de color aplicables (El símbolo (*) muestra el color de modelo.)

Abreviatura	Nombre de color	Código de color
DPBMY(*)	DEEP PURPLISH BLUE METALLIC Y	1115
MNM3(*)	MAT GRAY METALLIC 3	1278
SMX	BLACK METALLIC X	0903
VRC1	VIVID RED COCKTAIL 1	0121
YB	YAMAHA BLACK	0033

9. Nº de serie inicial aplicable

Nº de Serie del bastidor

Nº de serie	Nombre de la columna de cantidades	Código de Modelo

Nº de Serie del motor

Nº de serie	Nombre de la columna de cantidades	Código de Modelo

7. Applicable Serial No.

Frame Serial No.

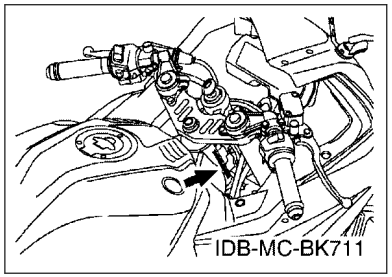

Engine Serial No.

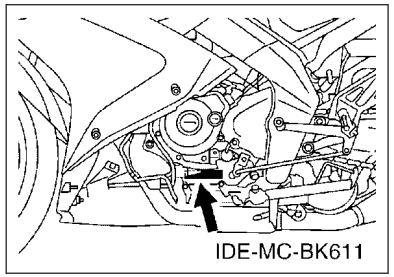

8. Applicable Colour Code (The (*) mark shows Model colour.)

Abbreviation	Colour Name	Colour Code
DPBMY(*)	DEEP PURPLISH BLUE METALLIC Y	1115
MNM3(*)	MAT GRAY METALLIC 3	1278
SMX	BLACK METALLIC X	0903
VRC1	VIVID RED COCKTAIL 1	0121
YB	YAMAHA BLACK	0033

9. Applicable Starting Serial No.

Frame Serial No.

Serial No.	Name Of Q'ty Column	Model Code

Engine Serial No.

Serial No.	Name Of Q'ty Column	Model Code

CONTENIDO

MOTOR

CULATA DE CILINDRO..... 1
CIGUENAL & PISTON.....2
VALVULA.....4
ARBOL DE LEVAS & CADENA.....5
BOMBA DE AGUA.....6
RADIADOR & MANGUERA.....7
BOMBA DE ACEITE.....8
ADMISION.....9
DESCARGA.....11
CARTER.....12
CUBIERTA DE CARTER 1.....13
EMBRAGUE DEL ARRANQUE.....14
EMBRAGUE..... 15
TRANSMISION.....17
LEVA DE CAMBIO & HORQUILLA..... 19
EJE DE CAMBIO & PEDAL.....20

SHASIS

CUADRO..... 21
GUARDABARRO.....22
CUBIERTA LATERAL.....24
BRAZO TRASERO & SUSPENSION.....26
DIRECCION.....27
HORQUILLA DELANTERA..... 28
DEPOSITO DE COMBUSTIBLE..... 30
ASIENTO.....32
RUEDA DELANTERA.....33
CALIBRE FRENO DELANTERA..... 34
RUEDA TRASERA..... 35
CALIBRE FRENO TRASERA.....36
MANILLAR & CABLE.....37
CILINDRO MAESTRO DELANTERO.....38
SOPORTE & APOYAPIE.....39
CILINDRO MAESTRO TRASERO..... 41
PATA PROTEGIDA..... 42
PARABRISAS.....44
GENERADOR.....47
MOTOR DE ARRANQUE.....48
LUZ DE DESTELLADOR.....49
MEDIDOR.....51
FARO DELANTERO.....52
LUZ DE COLA..... 53
INTERRUPTOR DE MANILLAR&PALANC..... 54
EQUIPO ELECTRICO 1..... 55
EQUIPO ELECTRICO 2..... 56

INDICE

INDICE NUMERICO..... 58

CONTENTS

ENGINE

CYLINDER HEAD....1
CRANKSHAFT & PISTON....2
VALVE....4
CAMSHAFT & CHAIN....5
WATER PUMP....6
RADIATOR & HOSE....7
OIL PUMP....8
INTAKE....9
EXHAUST....11
CRANKCASE....12
CRANKCASE COVER 1....13
STARTER CLUTCH....14
CLUTCH....15
TRANSMISSION....17
SHIFT CAM & FORK....19
SHIFT SHAFT....20

CHASSIS

FRAME....21
FENDER....22
SIDE COVER....24
REAR ARM & SUSPENSION....26
STEERING....27
FRONT FORK....28
FUEL TANK....30
SEAT....32
FRONT WHEEL....33
FRONT BRAKE CALIPER....34
REAR WHEEL....35
REAR BRAKE CALIPER....36
STEERING HANDLE & CABLE....37
FRONT MASTER CYLINDER....38
STAND & FOOTREST....39
REAR MASTER CYLINDER....41
LEG SHIELD....42
WINDSHIELD....44
GENERATOR....47
STARTING MOTOR....48
FLASHER LIGHT....49
METER....51
HEADLIGHT....52
TAILLIGHT....53
HANDLE SWITCH & LEVER....54
ELECTRICAL 1....55
ELECTRICAL 2....56

INDEX

NUMERICAL INDEX....58

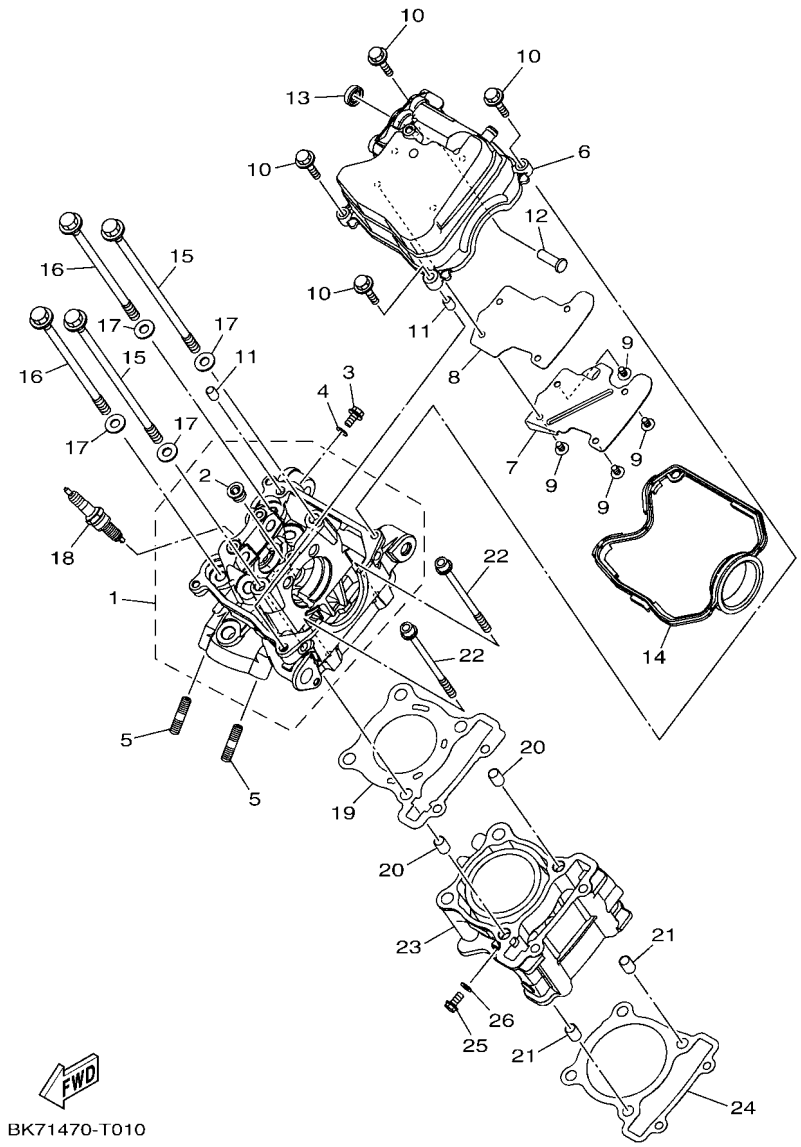

FIG. 1 CULATA DE CILINDRO — CYLINDER HEAD

REF. Nº	CODIGO Nº PART NO.	DESCRIPCION DESCRIPTION	B1L1					OBSERVACIONES REMARKS
1	BK7–E1102–00	CULATA DE CILINDRO COMPLETA CYLINDER HEAD ASSY	1					
2	90340–12813	.TORNILLO, DE DRENAJE .PLUG, STRAIGHT SCREW	1					
3	95022–06010	PERNO, DE BRIDA BOLT, FLANGE	1					
4	90430–06014	JUNTA GASKET	1					
5	95612–08618	PERNO DE PUNTAL BOLT, STUD	2					
6	BK7–E1191–00	TAPA CULATA DE CILINDRO 1 COVER, CYLINDER HEAD 1	1					
7	BK7–E1165–00	PLACA RESPIRADERO PLATE, BREATHER	1					
8	BK7–E1169–00	EMAPQ CBTA.DE RESP. GASKET, BREATHER COVER	1					
9	90149–05801	TORNILLO DE REGLAJE SCREW	4					
10	95022–06030	PERNO, DE BRIDA BOLT, FLANGE	4					
11	99530–08012	PASADOR, DE ESPIGA PIN, DOWEL	2					
12	BK6–E132G–00	VARILLA 1 ROD 1	1					
13	93102–08800	SELLO ACEITE OIL SEAL	1					
14	BK7–E1193–00	EMPAQUE GASKET, HEAD COVER 1	1					
15	BR2–E1361–00	PERNO RETEN DE CILINDRO 1 BOLT, CYLINDER HOLDING 1	2					
16	BK7–E1362–00	PERNO RETEN DE CILINDRO 2 BOLT, CYLINDER HOLDING 2	2					
17	90201–08859	ARANDELA PLANA WASHER, PLATE	4					
18	94703–00439	BUJIA (NGK MR8E-9) PLUG, SPARK (NGK MR8E-9)	1					
19	2DP–E1181–00	JUNTA, DE CULATA 1 GASKET, CYLINDER HEAD 1	1					
20	91810–14809	PASADOR DE CLAVIJA PIN, DOWEL	2					
21	91810–14809	PASADOR DE CLAVIJA PIN, DOWEL	2					
22	90110–06378	TORNILLO ALLEN BOLT, HEXAGON SOCKET HEAD	2					
23	2DP–E1311–10	CILINDRO 1 CYLINDER 1	1					
24	BK7–E1351–00	JUNTA, DE CILINDRO GASKET, CYLINDER	1					
25	95022–06010	PERNO, DE BRIDA BOLT, FLANGE	1					
26	90430–06014	JUNTA GASKET	1					

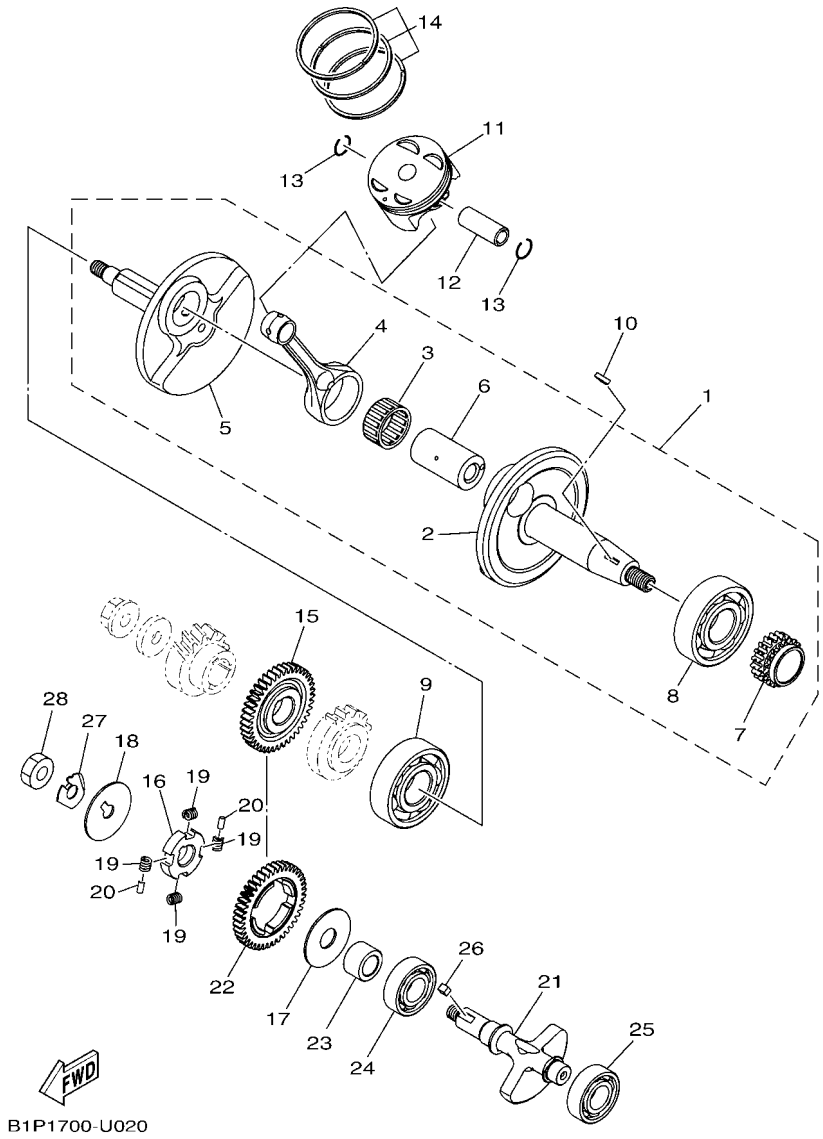

FIG. 2 CIGUENAL & PISTON — CRANKSHAFT & PISTON

REF. Nº	CODIGO Nº PART NO.	DESCRIPCION DESCRIPTION	B1L1					OBSERVACIONES REMARKS
1	BK7–E1400–09	CIGUENAL COMPLETO CRANKSHAFT ASSY	1					
2	BK7–E1412–00	.MANIVELA 1 .CRANK 1	1					
3	93310–526YT	.COJINETE DE RODILLOS .BEARING	1					
4	BK6–E1651–00	.BIELA .ROD, CONNECTING	1					
5	BK7–E1422–00	.MANIVELA 2 .CRANK 2	1					
6	BK7–E1681–00	.PASADOR MANIVELA 1 .PIN, CRANK 1	1					
7	BK7–E1549–00	.CATALINA CADENA DE LEVA .SPROCKET, CAM CHAIN	1					
8	93306–305XX	.COJINETE .BEARING	1					
9	93306–305XW	COJINETE BEARING	1					
10	90280–03017	CUNA WOODRUFF KEY, WOODRUFF	1					
11	BK6–E1631–00	PISTON (NORMA) PISTON (STD)	1					
12	BK7–E1633–00	PASADOR, PISTON PIN, PISTON	1					
13	93450–16115	SEGURO CIRCLIP	2					
14	BK6–E1603–00	JUEGO DE ANILLOS (NORMA) PISTON RING SET (STD)	1					
15	BK7–E1536–00	ENGRANAJE TRACCION GEAR, DRIVE	1					
16	21C–E1496–20	COPA TOPE BOSS, BUFFER	1					
17	90201–15022	ARANDELA PLANA WASHER, PLATE	1					
18	90214–10006	ARANDELA DE POSICION WASHER, CLAW	1					
19	54B–E1476–00	RESORTE SPRING	4					
20	21C–E3362–00	RODILLO ROLLER	2					
21	BK7–E1454–00	PESO 1 WEIGHT 1	1					
22	BK7–E1531–00	ENGRANAJE CONTRAPESO GEAR, BALANCE WEIGHT	1					
23	90387–15810	ESPACIADOR COLLAR	1					
24	93306–203XS	COJINETE BEARING	1					
25	93306–203XS	COJINETE BEARING	1					
26	90282–05031	CHAVETA, RECTA KEY, STRAIGHT	1					
27	90215–10803	ARANDELA DE CIERRE WASHER, LOCK	1					

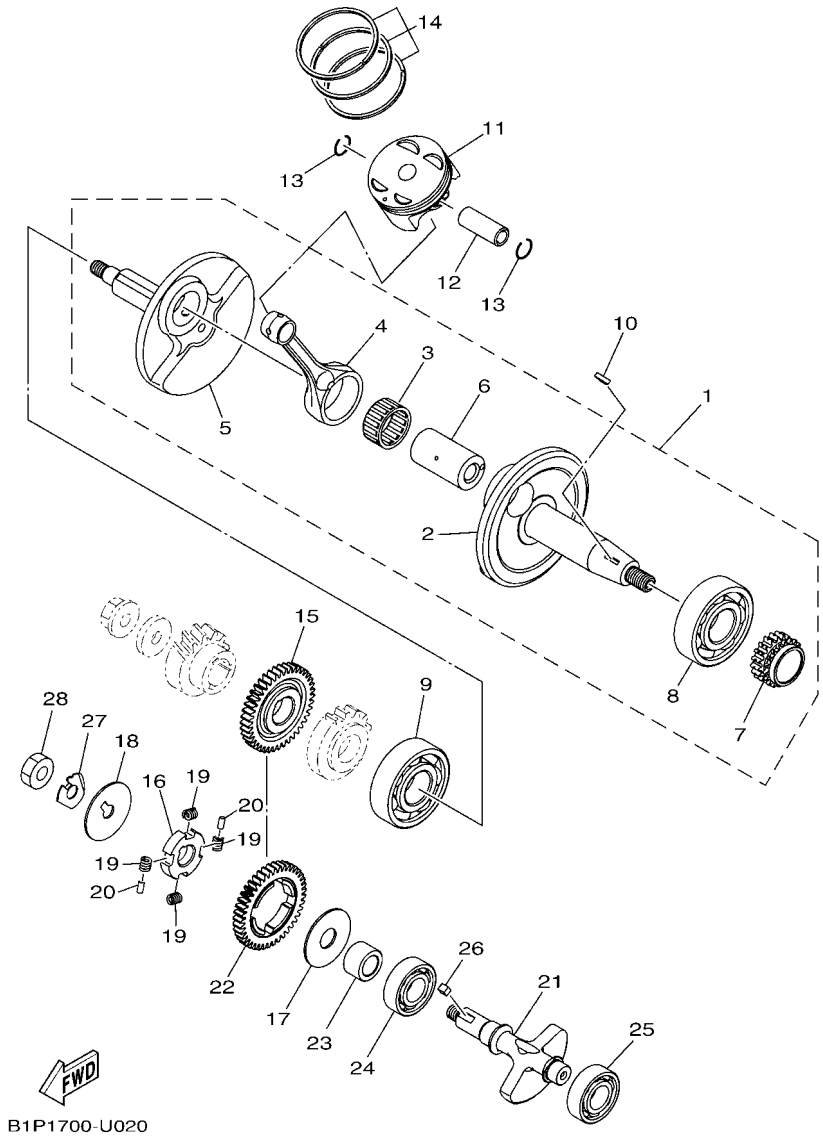

FIG. 2 CIGUENAL & PISTON — CRANKSHAFT & PISTON

REF. Nº	CODIGO Nº PART NO.	DESCRIPCION DESCRIPTION	B1L1					OBSERVACIONES REMARKS
28	90170–10012	TUERCA NUT	1					

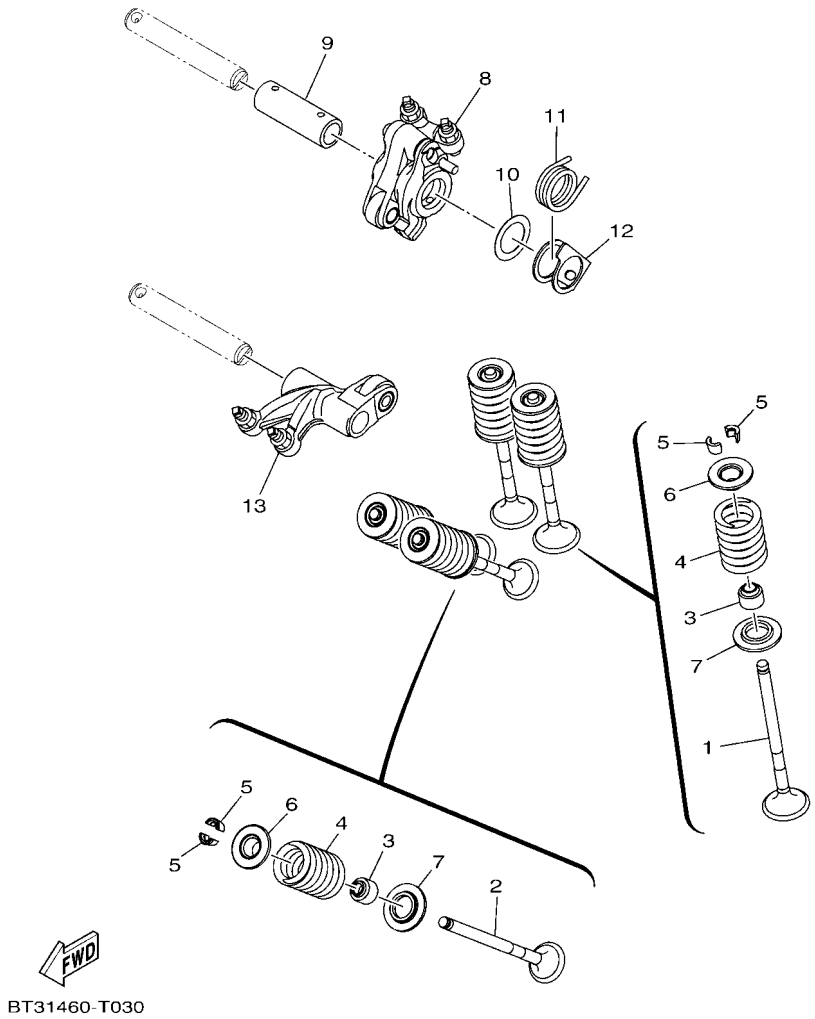

FIG. 3 VALVULA — VALVE

REF. Nº	CODIGO Nº PART NO.	DESCRIPCION DESCRIPTION	B1L1					OBSERVACIONES REMARKS
1	BK7–E2111–00	VALVULA DE ADMISION VALVE, INTAKE	2					
2	BK7–E2121–00	VALVULA DE ESCAPE VALVE, EXHAUST	2					
3	1GC–E2119–00	SELLO DE ACEITE VALVULA SEAL, VALVE STEM	4					
4	B63–E2113–00	RESORTE VALVULA INTERNA SPRING, VALVE INNER	4					
5	5TL–E2118–00	SEGURO DE VALVULA LOCK, VALVE SPRING RETAINER	8					
6	2DP–E2117–00	RETEN RESORTE DE VALVULA RETAINER, VALVE SPRING	4					
7	38B–E2126–00	ASIENTO RESORTE DE VALVULA2 SEAT, VALVE SPRING 2	4					
8	BK6–E2150–00	BRAZO DE BALANCIN DE VALVULA VALVE ROCKER ARM ASSY	1					
9	BK6–E2166–00	EJE, BALANCIN 3 SHAFT, ROCKER 3	1					
10	BK6–E1557–00	ARANDELA 1 WASHER 1	1					
11	BK6–E2226–00	RESORTE SPRING, COIL	1					
12	BK7–E2279–00	PLACA PLATE	1					
13	BK7–E2160–00	BRAZO DE BALANCIN DE VALVULA 2 VALVE ROCKER ARM ASSY 2	1					

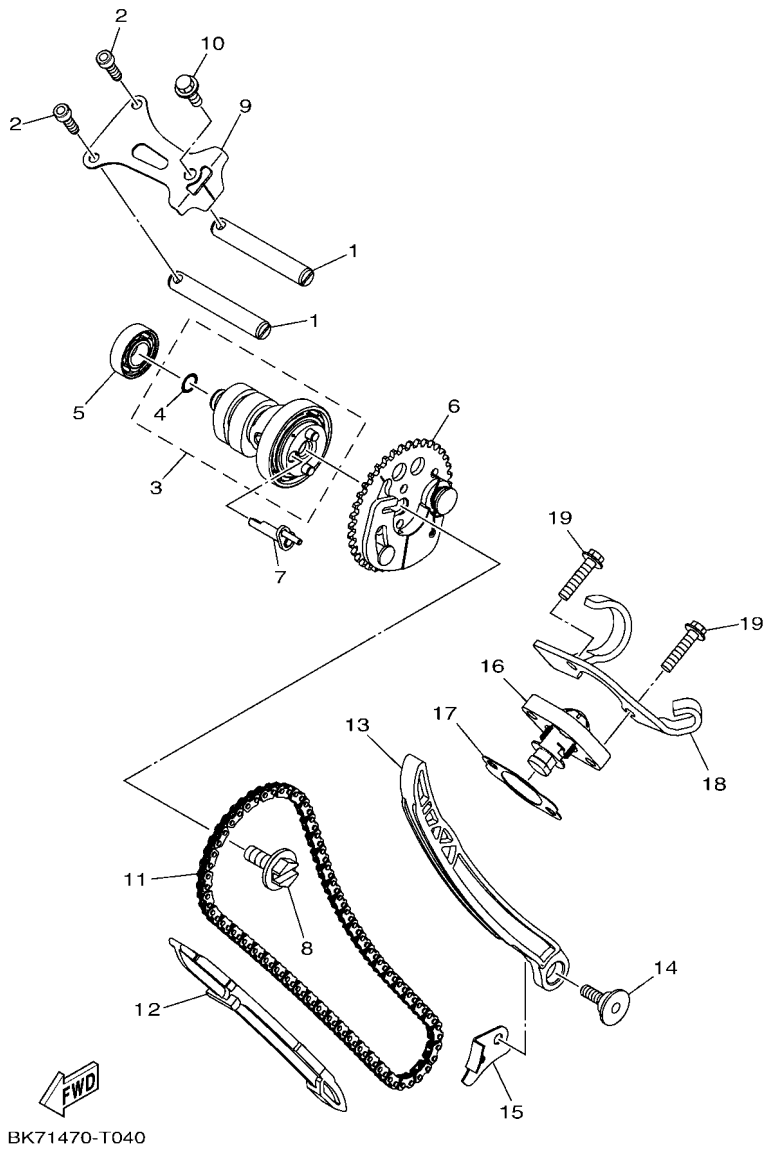

FIG. 4 ARBOL DE LEVAS & CADENA — CAMSHAFT & CHAIN

REF. Nº	CODIGO Nº PART NO.	DESCRIPCION DESCRIPTION	B1L1					OBSERVACIONES REMARKS
1	21C–E2156–00	EJE DE BALANCIN SHAFT, ROCKER 2	2					
2	91312–05016	TORNILLO ALLEN BOLT, HEXAGON SOCKET HEAD	2					
3	BK7–E2170–00	ARBOL DE LEVAS COMPLETO 1 CAMSHAFT ASSY 1	1					
4	93210–09809	.ANILLO O .O-RING	1					
5	93306–001YH	COJINETE BEARING	1					
6	BK7–E2280–00	EQUIPO DE DESCOMPRESION DECOMPRESSION ASSY	1					
7	BK7–E2288–00	LEVA DE DESCOMPRESION CAM, DECOMPRESSION	1					
8	2FB–E2157–00	PERNO BOLT	1					
9	BK7–E111F–00	PLACA PLATE	1					
10	95022–06014	PERNO, DE BRIDA BOLT, FLANGE	1					
11	94568–J9096	CADENA CHAIN	1					
12	BK7–E2231–00	TOPE DE GUIA 1 GUIDE, STOPPER 1	1					
13	BK7–E2241–00	TOPE DE GUIA 2 GUIDE, STOPPER 2	1					
14	1GC–E2228–00	PERNO BOLT	1					
15	BK7–E2256–00	CUBIERTA DE CADENA COVER, CHAIN	1					
16	2ND–E2210–20	TENSOR CADENA DE LEVA TENSIONER ASSY, CAM CHAIN	1					
17	BK6–E2213–00	EMPAQUE DE CAJA TENSOR GASKET, TENSIONER CASE	1					
18	BK7–E5441–00	SOSTEN DE CABLE DE EMBRAGUE HOLDER, CLUTCH CABLE	1					
19	95022–06025	PERNO, DE BRIDA BOLT, FLANGE	2					

FIG. 5 BOMBA DE AGUA — WATER PUMP

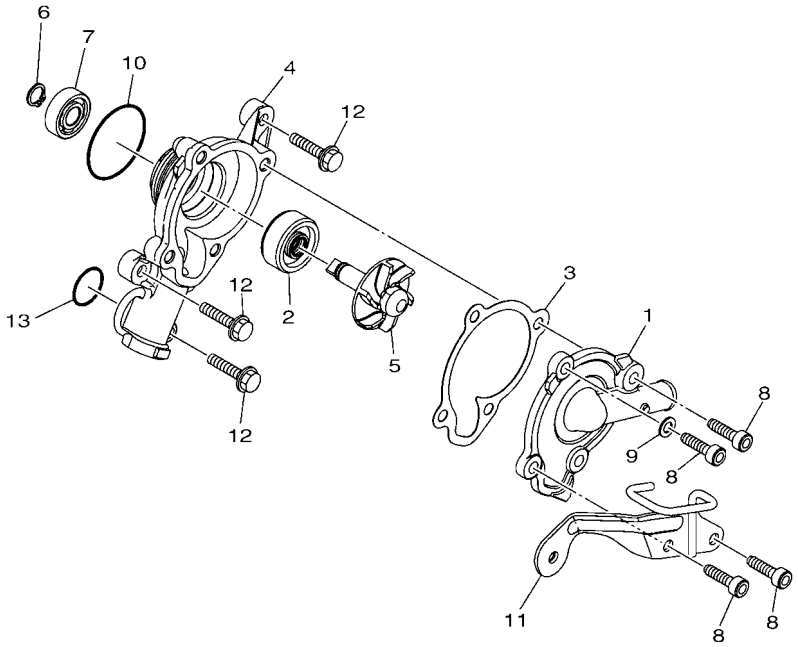

BK71470-T050

REF. Nº	CODIGO Nº PART NO.	DESCRIPCION DESCRIPTION	B1L1					OBSERVACIONES REMARKS
1	BK7–E2422–00	CUBIERTA DE CAJA COVER, HOUSING	1					
2	93103–10801	SELLO ACEITE OIL SEAL	1					
3	2DP–E2428–00	JUNTA, DE CBTA.CAJA 2 GASKET, HOUSING COVER 2	1					
4	BK7–E1185–00	CUBIERTA CULATA CIL.LAT.3 COVER, CYLINDER HEAD SIDE 3	1					
5	BK7–E2450–00	EJE IMPULSOR COMPLETO IMPELLER SHAFT ASSY	1					
6	BK7–E2842–00	PRESILLA (ND) CIRCLIP	1					
7	93306–000Y3	COJINETE BEARING	1					
8	BK7–E2615–00	PERNO BOLT	4					
9	BK7–E2435–00	EMPAQUE GASKET	1					
10	93210–39803	ANILLO O O-RING	1					
11	BK7–E2443–00	APOYO STAY	1					
12	95022–06025	PERNO, DE BRIDA BOLT, FLANGE	3					
13	93210–19809	ANILLO O O-RING	1					

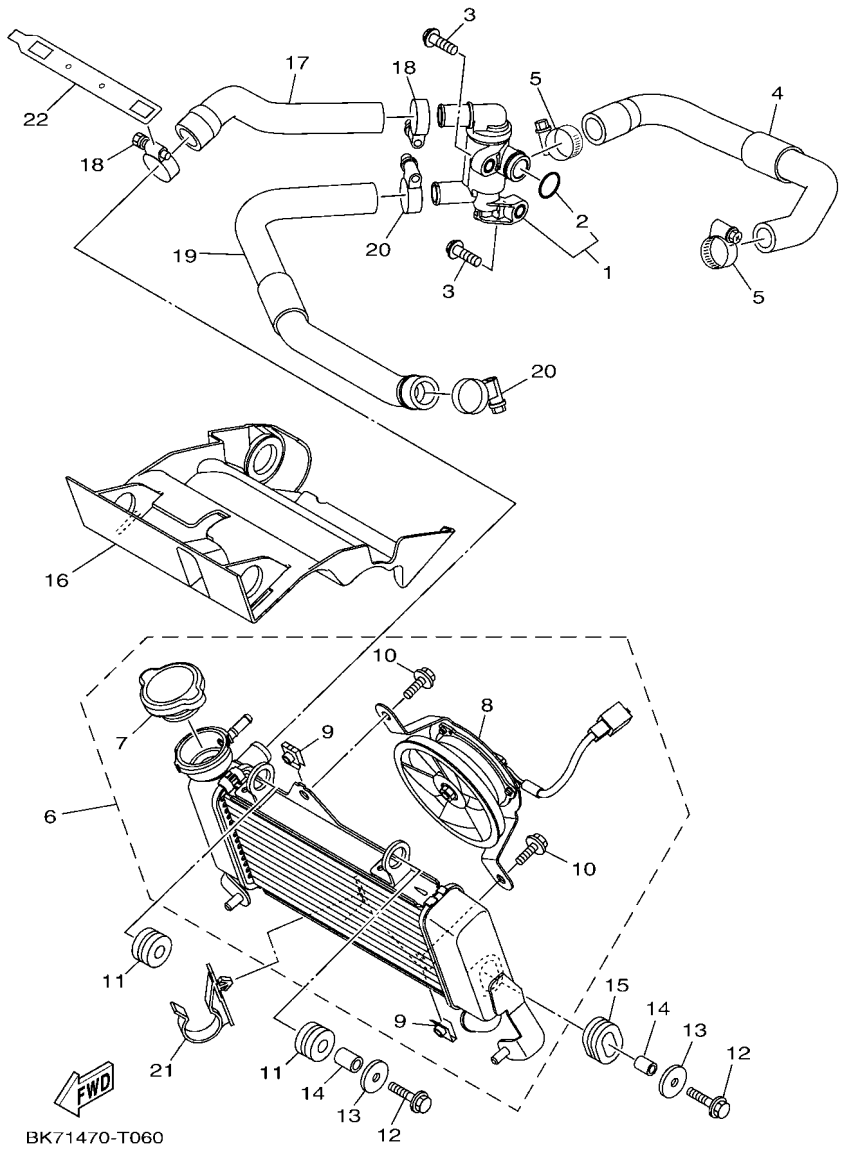

FIG. 6 RADIADOR & MANGUERA — RADIATOR & HOSE

REF. Nº	CODIGO Nº PART NO.	DESCRIPCION DESCRIPTION	B1L1					OBSERVACIONES REMARKS
1	BK6–E2410–00	TERMOSTATO CONJUNTO THERMOSTAT ASSY	1					
2	52S–12439–00	.ANILLO O .O-RING	1					
3	95022–06020	PERNO, DE BRIDA BOLT, FLANGE	2					
4	BK7–E2483–00	TUBO 3 PIPE 3	1					
5	90450–27806	BRIDA, MANGUERA HOSE CLAMP ASSY	2					
6	BK7–E2460–00	RADIADOR COMPLETO RADIATOR ASSY	1					
7	5ST–E2462–00	.TAPON, DEL RADIADOR .CAP, RADIATOR	1					
8	BK7–E2405–00	.COMPRESOR .BLOWER ASSY	1					
9	5YP–E2671–00	.TUERCA 1 .NUT 1	2					
10	5YP–E2675–00	.PERNO, SUJECION VENTILADOR .BOLT, BLOWER HOLDING	2					
11	90480–15363	TAPON GROMMET	2					
12	95822–06025	TORNILLO DE REBORDE BOLT, FLANGE	2					
13	90201–06072	ARANDELA PLANA WASHER, PLATE	2					
14	90387–064W3	ESPACIADOR COLLAR	2					
15	90480–01803	TAPON GROMMET	1					
16	BK7–E2467–00	CUBIERTA DEL RADIADOR COVER, RADIATOR	1					
17	BK7–E2481–00	TUBO 1 PIPE 1	1					
18	90450–27806	BRIDA, MANGUERA HOSE CLAMP ASSY	2					
19	BK7–E2482–00	TUBO 2 PIPE 2	1					
20	90450–27806	BRIDA, MANGUERA HOSE CLAMP ASSY	2					
21	20P–F1338–00	GRAMPA CLAMP	1					
22	BK7–E246E–00	CUBIERTA 2 COVER 2	1					

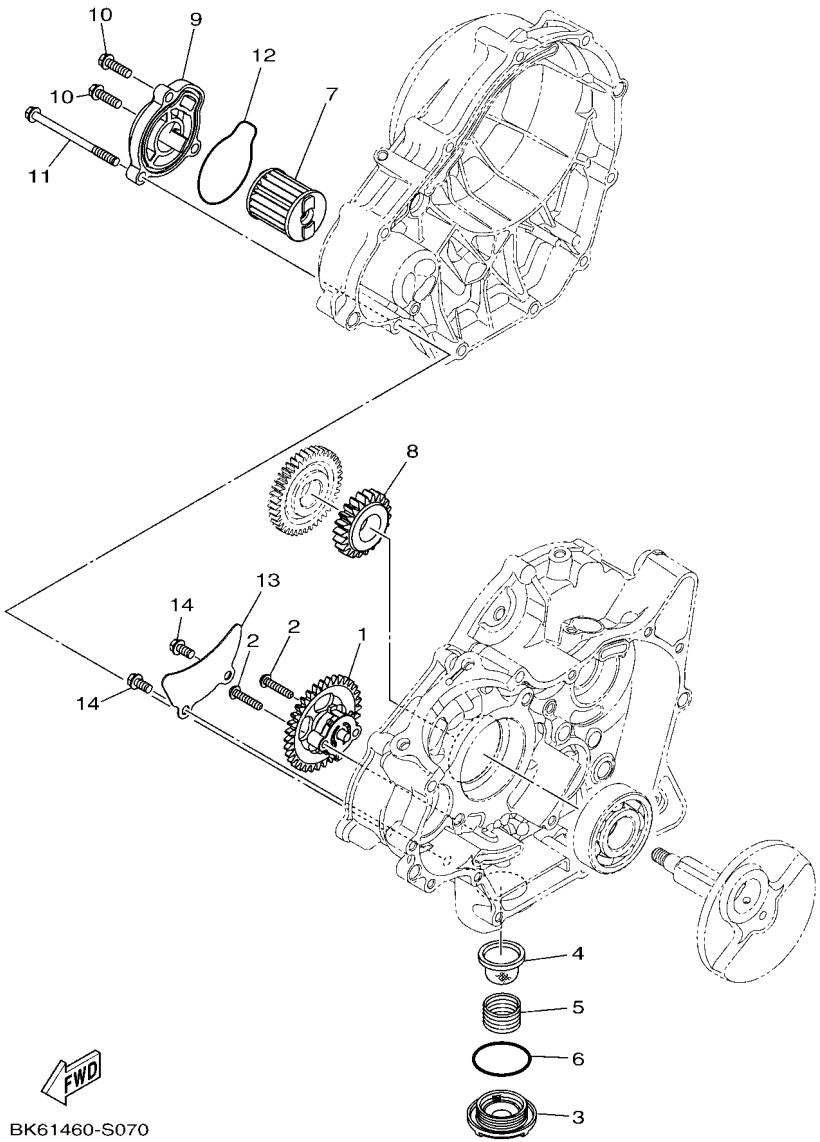

FIG. 7 BOMBA DE ACEITE — OIL PUMP

REF. Nº	CODIGO Nº PART NO.	DESCRIPCION DESCRIPTION	B1L1					OBSERVACIONES REMARKS
1	BK7–E3300–00	BOMBA DE ACEITE COMPLETA OIL PUMP ASSY	1					
2	90111–05035	TORNILLO BOLT,HEX. SOCKET BUTTON	2					
3	38B–E5351–00	TAPON DE DRENAJE PLUG, DRAIN	1					
4	38B–E3411–00	FILTRO DE ACEITE STRAINER, OIL	1					
5	90501–18576	RESORTE DE COMPRESION SPRING, COMPRESSION	1					
6	93210–34805	ANILLO O O-RING	1					
7	38B–E3440–00	ELEMENTO FILTRO DE ACEITE ELEMENT ASSY, OIL CLEANER	1					
8	38B–E3324–00	ENGRANAJE TRACC. DE BOMBA GEAR, PUMP DRIVE	1					
9	38B–E3447–00	TAPA DEL ELEMENTO COVER, OIL ELEMENT	1					
10	95022–06020	PERNO, DE BRIDA BOLT, FLANGE	2					
11	95022–06080	PERNO, DE BRIDA BOLT, FLANGE	1					
12	93210–54806	ANILLO O O-RING	1					
13	38B–E3327–00	CUBIERTA ENGRANAJE DE BOMBA COVER, PUMP GEAR	1					
14	95022–06012	PERNO, DE BRIDA BOLT, FLANGE	2					

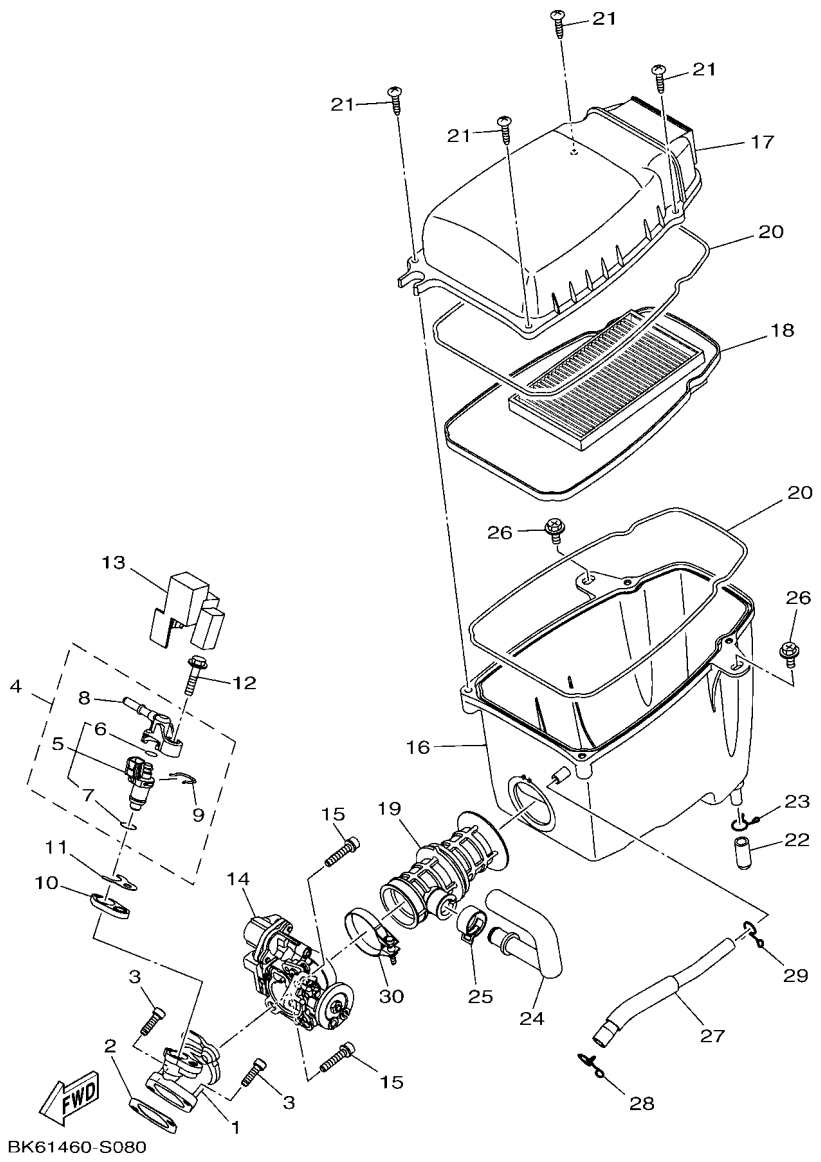

FIG. 8 ADMISION — INTAKE

REF. Nº	CODIGO Nº PART NO.	DESCRIPCION DESCRIPTION	B1L1					OBSERVACIONES REMARKS
1	BK7–E3585–00	MULTIPLE MANIFOLD	1					
2	BK7–E4199–00	EMPAQUE GASKET	1					
3	91312–06020	TORNILLO ALLEN BOLT, HEXAGON SOCKET HEAD	2					
4	BK6–E3770–00	INYECTOR INJECTOR ASSY	1					
5	BK6–E3761–00	.INYECTOR .INJECTOR	1					
6	54P–E4147–00	..ANILLO O ..O-RING	1					
7	5CA–E4147–00	..ANILLO O ..O-RING	1					
8	54P–E3938–00	.TUBO DE ADMISION .PIPE	1					
9	54P–E4137–00	.PRESILLA .CLIP	1					
10	2FB–E3556–00	EMPAQUE GASKET, MANIFOLD	1					
11	BK7–E3557–00	EMPAQUE GASKET	1					
12	95812–06030	TORNILLO DE REBORDE BOLT, FLANGE	1					
13	BK7–E3767–00	TAPA DE INJECTOR CAP, INJECTOR	1					
14	B1P–E3750–00	CAJA DE ACELERADOR COMPL. THROTTLE BODY ASSY	1					
15	90110–06846	TORNILLO ALLEN BOLT, HEXAGON SOCKET HEAD	2					
16	BK7–E4411–00	CAJA FILTRO DEL AIRE 1 CASE, AIR CLEANER 1	1					
17	BK7–E4412–00	TAPA CAJA DEL FILTRO 1 CAP, CLEANER CASE 1	1					
18	BK7–E4450–00	ELEMENTO COMP.FILTRO DE AIRE ELEMENT ASSY, AIR CLEANER	1					
19	BK7–E4453–00	UNION DEL FILTRO DEL AIRE 1 JOINT, AIR CLEANER 1	1					
20	BK7–E4452–00	SELLO SEAL	2					
21	97707–50025	TORNILLO ROSCA HEMBRA SCREW, TAPPING	4					
22	20P–E443E–00	TUBO, DRENAJE PIPE, DRAIN	1					
23	90467–12800	PRESILLA CLIP	1					
24	BK7–E441J–00	TUBO PIPE, SILENCER	1					
25	90467–20804	PRESILLA CLIP	1					
26	90119–06051	TORNILLO CON ARANDELA BOLT, WITH WASHER	2					
27	BK7–E1166–00	TUBO RESPIRADERO 1 PIPE, BREATHER 1	1					

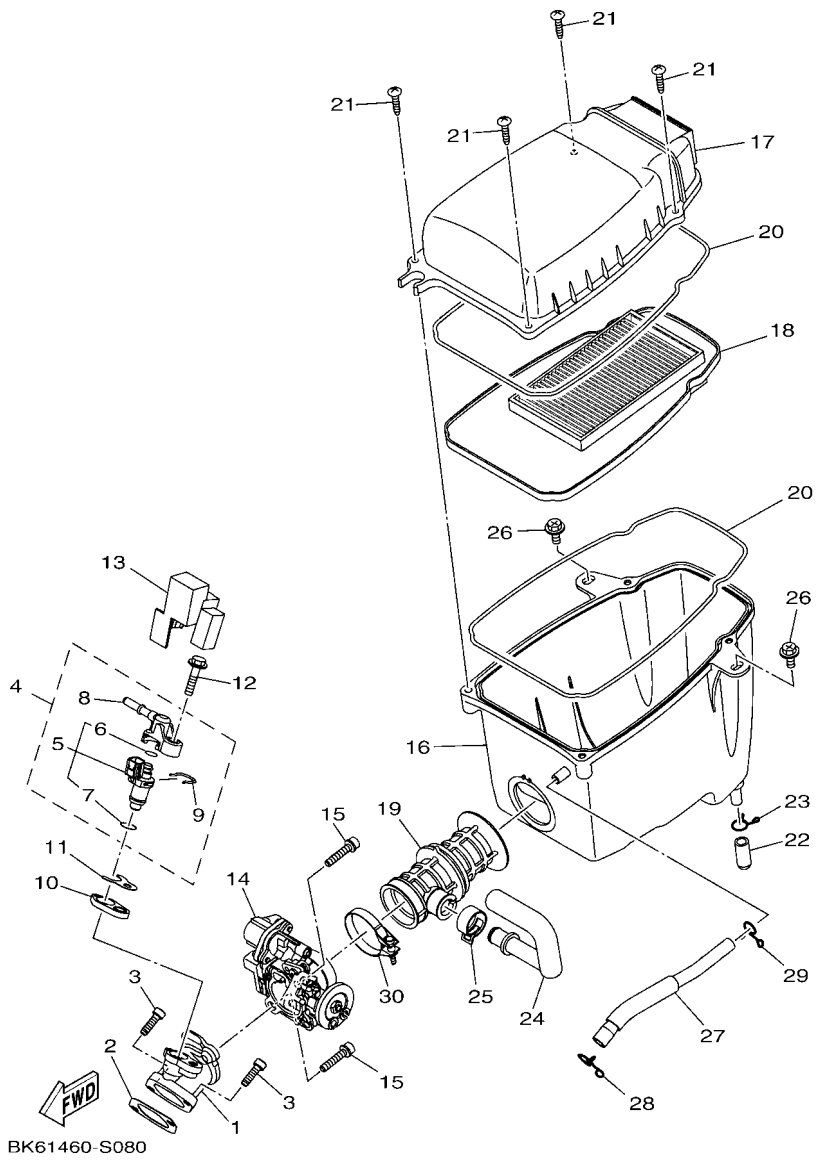

FIG. 8 ADMISION — INTAKE

REF. Nº	CODIGO Nº PART NO.	DESCRIPCION DESCRIPTION	B1L1					OBSERVACIONES REMARKS
28	90467–12052	PRESILLA CLIP	1					
29	90467–11825	PRESILLA CLIP	1					
30	90450–43807	BRIDA, MANGUERA HOSE CLAMP ASSY	1					

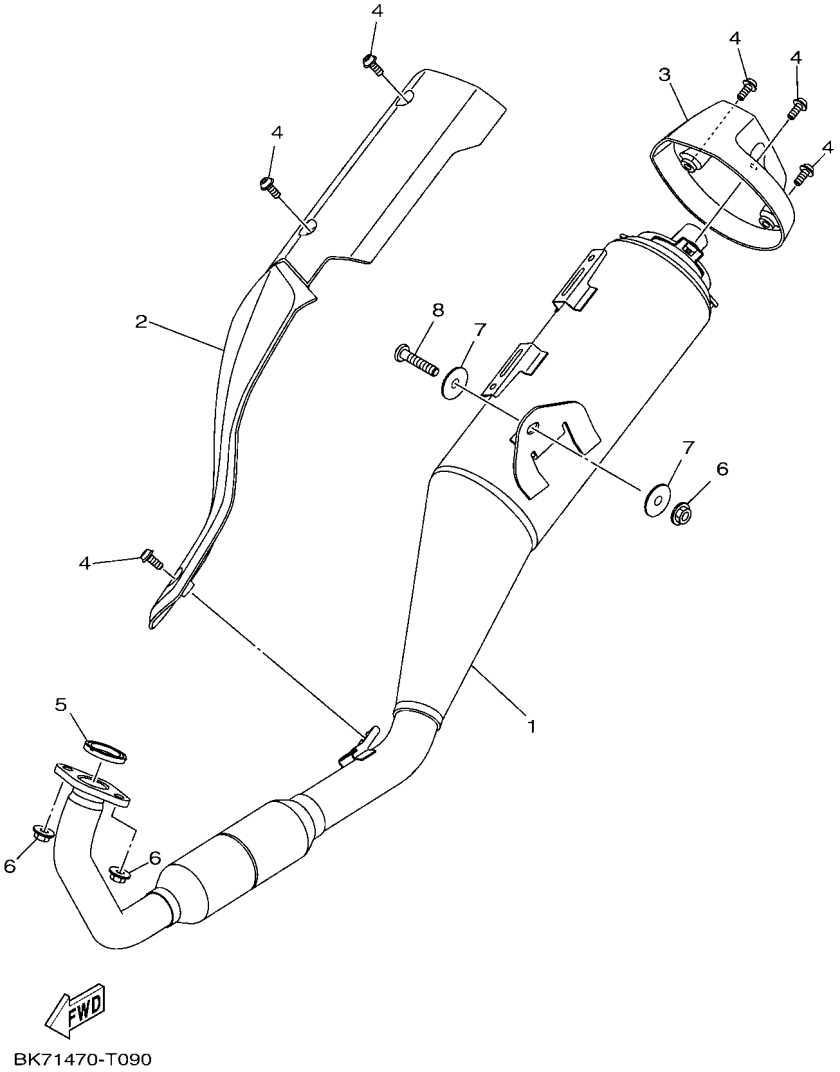

FIG. 9 DESCARGA EXHAUST

REF. Nº	CODIGO Nº PART NO.	DESCRIPCION DESCRIPTION	B1L1					OBSERVACIONES REMARKS
1	BK7–E4703–00	SILENCIADOR COMPL. 1 MUFFLER COMP. 1	1					
2	BK7–E4718–00	PROTECTOR DE SILENCIADOR 1 PROTECTOR, MUFFLER 1	1					
3	BK7–E4799–00	TAPA CAP	1					
4	90111–06807	TORNILLO BOLT,HEX. SOCKET BUTTON	6					
5	BK7–E4613–00	JUNTA, TUBO DE ESCAPE GASKET, EXHAUST PIPE	1					
6	95702–08500	TUERCA DE BRIDA NUT, FLANGE	3					
7	90201–08612	ARANDELA PLANA WASHER, PLATE	2					
8	90149–08220	TORNILLO DE REGLAJE SCREW	1					

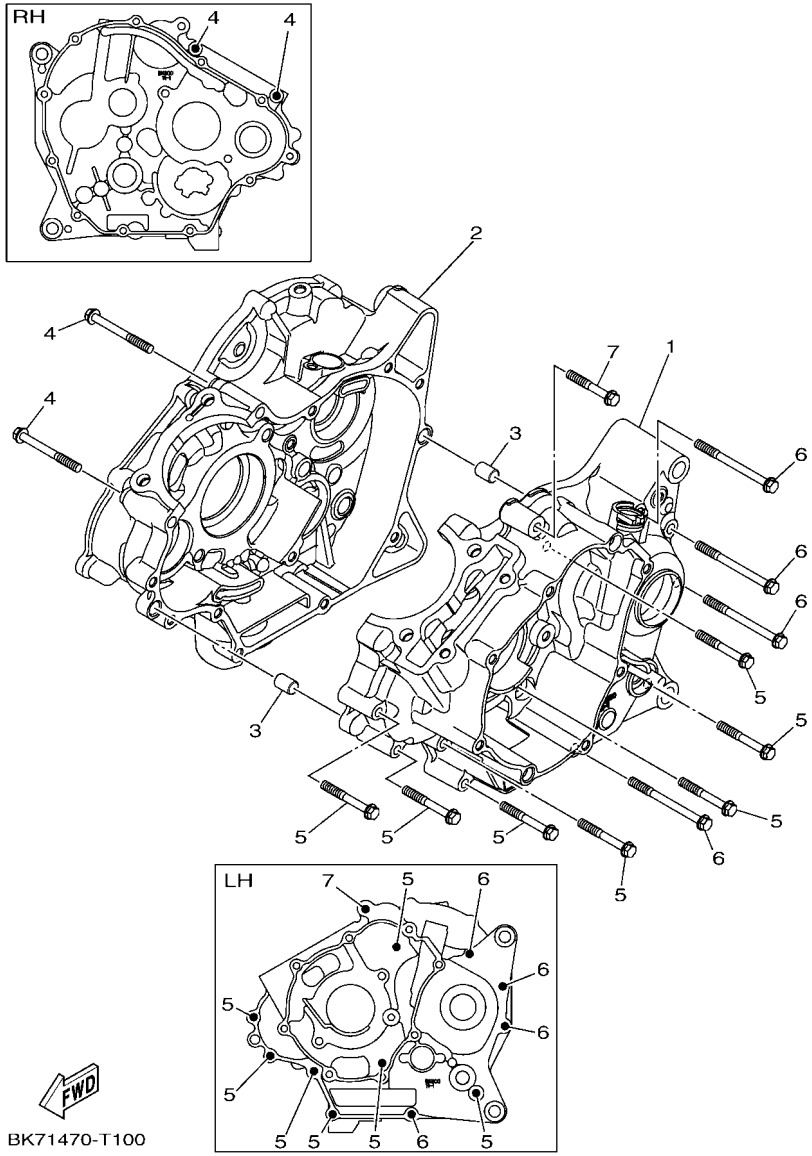

FIG. 10 CARTER — CRANKCASE

REF. Nº	CODIGO Nº PART NO.	DESCRIPCION DESCRIPTION	B1L1					OBSERVACIONES REMARKS
1	BK7–E5111–00	CARTER MANIVELA 1 CRANKCASE 1	1					
2	BK7–E5121–00	CARTER MANIVELA 2 CRANKCASE 2	1					
3	91810–14809	PASADOR DE CLAVIJA PIN, DOWEL	2					
4	95022–06055	PERNO, DE BRIDA BOLT, FLANGE	2					
5	95022–06045	PERNO, DE BRIDA BOLT, FLANGE	7					
6	95022–06070	PERNO, DE BRIDA BOLT, FLANGE	4					
7	95022–06040	PERNO, DE BRIDA BOLT, FLANGE	1					

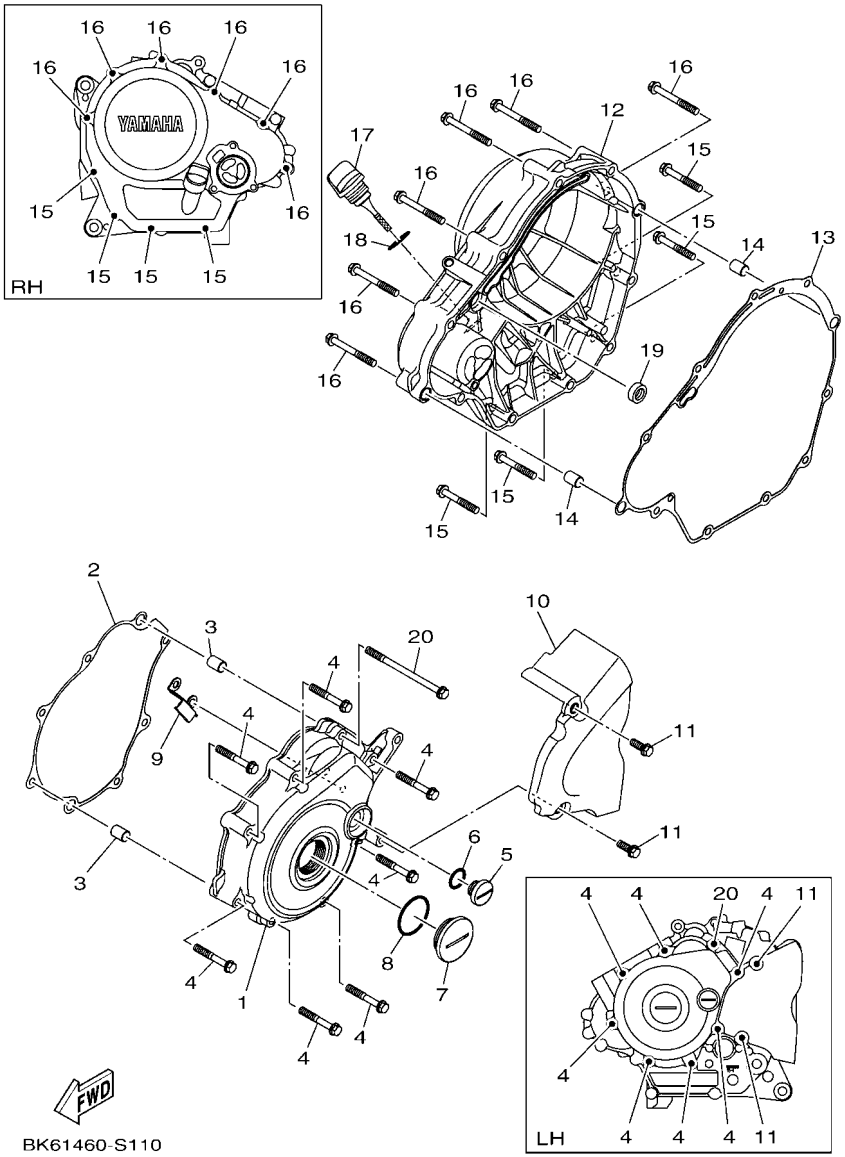

FIG. 11 CUBIERTA DE CARTER 1 — CRANKCASE COVER 1

REF. Nº	CODIGO Nº PART NO.	DESCRIPCION DESCRIPTION	B1L1					OBSERVACIONES REMARKS
1	BK7–E5411–00	CUBIERTA DE CARTER 1 COVER, CRANKCASE 1	1					
2	BK7–E5451–00	EMPAQ DE CUBIERTA DE CARTER GASKET, CRANKCASE COVER 1	1					
3	91810–14809	PASADOR DE CLAVIJA PIN, DOWEL	2					
4	95022–06040	PERNO, DE BRIDA BOLT, FLANGE	7					
5	90340–14824	TORNILLO, DE DRENAJE PLUG, STRAIGHT SCREW	1					
6	93210–14812	ANILLO O O-RING	1					
7	90340–32823	TORNILLO, DE DRENAJE PLUG, STRAIGHT SCREW	1					
8	93210–32813	ANILLO O O-RING	1					
9	2FB–E5113–00	PLACA PLATE	1					
10	BK7–E5418–00	CUBIERTA CAJA DE CADENA COVER, CHAIN CASE	1					
11	95022–06016	PERNO, DE BRIDA BOLT, FLANGE	2					
12	BK7–E5421–00	TAPA DE CARTER DERECHA COVER, CRANKCASE 2	1					
13	BK7–E5461–00	JUNTA TAPA CARTER DERECHO 2 GASKET, CRANKCASE COVER 2	1					
14	91810–14809	PASADOR DE CLAVIJA PIN, DOWEL	2					
15	95022–06040	PERNO, DE BRIDA BOLT, FLANGE	4					
16	95022–06050	PERNO, DE BRIDA BOLT, FLANGE	6					
17	BK7–E5362–00	TAPON DEL NIVEL DE ACEITE PLUG, OIL LEVEL	1					
18	93210–19809	ANILLO O O-RING	1					
19	93101–10805	SELLO ACEITE OIL SEAL	1					
20	95022–06090	PERNO, DE BRIDA BOLT, FLANGE	1					

FIG. 12 EMBRAGUE DEL ARRANQUE — STARTER CLUTCH

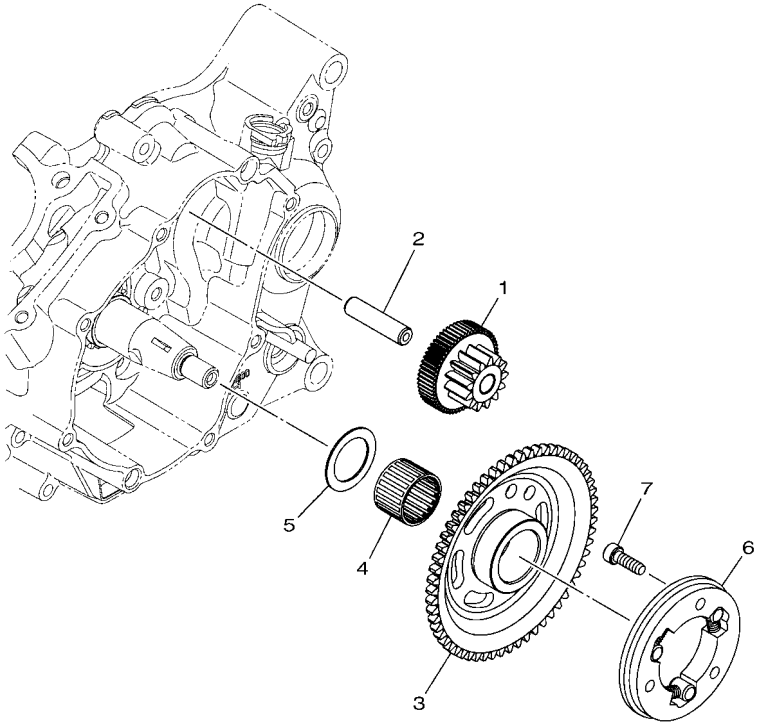

BK61460-S120

REF. Nº	CODIGO Nº PART NO.	DESCRIPCION DESCRIPTION	B1L1					OBSERVACIONES REMARKS
1	1CK–E5514–00	ENGRANAJE 2 GEAR 2	1					
2	BK7–E5521–00	EJE 1 SHAFT 1	1					
3	2FB–E5524–00	RUEDA DE ARRANQUE WHEEL, STARTER	1					
4	93310–325YC	COJINETE DE RODILLOS BEARING	1					
5	90201–25290	ARANDELA PLANA WASHER, PLATE	1					
6	54B–E5580–00	ENSAMBLE EXT.EMBRAGUE ARRANQUE STARTER CLUTCH OUTER ASSY	1					
7	91312–06020	TORNILLO ALLEN BOLT, HEXAGON SOCKET HEAD	3					

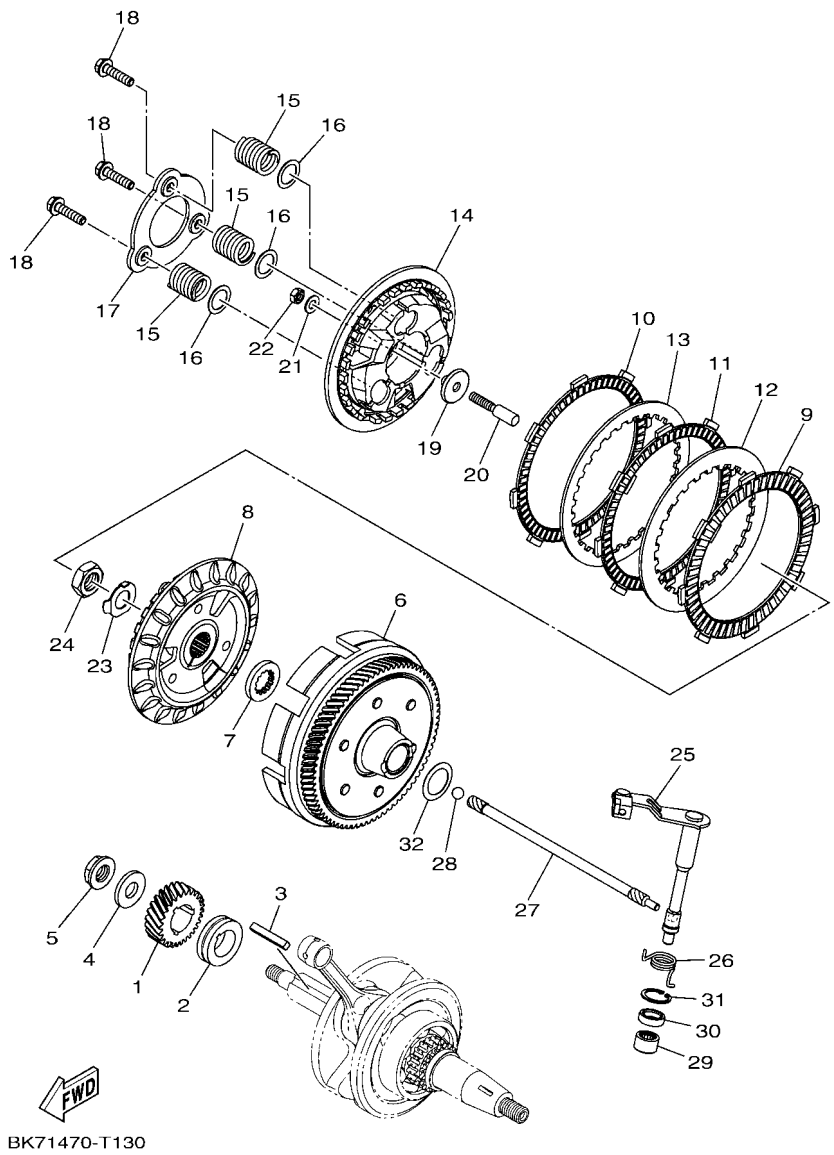

FIG. 13 EMBRAGUE — CLUTCH

REF. Nº	CODIGO Nº PART NO.	DESCRIPCION DESCRIPTION	B1L1					OBSERVACIONES REMARKS
1	BK7–E6111–00	ENGRANAJE TRACC.PRIMARIA GEAR, PRIMARY DRIVE	1					
2	BK7–E7258–00	COLLAR 1 COLLAR 1	1					
3	38B–E6193–00	CHAVETA DE AGUJA KEY, FEATHER	1					
4	90201–12019	ARANDELA PLANA WASHER, PLATE	1					
5	90179–12802	TUERCA NUT	1					
6	BK7–E6150–00	CAMPANA DE EMBRAGUE PRIMARY DRIVEN GEAR COMP.	1					
7	21C–E6154–00	ARANDELA, DE EMPUJE 1 PLATE, THRUST 1	1					
8	BK7–E6371–00	CUBO, DE EMBRAGUE BOSS, CLUTCH	1					
9	BK7–E6320–00	PLACA DE FRICCION 1 PLATE, FRICTION 1	1					
10	BK7–E6331–00	DISCO, DE FRICCION 2 PLATE, FRICTION 2	1					
11	BK7–E6321–00	PLACA DE FRICCION PLATE, FRICTION	1					
12	BK7–E6325–00	DISCO, DE EMBRAGUE PLATE, CLUTCH 2	1					
13	BK7–E6324–00	PLACA DE EMBRAGUE PLATE, CLUTCH 1	1					
14	BK7–E6351–00	PLATO DE PRESION PLATE, PRESSURE 1	1					
15	BK7–E6333–00	RESORTE DE EMBRAGUE 1 SPRING, CLUTCH 1	3					
16	BK7–E6774–00	ARANDELA DE SEPARACION WASHER	3					
17	BK7–E6352–00	PLACA DE PRESION 2 PLATE, PRESSURE 2	1					
18	BK7–E6337–00	TORNILLO DE RESORTE SCREW, SPRING	3					
19	21C–E6358–00	PLACA DE EMPUJE PLATE, PUSH	1					
20	21C–E6356–01	VARILLA DE EMPUJE 1 ROD, PUSH 1	1					
21	54B–E6144–00	ARANDELA WASHER	1					
22	54B–E6344–00	TUERCA DE AJUSTE NUT, ADJUSTING	1					
23	90215–14802	ARANDELA DE CIERRE WASHER, LOCK	1					
24	90170–14801	TUERCA NUT	1					
25	BK7–E6380–00	LEVA DE EMPUJE COMPLETA PUSH LEVER ASSY	1					
26	BK7–E6345–00	RESORTE DE RETORNO SPRING, RETURN	1					
27	38B–E6357–01	VARILLA DE EMPUJE 2 ROD, PUSH 2	1					

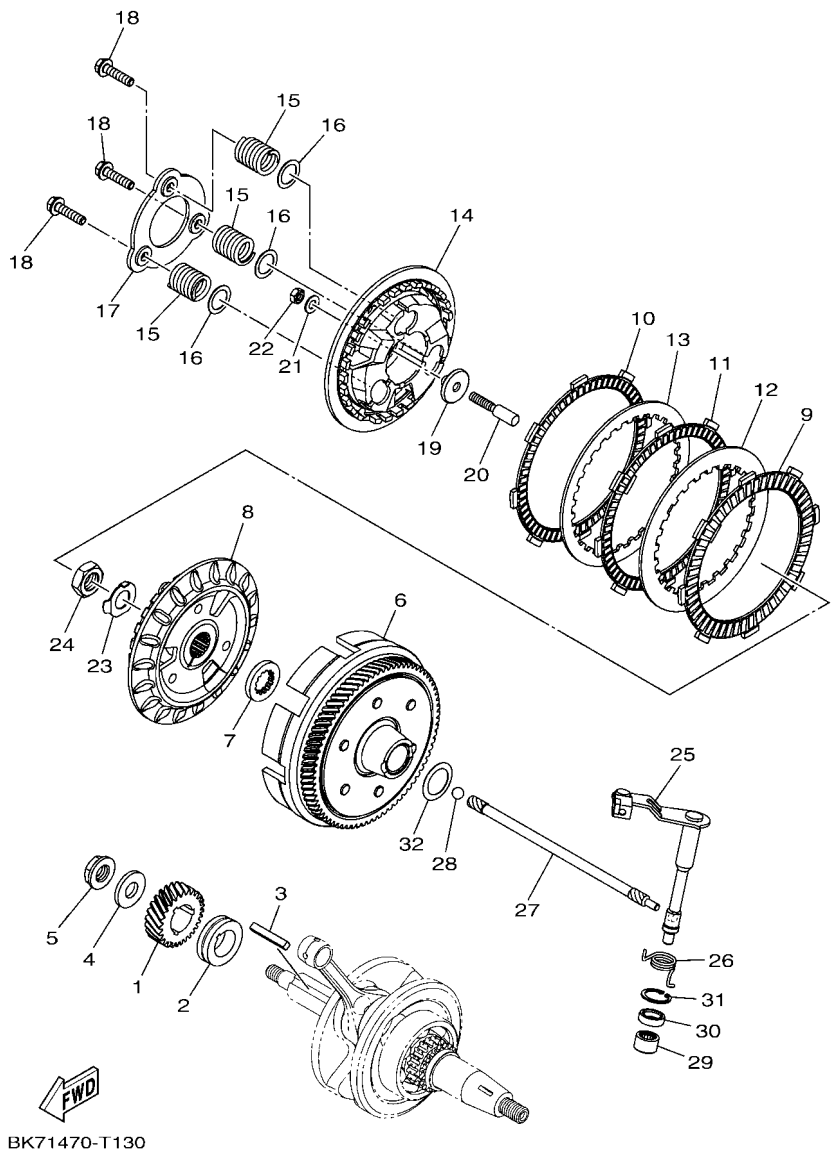

FIG. 13 EMBRAGUE — CLUTCH

REF. Nº	CODIGO Nº PART NO.	DESCRIPCION DESCRIPTION	B1L1					OBSERVACIONES REMARKS
28	93505–16844	BOLA BALL	1					
29	93315–112Y9	COJINETE DE RODILLOS BEARING	1					
30	93102–12877	SELLO ACEITE OIL SEAL	1					
31	99009–20500	PRESILLA REDONDA CIRCLIP	1					
32	90208–20003	ARANDELA DE RESORTE CONICO WASHER, CONICAL SPRING	1					

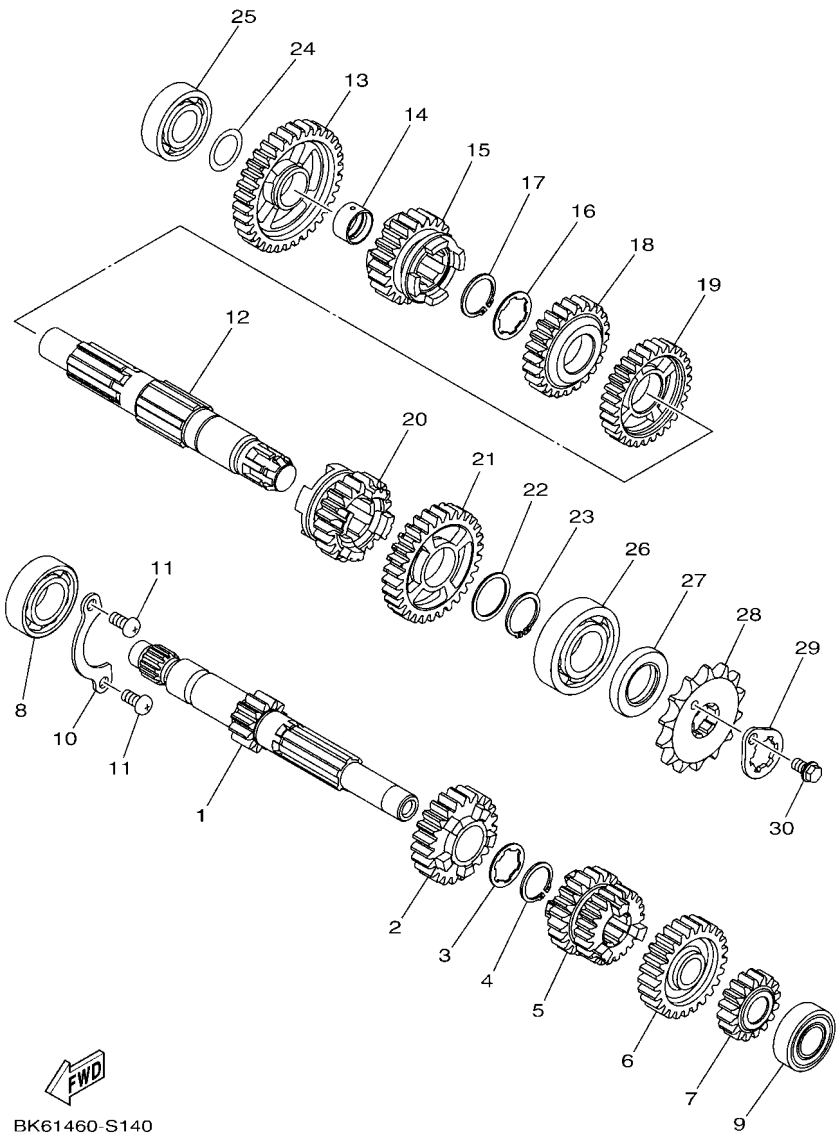

FIG. 14 TRANSMISION — TRANSMISSION

REF. Nº	CODIGO Nº PART NO.	DESCRIPCION DESCRIPTION	B1L1					OBSERVACIONES REMARKS
1	BK7–E7411–00	EJE PRIMARIO AXLE, MAIN	1					
2	2FB–E7151–00	ENGRANAJE PINON DE 5TA (23T) GEAR, 5TH PINION (23T)	1					
3	90209–17285	ARANDELA DE SEPARACION WASHER	1					
4	93410–20809	SEGURO CIRCLIP	1					
5	2FB–E7131–00	ENGRANAJE PINON DE 3RA(22/21T) GEAR, 3RD PINION (22T/21T)	1					
6	2FB–E7161–00	ENGRANAJE PINON 6TA (25T) GEAR, 6TH PINION (25T)	1					
7	38B–E7121–00	ENGRANAJE DE PINON DE 2DA(16T) GEAR, 2ND PINION (16T)	1					
8	93306–054XG	COJINETE BEARING	1					
9	93306–202YE	COJINETE BEARING	1					
10	38B–E7471–00	PLACA, DE CUBIERTA PLATE, COVER	1					
11	98502–06012	TORNILLO SCREW, PAN HEAD	2					
12	BK7–E7421–00	EJE SECUNDARIO AXLE, DRIVE	1					
13	2FB–E7211–00	ENGRANAJE RUEDA DE 1 RA (34T) GEAR, 1ST WHEEL (34T)	1					
14	38B–E7258–00	COLLAR 1 COLLAR 1	1					
15	2FB–E7251–00	ENGRANAJE RUEDA DE 5TA (22T) GEAR, 5TH WHEEL (22T)	1					
16	90209–18208	ARANDELA DE SEPARACION WASHER	1					
17	93410–22039	SEGURO CIRCLIP	1					
18	2FB–E7241–00	ENGRANAJE DE RUEDA 4TA (24T) GEAR, 4TH WHEEL (24T)	1					
19	2FB–E7231–00	ENGRANAJE RUEDA DE 3RA (30T) GEAR, 3RD WHEEL (30T)	1					
20	2FB–E7261–00	ENGRANAJE RUEDA DE 6TA (21T) GEAR, 6TH WHEEL (21T)	1					
21	BK7–E7221–00	ENGRANAJE RUEDA DE 2DA GEAR, 2ND WHEEL (30T)	1					
22	90201–22793	ARANDELA PLANA WASHER, PLATE	1					
23	93410–22039	SEGURO CIRCLIP	1					
24	90201–173F4	ARANDELA PLANA WASHER, PLATE	1					
25	93306–203XR	COJINETE BEARING	1					
26	93306–272X1	COJINETE BEARING	1					
27	93102–22818	SELLO ACEITE OIL SEAL	1					

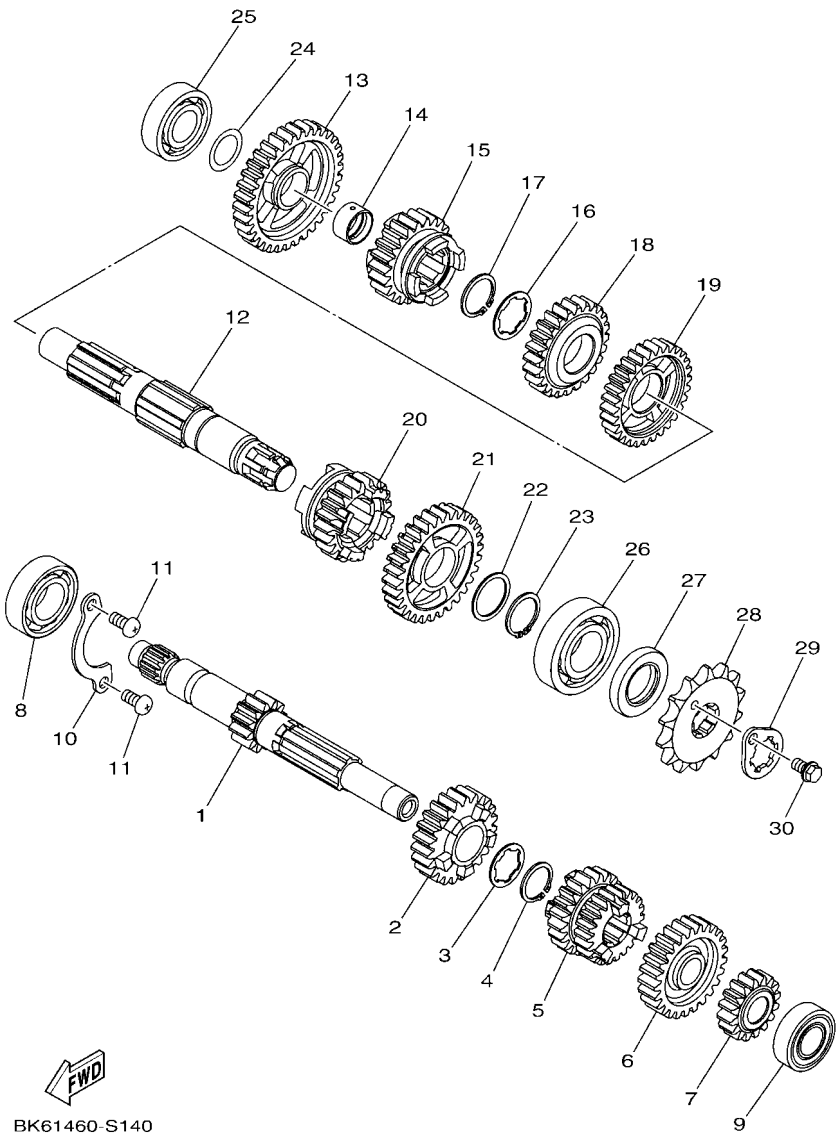

FIG. 14 TRANSMISION — TRANSMISSION

REF. Nº	CODIGO Nº PART NO.	DESCRIPCION DESCRIPTION	B1L1					OBSERVACIONES REMARKS
28	93822–14800	CORONA (14T) SPROCKET, DRIVE (14T)	1					
29	4LS–E7456–00	SOPORTE DE CORONA HOLDER, SPROCKET	1					
30	95022–06010	PERNO, DE BRIDA BOLT, FLANGE	1					

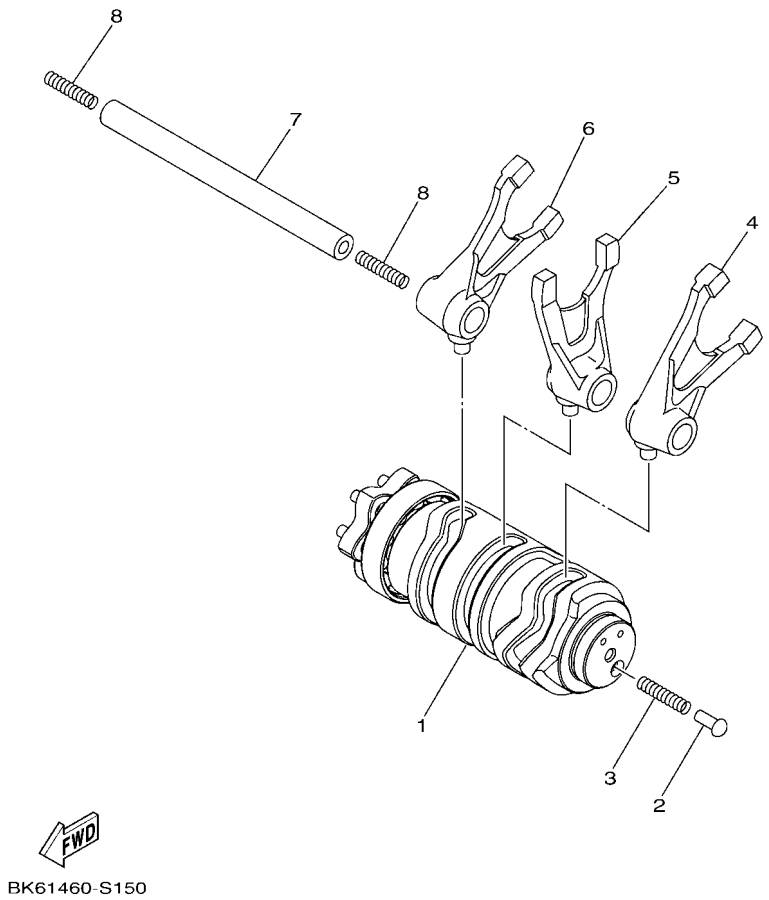

FIG. 15 LEVA DE CAMBIO & HORQUILLA — SHIFT CAM & FORK

REF. Nº	CODIGO Nº PART NO.	DESCRIPCION DESCRIPTION	B1L1					OBSERVACIONES REMARKS
1	BK7–E8540–00	LEVA DEL CAMBIO COMPLETA SHIFT CAM ASSY	1					
2	BK7–E8542–00	PUNTO MUERTO POINT, NEUTRAL	1					
3	90501–06022	RESORTE DE COMPRESION SPRING, COMPRESSION	1					
4	38B–E8511–00	HORQUILLA DEL CAMBIO 1 FORK, SHIFT 1	1					
5	38B–E8512–00	HORQUILLA DEL CAMBIO 2 FORK, SHIFT 2	1					
6	38B–E8513–00	HORQUILLA DEL CAMBIO 3 FORK, SHIFT 3	1					
7	38B–E8531–00	BARRA GUIA HORQ. CAMBIO 1 BAR, SHIFT FORK GUIDE 1	1					
8	90501–06800	RESORTE DE COMPRESION SPRING, COMPRESSION	2					

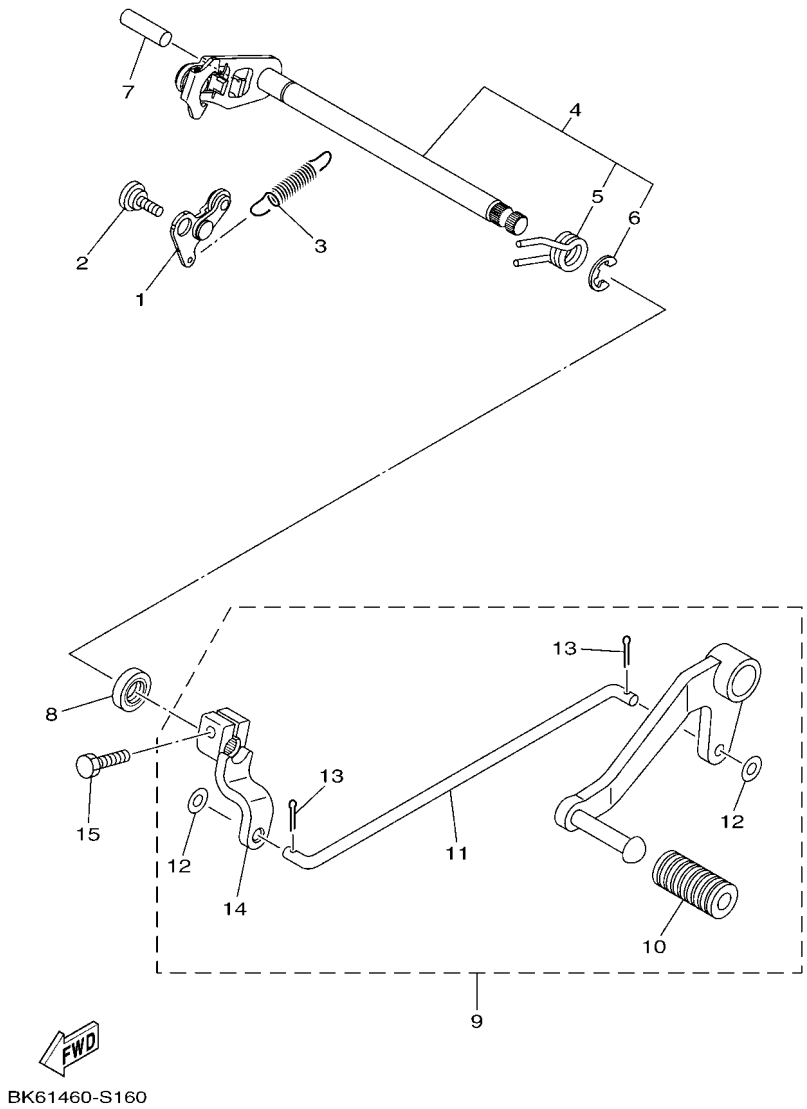

FIG. 16 EJE DE CAMBIO & PEDAL — SHIFT SHAFT

REF. Nº	CODIGO Nº PART NO.	DESCRIPCION DESCRIPTION	B1L1					OBSERVACIONES REMARKS
1	BK7–E8140–00	PALANCA DE TOPE COMPLETA STOPPER LEVER ASSY	1					
2	90109–06259	PERNO BOLT	1					
3	BK7–E8337–00	RESORTE SPRING	1					
4	38B–E8101–00	EJE SELECTOR COMPLETO SHIFT SHAFT ASSY	1					
5	90508–32837	.RESORTE DE TORSION .SPRING, TORSION	1					
6	99001–10600	.PRESILLA REDONDA .CIRCLIP	1					
7	93608–30839	PASADOR DE CLAVIJA PIN, DOWEL	1					
8	93102–12809	SELLO ACEITE OIL SEAL	1					
9	BK7–E8110–00	PEDAL DE CAMBIO COMPLETO SHIFT PEDAL ASSY	1					
10	20P–E8113–00	.FUNDA DEL PEDAL DEL CAMBIO .COVER, SHIFT PEDAL	1					
11	BK7–E8115–00	.VARILLA DEL CAMBIO .ROD, SHIFT	1					
12	92902–06200	.ARANDELA .WASHER	2					
13	90252–18800	.PASADOR DE CHAVETA .PIN, COTTER	2					
14	BK7–E8112–00	.BRAZO DEL CAMBIO .ARM, SHIFT	1					
15	97012–06020	PERNO BOLT	1					

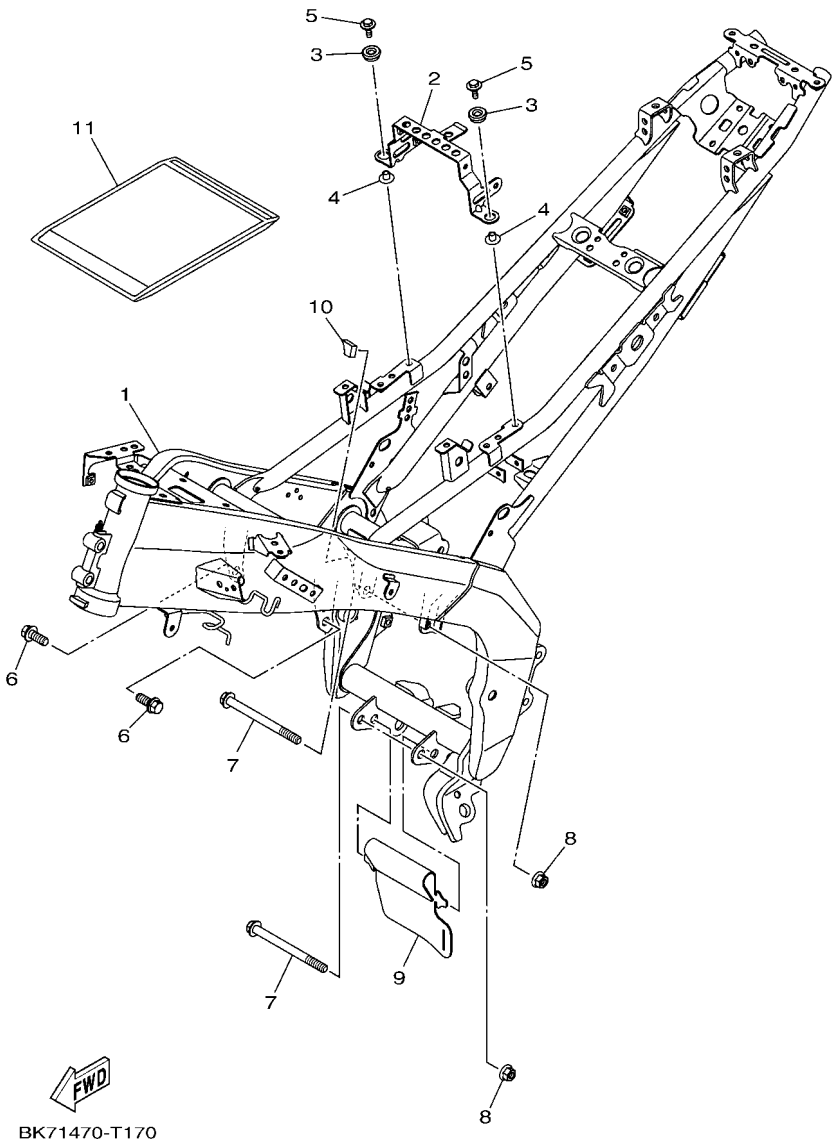

FIG. 17 CUADRO — FRAME

REF. Nº	CODIGO Nº PART NO.	DESCRIPCION DESCRIPTION	B1L1					OBSERVACIONES REMARKS
1	B1L–F1110–00	ARMAZON COMPLETO FRAME COMP.	1					
2	BK7–F1946–00	SOPORTE ASIENTO ACCESORIE BRACKET, SEAT FITTING	1					
3	90480–13567	TAPON GROMMET	2					
4	90387–068C5	ESPACIADOR COLLAR	2					
5	90119–06810	TORNILLO CON ARANDELA BOLT, WITH WASHER	2					
6	90105–108A4	TORNILLO BOLT, FLANGE	2					
7	90105–10886	TORNILLO BOLT, FLANGE	2					
8	90179–10819	TUERCA NUT	2					
9	BK7–F2327–00	GUARDAFANGO 1 MUD GUARD 1	1					
10	BK7–F113B–00	AMORTIGUADOR DAMPER	1					
11	1CK–F8186–00	SACO PLASTICO POUCH	1					

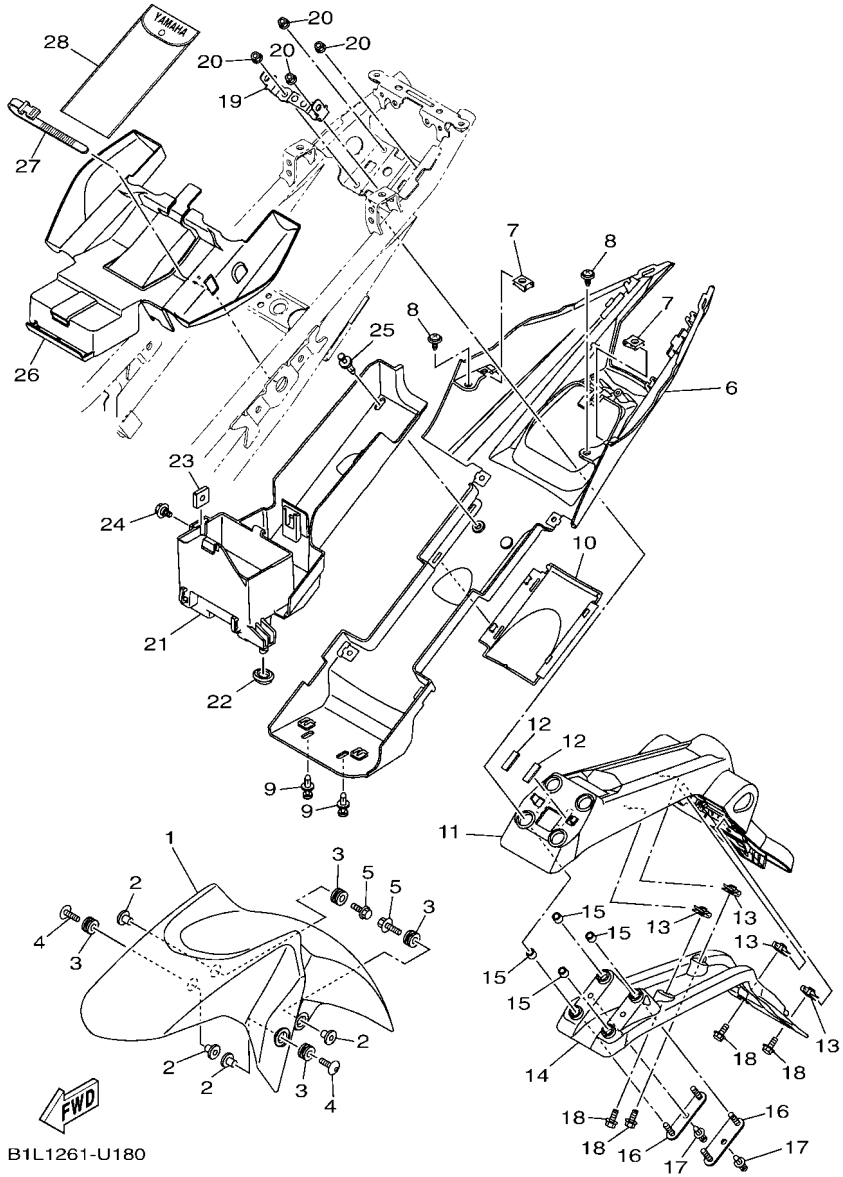

FIG. 18 GUARDABARRO FENDER

REF. Nº	CODIGO Nº PART NO.	DESCRIPCION DESCRIPTION	B1L1					OBSERVACIONES REMARKS
1	BK7–F1511–00	GUARDABARRO DELANTERO FENDER, FRONT	1					
2	90387–068C5	ESPACIADOR COLLAR	4					
3	90480–08801	TAPON GROMMET	4					
4	90111–06117	TORNILLO BOLT,HEX. SOCKET BUTTON	2					
5	95807–06020	TORNILLO BOLT, FLANGE	2					
6	BK7–F1611–00	GUARDABARRO TRASERO FENDER, REAR	1					
7	90183–05807	TUERCA DE RESORTE NUT, SPRING	2					
8	90159–06817	TORNILLO CON VALONA SCREW, WITH WASHER	2					
9	90269–06812	REMACHE RIVET	2					
10	BK7–F162R–00–P0	GUARDABAARRO 2 FENDER 2	1					UR PARA DPBMY UR FOR DPBMY
	BK7–F162R–00–P1	GUARDABAARRO 2 FENDER 2	1					UR PARA MNM3 UR FOR MNM3
11	BK7–F1629–00	GUARDABARRO INFERIOR GUARD, MUD	1					
12	BK7–F834E–00	AMORTIGUADOR 1 DAMPER 3	2					
13	90183–050A7	TUERCA DE RESORTE NUT, SPRING	4					
14	BK6–F1617–00	SOPORTE DE GUARDABARRO BRACKET, FENDER	1					
15	90387–066J9	ESPACIADOR COLLAR	4					
16	BK7–F1613–00	SOPORTE DE GUARDABARRO STAY, FENDER 1	2					
17	90269–06812	REMACHE RIVET	2					
18	90119–05022	TORNILLO CON ARANDELA BOLT, WITH WASHER	4					
19	BK7–H1948–00	SOPORTE BRACKET	1					
20	90185–06801	TUERCA AUTOBLOCANTE NUT, SELF-LOCKING	4					
21	BK7–F160E–00	CAJA BOX	1					
22	90480–01558	TAPON GROMMET	1					
23	90173–06806	TUERCA CUADRADA NUT, SQUARE	1					
24	90109–06202	PERNO BOLT	1					
25	90269–06812	REMACHE RIVET	1					
26	BK7–F1653–00	CAJA BOX	1					

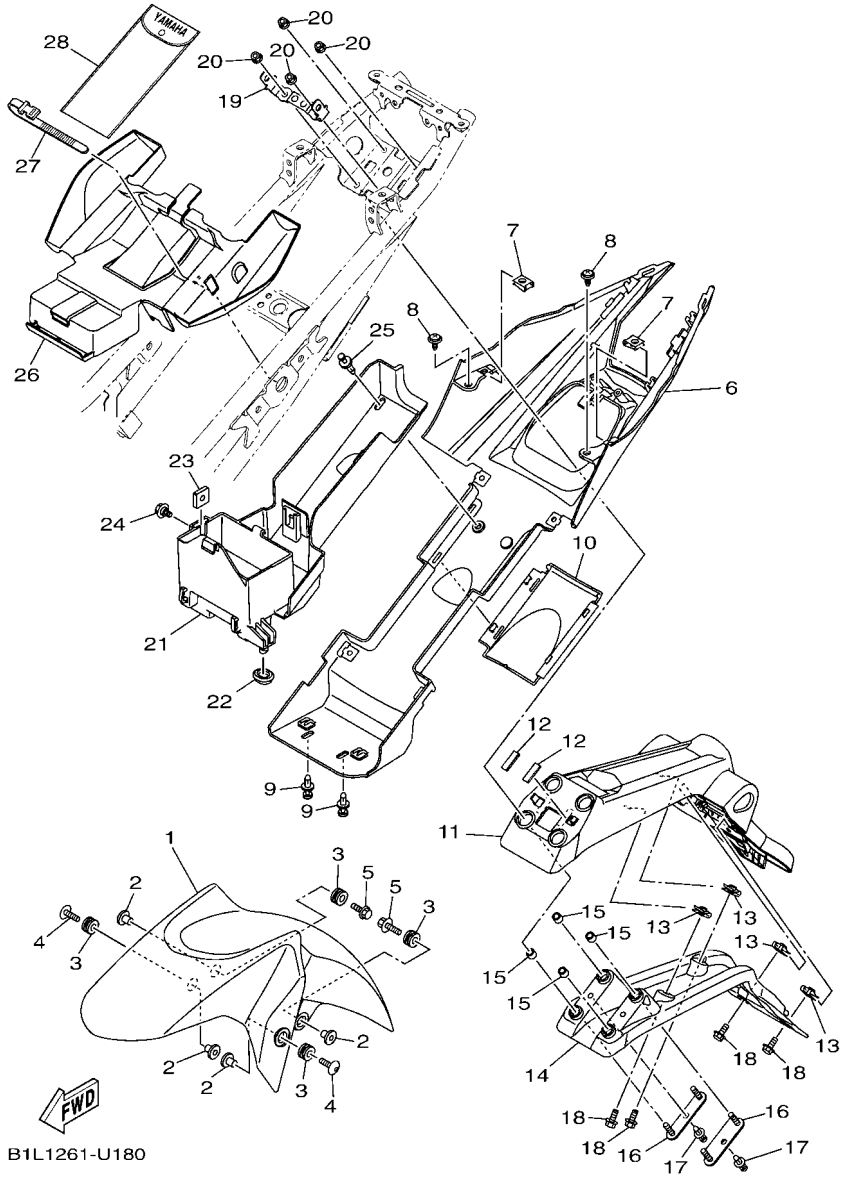

FIG. 18 GUARDABARRO — FENDER

REF. Nº	CODIGO Nº PART NO.	DESCRIPCION DESCRIPTION	B1L1					OBSERVACIONES REMARKS
27	5TS–H3936–01	BANDA DE CABLE DE INTERRUPTOR BAND, SWITCH CORD	1					
28	BK6–F8100–00	JUEGO DE HERRAMIENTAS TOOL KIT	1					

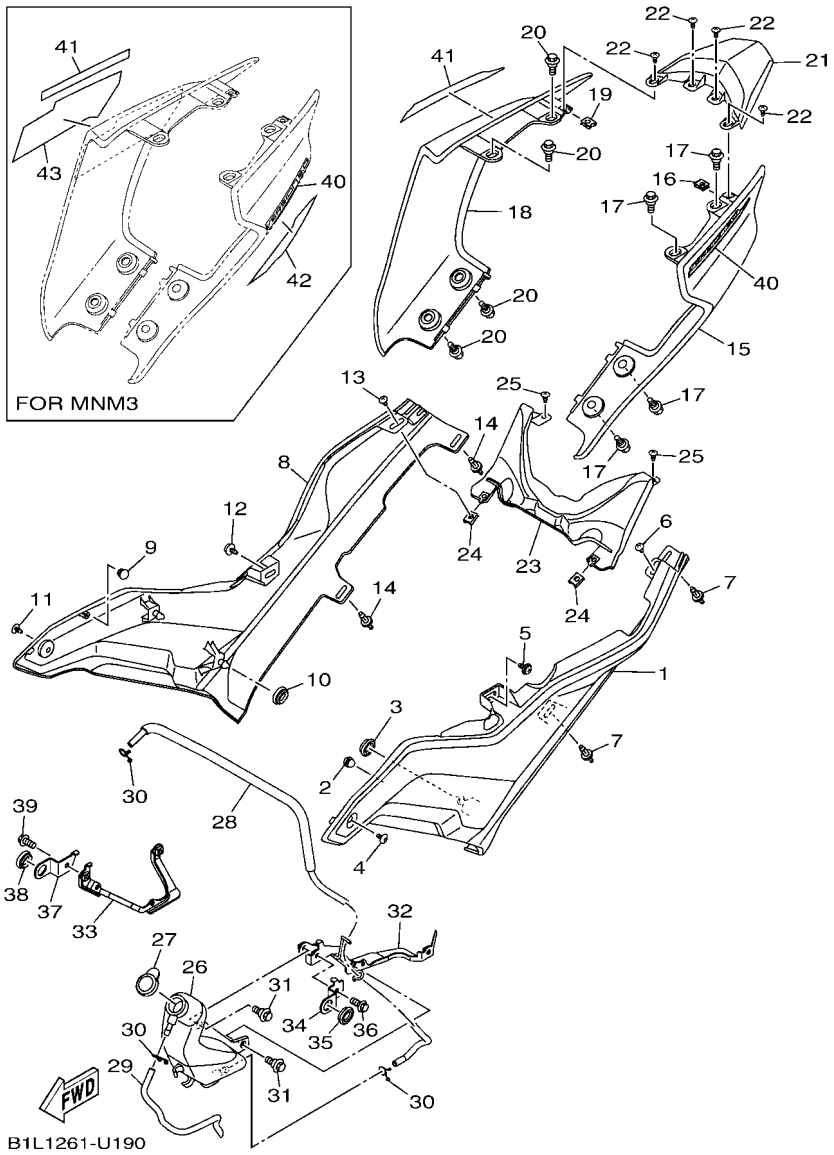

FIG. 19 CUBIERTA LATERAL — SIDE COVER

REF. Nº	CODIGO Nº PART NO.	DESCRIPCION DESCRIPTION	B1L1					OBSERVACIONES REMARKS
1	BK7–F1711–00	CUBIERTA LATERAL 1 COVER, SIDE 1	1					
2	21C–F1717–00	AMORTIGUADOR DAMPER	1					
3	90480–01558	TAPON GROMMET	1					
4	90160–05812	TORNILLO REDONDO ROSCA HEMBRA SCREW, ROUND TAPPING	1					
5	90159–06817	TORNILLO CON VALONA SCREW, WITH WASHER	1					
6	97702–50012	TORNILLO ROSCA HEMBRA SCREW, TAPPING	1					
7	90269–06812	REMACHE RIVET	2					
8	BK7–F1721–00	CUBIERTA LATERAL 2 COVER, SIDE 2	1					
9	21C–F1717–00	AMORTIGUADOR DAMPER	1					
10	90480–01558	TAPON GROMMET	1					
11	90160–05812	TORNILLO REDONDO ROSCA HEMBRA SCREW, ROUND TAPPING	1					
12	90159–06817	TORNILLO CON VALONA SCREW, WITH WASHER	1					
13	97702–50012	TORNILLO ROSCA HEMBRA SCREW, TAPPING	1					
14	90269–06812	REMACHE RIVET	2					
15	BK7–F1731–00–P0	TAPA LATERAL 3 COVER, SIDE 3	1					UR PARA DPBMY UR FOR DPBMY
	BK7–F1731–00–P1	TAPA LATERAL 3 COVER, SIDE 3	1					UR PARA MNM3 UR FOR MNM3
16	90183–05807	TUERCA DE RESORTE NUT, SPRING	1					
17	90109–068B2	PERNO BOLT	4					
18	BK7–F1741–00–P0	TAPA LATERAL 4 COVER, SIDE 4	1					UR PARA DPBMY UR FOR DPBMY
	BK7–F1741–00–P1	TAPA LATERAL 4 COVER, SIDE 4	1					UR PARA MNM3 UR FOR MNM3
19	90183–05807	TUERCA DE RESORTE NUT, SPRING	1					
20	90109–068B2	PERNO BOLT	4					
21	BK7–F171E–00	CUBIERTA LATERAL 5 COVER, SIDE 5	1					
22	97707–50012	TORNILLO SCREW, TRUSS HEAD TAPPING	4					
23	BK7–F171X–00	CUBIERTA LATERAL 6 COVER, SIDE 6	1					
24	90183–05807	TUERCA DE RESORTE NUT, SPRING	2					
25	97707–50012	TORNILLO SCREW, TRUSS HEAD TAPPING	2					

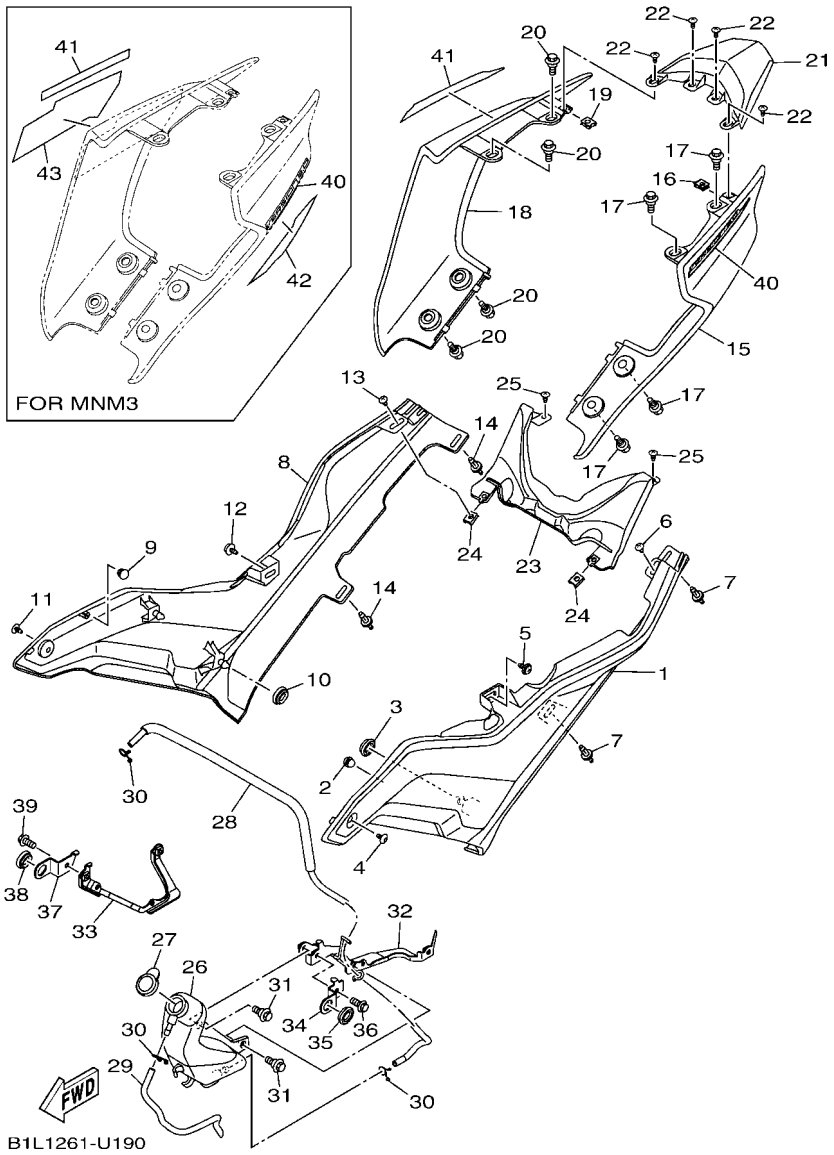

FIG. 19 CUBIERTA LATERAL — SIDE COVER

REF. Nº	CODIGO Nº PART NO.	DESCRIPCION DESCRIPTION	B1L1					OBSERVACIONES REMARKS
26	BK7–F1871–00	TANQUE DE RECUPERACION TANK, RECOVERY	1					
27	BK7–F1875–00	TAPA CAP	1					
28	BK7–F1817–00	TUBO 2 PIPE 2	1					
29	BK7–F247A–00	TUBO 1 HOSE 1	1					
30	90467–08003	PRESILLA CLIP	3					
31	90109–068B2	PERNO BOLT	2					
32	BK7–F8283–00	MENSULA,SACO PLASTICO BRACKET, POUCH	1					
33	BK7–F8284–00	MENSULA INFERIOR BRACKET, UNDER	1					
34	BK7–F8417–00	PLACA PLATE	1					
35	90480–01558	TAPON GROMMET	1					
36	95022–06014	PERNO, DE BRIDA BOLT, FLANGE	1					
37	BK7–F841F–00	PLACA PLATE	1					
38	90480–01558	TAPON GROMMET	1					
39	95022–06014	PERNO, DE BRIDA BOLT, FLANGE	1					
40	B1L–F173E–00	GRAFICO, 1 GRAPHIC 1	1					UR PARA DPBMY UR FOR DPBMY
	B1L–F173E–10	GRAFICO, 1 GRAPHIC 1	1					UR PARA MNM3 UR FOR MNM3
41	B1L–F173F–00	GRAFICO 2 GRAPHIC 2	1					UR PARA DPBMY UR FOR DPBMY
	B1L–F173F–10	GRAFICO 2 GRAPHIC 2	1					UR PARA MNM3 UR FOR MNM3
42	B1L–F174G–00	GRAFICO 3 GRAPHIC 3	1					PARA MNM3 FOR MNM3
43	B1L–F174H–00	GRAFICO 4 GRAPHIC 4	1					PARA MNM3 FOR MNM3

FIG. 20 BRAZO TRASERO & SUSPENSION — REAR ARM & SUSPENSION

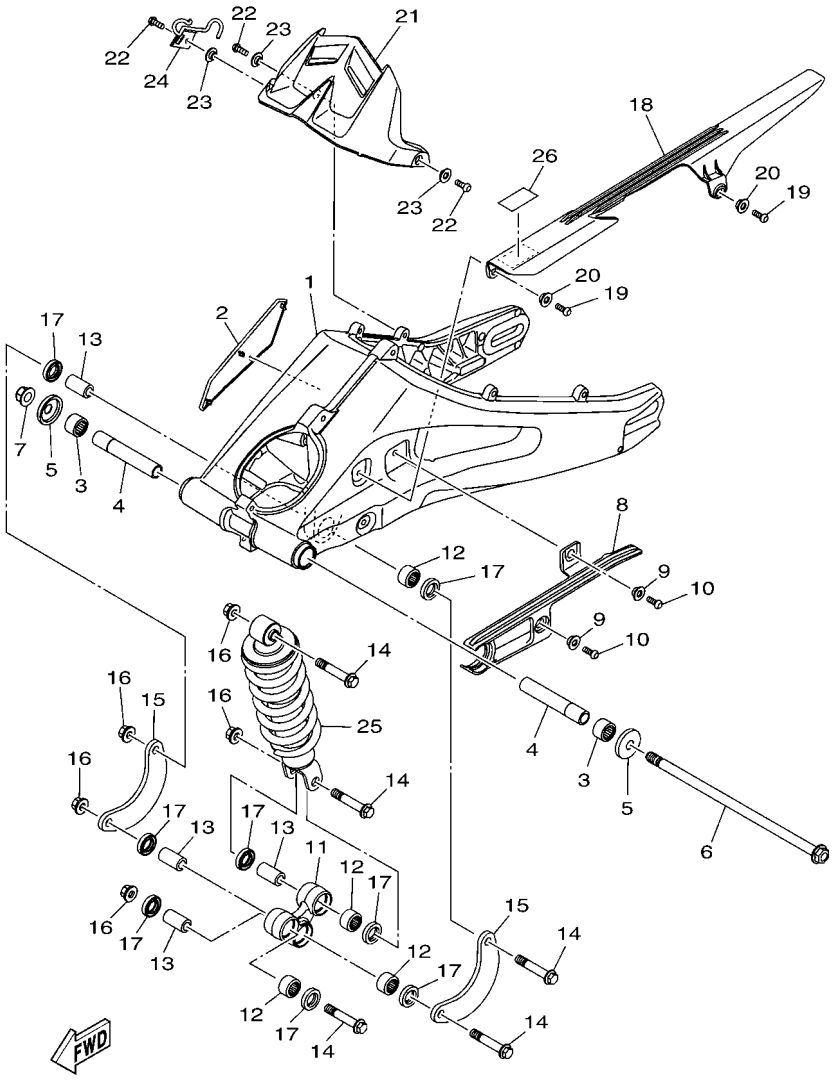

REF. Nº	CODIGO Nº PART NO.	DESCRIPCION DESCRIPTION	B1L1					OBSERVACIONES REMARKS
1	B5G–F2110–00	BRAZO TRASERO COMPLETO REAR ARM COMP.	1					
2	BK7–F135F–00	CUBIERTA COVER	1					
3	93317–318Y5	COJINETE BEARING	2					
4	BK7–F2184–00	BUJE BUSH	2					
5	1CK–F2128–00	TAPA DE EMPIJE 1 COVER, THRUST 1	2					
6	BK7–F2141–00	EJE DEL BARCULANTE SHAFT, PIVOT	1					
7	95602–12200	TUERCA DE AUTO-CIERRE NUT, SELF-LOCKING	1					
8	BK7–F2151–00	SELLO DE GUARDA SEAL, GUARD	1					
9	90387–068S1	ESPACIADOR COLLAR	2					
10	92012–06016	PERNO BOLT, BUTTON HEAD	2					
11	1CK–F217A–00	BRAZO REEURIO ARM, RELAY	1					
12	93315–317Y4	COJINETE DE RODILLOS BEARING	4					
13	90387–10814	ESPACIADOR COLLAR	4					
14	90105–10887	TORNILLO BOLT, FLANGE	5					
15	BK7–F217F–00	BIELA COMPLETA 1 ROD, CONNECTING 1	2					
16	90179–10805	TUERCA NUT	5					
17	93106–17802	SELLO ACEITE OIL SEAL	8					
18	BK7–F2311–00	CABRECADENA CASE, CHAIN	1					
19	92012–06016	PERNO BOLT, BUTTON HEAD	2					
20	90387–068S1	ESPACIADOR COLLAR	2					
21	BK7–F1650–00	GUARDABARRO TRANSERO COMP. REAR FENDER COMP.	1					
22	92012–06016	PERNO BOLT, BUTTON HEAD	3					
23	90387–068S1	ESPACIADOR COLLAR	3					
24	BK7–F587A–00	SOPORTE DE MANGUERA FRENO HOLDER, BRAKE HOSE	1					
25	BK7–F2210–00	AMORTIGUADOR TRASERO COMPLETO SHOCK ABSORBER ASSY, REAR	1					
26	B1L–F1668–00	ETIQUETA DE FRANJA LABEL, TIRE	1					

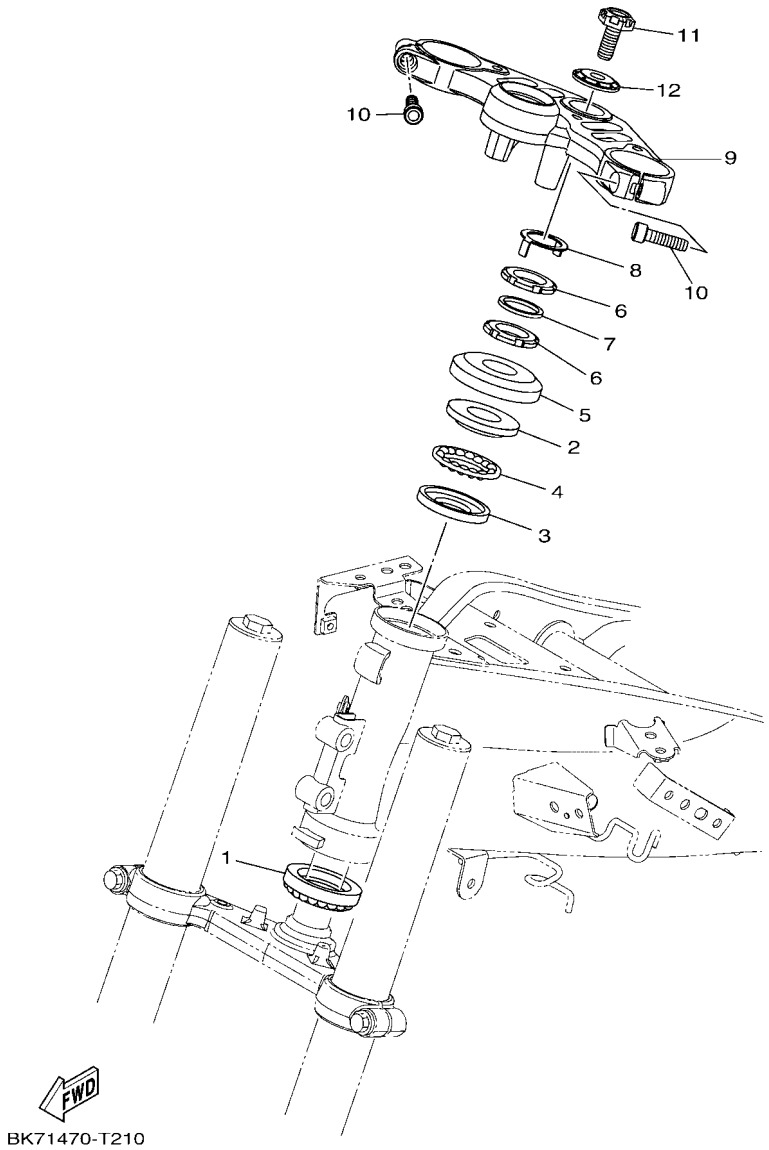

FIG. 21 DIRECCION STEERING

REF. Nº	CODIGO Nº PART NO.	DESCRIPCION DESCRIPTION	B1L1					OBSERVACIONES REMARKS
1	2FB–F3873–00	COJINETE SUP.DIRECCION BEARING, STEERING UPPER	1					
2	BK7–F3411–00	PISTA DE BOLAS 1 RACE, BALL 1	1					
3	21C–F3412–00	PISTA DE BOLAS 2 RACE, BALL 2	1					
4	4LS–F341E–10	RETEN DE COJINETE RETAINER, BALL BEARING	1					
5	20P–F3416–00	CUBIERTA DE BASE DE BOLA 2 COVER, BALL RACE 2	1					
6	90179–25615	TUERCA NUT	2					
7	90202–26142	ARANDELA DE PLANA WASHER, PLATE	1					
8	20P–F3418–00	ARANDELA ESPECIAL WASHER, SPECIAL	1					
9	BK7–F3435–00	PLATINA SUPERIOR CROWN, HANDLE	1					
10	91317–08030	TORNILLO ALLEN BOLT,HEX.SOCKET HEAD	2					
11	90101–10832	TORNILLO BOLT	1					
12	90209–10812	ARANDELA DE SEPARACION WASHER	1					

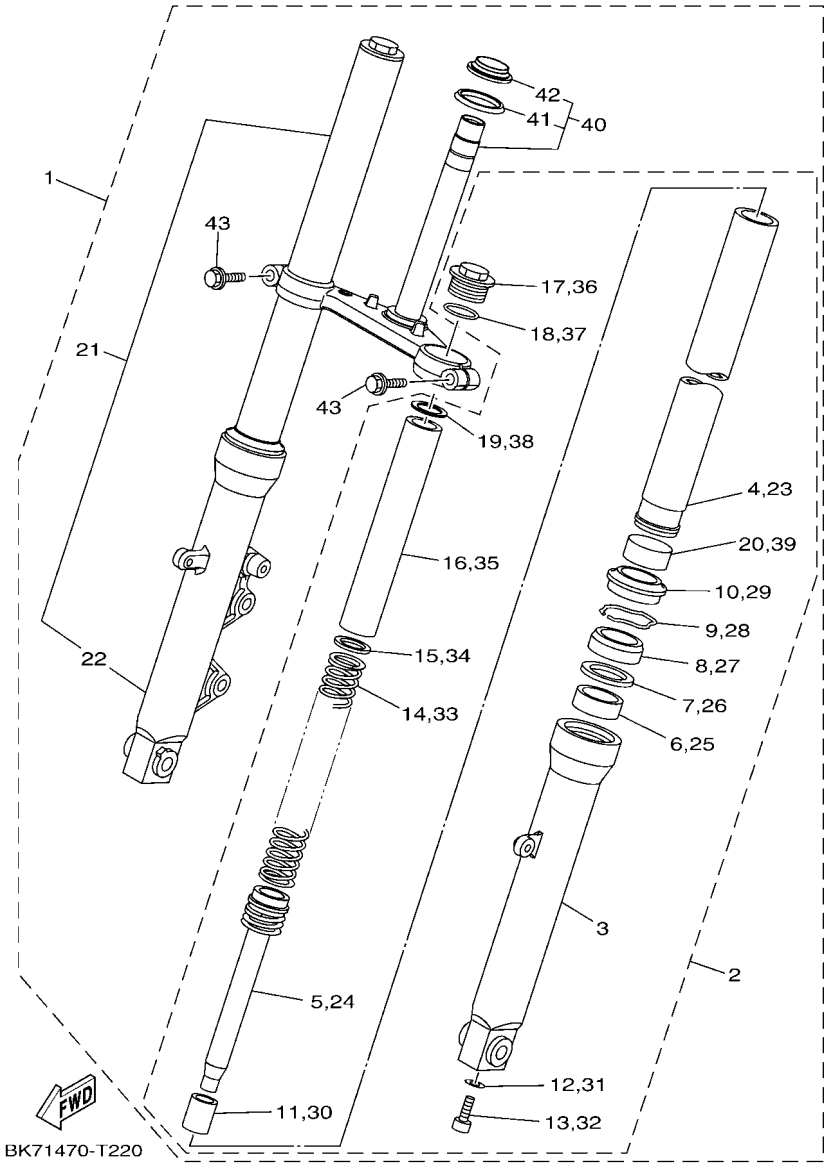

FIG. 22 HORQUILLA DELANTERA — FRONT FORK

REF. Nº	CODIGO Nº PART NO.	DESCRIPCION DESCRIPTION	B1L1					OBSERVACIONES REMARKS
1	BK7–F3100–00	HORQUILLA DELANTERA COMPLETA FRONT FORK ASSY	1					
2	BK7–F3102–00	.HORQUILLA DELANTERA COMPL.(MI) .FRONT FORK ASSY (L.H)	1					
3	21C–F3126–11	..TUBO EXTERIOR (IZQUIERDO) ..TUBE, OUTER (L.H)	2					
4	BK7–F3110–00	..TUBO INTERIOR COMPLETO 1 ..INNER TUBE COMP.1	1					
5	BK7–F3170–00	..CILINDRO COMPL DE HORQ DELANT ..CYLINDER COMP., FRONT FORK	1					
6	4FM–23125–40	..METAL CORREDIZO 1 ..METAL, SLIDE 1	1					
7	21C–F3146–00	..ARANDELA DE SELLO DE ACEITE ..WASHER, OIL SEAL	1					
8	2GS–F3145–00	..RETEN DE ACEITE ..OIL SEAL	1					
9	21C–F3156–00	..ANILLO DE ENGANCHE ..RING, SNAP	1					
10	2GS–F3144–00	..GUARDAPOLVO ..SEAL, DUST	1					
11	21C–F3173–00	..VASTAGO AHUSADO ..SPINDLE, TAPER	1					
12	21C–F3158–00	..EMPAQUE ..GASKET	1					
13	21C–F3181–00	..TORNILLO CABEZAHEXAGONAL ..BOLT, HEXAGON SOCKET HEAD	1					
14	BK7–F3141–00	..RESORTE HORQUILLA DELANT. ..SPRING, FRONT FORK	1					
15	21C–F3149–00	..ARANDELA DE RESORTE SUPERIOR ..WASHER, SPRING UPPER	1					
16	BK7–F3118–00	..SEPARADOR ..SPACER	1					
17	21C–F3111–00	..PERNO DE TAPA ..BOLT, CAP	1					
18	21C–F3114–00	..EMPAQUE ..GASKET	1					
19	21C–F2674–00	..ARANDELA 2 ..WASHER 2	1					
20	2GS–F3171–00	..PISTON HORQUILLA DELANT. ..BUSH, INNER TUBE	1					
21	BK7–F3103–00	.HORQUILLA DELANTERA COMPL.(MD) .FRONT FORK ASSY (R.H)	1					
22	B97–F3136–00	..TUBO EXTERIOR 2 ..TUBE, OUTER 2	1					
23	BK7–F3110–00	..TUBO INTERIOR COMPLETO 1 ..INNER TUBE COMP.1	1					
24	BK7–F3170–00	..CILINDRO COMPL DE HORQ DELANT ..CYLINDER COMP., FRONT FORK	1					
25	4FM–23125–40	..METAL CORREDIZO 1 ..METAL, SLIDE 1	1					
26	21C–F3146–00	..ARANDELA DE SELLO DE ACEITE ..WASHER, OIL SEAL	1					
27	2GS–F3145–00	..RETEN DE ACEITE ..OIL SEAL	1					

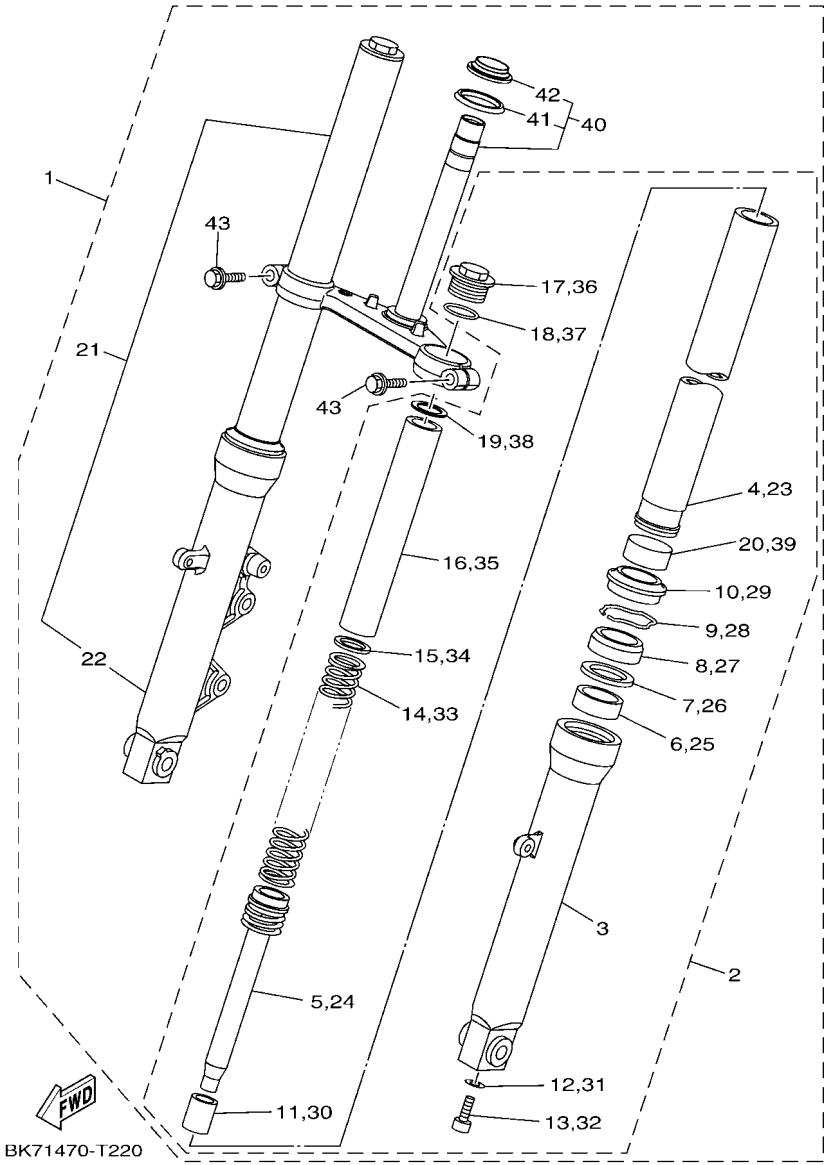

FIG. 22 HORQUILLA DELANTERA — FRONT FORK

REF. Nº	CODIGO Nº PART NO.	DESCRIPCION DESCRIPTION	B1L1					OBSERVACIONES REMARKS
28	21C–F3156–00	..ANILLO DE ENGANCHE ..RING, SNAP	1					
29	2GS–F3144–00	..GUARDAPOLVO ..SEAL, DUST	1					
30	21C–F3173–00	..VASTAGO AHUSADO ..SPINDLE, TAPER	1					
31	21C–F3158–00	..EMPAQUE ..GASKET	1					
32	21C–F3181–00	..TORNILLO CABEZAHEXAGONAL ..BOLT, HEXAGON SOCKET HEAD	1					
33	BK7–F3141–00	..RESORTE HORQUILLA DELANT. ..SPRING, FRONT FORK	1					
34	21C–F3149–00	..ARANDELA DE RESORTE SUPERIOR ..WASHER, SPRING UPPER	1					
35	BK7–F3118–00	..SEPARADOR ..SPACER	1					
36	21C–F3111–00	..PERNO DE TAPA ..BOLT, CAP	1					
37	21C–F3114–00	..EMPAQUE ..GASKET	1					
38	21C–F2674–00	..ARANDELA 2 ..WASHER 2	1					
39	2GS–F3171–00	..PISTON HORQUILLA DELANT. ..BUSH, INNER TUBE	1					
40	BK7–F3340–00	.PLATINA INFERIOR COMPLETA .UNDER BRACKET COMP.	1					
41	5YY–F3462–00	..SELLO PARA POLVO ..SEAL, DUST	1					
42	2FB–F3875–00	..COJINETE ..BEARING, STEERING LOWER	1					
43	20P–F3346–00	.PERNO 1 .BOLT 1	2					

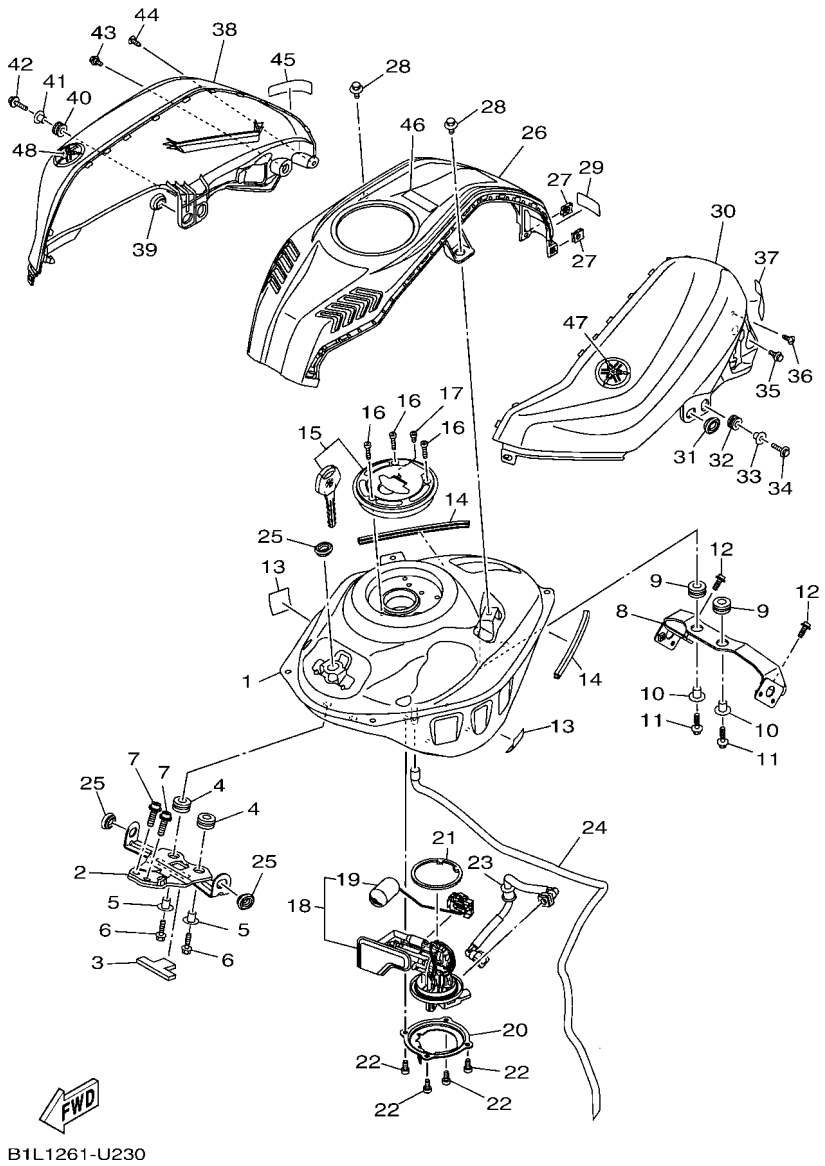

FIG. 23 DEPOSITO DE COMBUSTIBLE — FUEL TANK

REF. Nº	CODIGO Nº PART NO.	DESCRIPCION DESCRIPTION	B1L1					OBSERVACIONES REMARKS
1	B1L–F4110–00	DEPOSITO DE COMBUSTIBLE COMP. FUEL TANK COMP.	1					
2	BK7–F412Y–00	SOPORTE TANK ELEQUIPO BRACKET, TANK FITTING	1					
3	BK7–F4181–00	AMORTIGUADOR DE MONTAJE 1 DAMPER, LOCATING 1	1					
4	90480–15363	TAPON GROMMET	2					
5	90387–068B2	ESPACIADOR COLLAR	2					
6	90105–06169	TORNILLO BOLT, FLANGE	2					
7	90110–08839	TORNILLO ALLEN BOLT, HEXAGON SOCKET HEAD	2					
8	BK7–F4191–00	SOPORTE DEPOSITO DE COMBUST.1 BRACKET, FUEL TANK 1	1					
9	90480–15363	TAPON GROMMET	2					
10	90387–068B2	ESPACIADOR COLLAR	2					
11	90105–06169	TORNILLO BOLT, FLANGE	2					
12	90110–06215	TORNILLO ALLEN BOLT, HEXAGON SOCKET HEAD	2					
13	BK7–F414G–10	SELLO SEAL	2					
14	BK7–F1278–00	MOLDURA MOLD	2					
15	B1P–WF461–00	TAPA DE DEPOSITO COMPLETO CAP ASSY WITH LOCK	1					
16	90110–05806	TORNILLO ALLEN BOLT, HEXAGON SOCKET HEAD	3					
17	91312–05010	TORNILLO ALLEN BOLT, HEXAGON SOCKET HEAD	1					
18	BK6–E3907–00	BOMBA DE COMBUSTIBLE COMPLETA FUEL PUMP COMP.	1					
19	BK6–H5752–00	.UNIDAD TRANSM. MED. COMBUST. .SENDER UNIT ASSY, FUEL METER	1					
20	BK7–F4491–00	SOPORTE BOMBA COMBUSTIBLE BRACKET, FUEL PUMP	1					
21	2GS–F414G–00	SELLO SEAL	1					
22	91312–05010	TORNILLO ALLEN BOLT, HEXAGON SOCKET HEAD	4					
23	BK6–E3971–00	ANILLO DE ESPACIADOR PIPE, FUEL 1	1					
24	BK7–F4312–00	TUBO 2 PIPE 2	1					
25	90480–01558	TAPON GROMMET	3					
26	BK7–F41B1–00–P0	TAPA DE TANQUE COVER, TANK	1					UR SMX PARA DPBMY UR SMX FOR DPBMY
	BK7–F41B1–00–P1	TAPA DE TANQUE COVER, TANK	1					UR VRC1 PARA MNM3 UR VRC1 FOR MNM3

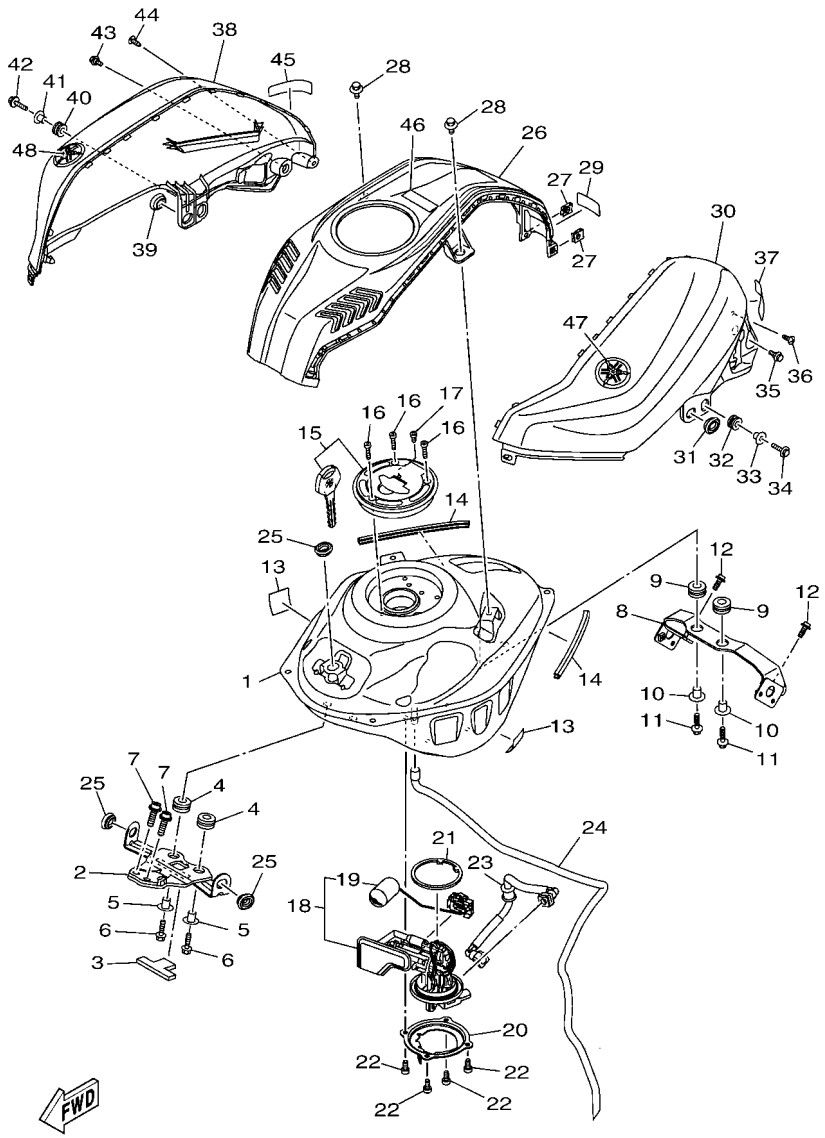

B1L1261-U230

FIG. 23 DEPOSITO DE COMBUSTIBLE — FUEL TANK

REF. Nº	CODIGO Nº PART NO.	DESCRIPCION DESCRIPTION	B1L1					OBSERVACIONES REMARKS
27	90183–05807	TUERCA DE RESORTE NUT, SPRING	2					
28	90109–068B2	PERNO BOLT	2					
29	BK7–F414G–00	SELLO SEAL	1					
30	BK7–F4129–00–P0	CUBIERTA LATERAL 1 COVER, SIDE 1	1					UR PARA DPBMY UR FOR DPBMY
	BK7–F4129–00–P1	CUBIERTA LATERAL 1 COVER, SIDE 1	1					UR PARA MNM3 UR FOR MNM3
31	90480–01559	TAPON GROMMET	1					
32	90480–12805	TAPON GROMMET	1					
33	90387–06899	ESPACIADOR COLLAR	1					
34	90159–05011	TORNILLO CON VALONA SCREW, WITH WASHER	1					
35	90109–05014	PERNO BOLT	1					
36	97702–50016	TORNILLO ROSCA HEMBRA SCREW, TAPPING	1					
37	BK7–F414E–00	SELLO 2 SEAL 2	1					
38	BK7–F4139–00–P0	CUBIERTA LATERAL 2 COVER, SIDE 2	1					UR PARA DPBMY UR FOR DPBMY
	BK7–F4139–00–P1	CUBIERTA LATERAL 2 COVER, SIDE 2	1					UR PARA MNM3 UR FOR MNM3
39	90480–01559	TAPON GROMMET	1					
40	90480–12805	TAPON GROMMET	1					
41	90387–06899	ESPACIADOR COLLAR	1					
42	90159–05011	TORNILLO CON VALONA SCREW, WITH WASHER	1					
43	90109–05014	PERNO BOLT	1					
44	97702–50016	TORNILLO ROSCA HEMBRA SCREW, TAPPING	1					
45	BK7–F414E–00	SELLO 2 SEAL 2	1					
46	B1L–F1568–00	ETIQUETA DE PRECAUCION LABEL, WARNING	1					
47	B73–F413B–00	EMBLEMA EMBLEM	1					
48	B73–F413B–00	EMBLEMA EMBLEM	1					

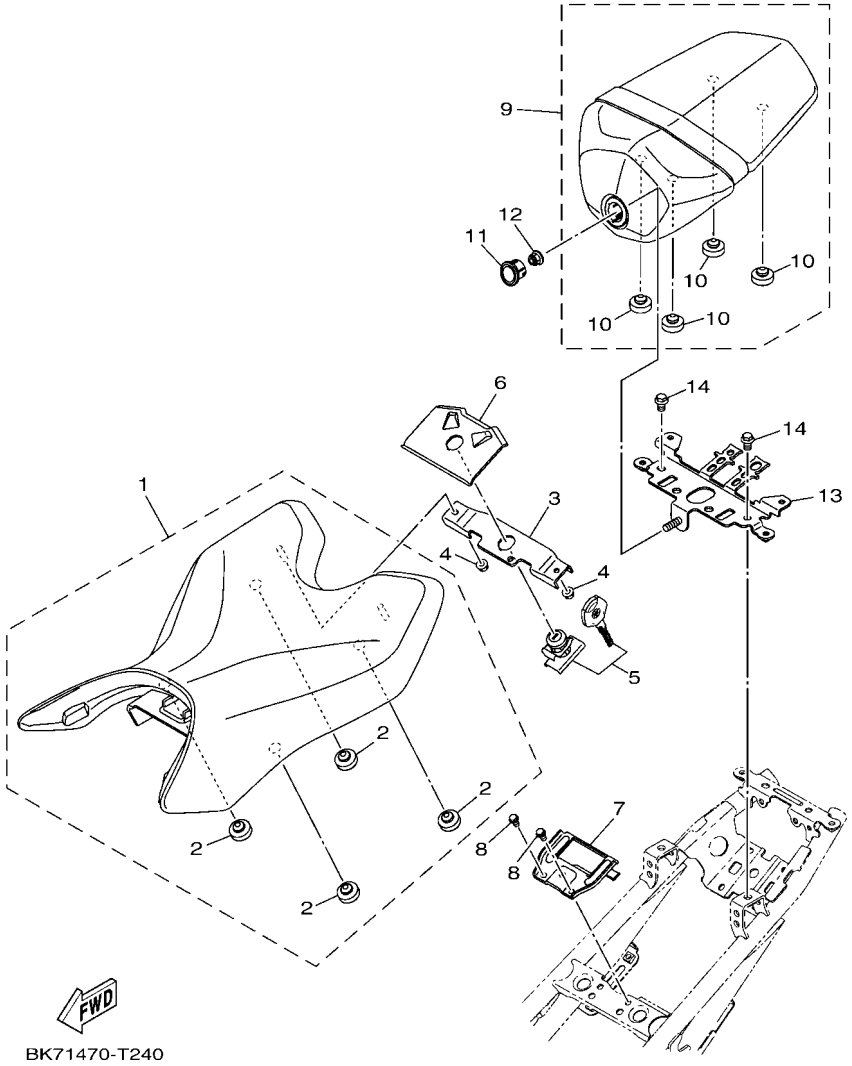

FIG. 24 ASIENTO — SEAT

REF. Nº	CODIGO Nº PART NO.	DESCRIPCION DESCRIPTION	B1L1					OBSERVACIONES REMARKS
1	BK7–F4710–00	ASIENTO SIMPLE COMPLETO SINGLE SEAT ASSY	1					
2	4LS–F4741–00	.COJIN DE ASIENTO .PAD, SEAT	4					
3	BK7–F4728–00	SOPORTE DE ASIENTO BRACKET, SEAT	1					
4	95607–06200	TUERCA DE AUTO-CIERRE NUT, SELF U-FLANGE	2					
5	BK7–WF478–00	CUBIERTA DE ASIENTO SEAT LOCK WITH KEY	1					
6	BK7–F4796–00	CUBIERTA COVER	1					
7	BK7–F475H–00	SOPORTE PALANCA ASIENTO 1 BRACKET, SEAT LEVER 1	1					
8	95022–06010	PERNO, DE BRIDA BOLT, FLANGE	2					
9	BK7–F4750–00	ASIENTO TANDEM COMPLETO TANDEM SEAT ASSY	1					
10	4LS–F4741–00	.COJIN DE ASIENTO .PAD, SEAT	4					
11	BK7–F475X–00	CUBIERTA 2 COVER,2	1					
12	95602–08200	TUERCA DE AUTO-CIERRE NUT, U FLANGE	1					
13	BK7–F475J–00	SOPORTE PALANCA ASIENTO 2 BRACKET, SEAT LEVER 2	1					
14	95022–08012	PERNO, DE BRIDA BOLT, FLANGE	2					

FIG. 25 RUEDA DELANTERA — FRONT WHEEL

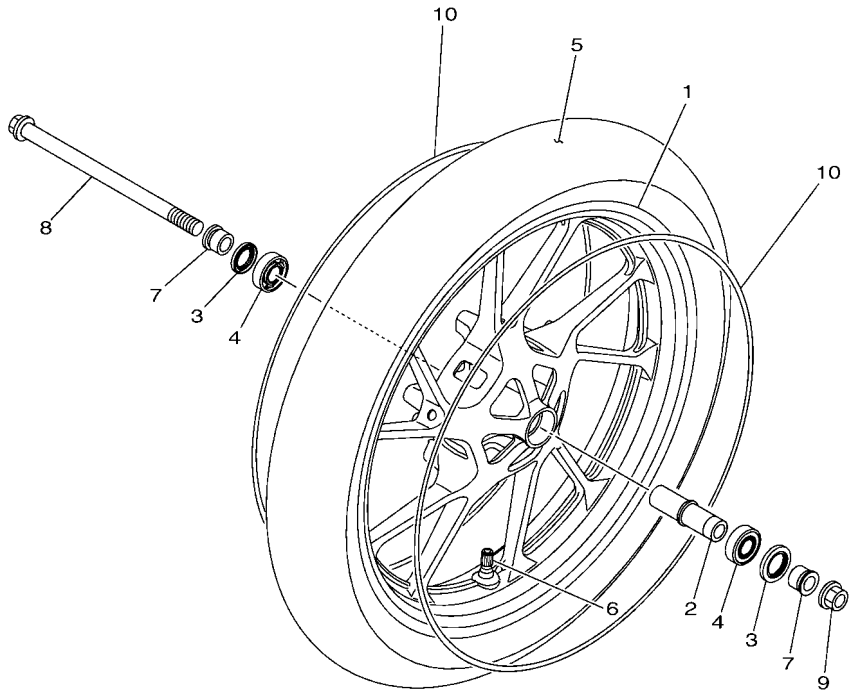

BK71470-T250

REF. Nº	CODIGO Nº PART NO.	DESCRIPCION DESCRIPTION	B1L1					OBSERVACIONES REMARKS
1	B97–F5168–01–33	RUEDA FUNDIDA DELANTERA CAST WHEEL, FRONT	1					YB YB
2	21C–F510C–10	COLLAR COLLAR ASSY.	1					
3	93106–22808	SELLO ACEITE OIL SEAL	2					
4	93306–252XG	COJINETE BEARING	2					
5	94110–17818	NEUMATICO(100/80-17 MC 52P) TIRE (100/80-17 MC 52P)	1					MRF MRF
6	93900–00824	VALVULA VALVE, RIM	1					
7	1CK–F5186–00	COLLAR DE RUEDA COLLAR, WHEEL	2					
8	21C–F5181–00	EJE DE LA RUEDA AXLE, WHEEL	1					
9	95602–14200	TUERCA DE AUTO-CIERRE NUT, SELF-LOCKING	1					
10	2FB–F531B–50	EMBLEMA DE RUEDA EMBLEM, WHEEL	2					UR PARA DPBMY UR FOR DPBMY
	2GS–F531B–60	EMBLEMA DE RUEDA EMBLEM, WHEEL	2					UR PARA MNM3 UR FOR MNM3

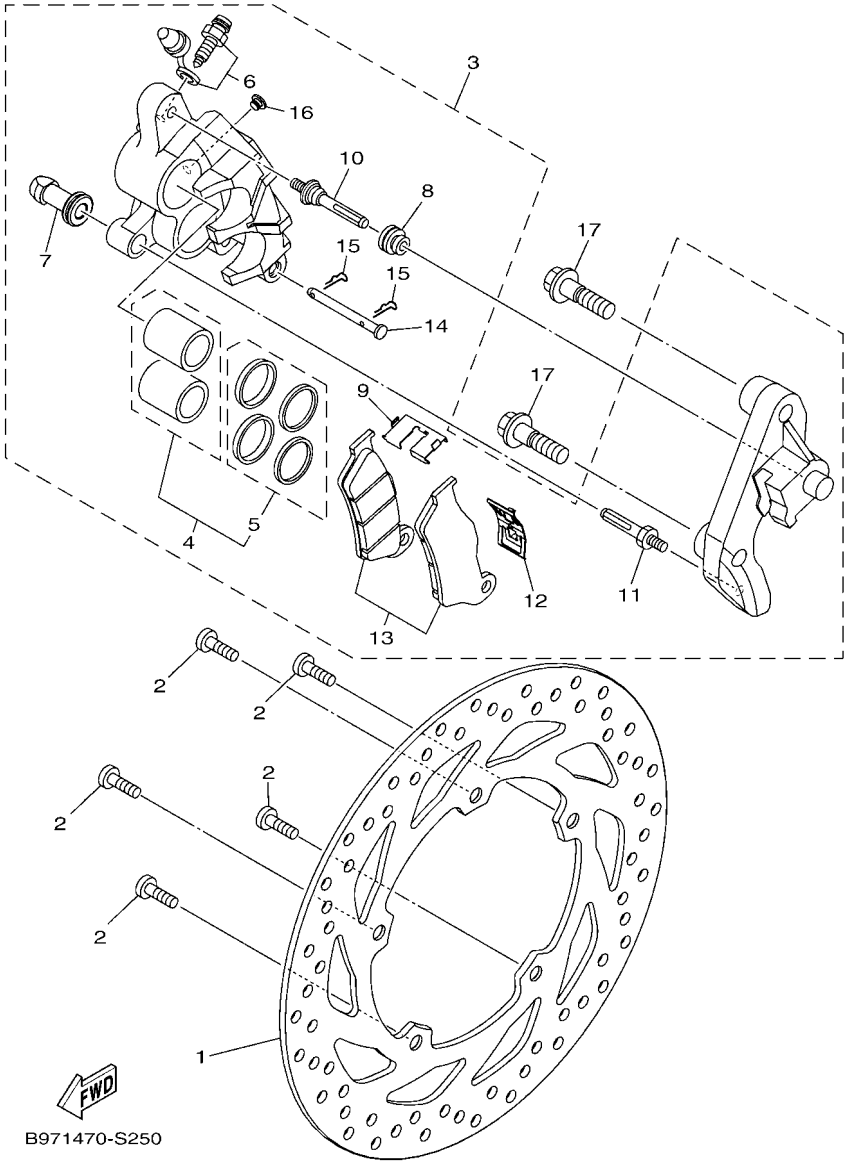

FIG. 26 CALIBRE FRENO DELANTERA — FRONT BRAKE CALIPER

REF. Nº	CODIGO Nº PART NO.	DESCRIPCION DESCRIPTION	B1L1					OBSERVACIONES REMARKS
1	B97–F582U–00	DISCO DE FRENO (DERECHO) DISK, BRAKE (RIGHT)	1					
2	90111–08029	TORNILLO BOLT,HEX. SOCKET BUTTON	5					
3	B97–F580U–00	CALIBRE COMPLETO (DERECHO) CALIPER ASSY (RIGHT)	1					
4	54B–W0057–00	.PISTON COMPLETO PINZA .PISTON ASSY, CALIPER	1					
5	54B–W0047–00	..JUEGO DE RETENES DE PINZA ..CALIPER SEAL KIT	1					
6	54B–W0048–00	.CJTO TORNILLO DE PURGA .BLEED SCREW KIT	1					
7	54B–F5937–00	.FUNDA .BOOT 2	1					
8	54B–F5917–00	.FUNDA DE CALIBRE .BOOT, CALIPER	1					
9	54B–F5939–00	.PRESILLA .CLIP, PAD	1					
10	54B–F5914–00	.PASADOR .PIN, SLIDE	1					
11	54B–F5926–00	.PERNO .BOLT	1					
12	54B–F5919–00	.SOPORTE DE PASTILLAS .SUPPORT, PAD	1					
13	B97–W0045–00	.JUEGO DE COJIN DE FRENO .BRAKE PAD KIT	1					
14	54B–F5924–00	.PASADOR .PIN, PAD	1					
15	54B–F5925–00	.PRESILLA .CLIP	2					
16	54B–F5916–00	.TAPON .PLUG	1					
17	90105–10319	TORNILLO BOLT, FLANGE	2					

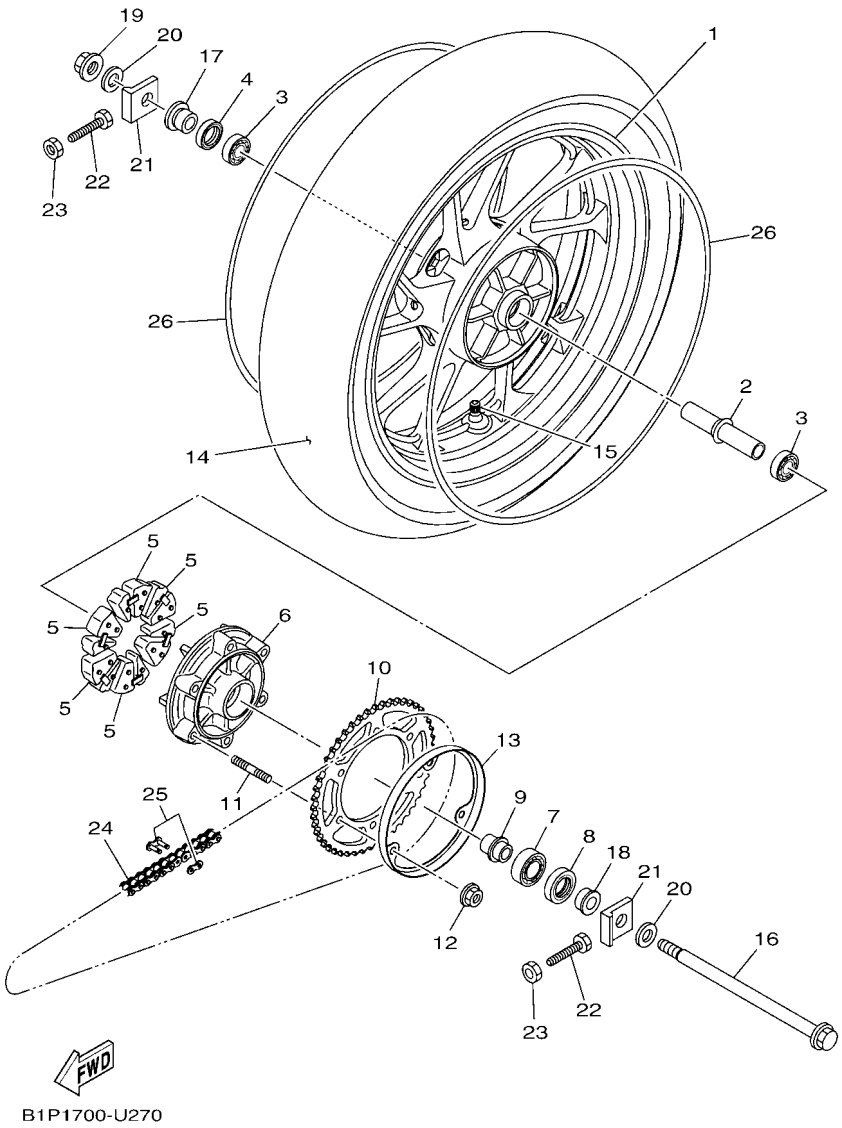

FIG. 27 RUEDA TRASERA — REAR WHEEL

REF. Nº	CODIGO Nº PART NO.	DESCRIPCION DESCRIPTION	B1L1					OBSERVACIONES REMARKS
1	B97–F5338–01–33	RUEDA FUNDIDA TRASERA CAST WHEEL, REAR	1					YB YB
2	B97–F530S–00	ASAMBLEA DE COLLAR COLLAR ASSY	1					
3	93306–252XG	COJINETE BEARING	2					
4	93106–22808	SELLO ACEITE OIL SEAL	1					
5	B97–F5364–00	AMORTIGUADOR DAMPER	6					
6	B97–F5366–00	EMBRAGUE DE MASA CLUTCH, HUB	1					
7	93306–054YA	COJINETE BEARING	1					
8	93106–26801	SELLO ACEITE OIL SEAL	1					
9	B97–F5376–00	COLLAR DE RUEDA COLLAR, WHEEL	1					
10	BK7–F5448–00	CORONA (48D) SPROCKET, DRIVEN (48T)	1					
11	90116–08846	ESPARRAGO BOLT, STUD	6					
12	95602–08200	TUERCA DE AUTO-CIERRE NUT, U FLANGE	6					
13	B1P–F5414–00	ESPACIADOR SPACER	1					
14	94114–17804	NEUMATICO (140/70-17 M/C 66H) TIRE (140/70-17 M/C 66H)	1					MRF MRF
15	93900–00824	VALVULA VALVE, RIM	1					
16	BK7–F5381–00	EJE DE RUEDA AXLE, WHEEL	1					
17	B97–F5377–00	COLLAR DE RUEDA COLLAR, WHEEL	1					
18	B97–F5383–00	COLLAR DE RUEDA COLLAR, WHEEL	1					
19	95602–14200	TUERCA DE AUTO-CIERRE NUT, SELF-LOCKING	1					
20	90201–15814	ARANDELA PLANA WASHER, PLATE	2					
21	1CK–F5388–00	TIRADOR DE CADENA 1 PULLER, CHAIN 1	2					
22	90101–08006	TORNILLO BOLT	2					
23	95302–08700	TUERCA NUT, HEXAGON	2					
24	94568–K4127	CADENA (R428NAR 127LL) CHAIN (R428NAR 127LL)	1					
25	94668–K402R	CONECTOR DE CADENA (R428NAR) JOINT, CHAIN (R428NAR)	1					
26	2FB–F531B–50	EMBLEMA DE RUEDA EMBLEM, WHEEL	2					UR PARA DPBMY UR FOR DPBMY
	2GS–F531B–60	EMBLEMA DE RUEDA EMBLEM, WHEEL	2					UR PARA MNM3 UR FOR MNM3

FIG. 28 CALIBRE FRENO TRASERA — REAR BRAKE CALIPER

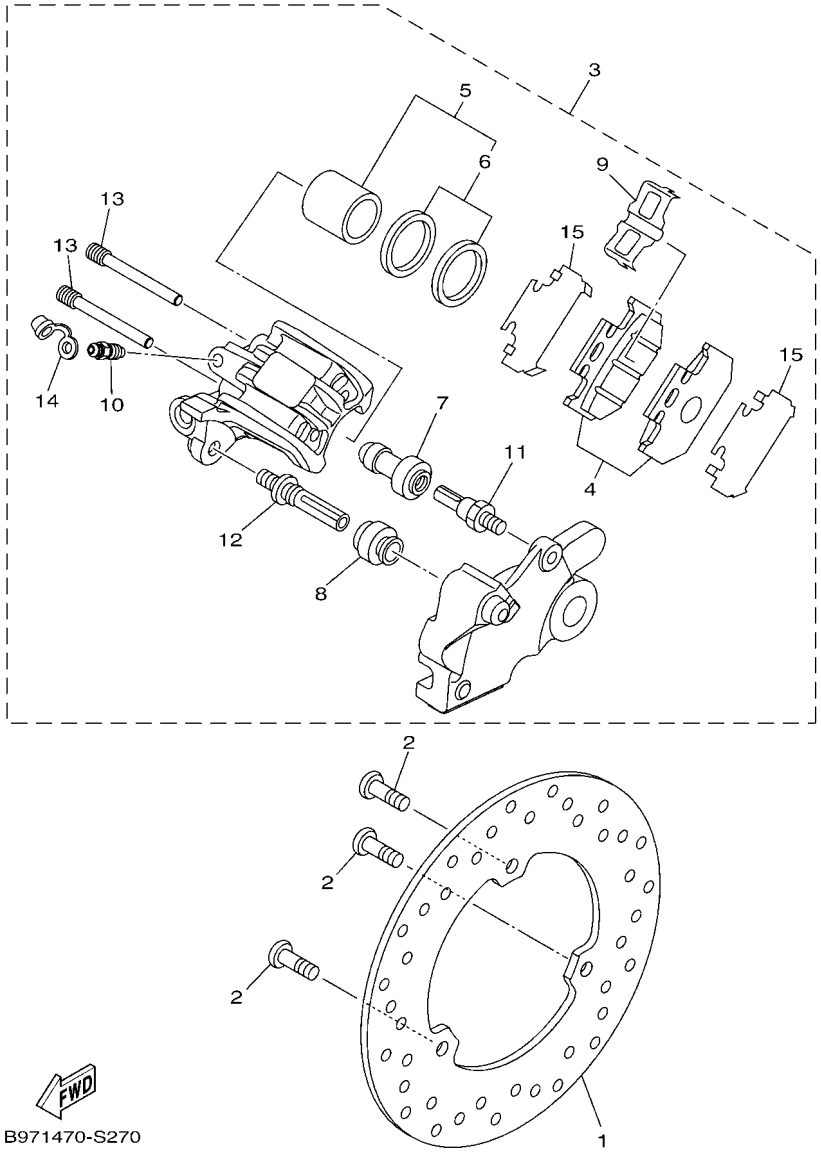

REF. Nº	CODIGO Nº PART NO.	DESCRIPCION DESCRIPTION	B1L1					OBSERVACIONES REMARKS
1	B97–F582W–00	DISCO DE FRENO TRASEROS 2 DISK, REAR BRAKE 2	1					
2	90111–08029	TORNILLO BOLT,HEX. SOCKET BUTTON	3					
3	B97–F580W–00	CALIBRE COMPLETO TRASEROS 2 CALIPER ASSY, REAR 2	1					
4	B97–F5806–00	.JUEGO DE PASTILLAS DE FRENO 2 .BRAKE PAD KIT 2	1					
5	5XT–25802–50	.PISTON COMPLETO PINZA .PISTON ASSY, CALIPER	1					
6	3JD–25803–50	..JUEGO DE RETENES DE PINZA ..CALIPER SEAL KIT	1					
7	5HH–F5937–00	.FUNDA .BOOT 2	1					
8	5HH–F5917–00	.FUNDA DE CALIBRE .BOOT, CALIPER	1					
9	3SP–25919–51	.SOPORTE DE PASTILLAS .SUPPORT, PAD	1					
10	5HH–F5824–00	.TORNILLO DE RESPIRADERO .SCREW, BLEED	1					
11	5HH–F5914–00	.PASADOR .PIN, SLIDE	1					
12	3SP–25926–51	.PERNO .BOLT	1					
13	3SP–25924–51	.PASADOR .PIN, PAD	2					
14	5HH–F5825–51	.TAPA .CAP	1					
15	5XT–25827–00	.CUNA DE CALIBRE .SHIM, CALIPER	2					

FIG. 29 MANILLAR & CABLE — STEERING HANDLE & CABLE

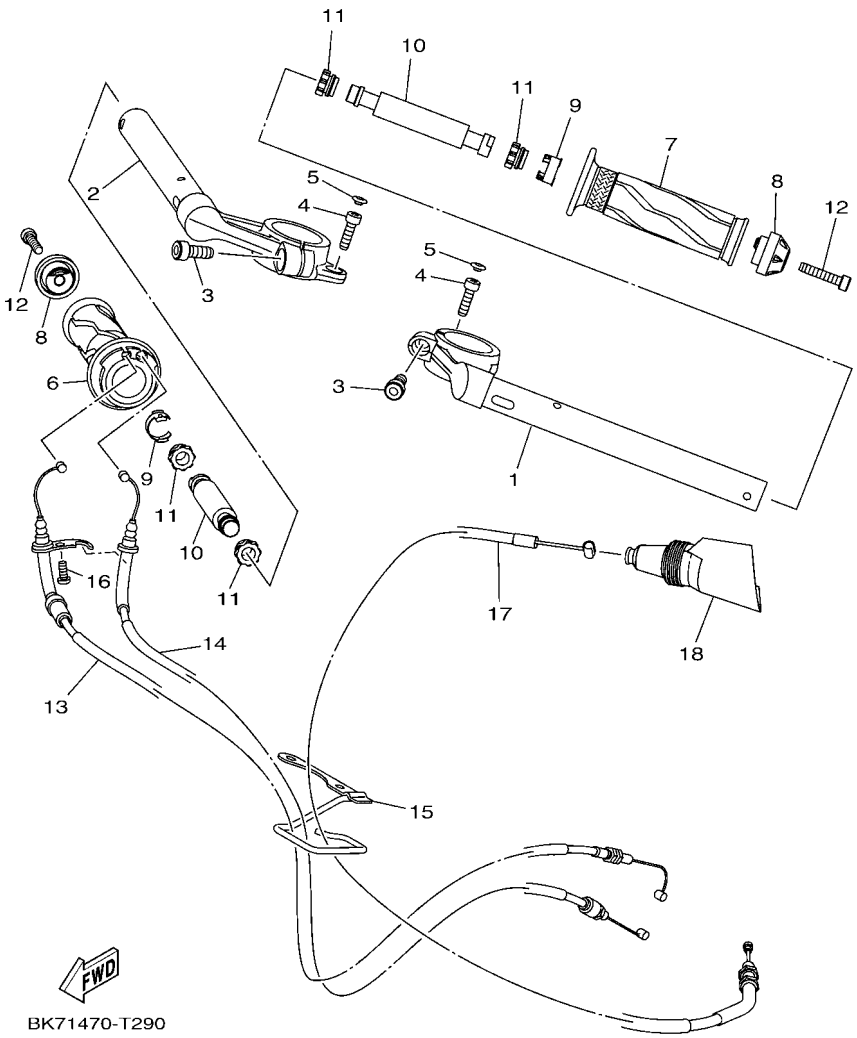

REF. Nº	CODIGO Nº PART NO.	DESCRIPCION DESCRIPTION	B1L1					OBSERVACIONES REMARKS
1	BK7–F6121–00	MANUBRIO (MI) HANDLEBAR (LEFT)	1					
2	BK7–F6122–00	MANUBRIO (MD) HANDLEBAR (RIGHT)	1					
3	91317–08020	TORNILLO ALLEN BOLT,HEX.SOCKET HEAD	2					
4	91317–06020	TORNILLO ALLEN BOLT,HEX.SOCKET HEAD	2					
5	20P–F3469–00	TAPA DE PERNO CAP, BOLT	2					
6	BK7–F6240–00	EMPUNADURA COMPLETA GRIP ASSY	1					
7	20P–F6241–00	EMPUNADURA GRIP	1					
8	BK7–F6246–00	EXTREMO DE EMPUNADURA END, GRIP	2					
9	20P–F6257–00	TOPE STOPPER	2					
10	20P–F622H–00	CONTRAPESO WEIGHT	2					
11	20P–F622F–00	AMORTIGUADOR, DE UBICACION 1 DAMPER, LOCATING 1	4					
12	91317–06030	TORNILLO ALLEN BOLT,HEX.SOCKET HEAD	2					
13	BK7–F6311–00	CABLE DE ACELERADOR 1 CABLE, THROTTLE 1	1					
14	BK7–F6312–00	CABLE DE ACELERADOR 2 CABLE, THROTTLE 2	1					
15	BK7–F6315–00	GUIA DE CABLE GUIDE, WIRE	1					
16	98507–05012	TORNILLO DE CABEZA PLANA SCREW, PAN HEAD	1					
17	BK7–F6335–00	CABLE DE EMBRAGUE CABLE, CLUTCH	1					
18	BK7–F6372–00	CUBIERTA DE PALANCA DE MANUB 1 COVER, HANDLE LEVER 1	1					

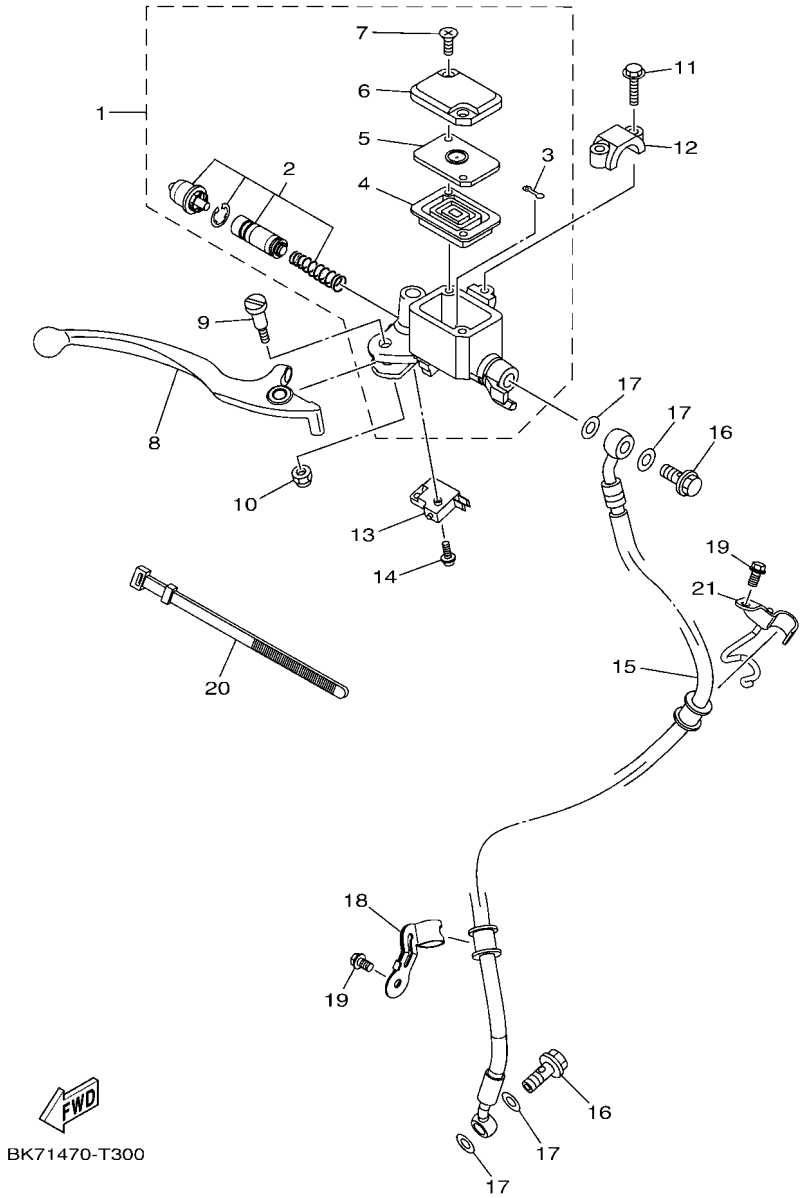

FIG. 30 CILINDRO MAESTRO DELANTERO — FRONT MASTER CYLINDER

REF. Nº	CODIGO Nº PART NO.	DESCRIPCION DESCRIPTION	B1L1					OBSERVACIONES REMARKS
1	B97–F580A–00	CILINDRO MAESTRO SUB COMPLET 2 MASTER CYLINDER SUB ASSY 2	1					
2	B97–F5807–00	.JUEGO DE CILINDRO MAESTRO .CYLINDER KIT, MASTER	1					
3	B97–F5715–00	.CUBIERTA 1 .COVER 1	1					
4	54B–F5854–00	.EMPAQUE,DIAFRAGMA .DIAPHRAGM, RESERVOIR	1					
5	54B–F5855–00	.BUJE DE DIAFRAGMA .BUSH,DIAPHRAGM	1					
6	54B–F5852–00	.TAPA DE TANQUE DE RESERVA .CAP, RESERVOIR	1					
7	54B–F589H–00	.TORNILLO .SCREW	2					
8	B97–H3922–00	PALANCA 2 LEVER 2	1					
9	90109–06859	PERNO BOLT	1					
10	54B–F6338–00	TUERCA DE AJUSTE NUT, ADJUSTING	1					
11	90105–06859	TORNILLO BOLT, FLANGE	2					
12	B97–F5867–00	SOPORTE DE CILINDRO MAESTRO BRACKET, MASTER CYLINDER	1					
13	B97–H3980–00	INTERRUP. DE PARADA DELANTERO FRONT STOP SWITCH ASSY	1					
14	B97–F589H–00	TORNILLO SCREW	1					
15	BK7–F5872–00	MANGUERA DE FRENO 1 HOSE, BRAKE 1	1					
16	90401–10818	PERNO DE UNION BOLT, UNION	2					
17	90201–10815	ARANDELA PLANA WASHER, PLATE	4					
18	BK7–F5886–00	SOPORTE DE MANGUERA FRENO HOLDER, BRAKE HOSE	1					
19	95027–06010	PERNO, DE BRIDA BOLT, FLANGE	2					
20	5TS–H3936–01	BANDA DE CABLE DE INTERRUPTOR BAND, SWITCH CORD	1					
21	BK7–F5887–00	SOPORTE DE MANGUERA FRENO HOLDER, BRAKE HOSE	1					

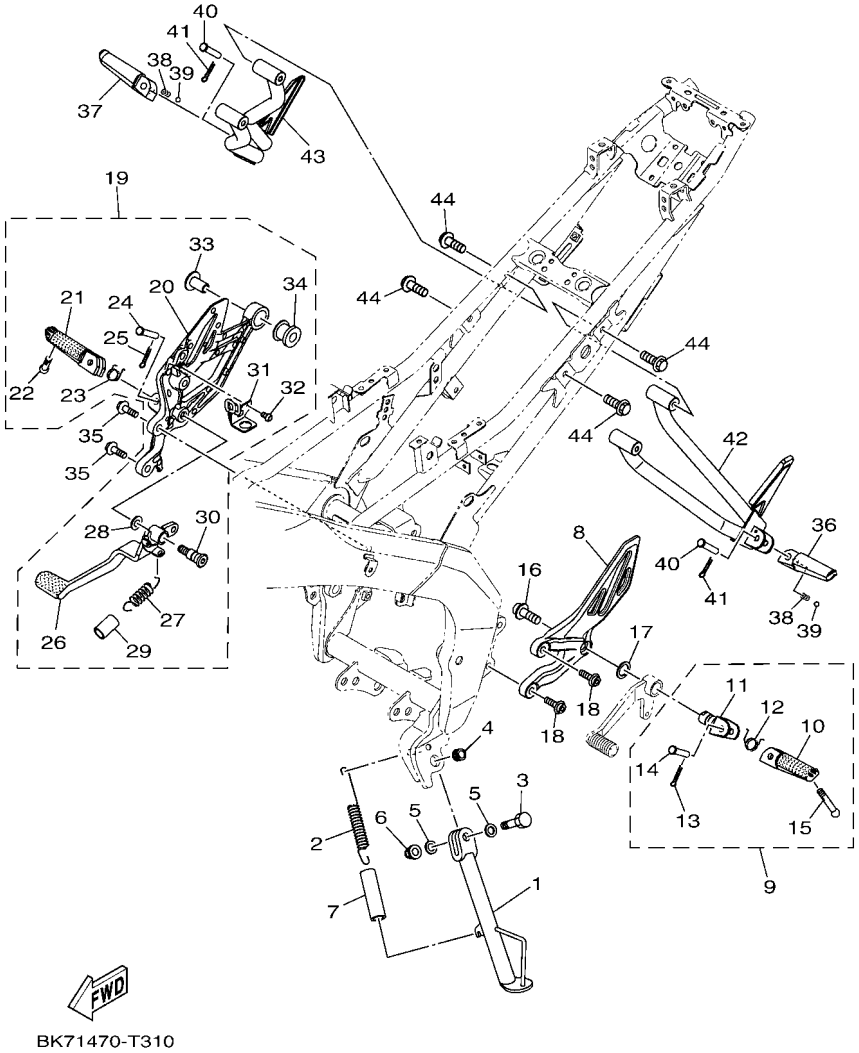

FIG. 31 SOPORTE & APOYAPIE — STAND & FOOTREST

REF. Nº	CODIGO Nº PART NO.	DESCRIPCION DESCRIPTION	B1L1					OBSERVACIONES REMARKS
1	BK7–F7311–00	PUNTAL LATERAL STAND, SIDE	1					
2	90506–28800	RESORTE DE TENSION SPRING, TENSION	1					
3	90101–10812	TORNILLO BOLT	1					
4	90387–10003	ESPACIADOR COLLAR	1					
5	90201–10841	ARANDELA PLANA WASHER, PLATE	2					
6	90185–10804	TUERCA AUTOBLOCANTE NUT, SELF-LOCKING	1					
7	90445–21848	TUBO (L70) HOSE (L70)	1					
8	BK7–F7442–00	SOPORTE 2 BRACKET 2	1					
9	BK7–F7410–00	APOYAPIE DELANTERO (MI) FRONT FOOTREST ASSY (LEFT)	1					
10	20P–F7451–00	.APOYAPIE .FOOTREST	1					
11	BK7–F7411–00	.APOYAPIE 1 .FOOTREST 1	1					
12	90508–183B9	.RESORTE DE TORSION .SPRING, TORSION	1					
13	90252–18800	.PASADOR DE CHAVETA .PIN, COTTER	1					
14	91701–08035	.PASADOR DE ABRAZADERA .PIN	1					
15	90109–08225	.PERNO .BOLT	1					
16	90110–10026	TORNILLO ALLEN BOLT, HEXAGON SOCKET HEAD	1					
17	90201–173U5	ARANDELA PLANA WASHER, PLATE	1					
18	90110–08803	TORNILLO ALLEN BOLT, HEXAGON SOCKET HEAD	2					
19	BK7–F7404–00	APOYAPIE COMPLETO 2 FOOTREST ASSY 2	1					
20	BK7–F7443–00	.SOPORTE 3 .BRACKET 3	1					
21	20P–F7461–00	.APOYAPIE .FOOTREST	1					
22	90109–08225	.PERNO .BOLT	1					
23	90508–184B0	.RESORTE DE TORSION .SPRING, TORSION	1					
24	90240–08145	.PASADOR CON HOYO .PIN, CLEVIS	1					
25	90252–18800	.PASADOR DE CHAVETA .PIN, COTTER	1					
26	BK7–F7211–00	.PEDAL DE FRENO .PEDAL, BRAKE	1					
27	90506–26807	.RESORTE DE TENSION .SPRING, TENSION	1					

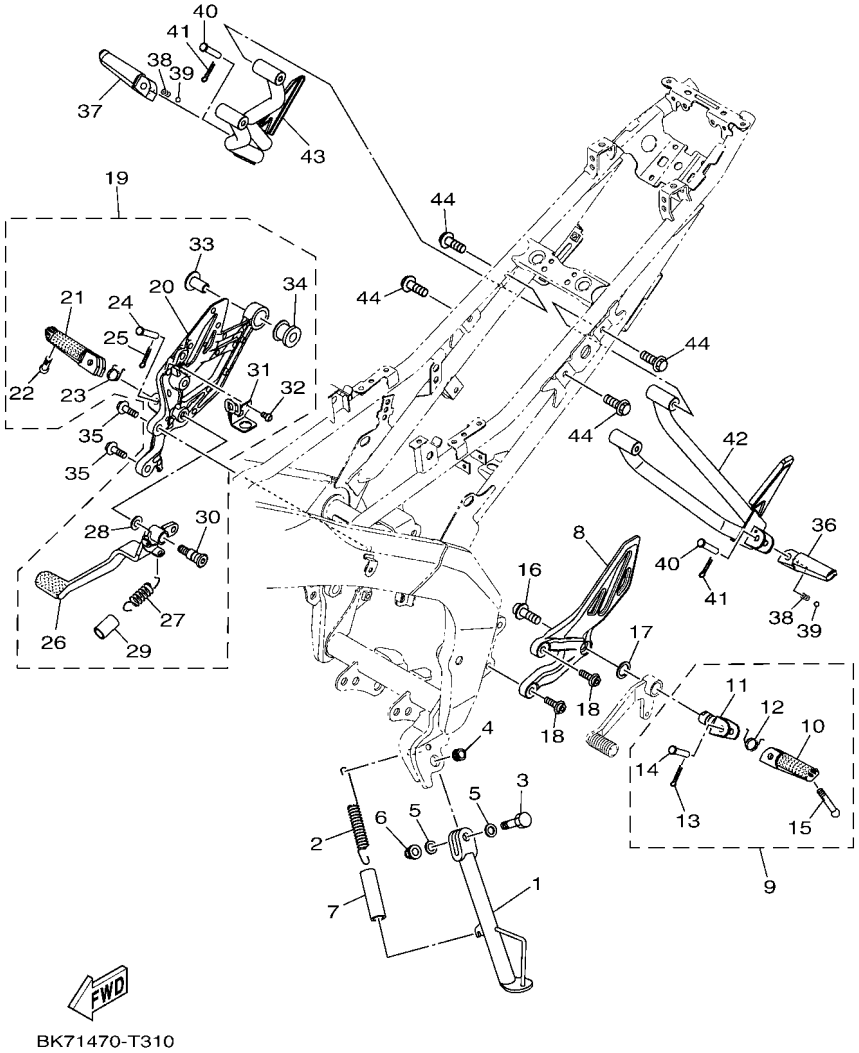

FIG. 31 SOPORTE & APOYAPIE — STAND & FOOTREST

REF. Nº	CODIGO Nº PART NO.	DESCRIPCION DESCRIPTION	B1L1					OBSERVACIONES REMARKS
28	90201–10021	.ARANDELA PLANA .WASHER, PLATE	1					
29	90445–19807	.TUBO .HOSE	1					
30	21C–F7261–00	.EJE .SHAFT	1					
31	BK7–F144G–00	.SOPORTE DE INTERRUPTOR .STAY, STOP SWITCH	1					
32	92012–06010	.PERNO .BOLT, BUTTON HEAD	1					
33	90387–08842	.ESPACIADOR .COLLAR	1					
34	BK7–E4747–00	.AMORTIGUADOR DE SILENCIADOR .DAMPER, MUFFLER	1					
35	90110–08803	TORNILLO ALLEN BOLT, HEXAGON SOCKET HEAD	2					
36	20P–F7431–00	APOYAPIE POSTERIOR 1 FOOTREST, REAR 1	1					
37	20P–F7441–00	APOYAPIE POSTERIOR 2 FOOTREST, REAR 2	1					
38	90501–12743	RESORTE DE COMPRESION SPRING, COMPRESSION	2					
39	93501–04805	BOLA BALL	2					
40	90240–08800	PASADOR CON HOYO PIN, CLEVIS	2					
41	90252–18800	PASADOR DE CHAVETA PIN, COTTER	2					
42	BK7–F741L–00	MENSULA 4 BRACKET 4	1					
43	BK7–F742L–00	MENSULA 5 BRACKET 5	1					
44	95812–08025	TORNILLO DE REBORDE BOLT, FLANGE	4					

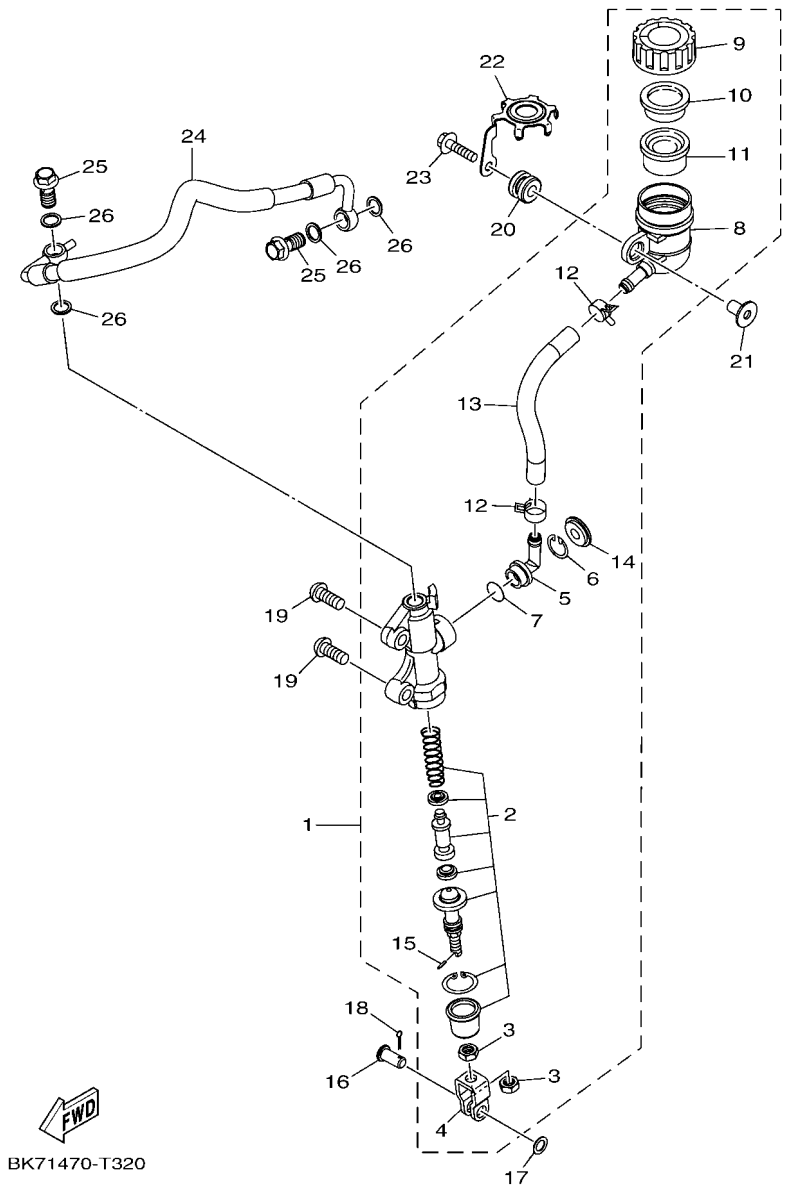

FIG. 32 CILINDRO MAESTRO TRASERO — REAR MASTER CYLINDER

REF. Nº	CODIGO Nº PART NO.	DESCRIPCION DESCRIPTION	B1L1					OBSERVACIONES REMARKS
1	BK6–F580E–00	CYLINDRO MAESTRO TRASERO COMP REAR MASTER CYLINDER ASSY	1					
2	B97–F5808–00	.JUEGO DE CILINDRO MAESTRO .CYLINDER KIT, MASTER	1					
3	95302–08700	.TUERCA .NUT, HEXAGON	2					
4	50C–F7222–00	.UNION .JOINT	1					
5	50C–F582A–50	.CONECTOR .JOINT	1					
6	50C–F5866–00	.PRESILLA REDONDA .CIRCLIP	1					
7	93210–15620	.ANILLO O .O-RING	1					
8	50C–F5894–11	.TANQUE DE RESERVA .TANK, RESERVOIR	1					
9	BK6–F5852–00	.TAPA DE TANQUE DE RESERVA .CAP, RESERVOIR	1					
10	50C–F5855–00	.BUJE DE DIAFRAGMA .BUSH,DIAPHRAGM	1					
11	2VN–F5854–00	.EMPAQUE,DIAFRAGMA .DIAPHRAGM, RESERVOIR	1					
12	90467–12085	.PRESILLA .CLIP	2					
13	BK6–F5895–00	.MANGUERA DE TANQUE DE RESERVA .HOSE, RESERVOIR	1					
14	50C–F589A–00	.CUBIERTA PARA POLVO .COVER, DUST	1					
15	5BU–27234–00	.PASADOR DE VARILLA DE FRENO .PIN, BRAKE ROD	1					
16	90240–08005	PASADOR CON HOYO PIN, CLEVIS	1					
17	90201–08066	ARANDELA PLANA WASHER, PLATE	1					
18	90252–18800	PASADOR DE CHAVETA PIN, COTTER	1					
19	92012–08020	PERNO BOLT, BUTTON HEAD	2					
20	BK7–F4742–00	ANILLO PROTECTOR GROMMET	1					
21	BK7–F6259–00	COLLAR COLLAR	1					
22	BK7–F5888–00	CUBIERTA DE TANQUE DE RESERVA COVER, RESERVOIR TANK	1					
23	95807–06025	TORNILLO BOLT, FLANGE	1					
24	BK7–F5873–00	MANGUERA DE FRENO 2 HOSE, BRAKE 2	1					
25	90401–10812	PERNO DE UNION BOLT, UNION	2					
26	90201–10118	ARANDELA PLANA WASHER, PLATE	4					

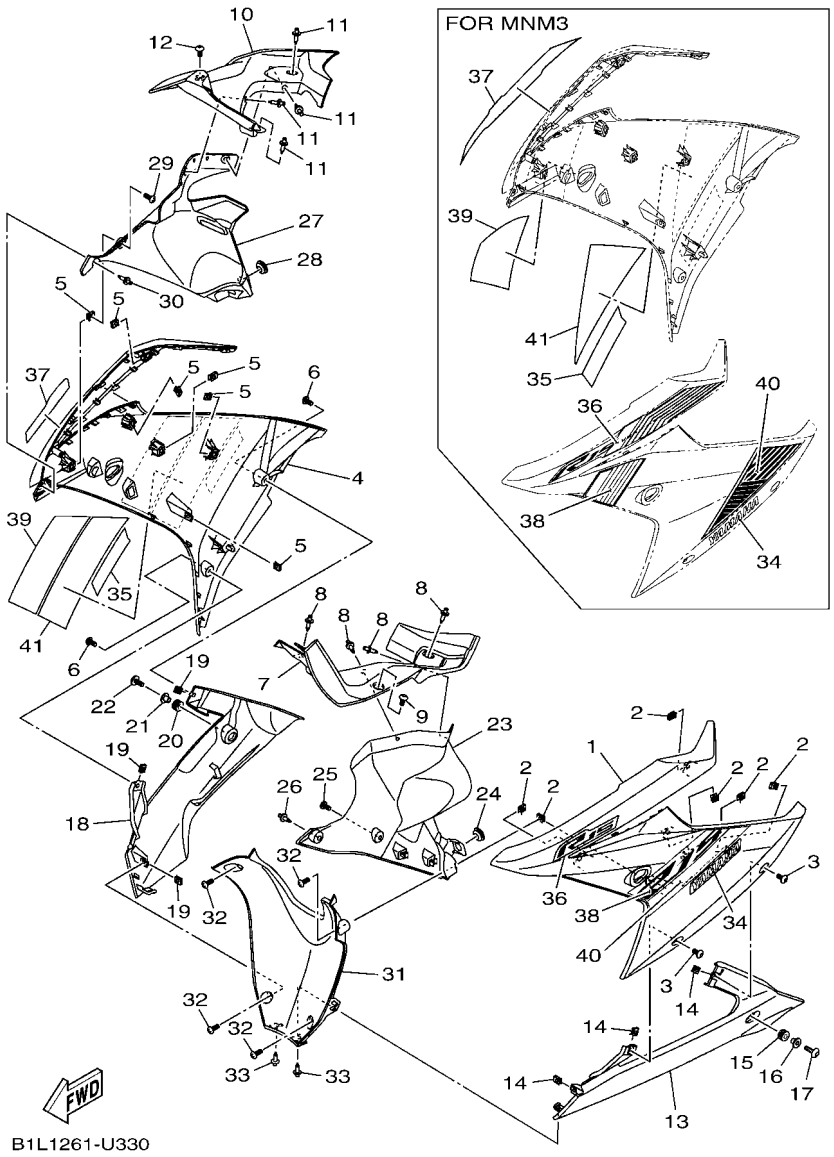

FIG. 33 PATA PROTEGIDA — LEG SHIELD

REF. Nº	CODIGO Nº PART NO.	DESCRIPCION DESCRIPTION	B1L1					OBSERVACIONES REMARKS
1	BK7–F835U–00–P0	PANEL 1 PANEL 1	1					UR PARA DPBMY UR FOR DPBMY
	BK7–F835U–00–P1	PANEL 1 PANEL 1	1					UR PARA MNM3 UR FOR MNM3
2	90183–05807	TUERCA DE RESORTE NUT, SPRING	6					
3	90160–05812	TORNILLO REDONDO ROSCA HEMBRA SCREW, ROUND TAPPING	2					
4	BK7–F835V–00–P0	PANEL 2 PANEL 2	1					UR PARA DPBMY UR FOR DPBMY
	BK7–F835V–00–P1	PANEL 2 PANEL 2	1					UR PARA MNM3 UR FOR MNM3
5	90183–05807	TUERCA DE RESORTE NUT, SPRING	6					
6	90160–05812	TORNILLO REDONDO ROSCA HEMBRA SCREW, ROUND TAPPING	2					
7	BK7–F837L–00	PANEL DE CONSOLA PANEL, CONSOLE 1	1					
8	90269–06812	REMACHE RIVET	4					
9	90160–05812	TORNILLO REDONDO ROSCA HEMBRA SCREW, ROUND TAPPING	1					
10	BK7–F837M–00	PANEL, DE CONSOLA 2 PANEL, CONSOLE 2	1					
11	90269–06812	REMACHE RIVET	4					
12	90160–05812	TORNILLO REDONDO ROSCA HEMBRA SCREW, ROUND TAPPING	1					
13	BK7–F8385–00–P0	CUBIERTA INFERIOR COVER, UNDER	1					SMX SMX
14	90183–05807	TUERCA DE RESORTE NUT, SPRING	3					
15	90480–12808	TAPON GROMMET	1					
16	90387–06899	ESPACIADOR COLLAR	1					
17	90111–06117	TORNILLO BOLT,HEX. SOCKET BUTTON	1					
18	BK7–F8395–00–P0	CUBIERTA INFERIOR 2 COVER, UNDER 2	1					SMX SMX
19	90183–05807	TUERCA DE RESORTE NUT, SPRING	3					
20	90480–12808	TAPON GROMMET	1					
21	90387–06899	ESPACIADOR COLLAR	1					
22	90111–06117	TORNILLO BOLT,HEX. SOCKET BUTTON	1					
23	BK7–F836K–00	PANEL 1 PANEL, INNER 1	1					
24	90480–01559	TAPON GROMMET	1					
25	97707–50016	TORNILLO SCREW, TRUSS HEAD TAPPING	1					

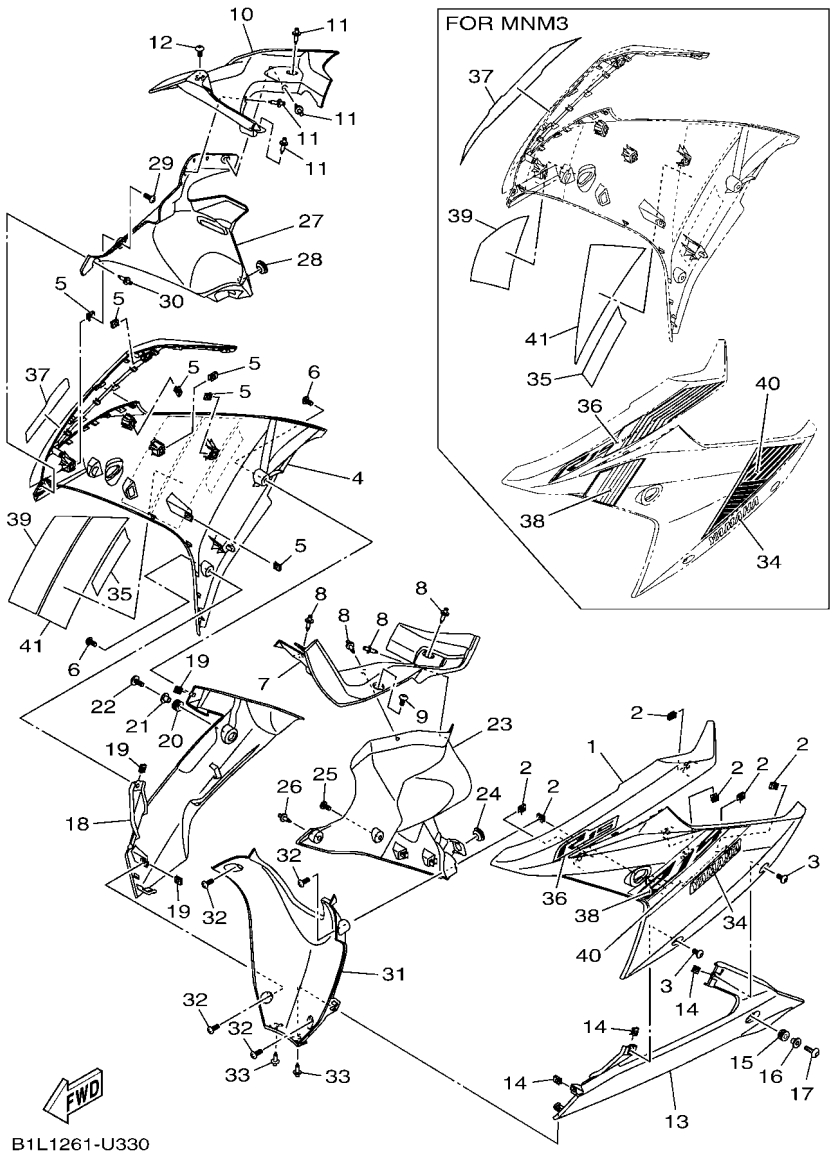

FIG. 33 PATA PROTEGIDA — LEG SHIELD

REF. Nº	CODIGO Nº PART NO.	DESCRIPCION DESCRIPTION	B1L1					OBSERVACIONES REMARKS
26	90269–06812	REMACHE RIVET	1					
27	BK7–F836L–00	PANEL 2 PANEL, INNER 2	1					
28	90480–01559	TAPON GROMMET	1					
29	97707–50016	TORNILLO SCREW, TRUSS HEAD TAPPING	1					
30	90269–06812	REMACHE RIVET	1					
31	BK7–F836M–00	PANEL 3 PANEL, INNER 3	1					
32	97707–50016	TORNILLO SCREW, TRUSS HEAD TAPPING	4					
33	90269–06812	REMACHE RIVET	2					
34	B1L–F841H–00	GRAFICO 5 GRAPHIC, 5	1					
35	B1L–F841H–00	GRAFICO 5 GRAPHIC, 5	1					
36	B1L–F8391–00	CALCOMANIA 1 GRAPHIC 1	1					UR PARA DPBMY UR FOR DPBMY
	B1L–F8391–10	CALCOMANIA 1 GRAPHIC 1	1					UR PARA MNM3 UR FOR MNM3
37	B1L–F8392–00	CALCOMANIA 2 GRAPHIC 2	1					UR PARA DPBMY UR FOR DPBMY
	B1L–F8392–10	CALCOMANIA 2 GRAPHIC 2	1					UR PARA MNM3 UR FOR MNM3
38	B1L–F8393–00	CALCOMANIA 3 GRAPHIC 3	1					UR PARA DPBMY UR FOR DPBMY
	B1L–F8393–10	CALCOMANIA 3 GRAPHIC 3	1					UR PARA MNM3 UR FOR MNM3
39	B1L–F8394–00	CALCOMANIA 4 GRAPHIC 4	1					UR PARA DPBMY UR FOR DPBMY
	B1L–F8394–10	CALCOMANIA 4 GRAPHIC 4	1					UR PARA MNM3 UR FOR MNM3
40	B1L–F8398–00	GRAFICO 5 GRAPHIC 5	1					UR PARA DPBMY UR FOR DPBMY
	B1L–F8398–10	GRAFICO 5 GRAPHIC 5	1					UR PARA MNM3 UR FOR MNM3
41	B1L–F8399–00	CALCOMANIA 6 GRAPHIC 6	1					UR PARA DPBMY UR FOR DPBMY
	B1L–F8399–10	CALCOMANIA 6 GRAPHIC 6	1					UR PARA MNM3 UR FOR MNM3

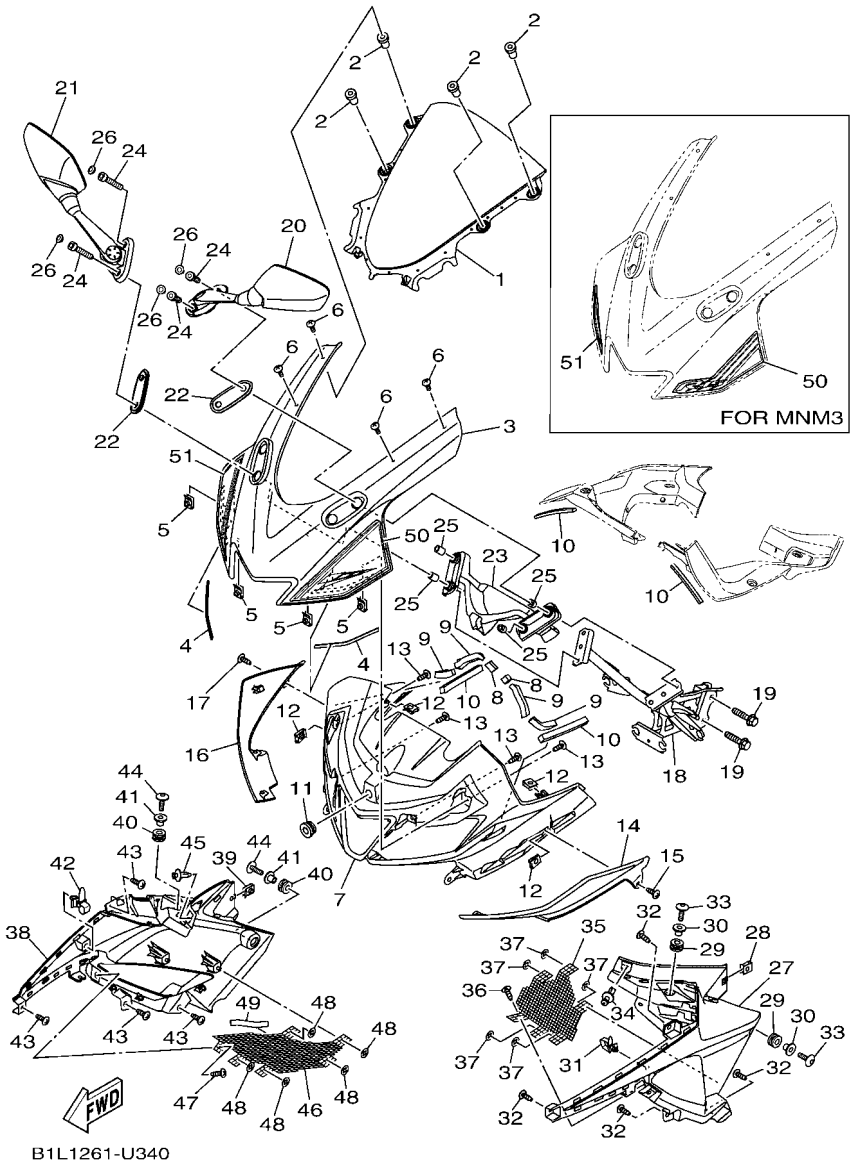

FIG. 34 PARABRISAS — WINDSHIELD

REF. Nº	CODIGO Nº PART NO.	DESCRIPCION DESCRIPTION	B1L1					OBSERVACIONES REMARKS
1	BK7–F8381–00	PARABRISA WINDSHIELD	1					
2	90179–05804	TUERCA NUT	4					
3	BK7–F8351–00–P0	CUERPO DE COBERTURA BODY, COWLING	1					UR SMX PARA DBPMY UR SMX FOR DBPMY
	BK7–F8351–00–P1	CUERPO DE COBERTURA BODY, COWLING	1					UR VRC1 PARA MNM3 UR VRC1 FOR MNM3
4	90520–02838	EQUILIBRIO, CUBIERTA DAMPER, PLATE	2					
5	90183–05807	TUERCA DE RESORTE NUT, SPRING	4					
6	90150–05024	TORNILLO CABEZA REDONDA SCREW, ROUND HEAD	4					
7	BK7–F835G–00	CARROCERIA, DELANT. SUP. 1 BODY, FRONT UPPER 1	1					
8	90520–10839	EQUILIBRIO, CUBIERTA DAMPER, PLATE	2					
9	90520–10847	EQUILIBRIO, CUBIERTA DAMPER, PLATE	4					
10	90520–10811	EQUILIBRIO, CUBIERTA DAMPER, PLATE	4					
11	90480–13398	TAPON GROMMET	1					
12	90183–05807	TUERCA DE RESORTE NUT, SPRING	4					
13	97702–50016	TORNILLO ROSCA HEMBRA SCREW, TAPPING	4					
14	BK7–F172G–00–P0	PANEL 2 PANEL 3	1					UR PARA DPBMY UR FOR DPBMY
	BK7–F172G–00–P1	PANEL 2 PANEL 3	1					UR SMX PARA MNM3 UR SMX FOR MNM3
15	97702–50012	TORNILLO ROSCA HEMBRA SCREW, TAPPING	1					
16	BK7–F172H–00–P0	PANEL 1 PANEL 4	1					UR PARA DPBMY UR FOR DPBMY
	BK7–F172H–00–P1	PANEL 1 PANEL 4	1					UR SMX PARA MNM3 UR SMX FOR MNM3
17	97702–50012	TORNILLO ROSCA HEMBRA SCREW, TAPPING	1					
18	BK7–F8356–00	SOPORTE 1 STAY 1	1					
19	90105–08002	TORNILLO BOLT, FLANGE	2					
20	BK7–F6280–00	ESPEJO COMPLETO (IZQUIERDO) REAR VIEW MIRROR ASSY (LEFT)	1					
21	BK7–F6290–00	ESPEJO COMPLETO (DERECHO) REAR VIEW MIRROR ASSY (RIGHT)	1					
22	BK7–F8483–00	PLACA 1 PLATE, RUBBER 1	2					
23	BK7–F8484–00	PLACA 2 PLATE, RUBBER 2	1					
24	91317–06030	TORNILLO ALLEN BOLT,HEX.SOCKET HEAD	4					

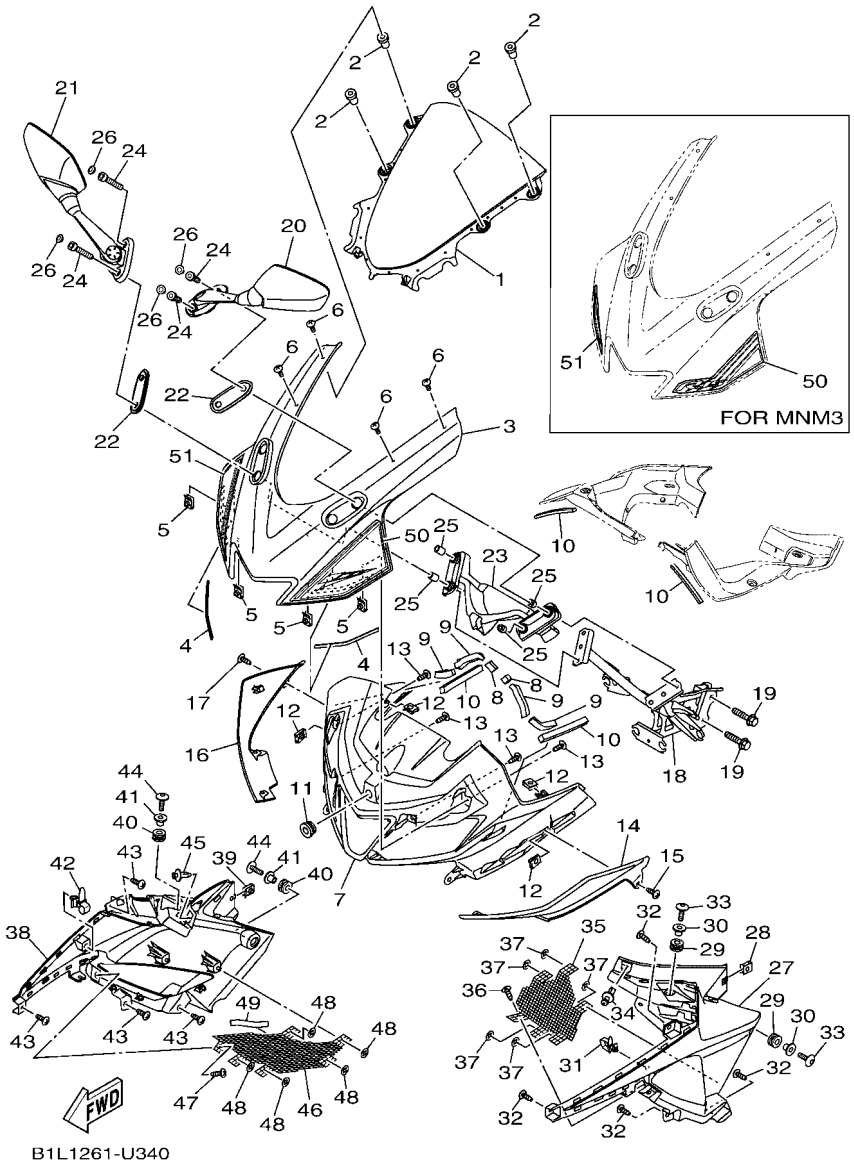

FIG. 34 PARABRISAS — WINDSHIELD

REF. Nº	CODIGO Nº PART NO.	DESCRIPCION DESCRIPTION	B1L1					OBSERVACIONES REMARKS
25	90387–06131	ESPACIADOR COLLAR	4					
26	20P–F3469–00	TAPA DE PERNO CAP, BOLT	4					
27	BK7–F117V–00	CUBIERTA 7 COVER 7	1					
28	90183–05807	TUERCA DE RESORTE NUT, SPRING	1					
29	90480–12808	TAPON GROMMET	2					
30	90387–06899	ESPACIADOR COLLAR	2					
31	90464–12036	BRIDA CLAMP	1					
32	97702–50016	TORNILLO ROSCA HEMBRA SCREW, TAPPING	4					
33	90111–06117	TORNILLO BOLT,HEX. SOCKET BUTTON	2					
34	90269–06812	REMACHE RIVET	1					
35	BK7–F837V–00	REJILLA, SAKIDA DE AIRE 1 GRILL, AIR OUTLET 1	1					
36	97702–50016	TORNILLO ROSCA HEMBRA SCREW, TAPPING	1					
37	90183–05067	TUERCA DE RESORTE NUT, SPRING	5					
38	BK7–F117W–00	CUBIERTA 8 COVER 8	1					
39	90183–05807	TUERCA DE RESORTE NUT, SPRING	1					
40	90480–12808	TAPON GROMMET	2					
41	90387–06899	ESPACIADOR COLLAR	2					
42	90464–12036	BRIDA CLAMP	1					
43	97702–50016	TORNILLO ROSCA HEMBRA SCREW, TAPPING	4					
44	90111–06117	TORNILLO BOLT,HEX. SOCKET BUTTON	2					
45	90269–06812	REMACHE RIVET	1					
46	BK7–F837W–00	REJILLA, SAKIDA DE AIRE 2 GRILL, AIR OUTLET 2	1					
47	97702–50016	TORNILLO ROSCA HEMBRA SCREW, TAPPING	1					
48	90183–05067	TUERCA DE RESORTE NUT, SPRING	5					
49	BK7–F1278–10	MOLDURA MOLD	1					
50	B1L–F841G–00	CALCOMANIA DE BOVEDA 1 GRAPHIC, 1	1					UR PARA DPBMY UR FOR DPBMY
	B1L–F841G–10	CALCOMANIA DE BOVEDA 1 GRAPHIC, 1	1					UR PARA MNM3 UR FOR MNM3

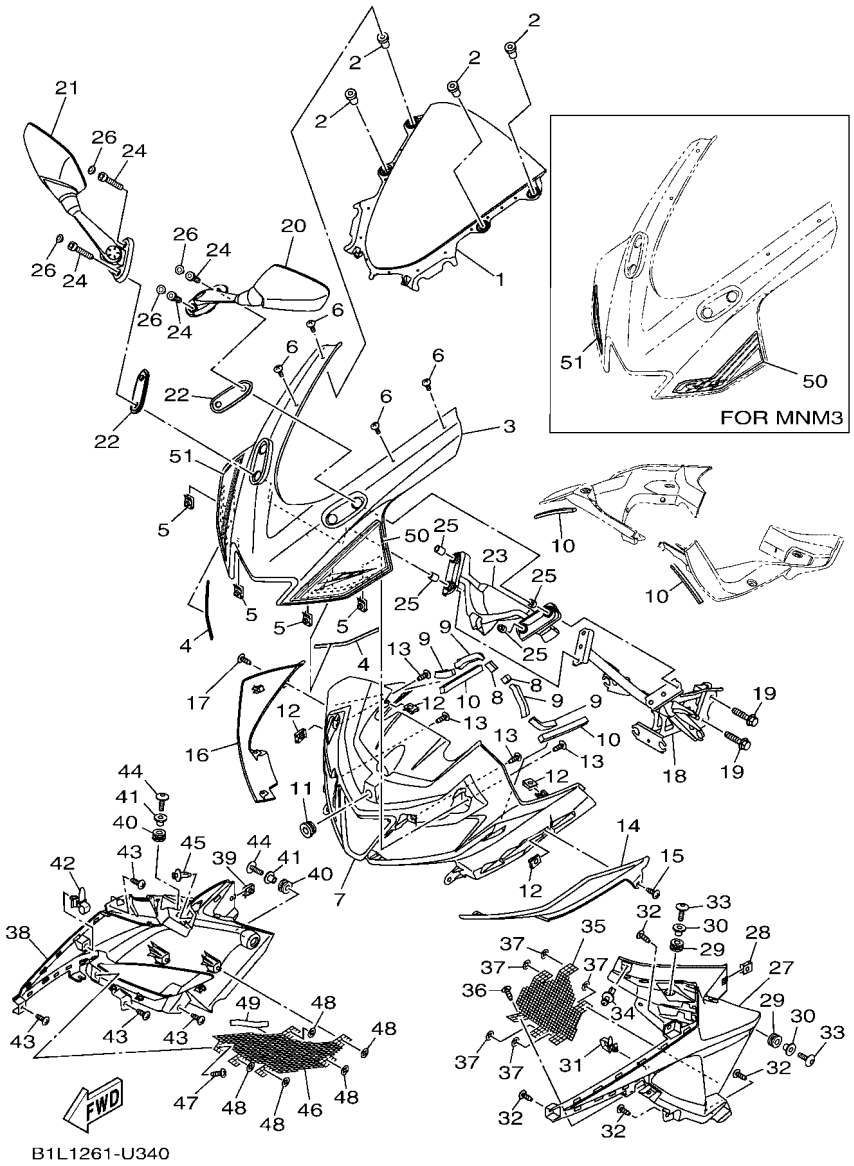

FIG. 34 PARABRISAS — WINDSHIELD

REF. Nº	CODIGO Nº PART NO.	DESCRIPCION DESCRIPTION	B1L1					OBSERVACIONES REMARKS
51	B1L–F842G–00	EMBLEMA 2 GRAPHIC, 2	1					UR PARA DPBMY UR FOR DPBMY
	B1L–F842G–10	EMBLEMA 2 GRAPHIC, 2	1					UR PARA MNM3 UR FOR MNM3

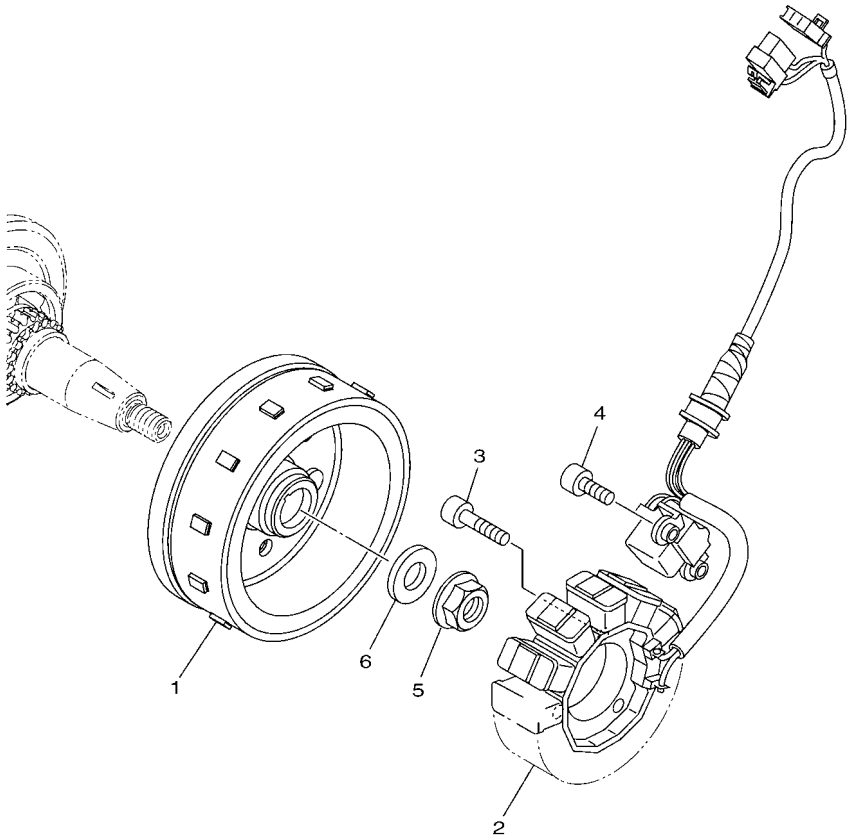

BK61460-S350

FIG. 35 GENERADOR — GENERATOR

REF. Nº	CODIGO Nº PART NO.	DESCRIPCION DESCRIPTION	B1L1					OBSERVACIONES REMARKS
1	BK7–H1450–00	ROTOR COMPLETO ROTOR ASSY	1					
2	BK7–H1410–00	ESTATOR COMPLETO STATOR ASSY	1					
3	91312–06025	TORNILLO ALLEN BOLT, HEXAGON SOCKET HEAD	3					
4	91312–06016	TORNILLO ALLEN BOLT, HEXAGON SOCKET HEAD	2					
5	95702–12500	TUERCA DE BRIDA NUT, FLANGE	1					
6	90201–12019	ARANDELA PLANA WASHER, PLATE	1					

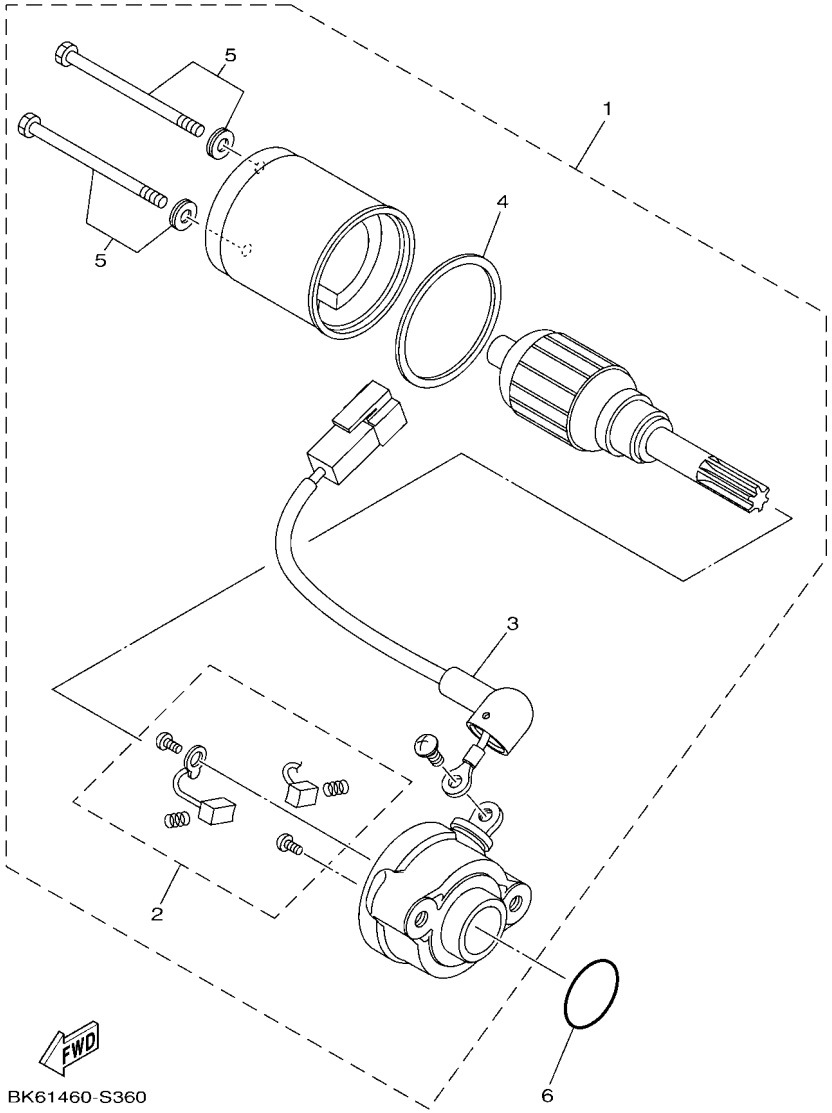

FIG. 36 MOTOR DE ARRANQUE — STARTING MOTOR

REF. Nº	CODIGO Nº PART NO.	DESCRIPCION DESCRIPTION	B1L1					OBSERVACIONES REMARKS
1	BK6–H1800–00	MOTOR DE ARRANQUE COMPLETO STARTING MOTOR ASSY	1					
2	2PH–H1801–10	.JUEGO DE ESCOBILLA .BRUSH SET	1					
3	1FD–H183G–00	.CABLE DEL MOTOR COMPL. .CORD COMP.	1					
4	5D9–H1861–00	.EMPAQUETADURA .GASKET	1					
5	5D9–H1828–00	.TORNILLO DE EMPUJE 2 .SCREW SET	2					
6	93210–26810	ANILLO O O-RING	1					

FIG. 37 LUZ DE DESTELLADOR — FLASHER LIGHT

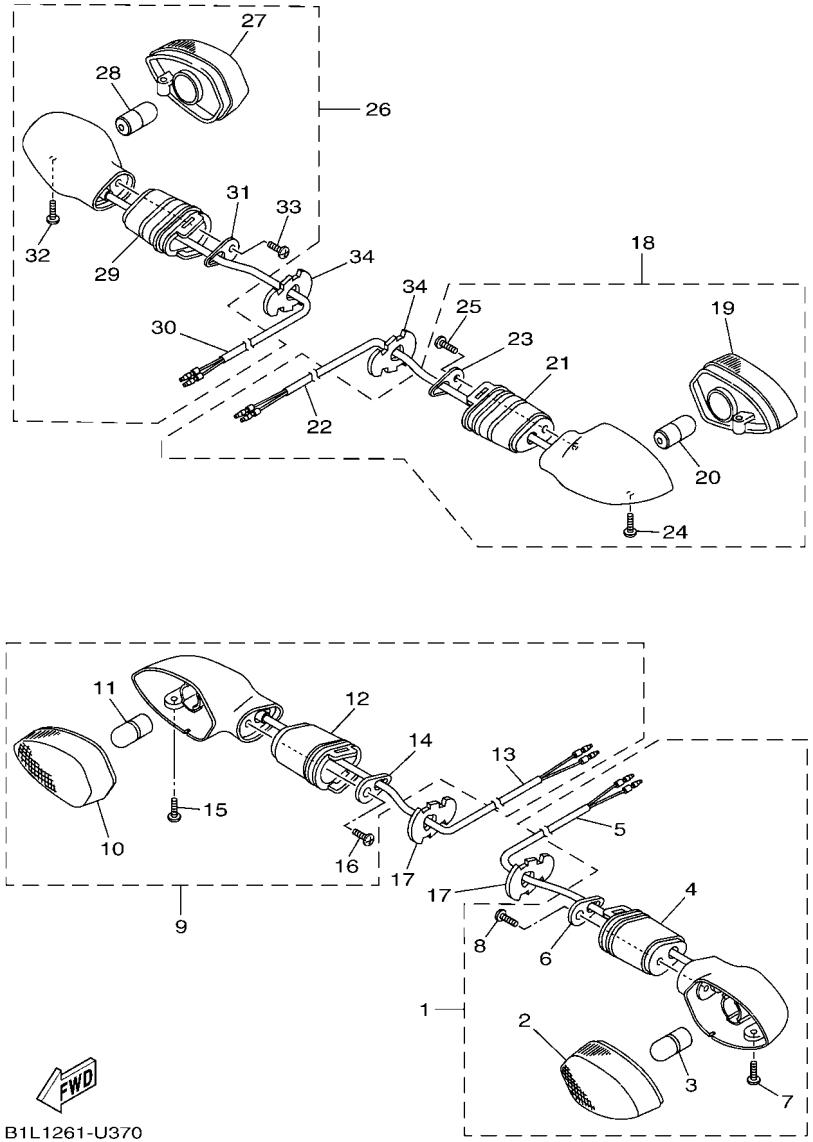

REF. Nº	CODIGO Nº PART NO.	DESCRIPCION DESCRIPTION	B1L1					OBSERVACIONES REMARKS
1	B1L–H3310–00	DESTELLADOR DE LUZ DELANT. FRONT FLASHER LIGHT ASSY 1	1					
2	B1L–H333A–00	.LENTES COMPLETO 1 .LENS COMP 1	1					
3	B1L–H3311–00	.BOMBILLA (12V-10W) .BULB, FLASHER (12V-10W)	1					
4	45D–H3318–00	.SOPORTE DE DESTELLADOR 1 .STAY, FLASHER 1	1					
5	B1L–H331E–00	.CORDON COMPLETO .CORD ASSY	1					
6	45D–H3618–00	.PLACA .PLATE	1					
7	45D–H3333–00	.TORNILLO ACCESORIO DE LENTE .SCREW, LENS FITTING	1					
8	45D–H2133–00	.TORNILLO ACCESORIO .SCREW, FITTING	1					
9	B1L–H3320–00	DESTELLADOR DE LUZ DELANT. FRONT FLASHER LIGHT ASSY 2	1					
10	B1L–H334A–00	.LENTES COMPLETO 2 .LENS COMP 2	1					
11	B1L–H3311–00	.BOMBILLA (12V-10W) .BULB, FLASHER (12V-10W)	1					
12	45D–H3318–00	.SOPORTE DE DESTELLADOR 1 .STAY, FLASHER 1	1					
13	B1L–H332E–00	.CABLE COMPL. .CORD ASSY	1					
14	45D–H3618–00	.PLACA .PLATE	1					
15	45D–H3333–00	.TORNILLO ACCESORIO DE LENTE .SCREW, LENS FITTING	1					
16	45D–H2133–00	.TORNILLO ACCESORIO .SCREW, FITTING	1					
17	2LP–H3318–00	SOPORTE DE DESTELLADOR 1 STAY, FLASHER 1	2					
18	B1L–H3330–00	DESTELLADOR DE LUZ TRAS.COMPL. REAR FLASHER LIGHT ASSY 1	1					
19	B1L–H334A–00	.LENTES COMPLETO 2 .LENS COMP 2	1					
20	B1L–H3311–00	.BOMBILLA (12V-10W) .BULB, FLASHER (12V-10W)	1					
21	45D–H3318–00	.SOPORTE DE DESTELLADOR 1 .STAY, FLASHER 1	1					
22	B1L–H334E–00	.CABLE COMPLETA .CORD ASSY	1					
23	45D–H3618–00	.PLACA .PLATE	1					
24	45D–H3333–00	.TORNILLO ACCESORIO DE LENTE .SCREW, LENS FITTING	1					
25	45D–H2133–00	.TORNILLO ACCESORIO .SCREW, FITTING	1					
26	B1L–H3340–00	DESTELLADOR DE LUZ TRAS.COMPL. REAR FLASHER LIGHT ASSY 2	1					
27	B1L–H333A–00	.LENTES COMPLETO 1 .LENS COMP 1	1					

FIG. 37 LUZ DE DESTELLADOR — FLASHER LIGHT

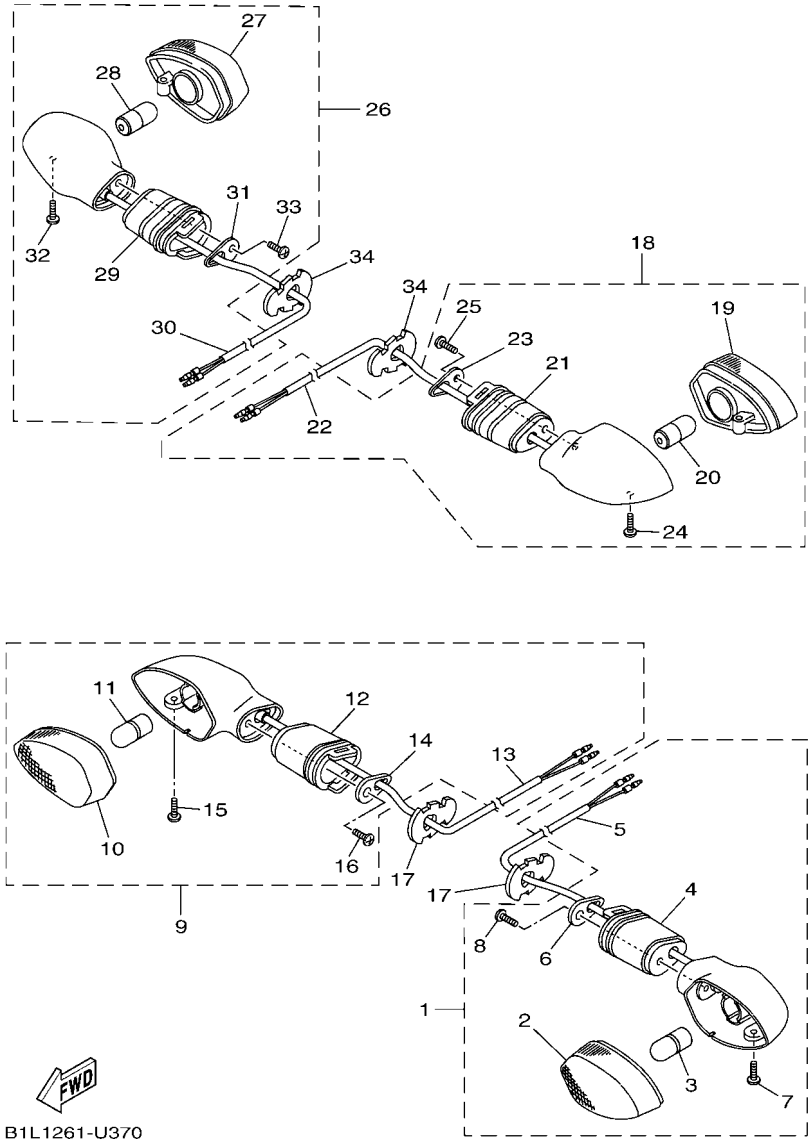

REF. Nº	CODIGO Nº PART NO.	DESCRIPCION DESCRIPTION	B1L1					OBSERVACIONES REMARKS
28	B1L–H3311–00	.BOMBILLA (12V-10W) .BULB, FLASHER (12V-10W)	1					
29	45D–H3318–00	.SOPORTE DE DESTELLADOR 1 .STAY, FLASHER 1	1					
30	B1L–H333E–00	.CABLE COMPLETA .CORD ASSY	1					
31	45D–H3618–00	.PLACA .PLATE	1					
32	45D–H3333–00	.TORNILLO ACCESORIO DE LENTE .SCREW, LENS FITTING	1					
33	45D–H2133–00	.TORNILLO ACCESORIO .SCREW, FITTING	1					
34	2LP–H3318–00	SOPORTE DE DESTELLADOR 1 STAY, FLASHER 1	2					

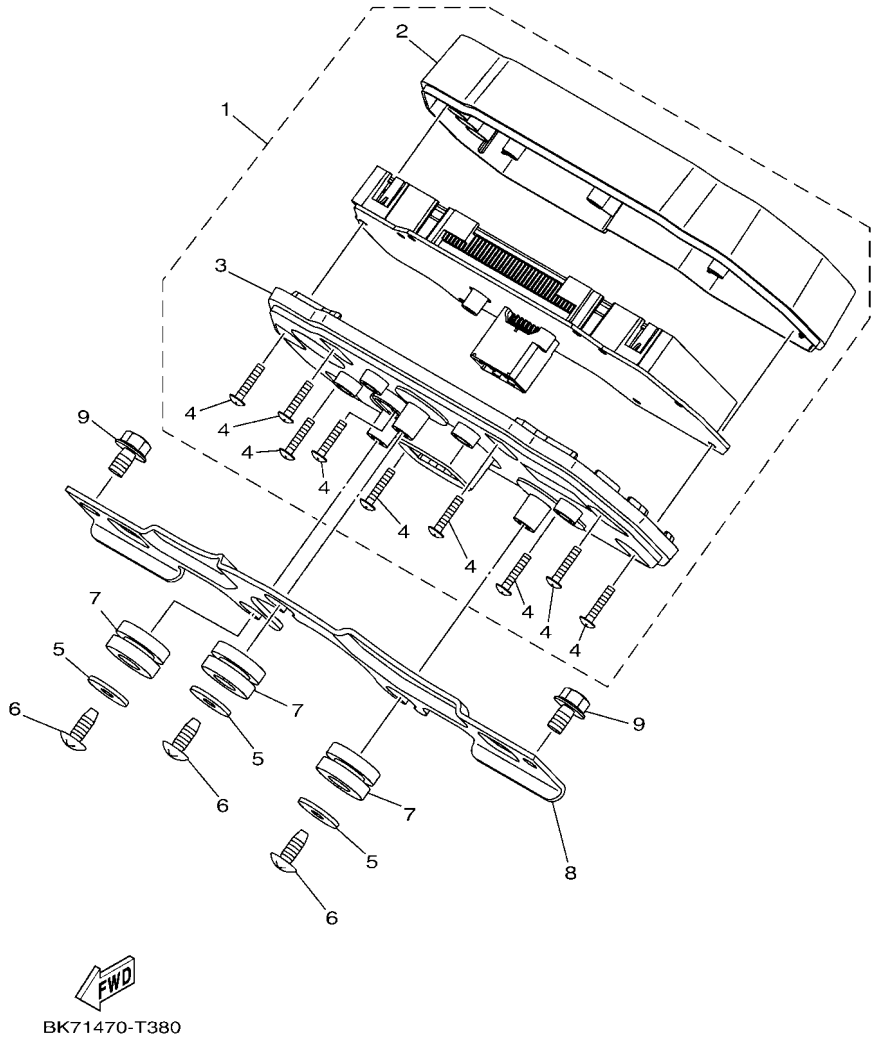

FIG. 38 MEDIDOR METER

REF. Nº	CODIGO Nº PART NO.	DESCRIPCION DESCRIPTION	B1L1					OBSERVACIONES REMARKS
1	BK7–H3500–00	METRO COMPLETO METER ASSY	1					
2	BK7–H3571–00	.CAJA DE VELOCIMETRO SUPERIOR .CASE, SPEEDOMETER UPPER	1					
3	BK7–H3572–00	.CAJA DE VELOCIMETRO INFERIOR .CASE, SPEEDOMETER LOWER	1					
4	97702–30016	.TORNILLO ROSCA HEMBRA .SCREW, TAPPING	9					
5	90201–05036	ARANDELA PLANA WASHER, PLATE	3					
6	97702–50014	TORNILLO ROSCA HEMBRA SCREW, TAPPING	3					
7	90480–14004	TAPON GROMMET	3					
8	BK7–H3519–00	SOPORTE DE MEDIDOR BRACKET, METER	1					
9	95802–06010	TORNILLO DE REBORDE BOLT, FLANGE	2					

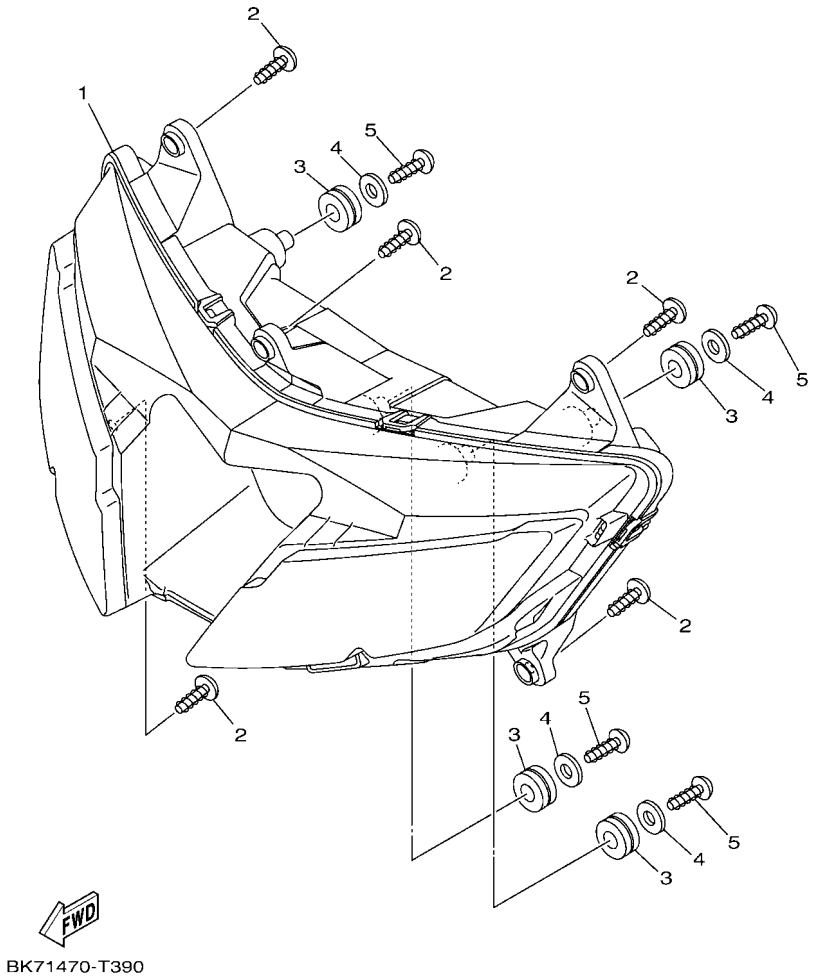

FIG. 39 FARO DELANTERO — HEADLIGHT

REF. Nº	CODIGO Nº PART NO.	DESCRIPCION DESCRIPTION	B1L1					OBSERVACIONES REMARKS
1	BK7–H4300–00	FARO DELANTERO COMPLETO HEADLIGHT ASSY	1					
2	97702–50016	TORNILLO ROSCA HEMBRA SCREW, TAPPING	5					
3	90480–14229	TAPON GROMMET	4					
4	90201–05036	ARANDELA PLANA WASHER, PLATE	4					
5	97702–50016	TORNILLO ROSCA HEMBRA SCREW, TAPPING	4					

FIG. 40 LUZ DE COLA — TAILLIGHT

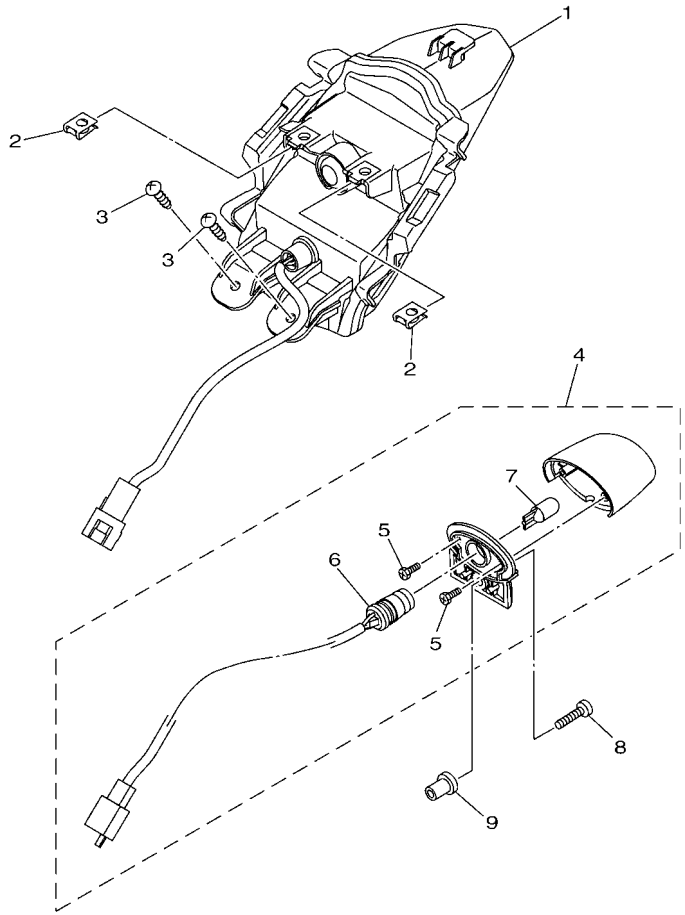

BK61460-S400

REF. Nº	CODIGO Nº PART NO.	DESCRIPCION DESCRIPTION	B1L1					OBSERVACIONES REMARKS
1	BK7–H4710–00	UNIDAD FARO TRASERO COMPL. TAILLIGHT UNIT ASSY	1					
2	90183–05807	TUERCA DE RESORTE NUT, SPRING	2					
3	97702–50016	TORNILLO ROSCA HEMBRA SCREW, TAPPING	2					
4	BK7–H4740–00	LUZ DE LICENCIA COMPLETA LICENCE LIGHT ASSY	1					
5	1CK–H4726–00	.TORNILLO .SCREW	2					
6	BK7–H4547–00	.CABLE DE LUZ DE LICENCIA .CORD, LICENCE LIGHT	1					
7	1CK–H4744–00	.BOMBILLA (12V-W5W) .BULB (12V-W5W)	1					
8	98907–04020	TORNILLO DE LIGAR SCREW, BIND	1					
9	90179–04003	TUERCA NUT	1					

FIG. 41 INTERRUPTOR DE MANILLAR&PALANC HANDLE SWITCH & LEVER

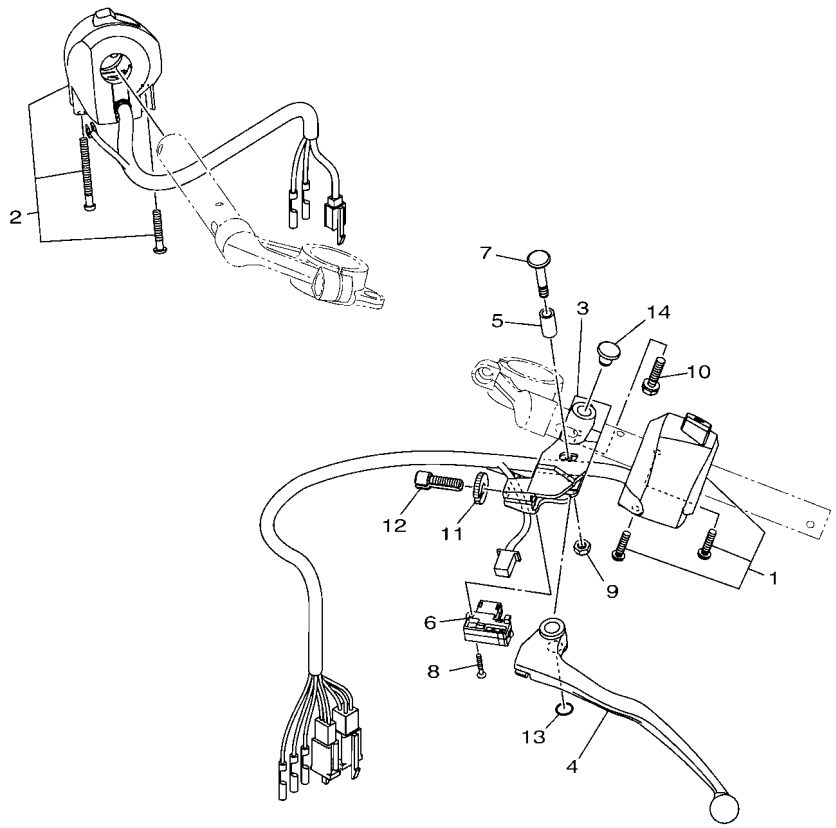

BK71470-T410

REF. Nº	CODIGO Nº PART NO.	DESCRIPCION DESCRIPTION	B1L1					OBSERVACIONES REMARKS
1	BK7–H3972–00	INTERRUPTOR DE MANIJA 4 SWITCH, HANDLE 4	1					
2	BK7–H3975–00	INTERRUPTOR DE MANIJA 2 SWITCH, HANDLE 2	1					
3	BK7–H2911–00	SOPORTE DE LEVA 1 HOLDER, LEVER 1	1					
4	BK7–H3912–00	PALANCA 1 LEVER 1	1					
5	BK7–H3913–00	COLLAR DE PALANCA 1 COLLAR, LEVER 1	1					
6	2FB–H2917–00	INTERRUPTOR SWITCH	1					
7	BK7–H3945–00	PERNO DE PALANCA BOLT, LEVER	1					
8	98707–03020	TORNILLO DE CABEZA PLANA SCREW, FLAT HEAD	1					
9	20P–H331B–00	TUERCA DE RESORTE NUT, SPRING	1					
10	97507–06525	PERNO CON ARANDELA BOLT, WITH WASHER	1					
11	20P–H3927–00	TUERCA DE AJUSTE NUT, ADJUSTING	1					
12	20P–H3951–00	PERNO DE CABLE DE AJUSTE BOLT, CABLE ADJUSTING	1					
13	93210–108H5	ANILLO O O-RING	1					
14	90338–09803	TAPON PLUG	2					

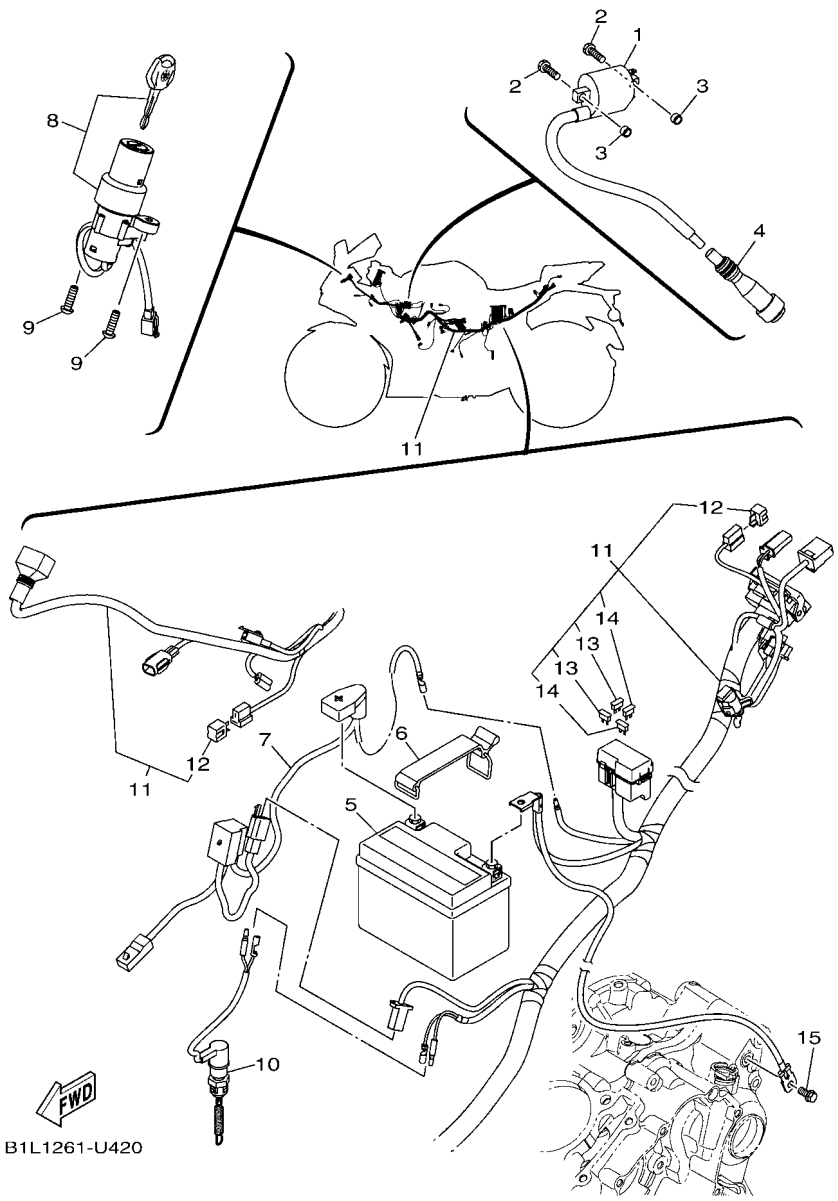

FIG. 42 EQUIPO ELECTRICO 1 — ELECTRICAL 1

REF. Nº	CODIGO Nº PART NO.	DESCRIPCION DESCRIPTION	B1L1					OBSERVACIONES REMARKS
1	2GS–H2310–00	BOBINA DE ENCENDIDO COMPLETA IGNITION COIL ASSY	1					
2	97080–06020	PERNO BOLT	2					
3	90387–06M30	ESPACIADOR COLLAR	2					
4	BK6–H2370–00	TAPON DE BUJIA COMPLT PLUG CAP ASSY	1					
5	B1P–H2100–00	BATERIA COMPLETA (YUASA YTZ6V) BATTERY ASSY (YUASA YTZ6V)	1					
6	20P–F811G–00	CINTA BAND	1					
7	BK7–H2115–00	CABLE CONDUCTOR POSITIVO WIRE, PLUS LEAD	1					
8	BK7–H2501–00	LLAVE DE IGNICION COMPLT MAIN SWITCH STEERING LOCK	1					
9	90149–06118	TORNILLO DE REGLAJE SCREW	2					
10	B97–H2530–00	INTERRUPTOR DE PARADA COMPLETO STOP SWITCH ASSY	1					
11	B1L–H2590–00	CONJUNTO DE CABLES WIRE HARNESS ASSY	1					
12	3WP–81980–00	.CONJUNTO DIODO .DIODE ASSY	2					
13	1WD–H2151–10	.FUSIBLE (15A-BL) .FUSE (15A-BL)	2					
14	B1L–H2151–00	.FUSIBLE (2A) .FUSE (2A)	2					
15	95022–06012	PERNO, DE BRIDA BOLT, FLANGE	1					

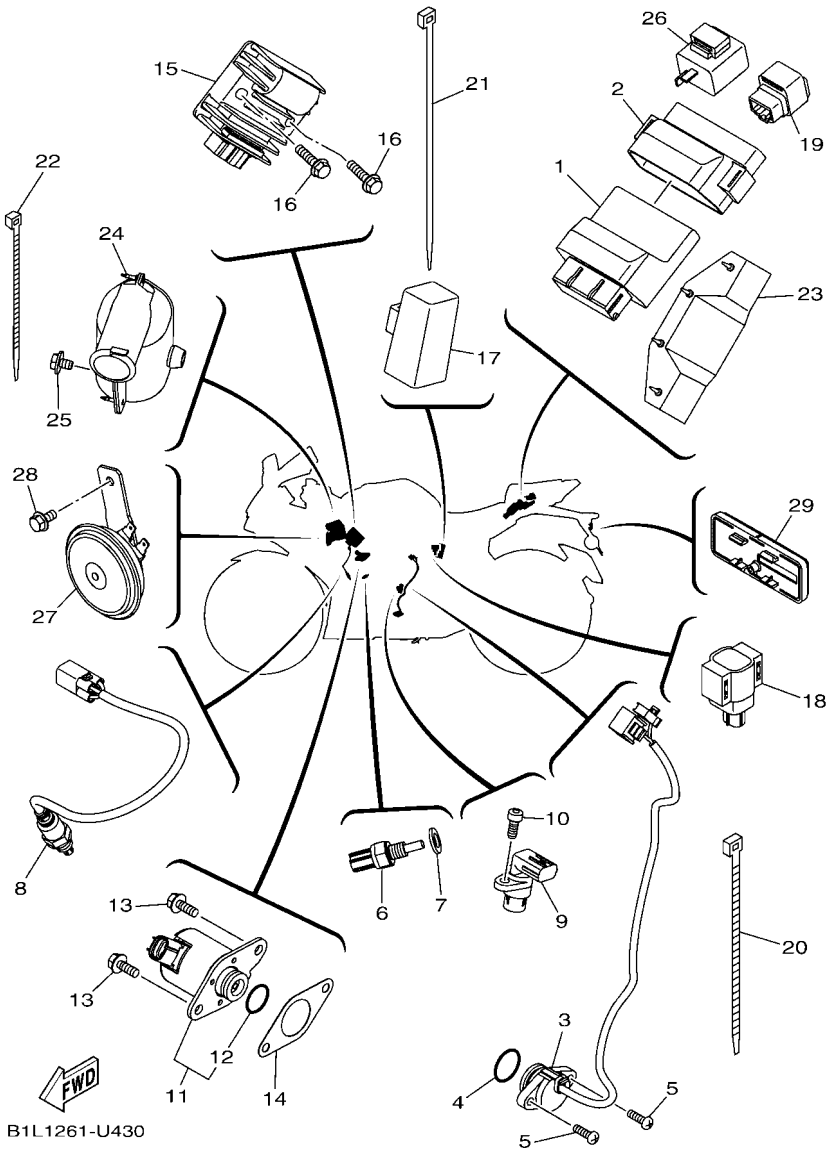

FIG. 43 EQUIPO ELECTRICO 2 — ELECTRICAL 2

REF. Nº	CODIGO Nº PART NO.	DESCRIPCION DESCRIPTION	B1L1					OBSERVACIONES REMARKS
1	B1L–H591A–00	UNIDAD CONTROL ENGINE CONTROL UNIT ASSY	1					
2	BK7–H5546–00	BANDA BAND	1					
3	BK7–H2540–00	INTERRUPTOR NEUTRAL COMPL NEUTRAL SWITCH ASSY	1					
4	93210–21801	ANILLO O O-RING	1					
5	98502–05016	TORNILLO SCREW, PAN HEAD	2					
6	52B–H3591–00	UNIDAD TERMOSTATO THERMO UNIT	1					
7	90430–10802	JUNTA GASKET	1					
8	B97–H592A–00	SENSOR SENSOR, OXYGEN	1					
9	B48–H3755–01	SENSOR DE VELOCIDAD SENSOR, SPEED	1					
10	91312–06014	TORNILLO ALLEN BOLT, HEXAGON SOCKET HEAD	1					
11	BK6–H6110–00	SOLENOIDE SOLENOID	1					
12	BK6–H1847–00	.ANILLO GOMA .O-RING	1					
13	95812–06016	TORNILLO DE REBORDE BOLT, FLANGE	2					
14	BK7–H1861–00	EMPAQUETADURA GASKET	1					
15	B97–H1960–00	RECTIFICADOR Y REGULADOR RECTIFIER & REGULATOR ASSY	1					
16	95802–06025	TORNILLO DE REBORDE BOLT, FLANGE	2					
17	BK7–H1940–00	CONJUNTO ARRANCADOR RELEVO STARTER RELAY ASSY	1					
18	1PA–H2576–00	SENSOR ANGULO DE INCLINATION SENSOR, LEAN ANGLE	1					
19	20P–H1950–01	RELE COMPLETO RELAY ASSY	1					
20	90464–50800	BRIDA CLAMP	4					
21	90464–65001	BRIDA CLAMP	2					
22	90464–36800	BRIDA CLAMP	6					
23	1CK–H2599–01	CUBIERTA DE CONECTOR COVER, CONNECTOR	1					
24	20P–H246B–02	CUBIERTA 1 COVER 1	1					
25	90119–06054	TORNILLO CON ARANDELA BOLT, WITH WASHER	1					
26	5TS–H3350–01	RELE DE DESTELLADOR COMPL. FLASHER RELAY ASSY	1					
27	BK7–H3371–10	BOCINA HORN	1					

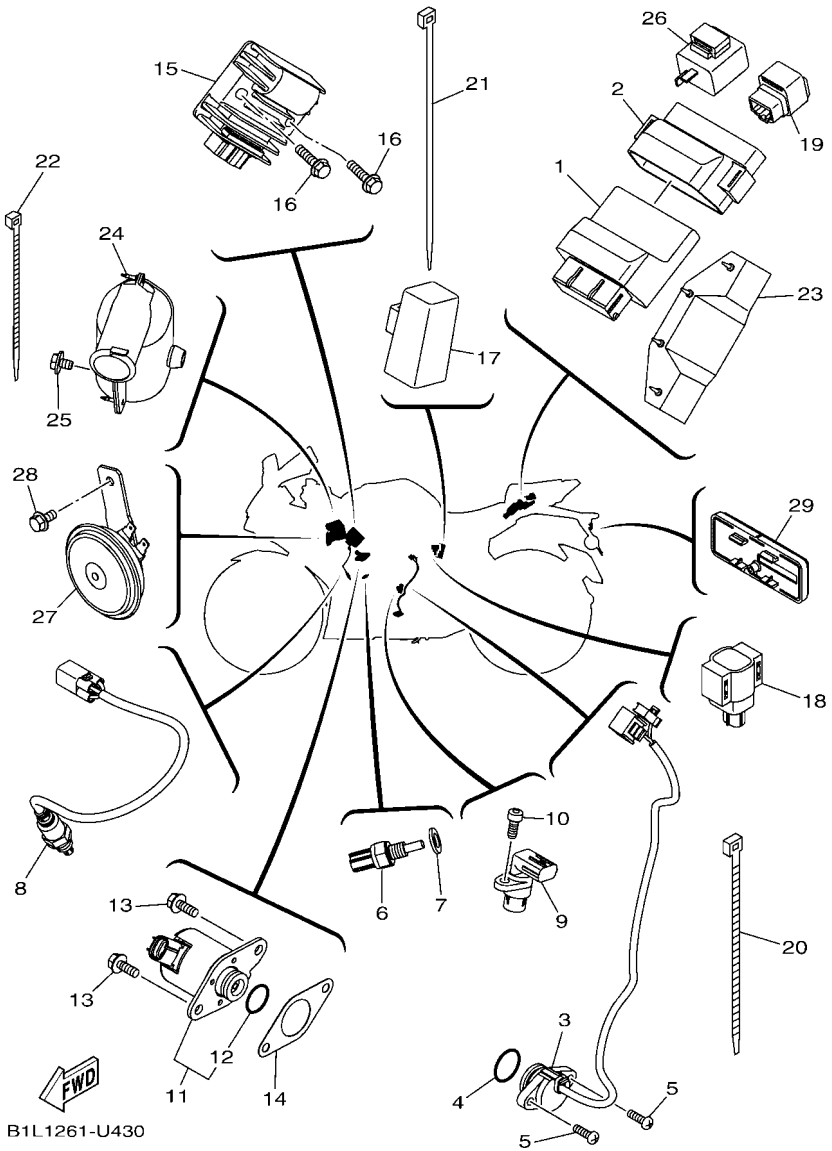

FIG. 43 EQUIPO ELECTRICO 2 — ELECTRICAL 2

REF. Nº	CODIGO Nº PART NO.	DESCRIPCION DESCRIPTION	B1L1					OBSERVACIONES REMARKS
28	95822–06012	TORNILLO DE REBORDE BOLT, FLANGE	1					
29	BE1–H5130–00	REFLECTOR TRASERO COMPLETO REAR REFLECTOR ASSY	1					

INDICE NUMERICO
NUMERICAL INDEX

CODIGO Nº PART NO.	REF. Nº
52S–12439–00	6 – 2
4FM–23125–40	22 – 6
	22 – 25
5XT–25802–50	28 – 5
3JD–25803–50	28 – 6
5XT–25827–00	28 – 15
3SP–25919–51	28 – 9
3SP–25924–51	28 – 13
3SP–25926–51	28 – 12
5BU–27234–00	32 – 15
3WP–81980–00	42 – 12
BK7–E1102–00	1 – 1
BK7–E111F–00	4 – 9
BK7–E1165–00	1 – 7
BK7–E1166–00	8 – 27
BK7–E1169–00	1 – 8
2DP–E1181–00	1 – 19
BK7–E1185–00	5 – 4
BK7–E1191–00	1 – 6
BK7–E1193–00	1 – 14
2DP–E1311–10	1 – 23
BK6–E132G–00	1 – 12
BK7–E1351–00	1 – 24
BR2–E1361–00	1 – 15
BK7–E1362–00	1 – 16
BK7–E1400–09	2 – 1
BK7–E1412–00	2 – 2
BK7–E1422–00	2 – 5
BK7–E1454–00	2 – 21
54B–E1476–00	2 – 19
21C–E1496–20	2 – 16
BK7–E1531–00	2 – 22
BK7–E1536–00	2 – 15
BK7–E1549–00	2 – 7
BK6–E1557–00	3 – 10
BK6–E1603–00	2 – 14
BK6–E1631–00	2 – 11
BK7–E1633–00	2 – 12
BK6–E1651–00	2 – 4
BK7–E1681–00	2 – 6
BK7–E2111–00	3 – 1
B63–E2113–00	3 – 4
2DP–E2117–00	3 – 6
5TL–E2118–00	3 – 5
1GC–E2119–00	3 – 3
BK7–E2121–00	3 – 2
38B–E2126–00	3 – 7
BK6–E2150–00	3 – 8

CODIGO Nº PART NO.	REF. Nº
21C–E2156–00	4 – 1
2FB–E2157–00	4 – 8
BK7–E2160–00	3 – 13
BK6–E2166–00	3 – 9
BK7–E2170–00	4 – 3
2ND–E2210–20	4 – 16
BK6–E2213–00	4 – 17
BK6–E2226–00	3 – 11
1GC–E2228–00	4 – 14
BK7–E2231–00	4 – 12
BK7–E2241–00	4 – 13
BK7–E2256–00	4 – 15
BK7–E2279–00	3 – 12
BK7–E2280–00	4 – 6
BK7–E2288–00	4 – 7
BK7–E2405–00	6 – 8
BK6–E2410–00	6 – 1
BK7–E2422–00	5 – 1
2DP–E2428–00	5 – 3
BK7–E2435–00	5 – 9
BK7–E2443–00	5 – 11
BK7–E2450–00	5 – 5
BK7–E2460–00	6 – 6
5ST–E2462–00	6 – 7
BK7–E2467–00	6 – 16
BK7–E246E–00	6 – 22
BK7–E2481–00	6 – 17
BK7–E2482–00	6 – 19
BK7–E2483–00	6 – 4
BK7–E2615–00	5 – 8
5YP–E2671–00	6 – 9
5YP–E2675–00	6 – 10
BK7–E2842–00	5 – 6
BK7–E3300–00	7 – 1
38B–E3324–00	7 – 8
38B–E3327–00	7 – 13
21C–E3362–00	2 – 20
38B–E3411–00	7 – 4
38B–E3440–00	7 – 7
38B–E3447–00	7 – 9
2FB–E3556–00	8 – 10
BK7–E3557–00	8 – 11
BK7–E3585–00	8 – 1
B1P–E3750–00	8 – 14
BK6–E3761–00	8 – 5
BK7–E3767–00	8 – 13
BK6–E3770–00	8 – 4
BK6–E3907–00	23 – 18

CODIGO Nº PART NO.	REF. Nº
54P–E3938–00	8 – 8
BK6–E3971–00	23 – 23
54P–E4137–00	8 – 9
54P–E4147–00	8 – 6
5CA–E4147–00	8 – 7
BK7–E4199–00	8 – 2
BK7–E4411–00	8 – 16
BK7–E4412–00	8 – 17
BK7–E441J–00	8 – 24
20P–E443E–00	8 – 22
BK7–E4450–00	8 – 18
BK7–E4452–00	8 – 20
BK7–E4453–00	8 – 19
BK7–E4613–00	9 – 5
BK7–E4703–00	9 – 1
BK7–E4718–00	9 – 2
BK7–E4747–00	31 – 34
BK7–E4799–00	9 – 3
BK7–E5111–00	10 – 1
2FB–E5113–00	11 – 9
BK7–E5121–00	10 – 2
38B–E5351–00	7 – 3
BK7–E5362–00	11 – 17
BK7–E5411–00	11 – 1
BK7–E5418–00	11 – 10
BK7–E5421–00	11 – 12
BK7–E5441–00	4 – 18
BK7–E5451–00	11 – 2
BK7–E5461–00	11 – 13
1CK–E5514–00	12 – 1
BK7–E5521–00	12 – 2
2FB–E5524–00	12 – 3
54B–E5580–00	12 – 6
BK7–E6111–00	13 – 1
54B–E6144–00	13 – 21
BK7–E6150–00	13 – 6
21C–E6154–00	13 – 7
38B–E6193–00	13 – 3
BK7–E6320–00	13 – 9
BK7–E6321–00	13 – 11
BK7–E6324–00	13 – 13
BK7–E6325–00	13 – 12
BK7–E6331–00	13 – 10
BK7–E6333–00	13 – 15
BK7–E6337–00	13 – 18
54B–E6344–00	13 – 22
BK7–E6345–00	13 – 26
BK7–E6351–00	13 – 14

CODIGO Nº PART NO.	REF. Nº
BK7–E6352–00	13 – 17
21C–E6356–01	13 – 20
38B–E6357–01	13 – 27
21C–E6358–00	13 – 19
BK7–E6371–00	13 – 8
BK7–E6380–00	13 – 25
BK7–E6774–00	13 – 16
38B–E7121–00	14 – 7
2FB–E7131–00	14 – 5
2FB–E7151–00	14 – 2
2FB–E7161–00	14 – 6
2FB–E7211–00	14 – 13
BK7–E7221–00	14 – 21
2FB–E7231–00	14 – 19
2FB–E7241–00	14 – 18
2FB–E7251–00	14 – 15
38B–E7258–00	14 – 14
BK7–E7258–00	13 – 2
2FB–E7261–00	14 – 20
BK7–E7411–00	14 – 1
BK7–E7421–00	14 – 12
4LS–E7456–00	14 – 29
38B–E7471–00	14 – 10
38B–E8101–00	16 – 4
BK7–E8110–00	16 – 9
BK7–E8112–00	16 – 14
20P–E8113–00	16 – 10
BK7–E8115–00	16 – 11
BK7–E8140–00	16 – 1
BK7–E8337–00	16 – 3
38B–E8511–00	15 – 4
38B–E8512–00	15 – 5
38B–E8513–00	15 – 6
38B–E8531–00	15 – 7
BK7–E8540–00	15 – 1
BK7–E8542–00	15 – 2
B1L–F1110–00	17 – 1
BK7–F113B–00	17 – 10
BK7–F117V–00	34 – 27
BK7–F117W–00	34 – 38
BK7–F1278–00	23 – 14
BK7–F1278–10	34 – 49
20P–F1338–00	6 – 21
BK7–F135F–00	20 – 2
BK7–F144G–00	31 – 31
BK7–F1511–00	18 – 1
B1L–F1568–00	23 – 46
BK7–F160E–00	18 – 21

CODIGO Nº PART NO.	REF. Nº
BK7–F1611–00	18 – 6
BK7–F1613–00	18 – 16
BK6–F1617–00	18 – 14
BK7–F1629–00	18 – 11
BK7–F162R–00–P0	18 – 10
BK7–F162R–00–P1	18 – 10
BK7–F1650–00	20 – 21
BK7–F1653–00	18 – 26
B1L–F1668–00	20 – 26
BK7–F1711–00	19 – 1
21C–F1717–00	19 – 2
	19 – 9
BK7–F171E–00	19 – 21
BK7–F171X–00	19 – 23
BK7–F1721–00	19 – 8
BK7–F172G–00–P0	34 – 14
BK7–F172G–00–P1	34 – 14
BK7–F172H–00–P0	34 – 16
BK7–F172H–00–P1	34 – 16
BK7–F1731–00–P0	19 – 15
BK7–F1731–00–P1	19 – 15
B1L–F173E–00	19 – 40
B1L–F173E–10	19 – 40
B1L–F173F–00	19 – 41
B1L–F173F–10	19 – 41
BK7–F1741–00–P0	19 – 18
BK7–F1741–00–P1	19 – 18
B1L–F174G–00	19 – 42
B1L–F174H–00	19 – 43
BK7–F1817–00	19 – 28
BK7–F1871–00	19 – 26
BK7–F1875–00	19 – 27
BK7–F1946–00	17 – 2
B5G–F2110–00	20 – 1
1CK–F2128–00	20 – 5
BK7–F2141–00	20 – 6
BK7–F2151–00	20 – 8
1CK–F217A–00	20 – 11
BK7–F217F–00	20 – 15
BK7–F2184–00	20 – 4
BK7–F2210–00	20 – 25
BK7–F2311–00	20 – 18
BK7–F2327–00	17 – 9
BK7–F247A–00	19 – 29
21C–F2674–00	22 – 19
	22 – 38
BK7–F3100–00	22 – 1
BK7–F3102–00	22 – 2

CODIGO Nº PART NO.	REF. Nº
BK7–F3103–00	22 – 21
BK7–F3110–00	22 – 4
	22 – 23
21C–F3111–00	22 – 17
	22 – 36
21C–F3114–00	22 – 18
	22 – 37
BK7–F3118–00	22 – 16
	22 – 35
21C–F3126–11	22 – 3
B97–F3136–00	22 – 22
BK7–F3141–00	22 – 14
	22 – 33
2GS–F3144–00	22 – 10
	22 – 29
2GS–F3145–00	22 – 8
	22 – 27
21C–F3146–00	22 – 7
	22 – 26
21C–F3149–00	22 – 15
	22 – 34
21C–F3156–00	22 – 9
	22 – 28
21C–F3158–00	22 – 12
	22 – 31
BK7–F3170–00	22 – 5
	22 – 24
2GS–F3171–00	22 – 20
	22 – 39
21C–F3173–00	22 – 11
	22 – 30
21C–F3181–00	22 – 13
	22 – 32
BK7–F3340–00	22 – 40
20P–F3346–00	22 – 43
BK7–F3411–00	21 – 2
21C–F3412–00	21 – 3
20P–F3416–00	21 – 5
20P–F3418–00	21 – 8
4LS–F341E–10	21 – 4
BK7–F3435–00	21 – 9
5YY–F3462–00	22 – 41
20P–F3469–00	29 – 5
	34 – 26
2FB–F3873–00	21 – 1
2FB–F3875–00	22 – 42
B1L–F4110–00	23 – 1
BK7–F4129–00–P0	23 – 30

INDICE NUMERICO
NUMERICAL INDEX

CODIGO Nº PART NO.	REF. Nº
BK7–F4129–00–P1	23 – 30
BK7–F412Y–00	23 – 2
BK7–F4139–00–P0	23 – 38
BK7–F4139–00–P1	23 – 38
B73–F413B–00	23 – 47
	23 – 48
BK7–F414E–00	23 – 37
	23 – 45
2GS–F414G–00	23 – 21
BK7–F414G–00	23 – 29
BK7–F414G–10	23 – 13
BK7–F4181–00	23 – 3
BK7–F4191–00	23 – 8
BK7–F41B1–00–P0	23 – 26
BK7–F41B1–00–P1	23 – 26
BK7–F4312–00	23 – 24
BK7–F4491–00	23 – 20
BK7–F4710–00	24 – 1
BK7–F4728–00	24 – 3
4LS–F4741–00	24 – 2
	24 – 10
BK7–F4742–00	32 – 20
BK7–F4750–00	24 – 9
BK7–F475H–00	24 – 7
BK7–F475J–00	24 – 13
BK7–F475X–00	24 – 11
BK7–F4796–00	24 – 6
21C–F510C–10	25 – 2
B97–F5168–01–33	25 – 1
21C–F5181–00	25 – 8
1CK–F5186–00	25 – 7
B97–F530S–00	27 – 2
2FB–F531B–50	25 – 10
	27 – 26
2GS–F531B–60	25 – 10
	27 – 26
B97–F5338–01–33	27 – 1
B97–F5364–00	27 – 5
B97–F5366–00	27 – 6
B97–F5376–00	27 – 9
B97–F5377–00	27 – 17
BK7–F5381–00	27 – 16
B97–F5383–00	27 – 18
1CK–F5388–00	27 – 21
B1P–F5414–00	27 – 13
BK7–F5448–00	27 – 10
B97–F5715–00	30 – 3
B97–F5806–00	28 – 4

CODIGO Nº PART NO.	REF. Nº
B97–F5807–00	30 – 2
B97–F5808–00	32 – 2
B97–F580A–00	30 – 1
BK6–F580E–00	32 – 1
B97–F580U–00	26 – 3
B97–F580W–00	28 – 3
5HH–F5824–00	28 – 10
5HH–F5825–51	28 – 14
50C–F582A–50	32 – 5
B97–F582U–00	26 – 1
B97–F582W–00	28 – 1
54B–F5852–00	30 – 6
BK6–F5852–00	32 – 9
2VN–F5854–00	32 – 11
54B–F5854–00	30 – 4
50C–F5855–00	32 – 10
54B–F5855–00	30 – 5
50C–F5866–00	32 – 6
B97–F5867–00	30 – 12
BK7–F5872–00	30 – 15
BK7–F5873–00	32 – 24
BK7–F587A–00	20 – 24
BK7–F5886–00	30 – 18
BK7–F5887–00	30 – 21
BK7–F5888–00	32 – 22
50C–F5894–11	32 – 8
BK6–F5895–00	32 – 13
50C–F589A–00	32 – 14
54B–F589H–00	30 – 7
B97–F589H–00	30 – 14
54B–F5914–00	26 – 10
5HH–F5914–00	28 – 11
54B–F5916–00	26 – 16
54B–F5917–00	26 – 8
5HH–F5917–00	28 – 8
54B–F5919–00	26 – 12
54B–F5924–00	26 – 14
54B–F5925–00	26 – 15
54B–F5926–00	26 – 11
54B–F5937–00	26 – 7
5HH–F5937–00	28 – 7
54B–F5939–00	26 – 9
BK7–F6121–00	29 – 1
BK7–F6122–00	29 – 2
20P–F622F–00	29 – 11
20P–F622H–00	29 – 10
BK7–F6240–00	29 – 6
20P–F6241–00	29 – 7

CODIGO Nº PART NO.	REF. Nº
BK7–F6246–00	29 – 8
20P–F6257–00	29 – 9
BK7–F6259–00	32 – 21
BK7–F6280–00	34 – 20
BK7–F6290–00	34 – 21
BK7–F6311–00	29 – 13
BK7–F6312–00	29 – 14
BK7–F6315–00	29 – 15
BK7–F6335–00	29 – 17
54B–F6338–00	30 – 10
BK7–F6372–00	29 – 18
BK7–F7211–00	31 – 26
50C–F7222–00	32 – 4
21C–F7261–00	31 – 30
BK7–F7311–00	31 – 1
BK7–F7404–00	31 – 19
BK7–F7410–00	31 – 9
BK7–F7411–00	31 – 11
BK7–F741L–00	31 – 42
BK7–F742L–00	31 – 43
20P–F7431–00	31 – 36
20P–F7441–00	31 – 37
BK7–F7442–00	31 – 8
BK7–F7443–00	31 – 20
20P–F7451–00	31 – 10
20P–F7461–00	31 – 21
BK6–F8100–00	18 – 28
20P–F811G–00	42 – 6
1CK–F8186–00	17 – 11
BK7–F8283–00	19 – 32
BK7–F8284–00	19 – 33
BK7–F834E–00	18 – 12
BK7–F8351–00–P0	34 – 3
BK7–F8351–00–P1	34 – 3
BK7–F8356–00	34 – 18
BK7–F835G–00	34 – 7
BK7–F835U–00–P0	33 – 1
BK7–F835U–00–P1	33 – 1
BK7–F835V–00–P0	33 – 4
BK7–F835V–00–P1	33 – 4
BK7–F836K–00	33 – 23
BK7–F836L–00	33 – 27
BK7–F836M–00	33 – 31
BK7–F837L–00	33 – 7
BK7–F837M–00	33 – 10
BK7–F837V–00	34 – 35
BK7–F837W–00	34 – 46
BK7–F8381–00	34 – 1

CODIGO Nº PART NO.	REF. Nº
BK7–F8385–00–P0	33 – 13
B1L–F8391–00	33 – 36
B1L–F8391–10	33 – 36
B1L–F8392–00	33 – 37
B1L–F8392–10	33 – 37
B1L–F8393–00	33 – 38
B1L–F8393–10	33 – 38
B1L–F8394–00	33 – 39
B1L–F8394–10	33 – 39
BK7–F8395–00–P0	33 – 18
B1L–F8398–00	33 – 40
B1L–F8398–10	33 – 40
B1L–F8399–00	33 – 41
B1L–F8399–10	33 – 41
BK7–F8417–00	19 – 34
BK7–F841F–00	19 – 37
B1L–F841G–00	34 – 50
B1L–F841G–10	34 – 50
B1L–F841H–00	33 – 34
	33 – 35
B1L–F842G–00	34 – 51
B1L–F842G–10	34 – 51
BK7–F8483–00	34 – 22
BK7–F8484–00	34 – 23
BK7–H1410–00	35 – 2
BK7–H1450–00	35 – 1
BK6–H1800–00	36 – 1
2PH–H1801–10	36 – 2
5D9–H1828–00	36 – 5
1FD–H183G–00	36 – 3
BK6–H1847–00	43 – 12
5D9–H1861–00	36 – 4
BK7–H1861–00	43 – 14
BK7–H1940–00	43 – 17
BK7–H1948–00	18 – 19
20P–H1950–01	43 – 19
B97–H1960–00	43 – 15
B1P–H2100–00	42 – 5
BK7–H2115–00	42 – 7
45D–H2133–00	37 – 8
	37 – 16
	37 – 25
	37 – 33
B1L–H2151–00	42 – 14
1WD–H2151–10	42 – 13
2GS–H2310–00	42 – 1
BK6–H2370–00	42 – 4
20P–H246B–02	43 – 24

CODIGO Nº PART NO.	REF. Nº
BK7–H2501–00	42 – 8
B97–H2530–00	42 – 10
BK7–H2540–00	43 – 3
1PA–H2576–00	43 – 18
B1L–H2590–00	42 – 11
1CK–H2599–01	43 – 23
BK7–H2911–00	41 – 3
2FB–H2917–00	41 – 6
B1L–H3310–00	37 – 1
B1L–H3311–00	37 – 3
	37 – 11
	37 – 20
	37 – 28
2LP–H3318–00	37 – 17
	37 – 34
45D–H3318–00	37 – 4
	37 – 12
	37 – 21
	37 – 29
20P–H331B–00	41 – 9
B1L–H331E–00	37 – 5
B1L–H3320–00	37 – 9
B1L–H332E–00	37 – 13
B1L–H3330–00	37 – 18
45D–H3333–00	37 – 7
	37 – 15
	37 – 24
	37 – 32
B1L–H333A–00	37 – 2
	37 – 27
B1L–H333E–00	37 – 30
B1L–H3340–00	37 – 26
B1L–H334A–00	37 – 10
	37 – 19
B1L–H334E–00	37 – 22
5TS–H3350–01	43 – 26
BK7–H3371–10	43 – 27
BK7–H3500–00	38 – 1
BK7–H3519–00	38 – 8
BK7–H3571–00	38 – 2
BK7–H3572–00	38 – 3
52B–H3591–00	43 – 6
45D–H3618–00	37 – 6
	37 – 14
	37 – 23
	37 – 31
B48–H3755–01	43 – 9
BK7–H3912–00	41 – 4

CODIGO Nº PART NO.	REF. Nº
BK7–H3913–00	41 – 5
B97–H3922–00	30 – 8
20P–H3927–00	41 – 11
5TS–H3936–01	18 – 27
	30 – 20
BK7–H3945–00	41 – 7
20P–H3951–00	41 – 12
BK7–H3972–00	41 – 1
BK7–H3975–00	41 – 2
B97–H3980–00	30 – 13
BK7–H4300–00	39 – 1
BK7–H4547–00	40 – 6
BK7–H4710–00	40 – 1
1CK–H4726–00	40 – 5
BK7–H4740–00	40 – 4
1CK–H4744–00	40 – 7
BE1–H5130–00	43 – 29
BK7–H5546–00	43 – 2
BK6–H5752–00	23 – 19
B1L–H591A–00	43 – 1
B97–H592A–00	43 – 8
BK6–H6110–00	43 – 11
B97–W0045–00	26 – 13
54B–W0047–00	26 – 5
54B–W0048–00	26 – 6
54B–W0057–00	26 – 4
B1P–WF461–00	23 – 15
BK7–WF478–00	24 – 5
90101–08006	27 – 22
90101–10812	31 – 3
90101–10832	21 – 11
90105–06169	23 – 6
	23 – 11
90105–06859	30 – 11
90105–08002	34 – 19
90105–10319	26 – 17
90105–10886	17 – 7
90105–10887	20 – 14
90105–108A4	17 – 6
90109–05014	23 – 35
	23 – 43
90109–06202	18 – 24
90109–06259	16 – 2
90109–06859	30 – 9
90109–068B2	19 – 17
	19 – 20
	19 – 31
	23 – 28

INDICE NUMERICO
NUMERICAL INDEX

CODIGO Nº PART NO.	REF. Nº
90109–08225	31 – 15
	31 – 22
90110–05806	23 – 16
90110–06215	23 – 12
90110–06378	1 – 22
90110–06846	8 – 15
90110–08803	31 – 18
	31 – 35
90110–08839	23 – 7
90110–10026	31 – 16
90111–05035	7 – 2
90111–06117	18 – 4
	33 – 17
	33 – 22
	34 – 33
	34 – 44
90111–06807	9 – 4
90111–08029	26 – 2
	28 – 2
90116–08846	27 – 11
90119–05022	18 – 18
90119–06051	8 – 26
90119–06054	43 – 25
90119–06810	17 – 5
90149–05801	1 – 9
90149–06118	42 – 9
90149–08220	9 – 8
90150–05024	34 – 6
90159–05011	23 – 34
	23 – 42
90159–06817	18 – 8
	19 – 5
	19 – 12
90160–05812	19 – 4
	19 – 11
	33 – 3
	33 – 6
	33 – 9
	33 – 12
90170–10012	2 – 28
90170–14801	13 – 24
90173–06806	18 – 23
90179–04003	40 – 9
90179–05804	34 – 2
90179–10805	20 – 16
90179–10819	17 – 8
90179–12802	13 – 5
90179–25615	21 – 6

CODIGO Nº PART NO.	REF. Nº
90183–05067	34 – 37
	34 – 48
90183–050A7	18 – 13
90183–05807	18 – 7
	19 – 16
	19 – 19
	19 – 24
	23 – 27
	33 – 2
	33 – 5
	33 – 14
	33 – 19
	34 – 5
	34 – 12
	34 – 28
	34 – 39
	40 – 2
90185–06801	18 – 20
90185–10804	31 – 6
90201–05036	38 – 5
	39 – 4
90201–06072	6 – 13
90201–08066	32 – 17
90201–08612	9 – 7
90201–08859	1 – 17
90201–10021	31 – 28
90201–10118	32 – 26
90201–10815	30 – 17
90201–10841	31 – 5
90201–12019	13 – 4
	35 – 6
90201–15022	2 – 17
90201–15814	27 – 20
90201–173F4	14 – 24
90201–173U5	31 – 17
90201–22793	14 – 22
90201–25290	12 – 5
90202–26142	21 – 7
90208–20003	13 – 32
90209–10812	21 – 12
90209–17285	14 – 3
90209–18208	14 – 16
90214–10006	2 – 18
90215–10803	2 – 27
90215–14802	13 – 23
90240–08005	32 – 16
90240–08145	31 – 24
90240–08800	31 – 40

CODIGO Nº PART NO.	REF. Nº
90252–18800	16 – 13
	31 – 13
	31 – 25
	31 – 41
	32 – 18
90269–06812	18 – 9
	18 – 17
	18 – 25
	19 – 7
	19 – 14
	33 – 8
	33 – 11
	33 – 26
	33 – 30
	33 – 33
	34 – 34
	34 – 45
90280–03017	2 – 10
90282–05031	2 – 26
90338–09803	41 – 14
90340–12813	1 – 2
90340–14824	11 – 5
90340–32823	11 – 7
90387–06131	34 – 25
90387–064W3	6 – 14
90387–066J9	18 – 15
90387–06899	23 – 33
	23 – 41
	33 – 16
	33 – 21
	34 – 30
	34 – 41
90387–068B2	23 – 5
	23 – 10
90387–068C5	17 – 4
	18 – 2
90387–068S1	20 – 9
	20 – 20
	20 – 23
90387–06M30	42 – 3
90387–08842	31 – 33
90387–10003	31 – 4
90387–10814	20 – 13
90387–15810	2 – 23
90401–10812	32 – 25
90401–10818	30 – 16
90430–06014	1 – 4
	1 – 26

CODIGO Nº PART NO.	REF. Nº
90430–10802	43 – 7
90445–19807	31 – 29
90445–21848	31 – 7
90450–27806	6 – 5
	6 – 18
	6 – 20
90450–43807	8 – 30
90464–12036	34 – 31
	34 – 42
90464–36800	43 – 22
90464–50800	43 – 20
90464–65001	43 – 21
90467–08003	19 – 30
90467–11825	8 – 29
90467–12052	8 – 28
90467–12085	32 – 12
90467–12800	8 – 23
90467–20804	8 – 25
90480–01558	18 – 22
	19 – 3
	19 – 10
	19 – 35
	19 – 38
	23 – 25
90480–01559	23 – 31
	23 – 39
	33 – 24
	33 – 28
90480–01803	6 – 15
90480–08801	18 – 3
90480–12805	23 – 32
	23 – 40
90480–12808	33 – 15
	33 – 20
	34 – 29
	34 – 40
90480–13398	34 – 11
90480–13567	17 – 3
90480–14004	38 – 7
90480–14229	39 – 3
90480–15363	6 – 11
	23 – 4
	23 – 9
90501–06022	15 – 3
90501–06800	15 – 8
90501–12743	31 – 38
90501–18576	7 – 5
90506–26807	31 – 27

CODIGO Nº PART NO.	REF. Nº
90506–28800	31 – 2
90508–183B9	31 – 12
90508–184B0	31 – 23
90508–32837	16 – 5
90520–02838	34 – 4
90520–10811	34 – 10
90520–10839	34 – 8
90520–10847	34 – 9
91312–05010	23 – 17
	23 – 22
91312–05016	4 – 2
91312–06014	43 – 10
91312–06016	35 – 4
91312–06020	8 – 3
	12 – 7
91312–06025	35 – 3
91317–06020	29 – 4
91317–06030	29 – 12
	34 – 24
91317–08020	29 – 3
91317–08030	21 – 10
91701–08035	31 – 14
91810–14809	1 – 20
	1 – 21
	10 – 3
	11 – 3
	11 – 14
92012–06010	31 – 32
92012–06016	20 – 10
	20 – 19
	20 – 22
92012–08020	32 – 19
92902–06200	16 – 12
93101–10805	11 – 19
93102–08800	1 – 13
93102–12809	16 – 8
93102–12877	13 – 30
93102–22818	14 – 27
93103–10801	5 – 2
93106–17802	20 – 17
93106–22808	25 – 3
	27 – 4
93106–26801	27 – 8
93210–09809	4 – 4
93210–108H5	41 – 13
93210–14812	11 – 6
93210–15620	32 – 7
93210–19809	5 – 13

CODIGO Nº PART NO.	REF. Nº
93210–19809	11 – 18
93210–21801	43 – 4
93210–26810	36 – 6
93210–32813	11 – 8
93210–34805	7 – 6
93210–39803	5 – 10
93210–54806	7 – 12
93306–000Y3	5 – 7
93306–001YH	4 – 5
93306–054XG	14 – 8
93306–054YA	27 – 7
93306–202YE	14 – 9
93306–203XR	14 – 25
93306–203XS	2 – 24
	2 – 25
93306–252XG	25 – 4
	27 – 3
93306–272X1	14 – 26
93306–305XW	2 – 9
93306–305XX	2 – 8
93310–325YC	12 – 4
93310–526YT	2 – 3
93315–112Y9	13 – 29
93315–317Y4	20 – 12
93317–318Y5	20 – 3
93410–20809	14 – 4
93410–22039	14 – 17
	14 – 23
93450–16115	2 – 13
93501–04805	31 – 39
93505–16844	13 – 28
93608–30839	16 – 7
93822–14800	14 – 28
93900–00824	25 – 6
	27 – 15
94110–17818	25 – 5
94114–17804	27 – 14
94568–J9096	4 – 11
94568–K4127	27 – 24
94668–K402R	27 – 25
94703–00439	1 – 18
95022–06010	1 – 3
	1 – 25
	14 – 30
	24 – 8
95022–06012	7 – 14
	42 – 15
95022–06014	4 – 10

INDICE NUMERICO
NUMERICAL INDEX

CODIGO Nº PART NO.	REF. Nº
95022–06014	19 – 36
	19 – 39
95022–06016	11 – 11
95022–06020	6 – 3
	7 – 10
95022–06025	4 – 19
	5 – 12
95022–06030	1 – 10
95022–06040	10 – 7
	11 – 4
	11 – 15
95022–06045	10 – 5
95022–06050	11 – 16
95022–06055	10 – 4
95022–06070	10 – 6
95022–06080	7 – 11
95022–06090	11 – 20
95022–08012	24 – 14
95027–06010	30 – 19
95302–08700	27 – 23
	32 – 3
95602–08200	24 – 12
	27 – 12
95602–12200	20 – 7
95602–14200	25 – 9
	27 – 19
95607–06200	24 – 4
95612–08618	1 – 5
95702–08500	9 – 6
95702–12500	35 – 5
95802–06010	38 – 9
95802–06025	43 – 16
95807–06020	18 – 5
95807–06025	32 – 23
95812–06016	43 – 13
95812–06030	8 – 12
95812–08025	31 – 44
95822–06012	43 – 28
95822–06025	6 – 12
97012–06020	16 – 15
97080–06020	42 – 2
97507–06525	41 – 10
97702–30016	38 – 4
97702–50012	19 – 6
	19 – 13
	34 – 15
	34 – 17
97702–50014	38 – 6
97702–50016	23 – 36
	23 – 44
	34 – 13
	34 – 32
	34 – 36
	34 – 43
	34 – 47
	39 – 2
	39 – 5
	40 – 3
97707–50012	19 – 22
	19 – 25
97707–50016	33 – 25
	33 – 29
	33 – 32
97707–50025	8 – 21
98502–05016	43 – 5
98502–06012	14 – 11
98507–05012	29 – 16
98707–03020	41 – 8
98907–04020	40 – 8
99001–10600	16 – 6
99009–20500	13 – 31
99530–08012	1 – 11