Alphabetical Index

3rd-4th Gear Synchronizer (Removal and Installation, Manual Transmission - Vehicles With: 5-Speed Manual Transmission - MTX75)
A-Pillar Outer Panel Section and Reinforcement (Removal and Installation, Side Panel Sheet Metal Repairs)
A-Pillar Trim Panel (Removal and Installation, Interior Trim and Ornamentation)
About This Manual (Description and Operation, General Information)
Acceleration Control (Diagnosis and Testing, Acceleration Control)
Acceleration Control - Overview (Description and Operation, Acceleration Control)
Accelerator Pedal (Removal and Installation, Acceleration Control)
Accessory Drive (Diagnosis and Testing, Accessory Drive - 2.0L Duratec-HE (125kW/170PS) - MI4)
Accessory Drive (Diagnosis and Testing, Accessory Drive - 2.0L EcoBoost (184kW/250PS) - MI4)
Accessory Drive - Component Location (Description and Operation, Accessory Drive - 2.0L EcoBoost (184kW/250PS) - MI4)
Accessory Drive - Overview (Description and Operation, Accessory Drive - 2.0L Duratec-HE (125kW/170PS) - MI4)
Accessory Drive Belt (Removal and Installation, Accessory Drive - 2.0L Duratec-HE (125kW/170PS) - MI4)
Accessory Drive Belt (Removal and Installation, Accessory Drive - 2.0L EcoBoost (184kW/250PS) - MI4)
Accessory Drive Belt Tensioner (Removal and Installation, Accessory Drive - 2.0L Duratec-HE (125kW/170PS) - MI4)
Accessory Drive Belt Tensioner (Removal and Installation, Accessory Drive - 2.0L EcoBoost (184kW/250PS) - MI4)
Active Grille Shutter (Diagnosis and Testing, Front End Body Panels)
Active Grille Shutter (Disassembly and Assembly, Front End Body Panels)
Active Grille Shutter (Removal and Installation, Front End Body Panels)
Active Grille Shutter - Overview (Description and Operation, Front End Body Panels)
Active Grille Shutter - System Operation and Component Description (Description and Operation, Front End Body Panels)
Active Park Assist Switch (Removal and Installation, Parking Aid - Vehicles With: Active Park Assist)
Air Cleaner (Removal and Installation, Intake Air Distribution and Filtering - 2.0L Duratec-HE (125kW/170PS) - MI4)
Air Cleaner (Removal and Installation, Intake Air Distribution and Filtering - 2.0L EcoBoost (184kW/250PS) - MI4)
Air Cleaner Outlet Pipe (Removal and Installation, Intake Air Distribution and Filtering - 2.0L Duratec-HE (125kW/170PS) - MI4)
Air Cleaner Outlet Pipe (Removal and Installation, Intake Air Distribution and Filtering - 2.0L EcoBoost (184kW/250PS) - MI4)
Air Conditioning (A/C) Clutch Air Gap Adjustment (General Procedures, Climate Control System - General Information)
Air Conditioning (A/C) Clutch and Air Conditioning (A/C) Clutch Field Coil (Removal and Installation, Climate Control System - General Information)
Air Conditioning (A/C) Compressor - 2.0L Duratec-HE (125kW/170PS) - MI4 (Removal and Installation, Climate Control System - General Information)
Air Conditioning (A/C) Compressor - 2.0L EcoBoost (184kW/250PS) - MI4 (Removal and Installation, Climate Control System - General Information)
Air Conditioning (A/C) Compressor Belt (Removal and Installation, Accessory Drive - 2.0L Duratec-HE (125kW/170PS) - MI4)
Air Conditioning (A/C) Compressor Belt (Removal and Installation, Accessory Drive - 2.0L EcoBoost (184kW/250PS) - MI4)
Air Conditioning (A/C) Compressor Inlet Line - 2.0L Duratec-HE (125kW/170PS) - MI4, Vehicles Built From: 05-March-2012 (Removal and Installation, Climate Control System - General Information)
Air Conditioning (A/C) Compressor Inlet Line - 2.0L Duratec-HE (125kW/170PS) - MI4, Vehicles Built Up To: 05-March-2012 (Removal and Installation, Climate Control System - General Information)
Air Conditioning (A/C) Compressor Inlet Line - 2.0L EcoBoost (184kW/250PS) - MI4 (Removal and Installation, Climate Control System - General Information)
Air Conditioning (A/C) Compressor to Condenser Line - 2.0L Duratec-HE (125kW/170PS) - MI4 (Removal and Installation, Climate Control System - General Information)
Air Conditioning (A/C) Compressor to Condenser Line - 2.0L EcoBoost (184kW/250PS) - MI4 (Removal and Installation, Climate Control System - General Information)
Air Conditioning (A/C) Odor Treatment (General Procedures, Climate Control System - General Information)
Air Conditioning (A/C) Pressure Transducer (Removal and Installation, Climate Control System - General Information)
Air Conditioning (A/C) System Flushing (General Procedures, Climate Control System - General Information)
Air Conditioning (A/C) System Recovery, Evacuation and Charging (General Procedures, Climate Control System - General Information)
Air Deflector (Removal and Installation, Roof Opening Panel)
Air Distribution Door Actuator - Vehicles With: Electronic Manual Temperature Control (EMTC) (Removal and Installation, Climate Control System - General Information)
Air Inlet Door Actuator - Vehicles With: Dual Automatic Temperature Control (DATC) (Removal and Installation, Climate Control System - General Information)

Air Inlet Door Actuator - Vehicles With: Electronic Manual Temperature Control (EMTC) (Removal and Installation, Climate Control System - General Information)
Air Inlet Duct - Vehicles With: Dual Automatic Temperature Control (DATC) (Removal and Installation, Climate Control System - General Information)
Air Inlet Duct - Vehicles With: Electronic Manual Temperature Control (EMTC) (Removal and Installation, Climate Control System - General Information)
Airbag Supplemental Restraint System (SRS) - Vehicles Built From: 11-June-2012 (Diagnosis and Testing, Supplemental Restraint System)
Airbag Supplemental Restraint System (SRS) - Vehicles Built Up To: 25-June-2012 (Diagnosis and Testing, Supplemental Restraint System)
Airbag and Safety Belt Pretensioner Supplemental Restraint System (SRS) - Overview (Description and Operation, Supplemental Restraint System)
Airbag and Safety Belt Pretensioner Supplemental Restraint System (SRS) - Vehicles Built From: 11-June-2012 - Component Location (Description and Operation, Supplemental Restraint System)
Airbag and Safety Belt Pretensioner Supplemental Restraint System (SRS) - Vehicles Built From: 11-June-2012 - System Operation and Component Description (Description and Operation, Supplemental Restraint System)
Airbag and Safety Belt Pretensioner Supplemental Restraint System (SRS) - Vehicles Built Up To: 25-June-2012 - Component Location (Description and Operation, Supplemental Restraint System)
Airbag and Safety Belt Pretensioner Supplemental Restraint System (SRS) - Vehicles Built Up To: 25-June-2012 - System Operation and Component Description (Description and Operation, Supplemental Restraint System)
Ambient Air Temperature Sensor (Removal and Installation, Climate Control System - General Information)
Anti-Lock Brake System (ABS) and Stability Control (Diagnosis and Testing, Anti-Lock Brake System (ABS) and Stability Control)
Anti-Lock Brake System (ABS) and Stability Control - Overview (Description and Operation, Anti-Lock Brake System (ABS) and Stability Control)
Anti-Lock Brake System (ABS) and Stability Control - System Operation and Component Description (Description and Operation, Anti-Lock Brake System (ABS) and Stability Control)
Audio Digital Signal Processing (DSP) Module (Removal and Installation, Information and Entertainment System - General Information - Vehicles With: SYNC/Sony AM/FM/CD)
Audio Front Control Module (ACM) (Removal and Installation, Information and Entertainment System - General Information - Vehicles With: AM/FM/CD)
Audio Front Control Module (ACM) (Removal and Installation, Information and Entertainment System - General Information - Vehicles With: AM/FM/CD/SYNC)
Audio Front Control Module (ACM) (Removal and Installation, Information and Entertainment System - General Information - Vehicles With: SYNC/Sony AM/FM/CD)
Audio Front Control Module (ACM) Self-Test (General Procedures, Information and Entertainment System - General Information - Vehicles With: AM/FM/CD)
Audio Front Control Module (ACM) Self-Test (General Procedures, Information and Entertainment System - General Information - Vehicles With: AM/FM/CD/SYNC)
Audio Front Control Module (ACM) Self-Test (General Procedures, Information and Entertainment System - General Information - Vehicles With: SYNC/Sony AM/FM/CD)
Audio Input Socket (Removal and Installation, Information and Entertainment System - General Information - Vehicles With: AM/FM/CD)
Audio Input Socket (Removal and Installation, Information and Entertainment System - General Information - Vehicles With: AM/FM/CD/SYNC)
Audio Unit Antenna (Removal and Installation, Information and Entertainment System - General Information - Vehicles With: AM/FM/CD)
Audio Unit Antenna (Removal and Installation, Information and Entertainment System - General Information - Vehicles With: AM/FM/CD/SYNC)
Audio Unit Antenna (Removal and Installation, Information and Entertainment System - General Information - Vehicles With: SYNC/Sony AM/FM/CD)
Audio Unit Antenna Cable (Removal and Installation, Information and Entertainment System - General Information - Vehicles With: AM/FM/CD)
Audio Unit Antenna Cable (Removal and Installation, Information and Entertainment System - General Information - Vehicles With: AM/FM/CD/SYNC)
Audio Unit Antenna Cable (Removal and Installation, Information and Entertainment System - General Information - Vehicles With: SYNC/Sony AM/FM/CD)
Autolamps (Diagnosis and Testing, Exterior Lighting)
Automatic Transmission (Diagnosis and Testing, Automatic Transmission - Vehicles With: 6-Speed PowerShift Transmission - DPS6/6DCT250)
Automatic Transmission - Vehicles With: 6-Speed PowerShift Transmission - DPS6/6DCT250 (Specifications)

Auxiliary Power Point (Removal and Installation, Instrument Panel and Console)
Azimuth System Check (General Procedures, Parking Aid - Vehicles With: Active Park Assist)
Azimuth System Check (General Procedures, Parking Aid)
B-Pillar Trim Panel - Vehicles Built From: 11-June-2012 (Removal and Installation, Interior Trim and Ornamentation)
B-Pillar Trim Panel - Vehicles Built Up To: 25-June-2012 (Removal and Installation, Interior Trim and Ornamentation)
Back Panel and Reinforcement - Vehicles With: 4-Door (Removal and Installation, Rear End Sheet Metal Repairs)
Back Panel and Reinforcement - Vehicles With: 5-Door (Removal and Installation, Rear End Sheet Metal Repairs)
Balance Shaft Backlash (General Procedures, Engine - 2.0L EcoBoost (184kW/250PS) - MI4)
Ballast (Removal and Installation, Exterior Lighting)
Battery (Diagnosis and Testing, Battery, Mounting and Cables)
Battery (Removal and Installation, Battery, Mounting and Cables)
Battery Cables - 2.0L Duratec-HE (125kW/170PS) - MI4 (Removal and Installation, Battery, Mounting and Cables)
Battery Cables - 2.0L EcoBoost (184kW/250PS) - MI4 (Removal and Installation, Battery, Mounting and Cables)
Battery Disconnect and Connect (General Procedures, Battery, Mounting and Cables)
Battery Drain Check (General Procedures, Battery, Mounting and Cables)
Battery Tray (Removal and Installation, Battery, Mounting and Cables)
Battery and Battery Charging Health and Safety Precautions (Description and Operation, General Information)
Battery and Cables - Overview (Description and Operation, Battery, Mounting and Cables)
Battery and Cables - System Operation and Component Description (Description and Operation, Battery, Mounting and Cables)
Battery, Mounting and Cables (Specifications)
Bearing Inspection (General Procedures, Engine System - General Information)
Block Heater (Removal and Installation, Engine Cooling - 2.0L Duratec-HE (125kW/170PS) - MI4)
Block Heater (Removal and Installation, Engine Cooling - 2.0L EcoBoost (184kW/250PS) - MI4)
Blower Motor - Vehicles With: Dual Automatic Temperature Control (DATC) (Removal and Installation, Climate Control System - General Information)
Blower Motor - Vehicles With: Electronic Manual Temperature Control (EMTC) (Removal and Installation, Climate Control System - General Information)
Blower Motor Resistor - Vehicles With: Electronic Manual Temperature Control (EMTC) (Removal and Installation, Climate Control System - General Information)
Blower Motor Speed Control - Vehicles With: Dual Automatic Temperature Control (DATC) (Removal and Installation, Climate Control System - General Information)
Body - Overview (Description and Operation, Body System - General Information)
Body Construction - Component Location (Description and Operation, Body Repairs - General Information)
Body Control Module (BCM) (Diagnosis and Testing, Multifunction Electronic Modules)
Body Control Module (BCM) (Removal and Installation, Multifunction Electronic Modules)
Body Panel Sectioning (General Procedures, Body Repairs - Vehicle Specific Information and Tolerance Checks)
Body Repair Health and Safety and General Precautions (Description and Operation, General Information)
Body Repairs - General Information (Specifications)
Body System (Diagnosis and Testing, Body System - General Information)
Body and Frame (Description and Operation, Body Repairs - Vehicle Specific Information and Tolerance Checks)
Brake Backing Plate (Removal and Installation, Drum Brake)
Brake Booster (Removal and Installation, Power Brake Actuation)
Brake Caliper (Removal and Installation, Front Disc Brake)
Brake Caliper (Removal and Installation, Rear Disc Brake)
Brake Caliper Anchor Plate (Removal and Installation, Front Disc Brake)
Brake Caliper Anchor Plate (Removal and Installation, Rear Disc Brake)
Brake Disc (Removal and Installation, Front Disc Brake)
Brake Disc (Removal and Installation, Rear Disc Brake)
Brake Disc Machining (General Procedures, Brake System - General Information)
Brake Disc Shield (Removal and Installation, Front Disc Brake)
Brake Disc Shield (Removal and Installation, Rear Disc Brake)
Brake Drum (Removal and Installation, Drum Brake)
Brake Fluid Reservoir (Removal and Installation, Hydraulic Brake Actuation)
Brake Master Cylinder (Removal and Installation, Hydraulic Brake Actuation)
Brake Pads (Removal and Installation, Front Disc Brake)
Brake Pads (Removal and Installation, Rear Disc Brake)
Brake Pedal and Bracket (Removal and Installation, Hydraulic Brake Actuation)
Brake Shoe Adjustment (General Procedures, Drum Brake)
Brake Shoes (Removal and Installation, Drum Brake)
Brake System (Diagnosis and Testing, Brake System - General Information)

Brake System - General Information (Specifications)
Brake System Bleeding (General Procedures, Brake System - General Information)
Brake System Health and Safety Precautions (Description and Operation, General Information)
Brake System Inspection (General Procedures, Brake System - General Information)
Brake Vacuum Pump - 2.0L EcoBoost (184kW/250PS) - MI4 (Removal and Installation, Power Brake Actuation)
C-Pillar Lower Trim Panel (Removal and Installation, Interior Trim and Ornamentation)
C-Pillar Lower Trim Panel (Removal and Installation, Interior Trim and Ornamentation)
C-Pillar Side Impact Sensor (Removal and Installation, Supplemental Restraint System)
C-Pillar Trim Panel - Vehicles With: 4-Door (Removal and Installation, Interior Trim and Ornamentation)
C-Pillar Trim Panel - Vehicles With: 5-Door (Removal and Installation, Interior Trim and Ornamentation)
C-Pillar Upper Trim Panel (Removal and Installation, Interior Trim and Ornamentation)
Cabin Air Filter (Removal and Installation, Climate Control System - General Information)
Camshaft (Removal and Installation, Engine - 2.0L Duratec-HE (125kW/170PS) - MI4)
Camshaft (Removal and Installation, Engine - 2.0L EcoBoost (184kW/250PS) - MI4)
Camshaft Position (CMP) Sensor (Removal and Installation, Electronic Engine Controls - 2.0L Duratec-HE (125kW/170PS) - MI4)
Camshaft Position (CMP) Sensor LH (Removal and Installation, Electronic Engine Controls - 2.0L EcoBoost (184kW/250PS) - MI4)
Camshaft Position (CMP) Sensor RH (Removal and Installation, Electronic Engine Controls - 2.0L EcoBoost (184kW/250PS) - MI4)
Catalyst Monitor Sensor (Removal and Installation, Electronic Engine Controls - 2.0L Duratec-HE (125kW/170PS) - MI4)
Catalyst Monitor Sensor (Removal and Installation, Electronic Engine Controls - 2.0L EcoBoost (184kW/250PS) - MI4)
Catalytic Converter (Removal and Installation, Exhaust System - 2.0L Duratec-HE (125kW/170PS) - MI4)
Catalytic Converter (Removal and Installation, Exhaust System)
Center Register Air Discharge Temperature Sensor - Vehicles With: Dual Automatic Temperature Control (DATC) (Removal and Installation, Climate Control System - General Information)
Center Registers (Removal and Installation, Climate Control System - General Information)
Charge Air Cooler (CAC) (Removal and Installation, Intake Air Distribution and Filtering - 2.0L EcoBoost (184kW/250PS) - MI4)
Charge Air Cooler (CAC) Cleaning (General Procedures, Intake Air Distribution and Filtering - 2.0L EcoBoost (184kW/250PS) - MI4)
Charging System - 2.0L Duratec-HE (125kW/170PS) - MI4 (Diagnosis and Testing, Charging System - General Information)
Charging System - 2.0L EcoBoost (184kW/250PS) - MI4 (Diagnosis and Testing, Charging System - General Information)
Charging System - Overview (Description and Operation, Charging System - General Information)
Charging System - System Operation and Component Description (Description and Operation, Charging System - General Information)
Child Safety Seat Tether Anchor (Removal and Installation, Safety Belt System)
Climate Control System - General Information (Specifications)
Climate Control System - Vehicles Built From: 05-March-2012, Vehicles With: Dual Automatic Temperature Control (DATC) - Component Location (Description and Operation, Climate Control System - General Information)
Climate Control System - Vehicles Built From: 05-March-2012, Vehicles With: Electronic Manual Temperature Control (EMTC) - Component Location (Description and Operation, Climate Control System - General Information)
Climate Control System - Vehicles Built Up To: 05-March-2012, Vehicles With: Dual Automatic Temperature Control (DATC) - Component Location (Description and Operation, Climate Control System - General Information)
Climate Control System - Vehicles Built Up To: 05-March-2012, Vehicles With: Electronic Manual Temperature Control (EMTC) - Component Location (Description and Operation, Climate Control System - General Information)
Climate Control System - Vehicles With: Dual Automatic Temperature Control (DATC) (Diagnosis and Testing, Climate Control System - General Information)
Climate Control System - Vehicles With: Dual Automatic Temperature Control (DATC) - Overview (Description and Operation, Climate Control System - General Information)
Climate Control System - Vehicles With: Dual Automatic Temperature Control (DATC) - System Operation and Component Description (Description and Operation, Climate Control System - General Information)
Climate Control System - Vehicles With: Electronic Manual Temperature Control (EMTC) (Diagnosis and Testing, Climate Control System - General Information)
Climate Control System - Vehicles With: Electronic Manual Temperature Control (EMTC) - Overview (Description and Operation, Climate Control System - General Information)
Climate Control System - Vehicles With: Electronic Manual Temperature Control (EMTC) - System Operation and Component Description (Description and Operation, Climate Control System - General Information)
Climate Control System Health and Safety Precautions (Description and Operation, General Information)
Clockspring (Removal and Installation, Supplemental Restraint System)
Clutch (Diagnosis and Testing, Clutch)
Clutch - Overview (Description and Operation, Clutch)
Clutch - System Operation and Component Description (Description and Operation, Clutch)
Clutch Actuator (Removal and Installation, Automatic Transmission - Vehicles With: 6-Speed PowerShift Transmission - DPS6/6DCT250)

Clutch Actuator Motor (Removal and Installation, Automatic Transmission - Vehicles With: 6-Speed PowerShift Transmission - DPS6/6DCT250)
Clutch Controls (Diagnosis and Testing, Clutch Controls)
Clutch Controls - Overview (Description and Operation, Clutch Controls)
Clutch Disc and Pressure Plate - Vehicles With: 5-Speed Manual Transmission - MTX75 (Removal and Installation, Clutch)
Clutch Disc and Pressure Plate - Vehicles With: 6-Speed Manual Transmission - MMT6 (Removal and Installation, Clutch)
Clutch Housing (Disassembly and Assembly of Subassemblies, Automatic Transmission - Vehicles With: 6-Speed PowerShift Transmission - DPS6/6DCT250)
Clutch Pedal - Vehicles With: LHD (Removal and Installation, Clutch Controls)
Clutch Pedal Position (CPP) Switch (Removal and Installation, Electronic Engine Controls - 2.0L Duratec-HE (125kW/170PS) - MI4)
Clutch Pedal Position (CPP) Switch (Removal and Installation, Electronic Engine Controls - 2.0L EcoBoost (184kW/250PS) - MI4)
Clutch Slave Cylinder - Vehicles With: 5-Speed Manual Transmission - MTX75 (Removal and Installation, Clutch Controls)
Clutch Slave Cylinder - Vehicles With: 6-Speed Manual Transmission - MMT6 (Removal and Installation, Clutch Controls)
Clutch System Bleeding (General Procedures, Clutch Controls)
Clutch Unit (Removal and Installation, Automatic Transmission - Vehicles With: 6-Speed PowerShift Transmission - DPS6/6DCT250)
Communications Network (Diagnosis and Testing, Module Communications Network)
Communications Network - Overview (Description and Operation, Module Communications Network)
Communications Network - System Operation and Component Description (Description and Operation, Module Communications Network)
Compass Module (Removal and Installation, Instrumentation, Message Center and Warning Chimes)
Component Bleeding (General Procedures, Brake System - General Information)
Condenser - 2.0L Duratec-HE (125kW/170PS) - MI4 (Removal and Installation, Climate Control System - General Information)
Condenser - 2.0L EcoBoost (184kW/250PS) - MI4 (Removal and Installation, Climate Control System - General Information)
Connecting Rod Bearing Journal Clearance (General Procedures, Engine System - General Information)
Coolant Pump (Removal and Installation, Engine Cooling - 2.0L Duratec-HE (125kW/170PS) - MI4)
Coolant Pump (Removal and Installation, Engine Cooling - 2.0L EcoBoost (184kW/250PS) - MI4)
Cooling Fan Motor and Shroud (Removal and Installation, Engine Cooling - 2.0L Duratec-HE (125kW/170PS) - MI4)
Cooling Fan Motor and Shroud (Removal and Installation, Engine Cooling - 2.0L EcoBoost (184kW/250PS) - MI4)
Cooling Module (Removal and Installation, Engine Cooling - 2.0L EcoBoost (184kW/250PS) - MI4)
Cooling System Draining and Vacuum Filling (General Procedures, Engine Cooling - 2.0L Duratec-HE (125kW/170PS) - MI4)
Cooling System Draining and Vacuum Filling (General Procedures, Engine Cooling - 2.0L EcoBoost (184kW/250PS) - MI4)
Cooling System Draining, Filling and Bleeding (General Procedures, Engine Cooling - 2.0L Duratec-HE (125kW/170PS) - MI4)
Cooling System Flushing (General Procedures, Engine Cooling - 2.0L Duratec-HE (125kW/170PS) - MI4)
Corrosion Prevention (General Procedures, Body Repairs - General Information)
Cowl Panel Grille (Removal and Installation, Front End Body Panels)
Crankcase Vent Oil Separator (Removal and Installation, Engine Emission Control - 2.0L Duratec-HE (125kW/170PS) - MI4)
Crankcase Vent Oil Separator (Removal and Installation, Engine Emission Control - 2.0L EcoBoost (184kW/250PS) - MI4)
Crankshaft Front Seal (Removal and Installation, Engine - 2.0L Duratec-HE (125kW/170PS) - MI4)
Crankshaft Front Seal (Removal and Installation, Engine - 2.0L EcoBoost (184kW/250PS) - MI4)
Crankshaft Main Bearing Journal Clearance (General Procedures, Engine System - General Information)
Crankshaft Position (CKP) Sensor (Removal and Installation, Electronic Engine Controls - 2.0L Duratec-HE (125kW/170PS) - MI4)
Crankshaft Position (CKP) Sensor (Removal and Installation, Electronic Engine Controls - 2.0L EcoBoost (184kW/250PS) - MI4)
Crankshaft Pulley (Removal and Installation, Engine - 2.0L Duratec-HE (125kW/170PS) - MI4)
Crankshaft Pulley (Removal and Installation, Engine - 2.0L EcoBoost (184kW/250PS) - MI4)
Crankshaft Rear Seal (Removal and Installation, Engine - 2.0L Duratec-HE (125kW/170PS) - MI4)
Crankshaft Rear Seal (Removal and Installation, Engine - 2.0L EcoBoost (184kW/250PS) - MI4)
Cruise Control (Diagnosis and Testing, Cruise Control)
Cruise Control - Component Location (Description and Operation, Cruise Control)
Cruise Control - Overview (Description and Operation, Cruise Control)
Cruise Control - System Operation and Component Description (Description and Operation, Cruise Control)
Cylinder Block Core Plug Replacement (General Procedures, Engine System - General Information)
Cylinder Block Distortion (General Procedures, Engine System - General Information)
Cylinder Bore Taper (General Procedures, Engine System - General Information)
Cylinder Head (Disassembly and Assembly of Subassemblies, Engine - 2.0L Duratec-HE (125kW/170PS) - MI4)
Cylinder Head (Disassembly and Assembly of Subassemblies, Engine - 2.0L EcoBoost (184kW/250PS) - MI4)
Cylinder Head (Removal and Installation, Engine - 2.0L Duratec-HE (125kW/170PS) - MI4)
Cylinder Head (Removal and Installation, Engine - 2.0L EcoBoost (184kW/250PS) - MI4)
Cylinder Head Distortion (General Procedures, Engine System - General Information)
Cylinder Head Temperature (CHT) Sensor (Removal and Installation, Electronic Engine Controls - 2.0L EcoBoost (184kW/250PS) - MI4)

D-Pillar Trim Panel - Vehicles With: 4-Door (Removal and Installation, Interior Trim and Ornamentation)
D-Pillar Trim Panel - Vehicles With: 5-Door (Removal and Installation, Interior Trim and Ornamentation)
Daytime Running Lamps (DRL) (Diagnosis and Testing, Exterior Lighting)
Defrost Vent/Register Door Actuator - Vehicles With: Dual Automatic Temperature Control (DATC) (Removal and Installation, Climate Control System - General Information)
Degas Bottle (Removal and Installation, Engine Cooling - 2.0L Duratec-HE (125kW/170PS) - MI4)
Degas Bottle (Removal and Installation, Engine Cooling - 2.0L EcoBoost (184kW/250PS) - MI4)
Diagnosis By Symptom (Diagnosis and Testing, Automatic Transmission - Vehicles With: 6-Speed PowerShift Transmission - DPS6/6DCT250)
Diagnostic Methods (Description and Operation, General Information)
Diagnostic Trouble Code Charts (Diagnosis and Testing, General Information)
Diesel Fuel System Health and Safety Precautions (Description and Operation, General Information)
Differential (Disassembly and Assembly of Subassemblies, Automatic Transmission - Vehicles With: 6-Speed PowerShift Transmission - DPS6/6DCT250)
Differential (Disassembly and Assembly of Subassemblies, Manual Transmission - Vehicles With: 5-Speed Manual Transmission - MTX75)
Door Latch Lubrication (General Procedures, Handles, Locks, Latches and Entry Systems - Vehicles With: One-Touch Up Door Window)
Door Latch Lubrication (General Procedures, Handles, Locks, Latches and Entry Systems - Vehicles Without: One-Touch Up Door Window)
Door Lock Cylinder (Removal and Installation, Handles, Locks, Latches and Entry Systems - Vehicles With: One-Touch Up Door Window)
Door Lock Cylinder (Removal and Installation, Handles, Locks, Latches and Entry Systems - Vehicles Without: One-Touch Up Door Window)
Door Module (Removal and Installation, Multifunction Electronic Modules)
Driveline System (Diagnosis and Testing, Driveline System - General Information)
Driver Airbag (Removal and Installation, Supplemental Restraint System)
Driver Lower Airbag - Vehicles Built From: 11-June-2012 (Removal and Installation, Supplemental Restraint System)
Driver Side Register (Removal and Installation, Climate Control System - General Information)
Driver Side Temperature Door Actuator - Vehicles With: Dual Automatic Temperature Control (DATC) (Removal and Installation, Climate Control System - General Information)
Drum Brake (Diagnosis and Testing, Drum Brake)
Electronic Engine Controls (Diagnosis and Testing, Electronic Engine Controls - 2.0L Duratec-HE (125kW/170PS) - MI4)
Electronic Engine Controls (Diagnosis and Testing, Electronic Engine Controls - 2.0L EcoBoost (184kW/250PS) - MI4)
Electronic Engine Controls - 2.0L Duratec-HE (125kW/170PS) - MI4 (Specifications)
Electronic Engine Controls - 2.0L EcoBoost (184kW/250PS) - MI4 (Specifications)
Electronic Engine Controls - Component Location (Description and Operation, Electronic Engine Controls - 2.0L Duratec-HE (125kW/170PS) - MI4)
Electronic Engine Controls - Component Location (Description and Operation, Electronic Engine Controls - 2.0L EcoBoost (184kW/250PS) - MI4)
Electronic Engine Controls - Overview (Description and Operation, Electronic Engine Controls - 2.0L Duratec-HE (125kW/170PS) - MI4)
Electronic Engine Controls - Overview (Description and Operation, Electronic Engine Controls - 2.0L EcoBoost (184kW/250PS) - MI4)
Electronic Engine Controls - System Operation and Component Description (Description and Operation, Electronic Engine Controls - 2.0L Duratec-HE (125kW/170PS) - MI4)
Electronic Engine Controls - System Operation and Component Description (Description and Operation, Electronic Engine Controls - 2.0L EcoBoost (184kW/250PS) - MI4)
Electronic Leak Detection (General Procedures, Climate Control System - General Information)
Elevation System Check (General Procedures, Parking Aid)
Engine (Assembly, Engine - 2.0L Duratec-HE (125kW/170PS) - MI4)
Engine (Assembly, Engine - 2.0L EcoBoost (184kW/250PS) - MI4)
Engine (Diagnosis and Testing, Engine - 2.0L Duratec-HE (125kW/170PS) - MI4)
Engine (Diagnosis and Testing, Engine - 2.0L EcoBoost (184kW/250PS) - MI4)
Engine (Diagnosis and Testing, Engine System - General Information)
Engine (Disassembly, Engine - 2.0L Duratec-HE (125kW/170PS) - MI4)
Engine (Disassembly, Engine - 2.0L EcoBoost (184kW/250PS) - MI4)
Engine (Installation, Engine - 2.0L Duratec-HE (125kW/170PS) - MI4)
Engine (Installation, Engine - 2.0L EcoBoost (184kW/250PS) - MI4)
Engine (Removal, Engine - 2.0L Duratec-HE (125kW/170PS) - MI4)
Engine (Removal, Engine - 2.0L EcoBoost (184kW/250PS) - MI4)

Engine - 2.0L Duratec-HE (125kW/170PS) - MI4 (Specifications)
Engine - 2.0L EcoBoost (184kW/250PS) - MI4 (Specifications)
Engine - Overview (Description and Operation, Engine - 2.0L Duratec-HE (125kW/170PS) - MI4)
Engine - Overview (Description and Operation, Engine - 2.0L EcoBoost (184kW/250PS) - MI4)
Engine - Overview (Description and Operation, Engine System - General Information)
Engine Component View (Description and Operation, Engine - 2.0L Duratec-HE (125kW/170PS) - MI4)
Engine Component View (Description and Operation, Engine - 2.0L EcoBoost (184kW/250PS) - MI4)
Engine Coolant Temperature (ECT) Sensor (Removal and Installation, Electronic Engine Controls - 2.0L Duratec-HE (125kW/170PS) - MI4)
Engine Cooling (Diagnosis and Testing, Engine Cooling - 2.0L Duratec-HE (125kW/170PS) - MI4)
Engine Cooling (Diagnosis and Testing, Engine Cooling - 2.0L EcoBoost (184kW/250PS) - MI4)
Engine Cooling - 2.0L Duratec-HE (125kW/170PS) - MI4 (Specifications)
Engine Cooling - 2.0L EcoBoost (184kW/250PS) - MI4 (Specifications)
Engine Cooling - Component Location (Description and Operation, Engine Cooling - 2.0L EcoBoost (184kW/250PS) - MI4)
Engine Cooling - System Operation and Component Description (Description and Operation, Engine Cooling - 2.0L Duratec-HE (125kW/170PS) - MI4)
Engine Cooling System Health and Safety Precautions (Description and Operation, General Information)
Engine Emission Control (Diagnosis and Testing, Engine Emission Control - 2.0L Duratec-HE (125kW/170PS) - MI4)
Engine Emission Control (Diagnosis and Testing, Engine Emission Control - 2.0L EcoBoost (184kW/250PS) - MI4)
Engine Emission Control - 2.0L Duratec-HE (125kW/170PS) - MI4 (Specifications)
Engine Emission Control - Component Location (Description and Operation, Engine Emission Control - 2.0L Duratec-HE (125kW/170PS) - MI4)
Engine Emission Control - Component Location (Description and Operation, Engine Emission Control - 2.0L EcoBoost (184kW/250PS) - MI4)
Engine Emission Control - Overview (Description and Operation, Engine Emission Control - 2.0L Duratec-HE (125kW/170PS) - MI4)
Engine Emission Control - Overview (Description and Operation, Engine Emission Control - 2.0L EcoBoost (184kW/250PS) - MI4)
Engine Emission Control - System Operation and Component Description (Description and Operation, Engine Emission Control - 2.0L Duratec-HE (125kW/170PS) - MI4)
Engine Emission Control - System Operation and Component Description (Description and Operation, Engine Emission Control - 2.0L EcoBoost (184kW/250PS) - MI4)
Engine Front Cover (Removal and Installation, Engine - 2.0L Duratec-HE (125kW/170PS) - MI4)
Engine Front Cover (Removal and Installation, Engine - 2.0L EcoBoost (184kW/250PS) - MI4)
Engine Ignition (Diagnosis and Testing, Engine Ignition - 2.0L Duratec-HE (125kW/170PS) - MI4)
Engine Ignition (Diagnosis and Testing, Engine Ignition - 2.0L EcoBoost (184kW/250PS) - MI4)
Engine Ignition - 2.0L Duratec-HE (125kW/170PS) - MI4 (Specifications)
Engine Ignition - 2.0L EcoBoost (184kW/250PS) - MI4 (Specifications)
Engine Ignition - Component Location (Description and Operation, Engine Ignition - 2.0L Duratec-HE (125kW/170PS) - MI4)
Engine Ignition - Component Location (Description and Operation, Engine Ignition - 2.0L EcoBoost (184kW/250PS) - MI4)
Engine Ignition - System Operation and Component Description (Description and Operation, Engine Ignition - 2.0L Duratec-HE (125kW/170PS) - MI4)
Engine Ignition - System Operation and Component Description (Description and Operation, Engine Ignition - 2.0L EcoBoost (184kW/250PS) - MI4)
Engine Mount (Removal and Installation, Engine - 2.0L Duratec-HE (125kW/170PS) - MI4)
Engine Mount (Removal and Installation, Engine - 2.0L EcoBoost (184kW/250PS) - MI4)
Engine System - General Information (Specifications)
Erase All Keys and Key Programming (General Procedures, Passive Anti-Theft System (PATS) - Vehicles With: Push Button Start)
Erase All Keys and Key Programming (General Procedures, Passive Anti-Theft System (PATS))
Evaporative Emission Canister (Removal and Installation, Evaporative Emissions - 2.0L Duratec-HE (125kW/170PS) - MI4)
Evaporative Emission Canister (Removal and Installation, Evaporative Emissions - 2.0L EcoBoost (184kW/250PS) - MI4)
Evaporative Emission Canister Purge Valve (Removal and Installation, Evaporative Emissions - 2.0L Duratec-HE (125kW/170PS) - MI4)
Evaporative Emission Canister Purge Valve (Removal and Installation, Evaporative Emissions - 2.0L EcoBoost (184kW/250PS) - MI4)
Evaporative Emission Canister Vent Solenoid (Removal and Installation, Evaporative Emissions - 2.0L Duratec-HE (125kW/170PS) - MI4)
Evaporative Emission Canister Vent Solenoid (Removal and Installation, Evaporative Emissions - 2.0L EcoBoost (184kW/250PS) - MI4)
Evaporative Emission System Leak Test (General Procedures, Evaporative Emissions - 2.0L Duratec-HE (125kW/170PS) - MI4)
Evaporative Emission System Leak Test (General Procedures, Evaporative Emissions - 2.0L EcoBoost (184kW/250PS) - MI4)
Evaporative Emissions (Diagnosis and Testing, Evaporative Emissions - 2.0L Duratec-HE (125kW/170PS) - MI4)
Evaporative Emissions (Diagnosis and Testing, Evaporative Emissions - 2.0L EcoBoost (184kW/250PS) - MI4)

Evaporative Emissions - Overview (Description and Operation, Evaporative Emissions - 2.0L Duratec-HE (125kW/170PS) - MI4)
Evaporative Emissions - Overview (Description and Operation, Evaporative Emissions - 2.0L EcoBoost (184kW/250PS) - MI4)
Evaporative Emissions - System Operation and Component Description (Description and Operation, Evaporative Emissions - 2.0L Duratec-HE (125kW/170PS) - MI4)
Evaporative Emissions - System Operation and Component Description (Description and Operation, Evaporative Emissions - 2.0L EcoBoost (184kW/250PS) - MI4)
Evaporator (Removal and Installation, Climate Control System - General Information)
Evaporator Temperature Sensor (Removal and Installation, Climate Control System - General Information)
Exhaust Manifold (Removal and Installation, Engine - 2.0L Duratec-HE (125kW/170PS) - MI4)
Exhaust Manifold Cleaning and Inspection (General Procedures, Engine System - General Information)
Exhaust System (Diagnosis and Testing, Exhaust System - 2.0L Duratec-HE (125kW/170PS) - MI4)
Exhaust System (Diagnosis and Testing, Exhaust System)
Exhaust System - Overview (Description and Operation, Exhaust System - 2.0L Duratec-HE (125kW/170PS) - MI4)
Exhaust System - Overview (Description and Operation, Exhaust System)
Exhaust System Alignment (General Procedures, Exhaust System - 2.0L Duratec-HE (125kW/170PS) - MI4)
Exterior Front Door Handle (Removal and Installation, Handles, Locks, Latches and Entry Systems - Vehicles With: One-Touch Up Door Window)
Exterior Front Door Handle (Removal and Installation, Handles, Locks, Latches and Entry Systems - Vehicles Without: One-Touch Up Door Window)
Exterior Front Door Handle Reinforcement (Removal and Installation, Handles, Locks, Latches and Entry Systems - Vehicles With: One-Touch Up Door Window)
Exterior Front Door Handle Reinforcement (Removal and Installation, Handles, Locks, Latches and Entry Systems - Vehicles Without: One-Touch Up Door Window)
Exterior Lighting - Overview (Description and Operation, Exterior Lighting)
Exterior Lighting - System Operation and Component Description (Description and Operation, Exterior Lighting)
Exterior Mirror (Removal and Installation, Rear View Mirrors - Vehicles With: One-Touch Up Door Window)
Exterior Mirror (Removal and Installation, Rear View Mirrors - Vehicles Without: One-Touch Up Door Window)
Exterior Rear Door Handle (Removal and Installation, Handles, Locks, Latches and Entry Systems - Vehicles With: One-Touch Up Door Window)
Exterior Rear Door Handle (Removal and Installation, Handles, Locks, Latches and Entry Systems - Vehicles Without: One-Touch Up Door Window)
Exterior Rear Door Handle Reinforcement (Removal and Installation, Handles, Locks, Latches and Entry Systems - Vehicles With: One-Touch Up Door Window)
Exterior Rear Door Handle Reinforcement (Removal and Installation, Handles, Locks, Latches and Entry Systems - Vehicles Without: One-Touch Up Door Window)
External Controls (Description and Operation, Automatic Transmission External Controls)
External Controls (Description and Operation, Manual Transmission External Controls)
External Controls (Diagnosis and Testing, Automatic Transmission External Controls)
External Controls (Diagnosis and Testing, Manual Transmission External Controls)
External Controls - Overview (Description and Operation, Automatic Transmission External Controls)
Fender (Removal and Installation, Front End Body Panels)
Fender Splash Shield (Removal and Installation, Front End Body Panels)
Flexplate (Removal and Installation, Engine - 2.0L Duratec-HE (125kW/170PS) - MI4)
Floor Console - Vehicles With: Center Armrest (Removal and Installation, Instrument Panel and Console)
Floor Console - Vehicles Without: Center Armrest (Removal and Installation, Instrument Panel and Console)
Fluorescent Dye Leak Detection (General Procedures, Climate Control System - General Information)
Flywheel (Removal and Installation, Engine - 2.0L Duratec-HE (125kW/170PS) - MI4)
Flywheel (Removal and Installation, Engine - 2.0L EcoBoost (184kW/250PS) - MI4)
Flywheel Inspection (General Procedures, Engine System - General Information)
Fog Lamps (Diagnosis and Testing, Exterior Lighting)
Footwell Air Discharge Temperature Sensor - Vehicles With: Dual Automatic Temperature Control (DATC) (Removal and Installation, Climate Control System - General Information)
Footwell Vent Door Actuator - Vehicles With: Dual Automatic Temperature Control (DATC) (Removal and Installation, Climate Control System - General Information)
Frame Assembly - Overview (Description and Operation, Uni-Body, Subframe and Mounting System)
Front Active Park Assist Sensors (Removal and Installation, Parking Aid - Vehicles With: Active Park Assist)
Front Brake Flexible Hose (Removal and Installation, Front Disc Brake)
Front Bumper (Removal and Installation, Bumpers)
Front Bumper Cover (Disassembly and Assembly, Bumpers)
Front Bumper Cover (Disassembly and Assembly, Bumpers)

Front Bumper Cover (Removal and Installation, Bumpers)
Front Camber and Caster Adjustment (General Procedures, Suspension System - General Information)
Front Control/Display Interface Module (FCDIM) (Removal and Installation, Information and Entertainment System - General Information - Vehicles With: AM/FM/CD)
Front Control/Display Interface Module (FCDIM) (Removal and Installation, Information and Entertainment System - General Information - Vehicles With: AM/FM/CD/SYNC)
Front Controls Interface Module (FCIM) (Removal and Installation, Information and Entertainment System - General Information - Vehicles With: AM/FM/CD)
Front Controls Interface Module (FCIM) (Removal and Installation, Information and Entertainment System - General Information - Vehicles With: AM/FM/CD/SYNC)
Front Controls Interface Module (FCIM) (Removal and Installation, Information and Entertainment System - General Information - Vehicles With: SYNC/Sony AM/FM/CD)
Front Disc Brake (Diagnosis and Testing, Front Disc Brake)
Front Display Interface Module (FDIM) (Removal and Installation, Information and Entertainment System - General Information - Vehicles With: SYNC/Sony AM/FM/CD)
Front Door (Removal and Installation, Body Closures)
Front Door Alignment (General Procedures, Body Closures)
Front Door Glass Top Run (Removal and Installation, Glass, Frames and Mechanisms - Vehicles With: One-Touch Up Door Window)
Front Door Glass Top Run (Removal and Installation, Glass, Frames and Mechanisms - Vehicles Without: One-Touch Up Door Window)
Front Door Latch (Removal and Installation, Handles, Locks, Latches and Entry Systems - Vehicles With: One-Touch Up Door Window)
Front Door Latch (Removal and Installation, Handles, Locks, Latches and Entry Systems - Vehicles Without: One-Touch Up Door Window)
Front Door Side Impact Sensor (Removal and Installation, Supplemental Restraint System)
Front Door Skin Panel (Removal and Installation, Side Panel Sheet Metal Repairs)
Front Door Speaker (Removal and Installation, Information and Entertainment System - General Information - Vehicles With: AM/FM/CD)
Front Door Speaker (Removal and Installation, Information and Entertainment System - General Information - Vehicles With: AM/FM/CD/SYNC)
Front Door Speaker (Removal and Installation, Information and Entertainment System - General Information - Vehicles With: SYNC/Sony AM/FM/CD)
Front Door Trim Panel (Removal and Installation, Interior Trim and Ornamentation)
Front Door Tweeter Speaker (Removal and Installation, Information and Entertainment System - General Information - Vehicles With: AM/FM/CD/SYNC)
Front Door Tweeter Speaker (Removal and Installation, Information and Entertainment System - General Information - Vehicles With: SYNC/Sony AM/FM/CD)
Front Door Weatherstrip (Removal and Installation, Body Closures)
Front Door Window Control Switch (Removal and Installation, Glass, Frames and Mechanisms - Vehicles With: One-Touch Up Door Window)
Front Door Window Control Switch (Removal and Installation, Glass, Frames and Mechanisms - Vehicles Without: One-Touch Up Door Window)
Front Door Window Glass (Removal and Installation, Glass, Frames and Mechanisms - Vehicles With: One-Touch Up Door Window)
Front Door Window Glass (Removal and Installation, Glass, Frames and Mechanisms - Vehicles Without: One-Touch Up Door Window)
Front Door Window Regulator (Removal and Installation, Glass, Frames and Mechanisms - Vehicles With: One-Touch Up Door Window)
Front Door Window Regulator (Removal and Installation, Glass, Frames and Mechanisms - Vehicles Without: One-Touch Up Door Window)
Front Door Window Regulator Motor (Removal and Installation, Glass, Frames and Mechanisms - Vehicles With: One-Touch Up Door Window)
Front Door Window Regulator Motor (Removal and Installation, Glass, Frames and Mechanisms - Vehicles Without: One-Touch Up Door Window)
Front Drive Halfshafts (Diagnosis and Testing, Front Drive Halfshafts)
Front Fog Lamp (Removal and Installation, Exterior Lighting)
Front Fog Lamp (Removal and Installation, Exterior Lighting)
Front Fog Lamp Adjustment (General Procedures, Exterior Lighting)
Front Halfshaft LH (Removal and Installation, Front Drive Halfshafts)
Front Halfshaft RH (Removal and Installation, Front Drive Halfshafts)
Front Head Restraint Guide Sleeve (Removal and Installation, Seating)

Front Impact Severity Sensor (Removal and Installation, Supplemental Restraint System)
Front Knock Sensor (KS) (Removal and Installation, Electronic Engine Controls - 2.0L EcoBoost (184kW/250PS) - MI4)
Front Lower Arm (Removal and Installation, Rear Suspension)
Front Parking Aid Sensor (Removal and Installation, Parking Aid)
Front Safety Belt Buckle (Removal and Installation, Safety Belt System)
Front Seat (Removal and Installation, Seating)
Front Seat Backrest (Removal and Installation, Seating)
Front Seat Backrest Cover (Removal and Installation, Seating)
Front Seat Backrest Heater Mat (Removal and Installation, Seating)
Front Seat Control Switch (Removal and Installation, Seating)
Front Seat Cushion Cover (Removal and Installation, Seating)
Front Seat Cushion Heater Mat (Removal and Installation, Seating)
Front Seat Track (Removal and Installation, Seating)
Front Side Member and Fender Apron Panel LH (Removal and Installation, Front End Sheet Metal Repairs)
Front Stabilizer Bar (Removal and Installation, Front Suspension)
Front Strut and Spring Assembly (Disassembly and Assembly, Front Suspension)
Front Strut and Spring Assembly (Removal and Installation, Front Suspension)
Front Subframe (Removal and Installation, Uni-Body, Subframe and Mounting System)
Front Suspension - Overview (Description and Operation, Front Suspension)
Front Toe Adjustment (General Procedures, Suspension System - General Information)
Front Wheel Bearing (Removal and Installation, Front Suspension)
Front Wheel Speed Sensor (Removal and Installation, Anti-Lock Brake System (ABS) and Stability Control)
Fuel Charging and Controls (Diagnosis and Testing, Fuel Charging and Controls - 2.0L Duratec-HE (125kW/170PS) - MI4)
Fuel Charging and Controls (Diagnosis and Testing, Fuel Charging and Controls - 2.0L EcoBoost (184kW/250PS) - MI4)
Fuel Charging and Controls - 2.0L Duratec-HE (125kW/170PS) - MI4 (Specifications)
Fuel Charging and Controls - Component Location (Description and Operation, Fuel Charging and Controls - 2.0L Duratec-HE (125kW/170PS) - MI4)
Fuel Charging and Controls - Component Location (Description and Operation, Fuel Charging and Controls - 2.0L EcoBoost (184kW/250PS) - MI4)
Fuel Charging and Controls - System Operation and Component Description (Description and Operation, Fuel Charging and Controls - 2.0L Duratec-HE (125kW/170PS) - MI4)
Fuel Charging and Controls - System Operation and Component Description (Description and Operation, Fuel Charging and Controls - 2.0L EcoBoost (184kW/250PS) - MI4)
Fuel Charging and Controls - Turbocharger - 2.0L EcoBoost (184kW/250PS) - MI4 (Specifications)
Fuel Injection Pump (Removal and Installation, Fuel Charging and Controls - 2.0L Duratec-HE (125kW/170PS) - MI4)
Fuel Injection Pump (Removal and Installation, Fuel Charging and Controls - 2.0L EcoBoost (184kW/250PS) - MI4)
Fuel Injector (Removal and Installation, Fuel Charging and Controls - 2.0L Duratec-HE (125kW/170PS) - MI4)
Fuel Injector (Removal and Installation, Fuel Charging and Controls - 2.0L EcoBoost (184kW/250PS) - MI4)
Fuel Level Sender (Removal and Installation, Fuel Tank and Lines)
Fuel Level Sender (Removal and Installation, Fuel Tank and Lines)
Fuel Lines (Removal and Installation, Fuel Tank and Lines)
Fuel Lines (Removal and Installation, Fuel Tank and Lines)
Fuel Pump (Removal and Installation, Fuel Tank and Lines)
Fuel Pump (Removal and Installation, Fuel Tank and Lines)
Fuel Pump Driver Module (FPDM) (Removal and Installation, Fuel Charging and Controls - 2.0L Duratec-HE (125kW/170PS) - MI4)
Fuel Pump Driver Module (FPDM) (Removal and Installation, Fuel Charging and Controls - 2.0L EcoBoost (184kW/250PS) - MI4)
Fuel Rail (Removal and Installation, Fuel Charging and Controls - 2.0L Duratec-HE (125kW/170PS) - MI4)
Fuel Rail (Removal and Installation, Fuel Charging and Controls - 2.0L EcoBoost (184kW/250PS) - MI4)
Fuel Rail Pressure (FRP) Sensor (Removal and Installation, Electronic Engine Controls - 2.0L Duratec-HE (125kW/170PS) - MI4)
Fuel Rail Pressure (FRP) Sensor (Removal and Installation, Electronic Engine Controls - 2.0L EcoBoost (184kW/250PS) - MI4)
Fuel System (Diagnosis and Testing, Fuel System - General Information)
Fuel System (Diagnosis and Testing, Fuel System - General Information)
Fuel System - General Information (Specifications)
Fuel System - General Information (Specifications)
Fuel System - Overview (Description and Operation, Fuel System - General Information)
Fuel System - Overview (Description and Operation, Fuel System - General Information)
Fuel System Pressure Check (General Procedures, Fuel System - General Information)
Fuel System Pressure Check (General Procedures, Fuel System - General Information)
Fuel System Pressure Release (General Procedures, Fuel System - General Information)
Fuel System Pressure Release (General Procedures, Fuel System - General Information)

Fuel Tank (Removal and Installation, Fuel Tank and Lines)
Fuel Tank (Removal and Installation, Fuel Tank and Lines)
Fuel Tank Draining (General Procedures, Fuel System - General Information)
Fuel Tank Draining (General Procedures, Fuel System - General Information)
Fuel Tank Filler Pipe (Removal and Installation, Fuel Tank and Lines)
Fuel Tank Filler Pipe (Removal and Installation, Fuel Tank and Lines)
Fuel Tank Pressure Sensor and Tube (Removal and Installation, Evaporative Emissions - 2.0L Duratec-HE (125kW/170PS) - MI4)
Fuel Tank Pressure Sensor and Tube (Removal and Installation, Evaporative Emissions - 2.0L EcoBoost (184kW/250PS) - MI4)
Fuel Tank and Lines (Diagnosis and Testing, Fuel Tank and Lines)
Fuel Tank and Lines (Diagnosis and Testing, Fuel Tank and Lines)
Fuel Tank and Lines (Specifications)
Fuel Tank and Lines (Specifications)
Fuel Tank and Lines - Overview (Description and Operation, Fuel Tank and Lines)
Fuel Tank and Lines - Overview (Description and Operation, Fuel Tank and Lines)
Gasoline and Gasoline-Ethanol Fuel Systems Health and Safety Precautions (Description and Operation, General Information)
Gearshift Cable Adjustment - Vehicles With: 5-Speed Manual Transmission - MTX75 (General Procedures, Manual Transmission External Controls)
Gearshift Cable Adjustment - Vehicles With: 6-Speed Manual Transmission - MMT6 (General Procedures, Manual Transmission External Controls)
Gearshift Cables - Vehicles With: 5-Speed Manual Transmission - MTX75 (Removal and Installation, Manual Transmission External Controls)
Gearshift Cables - Vehicles With: 6-Speed Manual Transmission - MMT6 (Removal and Installation, Manual Transmission External Controls)
Gearshift Lever - Vehicles With: 5-Speed Manual Transmission - B5/IB5/5-Speed Manual Transmission - MTX75 (Removal and Installation, Manual Transmission External Controls)
Gearshift Lever - Vehicles With: 6-Speed Manual Transmission - B6/6-Speed Manual Transmission - MMT6 (Removal and Installation, Manual Transmission External Controls)
Generator - 2.0L Duratec-HE (125kW/170PS) - MI4 (Removal and Installation, Generator and Regulator)
Generator - 2.0L EcoBoost (184kW/250PS) - MI4 (Removal and Installation, Generator and Regulator)
Generator Pulley (Removal and Installation, Generator and Regulator)
Generator and Regulator (Specifications)
Glass, Frames and Mechanisms (Diagnosis and Testing, Glass, Frames and Mechanisms - Vehicles With: One-Touch Up Door Window)
Glass, Frames and Mechanisms (Diagnosis and Testing, Glass, Frames and Mechanisms - Vehicles Without: One-Touch Up Door Window)
Glass, Frames and Mechanisms - Overview (Description and Operation, Glass, Frames and Mechanisms - Vehicles With: One-Touch Up Door Window)
Glass, Frames and Mechanisms - Overview (Description and Operation, Glass, Frames and Mechanisms - Vehicles Without: One-Touch Up Door Window)
Glass, Frames and Mechanisms - System Operation and Component Description (Description and Operation, Glass, Frames and Mechanisms - Vehicles With: One-Touch Up Door Window)
Glass, Frames and Mechanisms - System Operation and Component Description (Description and Operation, Glass, Frames and Mechanisms - Vehicles Without: One-Touch Up Door Window)
Global Positioning System Module (GPSM) (Removal and Installation, Information and Entertainment System - General Information - Vehicles With: AM/FM/CD/SYNC)
Global Positioning System Module (GPSM) (Removal and Installation, Information and Entertainment System - General Information - Vehicles With: SYNC/Sony AM/FM/CD)
Halfshaft Seal LH (Removal and Installation, Automatic Transmission - Vehicles With: 6-Speed PowerShift Transmission - DPS6/6DCT250)
Halfshaft Seal LH (Removal and Installation, Manual Transmission - Vehicles With: 5-Speed Manual Transmission - MTX75)
Halfshaft Seal LH (Removal and Installation, Manual Transmission - Vehicles With: 6-Speed Manual Transmission - MMT6)
Halfshaft Seal RH (Removal and Installation, Automatic Transmission - Vehicles With: 6-Speed PowerShift Transmission - DPS6/6DCT250)
Halfshaft Seal RH (Removal and Installation, Manual Transmission - Vehicles With: 5-Speed Manual Transmission - MTX75)
Halfshaft Seal RH (Removal and Installation, Manual Transmission - Vehicles With: 6-Speed Manual Transmission - MMT6)
Handles, Locks, Latches and Entry Systems - Overview (Description and Operation, Handles, Locks, Latches and Entry Systems - Vehicles With: One-Touch Up Door Window)
Handles, Locks, Latches and Entry Systems - Overview (Description and Operation, Handles, Locks, Latches and Entry Systems - Vehicles Without: One-Touch Up Door Window)
Handles, Locks, Latches and Entry Systems - System Operation and Component Description (Description and Operation, Handles,

Locks, Latches and Entry Systems - Vehicles With: One-Touch Up Door Window)
Handles, Locks, Latches and Entry Systems - System Operation and Component Description (Description and Operation, Handles, Locks, Latches and Entry Systems - Vehicles Without: One-Touch Up Door Window)
Hazard Flasher Switch (Removal and Installation, Exterior Lighting)
Headlamp Adjustment (General Procedures, Exterior Lighting)
Headlamp Assembly (Removal and Installation, Exterior Lighting)
Headlamp Bulb - Vehicles With: High Intensity Discharge Headlamps (Removal and Installation, Exterior Lighting)
Headlamp Switch (Removal and Installation, Exterior Lighting)
Headlamps (Diagnosis and Testing, Exterior Lighting)
Headliner - Vehicles With: 4-Door (Removal and Installation, Interior Trim and Ornamentation)
Headliner - Vehicles With: 5-Door (Removal and Installation, Interior Trim and Ornamentation)
Health and Safety Precautions (Description and Operation, General Information)
Heated Oxygen Sensor (HO2S) (Removal and Installation, Electronic Engine Controls - 2.0L Duratec-HE (125kW/170PS) - MI4)
Heated Oxygen Sensor (HO2S) (Removal and Installation, Electronic Engine Controls - 2.0L EcoBoost (184kW/250PS) - MI4)
Heated Seat Switch - Vehicles With: Center Armrest (Removal and Installation, Seating)
Heated Seat Switch - Vehicles Without: Center Armrest (Removal and Installation, Seating)
Heated Window Grid Wire Repair (General Procedures, Glass, Frames and Mechanisms - Vehicles With: One-Touch Up Door Window)
Heated Window Grid Wire Repair (General Procedures, Glass, Frames and Mechanisms - Vehicles Without: One-Touch Up Door Window)
Heater Core (Removal and Installation, Climate Control System - General Information)
Heater Core and Evaporator Core Housing (Removal and Installation, Climate Control System - General Information)
Heating, Ventilation and Air Conditioning (HVAC) Control Module (Removal and Installation, Climate Control System - General Information)
High Mounted Stoplamp - Vehicles With: 4-Door (Removal and Installation, Exterior Lighting)
High Mounted Stoplamp - Vehicles With: 5-Door (Removal and Installation, Exterior Lighting)
High Voltage System Health and Safety Precautions - Overview (Description and Operation, General Information)
Hood Alignment (General Procedures, Body Closures)
Hood Latch (Removal and Installation, Handles, Locks, Latches and Entry Systems - Vehicles With: One-Touch Up Door Window)
Hood Latch (Removal and Installation, Handles, Locks, Latches and Entry Systems - Vehicles Without: One-Touch Up Door Window)
Hood Latch Release Cable (Removal and Installation, Handles, Locks, Latches and Entry Systems - Vehicles With: One-Touch Up Door Window)
Hood Latch Release Cable (Removal and Installation, Handles, Locks, Latches and Entry Systems - Vehicles Without: One-Touch Up Door Window)
Hood Secondary Latch Release Handle and Cable (Removal and Installation, Handles, Locks, Latches and Entry Systems - Vehicles With: One-Touch Up Door Window)
Hood Secondary Latch Release Handle and Cable (Removal and Installation, Handles, Locks, Latches and Entry Systems - Vehicles Without: One-Touch Up Door Window)
Horn (Diagnosis and Testing, Horn)
Horn (Removal and Installation, Horn)
Horn - Component Location (Description and Operation, Horn)
Horn - Overview (Description and Operation, Horn)
Horn - System Operation and Component Description (Description and Operation, Horn)
Hydraulic Brake Actuation (Diagnosis and Testing, Hydraulic Brake Actuation)
Hydraulic Control Unit (HCU) (Removal and Installation, Anti-Lock Brake System (ABS) and Stability Control)
Identification Codes - Vehicles Built From: 11-June-2012 (Description and Operation, Identification Codes)
Identification Codes - Vehicles Built Up To: 25-June-2012 (Description and Operation, Identification Codes)
Ignition Coil-On-Plug (Removal and Installation, Engine Ignition - 2.0L Duratec-HE (125kW/170PS) - MI4)
Ignition Coil-On-Plug (Removal and Installation, Engine Ignition - 2.0L EcoBoost (184kW/250PS) - MI4)
Ignition Lock Cylinder (Removal and Installation, Handles, Locks, Latches and Entry Systems - Vehicles With: One-Touch Up Door Window)
Ignition Lock Cylinder (Removal and Installation, Handles, Locks, Latches and Entry Systems - Vehicles Without: One-Touch Up Door Window)
Ignition Switch (Removal and Installation, Steering Column Switches)
Ignition Switch - Vehicles With: Push Button Start (Removal and Installation, Steering Column Switches)
Image Processing Module B (IPMB) - Vehicles With: 4-Door (Removal and Installation, Parking Aid)
Image Processing Module B (IPMB) - Vehicles With: 5-Door (Removal and Installation, Parking Aid)
In-Vehicle Crossbeam (Removal and Installation, Instrument Panel and Console)
In-Vehicle Temperature and Humidity Sensor - Vehicles With: Dual Automatic Temperature Control (DATC) (Removal and Installation, Climate Control System - General Information)

Information Center Module (ICM) (Removal and Installation, Instrumentation, Message Center and Warning Chimes)
Information and Entertainment System (Diagnosis and Testing, Information and Entertainment System - General Information - Vehicles With: AM/FM/CD)
Information and Entertainment System (Diagnosis and Testing, Information and Entertainment System - General Information - Vehicles With: AM/FM/CD/SYNC)
Information and Entertainment System (Diagnosis and Testing, Information and Entertainment System - General Information - Vehicles With: SYNC/Sony AM/FM/CD)
Information and Entertainment System - Component Location (Description and Operation, Information and Entertainment System - General Information - Vehicles With: AM/FM/CD)
Information and Entertainment System - Component Location (Description and Operation, Information and Entertainment System - General Information - Vehicles With: AM/FM/CD/SYNC)
Information and Entertainment System - Component Location (Description and Operation, Information and Entertainment System - General Information - Vehicles With: SYNC/Sony AM/FM/CD)
Information and Entertainment System - General Information - Vehicles With: AM/FM/CD (Specifications)
Information and Entertainment System - General Information - Vehicles With: AM/FM/CD/SYNC (Specifications)
Information and Entertainment System - General Information - Vehicles With: SYNC/Sony AM/FM/CD (Specifications)
Information and Entertainment System - Overview (Description and Operation, Information and Entertainment System - General Information - Vehicles With: AM/FM/CD)
Information and Entertainment System - Overview (Description and Operation, Information and Entertainment System - General Information - Vehicles With: AM/FM/CD/SYNC)
Information and Entertainment System - Overview (Description and Operation, Information and Entertainment System - General Information - Vehicles With: SYNC/Sony AM/FM/CD)
Information and Entertainment System - System Operation and Component Description (Description and Operation, Information and Entertainment System - General Information - Vehicles With: AM/FM/CD)
Information and Entertainment System - System Operation and Component Description (Description and Operation, Information and Entertainment System - General Information - Vehicles With: AM/FM/CD/SYNC)
Information and Entertainment System - System Operation and Component Description (Description and Operation, Information and Entertainment System - General Information - Vehicles With: SYNC/Sony AM/FM/CD)
Input Shaft (Disassembly and Assembly of Subassemblies, Automatic Transmission - Vehicles With: 6-Speed PowerShift Transmission - DPS6/6DCT250)
Input Shaft (Disassembly and Assembly of Subassemblies, Manual Transmission - Vehicles With: 5-Speed Manual Transmission - MTX75)
Input Shaft Seal (Removal and Installation, Automatic Transmission - Vehicles With: 6-Speed PowerShift Transmission - DPS6/6DCT250)
Input Shaft Seal (Removal and Installation, Manual Transmission - Vehicles With: 6-Speed Manual Transmission - MMT6)
Input Shaft Speed (ISS) Sensor (Removal and Installation, Automatic Transmission - Vehicles With: 6-Speed PowerShift Transmission - DPS6/6DCT250)
Inspection and Repair after a Supplemental Restraint System (SRS) Deployment (General Procedures, Supplemental Restraint System)
Instrument Panel (Removal and Installation, Instrument Panel and Console)
Instrument Panel Center Speaker (Removal and Installation, Information and Entertainment System - General Information - Vehicles With: SYNC/Sony AM/FM/CD)
Instrument Panel Cluster (IPC) (Removal and Installation, Instrumentation, Message Center and Warning Chimes)
Instrument Panel Cluster (IPC) - Overview (Description and Operation, Instrumentation, Message Center and Warning Chimes)
Instrument Panel Cluster (IPC) - System Operation and Component Description (Description and Operation, Instrumentation, Message Center and Warning Chimes)
Instrument Panel Cluster (IPC) and Panel Illumination (Diagnosis and Testing, Instrument Panel Cluster (IPC) and Panel Illumination)
Instrument Panel Cluster (IPC) and Panel Illumination - Overview (Description and Operation, Instrument Panel Cluster (IPC) and Panel Illumination)
Instrument Panel Cluster (IPC) and Panel Illumination - System Operation and Component Description (Description and Operation, Instrument Panel Cluster (IPC) and Panel Illumination)
Instrument Panel Upper Section (Removal and Installation, Instrument Panel and Console)
Instrument Panel and Console (Specifications)
Instrumentation, Message Center and Warning Chimes (Diagnosis and Testing, Instrumentation, Message Center and Warning Chimes)
Intake Air Distribution and Filtering (Description and Operation, Intake Air Distribution and Filtering - 2.0L EcoBoost (184kW/250PS) - MI4)
Intake Air Distribution and Filtering (Diagnosis and Testing, Intake Air Distribution and Filtering - 2.0L Duratec-HE (125kW/170PS) - MI4)
Intake Air Distribution and Filtering (Diagnosis and Testing, Intake Air Distribution and Filtering - 2.0L EcoBoost (184kW/250PS) - MI4)

Intake Air Distribution and Filtering - Overview (Description and Operation, Intake Air Distribution and Filtering - 2.0L Duratec-HE (125kW/170PS) - MI4)
Intake Manifold (Removal and Installation, Engine - 2.0L Duratec-HE (125kW/170PS) - MI4)
Intake Manifold (Removal and Installation, Engine - 2.0L EcoBoost (184kW/250PS) - MI4)
Interior Door Handle (Removal and Installation, Handles, Locks, Latches and Entry Systems - Vehicles With: One-Touch Up Door Window)
Interior Door Handle (Removal and Installation, Handles, Locks, Latches and Entry Systems - Vehicles Without: One-Touch Up Door Window)
Interior Lighting (Diagnosis and Testing, Interior Lighting)
Interior Lighting - Overview (Description and Operation, Interior Lighting)
Interior Lighting - System Operation and Component Description (Description and Operation, Interior Lighting)
Interior Rear View Mirror (Removal and Installation, Rear View Mirrors - Vehicles With: One-Touch Up Door Window)
Interior Rear View Mirror (Removal and Installation, Rear View Mirrors - Vehicles Without: One-Touch Up Door Window)
Jacking and Lifting - Overview (Description and Operation, Jacking and Lifting)
Joining Techniques (General Procedures, Body Repairs - General Information)
Key Programming Using Diagnostic Equipment (General Procedures, Passive Anti-Theft System (PATS) - Vehicles With: Push Button Start)
Key Programming Using Diagnostic Equipment (General Procedures, Passive Anti-Theft System (PATS))
Key Programming Using Two Programmed Keys (General Procedures, Passive Anti-Theft System (PATS))
Knock Sensor (KS) (Removal and Installation, Electronic Engine Controls - 2.0L Duratec-HE (125kW/170PS) - MI4)
Lead Terminal Repair (General Procedures, Glass, Frames and Mechanisms - Vehicles With: One-Touch Up Door Window)
Lead Terminal Repair (General Procedures, Glass, Frames and Mechanisms - Vehicles Without: One-Touch Up Door Window)
Liftgate (Removal and Installation, Body Closures)
Liftgate Alignment (General Procedures, Body Closures)
Liftgate Hinge (Removal and Installation, Body Closures)
Liftgate Latch (Removal and Installation, Handles, Locks, Latches and Entry Systems - Vehicles With: One-Touch Up Door Window)
Liftgate Latch (Removal and Installation, Handles, Locks, Latches and Entry Systems - Vehicles Without: One-Touch Up Door Window)
Liftgate Release Switch (Removal and Installation, Handles, Locks, Latches and Entry Systems - Vehicles With: One-Touch Up Door Window)
Liftgate Release Switch (Removal and Installation, Handles, Locks, Latches and Entry Systems - Vehicles Without: One-Touch Up Door Window)
Liftgate Trim Panel (Removal and Installation, Interior Trim and Ornamentation)
Light Sensor (Removal and Installation, Exterior Lighting)
Locks, Latches and Entry Systems (Diagnosis and Testing, Handles, Locks, Latches and Entry Systems - Vehicles With: One-Touch Up Door Window)
Locks, Latches and Entry Systems (Diagnosis and Testing, Handles, Locks, Latches and Entry Systems - Vehicles Without: One-Touch Up Door Window)
Lower Arm LH (Removal and Installation, Front Suspension)
Lower Arm RH (Removal and Installation, Front Suspension)
Luggage Compartment Lid (Removal and Installation, Body Closures)
Luggage Compartment Lid Alignment (General Procedures, Body Closures)
Luggage Compartment Lid Latch (Removal and Installation, Handles, Locks, Latches and Entry Systems - Vehicles With: One-Touch Up Door Window)
Luggage Compartment Lid Latch (Removal and Installation, Handles, Locks, Latches and Entry Systems - Vehicles Without: One-Touch Up Door Window)
Luggage Compartment Lid Release Switch (Removal and Installation, Handles, Locks, Latches and Entry Systems - Vehicles With: One-Touch Up Door Window)
Luggage Compartment Lid Release Switch (Removal and Installation, Handles, Locks, Latches and Entry Systems - Vehicles Without: One-Touch Up Door Window)
Lumbar Assembly (Removal and Installation, Seating)
Maintenance Schedules - Gasoline Engines (Description and Operation, Maintenance Schedules)
Manifold Absolute Pressure and Temperature (MAPT) Sensor (Removal and Installation, Electronic Engine Controls - 2.0L EcoBoost (184kW/250PS) - MI4)
Manual Transmission (Diagnosis and Testing, Manual Transmission - Vehicles With: 5-Speed Manual Transmission - MTX75)
Manual Transmission (Diagnosis and Testing, Manual Transmission - Vehicles With: 6-Speed Manual Transmission - MMT6)
Manual Transmission - Overview (Description and Operation, Manual Transmission - Vehicles With: 5-Speed Manual Transmission - MTX75)
Manual Transmission - Overview (Description and Operation, Manual Transmission - Vehicles With: 6-Speed Manual Transmission - MMT6)

Manual Transmission - System Operation and Component Description (Description and Operation, Manual Transmission - Vehicles With: 5-Speed Manual Transmission - MTX75)
Manual Transmission - System Operation and Component Description (Description and Operation, Manual Transmission - Vehicles With: 6-Speed Manual Transmission - MMT6)
Manual Transmission - Vehicles With: 5-Speed Manual Transmission - MTX75 (Specifications)
Manual Transmission - Vehicles With: 6-Speed Manual Transmission - MMT6 (Specifications)
Mass Air Flow (MAF) Sensor (Removal and Installation, Electronic Engine Controls - 2.0L Duratec-HE (125kW/170PS) - MI4)
Media Hub (Removal and Installation, Information and Entertainment System - General Information - Vehicles With: SYNC/Sony AM/FM/CD)
Message Center - Overview (Description and Operation, Instrumentation, Message Center and Warning Chimes)
Message Center - System Operation and Component Description (Description and Operation, Instrumentation, Message Center and Warning Chimes)
Microphone - Vehicles With: SYNC (Removal and Installation, Information and Entertainment System - General Information - Vehicles With: AM/FM/CD/SYNC)
Microphone - Vehicles With: SYNC (Removal and Installation, Information and Entertainment System - General Information - Vehicles With: SYNC/Sony AM/FM/CD)
Module Configuration - System Operation and Component Description (Description and Operation, Module Configuration)
Module Controlled Functions - Component Location (Description and Operation, Multifunction Electronic Modules)
Module Controlled Functions - Overview (Description and Operation, Multifunction Electronic Modules)
Module Controlled Functions - System Operation and Component Description (Description and Operation, Multifunction Electronic Modules)
Muffler and Tailpipe (Removal and Installation, Exhaust System - 2.0L Duratec-HE (125kW/170PS) - MI4)
Muffler and Tailpipe (Removal and Installation, Exhaust System)
Multifunction Electronic Modules (Specifications)
No Communication Between the Integrated Diagnostic System (IDS) and the Vehicle (General Procedures, Module Communications Network)
Noise, Vibration and Harshness (Description and Operation, Body Repairs - General Information)
Noise, Vibration and Harshness (NVH) (Description and Operation, Noise, Vibration and Harshness)
Noise, Vibration and Harshness (NVH) (Diagnosis and Testing, Noise, Vibration and Harshness)
Occupant Classification System (OCS) Sensor - Vehicles Built From: 11-June-2012 (Removal and Installation, Supplemental Restraint System)
Occupant Classification System (OCS) Sensor - Vehicles Built Up To: 25-June-2012 (Removal and Installation, Supplemental Restraint System)
Oil Cooler (Removal and Installation, Engine - 2.0L EcoBoost (184kW/250PS) - MI4)
Oil Filter Adapter (Removal and Installation, Engine - 2.0L Duratec-HE (125kW/170PS) - MI4)
Oil Filter Adapter (Removal and Installation, Engine - 2.0L EcoBoost (184kW/250PS) - MI4)
Oil Pan (Removal and Installation, Engine - 2.0L Duratec-HE (125kW/170PS) - MI4)
Oil Pan (Removal and Installation, Engine - 2.0L EcoBoost (184kW/250PS) - MI4)
Oil Pressure Switch (Removal and Installation, Engine - 2.0L Duratec-HE (125kW/170PS) - MI4)
Oil Pressure Switch (Removal and Installation, Engine - 2.0L EcoBoost (184kW/250PS) - MI4)
Oil Pump (Removal and Installation, Engine - 2.0L Duratec-HE (125kW/170PS) - MI4)
Oil Pump (Removal and Installation, Engine - 2.0L EcoBoost (184kW/250PS) - MI4)
Oil Pump Screen and Pickup Tube (Removal and Installation, Engine - 2.0L Duratec-HE (125kW/170PS) - MI4)
Oil Pump Screen and Pickup Tube (Removal and Installation, Engine - 2.0L EcoBoost (184kW/250PS) - MI4)
Output Shaft (Disassembly and Assembly of Subassemblies, Manual Transmission - Vehicles With: 5-Speed Manual Transmission - MTX75)
Output Shaft Speed (OSS) Sensor (Removal and Installation, Automatic Transmission - Vehicles With: 6-Speed PowerShift Transmission - DPS6/6DCT250)
Overhead Console (Removal and Installation, Instrument Panel and Console)
Paintwork Defects and Damage (General Procedures, Paint - General Information)
Parameter Identification (PID) Chart (Diagnosis and Testing, Automatic Transmission - Vehicles With: 6-Speed PowerShift Transmission - DPS6/6DCT250)
Parcel Shelf (Removal and Installation, Interior Trim and Ornamentation)
Parking Aid (Diagnosis and Testing, Parking Aid - Vehicles With: Active Park Assist)
Parking Aid (Diagnosis and Testing, Parking Aid)
Parking Aid (Specifications)
Parking Aid - Component Location (Description and Operation, Parking Aid - Vehicles With: Active Park Assist)
Parking Aid - Component Location (Description and Operation, Parking Aid)
Parking Aid - Overview (Description and Operation, Parking Aid - Vehicles With: Active Park Assist)
Parking Aid - Overview (Description and Operation, Parking Aid)

Parking Aid - System Operation and Component Description (Description and Operation, Parking Aid - Vehicles With: Active Park Assist)
Parking Aid - System Operation and Component Description (Description and Operation, Parking Aid)
Parking Aid - Vehicles With: Active Park Assist (Specifications)
Parking Aid Camera - Vehicles With: 4-Door (Removal and Installation, Parking Aid)
Parking Aid Camera - Vehicles With: 5-Door (Removal and Installation, Parking Aid)
Parking Assist Control Module (PAM) - Vehicles With: 4-Door (Removal and Installation, Parking Aid)
Parking Assist Control Module (PAM) - Vehicles With: 5-Door (Removal and Installation, Parking Aid)
Parking Brake (Diagnosis and Testing, Parking Brake and Actuation)
Parking Brake Cable - Vehicles With: Rear Disc Brakes (Removal and Installation, Parking Brake and Actuation)
Parking Brake Cable - Vehicles With: Rear Drum Brakes (Removal and Installation, Parking Brake and Actuation)
Parking Brake Cable Adjustment - Vehicles With: Rear Disc Brakes (General Procedures, Parking Brake and Actuation)
Parking Brake Cable Adjustment - Vehicles With: Rear Drum Brakes (General Procedures, Parking Brake and Actuation)
Parking Brake Control (Removal and Installation, Parking Brake and Actuation)
Parking, Rear and License Plate Lamps (Diagnosis and Testing, Exterior Lighting)
Passenger Airbag (Removal and Installation, Supplemental Restraint System)
Passenger Airbag Deactivation (PAD) Indicator (Removal and Installation, Supplemental Restraint System)
Passenger Side Register (Removal and Installation, Climate Control System - General Information)
Passenger Side Temperature Door Actuator - Vehicles With: Dual Automatic Temperature Control (DATC) (Removal and Installation, Climate Control System - General Information)
Passive Anti-Theft System (PATS) (Diagnosis and Testing, Passive Anti-Theft System (PATS) - Vehicles With: Push Button Start)
Passive Anti-Theft System (PATS) (Diagnosis and Testing, Passive Anti-Theft System (PATS))
Passive Anti-Theft System (PATS) - Component Location (Description and Operation, Passive Anti-Theft System (PATS) - Vehicles With: Push Button Start)
Passive Anti-Theft System (PATS) - Overview (Description and Operation, Passive Anti-Theft System (PATS) - Vehicles With: Push Button Start)
Passive Anti-Theft System (PATS) - Overview (Description and Operation, Passive Anti-Theft System (PATS))
Passive Anti-Theft System (PATS) - System Operation and Component Description (Description and Operation, Passive Anti-Theft System (PATS) - Vehicles With: Push Button Start)
Passive Anti-Theft System (PATS) - System Operation and Component Description (Description and Operation, Passive Anti-Theft System (PATS))
Passive Anti-Theft System (PATS) Parameter Reset (General Procedures, Passive Anti-Theft System (PATS) - Vehicles With: Push Button Start)
Passive Anti-Theft System (PATS) Parameter Reset (General Procedures, Passive Anti-Theft System (PATS))
Passive Anti-Theft System (PATS) Transceiver (Removal and Installation, Passive Anti-Theft System (PATS) - Vehicles With: Push Button Start)
Passive Anti-Theft System (PATS) Transceiver (Removal and Installation, Passive Anti-Theft System (PATS))
Perimeter Anti-Theft Alarm (Diagnosis and Testing, Perimeter Anti-Theft Alarm)
Perimeter Anti-Theft Alarm - Overview (Description and Operation, Perimeter Anti-Theft Alarm)
Perimeter Anti-Theft Alarm - System Operation and Component Description (Description and Operation, Perimeter Anti-Theft Alarm)
Pinpoint Test - DTC: B00D5:12 and B00D5:14 (Diagnosis and Testing, Supplemental Restraint System)
Pinpoint Test - DTC: B0001:11, B0001:12, B0001:13 and B0001:1A (Diagnosis and Testing, Supplemental Restraint System)
Pinpoint Test - DTC: B0002:11, B0002:12, B0002:13 and B0002:1A (Diagnosis and Testing, Supplemental Restraint System)
Pinpoint Test - DTC: B0004:11, B0004:12, B0004:13 and B0004:1A, Vehicles Built From: 11-June-2012 (Diagnosis and Testing, Supplemental Restraint System)
Pinpoint Test - DTC: B0005:11, B0005:12, B0005:13 and B0005:1A, Vehicles Built From: 11-June-2012 (Diagnosis and Testing, Supplemental Restraint System)
Pinpoint Test - DTC: B0010:11, B0010:12, B0010:13 and B0010:1A (Diagnosis and Testing, Supplemental Restraint System)
Pinpoint Test - DTC: B0011:11, B0011:12, B0011:13 and B0011:1A (Diagnosis and Testing, Supplemental Restraint System)
Pinpoint Test - DTC: B0020:11, B0020:12, B0020:13 and B0020:1A (Diagnosis and Testing, Supplemental Restraint System)
Pinpoint Test - DTC: B0021:11, B0021:12, B0021:13 and B0021:1A (Diagnosis and Testing, Supplemental Restraint System)
Pinpoint Test - DTC: B0028:11, B0028:12, B0028:13 and B0028:1A (Diagnosis and Testing, Supplemental Restraint System)
Pinpoint Test - DTC: B0029:11, B0029:12, B0029:13 and B0029:1A (Diagnosis and Testing, Supplemental Restraint System)
Pinpoint Test - DTC: B0050:11, B0050:12, B0050:13 and B0050:1D (Diagnosis and Testing, Supplemental Restraint System)
Pinpoint Test - DTC: B0052:11, B0052:12, B0052:13 and B0052:1D, Vehicles Built From: 11-June-2012 (Diagnosis and Testing, Supplemental Restraint System)
Pinpoint Test - DTC: B0052:11, B0052:12, B0052:13 and B0052:1D, Vehicles Built Up To: 25-June-2012 (Diagnosis and Testing, Supplemental Restraint System)
Pinpoint Test - DTC: B0061:11, B0061:12, B0061:13, B0061:1C, and B0061:49, Vehicles Built From: 11-June-2012 (Diagnosis and Testing, Supplemental Restraint System)

Pinpoint Test - DTC: B0061:11, B0061:12, B0061:13, B0061:1C, and B0061:49, Vehicles Built Up To: 25-June-2012 (Diagnosis and Testing, Supplemental Restraint System)
Pinpoint Test - DTC: B0070:11, B0070:12, B0070:13 and B0070:1A, Vehicles Built From: 11-June-2012 (Diagnosis and Testing, Supplemental Restraint System)
Pinpoint Test - DTC: B0072:11, B0072:12, B0072:13 and B0072:1A, Vehicles Built From: 11-June-2012 (Diagnosis and Testing, Supplemental Restraint System)
Pinpoint Test - DTC: B0082:11, B0082:12, B0082:13 and B0082:1A (Diagnosis and Testing, Supplemental Restraint System)
Pinpoint Test - DTC: B0090:11, B0090:81, B0090:93 (Diagnosis and Testing, Supplemental Restraint System)
Pinpoint Test - DTC: B0091:81, B0097:11, B0097:81, B0097:93 (Diagnosis and Testing, Supplemental Restraint System)
Pinpoint Test - DTC: B0092:11, B0092:81, B0092:93, B0096:81 (Diagnosis and Testing, Supplemental Restraint System)
Pinpoint Test - DTC: B0095:11, B0095:81, B0095:93 (Diagnosis and Testing, Supplemental Restraint System)
Pinpoint Test - DTC: B00A0:09, B00A0:4A, B00A0:63, B00A0:64 and B00A0:68 (Diagnosis and Testing, Supplemental Restraint System)
Pinpoint Test - DTC: B00B5:11, B00B5:12, B00B5:13 and B00B5:1D (Diagnosis and Testing, Supplemental Restraint System)
Pinpoint Test - DTC: B00C2:11 and B00C2:12, Vehicles Built From: 11-June-2012 (Diagnosis and Testing, Supplemental Restraint System)
Pinpoint Test - DTC: B00C2:11 and B00C2:12, Vehicles Built Up To: 25-June-2012 (Diagnosis and Testing, Supplemental Restraint System)
Pinpoint Test - DTC: B00C5:11, B00C5:12, B00C5:13 and B00C5:1D (Diagnosis and Testing, Supplemental Restraint System)
Pinpoint Test - DTC: B11CF:11, B11CF:12, B11CF:13, B11CF:1A (Diagnosis and Testing, Supplemental Restraint System)
Pinpoint Test - DTC: B11D8:12 and B11D8:14, Vehicles Built From: 11-June-2012 (Diagnosis and Testing, Supplemental Restraint System)
Pinpoint Test - DTC: B11D8:12 and B11D8:14, Vehicles Built Up To: 25-June-2012 (Diagnosis and Testing, Supplemental Restraint System)
Pinpoint Test - DTC: B1211:11, B1211:12, B1211:13 and B1211:1A (Diagnosis and Testing, Supplemental Restraint System)
Pinpoint Test - DTC: B1214:11, B1214:12, B1214:13 and B1214:1A (Diagnosis and Testing, Supplemental Restraint System)
Pinpoint Test - DTC: BXXXX:2B (any BXXXX with a 2B failure type) Signal Cross Coupled, Vehicles Built From: 11-June-2012 (Diagnosis and Testing, Supplemental Restraint System)
Pinpoint Test - DTC: BXXXX:2B , Vehicles Built Up To: 25-June-2012 (Diagnosis and Testing, Supplemental Restraint System)
Pinpoint Test - DTC: BXXXX:4A (any BXXXX with a 4A failure type) Incorrect Component Installed, Vehicles Built From: 11-June-2012 (Diagnosis and Testing, Supplemental Restraint System)
Pinpoint Test - DTC: BXXXX:4A , Vehicles Built Up To: 25-June-2012 (Diagnosis and Testing, Supplemental Restraint System)
Pinpoint Test - DTC: C0061:68, C0062:68, C0063:68, C006A:68 (Diagnosis and Testing, Supplemental Restraint System)
Pinpoint Test - DTC: U0001:88, U1A14:55 (Diagnosis and Testing, Supplemental Restraint System)
Pinpoint Test - DTC: U0028:88 (Diagnosis and Testing, Supplemental Restraint System)
Pinpoint Test - DTC: U0100:00 (Diagnosis and Testing, Supplemental Restraint System)
Pinpoint Test - DTC: U0140:00 (Diagnosis and Testing, Supplemental Restraint System)
Pinpoint Test - DTC: U0151:00 (Diagnosis and Testing, Supplemental Restraint System)
Pinpoint Test - DTC: U0154:00 (Diagnosis and Testing, Supplemental Restraint System)
Pinpoint Test - DTC: U0253:00 (Diagnosis and Testing, Supplemental Restraint System)
Pinpoint Test - DTC: U3003:16 and U3003:17, Vehicles Built From: 11-June-2012 (Diagnosis and Testing, Supplemental Restraint System)
Pinpoint Test - DTC: U3003:16 and U3003:17, Vehicles Built Up To: 25-June-2012 (Diagnosis and Testing, Supplemental Restraint System)
Piston (Disassembly and Assembly of Subassemblies, Engine - 2.0L Duratec-HE (125kW/170PS) - MI4)
Piston (Disassembly and Assembly of Subassemblies, Engine - 2.0L EcoBoost (184kW/250PS) - MI4)
Piston Diameter (General Procedures, Engine System - General Information)
Piston Inspection (General Procedures, Engine System - General Information)
Piston Ring End Gap (General Procedures, Engine System - General Information)
Piston Selection (General Procedures, Engine System - General Information)
Plastic Repairs (Description and Operation, Body Repairs - General Information)
Plastic Repairs (General Procedures, Body Repairs - General Information)
Power Brake System (Diagnosis and Testing, Power Brake Actuation)
Power Door Window Initialization (General Procedures, Glass, Frames and Mechanisms - Vehicles With: One-Touch Up Door Window)
Power Roof Opening Panel Initialization (General Procedures, Roof Opening Panel)
Power Steering (Diagnosis and Testing, Power Steering)
Power Steering - Overview (Description and Operation, Power Steering)
Power Steering - System Operation and Component Description (Description and Operation, Power Steering)
Powertrain Control Module (PCM) (Removal and Installation, Electronic Engine Controls - 2.0L Duratec-HE (125kW/170PS) - MI4)

Powertrain Control Module (PCM) (Removal and Installation, Electronic Engine Controls - 2.0L EcoBoost (184kW/250PS) - MI4)
Powertrain/Drivetrain Mount Neutralizing (General Procedures, Engine System - General Information)
Pyrotechnic Device Disposal (General Procedures, Supplemental Restraint System)
Quick Release Coupling (General Procedures, Fuel System - General Information)
Quick Release Coupling (General Procedures, Fuel System - General Information)
Radiator (Removal and Installation, Engine Cooling - 2.0L Duratec-HE (125kW/170PS) - MI4)
Radiator (Removal and Installation, Engine Cooling - 2.0L EcoBoost (184kW/250PS) - MI4)
Radio Frequency (RF) Receiver (Removal and Installation, Handles, Locks, Latches and Entry Systems - Vehicles With: One-Touch Up Door Window)
Rain Sensor - Vehicles Without: Active City Stop (Removal and Installation, Wipers and Washers)
Rear Brake Flexible Hose (Removal and Installation, Drum Brake)
Rear Brake Flexible Hose (Removal and Installation, Rear Disc Brake)
Rear Bumper - Vehicles With: 4-Door (Removal and Installation, Bumpers)
Rear Bumper - Vehicles With: 5-Door (Removal and Installation, Bumpers)
Rear Bumper Cover (Disassembly and Assembly, Bumpers)
Rear Bumper Cover (Disassembly and Assembly, Bumpers)
Rear Bumper Cover - Vehicles With: 4-Door (Removal and Installation, Bumpers)
Rear Bumper Cover - Vehicles With: 5-Door (Removal and Installation, Bumpers)
Rear Camber Adjustment (General Procedures, Suspension System - General Information)
Rear Center Safety Belt Retractor (Removal and Installation, Safety Belt System)
Rear Disc Brake (Diagnosis and Testing, Rear Disc Brake)
Rear Door (Removal and Installation, Body Closures)
Rear Door Alignment (General Procedures, Body Closures)
Rear Door Glass Top Run (Removal and Installation, Glass, Frames and Mechanisms - Vehicles With: One-Touch Up Door Window)
Rear Door Glass Top Run (Removal and Installation, Glass, Frames and Mechanisms - Vehicles Without: One-Touch Up Door Window)
Rear Door Latch (Removal and Installation, Handles, Locks, Latches and Entry Systems - Vehicles With: One-Touch Up Door Window)
Rear Door Latch (Removal and Installation, Handles, Locks, Latches and Entry Systems - Vehicles Without: One-Touch Up Door Window)
Rear Door Skin Panel (Removal and Installation, Side Panel Sheet Metal Repairs)
Rear Door Speaker (Removal and Installation, Information and Entertainment System - General Information - Vehicles With: AM/FM/CD)
Rear Door Speaker (Removal and Installation, Information and Entertainment System - General Information - Vehicles With: AM/FM/CD/SYNC)
Rear Door Speaker (Removal and Installation, Information and Entertainment System - General Information - Vehicles With: SYNC/Sony AM/FM/CD)
Rear Door Trim Panel (Removal and Installation, Interior Trim and Ornamentation)
Rear Door Tweeter Speaker (Removal and Installation, Information and Entertainment System - General Information - Vehicles With: SYNC/Sony AM/FM/CD)
Rear Door Weatherstrip (Removal and Installation, Body Closures)
Rear Door Window Control Switch (Removal and Installation, Glass, Frames and Mechanisms - Vehicles With: One-Touch Up Door Window)
Rear Door Window Control Switch (Removal and Installation, Glass, Frames and Mechanisms - Vehicles Without: One-Touch Up Door Window)
Rear Door Window Glass (Removal and Installation, Glass, Frames and Mechanisms - Vehicles With: One-Touch Up Door Window)
Rear Door Window Glass (Removal and Installation, Glass, Frames and Mechanisms - Vehicles Without: One-Touch Up Door Window)
Rear Door Window Regulator (Removal and Installation, Glass, Frames and Mechanisms - Vehicles With: One-Touch Up Door Window)
Rear Door Window Regulator (Removal and Installation, Glass, Frames and Mechanisms - Vehicles Without: One-Touch Up Door Window)
Rear Door Window Regulator Motor (Removal and Installation, Glass, Frames and Mechanisms - Vehicles With: One-Touch Up Door Window)
Rear Door Window Regulator Motor (Removal and Installation, Glass, Frames and Mechanisms - Vehicles Without: One-Touch Up Door Window)
Rear Floor Panel - Vehicles With: 4-Door (Removal and Installation, Rear End Sheet Metal Repairs)
Rear Floor Panel - Vehicles With: 5-Door (Removal and Installation, Rear End Sheet Metal Repairs)
Rear Head Restraint Guide Sleeve (Removal and Installation, Seating)
Rear Knock Sensor (KS) (Removal and Installation, Electronic Engine Controls - 2.0L EcoBoost (184kW/250PS) - MI4)

Rear Lamp Assembly - Vehicles With: 4-Door (Removal and Installation, Exterior Lighting)
Rear Lamp Assembly - Vehicles With: 5-Door (Removal and Installation, Exterior Lighting)
Rear Lower Arm (Removal and Installation, Rear Suspension)
Rear Parking Aid Sensor (Removal and Installation, Parking Aid)
Rear Quarter Window Glass - Vehicles With: 4-Door (Removal and Installation, Glass, Frames and Mechanisms - Vehicles With: One-Touch Up Door Window)
Rear Quarter Window Glass - Vehicles With: 4-Door (Removal and Installation, Glass, Frames and Mechanisms - Vehicles Without: One-Touch Up Door Window)
Rear Quarter Window Glass - Vehicles With: 5-Door (Removal and Installation, Glass, Frames and Mechanisms - Vehicles With: One-Touch Up Door Window)
Rear Quarter Window Glass - Vehicles With: 5-Door (Removal and Installation, Glass, Frames and Mechanisms - Vehicles Without: One-Touch Up Door Window)
Rear Safety Belt Buckle (Removal and Installation, Safety Belt System)
Rear Safety Belt Retractor (Removal and Installation, Safety Belt System)
Rear Seat Armrest (Removal and Installation, Seating)
Rear Seat Backrest (Removal and Installation, Seating)
Rear Seat Backrest Cover (Removal and Installation, Seating)
Rear Seat Backrest Latch (Removal and Installation, Seating)
Rear Seat Cushion - Vehicles With: 60/40 Split Seat (Removal and Installation, Seating)
Rear Seat Cushion Cover - Vehicles With: 60/40 Split Seat (Removal and Installation, Seating)
Rear Shock Absorber (Removal and Installation, Rear Suspension)
Rear Side Member Section - Vehicles With: 4-Door (Removal and Installation, Rear End Sheet Metal Repairs)
Rear Side Member Section - Vehicles With: 5-Door (Removal and Installation, Rear End Sheet Metal Repairs)
Rear Spoiler - Vehicles With: 4-Door (Removal and Installation, Exterior Trim and Ornamentation)
Rear Spoiler - Vehicles With: 5-Door (Removal and Installation, Exterior Trim and Ornamentation)
Rear Stabilizer Bar (Removal and Installation, Rear Suspension)
Rear Stabilizer Bar Link - Vehicles With: Ball Joint Stabilizer Bar Link (Removal and Installation, Rear Suspension)
Rear Subframe (Removal and Installation, Uni-Body, Subframe and Mounting System)
Rear Suspension (Diagnosis and Testing, Rear Suspension)
Rear Suspension - Overview (Description and Operation, Rear Suspension)
Rear Toe Adjustment (General Procedures, Suspension System - General Information)
Rear View Mirrors (Diagnosis and Testing, Rear View Mirrors - Vehicles With: One-Touch Up Door Window)
Rear View Mirrors (Diagnosis and Testing, Rear View Mirrors - Vehicles Without: One-Touch Up Door Window)
Rear View Mirrors - Overview (Description and Operation, Rear View Mirrors - Vehicles With: One-Touch Up Door Window)
Rear View Mirrors - Overview (Description and Operation, Rear View Mirrors - Vehicles Without: One-Touch Up Door Window)
Rear View Mirrors - System Operation and Component Description (Description and Operation, Rear View Mirrors - Vehicles With: One-Touch Up Door Window)
Rear View Mirrors - System Operation and Component Description (Description and Operation, Rear View Mirrors - Vehicles Without: One-Touch Up Door Window)
Rear Wheel Speed Sensor (Removal and Installation, Anti-Lock Brake System (ABS) and Stability Control)
Rear Window Glass - Vehicles With: 4-Door (Removal and Installation, Glass, Frames and Mechanisms - Vehicles With: One-Touch Up Door Window)
Rear Window Glass - Vehicles With: 4-Door (Removal and Installation, Glass, Frames and Mechanisms - Vehicles Without: One-Touch Up Door Window)
Rear Window Glass - Vehicles With: 5-Door (Removal and Installation, Glass, Frames and Mechanisms - Vehicles With: One-Touch Up Door Window)
Rear Window Glass - Vehicles With: 5-Door (Removal and Installation, Glass, Frames and Mechanisms - Vehicles Without: One-Touch Up Door Window)
Rear Window Glass Reseal (General Procedures, Glass, Frames and Mechanisms - Vehicles With: One-Touch Up Door Window)
Rear Window Glass Reseal (General Procedures, Glass, Frames and Mechanisms - Vehicles Without: One-Touch Up Door Window)
Rear Window Wiper Blade and Pivot Arm Adjustment (General Procedures, Wipers and Washers)
Rear Window Wiper Motor (Removal and Installation, Wipers and Washers)
Rear Window Wiper Pivot Arm (Removal and Installation, Wipers and Washers)
Receiver Drier Element - 2.0L Duratec-HE (125kW/170PS) - MI4 (Removal and Installation, Climate Control System - General Information)
Receiver Drier Element - 2.0L EcoBoost (184kW/250PS) - MI4 (Removal and Installation, Climate Control System - General Information)
Refrigerant Identification Testing (General Procedures, Climate Control System - General Information)
Refrigerant Oil Adding (General Procedures, Climate Control System - General Information)
Refrigerant System Tests (General Procedures, Climate Control System - General Information)

Remote Function Actuator (RFA) Module (Diagnosis and Testing, Multifunction Electronic Modules)
Remote Function Actuator (RFA) Module (Removal and Installation, Multifunction Electronic Modules)
Remote Keyless Entry (RKE) Transmitter Programming (General Procedures, Handles, Locks, Latches and Entry Systems - Vehicles Without: One-Touch Up Door Window)
Reset the SYNC Module [APIM] (General Procedures, Information and Entertainment System - General Information - Vehicles With: AM/FM/CD/SYNC)
Reset the SYNC Module [APIM] (General Procedures, Information and Entertainment System - General Information - Vehicles With: SYNC/Sony AM/FM/CD)
Restraints Control Module (RCM) (Removal and Installation, Supplemental Restraint System)
Reversing Lamps (Diagnosis and Testing, Exterior Lighting)
Ride Height Measurement (General Procedures, Suspension System - General Information)
Rocker Panel Moulding (Removal and Installation, Exterior Trim and Ornamentation)
Roll Restrictor RH (Removal and Installation, Automatic Transmission - Vehicles With: 6-Speed PowerShift Transmission - DPS6/6DCT250)
Roll Restrictor RH (Removal and Installation, Manual Transmission - Vehicles With: 5-Speed Manual Transmission - MTX75)
Roll Restrictor RH (Removal and Installation, Manual Transmission - Vehicles With: 6-Speed Manual Transmission - MMT6)
Roof Opening Panel (Diagnosis and Testing, Roof Opening Panel)
Roof Opening Panel (Specifications)
Roof Opening Panel - System Operation and Component Description (Description and Operation, Roof Opening Panel)
Roof Opening Panel Alignment (General Procedures, Roof Opening Panel)
Roof Opening Panel Control Switch (Removal and Installation, Roof Opening Panel)
Roof Opening Panel Frame - Vehicles With: 4-Door (Removal and Installation, Roof Opening Panel)
Roof Opening Panel Frame - Vehicles With: 5-Door (Removal and Installation, Roof Opening Panel)
Roof Opening Panel Glass (Removal and Installation, Roof Opening Panel)
Roof Opening Panel Manual Closing (General Procedures, Roof Opening Panel)
Roof Opening Panel Manual Opening (General Procedures, Roof Opening Panel)
Roof Opening Panel Motor (Removal and Installation, Roof Opening Panel)
Roof Opening Panel Shield (Removal and Installation, Roof Opening Panel)
Roof Panel - Vehicles With: 4-Door (Removal and Installation, Roof Sheet Metal Repairs)
Roof Panel - Vehicles With: 5-Door (Removal and Installation, Roof Sheet Metal Repairs)
SYNC Module [APIM] (Removal and Installation, Information and Entertainment System - General Information - Vehicles With: AM/FM/CD/SYNC)
SYNC Module [APIM] (Removal and Installation, Information and Entertainment System - General Information - Vehicles With: SYNC/Sony AM/FM/CD)
SYNC Module [APIM] Custom Programming (General Procedures, Information and Entertainment System - General Information - Vehicles With: SYNC/Sony AM/FM/CD)
SYNC Module [APIM] Programming (General Procedures, Information and Entertainment System - General Information - Vehicles With: AM/FM/CD/SYNC)
SYNC Module [APIM] Replacement Programming (General Procedures, Information and Entertainment System - General Information - Vehicles With: SYNC/Sony AM/FM/CD)
SYNC Module [APIM] Standard Programming (General Procedures, Information and Entertainment System - General Information - Vehicles With: SYNC/Sony AM/FM/CD)
SYNC Module [APIM] to Universal Serial Bus (USB) Port Cable (Removal and Installation, Information and Entertainment System - General Information - Vehicles With: AM/FM/CD/SYNC)
SYNC Module [APIM] to Universal Serial Bus (USB) Port Cable (Removal and Installation, Information and Entertainment System - General Information - Vehicles With: SYNC/Sony AM/FM/CD)
Safety Belt Cleaning (General Procedures, Safety Belt System)
Safety Belt Maintenance (General Procedures, Safety Belt System)
Safety Belt Minder Deactivating/Activating (General Procedures, Instrumentation, Message Center and Warning Chimes)
Safety Belt Procedure After a Collision (General Procedures, Safety Belt System)
Safety Belt Retractor and Pretensioner (Removal and Installation, Safety Belt System)
Safety Belt Shoulder Height Adjuster (Removal and Installation, Safety Belt System)
Safety Belt System (Diagnosis and Testing, Safety Belt System)
Safety Belt System - Overview (Description and Operation, Safety Belt System)
Safety Belt System - System Operation and Component Description (Description and Operation, Safety Belt System)
Safety Belt Tongue Rotated On Belt (General Procedures, Safety Belt System)
Safety Belt Twisted at the Safety Belt Guide (General Procedures, Safety Belt System)
Safety Belt and Supplemental Restraint System (SRS) Health and Safety Precautions (Description and Operation, General Information)
Safety Precautions - Overview (Description and Operation, Wheels and Tires)

Satellite Radio Serial Number Retrieval (General Procedures, Information and Entertainment System - General Information - Vehicles With: AM/FM/CD/SYNC)
Satellite Radio Serial Number Retrieval (General Procedures, Information and Entertainment System - General Information - Vehicles With: SYNC/Sony AM/FM/CD)
Sealer, Underbody Protection Material and Adhesives (Description and Operation, Body Repairs - General Information)
Seat Position Sensor (Removal and Installation, Supplemental Restraint System)
Seats (Diagnosis and Testing, Seating)
Seats - Overview (Description and Operation, Seating)
Seats - System Operation and Component Description (Description and Operation, Seating)
Selector Lever Assembly (Removal and Installation, Automatic Transmission External Controls)
Selector Lever Cable (Removal and Installation, Automatic Transmission External Controls)
Selector Lever Cable Adjustment (General Procedures, Automatic Transmission External Controls)
Selector Lever Knob (Removal and Installation, Automatic Transmission External Controls)
Selector Mechanism (Removal and Installation, Manual Transmission - Vehicles With: 5-Speed Manual Transmission - MTX75)
Selector Mechanism (Removal and Installation, Manual Transmission - Vehicles With: 6-Speed Manual Transmission - MMT6)
Selector Shaft Seal (Removal and Installation, Automatic Transmission - Vehicles With: 6-Speed PowerShift Transmission - DPS6/6DCT250)
Side Air Curtain (Removal and Installation, Supplemental Restraint System)
Side Airbag (Removal and Installation, Supplemental Restraint System)
Spark Plugs (Removal and Installation, Engine Ignition - 2.0L Duratec-HE (125kW/170PS) - MI4)
Spark Plugs (Removal and Installation, Engine Ignition - 2.0L EcoBoost (184kW/250PS) - MI4)
Special Testing Procedures (Diagnosis and Testing, Automatic Transmission - Vehicles With: 6-Speed PowerShift Transmission - DPS6/6DCT250)
Spring (Removal and Installation, Rear Suspension)
Spring Lock Couplings (General Procedures, Fuel System - General Information)
Spring Lock Couplings (General Procedures, Fuel System - General Information)
Staged Unlock Programming (General Procedures, Handles, Locks, Latches and Entry Systems - Vehicles With: One-Touch Up Door Window)
Staged Unlock Programming (General Procedures, Handles, Locks, Latches and Entry Systems - Vehicles Without: One-Touch Up Door Window)
Starter Motor (Removal and Installation, Starting System - 2.0L Duratec-HE (125kW/170PS) - MI4)
Starter Motor (Removal and Installation, Starting System - 2.0L EcoBoost (184kW/250PS) - MI4)
Starter Motor Drive Gear and Flywheel Ring Gear Inspection (General Procedures, Starting System - 2.0L Duratec-HE (125kW/170PS) - MI4)
Starter Motor Drive Gear and Flywheel Ring Gear Inspection (General Procedures, Starting System - 2.0L EcoBoost (184kW/250PS) - MI4)
Starting System (Diagnosis and Testing, Starting System - 2.0L Duratec-HE (125kW/170PS) - MI4)
Starting System (Diagnosis and Testing, Starting System - 2.0L EcoBoost (184kW/250PS) - MI4)
Starting System - 2.0L Duratec-HE (125kW/170PS) - MI4 (Specifications)
Starting System - 2.0L EcoBoost (184kW/250PS) - MI4 (Specifications)
Starting System - Overview (Description and Operation, Starting System - 2.0L Duratec-HE (125kW/170PS) - MI4)
Starting System - Overview (Description and Operation, Starting System - 2.0L EcoBoost (184kW/250PS) - MI4)
Starting System - System Operation and Component Description (Description and Operation, Starting System - 2.0L Duratec-HE (125kW/170PS) - MI4)
Starting System - System Operation and Component Description (Description and Operation, Starting System - 2.0L EcoBoost (184kW/250PS) - MI4)
Starting System - Vehicles With: Push Button Start - Overview (Description and Operation, Starting System - 2.0L Duratec-HE (125kW/170PS) - MI4)
Starting System - Vehicles With: Push Button Start - System Operation and Component Description (Description and Operation, Starting System - 2.0L Duratec-HE (125kW/170PS) - MI4)
Steering Angle Sensor Module (SASM) (Removal and Installation, Steering Column Switches)
Steering Column (Description and Operation, Steering Column)
Steering Column (Removal and Installation, Steering Column)
Steering Column Multifunction Switch LH (Removal and Installation, Steering Column Switches)
Steering Column Multifunction Switch RH (Removal and Installation, Steering Column Switches)
Steering Column Shrouds (Removal and Installation, Interior Trim and Ornamentation)
Steering Gear (Removal and Installation, Power Steering)
Steering Wheel (Removal and Installation, Steering Column)
Steering Wheel Cover Repair (General Procedures, Steering Column)
Steering Wheel Multifunction Switch (Removal and Installation, Steering Column Switches)

Steering Wheel and Column Electrical Components (Diagnosis and Testing, Steering Column Switches)
Steering Wheel and Column Electrical Components - Overview (Description and Operation, Steering Column Switches)
Steering Wheel and Column Electrical Components - System Operation and Component Description (Description and Operation, Steering Column Switches)
Stoplamp Switch (Removal and Installation, Exterior Lighting)
Stoplamps (Diagnosis and Testing, Exterior Lighting)
Subwoofer Speaker (Removal and Installation, Information and Entertainment System - General Information - Vehicles With: SYNC/Sony AM/FM/CD)
Sunload Sensor - Vehicles With: Dual Automatic Temperature Control (DATC) (Removal and Installation, Climate Control System - General Information)
Supplemental Restraint System (SRS) Depowering and Repowering (General Procedures, Supplemental Restraint System)
Suspension System (Diagnosis and Testing, Suspension System - General Information)
Suspension System - General Information (Specifications)
Symbols Glossary (Description and Operation, General Information)
Temperature Door Actuator - Vehicles With: Electronic Manual Temperature Control (EMTC) (Removal and Installation, Climate Control System - General Information)
Thermostat (Removal and Installation, Engine Cooling - 2.0L EcoBoost (184kW/250PS) - MI4)
Thermostat Housing (Removal and Installation, Engine Cooling - 2.0L Duratec-HE (125kW/170PS) - MI4)
Thermostatic Expansion Valve - 2.0L Duratec-HE (125kW/170PS) - MI4, Vehicles Built From: 05-March-2012 (Removal and Installation, Climate Control System - General Information)
Thermostatic Expansion Valve - 2.0L Duratec-HE (125kW/170PS) - MI4, Vehicles Built Up To: 05-March-2012 (Removal and Installation, Climate Control System - General Information)
Thermostatic Expansion Valve - 2.0L EcoBoost (184kW/250PS) - MI4 (Removal and Installation, Climate Control System - General Information)
Thermostatic Expansion Valve Manifold and Tube Assembly - 2.0L Duratec-HE (125kW/170PS) - MI4, Vehicles Built From: 05-March-2012 (Removal and Installation, Climate Control System - General Information)
Thermostatic Expansion Valve Manifold and Tube Assembly - 2.0L Duratec-HE (125kW/170PS) - MI4, Vehicles Built Up To: 05-March-2012 (Removal and Installation, Climate Control System - General Information)
Thermostatic Expansion Valve Manifold and Tube Assembly - 2.0L EcoBoost (184kW/250PS) - MI4 (Removal and Installation, Climate Control System - General Information)
Throttle Body (Removal and Installation, Fuel Charging and Controls - 2.0L Duratec-HE (125kW/170PS) - MI4)
Throttle Body (Removal and Installation, Fuel Charging and Controls - 2.0L EcoBoost (184kW/250PS) - MI4)
Tie Rod (Removal and Installation, Power Steering)
Timing Adjustment (General Procedures, Roof Opening Panel)
Timing Drive Components (Removal and Installation, Engine - 2.0L Duratec-HE (125kW/170PS) - MI4)
Timing Drive Components (Removal and Installation, Engine - 2.0L EcoBoost (184kW/250PS) - MI4)
Tire Pressure Monitoring System (TPMS) (Diagnosis and Testing, Tire Pressure Monitoring System (TPMS))
Tire Pressure Monitoring System (TPMS) - Component Location (Description and Operation, Tire Pressure Monitoring System (TPMS))
Tire Pressure Monitoring System (TPMS) - Overview (Description and Operation, Tire Pressure Monitoring System (TPMS))
Tire Pressure Monitoring System (TPMS) - System Operation and Component Description (Description and Operation, Tire Pressure Monitoring System (TPMS))
Tire Pressure Monitoring System (TPMS) Sensor (Removal and Installation, Tire Pressure Monitoring System (TPMS))
Tire Pressure Monitoring System (TPMS) Sensor Activation (General Procedures, Tire Pressure Monitoring System (TPMS))
Tire Pressure Monitoring System (TPMS) Sensor Location Calibration (General Procedures, Tire Pressure Monitoring System (TPMS))
Touchscreen Calibration (General Procedures, Information and Entertainment System - General Information - Vehicles With: SYNC/Sony AM/FM/CD)
Trailing Arm (Removal and Installation, Rear Suspension)
Transmission (Assembly, Automatic Transmission - Vehicles With: 6-Speed PowerShift Transmission - DPS6/6DCT250)
Transmission (Assembly, Manual Transmission - Vehicles With: 5-Speed Manual Transmission - MTX75)
Transmission (Disassembly, Automatic Transmission - Vehicles With: 6-Speed PowerShift Transmission - DPS6/6DCT250)
Transmission (Disassembly, Manual Transmission - Vehicles With: 5-Speed Manual Transmission - MTX75)
Transmission (Installation, Manual Transmission - Vehicles With: 5-Speed Manual Transmission - MTX75)
Transmission (Removal, Manual Transmission - Vehicles With: 5-Speed Manual Transmission - MTX75)
Transmission - 2.0L Duratec-HE (125kW/170PS) - MI4 (Installation, Automatic Transmission - Vehicles With: 6-Speed PowerShift Transmission - DPS6/6DCT250)
Transmission - 2.0L Duratec-HE (125kW/170PS) - MI4 (Removal, Automatic Transmission - Vehicles With: 6-Speed PowerShift Transmission - DPS6/6DCT250)
Transmission - 2.0L EcoBoost (184kW/250PS) - MI4 (Installation, Manual Transmission - Vehicles With: 6-Speed Manual

Transmission - MMT6)
Transmission - 2.0L EcoBoost (184kW/250PS) - MI4 (Removal, Manual Transmission - Vehicles With: 6-Speed Manual Transmission - MMT6)
Transmission Case (Disassembly and Assembly of Subassemblies, Automatic Transmission - Vehicles With: 6-Speed PowerShift Transmission - DPS6/6DCT250)
Transmission Control Module (TCM) (Removal and Installation, Automatic Transmission - Vehicles With: 6-Speed PowerShift Transmission - DPS6/6DCT250)
Transmission Control Module (TCM) Adaptive Learning (General Procedures, Automatic Transmission - Vehicles With: 6-Speed PowerShift Transmission - DPS6/6DCT250)
Transmission Description - Component Location (Description and Operation, Automatic Transmission - Vehicles With: 6-Speed PowerShift Transmission - DPS6/6DCT250)
Transmission Description - Overview (Description and Operation, Automatic Transmission - Vehicles With: 6-Speed PowerShift Transmission - DPS6/6DCT250)
Transmission Description - System Operation and Component Description (Description and Operation, Automatic Transmission - Vehicles With: 6-Speed PowerShift Transmission - DPS6/6DCT250)
Transmission Draining and Filling (General Procedures, Manual Transmission - Vehicles With: 5-Speed Manual Transmission - MTX75)
Transmission Draining and Filling (General Procedures, Manual Transmission - Vehicles With: 6-Speed Manual Transmission - MMT6)
Transmission Fluid Drain and Refill (General Procedures, Automatic Transmission - Vehicles With: 6-Speed PowerShift Transmission - DPS6/6DCT250)
Transmission Fluid Level Check (General Procedures, Automatic Transmission - Vehicles With: 6-Speed PowerShift Transmission - DPS6/6DCT250)
Transmission Fluid Level Check (General Procedures, Manual Transmission - Vehicles With: 5-Speed Manual Transmission - MTX75)
Transmission Fluid Level Check (General Procedures, Manual Transmission - Vehicles With: 6-Speed Manual Transmission - MMT6)
Transmission Range (TR) Sensor (Removal and Installation, Automatic Transmission - Vehicles With: 6-Speed PowerShift Transmission - DPS6/6DCT250)
Transmission Support Insulator (Removal and Installation, Automatic Transmission - Vehicles With: 6-Speed PowerShift Transmission - DPS6/6DCT250)
Transmission Support Insulator (Removal and Installation, Manual Transmission - Vehicles With: 5-Speed Manual Transmission - MTX75)
Transmission Support Insulator (Removal and Installation, Manual Transmission - Vehicles With: 6-Speed Manual Transmission - MMT6)
Transport and Factory Mode Deactivation (General Procedures, Multifunction Electronic Modules)
Trough Assembly (Removal and Installation, Roof Opening Panel)
Turbocharger (Diagnosis and Testing, Fuel Charging and Controls - Turbocharger - 2.0L EcoBoost (184kW/250PS) - MI4)
Turbocharger (Removal and Installation, Fuel Charging and Controls - Turbocharger - 2.0L EcoBoost (184kW/250PS) - MI4)
Turbocharger - Component Location (Description and Operation, Fuel Charging and Controls - Turbocharger - 2.0L EcoBoost (184kW/250PS) - MI4)
Turbocharger - Overview (Description and Operation, Fuel Charging and Controls - Turbocharger - 2.0L EcoBoost (184kW/250PS) - MI4)
Turbocharger - System Operation and Component Description (Description and Operation, Fuel Charging and Controls - Turbocharger - 2.0L EcoBoost (184kW/250PS) - MI4)
Turn Signal and Hazard Lamps (Diagnosis and Testing, Exterior Lighting)
Upper Arm (Removal and Installation, Rear Suspension)
Valve Clearance Check (General Procedures, Engine - 2.0L Duratec-HE (125kW/170PS) - MI4)
Valve Clearance Check (General Procedures, Engine - 2.0L EcoBoost (184kW/250PS) - MI4)
Valve Cover (Removal and Installation, Engine - 2.0L Duratec-HE (125kW/170PS) - MI4)
Valve Cover (Removal and Installation, Engine - 2.0L EcoBoost (184kW/250PS) - MI4)
Valve Guide Inner Diameter (General Procedures, Engine System - General Information)
Valve Springs (Removal and Installation, Engine - 2.0L Duratec-HE (125kW/170PS) - MI4)
Valve Springs (Removal and Installation, Engine - 2.0L EcoBoost (184kW/250PS) - MI4)
Valve Stem Diameter (General Procedures, Engine System - General Information)
Valve Stem Seals (Removal and Installation, Engine - 2.0L Duratec-HE (125kW/170PS) - MI4)
Valve Stem Seals (Removal and Installation, Engine - 2.0L EcoBoost (184kW/250PS) - MI4)
Valve Tappets (Removal and Installation, Engine - 2.0L Duratec-HE (125kW/170PS) - MI4)
Valve Tappets (Removal and Installation, Engine - 2.0L EcoBoost (184kW/250PS) - MI4)
Variable Camshaft Timing (VCT) Oil Control Solenoid (Removal and Installation, Electronic Engine Controls - 2.0L Duratec-HE (125kW/170PS) - MI4)
Variable Valve Timing (VVT) Oil Control Solenoid (Removal and Installation, Electronic Engine Controls - 2.0L EcoBoost

(184kW/250PS) - MI4)
Variable Valve Timing (VVT) Unit (Removal and Installation, Engine - 2.0L Duratec-HE (125kW/170PS) - MI4)
Variable Valve Timing (VVT) Unit (Removal and Installation, Engine - 2.0L EcoBoost (184kW/250PS) - MI4)
Warning Chimes - Overview (Description and Operation, Instrumentation, Message Center and Warning Chimes)
Warning Chimes - System Operation and Component Description (Description and Operation, Instrumentation, Message Center and Warning Chimes)
Washer Hose Coupling (General Procedures, Wipers and Washers)
Wheel Bearing and Wheel Hub (Removal and Installation, Rear Suspension)
Wheel Cylinder (Removal and Installation, Drum Brake)
Wheel Hub (Removal and Installation, Front Suspension)
Wheel Knuckle (Removal and Installation, Front Suspension)
Wheel Studs (Removal and Installation, Front Suspension)
Wheel Studs (Removal and Installation, Rear Suspension)
Wheel and Tire (Disassembly and Assembly, Wheels and Tires)
Wheel and Tire (Removal and Installation, Wheels and Tires)
Wheel and Tire Health and Safety Precautions (Description and Operation, General Information)
Wheel to Hub Runout Minimization (General Procedures, Wheels and Tires)
Wheel to Tire Runout Minimization (General Procedures, Wheels and Tires)
Wheels and Tires (Diagnosis and Testing, Wheels and Tires)
Wheels and Tires (Specifications)
Windshield Glass (Removal and Installation, Glass, Frames and Mechanisms - Vehicles With: One-Touch Up Door Window)
Windshield Glass (Removal and Installation, Glass, Frames and Mechanisms - Vehicles Without: One-Touch Up Door Window)
Windshield Moulding Bracket (Removal and Installation, Exterior Trim and Ornamentation)
Windshield Reseal (General Procedures, Glass, Frames and Mechanisms - Vehicles With: One-Touch Up Door Window)
Windshield Reseal (General Procedures, Glass, Frames and Mechanisms - Vehicles Without: One-Touch Up Door Window)
Windshield Washer Pump (Removal and Installation, Wipers and Washers)
Windshield Washer Reservoir (Removal and Installation, Wipers and Washers)
Windshield Wiper Motor (Removal and Installation, Wipers and Washers)
Windshield Wiper Motor Initialization (General Procedures, Wipers and Washers)
Windshield Wiper Pivot Arm (Removal and Installation, Wipers and Washers)
Wipers and Washers (Diagnosis and Testing, Wipers and Washers)
Wipers and Washers - Overview (Description and Operation, Wipers and Washers)
Wipers and Washers - System Operation and Component Description (Description and Operation, Wipers and Washers)

Copyright © Ford Motor Company

GROUP 00: Service Information

SECTION 100-00: General Information
SECTION 100-01: Identification Codes
SECTION 100-02: Jacking and Lifting
SECTION 100-03: Maintenance Schedules
SECTION 100-04: Noise, Vibration and Harshness

GROUP 01: Body and Paint

SECTION 501-00: Body System - General Information
SECTION 501-02: Front End Body Panels
SECTION 501-03: Body Closures
SECTION 501-05: Interior Trim and Ornamentation
SECTION 501-08: Exterior Trim and Ornamentation
SECTION 501-09A: Rear View Mirrors - Vehicles Without: One-Touch Up Door Window
SECTION 501-09B: Rear View Mirrors - Vehicles With: One-Touch Up Door Window
SECTION 501-10: Seating
SECTION 501-11A: Glass, Frames and Mechanisms - Vehicles Without: One-Touch Up Door Window
SECTION 501-11B: Glass, Frames and Mechanisms - Vehicles With: One-Touch Up Door Window
SECTION 501-12: Instrument Panel and Console
SECTION 501-14A: Handles, Locks, Latches and Entry Systems - Vehicles Without: One-Touch Up Door Window
SECTION 501-14B: Handles, Locks, Latches and Entry Systems - Vehicles With: One-Touch Up Door Window
SECTION 501-16: Wipers and Washers
SECTION 501-17: Roof Opening Panel
SECTION 501-19: Bumpers
SECTION 501-20A: Safety Belt System
SECTION 501-20B: Supplemental Restraint System
SECTION 501-25: Body Repairs - General Information
SECTION 501-26: Body Repairs - Vehicle Specific Information and Tolerance Checks
SECTION 501-27: Front End Sheet Metal Repairs
SECTION 501-28: Roof Sheet Metal Repairs
SECTION 501-29: Side Panel Sheet Metal Repairs
SECTION 501-30: Rear End Sheet Metal Repairs
SECTION 501-36: Paint - General Information

GROUP 02: Frame and Mounting

SECTION 502-00: Uni-Body, Subframe and Mounting System

GROUP 03: Engine

SECTION 303-00: Engine System - General Information
SECTION 303-01A: Engine - 2.0L Duratec-HE (125kW/170PS) - MI4
SECTION 303-01B: Engine - 2.0L EcoBoost (184kW/250PS) - MI4
SECTION 303-03A: Engine Cooling - 2.0L Duratec-HE (125kW/170PS) - MI4
SECTION 303-03B: Engine Cooling - 2.0L EcoBoost (184kW/250PS) - MI4
SECTION 303-04A: Fuel Charging and Controls - 2.0L Duratec-HE (125kW/170PS) - MI4
SECTION 303-04B: Fuel Charging and Controls - 2.0L EcoBoost (184kW/250PS) - MI4
SECTION 303-04C: Fuel Charging and Controls - Turbocharger - 2.0L EcoBoost (184kW/250PS) - MI4
SECTION 303-05A: Accessory Drive - 2.0L Duratec-HE (125kW/170PS) - MI4
SECTION 303-05B: Accessory Drive - 2.0L EcoBoost (184kW/250PS) - MI4
SECTION 303-06A: Starting System - 2.0L Duratec-HE (125kW/170PS) - MI4
SECTION 303-06B: Starting System - 2.0L EcoBoost (184kW/250PS) - MI4
SECTION 303-07A: Engine Ignition - 2.0L Duratec-HE (125kW/170PS) - MI4
SECTION 303-07B: Engine Ignition - 2.0L EcoBoost (184kW/250PS) - MI4
SECTION 303-08A: Engine Emission Control - 2.0L Duratec-HE (125kW/170PS) - MI4
SECTION 303-08B: Engine Emission Control - 2.0L EcoBoost (184kW/250PS) - MI4
SECTION 303-12A: Intake Air Distribution and Filtering - 2.0L Duratec-HE (125kW/170PS) - MI4
SECTION 303-12B: Intake Air Distribution and Filtering - 2.0L EcoBoost (184kW/250PS) - MI4
SECTION 303-13A: Evaporative Emissions - 2.0L Duratec-HE (125kW/170PS) - MI4
SECTION 303-13B: Evaporative Emissions - 2.0L EcoBoost (184kW/250PS) - MI4
SECTION 303-14A: Electronic Engine Controls - 2.0L Duratec-HE (125kW/170PS) - MI4
SECTION 303-14B: Electronic Engine Controls - 2.0L EcoBoost (184kW/250PS) - MI4

GROUP 04: Suspension

SECTION 204-00: Suspension System - General Information
SECTION 204-01: Front Suspension
SECTION 204-02: Rear Suspension
SECTION 204-04A: Wheels and Tires
SECTION 204-04B: Tire Pressure Monitoring System (TPMS)

GROUP 05: Driveline

SECTION 205-00: Driveline System - General Information
SECTION 205-04: Front Drive Halfshafts

GROUP 06: Brake System

SECTION 206-00: Brake System - General Information
SECTION 206-02: Drum Brake
SECTION 206-03: Front Disc Brake
SECTION 206-04: Rear Disc Brake
SECTION 206-05: Parking Brake and Actuation
SECTION 206-06: Hydraulic Brake Actuation
SECTION 206-07: Power Brake Actuation
SECTION 206-09: Anti-Lock Brake System (ABS) and Stability Control

GROUP 07: Automatic Transmission

SECTION 307-01: Automatic Transmission - Vehicles With: 6-Speed PowerShift Transmission - DPS6/6DCT250
SECTION 307-05: Automatic Transmission External Controls

GROUP 08: Manual Transmission, Clutch and Transfer Case

SECTION 308-01: Clutch
SECTION 308-02: Clutch Controls
SECTION 308-03A: Manual Transmission - Vehicles With: 5-Speed Manual Transmission - MTX75
SECTION 308-03B: Manual Transmission - Vehicles With: 6-Speed Manual Transmission - MMT6
SECTION 308-06: Manual Transmission External Controls

GROUP 09: Exhaust System

SECTION 309-00A: Exhaust System - 2.0L Duratec-HE (125kW/170PS) - MI4
SECTION 309-00B: Exhaust System

GROUP 10: Fuel System - General Information

SECTION 310-00A: Fuel System - General Information
SECTION 310-00B: Fuel System - General Information
SECTION 310-01A: Fuel Tank and Lines
SECTION 310-01B: Fuel Tank and Lines
SECTION 310-02: Acceleration Control

GROUP 11: Steering System

SECTION 211-02: Power Steering
SECTION 211-04: Steering Column
SECTION 211-05: Steering Column Switches

GROUP 12: Climate Control System

SECTION 412-00: Climate Control System - General Information

GROUP 13: Instrumentation and Warning Systems

SECTION 413-00: Instrument Panel Cluster (IPC) and Panel Illumination
SECTION 413-01: Instrumentation, Message Center and Warning Chimes
SECTION 413-06: Horn
SECTION 413-13A: Parking Aid
SECTION 413-13B: Parking Aid - Vehicles With: Active Park Assist

GROUP 14: Battery and Charging System

SECTION 414-00: Charging System - General Information
SECTION 414-01: Battery, Mounting and Cables
SECTION 414-02: Generator and Regulator

GROUP 15: Information and Entertainment Systems

SECTION 415-00A: Information and Entertainment System - General Information - Vehicles With: AM/FM/CD
SECTION 415-00B: Information and Entertainment System - General Information - Vehicles With: AM/FM/CD/SYNC
SECTION 415-00C: Information and Entertainment System - General Information - Vehicles With: SYNC/Sony AM/FM/CD

GROUP 17: Lighting

SECTION 417-01: Exterior Lighting
SECTION 417-02: Interior Lighting

GROUP 18: Electrical Distribution

SECTION 418-00: Module Communications Network
SECTION 418-01: Module Configuration

GROUP 19: Electronic Feature Group

SECTION 419-01A: Perimeter Anti-Theft Alarm
SECTION 419-01B: Passive Anti-Theft System (PATS)
SECTION 419-01C: Passive Anti-Theft System (PATS) - Vehicles With: Push Button Start
SECTION 419-03: Cruise Control
SECTION 419-10: Multifunction Electronic Modules

Symbols Glossary

Symbols are used inside the graphics and in the text area to enhance the information display.

Movement Symbols

Movement symbols provide detailed information to a required component movement. These component movements can be rotational or 1-3 dimensional movements.

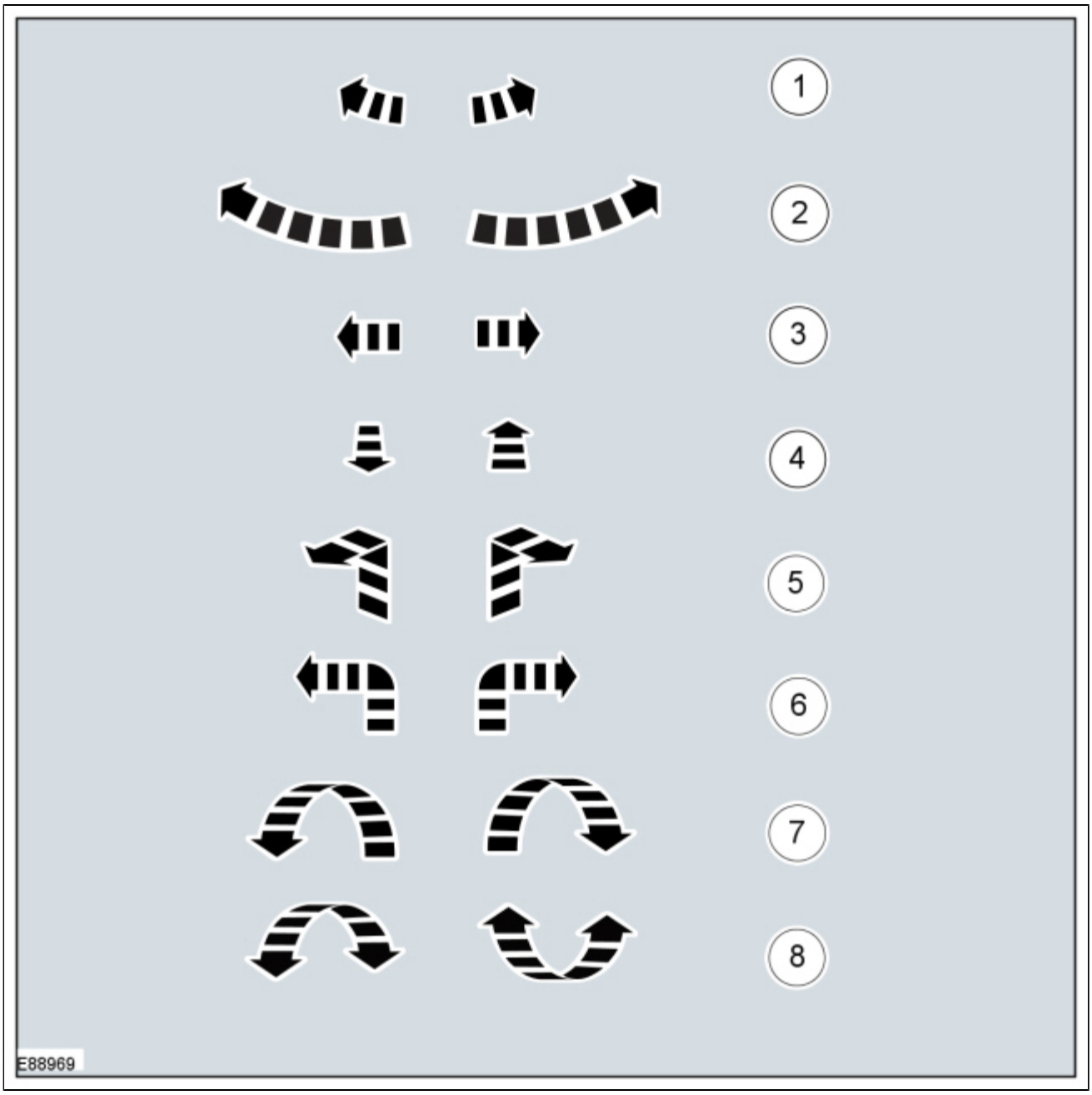

Item	Part Number	Description
1	—	Minor component movement clockwise/counterclockwise
2	—	Major component movement clockwise/counterclockwise

3	—	Component movement to the left/right/up/down
4	—	Component movement towards/away
5	—	3 dimensional component movement
6	—	2 dimensional component movement
7	—	3 dimensional component rotation
8	—	3 dimensional component cycling

Turn Symbols

Turn symbols are used to provide further information on the direction or angle of component turns.

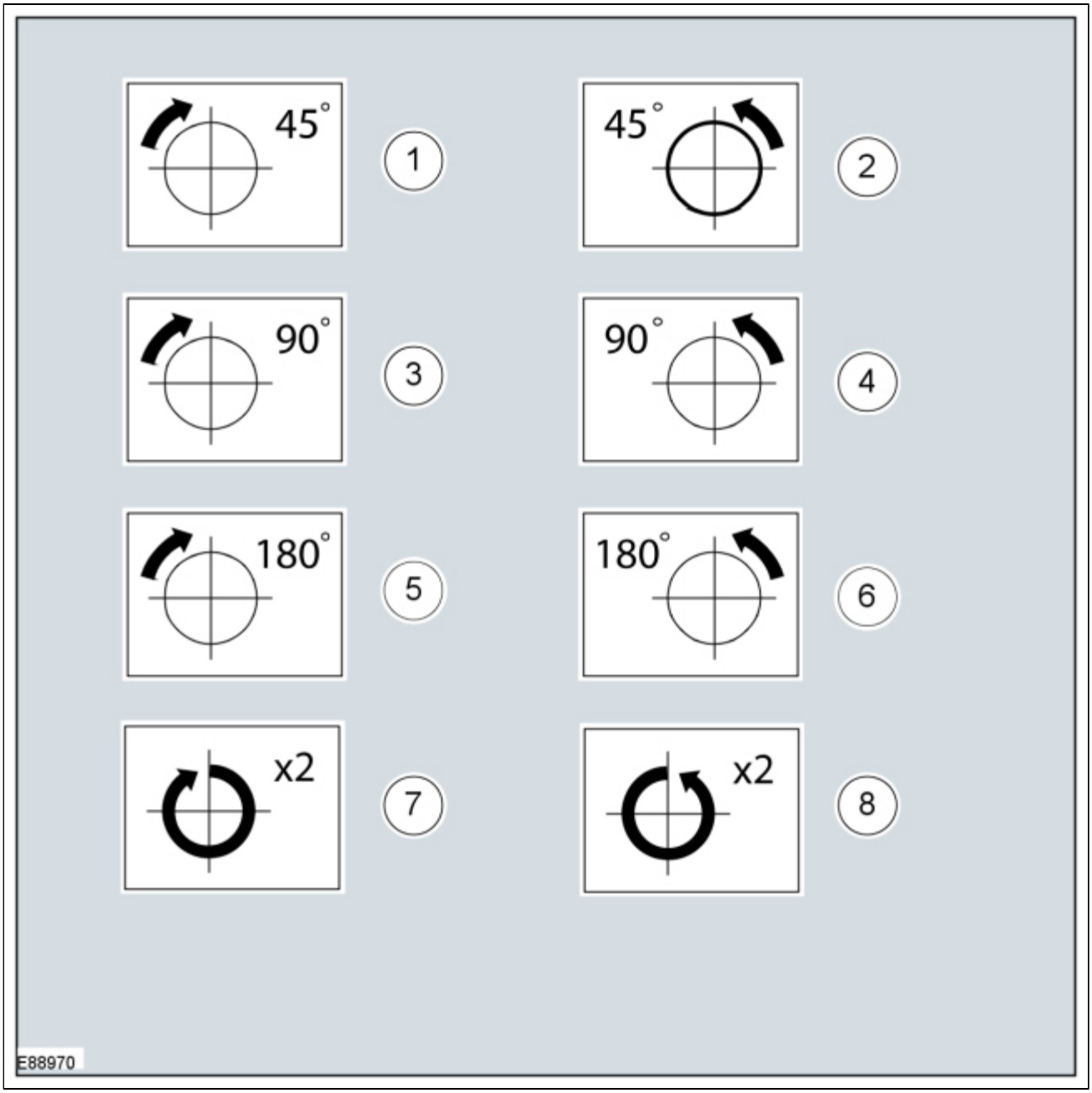

Item	Part Number	Description
1	—	Turn the component clockwise through 45°

2	—	Turn the component counterclockwise through 45°
3	—	Turn the component clockwise through 90°
4	—	Turn the component counterclockwise through 90°
5	—	Turn the component clockwise through 180°
6	—	Turn the component counterclockwise through 180°
7	—	Turn the component clockwise through 2 complete turns
8	—	Turn the component counterclockwise through 2 complete turns

Steering Wheel Symbols

Steering wheel symbols are used to provide further information to a required steering wheel position or steering column lock status.

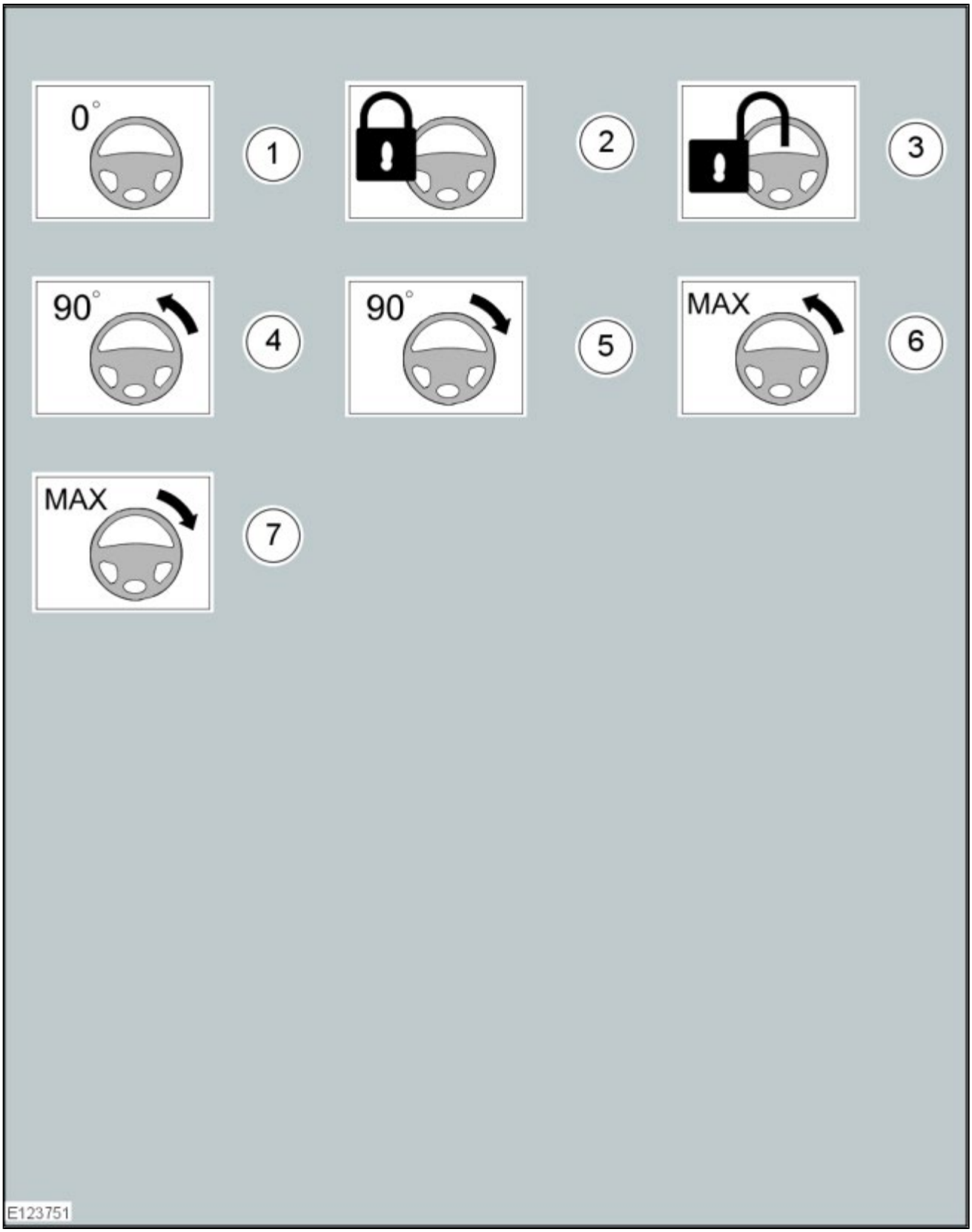

Item	Part Number	Description
1	—	Steering wheel in straight ahead position
2	—	Steering column lock locked
3	—	Steering column lock unlocked
4	—	Turn the steering wheel to the 90° left position

5	—	Turn the steering wheel to the 90° right position
6	—	Turn the steering wheel to the left-hand end position
7	—	Turn the steering wheel to the right-hand end position

Body Types

Body type symbols are used to identify different body configurations.

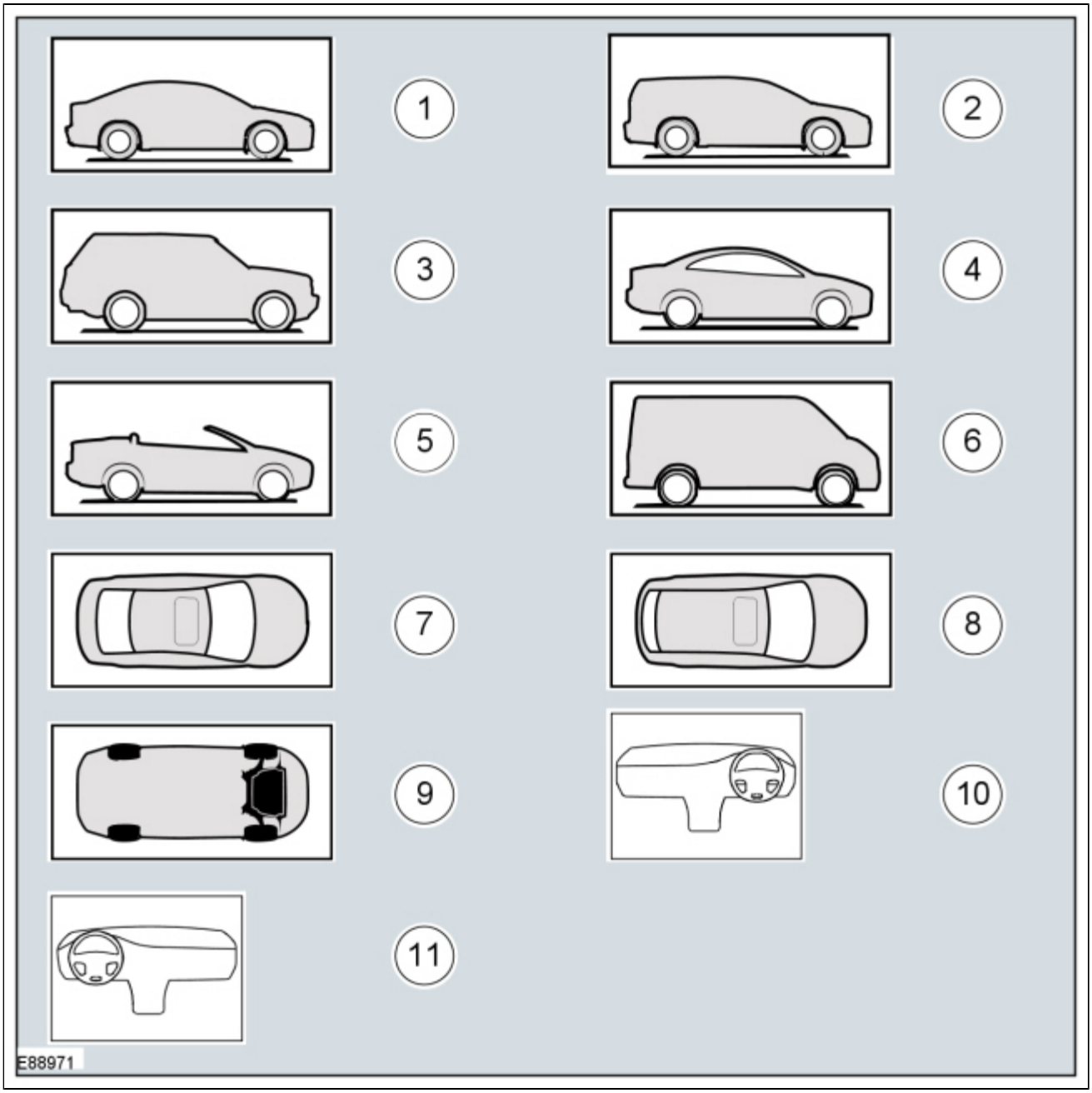

Item	Part Number	Description
1	—	3, 4, 5-door body style
2	—	Wagon body style
3	—	Sports utility vehicle body style
4	—	Coupe body style

5	—	Convertible body style
6	—	Van body style
7	—	3, 4, 5-door body style - Top View
8	—	Wagon body style - Top View
9	—	Underview
10	—	Right-hand drive (RHD) vehicle
11	—	Left-hand drive (LHD) vehicle

Gearshift lever and selector lever position symbols

Gearshift lever and selector lever position symbols are used to show the lever position that is required to be selected to carry out a procedure step.

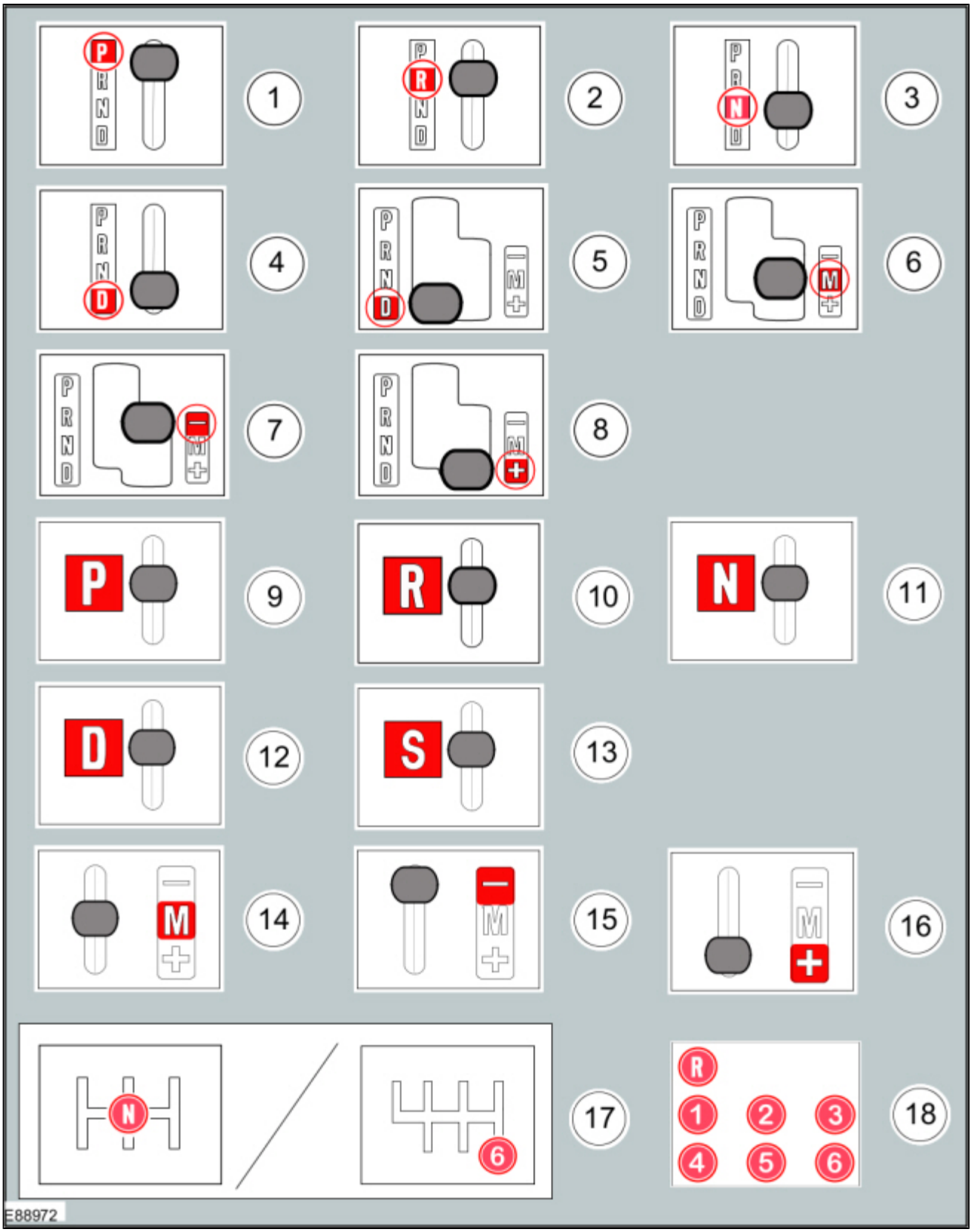

Item	Part Number	Description
1	—	Replaced by symbol 9
2	—	Replaced by symbol 10
3	—	Replaced by symbol 11
4	—	Replaced by symbol 12

5	—	Replaced by symbol 12
6	—	Replaced by symbol 14
7	—	Replaced by symbol 15
8	—	Replaced by symbol 16
9	—	Set the selector lever to the park (P) position
10	—	Set the selector lever to the reverse (R) position
11	—	Set the selector lever to the neutral (N) position
12	—	Set the selector lever to the drive (D) position
13	—	Set the selector lever to the drive (S) position
14	—	Set the selector lever to the drive (M) position
15	—	Set the selector lever to the drive (-) position
16	—	Set the selector lever to the drive (+) position
17	—	Set the gearshift lever to the neutral (N) position
18	—	Further gearshift lever positions that may appear in illustrations

Screwdriver symbols

The screwdriver symbols are used to show which screwdriver bit is recommended to carry out a procedure step.

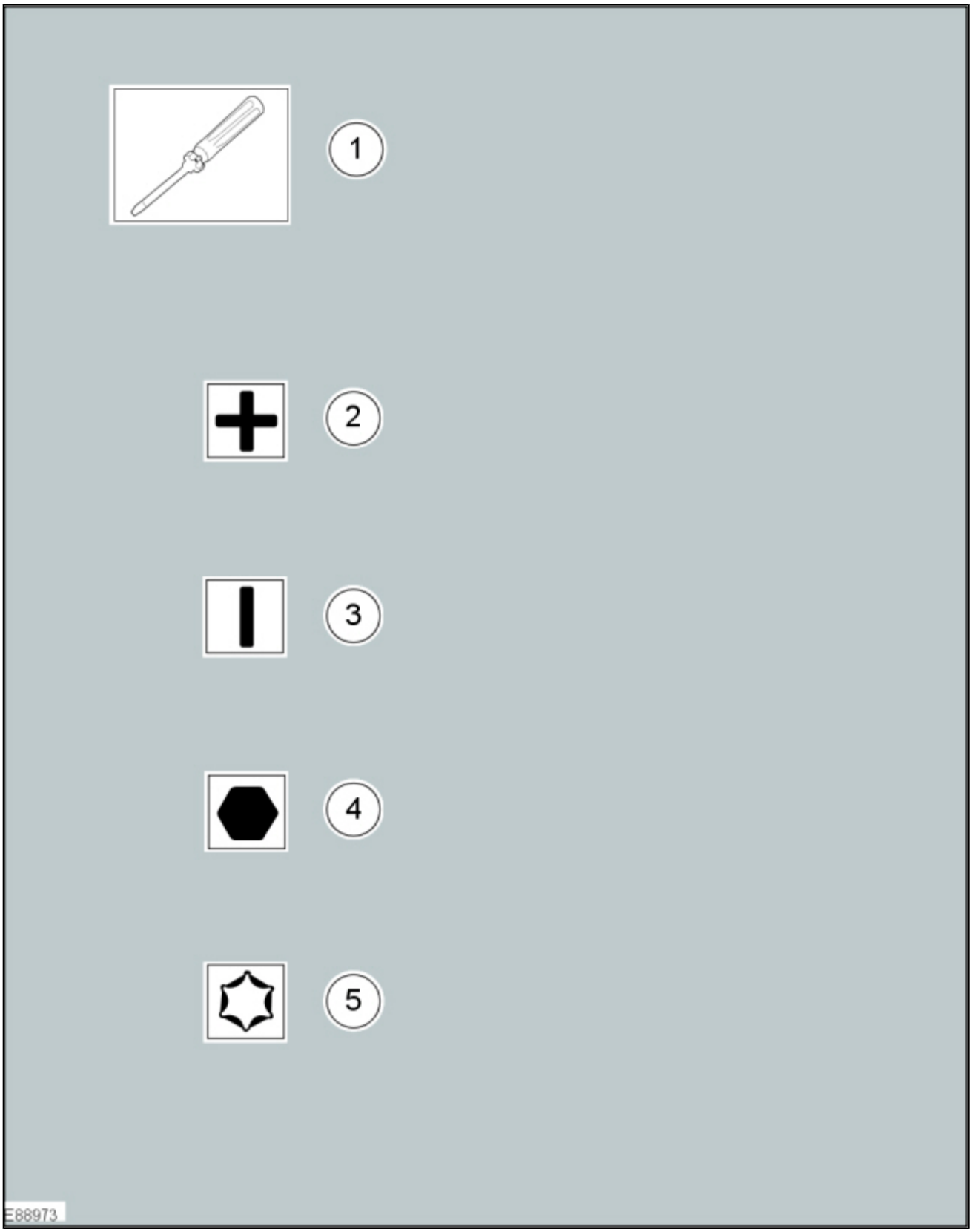

Item	Part Number	Description
1	—	Screwdriver
2	—	Cross bladed screwdriver
3	—	Flat bladed screwdriver
4	—	Hexagonal screwdriver

5	—	TORX screwdriver

Pliers symbols

The pliers symbols are used to show which pliers is recommended to carry out a procedure step.

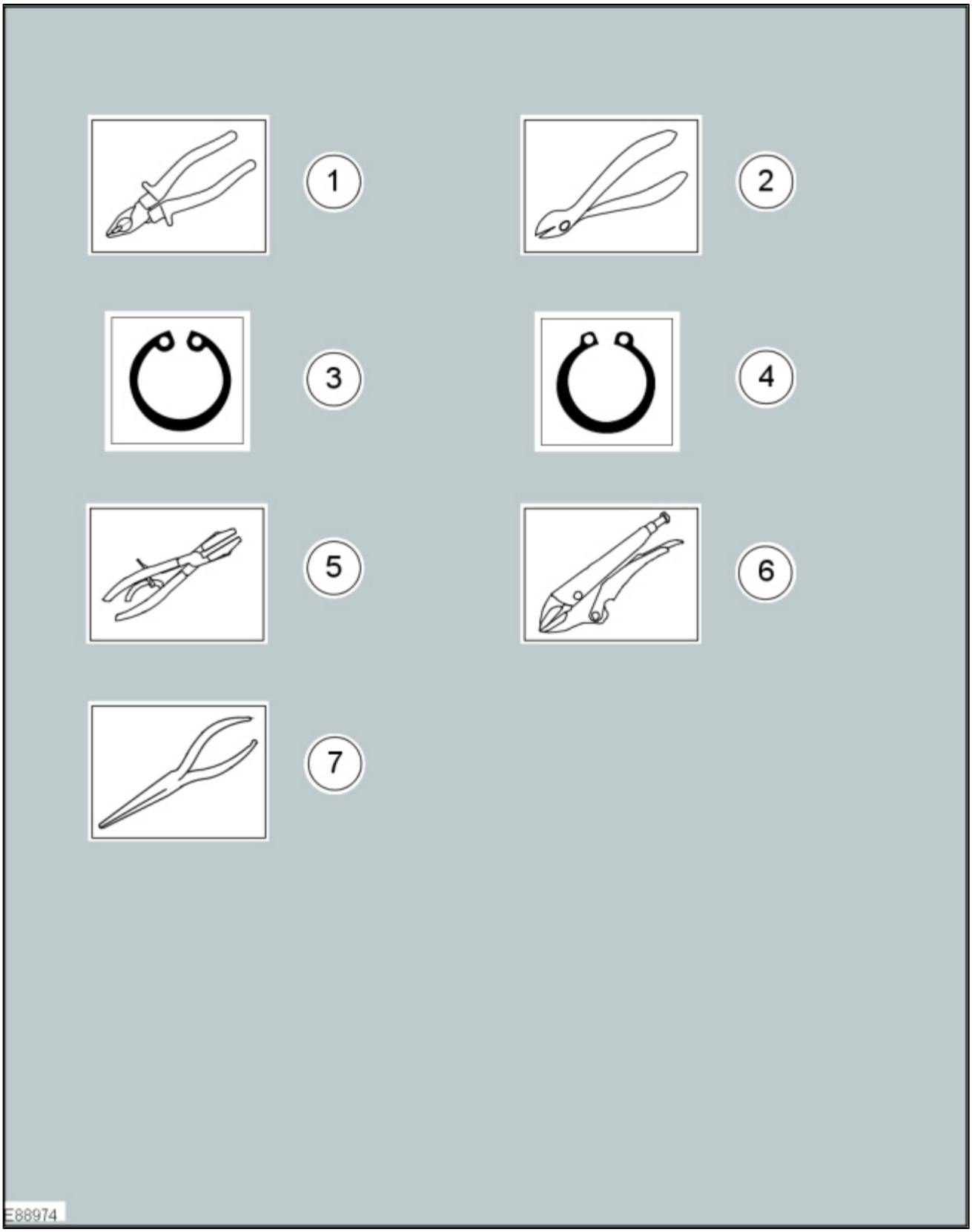

Item	Part Number	Description
1	—	Combination pliers
2	—	Side cutter pliers
3	—	Securing ring - inner
4	—	Securing ring - outer
5	—	Hose clamp pliers
6	—	Locking pliers
7	—	Long nose pliers

Drill symbols

The drill symbols are used to show which type and size of drill bit is recommended to carry out a procedure step.

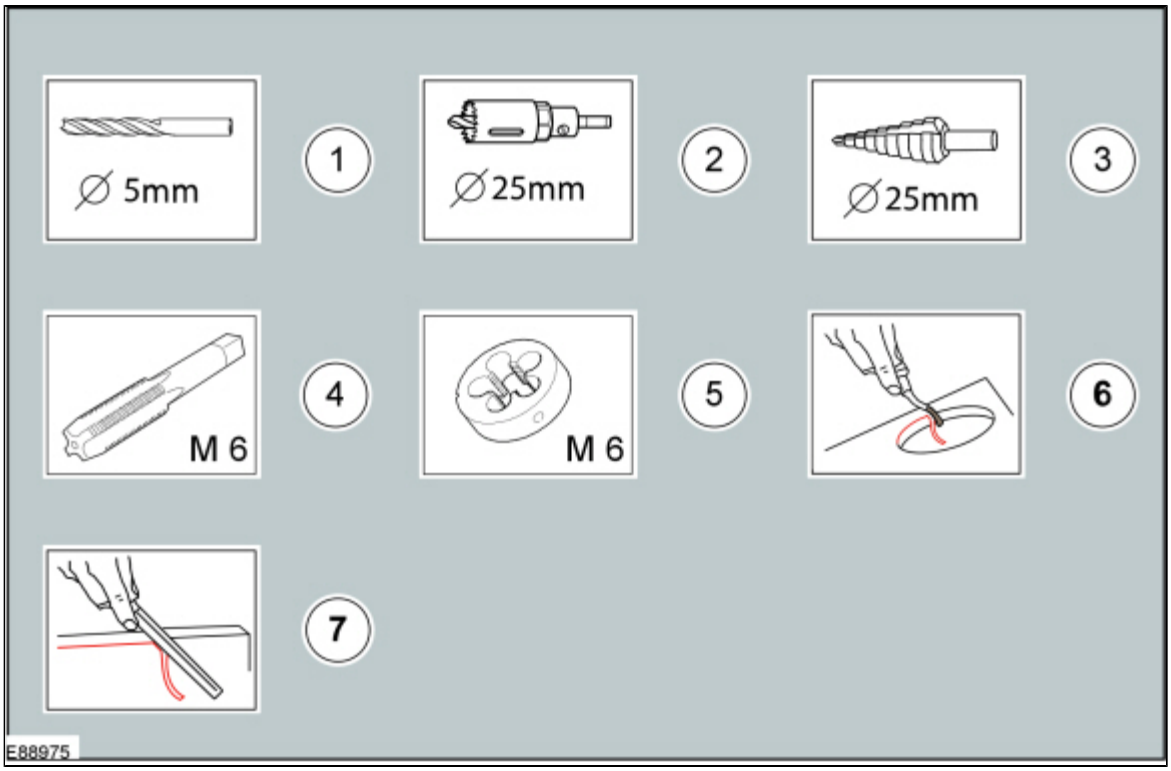

Item	Part Number	Description
1	—	Drill bit with a specified diameter
2	—	Hole saw with a specified diameter
3	—	Stepped drill bit with a specified diameter
4	—	Tap with a specified diameter
5	—	Die with a specified diameter
6	—	Scraper for circular holes
7	—	Scraper for straight edges

Cutting tool symbols

The cutting tool symbols are used to show which type of cutting tool is recommended to carry out a procedure step.

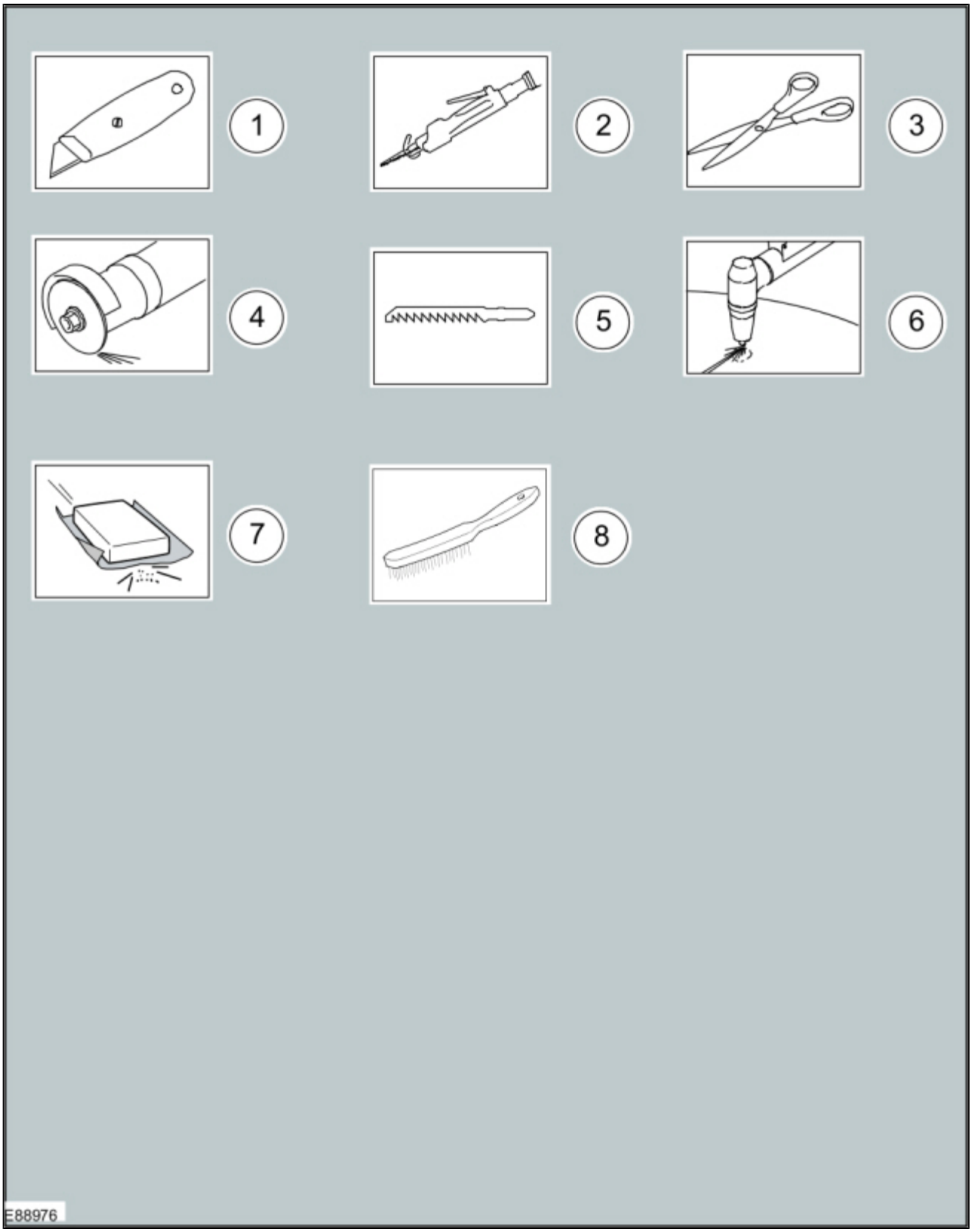

Item	Part Number	Description
1	—	Cutting knife
2	—	Air body saw
3	—	Scissors
4	—	Grinder

5	—	Jig saw
6	—	Plasma cutter
7	—	Sanding Paper
8	—	Wire brush

Apply Chemical or load symbols

The apply chemical or load symbols are used to show where to apply which type of chemical or load to carry out a procedure step.

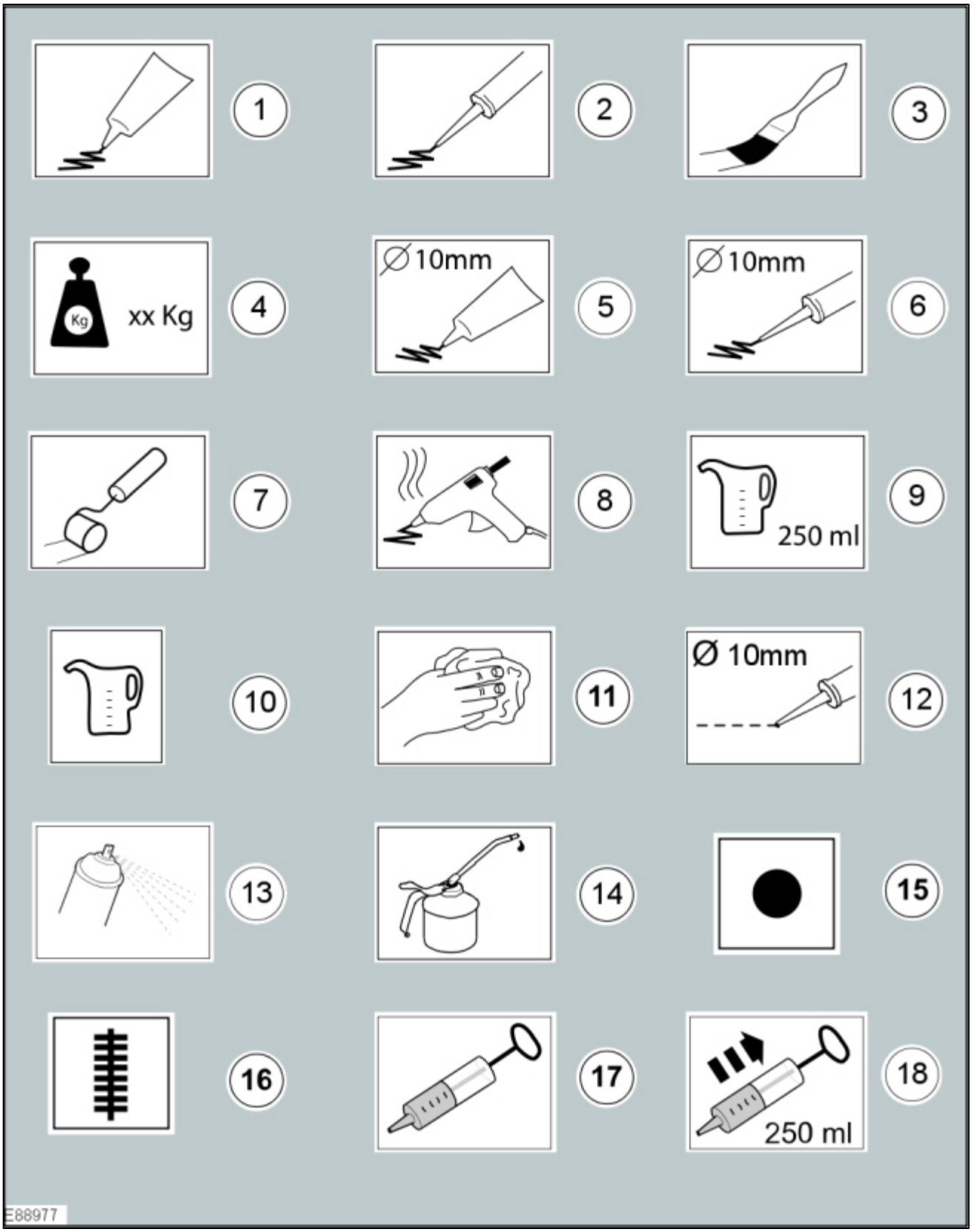

Item	Part Number	Description
1	—	Apply the substance from the specified tube
2	—	Apply the substance from the specified cartridge
3	—	Apply the specified chemical with a brush
4	—	Apply the specified load to the specified component

5	—	Apply a bead with a specific diameter from the specified tube
6	—	Apply a bead with a specific diameter from the specified cartridge
7	—	Apply the specified chemical with a roller
8	—	Apply hot glue to the specified component
9	—	Apply the specified amount of fluid from the fluid can
10	—	Apply fluid from the fluid can
11	—	Clean the specified component with the specified material
12	—	Apply a broken bead from the specified tube
13	—	Apply the specified chemical from a spray can
14	—	Apply the specified lubricant to the specified component
15	—	Apply spot welds to the specified component
16	—	Apply a continuous weld to the specified component
17	—	Handle the fluid using a syringe
18	—	Extract the specified amount of fluid using a syringe

Measurement symbols

The measurement symbols are used to show where to measure which type of measurement to carry out a procedure step.

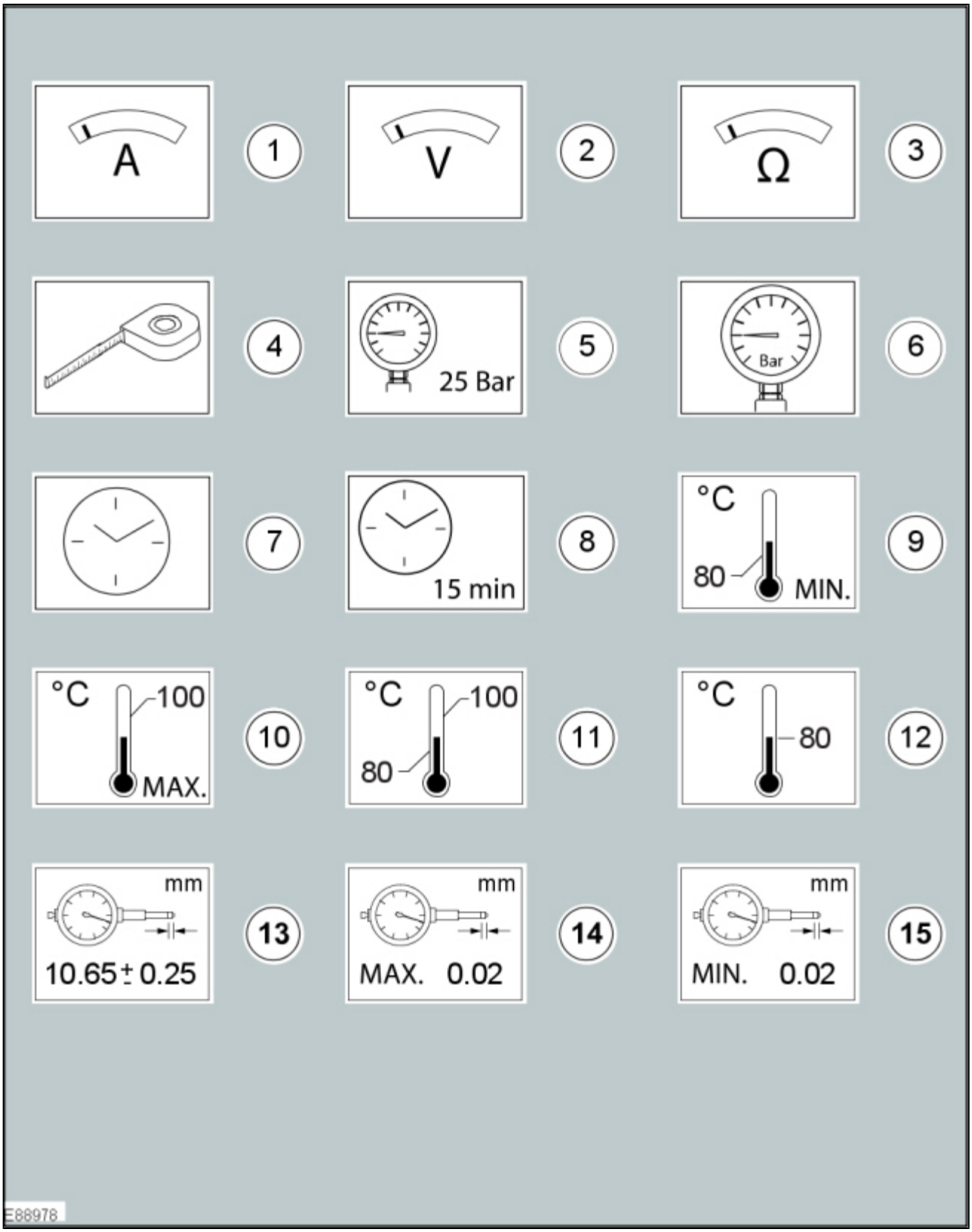

Item	Part Number	Description
1	—	Measure the current using a digital multimeter
2	—	Measure the voltage using a digital multimeter
3	—	Measure the resistance using a digital multimeter

4	—	Measure the length/distance
5	—	Check that the specified pressure is available using a suitable pressure gauge
6	—	Measure the pressure at the specified port using a suitable pressure gauge
7	—	Measure the time using a suitable stopwatch
8	—	Wait for the specified period of time
9	—	The specified task requires the specified minimum temperature
10	—	The specified task requires the specified maximum temperature not to be exceeded
11	—	The specified task requires the specified temperature range
12	—	The specified task requires the specified temperature
13	—	Measure and check for the specified value using a dial indicator gauge
14	—	Measure and check for the specified MAX value using a dial indicator gauge
15	—	Measure and check for the specified MIN value using a dial indicator gauge

General equipment symbols

The general equipment symbols are used to show where to use which type of general equipment to carry out a procedure step.

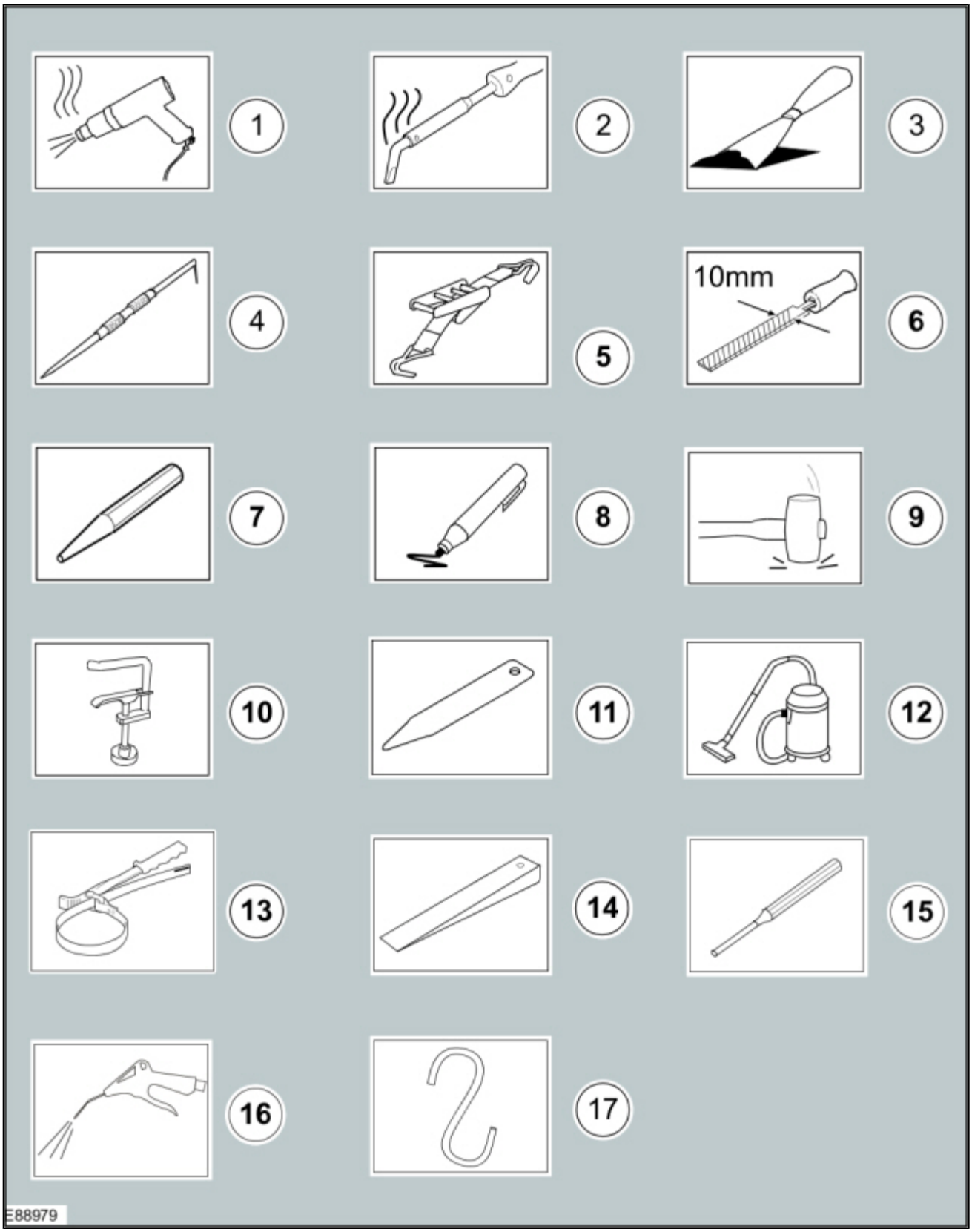

Item	Part Number	Description
1	—	Hot air gun
2	—	Soldering iron
3	—	Scraper
4	—	Scriber

5	—	Securing strap
6	—	File with a specified size
7	—	Center punch
8	—	Marker
9	—	Mallet
10	—	Hose clamp
11	—	Interior trim remover
12	—	Vacuum cleaner
13	—	Strap wrench
14	—	Wedge
15	—	Pin Punch
16	—	Air blow gun
17	—	Relocate and support the component
18	—	C-clamp

Welding symbols

These symbols indicate the type of welding to be used.

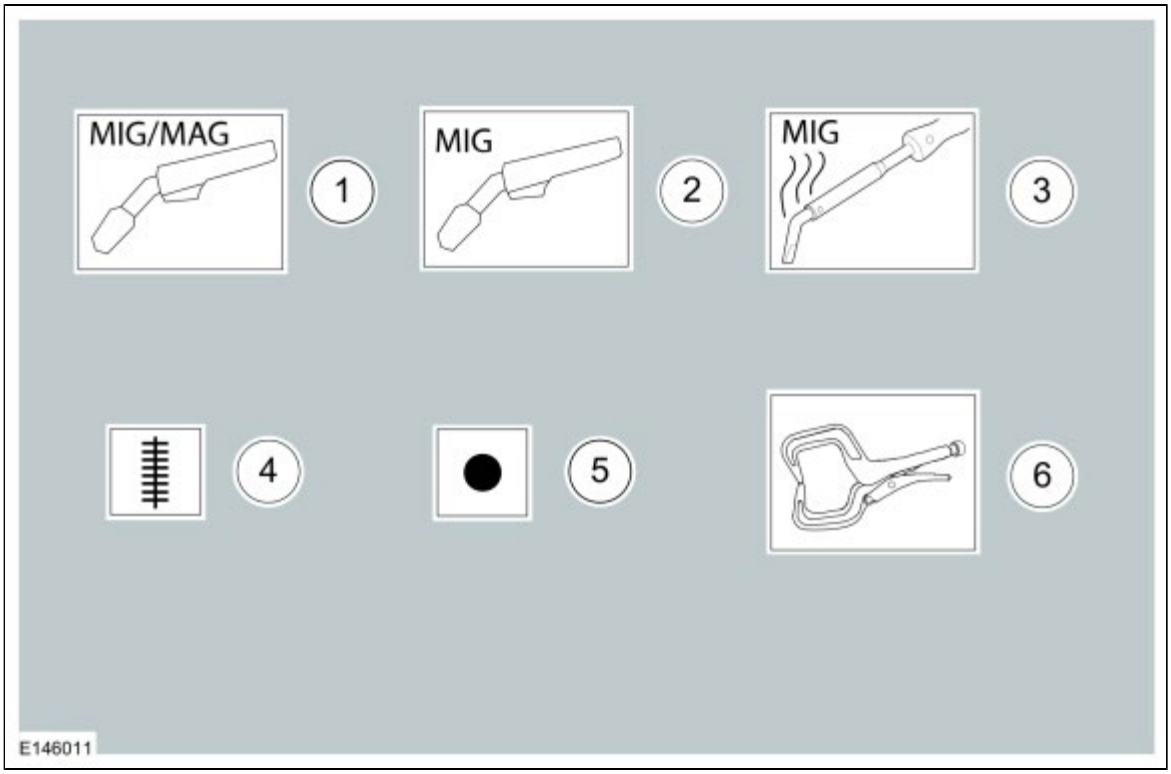

Item	Part Number	Description
1	—	Metal inert gas (MIG) / Metal active gas (MAG) welding equipment
2	—	Metal inert gas (MIG) welding equipment
3	—	Metal inert gas (MIG) brazing equipment
4	—	Apply a continuous weld to the specified component
5	—	Apply spot welds to the specified component

6	—	C-clamp

Drilling and grinding symbols

These symbols indicate the type of drilling or grinding to be used.

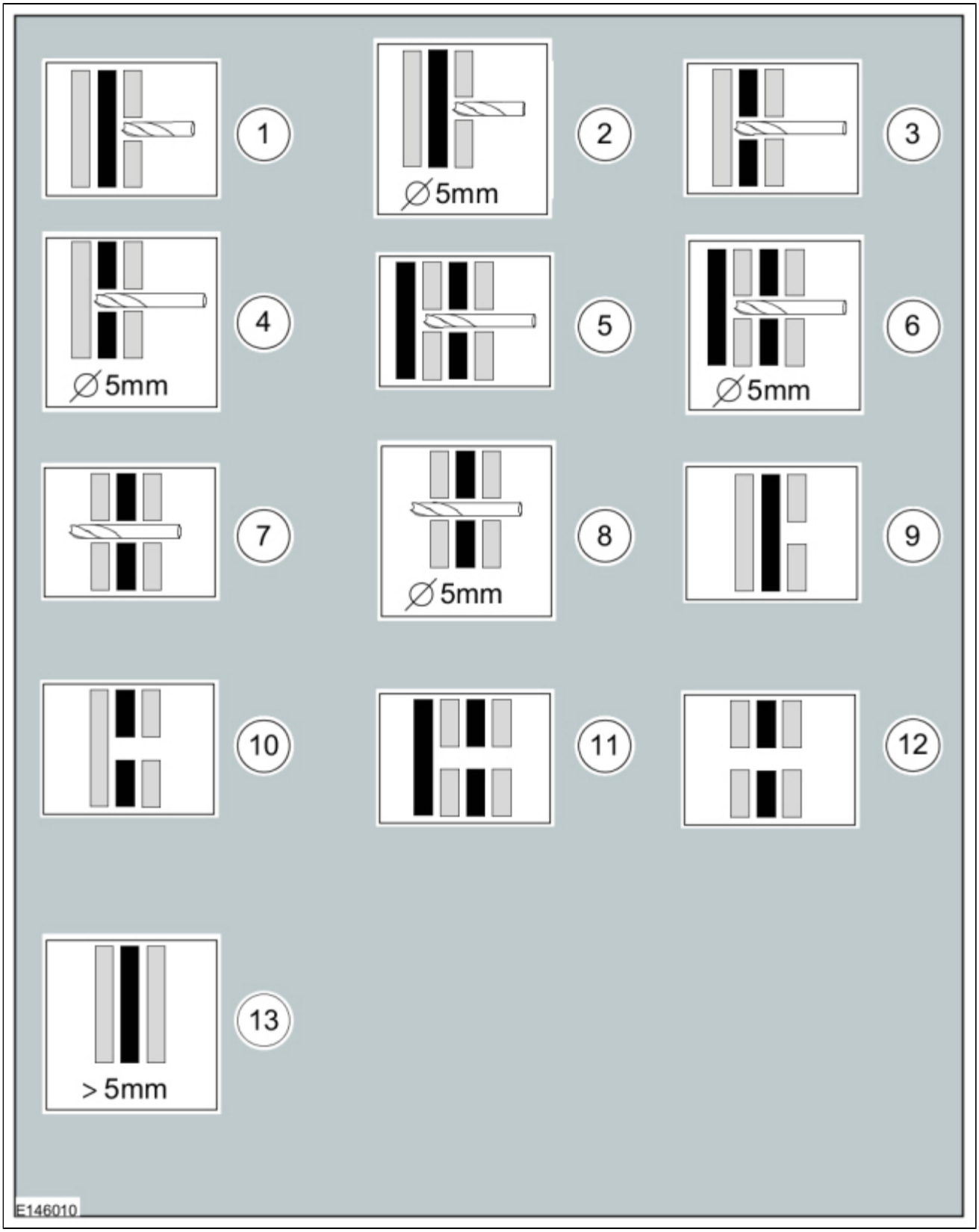

Item	Part Number	Description
1	—	Drill through first body layer with a suitable diameter
2	—	Drill through first body layer with the specified diameter
3	—	Drill through the indicated number of body layers with a suitable diameter
4	—	Drill through the indicated number of body layers with the specified diameter
5	—	Drill through the indicated number of body layers with a suitable diameter
6	—	Drill through the indicated number of body layers with the specified diameter
7	—	Drill through all body layers with a suitable diameter
8	—	Drill through all body layers with the specified diameter
9	—	Grind one layer
10	—	Grind two layers
11	—	Grind to last layer
12	—	Grind all layers
13	—	Material thickness > Xmm

Material symbols

The material symbols are used to show where to use which type of material to carry out a procedure step.

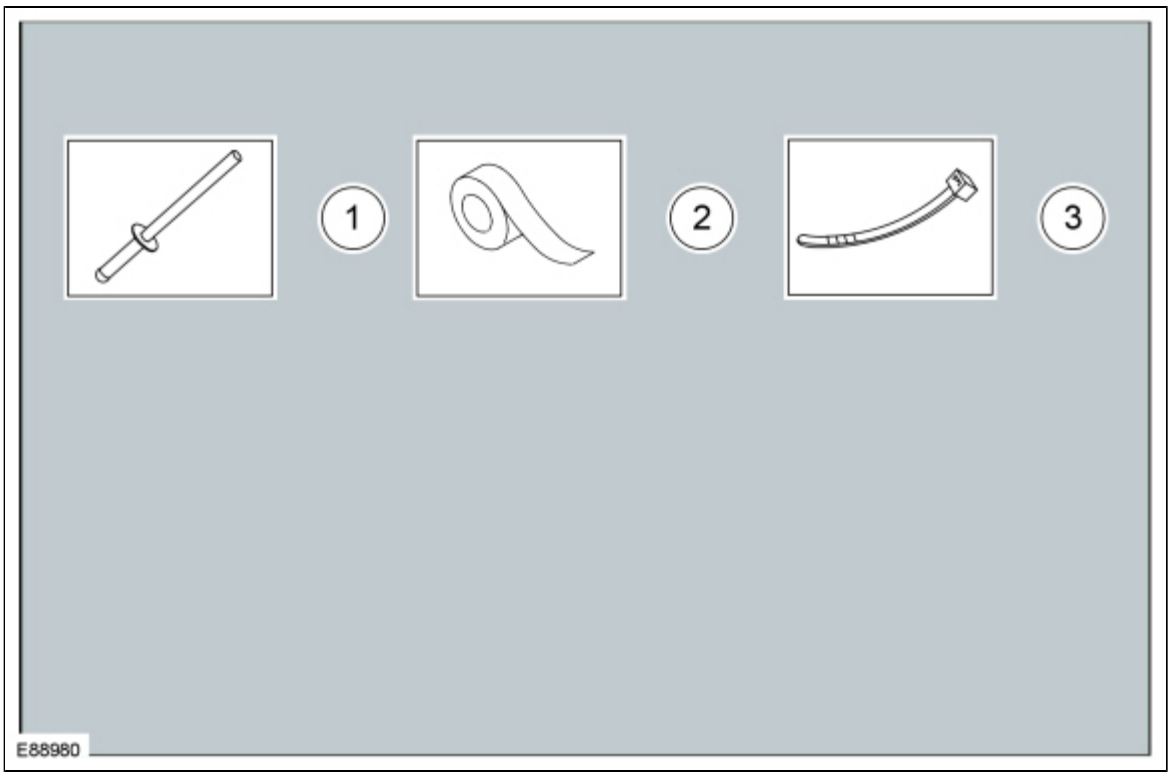

Item	Part Number	Description
1	—	Remove/Install the specified blind rivet

2	—	Apply tape to the specified component/area
3	—	Remove/Install the specified cable tie

Miscellaneous symbols

These symbols provide further information that is required to carry out a procedure step.

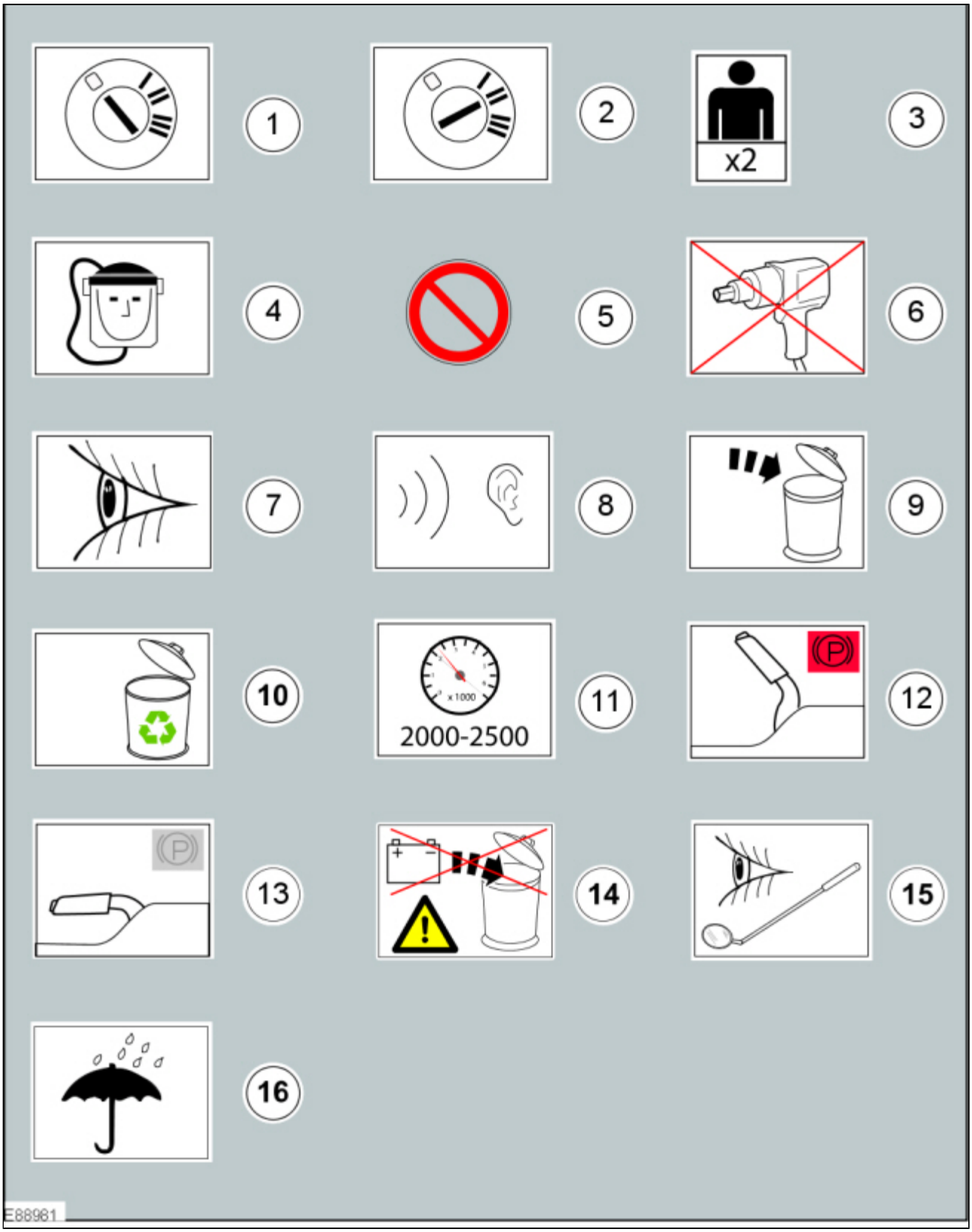

Item	Part Number	Description
1	—	Set the ignition switch to the 0 position
2	—	Set the ignition switch to the II position
3	—	The procedure step requires the aid of the specified number of supporting technicians
4	—	Self contained breathing apparatus
5	—	General prohibition used in combination with another symbol
6	—	Do not use power tools
7	—	Visual check
8	—	Noise check
9	—	Dispose the specified component
10	—	Replaced by item 9 (Dispose the specified component)
11	—	Set the engine speed to the specified value
12	—	Fully apply the parking brake lever
13	—	Fully release the parking brake lever
14	—	Do not dispose of batteries into the waste bin
15	—	Visual check using a mirror
16	—	Area/component must be dry

Mandatory Protective equipment - Health and safety symbols

The protective equipment symbols advise to use a mandatory protective equipment to avoid or at least reduce possible health and safety risks.

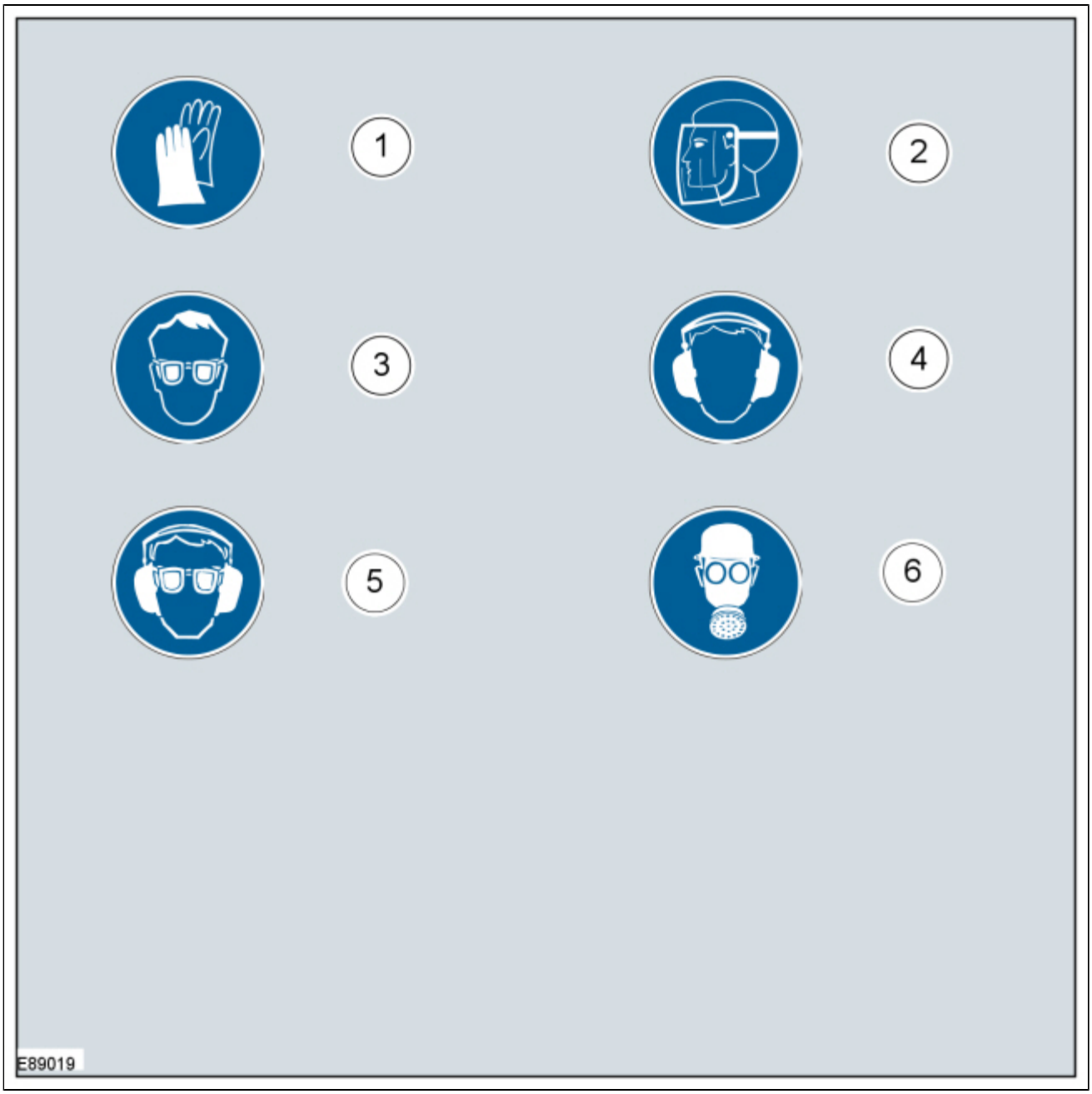

Item	Part Number	Description
1	—	Wear protective gloves
2	—	Wear face guard
3	—	Wear safety goggles
4	—	Wear ear protectors
5	—	Wear safety goggles and ear protectors
6	—	Wear a respirator

Prohibition - Health and safety symbols and component damage

The prohibition symbols are used to prohibit the specified actions to avoid or at least reduce possible component damage and health and safety risks.

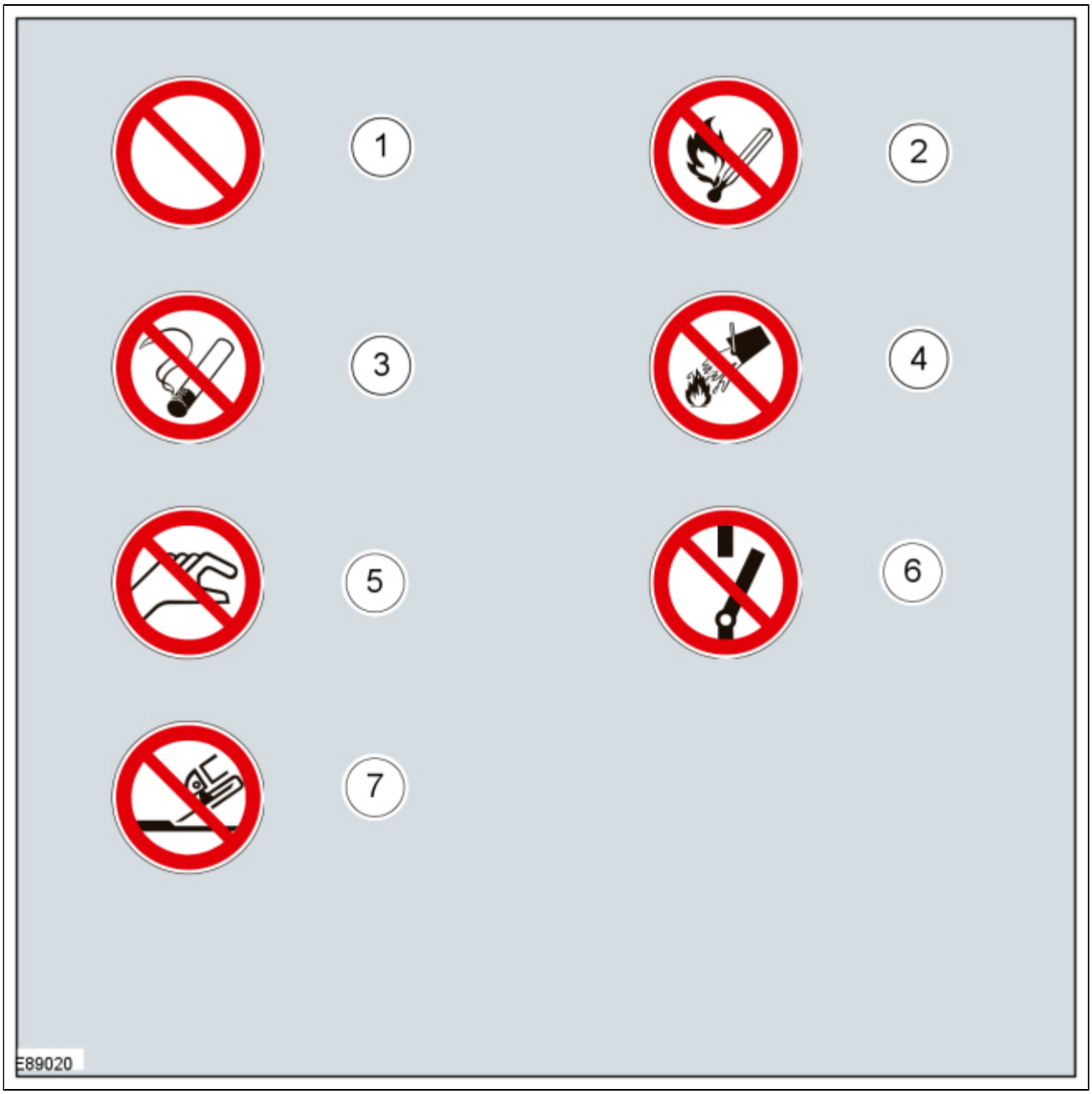

Item	Part Number	Description
1	—	General prohibition symbol
2	—	No naked flames
3	—	No smoking
4	—	No water
5	—	Do not touch
6	—	Do not switch
7	—	No grinding

Warning symbols - Health and safety and component damage

The warning symbols are used to advise on hazardous conditions to avoid or at least reduce possible component damage and health and safety risks.

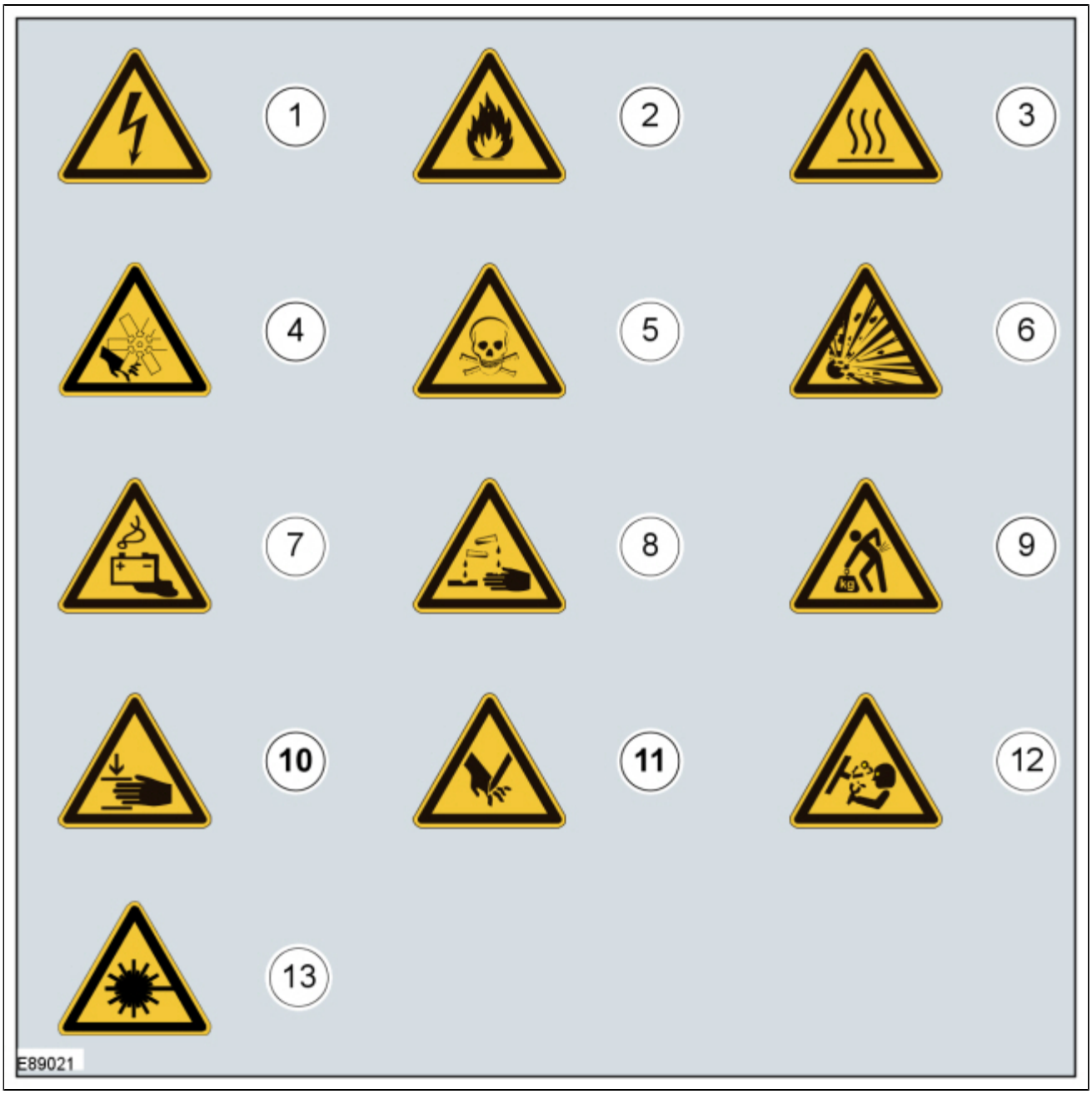

Item	Part Number	Description
1	—	Hazardous voltage/Electrical shock/Electrocution
2	—	Fire Hazard/Highly flammable
3	—	Burn hazard/Hot surface
4	—	Automatic start-up
5	—	Toxic
6	—	Explosive material
7	—	Battery hazard
8	—	Corrosive material
9	—	Lifting hazard
10	—	Hand crush/Force from above

11	—	Cutting of fingers or hand
12	—	Pressure hazard
13	—	Invisible laser radiation. Do not view directly with optical instruments (magnifiers). Class 1M laser product

Control Diagram symbols - Description and Operation procedures

These symbols provide further information on the type of connectivity, direction of flow or type of data bus of a system.

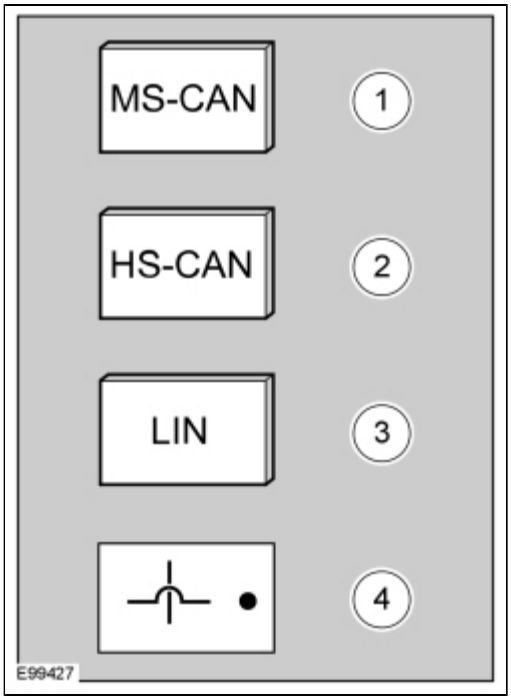

Item	Part Number	Description
1	—	Mid-speed Controller Area Network (CAN)
2	—	High-speed Controller Area Network (CAN)
3	—	Local Interconnect Network (LIN)
4	—	Wires crossing not connected

Copyright © Ford Motor Company

Front Toe Adjustment

NOTE: *Make sure that the vehicle is standing on a level surface.*

1. **NOTICE: Make sure that the steering wheel lock is engaged.**

   NOTE: *Make sure that the road wheels are in the straight ahead position.*

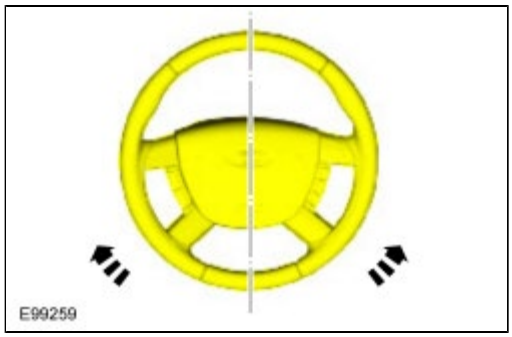

2. Check the toe setting on both sides.
   General Equipment : Wheel Alignment System

3.
   1. Loosen on both sides.
      Torque : 90 Nm

   2. **NOTE:** *Make sure that the boot is correctly located.*

      Rotate the tie-rods an equal amount in either a clockwise or a counterclockwise direction to adjust the toe setting on both sides.

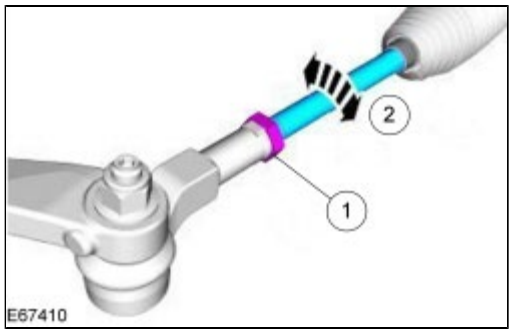

Copyright © Ford Motor Company

Front Wheel Bearing

Removal

1. Refer to: Wheel Hub (204-01 Front Suspension, Removal and Installation).

Installation

1. To install, reverse the removal procedure.

Copyright © Ford Motor Company

Rear Suspension

REFER to: Suspension System (204-00 Suspension System - General Information, Diagnosis and Testing).

Copyright © Ford Motor Company

Front Disc Brake

REFER to: Brake System (206-00 Brake System - General Information, Diagnosis and Testing).

Copyright © Ford Motor Company

Rear Disc Brake

REFER to: Brake System (206-00 Brake System - General Information, Diagnosis and Testing).

Copyright © Ford Motor Company

Power Brake System

REFER to: Brake System (206-00 Brake System - General Information, Diagnosis and Testing).

Copyright © Ford Motor Company

Steering Wheel

Removal

1. **WARNING: Before beginning any service procedure in this section, refer to Safety Warnings in section 100-00 General Information. Failure to follow this instruction may result in serious personal injury.**

   NOTICE: To prevent damage to the clockspring, make sure the front wheels are in the straight-ahead position.

   NOTE: *Removal steps in this procedure may contain installation details.*

   Refer to: Health and Safety Precautions (100-00 General Information, Description and Operation).

2. Refer to: Driver Airbag (501-20B Supplemental Restraint System, Removal and Installation).

3. *Torque* : 48 Nm

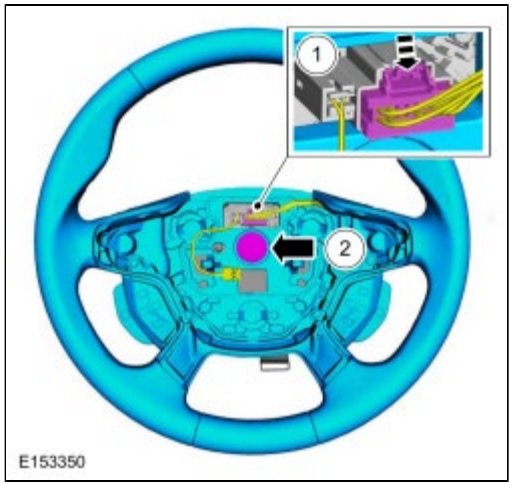

4. **NOTE:** *Make sure the clockspring rotor does not rotate.*

   NOTE: *Make sure the clockspring pins are not bent or damaged.*

   Apply tape to specified component or area.

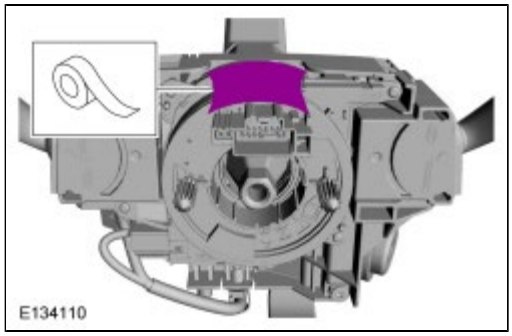

Installation

1. **NOTE:** *Transfer parts as needed.*

   To install, reverse the removal procedure.

Copyright © Ford Motor Company

Steering Column Multifunction Switch LH

Removal

NOTE: *Removal steps in this procedure may contain installation details.*

1. **WARNING: Before beginning any service procedure in this section, refer to Safety Warnings in section 100-00 General Information. Failure to follow this instruction may result in serious personal injury.**

   Refer to: Health and Safety Precautions (100-00 General Information, Description and Operation).

2. Refer to: Steering Wheel and Column Electrical Components (211-05 Steering Column Switches, Diagnosis and Testing).

3. 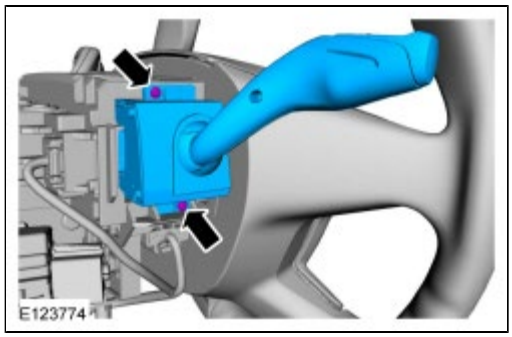

4. **NOTE:** *Make sure that the component terminals are not bent or damaged.*

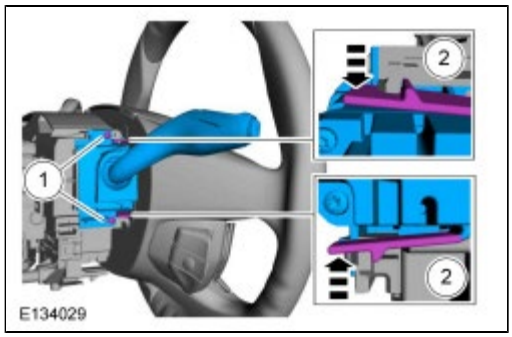

Installation

1. To install, reverse the removal procedure.

Copyright © Ford Motor Company

Steering Column Multifunction Switch RH

Removal

NOTE: *Removal steps in this procedure may contain installation details.*

1. **WARNING: Before beginning any service procedure in this section, refer to Safety Warnings in section 100-00 General Information. Failure to follow this instruction may result in serious personal injury.**

   Refer to: Health and Safety Precautions (100-00 General Information, Description and Operation).

2. Refer to: Steering Wheel and Column Electrical Components (211-05 Steering Column Switches, Diagnosis and Testing).

3. 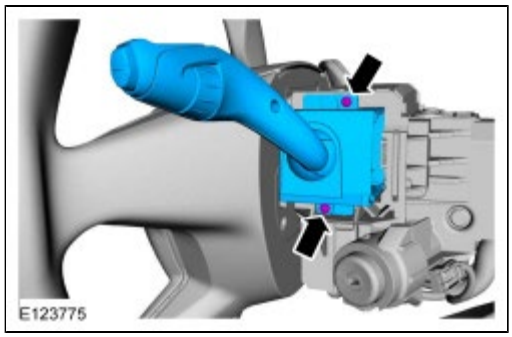

4. **NOTE:** *Make sure that the component terminals are not bent or damaged.*

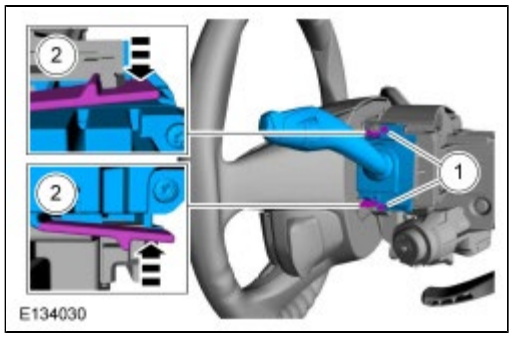

Installation

1. To install, reverse the removal procedure.

Copyright © Ford Motor Company

Transmission Fluid Drain and Refill

1. Refer to: Health and Safety Precautions (100-00 General Information, Description and Operation).

2.

   NOTE: *Make sure that the vehicle is standing on a level surface.*

   Refer to: Jacking and Lifting - Overview (100-02 Jacking and Lifting, Description and Operation).

3.
   1.
   2. If equipped.

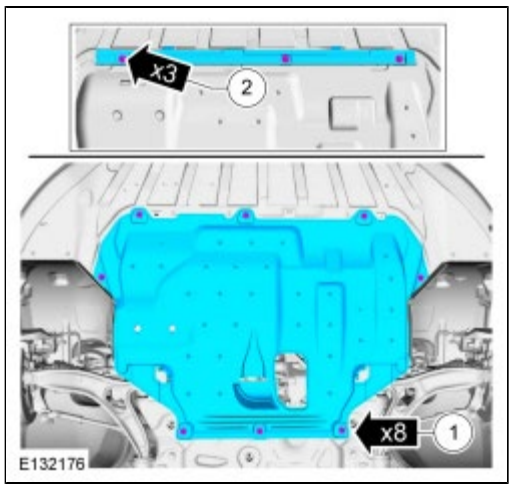

4. **NOTICE: Make sure that the component is at the specified temperature.**

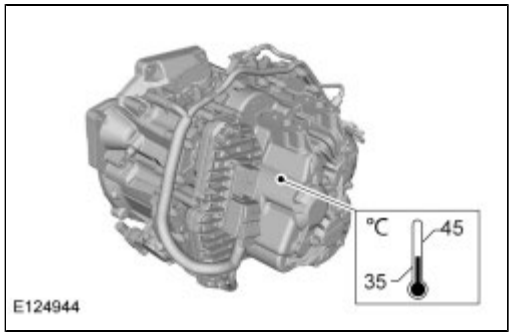

5. **WARNING: Be prepared to collect escaping fluid.**

   WARNING: Avoid skin contact with the fluid.

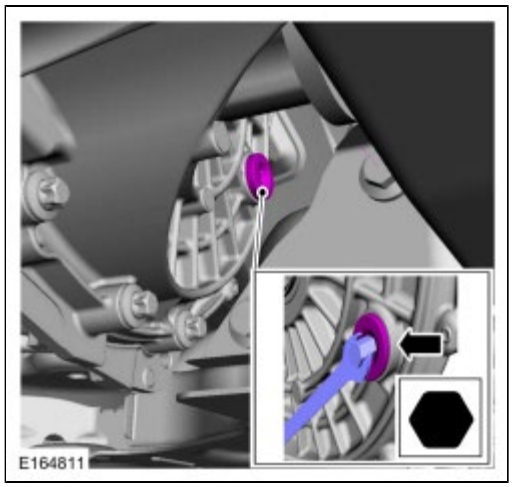

6. **WARNING: Be prepared to collect escaping fluid.**

   WARNING: Avoid skin contact with the fluid.

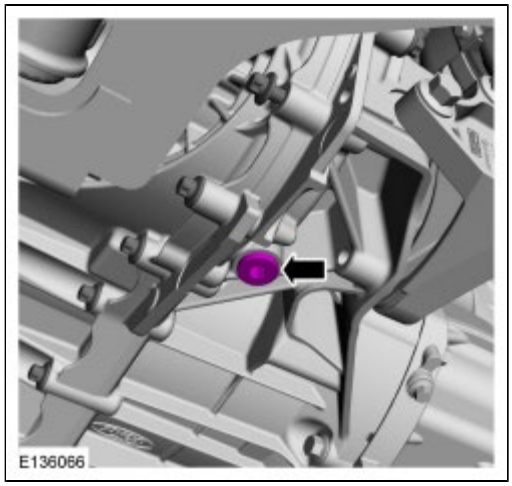

1. **NOTE:** *The O-ring seal is to be reused unless damaged.*

   Torque : 43 Nm

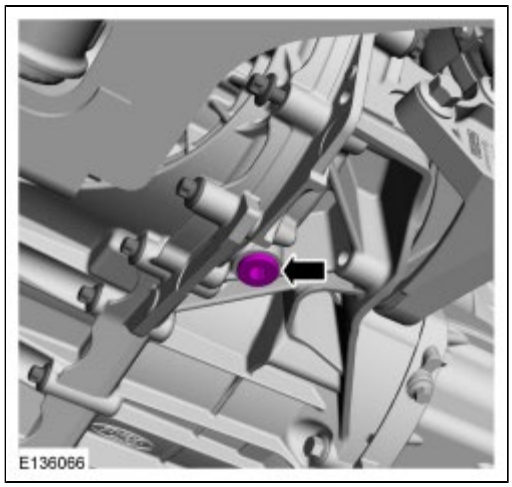

2. Fill the transmission until the fluid level is just below the filler hole.
   Material : Motorcraft® Dual Clutch Transmission Fluid / XT-11-QDC (WSS-M2C200-D2)

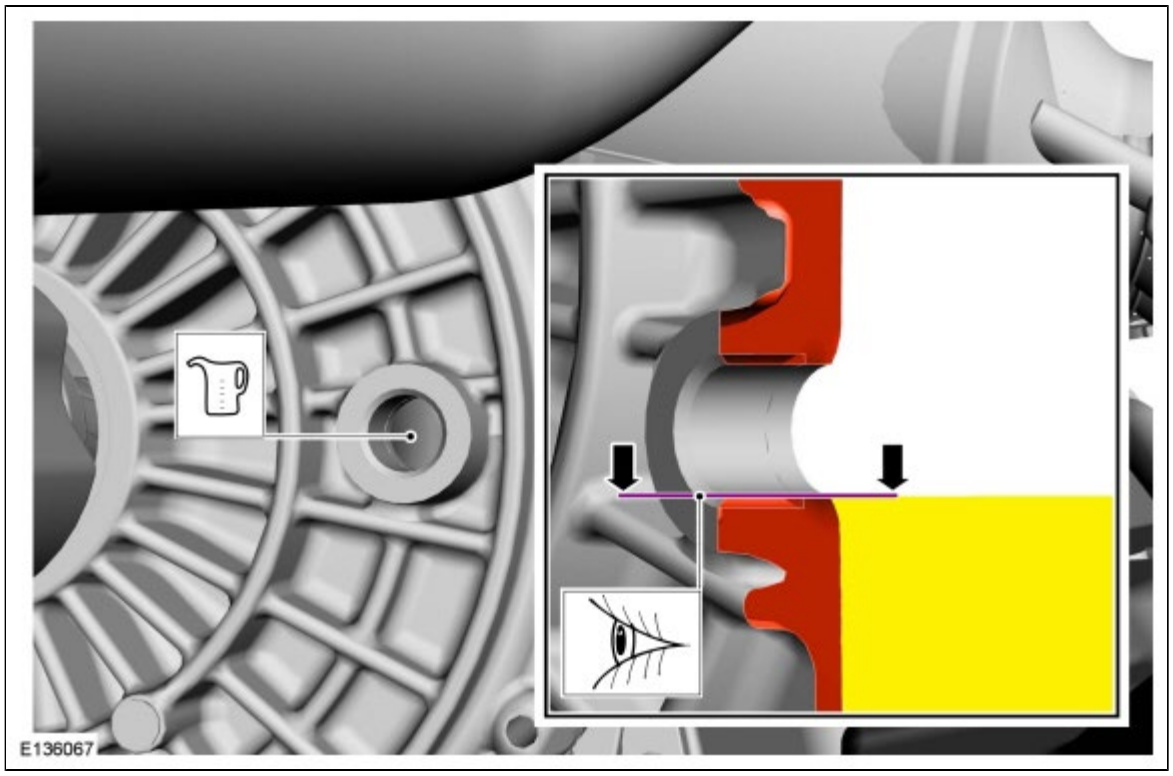

3. **NOTE:** *The O-ring seal is to be reused unless damaged.*

   Torque : 43 Nm

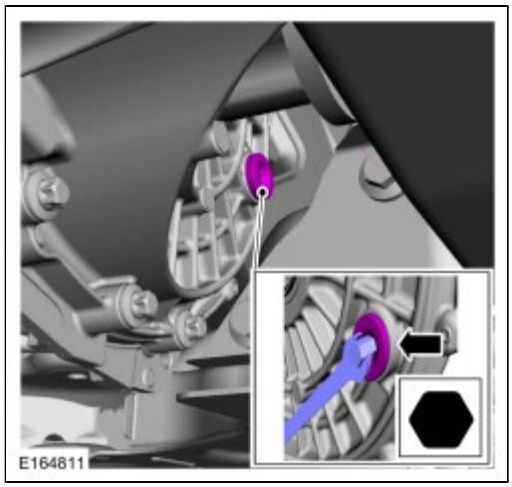

4.
   1.
   2. If equipped.

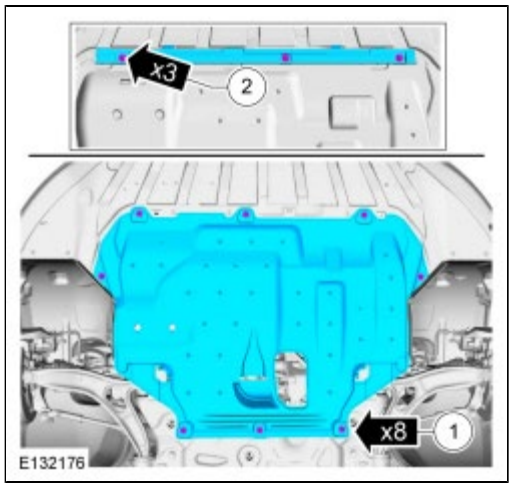

5. Refer to: Jacking and Lifting - Overview (100-02 Jacking and Lifting, Description and Operation).

Copyright © Ford Motor Company

Transmission Fluid Level Check

1. Refer to: Health and Safety Precautions (100-00 General Information, Description and Operation).

2.

   NOTE: *Make sure that the vehicle is standing on a level surface.*

   Refer to: Jacking and Lifting - Overview (100-02 Jacking and Lifting, Description and Operation).

3.
   1.
   2. If equipped.

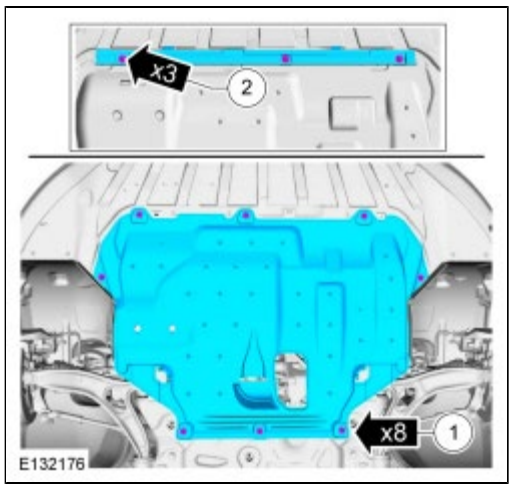

4. **NOTICE: Make sure that the component is at the specified temperature.**

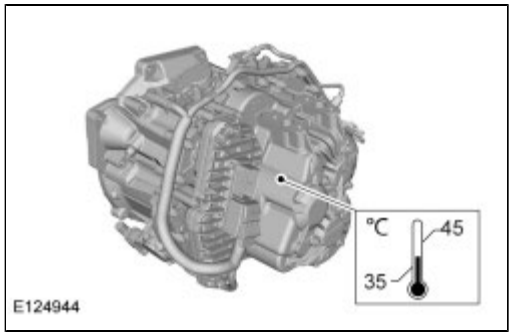

5. **WARNING: Be prepared to collect escaping fluid.**

   WARNING: Avoid skin contact with the fluid.

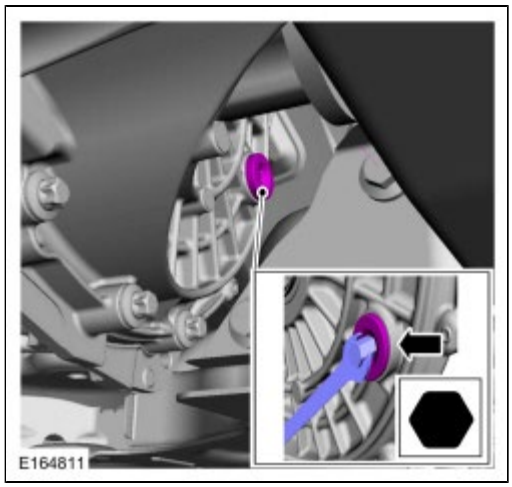

6. Fill the transmission until the fluid level is just below the filler hole.
   Material : Motorcraft® Dual Clutch Transmission Fluid / XT-11-QDC (WSS-M2C200-D2)

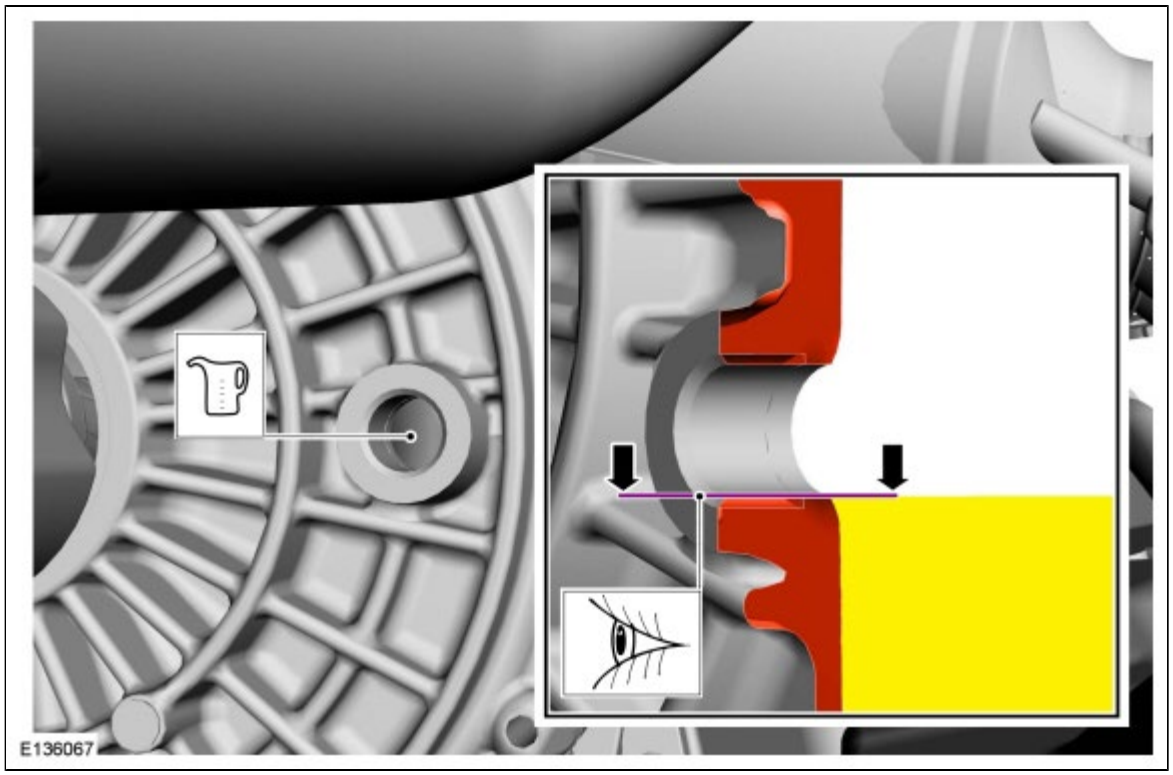

7. **NOTE:** *The O-ring seal is to be reused unless damaged.*

   Torque : 43 Nm

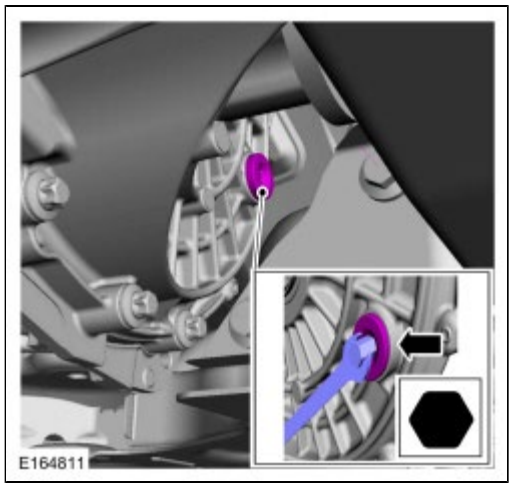

8.
   1.
   2. If equipped.

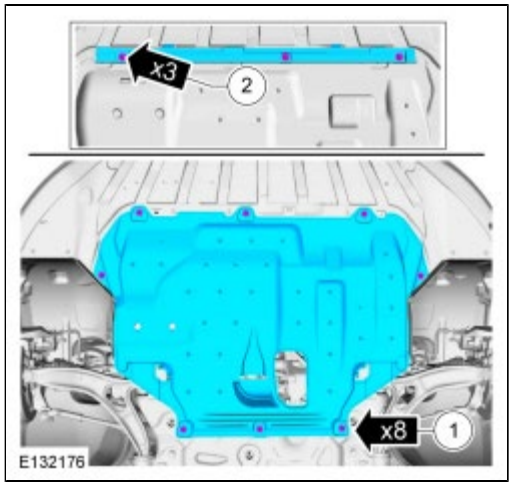

9. Refer to: Jacking and Lifting - Overview (100-02 Jacking and Lifting, Description and Operation).

Copyright © Ford Motor Company

Clutch Actuator

Removal

1. Refer to: Clutch Unit (307-01 Automatic Transmission - Vehicles With: 6-Speed PowerShift Transmission - DPS6/6DCT250, Removal and Installation).
2. **NOTE:** *Note the position of the components before removal.*

3. **NOTE:** *Note the position of the component before removal.*

4. **NOTE:** *Note the position of the components before removal.*

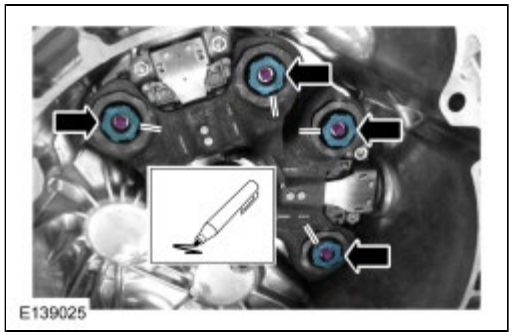

5.

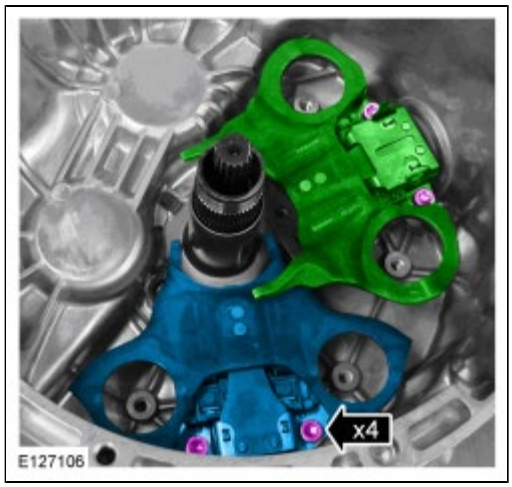

6. **NOTICE: Take extra care when handling the component.**

   On both sides.

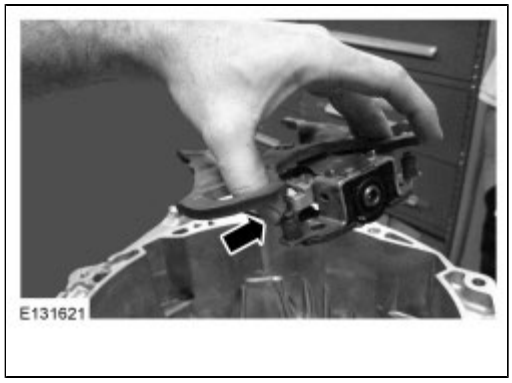

Installation

1. Check the surfaces for abrasion.

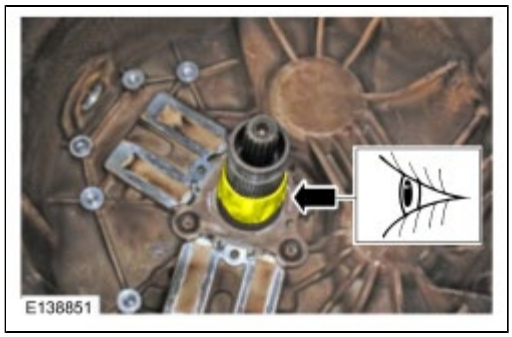

2.

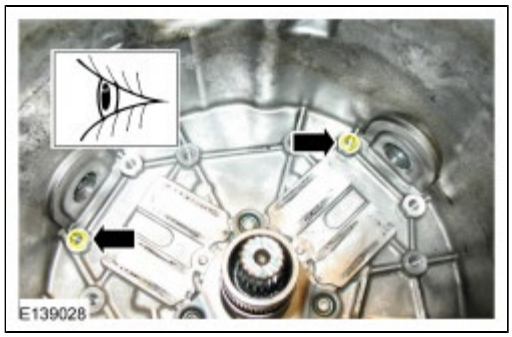

3. **NOTICE: Take extra care when handling the component.**

On both sides.

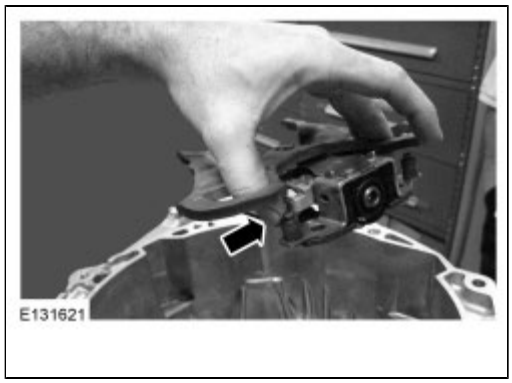

4. **NOTE:** *Make sure that the components are installed to the position noted before removal.*

   NOTE: *Only tighten the bolts finger tight at this stage.*

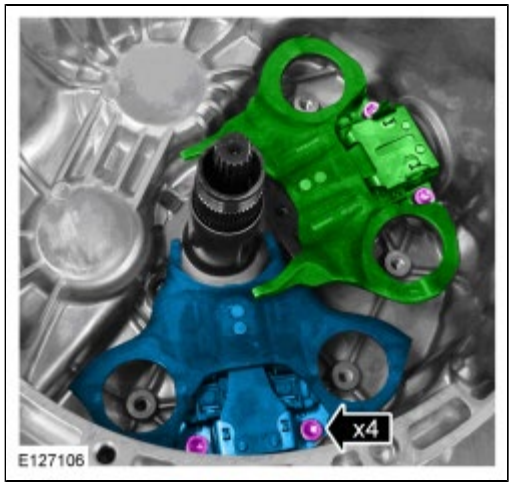

5. **NOTE:** *Only tighten the bolts finger tight at this stage.*

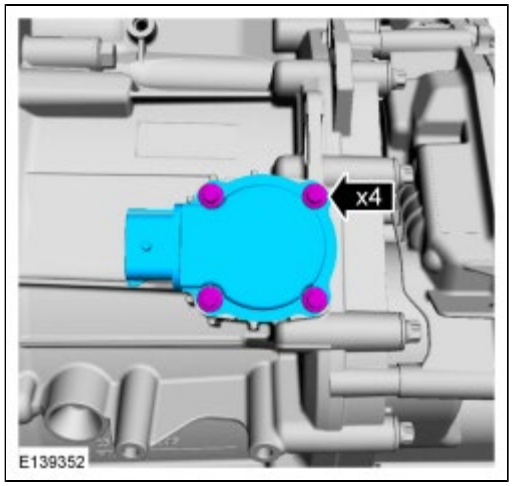

6. **NOTE:** *Only tighten the bolts finger tight at this stage.*

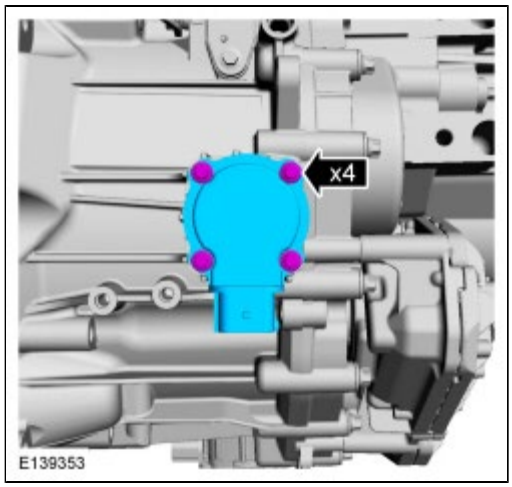

7. **NOTICE: The clutch actuator motor splines must be aligned with the clutch actuator and the motor must be flush to the transmission clutch housing before tightening the clutch actuator fasteners to specification. Failure to follow this notice will result in damage to the acutator and motor.**

   Torque : 19 Nm

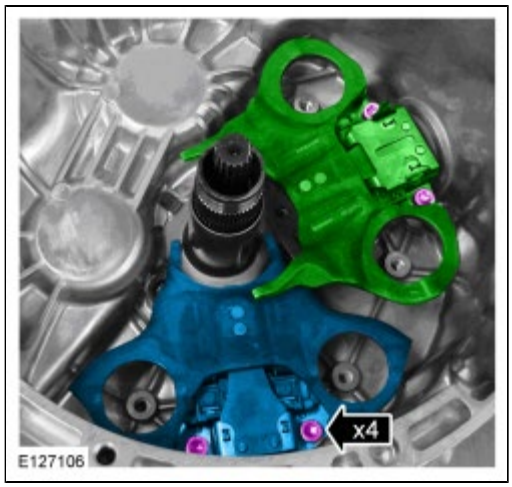

8. Remove the following items:
   -

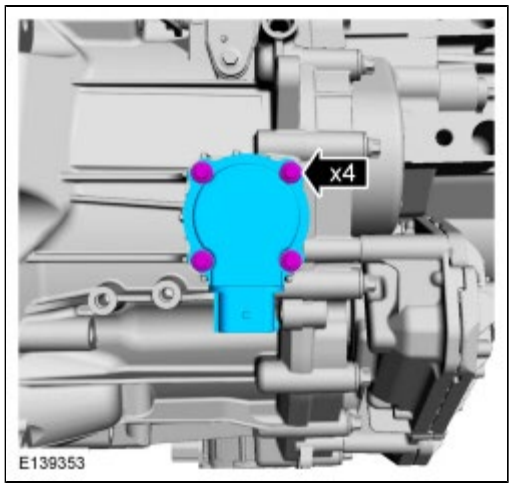

9. Remove the following items:
   -

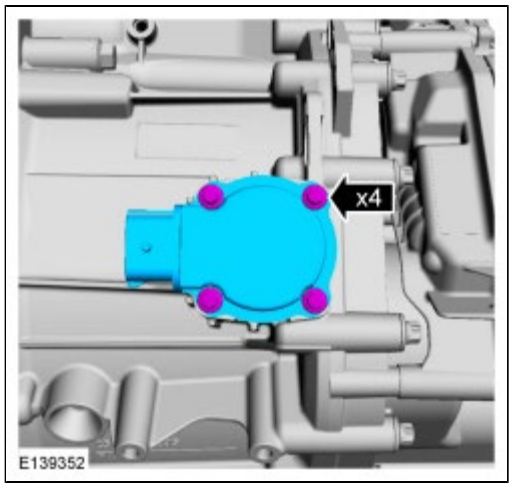

10. **NOTE:** *Install all the bolts finger tight before final tightening.*

    NOTE: *Make sure that the components are installed to the position noted before removal.*

    NOTE: *Make sure that the installation marks are aligned.*

    NOTE: *Make sure that the spring is correctly located in the lower spring seat.*

    NOTE: *Make sure that the classification of the components correspond with each other.*

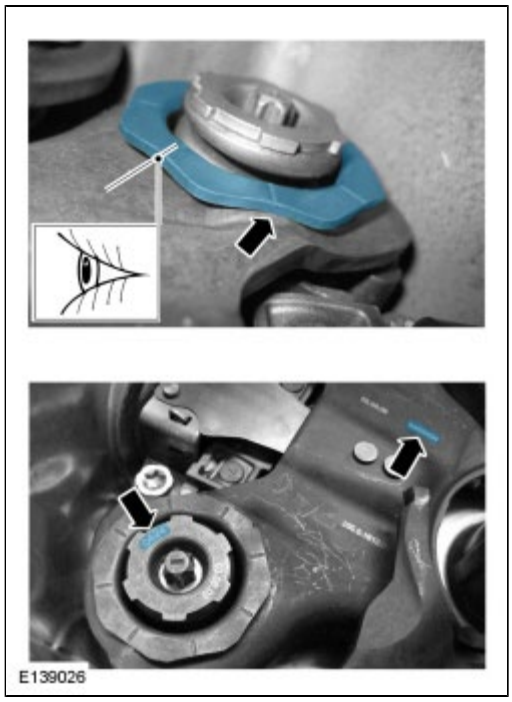

11. **NOTE:** *This step is only necessary when installing a new component.*

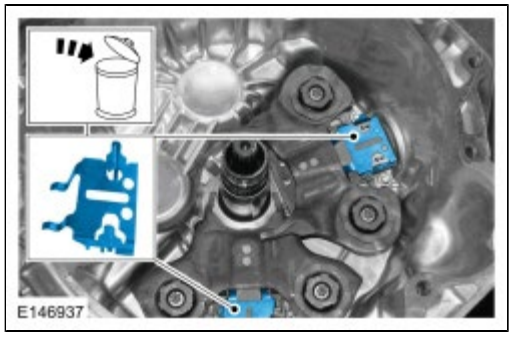

12. *Torque* : 26 Nm

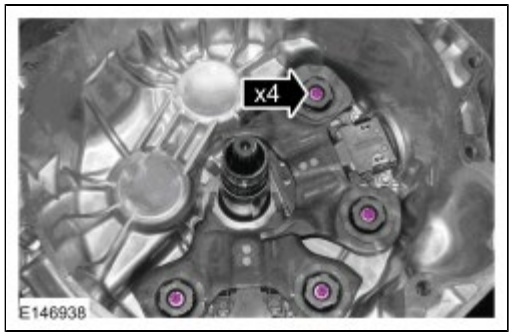

13. **NOTE:** *The component can only be installed in 1 position.*

14. **NOTE:** *The component can only be installed in 1 position.*

15. Refer to: Clutch Unit (307-01 Automatic Transmission - Vehicles With: 6-Speed PowerShift Transmission - DPS6/6DCT250, Removal and Installation).

Copyright © Ford Motor Company

Clutch Actuator Motor

Removal

NOTE: *Removal steps in this procedure may contain installation details.*

1. Refer to: Health and Safety Precautions (100-00 General Information, Description and Operation).
2. Refer to: Jacking and Lifting - Overview (100-02 Jacking and Lifting, Description and Operation).
3.
    2. *Torque* : 5 Nm

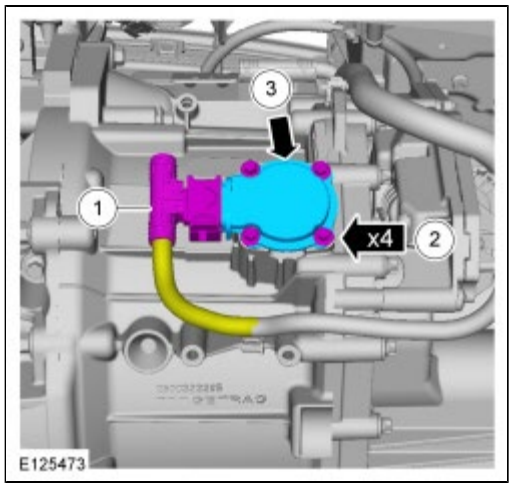

4. **WARNING: Make sure that the mating faces are clean and free of corrosion and foreign material.**

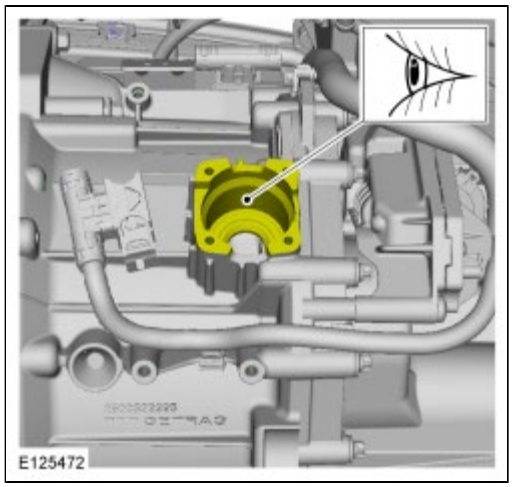

5. Lower the vehicle.
6. Refer to: Air Cleaner (303-12A Intake Air Distribution and Filtering - 2.0L Duratec-HE (125kW/170PS) - MI4, Removal and Installation).
7.
    2. *Torque* : 5 Nm

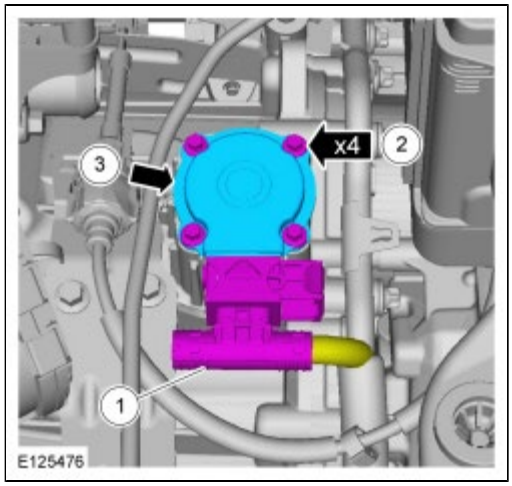

8. **WARNING: Make sure that the mating faces are clean and free of corrosion and foreign material.**

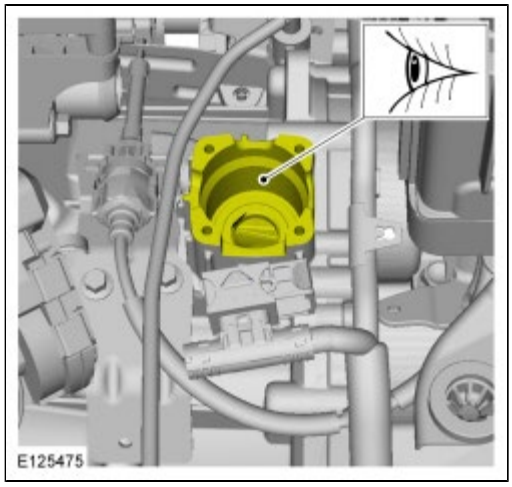

Installation

1.
    2. *Material* : High Temperature Nickel Anti-Seize Lubricant / XL-2

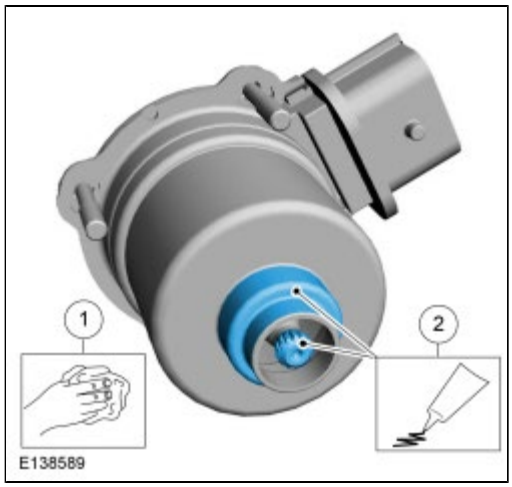

2. To install, reverse the removal procedure.

Copyright © Ford Motor Company

Input Shaft Seal

Removal

1. Refer to: Transmission - 2.0L Duratec-HE (125kW/170PS) - MI4 (307-01 Automatic Transmission - Vehicles With: 6-Speed PowerShift Transmission - DPS6/6DCT250, Removal).
   Refer to: Clutch Unit (307-01 Automatic Transmission - Vehicles With: 6-Speed PowerShift Transmission - DPS6/6DCT250, Removal and Installation).

2. *Special Tool(s)* : 307-673 Remover, Outer Input Shaft Seal

3. Refer to: Clutch Actuator (307-01 Automatic Transmission - Vehicles With: 6-Speed PowerShift Transmission - DPS6/6DCT250, Removal and Installation).

4.

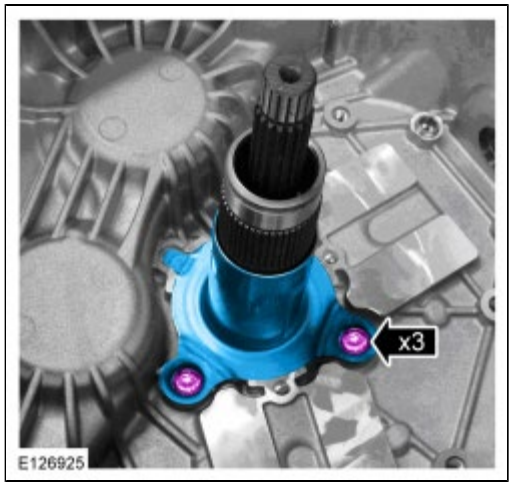

5. **NOTICE: Take extra care not to damage the bearing.**

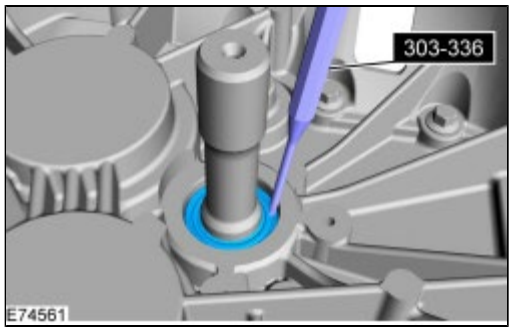

6.
    1. 2,5 x 15 mm self-tapping screw

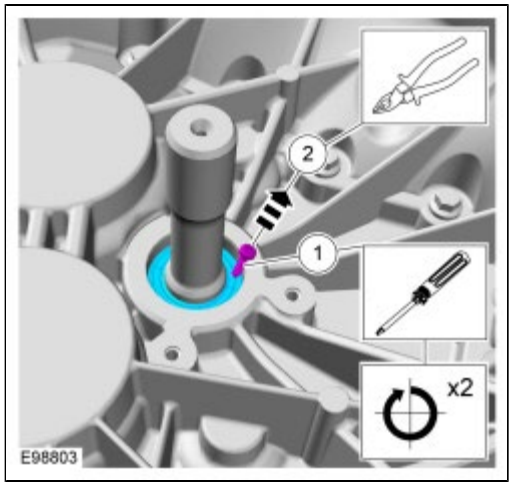

7.

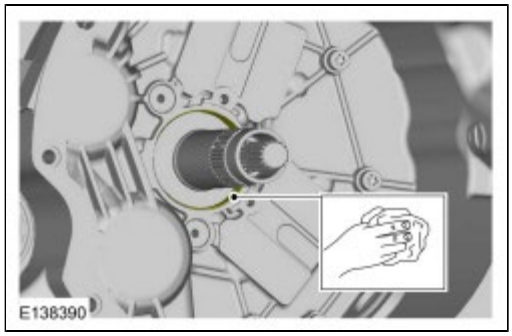

Installation

1. **WARNING: Make sure that the mating faces are clean and free of corrosion and foreign material.**

   NOTE: *Use a new seal.*

   Special Tool(s) : 307-672 Installer, Input Guide and Seal

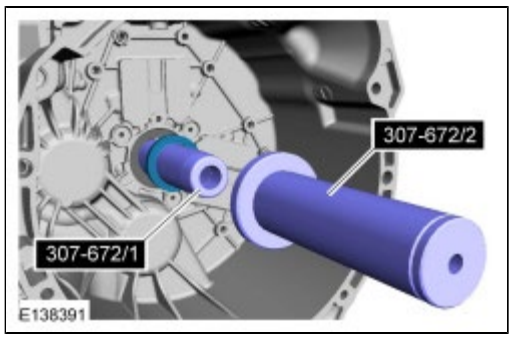

2. *Torque* : 8 Nm

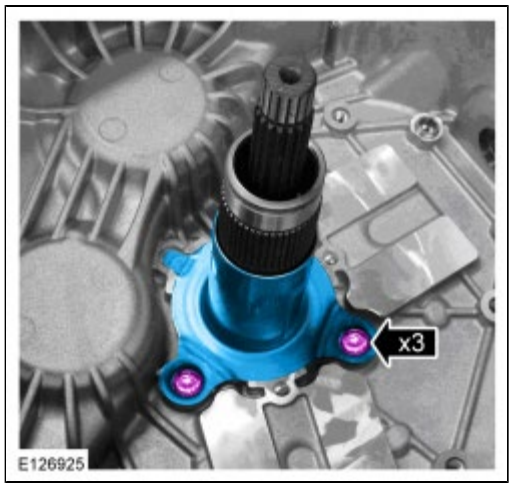

3. Refer to: Clutch Actuator (307-01 Automatic Transmission - Vehicles With: 6-Speed PowerShift Transmission - DPS6/6DCT250, Removal and Installation).

4. **NOTE:** *Use a new seal.*

   Special Tool(s) : 307-674 Installer, Outer Input Seal

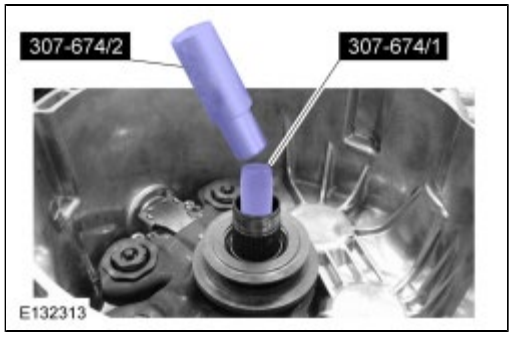

5. Refer to: Clutch Unit (307-01 Automatic Transmission - Vehicles With: 6-Speed PowerShift Transmission - DPS6/6DCT250, Removal and Installation).
   Refer to: Transmission - 2.0L Duratec-HE (125kW/170PS) - MI4 (307-01 Automatic Transmission - Vehicles With: 6-Speed PowerShift Transmission - DPS6/6DCT250, Removal).

Copyright © Ford Motor Company

Transmission Control Module (TCM)

Removal

1. Refer to: Health and Safety Precautions (100-00 General Information, Description and Operation).
2. Download the module information to the diagnostic tool using the Programmable Modules Installation routine.
3. Refer to: Air Cleaner (303-12A Intake Air Distribution and Filtering - 2.0L Duratec-HE (125kW/170PS) - MI4, Removal and Installation).
4.

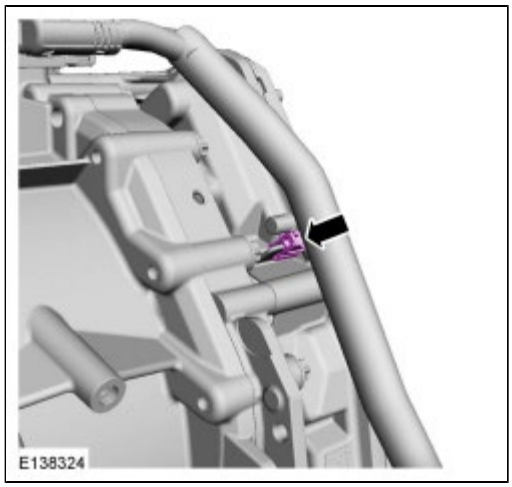

5. Refer to: Jacking and Lifting - Overview (100-02 Jacking and Lifting, Description and Operation).
6.
    1. If equipped.

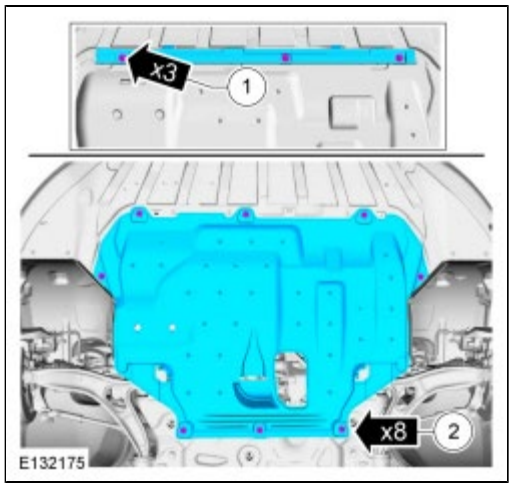

7.

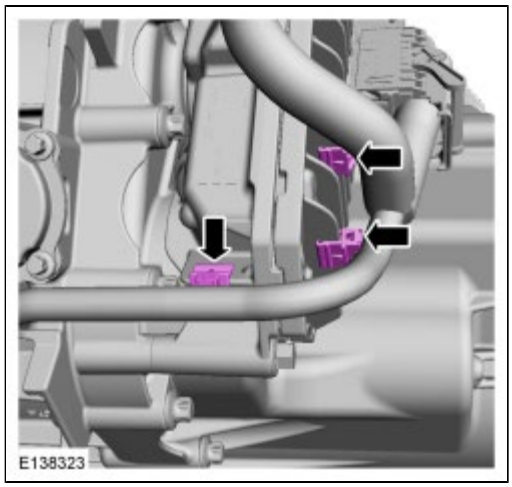

8. **NOTICE: Make sure that the terminals or pins/sockets of the transmission control module (TCM) and the TCM electrical connector are not bent or damaged.**

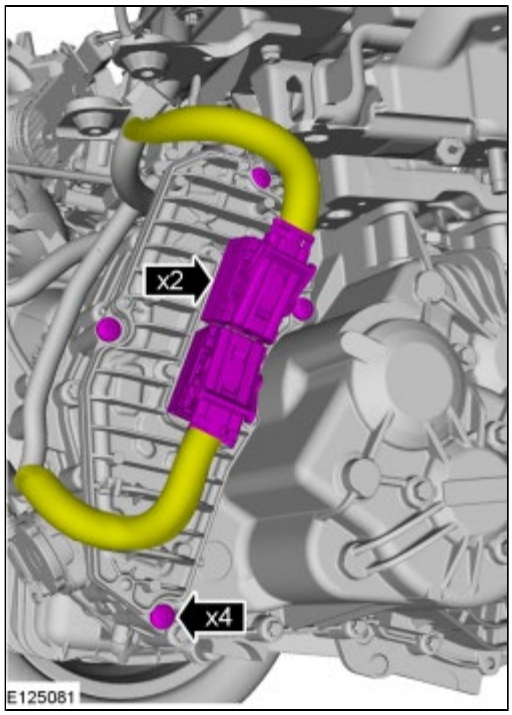

9.

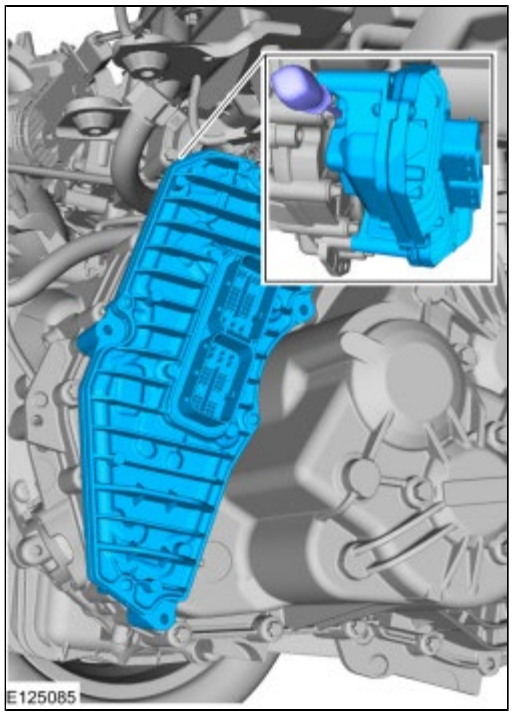

10.

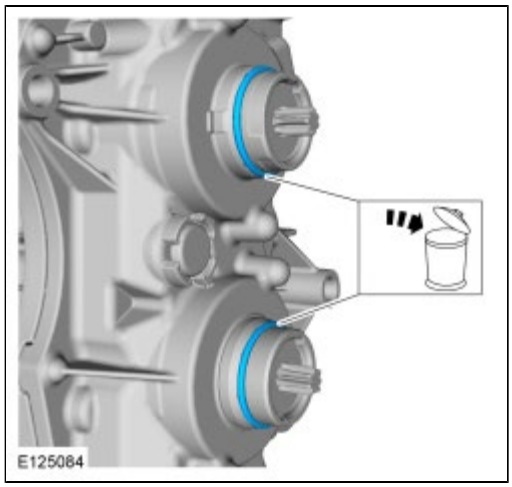

11. **WARNING: Make sure that the mating faces are clean and free of corrosion and foreign material.**

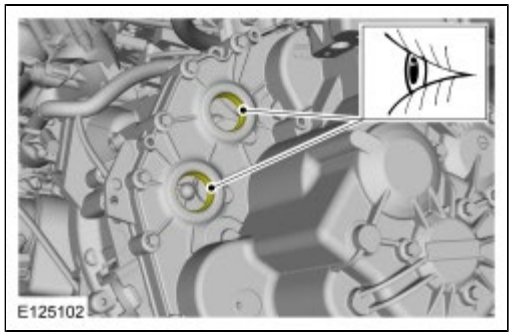

Installation

1. **WARNING: Make sure that the mating faces are clean and free of corrosion and foreign material.**

   Material : Motorcraft® Dual Clutch Transmission Fluid / XT-11-QDC (WSS-M2C200-D2)

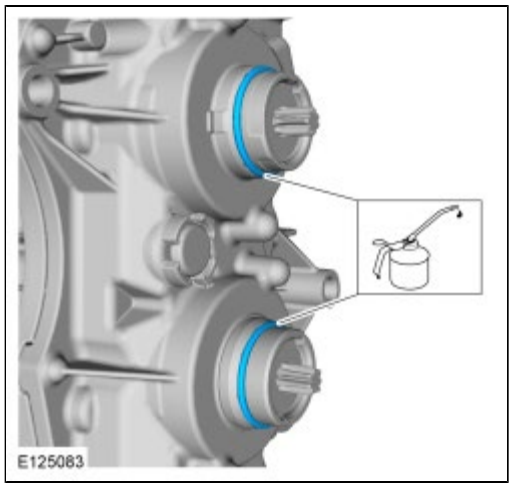

2.

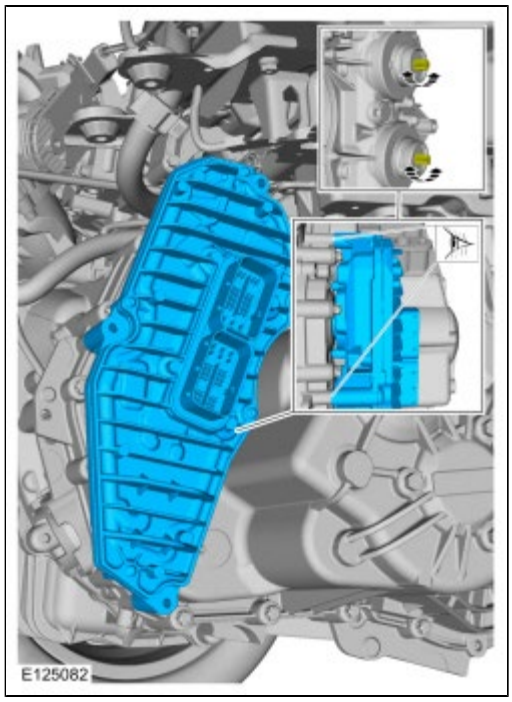

3. **NOTICE: Make sure that the terminals or pins/sockets of the transmission control module (TCM) and the TCM electrical connector are not bent or damaged.**

   Torque : 27 Nm

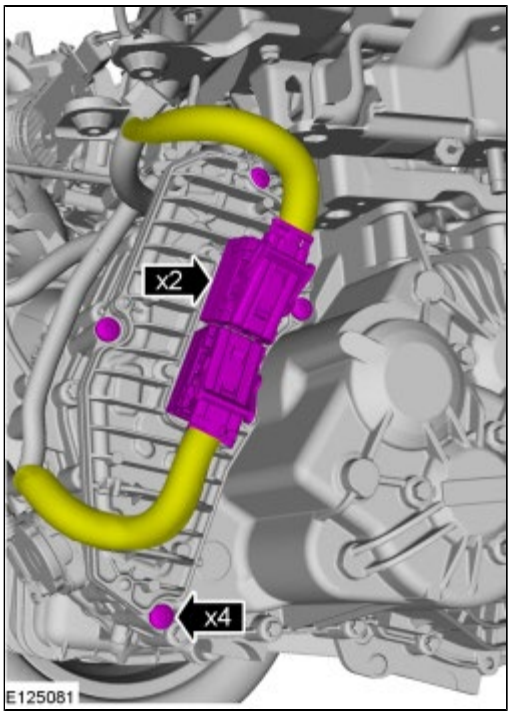

4.

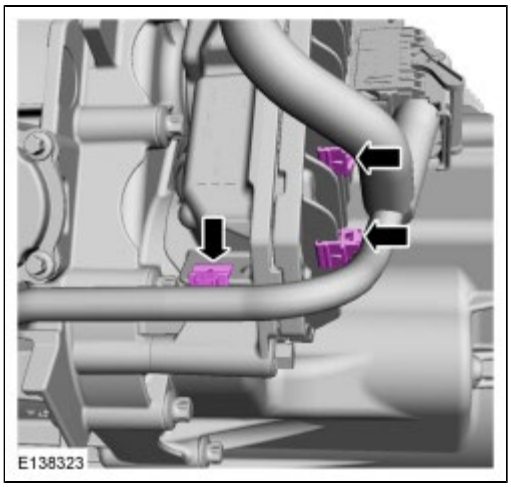

5. Lower the vehicle.

6.

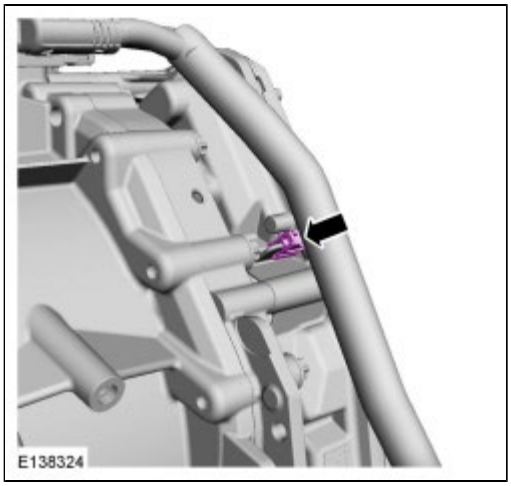

7. Refer to: Air Cleaner (303-12A Intake Air Distribution and Filtering - 2.0L Duratec-HE (125kW/170PS) - MI4, Removal and

Installation).

NOTE: *New units must be configured using the Programmable Module Installation Routine in the diagnostic tool.*

8. Upload the module information from the diagnostic tool to the module using the Programmable Modules Installation routine.
   General Equipment : Ford Diagnostic Equipment

Copyright © Ford Motor Company

Input Shaft Speed (ISS) Sensor

Removal

1. Refer to: Health and Safety Precautions (100-00 General Information, Description and Operation).
2. Refer to: Air Cleaner (303-12A Intake Air Distribution and Filtering - 2.0L Duratec-HE (125kW/170PS) - MI4, Removal and Installation).
   Refer to: Battery (414-01 Battery, Mounting and Cables, Removal and Installation).
   Refer to: Battery Tray (414-01 Battery, Mounting and Cables, Removal and Installation).
3. 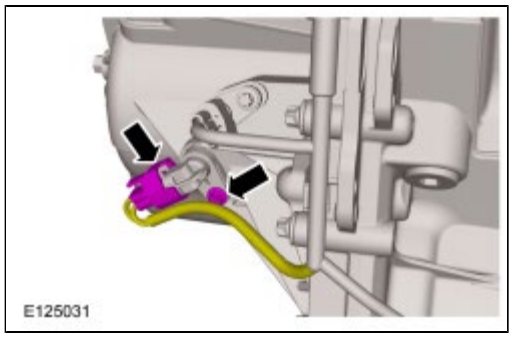

4. **WARNING: Be prepared to collect escaping fluid.**
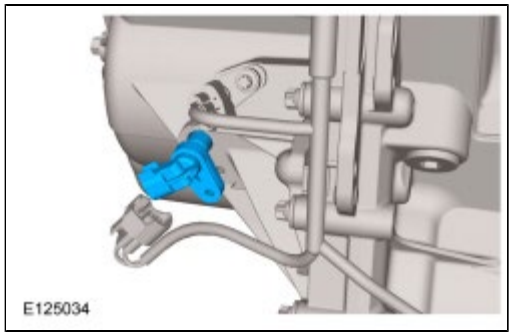

5.

6. **WARNING: Make sure that the mating faces are clean and free of corrosion and foreign material.**

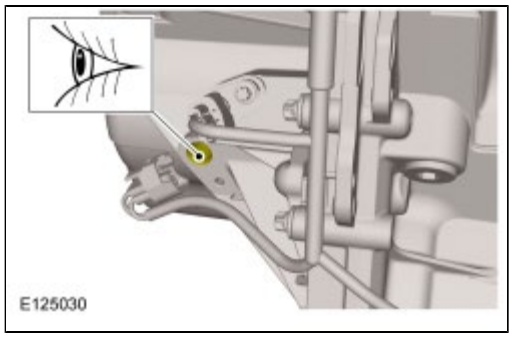

7.

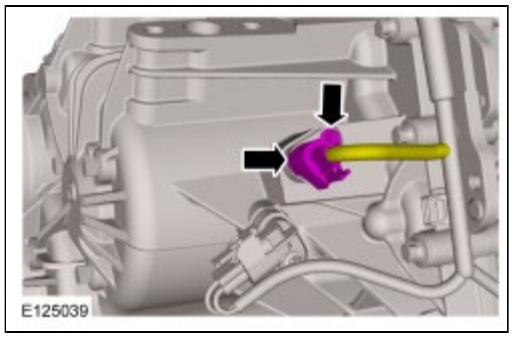

8. **WARNING: Be prepared to collect escaping fluid.**

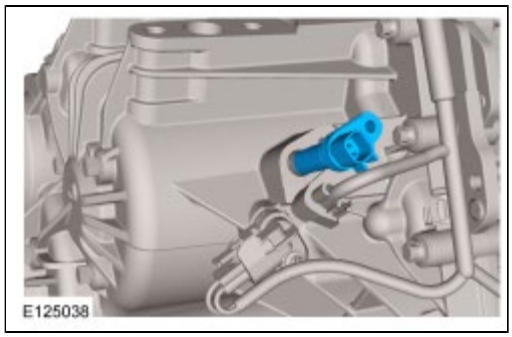

9.

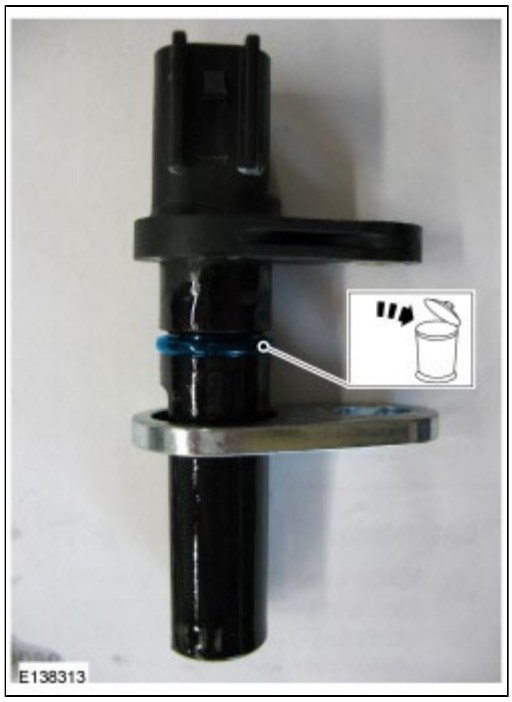

10. **WARNING: Make sure that the mating faces are clean and free of corrosion and foreign material.**

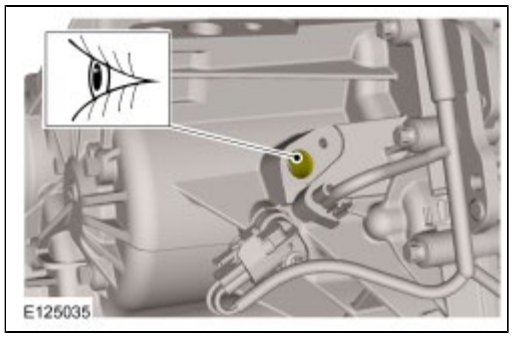

Installation

1.

    1. **NOTE:** *Make sure that a new component is installed.*

       Material : Motorcraft® Dual Clutch Transmission Fluid / XT-11-QDC (WSS-M2C200-D2)

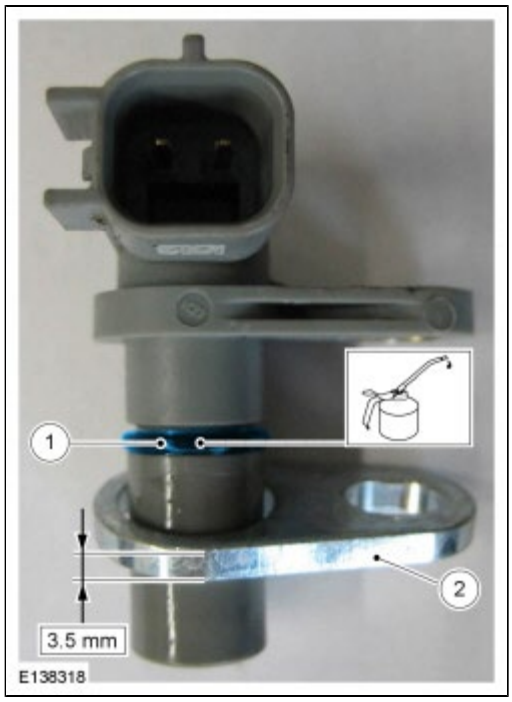

2.

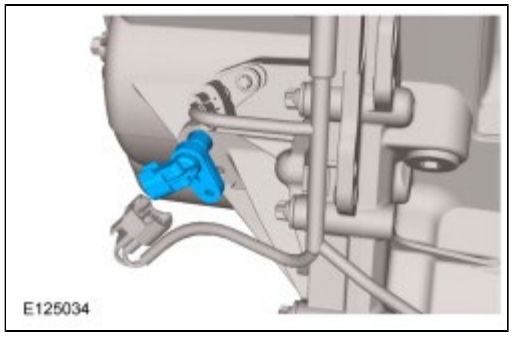

3. *Torque* : 10 Nm

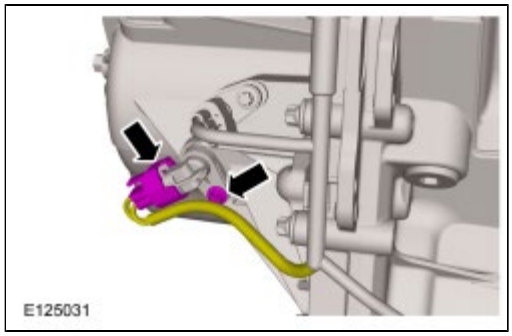

4.

1. **NOTE:** *Make sure that a new component is installed.*

   Material : Motorcraft® Dual Clutch Transmission Fluid / XT-11-QDC (WSS-M2C200-D2)

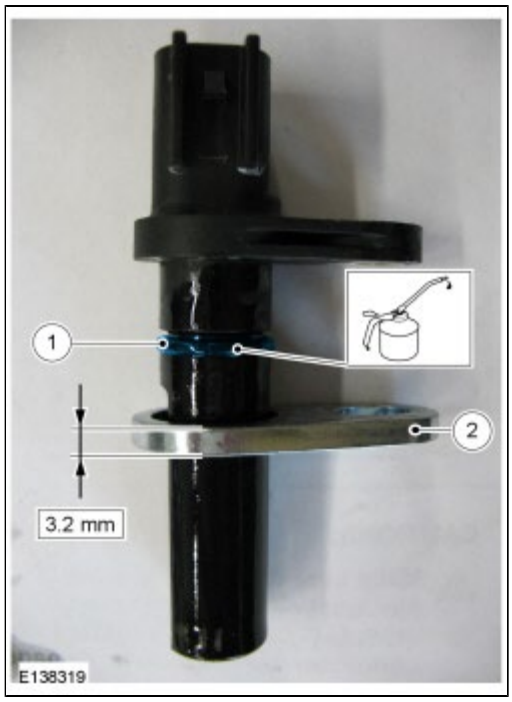

5.

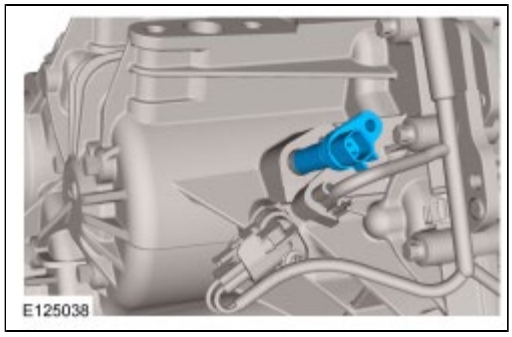

6. *Torque* : 10 Nm

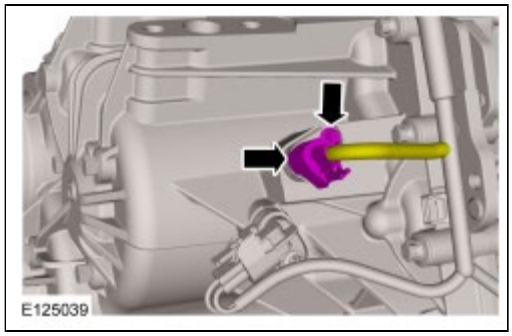

7. Refer to: Battery Tray (414-01 Battery, Mounting and Cables, Removal and Installation).
   Refer to: Battery (414-01 Battery, Mounting and Cables, Removal and Installation).
   Refer to: Air Cleaner (303-12A Intake Air Distribution and Filtering - 2.0L Duratec-HE (125kW/170PS) - MI4, Removal and Installation).

Copyright © Ford Motor Company

Output Shaft Speed (OSS) Sensor

Removal

NOTE: *Removal steps in this procedure may contain installation details.*

1. Refer to: Health and Safety Precautions (100-00 General Information, Description and Operation).
2. Refer to: Jacking and Lifting - Overview (100-02 Jacking and Lifting, Description and Operation).
3.
    1. If equipped.

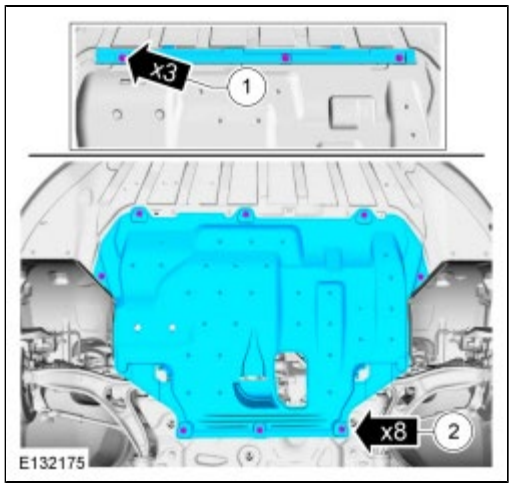

4. **NOTICE: Take extra care not to damage the wiring harnesses.**

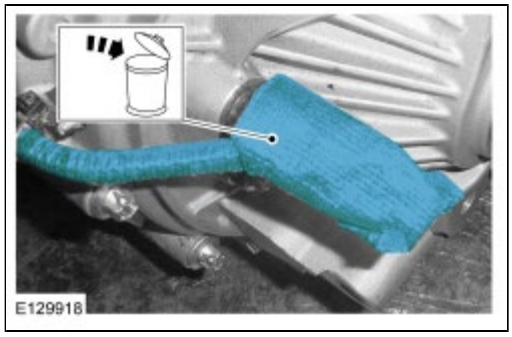

5. *Torque* : 10 Nm

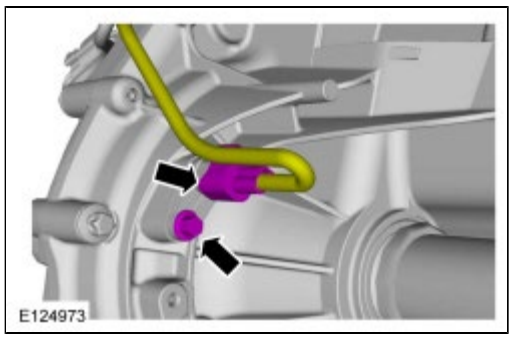

6. **WARNING: Be prepared to collect escaping fluid.**

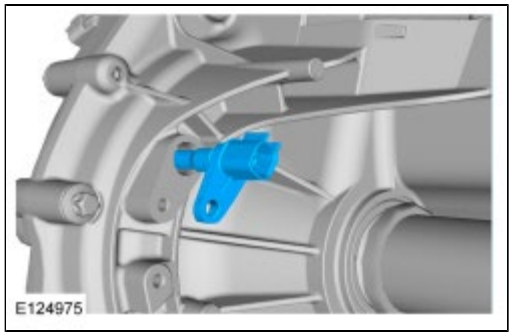

7.

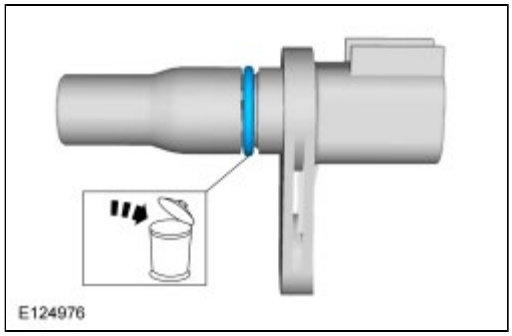

8. **WARNING: Make sure that the mating faces are clean and free of corrosion and foreign material.**

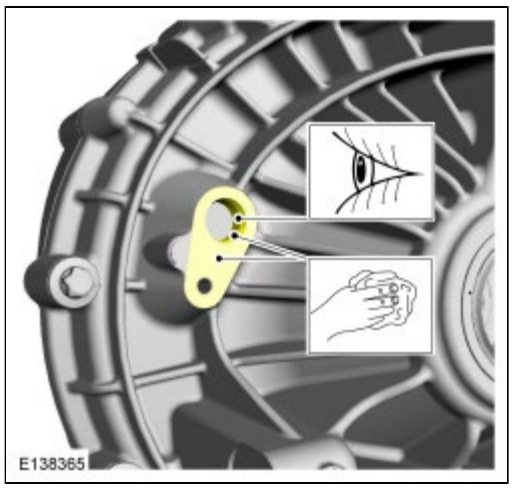

Installation

1.
    2. *Material* : Motorcraft® Dual Clutch Transmission Fluid / XT-11-QDC (WSS-M2C200-D2)

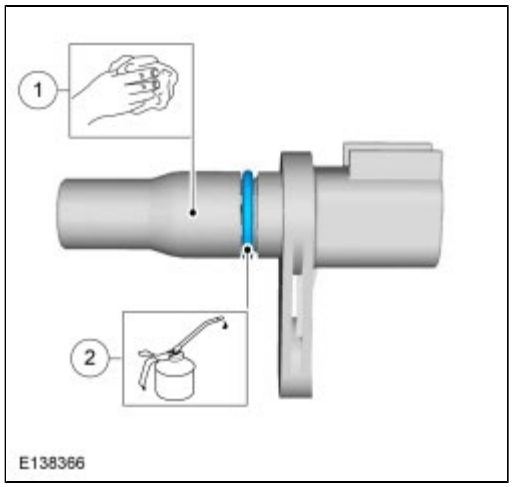

2. **NOTICE: Make sure that the surface is clean and free of foreign material before taping around the component.**

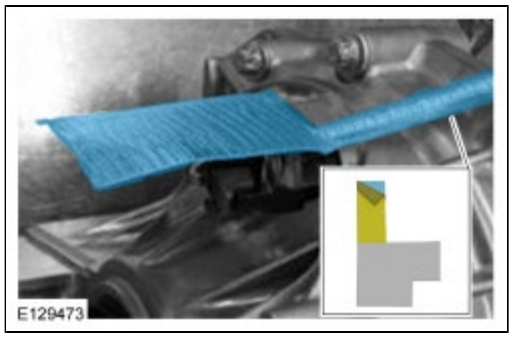

3.

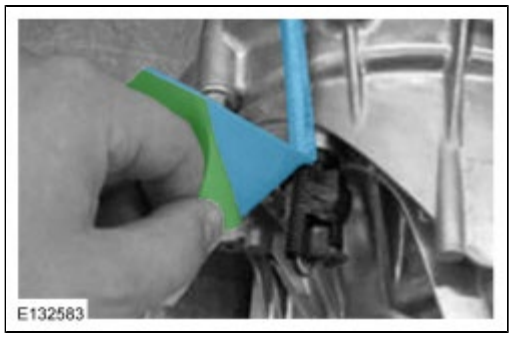

4.

5.

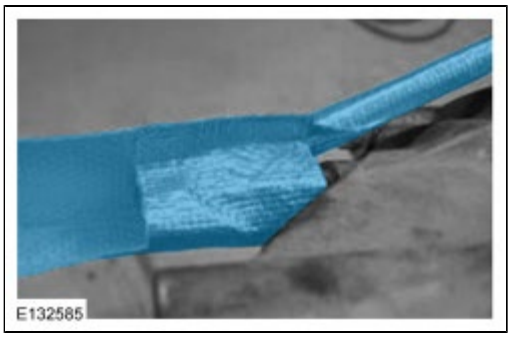

6.

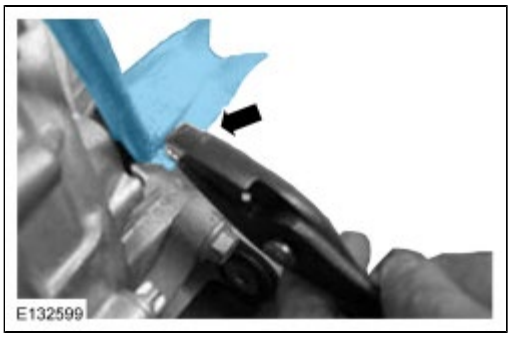

7.

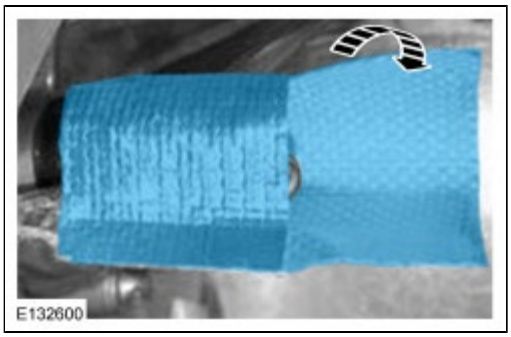

8.

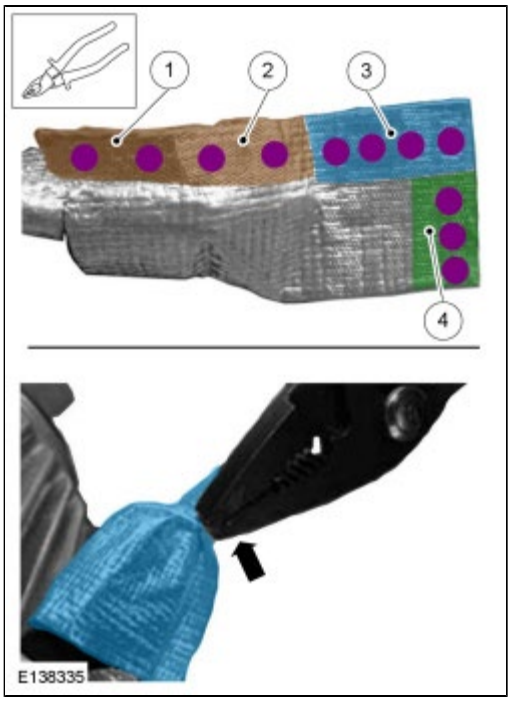

Copyright © Ford Motor Company

Transmission Range (TR) Sensor

Removal

1.

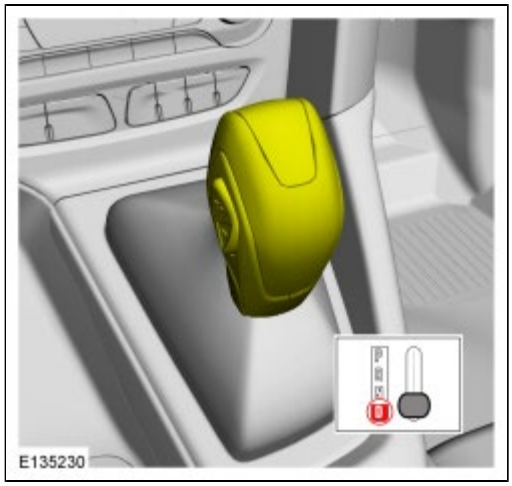

2.

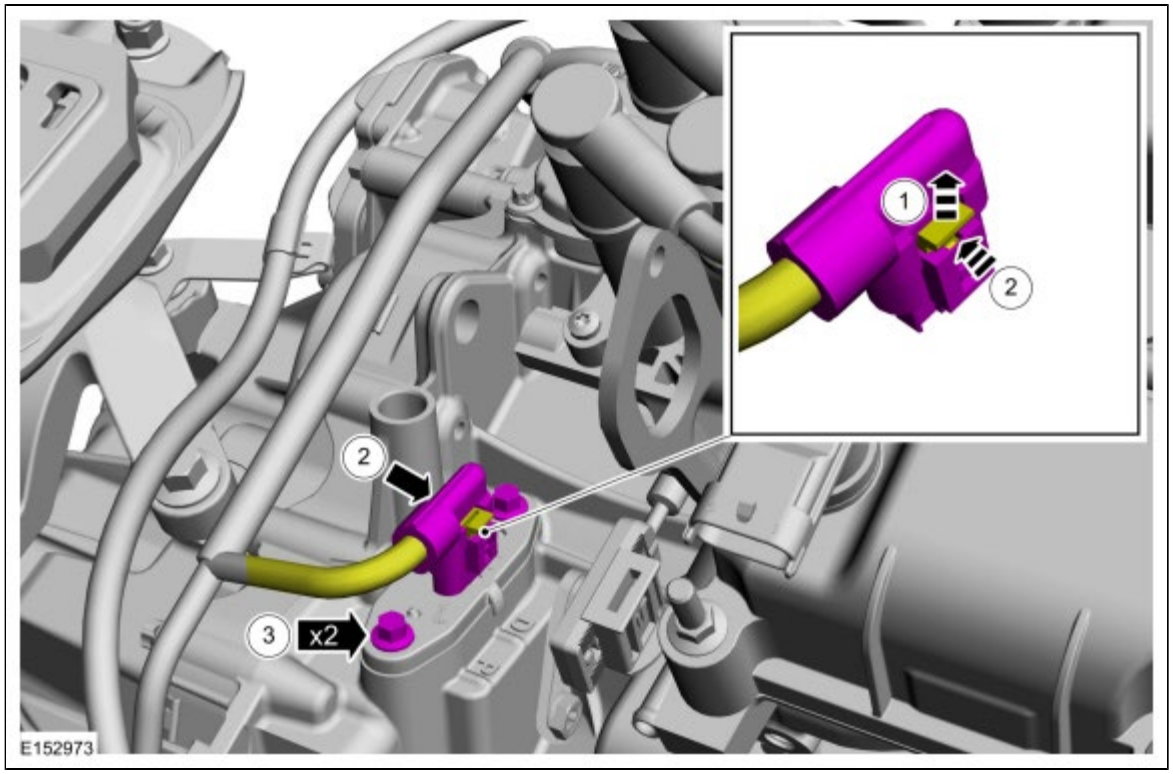

3.

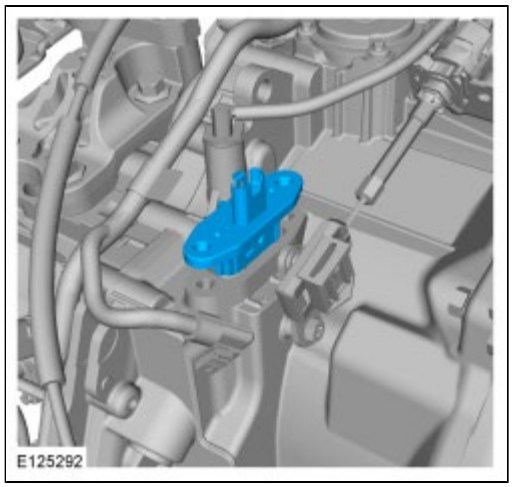

Installation

1. **WARNING: Make sure that the mating faces are clean and free of corrosion and foreign material.**

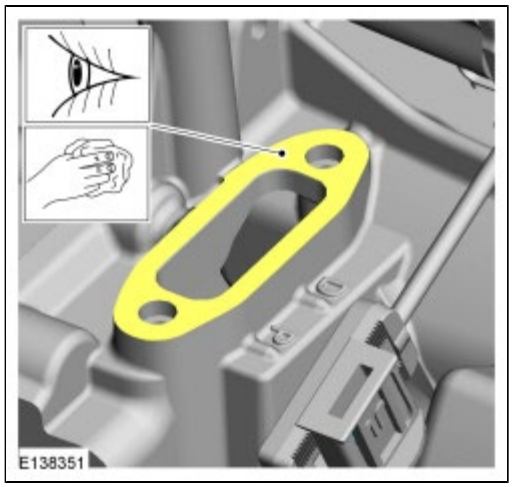

2.

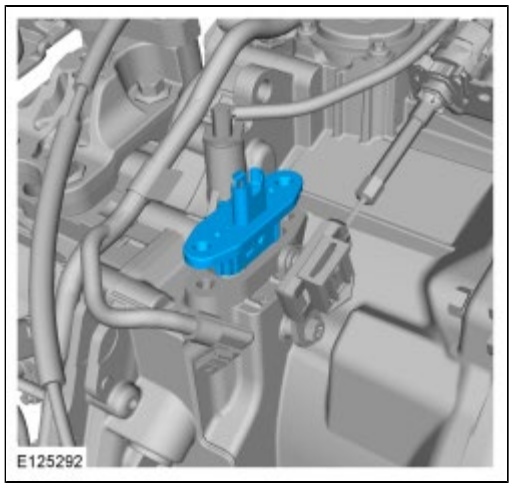

3. *Torque* : 10 Nm

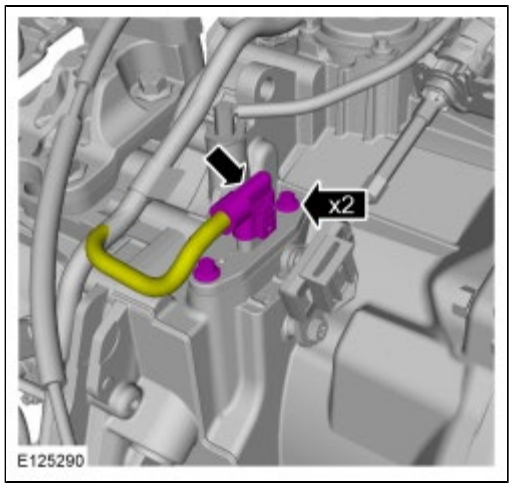

4. **NOTE:** *New units must be configured using the Programmable Module Installation Routine in the diagnostic tool.*

   General Equipment : Ford Diagnostic Equipment

Copyright © Ford Motor Company

Selector Shaft Seal

Removal

1. Refer to: Transmission - 2.0L Duratec-HE (125kW/170PS) - MI4 (307-01 Automatic Transmission - Vehicles With: 6-Speed PowerShift Transmission - DPS6/6DCT250, Removal).

2. *Special Tool(s)* : 303-081 Installer/Aligner, Pilot Bearing/Clutch Plate

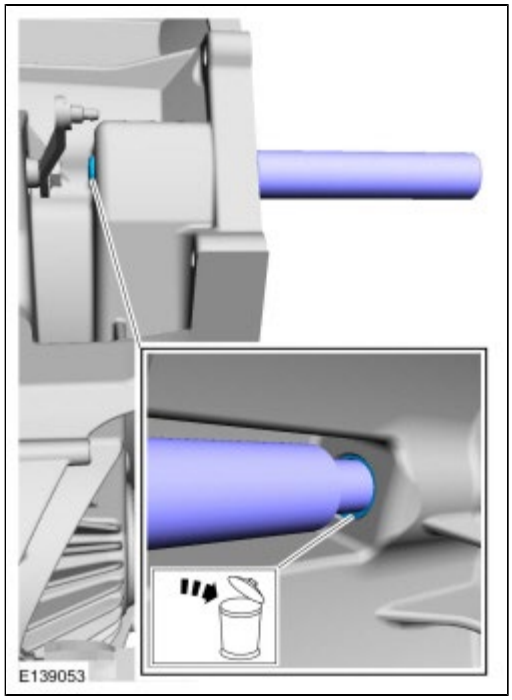

3.

4.
    1. *Install Special Service Tool* : 307-670 Remover/Installer, Shift Lever Seal

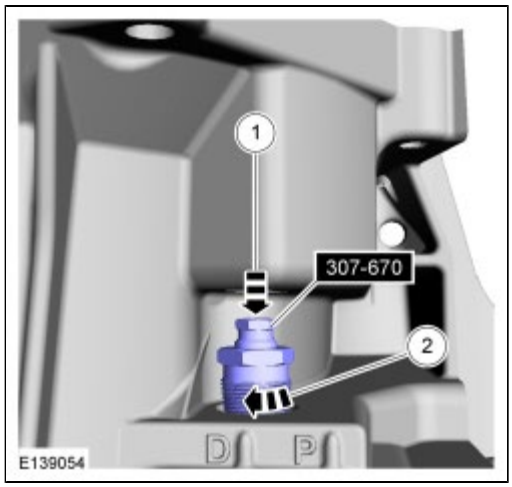

5. *Remove Special Service Tool* : 307-670 Remover/Installer, Shift Lever Seal

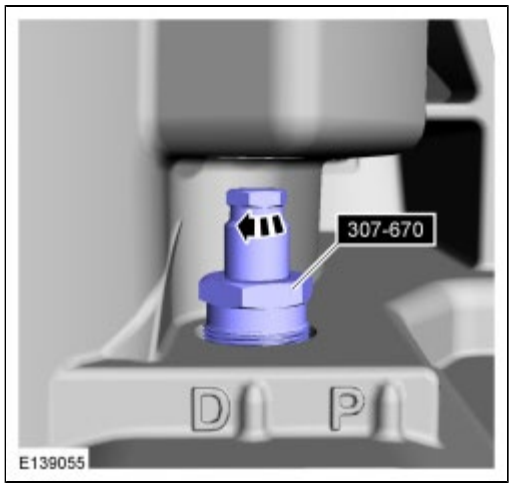

Installation

1. **NOTE:** *Make sure that the component is clean and free of foreign material.*

   Special Tool(s) : 307-670 Remover/Installer, Shift Lever Seal
   Torque : 15 Nm

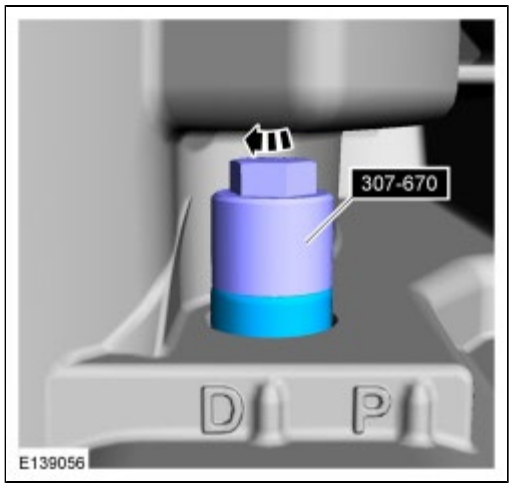

2.

   2. **NOTE:** *Make sure that a new component is installed.*

      Torque : 26 Nm

3.

1. **NOTE:** *Make sure that a new component is installed.*

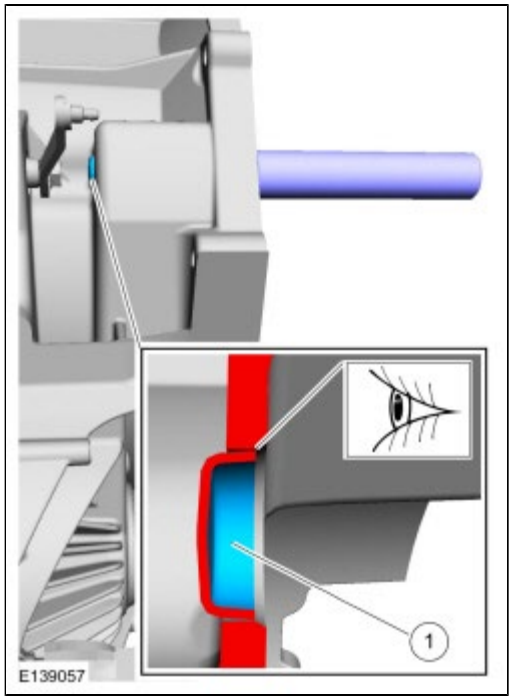

4. Refer to: Transmission - 2.0L Duratec-HE (125kW/170PS) - MI4 (307-01 Automatic Transmission - Vehicles With: 6-Speed PowerShift Transmission - DPS6/6DCT250, Installation).

Copyright © Ford Motor Company

Transmission Draining and Filling

1. Refer to: Health and Safety Precautions (100-00 General Information, Description and Operation).
   Refer to: Jacking and Lifting - Overview (100-02 Jacking and Lifting, Description and Operation).

2.
   1. If equipped.
   2.

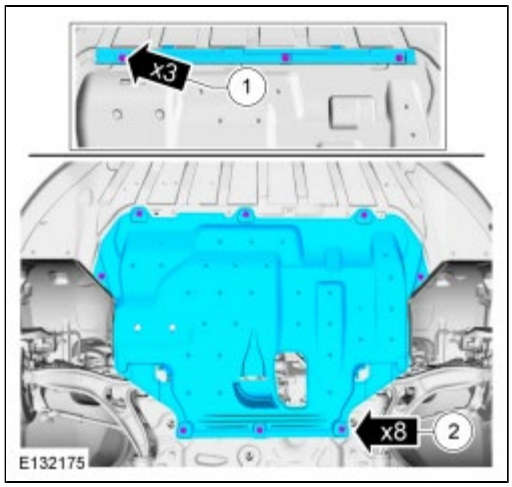

3.
   1. **WARNING: Be prepared to collect escaping fluid.**
   2. *Torque* : 35 Nm

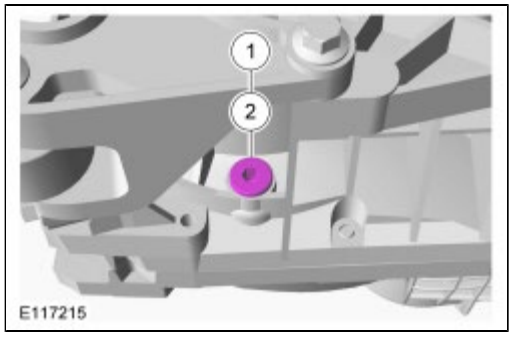

4.

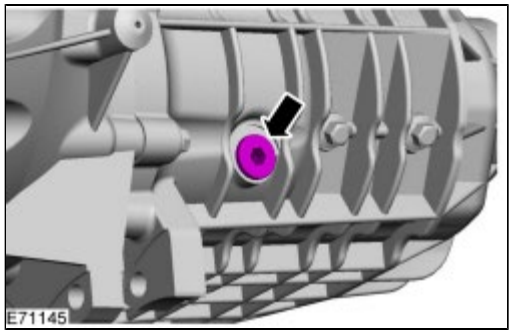

5. *Material* : Motorcraft® Dual Clutch Transmission Fluid / XT-11-QDC (WSS-M2C200-D2)

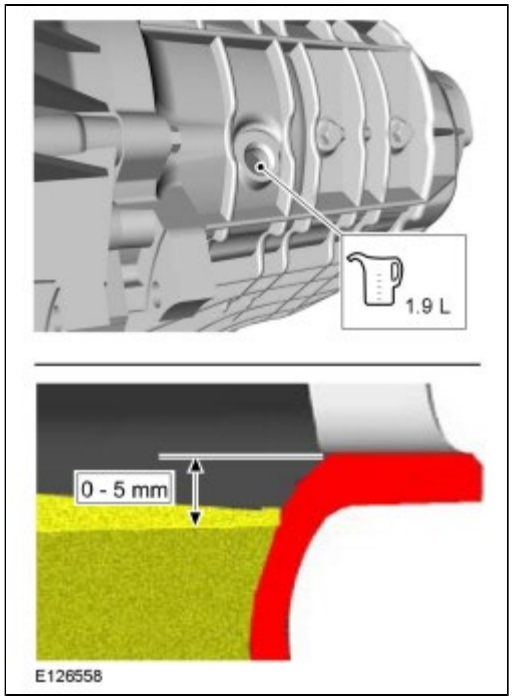

6. *Torque* : 35 Nm

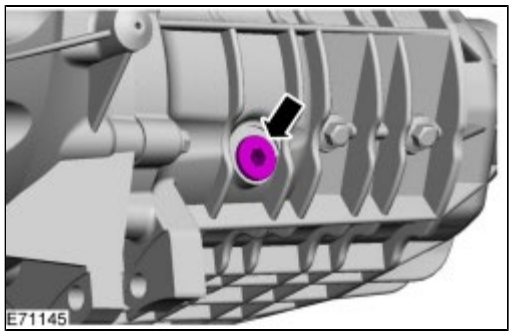

7.
    1.
    2. If equipped.

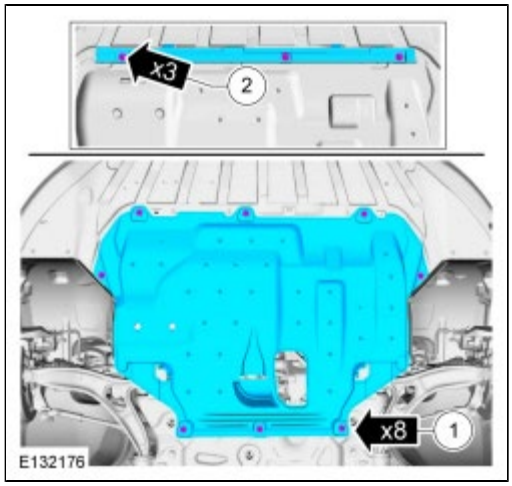

8. Lower the Vehicle.

Copyright © Ford Motor Company

Transmission Fluid Level Check

1. Refer to: Health and Safety Precautions (100-00 General Information, Description and Operation).
   Refer to: Jacking and Lifting - Overview (100-02 Jacking and Lifting, Description and Operation).

2.
   1. If equipped.
   2.

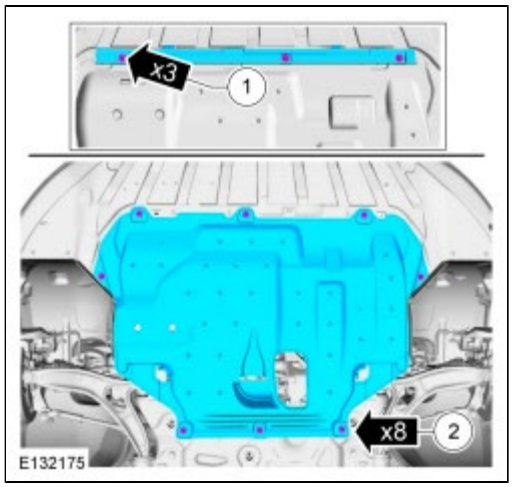

3. **WARNING: Be prepared to collect escaping fluid.**

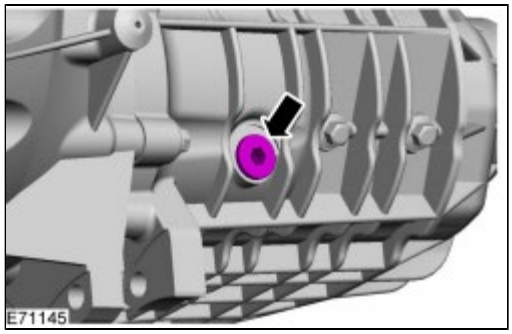

4. *Material* : Motorcraft® Dual Clutch Transmission Fluid / XT-11-QDC (WSS-M2C200-D2)

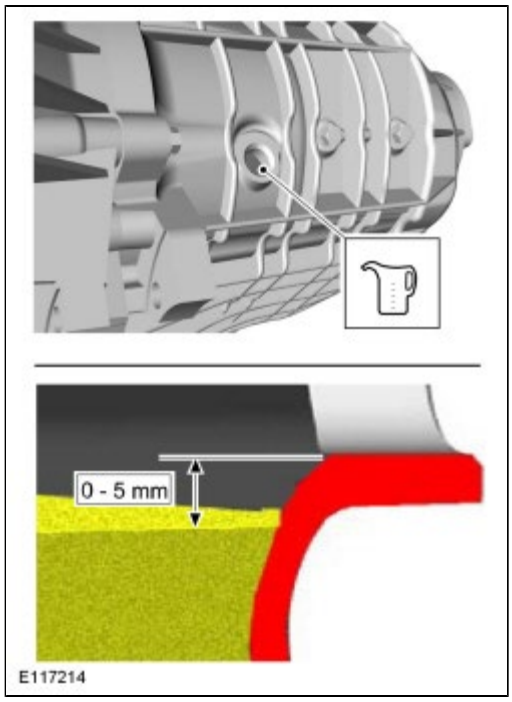

5. *Torque* : 35 Nm

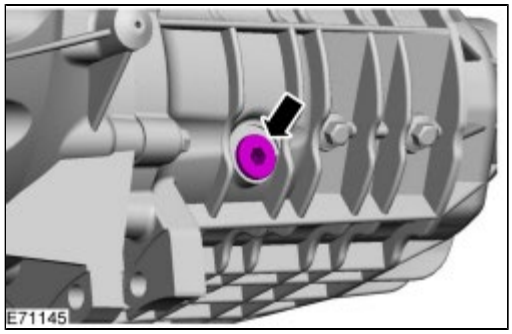

6.
    1.
    2. If equipped.

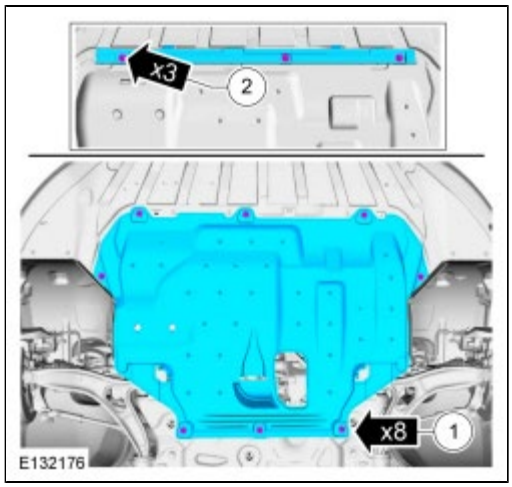

7. Lower the Vehicle.

Copyright © Ford Motor Company

Battery Tray

Removal

1. **WARNING: Before beginning any service procedure in this section, refer to Safety Warnings in section 100-00 General Information. Failure to follow this instruction may result in serious personal injury.**

   Refer to: Health and Safety Precautions (100-00 General Information, Description and Operation).

2. Refer to: Battery (414-01 Battery, Mounting and Cables, Removal and Installation).

3.
   1. ST vehicles
   2. *Torque* : 10 Nm

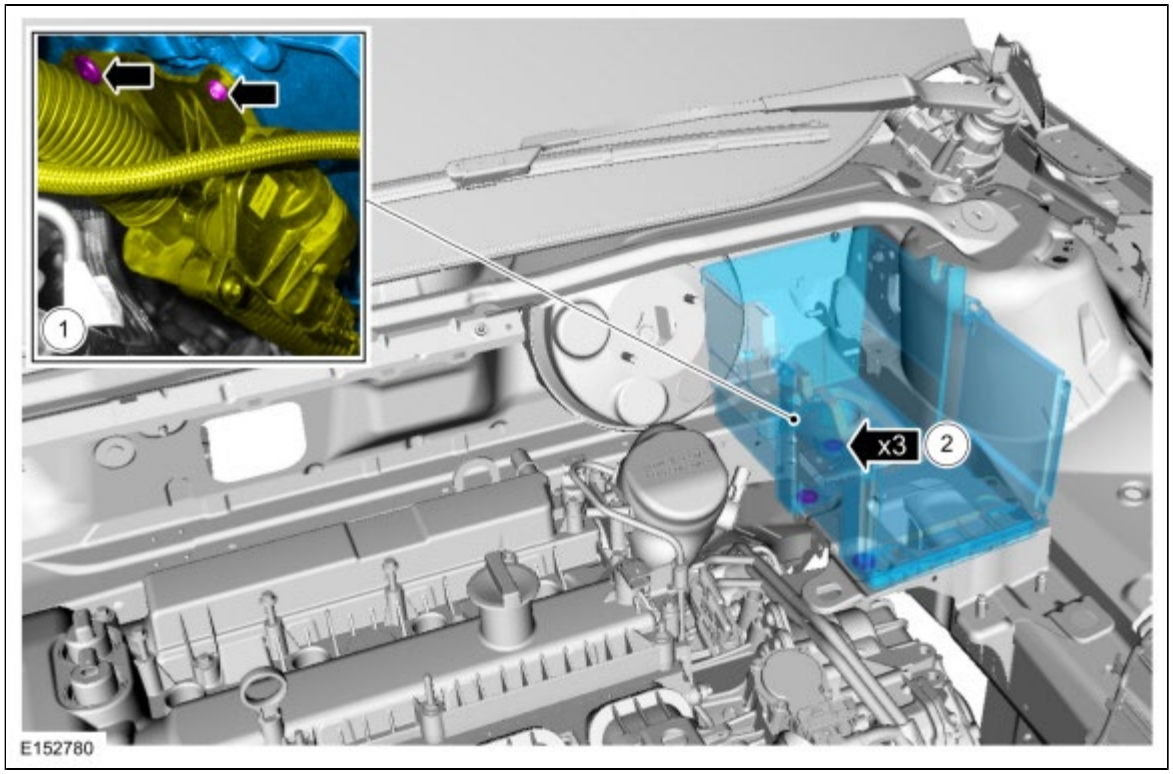

Installation

1. To install, reverse the removal procedure.

Copyright © Ford Motor Company

Headlamp Bulb - Vehicles With: High Intensity Discharge Headlamps

Removal

NOTE: *Removal steps in this procedure may contain installation details.*

1. **WARNING: Before beginning any service procedure in this section, refer to Safety Warnings in section 100-00 General Information. Failure to follow this instruction may result in serious personal injury.**

   Refer to: Health and Safety Precautions (100-00 General Information, Description and Operation).

2. Refer to: Headlamp Assembly (417-01 Exterior Lighting, Removal and Installation).

3.

4. 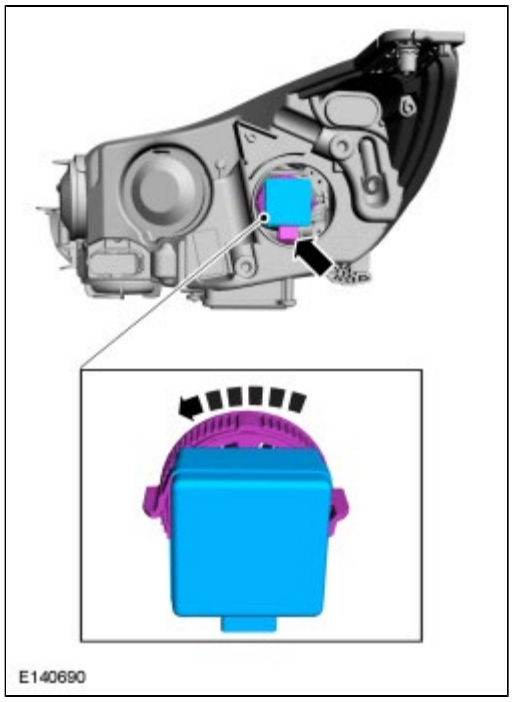

Installation

1. To install, reverse the removal procedure.

Copyright © Ford Motor Company

Rear Lamp Assembly - Vehicles With: 5-Door

Removal

NOTE: *Removal steps in this procedure may contain installation details.*

1. **WARNING: Before beginning any service procedure in this section, refer to Safety Warnings in section 100-00 General Information. Failure to follow this instruction may result in serious personal injury.**

   Refer to: Health and Safety Precautions (100-00 General Information, Description and Operation).

2.

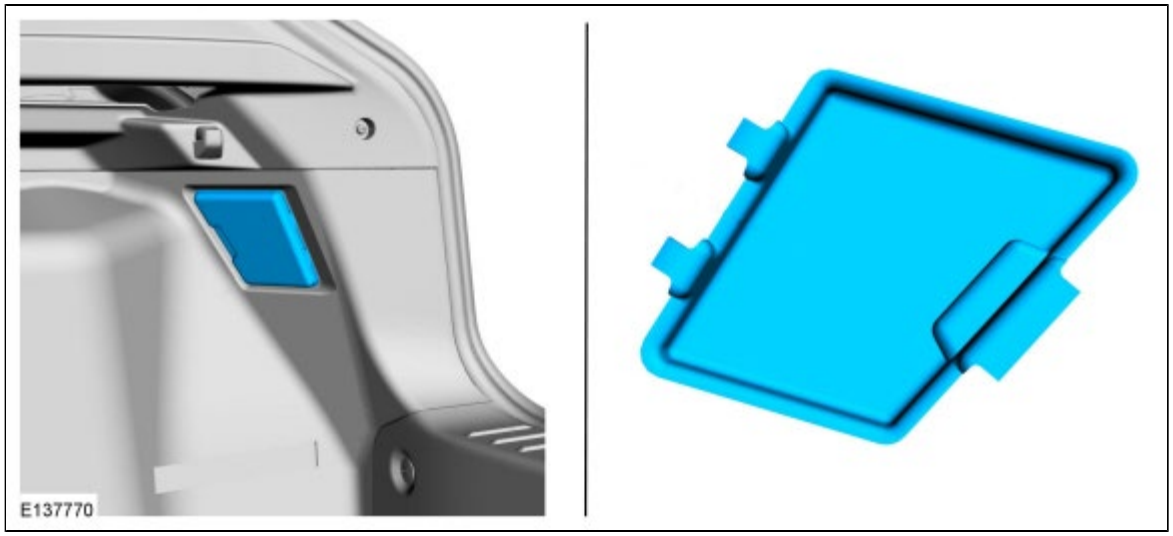

3.

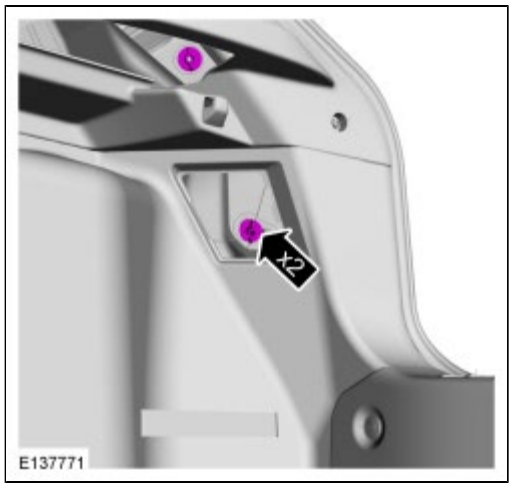

4.

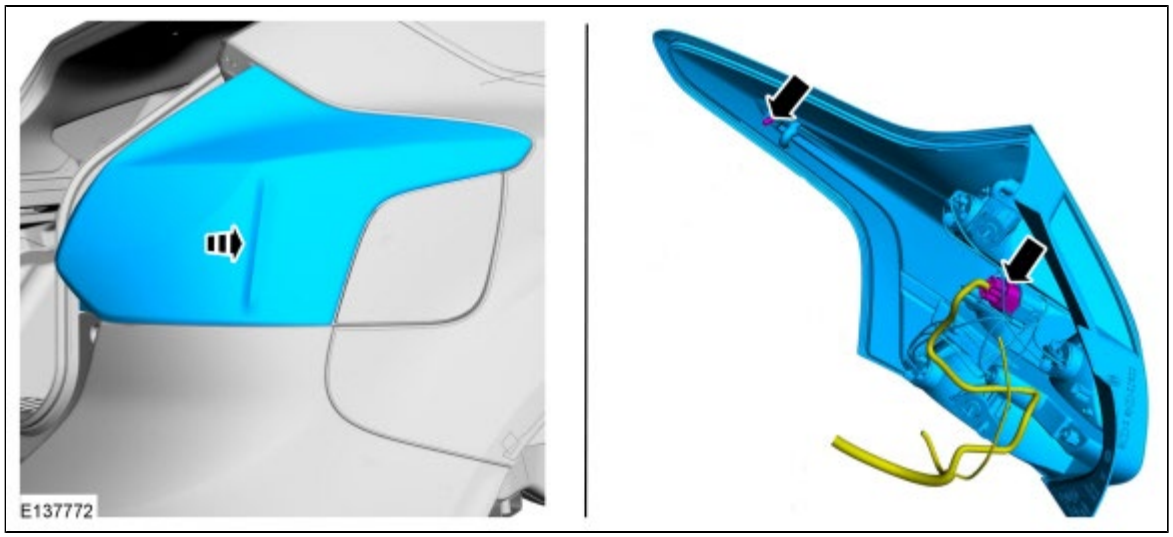

Installation

1. To install, reverse the removal procedure.

Copyright © Ford Motor Company

Rear Lamp Assembly - Vehicles With: 4-Door

Removal

NOTE: *Removal steps in this procedure may contain installation details.*

1. **WARNING: Before beginning any service procedure in this section, refer to Safety Warnings in section 100-00 General Information. Failure to follow this instruction may result in serious personal injury.**

   Refer to: Health and Safety Precautions (100-00 General Information, Description and Operation).

2.

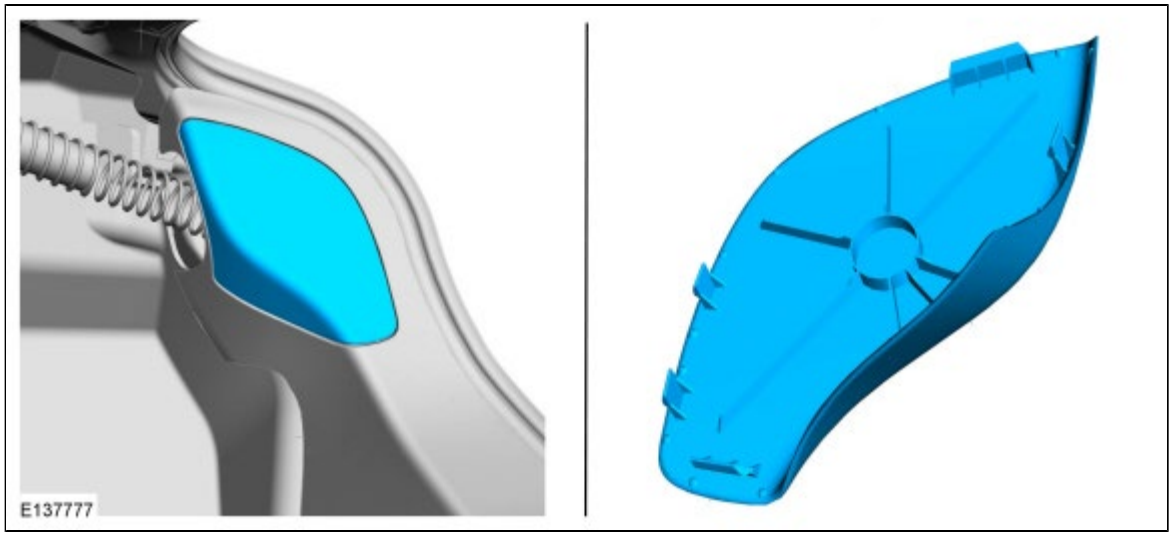

3.

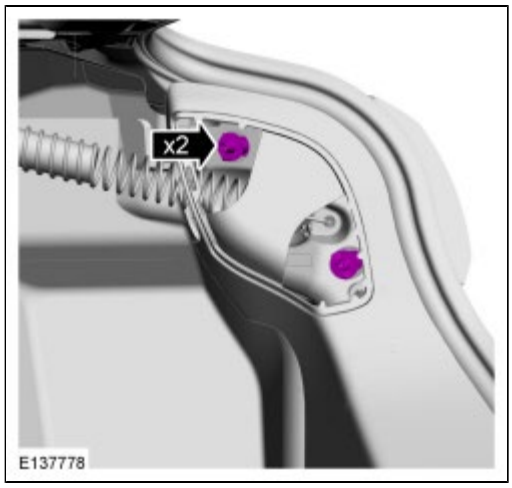

4.

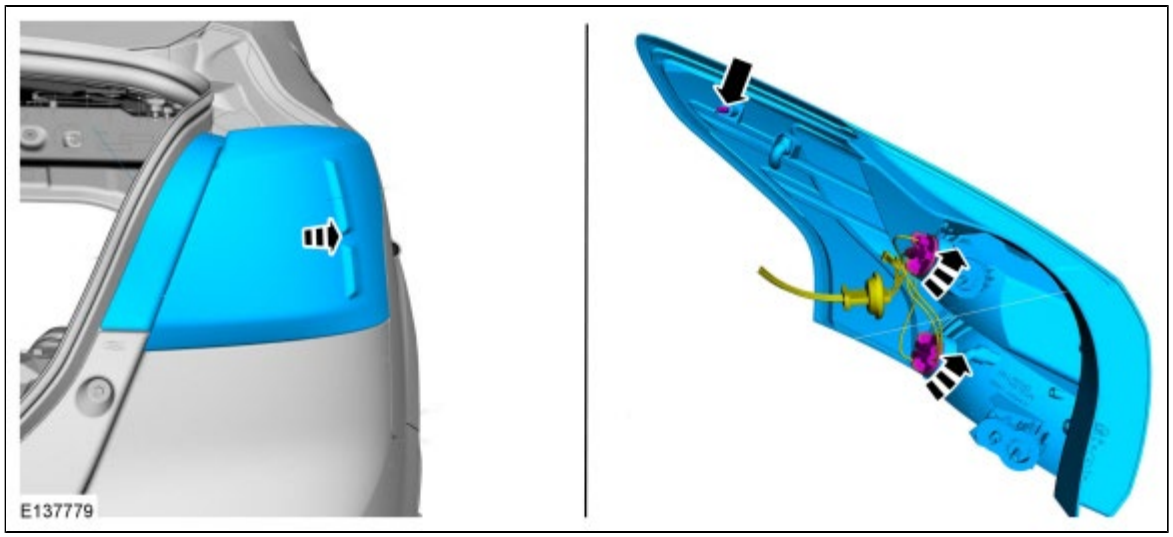

Installation

1. To install, reverse the removal procedure.

Copyright © Ford Motor Company

Front Fog Lamp

Removal

NOTE: *Removal steps in this procedure may contain installation details.*

1. Refer to: Jacking and Lifting - Overview (100-02 Jacking and Lifting, Description and Operation).
2. If equipped.

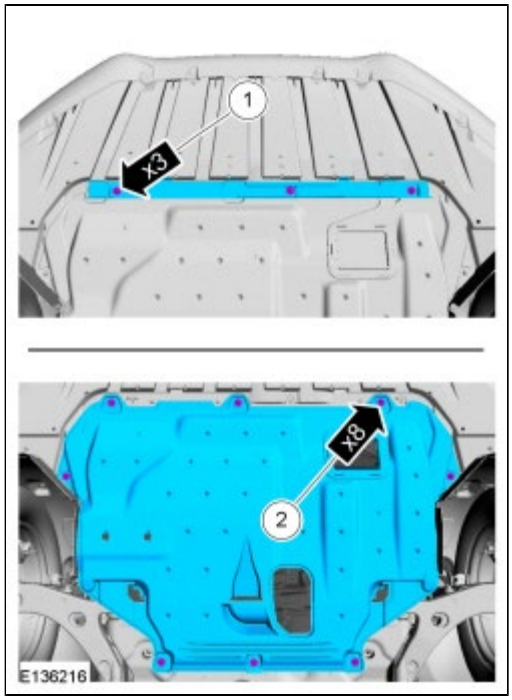

3.

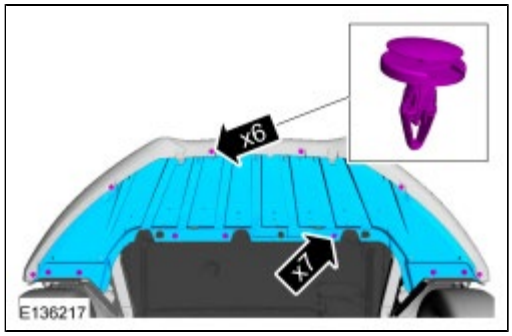

4.

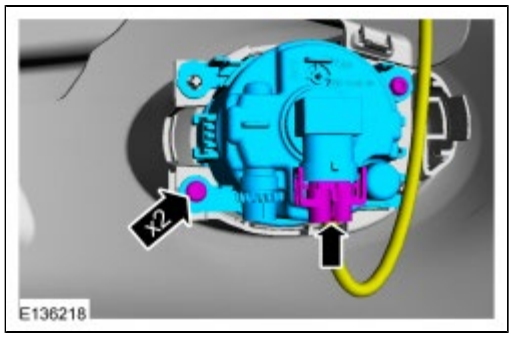

Installation

1. To install, reverse the removal procedure.

Copyright © Ford Motor Company

Active Grille Shutter

Removal

NOTE: *Removal steps in this procedure may contain installation details.*

1. Refer to: Jacking and Lifting - Overview (100-02 Jacking and Lifting, Description and Operation).
2. If equipped.

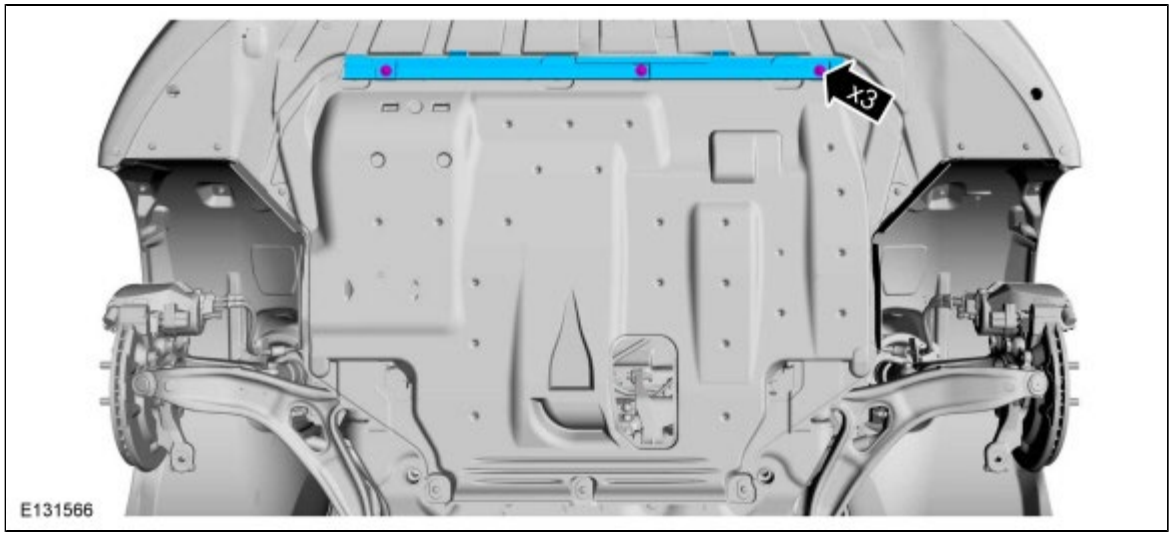

3. If equipped.

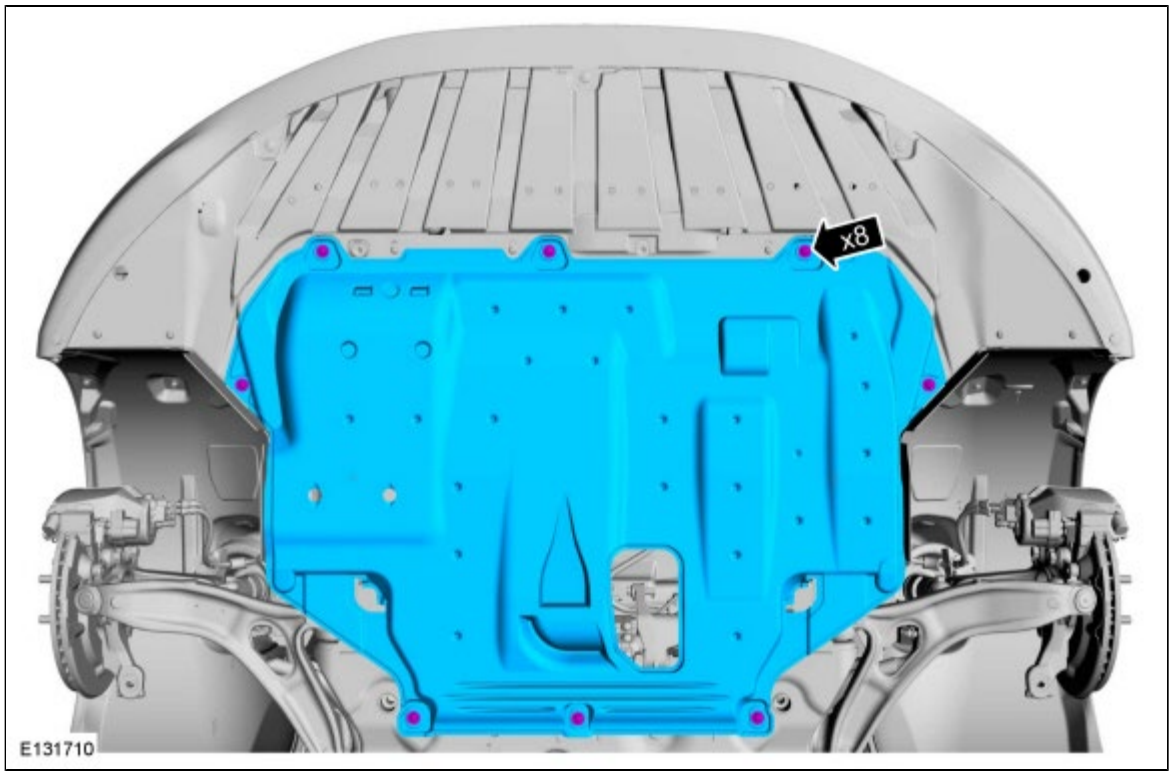

4. If equipped.

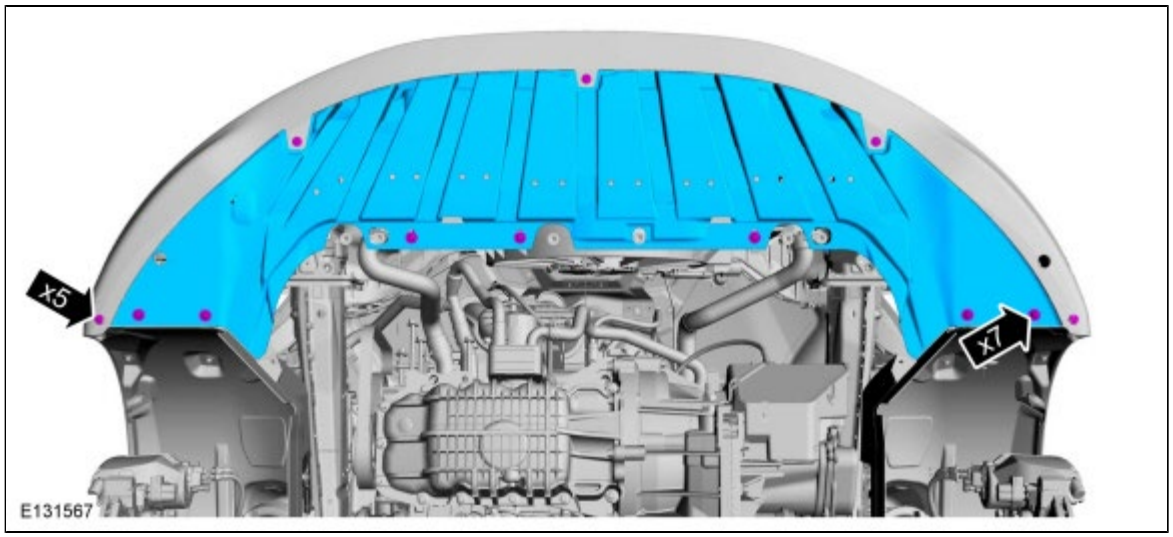

5.

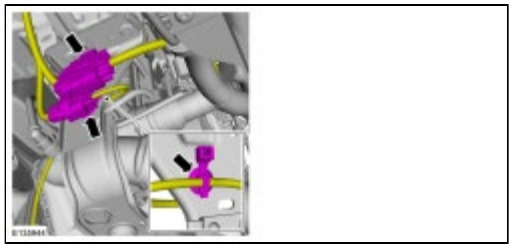

6. *Torque* : 25 Nm

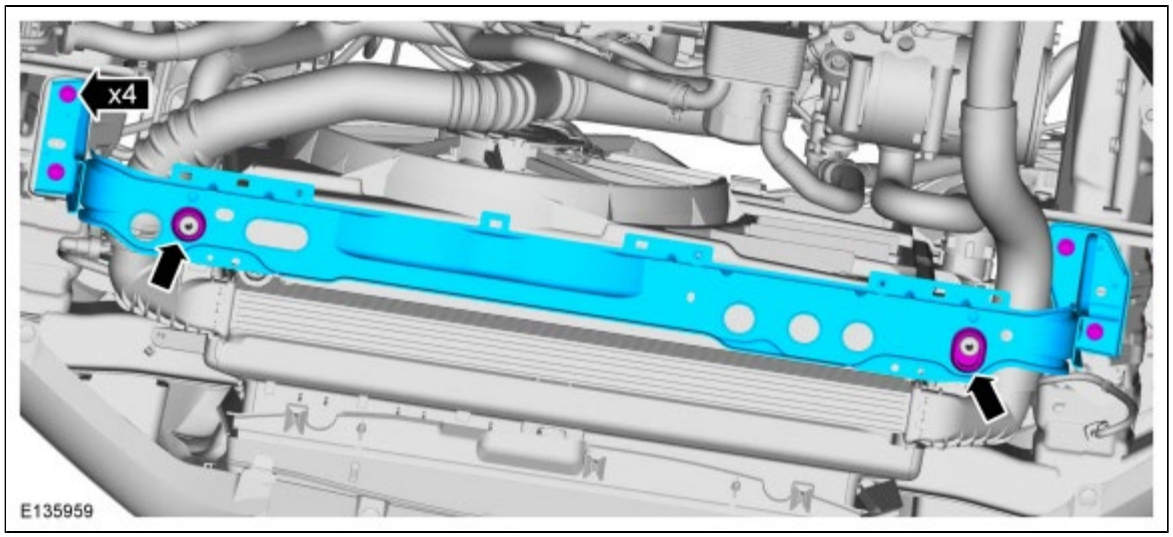

7.

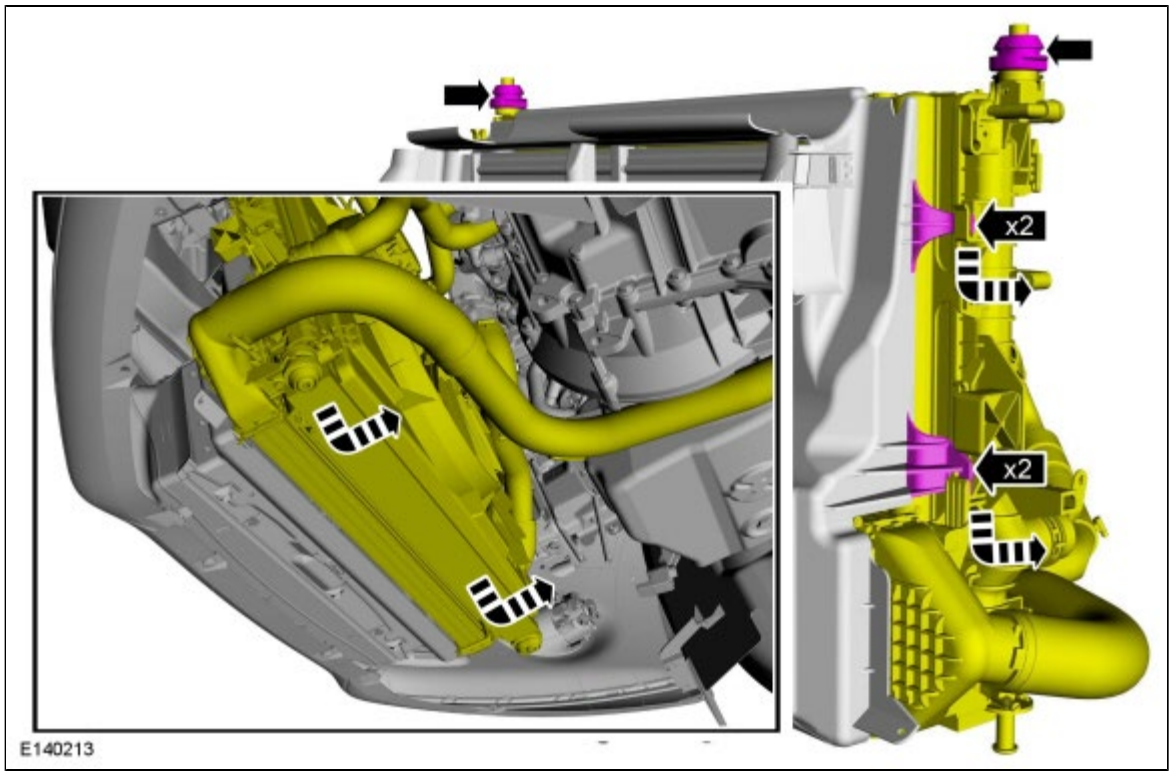

8.

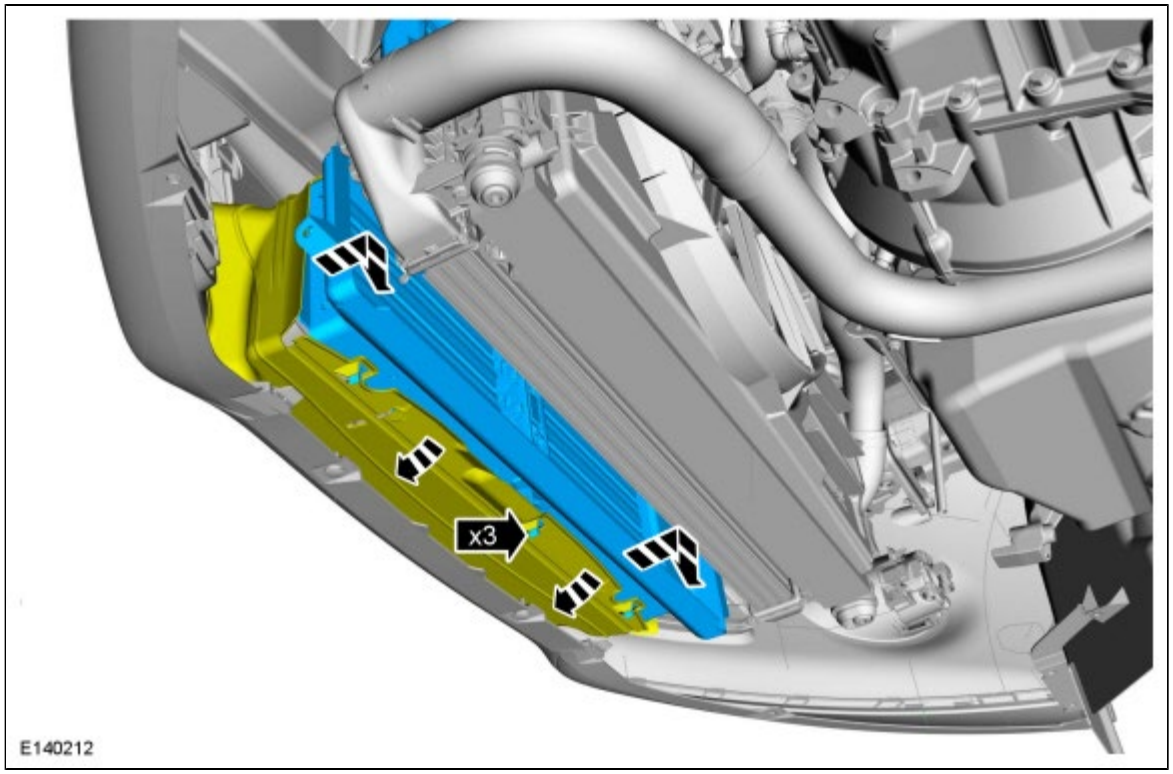

Installation

1. To install, reverse the removal procedure.

Copyright © Ford Motor Company

Fender Splash Shield

Removal

1. Refer to: Wheel and Tire (204-04A Wheels and Tires, Removal and Installation).
2. If equipped.

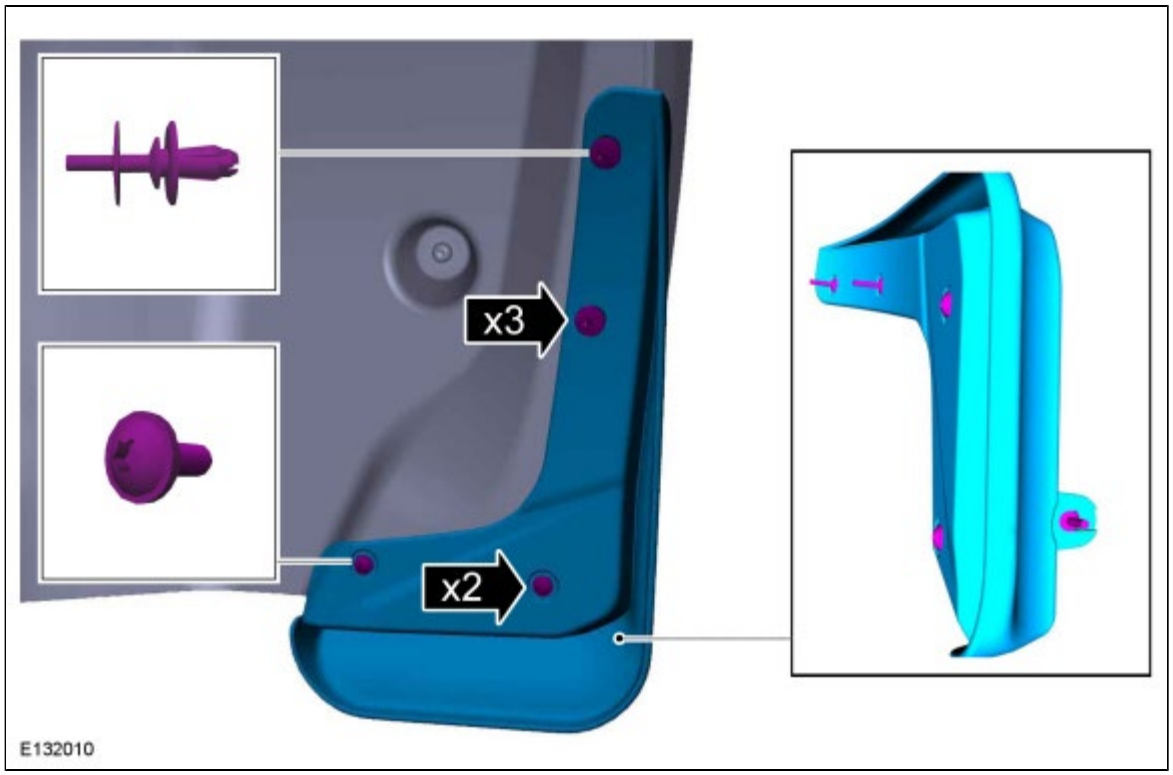

3.

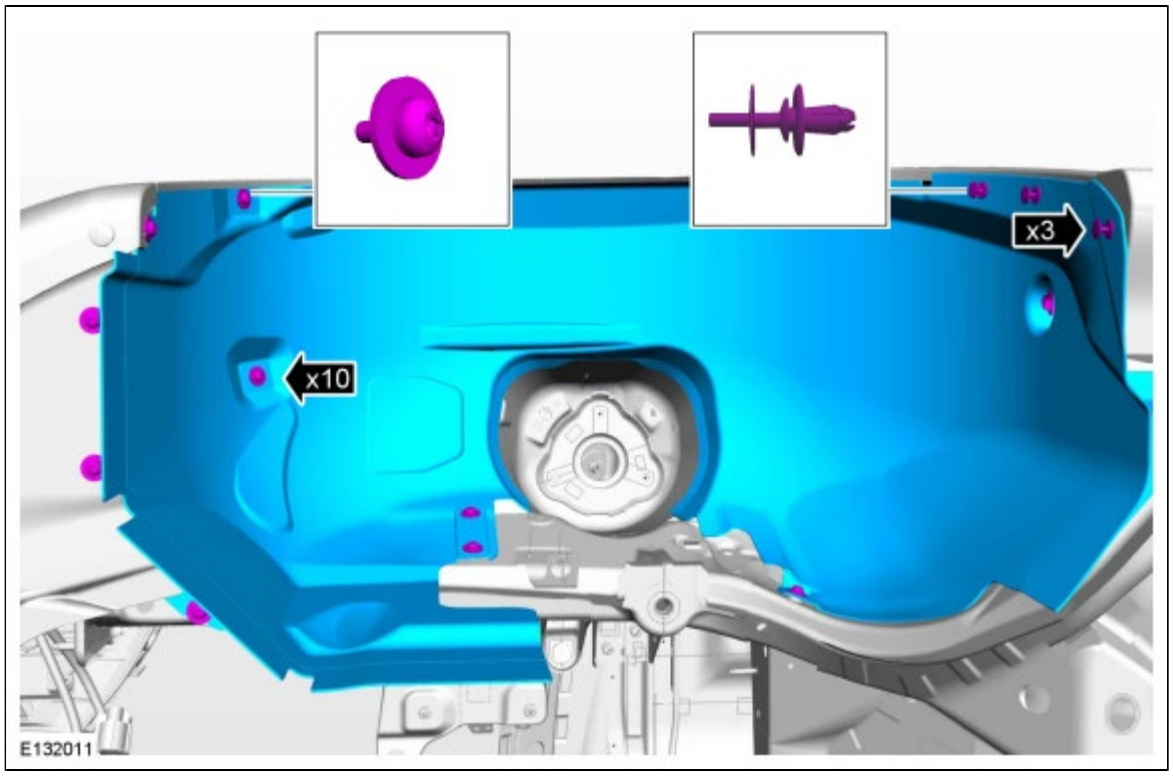

Installation

1. To install, reverse the removal procedure.

Copyright © Ford Motor Company

Active Grille Shutter

DISASSEMBLY

1.

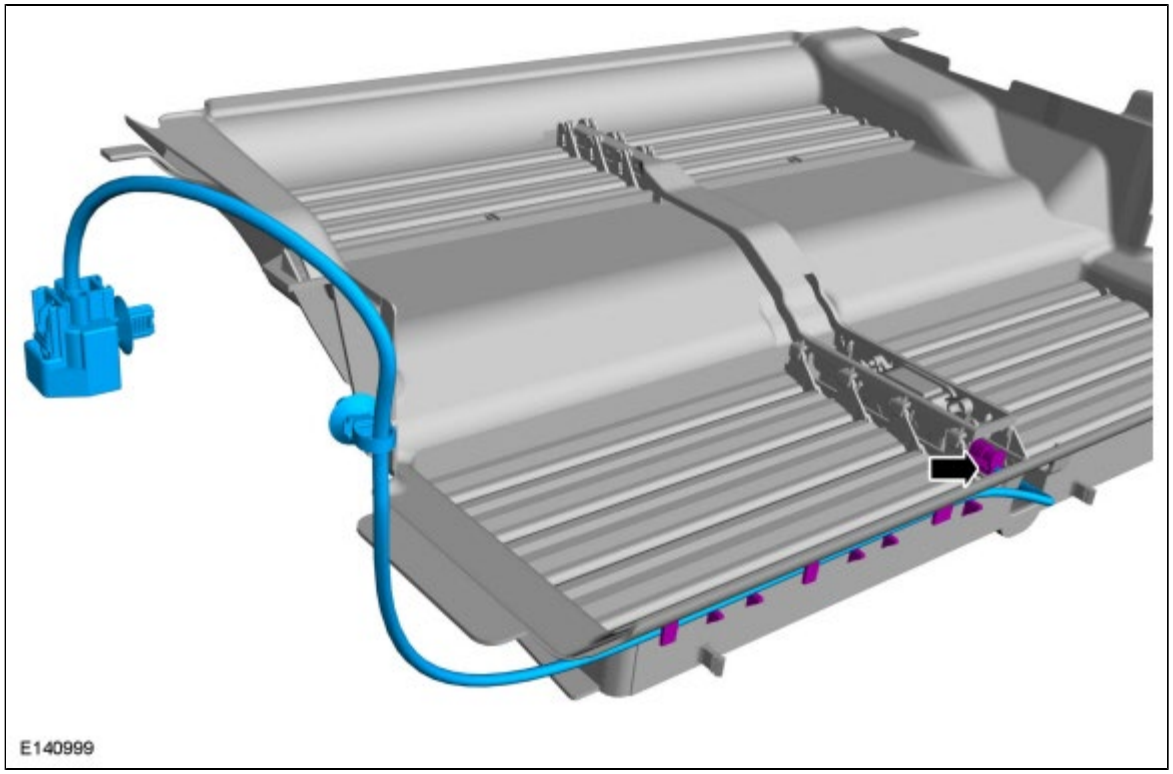

2. **NOTICE: Make sure to lift simultaneously.**

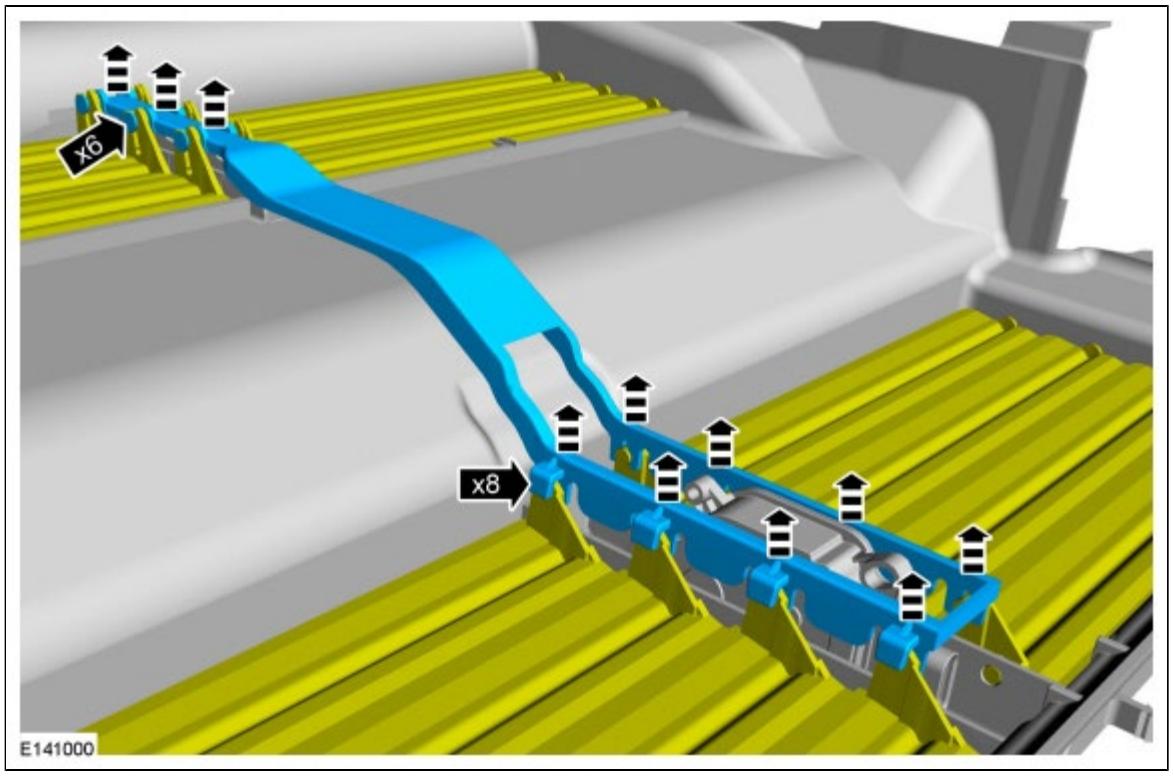

3. *General Equipment* : Flat Headed Screw Driver

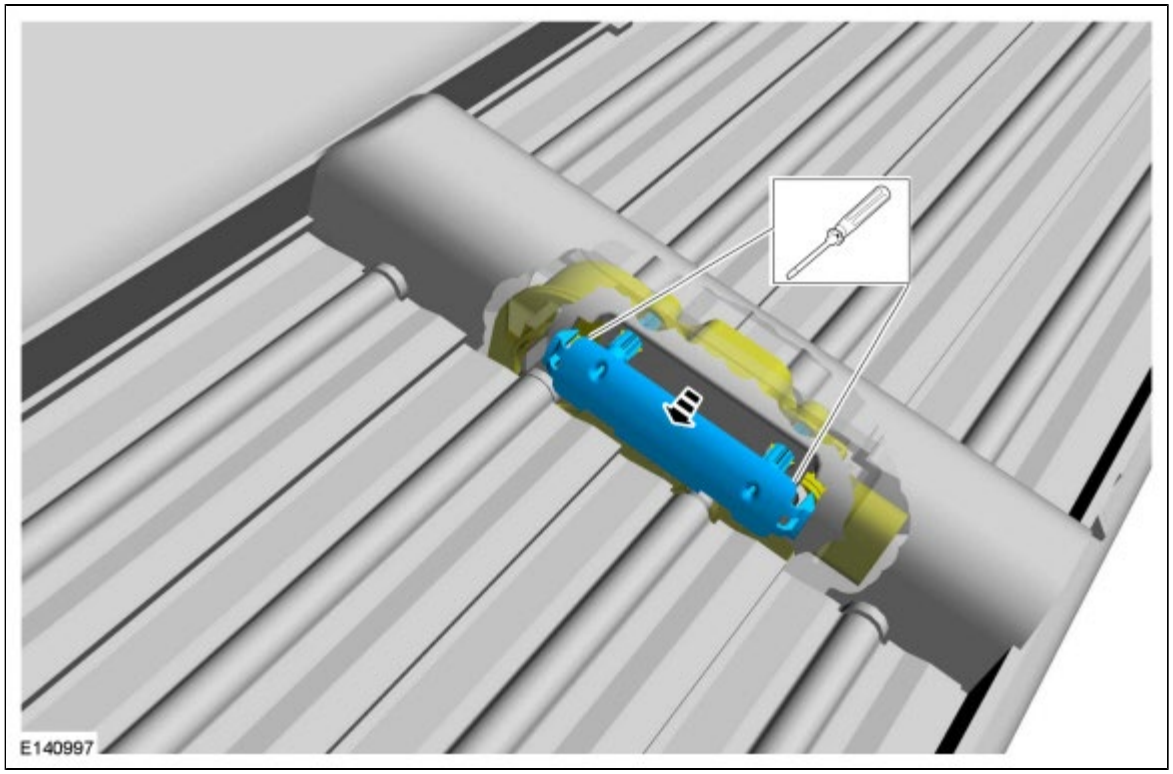

4.

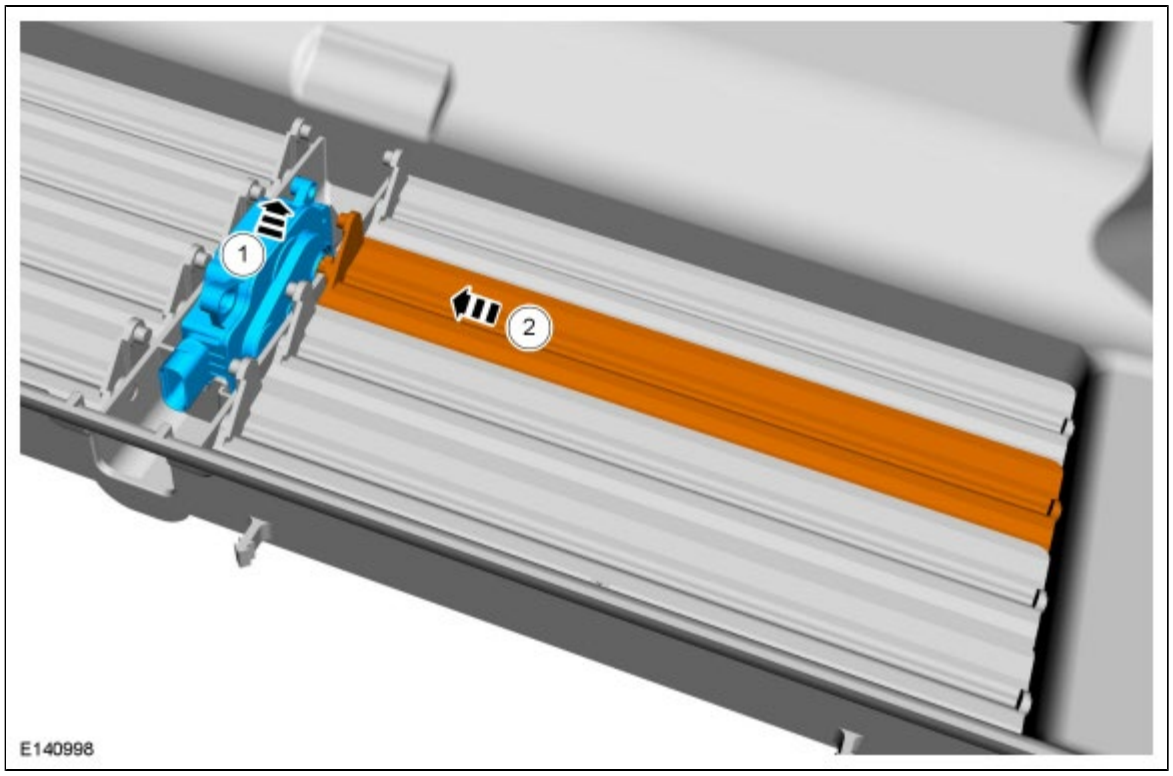

5. **NOTE:** *Note the position of the components before removal.*

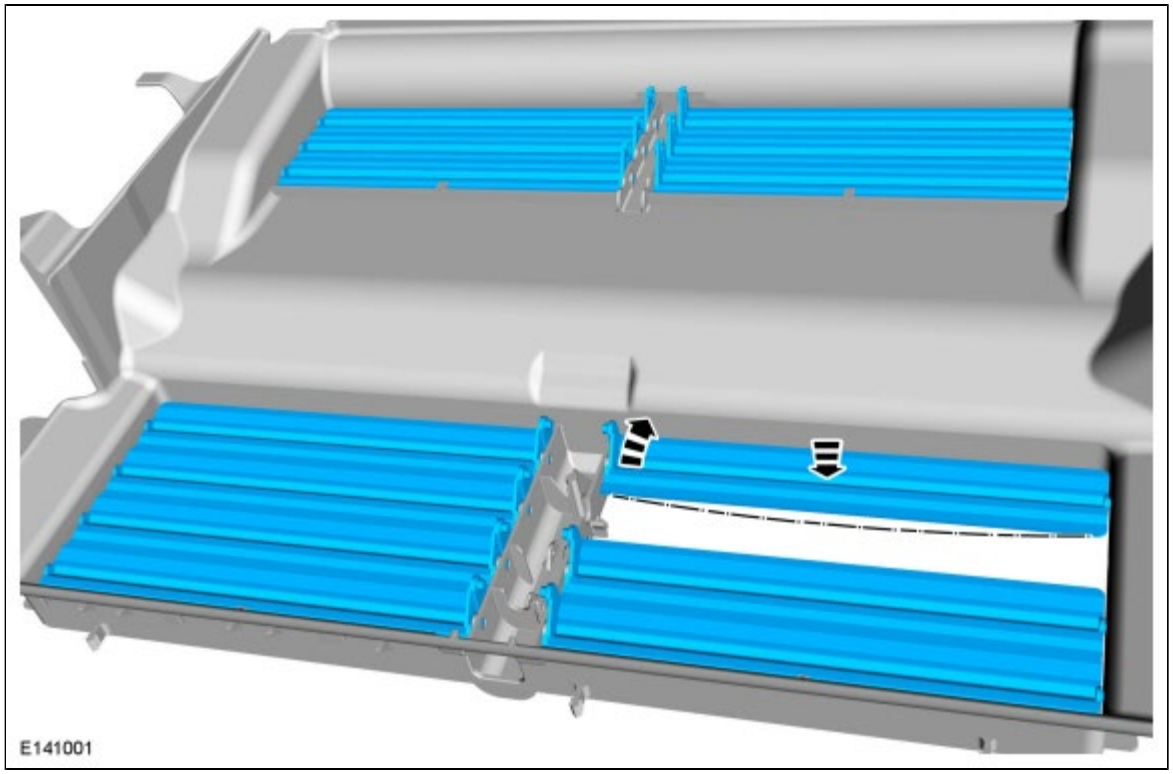

ASSEMBLY

1. To assemble, reverse the disassembly procedure.

Copyright © Ford Motor Company

Front Door

Removal

NOTE: *Removal steps in this procedure may contain installation details.*

1. *Torque* : 30 Nm

2.

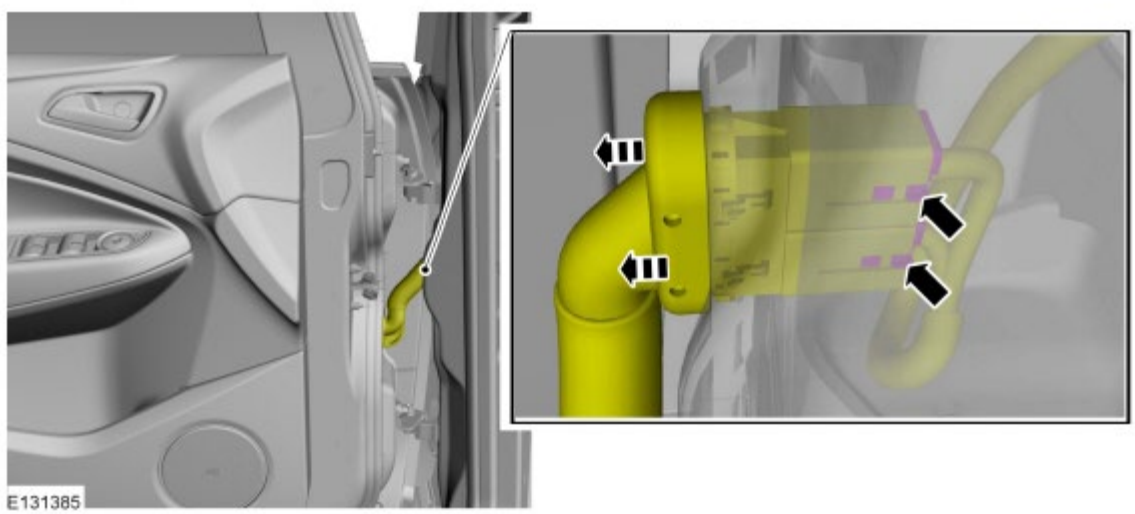

3. **NOTICE: Use suitable packing material to prevent damage to the component.**

   General Equipment : Trolley Jack
   Torque : 30 Nm

Installation

1. To install, reverse the removal procedure.

Copyright © Ford Motor Company

Front Door Weatherstrip

Removal

1.

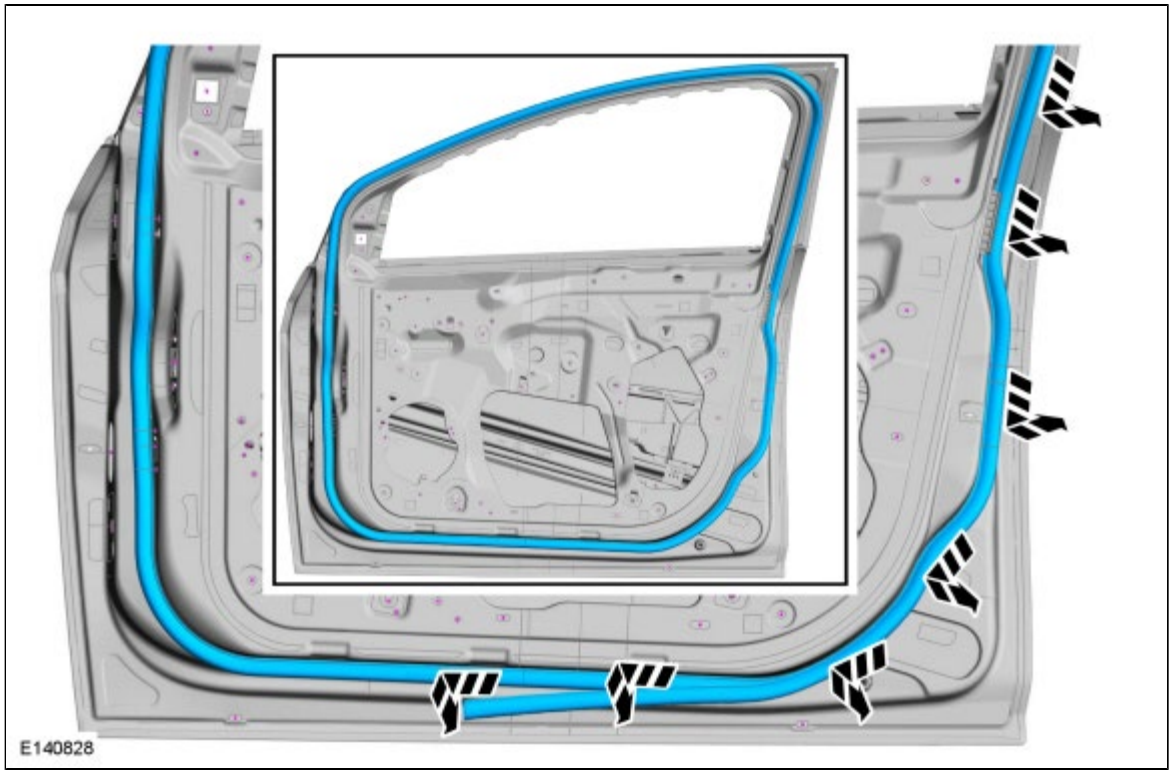

Installation

1.

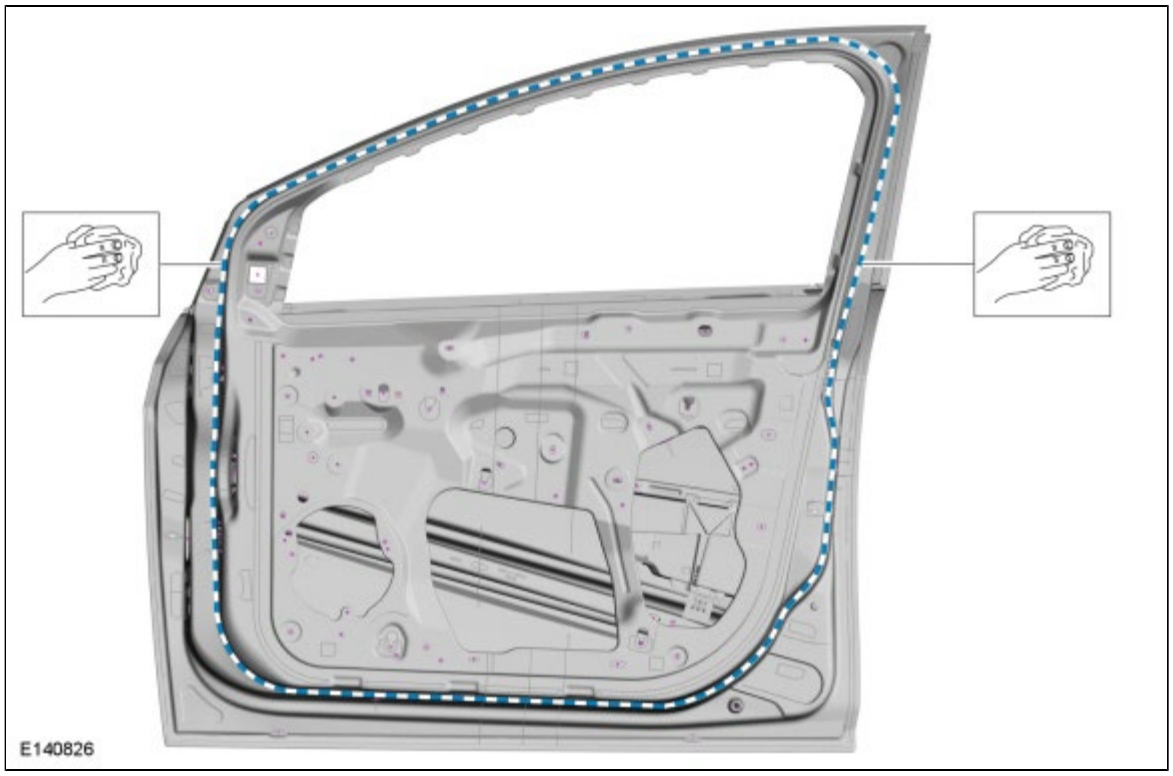

2. **NOTICE: Make sure that the components are aligned.**

   General Equipment : Knife

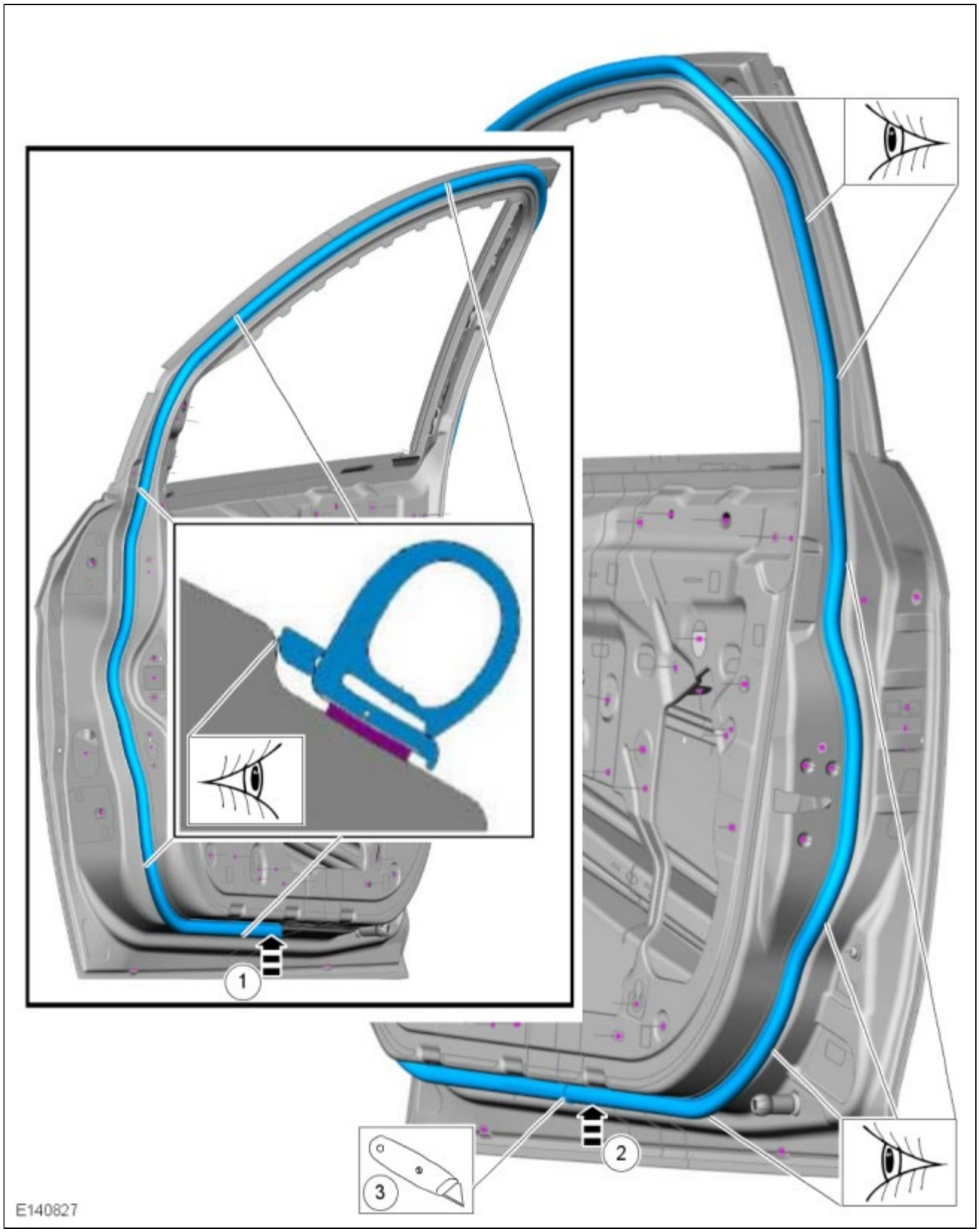

3. **NOTICE: Make sure that equal pressure is applied to the full length of the component.**

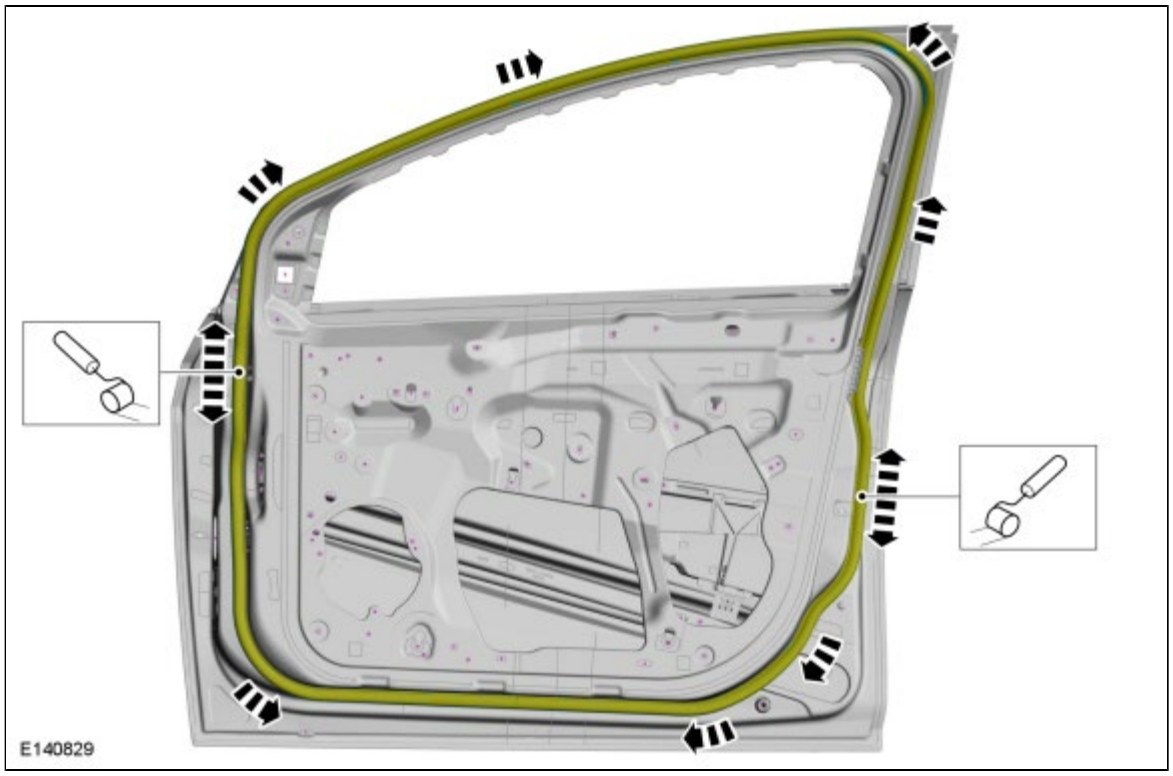

4.

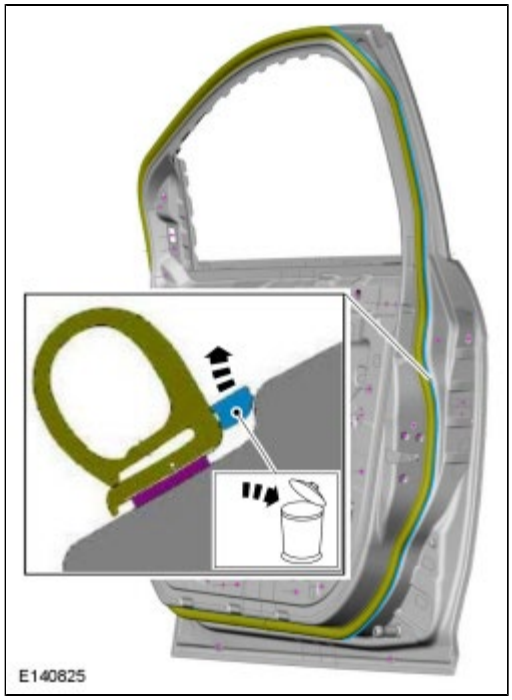

Copyright © Ford Motor Company

Rear Door Weatherstrip

Removal

1.

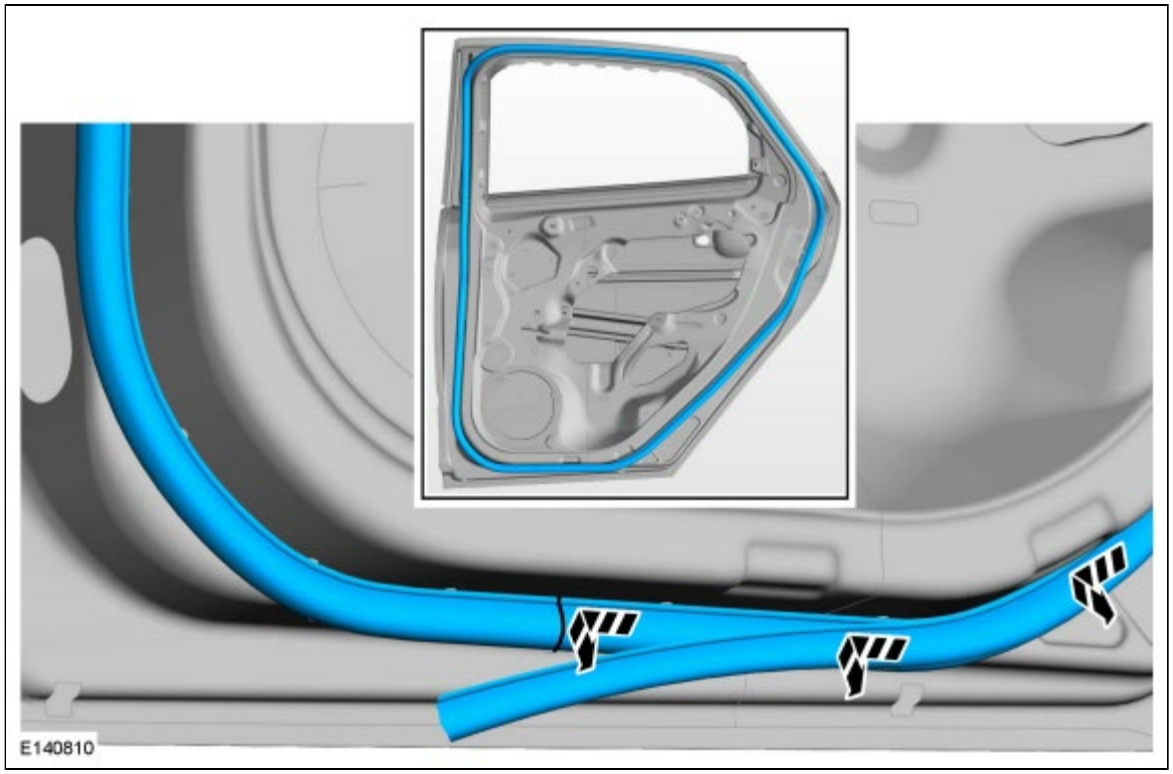

Installation

1.

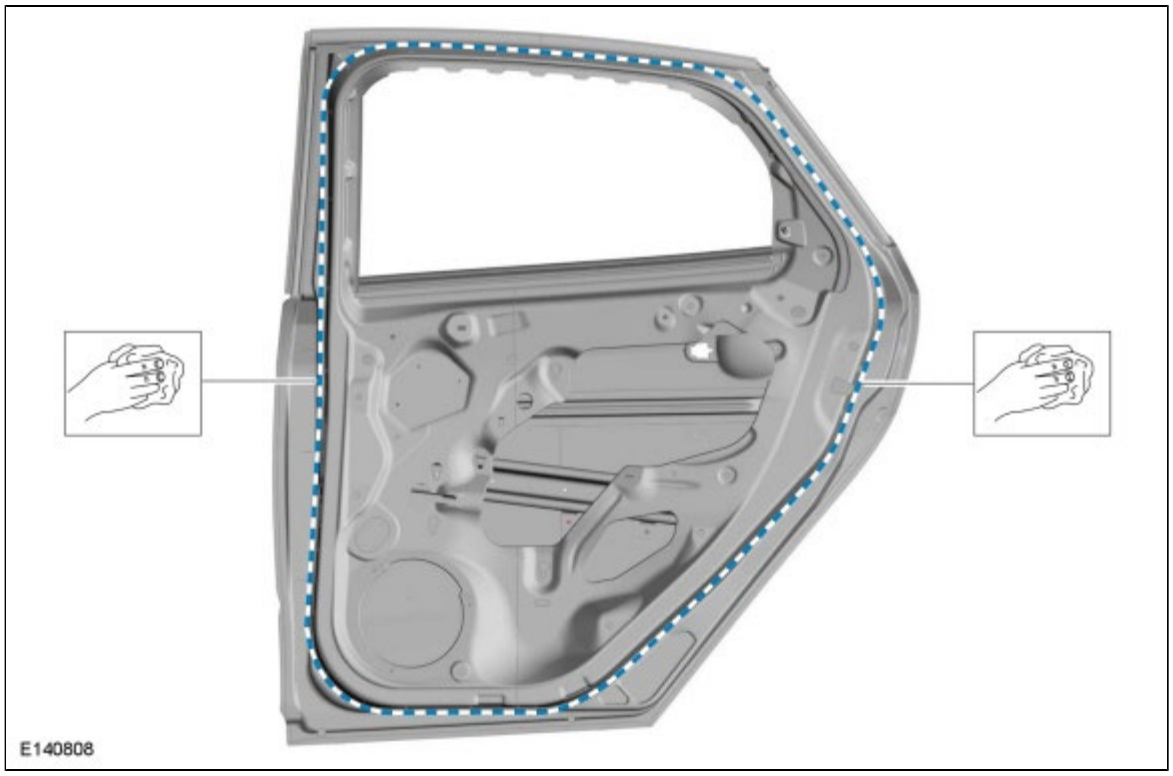

2. **NOTE:** *Make sure that the installation marks are aligned.*

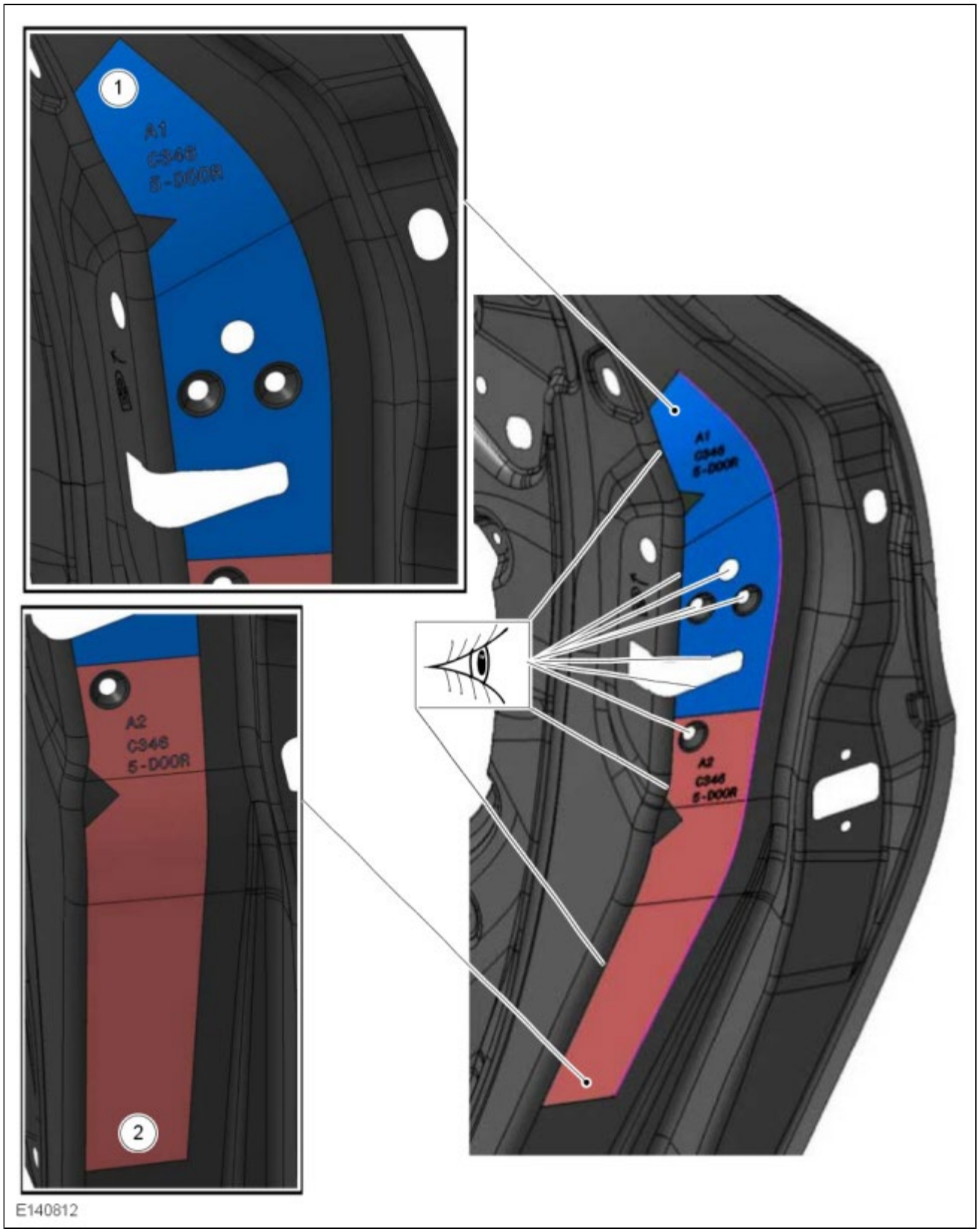

3. **NOTICE: Make sure that the components are aligned.**

   General Equipment : Knife

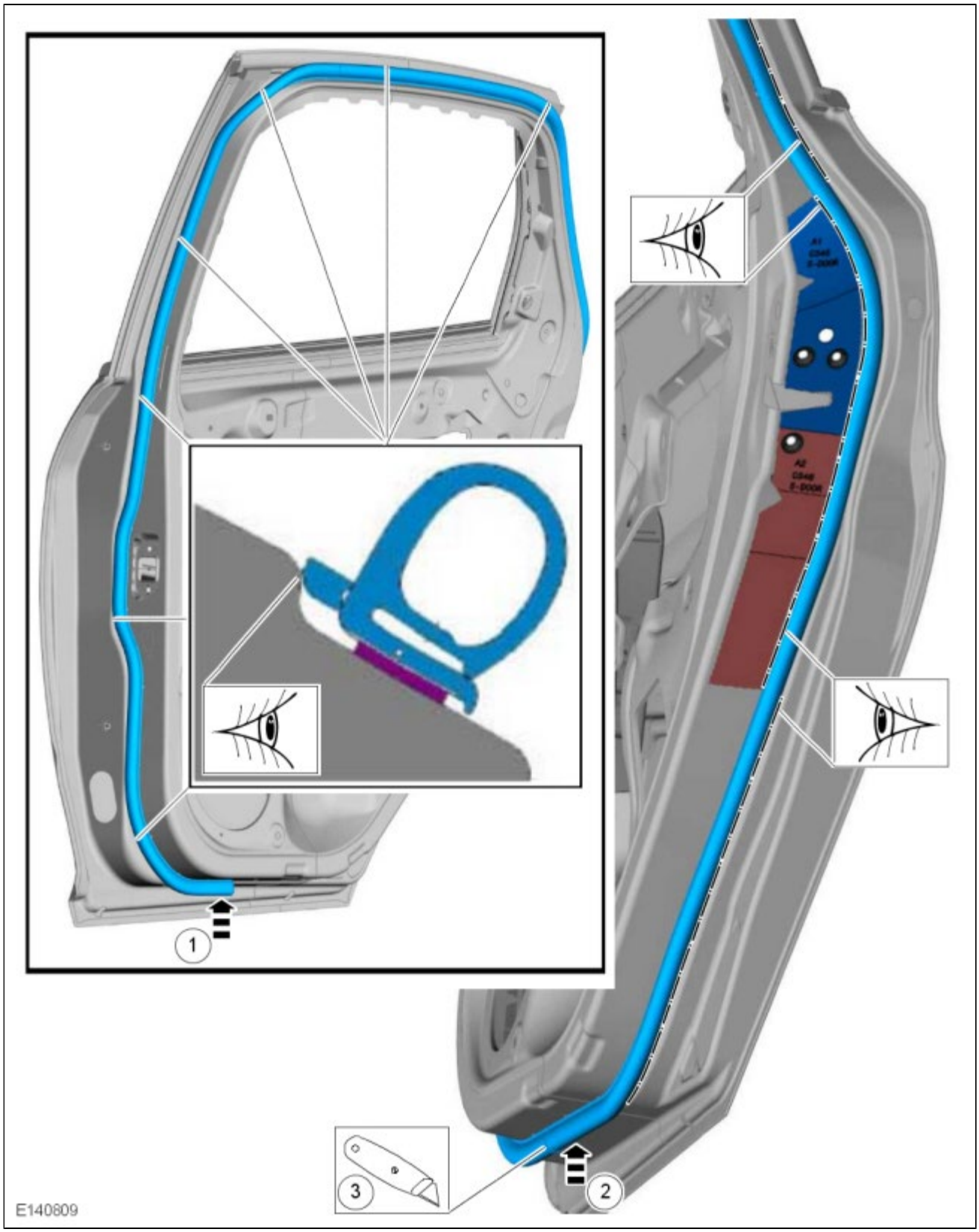

4. **NOTICE: Make sure that equal pressure is applied to the full length of the component.**

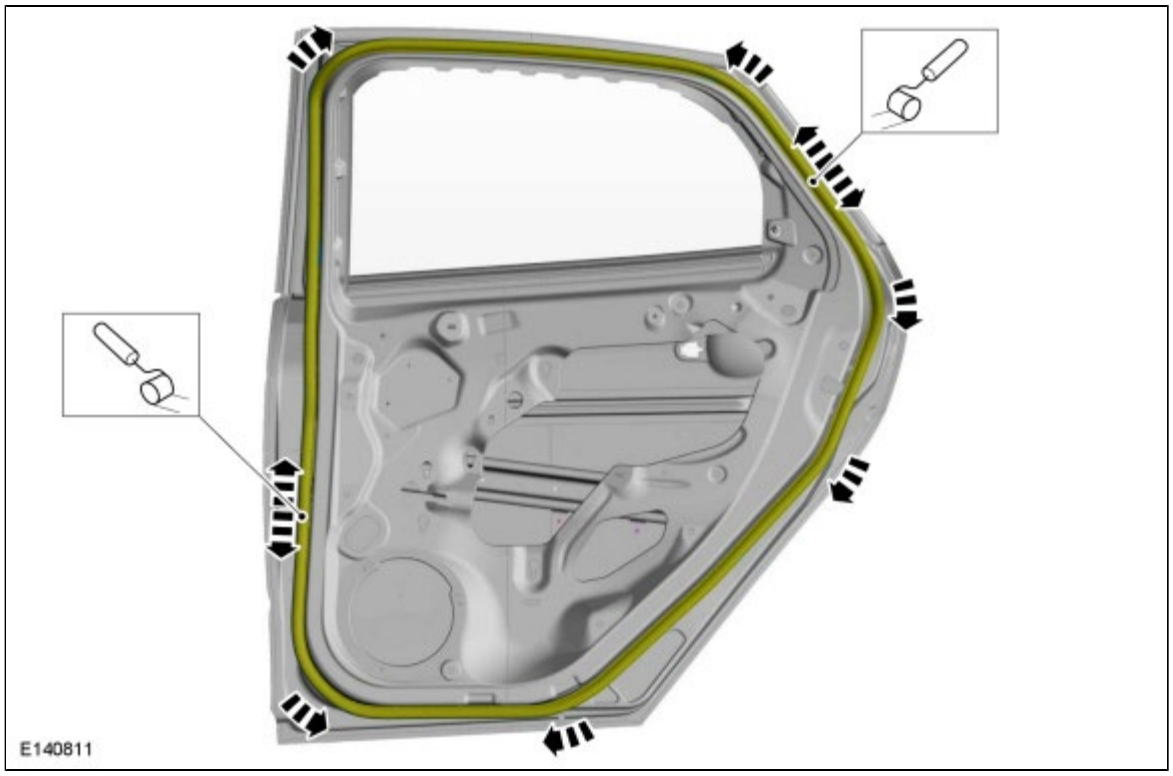

5.

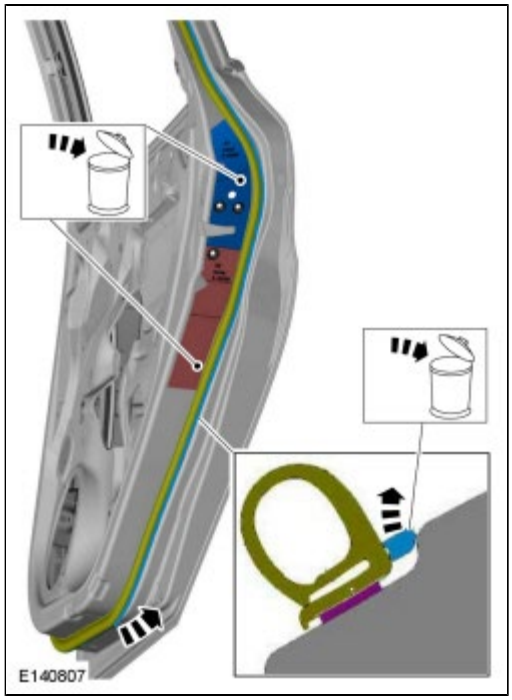

Copyright © Ford Motor Company

Exterior Mirror

Removal

NOTE: *Not all procedure steps are required for some components.*

1.

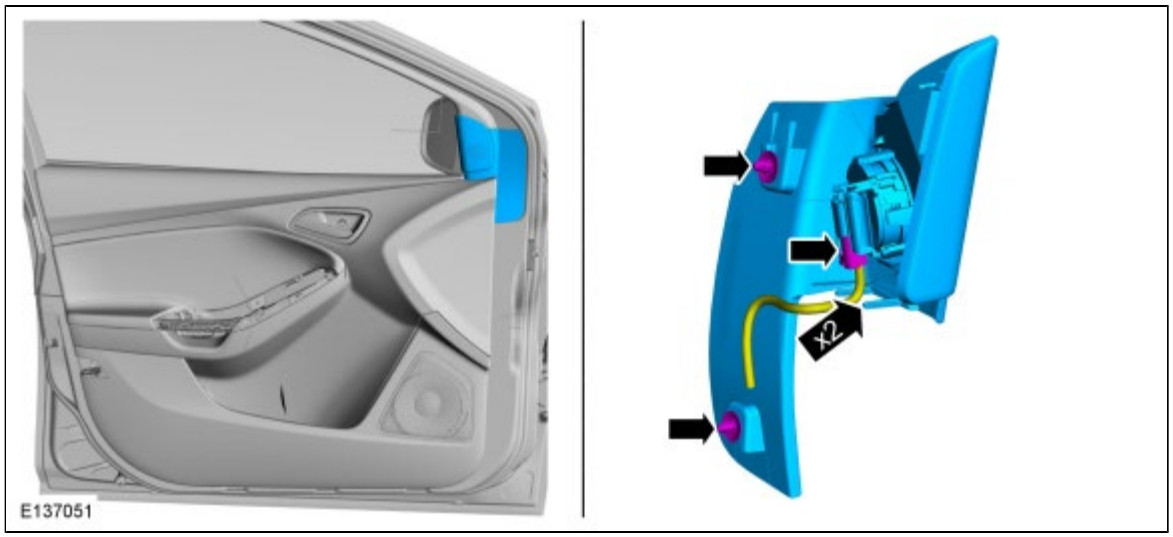

2. *Torque* : 6 Nm

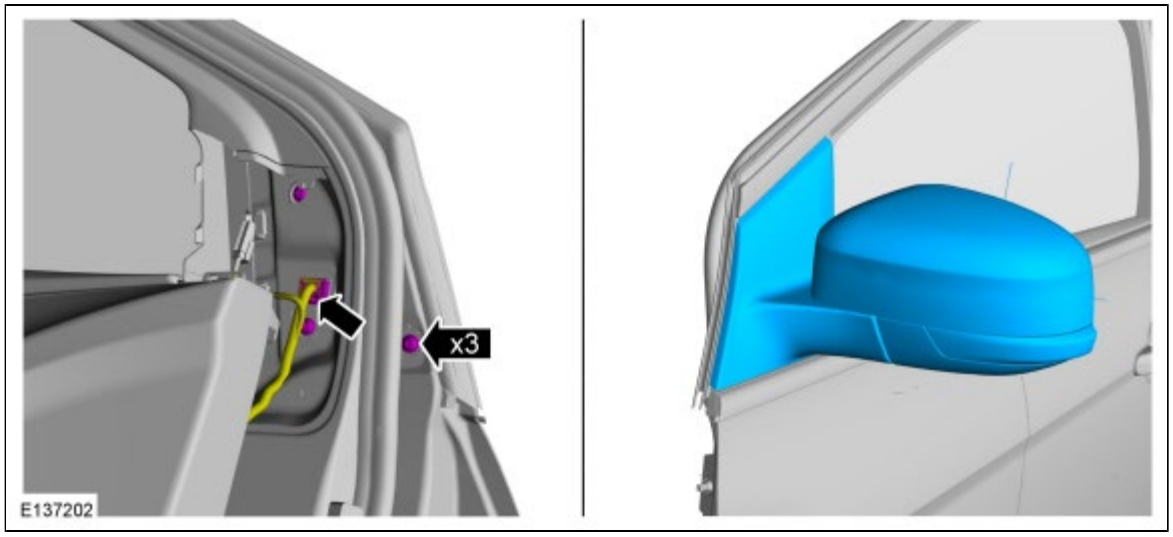

3.
    1. If equipped.

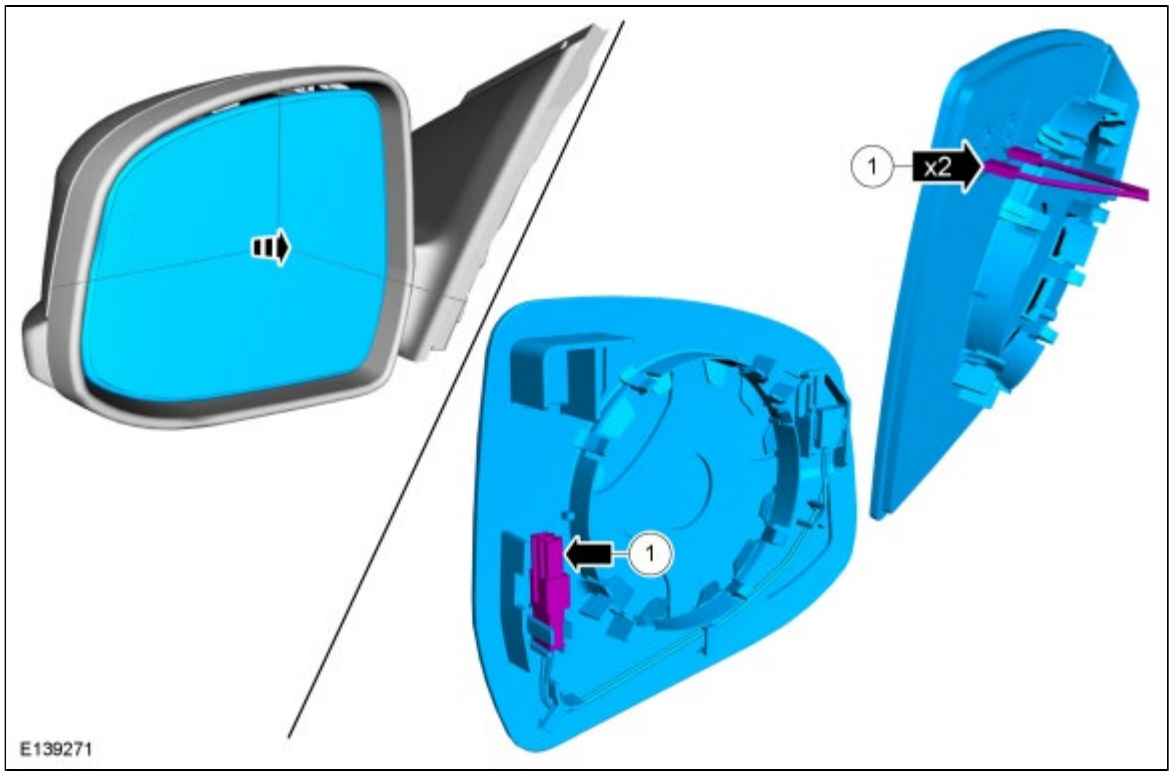

4. **NOTE:** *This step is only necessary when installing a new mirror cover.*

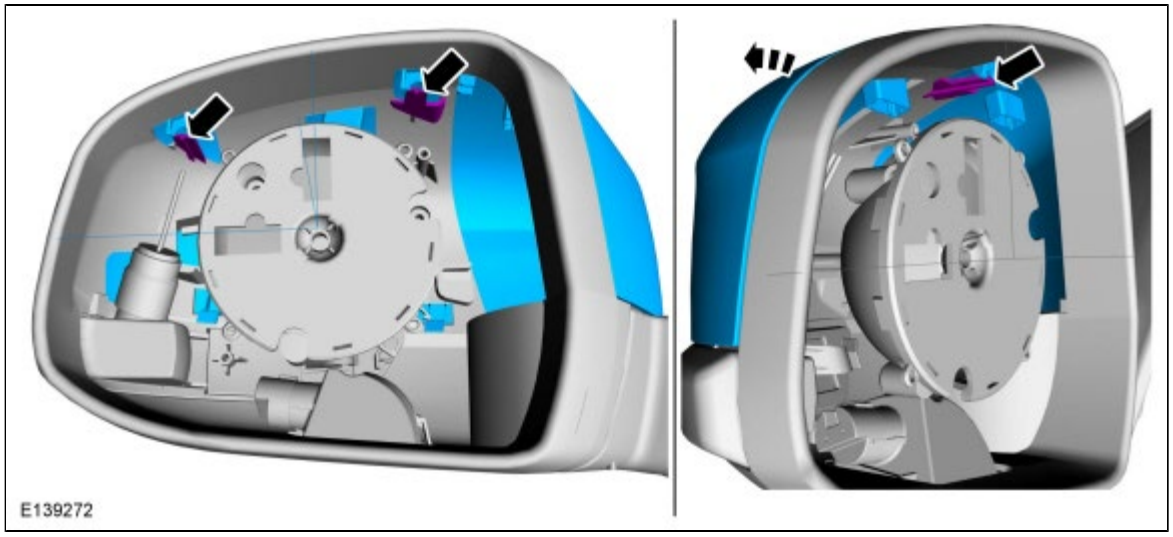

5. **NOTE:** *This step is only necessary when installing a new turn signal indicator.*

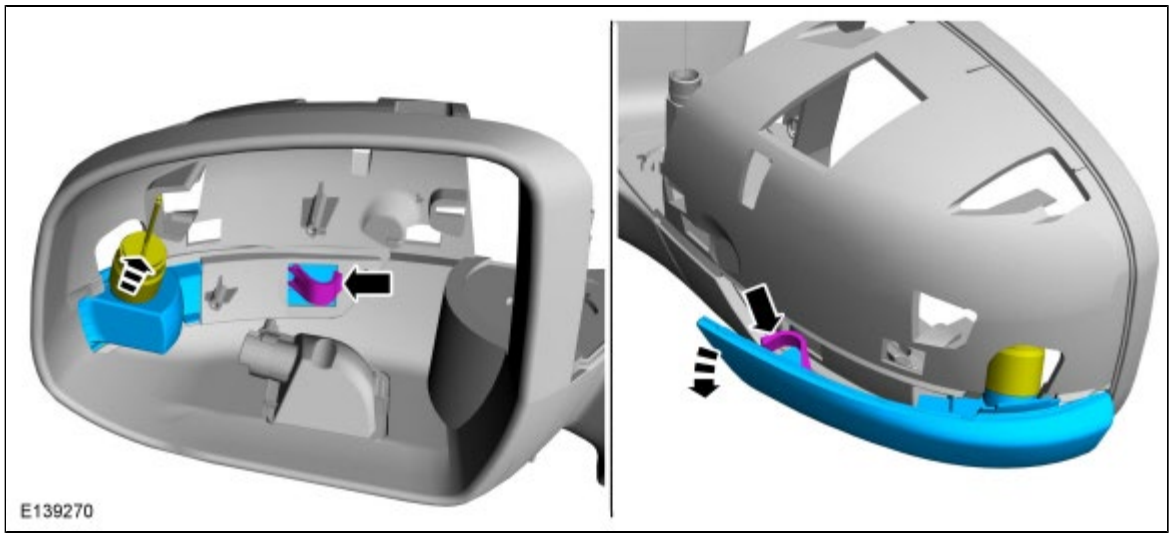

6. **NOTE:** *This step is only necessary when installing a new puddle lamp.*

   If equipped.

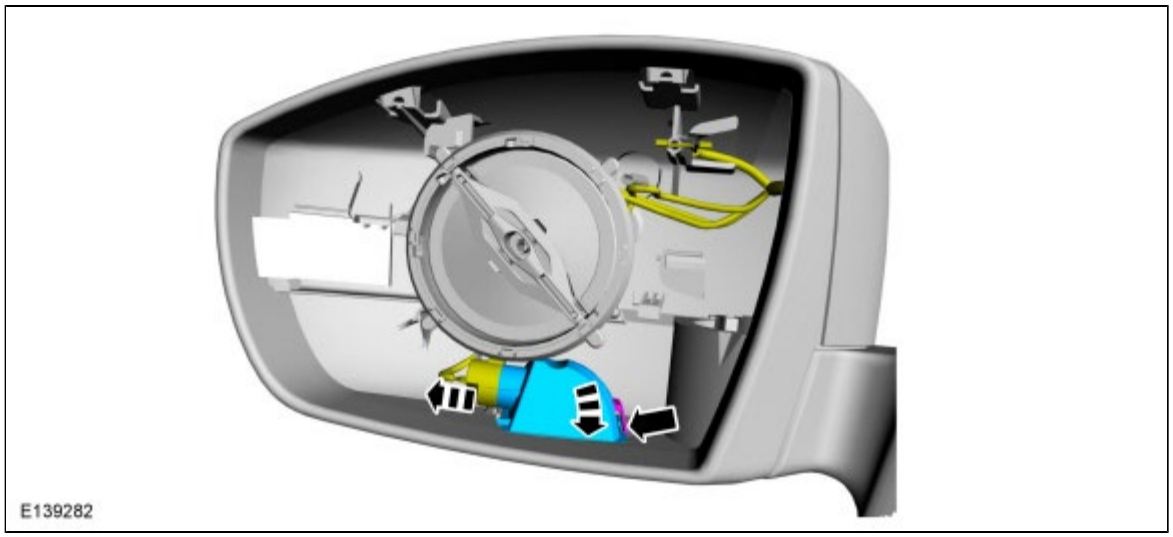

Installation

1. To install, reverse the removal procedure.

Copyright © Ford Motor Company

Heated Seat Switch - Vehicles Without: Center Armrest

Removal

1. Refer to: Floor Console - Vehicles Without: Center Armrest (501-12 Instrument Panel and Console, Removal and Installation).

2.

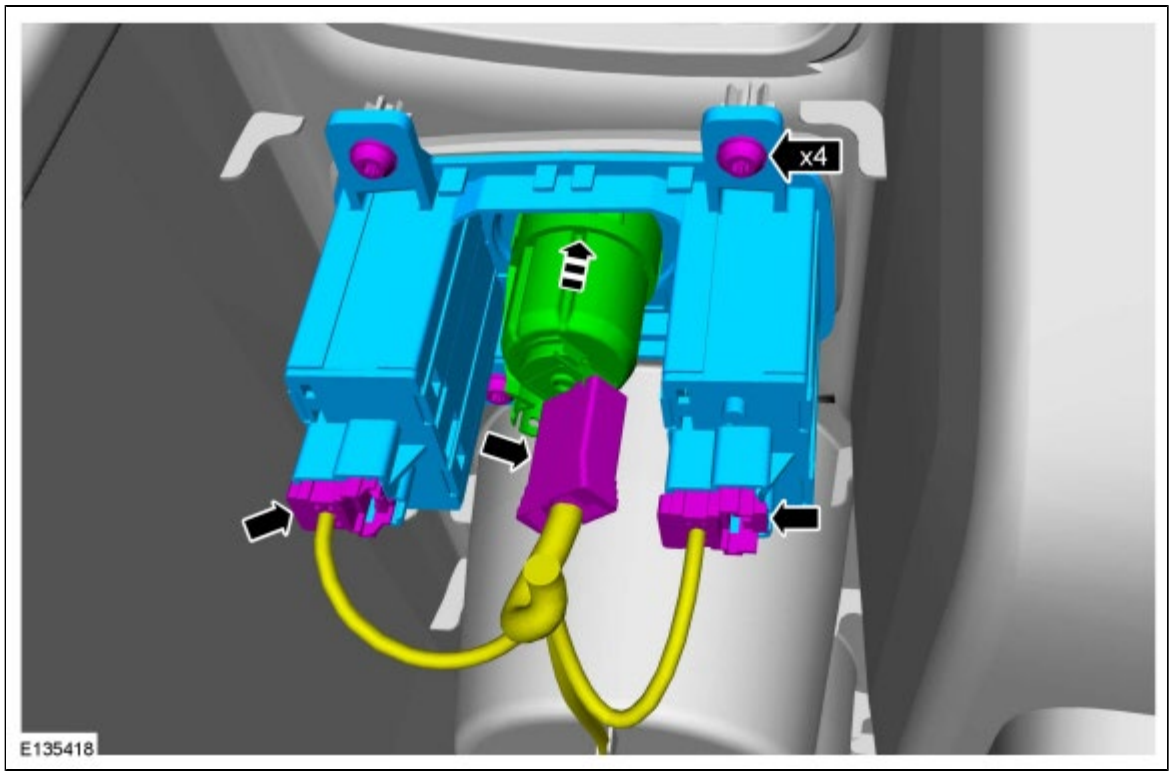

Installation

1. To install, reverse the removal procedure.

Copyright © Ford Motor Company

Specifications

Lubricants, Fluids, Sealers and Adhesives

	Specifications
Motorcraft® Orange Antifreeze/Coolant Concentrated VC-3-B (US); CVC-3-B2 (Canada)	WSS-M97B44-D
Motorcraft® Orange Antifreeze/Coolant Prediluted VC-3DIL-B (US); CVC-3DIL-B (Canada)	WSS-M97B44-D2
Motorcraft® Premium Cooling System Flush VC-1	ESR-M14P7-A

Capacities

	qt (L)
Initial fill	6.81 qt (6.45 L)

Copyright © Ford Motor Company

Engine Cooling - System Operation and Component Description

System Operation

System Diagram

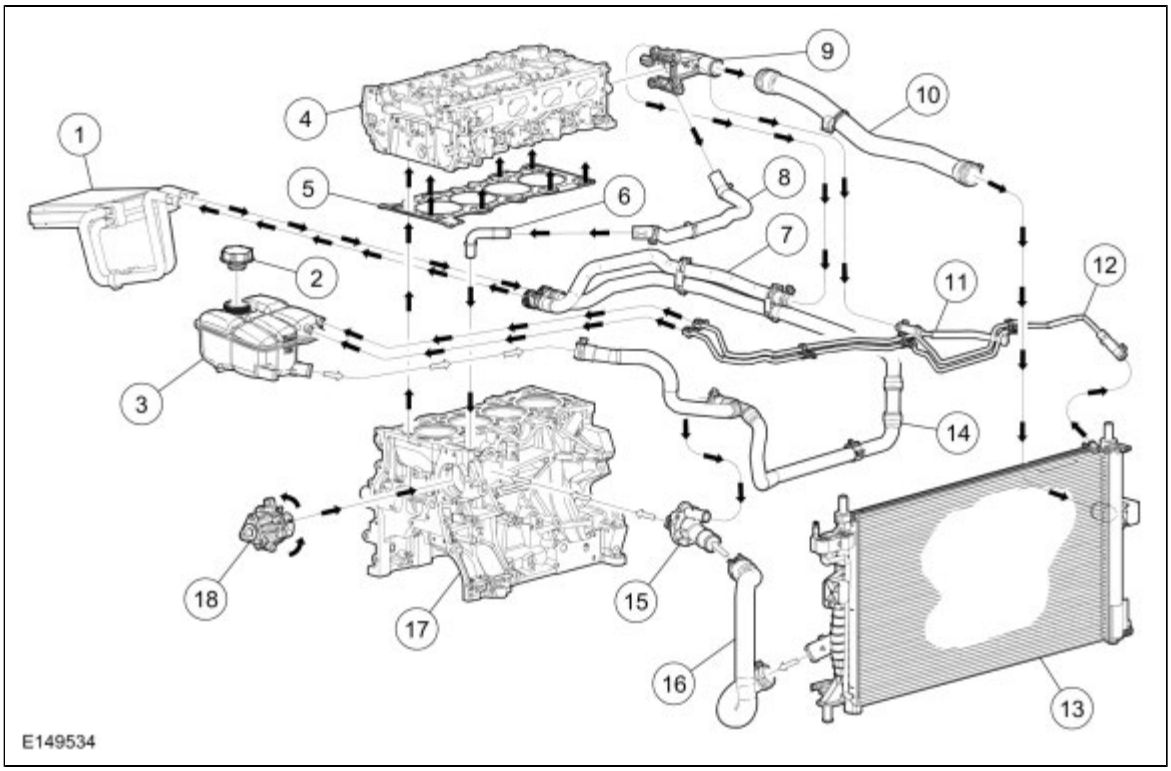

Item	Service Part Number	Description
1	18476	Heater core
2	8100	Pressure relief cap
3	8A080	Degas bottle
4	6049	Cylinder head
5	6051	Cylinder head gasket
6	8597	Coolant bypass tube
7	18472	Heater core inlet hose
8	8597	Coolant bypass hose
9	8K556	Coolant outlet connector
10	8260	Upper radiator hose
11	8B081	Degas bottle-to-engine hose
12	8K012	Radiator-to-degas bottle hose
13	8005	Radiator
14	18472	Heater core outlet hose

15	8592	Thermostat and thermostat housing assembly
16	8286	Lower radiator hose
17	6010	Cylinder block
18	8501	Coolant pump

Copyright © Ford Motor Company

Engine Cooling

Special Tool(s)

E144764	3-Way HD Antifreeze Coolant Test Kit 328-2050-62291 or equivalent
E144765	Coolant/Battery Refractometer 300-ROB75240 or equivalent
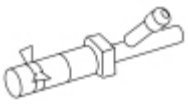 E144767	D-Gas Adapter 300-OTC-014-R1068 or equivalent
E144766	Radiator Tester STN12270 or equivalent
E145674	UView® Combustion Leak Tester UVU560000-R

Lubricants, Fluids, Sealers and Adhesives

	Specifications
Motorcraft® Orange Antifreeze/Coolant Concentrated VC-3-B (US); CVC-3-B2 (Canada)	WSS-M97B44-D
Motorcraft® Orange Antifreeze/Coolant Prediluted VC-3DIL-B (US); CVC-3DIL-B (Canada)	WSS-M97B44-D2

DTC Chart

Diagnostics in this manual assume a certain skill level and knowledge of Ford-specific diagnostic practices. Refer to Diagnostic Methods for information about these practices.

PCM DTC Chart

DTC	Description	Action
P0125	Insufficient Coolant Temp For Closed Loop Fuel Control	GO to Pinpoint Test C
P0128	Coolant Thermostat (Coolant Temp Below Thermostat Regulating Temperature)	GO to Pinpoint Test C
P0480	Fan 1 Control Circuit	Refer to the Refer to Powertrain Control/Emissions Diagnosis (PC/ED) manual.
P0481	Fan 2 Control Circuit	Refer to the Refer to Powertrain Control/Emissions Diagnosis (PC/ED) manual.
P0691	Fan 1 Control Circuit Low	Refer to the Refer to Powertrain Control/Emissions Diagnosis (PC/ED) manual.
P0692	Fan 1 Control Circuit High	Refer to the Refer to Powertrain Control/Emissions Diagnosis (PC/ED) manual.
P0693	Fan 2 Control Circuit Low	Refer to the Refer to Powertrain Control/Emissions Diagnosis (PC/ED) manual.
P0694	Fan 2 Control Circuit High	Refer to the Refer to Powertrain Control/Emissions Diagnosis (PC/ED) manual.
P1285	Cylinder Head Overtemperature Condition	GO to Pinpoint Test B
P1299	Cylinder Head Overtemperature Protection Active	GO to Pinpoint Test B
All Other PCM Diagnostic Trouble Codes (DTCs)	—	REFER to: Electronic Engine Controls (303-14B Electronic Engine Controls - 2.0L EcoBoost (184kW/250PS) - MI4, Diagnosis and Testing).

Inspection and Verification

WARNING: Always allow the engine to cool before opening the cooling system. Do not unscrew the coolant pressure relief cap when the engine is operating or the cooling system is hot. The cooling system is under pressure; steam and hot liquid can come out forcefully when the cap is loosened slightly. Failure to follow these instructions may result in serious personal injury.

NOTICE: The engine cooling system is filled with Motorcraft® Orange Antifreeze/Coolant. Always fill the cooling system with the manufacturer's specified coolant. Chemically flush the cooling system if a non-specified coolant has been used. Refer to Cooling System Flushing in this section. Failure to follow these instructions may damage the engine or cooling system.

NOTE: *During normal vehicle operation, Motorcraft® Orange Antifreeze/Coolant may change color from orange to pink or light red. As long as the engine coolant is clear and uncontaminated, this color change does not indicate the engine coolant has degraded nor does it require the engine coolant to be drained, the system to be flushed, or the engine coolant to be replaced.*

1. Verify the customer concern.
2. Visually check the engine coolant level at the degas bottle when the system is cold.

3. Make sure the pressure relief cap is installed correctly.

4. Record any cooling system Diagnostic Trouble Codes (DTCs) retrieved. Refer to the PCM DTC chart in this section for DTC descriptions.

5. **NOTE:** *Take note of any coolant odor or steam coming from cooling system components.*

   If the system coolant is filled correctly and no Diagnostic Trouble Codes (DTCs) associated with fail-safe cooling are retrieved, verify the customer concern by operating the engine to duplicate the condition.

6. Visually inspect for obvious signs of any mechanical or electrical damage.

Visual Inspection Chart

Mechanical	Electrical

• Leaks or weeps at:
  • Hoses
  • Tubes
  • Hose clamps
  • Engine gaskets (may leak internally or externally)
  • Thermostat housing
  • Radiator
  • Pressure relief cap
  • Coolant pump
  • Engine oil cooler (may leak internally or externally) (if equipped)
  • Heater core (wet floor or coolant odor in vehicle)
  • Degas bottle
  • Cylinder block core plugs
  • Cylinder head core plugs
  • Block heater (if equipped)
• Cracked or damaged:
  • Hoses
  • Tubes
  • Hose clamps
  • Thermostat housing
  • Radiator
  • Pressure relief cap
  • Cooling fan
  • Coolant pump
  • Engine oil cooler (if equipped)
  • Degas bottle
  • Cylinder block core plugs
  • Cylinder head core plugs
  • Block heater (if equipped)
• Restricted airflow through the A/C condenser/radiator
• Excessive white or light gray exhaust smoke (may have burnt coolant odor)
• Coolant in engine oil
• Engine oil in coolant
	• Inoperative or damaged:
	  • Electric cooling fan
	  • Wiring, connectors, relays or modules
	  • CHT sensor
	  • VSS

7. If the inspection reveals an obvious concern that can be readily identified, repair it as necessary.

8. Inspect the coolant condition.
   1. Inspect the coolant color.

- If Motorcraft® Orange Antifreeze/Coolant has a clear or pale color, this indicates higher water content than required. Test the engine coolant freezing point range with the Coolant/Battery Refractometer. Maintain the coolant concentration within 48% to 50%, which equates to a freeze point between -31° C and -37°C (-30°F and -34°F). If the vehicle is driven in cold climates less than -37° C (-34° F), it may be necessary to increase the coolant concentration to get adequate freeze protection. Recommended coolant concentration is 48/52 to 50/50 (freeze protection -31° C to -37°C [-30° F to -34°F]) engine coolant to distilled water.
- Discoloration may indicate that incorrect coolant may have been added to the system. Use of incorrect (green or yellow in color) coolant degrades the corrosion protection of Motorcraft® Orange Antifreeze/Coolant. Addition of Motorcraft® Specialty Green Engine Coolant may cause the color to appear to be a murky green-brown color. The addition of Motorcraft® Premium Gold Engine Coolant with Bittering Agent, however, may not change the color or appearance of Motorcraft® Orange Antifreeze/Coolant. Detection of contamination with Motorcraft® Premium Gold Engine Coolant with Bittering Agent is determined by the presence of nitrite. If contamination with Motorcraft® Premium Gold Engine Coolant with Bittering Agent is suspected, test the coolant with the 3-Way HD Antifreeze Coolant Test Kit. Follow the nitrite testing directions in the kit to determine if nitrite is present in the system. If nitrite is present, flush the system and refill with the correct mixture of distilled water and Motorcraft® Orange Antifreeze/Coolant.
  REFER to: Cooling System Flushing (303-03A Engine Cooling - 2.0L Duratec-HE (125kW/170PS) - MI4, General Procedures).

- A darker orange with the presence of debris could indicate a commercially available stop leak may have been used and could result in loss of coolant flow to critical parts of the engine. If sediment is present, flush the system and refill with the correct mixture of distilled water and Motorcraft® Orange Antifreeze/Coolant.
  REFER to: Cooling System Flushing (303-03A Engine Cooling - 2.0L Duratec-HE (125kW/170PS) - MI4, General Procedures).

- A light or reddish brown color indicates that rust may be present in the cooling system. Flush the system and refill with the correct mixture of distilled water and Motorcraft® Orange Antifreeze/Coolant.
  REFER to: Cooling System Flushing (303-03A Engine Cooling - 2.0L Duratec-HE (125kW/170PS) - MI4, General Procedures).

- An iridescent sheen on top of the coolant could indicate a trace of oil is entering the system. For engine diagnosis,
  REFER to: Engine (303-00 Engine System - General Information, Diagnosis and Testing).
  Flush the system and refill with the correct mixture of distilled water and Motorcraft® Orange Antifreeze/Coolant.REFER to: Cooling System Flushing (303-03A Engine Cooling - 2.0L Duratec-HE (125kW/170PS) - MI4, General Procedures).

- A milky brown color may indicate that engine oil is entering the cooling system. Pressure test the cooling system. Refer to component tests in this section. If engine oil is suspected, the cause of the leak may be internal to the engine. For engine diagnosis,
  REFER to: Engine (303-00 Engine System - General Information, Diagnosis and Testing).
  Flush the system and refill with the correct mixture of distilled water and Motorcraft® Orange Antifreeze/Coolant.REFER to: Cooling System Flushing (303-03A Engine Cooling - 2.0L Duratec-HE (125kW/170PS) - MI4, General Procedures).

2. If the engine coolant appearance is acceptable, test the engine coolant freezing point range with the Coolant/Battery Refractometer. Maintain the coolant concentration within 48% to 50%, which equates to a freeze point between -31° C and -37°C (-30° F and -34°F). If the vehicle is driven in cold climates less than -36.7 C (-34 F), it may be necessary to increase the coolant concentration to get adequate freeze protection. Recommended coolant concentration is 48% to 50% (freeze protection -31° C to -37°C [-30° F to -34°F]) engine coolant to distilled water.
   - Maximum coolant concentration is 60/40 for cold weather areas.
   - Minimum coolant concentration is 40/60 for warm weather areas.
3. Adjust coolant range and level if necessary:
   - If coolant is low, add Motorcraft® Orange Antifreeze/Coolant Prediluted.
   - If the engine coolant tests too weak, remove some of the engine coolant and add Motorcraft® Orange Antifreeze/Coolant Concentrated until the readings are within acceptable levels.
   - If the engine coolant tests strong, remove some of the engine coolant and add distilled water until the readings are within acceptable levels.

9. If an obvious cause for an observed or reported concern is found, correct the cause and test the system for normal operation before proceeding to the next step.

10. **NOTE:** *Make sure to use the latest scan tool software release.*

    If the cause is not visually evident, connect the scan tool to the DLC .

11. **NOTE:** *The Vehicle Communication Module (VCM) LED prove-out confirms power and ground from the DLC are provided to the VCM.*

    If the scan tool does not communicate with the VCM :

- Check the VCM connection to the vehicle.
- Check the scan tool connection to the VCM.
- No Power To The Scan Tool, to diagnose no power to the scan tool
  REFER to: Communications Network (418-00 Module Communications Network, Diagnosis and Testing).

12. If the scan tool does not communicate with the vehicle:

- Verify the ignition key is in the ON position.
- Verify the scan tool operation with a known good vehicle.
- To diagnose no response from the PCM
  REFER to: Communications Network (418-00 Module Communications Network, Diagnosis and Testing).

13. Carry out the network test.

- If the scan tool responds with no communication for one or more modules,
  REFER to: Communications Network (418-00 Module Communications Network, Diagnosis and Testing).
- If the network test passes, retrieve and record Continuous Memory Diagnostic Trouble Codes (CMDTCs).

14. Clear the continuous Diagnostic Trouble Codes (DTCs) and carry out the self-test diagnostics PCM

15. If the Diagnostic Trouble Codes (DTCs) recovered are related to the concern, go to the PCM DTC Chart. For all other PCM Diagnostic Trouble Codes (DTCs),
    REFER to: Electronic Engine Controls (303-14A Electronic Engine Controls - 2.0L Duratec-HE (125kW/170PS) - MI4, Diagnosis and Testing).

16. If no Diagnostic Trouble Codes (DTCs) related to the concern are retrieved, GO to Symptom Chart.

Symptom Chart

Diagnostics in this manual assume a certain skill level and knowledge of Ford-specific diagnostic practices.

Condition	Possible Sources	Actions
Loss of coolant	Refer to the Pinpoint Test	GO to Pinpoint Test A
The engine overheats.	Refer to the Pinpoint Test	GO to Pinpoint Test B
The engine does not reach normal operating temperature.	Refer to the Pinpoint Test	GO to Pinpoint Test C
The block heater does not operate correctly.	• Block heater power cable • Block heater	• CHECK continuity in all 3 power cable circuits. If any circuit measures more than 5 ohms, INSTALL a new power cable. • CHECK the resistance of the block heater. If the resistance does not measure between 12.5 and 17 ohms, INSTALL a new block heater.
The electric cooling fan is inoperative in one or more speeds or does not	• Wiring • Relays	REFER to the Refer to Powertrain Control/Emissions Diagnosis (PC/ED) manual..

operate correctly.	• Fuses • Cooling fan motor • Cooling fan resistor	
The electric cooling fan stays on all the time.	• Wiring • Relays	REFER to the Refer to Powertrain Control/Emissions Diagnosis (PC/ED) manual..
Noisy electric cooling fan operation.	• Foreign material contamination • Fan motor	• REMOVE the foreign material from the cooling fan and shroud. TEST the system for normal operation. If still noisy, INSTALL a new cooling fan assembly.
	• Fan blade detached from fan motor	• INSTALL a new cooling fan assembly.

Diagnostic Routine(s)

Loss of Coolant

Normal operation and Fault Conditions

The engine cooling system is a closed system providing for coolant expansion and contraction as well as changes in pressure as coolant warms and cools with engine operation. Various gaskets, seals, hoses and clamps contain coolant within the cooling system and keep other fluids and contaminants from entering the cooling system.

Possible Sources

- Coolant hoses or tubes
- Hose clamps
- Thermostat housing
- Thermostat housing O-ring seals
- Coolant pump gasket
- Radiator
- Pressure relief cap
- Coolant pump
- Oil cooler (may leak internally or externally) (if equipped)
- Heater core
- Engine gaskets (may leak internally or externally)
- Degas bottle
- Cylinder block core plugs
- Cylinder head core plugs
- Block heater (if equipped)

PINPOINT TEST A : PINPOINT TEST

WARNING: Always allow the engine to cool before opening the cooling system. Do not unscrew the coolant pressure relief cap when the engine is operating or the cooling system is hot. The cooling system is under pressure; steam and hot liquid can come out forcefully when the cap is loosened slightly. Failure to follow these instructions may result in serious personal injury.
A1 CARRY OUT INSPECTION AND VERIFICATION
• Carry out inspection and verification.

Are any concerns present?

Yes	REPAIR as needed.
No	GO to A2

A2 CHECK THE ENGINE COOLANT LEVEL AND PRESSURE TEST THE ENGINE COOLING SYSTEM

NOTE: *Allow the engine to cool before checking the engine coolant level.*

- Ignition OFF
- Visually inspect the engine coolant level at the degas bottle and adjust as necessary. Pressure test the engine cooling system. Refer to Component Tests, Cooling System Pressure Test in this section.

Does the engine cooling system leak externally?

Yes	REPAIR or INSTALL new components.
No	GO to A3

A3 CHECK THE ENGINE COOLANT FOR AN INTERNAL LEAK

- Inspect the engine coolant in the degas bottle for signs of engine oil.

Is engine oil evident in the coolant?

Yes	REFER to: Engine (303-01B Engine - 2.0L EcoBoost (184kW/250PS) - MI4, Diagnosis and Testing).
No	GO to A4

A4 CHECK THE ENGINE OIL FOR COOLANT

- Remove the oil level indicator from the engine.

Is coolant evident in the oil?

Yes	REFER to: Engine (303-00 Engine System - General Information, Diagnosis and Testing).
No	GO to A5

A5 CHECK THE COOLING SYSTEM FOR COMBUSTION GASES

NOTE: *Use UView® Combustion Leak Tester part number UVU560000-R or equivalent.*

- Using a cooling system combustion gas leak tester, following the instructions supplied with the tester, check the coolant for combustion gases.

Are combustion gases present?

Yes	REFER to: Engine (303-00 Engine System - General Information, Diagnosis and Testing).
No	The cooling system is operational

The Engine Overheats

Normal operation and Fault Conditions

The engine cooling system maintains the engine temperature during operation. Correct coolant flow through the engine, radiator and remainder of cooling system passages and components is essential to maintaining a correct engine temperature.

Engine coolant flows primarily from the engine to the radiator circuit and back to the coolant pump. Coolant is sent from the coolant pump through the engine block and cylinder heads. A separate circuit from the engine also feeds the heater core with coolant. The coolant pump circulates the coolant. The coolant thermostat is a control valve actuated by coolant temperature. When the thermostat is closed, coolant flow bypasses the radiator circuit and returns to the coolant pump. When the thermostat is opened, coolant flows through the radiator circuit to transfer engine-generated heat to the outside air.

Engine overheating generally occurs when there is a disruption in the ability to control either coolant flow at the correct rate, the inability to transfer heat from the engine through the coolant (including low coolant) or an inability to transfer engine-generated heat to the outside air through the radiator.

Possible Sources

- Low coolant level
- External engine coolant leak
- Airlock in system
- Pressure relief cap installation
- Restricted airflow through A/C condenser/radiator
- Internal engine coolant leak
- Coolant condition/concentration
- Non-OEM engine enhancement components
- Electric cooling fan
- CHT sensor
- Radiator
- Thermostat
- Temperature gauge
- Coolant pump
- Coolant flow restriction

Diagnostic Trouble Code (DTC) Fault Trigger Conditions

DTC	Description	Fault Trigger Conditions
P1285	Cylinder Head Overtemperature Condition	Sets in the PCM when an engine overheat condition was sensed by the CHT sensor.
P1299	Cylinder Head Overtemperature Protection Active	Sets in the PCM when an engine overheat condition was detected by the CHT sensor. A failure mode effects management strategy called fail-safe cooling was activated to cool the engine

PINPOINT TEST B : PINPOINT TEST

B1 CARRY OUT INSPECTION AND VERIFICATION
• Carry out the Inspection and Verification procedure in this section. **Are any concerns present?**

Yes	REPAIR as needed.
No	GO to B2

B2 CHECK FOR AN AIRFLOW OBSTRUCTION

- Check the radiator or A/C condenser for an external obstruction such as leaves or cardboard.

Is an obstruction present?

Yes	REMOVE the obstruction.
No	GO to B3

B3 CHECK THE ENGINE COOLANT LEVEL AND PRESSURE TEST THE COOLING SYSTEM

- Ignition OFF.
- Visually check the engine coolant level in the degas bottle and adjust as necessary. Pressure test the cooling system.

Does the engine cooling system leak externally?

Yes	REPAIR or INSTALL new components.
No	GO to B4

B4 CHECK THE ENGINE COOLANT FOR AN INTERNAL LEAK

- Inspect the engine coolant in the degas bottle for signs of engine oil.

Is engine oil evident in the coolant?

Yes	REFER to: Engine (303-00 Engine System - General Information, Diagnosis and Testing).
No	GO to B5

B5 CHECK THE ENGINE OIL FOR COOLANT

- Remove the oil level indicator from the engine.

Is coolant evident in the oil?

Yes	REFER to: Engine (303-00 Engine System - General Information, Diagnosis and Testing).
No	GO to B6

B6 CHECK THE COOLING SYSTEM FOR COMBUSTION GASES

NOTE: *Use UView® Combustion Leak Tester part number UVU560000-R or equivalent.*

- Using a cooling system combustion gas leak tester, following the instructions supplied with the tester, check the coolant for combustion gases.

Are combustion gases present?

Yes	REFER to: Engine (303-00 Engine System - General Information, Diagnosis and Testing).
No	GO to B7

B7 CHECK COOLANT CONDITION

- Check the coolant for dirt, rust or contamination and check the coolant concentration.

Is the coolant condition OK?

Yes	GO to B8
No	FLUSH the engine cooling system. REFER to: Cooling System Flushing (303-03A Engine Cooling - 2.0L Duratec-HE (125kW/170PS) - MI4, General Procedures).

B8 CHECK THE ELECTRIC COOLING FAN OPERATION

- Start the engine.
- Place the climate control function selector in the MAX A/C position and the blower motor switch in the HI position.

Yes	GO to B9
No	DIAGNOSE the electric cooling fan operation. REFER to the PC/ED Section 3 Symptom Charts.

B9 CHECK THE COOLANT PUMP OPERATION

- Start the engine.
- Allow the engine to run for 30 minutes. Place the climate control function selector in the MAX HEAT position. Feel the heater outlet hose.

Is the heater outlet hose hot?

Yes	GO to B10
No	INSTALL a new coolant pump. REFER to: Coolant Pump (303-03A Engine Cooling - 2.0L Duratec-HE (125kW/170PS) - MI4, Removal and Installation).

B10 CHECK THE THERMOSTAT OPERATION

- Start the engine.
- Allow the engine to run for 30 minutes. Place the climate control function selector in the MAX HEAT position. Feel the lower radiator hose.

Is the lower radiator hose hot?

Yes	CHECK the temperature gauge operation. REFER to: Instrumentation, Message Center and Warning Chimes (413-01 Instrumentation, Message

	Center and Warning Chimes, Diagnosis and Testing).
No	GO to B11

B11 VISUALLY INSPECT THE THERMOSTAT

- Carry out the Thermostat Visual Inspection in the Component Tests portion of this section.

Is the thermostat damaged?

Yes	INSTALL a new thermostat housing. REFER to: Thermostat Housing (303-03A Engine Cooling - 2.0L Duratec-HE (125kW/170PS) - MI4, Removal and Installation).
No	INSTALL a new thermostat housing. REFER to: Thermostat Housing (303-03A Engine Cooling - 2.0L Duratec-HE (125kW/170PS) - MI4, Removal and Installation). If the engine still overheats, INSTALL a new radiator. REFER to: Radiator (303-03A Engine Cooling - 2.0L Duratec-HE (125kW/170PS) - MI4, Removal and Installation).

The Engine Does Not Reach Normal Operating Temperature

Normal operation and Fault Conditions

The engine cooling system maintains engine temperature during operation. Correct coolant flow through the engine, radiator and remainder of cooling system passages and components is essential to maintaining a correct engine temperature.

Engine coolant flows primarily from the engine to the radiator circuit and back to the coolant pump. Coolant is sent from the coolant pump through the engine block and cylinder heads. A separate circuit from the engine also feeds the heater core with coolant. The coolant pump circulates the coolant. The coolant thermostat is a control valve actuated by coolant temperature. When the thermostat is closed, coolant flow bypasses the radiator circuit and returns to the coolant pump. When the thermostat is opened, coolant flows through the radiator circuit in order to transfer engine generated heat to the outside air.

Concerns of engine inability to reach normal operating temperature typically occur when the rate of coolant flow through some coolant circuits (radiator, heater core) is more than expected given the conditions. Heat is not allowed to build in the engine because a heat exchanger is removing too much heat, including the radiator, heater core and oil cooler. In addition, perceived concerns that the engine does not reach normal operating temperature can be related to a low coolant level or trapped air which does not allow for hot coolant to be available at the heater core, an inoperative climate control system, or for concerns perceived or related to an incorrect engine temperature gauge indication.

Possible Sources

- Low coolant level
- Thermostat
- Temperature gauge
- CHT Sensor

Diagnostic Trouble Code (DTC) Fault Trigger Conditions

DTC	Description	Fault Trigger Conditions
P0125	Insufficient Coolant Temp for Closed Loop Fuel Control	Sets in the PCM when the CHT sensor has not achieved the required temperature level to enter closed loop operating conditions within a specified amount of time after starting the engine.

P0128	Coolant Thermostat (Coolant Temp Below Thermostat Regulating Temperature)	Sets in the PCM when the thermostat monitor has not achieved the required engine operating temperature within a specified amount of time after starting the engine.

PINPOINT TEST C : PINPOINT TEST

WARNING: Always allow the engine to cool before opening the cooling system. Do not unscrew the coolant pressure relief cap when the engine is operating or the cooling system is hot. The cooling system is under pressure; steam and hot liquid can come out forcefully when the cap is loosened slightly. Failure to follow these instructions may result in serious personal injury.

C1 CARRY OUT INSPECTION AND VERIFICATION

- Carry out the Inspection and Verification procedure in this section.

Were any concerns found?

Yes	REPAIR as needed.
No	GO to C2

C2 CHECK FOR DTC P0125 OR P0128

- Using a scan tool, perform the PCM self-test.

Is DTC P0125 or P0128 present?

Yes	GO to C3
No	The cooling system is operational. If an inoperative temperature gauge is suspected, CHECK the temperature gauge operation. REFER to: Instrumentation, Message Center and Warning Chimes (413-01 Instrumentation, Message Center and Warning Chimes, Diagnosis and Testing). If an inoperative climate control system is suspected, CHECK the climate control system operation. For electronic manual temperature control, REFER to: Climate Control System - Vehicles With: Electronic Manual Temperature Control (EMTC) (412-00 Climate Control System - General Information, Diagnosis and Testing). For dual automatic temperature control, REFER to: Climate Control System - Vehicles With: Dual Automatic Temperature Control (DATC) (412-00 Climate Control System - General Information, Diagnosis and Testing). If any other Diagnostic Trouble Codes (DTCs) are retrieved, REFER to: Electronic Engine Controls (303-14A Electronic Engine Controls - 2.0L Duratec-HE (125kW/170PS) - MI4, Diagnosis and Testing).

C3 CHECK THE COOLANT LEVEL

NOTE: *Allow the engine to cool before checking the degas bottle.*

- Visually check the engine coolant level in the degas bottle

Is the engine coolant level within specification?

Yes	INSTALL a new thermostat housing. REFER to: Thermostat Housing (303-03A Engine Cooling - 2.0L Duratec-HE (125kW/170PS) - MI4, Removal and Installation). CLEAR Diagnostic Trouble Codes (DTCs). If the DTC returns check for correct CHT sensor operation.

No	GO to Pinpoint Test A

Component Tests

Cooling System Pressure Test

WARNING: Always allow the engine to cool before opening the cooling system. Do not unscrew the coolant pressure relief cap when the engine is operating or the cooling system is hot. The cooling system is under pressure; steam and hot liquid can come out forcefully when the cap is loosened slightly. Failure to follow these instructions may result in serious personal injury.

NOTE: *Vehicles have a pressure relief cap on the degas bottle and no radiator cap.*

1. Turn the engine OFF.
2. Check the engine coolant and adjust as necessary.
3. Remove the degas bottle cap. Inspect the degas bottle cap and degas bottle for any issues that would cause improper sealing, such as for cross-threading, burrs, damaged o-ring, etc. If any issues are found, INSTALL a new cap and/or degas bottle.
4. Attach the Pressure Tester and adaptor (Snap-On TA53 or equivalent), to the degas bottle cap. The cap must hold pressure of 145 kPa +/- 21 kPa (21 PSI +/- 3 PSI). If any issues are found, INSTALL a new cap.

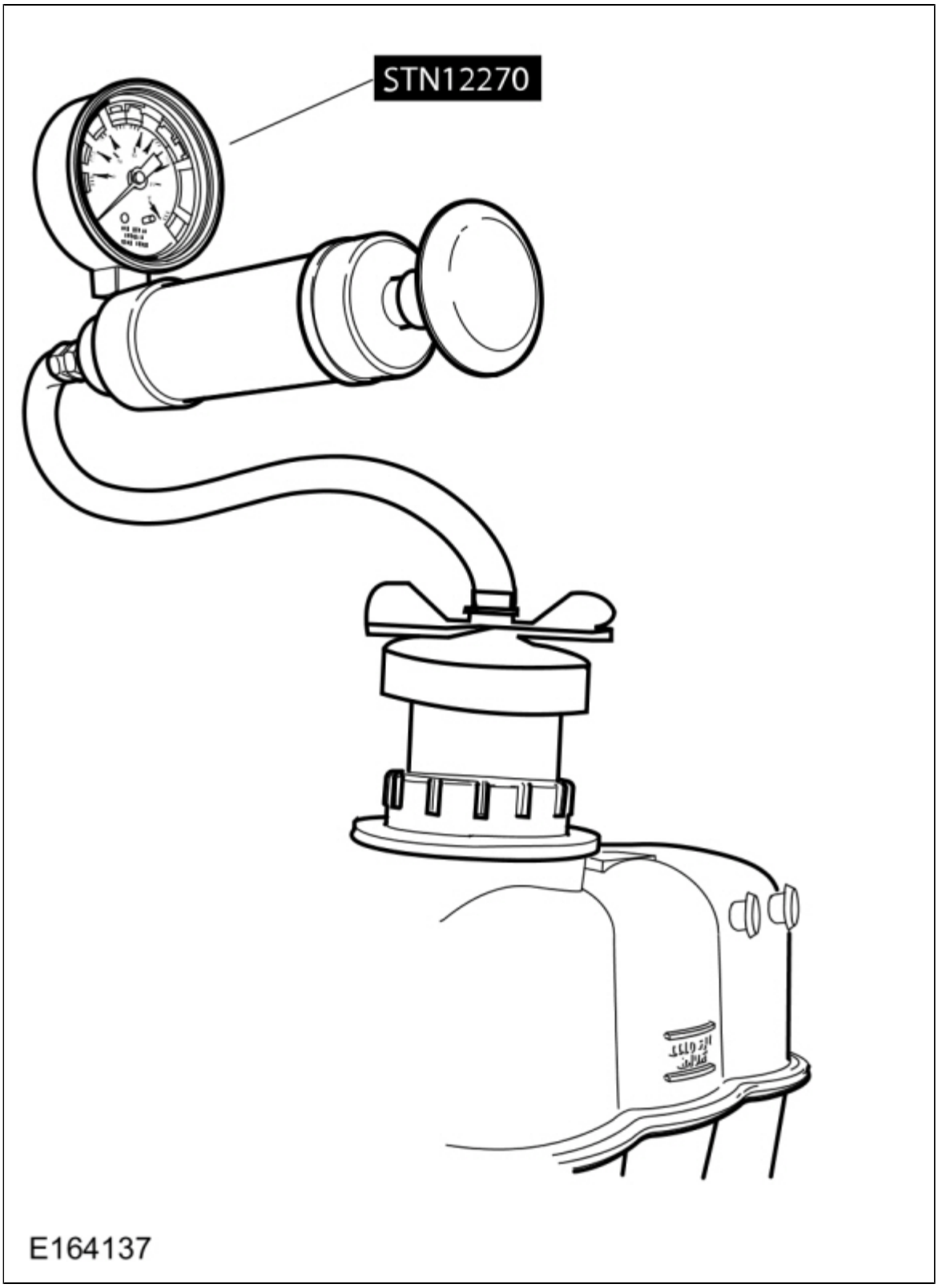

5. Attach the Pressure Tester and adaptor (Snap-On TA52, AST ASSFZ-47, Redline RDL95-0750 or equivalent) to the degas bottle..

6. **NOTICE: Do not pressurize the cooling system beyond the maximum pressure listed in the specifications table in this section, or cooling system components can be damaged.**

   To pressurize the engine cooling system, slowly press the plunger of the pressure test pump and increase the pressure to between 124 - 138 kPa (18 - 20 PSI). Observe the gauge reading for approximately 2 minutes. Pressure should not drop during this time. If the pressure drops within this time, inspect for leaks and repair as necessary.

7. If no leaks are found and the pressure drops, the leak may be internal to the engine. Inspect the coolant for engine oil and the engine oil for coolant.
   REFER to: Engine (303-00 Engine System - General Information, Diagnosis and Testing).

8. If the pressure does not drop remove the cooling system Pressure Tester and adaptor from degas bottle.

9. Install the degas bottle cap until it contacts the hard stop.

Thermostat

Install a new thermostat only after at least one of the following tests and checks have been carried out:

- Pinpoint Test B or C
- Thermostat Visual Inspection

Thermostat Visual Inspection

1. Remove the thermostat.

2. Examine the thermostat for signs of damage including:

- Valve not fully seated (light visible through the valve)
- Foreign material lodged in the main valve
- Bent or broken frame or flange
- Bent or broken spring
- Wax leaking from wax reservoir or a bulge in the reservoir
- Any other damage or distortion

3. **NOTE:** *If no damage is found during the inspection, do not attempt to open the thermostat using hot water or other heat sources. This method is not an accurate means to test the function of the thermostat and may damage the thermostat.*

   If damage is found during the inspection, remove any foreign material or broken pieces and install a new thermostat.

Radiator Leak Test, Removed From Vehicle

NOTICE: Never leak test an aluminum radiator in the same water that copper/brass radiators are tested in. Flux and caustic cleaners may be present in the cleaning tank and they will damage aluminum radiators.

NOTE: *Clean the radiator before leak testing to avoid contamination of tank.*

1. Leak test the radiator in clean water with air pressurized to the maximum pressure listed in the Specifications table.

Copyright © Ford Motor Company

Block Heater

Removal

NOTE: *Removal steps in this procedure may contain installation details.*

1. **WARNING: Before beginning any service procedure in this section, refer to Safety Warnings in section 100-00 General Information. Failure to follow this instruction may result in serious personal injury.**

   Refer to: Engine Cooling System Health and Safety Precautions (100-00 General Information, Description and Operation).

2. Refer to: Cooling System Draining, Filling and Bleeding (303-03A Engine Cooling - 2.0L Duratec-HE (125kW/170PS) - MI4, General Procedures).
   Refer to: Cooling System Draining and Vacuum Filling (303-03A Engine Cooling - 2.0L Duratec-HE (125kW/170PS) - MI4, General Procedures).

3. 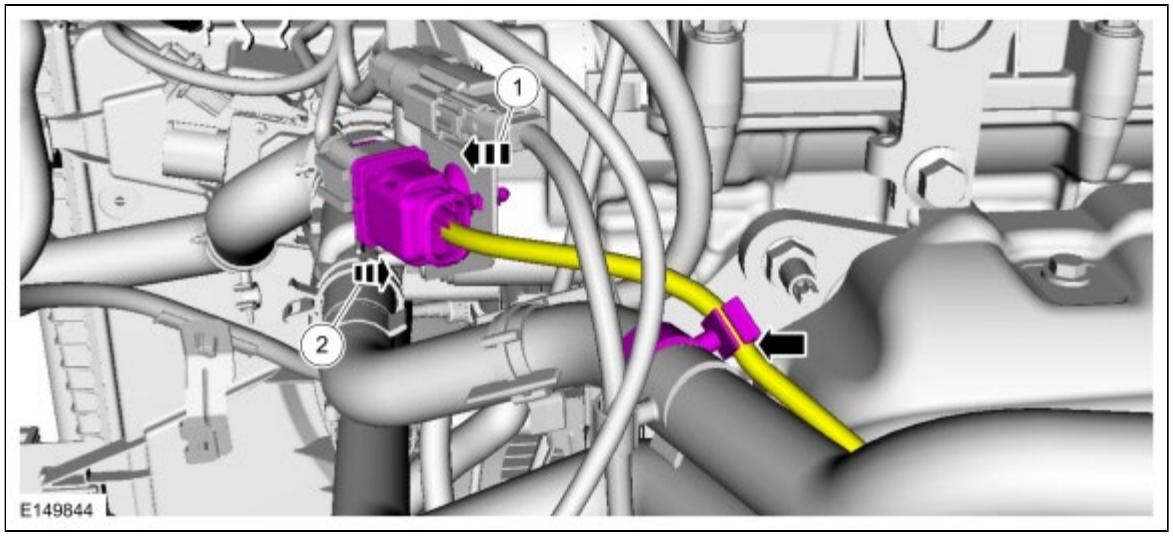

4. *Torque* : 11 Nm

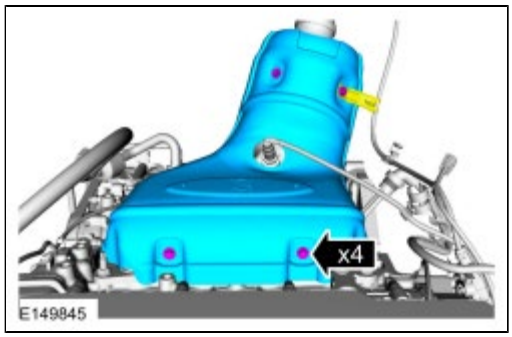

5. **NOTE:** *Note the position of the component before removal.*

   NOTE: *Make sure that the component is installed to the position noted before removal.*

   Torque : 40 Nm

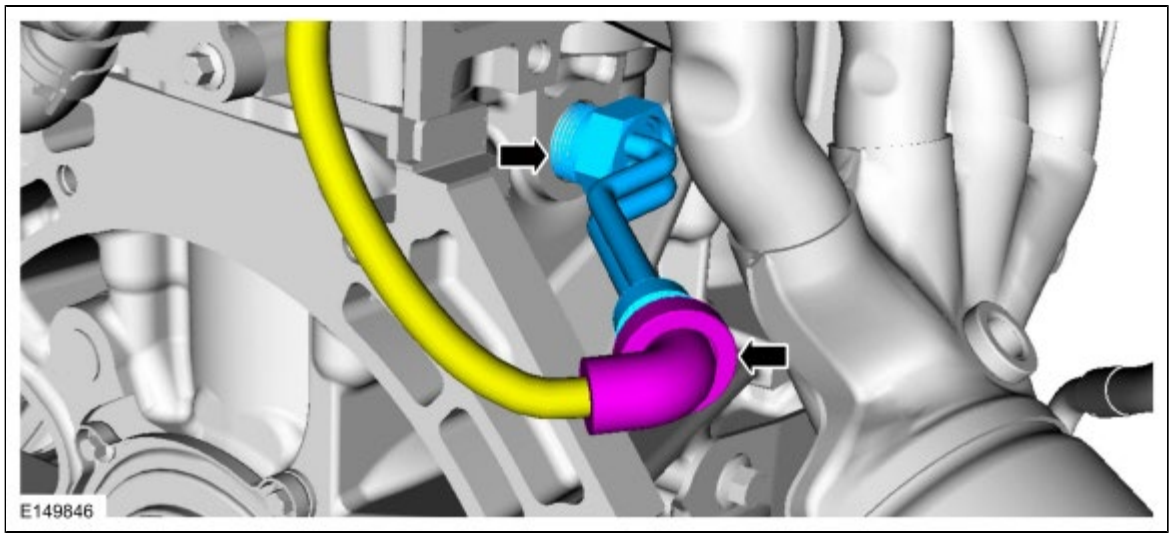

Installation

1. To install, reverse the removal procedure.

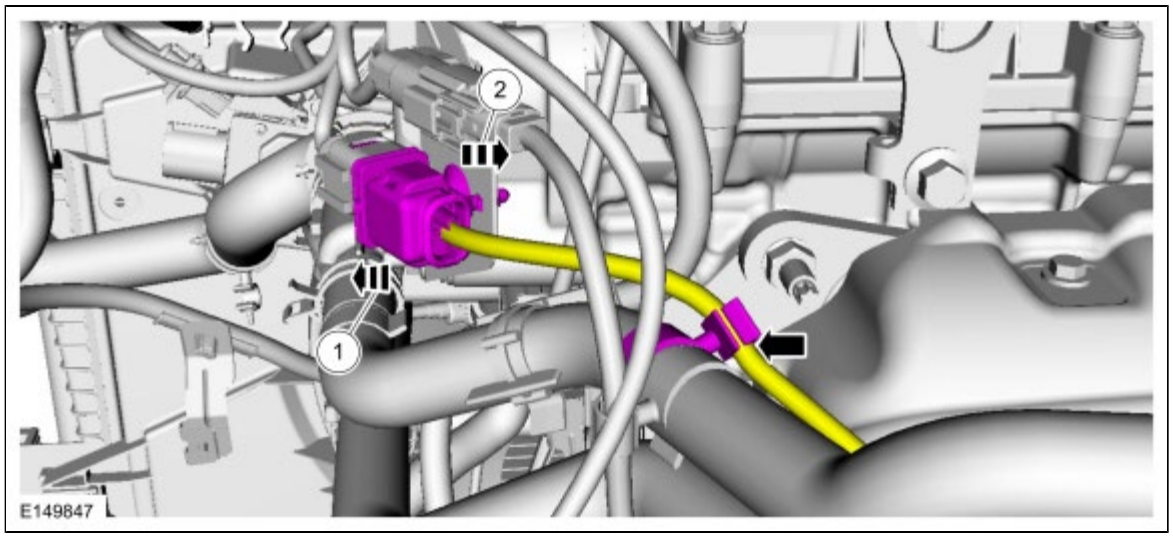

2. or

Copyright © Ford Motor Company

Coolant Pump

Removal

1. **WARNING: Before beginning any service procedure in this section, refer to Safety Warnings in section 100-00 General Information. Failure to follow this instruction may result in serious personal injury.**

   Refer to: Engine Cooling System Health and Safety Precautions (100-00 General Information, Description and Operation).

2. Refer to: Cooling System Draining, Filling and Bleeding (303-03A Engine Cooling - 2.0L Duratec-HE (125kW/170PS) - MI4, General Procedures).
   Refer to: Cooling System Draining and Vacuum Filling (303-03A Engine Cooling - 2.0L Duratec-HE (125kW/170PS) - MI4, General Procedures).

3. 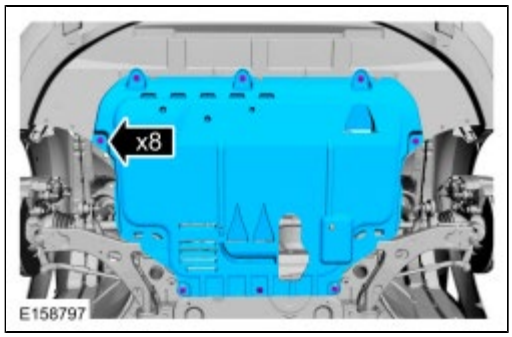

4. Position aside.

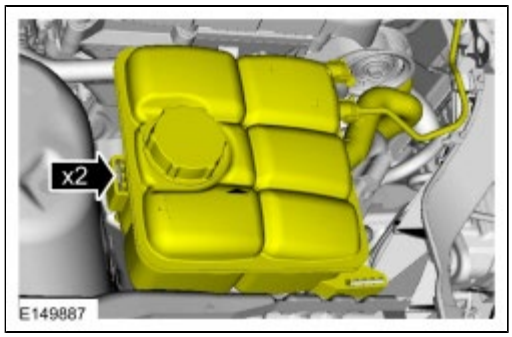

5. 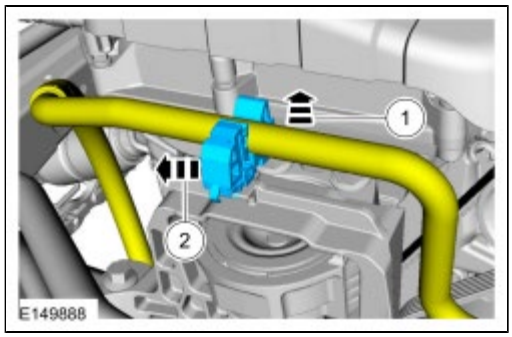

6.

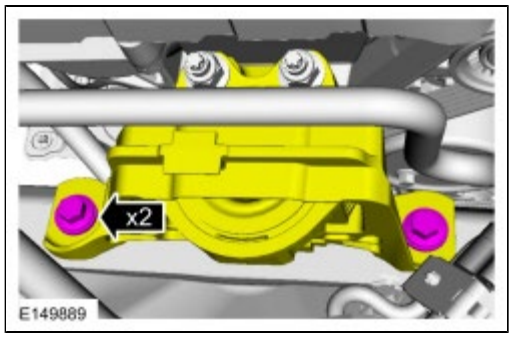

7. *General Equipment* : Trolley Jack

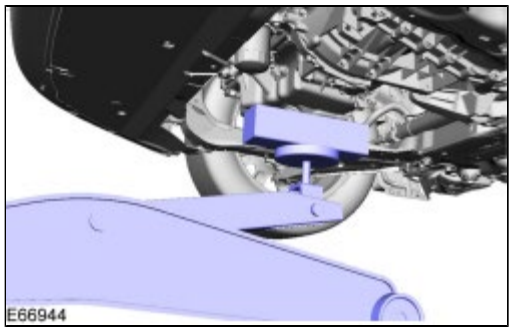

8. Loosen 2 turns.

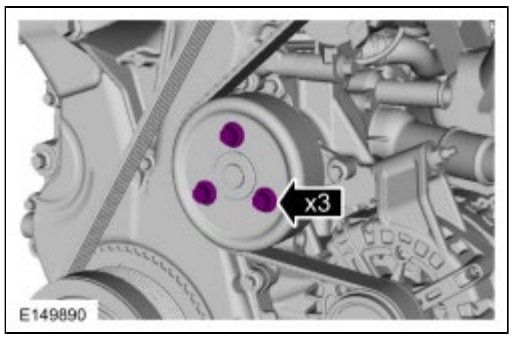

9. **NOTICE: Position the accessory drive belt so no coolant will drip on the belt, or the belt may be contaminated.**

   Position aside.

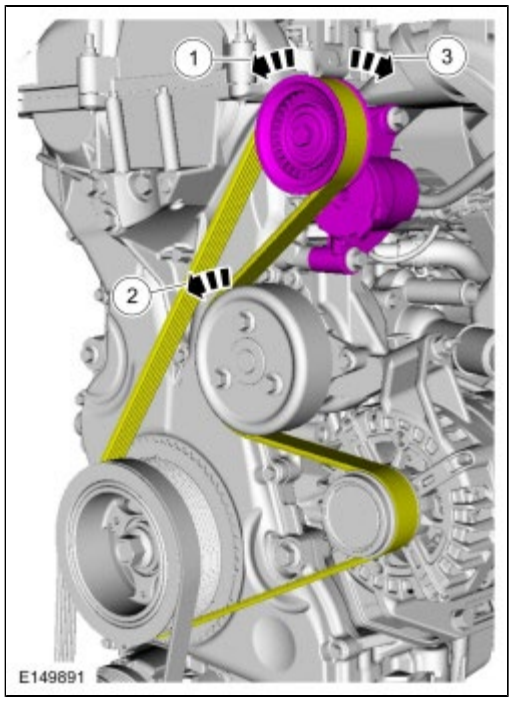

10.

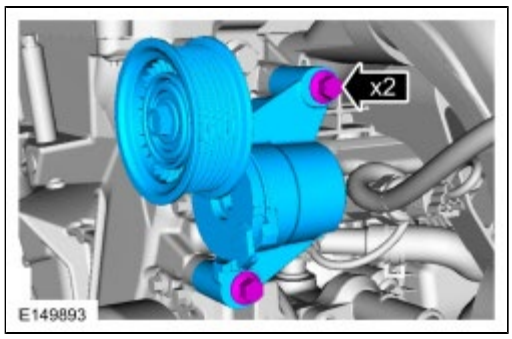

11.

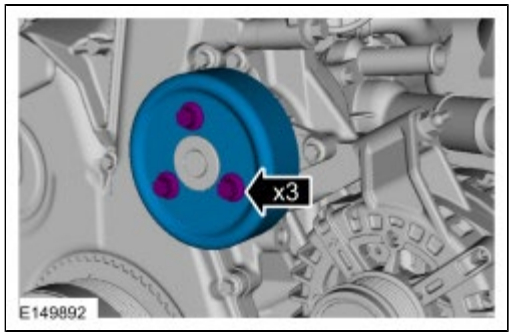

12.

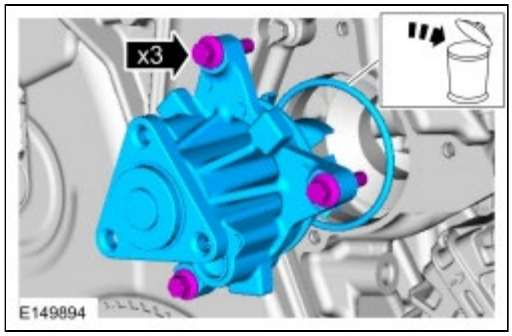

Installation

1. *Material* : Motorcraft® Orange Antifreeze/Coolant Concentrated / VC-3-B (WSS-M97B44-D)
   Material : Motorcraft® Orange Antifreeze/Coolant Prediluted / VC-3DIL-B (WSS-M97B44-D2)
   Torque : 10 Nm

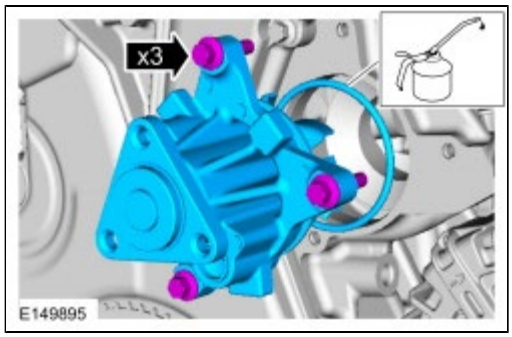

2. Finger tight.

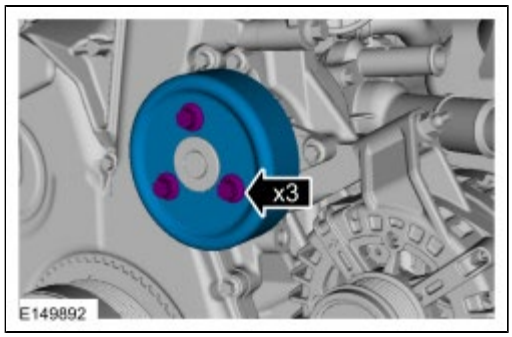

3. *Torque* : 25 Nm

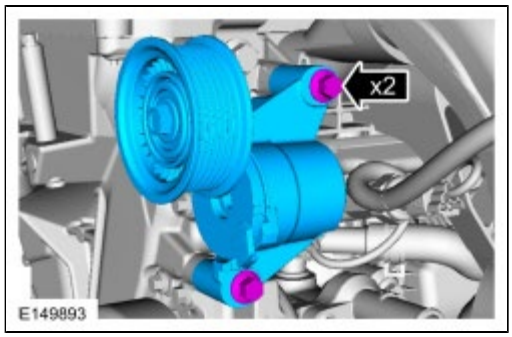

4.

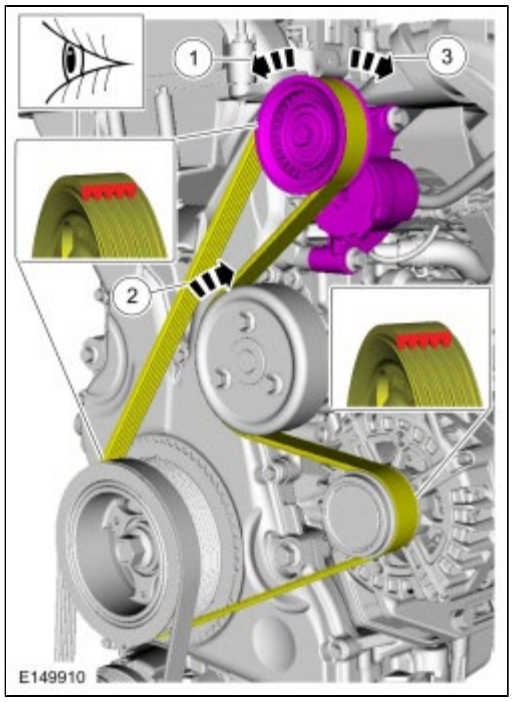

5. *Torque* : 20 Nm

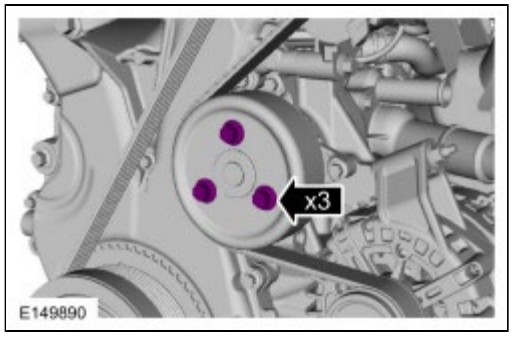

6. *General Equipment* : Trolley Jack

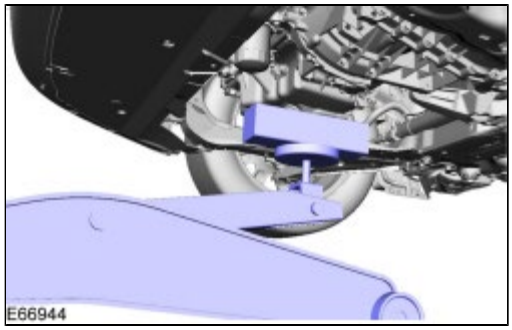

7. *Torque* : 90 Nm

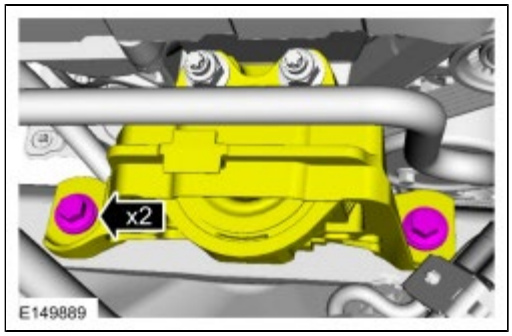

8.

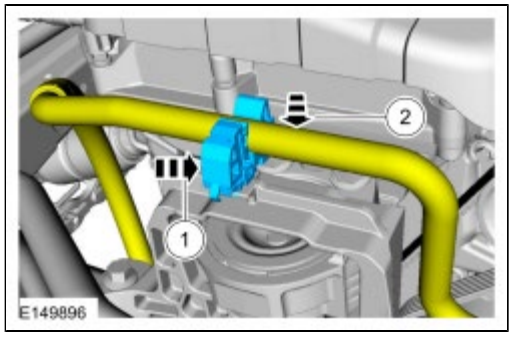

9.

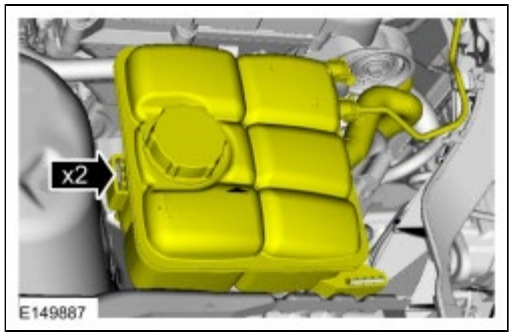

10.

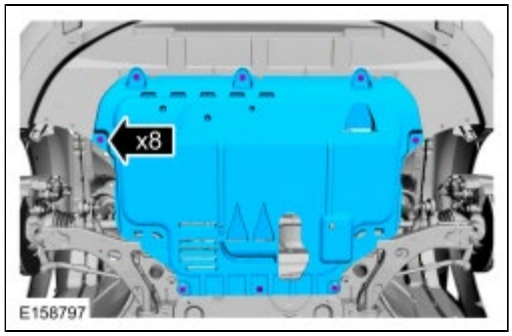

11. Refer to: Cooling System Draining, Filling and Bleeding (303-03A Engine Cooling - 2.0L Duratec-HE (125kW/170PS) - MI4, General Procedures).
    Refer to: Cooling System Draining and Vacuum Filling (303-03A Engine Cooling - 2.0L Duratec-HE (125kW/170PS) - MI4, General Procedures).

Copyright © Ford Motor Company

Thermostat Housing

Removal

NOTE: *Removal steps in this procedure may contain installation details.*

1. **WARNING: Before beginning any service procedure in this section, refer to Safety Warnings in section 100-00 General Information. Failure to follow this instruction may result in serious personal injury.**

   Refer to: Engine Cooling System Health and Safety Precautions (100-00 General Information, Description and Operation).

2. Refer to: Cooling System Draining, Filling and Bleeding (303-03A Engine Cooling - 2.0L Duratec-HE (125kW/170PS) - MI4, General Procedures).
   Refer to: Cooling System Draining and Vacuum Filling (303-03A Engine Cooling - 2.0L Duratec-HE (125kW/170PS) - MI4, General Procedures).

3. Disconnect the battery ground cable.
   Refer to: Battery Disconnect and Connect (414-01 Battery, Mounting and Cables, General Procedures).

4. 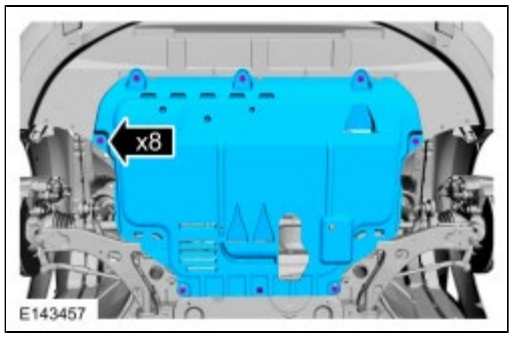

5. *Torque* : 17 Nm

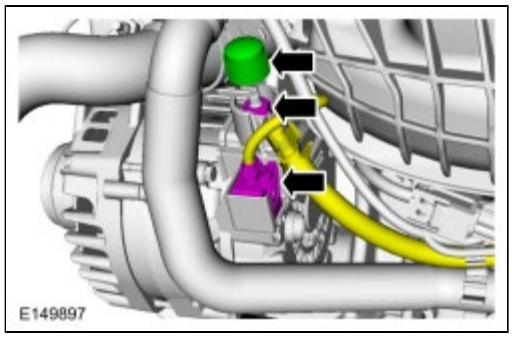

6. **NOTICE: Cover the generator to prevent coolant contamination and possible damage to generator.**

   Completely cover the generator with waterproof plastic.

7. *General Equipment* : Hose Clamp Remover/Installer

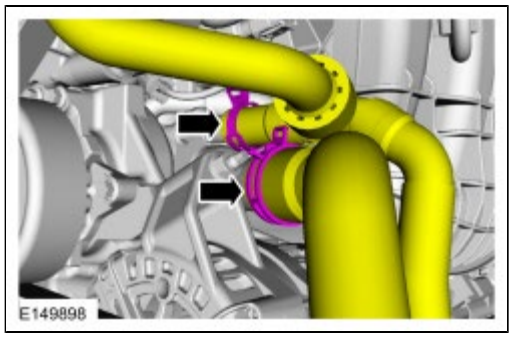

8. *Torque* : 10 Nm

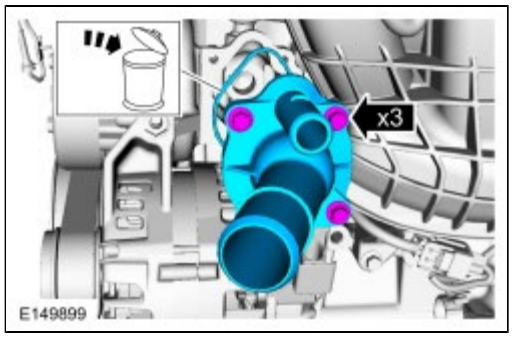

Installation

1. To install, reverse the removal procedure.

Copyright © Ford Motor Company

Radiator

Removal

1. **WARNING: Before beginning any service procedure in this section, refer to Safety Warnings in section 100-00 General Information. Failure to follow this instruction may result in serious personal injury.**

   Refer to: Engine Cooling System Health and Safety Precautions (100-00 General Information, Description and Operation).

2. Refer to: Air Conditioning (A/C) System Recovery, Evacuation and Charging (412-00 Climate Control System - General Information, General Procedures).

3. Discard the O-rings and gasket seals.

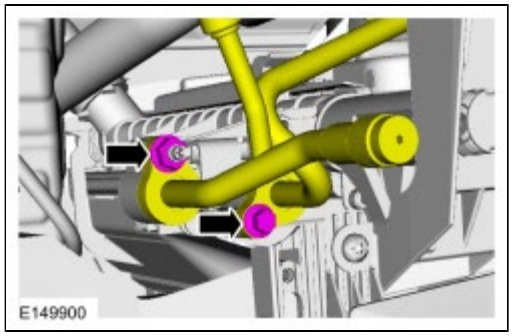

4. Refer to: Cooling System Draining, Filling and Bleeding (303-03A Engine Cooling - 2.0L Duratec-HE (125kW/170PS) - MI4, General Procedures).
   Refer to: Cooling System Draining and Vacuum Filling (303-03A Engine Cooling - 2.0L Duratec-HE (125kW/170PS) - MI4, General Procedures).

5.

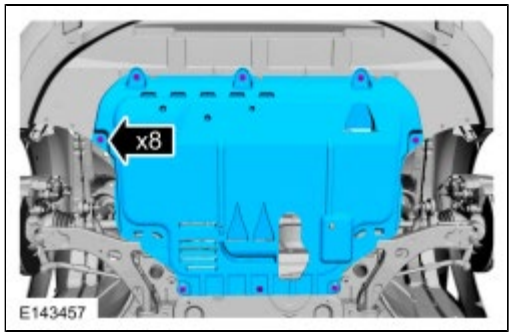

6.

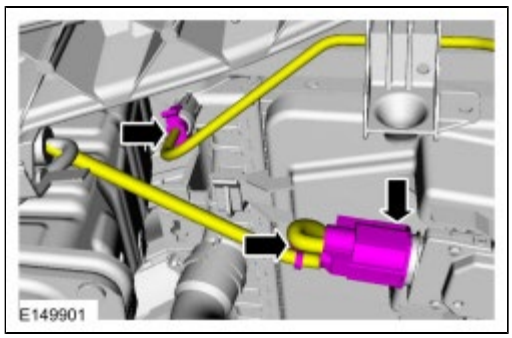

7.

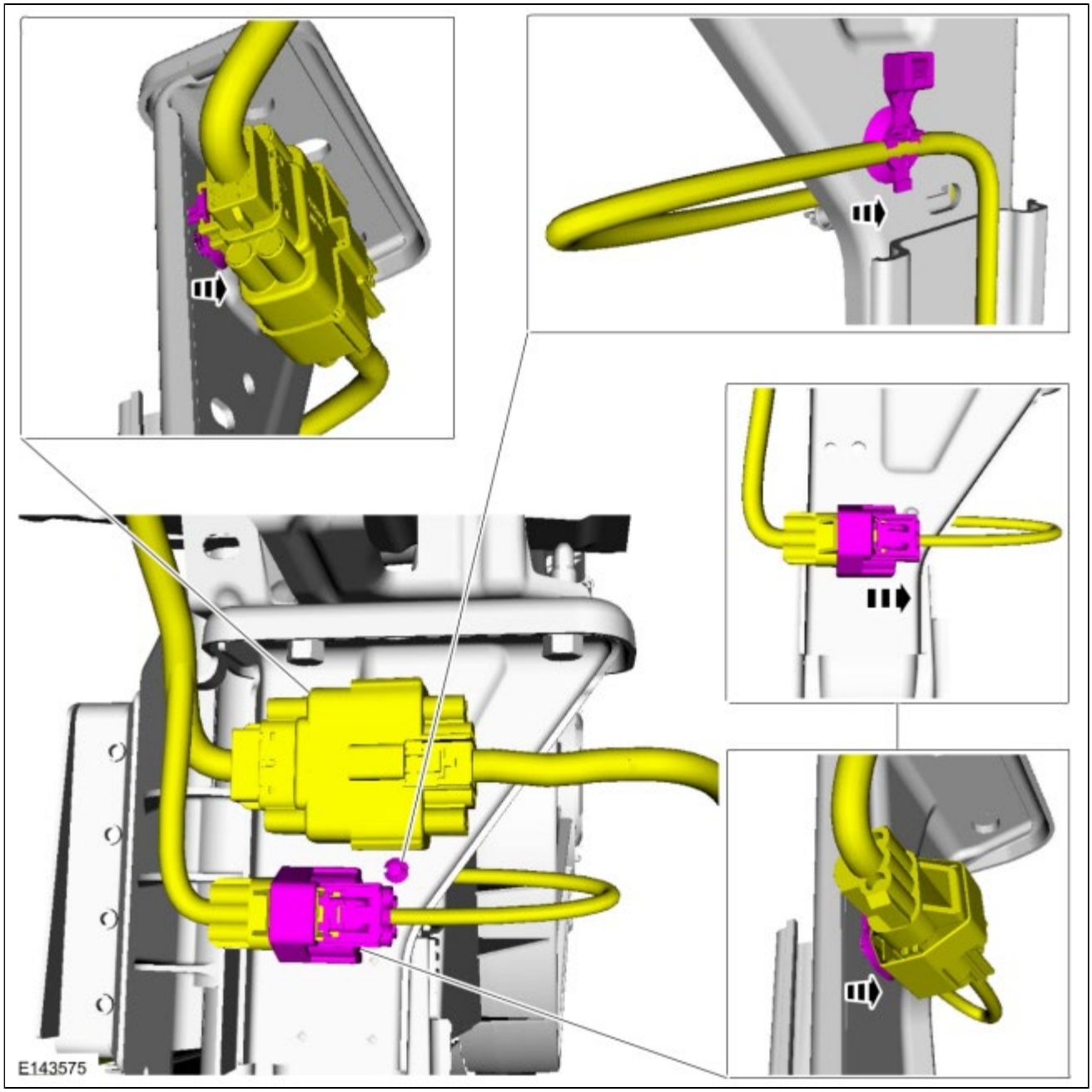

8.

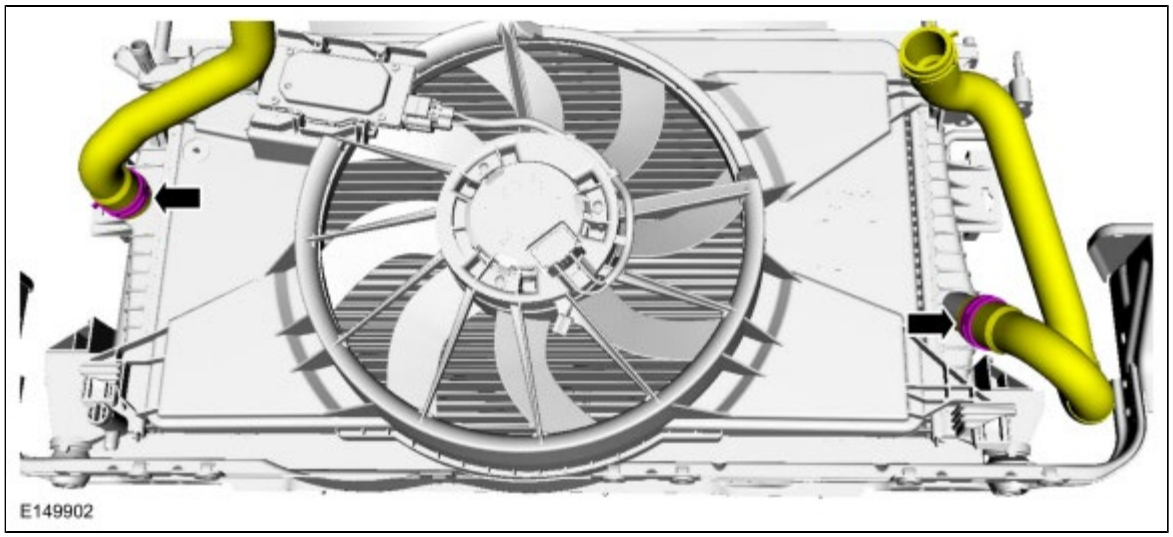

9.

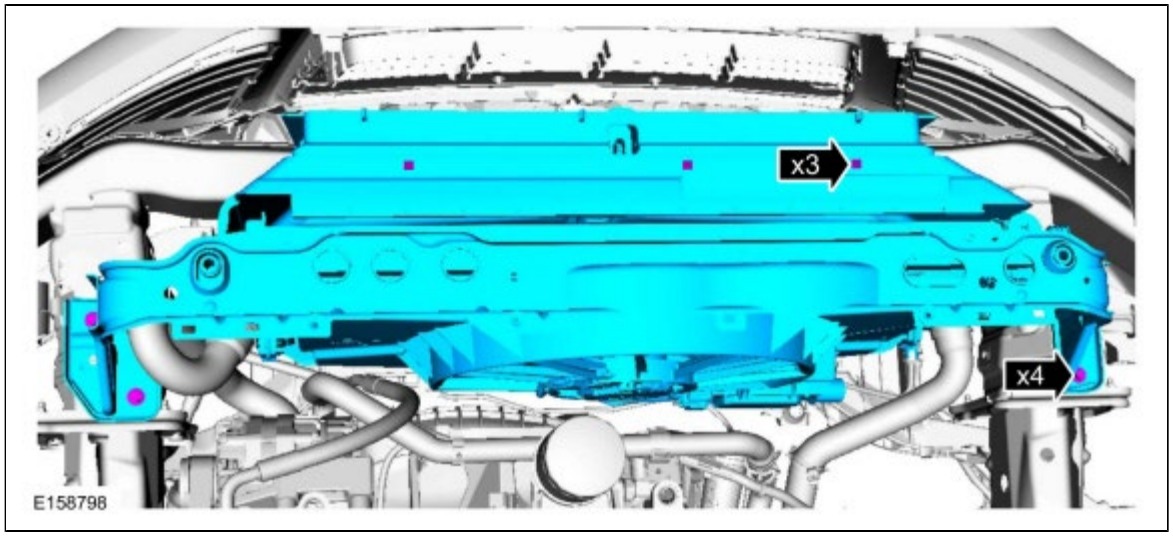

10.

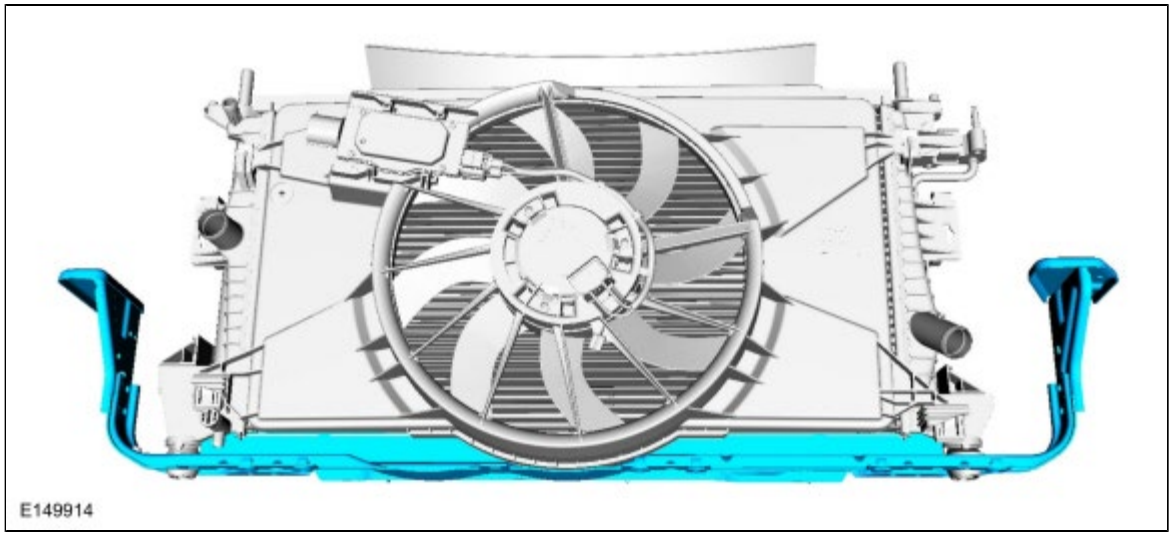

11.

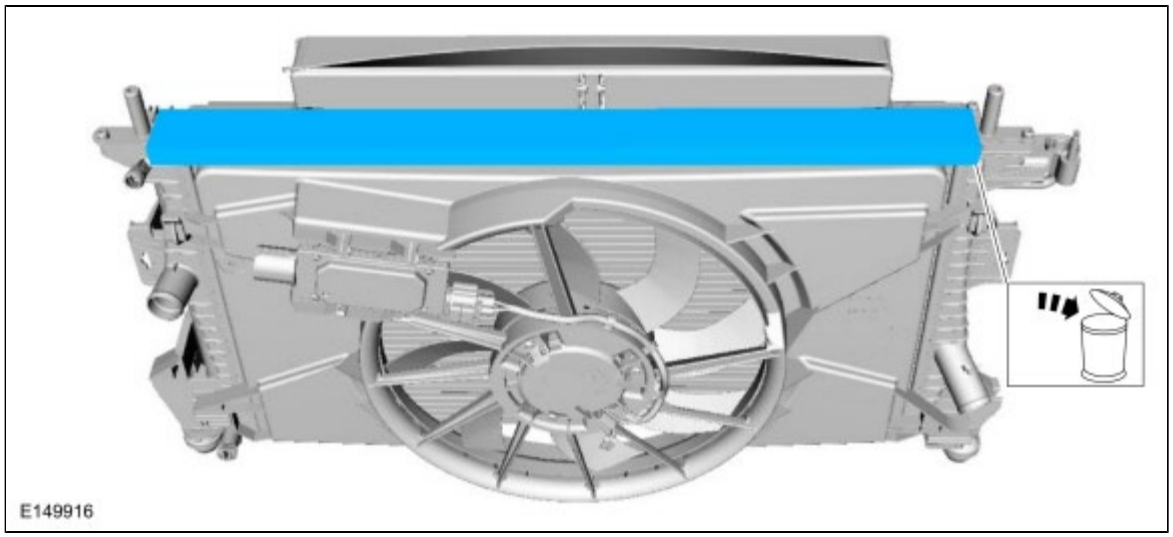

12.

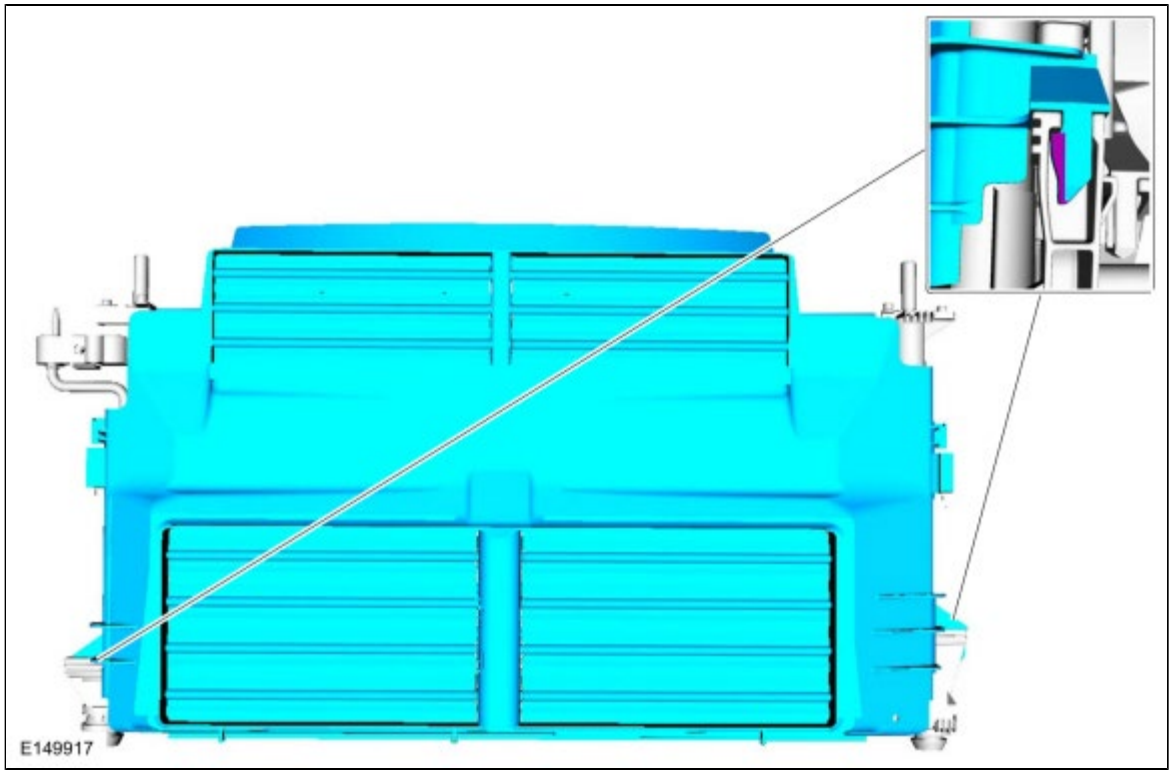

13.

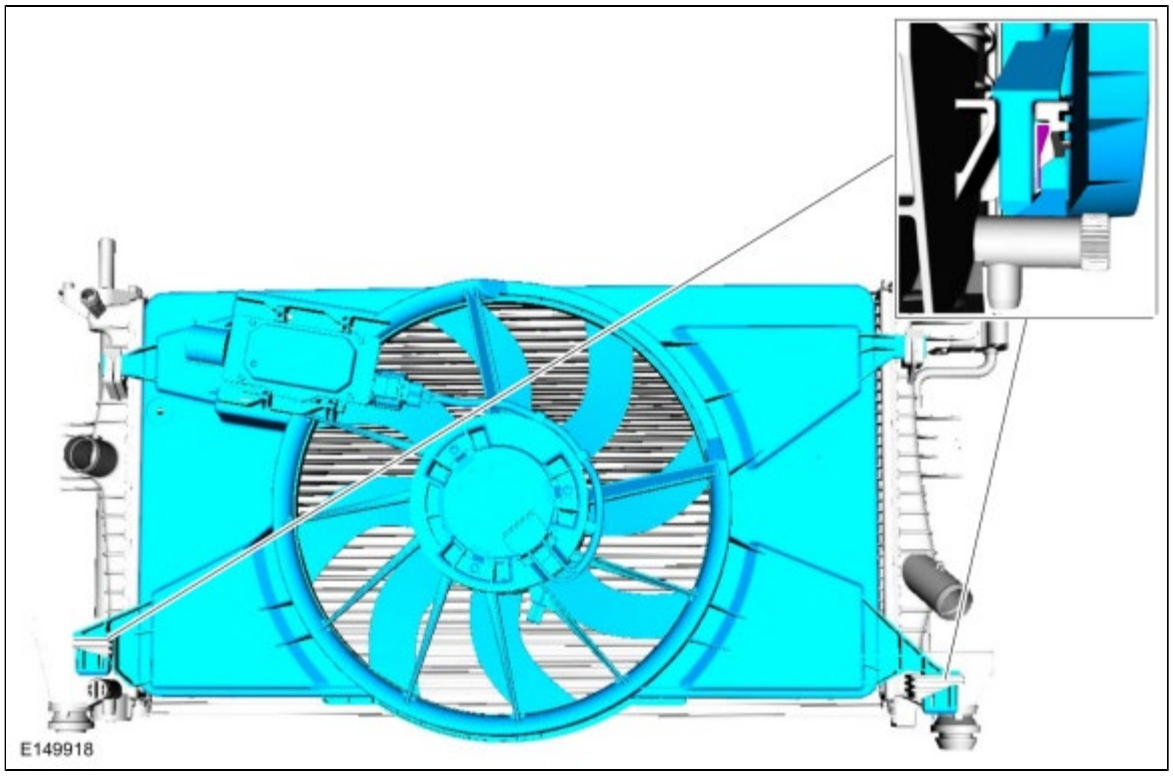

14.

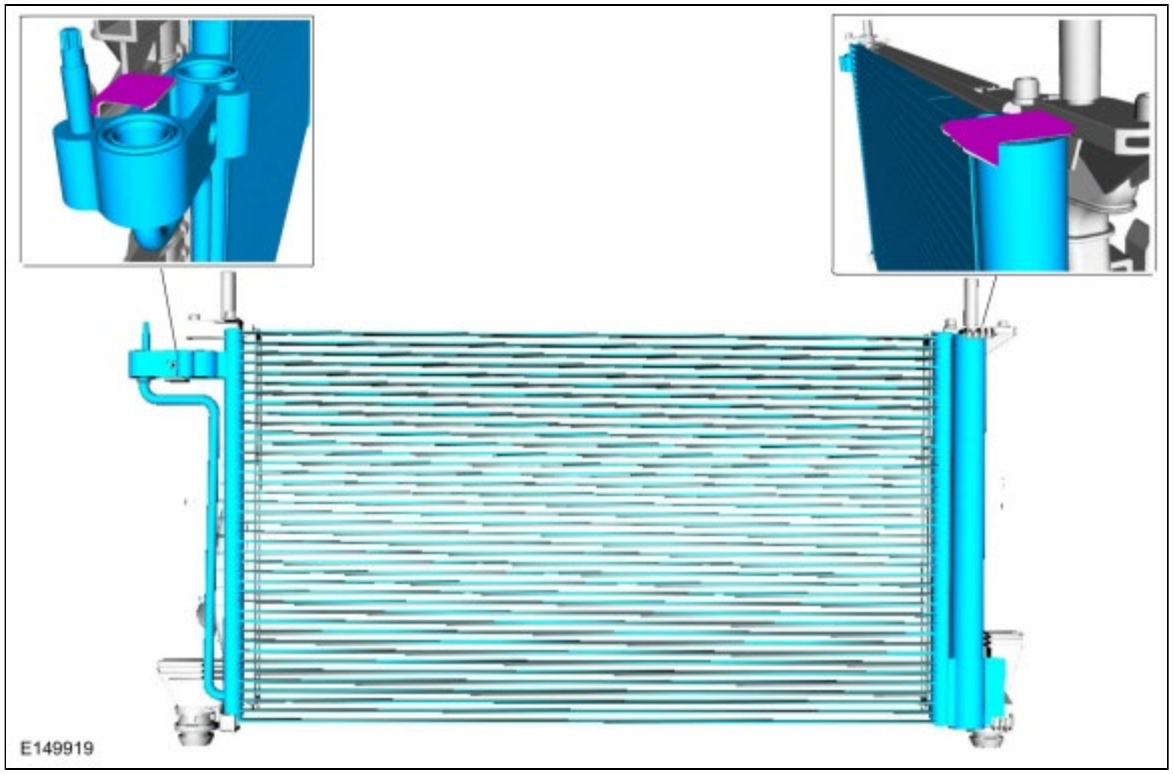

15.

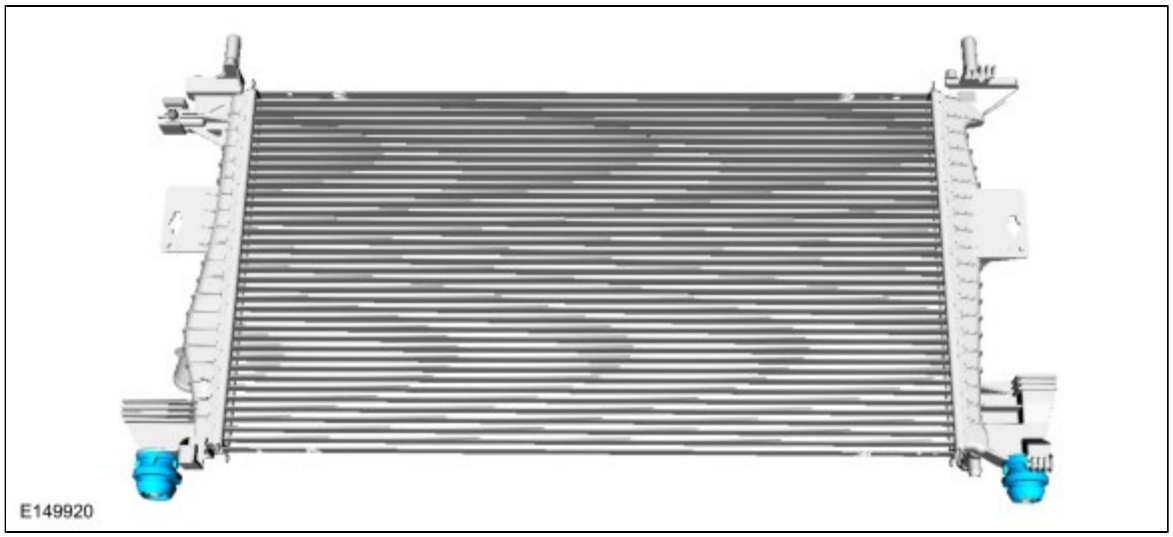

Installation

1.

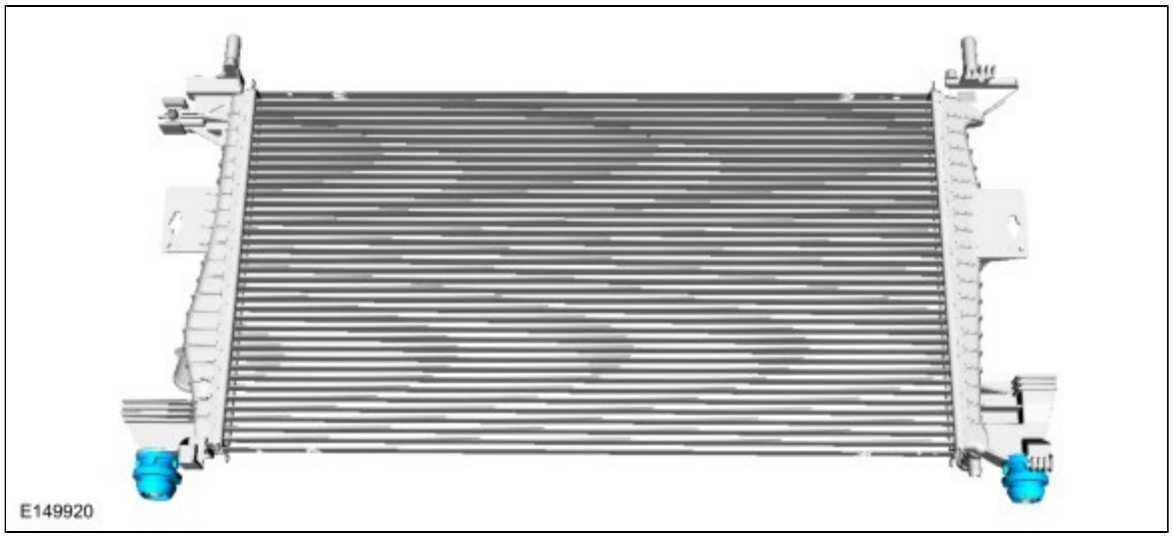

2.

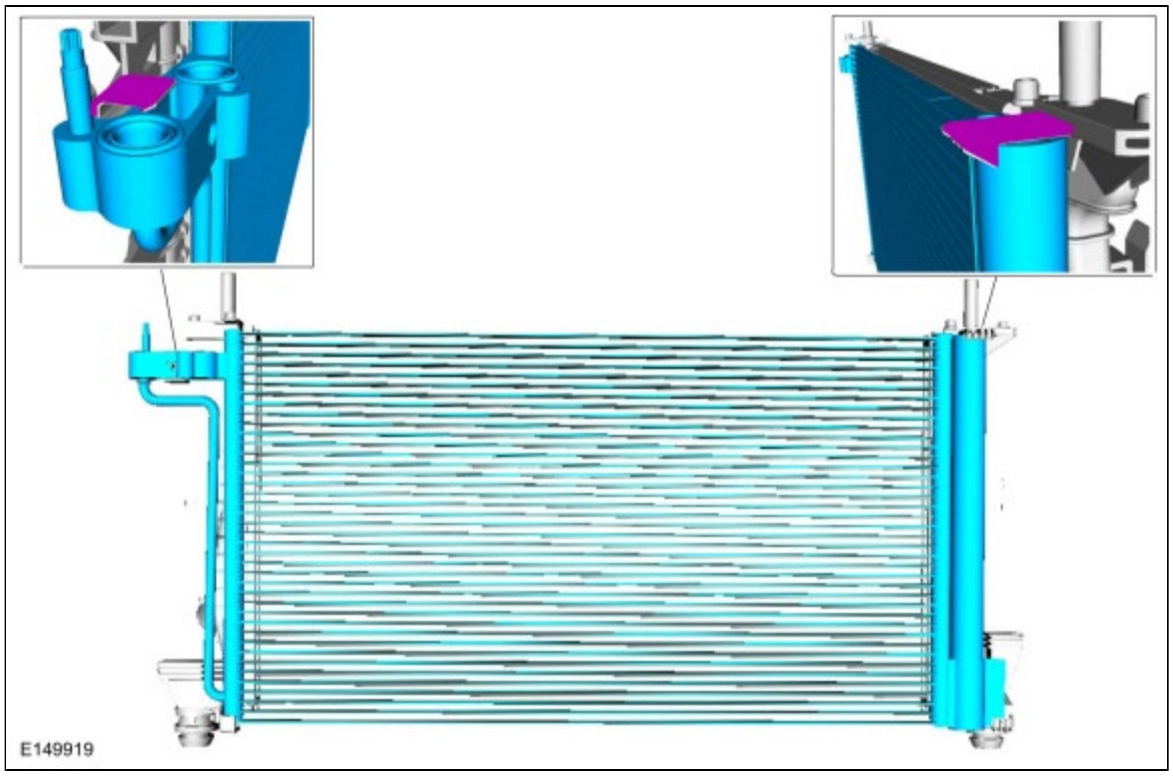

3.

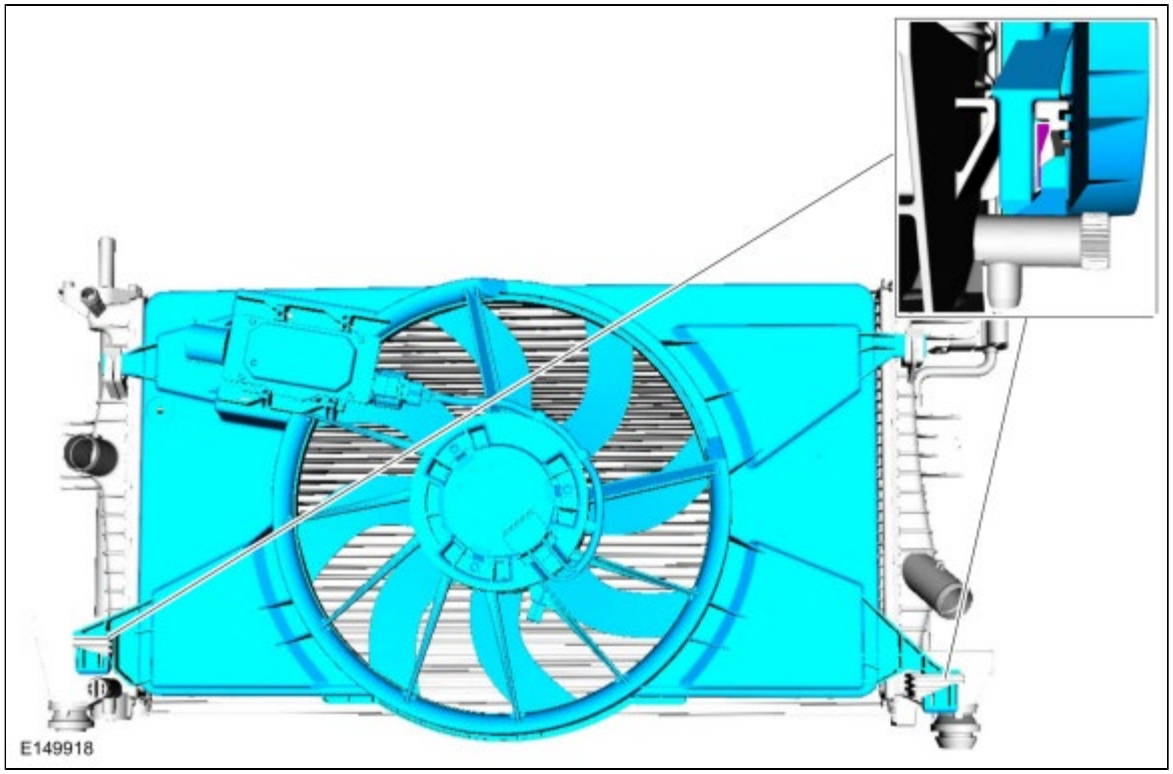

4.

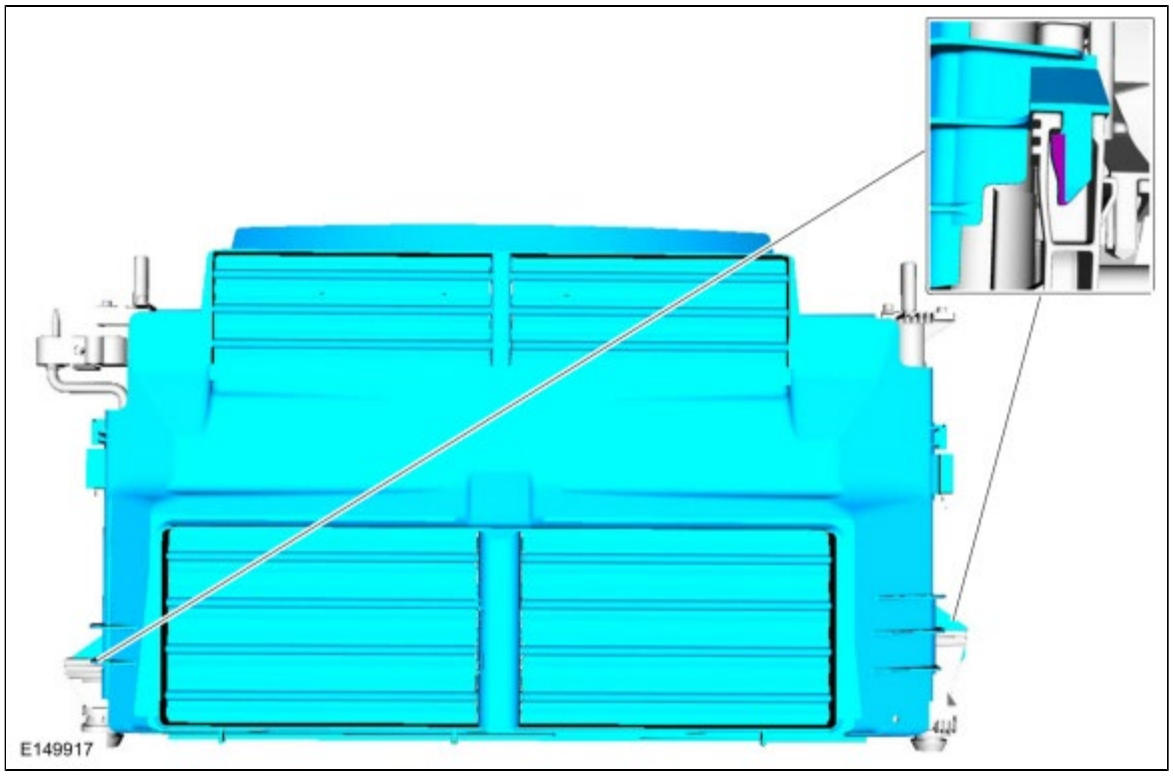

5.

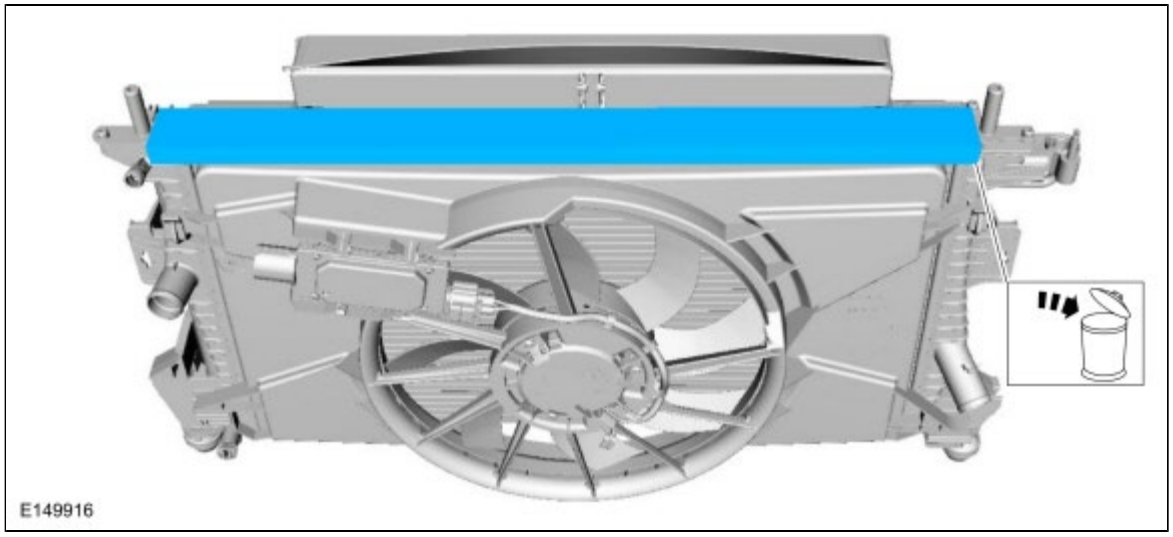

6.

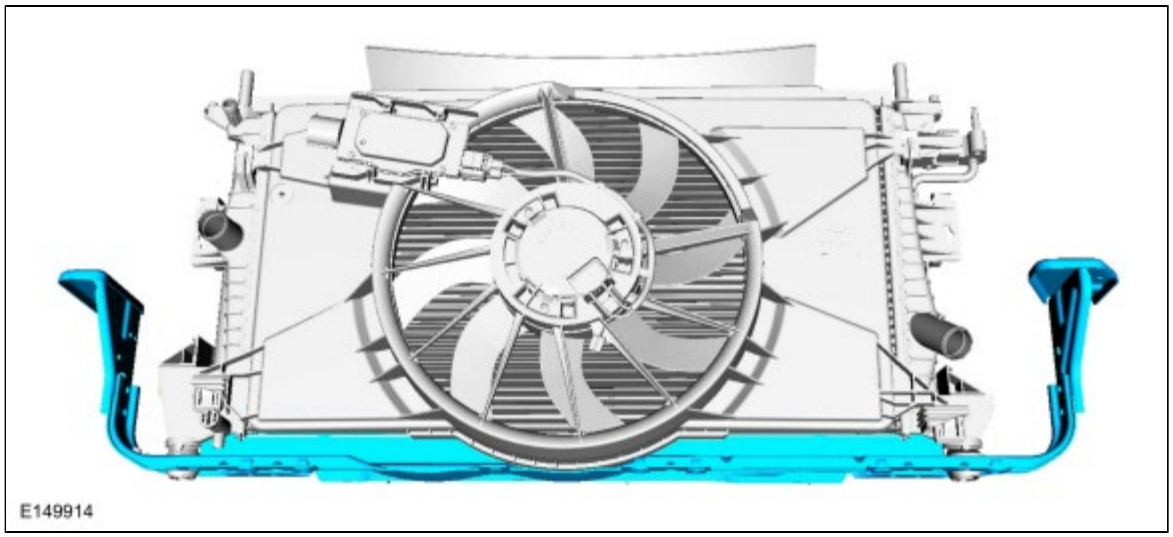

7. *Torque* : 25 Nm

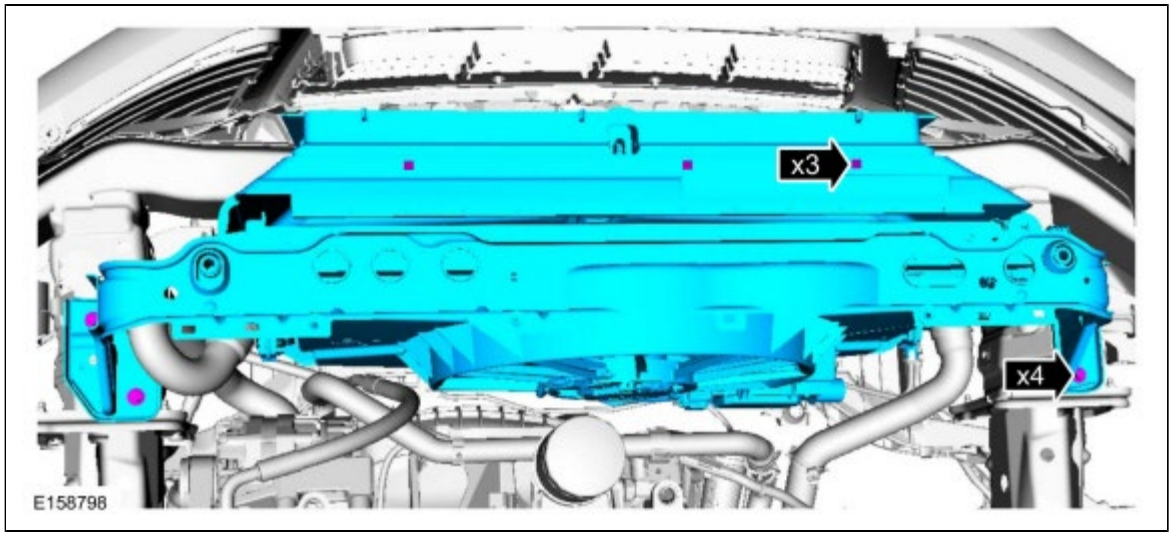

8.

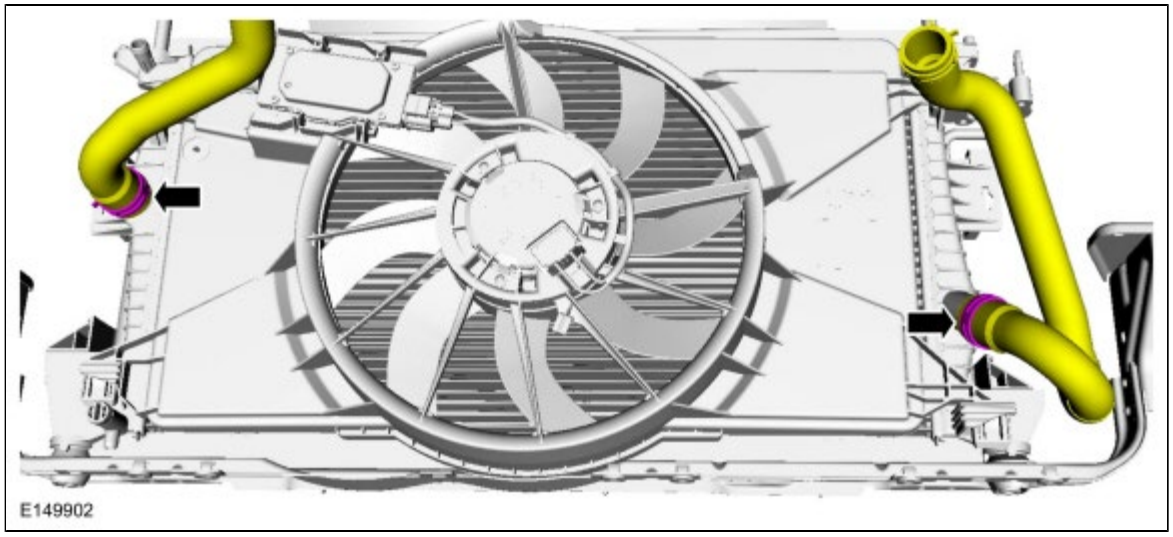

9.

E149921

10.

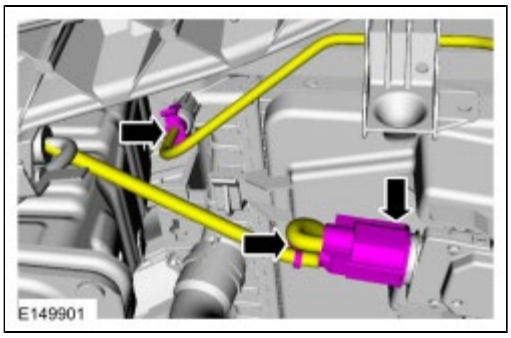

11.

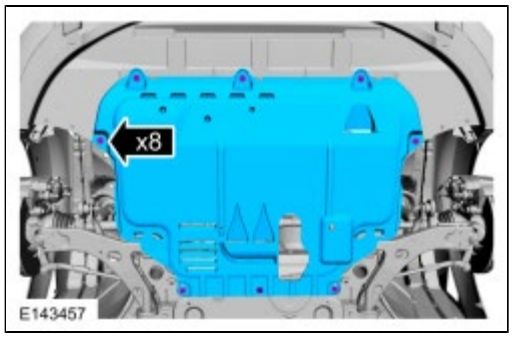

12. Install new O-rings and gasket seals.
    Torque : 15 Nm

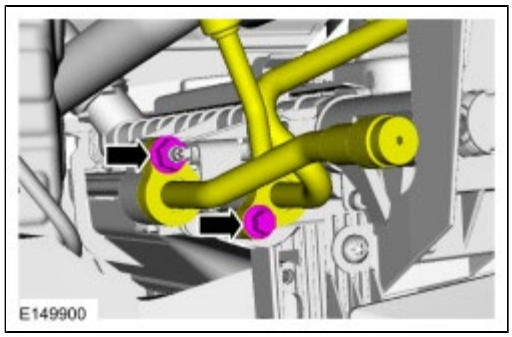

13. Refer to: Cooling System Draining, Filling and Bleeding (303-03A Engine Cooling - 2.0L Duratec-HE (125kW/170PS) - MI4, General Procedures).
    Refer to: Cooling System Draining and Vacuum Filling (303-03A Engine Cooling - 2.0L Duratec-HE (125kW/170PS) - MI4, General Procedures).

14. Refer to: Air Conditioning (A/C) System Recovery, Evacuation and Charging (412-00 Climate Control System - General Information, General Procedures).

Copyright © Ford Motor Company

Cooling Fan Motor and Shroud

Removal

NOTE: *Removal steps in this procedure may contain installation details.*

1. **WARNING: Before beginning any service procedure in this section, refer to Safety Warnings in section 100-00 General Information. Failure to follow this instruction may result in serious personal injury.**

   Refer to: Engine Cooling System Health and Safety Precautions (100-00 General Information, Description and Operation).

2. Refer to: Jacking and Lifting - Overview (100-02 Jacking and Lifting, Description and Operation).

3. 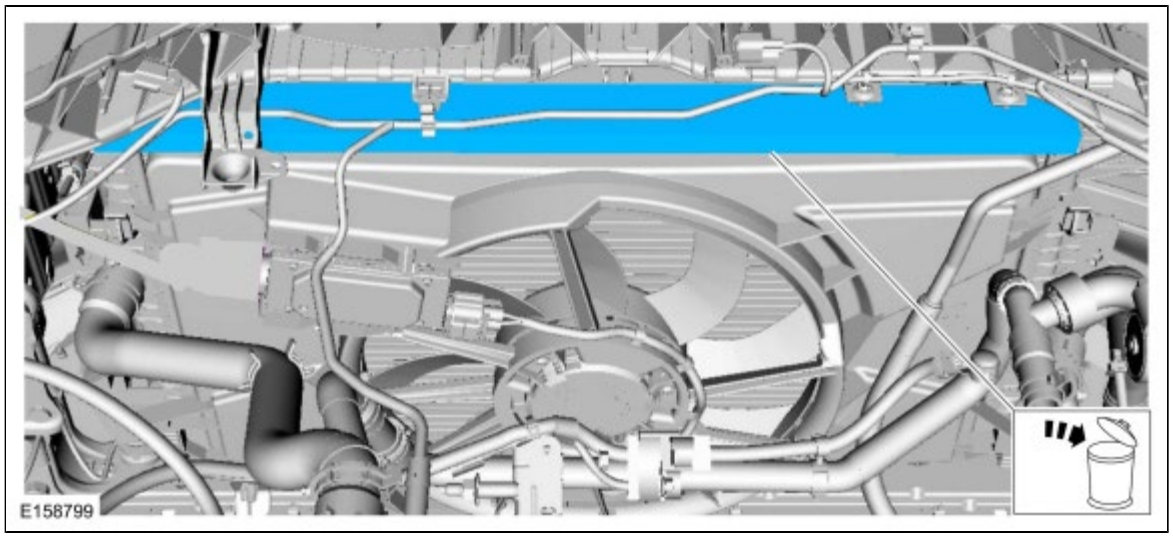

4.

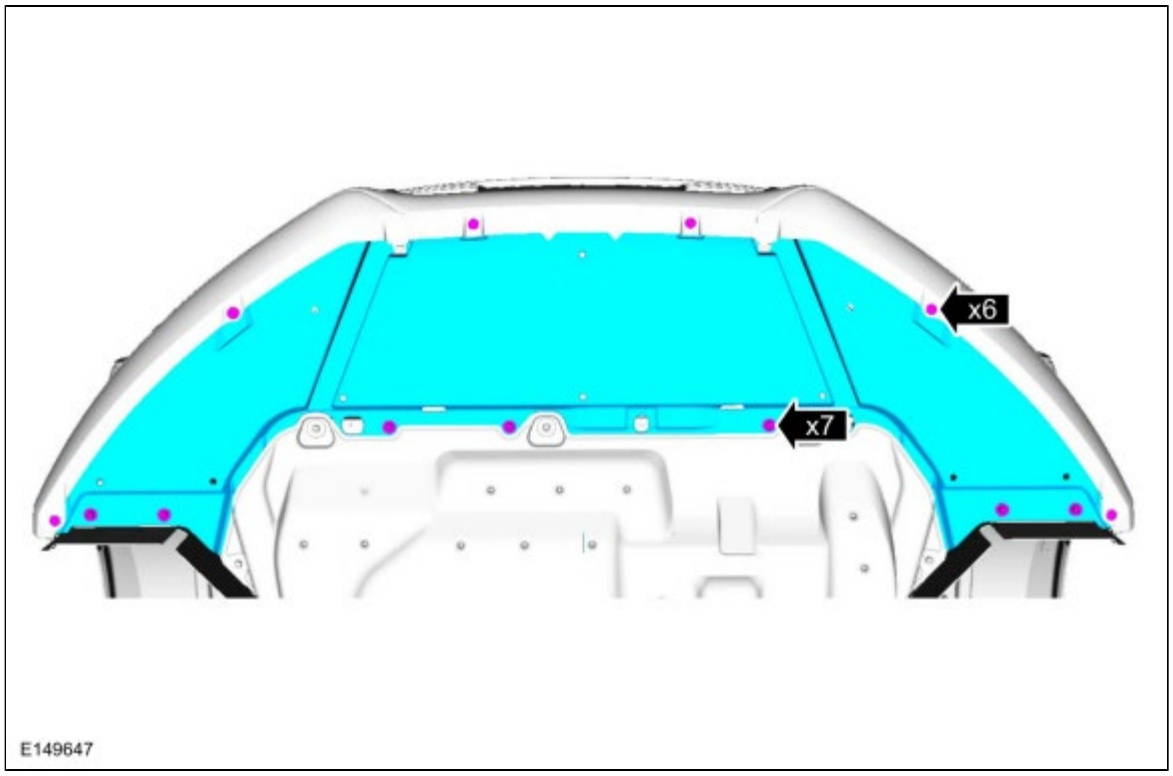

5.

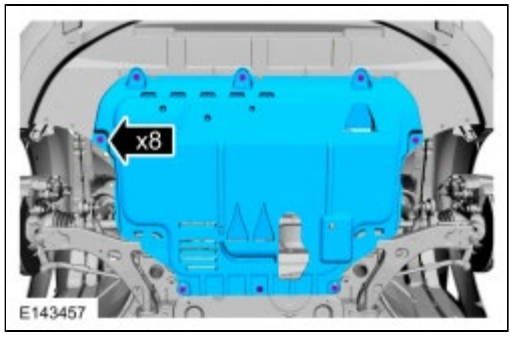

6.

- *Torque* : 8 Nm
- *Angle* : 180

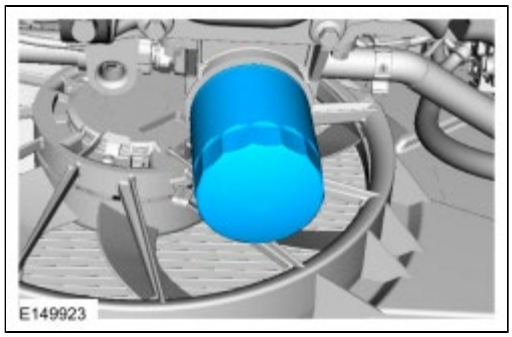

7.

8.

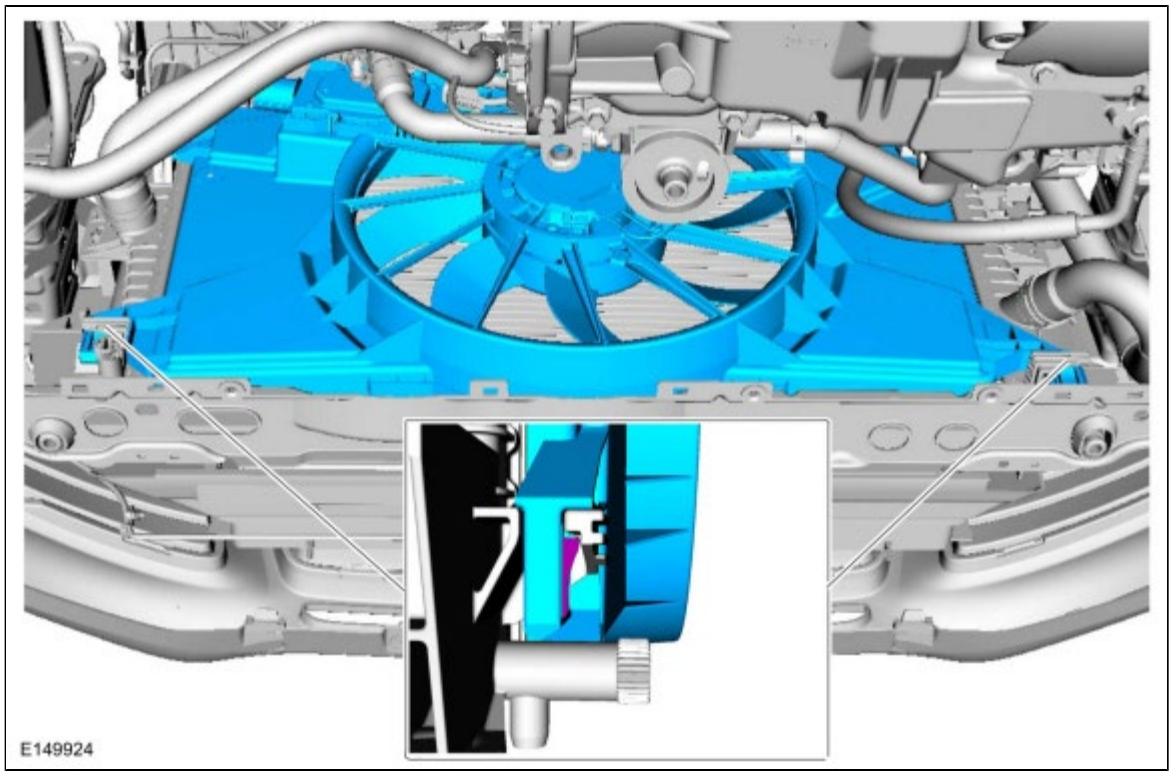

Installation

1. To install, reverse the removal procedure.

Copyright © Ford Motor Company

Cooling System Draining, Filling and Bleeding

1. **WARNING: Before beginning any service procedure in this section, refer to Safety Warnings in section 100-00 General Information. Failure to follow this instruction may result in serious personal injury.**

   Refer to: Engine Cooling System Health and Safety Precautions (100-00 General Information, Description and Operation).

2. With the vehicle in NEUTRAL, position it on a hoist.
   Refer to: Jacking and Lifting - Overview (100-02 Jacking and Lifting, Description and Operation).

3. Remove the 6 pushpins, the 7 screws and the radiator air deflector.

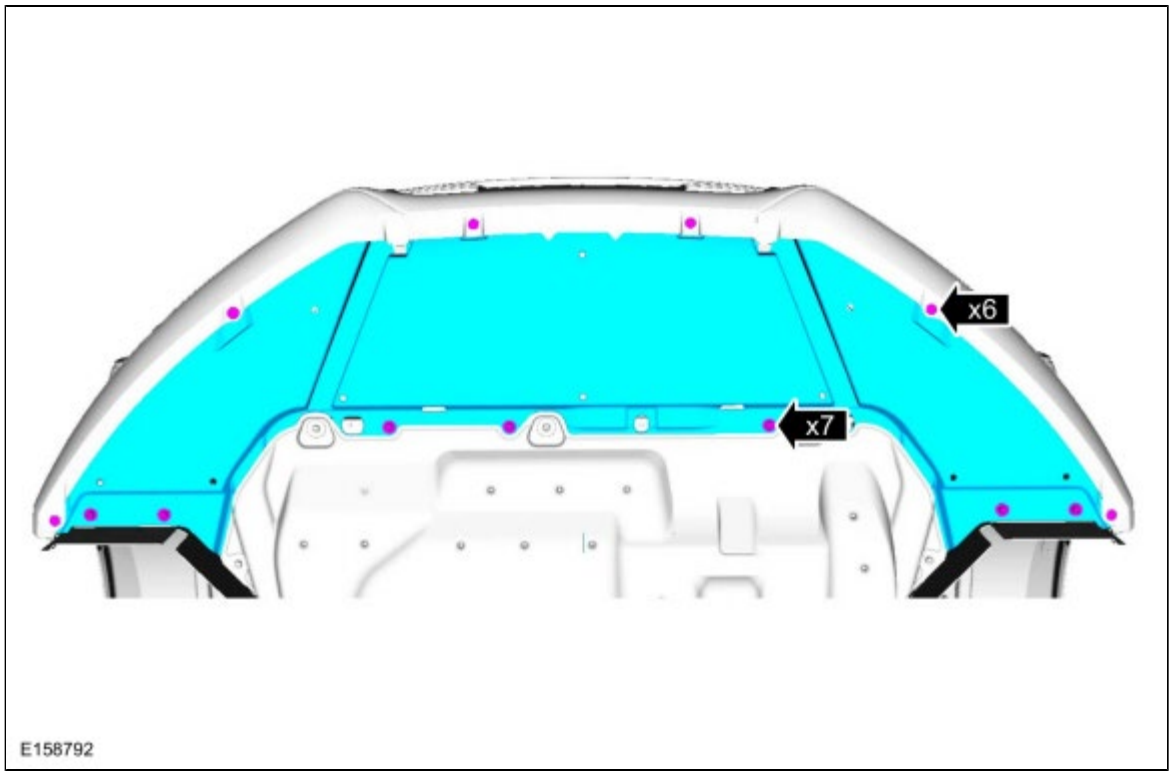

4. Release the pressure in the cooling system by slowly turning the pressure relief cap 1/2 turn counterclockwise. When the pressure is released, remove the pressure relief cap.

5. Open the radiator draincock and drain the cooling system.

6. Close the radiator draincock when finished.

1. Install the lower radiator air deflector, the 6 pushpins and the 7 screws.

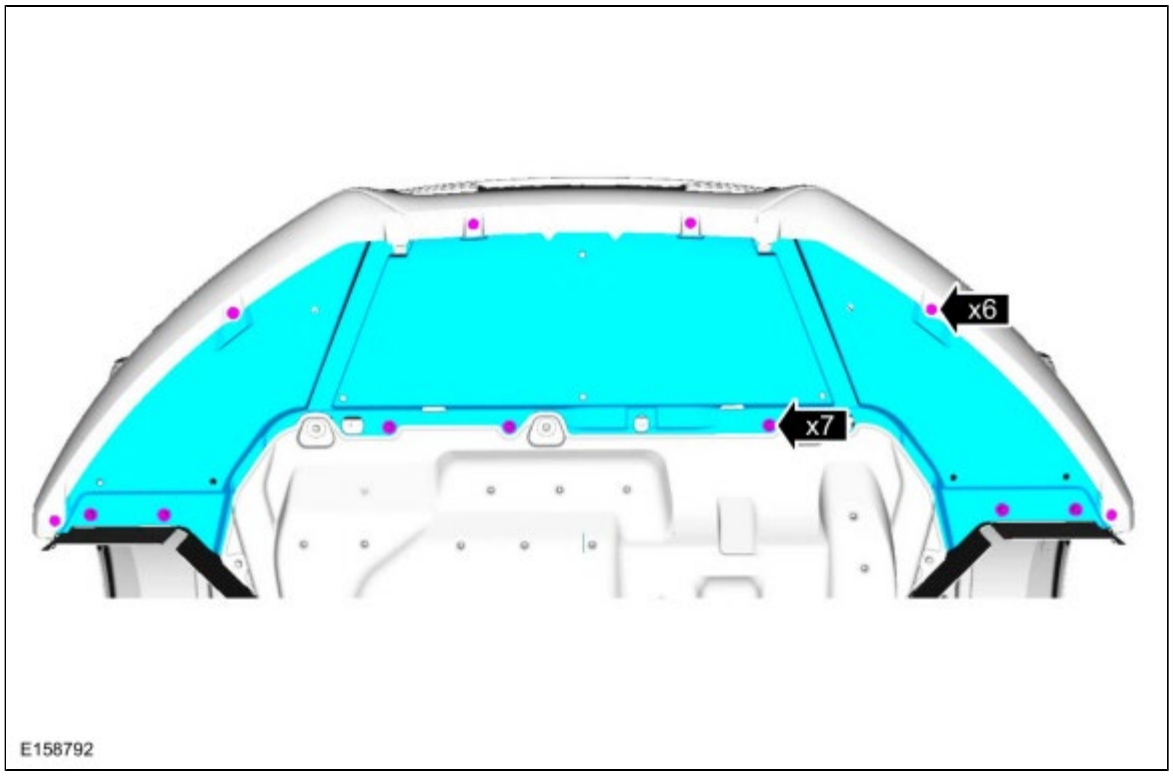

2.
    - Measure the coolant concentration in the vehicle.
      Special Tool(s) : ROB75240 Coolant/Battery Refractometer (Fahrenheit)
    - Determine the concentration desired based on the vehicle duty cycle of extreme hot or cold operating conditions.
    - Add, top-off or adjust the coolant as follows:
    - For concentrations measured 48/52 to 50/50 (freeze protection -34˚C to -37˚C [-30˚F to -34˚F]) use Motorcraft® Orange Antifreeze/Coolant Prediluted to maintain a coolant concentration in this same range.
      Material : Motorcraft® Orange Antifreeze/Coolant Prediluted / VC-3DIL-B (WSS-M97B44-D2)
    - For all other concentrations, use Motorcraft® Orange Antifreeze/Coolant Concentrated and/or distilled water to get to the desired concentration.
      Material : Motorcraft® Orange Antifreeze/Coolant Concentrated / VC-3-B (WSS-M97B44-D)
    - When refilling the engine coolant after a flush procedure, use a mixture of Motorcraft® Orange Antifreeze/Coolant Concentrated and distilled water to get to the desired concentration.

3. Recommended coolant concentration is 48/52 to 50/50 engine coolant to distilled water (freeze protection -34˚C to -37˚C [-30˚F to -34˚F]).

4.
    - For extremely cold climates (less than -37˚C [-34˚F]):
    - It may be necessary to increase the coolant concentration above 50%.
    - NEVER increase the coolant concentration above 60%.
    - Maximum coolant concentration is 60/40 for cold weather areas.
    - A coolant concentration of 60% provides freeze protection down to -50˚C (-58˚F)
    - Engine coolant concentration above 60% will decrease the overheat protection characteristics of the engine coolant and may damage the engine.

5.
    - For extremely hot climates:
    - It is still necessary to maintain the coolant concentration above 40%.
    - NEVER decrease the coolant concentration below 40%.
    - Minimum coolant concentration is 40/60 for warm weather areas.
    - Engine coolant concentration below 40% will decrease the freeze protection characteristics of the engine coolant and may damage the engine.

6. Vehicles driven year-round in non-extreme climates should use a 48/52 to 50/50 (freeze protection -34˚C to -37˚C [-30˚F to -34˚F]) mixture of engine coolant and distilled water for optimum cooling system and engine protection.

7. Fill the cooling system through the degas bottle until the coolant level in the degas bottle is at the MIN line.
8. Install the pressure relief cap until at least 1 audible click is heard.
9. **NOTICE: If the engine overheats or the fluid level in the degas bottle drops below the MIN line, allow the engine to cool. Once the engine is cool, add coolant to the degas bottle until the coolant in the degas bottle is at the MIN line.**

   Start the engine and hold at 2,500 rpm for approximately 8 minutes until the thermostat opens, then for another 3 minutes after the thermostat opens.
10. Increase the engine speed to 4,000 rpm and hold for approximately 5 seconds.
11. **NOTICE: If the engine overheats or the fluid level in the degas bottle drops below the MIN line, allow the engine to cool. Once the engine is cool, add coolant to the degas bottle until the coolant in the degas bottle is at the MIN line.**

    Return the engine speed to 2,500 rpm and hold for another 3 minutes.
12. Allow the engine to return to idle, shut the engine off and allow to cool.
13. Check the engine for any leaks.
14. Check the coolant level in the degas bottle and fill as necessary.

Copyright © Ford Motor Company

Specifications

Lubricants, Fluids, Sealers and Adhesives

	Specifications
Motorcraft® SAE 5W-20 Premium Synthetic Blend Motor Oil XO-5W20-QSP	WSS-M2C945-A
Penetrating and Lock Lubricant	XL-1
High Temperature Nickel Anti-Seize Lubricant	XL-2

Copyright © Ford Motor Company

Electronic Engine Controls - Component Location

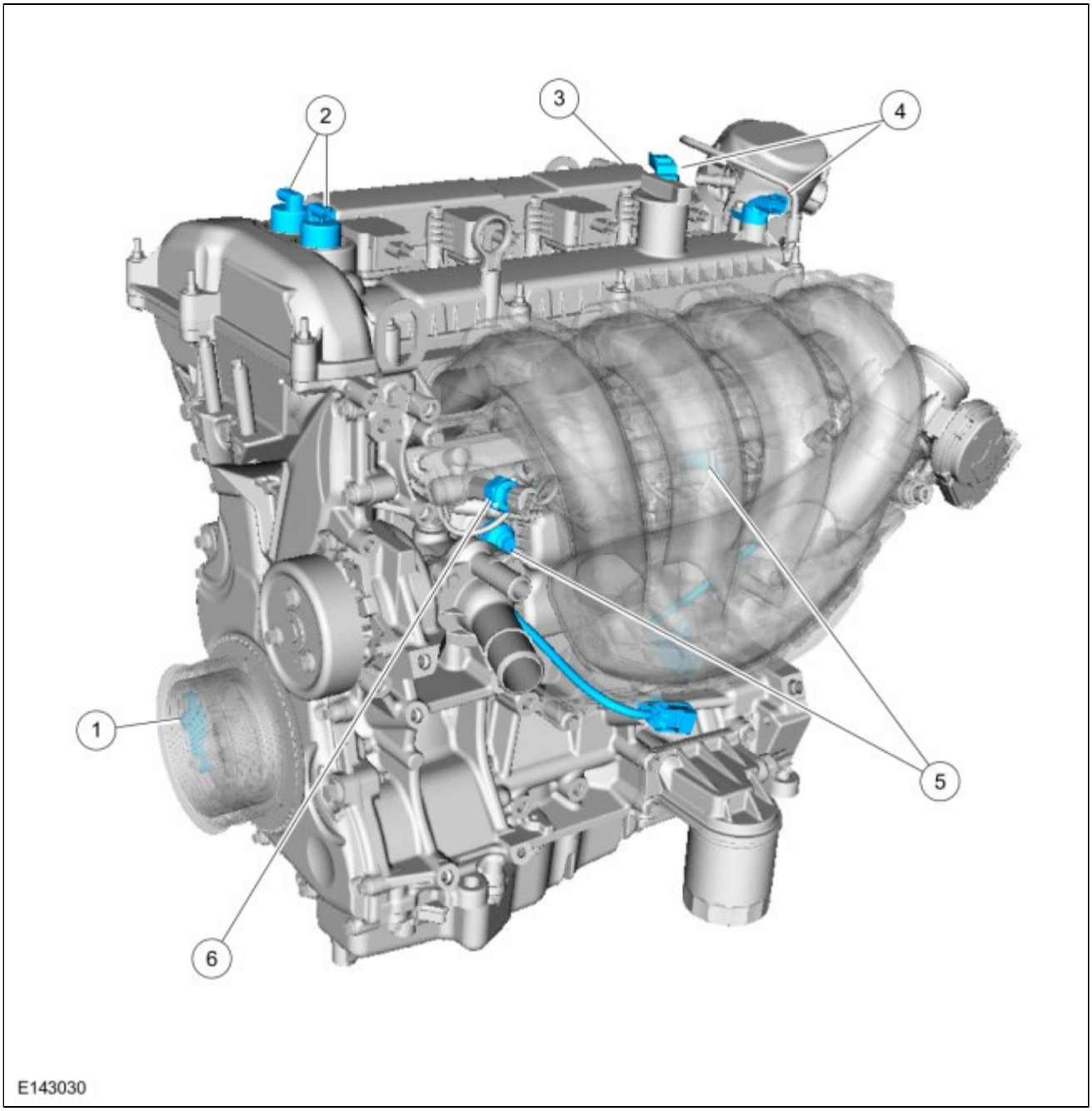

Item	Description
1	6C315 **Comments:** CKP sensor
2	6M280 **Comments:** VCT oil control solenoid
3	12A648 **Comments:**

	ECT sensor
4	6B288 **Comments:** CMP sensor
5	12A699 **Comments:** KS
6	9F972 **Comments:** FRP sensor

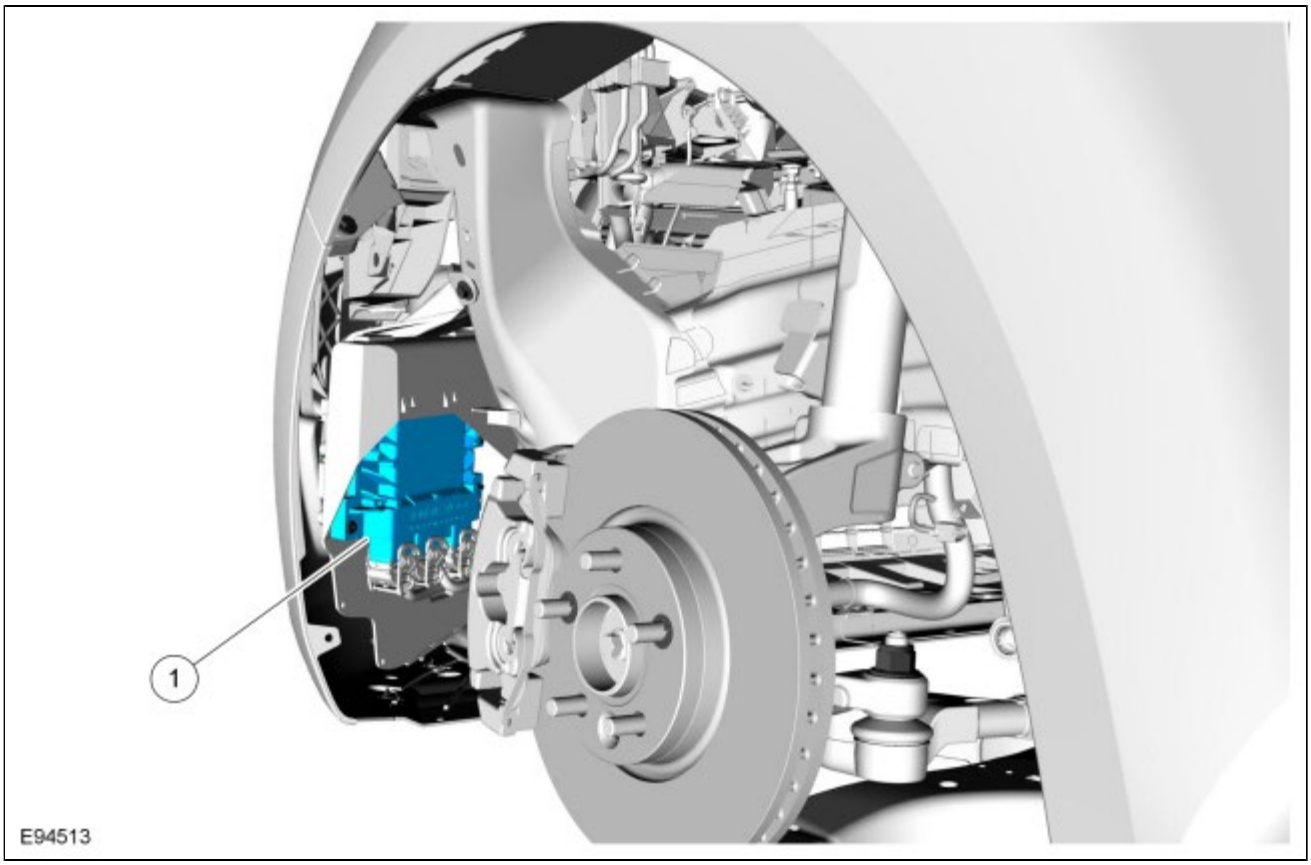

Item	Description
1	12A650 **Comments:** PCM

Copyright © Ford Motor Company

Electronic Engine Controls

DTC Chart: Powertrain Control Module (PCM)

Diagnostics in this manual assume a certain skill level and knowledge of Ford-specific diagnostic practices.

Powertrain Control Module (PCM) DTC Chart

DTC	Description	Action
PCM DTCs	Powertrain Control Module (PCM) Diagnostic Trouble Codes (DTCs) not listed in this chart	Refer to Powertrain Control/Emissions Diagnosis (PC/ED) manual. Section 3 Symptom Charts.
P0125	Insufficient Coolant Temp For Closed Loop Fuel Control	REFER to: Engine Cooling (303-03A Engine Cooling - 2.0L Duratec-HE (125kW/170PS) - MI4, Diagnosis and Testing).
P0128	Coolant Thermostat (Coolant Temp Below Thermostat Regulating Temperature)	REFER to: Engine Cooling (303-03A Engine Cooling - 2.0L Duratec-HE (125kW/170PS) - MI4, Diagnosis and Testing).
P0217	Engine Coolant Overtemperature Condition	REFER to: Engine Cooling (303-03A Engine Cooling - 2.0L Duratec-HE (125kW/170PS) - MI4, Diagnosis and Testing).
P0460	Fuel Level Sensor "A" Circuit	• First, Refer to Powertrain Control/Emissions Diagnosis (PC/ED) manual. • If sent here from PC/ED , REFER to: Instrumentation, Message Center and Warning Chimes (413-01 Instrumentation, Message Center and Warning Chimes, Diagnosis and Testing).
P0461	Fuel Level Sensor "A" Circuit Range/Performance	• First, Refer to Powertrain Control/Emissions Diagnosis (PC/ED) manual. • If sent here from PC/ED , REFER to: Instrumentation, Message Center and Warning Chimes (413-01 Instrumentation, Message Center and Warning Chimes, Diagnosis and Testing).
P0462	Fuel Level Sensor "A" Circuit Low	• First, Refer to Powertrain Control/Emissions Diagnosis (PC/ED) manual. • If sent here from PC/ED , REFER to: Instrumentation, Message Center and Warning Chimes (413-01 Instrumentation, Message Center and Warning Chimes, Diagnosis and Testing).
P0463	Fuel Level Sensor "A" Circuit High	• First, Refer to Powertrain Control/Emissions Diagnosis (PC/ED) manual. • If sent here from PC/ED , REFER to: Instrumentation, Message Center and Warning Chimes (413-01 Instrumentation, Message Center and Warning Chimes, Diagnosis and Testing).
P0504	Brake Switch "A"/" B" Correlation	REFER to: Cruise Control (419-03 Cruise Control, Diagnosis and Testing).
P0532	A/C Refrigerant Pressure Sensor “A” Circuit Low	• For Electronic Manual Temperature Control (EMTC) vehicles, REFER to: Climate Control System - Vehicles With: Electronic Manual Temperature Control (EMTC) (412-00 Climate Control System - General

		Information, Diagnosis and Testing). • For Dual Automatic Temperature Control (DATC) vehicles, REFER to: Climate Control System - Vehicles With: Dual Automatic Temperature Control (DATC) (412-00 Climate Control System - General Information, Diagnosis and Testing).
P0533	A/C Refrigerant Pressure Sensor “A” Circuit High	• For Electronic Manual Temperature Control (EMTC) vehicles, REFER to: Climate Control System - Vehicles With: Electronic Manual Temperature Control (EMTC) (412-00 Climate Control System - General Information, Diagnosis and Testing). • For Dual Automatic Temperature Control (DATC) vehicles, REFER to: Climate Control System - Vehicles With: Dual Automatic Temperature Control (DATC) (412-00 Climate Control System - General Information, Diagnosis and Testing).
P0562	System Voltage Low	REFER to: Charging System - 2.0L Duratec-HE (125kW/170PS) - MI4 (414-00 Charging System - General Information, Diagnosis and Testing).
P0563	System Voltage High	REFER to: Charging System - 2.0L Duratec-HE (125kW/170PS) - MI4 (414-00 Charging System - General Information, Diagnosis and Testing).
P0572	Brake Switch "A" Circuit Low	REFER to: Cruise Control (419-03 Cruise Control, Diagnosis and Testing).
P0573	Brake Switch "A" Circuit High	REFER to: Cruise Control (419-03 Cruise Control, Diagnosis and Testing).
P059F	Active Grille Air Shutter “A” Performance/Stuck Off	REFER to: Active Grille Shutter (501-02 Front End Body Panels, Diagnosis and Testing).
P05A1	Active Grille Air Shutter “A” Position Sensor Minimum/Maximum Stop Performance	REFER to: Active Grille Shutter (501-02 Front End Body Panels, Diagnosis and Testing).
P05A2	Active Grille Air Shutter “A” Control Circuit/Open	REFER to: Active Grille Shutter (501-02 Front End Body Panels, Diagnosis and Testing).
P05A7	Active Grille Air Shutter Control Module “A” Supply Voltage Circuit Low	REFER to: Active Grille Shutter (501-02 Front End Body Panels, Diagnosis and Testing).
P05C0	Active Grille Air Shutter Module “A” Over Temperature	INSTALL a new grille shutter actuator. REFER to: Active Grille Shutter (501-02 Front End Body Panels, Removal and Installation).
P0615	Starter Relay Circuit	REFER to: Starting System (303-06A Starting System - 2.0L Duratec-HE (125kW/170PS) - MI4, Diagnosis and Testing).
P0645	A/C Clutch Relay Control Circuit	• For Electronic Manual Temperature Control (EMTC) vehicles, REFER to: Climate Control System - Vehicles With: Electronic Manual Temperature Control (EMTC) (412-00 Climate Control System - General Information, Diagnosis and Testing). • For Dual Automatic Temperature Control (DATC) vehicles, REFER to: Climate Control System - Vehicles With: Dual Automatic Temperature Control (DATC) (412-00 Climate Control System - General Information, Diagnosis and Testing).
P065B	Generator Control Circuit	INSTALL a new generator.

	Range/Performance	REFER to: Generator - 2.0L Duratec-HE (125kW/170PS) - MI4 (414-02 Generator and Regulator, Removal and Installation).
P065C	Generator Mechanical Performance	REFER to: Charging System - 2.0L Duratec-HE (125kW/170PS) - MI4 (414-00 Charging System - General Information, Diagnosis and Testing).
P0833	Clutch Pedal Switch "B" Circuit	REFER to: Cruise Control (419-03 Cruise Control, Diagnosis and Testing).
P0850	Park / Neutral Switch Input Circuit	REFER to: Automatic Transmission (307-01 Automatic Transmission - Vehicles With: 6-Speed PowerShift Transmission - DPS6/6DCT250, Diagnosis and Testing).
P0851	Park / Neutral Switch Input Circuit Low	REFER to: Automatic Transmission (307-01 Automatic Transmission - Vehicles With: 6-Speed PowerShift Transmission - DPS6/6DCT250, Diagnosis and Testing).
P0A3B	Generator Over Temperature	CARRY OUT self-test of the Powertrain Control Module (PCM) and DIAGNOSE any grille shutter or cooling fan Diagnostic Trouble Codes (DTCs). If necessary, REFER to: Active Grille Shutter (501-02 Front End Body Panels, Diagnosis and Testing). If no grille shutter or cooling fan Diagnostic Trouble Codes (DTCs) are present, INSTALL a new generator. REFER to: Generator - 2.0L Duratec-HE (125kW/170PS) - MI4 (414-02 Generator and Regulator, Removal and Installation).
P1464	A/C Demand Out Of Self Test Range	• For Electronic Manual Temperature Control (EMTC) vehicles, REFER to: Climate Control System - Vehicles With: Electronic Manual Temperature Control (EMTC) (412-00 Climate Control System - General Information, Diagnosis and Testing). • For Dual Automatic Temperature Control (DATC) vehicles, REFER to: Climate Control System - Vehicles With: Dual Automatic Temperature Control (DATC) (412-00 Climate Control System - General Information, Diagnosis and Testing).
P161A	Incorrect Response from Immobilizer Control Module	The Body Control Module (BCM) ID received by the Powertrain Control Module (PCM) does not match the ID stored in the Powertrain Control Module (PCM) memory. CARRY OUT a parameter reset. For vehicles without Push button start, REFER to: Passive Anti-Theft System (PATS) (419-01B Passive Anti-Theft System (PATS), Diagnosis and Testing). For vehicles with Push button start, REFER to: Passive Anti-Theft System (PATS) (419-01C Passive Anti-Theft System (PATS) - Vehicles With: Push Button Start, Diagnosis and Testing).
P1703	Brake Switch Out Of Self Test Range	REFER to: Cruise Control (419-03 Cruise Control, Diagnosis and Testing).
P193E	A/C Clutch Request Signal	• For Electronic Manual Temperature Control (EMTC) vehicles, REFER to: Climate Control System - Vehicles With: Electronic Manual Temperature Control (EMTC) (412-00 Climate Control System - General Information, Diagnosis and Testing). • For Dual Automatic Temperature Control (DATC) vehicles, REFER to: Climate Control System - Vehicles With: Dual Automatic Temperature Control (DATC) (412-00 Climate Control System - General Information, Diagnosis and Testing).
P2531	Ignition Switch Run Position Circuit Low	REFER to: Starting System (303-06A Starting System - 2.0L Duratec-HE (125kW/170PS) - MI4, Diagnosis and Testing).
P2532	Ignition Switch Run Position Circuit High	REFER to: Starting System (303-06A Starting System - 2.0L Duratec-HE (125kW/170PS) - MI4, Diagnosis and Testing).
P2534	Ignition Switch Run/Start	

	Position Circuit Low	REFER to: Starting System (303-06A Starting System - 2.0L Duratec-HE (125kW/170PS) - MI4, Diagnosis and Testing).
P2535	Ignition Switch Run/Start Position Circuit High	REFER to: Starting System (303-06A Starting System - 2.0L Duratec-HE (125kW/170PS) - MI4, Diagnosis and Testing).
U012D	Lost Communication With Generator Control Module	REFER to: Charging System - 2.0L Duratec-HE (125kW/170PS) - MI4 (414-00 Charging System - General Information, Diagnosis and Testing).
U0284	Lost Communication With Active Grille Air Shutter Control Module “A”	REFER to: Active Grille Shutter (501-02 Front End Body Panels, Diagnosis and Testing).
U042E	Invalid Data Received From Generator Control Module	REFER to: Charging System - 2.0L Duratec-HE (125kW/170PS) - MI4 (414-00 Charging System - General Information, Diagnosis and Testing).

Copyright © Ford Motor Company

Camshaft Position (CMP) Sensor

Removal

NOTE: *Removal steps in this procedure may contain installation details.*

1. **WARNING: Before beginning any service procedure in this section, refer to Safety Warnings in section 100-00 General Information. Failure to follow this instruction may result in serious personal injury.**

   Refer to: Health and Safety Precautions (100-00 General Information, Description and Operation).

2. LH CMP sensor
   Torque : 6 Nm

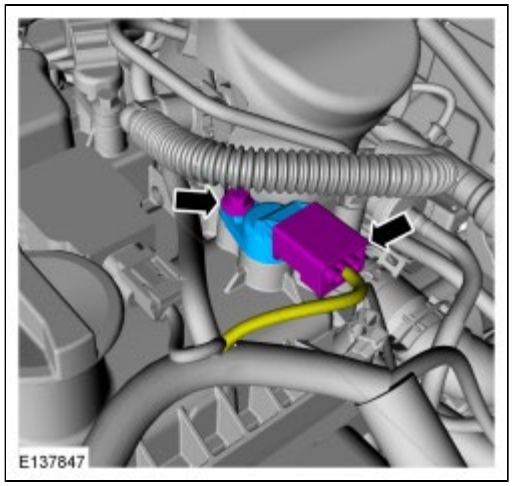

3. RH CMP sensor
   Torque : 6 Nm

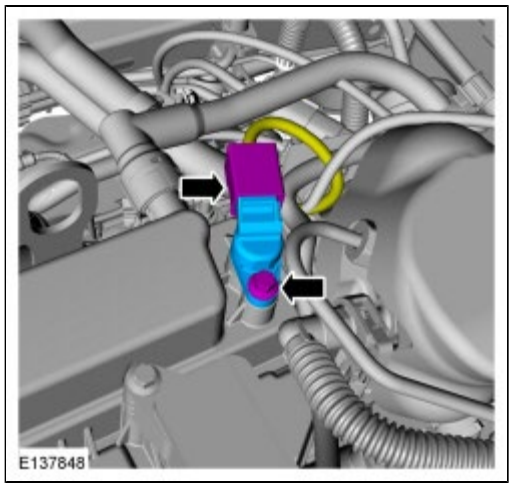

Installation

1. To install, reverse the removal procedure.
   Material : Motorcraft® SAE 5W-20 Premium Synthetic Blend Motor Oil / XO-5W20-QSP (WSS-M2C945-A)

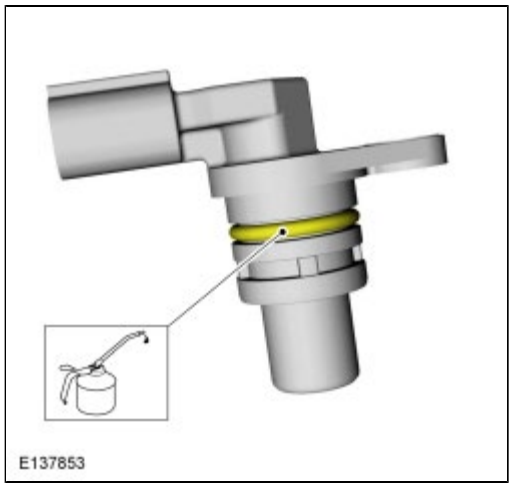

Copyright © Ford Motor Company

Crankshaft Position (CKP) Sensor

Removal

1. **WARNING: Before beginning any service procedure in this section, refer to Safety Warnings in section 100-00 General Information. Failure to follow this instruction may result in serious personal injury.**

   Refer to: Health and Safety Precautions (100-00 General Information, Description and Operation).

2. Refer to: Jacking and Lifting - Overview (100-02 Jacking and Lifting, Description and Operation).

3. Remove the RH wheel and tire.
   Refer to: Wheel and Tire (204-04A Wheels and Tires, Removal and Installation).

4. Remove the RH front fender splash shield.
   Refer to: Fender Splash Shield (501-02 Front End Body Panels, Removal and Installation).

5. Disconnect the CKP electrical connector.

6. Turn the crankshaft until piston no. 1 is 45 degrees BTDC by using the guide holes on the engine front cover and the crankshaft pulley.

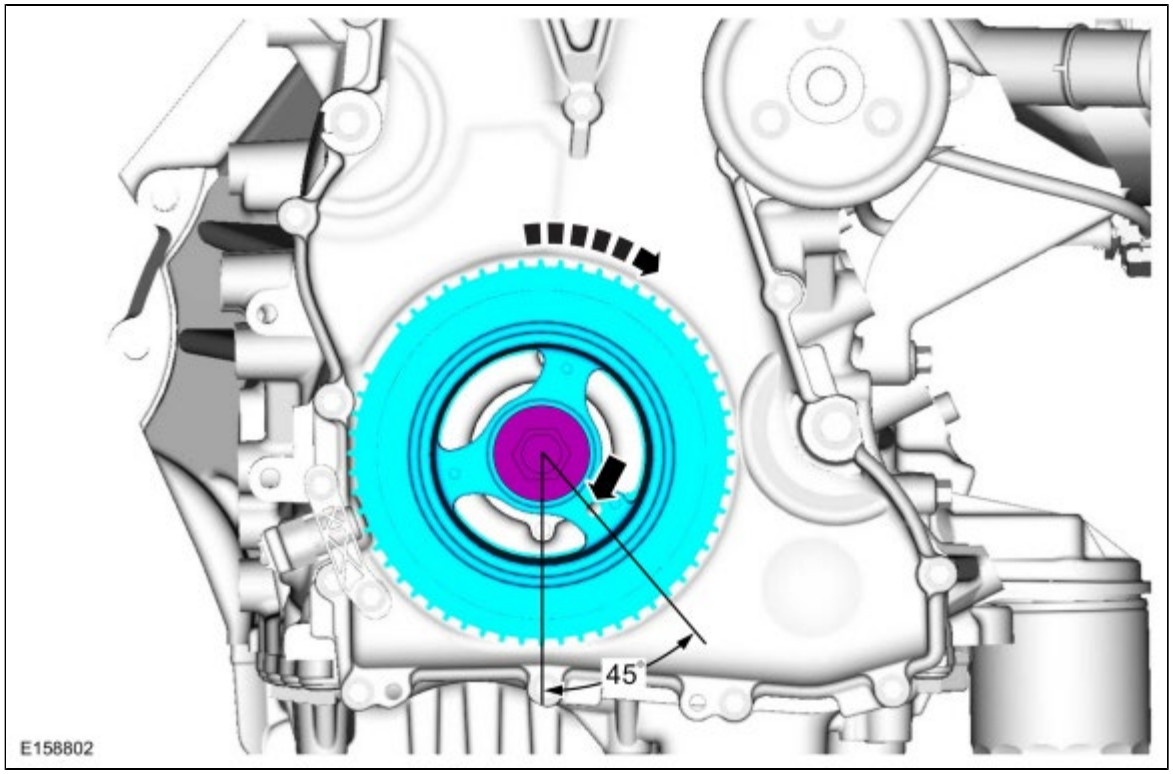

7.

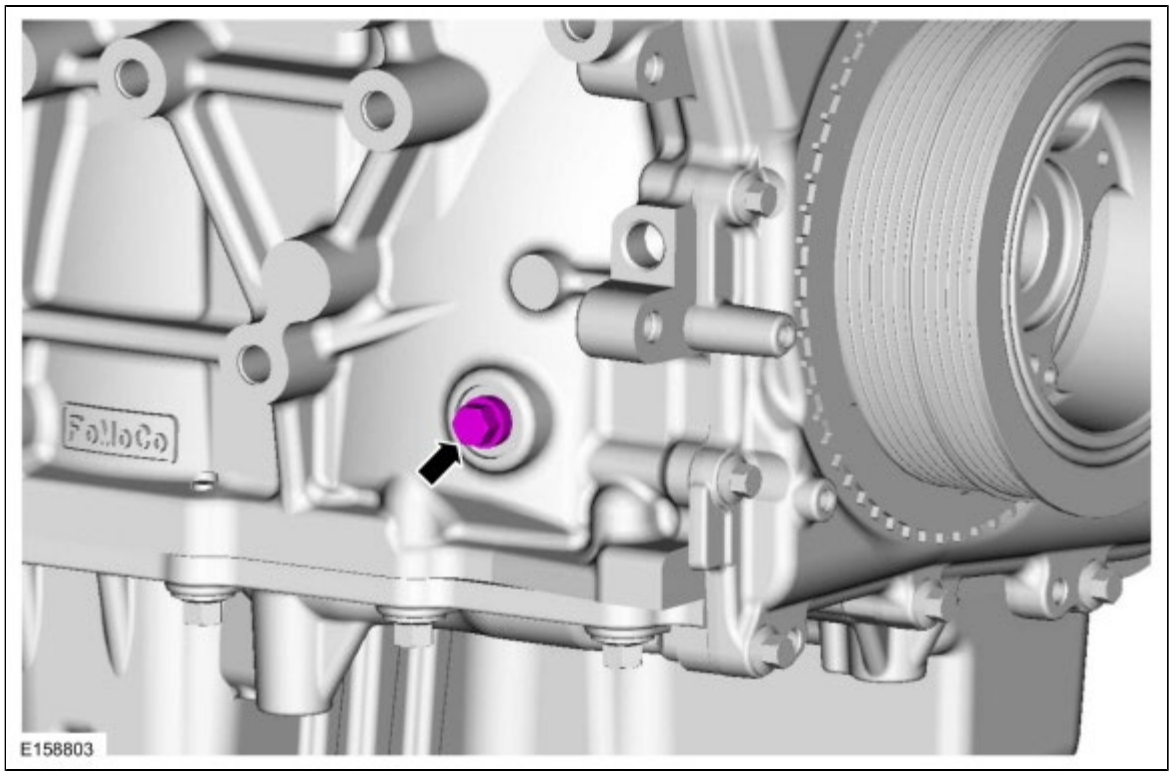

8. Turn the crankshaft clockwise until the crankshaft contacts the special tool.
   Install Special Service Tool : 303-507 Timing Peg, Crankshaft TDC

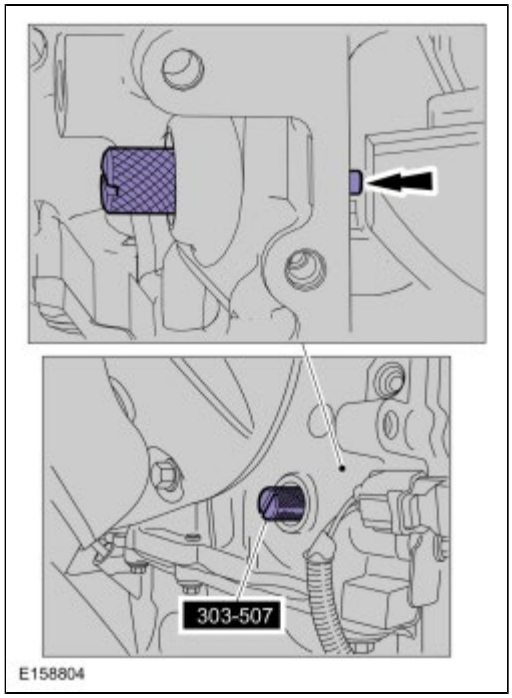

9. **NOTICE: Only hand-tighten the bolt or the front cover may be damaged.**

   Install a 6 mm x 18 mm bolt through the crankshaft pulley TDC guide hole and into the engine front cover TDC guide hole.

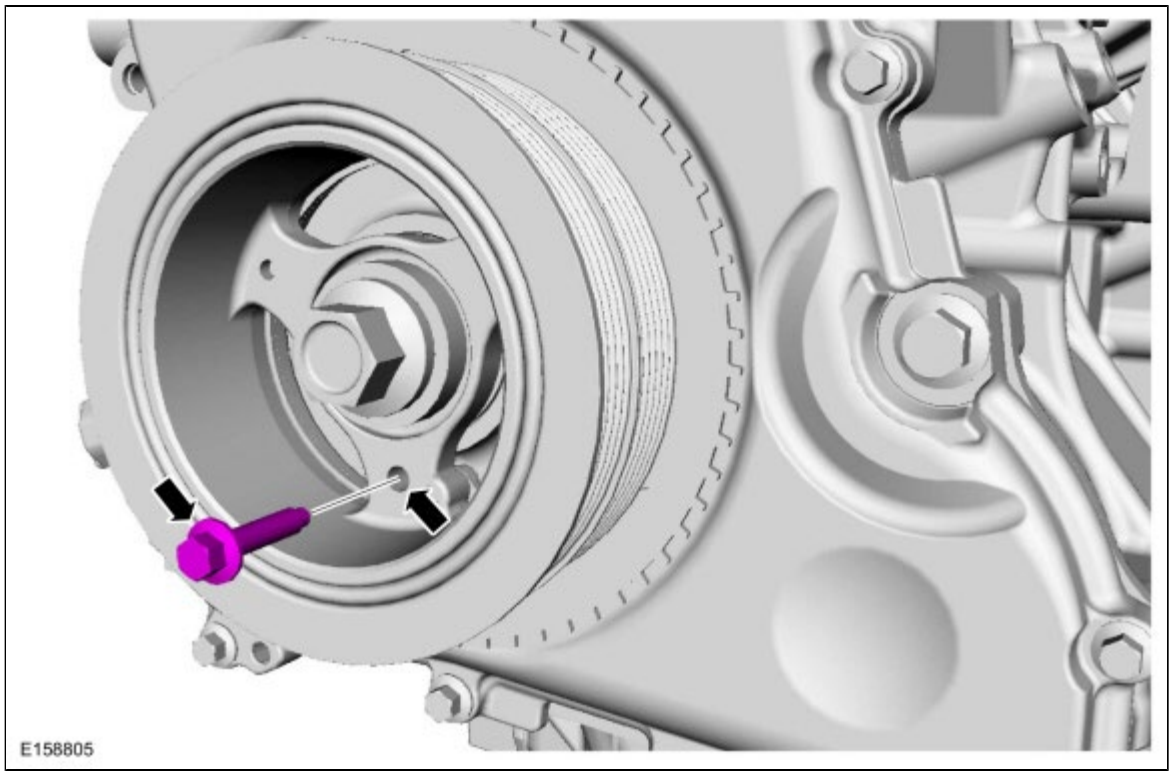

10.

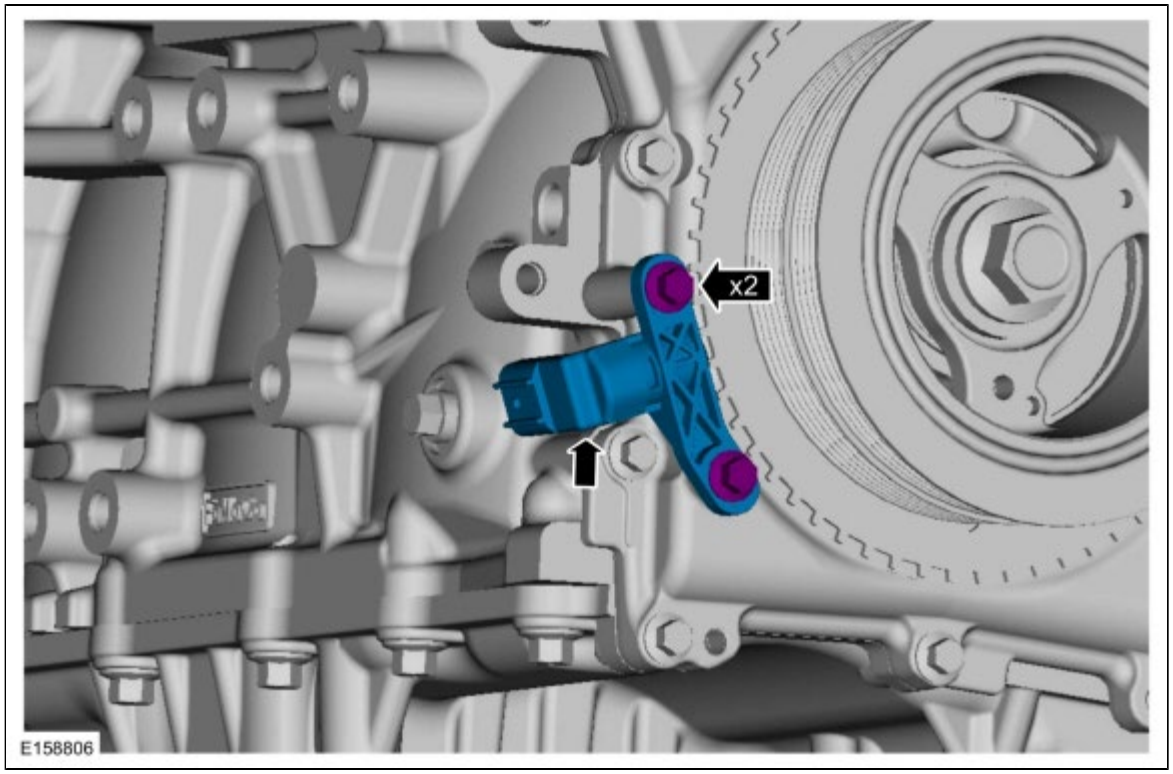

Installation

1. **NOTE:** *Do not tighten the bolts at this time.*

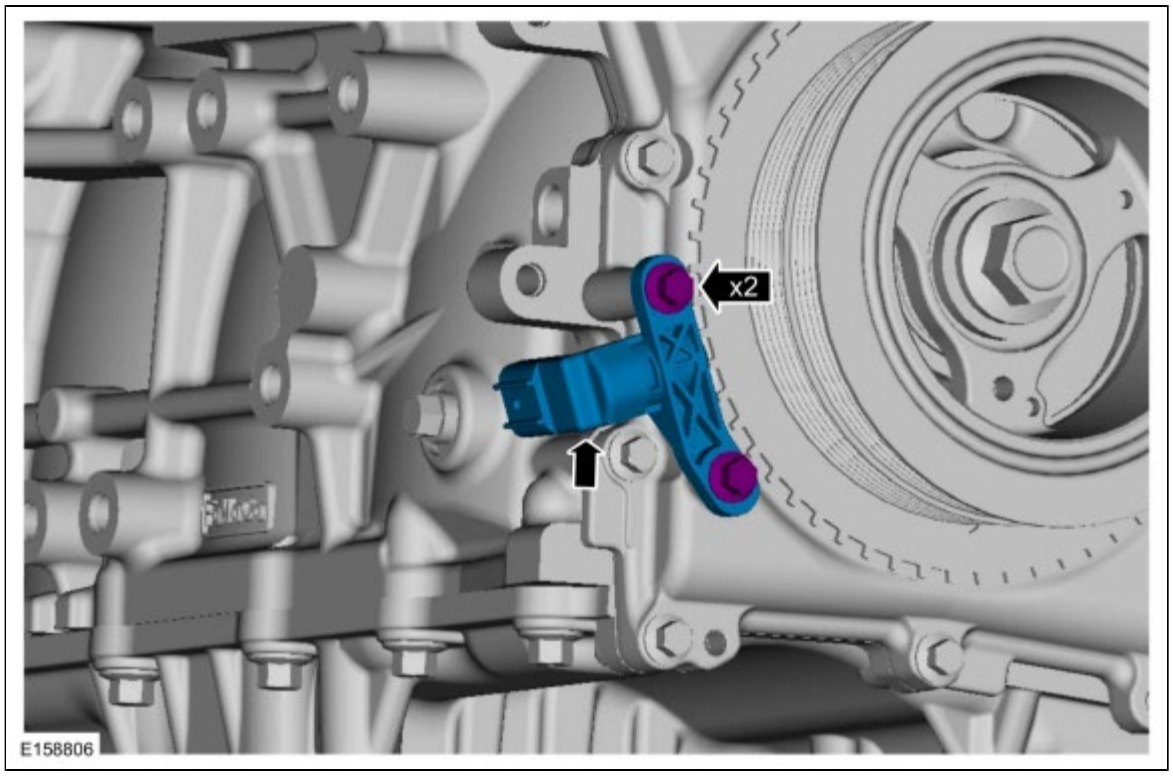

2. *Special Tool(s)* : 303-1521 Alignment Tool, Crankshaft Position Sensor
   Torque : 7 Nm

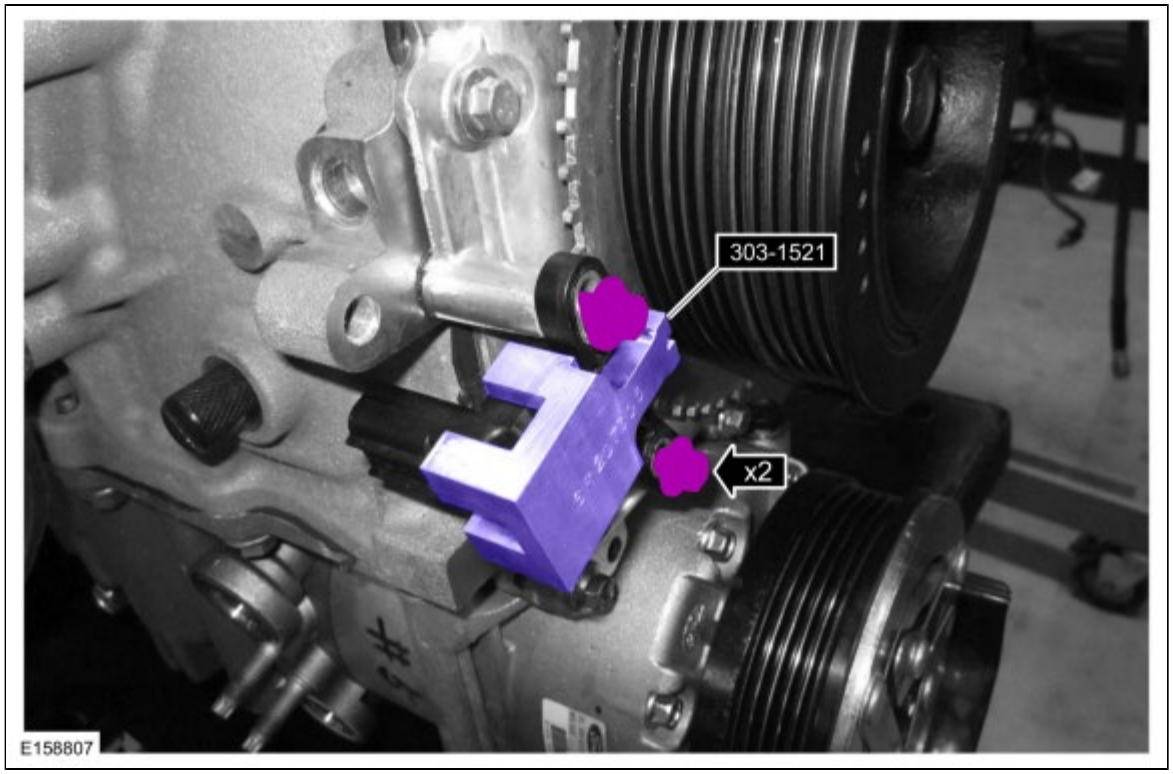

3. Connect the CKP electrical connector.

4. Remove the 6 mm x 18 mm bolt.

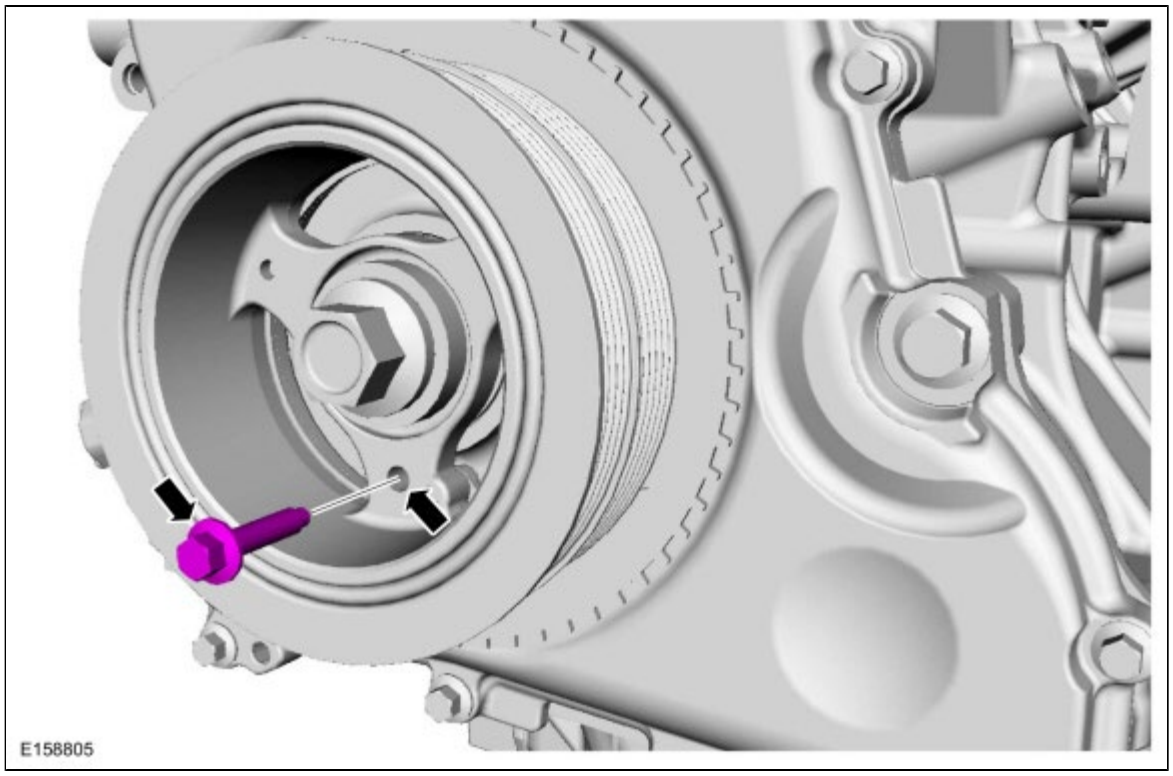

5. Remove the special tool and install the cylinder block plug.
   Remove Special Service Tool : 303-507 Timing Peg, Crankshaft TDC
   Torque : 20 Nm

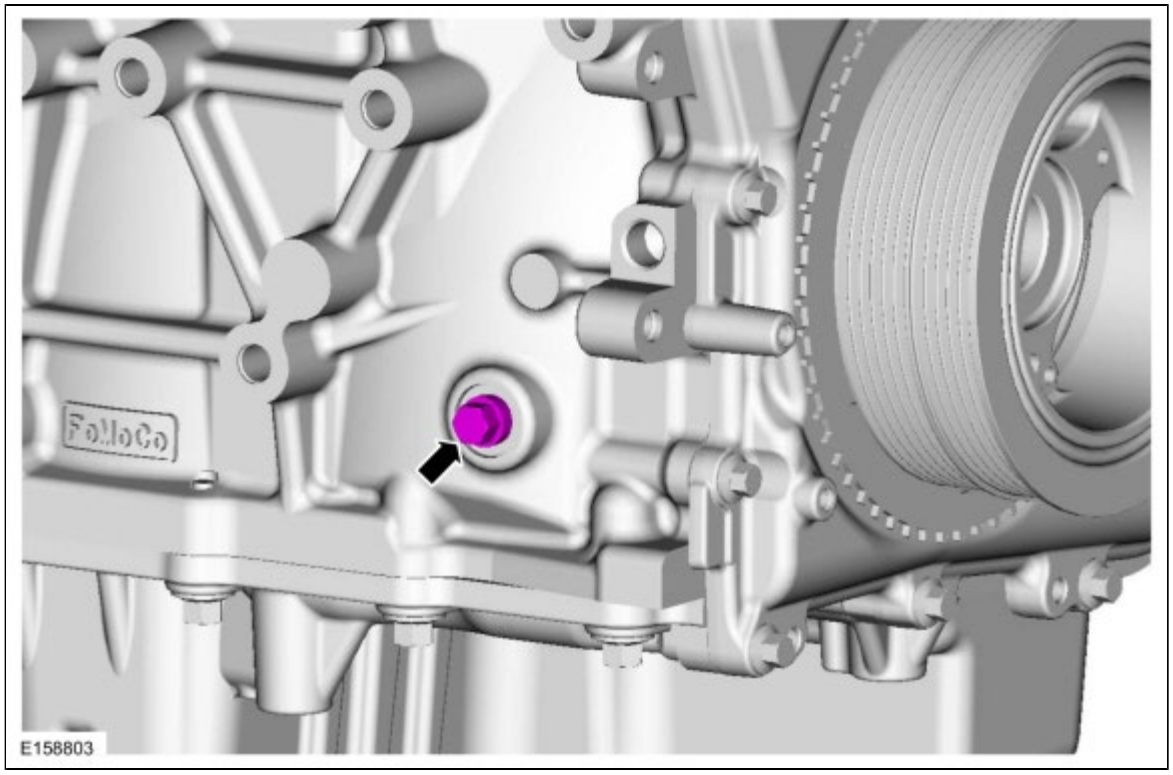

6. Install the RH front fender splash shield.
   Refer to: Fender Splash Shield (501-02 Front End Body Panels, Removal and Installation).

7. Install the RH wheel and tire.
   Refer to: Wheel and Tire (204-04A Wheels and Tires, Removal and Installation).

Copyright © Ford Motor Company

Powertrain Control Module (PCM)

Removal

NOTE: *Removal steps in this procedure may contain installation details.*

1. **WARNING: Before beginning any service procedure in this section, refer to Safety Warnings in section 100-00 General Information. Failure to follow this instruction may result in serious personal injury.**

   Refer to: Health and Safety Precautions (100-00 General Information, Description and Operation).

2. **NOTE:** *Powertrain Control Module (PCM) installation DOES NOT require new keys or programming of keys, only a Parameter Reset of the PATS .*

   NOTE: *This step is only necessary when installing a new component.*

   Retrieve the module configuration. Carry out the module configuration retrieval steps of the Programmable Module Installation (PMI) procedure.
   Refer to: Module Configuration - System Operation and Component Description (418-01 Module Configuration, Description and Operation).
   General Equipment : Ford Diagnostic Equipment

3. Remove the LH inner fender splash shield.
   Refer to: Fender Splash Shield (501-02 Front End Body Panels, Removal and Installation).

4. *Torque* : 3 Nm

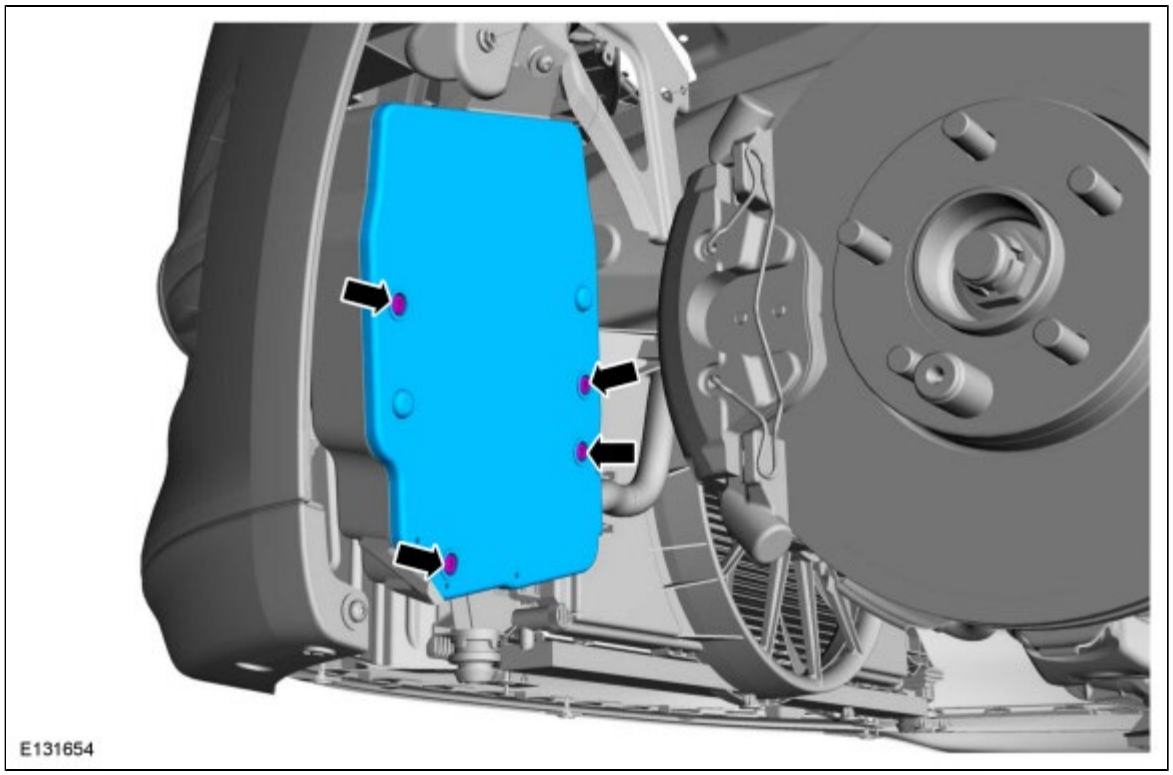

5.

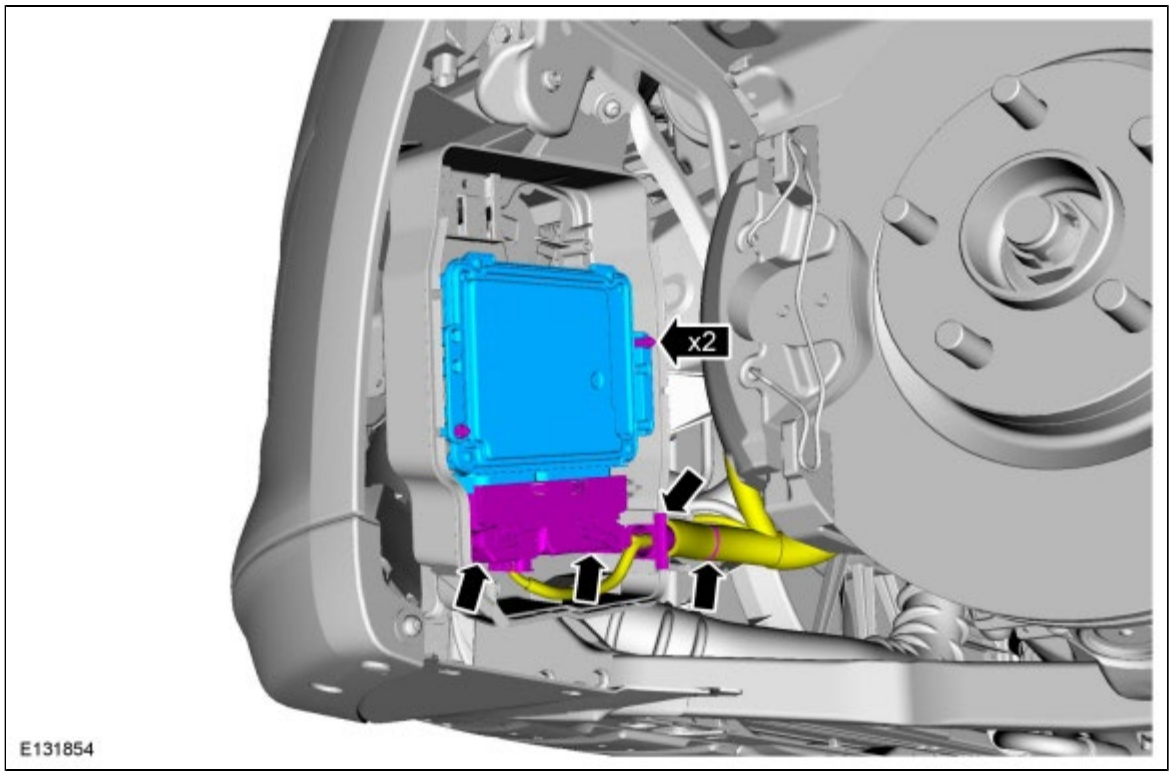

Installation

1. To install, reverse the removal procedure.

2. **NOTE:** *This step is only necessary when installing a new component.*

   Restore the module configuration. Carry out the module configuration restore steps of the Programmable Module Installation (PMI) procedure.
   Refer to: Module Configuration - System Operation and Component Description (418-01 Module Configuration, Description and Operation).
   General Equipment : Ford Diagnostic Equipment

3. Reprogram the PATS
   Refer to: Passive Anti-Theft System (PATS) Parameter Reset (419-01B Passive Anti-Theft System (PATS), General Procedures).
   Refer to: Passive Anti-Theft System (PATS) Parameter Reset (419-01C Passive Anti-Theft System (PATS) - Vehicles With: Push Button Start, General Procedures).

Copyright © Ford Motor Company

Mass Air Flow (MAF) Sensor

Removal

NOTE: *Removal steps in this procedure may contain installation details.*

1. **WARNING: Before beginning any service procedure in this section, refer to Safety Warnings in section 100-00 General Information. Failure to follow this instruction may result in serious personal injury.**

   Refer to: Health and Safety Precautions (100-00 General Information, Description and Operation).

2. *Torque* : 8 Nm

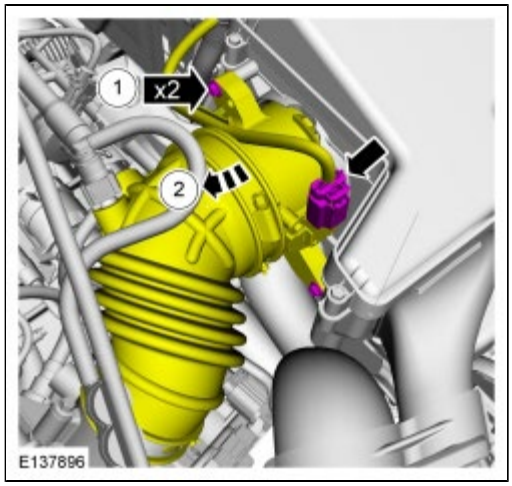

3. *Torque* : 2 Nm

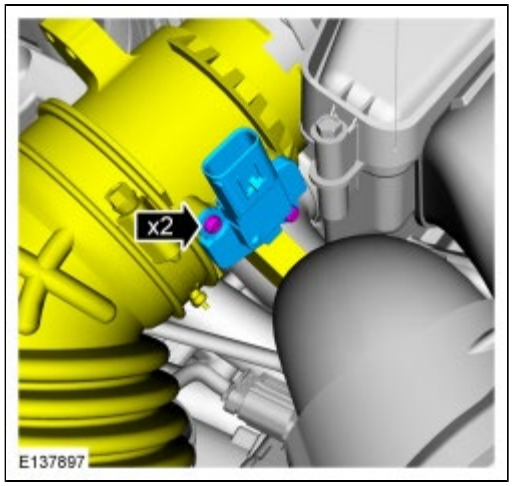

Installation

1. To install, reverse the removal procedure.

Copyright © Ford Motor Company

Heated Oxygen Sensor (HO2S)

Removal

1. **WARNING: Before beginning any service procedure in this section, refer to Safety Warnings in section 100-00 General Information. Failure to follow this instruction may result in serious personal injury.**

   Refer to: Health and Safety Precautions (100-00 General Information, Description and Operation).

2. 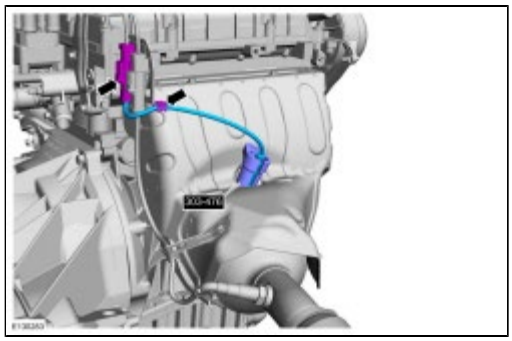

3. *Special Tool(s)* : 303-476 (T94P-9472-A) Socket, Exhaust Gas Oxygen Sensor
   Material : Penetrating and Lock Lubricant / XL-1

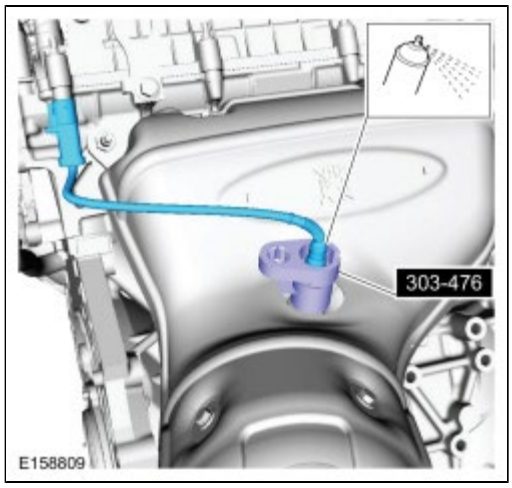

Installation

1. Calculate the correct torque wrench setting for the following torque. Refer to Torque Wrench Adapter Formula in the Apex.
   Special Tool(s) : 303-476 (T94P-9472-A) Socket, Exhaust Gas Oxygen Sensor
   Material : High Temperature Nickel Anti-Seize Lubricant / XL-2
   Torque : 48 Nm

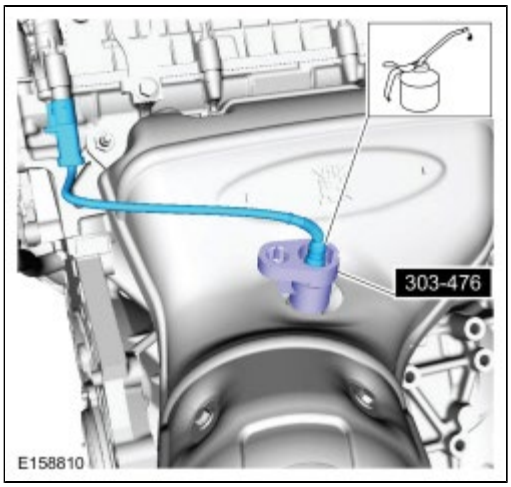

2.

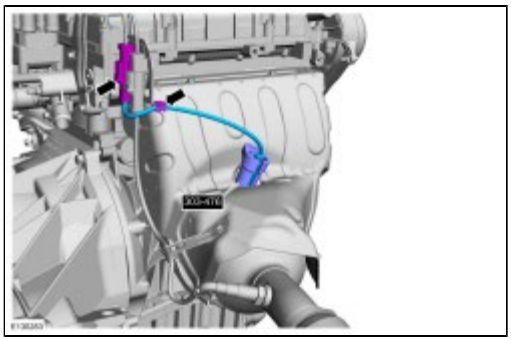

Copyright © Ford Motor Company

Catalyst Monitor Sensor

Removal

1. **WARNING: Before beginning any service procedure in this section, refer to Safety Warnings in section 100-00 General Information. Failure to follow this instruction may result in serious personal injury.**

   Refer to: Health and Safety Precautions (100-00 General Information, Description and Operation).

2. Refer to: Jacking and Lifting - Overview (100-02 Jacking and Lifting, Description and Operation).

3. 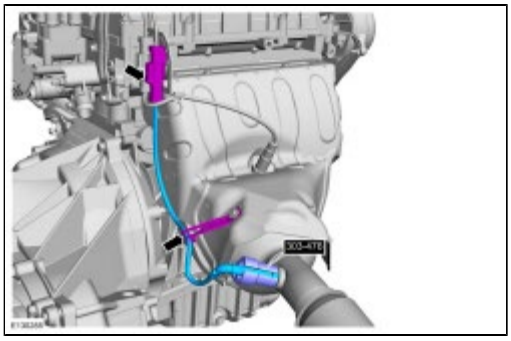

4. 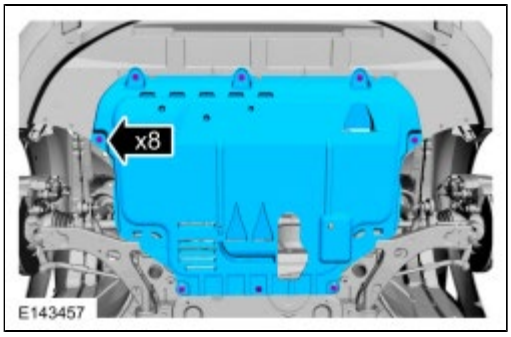

5. *Special Tool(s)* : 303-476 (T94P-9472-A) Socket, Exhaust Gas Oxygen Sensor
   Material : Penetrating and Lock Lubricant / XL-1

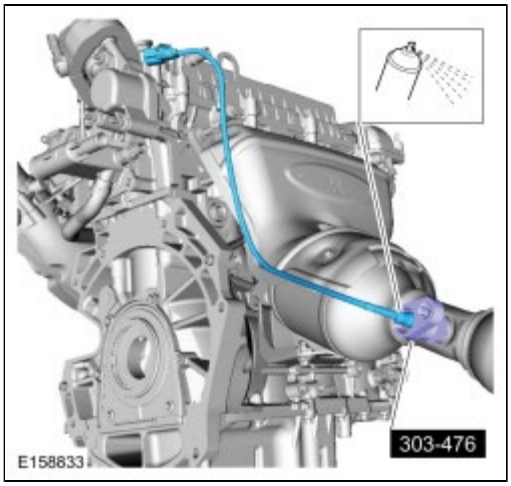

Installation

1. Calculate the correct torque wrench setting for the following torque. Refer to Torque Wrench Adapter formula in the Apex.
   Special Tool(s) : 303-476 (T94P-9472-A) Socket, Exhaust Gas Oxygen Sensor
   Material : High Temperature Nickel Anti-Seize Lubricant / XL-2
   Torque : 48 Nm

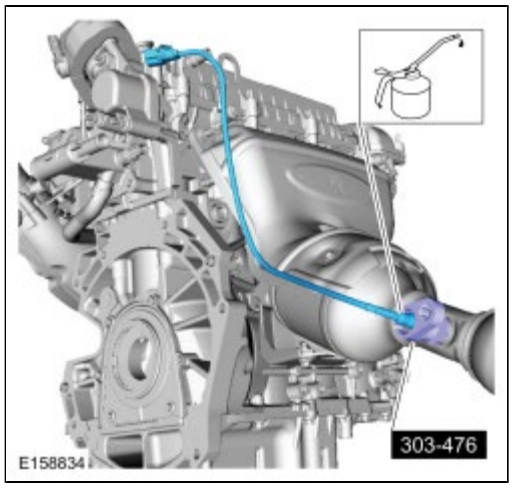

2.

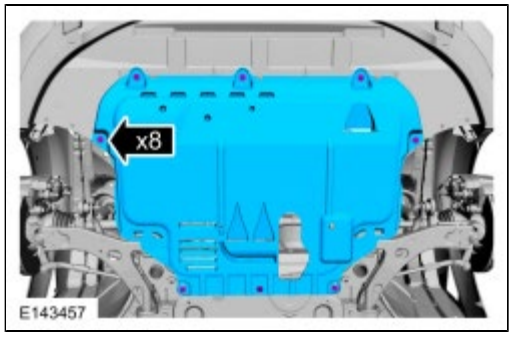

3.

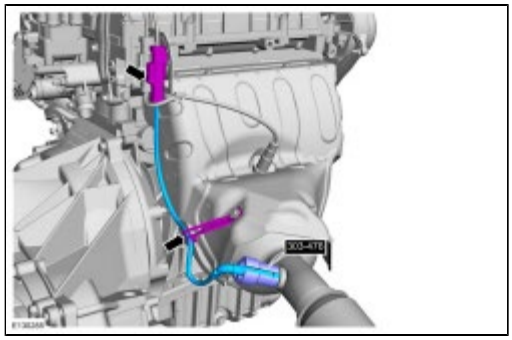

Copyright © Ford Motor Company

Fuel Rail Pressure (FRP) Sensor

Removal

1. **WARNING: Before beginning any service procedure in this section, refer to Safety Warnings in section 100-00 General Information. Failure to follow this instruction may result in serious personal injury.**

   Refer to: Gasoline and Gasoline-Ethanol Fuel Systems Health and Safety Precautions (100-00 General Information, Description and Operation).

2. Refer to: Fuel System Pressure Release (310-00A Fuel System - General Information, General Procedures).

3. Disconnect the battery ground cable.
   Refer to: Battery Disconnect and Connect (414-01 Battery, Mounting and Cables, General Procedures).

4. **NOTICE: During repair procedure, cleanliness is extremely important. Any foreign material, including any material created while cleaning or removing components that enters the fuel supply passages may cause engine failure.**

   NOTE: *Use compressed air to remove any foreign material from around the Fuel Rail Pressure (FRP) sensor area before removal.*

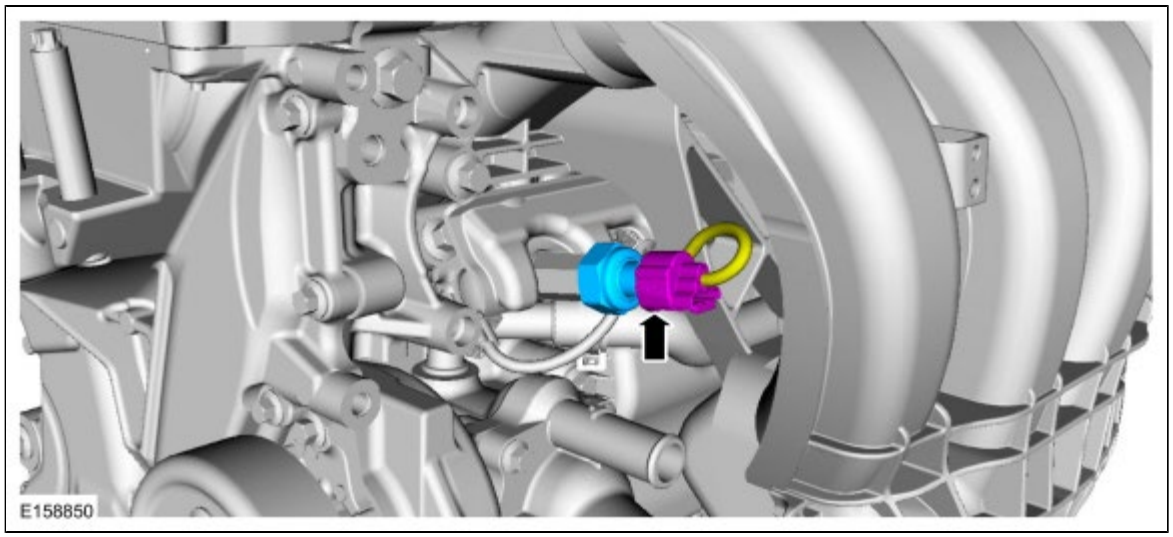

Installation

1.

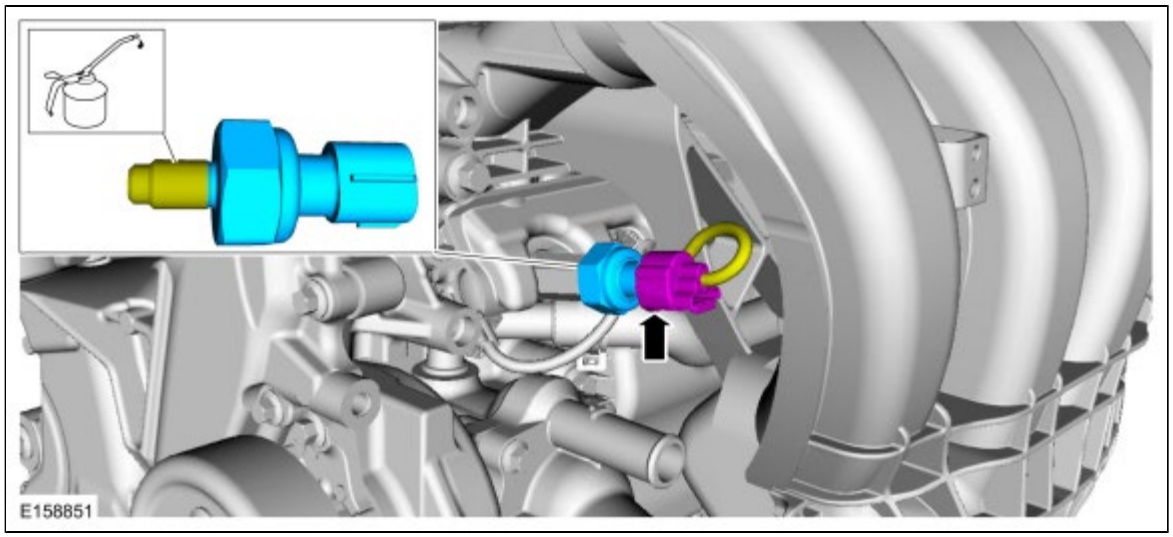

2. **NOTICE: During repair procedure, cleanliness is extremely important. Any foreign material, including any material created while cleaning or removing components that enters the fuel supply passages may cause engine failure.**

   Install the Fuel Rail Pressure (FRP) sensor and tighten in the following 5 stages:
   Material : Motorcraft® SAE 5W-20 Premium Synthetic Blend Motor Oil / XO-5W20-QSP (WSS-M2C945-A)

3. Stage 1
   Torque : 6 Nm

4. Stage 2
   Angle : 5

5. Stage 3
   Loosen :
   90°

6. Stage 4
   Torque : 6 Nm

7. Stage 5
   Angle : 21

8. Connect the battery ground cable.
   Refer to: Battery Disconnect and Connect (414-01 Battery, Mounting and Cables, General Procedures).

Copyright © Ford Motor Company

Knock Sensor (KS)

Removal

NOTE: *Removal steps in this procedure may contain installation details.*

1. **WARNING: Before beginning any service procedure in this section, refer to Safety Warnings in section 100-00 General Information. Failure to follow this instruction may result in serious personal injury.**

   Refer to: Health and Safety Precautions (100-00 General Information, Description and Operation).

2. Refer to: Intake Manifold (303-01A Engine - 2.0L Duratec-HE (125kW/170PS) - MI4, Removal and Installation).

3. **NOTE:** *Note the position of the components before removal.*

   NOTE: *Make sure that the components are installed to the position noted before removal.*

   Torque : 20 Nm

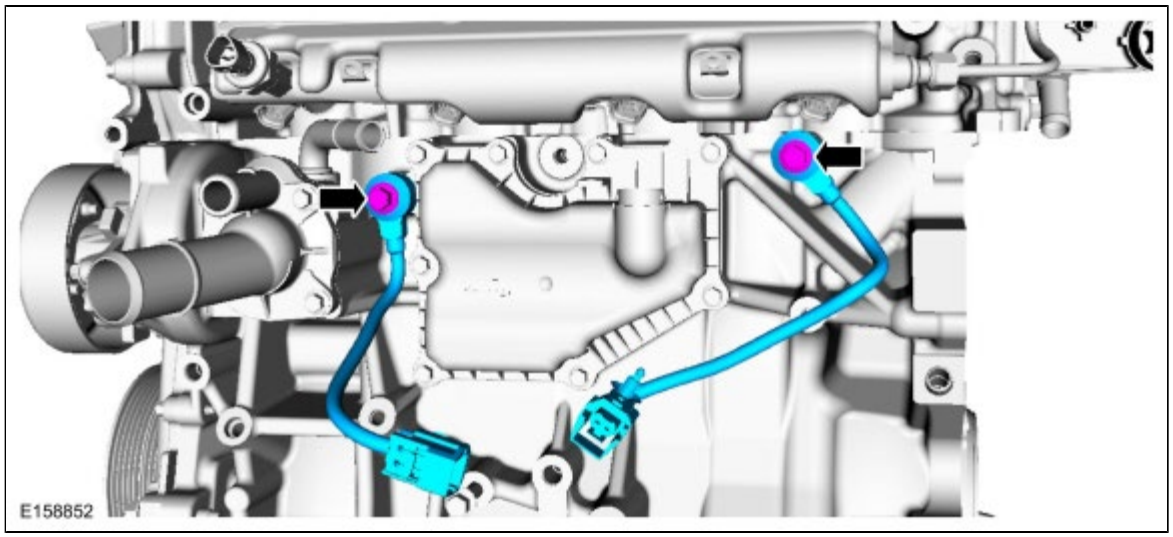

Installation

1. To install, reverse the removal procedure.

Copyright © Ford Motor Company

Engine Coolant Temperature (ECT) Sensor

Removal

NOTE: *Removal steps in this procedure may contain installation details.*

1. **WARNING: Before beginning any service procedure in this section, refer to Safety Warnings in section 100-00 General Information. Failure to follow this instruction may result in serious personal injury.**

   Refer to: Health and Safety Precautions (100-00 General Information, Description and Operation).

2. Refer to: Cooling System Draining, Filling and Bleeding (303-03A Engine Cooling - 2.0L Duratec-HE (125kW/170PS) - MI4, General Procedures).
   Refer to: Cooling System Draining and Vacuum Filling (303-03A Engine Cooling - 2.0L Duratec-HE (125kW/170PS) - MI4, General Procedures).

3.

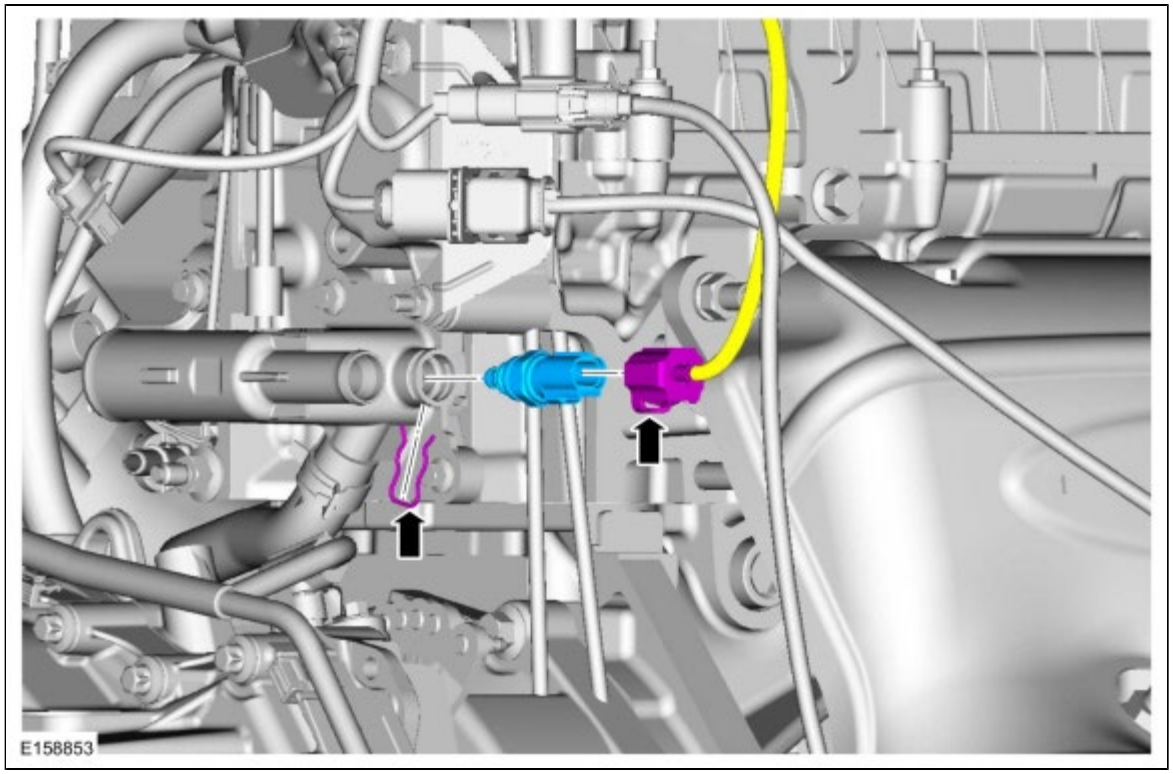

Installation

1. To install, reverse the removal procedure.

Copyright © Ford Motor Company

Clutch Pedal Position (CPP) Switch

Removal

NOTE: *Removal steps in this procedure may contain installation details.*

1. **WARNING: Before beginning any service procedure in this section, refer to Safety Warnings in section 100-00 General Information. Failure to follow this instruction may result in serious personal injury.**

   Refer to: Health and Safety Precautions (100-00 General Information, Description and Operation).

2.

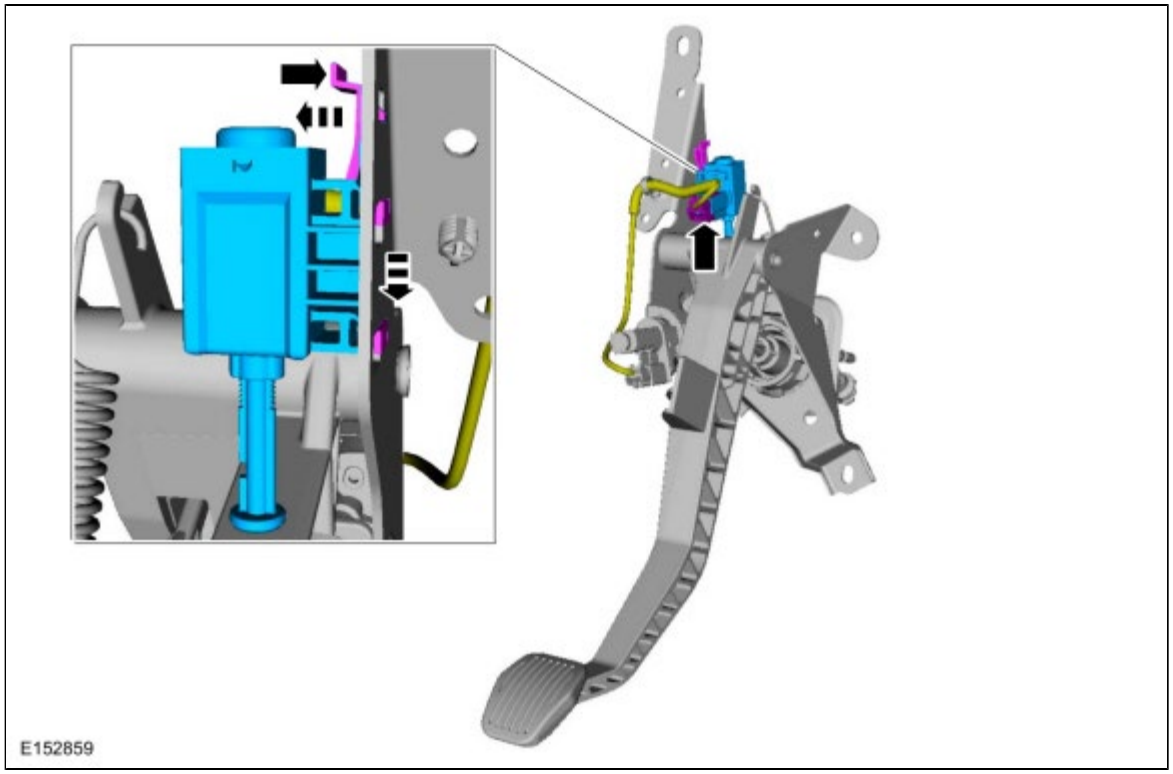

Installation

1. To install, reverse the removal procedure.

Copyright © Ford Motor Company

Drum Brake

Symptom Chart(s)

Symptom Chart: Drum Brake

Diagnostics in this manual assume a certain skill level and knowledge of Ford-specific diagnostic practices.

REFER to: Brake System (206-00 Brake System - General Information, Diagnosis and Testing).

Copyright © Ford Motor Company

Brake Drum

Removal

1. Refer to: Health and Safety Precautions (100-00 General Information, Description and Operation).
2. Refer to: Wheel and Tire (204-04A Wheels and Tires, Removal and Installation).
3. **NOTICE: Use of a brake drum puller or a torch is not recommended. Brake drum distortion can result .**

   NOTE: *If the brake drum is seized to the wheel hub pilot diameter, tap the center of the brake drum between the wheel studs.*

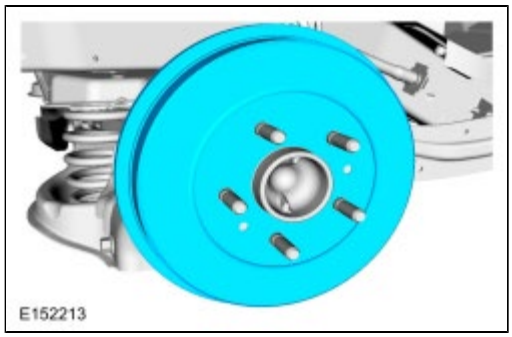

Installation

1. To install, reverse the removal procedure.
2. Refer to: Brake Shoe Adjustment (206-02 Drum Brake, General Procedures).

Copyright © Ford Motor Company

Brake Shoes

Removal

1. Refer to: Health and Safety Precautions (100-00 General Information, Description and Operation).
2. Refer to: Brake Drum (206-02 Drum Brake, Removal and Installation).
3. 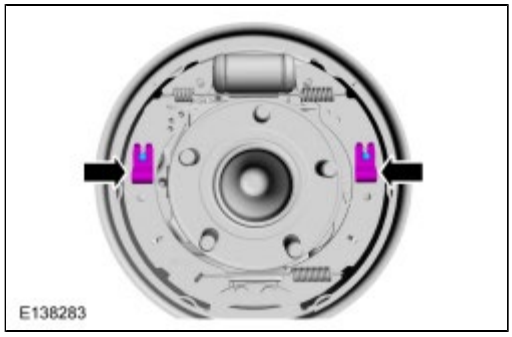

4. 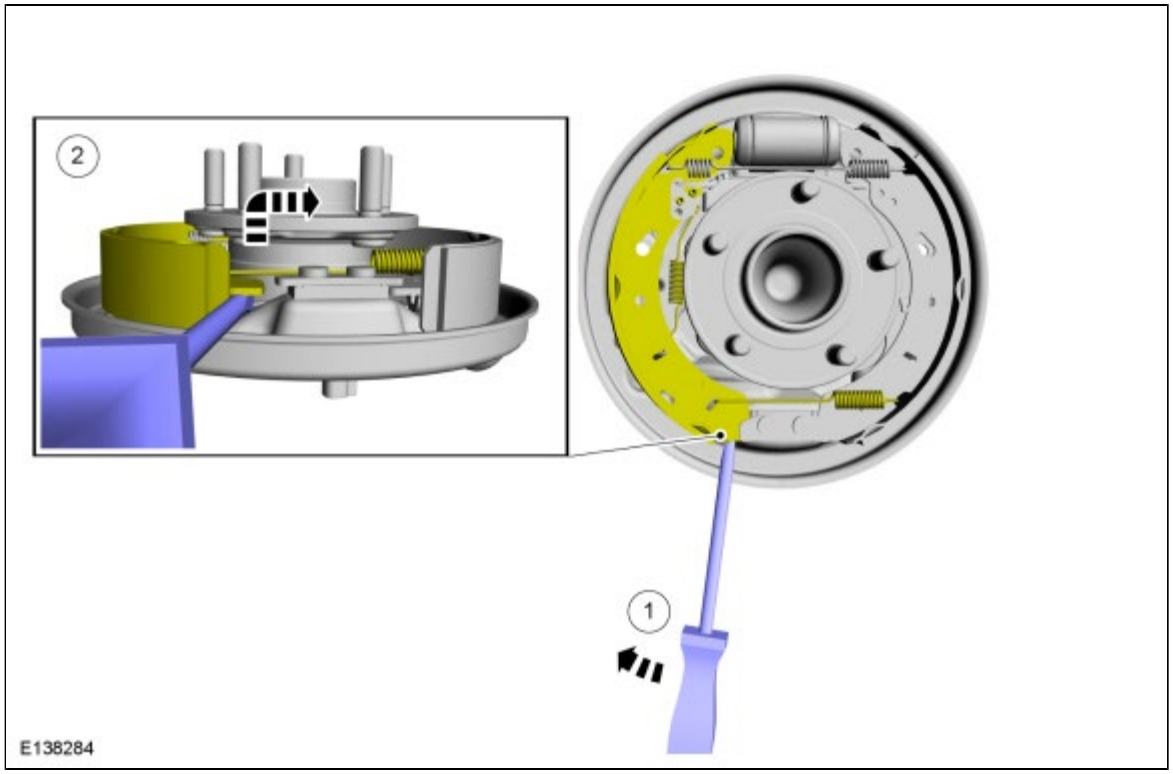

5.

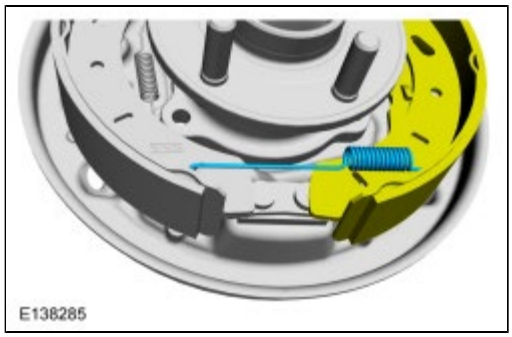

6.

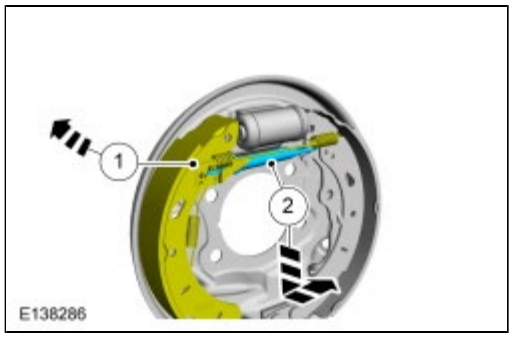

7.

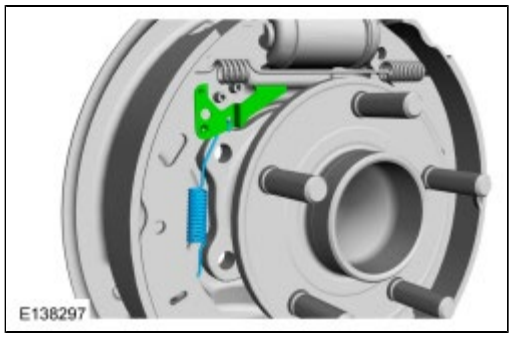

8.

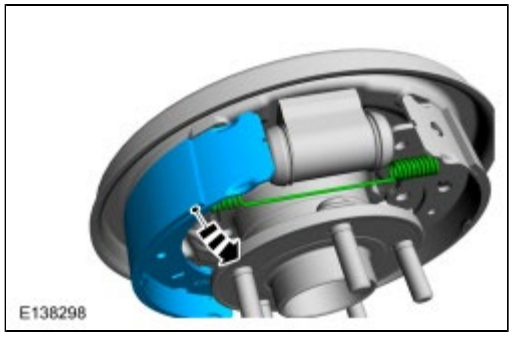

9.

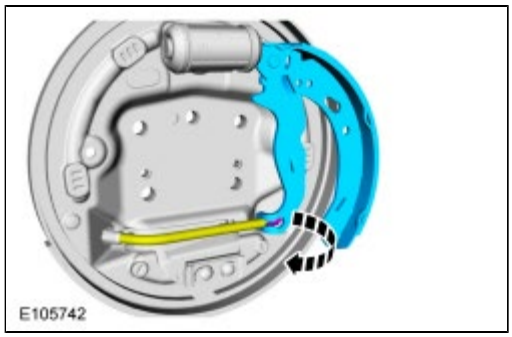

Installation

1. Apply the substance from the specified tube.
   Material : Silicone Brake Caliper Grease and Dielectric Compound / XG-3-A (ESE-M1C171-A)

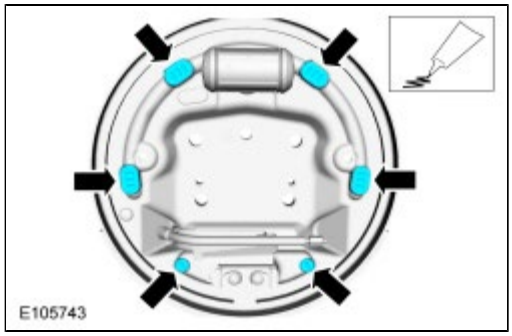

2. To install, reverse the removal procedure.

3. Refer to: Brake Shoe Adjustment (206-02 Drum Brake, General Procedures).

Copyright © Ford Motor Company

Wheel Cylinder

Removal

NOTICE: Do not spill brake fluid on painted or plastic surfaces or damage to the surface may occur. If brake fluid is spilled onto a painted or plastic surface, immediately wash the surface with water.

NOTE: *Removal steps in this procedure may include installation details.*

1. **WARNING: Before beginning any service procedure in this section, refer to Safety Warnings in section 100-00 General Information. Failure to follow this instruction may result in serious personal injury.**

   Refer to: Health and Safety Precautions (100-00 General Information, Description and Operation).

2. Refer to: Brake Drum (206-02 Drum Brake, Removal and Installation).

3.
   - *Torque* : 15 Nm
   - *Torque* : 12 Nm

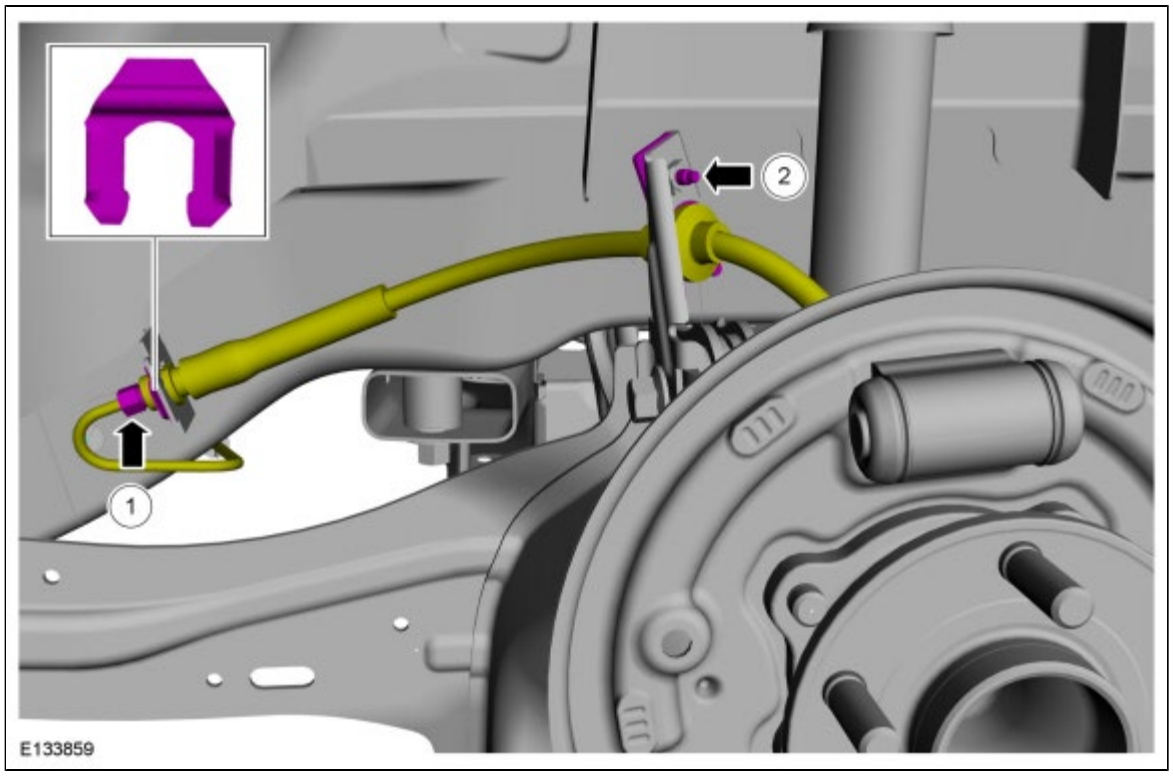

4.
   - *Torque* : 23 Nm
   - *Torque* : 12 Nm

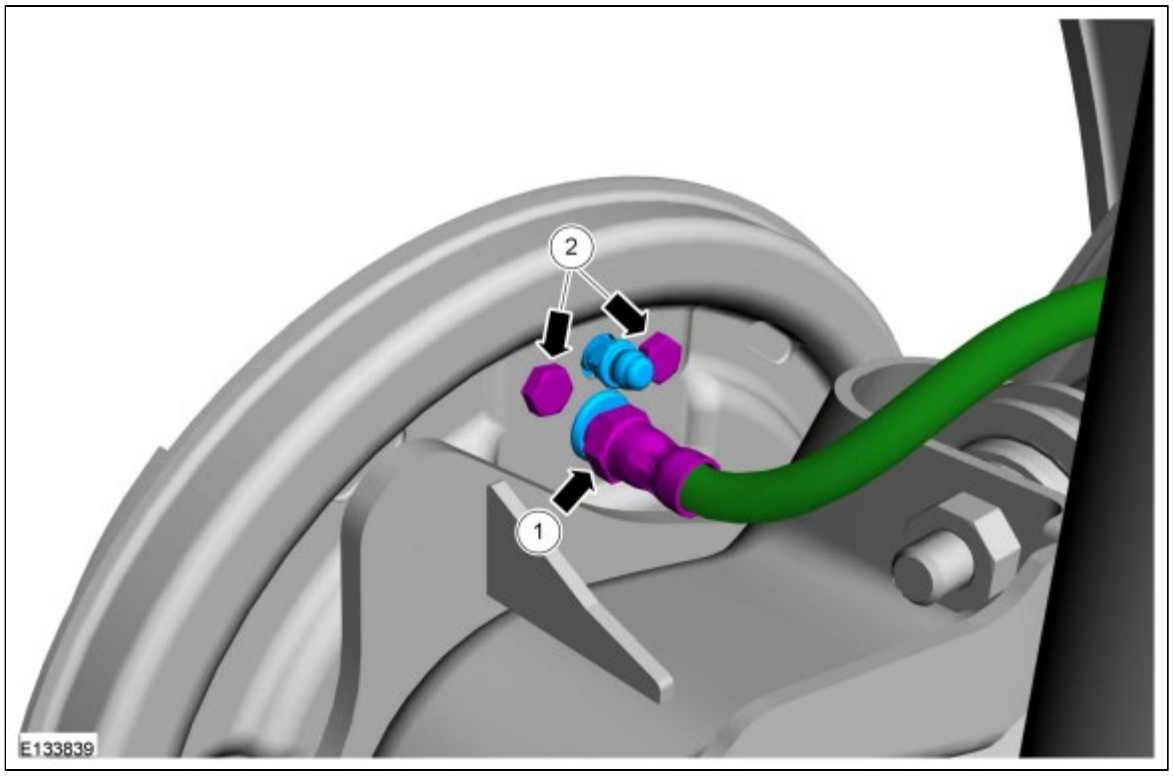

Installation

1. To install, reverse the removal procedure.
2. Bleed the wheel cylinder.
   Refer to: Component Bleeding (206-00 Brake System - General Information, General Procedures).

Copyright © Ford Motor Company

Brake Backing Plate

Removal

1. Refer to: Brake Shoes (206-02 Drum Brake, Removal and Installation).
2. Refer to: Wheel Cylinder (206-02 Drum Brake, Removal and Installation).
3. 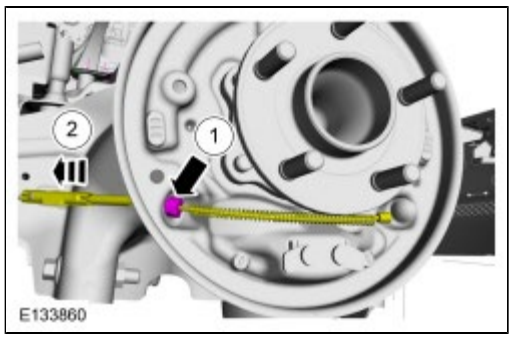

4. Refer to: Wheel Bearing and Wheel Hub (204-02 Rear Suspension, Removal and Installation).
5.

Installation

1. To install, reverse the removal procedure .

Copyright © Ford Motor Company

Rear Brake Flexible Hose

Removal

NOTICE: Do not spill brake fluid on painted or plastic surfaces or damage to the surface may occur. If brake fluid is spilled onto a painted or plastic surface, immediately wash the surface with water.

NOTE: *Removal steps in this procedure may contain installation details.*

1. **WARNING: Before beginning any service procedure in this section, refer to Safety Warnings in section 100-00 General Information. Failure to follow this instruction may result in serious personal injury.**

   Refer to: Health and Safety Precautions (100-00 General Information, Description and Operation).

2. Refer to: Jacking and Lifting - Overview (100-02 Jacking and Lifting, Description and Operation).

3.
   - *Torque* : 15 Nm
   - *Torque* : 12 Nm

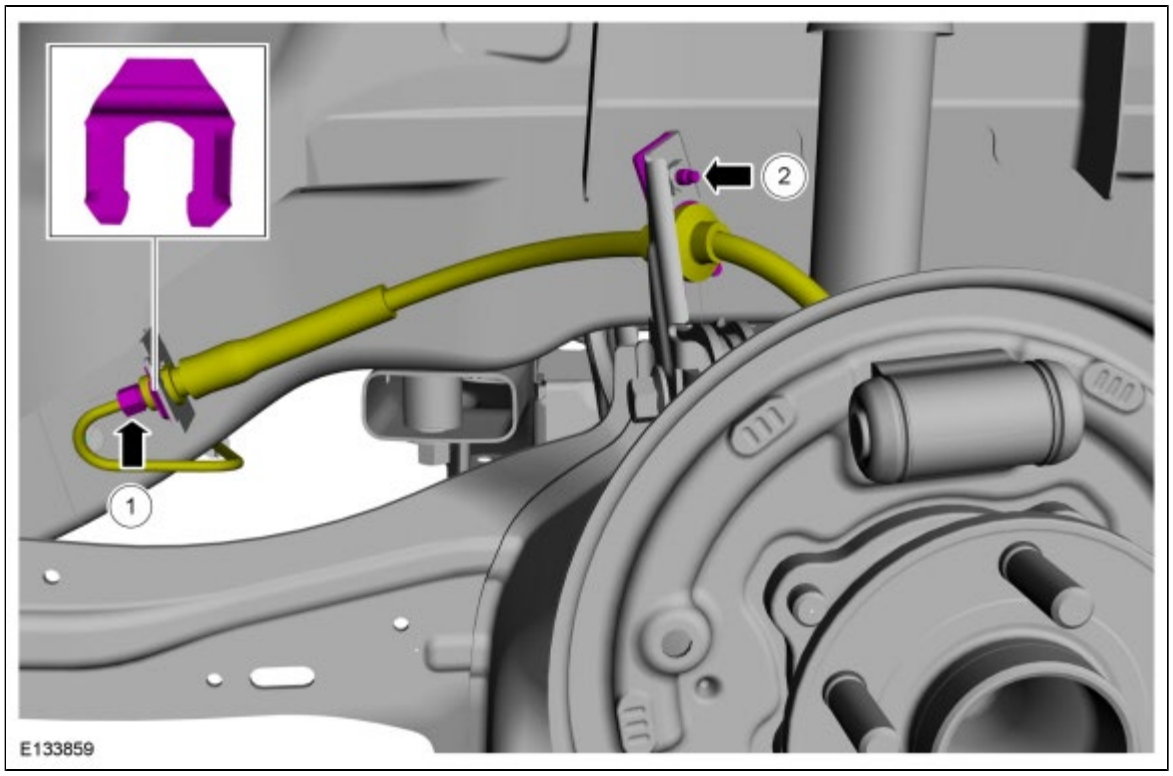

4. *Torque* : 23 Nm

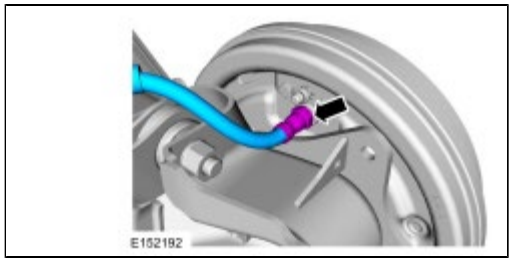

Installation

1. To install, reverse the removal procedure.
2. Refer to: Component Bleeding (206-00 Brake System - General Information, General Procedures).

Copyright © Ford Motor Company

Noise, Vibration and Harshness (NVH)

Acceptable NVH

Noise is any undesirable sound, usually unpleasant in nature. Vibration is any motion, shaking or trembling, that can be felt or seen when an object moves back and forth or up and down. Harshness is a ride quality issue where the vehicle's response to the road transmits sharply to the customer. Harshness normally describes a firmer than usual response from the suspension system. NVH is a term used to describe these conditions, which result in varying degrees of dissatisfaction. Although a certain level of NVH caused by road and environmental conditions is normal, this section is designed to aid in the diagnosis, testing and repair of NVH symptoms. All internal combustion engines and drivelines produce some noise and vibration; operating in a real world environment adds noise that is not subject to control. Vibration isolators, mufflers and dampers reduce these to acceptable levels. A driver who is unfamiliar with a vehicle can think that some sounds are abnormal when actually the sounds are normal for the vehicle type. As a technician, it is very important to be familiar with vehicle features and know how they relate to NVH symptoms and their diagnosis. For example, if the vehicle has automatic overdrive, it is important to test drive the vehicle both in and out of overdrive mode.

Glossary of Terms

Amplitude

The quantity or amount of energy produced by a vibrating component (G-force). An extreme vibration has a high amplitude. A mild vibration has a low amplitude. See Intensity.

Boom

Low frequency or low pitched noise often accompanied by a vibration. Also refer to Drumming.

Buffet/Buffeting

Strong noise fluctuations caused by gusting winds. An example would be wind gusts against the side glass.

Buzz

A low-pitched sound like that from a bee. Often a metallic or hard plastic humming sound. Also describes a high-frequency vibration. Vibration feels similar to an electric razor.

Chatter

A pronounced series of rapidly repeating rattling or clicking sounds.

Chirp

A short-duration, high-pitched noise associated with a slipping drive belt.

Chuckle

A repetitious, low-pitched sound. A loud chuckle is usually described as a knock.

Click

A sharp, brief, non-resonant sound, similar to actuating a ball point pen.

Clonk

A hydraulic knocking sound. Sound occurs with air pockets in a hydraulic system. Also described as hammering.

Clunk/Driveline Clunk

A heavy or dull, short-duration, low-frequency sound. Occurs mostly on a vehicle that is accelerating or decelerating abruptly. Also described as a thunk.

Conductor

The components that carry (transmit) a vibration frequency from the originator to the reactor.

Cycles Per Second

Cycles per second. Same as Hz (hertz).

Cracks

A mid-frequency sound, related to squeak. Sound varies with temperature conditions.

Creak

A metallic squeak.

Cycle

The process of a vibrating component going through a complete range of motion and returning to the starting point.

dB (Decibel)

A unit of measurement, referring to sound pressure level, abbreviated dB.

Drone

A low-frequency, steady sound, like a freezer compressor. Also described as a moan.

Drumming

A cycling, low-frequency, rhythmic noise often accompanied by a sensation of pressure on the ear drums. Also described as a low rumble, boom or rolling thunder.

Flutter

Mid to high intermittent sound due to air flow. Similar to a flag flapping in the wind.

Frequency

The rate at which a cycle occurs within a given time.

G-force

The additional load or weight produced in an object during acceleration. When measuring the level or amplitude of a vibration without sound, the unit G is added to associate the force of the vibration to gravity. This is similar to measuring the weight of an object, which is also a function of gravity.

Gravelly Feel

A grinding or growl in a component, similar to the feel experienced when driving on gravel.

Grind

An abrasive sound, similar to using a grinding wheel, or rubbing sand paper against wood.

Hz (Hertz)

A unit of measure used to describe noise and vibration concerns expressed in cycles per second.

Hiss

Steady, high-frequency noise. Vacuum leak sound.

Hoot

A steady, low-frequency tone, sounds like blowing over a long neck bottle.

Howl

A mid-range frequency noise between drumming and whine. Also described as a hum.

Hum

Mid-frequency steady sound, like a small fan motor. Also described as a howl.

Intensity

The physical quality of sound that relates to the strength of the vibration (measured in decibels). The higher the sound's amplitude, the higher the intensity and vice versa. See Amplitude.

Knock

A heavy, loud, repetitious sound, like a knock on the door.

Moan

A constant, low-frequency tone. Also described as a hum.

Ping

A short-duration, high-frequency sound, which has a slight echo.

Pitch

The physical quality of sound that relates to its frequency. Pitch increases as frequency increases and vice versa.

Pumping Feel

A slow, pulsing movement.

Rattle

A random and momentary or short-duration noise.

Reactor

The component, or part, that receives a vibration from an originator and conductor and reacts to the vibration by moving.

Roughness

A medium-frequency vibration. A slightly higher frequency than a shake. This type of vibration is usually related to drivetrain components.

Rustling

Intermittent sound of varying frequency, sounds similar to shuffling through leaves.

Shake

A low-frequency vibration, usually with visible component movement. Usually relates to tires, wheels, brake drums or brake discs if it is vehicle speed sensitive, or engine if it is engine speed sensitive. Also referred to as a shimmy or wobble.

Shimmy

An abnormal vibration or wobbling, felt as a side-to-side motion of the steering wheel in the driveshaft rotation. Also described as waddle.

Shudder

A low-frequency vibration that is felt through the steering wheel or seat during light brake application.

Slap

A resonance from flat surfaces, such as safety belt webbing or door trim panels.

Squeak

A high-pitched transient sound, similar to rubbing fingers against a clean window.

Squeal

A long-duration, high-pitched noise.

Tap

A light, rhythmic or intermittent hammering sound, similar to tapping a pencil on a table edge.

Thump

A dull beat caused by 2 items striking together.

Tick

A rhythmic tap, similar to a clock noise.

Tip-In-Moan

A light moaning noise heard during light vehicle acceleration, usually between 40.2 kmh (25 mph) - 104.6 kmh (65 mph).

Transient

A noise or vibration that is momentary, a short duration.

Vibration

Any motion, shaking or trembling, that can be felt or seen when an object moves back and forth or up and down.

Whine

A constant, high-pitched noise. Also described as a screech.

Whistle

High-pitched noise with a very narrow frequency band. Examples of whistle noises are a turbocharger or air flow around an antenna.

Wind Noise

Any noise caused by air movement in, out or around the vehicle.

Copyright © Ford Motor Company

Noise, Vibration and Harshness (NVH)

Special Tool(s)

ST3025-A	MASTERTECH MTS-4000 ANALYZER 257-00018
ST2312-A	EngineEAR 107-R2100 Chassis Ears JSP97170 Squeak And Rattle Kit 164-R4900
ST2314A	Ultrasonic Leak Detector 134-R0135

Diagnostic Theory

The shortest route to an accurate diagnosis results from:

- System knowledge, including comparison with a known good system.
- System history, including repair history and usage patterns.
- Condition history, especially any relationship to repairs or sudden change.
- Knowledge of possible sources.
- Using a systematic diagnostic method that divides the system into related areas.

The diagnosis and correction of NVH symptoms requires:

- A road or sytem test to determine the exact nature of the symptom.
- An analysis of the possible causes
- Testing to verify the cause.
- Repairing any symptoms found
- A road test or system test to make sure the cause has been corrected or brought back to within acceptable range.

Diagnostic Procedure Overview

Qualifying the symptom by the particular sensation present can help narrow down the cause. Always use the "symptom" to "system" to "component" to "cause" diagnostic technique.This diagnostic method divides the problem into related areas to correct the customer concern.

- Verify the "symptom".
- Determine which "symptoms(s)" can cause the "symptom" using the diagnostic tools described in this section.
- After determining the possible "system(s)" , refer to the appropriate section in this manual to identify the worn or damaged "components".
- After identifying the 'components" , identify the "cause" of the failure.

Tools and Techniques

The diagnostic tools allow for a systematic collection of information that is necessary to accurately diagnose and repair NVH problems. Remember that the vibrating source component (originator) may only generate a small vibration. This small vibration can in turn cause a larger vibration/noise to emanate from another receiving component (reactor), due to contact with other components (transfer path). For the best results, carry out the test as follows:

- Test drive the vehicle with the vibration sensor inside the vehicle.
- Place the sensor in the vehicle according to feel.
    - If the condition is felt through the steering wheel, the source is most likely in the front of the vehicle.
    - A vibration that is felt in the seat or floor only will most likely be found in the driveline, drive axle or rear wheels and tires.
- Record the readings. Also note when the condition begins, when it reaches maximum intensity and if it tends to diminish above/below a certain speed.
    - If a vibration symptom is vehicle speed related, the tire and wheel rpm/frequency and driveshaft frequency should be calculated.
    - If a vibration symptom is engine speed related, the engine, engine accessory and engine firing frequencies should be calculated.
    - Frequencies with an amplitude reading of 0.06 Gs or less are barely perceptible NVH levels. No corrective action is necessary.
- Place the vibration sensor on or near the suspect area outside the vehicle.
- Continue the road test, driving the vehicle at the speed the symptom occurs, and take another reading.
- Compare the readings.
    - A match in frequency indicates the problem component or area.
    - An unmatched test could indicate the symptom is caused by the engine, torque converter or engine accessory. Use the diagnostic tools in the rpm mode and check if symptom is rpm related.

The following diagnostic tools and techniques can be used separately or in conjunction with each other to aid in the diagnosis of NVH symptoms. They are listed in order of preference for ease in their use for locating these symptoms.

NVH Analyzer (Vetronix)

The MTS 4000 and the MTS 4100 NVH analyzers are tools to aid in the identification and isolation of a noise, vibration or harshness symptom in a vehicle. They measure noise and vibration data and compare it with data obtained from the vehicle's PCM as well as vehicle variants that were entered by the user such as pulley size, axle ratio and tire size in order to provide possible sources. The MTS 4000 and the MTS 4100 have the following characteristics:

- Interface with the vehicle's computer system
- Support and store vibration data input from 1 or 2 accelerometers
- Support and store noise data input from 2 microphones
- Provide a photo-tachometer for operation of the driveshaft balancing function
- Provide a strobe output capable of driving a standard timing light
- Contain a real-time clock circuit that provides time and date information which is used for tagging test data
- Have the capability to print to an external printer and interface with a Personal Computer (PC)
- Can be powered from a variety of power sources: cigarette lighter, AC power or the internal battery pack

The MTS 4000 and the MTS 4100 NVH analyzers have 4 main operating modes. The first is for vibration diagnosis. This mode measures data from 1 or 2 accelerometers simultaneously while obtaining data from the vehicle. Then it carries out a frequency analysis on the accelerometer information and compares the vibration frequencies with the frequencies associated with various rotating components within the vehicle. The data can be presented in 4 different display modes: principle component, bar chart, frequency spectrum or waterfall. All display mode formats contain the same common elements, such as amplitude.

The second is for noise diagnosis. This mode measures noise from 1 or 2 microphones simultaneously. All noise measurements are in decibels (dBs). All frequency bands used for noise measurements are the same as for the vibration measurements, up to 1,000 Hz (Hertz).

The third is driveshaft balancing. Driveshaft balancing is done using 1 or 2 accelerometers and a photo-tachometer. The accelerometers measure the vibration at both ends of the driveshaft, while the photo-tachometer measures the rotation speed and position reference.

The fourth is the strobe. A strobe or standard timing light can be connected to an analyzer, to provide a means for measuring rotation speed. The strobe function is used for isolating the source of a vibration.

EVA (Electronic Vibration Analyzer)

The EVA (Electronic Vibration Analyzer) is a hand-held electronic scan tool which will assist in locating the source of unacceptable vibrations. The vibration sensor can be remotely mounted anywhere in the vehicle for testing purposes. The unit displays the 3 most common vibration frequencies and their corresponding amplitudes simultaneously. A bar graph provides a visual reference of the relative signal strength (amplitude) of each vibration being displayed and its relative G-force. The keypad is arranged to make the EVA (Electronic Vibration Analyzer)simple to program and use. Some of the functions include the ability to average readings as well as record, play back and freeze readings. The EVA (Electronic Vibration Analyzer)has a strobe balancing function that can be used to detect imbalance on rotating components such as a driveshaft or engine accessories.

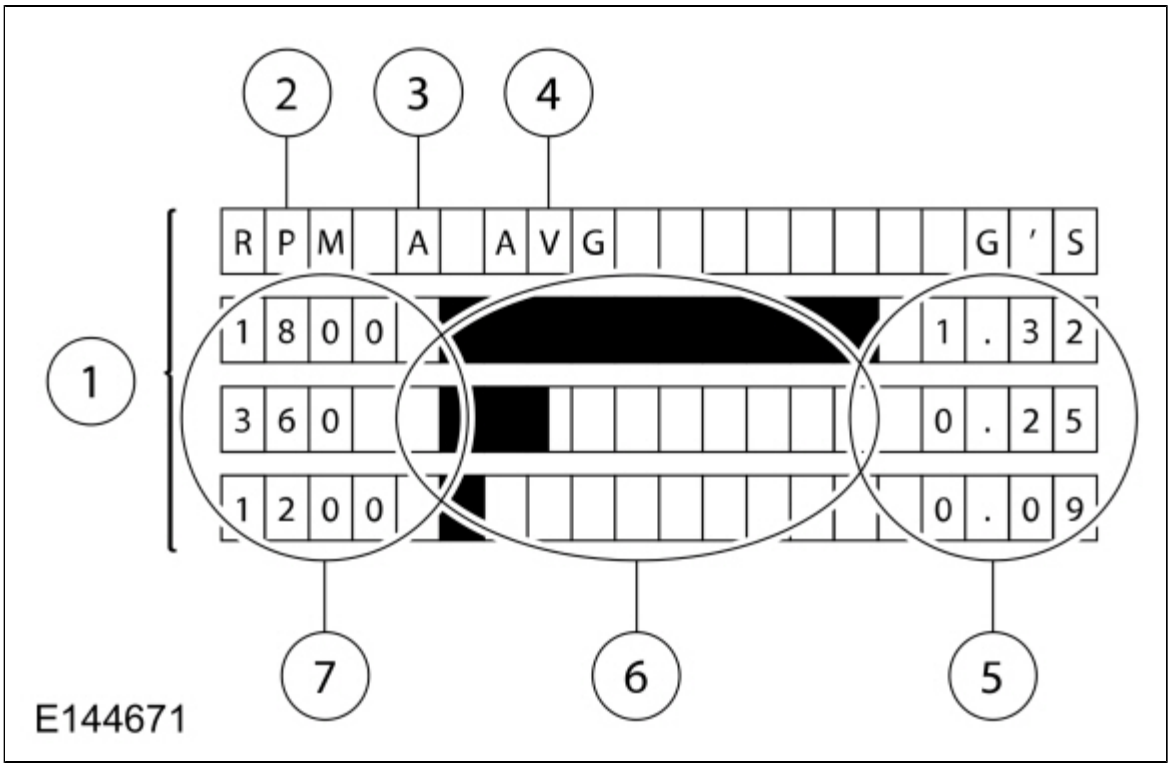

Item	Description
1	EVA (Electronic Vibration Analyzer)screen
2	Frequency mode displayed in RPM (Revoultions Per Minute) or Hz (Hertz)
3	Active sensor input (A or B)
4	Current active mode
5	G-force indicators or the strongest frequencies in descending strength of each vibration
6	Strength of each vibration
7	Frequency in RPM (Revoultions Per Minute)/Hz (Hertz) of each vibration

Record the readings taken with the diagnostic tool.

- Frequencies should be read in the "average" mode.
- Frequencies have a range of plus or minus 2 Hz (Hertz). A reading of 10 Hz (Hertz) can be displayed as an 8 Hz (Hertz) through 12 Hz (Hertz).

Vibrate Software

Vibrate Software is a diagnostic aid which will assist in pinpointing the source of unacceptable vibrations. The engine's crankshaft is

the point of reference for vibration diagnosis. Every rotating component will have an angular velocity that is faster, slower or the same as the engine's crankshaft. Vibrate Software® calculates the angular velocity of each component and graphically represents these velocities on a computer screen and on a printed vibration worksheet. The following steps outline how Vibrate Software® helps diagnose a vibration symptom:

- Enter the vehicle information. Vibrate will do all the calculations and display a graph showing tire, driveshaft and engine vibrations.
- Print a Vibration Worksheet graph. The printed graph is to be used during the road test.
- Road test the vehicle at the speed where the vibration is most noticeable. Record the vibration frequency rpm and the engine rpm on the worksheet graph. The point on the graph where the vibration frequency rpm reading and the engine rpm reading intersect indicates the specific component group causing the symptom.
    - A frequency measurement tool capable of measuring vibration frequency and engine rpm will be needed.
- Provides graphics of diagnostic procedures to aid in testing components.

Reed Tachometer

The Reed tachometer is a hand-held vibration sensor which will assist in locating the source of unacceptable vibrations. The vibration sensor can be placed anywhere in the vehicle for testing purposes. The Reed tachometer contains several reeds that are tuned to vibrate or resonate at different frequencies ranging from 10 to 80 Hz (Hertz) or 600 to 4,800 rpm. Though the Reed tachometer is able to measure multiple frequencies, it does not measure amplitude.

Sirometer

The Sirometer measures frequency in hertz and rpm. To use the Sirometer, place it on any vibrating component and slowly scroll the wire out by turning the knob. As the length of wire changes, so does its natural frequency. Find the length of wire that vibrates with the highest amplitude. This frequency will match that of the vibrating component. Read the frequency for that length of wire.

Combination EngineEAR/ChassisEAR

An electronic listening device used to quickly identify noise and the location under the chassis while the vehicle is being road tested. The ChassisEARs can identify the noise and location of damaged/worn wheel bearings, constant velocity joints, brakes, springs, axle bearings or driveshaft carrier bearings.

EngineEAR Basic Unit

An electronic listening device used to detect even the faintest noises. The EngineEARs can detect the noise of damaged/worn bearings in generators, coolant pumps, A/C compressors and power steering pumps. They are also used to identify noisy lifters, exhaust manifold leaks, chipped gear teeth and for detecting wind noise. The EngineEAR has a sensing tip, amplifier and headphones. The directional sensing tip is used to listen to the various components. Point the sensing tip at the suspect component and adjust the volume with the amplifier. Placing the tip in direct contact with a component will reveal structure-borne noise and vibrations, generated by or passing through, the component. Various volume levels can reveal different sounds.

Mechanic's Stethoscope

A mechanic's stethoscope is an inexpensive tool for locating noises in engines and other moving parts. It can be used to help diagnose piston slap, worn gears, faulty valves, coolant pump failure, damaged gaskets, defective bearings and body squeaks.

Squeak and Rattle Repair Kit

The Squeak and Rattle Repair Kit contains lubricants and self-adhesive materials that can be used to eliminate interior and exterior squeaks and rattles. The kit consists of the following materials:

- PVC (soft foam) tape
- Urethane (hard foam) tape
- Flocked (black fuzzy) tape
- UHMW (Ultra High Molecular Weight) (frosted) tape
- Squeak and rattle oil tube
- Squeak and rattle grease tube

Leak Detector

The Leak Detector is used to detect wind noises caused by leaks and gaps in areas where there is weatherstripping or other sealing material. It is also used to identify A/C leaks, vacuum leaks and evaporative emission noises. The Leak Detector includes a

multi-directional transmitter (operating in the ultrasonic range) and a hand-held detector. The transmitter is placed inside the vehicle. On the outside of the vehicle, the hand-held detector is used to sweep the area of the suspected leak. As the source of the leak is approached, a beeping sound is produced which increases in both speed and frequency.

Write-Up Job Aid

To assist the service advisor and the technician, a Write-up Job Aid and an NVH Diagnostic Guide are included with this material. The Write-up Job Aid serves as a place to record all important symptom information. The NVH Diagnostic Guide serves as a place to record information reported on the Write-up Job Aid as well as data from the testing to be carried out.

To begin a successful diagnosis, fill out the NVH Diagnostic Guide, record the reported findings, then proceed to each of the numbered process steps to complete the diagnosis.

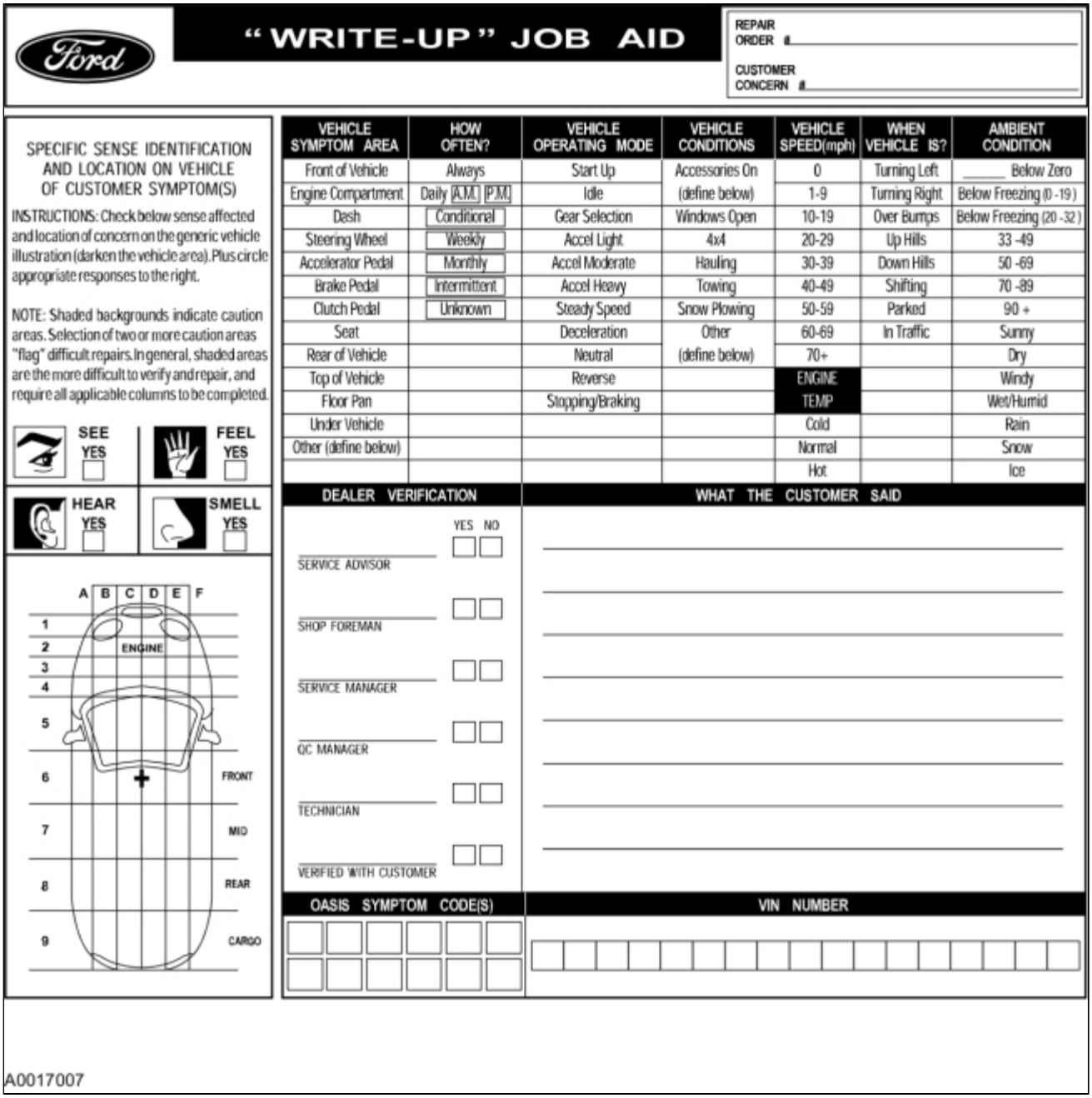

1: Customer Interview

The diagnostic process starts with the customer interview. The service advisor must obtain as much information as possible about the problem and take a test drive with the customer. There are many ways a customer will describe NVH concerns and this will help minimize confusion arising from descriptive language differences. It is important that the concern is correctly interpreted and the customer descriptions are recorded. During the interview, ask the following questions:

- When was it first noticed?
- Did it appear suddenly or gradually?
- Did any abnormal occurrence coincide with or proceed its appearance?

Use the information gained from the customer to accurately begin the diagnostic process.

2: Pre-Drive Check

It is important to do a pre-drive check before road testing the vehicle. A pre-drive check verifies that the vehicle is safe to drive and eliminates any obvious faults on the vehicle.

The pre-drive check consists of a brief visual inspection. During this brief inspection, take note of anything that will compromise safety during the road test and make those repairs/adjustments before taking the vehicle on the road.

3: Preparing for the Road Test

Observe the following when preparing for the road test:

- Review the information recorded on the NVH Diagnostic Guide. It is important to know the specific concern the customer has with the vehicle.
- Do not be misled by the reported location of the noise/vibration. The cause can actually be some distance away.
- Remember that the vibrating source component (originator) may only generate a small vibration. This small vibration can in turn cause a larger vibration/noise to emanate from another receiving component (reactor) due to contact with other components (transfer path).
- Conduct the road test on a quiet street where it is safe to duplicate the vibration/noise. The ideal testing route is an open, low-traffic area where it is possible to operate the vehicle at the speed at which the condition occurs.
- If possible, lower the radio antenna in order to minimize turbulence. Identify anything that could potentially make noise or be a source of wind noise. Inspect the vehicle for add-on items that create vibration/noise. Turn off the radio and the heating and cooling system blower.
- The engine speed is an important factor in arriving at a final conclusion. Therefore, connect an accurate tachometer to the engine, even if the vehicle has a tachometer. Use a tachometer that has clearly defined increments of less than 50 RPM (Revolutions Per Minute). This ensures an exact engine speed reading.

4: Verify the Customer Concern

Verify the customer concern by carrying out a road test, an engine run-up test, or both.

The decision to carry out a road test, an engine run-up test, or both depends on the type of NVH concern. A road test may be necessary if the symptom relates to the suspension system or is sensitive to torque. A DERU or a NERU Test identifies noises and vibrations relating to engine and drivetrain rpm. Remember, a condition will not always be identifiable by carrying out these tests; however, they will eliminate many possibilities if carried out correctly.

5: Road Test

NOTE: *It may be necessary to have the customer ride along or drive the vehicle to point out the concern. During the road test, take into consideration the customer's driving habits and the driving conditions. The customer's concern just may be an acceptable operating condition for that vehicle.*

The following is a brief overview of each test. A review of this information helps to quickly identify the most appropriate process necessary to make a successful diagnosis. After reviewing this information, select and carry out the appropriate test(s), proceeding to the next step of this process.

- The Slow Acceleration Test is normally the first test to carry out when identifying an NVH concern, especially when a road test with the customer is not possible.
- The Heavy Acceleration Test helps to determine if the concern is torque-related.
- The Neutral Coast Down Speed Test helps to determine if the concern is vehicle speed-related.
- The Downshift Speed Test helps to determine if the concern is engine speed-related.
- The Steering Input Test helps to determine how the wheel bearings and other suspension components contribute to a vehicle speed-related concern.
- The Brake Test helps to identify vibrations or noise that are brake related.
- The Road Test Over Bumps helps isolate a noise that occurs when driving over a rough or bumpy surface.
- The Engine Run-Up Tests consist of the Neutral Run-Up Test and the Engine Load Test. These tests help to determine if the concern is engine speed-related.

- The Neutral Run-Up Test is used as a follow-up test to the Downshift Speed Test when the concern occurs at idle.
- The Engine Load Test helps to identify vibration/noise sensitive to engine load or torque. It also helps to reproduce engine speed-related concerns that cannot be duplicated when carrying out the Neutral Run-Up Test or the Neutral Coast Down Test.
- The Engine Accessory Test helps to locate faulty belts and accessories that cause engine speed-related concerns.
- The Vehicle Cold Soak Procedure helps to identify concerns occurring during initial start-up and when an extended time lapse occurs between vehicle usage.

Slow Acceleration Test

To carry out this test, proceed as follows:

- Slowly accelerate to the speed where the reported concern occurs. Note the vehicle speed, the engine rpm and, if possible, determine the vibration frequency.
- Attempt to identify what part of the vehicle the concern is coming from.
- Attempt to identify the source of the concern.
- Proceed as necessary.

Heavy Acceleration Test

To carry out this test, proceed as follows:

- Accelerate hard from 0-64 km/h (0-40 mph).
- Decelerate in a lower gear.
- The concern is torque related if duplicated while carrying out this test.
- Proceed as necessary.

Neutral Coast Down Speed Test

To carry out this test, proceed as follows:

- Drive at a higher rate of speed than where the concern occurred when carrying out the Slow Acceleration Test.
- Place the transmission in NEUTRAL and coast down past the speed where the concern occurs.
- The concern is vehicle speed-related if duplicated while carrying out this test. This eliminates the engine and the torque converter as sources.
- If the concern was not duplicated while carrying out this test, carry out the Downshift Speed Test to verify if the concern is engine speed-related.
- Proceed as necessary.

Downshift Speed Test

To carry out this test, proceed as follows:

- Shift into a lower gear than the gear used when carrying out the Slow Acceleration Test.
- Drive at the engine rpm where the concern occurs.
- The concern is engine speed-related if duplicated while carrying out this test. This eliminates the tires, wheels, brakes and the suspension components as sources.
- If necessary, repeat this test using other gears and NEUTRAL to verify the results.
- Proceed as necessary.

Steering Input Test

To carry out this test, proceed as follows:

- Drive at the speed where the concern occurs, while making sweeping turns in both directions.
- If the concern goes away or gets worse, the wheel bearings, hubs, CV joints, and tire tread wear are all possible sources.
- Proceed as necessary.

Brake Test

To carry out this test, proceed as follows:

- Warm the brakes by slowing the vehicle a few times from 80-32 km/h (50-20 mph) using light braking applications. At highway speeds of 89-97 km/h (50-60 mph), apply the brake using a light pedal force.

- Accelerate to 89-97 km/h (55-60 mph).
- Lightly apply the brakes and slow the vehicle to 30 km/h (20 mph).
- A brake vibration noise can be felt in the steering wheel, seat or brake pedal. A brake noise can be heard upon brake application and diminish when the brake is released.
- If the source of the symptom has been identified as a result of this test, proceed to the appropriate brake section(s) for further diagnosis and repair. If the source has not been identified, continue with the road test.

Road Test Over Bumps

To carry out this test, proceed as follows:

- Drive the vehicle over a bumpy or rough surface one wheel at a time to determine if the noise is coming from the front or the back and the left or the right side of the vehicle.
- Proceed as necessary.

NERU (Neutral Engine Run-Up) Test

To carry out this test, proceed as follows:

- Install a tachometer.
- Increase the engine rpm from an idle to approximately 4000 rpm while in PARK on front wheel drive vehicles with automatic transmissions, or NEUTRAL for all other vehicles. Note the engine rpm and, if possible, determine the vibration frequency.
- Attempt to identify what part of the vehicle the concern is coming from.
- Attempt to identify the source of the concern.
- If the source of the symptom has been identified as a result of this test, proceed to the appropriate section for further diagnosis and repair. If the source has not been identified, continue with the road test.

DERU (Drive Engine Run-Up) Load Test

To carry out this test, proceed as follows:

- **WARNING: Block the front and rear wheels, and apply the parking brake and the service brake, or injury to personnel can result.**

  NOTICE: Do not carry out the Engine Load Test for more than 5 seconds or damage to the transmission or transaxle can result.

  Block the front and rear wheels.
- Apply the parking brake and the service brake.
- Install a tachometer.
- Shift the transmission into DRIVE, and increase and decrease the engine RPM (Revolutions Per Minute) between idle and approximately 2000 RPM (Revolutions Per Minute). Note the engine RPM (Revolutions Per Minute) and, if possible, determine the vibration frequency.
- Repeat the test in REVERSE.
- If the vibration/noise is duplicated when carrying out this test, inspect the engine and the transmission or transaxle mounts.
- If the concern is definitely engine speed-related, carry out the Engine Accessory Test to narrow down the source.
- If the source of the symptom has been identified as a result of this test, proceed to the appropriate section for further diagnosis and repair. If the source has not been identified, continue with the road test.

Engine Accessory Test

To carry out this test, proceed as follows:

- **WARNING: Block the front and rear wheels, and apply the parking brake and the service brake, or injury to personnel can result.**

  NOTICE: Limit engine running time to one minute or less with the belts removed or serious engine damage will result.

  NOTE: *A serpentine drive belt decreases the usefulness of this test. In these cases, use a vibration analyzer, such as the Electronic Vibration Analyzer (EVA), to pinpoint accessory vibrations. An electronic listening device, such as an EngineEAR, will also help to identify noises from specific accessories.*

Remove the accessory drive belts.
- Increase the engine RPM (Revolutions Per Minute) to where the concern occurs.
- If the vibration/noise is duplicated when carrying out this test, the belts and accessories are not sources.
- If the vibration/noise was not duplicated when carrying out this test, install each accessory belt, one at a time, to locate the source.
- If the source of the symptom has been identified as a result of this test, proceed to the appropriate section for further diagnosis and repair. If the source has not been identified, continue with the road test.

Vehicle Cold Soak Procedure

To carry out this procedure, proceed as follows:

- Test preparations include matching the customer conditions (if known). If not known, document the gear selection and engine rpm test conditions. Monitor the vibration/noise duration with a watch for up to 3 minutes.
- Park the vehicle where testing will occur. The vehicle must remain at or below the concern temperature (if known) for 6-8 hours.
- Before starting the engine, conduct a visual inspection under the hood.
- Turn the key on, but do not start the engine. Listen for fuel pump and anti-lock brake system ABS noises.
- Start the engine.

- **NOTICE: Never probe moving parts.**

  Isolate the vibration/noise by carefully listening. Move around the vehicle while listening to find the general location of the vibration/noise. Then, search for a more precise location by using a stethoscope or EngineEAR.
- If the source of the symptom has been identified as a result of this test, proceed to the appropriate section for further diagnosis and repair. If the source has not been identified, continue with the road test.

Symptom Charts

NVH Symptoms

Classify NVH Symptoms

For NVH concerns, it is necessary to classify the customer's concern into one of the 3 categories: noise, vibration or harshness. The reason for this is that a customer concern may consist of a combination of symptoms involving noise and vibration, or vibration and harshness. In cases where there are combination symptoms, determine which diagnostic path to follow: noise, vibration or harshness. For example, if a customer has a concern involving a noise and a vibration, and it is determined that it is vehicle speed-related, follow the vibration diagnostic path.

Noise Symptoms

Once a symptom is classified as a noise, the particular conditions under which the noise occurs need to be identified. These conditions are identified and verified during the road test. For example, a noise may only occur while turning. The next step is to determine which systems on the vehicle are related to that condition. In this case, the steering system and wheel/tire system may be suspect. After identifying possible systems, a preliminary inspection of these systems should be done. If the source of noise is still unidentified, use a listening device (such as the ChassisEAR) to pinpoint the source. Once the source has been identified, determine if this source is related to the suspected system previously identified. If it is related, then complete the repair to resolve the customer concern. If it is unrelated, then it is possible that the source of the noise is a reactor to a noise being transmitted through a transfer path. If this is the case, repairing the reactor will not resolve the customer concern. The transfer path must be identified and a determination made if the noise is normal, but accentuated by the transfer path (conductor), or if the originator is the fault causing excessive noise to transfer to another component through a conductor. There is a relationship between systems identified as related to conditions and the noise transfer path. In some cases, the condition under which the noise occurs has nothing to do with the identified source. This relationship is important in the diagnosis of noise concerns. It is the first clue that the identified source of noise might be a reactor and that further investigation is needed to diagnose a possible noise transfer path concern. Based on the results from the road test, make a determination of which action in the symptom chart to take first.

Vibration Symptoms

Most vibrations consist of movements back and forth or up and down that repeat. Every time the vibrating component goes through its complete range of motion and returns to the starting point is called a cycle. The rate at which these cycles occur within a given time is called the frequency. Frequency is measured in cycles per second or Hz (Hertz). One cycle per second equals one Hz (Hertz). Once the frequency of a vibration is known, calculations can be done to determine the system that is the source of the concern.

Order of Vibration

The order of a vibration refers to how often the vibration is present in one revolution of the component. For example, a vibration that is present once each revolution of a component would be a first order vibration. A vibration present twice each revolution of the component would be a second order vibration. Vibration orders do not have to be whole numbers, they can have decimal values such as 1.5 order vibration or 3.08 order vibration.

The concept of order of vibration is important to remember when the measured frequency of a vibration does not seem to match the frequency calculations of any of the likely systems or components. As the order increases, the frequency of the vibration will also increase by a multiple of that number.

For example, vibration may be present where the frequency is measured at 14 Hz (Hertz). After doing the necessary calculations it is determined the first order tire and wheel frequency is 7 Hz (Hertz) and the first order driveshaft frequency is 22 Hz (Hertz). Based on this information it can be determined the vibration is most likely a second order tire and wheel vibration: 7 Hz (Hertz) (first order tire and wheel frequency) multiplied by 2 (second order) equals 14 Hz (Hertz) (second order tire and wheel frequency).

Relationship of Vibration Frequency to Order of Vibration

After carrying out the road test as described in this section, the vibration was determined to be either vehicle-speed related or engine-speed related. That determination will identify the vibration frequency calculations that should be done.

Vibration Type	Calculate
Vehicle-speed related	Tire-speed vibration frequency, Driveshaft-speed vibration frequency
Engine-speed related	Engine vibration frequency, Engine accessory vibration frequency, Engine firing vibration frequency

In calculating and using frequency readings it is important to remember the direct relationship between Hz (Hertz) and rpm. One Hz (Hertz) is equal to 60 rpm.Think of Hz (Hertz) as cycles per second. There are 60 seconds in a minute, therefore multiply the Hz (Hertz) reading by 60 to get rpm. Conversely, divide rpm by 60 to get Hz (Hertz).

Use the Frequency and RPM (Revolutions Per Minute) Calculations Worksheet to calculate system/component frequencies. The worksheet provides the necessary steps to determine each system/component group frequency.

Frequency Calculations

Calculating Tire and Wheel Frequency

For a vibration concern, use the vehicle speed to determine tire/wheel frequency and RPM (Revolutions Per Minute). Calculate the tire and wheel RPM (Revolutions Per Minute) and frequency by carrying out and following:

- Measure the diameter of the tire.
- Record the speed at which the vibration occurs.
- Obtain the corresponding tire and wheel RPM (Revolutions Per Minute) and frequency from the Tire Speed and Frequency Chart.
    - If the vehicle speed is not listed, divide the vehicle speed at which the vibration occurs by 16 km/h (10 mph). Multiply that number by the 16 km/h (10 mph) tire RPM (Revolutions Per Minute) listed for that tire diameter in the chart. Then divide that number by 60. For example: a 40 mph vibration with 835 mm (33 in) tires. 40 divided by 10 = 4. Multiply 4 by 105 = 420 RPM (Revolutions Per Minute). Divide 420 RPM (Revolutions Per Minute) by 60 seconds = 7 Hz (Hertz) at 40 mph.

Tire Speed and Frequency Chart

Tire Diameter	Tire RPM (Revolutions Per Minute)/Hz (Hertz) at value listed below	Tire RPM (Revolutions Per Minute)/Hz (Hertz) at value listed below	Tire RPM (Revolutions Per Minute)/Hz (Hertz) at value listed below	Tire RPM (Revolutions Per Minute)/Hz (Hertz) at value listed below
in (mm)	@ 16 km/h (10 mph)	@ 80 km/h (50 mph)	@ 97 km/h (60 mph)	@ 113 km/h (70 mph)
in (mm) 19 (483)	182	910/15	1092/18	1274/21
20 (508)	173	865/14	1038/17	1211/20
21 (533)	165	825/14	990/16	1155/19
22 (560)	158	790/13	948/16	1106/18
23 (585)	151	755/13	906/15	1057/18
24 (610)	145	725/12	870/14	1015/17
25 (635)	139	695/12	834/14	973/16
26 (660)	134	670/11	804/13	938/16
27 (685)	129	645/11	774/13	903/15
28 (710)	124	620/10	744/12	868/14
29 (735)	119	595/10	714/12	833/14
30 (760)	115	575/10	690/11	805/13
31 (785)	111	555/9	666/11	777/13
32 (810)	108	540/9	648/11	756/13
33 (835)	105	525/9	630/10	735/12
34 (864)	102	510/8	612/10	714/12

Calculating Driveshaft Frequency

Knowing the tire and wheel frequency allows for easy calculation of driveshaft frequency. The driveshaft drives the tires through the rear axle. Therefore, to determine driveshaft frequency, multiply tire and wheel frequency by the ratio of the rear axle. Calculate driveshaft frequency by performing the following steps:

- Obtain the axle ratio of the vehicle. Suppose the vehicle you are diagnosing has a vibration problem at 64 km/h (40mph) and a rear axle ratio of 3.08:1.
- Multiply the tire and wheel frequency of 7 Hz (Hertz) (calculated previously) with the rear axle ratio of 3.08:1. This results in a driveshaft frequency of 22 Hz (Hertz) at a vehicle speed of 64 km/h (40mph).

The calculated frequency of 22 Hz (Hertz) is the first order driveshaft frequency; the second order frequency of the driveshaft is twice this number, or 44 Hz (Hertz); and so on.

Calculating Engine Frequency

Use the engine RPM (Revolutions Per Minute) where the vibration symptom occurs to determine engine frequency. Calculate engine frequency by dividing the engine RPM (Revolutions Per Minute) by 60 (the number of seconds in a minute). For example, if the corresponding engine RPM (Revolutions Per Minute) of a vibration concern on a vehicle is 2,400 RPM (Revolutions Per Minute), the resulting engine frequency is 40 Hz (Hertz). Therefore, a 40 Hz (Hertz) vibration is a first order engine vibration. For purposes of vibration diagnosis, the engine also includes the torque converter and exhaust system.

Calculating Engine Accessory Frequency

Belt-driven engine accessories often produce vibrations at different frequencies than the engine itself. This is because the drive ratio created by the different size pulleys causes them to rotate at different speeds. Determining engine accessory frequency is comparable to calculating driveshaft frequency.

Calculate engine accessory frequency by performing the following steps:

- Determine the size ratio factor between the accessory pulley and the crankshaft pulley. For example, if the diameter of the crankshaft pulley is 6 inches and the accessory pulley diameter is 2 inches, the accessory pulley rotates 3 times for every crankshaft rotation (6 divided by 2).
- Multiply the engine RPM (Revolutions Per Minute) where the vibration condition occurs by the number of times the accessory pulley is rotating per crankshaft revolution. For example, if the engine RPM (Revolutions Per Minute) is 2,400 RPM (Revolutions Per Minute), the accessory is rotating at 7,200 RPM (Revolutions Per Minute) (2,400 RPM (Revolutions Per Minute) multiplied by 3).
- Divide the accessory RPM (Revolutions Per Minute) by 60 (the number of seconds in a minute). In this example, the engine accessory frequency is 120 Hz (Hertz) (7,200 divided by 60).

Calculating Engine Firing Frequency

Engine firing frequency is a term used to describe the pulses an engine creates from the firing of the cylinders. Engine firing frequency depends on how many cylinders an engine has. The number of times an engine fires a cylinder with each crankshaft revolution is equal to one-half the number of cylinders. A 4-cylinder engine fires 2 cylinders with each crankshaft revolution. Two revolutions of the crankshaft fire all 4 cylinders. A 6-cylinder engine fires 3 cylinders with each crankshaft revolution. An 8-cylinder engine fires 4 cylinders for each crankshaft revolution.

Calculate engine firing frequency by performing the following steps:

- Multiply the engine RPM (Revolutions Per Minute) where the vibration symptom occurs by the number of cylinders fired with each crankshaft revolution. For example, a vehicle with a 6-cylinder engine experiences a vibration concern at 2,400 RPM (Revolutions Per Minute). The engine is firing the cylinders at 7,200 times per minute (3 multiplied by 2,400).
- Divide this number by 60 (the number of seconds in a minute) to obtain the engine firing frequency. In this example, the engine firing frequency is 120 Hz (Hertz) (7,200 divided by 60) at 2,400 RPM (Revolutions Per Minute).

Frequency and RPM Calculations Worksheet

WHEEL/TIRE/BRAKES CHECK:

Balance Check **Yes / No**

Maximum Runout Allowed:

Wheel: Radial _____ Lateral _____

Tire: Radial _____ Lateral _____

Measured Runout:

Tire/Wheel	Radial:	LF _____	LR _____	RF _____	RR _____
	Lateral:	LF _____	LR _____	RF _____	RR _____
Wheel Only	Radial:	LF _____	LR _____	RF _____	RR _____
	Lateral:	LF _____	LR _____	RF _____	RR _____

SUSPENSION INSPECTION:

Can Cause: Shimmy ☐ Clunk ☐ Squeak ☐ Harshness ☐

Suspension Bushings: Loose ☐ Worn ☐ Missing ☐ OK ☐

Front Upper Control Arm ☐ Stabilizer (sway bar) ☐ Rear Lower Control Arm ☐

Front Lower Control Arm ☐ Rear Upper Control Arm ☐ Rear Upper Control Arm ☐

Other _____

Suspension/Steering Components: Loose Worn Missing OK

Ball Joints ☐ Idler Arm ☐ Pitman Arm ☐

Shock Absorbers F/R ☐ Center Link ☐ Steering Gear ☐

Springs F/R ☐ Tie Rod Ends/Sleeve ☐ Steering Coupler ☐

DRIVESHAFT CONDITION: Noise ☐ Vibration ☐

Balance Weights Missing/Other Visual Defects? **Yes / No**

Maximum Allowable Runout: _____

Actual Runout: Front _____ Middle _____ Rear _____

Two-Piece Driveshaft Runout: Front _____ Rear _____

Middle Support Bearing: Loose ☐ Damaged ☐ Worn ☐ Other _____

Suspect Driveshaft Balanced? **Yes / No**

Pinion Angle: Engine Height: Specification _____ Actual _____

Pinion Angle: Specification _____ Actual _____

Driveline Angle - Truck: Specification _____ Actual _____

ENGINE/ACCESSORY CHECK:

Visual Inspection for Damage or Grounded Condition:

Powertrain Mounts ☐ Fuel Lines ☐ A/C Lines ☐ Power Steering/Cooler Lines ☐

Air Intake ☐ Accessories ☐ Exhaust ☐ Radiator/Condensor ☐

BODY (NOISE/RATTLE)

Indicate Suspected Area of Concern: Doors ☐ Windows ☐ Dash Panel ☐ Other _____

Tests Used to Isolate

NVH Concern: Vacuum/Leak Detector ☐ Ultrasonic Leak Detector ☐ Tracing Powder ☐

Electronic Noise Detector ☐ Other _____

ROAD/ENGINE RUN-UP TESTS: Improved? **Yes / No** Vehicle Acceptable? **Yes / No**

Comments: _____

A0008914

Harshness Symptoms

Harshness is customer perception which gives the impression of no isolation from the tire/wheel and suspension system. Harshness may be caused by road conditions, temperature changes, component damage and/or incorrect customer modifications

on original components/specifications. Customers usually experience harshness when the vehicle is driving over bumps or potholes and in cold weather conditions. Harshness can also be experienced with excessive tire pressure, sporty tires, heavy-duty springs and shocks, or other vehicle modifications. Some aftermarket tires, even with the correct size, may change vehicle behavior and produce customer concerns. The first step in diagnosing a harshness concern is to determine if the concern was experienced only in certain specific operating conditions, such as large potholes or extremely cold weather. In these cases, harshness should be considered normal. A known good vehicle can be driven under the same conditions and the rides can be compared to determine whether the concern is normal or vehicle specific. The second step is to check tire pressure and make sure it was set within vehicle specifications. The third step is to inspect for aftermarket or modified components and determine if they are the cause of the harshness complaint. If the harshness concern persists after the above steps, it is possible that some components are damaged. Based on the results from the road test, make a determination of which action in the symptom chart to take first.

NVH Symptom Chart Categories

A good diagnostic process is a logical sequence of steps that lead to the identification of a causal system. Use the symptom and possible system categories as follows:

- Identify the operating condition that the vehicle is exhibiting.
- Match the operating condition to the symptom.
- Verify the symptom.
- Calculate the frequency and order of the symptom.
- Identify which category or system(s) could cause the symptom.
- the section indicated to identify and diagnose the symptom or confirm that the system is not the source of the condition.

Use the diagnostic instructions in this section along with the necessary listed tools to identify the vibration order and to isolate the symptom and the possible systems associated with that symptom. Then based on the results from the road test, make a determination of which action in the symptom chart to take first. Since it is possible any one of multiple systems may be the cause of the symptom, it may be necessary to use a process of elimination type diagnostic approach to pinpoint the concern. the section(s) indicated to identify and isolate the cause or rule that system out as being the causal system for the symptom.

Symptom Chart: Vehicle-Speed Related Vibrations

NOTE: *Any assembly that is out of balance will only cause a first order vibration, it will not cause a higher order vibration.*

When a vehicle-speed related vibration is present, both tire-speed related vibration and driveshaft-speed related vibration calculations should be carried out.

Symptom Chart-Tire-Speed Related Vibrations

Symptom Chart

Condition	Possible Sources	Actions
First order tire vibration	Tire or wheel	Symptom Chart: NVH REFER to: Wheels and Tires (204-04A Wheels and Tires, Diagnosis and Testing).
	Wheel bearings	Symptom Chart: NVH REFER to: Suspension System (204-00 Suspension System - General Information, Diagnosis and Testing).
	• Drive axle • Halfshaft	Symptom Chart: NVH REFER to: Driveline System (205-00 Driveline System - General Information, Diagnosis and Testing).
	Brake rotor or drum	Symptom Chart: NVH REFER to: Brake System (206-00 Brake System - General Information, Diagnosis and Testing).
Second order tire vibration	Tire or wheel	Symptom Chart: NVH REFER to: Wheels and Tires (204-04A Wheels and Tires, Diagnosis and Testing).

Third order tire vibration	Tire or wheel	Symptom Chart: NVH REFER to: Wheels and Tires (204-04A Wheels and Tires, Diagnosis and Testing).
	• Drive axle • Halfshaft	Symptom Chart: NVH REFER to: Driveline System (205-00 Driveline System - General Information, Diagnosis and Testing).

Symptom Chart Driveshaft-Speed Related Vibrations

Symptom Chart

Condition	Possible Sources	Actions
First order driveshaft vibration	• Driveshaft • Axle/differential	Symptom Chart: NVH REFER to: Driveline System (205-00 Driveline System - General Information, Diagnosis and Testing).
Second order driveshaft vibration	CV joint	Symptom Chart: NVH REFER to: Driveline System (205-00 Driveline System - General Information, Diagnosis and Testing).
Third order driveshaft vibration	Rear drive axle/differential	Symptom Chart: NVH REFER to: Driveline System (205-00 Driveline System - General Information, Diagnosis and Testing).

Symptom Chart: Engine-Speed Related Vibrations

NOTE: *When an engine-speed related vibration is present, engine, engine accessory and engine firing calculations should be carried out.*

NOTE: *Any assembly that is out of balance will only cause a first order vibration, it will not cause a higher order vibration.*

NOTE: *Some engine-speed related vibrations are normal though they should not be felt in the passenger compartment.*

Symptom Chart

Condition	Possible Sources	Actions
0.5 order engine vibration	Engine	Symptom Chart: NVH REFER to: Engine (303-00 Engine System - General Information, Diagnosis and Testing). REFER to: Engine (303-01A Engine - 2.0L Duratec-HE (125kW/170PS) - MI4, Diagnosis and Testing). or REFER to: Engine (303-01B Engine - 2.0L EcoBoost (184kW/250PS) - MI4, Diagnosis and Testing).
First through sixth order engine vibration	Engine	Symptom Chart: NVH REFER to: Engine (303-00 Engine System - General Information, Diagnosis and Testing). REFER to: Engine (303-01A Engine - 2.0L Duratec-HE (125kW/170PS) - MI4, Diagnosis and Testing). or REFER to: Engine (303-01B Engine - 2.0L EcoBoost (184kW/250PS) - MI4,

		Diagnosis and Testing).
	Transmission/transaxle	REFER to: Automatic Transmission (307-01 Automatic Transmission - Vehicles With: 6-Speed PowerShift Transmission - DPS6/6DCT250, Diagnosis and Testing). or REFER to: Manual Transmission (308-03A Manual Transmission - Vehicles With: 5-Speed Manual Transmission - MTX75, Diagnosis and Testing).
	Engine mounts	REFER to: Engine (303-00 Engine System - General Information, Diagnosis and Testing).
	Transmission/transaxle mounts	REFER to: Automatic Transmission (307-01 Automatic Transmission - Vehicles With: 6-Speed PowerShift Transmission - DPS6/6DCT250, Diagnosis and Testing). or REFER to: Manual Transmission (308-03A Manual Transmission - Vehicles With: 5-Speed Manual Transmission - MTX75, Diagnosis and Testing).
	Exhaust system	Symptom Chart: Symptom Chart - NVH REFER to: Exhaust System (309-00A Exhaust System - 2.0L Duratec-HE (125kW/170PS) - MI4, Diagnosis and Testing).
Belt driven accessory speed vibration	Engine pulley	Symptom Chart: NVH REFER to: Accessory Drive (303-05A Accessory Drive - 2.0L Duratec-HE (125kW/170PS) - MI4, Diagnosis and Testing). or REFER to: Accessory Drive (303-05B Accessory Drive - 2.0L EcoBoost (184kW/250PS) - MI4, Diagnosis and Testing).
	Coolant pump	Symptom Chart: NVH REFER to: Engine Cooling (303-03A Engine Cooling - 2.0L Duratec-HE (125kW/170PS) - MI4, Diagnosis and Testing). or REFER to: Engine Cooling (303-03B Engine Cooling - 2.0L EcoBoost (184kW/250PS) - MI4, Diagnosis and Testing).
	Generator	Symptom Chart: Charging System REFER to: Charging System - 2.0L Duratec-HE (125kW/170PS) - MI4 (414-00 Charging System - General Information, Diagnosis and Testing). or REFER to: Charging System - 2.0L EcoBoost (184kW/250PS) - MI4 (414-00 Charging System - General Information, Diagnosis and Testing).
	A/C compressor	Symptom Chart: REFER to: Climate Control System - Vehicles With: Electronic Manual Temperature Control (EMTC) (412-00 Climate Control System - General Information, Diagnosis and Testing). or REFER to: Climate Control System - Vehicles With: Dual Automatic Temperature Control (DATC) (412-00 Climate Control System - General Information, Diagnosis and Testing).
	Accessory drive belt	Symptom Chart: NVH REFER to: Accessory Drive (303-05A Accessory Drive - 2.0L Duratec-HE (125kW/170PS) - MI4, Diagnosis and Testing). or REFER to: Accessory Drive (303-05B Accessory Drive - 2.0L EcoBoost (184kW/250PS) - MI4, Diagnosis and Testing).

Symptom Chart: Noise, Air Leaks or Water Leaks

Symptom Chart

Condition	Possible Sources	Actions
Wind noise, air or water leaks	• Body • Roof opening	REFER to: Body System (501-00 Body System - General Information, Diagnosis

	panel	and Testing).
Belt driven accessory noise/squeal or chirping	• Accessory drive belt • Pulleys	Symptom Chart: FEAD REFER to: Accessory Drive (303-05A Accessory Drive - 2.0L Duratec-HE (125kW/170PS) - MI4, Diagnosis and Testing). orREFER to: Accessory Drive (303-05B Accessory Drive - 2.0L EcoBoost (184kW/250PS) - MI4, Diagnosis and Testing).
Front end noise while driving vehicle	Front suspension	Symptom Chart: NVH REFER to: Suspension System (204-00 Suspension System - General Information, Diagnosis and Testing).
	Drive axle or differential	Symptom Chart: NVH REFER to: Driveline System (205-00 Driveline System - General Information, Diagnosis and Testing).
	Brake system	Symptom Chart: NVH REFER to: Brake System (206-00 Brake System - General Information, Diagnosis and Testing).
	Steering linkage or gear	Symptom Chart: NVH REFER to: Power Steering (211-02 Power Steering, Diagnosis and Testing).
	Transmission/transaxle	REFER to: Automatic Transmission (307-01 Automatic Transmission - Vehicles With: 6-Speed PowerShift Transmission - DPS6/6DCT250, Diagnosis and Testing). or REFER to: Manual Transmission (308-03A Manual Transmission - Vehicles With: 5-Speed Manual Transmission - MTX75, Diagnosis and Testing).
	Engine	Symptom Chart: NVH REFER to: Engine (303-00 Engine System - General Information, Diagnosis and Testing). REFER to: Engine (303-01A Engine - 2.0L Duratec-HE (125kW/170PS) - MI4, Diagnosis and Testing). or REFER to: Engine (303-01B Engine - 2.0L EcoBoost (184kW/250PS) - MI4, Diagnosis and Testing).
	Exhaust system	Symptom Chart: NVH REFER to: Exhaust System (309-00A Exhaust System - 2.0L Duratec-HE (125kW/170PS) - MI4, Diagnosis and Testing).
	Body	REFER to: Body System (501-00 Body System - General Information, Diagnosis and Testing).
Rear end noise while driving vehicle	Rear suspension	Symptom Chart: NVH REFER to: Suspension System (204-00 Suspension System - General Information, Diagnosis and Testing).
	Drive axle or differential	Symptom Chart: NVH REFER to: Driveline System (205-00 Driveline System - General Information, Diagnosis and Testing).
	Brake system	Symptom Chart: NVH REFER to: Brake System (206-00 Brake System - General Information, Diagnosis and Testing).
	Transmission/transaxle	REFER to: Automatic Transmission (307-01 Automatic Transmission - Vehicles With: 6-Speed PowerShift Transmission - DPS6/6DCT250, Diagnosis and Testing). or REFER to: Manual Transmission (308-03A Manual Transmission - Vehicles With: 5-Speed Manual Transmission - MTX75, Diagnosis and Testing).
	Exhaust system	Symptom Chart: Symptom Chart: NVH REFER to: Exhaust System (309-00A Exhaust System - 2.0L Duratec-HE

		(125kW/170PS) - MI4, Diagnosis and Testing).
	Body	Symptom Chart: REFER to: Body System (501-00 Body System - General Information, Diagnosis and Testing).
Noise with vehicle stopped	Engine	Symptom Chart: NVH REFER to: Engine (303-01A Engine - 2.0L Duratec-HE (125kW/170PS) - MI4, Diagnosis and Testing). or REFER to: Engine (303-01B Engine - 2.0L EcoBoost (184kW/250PS) - MI4, Diagnosis and Testing).
	Transmission/transaxle	REFER to: Automatic Transmission (307-01 Automatic Transmission - Vehicles With: 6-Speed PowerShift Transmission - DPS6/6DCT250, Diagnosis and Testing). or REFER to: Manual Transmission (308-03A Manual Transmission - Vehicles With: 5-Speed Manual Transmission - MTX75, Diagnosis and Testing).
	Exhaust system	Symptom Chart: NVH REFER to: Exhaust System (309-00A Exhaust System - 2.0L Duratec-HE (125kW/170PS) - MI4, Diagnosis and Testing).
	Generator	Symptom Chart: REFER to: Charging System - 2.0L Duratec-HE (125kW/170PS) - MI4 (414-00 Charging System - General Information, Diagnosis and Testing). REFER to: Charging System - 2.0L EcoBoost (184kW/250PS) - MI4 (414-00 Charging System - General Information, Diagnosis and Testing). or REFER to: Charging System - System Operation and Component Description (414-00 Charging System - General Information, Description and Operation).
	A/C compressor	Symptom Chart: NVH REFER to: Climate Control System - Vehicles With: Electronic Manual Temperature Control (EMTC) (412-00 Climate Control System - General Information, Diagnosis and Testing). or REFER to: Climate Control System - Vehicles With: Dual Automatic Temperature Control (DATC) (412-00 Climate Control System - General Information, Diagnosis and Testing).
	Body	Symptom Chart: Body System REFER to: Body System (501-00 Body System - General Information, Diagnosis and Testing).

Symptom Chart: Harshness

Symptom Chart

Condition	Possible Sources	Actions
Harsh vehicle ride	Front suspension	Symptom Chart: NVH REFER to: Suspension System (204-00 Suspension System - General Information, Diagnosis and Testing).
	Rear suspension	Symptom Chart: NVH REFER to: Suspension System (204-00 Suspension System - General Information, Diagnosis and Testing).

Copyright © Ford Motor Company

Brake System

Symptom Chart(s)

Symptom Chart: Brake System

Diagnostics in this manual assume a certain skill level and knowledge of Ford-specific diagnostic practices.
REFER to: Diagnostic Methods (100-00 General Information, Description and Operation).

Condition	Possible Sources	Actions
The red brake warning indicator and the yellow ABS warning indicator are illuminated	Diagnostic Trouble Codes (DTCs) in the ABS	CHECK for ABS diagnostic trouble codes (DTCs). REFER to: Anti-Lock Brake System (ABS) and Stability Control (206-09 Anti-Lock Brake System (ABS) and Stability Control, Diagnosis and Testing).
The red brake warning indicator is always/never on	• Brake fluid level switch • Parking brake switch • Wiring, terminals or connectors • IPC • BCM	REFER to: Instrumentation, Message Center and Warning Chimes (413-01 Instrumentation, Message Center and Warning Chimes, Diagnosis and Testing).
Vehicle pulls or drifts during braking	• Brake calipers and/or guide pins • Wheel cylinders and/or brake shoe hardware • Brake flexible hose • Brake pads/shoes • Brake discs/drums	INSPECT the brake system components. REFER to: Brake System Inspection (206-00 Brake System - General Information, General Procedures). INSTALL new components as necessary.
	Tires	REFER to: Wheels and Tires (204-04A Wheels and Tires, Diagnosis and Testing).
	Suspension component(s) and/or wheel alignment	REFER to: Suspension System (204-00 Suspension System - General Information, Diagnosis and Testing).
Brake pedal goes down fast or eases down slowly	Brake fluid leaks and/or air in the system	INSPECT the system for leaks. REPAIR as necessary. BLEED the system. REFER to: Brake System Bleeding (206-00 Brake System - General Information, General Procedures).
	Brake master cylinder	CARRY OUT the Brake Master Cylinder - Bypass Condition Component Test.
	HCU	REFER to: Anti-Lock Brake System (ABS) and Stability Control (206-09 Anti-Lock Brake System (ABS) and Stability Control, Diagnosis and Testing).

Brakes lock up under light brake pedal force	• Brake pads/shoes • Brake flexible hose • Brake discs/drums • Brake calipers and/or guide pins • Wheel cylinders and/or brake shoe hardware	INSPECT the brake system components. REFER to: Brake System Inspection (206-00 Brake System - General Information, General Procedures). INSTALL new components as necessary.
	ABS	REFER to: Anti-Lock Brake System (ABS) and Stability Control (206-09 Anti-Lock Brake System (ABS) and Stability Control, Diagnosis and Testing).
Excessive brake pedal travel (low/spongy pedal)	Brake fluid leaks and/or air in the system	INSPECT the system for leaks. REPAIR as necessary. BLEED the system. REFER to: Brake System Bleeding (206-00 Brake System - General Information, General Procedures).
	Incorrect brake shoe adjustment	REFER to: Brake Shoe Adjustment (206-02 Drum Brake, General Procedures).
	Brake master cylinder	CARRY OUT the Brake Master Cylinder - Bypass Condition Component Test.
	Brake calipers and/or guide pins	INSPECT the brake calipers and guide pins. REFER to: Brake System Inspection (206-00 Brake System - General Information, General Procedures). INSTALL new components as necessary.
	Brake flexible hose	INSPECT the brake flexible hoses during brake application. INSTALL a new brake hose as necessary. REFER to: Front Brake Flexible Hose (206-03 Front Disc Brake, Removal and Installation). REFER to: Rear Brake Flexible Hose (206-02 Drum Brake, Removal and Installation). REFER to: Rear Brake Flexible Hose (206-04 Rear Disc Brake, Removal and Installation).
Erratic brake pedal travel	Brake pedal	INSPECT the brake pedal for binding, obstructions and correct interface to booster rod. REPAIR as necessary. CHECK the brake pedal fasteners for correct torque. REFER to: Brake Pedal and Bracket (206-06 Hydraulic Brake Actuation, Removal and Installation).
	ABS	REFER to: Anti-Lock Brake System (ABS) and Stability Control (206-09 Anti-Lock Brake System (ABS) and Stability Control, Diagnosis and Testing).
Brake drag	Parking brake component	INSPECT the parking brake system. REFER to: Parking Brake (206-05 Parking Brake and Actuation, Diagnosis and Testing).
	• Incorrect brake shoe and/or parking brake cable adjustment • Wheel cylinder(s) • Brake caliper and/or guide pins • Brake flexible hose • Brake booster	INSPECT the brake system components. REFER to: Brake System Inspection (206-00 Brake System - General Information, General Procedures). INSTALL new components as necessary.

	Brake master cylinder	CARRY OUT the Brake Master Cylinder - Compensator Port Component Test.
	Hydraulic Control Unit (HCU)	REFER to: Anti-Lock Brake System (ABS) and Stability Control (206-09 Anti-Lock Brake System (ABS) and Stability Control, Diagnosis and Testing).
	Stoplamp switch	VERIFY correct installation of the stoplamp switch. REFER to: Stoplamp Switch (417-01 Exterior Lighting, Removal and Installation).
Excessive brake pedal effort	• Insufficient vacuum for brake booster operation • Brake booster manifold vacuum hose • Brake booster • Brake booster check valve • Brake booster vacuum pump	CARRY OUT the Brake Booster Component Test in this section.
	Brake pads/shoes	INSPECT the brake pads. INSTALL new components as necessary. REFER to: Brake System Inspection (206-00 Brake System - General Information, General Procedures).

Symptom Chart: NVH

Diagnostics in this manual assume a certain skill level and knowledge of Ford-specific diagnostic practices.
REFER to: Diagnostic Methods (100-00 General Information, Description and Operation).

Condition	Possible Sources	Actions
Vibration when the brakes are applied	• Brake disc(s)/drums(s) • Suspension components	GO to Pinpoint Test A
Brake vibration/shudder occurs when the brake pedal is released	Brake drag	REFER to Symptom Chart: Brake System
Rattling noise	• Caliper guide pins or guide pin bolts • Missing or damaged anti-rattle clips or springs • Loose brake disc shield • Missing or damaged brake shoe hardware	• INSPECT the caliper guide pins and guide pin bolts. REFER to: Brake System Inspection (206-00 Brake System - General Information, General Procedures). INSTALL new components as necessary. • INSPECT the brake pads for missing clips or broken springs. REFER to: Brake System Inspection (206-00 Brake System - General Information, General Procedures). INSTALL new components as necessary. • TIGHTEN the brake disc shield bolts to specification. REFER to: Brake Disc Shield (206-03 Front Disc Brake, Removal and Installation).

		REFER to: Brake Disc Shield (206-04 Rear Disc Brake, Removal and Installation). • CHECK the brake shoes for missing or broken hardware. INSTALL new components as necessary. REFER to: Brake Shoes (206-02 Drum Brake, Removal and Installation).
Squealing noise - occurs on first (morning) brake application	Brake pads/shoes	Acceptable condition. Caused by humidity and low brake pad temperature.
Squealing noise - a continuous squeal	Brake pads/shoes	INSPECT the brake pads. INSTALL new components as necessary. REFER to: Brake Pads (206-03 Front Disc Brake, Removal and Installation). REFER to: Brake Pads (206-04 Rear Disc Brake, Removal and Installation).
Squealing noise - an intermittent squeal	Brake pads/shoes	Acceptable condition. Caused by cold, heat, water, mud or snow.
Groaning noise - occurs at low speeds with brake lightly applied (creeping)	Brake pads/shoes	Acceptable condition.
Grinding/moaning noise - continuous	• Brake pads/shoes • Brake disc/drums	INSPECT the brake pads, brake shoes, brake discs and attaching hardware for damage. VERIFY brake components are within specifications. REFER to: Brake Pads (206-04 Rear Disc Brake, Removal and Installation). INSTALL new components as necessary.

Pinpoint Tests

Diagnostics in this manual assume a certain skill level and knowledge of Ford-specific diagnostic practices.
REFER to: Diagnostic Methods (100-00 General Information, Description and Operation).

Vibration When Brakes Are Applied

Normal Operation and Fault Conditions

During moderate to heavy braking, noise from the HCU and pulsation in the brake pedal can be observed. Pedal pulsation coupled with noise during heavy braking or on loose gravel, bumps, wet or snowy surfaces is acceptable and indicates correct functioning of the ABS . Pedal pulsation or steering wheel nibble when the brakes are applied (frequency is proportioned to the vehicle speed) indicates a concern with a brake or suspension component.

PINPOINT TEST A : VIBRATION WHEN BRAKES ARE APPLIED

A1 ROAD TEST THE VEHICLE -LIGHT BRAKING

- Road test the vehicle. Warm the brakes by slowing the vehicle from 80 to 32 km/h (50 to 20 mph) using light brake force. At highway speeds of 89-97 km/h (55-60 mph), apply the brake using light pedal force.

Is there a vibration/shudder felt in the steering wheel, seat or brake pedal?

Yes	GO to A4
No	GO to A2

A2 ROAD TEST THE VEHICLE -MODERATE TO HEAVY BRAKING

- Road test the vehicle. At highway speeds of 89-97 km/h (55-60 mph), apply the brake using a moderate to heavy pedal force.

Is there a vibration/shudder?

Yes	GO to A3
No	The concern is not present at this time.

A3 CHECK ABS (ANTI-LOCK BRAKE SYSTEM) OPERATION

NOTE: *During moderate to heavy braking, noise from the Hydraulic Control Unit (HCU) and pulsation in the brake pedal can be observed. Pedal pulsation coupled with noise during heavy braking or on loose gravel, bumps, wet or snowy surfaces is acceptable and indicates correct operation of the ABS . Pedal pulsation or steering wheel nibble with the frequency proportional to vehicle speed indicates a concern with a brake or suspension component.*

- Road test the vehicle and apply the brakes on a dry, firm surface, then apply the brakes on a wet, snowy or loose surface (such as gravel).

Is the vibration/shudder only present on a wet, snowy or loose surface?

Yes	This is a normal operating condition of the ABS .
No	GO to A5

A4 ISOLATE BRAKE VIBRATION

NOTE: *This test step is not applicable to vehicles with drum-in-hat type parking brakes. For vehicles with drum-in-hat parking brakes, proceed to the next test step. For all other vehicles, apply the parking brake to identify if the problem is in the front or rear brake.*

- Apply the parking brake to identify if the problem is in the front or rear brake. At highway speeds of 89-97 km/h (55-60 mph), lightly apply the parking brake until the vehicle slows down. Release the parking brake immediately after the test.

Is there a vibration/shudder?

Yes	GO to A7
No	GO to A5

A5 CHECK THE FRONT SUSPENSION

- Check the front suspension.

Are all the suspension components in satisfactory condition?

Yes	GO to A6
No	REPAIR or INSTALL new components as necessary. TEST the system for normal operation.

A6 CHECK THE FRONT BRAKE DISCS

- Inspect the front brake discs.
  REFER to: Brake System Inspection (206-00 Brake System - General Information, General Procedures).
  MACHINE or INSTALL new brake discs as necessary.REFER to: Brake Disc Machining (206-00 Brake System - General Information, General Procedures).

REFER to: Brake Disc (206-03 Front Disc Brake, Removal and Installation).

- Road test the vehicle.

Is the vibration/shudder present?

Yes	GO to A7
No	The concern has been repaired.

A7 CHECK THE REAR SUSPENSION

- Check the rear suspension.

Are all the suspension components in satisfactory condition?

Yes	INSPECT the rear brake discs or brake drums. REFER to: Brake System Inspection (206-00 Brake System - General Information, General Procedures). MACHINE or INSTALL new brake discs or drums as necessary. REFER to: Brake Disc Machining (206-00 Brake System - General Information, General Procedures). REFER to: Brake Disc (206-03 Front Disc Brake, Removal and Installation). REFER to: Brake Drum (206-02 Drum Brake, Removal and Installation).
No	REPAIR or INSTALL new components as necessary. TEST the system for normal operation.

Component Test- Brake Booster

1. Disconnect the brake booster vacuum sensor/check valve from the brake booster and connect a suitable vacuum/pressure tester to the booster side of the vacuum sensor/check valve.

2. Apply the parking brake, start the engine and place the transmission in NEUTRAL.
   - Allow the engine to reach normal operating temperature.

3. Verify that vacuum is available at the vacuum sensor/check valve with engine running at normal idle speed.
   - The vacuum gauge should read between 51-74 kPa (15-22 in-Hg).
   - If specified vacuum is available, stop the engine, connect the vacuum sensor/check valve and continue with Step 5.
   - If specified vacuum is not available, continue with Step 4.

4. Disconnect the vacuum sensor/check valve from the vacuum hose and verify that the specified vacuum is available at the hose with the engine at idle speed and the transmission in NEUTRAL.
   - If specified vacuum is available, stop the engine, install a new check valve and continue with Step 5.
   - For vehicles equipped with a brake vacuum pump, if specified vacuum is not available, inspect the vacuum hose and install new as necessary. If the vacuum hose is OK, install a new vacuum pump.
     REFER to: Brake Vacuum Pump - 2.0L EcoBoost (184kW/250PS) - MI4 (206-07 Power Brake Actuation, Removal and Installation).

   - For vehicles not equipped with a brake vacuum pump, if specified vacuum is not available, stop the engine, connect the vacuum hose to the check valve and diagnose the no/low vacuum condition.
     REFER to: Engine (303-00 Engine System - General Information, Diagnosis and Testing).

5. Apply the brake pedal several times to exhaust all vacuum from the system.

6. Apply the brake pedal and hold it in the applied position. Start the engine and verify that the brake pedal moves downward after the engine starts.
   - If the brake pedal moves, the brake booster is operating correctly.
   - If the brake pedal does not move, install a new brake booster.

REFER to: Brake Booster (206-07 Power Brake Actuation, Removal and Installation).

7. Operate the engine a minimum of 20 seconds at idle. Stop the engine and let the vehicle stand for 10 minutes, then apply the brake pedal. The brake pedal feel should be the same as that noted with the engine operating.
   - If the brake pedal feels hard (no power assist), install a new brake booster vacuum sensor/check valve and retest.
   - If condition still exists, install a new brake booster.
     REFER to: Brake Booster (206-07 Power Brake Actuation, Removal and Installation).

   - If the brake pedal feels the same as noted with the engine operating, the vacuum sensor/check valve is functioning properly.

Component Test- Brake Master Cylinder - Bypass Condition

1. Inspect the master cylinder.

2. Disconnect the brake tubes from the master cylinder.

3. **NOTE:** *Make sure the outlet port plugs do not show signs of leakage.*

   Plug the outlet ports of the master cylinder.

4. Lightly apply the brakes and hold for 10 seconds. Release the brakes and then reapply with heavy force. If brake pedal height cannot be maintained, the brake master cylinder has an internal leak and a new brake master cylinder must be installed.

- If brake pedal height is maintained, reinstall brake tubes and tighten to specifications.
  REFER to: Brake Master Cylinder (206-06 Hydraulic Brake Actuation, Removal and Installation).
  After installation, bleed the brake system. REFER to: Brake System Bleeding (206-00 Brake System - General Information, General Procedures).

Component Test- Brake Master Cylinder - Compensator Port

1. Inspect the master cylinder.

2.
   REFER to: Jacking and Lifting - Overview (100-02 Jacking and Lifting, Description and Operation).

3. Apply and release the brakes.

4. With the brakes released, attempt to rotate each wheel and check for any brake drag.

- If an excessive amount of brake drag exists at multiple wheels, continue to Step 5.
- If an excessive amount of brake drag exists at only one wheel, it indicates a possible seized brake caliper, brake wheel cylinder or parking brake component. Repair or install new components as necessary.

5. Check the brake stoplamp switch and the brake pedal free play to verify the brake pedal is not partially applied.

6. Loosen the brake master cylinder nuts and position the brake master cylinder away from the brake booster.

7. With the brakes released, attempt to rotate each wheel and check for any brake drag.

- If the brake drag is no longer present, install a new brake booster.
  REFER to: Brake Booster (206-07 Power Brake Actuation, Removal and Installation).
- If the brake drag is still present, install a new master cylinder.
  REFER to: Brake Master Cylinder (206-06 Hydraulic Brake Actuation, Removal and Installation).

Copyright © Ford Motor Company

Brake System Inspection

NOTE: ***Brake Pads***

1. Inspect the brake pads for contamination. If the friction material shows evidence of contamination, install new brake pads.
   Refer to: Brake Pads (206-03 Front Disc Brake, Removal and Installation).
   Refer to: Brake Pads (206-04 Rear Disc Brake, Removal and Installation).

2. Inspect and measure the thickness of the brake pad friction material. Minor surface cracks do not require pad replacement, however, if there are missing chunks or cracks in the lining through to the backing plate, install new brake pads. If the thickness of the friction material is less than the specified thickness, install new brake pads. If the friction material shows taper wear that is not within specifications, install new brake pads and verify the caliper guide pins are functioning correctly.
   Refer to: Specifications (206-00 Brake System - General Information, Specifications).
   Refer to: Brake Pads (206-03 Front Disc Brake, Removal and Installation).
   Refer to: Brake Pads (206-04 Rear Disc Brake, Removal and Installation).

NOTE: ***Brake Disc***

1. Inspect the brake discs and measure the brake disc thickness and record the measurement. If the brake disc is cracked or otherwise damaged, install a new brake disc. If the measurement is below the minimum thickness specification, install a new brake disc.
   Refer to: Specifications (206-00 Brake System - General Information, Specifications).
   Refer to: Brake Pads (206-03 Front Disc Brake, Removal and Installation).
   Refer to: Brake Pads (206-04 Rear Disc Brake, Removal and Installation).

2. If the diagnosis has revealed vibration in the steering wheel, seat or pedal while braking that varies with vehicle speed, machine the brake disc. Heavily scored brake discs, similar to that caused by pads worn down to the backing plate, should also be machined. In order to machine, discs must be above the minimum thickness specification.
   Refer to: Brake Disc Machining (206-00 Brake System - General Information, General Procedures).

NOTE: ***Brake Caliper***

1. Inspect the brake calipers for leaks, damage to seals and piston corrosion or binding. If the brake caliper is leaking or otherwise damaged, install a new brake caliper.
   Refer to: Brake Caliper (206-03 Front Disc Brake, Removal and Installation).
   Refer to: Brake Caliper (206-04 Rear Disc Brake, Removal and Installation).

1. The guide pins should slide with a reasonable amount of hand force. If the brake pads show taper wear or the guide pins are difficult to move, disassemble the brake caliper guide pins and inspect the guide pins and guide pin bores for wear, damage and corrosion. If bore is worn or damaged, replace the damaged component. Use a wire brush, rolled-up sandpaper or emery cloth to remove all corrosion and foreign material from the caliper guide pin bores. Clean any remaining foreign material from the bores with brake parts cleaner and compressed air. Assemble the caliper seals, boots and guide pins. Use an ample amount of the specified grease to lubricate the bores and guide pins. Inspect the brake pads.
   Material : Silicone Brake Caliper Grease and Dielectric Compound / XG-3-A (ESE-M1C171-A)

NOTE: ***Brake Shoes***

2. Inspect the brake shoes for contamination. If the friction material shows evidence of contamination, install new brake shoes.
   Refer to: Brake Shoes (206-02 Drum Brake, Removal and Installation).

3. Inspect and measure the thickness of the brake shoe friction material. Minor surface cracks do not require shoe replacement, however, if there are missing chunks or cracks in the lining through to the backing plate, install new brake shoes. If the thickness of the friction material is less than the specified thickness, install new brake shoes.
   Refer to: Specifications (206-00 Brake System - General Information, Specifications).
   Refer to: Brake Pads (206-03 Front Disc Brake, Removal and Installation).
   Refer to: Brake Pads (206-04 Rear Disc Brake, Removal and Installation).

4. Verify the mounting hardware is installed and operating correctly. Install new hardware as necessary.
   Refer to: Brake Shoes (206-02 Drum Brake, Removal and Installation).

5. Verify correct brake shoe adjustment.
   Refer to: Brake Shoe Adjustment (206-02 Drum Brake, General Procedures).

NOTE: ***Brake Drum***

NOTE: *It is generally not required to install new brake drums to address noise issues. Heavily scored brake drums, similar to that caused by shoes worn down to the backing plate, should be machined. In order to machine, drums must be below the maximum diameter specification.*

1. Inspect the brake drums and measure the brake drum diameter. Record the measurements.
   Refer to: Specifications (206-00 Brake System - General Information, Specifications).

2. If the brake drum is cracked, damaged or if the diameter measurement is more than the maximum specification, install a new brake drum.
   Refer to: Brake Drum (206-02 Drum Brake, Removal and Installation).

NOTE: ***Wheel Cylinder***

1. Inspect the wheel cylinders for leaks, damage to seals, and piston corrosion or binding. If the wheel cylinder is leaking or otherwise damaged, install a new wheel cylinder.
   Refer to: Wheel Cylinder (206-02 Drum Brake, Removal and Installation).

NOTE: ***Brake Flexible Hose***

1. Inspect the brake flexible hoses for cracks, leaks and swelling during brake application or any other signs of damage. Install a new brake flexible hose if the hose shows signs of softening, cracking or other damage.
   Refer to: Front Brake Flexible Hose (206-03 Front Disc Brake, Removal and Installation).
   Refer to: Rear Brake Flexible Hose (206-02 Drum Brake, Removal and Installation).
   Refer to: Rear Brake Flexible Hose (206-04 Rear Disc Brake, Removal and Installation).

NOTE: ***Brake Tubes***

1. Inspect brake tubes for corrosion, cracks, leaks or any other signs of damage. If a section of the brake tube is damaged, replace the entire section with a new tube of the same type, size, shape and length. When installing the hydraulic brake tubing, hoses or connectors, tighten all connections to specifications.

NOTE: ***Brake Master Cylinder***

1. Inspect the brake master cylinder for fluid leaks and install a new master cylinder or brake fluid reservoir if signs of excessive leaking are present.
   Refer to: Brake Master Cylinder (206-06 Hydraulic Brake Actuation, Removal and Installation).
   Refer to: Brake Fluid Reservoir (206-06 Hydraulic Brake Actuation, Removal and Installation).

2. If there are no leaks present, check the master cylinder for correct operation .
   Refer to: Brake System (206-00 Brake System - General Information, Diagnosis and Testing).

NOTE: ***Brake Booster***

1. Inspect the brake booster for excessive corrosion or damageand inspect the vacuum hoses for leaks and kinks. Install a new brake booster if signs of excessive corrosion or damage is found. Repair or replace vacuum hoses as necessary.
   Refer to: Brake Booster (206-07 Power Brake Actuation, Removal and Installation).

Copyright © Ford Motor Company

Brake Disc Machining

NOTE: *Do not use a bench lathe to machine the brake discs. Use an on-vehicle brake lathe only. Read the entire operating manual and/or view the video shipped with the lathe before installing, operating or repairing the lathe.*

NOTE: *An on-vehicle brake lathe with an automatic runout adjustment feature is preferred. However, if the lathe is not self adjusting, the lathe oscillation must be adjusted using a dial indicator. The total indicated runout target is 0.000 mm (0.000 in). The maximum indicated runout should be no more than 0.050 mm (0.002 in). If the runout adjustment (automatic or manual) is carried out correctly prior to machining, then the final brake disc runout will be within specification and a runout measurement is not necessary after machining.*

NOTE: *Lateral runout and disc thickness variation measurements are not required because correct adjustment of the on-vehicle brake lathe will make sure that these dimensions are within specification.*

1. Refer to: Wheel and Tire (204-04A Wheels and Tires, Removal and Installation).
2. **NOTICE: Do not allow the caliper to hang from the brake hose or damage to the hose may occur.**

   NOTE: *It is not necessary to disconnect the brake hose from the brake caliper.*

   Remove the bolts and position the brake caliper or brake caliper and anchor plate assembly aside, as required. Support the brake caliper using mechanic's wire.
3.
   - Install the hub adapter using four wheel nuts on a 4, 7 or 8-stud wheel hub.
   - Install the hub adapter using five wheel nuts on a 5 or 10-stud wheel hub.
   - Install the hub adapter using six wheel nuts on a 6-stud wheel hub.
4. Install the cutting lathe.
5. If the lathe is not self-adjusting, adjust the lathe oscillation using a dial indicator. The total indicated runout target is 0 mm (0 in). The maximum indicated runout should be no more than 0.05 mm (0.002 in).
6. Center the cutting head, adjust the cutting bits and install the chip deflector/silencer.
7. **NOTE:** *The depth of the cut should be between 0.10 and 0.40 mm (0.004 and 0.015 in). Lighter cuts will cause the bit to heat up and wear faster. Heavier cuts will cause poor brake disc surface finish.*

   Machine the brake disc.
8. Remove the lathe and the silencer.
9. Remove the wheel nuts and hub adapter.
10. Remove the metal shavings.
11. Measure the brake disc thickness. If the measurement is below the minimum specification, install a new brake disc.
    Refer to: Brake Disc (206-03 Front Disc Brake, Removal and Installation).
    Refer to: Brake Disc (206-04 Rear Disc Brake, Removal and Installation).
12. **NOTE:** *It is not required to install new brake pads if friction material is within specifications.*

    Position the brake caliper or brake caliper and anchor plate assembly and install the bolts.
    Refer to: Brake Caliper Anchor Plate (206-03 Front Disc Brake, Removal and Installation).
    Refer to: Brake Caliper Anchor Plate (206-04 Rear Disc Brake, Removal and Installation).
13. Refer to: Wheel and Tire (204-04A Wheels and Tires, Removal and Installation).

Copyright © Ford Motor Company

Component Bleeding

NOTICE: Do not spill brake fluid on painted or plastic surfaces or damage to the surface may occur. If brake fluid is spilled onto a painted or plastic surface, immediately wash the surface with water.

NOTE: ***Brake Master Cylinder***

1. **WARNING: Before beginning any service procedure in this section, refer to Safety Warnings in section 100-00 General Information. Failure to follow this instruction may result in serious personal injury.**

   Refer to: Health and Safety Precautions (100-00 General Information, Description and Operation).

2. Disconnect the brake tubes from the master cylinder.

3. Install brake master cylinder bleed tubes onto the primary and secondary ports with the ends of the tubes submerged in the brake master cylinder reservoir.

4. Fill the brake master cylinder reservoir with clean, specified brake fluid.
   Material : Motorcraft® DOT 4 LV High Performance Motor Vehicle Brake Fluid / PM-20 (WSS-M6C65-A2) (ISO 4925 Class 6)

5. Have an assistant pump the brake pedal until clear fluid flows from the brake tubes without air bubbles.

6. Remove the brake master cylinder bleed tubes, install the master cylinder brake tubes and tighten the brake tubes to specification.
   Refer to: Specifications (206-00 Brake System - General Information, Specifications).

7. Bleed the brake system.
   Refer to: Brake System Bleeding (206-00 Brake System - General Information, General Procedures).

NOTICE: Do not spill brake fluid on painted or plastic surfaces or damage to the surface may occur. If brake fluid is spilled onto a painted or plastic surface, immediately wash the surface with water.

NOTE: ***Brake Caliper or Wheel Cylinder***

NOTE: *It is not necessary to do a complete brake system bleed if only a brake caliper, wheel cylinder or brake hose was disconnected or replaced.*

1. **WARNING: Before beginning any service procedure in this section, refer to Safety Warnings in section 100-00 General Information. Failure to follow this instruction may result in serious personal injury.**

   Refer to: Health and Safety Precautions (100-00 General Information, Description and Operation).

2. Clean all the dirt from around the brake fluid reservoir cap and remove the cap. Fill the brake master cylinder reservoir with clean, specified brake fluid and reinstall the fluid reservoir cap.
   Material : Motorcraft® DOT 4 LV High Performance Motor Vehicle Brake Fluid / PM-20 (WSS-M6C65-A2) (ISO 4925 Class 6)

3. Remove the bleeder cap and place a box-end wrench on the bleeder screw. Attach a rubber drain tube to the bleeder screw and submerge the free end of the tube in a container partially filled with clean, specified brake fluid.
   General Equipment : Fluid Container

4. Have an assistant pump the brake pedal and then hold firm pressure on the brake pedal.

5.
   - Loosen the bleeder screw.
   - Leave open until clear, bubble-free brake fluid flows, then tighten the bleeder screw.

- For rear integral parking brake calipers, apply and release the parking brake 5 times while bleeding the rear brake caliper.
- Repeat until clear, bubble-free fluid comes out.

6. Remove the rubber hose and tighten the bleeder screw to specification and install the bleeder screw cap.
   Refer to: Specifications (206-00 Brake System - General Information, Specifications).

7. Fill the brake master cylinder reservoir with clean, specified brake fluid and install the fluid reservoir cap.
   Material : Motorcraft® DOT 4 LV High Performance Motor Vehicle Brake Fluid / PM-20 (WSS-M6C65-A2) (ISO 4925 Class 6)

Copyright © Ford Motor Company

Brake System Bleeding

NOTICE: Do not spill brake fluid on painted or plastic surfaces or damage to the surface may occur. If brake fluid is spilled onto a painted or plastic surface, immediately wash the surface with water.

1. **WARNING: Before beginning any service procedure in this section, refer to Safety Warnings in section 100-00 General Information. Failure to follow this instruction may result in serious personal injury.**

   Refer to: Health and Safety Precautions (100-00 General Information, Description and Operation).

2. Clean all the dirt from around the brake fluid reservoir cap and remove the cap. Fill the brake master cylinder reservoir with clean, specified brake fluid.
   Material : Motorcraft® DOT 4 LV High Performance Motor Vehicle Brake Fluid / PM-20 (WSS-M6C65-A2) (ISO 4925 Class 6)

3. **NOTE:** *Master cylinder pressure bleeder adapter tools are available from various manufacturers of pressure bleeding equipment. Follow the instructions of the manufacturer when installing the adapter.*

   Install the bleeder adapter to the brake master cylinder reservoir and attach the bleeder tank hose to the fitting on the adapter.
   General Equipment : Brake/Clutch System Pressure Bleeder/Filler

4. **NOTE:** *Make sure the bleeder tank contains enough clean specified brake fluid to complete the bleeding operation.*

   Open the valve on the bleeder tank.

5. Apply - to the brake system.

6. **NOTE:** *Due to the complexity of the fluid path within the rear integral parking brake calipers, it is necessary to apply and release the parking brake during the bleed procedure.*

   - Remove the RH rear bleeder cap and place a box-end wrench on the bleeder screw. Attach a rubber drain tube to the RH rear bleeder screw and submerge the free end of the tube in a container partially filled with clean, specified brake fluid.
   - Loosen the RH rear bleeder screw. Leave open until clear, bubble-free brake fluid flows, then tighten the RH rear bleeder screw.
   - For vehicles with rear integral parking brake calipers, apply and release the parking brake 5 times. Repeat until clear, bubble-free fluid comes out.

7. Tighten the RH rear bleeder screw to specification.
   Refer to: Specifications (206-00 Brake System - General Information, Specifications).

8. Remove the rubber hose and install the bleeder screw cap.

9. Repeat Steps 5 and 6 for the LH rear bleeder screw.

10. Continue bleeding the front of the system, going from the RH front brake caliper and then to the LH front brake caliper.

11. Tighten the front brake caliper bleeder screws to specification.
    Refer to: Specifications (206-00 Brake System - General Information, Specifications).

12. Close the bleeder tank valve and release the pressure. Remove the tank hose from the adapter and remove the adapter. Fill the reservoir with clean, specified brake fluid and install the reservoir cap.

Copyright © Ford Motor Company

Specifications

Capacities

Item	Fill Capacity
Dye-Lite™ Gasoline Engine Oil Leak Detection Dye 164-R3700 (Rotunda)	29.6 ml (1 oz.)

Copyright © Ford Motor Company

Engine

Inspection and Verification - Engine Performance

NOTE: *There are 2 diagnostic paths that can be followed depending on the type of engine concern. Carry out Inspection and Verification - Engine Performance or Inspection and Verification - NVH .*

1. Verify the customer concern.
2. Visually inspect for obvious signs of mechanical or electrical damage.
3. If an obvious cause for an observed or reported concern is found, correct the cause (if possible) before proceeding to the next step.
4. **NOTE:** *Make sure to use the latest scan tool software release.*

   If the cause is not visually evident, connect the scan tool to the DLC .
5. **NOTE:** *The VCM LED prove out confirms power and ground from the DLC are provided to the VCM .*

   If the scan tool does not communicate with the VCM :
   - check the VCM connection to the vehicle.
   - check the scan tool connection to the VCM .
   - check for No Power To The Scan Tool, to diagnose no power to the scan tool.
     REFER to: Communications Network (418-00 Module Communications Network, Diagnosis and Testing).
6. If the scan tool does not communicate with the vehicle:
   - verify the ignition key is in the ON position.
   - verify the scan tool operation with a known good vehicle.
   - to diagnose no response from the PCM ,
     REFER to: Communications Network (418-00 Module Communications Network, Diagnosis and Testing).
7. Carry out the network test.
   - If the scan tool responds with no communication for one or more modules,
     REFER to: Communications Network (418-00 Module Communications Network, Diagnosis and Testing).
   - If the network test passes, retrieve and record continuous memory DTCs.
8. Clear the continuous DTCs and carry out the self-test diagnostics for the PCM .
9. If the DTCs retrieved are related to the concern, go to the DTC Chart.
   REFER to: Electronic Engine Controls (303-14A Electronic Engine Controls - 2.0L Duratec-HE (125kW/170PS) - MI4, Diagnosis and Testing).
   or REFER to: Electronic Engine Controls (303-14B Electronic Engine Controls - 2.0L EcoBoost (184kW/250PS) - MI4, Diagnosis and Testing).
10. If no DTCs related to the concern are retrieved, GO to Symptom Chart - Engine Performance.

Inspection and Verification - NVH

1. NVH symptoms should be identified using the diagnostic tools and techniques that are available. For a list of these techniques, tools, an explanation of their uses and a glossary of common terms,
   REFER to: Noise, Vibration and Harshness (NVH) (100-04 Noise, Vibration and Harshness, Diagnosis and Testing).
   Since it is possible that any one of multiple systems may be the cause of the symptom, it may be necessary to use a process

of elimination type of diagnostic approach to pinpoint the responsible system.

2. Verify the customer concern by operating the engine to duplicate the condition.

3. Check the engine oil level and check the oil for contamination. Low engine oil level or contaminated oil are a common cause of engine noise. If the oil is contaminated, the source of the contamination must be identified and repaired as necessary.

4. Visually inspect for obvious signs of mechanical damage.

5. If the inspection reveals obvious concerns that can be readily identified, repair as necessary.

6. **NOTE:** *Make sure to use the latest scan tool software release.*

   If the cause is not visually evident, connect the scan tool to the DLC .

7. **NOTE:** *The VCM LED prove out confirms power and ground from the DLC are provided to the VCM .*

   If the scan tool does not communicate with the VCM :
   - check the VCM connection to the vehicle.
   - check the scan tool connection to the VCM .
   - check for No Power To The Scan Tool, to diagnose no power to the scan tool.
     REFER to: Communications Network (418-00 Module Communications Network, Diagnosis and Testing).

8. If the scan tool does not communicate with the vehicle:
   - verify the ignition key is in the ON position.
   - verify the scan tool operation with a known good vehicle.
   - to diagnose no response from the PCM ,
     REFER to: Communications Network (418-00 Module Communications Network, Diagnosis and Testing).

9. Carry out the network test.
   - If the scan tool responds with no communication for one or more modules,
     REFER to: Communications Network (418-00 Module Communications Network, Diagnosis and Testing).

   - If the network test passes, retrieve and record continuous memory DTCs.

10. Clear the continuous DTCs and carry out the self-test diagnostics for the PCM .

11. If the DTCs retrieved are related to the concern, go to the DTC Chart.
    REFER to: Electronic Engine Controls (303-14A Electronic Engine Controls - 2.0L Duratec-HE (125kW/170PS) - MI4, Diagnosis and Testing).
    or REFER to: Electronic Engine Controls (303-14B Electronic Engine Controls - 2.0L EcoBoost (184kW/250PS) - MI4, Diagnosis and Testing).

12. If no DTCs related to the concern are retrieved, continue the inspection and verification if a noise concern is related to the engine. For vibration concerns and noise concerns such as powertrain mounts, air intake system and starter GO to Symptom Chart - NVH .

In some cases, a noise may be a normal characteristic of that engine type. In other cases the noise may require further investigation. Comparing the noise to a similar year/model vehicle equipped with the same engine will aid in determining if the noise is normal or abnormal.

Once a customer concern has been identified as an abnormal engine noise, it is critical to determine the location of the specific noise. Use the EngineEAR/ChassisEAR or stethoscope (the noise will always be louder closer to the noise source) to isolate the location of the noise to one of the following areas.

- Fuel injector(s)
- Upper end of engine
- Lower end of engine
- Front of engine
- Rear of engine

Fuel injector noise

A common source of an engine ticking noise can be related to the fuel injection pump Gasoline Turbocharged Direct Injection (GTDI) engine or fuel injector(s). This is normal engine noise that can be verified by listening to another vehicle. If the injector noise is excessive or irregular, use the EngineEAR/ChassisEAR or stethoscope to isolate the noise to a specific fuel injector.

Upper end engine noise

A common source of upper end engine noise (ticking, knocking or rattle) include the camshaft(s) and valve train. Upper end engine noise can be determined using the EngineEAR/ChassisEAR or stethoscope on the valve cover bolts. If the noise is loudest from the valve cover bolts, then the noise is upper end. The EngineEAR/ChassisEAR or stethoscope can be used to further isolate the noise to the specific cylinder bank and cylinder. Removal of the valve covers will be required to pinpoint the source of the noise.

Lower end engine noise

A common source of lower end engine noise (ticking or knocking) include the crankshaft, connecting rod(s) and bearings. Lower end noises can be determined by using the oil pan or lower cylinder block. If the noise is loudest from these areas, then the noise is lower end. If an engine noise is isolated to the lower end, some disassembly of the engine may be required to inspect for damage or wear.

Front of engine noise

A common source of noise from the front of the engine (squeal, chirp, whine or hoot) is the FEAD components. To isolate FEAD noise, carry out the Engine Accessory Test.
REFER to: Noise, Vibration and Harshness (NVH) (100-04 Noise, Vibration and Harshness, Diagnosis and Testing).

Some other noises from the front of the engine (ticking, tapping or rattle) may be internal to the engine. Use the EngineEAR/ChassisEAR or stethoscope on the engine front cover to determine if the noise is internal to the engine. Removal of the engine front cover may be necessary to inspect internal engine components.

Rear of engine noise

A common source of noise from the rear of the engine (knocking) is the flywheel/flexplate. Inspection of the flywheel/flexplate will be necessary.

Turbocharger noise (Gasoline Turbocharged Direct Injection (GTDI) engine)

A common source of noise is the turbocharger. Some whine or air rush noise is an acceptable condition.

13. After the noise is localized, note the characteristics of the noise, including type of noise, frequency and conditions when the noise occurs and GO to Symptom Chart - NVH .

Symptom Chart - Engine Performance

Symptom Chart - Engine Performance

Symptom	Possible Sources	Action
• Difficult starting	• Inoperative or damaged ignition system • Air or vacuum leak • Inoperative or damaged fuel system • Inoperative or damaged starting system	• Refer to the appropriate section in Group 303 for the procedure. Refer to Powertrain Control/Emissions Diagnosis (PC/ED) manual.
	• Damaged charging system/ battery	• REFER to: Charging System - 2.0L Duratec-HE (125kW/170PS) - MI4 (414-00 Charging System - General Information, Diagnosis and Testing). or REFER to: Charging System - 2.0L EcoBoost (184kW/250PS) - MI4 (414-00 Charging System - General Information, Diagnosis and Testing). .

	Burnt valve	INSTALL a new cylinder head. TEST the system for normal operation after the repair.
	• Worn piston	• INSTALL a new piston. TEST the system for normal operation after the repair.
	• Worn piston rings	• INSTALL new piston rings. TEST the system for normal operation after the repair.
	• Worn cylinder	• INSTALL a new cylinder block. TEST the system for normal operation after the repair.
	• Damaged head gasket	• INSTALL a new cylinder head gasket. TEST the system for normal operation after the repair.
	• Inoperative or damaged cooling system	• Refer to the appropriate section in Group 303 for the procedure.
	• Fail-safe cooling invoked (if equipped)	• Refer to Powertrain Control/Emissions Diagnosis (PC/ED) manual.
• Poor idling	• Vacuum leaks • Inoperative or damaged EGR system	• Refer to the appropriate section in Group 303 for the procedure. Refer to Powertrain Control/Emissions Diagnosis (PC/ED) manual.
	• Inoperative or damaged ignition system	• Refer to the appropriate section in Group 303 for the procedure.
	• Inoperative or damaged cooling system • Inoperative or damaged fuel system	• Refer to the appropriate section in Group 303 for the procedure.
	• Fail-safe cooling invoked (if equipped)	• Refer to Powertrain Control/Emissions Diagnosis (PC/ED) manual.
	• Incorrect valve clearance	• ADJUST valve clearance. Refer to the appropriate section in Group 303 for the procedure. TEST the system for normal operation after the repair.
	• Incorrect valve-to-valve seat contact	• INSTALL a new cylinder head. TEST the system for normal operation after the repair.
	• Damaged head gasket	• INSTALL a new cylinder head gasket. TEST the system for normal operation after the repair.
• Engine runs rough	• Inoperative or damaged fuel system • Air or vacuum leaks • EGR system fault • Inoperative or damaged cooling system • Inoperative or damaged ignition system	• Refer to the appropriate section in Group 303 for the procedure.
	• Fail-safe cooling invoked (if equipped)	• Refer to Powertrain Control/Emissions Diagnosis (PC/ED) manual.
	• Burnt or sticking valve	• INSTALL a new valve. TEST the system for normal operation after the repair.
	• Weak or broken valve spring	• INSTALL a new valve spring. TEST the system for normal operation after the repair.
	• Carbon accumulation in combustion chamber	• ELIMINATE carbon buildup. TEST the system for normal operation after the repair.
• Excessive oil consumption	• Leaking oil	• REPAIR oil leakage. TEST the system for normal operation after the repair.

	• Blocked or restricted turbocharger oil drain pipe	• INSPECT the turbocharger drain pipe. REPAIR as necessary. TEST the system for normal operation after the repair.
	• Damaged or collapsed air intake hoses and tubes	• Tighten hoses clamps. INSPECT for damage and REPAIR as necessary. TEST the system for normal operation after the repair.
	• Damaged exhaust or exhaust leaks at turbocharger housing or exhaust manifold.	• INSPECT for leaks. Leaks can be detected audibility or visually, by a discoloration caused by escaping hot exhaust gases. REPAIR as necessary. TEST the system for normal operation after the repair.
	• Turbocharger oil seals leaking	• CARRY OUT the Turbocharger Internal Oil Leak Test. REFER to: Turbocharger (303-04C Fuel Charging and Controls - Turbocharger - 2.0L EcoBoost (184kW/250PS) - MI4, Diagnosis and Testing). TEST the system for normal operation after the repair.
	• Inoperative PCV system	• REPAIR or INSTALL new components as necessary. TEST the system for normal operation after the repair.
	• Incorrect oil	• CHANGE oil to correct specification. TEST the system for normal operation after the repair.
	• Worn valve stem seal	• INSTALL a new valve stem seal. TEST the system for normal operation after the repair.
	• Worn valve stem or valve guide	• INSTALL a new cylinder head. TEST the system for normal operation after the repair.
	• Sticking piston rings	• INSTALL new piston rings. TEST the system for normal operation after the repair.
	• Worn piston ring groove	• INSTALL a new piston and piston pin. TEST the system for normal operation after the repair.
	• Worn piston or cylinder	• INSTALL a new piston or cylinder block. TEST the system for normal operation after the repair.
• Oil in coolant	• Leaking head gasket • Damaged cylinder block • Damaged cylinder head	• INSPECT the engine components. INSTALL new engine components as necessary. Refer to the appropriate section in Group 303 for the procedure. TEST the system for normal operation after the repair.
	• Leaking oil cooler	• INSPECT the oil cooler and seal for damage. INSTALL new components as necessary. Refer to the appropriate section in Group 303 for the procedure.
• Coolant in oil	• Leaking head gasket • Damaged cylinder block • Damaged cylinder head	• INSPECT the engine components. INSTALL new engine components as necessary. Refer to the appropriate section in Group 303 for the procedure. TEST the system for normal operation after the repair.
• Insufficient power	• Inoperative or damaged ignition system • Air intake system blockage • Lubrication system blockage • Inoperative or damaged fuel system	• Refer to the appropriate section in Group 303 for the procedure. Refer to Powertrain Control/Emissions Diagnosis (PC/ED) manual.
	• Turbocharger turbine or compressor wheel damage	• INSPECT the turbocharger. CARRY OUT the Check for Free Rotation - Off Vehicle. REFER to: Turbocharger (303-04C Fuel Charging and Controls - Turbocharger - 2.0L EcoBoost (184kW/250PS) - MI4, Diagnosis and Testing).

		TEST the system for normal operation after the repair.
	• Damaged exhaust or exhaust leaks at turbocharger housing or exhaust manifold	• INSPECT for leaks. Leaks can be detected audibility or visually, by a discoloration caused by escaping hot exhaust gases. REPAIR as necessary. TEST the system for normal operation after the repair.
	• Malfunctioning turbocharger bypass valve	• Refer to Powertrain Control/Emissions Diagnosis (PC/ED) manual.
	• Oil level too high	• DRAIN oil to correct level.
	• Incorrect engine oil	• INSTALL correct specification engine oil. TEST the system for normal operation after the repair.
	• Excessive accessory drive belt loading • Inoperative or damaged cooling system	• Refer to the appropriate section in Group 303 for the procedure.
	• Fail-safe cooling invoked (if equipped)	• Refer to Powertrain Control/Emissions Diagnosis (PC/ED) manual.
	• Damaged or plugged exhaust system	• INSPECT exhaust system. TEST the system for normal operation after the repair.
	• Incorrect tire size	• REFER to: Suspension System (204-00 Suspension System - General Information, Diagnosis and Testing).
	• Dragging brakes	• REFER to: Brake System (206-00 Brake System - General Information, Diagnosis and Testing).
	• Slipping transmission	• Refer to the appropriate section in Group 307 for the procedure.
	• Slipping clutch	• Refer to the appropriate section in Group 308 for the procedure.
	• Incorrect valve clearance	• ADJUST valve clearance. Refer to the appropriate section in Group 303 for the procedure. TEST the system for normal operation after the repair.
	• Worn or damaged valve tappet	• INSTALL a new valve tappet. TEST the system for normal operation after the repair.
	• Damaged valve guide • Compression leakage at valve seat • Seized valve stem	• INSTALL a new cylinder head assembly. TEST the system for normal operation after the repair.
	• Weak or broken valve spring	• INSTALL a new valve spring. TEST the system for normal operation after the repair.
	• Worn or damaged cam	• INSTALL a new camshaft. TEST the system for normal operation after the repair.
	• Damaged head gasket	• INSTALL a new head gasket. TEST the system for normal operation after the repair.
	• Cracked or distorted cylinder head	• INSTALL a new cylinder head assembly. TEST the system for normal operation after the repair.
	• Damaged, worn or sticking piston ring(s)	• INSTALL a new piston ring(s). TEST the system for normal operation after the repair.
	• Worn or damaged piston	• INSTALL a new piston and piston pin. TEST the system for normal operation after the repair.
• Engine emits excessive black	• Clogged Air Cleaner (ACL) element	• INSTALL a new ACL element. TEST the system for normal operation after the repair.

smoke (black/blue/white)		
	• Incorrect type or grade of oil	• DRAIN and FILL with specified oil.
	• Blocked or restricted turbocharger oil drain pipe	• INSPECT the turbocharger oil drain pipe. REPAIR as necessary. TEST the system for normal operation after the repair.
	• Damaged/restricted or leaking turbocharger intake tube assembly	• REPAIR or INSTALL a new tube as necessary. TEST the system for normal operation after the repair.
	• Engine wear (piston rings, valve guides)	• REPAIR as necessary. TEST the system for normal operation after the repair.
	• Plugged crankcase ventilation system	• Visually INSPECT the crankcase ventilation system.
	• Turbocharger oil seals leaking	• CARRY OUT the Turbocharger Internal Oil Leak Test. REFER to: Turbocharger (303-04C Fuel Charging and Controls - Turbocharger - 2.0L EcoBoost (184kW/250PS) - MI4, Diagnosis and Testing). TEST the system for normal operation after the repair.

Symptom Chart - NVH

Symptom Chart - NVH

Symptom	Possible Sources	Action
• Drone type noise	• Powertrain mount(s)	• CARRY OUT the Powertrain/Drivetrain Mount Neutralizing procedure. REFER to: Powertrain/Drivetrain Mount Neutralizing (303-00 Engine System - General Information, General Procedures). TEST the system for normal operation after the repair.
• Drumming noise - occurs inside the vehicle during idle or high idle, hot or cold. Very low-frequency drumming is very rpm dependent	• Engine vibration excites the body resonances inducing interior noise	• CARRY OUT the Powertrain/Drivetrain Mount Neutralizing procedure. REFER to: Powertrain/Drivetrain Mount Neutralizing (303-00 Engine System - General Information, General Procedures). TEST the system for normal operation after the repair.
• Engine drumming noise - accompanied by vibration	• Powertrain mount(s)	• CARRY OUT the Powertrain/Drivetrain Mount Neutralizing procedure. REFER to: Powertrain/Drivetrain Mount Neutralizing (303-00 Engine System - General Information, General Procedures). TEST the system for normal operation after the repair.
• Rattle - occurs at idle or at light acceleration from a stop	• Powertrain mount(s)	• CHECK the powertrain mounts for damage. INSTALL new mounts as necessary. For engine, Refer to the appropriate section in Group 303 for the procedure. For transaxle, Refer to the appropriate section in Group 307 or Group 308 for the procedure. TEST the system for normal operation after the repair.
• Whine/moan type noise - pitch increases or changes with vehicle speed	• Powertrain mount(s)	• CHECK the powertrain mounts for damage. INSTALL new mounts as necessary. For engine, Refer to the appropriate section in Group 303 for the procedure. For transaxle, Refer to the appropriate section in Group 307 or Group 308 for the procedure. TEST the system for normal operation after the repair.

Clunk - occurs when shifting from PARK or between REVERSE and DRIVE	Powertrain mounts	CHECK the powertrain mounts for damage. INSTALL new mounts as necessary. For engine, Refer to the appropriate section in Group 303 for the procedure. For transaxle, Refer to the appropriate section in Group 307 or Group 308 for the procedure. TEST the system for normal operation after the repair.
	• Idle speed is too high	• CHECK for the correct idle speed. TEST the system for normal operation after the repair.
• Accessory drive bearing hoot - occurs at idle or high idle in cold temperatures of approximately 4°C (40°F) or colder at the first start of the day	• Accessory drive idler or tensioner pulley bearing is experiencing stick/slip between ball bearings and the bearing race	• CARRY OUT the Engine Cold Soak procedure. REFER to: Noise, Vibration and Harshness (NVH) (100-04 Noise, Vibration and Harshness, Diagnosis and Testing). • PLACE the EngineEAR probe directly on the idler/ tensioner center post or bolt to verify which bearing is making the noise. INSTALL new parts as necessary. Refer to the appropriate section in Group 303 for the procedure. TEST the system for normal operation after the repair.
• Accessory drive belt noise, squeal or chirping	• Defective/worn or incorrect accessory drive belt • Misaligned pulley(s) • Pulley runout • Damaged or worn accessory drive component or idler • Fluid contamination of the accessory drive belt or pulleys • Damaged or worn accessory drive belt tensioner • Damaged pulley grooves	• CARRY OUT the Engine Accessory Test. REFER to: Noise, Vibration and Harshness (NVH) (100-04 Noise, Vibration and Harshness, Diagnosis and Testing). INSPECT components and INSTALL new parts as necessary. Refer to the appropriate section in Group 303 for the procedure. TEST the system for normal operation after the repair.
• Clunking noise	• Coolant pump has excessive end play or imbalance	• CHECK the coolant pump for excessive end play. INSPECT the coolant pump for imbalance with the drive belt off. INSTALL a new coolant pump as necessary. Refer to the appropriate section in Group 303 for the procedure. TEST the system for normal operation after the repair.
• Whine/hum - occurs when unlocking the vehicle or opening the door with the engine off Gasoline Turbocharged Direct Injection (GTDI) only	• Fuel pump module	• Acceptable condition. Fuel pump module turns on before engine starts to prime the fuel system.
• Whine or moaning noise	• Air intake system	• CHECK the air cleaner and ducts for correct fit. INSPECT the air intake system for leaks or damage. REPAIR as necessary. TEST the system for normal operation after the repair.
• Whistling noise - normally	• Air intake system	• CHECK the air intake ducts, air cleaner, throttle body

accompanied with poor idle condition		and vacuum hoses for leaks and correct fit. REPAIR or ADJUST as necessary. TEST the system for normal operation after the repair.
	• Turbocharger intake tube assembly leaking	• REPAIR or INSTALL a new tube as necessary. TEST the system for normal operation after the repair.
	• Loose connections or damage to air intake hoses and tubes	• TIGHTEN hose clamps. INSPECT for damage and REPAIR as necessary. TEST the system for normal operation after the repair.
	• Air leaks at turbine housing, blown joints or damaged exhaust	• INSPECT for leaks. Leaks can usually be detected audibility or visually, by a discoloration caused by escaping hot exhaust gases. REPAIR as necessary. TEST the system for normal operation after the repair.
	• Carbon build up in the turbine housing	• INSPECT the turbocharger. CARRY OUT the Check for Free Rotation - Off Vehicle. REFER to: Turbocharger (303-04C Fuel Charging and Controls - Turbocharger - 2.0L EcoBoost (184kW/250PS) - MI4, Diagnosis and Testing). TEST the system for normal operation after the repair.
	• Turbocharger imbalance due to foreign object/damage	• REPAIR as necessary. TEST the system for normal operation after the repair.
	• Turbine bearing failure	• INSPECT the turbocharger. CARRY OUT the Check for Free Rotation - Off Vehicle. REFER to: Turbocharger (303-04C Fuel Charging and Controls - Turbocharger - 2.0L EcoBoost (184kW/250PS) - MI4, Diagnosis and Testing). TEST the system for normal operation after the repair.
	• Inoperative turbocharger bypass valve	• Refer to Powertrain Control/Emissions Diagnosis (PC/ED) manual.
• Whine or air rush type noise	• Turbocharger	• Acceptable condition. Some whine or air noise is common.
• Chrip or whoosh sound	• Turbocharger bypass valve	• CHECK the turbocharger bypass valve. REPAIR as necessary. TEST the system for normal operation after the repair.
• Hissing noise - occurs during idle or high idle that is apparent with the hood open	• Vacuum leak	• Use the Ultrasonic Leak Detector/EngineEAR to locate the source. Scan the air intake system from the inlet to each cylinder intake port. DISCARD the leaking parts, and INSTALL a new component. TEST the system for normal operation after the repair.
	• Vehicles with a plastic intake manifold	• Acceptable condition. Some plastic manifolds exhibit this noise, which is the effect of the plastic manifold.
• Grinding noise - occurs during engine cranking	• Incorrect starter motor mounting	• INSPECT the starter motor for correct mounting. REPAIR as necessary. Refer to the appropriate section in Group 303 for the procedure. TEST the system for normal operation after the repair.
	• Starter motor	• CHECK the starter motor. INSTALL a new starter motor as necessary. Refer to the appropriate section in Group

		303 for the procedure. TEST the system for normal operation after the repair.
	• Incorrect starter motor drive engagement	• INSPECT the starter motor drive for wear or damage. INSTALL a new starter motor as necessary. Refer to the appropriate section in Group 303 for the procedure. TEST the system for normal operation after the repair. • INSPECT the flywheel/flexplate for wear or damage. INSTALL a new flywheel/flexplate as necessary. Refer to the appropriate section in Group 303 for the procedure. TEST the system for normal operation after the repair.
• Engine noise, front of engine - knocking noise from lower front of engine	• Damaged or separated crankshaft pulley/damper	• CHECK for obvious signs of damage or wobble during operation. INSTALL new as necessary. Refer to the appropriate section in Group 303 for the procedure. TEST the system for normal operation after the repair.
• Engine noise, front of engine - ticking, tapping or rattling noise from the front of the engine	• Timing drive components	• REMOVE the accessory drive belt. Refer to the appropriate section in Group 303 for the procedure. • USE the EngineEAR to isolate the noise to the engine front cover. • REMOVE the engine front cover and INSPECT the timing drive components. INSTALL new parts as necessary. Refer to the appropriate section in Group 303 for the procedure. TEST the system for normal operation after the repair.
• Engine noise, upper end - ticking noise near the fuel rail and intake manifold	• Fuel rail clip • Fuel injector	• CHECK for loose or damaged fuel rail clip(s). REPAIR as necessary. • USE the EngineEAR to isolate the noisy injector(s). INSTALL a new injector(s) as necessary. Refer to the appropriate section in Group 303 for the procedure. TEST the system for normal operation after the repair.
	• Fuel injection pump (GTDI only)	• This is a normal engine noise that can be verified by listening to another vehicle. If noise is excessive, REPAIR as necessary. TEST the system for normal operation after the repair.
• Engine noise, upper end - ticking, knocking or rattle noise that occurs during idle or high idle during the first cold start of the day and may disappear as the engine warms	• Valve train noise (bled down lifter/lash adjuster)	• CARRY OUT the Valve Train Analysis Component Test in this section. INSTALL new parts as necessary. Refer to the appropriate section in Group 303 for the procedure. TEST the system for normal operation after the repair.
• Engine noise, upper end - occurs mostly with a warm engine at light/medium acceleration	• Worn or damaged spark plugs	• REMOVE the spark plugs. INSPECT and INSTALL new as necessary. Refer to the appropriate section in Group 303 for the procedure. TEST the system for normal operation after the repair.
• Engine noise, upper end - rattling noise from the valve train. Worse when the engine is cold	• Low oil level	• CHECK the oil level. FILL as necessary.
	• Thin or diluted oil	• INSPECT the oil for contamination. If the oil is contaminated, CHECK for the source. REPAIR as necessary. CHANGE the oil and filter. TEST the system for normal operation after the repair.
	• Low oil pressure	• CARRY OUT the Oil Pressure Test in this section. If not within specifications, REMOVE the engine oil pan. Refer to the appropriate section in Group 303 for the procedure. INSPECT for a blocked oil pick up tube.

		TEST the system for normal operation after the repair.
	• Worn valve train components	• CARRY OUT the Valve Train Analysis Component Test in this section. INSTALL new parts as necessary. Refer to the appropriate section in Group 303 for the procedure. TEST the system for normal operation after the repair.
	• Worn valve guides	• CARRY OUT the Valve Guide Inner Diameter procedure. REFER to: Valve Guide Inner Diameter (303-00 Engine System - General Information, General Procedures).
	• Excessive runout of the valve seats on the valve face	• INSPECT for abnormalities on the valve face and valve seat. INSTALL a new cylinder head assembly if abnormalities are found.
• Engine noise, upper end - pinging noise	• Gasoline octane too low	• VERIFY with customer the type of gasoline used. CORRECT as necessary. TEST the system for normal operation after the repair.
	• KS operation	• CHECK the KS operation. INSTALL a new KS . Refer to the appropriate section in Group 303 for the procedure. TEST the system for normal operation after the repair.
	• Incorrect spark timing	• CHECK the spark timing. REPAIR as necessary. TEST the system for normal operation after the repair.
	• High operating temperature	• INSPECT the cooling system for leaks. CHECK the coolant level. REFILL as necessary. CHECK the coolant for the correct mix ratio. DRAIN and REFILL as needed. VERIFY the engine operating temperature is within specifications. REPAIR as necessary. TEST the system for normal operation after the repair.
	• Spark plug	• CHECK the spark plugs. REPAIR or INSTALL new spark plugs as necessary. TEST the system for normal operation after the repair.
	• Catalytic converter	• Compare with a similar vehicle for what is acceptable noise.
• Engine noise, lower end - ticking or knocking noise near the oil filter adapter	• Oil pump	• USE the EngineEAR to verify the oil pump as the source of the noise at low rpm. REPAIR as necessary. Refer to the appropriate section in Group 303 for the procedure. TEST the system for normal operation after the repair.
• Engine noise, lower end - light knocking noise, also described as piston slap. Noise is most noticeable when the engine is cold with light to medium acceleration. The noise disappears as the engine warms	• Excessive clearance between the piston and the cylinder wall	• CARRY OUT the Piston Diameter procedure. REFER to: Piston Diameter (303-00 Engine System - General Information, General Procedures). Measure the cylinder bore diameter. Subtract the piston diameter from the cylinder bore diameter to find the piston-to-cylinder bore clearance. REFER to the appropriate 303-01 Section for specifications.
• Engine noise, lower end - light double knock or sharp rap sound. Occurs mostly with a warm engine at idle or low speeds in drive. Increases in relation to engine load. Associated with a poor lubrication history	• Excessive clearance between the piston and the piston pin	• MEASURE the piston pin bore and the piston pin in 2 directions on each side. REFER to the appropriate 303-01 Section for specifications.
• Engine noise, lower end - light knocking noise. The noise is most noticeable when the engine is warm. The noise tends to	• Excessive clearance between the connecting rod	• CARRY OUT the Connecting Rod Bearing Journal Clearance procedure. REFER to: Connecting Rod Bearing Journal Clearance (303-00 Engine System - General Information, General

decrease when the vehicle is coasting or in neutral	bearings and the crankshaft	Procedures).
• Engine noise, lower end - deep knocking noise. The noise is most noticeable when the engine is warm, at lower rpm and under a light load and then at float	• Worn or damaged crankshaft main bearings	• CARRY OUT the Crankshaft Main Bearing Journal Clearance procedure. REFER to: Crankshaft Main Bearing Journal Clearance (303-00 Engine System - General Information, General Procedures).
• Engine noise, rear of engine - knocking noise at rear of engine	• Damaged flywheel/flexplate	• INSPECT the flywheel/flexplate for wear or damage. INSTALL a new flywheel/flexplate as necessary. Refer to the appropriate section in Group 303 for the procedure. TEST the system for normal operation after the repair.
• Engine vibration - vibration felt at all times	• Excessive engine pulley runout	• CARRY OUT the Engine Accessory Test. REFER to: Noise, Vibration and Harshness (NVH) (100-04 Noise, Vibration and Harshness, Diagnosis and Testing). INSTALL a new engine pulley as necessary. Refer to the appropriate section in Group 303 for the procedure. TEST the system for normal operation after the repair.
	• Damaged or worn accessory component	• CARRY OUT the Engine Accessory Test. REFER to: Noise, Vibration and Harshness (NVH) (100-04 Noise, Vibration and Harshness, Diagnosis and Testing). REPAIR or INSTALL a new component as necessary. TEST the system for normal operation after the repair.
• Engine vibration - at idle, a low-frequency vibration (5-20 Hz) or mild shake that is felt through the seat/ floorpan	• Cylinder misfire	• Using the scan tool, CARRY OUT the cylinder power balance and the relative compression test. REPAIR as necessary. Refer to the appropriate section in Group 303 for the procedure. TEST the system for normal operation after the repair.
	• Engine or torque converter out of balance	• VERIFY the torque converter to crankshaft pilot clearance is correct. REPAIR as necessary. RE-INDEX the torque converter on the flex plate by 120 degrees for a 3- bolt converter or 180 degrees for a 4-bolt converter. Refer to the appropriate section in Group 307 for the procedure. TEST the system for normal operation after the repair.
• Engine vibration - is felt with increases and decreases in engine rpm	• Powertrain mount(s)	• CHECK the powertrain mounts for damage. INSTALL new mounts as necessary. For engine, Refer to the appropriate section in Group 303 for the procedure. For transaxle, Refer to the appropriate section in Group 307 or Group 308 for the procedure. TEST the system for normal operation after the repair.
	• Engine or transmission grounded to chassis	• INSPECT the powertrain/ drivetrain for correct clearances. REPAIR as necessary. TEST the system for normal operation after the repair.
• Engine vibration - increases intensity as the engine rpm is increased	• Engine out-of-balance	• CARRY OUT the NERU Test. REFER to: Noise, Vibration and Harshness (NVH) (100-04 Noise, Vibration and Harshness, Diagnosis and Testing). ROTATE the torque converter, 120 degrees for 3- bolt or 180 degrees for 4- bolt. INSPECT the torque converter pilot outer diameter-to-crankshaft pilot inner diameter. REPAIR as necessary. Refer to the appropriate section in Group 307 for the procedure.

		TEST the system for normal operation after the repair.
• Engine vibration - mostly at coast/neutral coast. Condition improves with vehicle acceleration	• Combustion instability	• CHECK the ignition system. INSTALL new components as necessary. Refer to the appropriate section in Group 303 for the procedure. TEST the system for normal operation after the repair.
• Engine vibration or shudder - occurs with light to medium acceleration above 56 km/h (35 mph)	• Worn or damaged spark plugs	• INSPECT the spark plugs for cracks, high resistance or broken insulators. INSTALL a new spark plug(s) as necessary. Refer to the appropriate section in Group 303 for the procedure. TEST the system for normal operation after the repair.
	• Plugged fuel injector	• REPAIR or INSTALL a new injector as necessary. Refer to the appropriate section in Group 303 for the procedure. TEST the system for normal operation after the repair.
	• Contaminated fuel	• INSPECT the fuel for contamination. DRAIN the fuel system and refill. TEST the system for normal operation after the repair.

Component Tests

The following component tests are used to diagnose engine concerns.

Engine Oil Leaks

NOTE: *If an overnight drive is done, the fan air or road air blast can cause erroneous readings.*

NOTE: *When diagnosing engine oil leaks, the source and location of the leak must be positively identified prior to repair.*

Prior to carrying out this procedure, clean the cylinder block, cylinder heads, valve covers, oil pan and flywheel/flexplate with a suitable solvent to remove all traces of oil.

Engine Oil Leaks - Fluorescent Oil Additive Method

Use the 12 Volt Master UV Diagnostic Inspection Kit to carry out the following procedure for oil leak diagnosis.

1. Add 29.6 ml (1 oz) of gasoline engine oil dye to a minimum of 0.47L (1/2 qt) and a maximum of 0.95L (1 qt) engine oil and fill through the engine oil fill. Thoroughly premix the gasoline engine oil dye or it will not have enough time to reach the crankcase, oil galleries and seal surfaces during this particular 15 minute test. The additive must be mixed well with oil and added through the oil fill. Check the level on the oil level indicator to determine what amount of oil to premix. If it is in the middle of the crosshatch area or below the full mark, use 0.95L (1 qt). If it is at the full mark, use 0.47L (1/2 qt).

2. Run the engine for 15 minutes. Stop the engine and inspect all seal and gasket areas for leaks using the UV Leak Detector Kit. A clear bright yellow or orange area will identify the leak. For extremely small leaks, several hours may be required for the leak to appear.

3. At the end of test, make sure the oil level is within the upper and lower oil indicator marks. Remove oil as necessary if it registers above the full mark.

Leakage Points - Underhood

Examine the following areas for oil leakage:

- Valve cover gaskets
- Cylinder head gaskets
- Oil cooler, if equipped
- Oil filter adapter
- Engine front cover
- Oil filter adapter and filter body
- Oil level indicator tube connection
- EOP switch

Leakage Points - Under Engine, With Vehicle on Hoist

Examine the following areas for oil leakage:

- Oil pan gaskets
- Oil pan sealer
- Engine front cover gasket
- Crankshaft front seal
- Crankshaft rear oil seal
- Oil filter adapter and filter body
- Oil cooler, if equipped

Leakage Points - With Transmission and Flywheel/Flexplate Removed

Examine the following areas for oil leakage:

- Crankshaft rear oil seal
- Rear main bearing cap parting line
- Flexplate mounting bolt holes (with flexplate installed)
- Pipe plugs at the end of oil passages

Compression Test

1. Make sure the oil in the crankcase is of the correct viscosity and at the correct level and that the battery is correctly charged. Operate the vehicle until the engine is at normal operating temperature. Turn the ignition switch to the OFF position, then remove all the spark plugs.

2. Set the throttle plates in the wide-open position.

3. Install a compression gauge in the No. 1 cylinder.

4. Install an auxiliary starter switch in the starting circuit. With the ignition switch in the OFF position, and using the auxiliary starter switch, crank the engine a minimum of 5 compression strokes and record the highest reading. Note the approximate number of compression strokes necessary to obtain the highest reading.

5. Repeat the test on each cylinder, cranking the engine approximately the same number of compression strokes.

Compression Test - Test Results

The indicated compression pressures are considered within specification if the lowest reading cylinder is at least 75% of the highest reading. Refer to the Compression Pressure Limit Chart.

Compression Pressure Limit Chart

Maximum Recorded Cylinder Pressure	Minimum Recorded Cylinder Pressure	Maximum Recorded Cylinder Pressure	Minimum Recorded Cylinder Pressure	Maximum Recorded Cylinder Pressure	Minimum Recorded Cylinder Pressure	Maximum Recorded Cylinder Pressure	Minimum Recorded Cylinder Pressure
924 kPa (134 psi)	696 kPa (101 psi)	1,131 kPa (164 psi)	848 kPa (123 psi)	1,338 kPa (194 psi)	1,000 kPa (145 psi)	1,544 kPa (224 psi)	1,158 kPa (168 psi)
938 kPa (136 psi)	703 kPa (102 psi)	1,145 kPa (166 psi)	855 kPa (124 psi)	1,351 kPa (196 psi)	1,014 kPa (147 psi)	1,558 kPa (226 psi)	1,165 kPa (169 psi)
952 kPa (138 psi)	717 kPa (104 psi)	1,158 kPa (168 psi)	869 kPa (126 psi)	1,365 kPa (198 psi)	1,020 kPa (148 psi)	1,572 kPa (228 psi)	1,179 kPa (171 psi)
965 kPa (140 psi)	724 kPa (105 psi)	1,172 kPa (170 psi)	876 kPa (127 psi)	1,379 kPa (200 psi)	1,034 kPa (150 psi)	1,586 kPa (230 psi)	1,186 kPa (172 psi)
979 kPa (142 psi)	738 kPa (107 psi)	1,186 kPa (172 psi)	889 kPa (129 psi)	1,303 kPa (189 psi)	1,041 kPa (151 psi)	1,600 kPa (232 psi)	1,200 kPa (174 psi)
933 kPa (135 psi)	745 kPa (108 psi)	1,200 kPa (174 psi)	903 kPa (131 psi)	1,407 kPa (204 psi)	1,055 kPa (153 psi)	1,055 kPa (153 psi)	1,207 kPa (175 psi)
1,007 kPa (146 psi)	758 kPa (110 psi)	1,214 kPa (176 psi)	910 kPa (132 psi)	1,420 kPa (206 psi)	1,062 kPa (154 psi)	1,627 kPa (236 psi)	1,220 kPa (177 psi)
1,020 kPa (148 psi)	765 kPa (111 psi)	1,227 kPa (178 psi)	917 kPa (133 psi)	1,434 kPa (208 psi)	1,075 kPa (156 psi)	1,641 kPa (238 psi)	1,227 kPa (178 psi)
1,034 kPa (150 psi)	779 kPa (113 psi)	1,241 kPa (180 psi)	931 kPa (135 psi)	1,448 kPa (210 psi)	1,083 kPa (157 psi)	1,655 kPa (240 psi)	1,241 kPa (180 psi)
1,048 kPa (152 psi)	786 kPa (114 psi)	1,255 kPa (182 psi)	936 kPa (136 psi)	1,462 kPa (212 psi)	1,089 kPa (158 psi)	1,669 kPa (242 psi)	1,248 kPa (181 psi)
1,062 kPa (154 psi)	793 kPa (115 psi)	1,269 kPa (184 psi)	952 kPa (138 psi)	1,476 kPa (214 psi)	1,103 kPa (160 psi)	1,682 kPa (244 psi)	1,262 kPa (183 psi)
1,076 kPa (156 psi)	807 kPa (117 psi)	1,282 kPa (186 psi)	965 kPa (140 psi)	1,489 kPa (216 psi)	1,117 kPa (162 psi)	1,696 kPa (246 psi)	1,269 kPa (184 psi)
1,089 kPa (158 psi)	814 kPa (118 psi)	1,296 kPa (188 psi)	972 kPa (141 psi)	1,503 kPa (218 psi)	1,124 kPa (163 psi)	1,710 kPa (248 psi)	1,202 kPa (174 psi)
1,103 kPa (160 psi)	827 kPa (120 psi)	1,310 kPa (190 psi)	979 kPa (142 psi)	1,517 kPa (220 psi)	1,138 kPa (165 psi)	1,724 kPa (250 psi)	1,289 kPa (187 psi)
1,110 kPa (161 psi)	834 kPa (121 psi)	1,324 kPa (192 psi)	993 kPa (144 psi)	1,631 kPa (237 psi)	1,145 kPa (166 psi)	–	–

E151691

If one or more cylinders reads low, squirt approximately one tablespoon of engine oil meeting Ford specification on top of the pistons in the low-reading cylinders. Repeat the compression pressure check on these cylinders.

Compression Test - Interpreting Compression Readings

1. If compression improves considerably, piston rings are worn or damaged.
2. If compression does not improve, valves are sticking or not seating correctly.
3. If 2 adjacent cylinders indicate low compression pressures and squirting oil on each piston does not increase compression, the head gasket may be leaking between cylinders. Engine oil or coolant in cylinders could result from this condition. Use the Compression Pressure Limit Chart when checking cylinder compression so the lowest reading is within 75% of the highest reading.

Cylinder Leakage Detection

When a cylinder produces a low reading, use of a cylinder leakage tester will be helpful in pinpointing the exact cause.

The leakage tester is inserted in the spark plug hole, the piston is brought up to TDC on the compression stroke, and compressed air is admitted.

Once the combustion chamber is pressurized, the leakage tester gauge will read the percentage of leakage. Leakage exceeding 20% is excessive.

While the air pressure is retained in the cylinder, listen for the hiss of escaping air. A leak at the intake valve will be heard in the Throttle Body (TB). A leak at the exhaust valve can be heard at the tailpipe. Leakage past the piston rings will be audible at the PCV connection. If air is passing through a blown head gasket to an adjacent cylinder, the noise will be evident at the spark plug hole of the cylinder into which the air is leaking. Cracks in the cylinder block or gasket leakage into the cooling system may be detected by a stream of bubbles in the radiator.

Excessive Engine Oil Consumption

Nearly all engines consume oil, which is essential for normal lubrication of the cylinder bore walls and pistons and rings. Determining the level of oil consumption may require testing by recording how much oil is being added over a given set of miles.

Customer driving habits greatly influence oil consumption. Mileage accumulated during towing or heavy loading generates extra heat. Frequent short trips, stop-and-go type traffic or extensive idling, prevent the engine from reaching normal operating temperature. This prevents component clearances from reaching specified operating ranges.

The following diagnostic procedure may be utilized to determine internal oil consumption. Make sure that the concern is related to internal oil consumption, and not external leakage, which also consumes oil. Verify there are no leaks before carrying out the test. Once verified, the rate of internal oil consumption can be tested.

A new engine may require extra oil in the early stages of operation. Internal piston-to-bore clearances and sealing characteristics improve as the engine breaks in. Engines are designed for close tolerances and do not require break-in oils or additives. Use the oil specified in the Owner's Literature. Ambient temperatures may determine the oil viscosity specification. Verify that the correct oil is being used for the vehicle in the geographic region in which it is driven.

Basic Pre-checks

1. For persistent complaints of oil consumption, interview the customer to determine the oil consumption characteristics. If possible, determine the brand and grade of oil currently in the oil pan. Look at the oil filter or oil-change station tags to determine if Ford-recommended maintenance schedules have been followed. Make sure that the oil has been changed at the specified mileage intervals. If vehicle mileage is past the first recommended drain interval, the Original Equipment Manufacturer (OEM) production filter should have been changed.

2. Ask how the most current mileage was accumulated. That is, determine whether the vehicle was driven under the following conditions:
    - Extended idling or curbside engine operation
    - Stop-and-go traffic or taxi operation
    - Towing a trailer or vehicle loaded heavily
    - Frequent short trips (engine not up to normal operating temperature)
    - Excessive throttling or high engine-rpm driving

3. Verify that there are no external leaks. If necessary, review the diagnostic procedure under Engine Oil Leaks in the Diagnosis and Testing portion of this section.

4. Inspect the crankcase ventilation system for:
    - disconnected hoses at the valve cover or TB.
    - loose or missing valve cover fill cap.
    - missing or incorrectly seated engine oil level indicator.
    - incorrect or dirty PCV valve.
    - a PCV valve grommet unseated in the valve cover (if so equipped).

5. Inspect for signs of sludge. Sludge affects PCV performance and can plug or restrict cylinder head drainback wells. It can also increase oil pressure by restricting passages and reducing the drainback capability of piston oil control rings. Sludge can result from either excessive water ingestion in the crankcase or operation at extremely high crankcase temperatures.

6. Inspect the air filter for dirt, sludge or damage. A hole in the filter element will allow unfiltered air to bypass into the air induction system. This can cause premature internal wear (engine dusting), allowing oil to escape past rings, pistons, valves and guides.

7. If the engine is hot or was recently shut down, wait for a minimum 5-minutes for 2.0L GDI or minimum 10-minutes for 2.0L GTDI to allow the oil to drain back. Ask the customer if this requirement has been followed. Adding oil without this wait

period can cause an overfill condition, leading to excessive oil consumption and foaming which may cause engine damage.

8. Make sure the oil level indicator (dipstick) is correctly and fully seated in the indicator tube. Remove the oil level indicator and record the oil level.

Detailed Pre-checks

1. Check the thermostat opening temperature to make sure that the cooling system is operating at the specified temperature. If it is low, internal engine parts are not running at specified internal operating clearances.

2. Verify the spark plugs are not oil saturated. Oil leaking into one or more cylinders will appear as an oil soaked condition on the plug. If a plug is saturated, a compression check may be necessary at the conclusion of the oil consumption test.

Oil Consumption Test

1. **NOTE:** *Once all of the previous conditions are met, carry out an oil consumption test.*

   Drain the engine oil and remove the oil filter. Install a new manufacturer-specified oil filter. Make sure the vehicle is positioned on a level surface. Refill the oil pan to a level one liter (quart) less than the specified fill level, using manufacturer-specified oil.

2. Run the engine for 3 minutes (if hot) or 10 minutes (if cold). Allow for a minimum 5-minutes for 2.0L GDI or minimum 10-minutes for 2.0L GTDI drainback period and then record the oil level shown on the oil level indicator. Place a mark on the backside of the oil level indicator noting the oil level location.

3. Add the final one liter (quart) to complete the normal oil fill. Restart the engine and allow it to idle for 2 minutes. Shut the engine down.

4. After a minimum 5-minutes for 2.0L GDI or minimum 10-minutes for 2.0L GTDI drainback period, record the location of the oil level again. Mark the oil level indicator with the new oil level location. (Note: Both marks should be very close to the MIN-MAX upper and lower limits or the upper and lower holes on the oil level indicator. These marks will exactly measure the engine's use of oil, with a one quart differential between the new marks.) Demonstrate to the customer that the factory-calibrated marks on the oil level indicator are where the oil should fall after an oil change with the specified fill amount. Explain however, that this may vary slightly between MIN-MAX or the upper and lower holes on the oil level indicator.

5. Record the vehicle mileage.

6. Advise the customer that oil level indicator readings must be taken every 320 km (200 mi) or weekly, using the revised marks as drawn. Remind the customer that the engine needs a minimum 5-minutes for 2.0L GDI or minimum 10-minutes for 2.0L GTDI drainback period for an accurate reading and that the oil level indicator must be firmly seated in the tube prior to taking the reading.

7. When the subsequent indicator readings demonstrate a full liter (quart) has been used, record the vehicle mileage. The mileage driven should not be less than 4,800 km (3,000 mi). The drive cycle the vehicle has been operated under must be considered when making this calculation. It may be necessary to have the customer bring the vehicle in for a periodic oil level indicator reading to closely monitor oil usage.

Post Checks, Evaluation and Corrective Action

1. If test results indicate excessive oil consumption, carry out a cylinder compression test. The cylinder compression test should be carried out with a fully charged battery and all spark plugs removed. See the Compression Test Chart in this section for pressure range limits.

2. Compression should be consistent across all cylinders. Refer to the Compression Testing portion of this section. If compression tested within the specifications found in this section, the excessive oil consumption may be due to wear on the valve guides, valves or valve seals.

3. A cylinder leak detection test can be carried out using a cylinder leakage detector. This can help identify valves, piston rings, or worn valve guides/valve stems, inoperative valve stem seals or other related areas as the source of oil consumption.

4. **NOTE:** *An oil-soaked appearance on the porcelain tips of the spark plugs also indicates excessive oil use. A typical engine with normal oil consumption will exhibit a light tan to brown appearance. A single or adjoining, multiple cylinder leak can be traced by viewing the tips.*

If an internal engine part is isolated as the root cause, determine if the repair will exceed cost limits and proceed with a repair strategy as required.

5. Once corrective action to engine is complete and verifying that all pre-check items were eliminated in the original diagnosis, repeat the Oil Consumption Test as described above and verify consumption results.

Intake Manifold Vacuum Test

Bring the engine to normal operating temperature. Connect the Vacuum/Pressure Tester to the intake manifold. Run the engine at the specified idle speed.

The vacuum gauge should read between 51-74 kPa (15-22 in-Hg) depending upon the engine condition and the altitude at which the test is conducted. Subtract 4.0193 kPa (1 in-Hg) from the specified reading for every 304.8 m (1,000 feet) of elevation above sea level.

The reading should be steady. If necessary, adjust the gauge damper control (where used) if the needle is fluttering rapidly. Adjust the damper until the needle moves easily without excessive flutter.

Intake Manifold Vacuum Test - Interpreting Vacuum Gauge Readings

A careful study of the vacuum gauge reading while the engine is idling will help pinpoint trouble areas. Always conduct other appropriate tests before arriving at a final diagnostic decision. Vacuum gauge readings, although helpful, must be interpreted carefully.

Most vacuum gauges have a normal band indicated on the gauge face. The following are potential gauge readings. Some are normal; others should be investigated further.

The following are potential gauge readings. Some are normal; others should be investigated further.

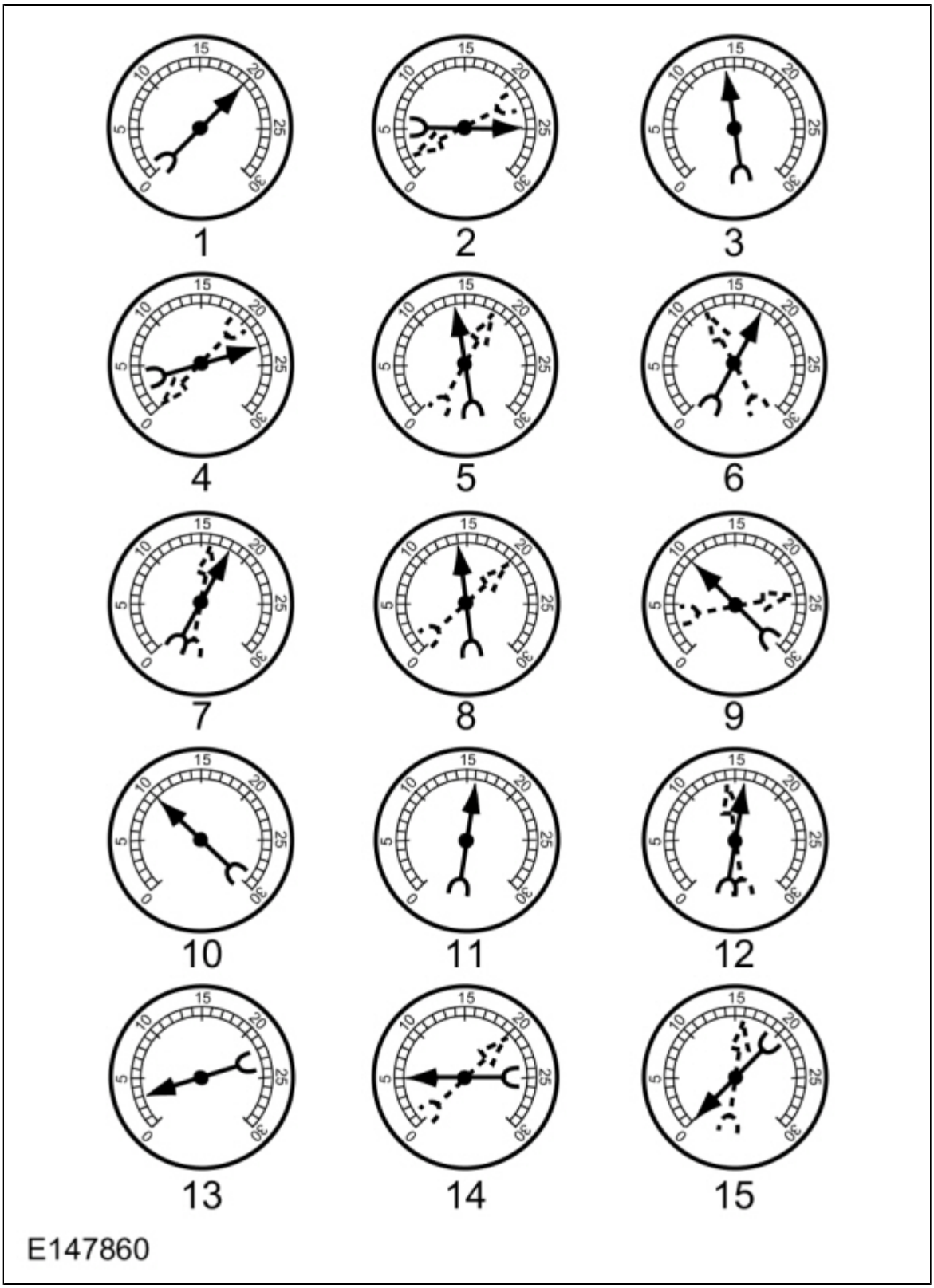

1. NORMAL READING: Needle between 51-74 kPa (15-22 in-Hg) and holding steady.
2. NORMAL READING DURING RAPID ACCELERATION AND DECELERATION: When the engine is rapidly accelerated (dotted needle), the needle will drop to a low reading (not to zero). When the throttle is suddenly released, the needle will snap back up to a higher than normal figure.
3. NORMAL FOR HIGH-LIFT CAMSHAFT WITH LARGE OVERLAP: The needle will register as low as 51 kPa (15 in-Hg) but will be relatively steady. Some oscillation is normal.
4. WORN RINGS OR DILUTED OIL: When the engine is accelerated (dotted needle), the needle drops to 0 kPa (0 in-Hg).

Upon deceleration, the needle runs slightly above 74 kPa (22 in-Hg).

5. STICKING VALVES: When the needle (dotted) remains steady at a normal vacuum but occasionally flicks (sharp, fast movement) down and back about 13 kPa (4 in-Hg), one or more valves may be sticking.
6. BURNED OR WARPED VALVES: A regular, evenly-spaced, downscale flicking of the needle indicates one or more burned or warped valves. Insufficient valve clearance will also cause this reaction.
7. POOR VALVE SEATING: A small but regular downscale flicking can mean one or more valves are not seating.
8. WORN VALVE GUIDES: When the needle oscillates over about a 13 kPa (4 in-Hg) range at idle speed, the valve guides could be worn. As engine speed increases, the needle will become steady if guides are responsible.
9. WEAK VALVE SPRINGS: When the needle oscillation becomes more violent as engine rpm is increased, weak valve springs are indicated. The reading at idle could be relatively steady.
10. LATE VALVE TIMING: A steady but low reading could be caused by late valve timing.
11. IGNITION TIMING RETARDING: Retarded ignition timing will produce a steady but somewhat low reading.
12. INSUFFICIENT SPARK PLUG GAP: When spark plugs are gapped too close, a regular, small pulsation of the needle can occur.
13. INTAKE LEAK: A low, steady reading can be caused by an intake manifold or Throttle Body (TB) gasket leak.
14. BLOWN HEAD GASKET: A regular drop of fair magnitude can be caused by a blown head gasket or warped cylinder head-to-cylinder block surface.
15. RESTRICTED EXHAUST SYSTEM: When the engine is first started and is idled, the reading may be normal, but as the engine rpm is increased, the back pressure caused by a clogged muffler, kinked tailpipe or other concerns will cause the needle to slowly drop to 0 kPa (0 in-Hg). The needle then may slowly rise. Excessive exhaust clogging will cause the needle to drop to a low point even if the engine is only idling.

When vacuum leaks are indicated, search out and correct the cause. Excess air leaking into the system will upset the fuel mixture and cause concerns such as rough idle, missing on acceleration or burned valves. If the leak exists in an accessory unit such as the power brake booster, the unit will not function correctly. Always fix vacuum leaks.

Oil Pressure Test

1. Disconnect and remove the EOP switch from the engine.
2. Connect the EOP Gauge to the oil pressure sender oil galley port.
3. Run the engine until normal operating temperature is reached.
4. Run the engine at the specified rpm and record the gauge reading.
5. The oil pressure should be within specifications, refer to the specification chart in the appropriate 303-01 engine section.
6. If the pressure is not within specification, check the following possible sources:
   - Insufficient oil
   - Oil leakage
   - Worn or damaged oil pump
   - Oil pump screen cover and tube
   - Excessive main bearing clearance
   - Excessive connecting rod bearing clearance
   - Chain tensioner leak

Valve Train Analysis

The following component tests are used to diagnose valve train concerns.

Valve Train Analysis - Engine Off, Valve Cover Removed

Check for damaged or severely worn parts and correct assembly. Make sure correct parts are used with the static engine analysis

as follows.

Valve Train Analysis - Camshafts and Valve Tappets

- Check for broken or damaged parts.
- Check for loose mounting bolts on camshaft caps.
- Check for worn or damaged valve tappets.

Valve Train Analysis - Valve Springs, Valve Tappets Removed

- Check for broken or damaged parts.

Valve Train Analysis - Valve Spring Retainer and Valve Spring Retainer Keys, Valve Tappets Removed

- Check for correct seating of the valve spring retainer key on the valve stem and in valve spring retainer.
- Check for correct seating on the valve stem.

Valve Train Analysis - Valves and Cylinder Head, Valve Tappets Removed

- Check for plugged oil drain back holes.
- Check for worn or damaged valve tips.
- Check for missing or damaged valve stem seals or guide-mounted valve stem seal.
- Check for missing or worn valve spring seats.

Valve Train Analysis - Camshaft Lobe Lift

Check the lift of each camshaft lobe in consecutive order and make a note of the readings.

1. Remove the spark plugs. Refer to the appropriate 303-07 section.

2. Install the Dial Indicator Gauge with Holding Fixture so the rounded tip of the dial indicator is on top of the camshaft lobe and on the same plane as the valve tappet.

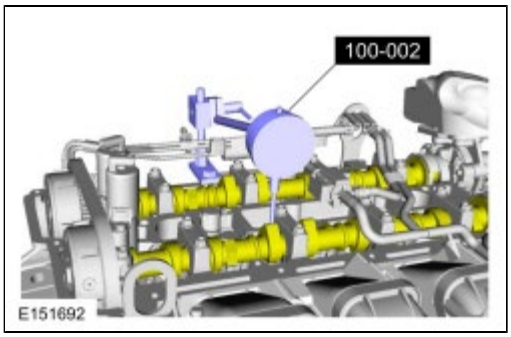

3. Rotate the crankshaft using a breaker bar and socket attached to the crankshaft pulley retainer bolt. Rotate the crankshaft until the base circle of the camshaft lobe is reached.

4. Zero the dial indicator. Continue to rotate the crankshaft until the high-lift point of the camshaft lobe is in the fully raised position (highest indicator reading).

5. To check the accuracy of the original dial indicator reading, continue to rotate crankshaft until the base circle is reached. The indicator reading should be zero. If zero reading is not obtained, repeat Steps 2 through 5.

6. If the lift on any lobe is below specified service limits, install a new camshaft and valve tappets.

7. Install the spark plugs. Refer to the appropriate 303-07 section.

Copyright © Ford Motor Company

Bearing Inspection

1.
- Cratering - fatigue failure
- Spot glazing - incorrect seating
- Scratching - dirty engine oil
- Base exposed - poor lubrication
- Both edges worn - journal damaged
- One edge worn - journal tapered or bearing not seated

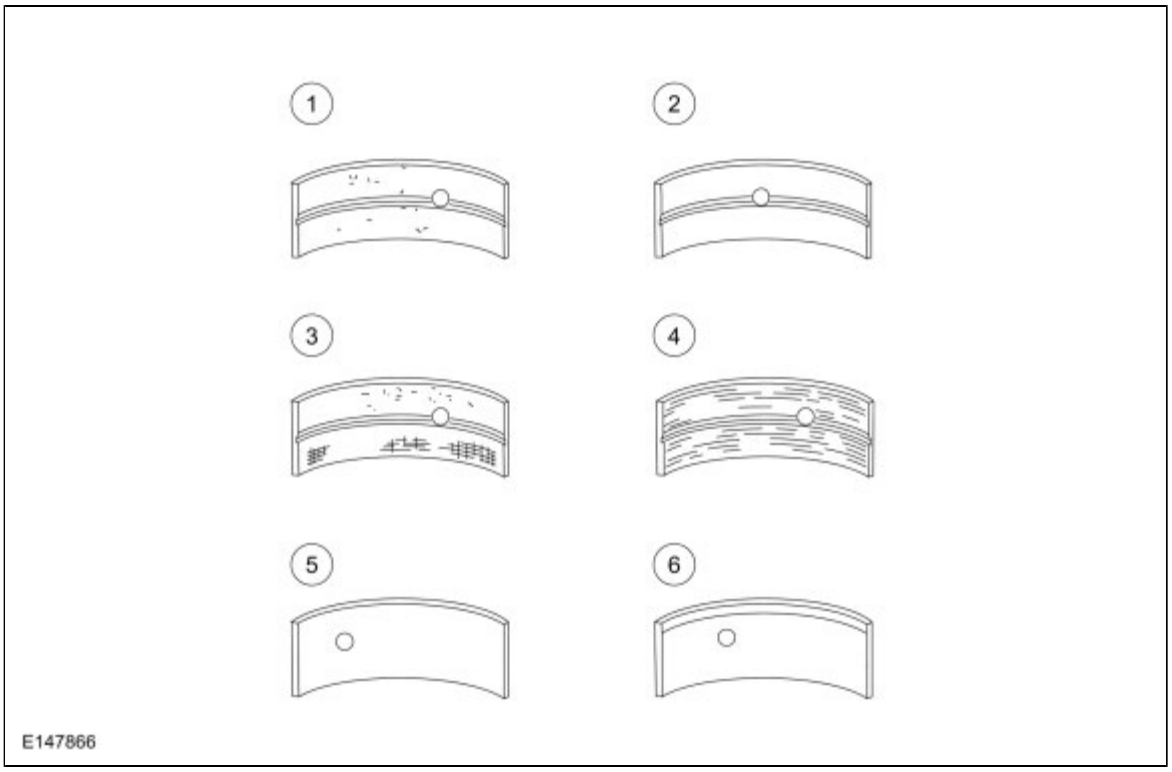

Copyright © Ford Motor Company

Connecting Rod Bearing Journal Clearance

NOTE: *Refer to the appropriate Section 303-01 for the specification.*

1. **NOTE:** *The crankshaft connecting rod journals must be within specifications to check the connecting rod bearing journal clearance.*

   Remove the connecting rod bearing cap and connecting rod bearing.

2. Position a piece of Plastigage across the bearing surface.

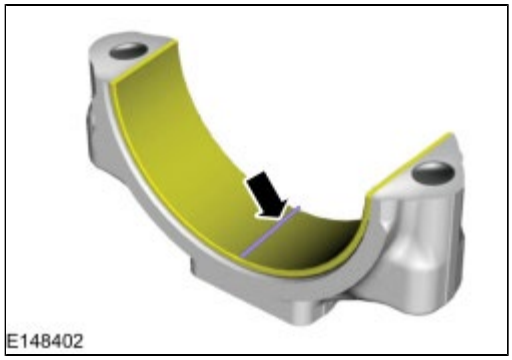

3. **NOTE:** *Do not turn the crankshaft during this step.*

   Install and tighten to specifications, then remove the connecting rod bearing cap.

4. Measure the Plastigage to get the connecting rod bearing journal clearance. The Plastigage should be smooth and flat. A changing width indicates a tapered or damaged connecting rod or connecting rod bearing.

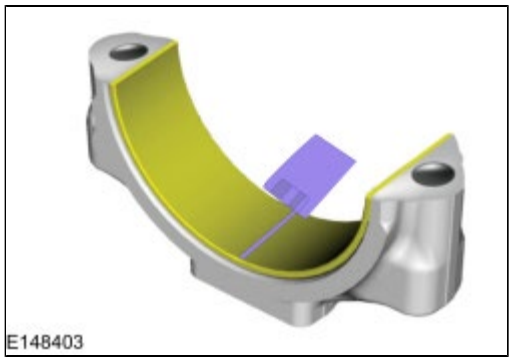

Copyright © Ford Motor Company

Cylinder Block Distortion

NOTE: *Refer to the appropriate Section 303-01 for the specification.*

1. **NOTE:** *Use a Straightedge that is calibrated by the manufacturer to be flat within 0.005 mm (0.0002 in) per running foot of length, such as Snap-On® GA438A or equivalent. For example, if the Straightedge is 61 cm (24 in) long, the machined edge must be flat within 0.010 mm (0.0004 in) from end to end.*

   Use a Straightedge and a Feeler Gauge Set to inspect the cylinder block for flatness.
   General Equipment : Feeler Gauge

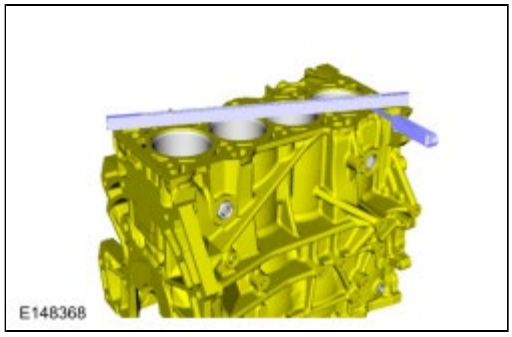

Copyright © Ford Motor Company

Cylinder Bore Taper

NOTE: *Refer to the appropriate Section 303-01 for the specification.*

1. Measure the cylinder bore at the top, middle and bottom of piston ring travel in 2 directions as indicated. Verify the cylinder bore is within the wear limit. The difference indicates the cylinder bore taper. If the cylinder bore taper does not meet specification, bore the cylinder to the next oversize limit.

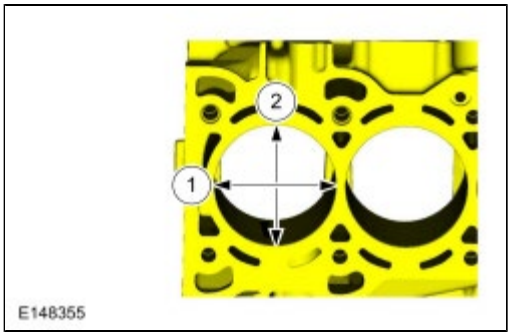

Copyright © Ford Motor Company

Cylinder Head Distortion

NOTE: *Refer to the appropriate Section 303-01 for the specification.*

1. **NOTE:** *Make sure all cylinder head surfaces are clear of any gasket material, silicone sealant, oil and coolant. The cylinder head surface must be clean and dry before running a flatness check.*

   NOTE: *Use a Straightedge that is calibrated by the manufacturer to be flat within 0.005 mm (0.0002 in) per running foot of length, such as Snap-On® GA438A or equivalent. For example, if the Straightedge is 61 cm (24 in) long, the machined edge must be flat within 0.010 mm (0.0004 in) from end to end.*

   Using a Straightedge and a Feeler Gauge Set, inspect the cylinder head for flatness in the sequence shown.
   General Equipment : Feeler Gauge

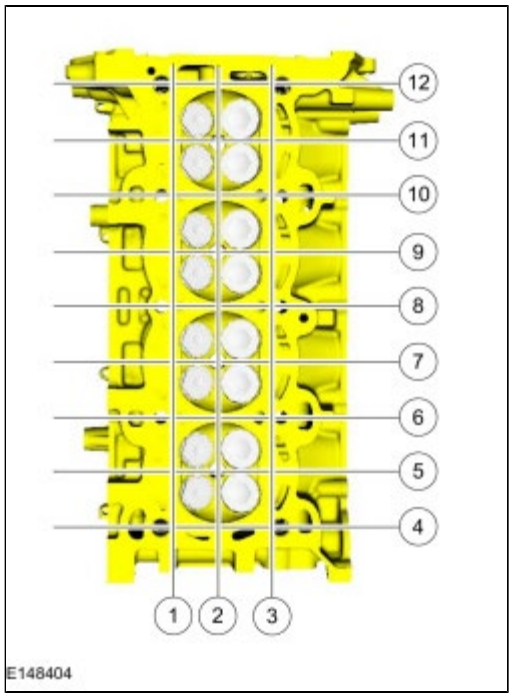

Copyright © Ford Motor Company

Exhaust Manifold Cleaning and Inspection

1. Clean the exhaust manifold using a suitable solvent. Use a plastic scraping tool to clean the gasket sealing surfaces.

1. **NOTE:** *New exhaust manifold gaskets, studs, nuts and/or bolts must be installed when an exhaust manifold is serviced.*

   NOTE: *Use a Straightedge that is calibrated by the manufacturer to be flat within 0.005 mm (0.0002 in) per running foot of length, such as Snap-On® GA438A or equivalent. For example, if the Straightedge is 61 cm (24 in) long, the machined edge must be flat within 0.010 mm (0.0004 in) from end to end.*

   Using the Straightedge and a Feeler Gauge Set, check the exhaust manifold sealing surface for warpage. If the warpage is greater than 0.76 mm (0.0299 in), install a new exhaust manifold.
   General Equipment : Feeler Gauge

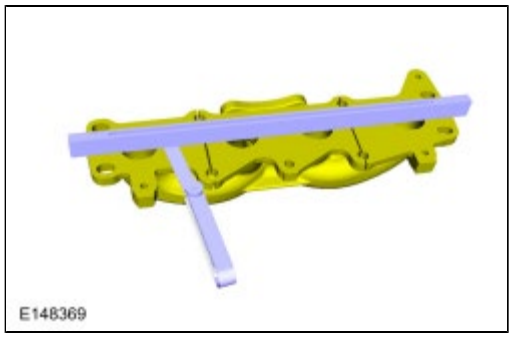

Copyright © Ford Motor Company

Piston Diameter

NOTE: *Refer to the appropriate Section 303-01 for the specification.*

1. Measure the piston diameter 90 degrees from the piston pin and 41 mm (1.61 in) down from the top of the piston at the point indicated.

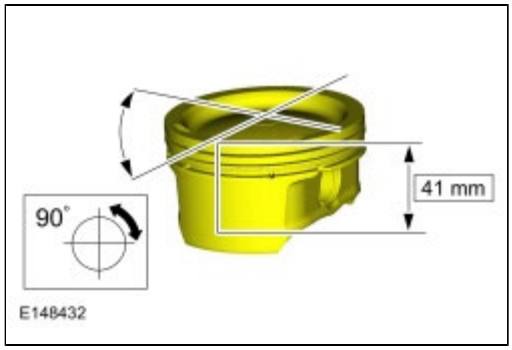

Copyright © Ford Motor Company

Piston Inspection

1. **NOTE:** *Do not use a caustic cleaning solution or a wire brush to clean the pistons or damage can occur.*

   Clean and inspect the (1) ring lands, (2) pin bosses, (3) skirts and the (4) tops of the pistons. If wear marks, scores or glazing is found on the piston skirt, check for a bent or twisted connecting rod.

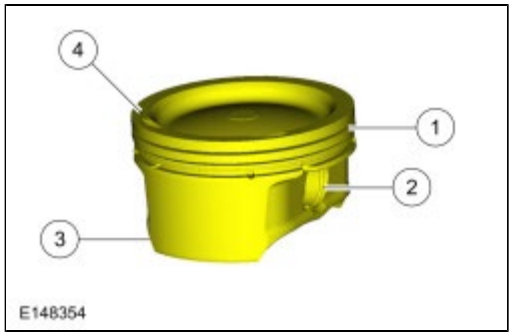

2. **NOTE:** *Make sure the oil ring holes are clean.*

   Using a Piston Ring Groove Scraper, clean the piston ring grooves.

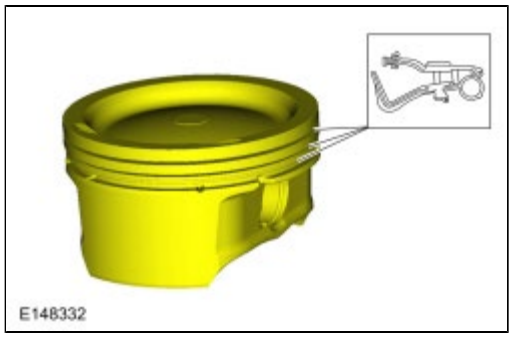

Copyright © Ford Motor Company

Piston Ring End Gap

NOTE: *Refer to the appropriate Section 303-01 for the specification.*

1. **NOTE:** *Use care when fitting piston rings to avoid possible damage to the piston ring or the cylinder bore.*

   NOTE: *Piston rings should not be transferred from one piston to another.*

   NOTE: *The cylinder bore must be within specification for taper and out-of-round.*

   Use a piston without rings to push a piston ring in a cylinder to the bottom of ring travel.

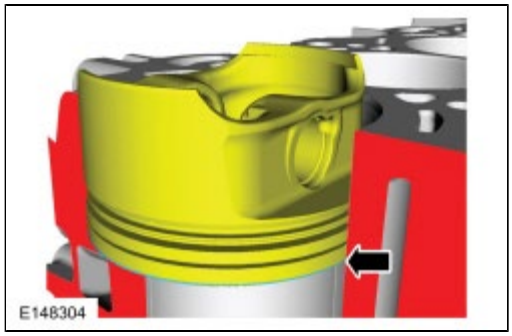

2. Using the Feeler Gauge Set measure the top piston ring end gap and the second piston ring end gap
   General Equipment : Feeler Gauge

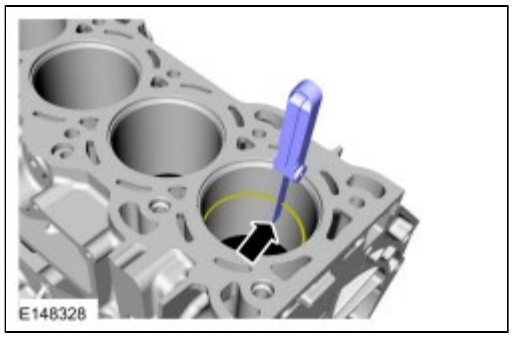

Copyright © Ford Motor Company

Valve Guide Inner Diameter

NOTE: *Refer to the appropriate Section 303-01 for the specification.*

1. **NOTE:** *Valve guides tend to wear in an hourglass pattern. The ball gauge can be inserted into the combustion chamber side of the valve guide, if necessary.*

    - Use a ball gauge to determine the inside diameter of the valve guides in 2 directions at the top, middle and bottom of the valve guide.
    - Measure the ball gauge with a micrometer.
    - If the valve guide is not within specifications, install a new cylinder head assembly.

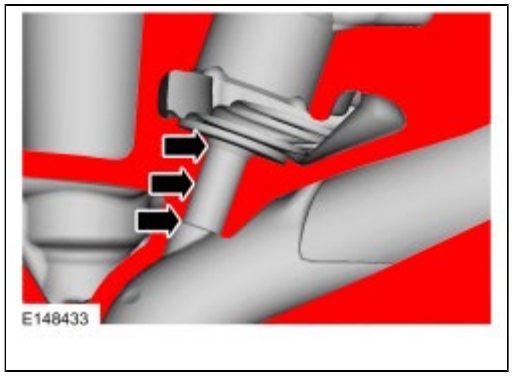

Copyright © Ford Motor Company

Valve Stem Diameter

NOTE: *Refer to the appropriate Section 303-01 for the specification.*

1. Measure the diameter of each intake and exhaust valve stem at the points shown. Verify the diameter is within specification.

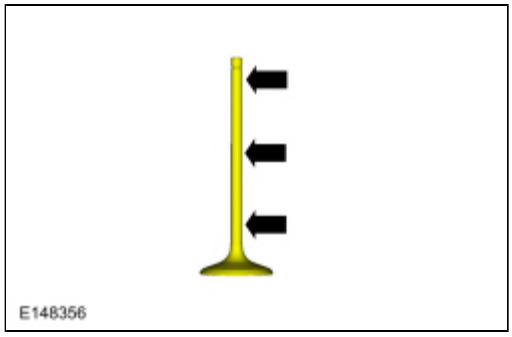

Copyright © Ford Motor Company

Specifications

Torque Specifications

Item	Nm	lb-ft	lb-in
Fuel injection pump bolts For additional information, refer to: Fuel Injection Pump (303-04A Fuel Charging and Controls - 2.0L Duratec-HE (125kW/170PS) - MI4, Removal and Installation).	-	-	-
Fuel rail bolts For additional information, refer to: Fuel Rail (303-04A Fuel Charging and Controls - 2.0L Duratec-HE (125kW/170PS) - MI4, Removal and Installation).	-	-	-
High pressure fuel tube bracket bolts	10	-	89
High pressure fuel tube-to-fuel injection pump flare nut For additional information, refer to: Fuel Injection Pump (303-04A Fuel Charging and Controls - 2.0L Duratec-HE (125kW/170PS) - MI4, Removal and Installation).	-	-	-
High pressure fuel tube-to-fuel rail flare nut For additional information, refer to: Fuel Injection Pump (303-04A Fuel Charging and Controls - 2.0L Duratec-HE (125kW/170PS) - MI4, Removal and Installation).	-	-	-
Throttle Body (TB) bolts	10	-	89

Copyright © Ford Motor Company

Fuel Charging and Controls - Component Location

Fuel Injection Pump 2.0L Gasoline Direct Injection (GDI)

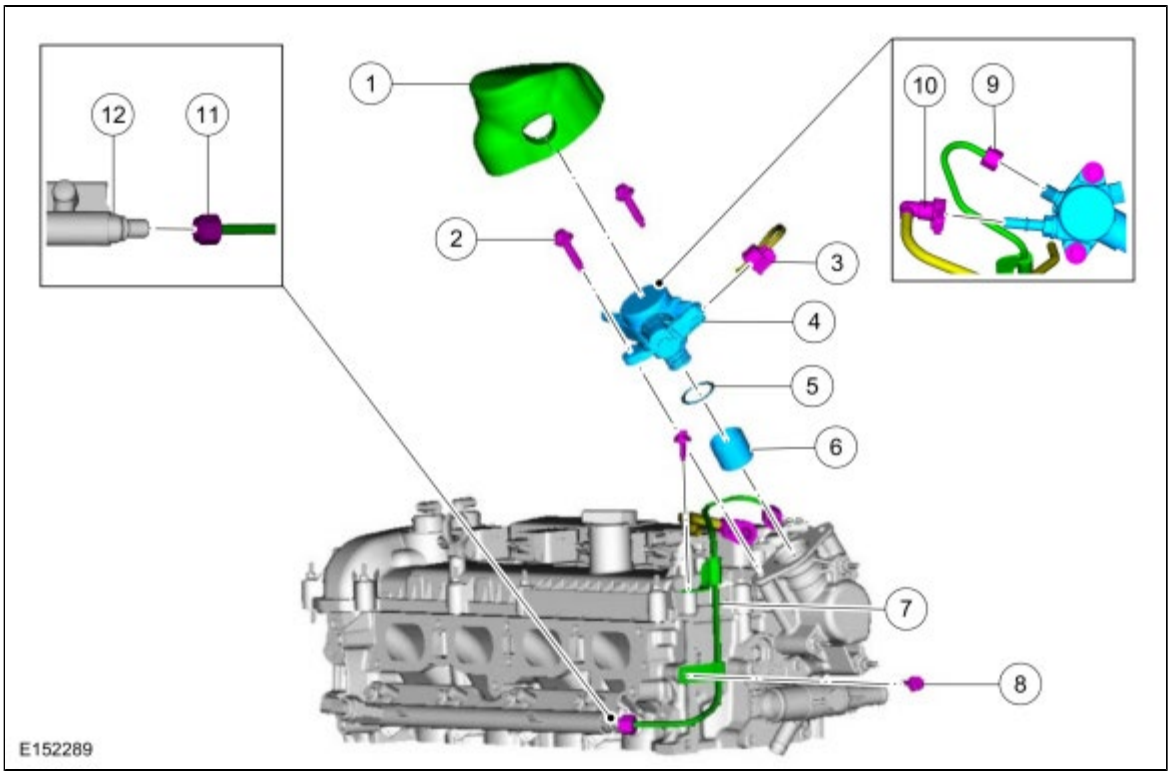

Item	Description
1	Fuel injection pump noise insulator
2	Fuel injection pump bolt (2 required)
3	Fuel injection pump electrical connector
4	Fuel injection pump
5	Fuel injection pump O-ring seal
6	Fuel injection pump roller tappet
7	High pressure fuel tube
8	High pressure fuel tube bracket bolt (2 required)
9	High pressure fuel tube-to-fuel injection pump flare nut
10	Fuel jumper tube-to-fuel injection pump quick connect coupling
11	High pressure fuel tube-to-fuel rail flare nut
12	Fuel rail

FPDM

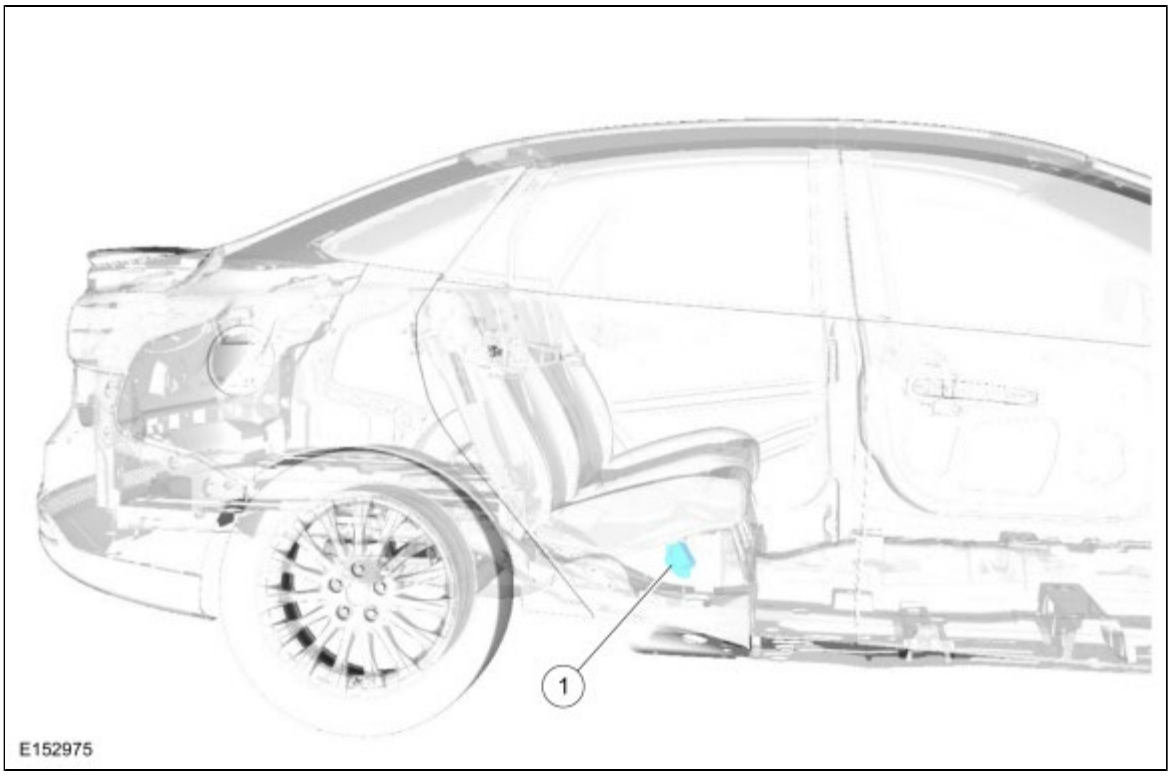

Item	Description
1	FPDM

Fuel Rail 2.0L Gasoline Direct Injection (GDI)

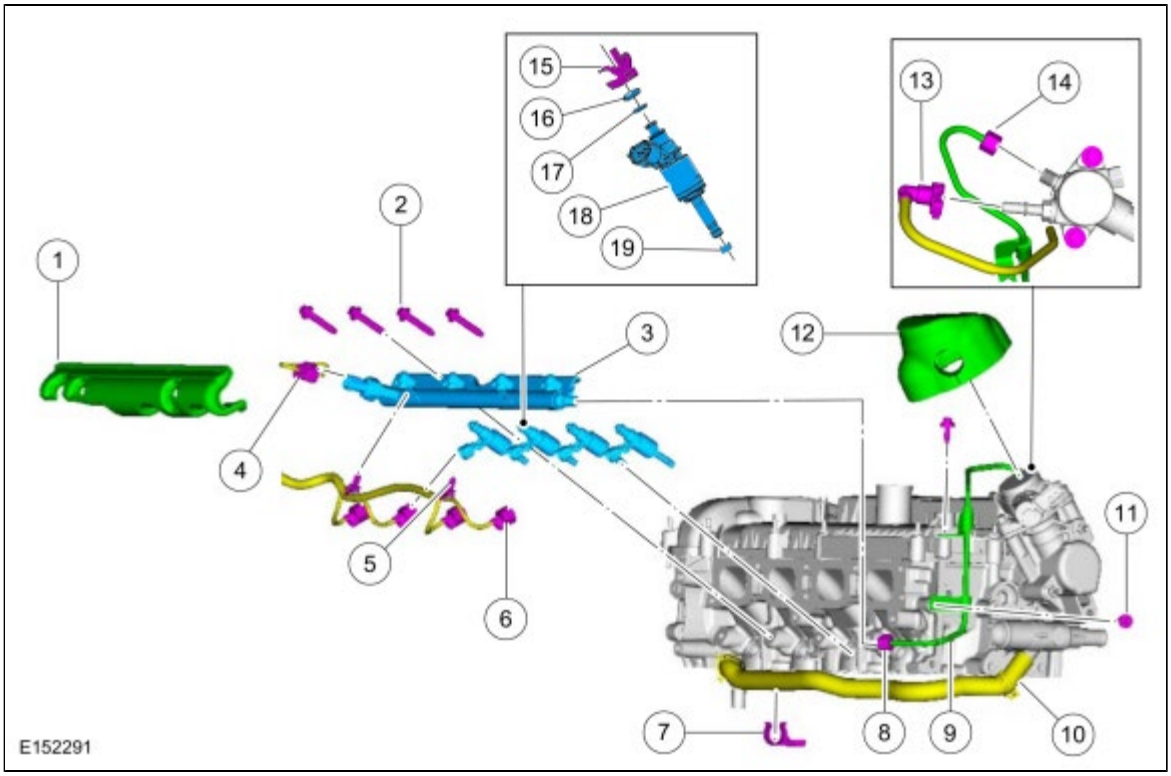

Item	Description
1	Fuel rail noise insulator

2	Fuel rail bolt (4 required)
3	Fuel rail
4	FRP electrical connector
5	Fuel injector jumper harness retainer (2 required)
6	Fuel injector electrical connector (4 required)
7	Coolant bypass hose retainer clip
8	High pressure fuel tube-to-fuel rail flare nut
9	High pressure fuel tube
10	Coolant bypass hose
11	High pressure fuel tube bracket bolt (2 required)
12	Fuel injection pump noise insulator
13	Fuel jumper tube-to-fuel injection pump quick connect coupling
14	High pressure fuel tube-to-fuel injection pump flare nut
15	Fuel injector retainer clip (4 required)
16	Upper fuel injector O-ring seal (4 required)
17	Upper fuel injector O-ring seal support ring (4 required)
18	Fuel injector (4 required)
19	Lower fuel injector Teflon® seal (4 required)

Throttle Body (TB) 2.0L Gasoline Direct Injection (GDI)

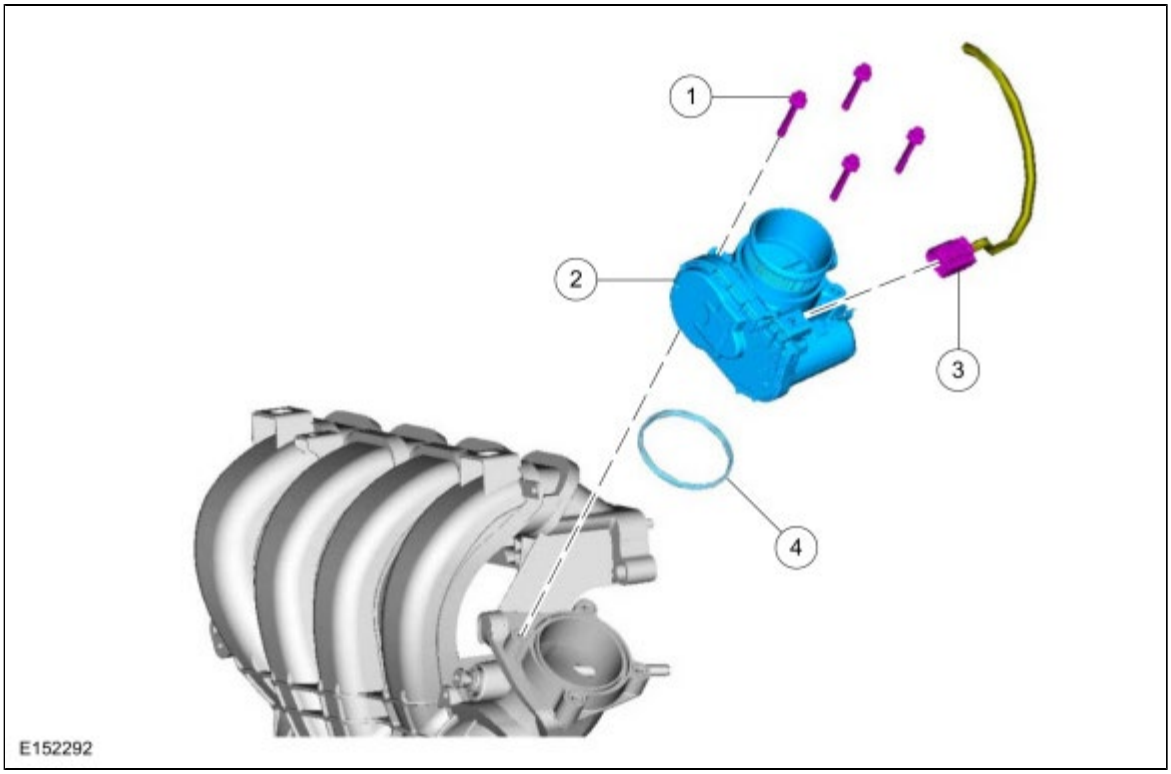

Item	Description
1	Throttle Body (TB) bolt (4 required)

2	Throttle Body (TB)
3	Throttle Body (TB) electrical connector
4	Throttle Body (TB) gasket

Copyright © Ford Motor Company

Fuel Charging and Controls

General Equipment

Ford diagnostic equipment

1. For PCM Diagnostic Trouble Codes (DTCs),
   REFER to: Electronic Engine Controls (303-14A Electronic Engine Controls - 2.0L Duratec-HE (125kW/170PS) - MI4, Diagnosis and Testing).
   MIL Code List. For driveability symptoms without Diagnostic Trouble Codes (DTCs), Refer to Powertrain Control/Emissions Diagnosis (PC/ED) manual. section 3 Symptom Charts.

Copyright © Ford Motor Company

Fuel Injection Pump

Removal

WARNING: Before beginning any service procedure in this section, refer to Safety Warnings in section 100-00 General Information. Failure to follow this instruction may result in serious personal injury.

1. Refer to: Health and Safety Precautions (100-00 General Information, Description and Operation).
2. Refer to: Fuel Charging and Controls - Component Location (303-04A Fuel Charging and Controls - 2.0L Duratec-HE (125kW/170PS) - MI4, Description and Operation).
3. **NOTE:** *Use care when removing the fuel injection pump noise insulator. Spreading the openings will aid in removing the fuel injection pump noise insulator and reduce the risk of damage.*

   Remove the fuel injection pump noise insulator shield.
4. Refer to: Fuel System Pressure Release (310-00A Fuel System - General Information, General Procedures).
5. Refer to: Battery Disconnect and Connect (414-01 Battery, Mounting and Cables, General Procedures).
6. Refer to: Air Cleaner Outlet Pipe (303-12A Intake Air Distribution and Filtering - 2.0L Duratec-HE (125kW/170PS) - MI4, Removal and Installation).
7. Disconnect the fuel injection pump electrical connector.
8. Disconnect the fuel jumper tube-to-fuel injection pump quick connect coupling.
   Refer to: Quick Release Coupling (310-00A Fuel System - General Information, General Procedures).
9. **NOTE:** *To release the fuel pressure in the high pressure fuel tube, wrap the fuel injection pump flare nut with a shop towel to absorb any residual fuel pressure during the loosening of fuel injection pump flare nut.*

   Remove the following items:
   1. Remove the high pressure fuel tube bracket bolts.
   2. Loosen the high pressure fuel tube-to-fuel rail flare nut.
   3. Loosen the high pressure fuel tube-to-fuel injection pump flare nut.
   4. Remove and discard the high pressure fuel tube.
10. Alternately loosen the 2 fuel injection pump bolts one complete revolution at a time.
11. Remove and discard the 2 fuel injection pump bolts.
12. Remove the fuel injection pump.
13. Remove and discard the fuel injection pump O-ring seal.

Installation

1. **NOTE:** *The cam lobe for the fuel injection pump must be at BDC for the fuel injection pump installation.*

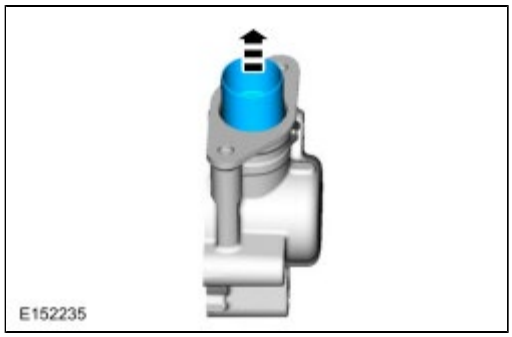

2. Visual check. Inspect the fuel injection pump tappet for flat spots or scoring, especially in the indicated areas. If any damage is found, inspect the fuel injection pump and the fuel injection pump tappet drive lobe. Install new components as necessary.

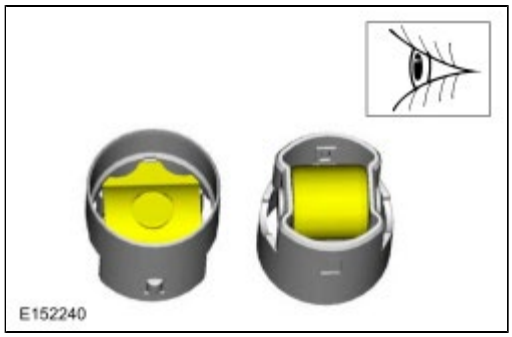

3. **NOTICE: Only rotate the crankshaft Clockwise (CW) or damage to the engine may occur.**

   Using the crankshaft pulley bolt, turn the crankshaft Clockwise (CW) until the fuel injection pump cam lobe is at BDC .

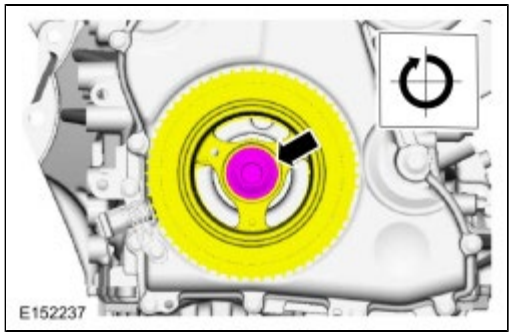

4. **NOTE:** *Apply clean motor oil to the fuel injection pump roller tappet and to the fuel injection pump cover bore.*

   Material : Motorcraft® SAE 5W-20 Premium Synthetic Blend Motor Oil / XO-5W20-QSP (WSS-M2C945-A)

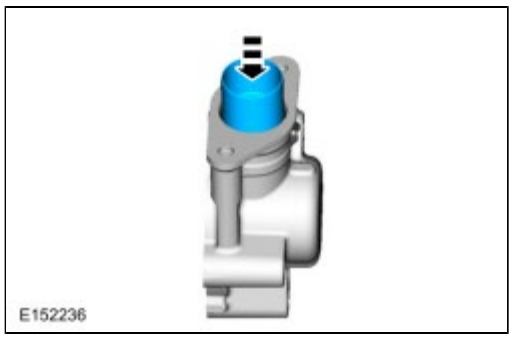

5. **NOTE:** *Apply clean motor oil to the fuel injection pump O-ring seal.*

   Install a new fuel injection pump O-ring seal onto the fuel injection pump.
   Material : Motorcraft® SAE 5W-20 Premium Synthetic Blend Motor Oil / XO-5W20-QSP (WSS-M2C945-A)

6. Install the fuel injection pump and loosely install 2 new fuel injection pump bolts, alternately tighten each bolt one complete

revolution until seated. Tighten the 2 fuel injection pump bolts in the following 2 stages.
Torque :
Stage 1: 20 Nm
Stage 2: 45°

7. Install the following items:
    1. Position a new high-pressure fuel tube and hand start the 2 flare nuts in the following order.
    2. Hand tighten the high pressure fuel tube-to-fuel rail flare nut.
    3. Hand tighten the high pressure fuel tube-to-fuel injection pump flare nut.
    4. Loosely install the high pressure fuel tube bracket bolts.
    5. **NOTE:** *Calculate the correct torque wrench setting for the following torque using the Torque Wrench Adapter Formulas.*

       Tighten the high pressure fuel tube-to-fuel rail flare nut in the following 2 stages.
       Torque :
       Stage 1: 15 Nm
       Stage 2: 45°
    6. **NOTE:** *Calculate the correct torque wrench setting for the following torque using the Torque Wrench Adapter Formulas.*

       Tighten the high pressure fuel tube-to-fuel injection pump flare nut in the following 2 stages.
       Torque :
       Stage 1: 15 Nm
       Stage 2: 45°
    7. Tighten the high-pressure fuel tube bracket bolts.
       Torque : 10 Nm

8. Connect the fuel jumper tube-to-fuel injection pump quick connect coupling.
   Refer to: Quick Release Coupling (310-00A Fuel System - General Information, General Procedures).

9. Connect the fuel injection pump electrical connector.

10. Refer to: Air Cleaner Outlet Pipe (303-12A Intake Air Distribution and Filtering - 2.0L Duratec-HE (125kW/170PS) - MI4, Removal and Installation).

11. Refer to: Battery Disconnect and Connect (414-01 Battery, Mounting and Cables, General Procedures).

12. Refer to: Fuel System Pressure Release (310-00A Fuel System - General Information, General Procedures).

13. Install the fuel injection pump noise insulator shield.

Copyright © Ford Motor Company

Fuel Rail

Removal

WARNING: Before beginning any service procedure in this section, refer to Safety Warnings in section 100-00 General Information. Failure to follow this instruction may result in serious personal injury.

1. Refer to: Health and Safety Precautions (100-00 General Information, Description and Operation).
2. Refer to: Fuel Charging and Controls - Component Location (303-04A Fuel Charging and Controls - 2.0L Duratec-HE (125kW/170PS) - MI4, Description and Operation).
3. Refer to: Fuel System Pressure Release (310-00A Fuel System - General Information, General Procedures).
4. Refer to: Battery Disconnect and Connect (414-01 Battery, Mounting and Cables, General Procedures).
5. Refer to: Intake Manifold (303-01A Engine - 2.0L Duratec-HE (125kW/170PS) - MI4, Removal and Installation).
6. Disconnect the fuel pump electrical connector.
7. **NOTE:** *Use care when removing the fuel injection pump noise insulator. Spreading the openings will aid in removing the fuel injection pump noise insulator and reduce the risk of damage.*

   Remove the fuel injection pump noise insulator.
8. **NOTICE: To release the fuel pressure in the high pressure fuel tube, wrap the fuel injection pump flare nut with a shop towel to absorb any residual fuel pressure during the loosening of fuel injection pump flare nut.**

   Remove the following items:
   1. Remove the high pressure fuel tube bracket bolts.
   2. Loosen the high pressure fuel tube-to-fuel rail flare nut.
   3. Loosen the high pressure fuel tube-to-fuel injection pump flare nut.
   4. Remove and discard the high pressure fuel tube.
9. Detach the 2 fuel charge wire harness retainers from the fuel rail.
10. Remove the fuel rail insulator.
11. Release the coolant bypass hose from the retainer clip.
12. Disconnect the 4 fuel injector electrical connectors.
13. Disconnect the FRP sensor electrical connector.
14. **NOTICE: Pull out the fuel rails in the direction of the fuel injector axis or damage may occur to the fuel injectors.**

    NOTE: *Use compressed air and remove any dirt or foreign material from the cylinder head, block and general surrounding area of the fuel rail and injectors.*

    NOTE: *When removing the fuel rails, the fuel injectors may remain in the fuel rails but normally remain in the cylinder heads and require the use of a Fuel Injector Remover tool to extract.*

    Remove the 4 bolts and remove the fuel rail.
15. Remove any of the fuel injectors that remained in the fuel rail.
16. Discard the specified component. Follow local disposal regulations.

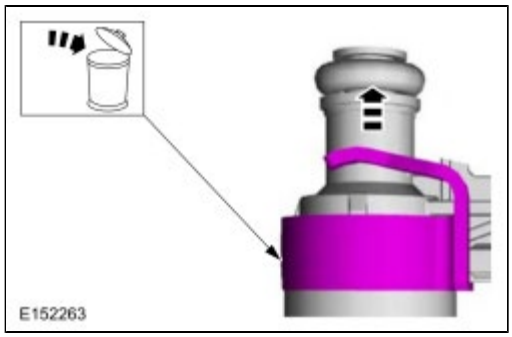

17.
    1. *Special Tool(s)* : 307-005 (T59L-100-B) Slide Hammer
    2. *Special Tool(s)* : 310-206 Remover, Fuel Injector

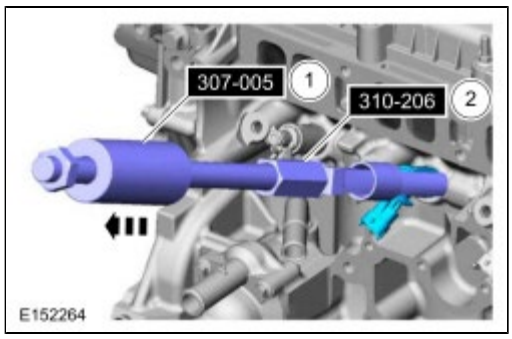

18. Discard the specified component. Follow local disposal regulations.

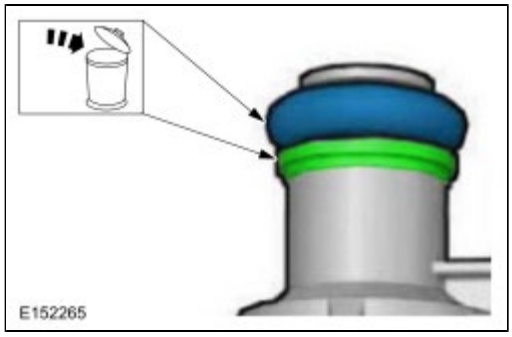

19. **NOTE:** *Make sure to thoroughly clean any residual fuel or foreign material from the cylinder head, block and the general surrounding area of the fuel rails and injectors.*

    NOTE: *Do not use compressed air to clean the tip of the fuel injector.*

    NOTE: *Do not use a brush to clean the tip of the fuel injector.*

    Special Tool(s) : 310-205 Fuel Injector Brush

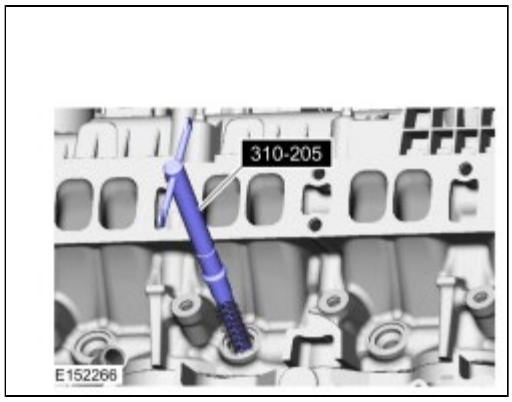

Installation

1.
    1. Pull the lower Teflon® seal away from the injector. Long-nosed pliers.
    2. Carefully cut and discard the lower fuel injector Teflon® seals. Cutting knife.
    3. Discard the specified component. Follow local disposal regulations.

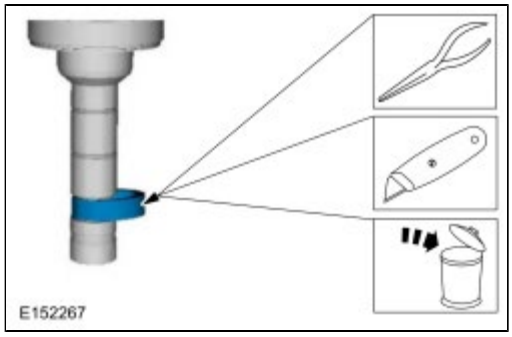

2. **NOTE:** *Place the Teflon® Seal Sizer, knurled side out, over the fuel injector tip until the fuel injector seal recess is exposed.*

    1. *Special Tool(s)* : 303-1567 Sizer, Teflon Seal
    2. *Special Tool(s)* : 310-207 Installer, Fuel Injector Seal Assembly

    3. **NOTE:** *Make sure that new lower fuel injector Teflon® seals are installed.*

    4. *Special Tool(s)* : 310-207 Installer, Fuel Injector Seal Assembly

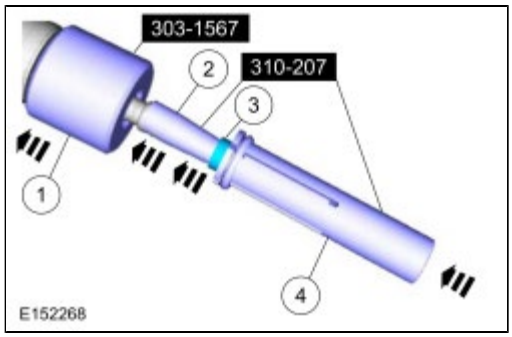

3. **NOTE:** *Make sure the Teflon® seal is fully seated in the groove on the fuel injector before sizing the seal.*

    NOTE: *Install the fuel injectors into the cylinder head within 15 minutes of sizing the seals due to Teflon® seal expansion.*

    Special Tool(s) : 303-1567 Sizer, Teflon Seal

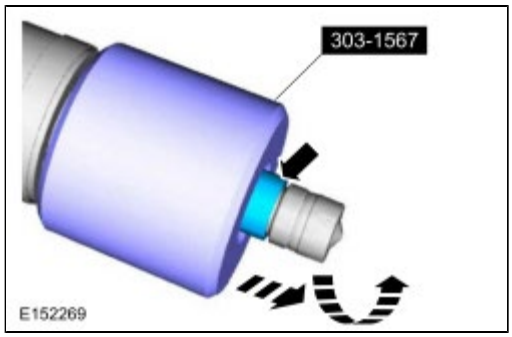

4. **NOTICE: Use fuel injector O-ring seals that are made of special fuel-resistant material. The use of ordinary O-ring seals may cause the fuel system to leak. Do not reuse the O-ring seals.**

    NOTE: *Do not lubricate the new lower Teflon® fuel injector seals.*

    Apply the specified lubricant to the specified component.
    Material : Motorcraft® SAE 5W-20 Premium Synthetic Blend Motor Oil / XO-5W20-QSP (WSS-M2C945-A)

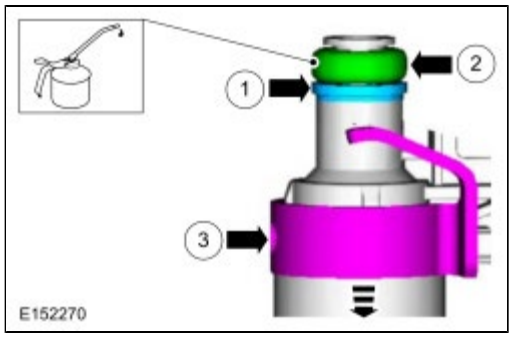

5. **NOTE:** *The anti-rotation finger of the fuel injector clip must slip into the groove of the fuel rail cup.*

   NOTE: *The FRP sensor must be replaced if it is removed from the fuel rail.*

   Install the fuel injectors into the fuel rails.

6. **NOTE:** *Do not lubricate the new lower Teflon® fuel injector seals.*

   Push down on the fuel rail above the injectors.
   Torque : 25 Nm

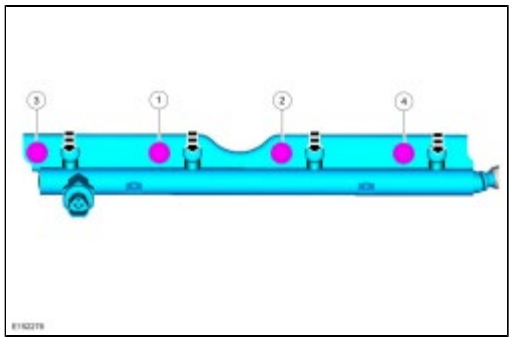

7. Connect the FRP sensor electrical connector.

8. Connect the 4 fuel injector electrical connectors.

9. Attach the coolant bypass hose to the retainer clip.

10. Install the fuel rail insulator.

11. Attach the 2 fuel charge wire harness retainers to the fuel rail.

12. Install the following items:
    1. Position a new high-pressure fuel tube and hand start the 2 flare nuts in the following order.
    2. Hand tighten the high pressure fuel tube-to-fuel rail flare nut.
    3. Hand tighten the high pressure fuel tube-to-fuel injection pump flare nut.
    4. Loosely install the high pressure fuel tube bracket bolts.

    5. **NOTE:** *Calculate the correct torque wrench setting for the following torque using the Torque Wrench Adapter Formulas.*

       Tighten the high pressure fuel tube-to-fuel rail flare nut in the following 2 stages.
       Torque :
       Stage 1: 15 Nm
       Stage 2: 45°

    6. **NOTE:** *Calculate the correct torque wrench setting for the following torque using the Torque Wrench Adapter Formulas.*

       Tighten the high pressure fuel tube-to-fuel injection pump flare nut in the following 2 stages.
       Torque :
       Stage 1: 15 Nm

Stage 2: 45°

7. Tighten the high-pressure fuel tube bracket bolts.
   Torque : 10 Nm

13. **NOTE:** *Use care when installing the fuel injection pump noise insulator. Spreading the openings will aid in installing the fuel injection pump noise insulator and reduce the risk of damage.*

    Install the fuel injection pump noise insulator.

14. Connect the fuel pump electrical connector.

15. Refer to: Intake Manifold (303-01A Engine - 2.0L Duratec-HE (125kW/170PS) - MI4, Removal and Installation).

16. Refer to: Battery Disconnect and Connect (414-01 Battery, Mounting and Cables, General Procedures).

17. Refer to: Fuel System Pressure Release (310-00A Fuel System - General Information, General Procedures).

Copyright © Ford Motor Company

Throttle Body

Removal

WARNING: Before beginning any service procedure in this section, refer to Safety Warnings in section 100-00 General Information. Failure to follow this instruction may result in serious personal injury.

1. Refer to: Health and Safety Precautions (100-00 General Information, Description and Operation).
2. Refer to: Fuel Charging and Controls - Component Location (303-04A Fuel Charging and Controls - 2.0L Duratec-HE (125kW/170PS) - MI4, Description and Operation).
3. Refer to: Air Cleaner Outlet Pipe (303-12A Intake Air Distribution and Filtering - 2.0L Duratec-HE (125kW/170PS) - MI4, Removal and Installation).
4. Disconnect the Throttle Body (TB) electrical connector.
5. Remove the 4 Throttle Body (TB) bolts and the Throttle Body (TB).
6. Remove and discard the Throttle Body (TB) gasket.

Installation

1. Install a new Throttle Body (TB) gasket.
2. Install the Throttle Body (TB) and the 4 Throttle Body (TB) bolts.
   Torque : 10 Nm

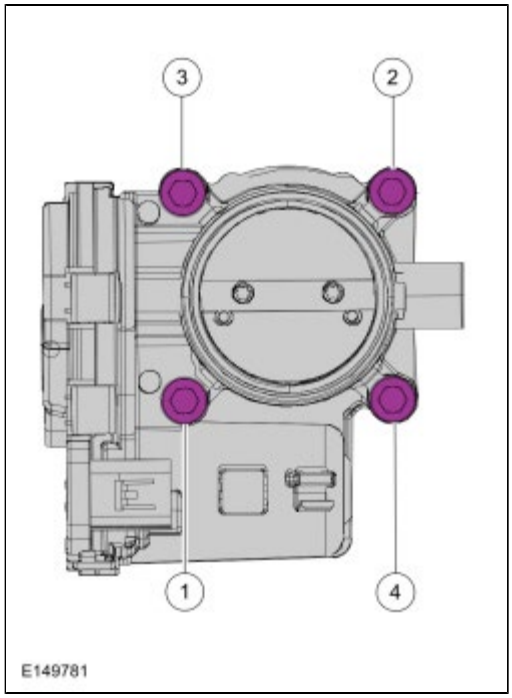

3. Connect the Throttle Body (TB) electrical connector.
4. Refer to: Air Cleaner Outlet Pipe (303-12A Intake Air Distribution and Filtering - 2.0L Duratec-HE (125kW/170PS) - MI4, Removal and Installation).

Copyright © Ford Motor Company

Accessory Drive - Overview

Overview

NOTE: *Early build engines have a 6-rib accessory drive belt, late build engines have a 4-rib accessory drive belt.*

The accessory drive system provides power to operate components which power other systems. These could include components such as the generator, power steering pump and A/C compressor. Each of these components is equipped with a pulley which is driven by the accessory drive belt. The accessory drive belt is driven by the engine crankshaft pulley.

The automatic belt tensioner maintains correct belt tension and compensates for component wear and changes in system load. System load changes can be caused by the A/C compressor clutch engaging or disengaging or demand changes on other systems powered by the accessory drive belt. Automatic belt tensioners are calibrated to provide the correct amount of tension to the belt for a given accessory drive system. Unless a spring or damping band within the tensioner assembly breaks or some other mechanical part of the tensioner fails, there is no need to check the tensioner for correct tension.

To maintain correct operation of this system, it is critical that the correct length drive belt is installed. The pulleys must also be correctly aligned and kept clean.

Copyright © Ford Motor Company

Accessory Drive

Symptom Chart(s)

Symptom Chart: Front End Accessory Drive (FEAD)

Diagnostics in this manual assume a certain skill level and knowledge of Ford-specific diagnostic practices. for information regarding Ford-specific diagnostic practices.

NOTICE: Under no circumstances should the accessory drive belt, tensioner or pulleys have any fluids or belt dressing applied to them as damage to the belt material and tensioner damping mechanism may occur.

- Inspect for signs of drive belt cracking/chunking/wear.
- Inspect for signs of belt/pulley contamination.
- Inspect for signs of a incorrect accessory drive belt.
- Inspect for signs of pulley misalignment or excessive pulley runout.
- Inspect for signs of loose or mislocated hardware.
- Inspect for signs of loose accessory drive belt.
- Inspect for signs of damaged pulleys.
- Inspect for signs of tensioner arm misalignment.

Symptom Chart

Condition	Possible Sources	Actions
V-Ribbed serpentine drive belt with cracks across ribs	Accessory drive belt	INSPECT the belt for cracks. Up to 15 cracks in a rib over a distance of can be considered acceptable. If cracks exceed this standard, install a new accessory drive belt.
V-Ribbed Serpentine Belt With excessive buildup (piling) in the V-grooves of the belt.	Accessory drive belt	The condition of the V-ribbed drive belt should be compared against the illustration and appropriate action taken. Small scattered deposits of rubber material. This is not a concern, therefore, installation of a new belt is not required. Longer deposit areas building up to 50% of the rib height. This is not considered a durability concern, but it can result in excessive noise. If noise is apparent, install a new accessory drive belt. Heavy deposits building up along the grooves resulting in a possible noise and belt stability concern. If heavy deposits are apparent, install a new accessory drive belt.
	Accessory drive belt	INSPECT the accessory drive belt. There should be no chunks missing from the belt ribs. If the belt shows any evidence of this, install a new accessory drive belt.
	Damaged pulley grooves	INSPECT the accessory drive belt pulley grooves for damage. INSTALL a new pulley or component as necessary.
Accessory drive belt noise, squeal, chirping or flutter	Defective/worn or incorrect accessory drive belt	GO to Pinpoint Test A REPAIR or INSTALL new parts as necessary.
	Misaligned pulley(s)	
	Pulley runout	

	Damaged or worn accessory drive component or idler	
	Fluid contamination of accessory drive belt or pulleys	
	Damaged or worn accessory drive belt tensioner	Install a new accessory drive belt tensioner
	Damaged pulley grooves	INSPECT the accessory drive belt pulley grooves for damage. INSTALL a new pulley or component as necessary.
	Accessory drive component failure	CHECK the accessory drive components. INSTALL new components as necessary.
Premature accessory drive belt wear	Defective or incorrect accessory drive belt	GO to Pinpoint Test A in this section. REPAIR or INSTALL new parts as necessary.
	Misaligned pulley(s)	
	Pulley runout	
	Damaged accessories	
	Incorrectly installed drive belt	
	Fluid contamination	
	Damaged pulley grooves	INSPECT the accessory drive belt pulley grooves for damage. INSTALL a new pulley or component as necessary.

Pinpoint Test(s)

Accessory Drive Belt Noise or Flutter

PINPOINT TEST A : ACCESSORY DRIVE BELT NOISE OR FLUTTER

NOTE: *Under no circumstances should the accessory drive belt, tensioner or pulleys have any fluids or belt dressing applied to them as damage to the belt material and tensioner damping mechanism may occur.*
A1 CHECK THE ACCESSORY DRIVE BELT
• Check the condition of the accessory drive belt and for correct installation. Repair as neccessary. **Is the accessory drive belt acceptable?**

Yes	GO to A2
No	Install a new accessory drive belt.

A2 CHECK FOR FLUID CONTAMINATION ON THE ACCESSORY DRIVE BELT

-

Is the accessory drive belt clean and dry?

Yes	GO to A3
No	For a drive belt that has been exposed to fluid contamination during vehicle operation, such as leaks from the power steering system, Air Conditioning (A/C) system or cooling system, clean all pulleys with soap and water, rinse with clean water and install a new accessory drive belt. For a drive belt that has been exposed to fluids in a localized area during routine vehicle service, such as replacement of hoses or fluids, the drive belt and pulleys should be washed with soap and water immediately (prior to starting the engine), and rinsed with clean water.

A3 CHECK FOR DAMAGED ACCESSORY DRIVE BELT TENSIONER

- Test the accessory drive belt tensioner.

Does the accessory drive belt tensioner function correctly?

Yes	GO to A4
No	Install a new accessory drive belt tensioner.

A4 CHECK FOR PULLEY MISALIGNMENT OR EXCESSIVE PULLEY RUNOUT

- Determine the area where the noise comes from.
- Check each of the pulleys in that area with a straightedge to the crankshaft pulley.
- Look for accessory pulleys out of position in the fore/aft direction or at an angle to the straightedge.

Is the pulley(s) misaligned or have excessive pulley runout?

Yes	Inspect the pulley. Repair as necessary.
No	GO to A5

A5 CHECK FOR DAMAGED ACCESSORIES

- Remove the accessory drive belt.
- Check that each accessory pulley can be rotated by hand in the unloaded condition.
- Check that each accessory pulley does not feel loose or is binding.

Do each of the accessory pulleys rotate smoothly by hand?

Yes	GO to A6
No	Inspect the accessories. Install a new accessory if necessary.

A6 CHECK THE AIR CONDITIONING (A/C) SYSTEM PRESSURE
• Test the Air Conditioning (A/C) refrigerant system. **Does the Air Conditioning (A/C) system pressure exceed specifications?**

Yes	Repair as neccessary.
No	The Front End Accessory Drive (FEAD) system is operating correctly at this time. A short intermittent squeal may have occurred during engine start up and shut down or during very rapid engine acceleration and decelerations, such as Wide Open Throttle (WOT)1-2 and 2-3 shifts or 2-3 and 3-4 back-out shifts on automatic transmissions and Wide Open Throttle (WOT) 1-2 and 2-3 shifts and any combination of rapid downshifting on manual transmissions. These unique short-term momentary events are expected, and are due to the higher system inertias required to meet the electrical and cooling demands on vehicle systems.

Component Test(s)

Accessory Drive Belt

NOTE: *Under no circumstances should the accessory drive belt, tensioner or pulleys have any fluids or belt dressing applied to them as damage to the belt material and tensioner damping mechanism may occur.*

NOTE: *Do not rotate the tensioner by the pulley bolt.*

1. Check that the belt length indicator on the belt tensioner is in the acceptable belt installation and wear range. If the indicator is in the belt replacement range, either an incorrect belt is installed or the belt is worn beyond the service limit. Install a new belt as necessary.

- Belt length indicator
- Acceptable belt installation and wear range
- Belt replacement range
- Belt tension relief point

NOTE: *Incorrect Installation*

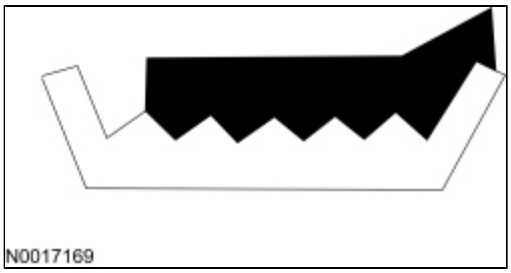

NOTE: *Correct Installation*

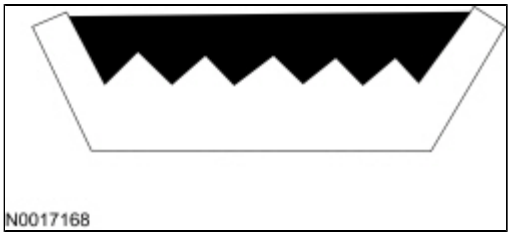

2. With the engine running, check accessory drive belt tracking on all pulleys. If the edge of the accessory drive belt rides beyond the edge of the pulleys, noise and premature wear will occur. Make sure the accessory drive belt rides correctly on the pulley. If an accessory drive belt tracking condition exists, proceed with the following:

Accessory Drive Belt Tensioner

1. With the engine off, check routing of the accessory drive belt. Replace if neccessary.

2. Using a suitable, commercially available serpentine belt tensioner release tool, release the tension on the belt and detach the accessory drive belt from the tensioner. Carry out the following tests:

- Using the release tool, move the tensioner from its relaxed position, through its full stroke and back to the relaxed position to make sure there is no stick, grab or bind, and to make sure that there is tension on the tensioner spring.
- Rotate the tensioner pulley by hand and check for a binding, contaminated or seized condition.
- Inspect the area surrounding the accessory drive belt tensioner for oil leaks or contamination and repair any leaks.

3. If the accessory drive belt tensioner does not meet the criteria in the previous step, install a new tensioner. If the accessory drive belt tensioner meets the criteria in the previous step, proceed to testing the tensioner dynamically in the next step.

4. Using a suitable, commercially available serpentine belt tensioner release tool, install the accessory drive belt onto the tensioner. With the engine running, observe the accessory drive belt tensioner movement. The accessory drive tensioner should move (respond) when the A/C clutch cycles (if equipped), or when the engine is accelerated rapidly. If the accessory drive belt tensioner movement is excessive without A/C clutch cycling or engine acceleration, inspect the accessory drive belt for uneven depth of grooves. Excessive uneven depth of grooves in the accessory belt can cause excessive accessory drive belt tensioner movement. To diagnose uneven depth of grooves in the accessory drive belt, install a new accessory drive belt. If excessive accessory drive belt tensioner movement still exists, install a new accessory drive belt tensioner.

5. If the tensioner is saturated with oil and grease internally, install a new tensioner.

Copyright © Ford Motor Company

Air Conditioning (A/C) Compressor Belt

Removal

WARNING: Before beginning any service procedure in this section, refer to Safety Warnings in section 100-00 General Information. Failure to follow this instruction may result in serious personal injury.

1. Refer to: Health and Safety Precautions (100-00 General Information, Description and Operation).
2. With the vehicle in NEUTRAL, position it on a hoist.
   Refer to: Jacking and Lifting - Overview (100-02 Jacking and Lifting, Description and Operation).
3. Remove the 8 retainers and the underbody insulator.
4. Remove the Right Front (RF) wheel.
   Refer to: Wheel and Tire (204-04A Wheels and Tires, Removal and Installation).
5. Remove the 2 retainers and position aside the splash shield.
6. Position the special tool between the crankshaft pulley and Air Conditioning (A/C) compressor belt as shown and rotate the crankshaft clockwise.
   Special Tool(s) : 303-1419 Remover, 3.5L / 3.7L Stretchy Belt
7. Rotate the crankshaft until the special tool is at approximately the 5 o'clock position as shown.
   Special Tool(s) : 303-1419 Remover, 3.5L / 3.7L Stretchy Belt
8. Fold the special tool around the inside of the Air Conditioning (A/C) compressor belt as shown.
   Special Tool(s) : 303-1419 Remover, 3.5L / 3.7L Stretchy Belt
9. In one quick motion, firmly pull the the special tool and remove the Air Conditioning (A/C) compressor belt.
   Special Tool(s) : 303-1419 Remover, 3.5L / 3.7L Stretchy Belt

Installation

1. **NOTE:** *After installation, make sure the Air Conditioning (A/C) compressor belt is correctly seated on the crankshaft and the Air Conditioning (A/C) compressor pulleys.*

   Position the Air Conditioning (A/C) compressor belt onto the Air Conditioning (A/C) compressor pulley and around the special tool on the crankshaft pulley. Make sure that the belt is engaged with the crankshaft pulley and rotate the crankshaft clockwise to install the Air Conditioning (A/C) compressor belt.
   Special Tool(s) : 303-1252/2 Tool, Stretchy Belt Installer

2. Position back the splash shield and install the 2 retainers.

3. Install the Right Front (RF) wheel.
   Refer to: Wheel and Tire (204-04A Wheels and Tires, Removal and Installation).

4. Install the underbody insulator and install the 8 retainers.

Copyright © Ford Motor Company

Specifications

Torque Specifications

Item	Nm	lb-ft	lb-in
Ignition coil-on-plug bolts	10	-	89
Spark plugs	15	-	133

Spark Plug

Item	Value
Spark plug	12405
Spark plug gap	0.035 in (.9 mm)

Copyright © Ford Motor Company

Engine Ignition - Component Location

Ignition Coil-On-Plug 2.0L Gasoline Direct Injection (GDI)

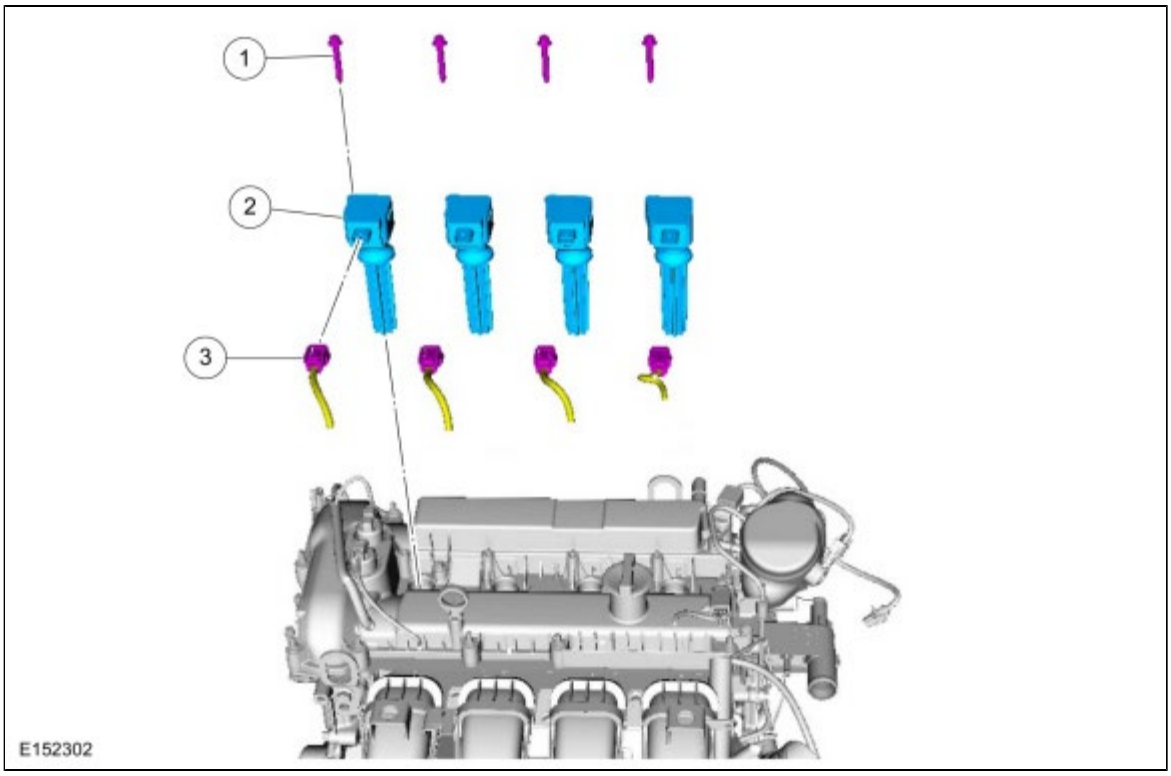

Item	Description
1	Ignition coil-on-plug bolt (4 required)
2	Ignition coil-on-plug (4 required)
3	Ignition coil-on-plug electrical connector

Spark Plugs 2.0L Gasoline Direct Injection (GDI)

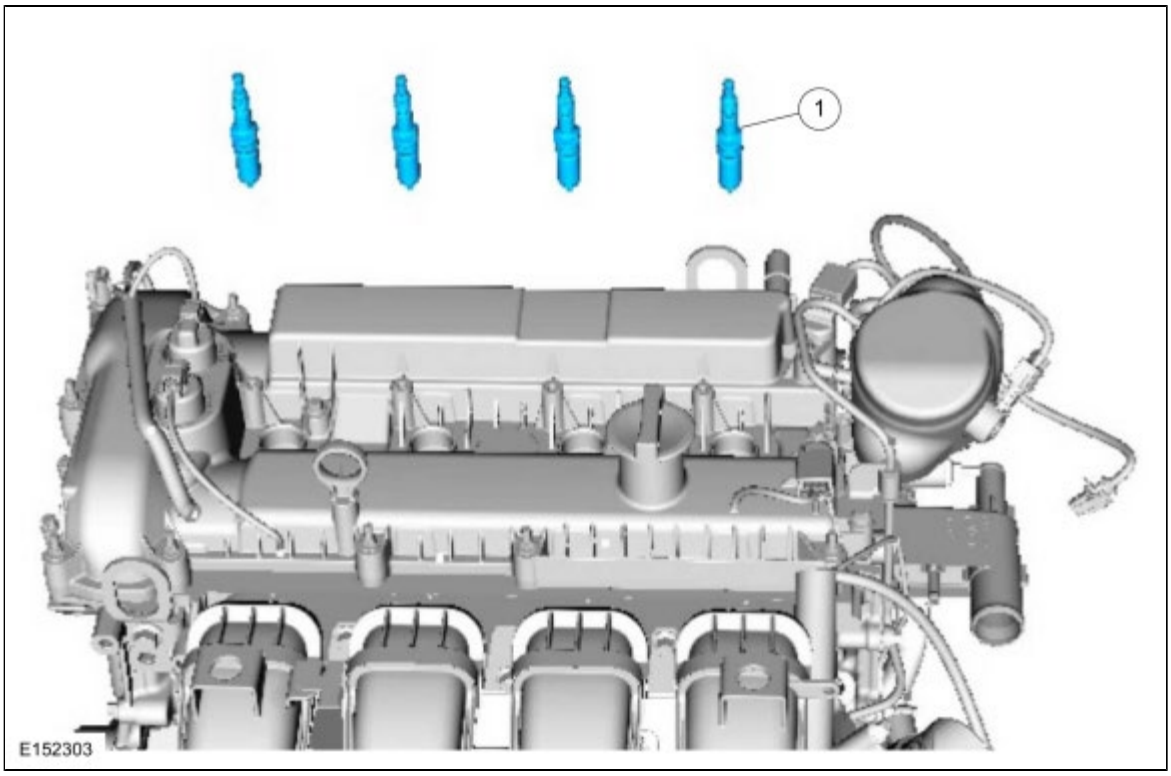

Item	Description
1	Spark plug (4 required)

Copyright © Ford Motor Company

Engine Ignition

General Equipment

Ford diagnostic equipment

1. For PCM Diagnostic Trouble Codes (DTCs),
   REFER to: Electronic Engine Controls (303-14A Electronic Engine Controls - 2.0L Duratec-HE (125kW/170PS) - MI4, Diagnosis and Testing).
   MIL Code List. For driveability symptoms without Diagnostic Trouble Codes (DTCs), Refer to Powertrain Control/Emissions Diagnosis (PC/ED) manual. section 3 Symptom Charts.

Copyright © Ford Motor Company

Ignition Coil-On-Plug

Removal

WARNING: Before beginning any service procedure in this section, refer to Safety Warnings in section 100-00 General Information. Failure to follow this instruction may result in serious personal injury.

NOTE: *Removal steps in this procedure may contain installation details.*

1. Refer to: Health and Safety Precautions (100-00 General Information, Description and Operation).
   Refer to: Engine Ignition - Component Location (303-07A Engine Ignition - 2.0L Duratec-HE (125kW/170PS) - MI4, Description and Operation).

2. If equipped, remove the engine cover.

3. **NOTE:** *Use compressed air to remove any foreign material from the ignition coil-on-plug and surrounding area before removing the ignition coil-on-plug.*

   Disconnect the 4 ignition coil-on-plug electrical connectors.

4. Remove the 4 ignition coil-on-plug bolts.
   Torque : 10 Nm

5. **NOTE:** *When removing the ignition coil-on-plugs, a slight twisting motion will break the seal and ease removal.*

   NOTE: *When installing apply a small amount of silicone brake caliper grease and dielectric compound to the inside of the ignition coil-on-plug boots before installation.*

   Remove the 4 ignition coil-on-plugs.
   Material : Silicone Brake Caliper Grease and Dielectric Compound / XG-3-A (ESE-M1C171-A)

Installation

1. **NOTE:** *Visual check. Inspect the ignition coil-on-plug rubber boot assembly for cracks, rips, or tears. Replace any damaged ignition coil-on-plug rubber boots.*

   To install, slide the new ignition coil-on-plug boot onto the ignition coil until it is fully seated at the top of the ignition coil-on-plug.

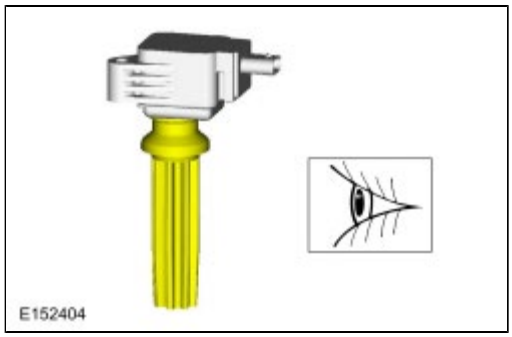

2. To install, reverse the removal procedure.

Copyright © Ford Motor Company

Spark Plugs

Removal

WARNING: Before beginning any service procedure in this section, refer to Safety Warnings in section 100-00 General Information. Failure to follow this instruction may result in serious personal injury.

NOTE: *Removal steps in this procedure may contain installation details.*

1. Refer to: Health and Safety Precautions (100-00 General Information, Description and Operation).
   Refer to: Engine Ignition - Component Location (303-07A Engine Ignition - 2.0L Duratec-HE (125kW/170PS) - MI4, Description and Operation).

2. Refer to: Ignition Coil-On-Plug (303-07A Engine Ignition - 2.0L Duratec-HE (125kW/170PS) - MI4, Removal and Installation).

3. **NOTE:** *Do not remove the spark plugs when the engine is hot or cold soaked. Spark plug thread or cylinder head damage can occur. Make sure the engine is warm (hand touch after cooling down) prior to spark plug removal.*

   NOTE: *Only use hand tools when removing or installing the spark plugs, or damage can occur to the cylinder head or spark plug.*

   NOTE: *The spark plug procedure must be followed exactly or damage to the cylinder head and spark plug will result.*

   NOTE: *The spark plug must be securely held in an assembly aid or tool to prevent the spark plug from falling into the spark plug well which may damage the spark plug or the cylinder head..*

   NOTE: *Use compressed air to remove any foreign material in the spark plug well before removing the spark plugs.*

   Torque : 15 Nm

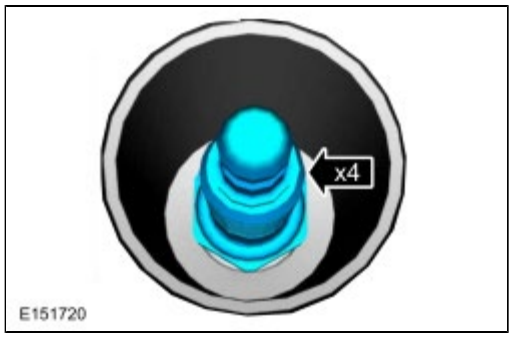

Installation

1. To install, reverse the removal procedure.

Copyright © Ford Motor Company

Specifications

Item	Nm	lb-ft	lb-in
AM/FM/Satellite antenna mounting bolt	10	-	89
ACM screws	1.3	-	12
Front door speakers	2	-	18
Rear door speaker	2	-	18
Door speaker mounting plate screws	2	-	18
FCDIM screws	1.3	-	12
FCDIM mounting bezel screws	2	-	19
FCIM screws	1.2	-	11

Copyright © Ford Motor Company

Information and Entertainment System

DTC Chart: ACM - Base

Diagnostics in this manual assume a certain skill level and knowledge of Ford-specific diagnostic practices. For information about these practices,
REFER to: Diagnostic Methods (100-00 General Information, Description and Operation).

ACM DTC Chart - Base

DTC	Description	Action
B1A01:01	Speaker #1: General Electrical Failure	GO to Pinpoint Test F
B1A01:11	Speaker #1: Circuit Short To Ground	GO to Pinpoint Test F
B1A01:12	Speaker #1: Circuit Short To Battery	GO to Pinpoint Test F
B1A01:13	Speaker #1: Circuit Open	GO to Pinpoint Test F
B1A02:01	Speaker #2: General Electrical Failure	GO to Pinpoint Test G
B1A02:11	Speaker #2: Circuit Short To Ground	GO to Pinpoint Test G
B1A02:12	Speaker #2: Circuit Short To Battery	GO to Pinpoint Test G
B1A02:13	Speaker #2: Circuit Open	GO to Pinpoint Test G
B1A03:01	Speaker #3: General Electrical Failure	GO to Pinpoint Test H
B1A03:11	Speaker #3: Circuit Short To Ground	GO to Pinpoint Test H
B1A03:12	Speaker #3: Circuit Short To Battery	GO to Pinpoint Test H
B1A03:13	Speaker #3: Circuit Open	GO to Pinpoint Test H

B1A04:01	Speaker #4: General Electrical Failure	GO to Pinpoint Test I
B1A04:11	Speaker #4: Circuit Short To Ground	GO to Pinpoint Test I
B1A04:12	Speaker #4: Circuit Short To Battery	GO to Pinpoint Test I
B1A04:13	Speaker #4: Circuit Open	GO to Pinpoint Test I
B1A56:21	Antenna: Signal Amplitude < Minimum	If DTC B1A56:21 sets after running the bezel diagnostic tests, disregard this DTC . This test is used for end of line or repair bay testing at the Ford plant. Each plant has its own assigned frequency and signal strength requirements. The running and passing of this test depends on local radio stations. If no local station is broadcasting on the required frequency, the test will fail. Therefore, tests ran from the bezel diagnostic screen and the DTC generated from the test can be disregarded.
B1D19:49	Compact Disc Unit: Internal Electronic Failure	• CLEAR the DTC . • WAIT at least 10 seconds. • REPEAT the self-test. • If DTC B1D19:49 is retrieved again, INSTALL a new ACM . REFER to: Audio Front Control Module (ACM) (415-00A Information and Entertainment System - General Information - Vehicles With: AM/FM/CD, Removal and Installation).
B1D19:4B	Compact Disc Unit: Over Temperature	The ACM was over temperature. This may occur during extended use. Audio operation can resume after the ACM cools. CLEAR the DTC . This is normal operation.
U0155:00	Lost Communication With IPC Control Module: No Sub Type Information	GO to Pinpoint Test P
U0257:00	Lost Communication With Front Control/Display Interface Module "A": No Sub Type Information	GO to Pinpoint Test Q
U201A:51	Control Module Main Calibration Data: Not Programmed	CHECK vehicle service history for recent service actions related to this module. This DTC sets due to incomplete or incorrect Programmable Module Installation (PMI) procedures. If there have been recent service actions with this module, REPEAT/PERFORM the Programmable Module Installation (PMI) procedure as directed by the diagnostic scan tool. REFER to: Module Configuration - System Operation and Component Description (418-01 Module Configuration, Description and Operation). - Programmable Module Installation (PMI). If there have been no recent service actions, INSTALL a new ACM to correct the failure to retain configuration data. REFER to: Audio Front Control Module (ACM) (415-00A Information and Entertainment System - General Information - Vehicles With: AM/FM/CD, Removal and Installation).
U2100:00	Initial Configuration Not Complete: No Sub Type Information	CHECK vehicle service history for recent service actions related to this module. This DTC sets due to incomplete or incorrect Programmable Module Installation (PMI) procedures. If there have been recent service actions with this module, REPEAT/PERFORM the Programmable Module Installation (PMI) procedure as directed by the diagnostic scan tool. REFER to: Module Configuration - System Operation and Component Description (418-01 Module Configuration, Description and Operation).

		- Programmable Module Installation (PMI). If there have been no recent service actions, INSTALL a new ACM to correct the failure to retain configuration data. REFER to: Audio Front Control Module (ACM) (415-00A Information and Entertainment System - General Information - Vehicles With: AM/FM/CD, Removal and Installation).
U2101:00	Control Module Configuration Incompatible: No Sub Type Information	CHECK vehicle service history for recent service actions related to this module. This DTC sets due to incomplete or incorrect Programmable Module Installation (PMI) procedures. If there have been recent service actions with this module, REPEAT/PERFORM the Programmable Module Installation (PMI) procedure as directed by the diagnostic scan tool. REFER to: Module Configuration - System Operation and Component Description (418-01 Module Configuration, Description and Operation). See Programmable Module Installation (PMI). If there have been no recent service actions, INSTALL a new ACM to correct the failure to retain configuration data. REFER to: Audio Front Control Module (ACM) (415-00A Information and Entertainment System - General Information - Vehicles With: AM/FM/CD, Removal and Installation).
U3000:41	Control Module: General Checksum Failure	• CLEAR the DTC . • WAIT at least 10 seconds. • REPEAT the self-test. • If DTC U3000:41 is retrieved again, INSTALL a new ACM . REFER to: Audio Front Control Module (ACM) (415-00A Information and Entertainment System - General Information - Vehicles With: AM/FM/CD, Removal and Installation).
U3000:42	Control Module: General Memory Failure	• CLEAR the DTC . • WAIT at least 10 seconds. • REPEAT the self-test. • If DTC U3000:42 is retrieved again, INSTALL a new ACM . REFER to: Audio Front Control Module (ACM) (415-00A Information and Entertainment System - General Information - Vehicles With: AM/FM/CD, Removal and Installation).
U3003:16	Battery Voltage: Circuit Voltage Below Threshold	GO to Pinpoint Test R
U3003:17	Battery Voltage: Circuit Voltage Above Threshold	GO to Pinpoint Test S

DTC Chart: FCDIM - Base

Diagnostics in this manual assume a certain skill level and knowledge of Ford-specific diagnostic practices. For information about these practices,
REFER to: Diagnostic Methods (100-00 General Information, Description and Operation).

FCDIM DTC Chart - Base

DTC	Description	Action
B10BD:11	Multifunctional Switch: Circuit Short to Ground	GO to Pinpoint Test M
B10BD:13	Multifunctional Switch: Circuit Open	GO to Pinpoint Test M
B10BD:23	Multifunctional	GO to Pinpoint Test M

	Switch: Signal Stuck Low	
U0001:88	High Speed CAN Communication Bus: Bus Off	**NOTE:** *The module was unable to communicate on the network at a point in time. The fault is not currently present since the module had to communicate with the diagnostic scan tool to report this DTC .* **To avoid repeat network concerns:** • INSPECT for damaged or corroded wiring at the FCDIM . Refer to Wiring Diagrams Cell 14 for schematic and connector information. • CLEAR the DTC . • WAIT at least 10 seconds. • REPEAT the network test with the diagnostic scan tool.
U0140:00	Lost Communication With Body Control Module: No Sub Type Information	GO to Pinpoint Test O
U0155:00	Lost Communication With IPC Module: No Sub Type Information	GO to Pinpoint Test P
U0423:68	Invalid Data Received From IPC : Event Information	RETRIEVE and FOLLOW Diagnostic Trouble Codes (DTCs) present in the IPC . REFER to: Instrumentation, Message Center and Warning Chimes (413-01 Instrumentation, Message Center and Warning Chimes, Diagnosis and Testing). See DTC chart.
U1A00:00	Private Communication Network: No Sub Type Information	GO to Pinpoint Test J
U2100:00	Initial Configuration Not Complete: No Sub Type Information	CHECK vehicle service history for recent service actions related to this module. This DTC sets due to incomplete or incorrect Programmable Module Installation (PMI) procedures. If there have been recent service actions with this module, REPEAT/PERFORM the Programmable Module Installation (PMI) procedure as directed by the diagnostic scan tool. REFER to: Module Configuration - System Operation and Component Description (418-01 Module Configuration, Description and Operation). See Programmable Module Installation (PMI). If there have been no recent service actions, INSTALL a new FCDIM to correct the failure to retain configuration data. REFER to: Front Control/Display Interface Module (FCDIM) (415-00A Information and Entertainment System - General Information - Vehicles With: AM/FM/CD, Removal and Installation).
U2101:00	Control Module Configuration Incompatible: No Sub Type Information	CHECK vehicle service history for recent service actions related to this module. This DTC sets due to incomplete or incorrect Programmable Module Installation (PMI) procedures. If there have been recent service actions with this module, REPEAT/PERFORM the Programmable Module Installation (PMI) procedure as directed by the diagnostic scan tool. REFER to: Module Configuration - System Operation and Component Description (418-01 Module Configuration, Description and Operation). See Programmable Module Installation (PMI). If there have been no recent service actions, INSTALL a new FCDIM to correct the failure to retain configuration data. REFER to: Front Control/Display Interface Module (FCDIM) (415-00A Information and Entertainment System - General Information - Vehicles With: AM/FM/CD, Removal and Installation).
U3000:00	Control Module: No Sub Type Information	CLEAR the DTC . WAIT 10 seconds. REPEAT the self-test. If DTC U3000:00 is still present, INSTALL a new FCDIM . REFER to: Front Control/Display Interface Module (FCDIM) (415-00A Information and

		Entertainment System - General Information - Vehicles With: AM/FM/CD, Removal and Installation).
U3006:16	Control Module Input Power “A”: Circuit Voltage Below Threshold	GO to Pinpoint Test T
U3006:16	Control Module Input Power “A”: Circuit Voltage Above Threshold	GO to Pinpoint Test U

DTC Chart: IPC - Base

Diagnostics in this manual assume a certain skill level and knowledge of Ford-specific diagnostic practices. For information about these practices,
REFER to: Diagnostic Methods (100-00 General Information, Description and Operation).

DTC Chart - IPC - Base

DTC	Description	Action
U0558:64	Invalid Data Received From Front Control/Display Interface Module: Signal Plausibility Failure	• Sets when the IPC receives invalid data from the FCDIM for more than 2 seconds. • CLEAR the DTC . • REPEAT the self-test • If DTC U0558:64 returns, RETRIEVE and REPAIR all Diagnostic Trouble Codes (DTCs) set in the FCDIM . REFER to: Information and Entertainment System (415-00A Information and Entertainment System - General Information - Vehicles With: AM/FM/CD, Diagnosis and Testing). See DTC Chart: FCDIM - Base.

Symptom Charts

Symptom Chart: General Audio System

Diagnostics in this manual assume a certain skill level and knowledge of Ford-specific diagnostic practices. For information about these practices,
REFER to: Diagnostic Methods (100-00 General Information, Description and Operation).

Symptom Chart

Condition	Possible Sources	Actions
A module does not respond to the diagnostic scan tool	• Fuse • Wiring, terminals, or	REFER to: Communications Network (418-00 Module Communications Network, Diagnosis and Testing). See Symptom Chart.

	connectors • Module	
The steering wheel controls are inoperative or do not operate correctly	Refer to the Pinpoint Test.	GO to Pinpoint Test M
The CD player is inoperative or does not operate correctly	• CD • ACM	INSPECT the CD for scratches, fingerprints, a loose paper label, incorrect format, or damage. INSERT a known good CD and TEST the system. If the system operates correctly, the concern was caused by a damaged CD . If the system does not operate correctly, INSTALL a new ACM . REFER to: Audio Front Control Module (ACM) (415-00A Information and Entertainment System - General Information - Vehicles With: AM/FM/CD, Removal and Installation).
The speed compensated volume does not operate correctly	Refer to the Pinpoint Test.	GO to Pinpoint Test B
The entire audio system is inoperative	Refer to the Pinpoint Test.	GO to Pinpoint Test C
The audio input jack is inoperative or has poor sound quality	Refer to the Pinpoint Test.	GO to Pinpoint Test N
The FCIM illumination is inoperative or does not dim	• Illumination system concern • FCIM	REFER to: Instrument Panel Cluster (IPC) and Panel Illumination (413-00 Instrument Panel Cluster (IPC) and Panel Illumination, Diagnosis and Testing).
The audio system does not operate correctly from the FCIM	Refer to the Pinpoint Test.	GO to Pinpoint Test J
A single FCIM button is inoperative	FCIM	INSTALL a new FCIM . REFER to: Front Controls Interface Module (FCIM) (415-00A Information and Entertainment System - General Information - Vehicles With: AM/FM/CD, Removal and Installation).
One or more FCDIM displays are inoperative or do not operate correctly	Refer to the Pinpoint Test.	GO to Pinpoint Test L
The FCDIM is inoperative or does not operate correctly	Refer to the Pinpoint Test.	GO to Pinpoint Test K
The FCDIM illumination is inoperative or does not dim	• Illumination system concern • FCDIM	REFER to: Instrument Panel Cluster (IPC) and Panel Illumination (413-00 Instrument Panel Cluster (IPC) and Panel Illumination, Diagnosis and Testing).
The clock does not operate properly	Refer to the Pinpoint Test.	GO to Pinpoint Test V

Symptom Chart: Sound Quality

Diagnostics in this manual assume a certain skill level and knowledge of Ford-specific diagnostic practices. For information about these practices,
REFER to: Diagnostic Methods (100-00 General Information, Description and Operation).

Symptom Chart

Condition	Possible Sources	Actions
Poor reception - AM / FM	Refer to the Pinpoint Test.	GO to Pinpoint Test A
Continuous seek or scan in AM / FM	Refer to the Pinpoint Test.	GO to Pinpoint Test A
No Sound From All Speakers	Refer to the Pinpoint Test.	GO to Pinpoint Test E
Poor Sound Quality Or Distorted Sound From One Or More Speakers (Not All Speakers)	Refer to the Pinpoint Test.	GO to Pinpoint Test D
The Left Front (LF) door speaker is inoperative	Refer to the Pinpoint Test.	GO to Pinpoint Test F
The Right Front (RF) door speaker is inoperative	Refer to the Pinpoint Test.	GO to Pinpoint Test G
The Right Rear (RR) door speaker is inoperative	Refer to the Pinpoint Test.	GO to Pinpoint Test H
The Left Rear (LR) door speaker is inoperative	Refer to the Pinpoint Test.	GO to Pinpoint Test I

Pinpoint Tests

Poor Reception - AM - FM

Refer to Wiring Diagrams Cell 130 for schematic and connector information.

Diagnostic Overview

Diagnostics in this manual assume a certain skill level and knowledge of Ford-specific diagnostic practices. For information about these practices,
REFER to: Diagnostic Methods (100-00 General Information, Description and Operation).

Normal Operation and Fault Conditions

REFER to: Information and Entertainment System - System Operation and Component Description (415-00A Information and Entertainment System - General Information - Vehicles With: AM/FM/CD, Description and Operation).
See AM / FM Radio.

The RDS function allows the vehicle operator to choose which genre (category) of music to listen to. When the SCAN button is pressed, the ACM only stops at channels falling within the selected category. If no channel in the selected category is found, the ACM continues to scan without stopping. This can appear to be a reception issue, but it is actually due to the customer's setting.

Possible Sources

- Wiring, terminals, or connectors
- AM / FM antenna

AM / FM antenna coaxial cable
- Charging system
- Ignition system
- Noise suppression equipment
- No channel found in the selected category
- ACM

PINPOINT TEST A : POOR RECEPTION - AM (AMPLITUDE MODULATION) - FM (FREQUENCY MODULATION)

A1 CHECK THE AUDIO SYSTEM RECEPTION

- Operate the audio system in radio tuner AM / FM mode.
- Check the reception with the engine running, and with the engine off.

Does the poor reception only occur with the engine running?

Yes	GO to A2
No	GO to A4

A2 CHECK THE GENERATOR

- Ignition OFF.
- Disconnect: Wiring harness to the generator voltage regulator.
- Start the engine.
- Operate the audio system in radio tuner AM / FM mode.

Is the reception OK?

Yes	INSTALL a new generator. REFER to: Generator - 2.0L Duratec-HE (125kW/170PS) - MI4 (414-02 Generator and Regulator, Removal and Installation).
No	GO to A3

A3 CHECK THE IGNITION CIRCUITS

- Ignition OFF.
- Connect: Wiring harness to the generator voltage regulator.
- Visually inspect the engine compartment and make sure all ignition coils are correctly and securely connected, and that there are no visible cracks in the coil housings.
- Inspect all the wiring harnesses and connectors for damaged insulation and loose or broken conditions.

Are the ignition components OK?

Yes	USE a jumper cable to ground various parts of the vehicle to the frame (for example: engine, fenders, quarter panels, stone deflectors, air cleaner, body sheet metal). When the noise is eliminated, PROVIDE a permanent ground where necessary.
No	REPAIR the ignition system as necessary.

A4 CHECK THE ANTENNA ENABLE CIRCUIT

- Ignition OFF.
- Disconnect: Antenna.
- Ignition ON.

- Operate the audio system in radio tuner AM / FM mode.
- Measure:

Positive Lead	Measurement / Action	Negative Lead
C9051-1	V	—

Is the voltage greater than 11 volts?

Yes	GO to A7
No	GO to A5

A5 CHECK THE ANTENNA ENABLE CIRCUIT FOR AN OPEN

- Ignition OFF.
- Disconnect: ACM C240A.
- Measure:

Positive Lead	Measurement / Action	Negative Lead
C9051-1	Ω	C240A-2

Is the resistance less than 3 ohms?

Yes	GO to A6
No	REPAIR the circuit.

A6 CHECK THE ANTENNA ENABLE CIRCUIT FOR A SHORT TO GROUND

- Measure:

Positive Lead	Measurement / Action	Negative Lead
C9051-1	Ω	—

Is the resistance greater than 10,000 ohms?

Yes	GO to A10
No	REPAIR the circuit.

A7 CHECK THE AM (AMPLITUDE MODULATION) / FM (FREQUENCY MODULATION) ANTENNA COAXIAL CABLE

- Ignition OFF.
- Disconnect: AM / FM Antenna In-Line Coaxial Cable Connection Behind The RH Floor Console Side Trim Panel.

REFER to: Floor Console - Vehicles With: Center Armrest (501-12 Instrument Panel and Console, Removal and Installation).
- Disconnect: AM / FM Antenna Coaxial Cable At ACM .
- Measure the resistance of the upper ACM antenna coaxial cable core between the antenna and the upper ACM antenna coaxial cable in-line connection; and between the upper ACM antenna coaxial cable core and shield.
- Measure the resistance of the lower ACM antenna coaxial cable core between the ACM and the lower ACM antenna coaxial cable in-line connection; and between the lower AM / FM antenna coaxial cable core and shield.

Is the resistance of each AM / FM antenna coaxial cable core less than 2 ohms, and the resistance between the core and shield of each ACM antenna coaxial cable greater than 10,000 ohms?

Yes	GO to A8
No	INSTALL a new upper or lower AM / FM antenna coaxial cable. REFER to: Audio Unit Antenna Cable (415-00A Information and Entertainment System - General Information - Vehicles With: AM/FM/CD, Removal and Installation).

A8 ISOLATE THE ANTENNA

- Connect: AM / FM Antenna In-Line Coaxial Connector Behind The RH Floor Console Side Trim Panel.
- Connect: AM / FM Antenna Coaxial Cable At ACM .
- Install a new antenna.
  REFER to: Audio Unit Antenna (415-00A Information and Entertainment System - General Information - Vehicles With: AM/FM/CD, Removal and Installation).
- Operate the audio system in radio tuner AM / FM mode.

Is the reception OK?

Yes	The system is operating correctly at this time. The concern was caused by an inoperative AM / FM antenna.
No	GO to A9

A9 ISOLATE THE ANTENNA COAXIAL CABLE

- Ignition OFF.
- Substitute each antenna coaxial cable by routing a new component. Do not remove the original antenna coaxial cable at this time.
- Operate the audio system in radio tuner AM / FM mode.

Is the reception OK?

Yes	INSTALL a new antenna coaxial cable for the inoperative cable. REFER to: Audio Unit Antenna Cable (415-00A Information and Entertainment System - General Information - Vehicles With: AM/FM/CD, Removal and Installation).
No	REMOVE the substitute antenna coaxial cable. GO to A10

A10 CHECK FOR CORRECT ACM (AUDIO FRONT CONTROL MODULE) OPERATION

- Ignition OFF.
- Disconnect and inspect all the ACM connectors.
- Repair:
  - corrosion (install new connectors or terminals - clean module pins)
  - damaged or bent pins - install new terminals pins
  - pushed-out pins - install new pins as necessary

- Reconnect the ACM connectors. Make sure they seat and latch correctly.
- Operate the system and determine if the concern is still present.

Is the concern still present?

Yes	CHECK OASIS for any applicable Technical Service Bulletins (TSBs). If a TSB exists for this concern, discontinue this test and follow TSB instructions. If no Technical Service Bulletins (TSBs) address this concern, INSTALL a new ACM . REFER to: Audio Front Control Module (ACM) (415-00A Information and Entertainment System - General Information - Vehicles With: AM/FM/CD, Removal and Installation).
No	The system is operating correctly at this time. The concern may have been caused by module connections. ADDRESS the root cause of any connector or pin issues.

The Speed Compensated Volume Does Not Operate Correctly

Diagnostic Overview

Diagnostics in this manual assume a certain skill level and knowledge of Ford-specific diagnostic practices. For information about these practices,
REFER to: Diagnostic Methods (100-00 General Information, Description and Operation).

Normal Operation and Fault Conditions

REFER to: Information and Entertainment System - System Operation and Component Description (415-00A Information and Entertainment System - General Information - Vehicles With: AM/FM/CD, Description and Operation).
See Speed Compensated Volume.

Possible Sources

- Speed compensated volume setting
- Vehicle Speed Sensor (VSS) signal concern
- Communication network concern
- ACM

PINPOINT TEST B : THE SPEED COMPENSATED VOLUME DOES NOT OPERATE CORRECTLY

B1 CHECK THE SPEEDOMETER OPERATION

- Drive the vehicle and observe the speedometer.

Does the speedometer operate correctly?

Yes	GO to B2
No	REFER to: Instrumentation, Message Center and Warning Chimes (413-01 Instrumentation, Message Center and Warning Chimes, Diagnosis and Testing). See The Speedometer Is Inoperative

B2 CHECK THE SPEED COMPENSATED VOLUME SETTING

- Turn the speed compensated volume off. Refer to the Owner's Literature.
- Operate the audio system in radio tuner AM / FM mode.
- Drive the vehicle at various speeds and observe the speaker volume.
- Set the speed compensated volume to maximum compensation. Refer to the Owner's Literature.

- Operate the audio system in radio tuner AM / FM mode.
- Drive the vehicle at various speeds and observe the speaker volume.

Does the volume remain constant with the speed compensated volume turned off, and increase and decrease with vehicle speed with the speed compensated volume set to maximum?

Yes	The system is operating correctly at this time. INSTRUCT the customer in the correct usage of the speed compensated volume feature.
No	GO to B3

B3 CHECK FOR DTC (DIAGNOSTIC TROUBLE CODE) U0155:00

- Using a diagnostic scan tool, retrieve all continuous Diagnostic Trouble Codes (DTCs).

Is DTC U0155:00 retrieved in any audio system module?

Yes	GO to Pinpoint Test P
No	GO to B4

B4 CHECK FOR CORRECT ACM (AUDIO FRONT CONTROL MODULE) OPERATION

- Ignition OFF.
- Disconnect and inspect all the ACM connectors.
- Repair:
  - corrosion (install new connector or terminals - clean module pins)
  - damaged pins - install new terminals/pins
  - pushed-out pins - install new pins as necessary
- Reconnect the ACM connectors. Make sure they seat and latch correctly.
- Operate the system and determine if the concern is still present.

Is the concern still present?

Yes	CHECK OASIS for any applicable Technical Service Bulletins (TSBs). If a TSB exists for this concern, discontinue this test and follow TSB instructions. If no Technical Service Bulletins (TSBs) address this concern, INSTALL a new ACM . REFER to: Audio Front Control Module (ACM) (415-00A Information and Entertainment System - General Information - Vehicles With: AM/FM/CD, Removal and Installation).
No	The system is operating correctly at this time. The concern may have been caused by module connections. ADDRESS the root cause of any connector or pin issues.

The Entire Audio System Is Inoperative

Diagnostic Overview

Diagnostics in this manual assume a certain skill level and knowledge of Ford-specific diagnostic practices. For information about these practices,
REFER to: Diagnostic Methods (100-00 General Information, Description and Operation).

Normal Operation and Fault Conditions

When the ignition in OFF, ACC, or RUN, and the FCIM ON button is pressed, a wake-up signal is provided to the FCDIM via the

dedicated LIN line. The FCDIM then broadcasts a message over the Infotainment Controller Area Network (I-CAN) to the other audio system modules.

REFER to: Information and Entertainment System - System Operation and Component Description (415-00A Information and Entertainment System - General Information - Vehicles With: AM/FM/CD, Description and Operation).
See Accessory Delay Feature, Audio Extended Play, and FCIM .

Possible Sources

- Communication network concern
- FCIM
- FCDIM
- ACM

PINPOINT TEST C : THE ENTIRE AUDIO SYSTEM IS INOPERATIVE

C1 VERIFY THAT THE ACM (AUDIO FRONT CONTROL MODULE) AND THE FCDIM (FRONT CONTROL/DISPLAY INTERFACE MODULE) PASS THE NETWORK TEST

- Using a diagnostic scan tool, perform the network test.

Do either the ACM or FCDIM fail to communicate with the diagnostic scan tool?

Yes	For no communication with the ACM , REFER to: Communications Network (418-00 Module Communications Network, Diagnosis and Testing). See The ACM Does Not Respond To The Diagnostic Scan Tool. For no communication with the FCDIM , REFER to: Communications Network (418-00 Module Communications Network, Diagnosis and Testing). See The FCDIM Does Not Respond To The Diagnostic Scan Tool.
No	GO to C2

C2 CHECK THE FCDIM (FRONT CONTROL/DISPLAY INTERFACE MODULE) POWER SWITCH INPUT PARAMETER IDENTIFICATION (PID)

- Using a diagnostic scan tool, view the FCDIM Parameter Identifications (PIDs).
- Monitor the FCDIM power switch Parameter Identification (PID) (BTN_POWER) while pressing and releasing the power switch on the FCIM .

Does the Parameter Identification (PID) display the correct the power switch positions?

Yes	GO to C3
No	GO to Pinpoint Test J

C3 CHECK FOR LOST COMMUNICATION DIAGNOSTIC TROUBLE CODES (DTCS)

- Ignition ON.
- Using a diagnostic scan tool, clear continuous Diagnostic Trouble Codes (DTCs) from all modules.
- Ignition OFF.
- Ignition ON.
- Wait at least 10 seconds.
- Using a diagnostic scan tool, repeat the ACM and FCDIM self-tests.

Is DTC U0140:00 or U0257:00 present?

Yes	For DTC U0140:00, GO to Pinpoint Test O For DTC U0257:00, GO to Pinpoint Test Q
No	GO to C4

C4 CHECK FOR CORRECT ACM (AUDIO FRONT CONTROL MODULE) OPERATION

- Ignition OFF.
- Disconnect and inspect all the ACM connectors.
- Repair:
  - corrosion (install new connector or terminals - clean module pins)
  - damaged pins - install new terminals/pins
  - pushed-out pins - install new pins as necessary
- Reconnect the ACM connectors. Make sure they seat and latch correctly.
- Operate the system and determine if the concern is still present.

Is the concern still present?

Yes	CHECK OASIS for any applicable Technical Service Bulletins (TSBs). If a TSB exists for this concern, discontinue this test and follow TSB instructions. If no Technical Service Bulletins (TSBs) address this concern, INSTALL a new ACM . REFER to: Audio Front Control Module (ACM) (415-00A Information and Entertainment System - General Information - Vehicles With: AM/FM/CD, Removal and Installation).
No	The system is operating correctly at this time. The concern may have been caused by module connections. ADDRESS the root cause of any connector or pin issues.

Poor Sound Quality Or Distorted Sound From One Or More Speakers (Not All Speakers)

Diagnostic Overview

Diagnostics in this manual assume a certain skill level and knowledge of Ford-specific diagnostic practices. For information about these practices,
REFER to: Diagnostic Methods (100-00 General Information, Description and Operation).

Normal Operation and Fault Conditions

The ACM sends audio signals to the speakers in the form of AC voltage, resulting in clear audio output.

Visual Inspection and Diagnostic Pre-checks

Visually inspect around the suspect area for any possible rattle conditions such as:

- Any storage compartments including cup holders (if equipped)
- Door map pockets for contents that can rattle (if equipped)
- Door pull cup attachments (if equipped)
- Door switch bezels (if equipped)
- Package tray (if equipped)
- Speaker grilles
- Trim panels and fasteners

Possible Sources

- Loose component fasteners
- Loose door handle, lock, and other trim panel components and fasteners
- Loose items in storage areas

Loose speaker grilles
- Loose wire harnesses or wire harness fasteners
- Speaker(s)
- Water shield bonding and placement

PINPOINT TEST D : POOR SOUND QUALITY OR DISTORTED SOUND FROM ONE OR MORE SPEAKERS (NOT ALL SPEAKERS)

D1 ISOLATE THE ZONE

- Operate the audio system using digital media (CD , MP3, etc.).
- Using the audio system fade and balance feature, adjust the audio sound to each of the four zones (LF, RF, LR and RR) of the vehicle to isolate the poor sound quality.
- Locate and apply pressure to the trim panel(s) around the poor sound quality area in question.

Does applying pressure to a trim panel reduce or eliminate the audible noise?

Yes	REPAIR or REPLACE the trim panel as needed.
No	GO to D2

D2 REMOVE AND INSPECT BEHIND/UNDERNEATH THE SUSPECT TRIM PANEL(S)

- Remove the trim panel to access the suspect speaker.
- Operate the audio system using digital media (CD , MP3, etc.).
- Validate where the poor sound quality area is located.
- Check:
  - Trim panel for loose components (e.g. speaker grille) around the speaker area.
  - Trim panel joining components for missing or broken pieces.
  - Lock and handle mechanical parts for correct attachment.
  - Wire harnesses for correct routing.
  - Wire harness fasteners for correct attachment.
  - Water shield for correct placement (speaker air path not blocked).
  - Water shield for correct bonding to sheet metal.
  - Storage areas for loose items.
  - All child safety belt anchors (if equipped).
  - All safety belt retractors.
  - All speaker bracket fasteners and other fasteners are secured and tightened to specified torque.

Was the source of the noise located?

Yes	REPAIR or REPLACE any loose or broken component or fastener as needed.
No	GO to D3

D3 CHECK THE SUSPECT SPEAKER FOR WATER INTRUSION

- Inspect for watermarks.
- Check the:
  - Cone
  - Magnet
  - Basket

Are any watermarks present on the speaker?

Yes	VERIFY the water shield is in the correct location, REPAIR or REPLACE any trim, door, or speaker seal as required.

	DRY the speaker in question and TEST the system for normal operation.
No	GO to D4

D4 ISOLATE SPEAKER TO VERIFY NOISE

- Remove the suspect speaker from its location and leave the speaker connected to the harness.
- Hold the speaker away from any trim panel(s) and ensure the speaker is isolated from contact.
- Operate the audio system using digital media (CD , MP3, etc.).

Is the noise still present in the suspect speaker?

Yes	INSTALL a new speaker for the one in question.
No	LOCATE the source of the noise and REPAIR as needed.

No Sound From All Speakers

Refer to Wiring Diagrams Cell 130 for schematic and connector information.

Diagnostic Overview

Diagnostics in this manual assume a certain skill level and knowledge of Ford-specific diagnostic practices. For information about these practices,
REFER to: Diagnostic Methods (100-00 General Information, Description and Operation).

Normal Operation and Fault Conditions

When the ignition is in the START position, the ACM receives voltage on the START signal circuit and mutes the speaker output. This prevents voltage spikes from producing popping noises through the speakers. A short to voltage on this circuit causes the ACM output to be muted continuously.

A short to ground or short to voltage in the circuitry to one of the speakers may cause multiple speakers to lose sound due to the built-in overload protection feature of the ACM . In this case, a speaker fault DTC sets.

Possible Sources

- Fuse
- Wiring, terminals, or connectors
- ACM

PINPOINT TEST E : NO SOUND FROM ALL SPEAKERS

E1 CHECK FOR PCM (POWERTRAIN CONTROL MODULE) PCM (POWERTRAIN CONTROL MODULE) DIAGNOSTIC TROUBLE CODES (DTCS)

- Ignition ON.
- Using a diagnostic scan tool, perform the PCM self-test.

Is DTC P0615 present?

Yes	REFER to: Starting System (303-06A Starting System - 2.0L Duratec-HE (125kW/170PS) - MI4, Diagnosis and Testing). See P0615.

No	GO to E2

E2 CHECK FOR SPEAKER DIAGNOSTIC TROUBLE CODES (DTCS)

- Ignition ON.
- Using a diagnostic scan tool, perform the ACM self-test.

Are any speaker fault Diagnostic Trouble Codes (DTCs) present?

Yes	REFER to: Information and Entertainment System (415-00A Information and Entertainment System - General Information - Vehicles With: AM/FM/CD, Diagnosis and Testing). See DTC Chart: ACM - Base.
No	GO to E3

E3 CHECK THE START SENSE CIRCUIT FOR A SHORT TO VOLTAGE

- Ignition OFF.
- Disconnect: ACM C240A.
- Ignition ON.
- Measure:

Positive Lead	Measurement / Action	Negative Lead
C240A-3		—

Is any voltage present?

Yes	REPAIR the circuit in question.
No	GO to E4

E4 CHECK FOR CORRECT ACM (AUDIO FRONT CONTROL MODULE) OPERATION

- Ignition OFF.
- Disconnect and inspect all the ACM connectors.
- Repair:
  - corrosion (install new connectors or terminals - clean module pins)
  - damaged or bent pins - install new terminals pins
  - pushed-out pins - install new pins as necessary
- Reconnect the ACM connectors. Make sure they seat and latch correctly.
- Operate the system and determine if the concern is still present.

Is the concern still present?

Yes	CHECK OASIS for any applicable Technical Service Bulletins (TSBs). If a TSB exists for this concern, discontinue this test and follow TSB instructions. If no Technical Service Bulletins (TSBs) address this concern, INSTALL a new ACM. REFER to: Audio Front Control Module (ACM) (415-00A Information and Entertainment System - General Information - Vehicles With: AM/FM/CD, Removal and Installation).
No	The system is operating correctly at this time. The concern may have been caused by module

	connections. ADDRESS the root cause of any connector or pin issues.

The LF Door Speaker Is Inoperative

Refer to Wiring Diagrams Cell 130 for schematic and connector information.

Diagnostic Overview

Diagnostics in this manual assume a certain skill level and knowledge of Ford-specific diagnostic practices. For information about these practices,
REFER to: Diagnostic Methods (100-00 General Information, Description and Operation).

Normal Operation and Fault Conditions

REFER to: Information and Entertainment System - System Operation and Component Description (415-00A Information and Entertainment System - General Information - Vehicles With: AM/FM/CD, Description and Operation).
See ACM .

The ACM directs audio signals to the Left Front (LF) speaker in the form of a fluctuating AC voltage.

DTC Fault Trigger Conditions

DTC	Description	Fault Trigger Conditions
B1A01:01	Speaker #1: General Electrical Failure	Set by the ACM when a failure is detected on the Left Front (LF) door speaker circuits.
B1A01:11	Speaker #1: Circuit Short To Ground	Set by the ACM when a short to ground is detected on the Left Front (LF) door speaker circuits. When DTC B1A01:11 is set, the speaker output is disabled.
B1A01:12	Speaker #1: Circuit Short To Battery	Set by the ACM when a short to battery is detected on the Left Front (LF) door speaker circuits. When DTC B1A01:12 is set, the speaker output is disabled.
B1A01:13	Speaker #1: Circuit Open	Set by the ACM when an open is detected on the Left Front (LF) door speaker circuits.

Possible Sources

- Wiring, terminals, or connectors
- Speaker
- ACM

PINPOINT TEST F : THE LF DOOR SPEAKER IS INOPERATIVE

F1 CHECK THE AUDIO SIGNAL TO THE LEFT FRONT (LF) DOOR SPEAKER
• Ignition OFF. • Disconnect: Left Front (LF) Door Speaker. • Operate the audio system in radio tuner AM / FM mode. • Measure:

Positive Lead	Measurement / Action	Negative Lead
C523-1	~V	C523-4

Is a fluctuating AC voltage present?

Yes	INSTALL a new Left Front (LF) door speaker. REFER to: Front Door Speaker (415-00A Information and Entertainment System - General Information - Vehicles With: AM/FM/CD, Removal and Installation).
No	GO to F2

F2 CHECK THE AUDIO CIRCUITS TO THE LEFT FRONT (LF) DOOR SPEAKER FOR A SHORT TO VOLTAGE

- Ignition OFF.
- Disconnect: ACM C240A.
- Ignition ON.
- Measure:

Positive Lead	Measurement / Action	Negative Lead
C523-1	V	—
C523-4	V	—

Is any voltage present?

Yes	REPAIR the circuit in question.
No	GO to F3

F3 CHECK THE AUDIO CIRCUITS TO THE LEFT FRONT (LF) DOOR SPEAKER FOR A SHORT TO GROUND

- Ignition OFF.
- Measure:

Positive Lead	Measurement / Action	Negative Lead
C523-1	Ω	—
C523-4	Ω	—

Are the resistances greater than 10,000 ohms?

Yes	GO to F4
No	REPAIR the circuit in question.

F4 CHECK THE AUDIO CIRCUITS TO THE LEFT FRONT (LF) DOOR SPEAKER FOR AN OPEN

- Measure:

Positive Lead	Measurement / Action	Negative Lead
C523-1	Ω	C240A-22
C523-4	Ω	C240A-10

Are the resistances less than 3 ohms?

Yes	GO to F5
No	REPAIR the circuit in question.

F5 CHECK THE AUDIO CIRCUITS TO THE LEFT FRONT (LF) DOOR SPEAKER FOR A SHORT TOGETHER

- Measure:

Positive Lead	Measurement / Action	Negative Lead
C523-1	Ω	C523-4

Is the resistance greater than 10,000 ohms?

Yes	GO to F6
No	REPAIR the circuit in question.

F6 CHECK FOR CORRECT ACM (AUDIO FRONT CONTROL MODULE) OPERATION

- Disconnect and inspect all the ACM connectors.
- Repair:
  - corrosion (install new connector or terminals - clean module pins)
  - damaged pins - install new terminals/pins
  - pushed-out pins - install new pins as necessary
- Reconnect the ACM connectors. Make sure they seat and latch correctly.
- Operate the system and determine if the concern is still present.

Is the concern still present?

Yes	CHECK OASIS for any applicable Technical Service Bulletins (TSBs). If a TSB exists for this concern, discontinue this test and follow TSB instructions. If no Technical Service Bulletins (TSBs) address this concern, INSTALL a new ACM . REFER to: Audio Front Control Module (ACM) (415-00A Information and Entertainment System - General Information - Vehicles With: AM/FM/CD, Removal and Installation).
No	The system is operating correctly at this time. The concern may have been caused by module connections. ADDRESS the root cause of any connector or pin issues.

The RF Door Speaker Is Inoperative

Refer to Wiring Diagrams Cell 130 for schematic and connector information.

Diagnostic Overview

Diagnostics in this manual assume a certain skill level and knowledge of Ford-specific diagnostic practices. For information about these practices,
REFER to: Diagnostic Methods (100-00 General Information, Description and Operation).

Normal Operation and Fault Conditions

REFER to: Information and Entertainment System - System Operation and Component Description (415-00A Information and Entertainment System - General Information - Vehicles With: AM/FM/CD, Description and Operation).
See ACM.

The ACM directs audio signals to the Right Front (RF) speaker in the form of a fluctuating AC voltage.

DTC Fault Trigger Conditions

DTC	Description	Fault Trigger Conditions
B1A02:01	Speaker #2: General Electrical Failure	Set by the ACM when a failure is detected on the Right Front (RF) door speaker circuits.
B1A02:11	Speaker #2: Circuit Short To Ground	Set by the ACM when a short to ground is detected on the Right Front (RF) door speaker circuits. When DTC B1A02:11 is set, the speaker output is disabled.
B1A02:12	Speaker #2: Circuit Short To Battery	Set by the ACM when a short to battery is detected on the Right Front (RF) door speaker circuits. When DTC B1A02:12 is set, the speaker output is disabled.
B1A02:13	Speaker #2: Circuit Open	Set by the ACM when an open is detected on the Right Front (RF) door speaker circuits.

Possible Sources

- Wiring, terminals, or connectors
- Speaker
- ACM

PINPOINT TEST G : THE RF DOOR SPEAKER IS INOPERATIVE

G1 CHECK THE AUDIO SIGNAL TO THE RIGHT FRONT (RF) DOOR SPEAKER

- Ignition OFF.
- Disconnect: Right Front (RF) Door Speaker.
- Operate the audio system in radio tuner AM / FM mode.
- Measure:

Positive Lead	Measurement / Action	Negative Lead
C612-1	$\tilde{V}$	C612-4

Is a fluctuating AC voltage present?

Yes	INSTALL a new Right Front (RF) door speaker. REFER to: Front Door Speaker (415-00A Information and Entertainment System - General Information - Vehicles With: AM/FM/CD, Removal and Installation).
No	GO to G2

G2 CHECK THE AUDIO CIRCUITS TO THE RIGHT FRONT (RF) DOOR SPEAKER FOR A SHORT TO VOLTAGE

- Ignition OFF.
- Disconnect: ACM C240A.
- Ignition ON.
- Measure:

Positive Lead	Measurement / Action	Negative Lead
C612-1	V	—
C612-4	V	—

Is any voltage present?

Yes	REPAIR the circuit in question.
No	GO to G3

G3 CHECK THE AUDIO CIRCUITS TO THE RIGHT FRONT (RF) DOOR SPEAKER FOR A SHORT TO GROUND

- Ignition OFF.
- Measure:

Positive Lead	Measurement / Action	Negative Lead
C612-1	Ω	—
C612-4	Ω	—

Are the resistances greater than 10,000 ohms?

Yes	GO to G4
No	REPAIR the circuit in question.

G4 CHECK THE AUDIO CIRCUITS TO THE RIGHT FRONT (RF) DOOR SPEAKER FOR AN OPEN

- Measure:

Positive Lead	Measurement / Action	Negative Lead
C612-1	Ω	C240A-23
C612-4	Ω	C240A-11

Are the resistances less than 3 ohms?

Yes	GO to G5
No	REPAIR the circuit in question.

G5 CHECK THE AUDIO CIRCUITS TO THE RIGHT FRONT (RF) DOOR SPEAKER FOR A SHORT TOGETHER

- Measure:

Positive Lead	Measurement / Action	Negative Lead
C612-1	Ω	C612-4

Is the resistance greater than 10,000 ohms?

Yes	GO to G6
No	REPAIR the circuit in question.

G6 CHECK FOR CORRECT ACM (AUDIO FRONT CONTROL MODULE) OPERATION

- Ignition OFF.
- Disconnect and inspect all the ACM connectors.
- Repair:
  - corrosion (install new connector or terminals - clean module pins)
  - damaged pins - install new terminals/pins
  - pushed-out pins - install new pins as necessary
- Reconnect the ACM connectors. Make sure they seat and latch correctly.
- Operate the system and determine if the concern is still present.

Is the concern still present?

Yes	CHECK OASIS for any applicable Technical Service Bulletins (TSBs). If a TSB exists for this concern, discontinue this test and follow TSB instructions. If no Technical Service Bulletins (TSBs) address this concern, INSTALL a new ACM . REFER to: Audio Front Control Module (ACM) (415-00A Information and Entertainment System - General Information - Vehicles With: AM/FM/CD, Removal and Installation).
No	The system is operating correctly at this time. The concern may have been caused by module connections. ADDRESS the root cause of any connector or pin issues.

The RR Door Speaker Is Inoperative

Refer to Wiring Diagrams Cell 130 for schematic and connector information.

Diagnostic Overview

Diagnostics in this manual assume a certain skill level and knowledge of Ford-specific diagnostic practices. For information about these practices,
REFER to: Diagnostic Methods (100-00 General Information, Description and Operation).

Normal Operation and Fault Conditions

REFER to: Information and Entertainment System - System Operation and Component Description (415-00A Information and Entertainment System - General Information - Vehicles With: AM/FM/CD, Description and Operation).
See ACM .

The ACM directs audio signals to the Right Rear (RR) speaker in the form of a fluctuating AC voltage.

DTC Fault Trigger Conditions

DTC	Description	Fault Trigger Conditions
B1A03:01	Speaker #3: General Electrical Failure	Set by the ACM when a failure is detected on the Right Rear (RR) door speaker circuits.
B1A03:11	Speaker #3: Circuit Short To Ground	Set by the ACM when a short to ground is detected on the Right Rear (RR) door speaker circuits. When DTC B1A03:11 is set, the speaker output is disabled.
B1A03:12	Speaker #3: Circuit Short To Battery	Set by the ACM when a short to battery is detected on the Right Rear (RR) door speaker circuits. When DTC B1A03:12 is set, the speaker output is disabled.
B1A03:13	Speaker #3: Circuit Open	Set by the ACM when an open is detected on the Right Rear (RR) door speaker circuits.

Possible Sources

- Wiring, terminals, or connectors
- Speaker
- ACM

PINPOINT TEST H : THE RR DOOR SPEAKER IS INOPERATIVE

H1 CHECK THE AUDIO SIGNAL TO THE RIGHT REAR (RR) DOOR SPEAKER

- Ignition OFF.
- Disconnect: Right Rear (RR) Door Speaker.
- Operate the audio system in radio tuner AM / FM mode.
- Measure:

Positive Lead	Measurement / Action	Negative Lead
C802-1	$\tilde{V}$	C802-4

Is a fluctuating AC voltage present?

Yes	INSTALL a new Right Rear (RR) door speaker. REFER to: Rear Door Speaker (415-00A Information and Entertainment System - General Information - Vehicles With: AM/FM/CD, Removal and Installation).
No	GO to H2

H2 CHECK THE AUDIO CIRCUITS TO THE RIGHT REAR (RR) DOOR SPEAKER FOR A SHORT TO VOLTAGE

- Ignition OFF.
- Disconnect: ACM C240A.
- Ignition ON.
- Measure:

Positive Lead	Measurement / Action	Negative Lead
C802-1	V	—
C802-4	V	—

Is any voltage present?

Yes	REPAIR the circuit in question.
No	GO to H3

H3 CHECK THE AUDIO CIRCUITS TO THE RIGHT REAR (RR) DOOR SPEAKER FOR A SHORT TO GROUND

- Ignition OFF.
- Measure:

Positive Lead	Measurement / Action	Negative Lead
C802-1	Ω	—
C802-4	Ω	—

Are the resistances greater than 10,000 ohms?

Yes	GO to H4
No	REPAIR the circuit in question.

H4 CHECK THE AUDIO CIRCUITS TO THE RIGHT REAR (RR) DOOR SPEAKER FOR AN OPEN

- Measure:

Positive Lead	Measurement / Action	Negative Lead

C802-1	Ω	C240A-24
C802-4	Ω	C240A-12

Are the resistances less than 3 ohms?

Yes	GO to H5
No	REPAIR the circuit in question.

H5 CHECK THE AUDIO CIRCUITS TO THE RIGHT REAR (RR) DOOR SPEAKER FOR A SHORT TOGETHER

- Measure:

Positive Lead	Measurement / Action	Negative Lead
C802-1	Ω	C802-4

Is the resistance greater than 10,000 ohms?

Yes	GO to H6
No	REPAIR the circuit in question.

H6 CHECK FOR CORRECT ACM (AUDIO FRONT CONTROL MODULE) OPERATION

- Disconnect and inspect all the ACM connectors.
- Repair:
  - corrosion (install new connector or terminals - clean module pins)
  - damaged pins - install new terminals/pins
  - pushed-out pins - install new pins as necessary
- Reconnect the ACM connectors. Make sure they seat and latch correctly.
- Operate the system and determine if the concern is still present.

Is the concern still present?

Yes	CHECK OASIS for any applicable Technical Service Bulletins (TSBs). If a TSB exists for this concern, discontinue this test and follow TSB instructions. If no Technical Service Bulletins (TSBs) address this concern, INSTALL a new ACM . REFER to: Audio Front Control Module (ACM) (415-00A Information and Entertainment System - General Information - Vehicles With: AM/FM/CD, Removal and Installation).
No	The system is operating correctly at this time. The concern may have been caused by module connections. ADDRESS the root cause of any connector or pin issues.

The LR Door Speaker Is Inoperative

Refer to Wiring Diagrams Cell 130 for schematic and connector information.

Diagnostic Overview

Diagnostics in this manual assume a certain skill level and knowledge of Ford-specific diagnostic practices. For information about these practices,
REFER to: Diagnostic Methods (100-00 General Information, Description and Operation).

Normal Operation and Fault Conditions

REFER to: Information and Entertainment System - System Operation and Component Description (415-00A Information and Entertainment System - General Information - Vehicles With: AM/FM/CD, Description and Operation).
See ACM .

The ACM directs audio signals to the Left Rear (LR) speaker in the form of a fluctuating AC voltage.

DTC Fault Trigger Conditions

DTC	Description	Fault Trigger Conditions
B1A04:01	Speaker #4: General Electrical Failure	Set by the ACM when a failure is detected on the Left Rear (LR) door speaker circuits.
B1A04:11	Speaker #4: Circuit Short To Ground	Set by the ACM when a short to ground is detected on the Left Rear (LR) door speaker circuits. When DTC B1A04:11 is set, the speaker output is disabled.
B1A04:12	Speaker #4: Circuit Short To Battery	Set by the ACM when a short to battery is detected on the Left Rear (LR) door speaker circuits. When DTC B1A04:12 is set, the speaker output is disabled.
B1A04:13	Speaker #4: Circuit Open	Set by the ACM when an open is detected on the Left Rear (LR) door speaker circuits.

Possible Sources

- Wiring, terminals, or connectors
- Speaker
- ACM

PINPOINT TEST I : THE LR DOOR SPEAKER IS INOPERATIVE

I1 CHECK THE AUDIO SIGNAL TO THE LEFT REAR (LR) DOOR SPEAKER

- Ignition OFF.
- Disconnect: Left Rear (LR) Door Speaker.
- Operate the audio system in radio tuner AM / FM mode.
- Measure:

Positive Lead	Measurement / Action	Negative Lead
C702-1	$\tilde{V}$	C702-4

Is a fluctuating AC voltage present?

Yes	INSTALL a new Left Rear (LR) door speaker. REFER to: Rear Door Speaker (415-00A Information and Entertainment System - General Information - Vehicles With: AM/FM/CD, Removal and Installation).
No	GO to I2

I2 CHECK THE AUDIO CIRCUITS TO THE LEFT REAR (LR) DOOR SPEAKER FOR A SHORT TO VOLTAGE

- Ignition OFF.
- Disconnect: ACM C240A.
- Ignition ON.
- Measure:

Positive Lead	Measurement / Action	Negative Lead
C702-1	V	—
C702-4	V	—

Is any voltage present?

Yes	REPAIR the circuit in question.
No	GO to I3

I3 CHECK THE AUDIO CIRCUITS TO THE LEFT REAR (LR) DOOR SPEAKER FOR A SHORT TO GROUND

- Ignition OFF.
- Measure:

Positive Lead	Measurement / Action	Negative Lead
C702-1	Ω	—
C702-4	Ω	—

Are the resistances greater than 10,000 ohms?

Yes	GO to I4
No	REPAIR the circuit in question.

I4 CHECK THE AUDIO CIRCUITS TO THE LEFT REAR (LR) DOOR SPEAKER FOR AN OPEN

- Measure:

Positive Lead	Measurement / Action	Negative Lead
C702-1	Ω	C240A-21
C702-4	Ω	C240A-9

Are the resistances less than 3 ohms?

Yes	GO to I5
No	REPAIR the circuit in question.

I5 CHECK THE AUDIO CIRCUITS TO THE LEFT REAR (LR) DOOR SPEAKER FOR A SHORT TOGETHER

- Measure:

Positive Lead	Measurement / Action	Negative Lead
C702-1	Ω	C702-4

Is the resistance greater than 10,000 ohms?

Yes	GO to I6
No	REPAIR the circuit in question.

I6 CHECK FOR CORRECT ACM (AUDIO FRONT CONTROL MODULE) OPERATION

- Disconnect and install all the ACM connectors.
- Repair:
  - corrosion (install new connector or terminals - clean module pins)
  - damaged pins - install new terminals/pins
  - pushed-out pins - install new pins as necessary
- Reconnect the ACM connectors. Make sure they seat and latch correctly.
- Operate the system and determine if the concern is still present.

Is the concern still present?

Yes	CHECK OASIS for any applicable Technical Service Bulletins (TSBs). If a TSB exists for this concern, discontinue this test and follow TSB instructions. If no Technical Service Bulletins (TSBs) address this concern, INSTALL a new ACM . REFER to: Audio Front Control Module (ACM) (415-00A Information and Entertainment System - General Information - Vehicles With: AM/FM/CD, Removal and Installation).
No	The system is operating correctly at this time. The concern may have been caused by module connections. ADDRESS the root cause of any connector or pin issues.

The Audio System Does Not Operate Correctly From The FCIM

Diagnostic Overview

Diagnostics in this manual assume a certain skill level and knowledge of Ford-specific diagnostic practices. For information about these practices,
REFER to: Diagnostic Methods (100-00 General Information, Description and Operation).

Normal Operation and Fault Conditions

REFER to: Information and Entertainment System - System Operation and Component Description (415-00A Information and Entertainment System - General Information - Vehicles With: AM/FM/CD, Description and Operation).
See Accessory Delay Feature, Audio Extended Play, and FCIM .

DTC Fault Trigger Conditions

DTC	Description	Fault Trigger Conditions
U1A00:00	Private Communication Network: No Sub Type Information	Set by the FCDIM when information is not received from the FCIM over the LIN for greater than 2 seconds. This does not necessarily indicate a fault in the LIN wiring, as a loss of power or ground to the FCIM can also cause a lack of communication.

Possible Sources

- Communication network concern
- FCIM
- FCDIM

PINPOINT TEST J : THE AUDIO SYSTEM DOES NOT OPERATE CORRECTLY FROM THE FCIM (FRONT CONTROLS INTERFACE MODULE)

J1 CHECK THE FCDIM (FRONT CONTROL/DISPLAY INTERFACE MODULE) BUTTON PARAMETER IDENTIFICATIONS (PIDS)

- Ignition ON.
- Using a diagnostic scan tool, view the FCDIM Parameter Identification (PIDs).
- **NOTE:** *The button Parameter Identification (PIDs) begin with the prefix "BTN_" and end with the indicated button. For example, Parameter Identification (PID) BTN_EJECT correlates with the eject button on the FCIM .*

Monitor the FCDIM Parameter Identification (PIDs) while pressing each button on the FCIM .

Do the Parameter Identification (PID) values agree with the button presses?

Yes	GO to J9
No	If one or more, but not all Parameter Identification (PID) values are incorrect or always read one particular switch position, GO to J8 If all Parameter Identification (PID) values are incorrect or always read one particular switch position, GO to J2

J2 CHECK FOR VOLTAGE TO THE FCIM (FRONT CONTROLS INTERFACE MODULE)

- Ignition OFF.
- Disconnect: FCIM C2402
- Ignition ON.
- Measure:

Positive Lead	Measurement / Action	Negative Lead

C2402-8		—

Is the voltage greater than 11 volts?

Yes	GO to J3
No	REPAIR the circuit.

J3 CHECK THE FCIM (FRONT CONTROLS INTERFACE MODULE) GROUND CIRCUIT FOR AN OPEN

- Measure:

Positive Lead	Measurement / Action	Negative Lead
C2402-8		C2402-5

Is the voltage greater than 11 volts?

Yes	GO to J4
No	REPAIR the circuit.

J4 CHECK THE LIN (LOCAL INTERCONNECT NETWORK) CIRCUIT FOR A SHORT TO VOLTAGE

- Ignition OFF.
- Disconnect: FCDIM C2123
- Ignition ON.
- Measure:

Positive Lead	Measurement / Action	Negative Lead
C2402-7		—

Is any voltage present?

Yes	REPAIR the circuit.
No	GO to J5

J5 CHECK THE LIN (LOCAL INTERCONNECT NETWORK) CIRCUIT FOR AN OPEN

- Ignition OFF.
- Measure:

Positive Lead	Measurement / Action	Negative Lead
C2402-7	Ω	C2123-8

Is the resistance less than 3 ohms?

Yes	GO to J6
No	REPAIR the circuit.

J6 CHECK THE LIN (LOCAL INTERCONNECT NETWORK) CIRCUIT FOR A SHORT TO GROUND

- Ignition OFF.
- Measure:

Positive Lead	Measurement / Action	Negative Lead
C2402-7	Ω	—

Is the resistance greater than 10,000 ohms?

Yes	GO to J7
No	REPAIR the circuit.

J7 RECHECK FOR DTC (DIAGNOSTIC TROUBLE CODE) U1A00:00

- Ignition ON.
- Using a diagnostic scan tool, clear continuous Diagnostic Trouble Codes (DTCs) from all modules.
- Ignition OFF.
- Ignition ON.
- Wait at least 10 seconds.
- Using a diagnostic scan tool, perform the FCDIM self-test.

Is DTC U1A00:00 set in the FCDIM ?

Yes	GO to J8
No	GO to J9

J8 CHECK FOR CORRECT FCIM (FRONT CONTROLS INTERFACE MODULE) OPERATION

- Ignition OFF.
- Disconnect and inspect the FCIM connector.
- Repair:
  - corrosion (install new connector or terminals - clean module pins)
  - damaged pins - install new terminals/pins
  - pushed-out pins - install new pins as necessary
- Reconnect the FCIM connector. Make sure it seats and latches correctly.
- Operate the system and determine if the concern is still present.

Is the concern still present?

Yes	CHECK OASIS for any applicable Technical Service Bulletins (TSBs). If a TSB exists for this concern, discontinue this test and follow TSB instructions. If no Technical Service Bulletins (TSBs) address this concern, INSTALL a new FCIM . REFER to: Front Controls Interface Module (FCIM) (415-00A Information and Entertainment System - General Information - Vehicles With: AM/FM/CD, Removal and Installation).
No	The system is operating correctly at this time. The concern may have been caused by module connections. ADDRESS the root cause of any connector or pin issues.

J9 CHECK FOR CORRECT FCDIM (FRONT CONTROL/DISPLAY INTERFACE MODULE) OPERATION

- Ignition OFF.
- Disconnect and inspect the FCDIM connector.
- Repair:
  - corrosion (install new connectors or terminals - clean module pins)
  - damaged or bent pins - install new terminals pins
  - pushed-out pins - install new pins as necessary
- Reconnect the FCDIM connector. Make sure it seats and latches correctly.
- Operate the system and determine if the concern is still present.

Is the concern still present?

Yes	CHECK OASIS for any applicable Technical Service Bulletins (TSBs). If a TSB exists for this concern, discontinue this test and follow TSB instructions. If no Technical Service Bulletins (TSBs) address this concern, INSTALL a new FCDIM . REFER to: Front Control/Display Interface Module (FCDIM) (415-00A Information and Entertainment System - General Information - Vehicles With: AM/FM/CD, Removal and Installation).
No	The system is operating correctly at this time. The concern may have been caused by module connections. ADDRESS the root cause of any connector or pin issues.

The FCDIM Is Inoperative Or Does Not Operate Correctly

Diagnostic Overview

Diagnostics in this manual assume a certain skill level and knowledge of Ford-specific diagnostic practices. For information about these practices,
REFER to: Diagnostic Methods (100-00 General Information, Description and Operation).

Normal Operation and Fault Conditions

REFER to: Information and Entertainment System - System Operation and Component Description (415-00A Information and Entertainment System - General Information - Vehicles With: AM/FM/CD, Description and Operation).
See FCDIM .

Possible Sources

- Fuse
- Wiring, terminals, or connectors
- FCDIM

PINPOINT TEST K : THE FCDIM (FRONT CONTROL/DISPLAY INTERFACE MODULE) IS INOPERATIVE OR DOES NOT OPERATE CORRECTLY

K1 VERIFY THAT THE FCDIM (FRONT CONTROL/DISPLAY INTERFACE MODULE) PASSES THE NETWORK TEST

- Using a diagnostic scan tool, perform the network test.

Did the FCDIM pass the network test?

Yes	GO to K2
No	REFER to: Communications Network (418-00 Module Communications Network, Diagnosis and Testing). See The FCDIM Does Not Respond To The Diagnostic Scan Tool.

K2 OBSERVE THE FCDIM (FRONT CONTROL/DISPLAY INTERFACE MODULE) DISPLAY

- Turn the audio system on and verify the FCDIM operation.

Is the FCDIM screen completely inoperative or blank?

Yes	GO to K4
No	GO to K3

K3 CHECK FOR LOST COMMUNICATION DIAGNOSTIC TROUBLE CODES (DTCS) SET IN THE FCDIM (FRONT CONTROL/DISPLAY INTERFACE MODULE)

- Ignition ON.
- Using a diagnostic scan tool, retrieve all continuous Diagnostic Trouble Codes (DTCs).

Are any lost communication Diagnostic Trouble Codes (DTCs) (U-codes) present in the FCDIM ?

Yes	REFER to: Information and Entertainment System (415-00A Information and Entertainment System - General Information - Vehicles With: AM/FM/CD, Diagnosis and Testing). See DTC Chart: FCDIM - Base.
No	GO to K4

K4 CHECK FOR CORRECT FCDIM (FRONT CONTROL/DISPLAY INTERFACE MODULE) OPERATION

- Ignition OFF.
- Disconnect and inspect the FCDIM connector.
- Repair:
  - corrosion (install new connectors or terminals - clean module pins)
  - damaged or bent pins - install new terminals pins
  - pushed-out pins - install new pins as necessary
- Reconnect the FCDIM connector. Make sure it seats and latches correctly.
- Operate the system and determine if the concern is still present.

Is the concern still present?

Yes	CHECK OASIS for any applicable Technical Service Bulletins (TSBs). If a TSB exists for this concern, discontinue this test and follow TSB instructions. If no Technical Service Bulletins (TSBs) address this concern, INSTALL a new FCDIM . REFER to: Front Control/Display Interface Module (FCDIM) (415-00A Information and Entertainment System - General Information - Vehicles With: AM/FM/CD, Removal and Installation).
No	The system is operating correctly at this time. The concern may have been caused by module

	connections. ADDRESS the root cause of any connector or pin issues.

One Or More FCDIM Displays Are Inoperative Or Do Not Operate Correctly

Diagnostic Overview

Diagnostics in this manual assume a certain skill level and knowledge of Ford-specific diagnostic practices. For information about these practices,
REFER to: Diagnostic Methods (100-00 General Information, Description and Operation).

Normal Operation and Fault Conditions

All of the displays on the FCDIM screen are controlled through network messages. The modules sending display data to the FCDIM are:

- ACM : audio system information
- IPC : warning messages and indicators

If the FCDIM loses the signal from either of these modules, only those specific displays will be inoperative.

Possible Sources

- Customer error
- FCDIM

PINPOINT TEST L : ONE OR MORE FCDIM (FRONT CONTROL/DISPLAY INTERFACE MODULE) DISPLAYS ARE INOPERATIVE OR DO NOT OPERATE CORRECTLY

L1 VERIFY THAT THE FCDIM (FRONT CONTROL/DISPLAY INTERFACE MODULE) PASSES THE NETWORK TEST

- Using a diagnostic scan tool, perform the network test.

Did the FCDIM pass the network test?

Yes	GO to L2
No	REFER to: Communications Network (418-00 Module Communications Network, Diagnosis and Testing). See The FCDIM Does Not Respond To The Diagnostic Scan Tool.

L2 CHECK FOR LOST COMMUNICATION DIAGNOSTIC TROUBLE CODES (DTCS) SET IN THE FCDIM (FRONT CONTROL/DISPLAY INTERFACE MODULE)

- Ignition ON.
- Using a diagnostic scan tool, retrieve all continuous Diagnostic Trouble Codes (DTCs).

Are any lost communication Diagnostic Trouble Codes (DTCs) (U-codes) present in the FCDIM ?

Yes	REFER to: Information and Entertainment System (415-00A Information and Entertainment System - General Information - Vehicles With: AM/FM/CD, Diagnosis and Testing). See DTC Chart: FCDIM - Base.
No	GO to L3

L3 CHECK THE FCDIM (FRONT CONTROL/DISPLAY INTERFACE MODULE) DISPLAY SEGMENTS

- Using a diagnostic scan tool, view the FCDIM Parameter Identifications (PIDs).
- Command all of the LCD segments on using the FCDIM active command LCD_SEG (All LCD Segments).

Do all of the FCDIM segments illuminate?

Yes	The system is operating correctly at this time. INFORM the customer of the operation of the FCDIM display.
No	GO to L4

L4 CHECK FOR CORRECT FCDIM (FRONT CONTROL/DISPLAY INTERFACE MODULE) OPERATION

- Ignition OFF.
- Disconnect and inspect the FCDIM connector.
- Repair:
  - corrosion (install new connectors or terminals - clean module pins)
  - damaged or bent pins - install new terminals pins
  - pushed-out pins - install new pins as necessary
- Reconnect the FCDIM connector. Make sure it seats and latches correctly.
- Operate the system and determine if the concern is still present.

Is the concern still present?

Yes	CHECK OASIS for any applicable Technical Service Bulletins (TSBs). If a TSB exists for this concern, discontinue this test and follow TSB instructions. If no Technical Service Bulletins (TSBs) address this concern, INSTALL a new FCDIM . REFER to: Front Control/Display Interface Module (FCDIM) (415-00A Information and Entertainment System - General Information - Vehicles With: AM/FM/CD, Removal and Installation).
No	The system is operating correctly at this time. The concern may have been caused by module connections. ADDRESS the root cause of any connector or pin issues.

The Steering Wheel Controls Are Inoperative Or Do Not Operate Correctly

Refer to Wiring Diagrams Cell 130 for schematic and connector information.

Diagnostic Overview

Diagnostics in this manual assume a certain skill level and knowledge of Ford-specific diagnostic practices. For information about these practices,
REFER to: Diagnostic Methods (100-00 General Information, Description and Operation).

Normal Operation and Fault Conditions

REFER to: Information and Entertainment System - System Operation and Component Description (415-00A Information and Entertainment System - General Information - Vehicles With: AM/FM/CD, Description and Operation).
See Steering Wheel Switch Function.

DTC Fault Trigger Conditions

DTC	Description	Fault Trigger Conditions
B10BD:11	Multifunctional Switch: Circuit Short to Ground	Set by the FCDIM when a short to ground is detected in the RH steering wheel switch circuits.
B10BD:13	Multifunctional Switch: Circuit Open	Set by the FCDIM when an open is detected in the RH steering wheel switch circuits.
B10BD:23	Multifunctional Switch: Signal Stuck Low	Set by the FCDIM when the RH steering wheel switch is stuck for more than 2 minutes during normal operation.

Visual Inspection and Diagnostic Pre-checks

Inspect the RH steering wheel switches for a sticking condition.

Possible Sources

- Wiring, terminals, or connectors
- Clockspring
- Steering wheel switch
- FCDIM

PINPOINT TEST M : THE STEERING WHEEL CONTROLS ARE INOPERATIVE OR DO NOT OPERATE CORRECTLY

M1 CHECK THE RH (RIGHT-HAND) STEERING WHEEL SWITCH PARAMETER IDENTIFICATIONS (PIDS)

- Ignition ON.
- Using a diagnostic scan tool, view the FCDIM Parameter Identifications (PIDs).
- Monitor the steering wheel controls Parameter Identifications (PIDs) while pressing each RH steering wheel switch.
  - Mode (SW_MODE)
  - Seek+ (SW_SEEKPLUS)
  - Seek– (SW_SEEKMINUS
  - Vol+ (SW_VOLUP)
  - Vol- (SW_VOLDOWN)

Do the Parameter Identification (PID) values agree with the switch positions?

Yes	GO to M14
No	If one or more, but not all Parameter Identification (PID) values are incorrect or always read one particular switch position, INSTALL a new RH steering wheel switch. REFER to: Steering Wheel Multifunction Switch (211-05 Steering Column Switches, Removal and Installation). If all Parameter Identification (PID) values are incorrect or always read one particular switch position, GO to M2

M2 CHECK THE CIRCUITRY TO THE CLOCKSPRING FOR A SHORT TO GROUND

WARNING: Turn the ignition OFF and wait one minute to deplete the backup power supply. Failure to follow this instruction may result in serious personal injury or death in the event of an accidental deployment.

- Ignition OFF.
- Disconnect: FCDIM C2123.
- Disconnect: Clockspring C218A.
- Measure:

Positive Lead	Measurement / Action	Negative Lead
C2123-7	Ω	—
C2123-10	Ω	—

Are the resistances greater than 10,000 ohms?

Yes	GO to M3
No	Repair the circuit in question.

M3 CHECK THE CIRCUITRY TO THE CLOCKSPRING FOR A SHORT TOGETHER

- Measure:

Positive Lead	Measurement / Action	Negative Lead
C2123-7	Ω	C2123-10

Is the resistance greater than 10,000 ohms?

Yes	GO to M4
No	Repair the circuit in question.

M4 CHECK THE CIRCUITRY TO THE CLOCKSPRING FOR AN OPEN

- Measure:

Positive Lead	Measurement / Action	Negative Lead
C2123-7	Ω	C218A-5
C2123-10	Ω	C218A-6

Are the resistances less than 3 ohms?

Yes	GO to M5
No	Repair the circuit in question.

M5 CHECK THE CLOCKSPRING FOR A SHORT TO GROUND

- Connect: Clockspring C218A.
- Remove the driver airbag and leave inline C260 connected.
  REFER to: Driver Airbag (501-20B Supplemental Restraint System, Removal and Installation).
- Disconnect: Clockspring C218B.
- Measure:

Positive Lead	Measurement / Action	Negative Lead
C2123-7	Ω	—
C2123-10	Ω	—

Are the resistances greater than 10,000 ohms?

Yes	GO to M6
No	INSTALL a new clockspring. REFER to: Clockspring (501-20B Supplemental Restraint System, Removal and Installation).

M6 CHECK THE CLOCKSPRING FOR A SHORT TOGETHER

- Measure:

Positive Lead	Measurement / Action	Negative Lead
C2123-7	Ω	C2123-10

Is the resistance greater than 10,000 ohms?

Yes	GO to M7
No	INSTALL a new clockspring. REFER to: Clockspring (501-20B Supplemental Restraint System, Removal and Installation).

M7 CHECK THE CLOCKSPRING FOR AN OPEN

- Measure:

Positive Lead	Measurement / Action	Negative Lead
C2123-7	Ω	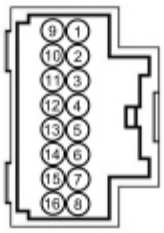 E144650 C218B-11 (Component Side)
C2123-10	Ω	

		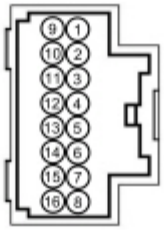 E144650 C218B-12 (Component Side)

Are the resistances less than 3 ohms?

Yes	GO to M8
No	INSTALL a new clockspring. REFER to: Clockspring (501-20B Supplemental Restraint System, Removal and Installation).

M8 CHECK THE STEERING WHEEL HARNESS FOR A SHORT TO GROUND

- Connect: Clockspring C218B.
- Disconnect: Inline C260.
- Measure:

Positive Lead	Measurement / Action	Negative Lead
C2123-7	Ω	—
C2123-10	Ω	—

Are the resistances greater than 10,000 ohms?

Yes	GO to M9
No	INSTALL a new steering wheel. REFER to: Steering Wheel (211-04 Steering Column, Removal and Installation).

M9 CHECK THE STEERING WHEEL HARNESS FOR A SHORT TOGETHER

- Measure:

Positive Lead	Measurement / Action	Negative Lead
C2123-7	Ω	C2123-10

Is the resistance greater than 10,000 ohms?

Yes	GO to M10

No	INSTALL a new steering wheel. REFER to: Steering Wheel (211-04 Steering Column, Removal and Installation).

M10 CHECK THE STEERING WHEEL HARNESS FOR AN OPEN

- Measure:

Positive Lead	Measurement / Action	Negative Lead
C2123-7	Ω	C260-4
C2123-10	Ω	C260-5

Are the resistances less than 3 ohms?

Yes	GO to M11
No	INSTALL a new steering wheel. REFER to: Steering Wheel (211-04 Steering Column, Removal and Installation).

M11 CHECK THE AIRBAG HARNESS FOR A SHORT TO GROUND

- Connect: Inline C260.
- Disconnect: RH Steering Wheel Switch C2999.
- Measure:

Positive Lead	Measurement / Action	Negative Lead
C2123-7	Ω	—
C2123-10	Ω	—

Are the resistances greater than 10,000 ohms?

Yes	GO to M12
No	INSTALL a new driver airbag. REFER to: Driver Airbag (501-20B Supplemental Restraint System, Removal and Installation).

M12 CHECK THE AIRBAG HARNESS FOR A SHORT TOGETHER

- Measure:

Positive Lead	Measurement / Action	Negative Lead
C2123-7	Ω	C2123-10

Is the resistance greater than 10,000 ohms?

Yes	GO to M13
No	INSTALL a new driver airbag. REFER to: Driver Airbag (501-20B Supplemental Restraint System, Removal and Installation).

M13 CHECK THE AIRBAG HARNESS FOR AN OPEN

- Measure:

Positive Lead	Measurement / Action	Negative Lead
C2123-7	Ω	C2999-2
C2123-10	Ω	C2999-1

Are the resistances less than 3 ohms?

Yes	INSTALL a new RH steering wheel switch. REFER to: Steering Wheel Multifunction Switch (211-05 Steering Column Switches, Removal and Installation).
No	INSTALL a new driver airbag. REFER to: Driver Airbag (501-20B Supplemental Restraint System, Removal and Installation).

M14 CHECK FOR CORRECT FCDIM (FRONT CONTROL/DISPLAY INTERFACE MODULE) OPERATION

- Ignition OFF.
- Disconnect and inspect the FCDIM connector.
- Repair:
  - corrosion (install new connectors or terminals - clean module pins)
  - damaged or bent pins - install new terminals pins
  - pushed-out pins - install new pins as necessary
- Reconnect the FCDIM connector. Make sure it seats and latches correctly.
- Operate the system and determine if the concern is still present.

Is the concern still present?

Yes	CHECK OASIS for any applicable Technical Service Bulletins (TSBs). If a TSB exists for this concern, discontinue this test and follow TSB instructions. If no Technical Service Bulletins (TSBs) address this concern, INSTALL a new FCDIM . REFER to: Front Control/Display Interface Module (FCDIM) (415-00A Information and Entertainment System - General Information - Vehicles With: AM/FM/CD, Removal and Installation).
No	The system is operating correctly at this time. The concern may have been caused by module connections. ADDRESS the root cause of any connector or pin issues.

The Audio Input Jack Is Inoperative Or Has Poor Sound Quality

Refer to Wiring Diagrams Cell 130 for schematic and connector information.

Diagnostic Overview

Diagnostics in this manual assume a certain skill level and knowledge of Ford-specific diagnostic practices. For information about these practices,
REFER to: Diagnostic Methods (100-00 General Information, Description and Operation).

Normal Operation and Fault Conditions

REFER to: Information and Entertainment System - System Operation and Component Description (415-00A Information and Entertainment System - General Information - Vehicles With: AM/FM/CD, Description and Operation).
See Audio Input Jack Mode.

Visual Inspection and Diagnostic Pre-checks

Make sure the MP3 device is operating correctly.

Possible Sources

- Wiring, terminals, or connectors
- Audio input jack
- Steering wheel switch
- ACM

PINPOINT TEST N : THE AUDIO INPUT JACK IS INOPERATIVE OR HAS POOR SOUND QUALITY

N1 CHECK THE AUDIO INPUT JACK AUDIO FUNCTIONALITY

- Connect: Multi-Media Interface Tester 105-00120.
- Using the Multi-Media Interface Tester 105-00120, attempt to play an audio file using the using the audio input jack.

Is the audio output OK for the audio input jack?

Yes	The system is operating correctly at this time. The concern may be with the customer's device.
No	GO to N2

N2 CHECK THE AUDIO INPUT JACK CIRCUITS FOR A SHORT TO VOLTAGE

- Ignition OFF.
- Disconnect: Audio Input Jack.
- Disconnect: ACM C240A
- Ignition ON.
- Measure:

Positive Lead	Measurement / Action	Negative Lead
C2401-1		—
C2401-3		—
C2401-4		—

Is any voltage present?

Yes	REPAIR the circuit in question.

No	GO to N3

N3 CHECK THE AUDIO INPUT JACK CIRCUITS FOR A SHORT TO GROUND

- Ignition OFF.
- Measure:

Positive Lead	Measurement / Action	Negative Lead
C2401-1	Ω	—
C2401-3	Ω	—
C2401-4	Ω	—

Is the resistance greater than 10,000 ohms?

Yes	GO to N4
No	REPAIR the circuit. TEST the system for normal operation.

N4 CHECK THE AUDIO INPUT JACK CIRCUITS FOR AN OPEN

- Measure:

Positive Lead	Measurement / Action	Negative Lead
C2401-1	Ω	C240A-18
C2401-3	Ω	C240A-6
C2401-4	Ω	C240A-17

Are the resistances less than 3 ohms?

Yes	GO to N5
No	REPAIR the circuit in question. TEST the system for normal operation.

N5 ISOLATE THE AUDIO INPUT JACK

- Connect: ACM C240A.
- Install a new audio input jack.
  REFER to: Audio Input Socket (415-00A Information and Entertainment System - General Information - Vehicles With: AM/FM/CD, Removal and Installation).
- Connect: Multi-Media Interface Tester 105-00120.
- Using the Multi-Media Interface Tester 105-00120, attempt to play an audio file using the using the audio input jack.

Is the audio output OK for the audio input jack?

Yes	The system is operating correctly at this time. The concern was caused by an inoperative audio input jack.

No	GO to N6

N6 CHECK FOR CORRECT ACM (AUDIO FRONT CONTROL MODULE) OPERATION

- Ignition OFF.
- Disconnect and inspect all ACM connectors.
- Repair:
  - corrosion (install new connectors or terminals - clean module pins)
  - damaged or bent pins - install new terminals pins
  - pushed-out pins - install new pins as necessary
- Reconnect all ACM connectors. Make sure they seat and latch correctly.
- Operate the system and determine if the concern is still present.

Is the concern still present?

Yes	CHECK OASIS for any applicable Technical Service Bulletins (TSBs). If a TSB exists for this concern, discontinue this test and follow TSB instructions. If no Technical Service Bulletins (TSBs) address this concern, INSTALL a new ACM . REFER to: Audio Front Control Module (ACM) (415-00A Information and Entertainment System - General Information - Vehicles With: AM/FM/CD, Removal and Installation).
No	The system is operating correctly at this time. The concern may have been caused by module connections. ADDRESS the root cause of any connector or pin issues.

U0140:00

Diagnostic Overview

Diagnostics in this manual assume a certain skill level and knowledge of Ford-specific diagnostic practices. For information about these practices,
REFER to: Diagnostic Methods (100-00 General Information, Description and Operation).

Normal Operation and Fault Conditions

DTC Fault Trigger Conditions

DTC	Description	Fault Trigger Conditions
U0140:00	Lost Communication With Body Control Module: No Sub Type Information	Set by the FCDIM when network messages are missing from the BCM for more than 5 seconds with the ignition in RUN.

PINPOINT TEST O : U0140:00

O1 VERIFY THE CUSTOMER'S CONCERN

- Ignition ON.
- Verify there is an observable symptom present.

Is an observable symptom present?

Yes	GO to O2
No	The system is operating correctly at this time. The DTC may have been set due to high network traffic or an intermittent fault condition.

O2 RECHECK FOR DTC (DIAGNOSTIC TROUBLE CODE) U0140:00

- Ignition ON.
- Using a diagnostic scan tool, clear continuous Diagnostic Trouble Codes (DTCs) from all modules.
- Ignition OFF.
- Ignition ON.
- Wait at least 10 seconds.
- Using a diagnostic scan tool, retrieve the Diagnostic Trouble Codes (DTCs) from all modules.

Is DTC U0140:00 set in the FCDIM ?

Yes	GO to O3
No	The system is operating correctly at this time. The DTC may have been set due to high network traffic or an intermittent fault condition.

O3 CHECK THE BCM (BODY CONTROL MODULE) FOR BATTERY VOLTAGE OUT-OF-RANGE DIAGNOSTIC TROUBLE CODES (DTCS)

- Using a diagnostic scan tool, perform the BCM self-test.

Are any low or high voltage Diagnostic Trouble Codes (DTCs) recorded in the BCM ?

Yes	For DTC U3003:16, REFER to: Body Control Module (BCM) (419-10 Multifunction Electronic Modules, Diagnosis and Testing). See U3003:16. For DTC U3003:17, REFER to: Body Control Module (BCM) (419-10 Multifunction Electronic Modules, Diagnosis and Testing). See U3003:17.
No	GO to O4

O4 CHECK THE FCDIM (FRONT CONTROL/DISPLAY INTERFACE MODULE) FOR BATTERY VOLTAGE OUT-OF-RANGE DIAGNOSTIC TROUBLE CODES (DTCS)

- Using a diagnostic scan tool, perform the FCDIM self-test.

Are any low or high voltage Diagnostic Trouble Codes (DTCs) recorded in the FCDIM ?

Yes	For DTC U3003:16, GO to Pinpoint Test R For DTC U3003:17, GO to Pinpoint Test S
No	GO to O5

O5 CHECK FOR CORRECT BCM (BODY CONTROL MODULE) OPERATION

- Ignition OFF.
- Disconnect and inspect all the BCM connectors.

- Repair:
  - corrosion (install new connector or terminals – clean module pins)
  - damaged pins - install new terminals/pins
  - pushed-out pins - install new pins as necessary
- Reconnect the BCM connectors. Make sure they seat and latch correctly.
- Operate the system and determine if the concern is still present.

Is the concern still present?

Yes	CHECK OASIS for any applicable Technical Service Bulletins (TSBs). If a TSB exists for this concern, discontinue this test and follow TSB instructions. If no Technical Service Bulletins (TSBs) address this concern, INSTALL a new BCM . REFER to: Body Control Module (BCM) (419-10 Multifunction Electronic Modules, Removal and Installation).
No	The system is operating correctly at this time. The concern may have been caused by module connections. ADDRESS the root cause of any connector or pin issues.

U0155:00

Diagnostic Overview

Diagnostics in this manual assume a certain skill level and knowledge of Ford-specific diagnostic practices. For information about these practices,
REFER to: Diagnostic Methods (100-00 General Information, Description and Operation).

Normal Operation and Fault Conditions

DTC Fault Trigger Conditions

DTC	Description	Fault Trigger Conditions
U0155:00	Lost Communication With IPC Control Module: No Sub Type Information	Set by the ACM and FCDIM when network messages are missing from the IPC for more than 5 seconds with the ignition in RUN.

PINPOINT TEST P : U0155:00

P1 VERIFY THE CUSTOMER'S CONCERN

- Ignition ON.
- Verify there is an observable symptom present.

Is an observable symptom present?

Yes	GO to P2
No	The system is operating correctly at this time. The DTC may have been set due to high network traffic or an intermittent fault condition.

P2 RECHECK FOR DTC (DIAGNOSTIC TROUBLE CODE) U0155:00

Ignition ON.
- Using a diagnostic scan tool, clear continuous Diagnostic Trouble Codes (DTCs) from all modules.
- Ignition OFF.
- Ignition ON.
- Wait at least 10 seconds.
- Using a diagnostic scan tool, retrieve the DTC from all modules.

Is DTC U0155:00 set in any audio system module?

Yes	GO to P3
No	The system is operating correctly at this time. The DTC may have been set due to high network traffic or an intermittent fault condition.

P3 CHECK THE IPC (INSTRUMENT PANEL CLUSTER) FOR BATTERY VOLTAGE OUT-OF-RANGE DIAGNOSTIC TROUBLE CODES (DTCS)

- Using a diagnostic scan tool, perform the IPC self-test.

Are any low or high voltage Diagnostic Trouble Codes (DTCs) recorded in the IPC ?

Yes	For DTC U3003:16, REFER to: Instrumentation, Message Center and Warning Chimes (413-01 Instrumentation, Message Center and Warning Chimes, Diagnosis and Testing). See U3003:16. For DTC U3003:17, REFER to: Instrumentation, Message Center and Warning Chimes (413-01 Instrumentation, Message Center and Warning Chimes, Diagnosis and Testing). See U3003:17.
No	GO to P4

P4 CHECK FOR BATTERY VOLTAGE OUT-OF-RANGE DIAGNOSTIC TROUBLE CODES (DTCS)

- Using a diagnostic scan tool, perform the self-test for the following modules:
  - ACM
  - FCDIM

Are any low or high voltage Diagnostic Trouble Codes (DTCs) recorded in the ACM or FCDIM ?

Yes	For DTC U3003:16, GO to Pinpoint Test R For DTC U3003:17, GO to Pinpoint Test S For DTC U3006:16, GO to Pinpoint Test T For DTC U3006:17, GO to Pinpoint Test U
No	GO to P5

P5 CHECK FOR DTC (DIAGNOSTIC TROUBLE CODE) U0155:00 SET IN MULTIPLE MODULES

- Review the recorded results from the self-tests.

Is DTC U0155:00 set in more than one module?

Yes	GO to P6
No	If there is an observable symptom,

	REFER to: Information and Entertainment System (415-00A Information and Entertainment System - General Information - Vehicles With: AM/FM/CD, Diagnosis and Testing). See Symptom Chart: General Audio System, to diagnose the observed symptom. If there is no observable symptom, the system is operating correctly at this time. The DTC may have been set due to high network traffic or an intermittent fault condition.

P6 CHECK FOR CORRECT IPC (INSTRUMENT PANEL CLUSTER) OPERATION

- Ignition OFF.
- Disconnect and inspect the IPC connector.
- Repair:
  - corrosion (install new connector or terminals – clean module pins)
  - damaged pins - install new terminals/pins
  - pushed-out pins - install new pins as necessary
- Reconnect the IPC connector. Make sure it seats and latches correctly.
- Operate the system and determine if the concern is still present.

Is the concern still present?

Yes	CHECK OASIS for any applicable Technical Service Bulletins (TSBs). If a TSB exists for this concern, discontinue this test and follow TSB instructions. If no Technical Service Bulletins (TSBs) address this concern, INSTALL a new IPC . REFER to: Instrument Panel Cluster (IPC) (413-01 Instrumentation, Message Center and Warning Chimes, Removal and Installation).
No	The system is operating correctly at this time. The concern may have been caused by module connections. ADDRESS the root cause of any connector or pin issues.

U0257:00

Diagnostic Overview

Diagnostics in this manual assume a certain skill level and knowledge of Ford-specific diagnostic practices. For information about these practices,
REFER to: Diagnostic Methods (100-00 General Information, Description and Operation).

Normal Operation and Fault Conditions

DTC Fault Trigger Conditions

DTC	Description	Fault Trigger Conditions
U0257:00	Lost Communication With Front Control/Display Interface Module: No Sub Type Information	Set by the ACM when network messages are missing from the FCDIM for more than 5 seconds with the ignition in the RUN position.

PINPOINT TEST Q : U0257:00

Q1 VERIFY THE CUSTOMER'S CONCERN

- Ignition ON.
- Verify there is an observable symptom present.

Is an observable symptom present?

Yes	GO to Q2
No	The system is operating correctly at this time. The DTC may have been set due to high network traffic or an intermittent fault condition.

Q2 RECHECK FOR DTC (DIAGNOSTIC TROUBLE CODE) U0257:00

- Ignition ON.
- Using a diagnostic scan tool, clear continuous Diagnostic Trouble Codes (DTCs) from all modules.
- Ignition OFF.
- Ignition ON.
- Wait at least 10 seconds.
- Using a diagnostic scan tool, retrieve the Diagnostic Trouble Codes (DTCs) from all modules.

Is DTC U0257:00 set in the ACM ?

Yes	GO to Q3
No	The system is operating correctly at this time. The DTC may have been set due to high network traffic or an intermittent fault condition.

Q3 CHECK FOR BATTERY VOLTAGE OUT-OF-RANGE DIAGNOSTIC TROUBLE CODES (DTCS)

- Using a diagnostic scan tool, perform the self-test for the following modules:
  - ACM
  - FCDIM

Are any low or high voltage Diagnostic Trouble Codes (DTCs) recorded in the ACM or FCDIM ?

Yes	For DTC U3003:16, GO to Pinpoint Test T For DTC U3003:17, GO to Pinpoint Test U
No	GO to Q4

Q4 CHECK FOR CORRECT FCDIM (FRONT CONTROL/DISPLAY INTERFACE MODULE) OPERATION

- Ignition OFF.
- Disconnect and inspect the FCDIM connector.
- Repair:
  - corrosion (install new connectors or terminals - clean module pins)
  - damaged or bent pins - install new terminals pins
  - pushed-out pins - install new pins as necessary
- Reconnect the FCDIM connector. Make sure it seats and latches correctly.
- Operate the system and determine if the concern is still present.

Is the concern still present?

Yes	CHECK OASIS for any applicable Technical Service Bulletins (TSBs). If a TSB exists for this concern, discontinue this test and follow TSB instructions. If no Technical Service Bulletins (TSBs) address this concern, INSTALL a new FCDIM . REFER to: Front Control/Display Interface Module (FCDIM) (415-00A Information and Entertainment System - General Information - Vehicles With: AM/FM/CD, Removal and Installation).
No	The system is operating correctly at this time. The concern may have been caused by module

	connections. ADDRESS the root cause of any connector or pin issues.

U3003:16

Diagnostic Overview

Diagnostics in this manual assume a certain skill level and knowledge of Ford-specific diagnostic practices. For information about these practices,
REFER to: Diagnostic Methods (100-00 General Information, Description and Operation).

Normal Operation and Fault Conditions

DTC Fault Trigger Conditions

DTC	Description	Fault Trigger Conditions
U3003:16	Battery Voltage: Circuit Voltage Below Threshold	Set by the ACM when the supply voltage falls below 10 volts for at least 10 seconds during normal operation or for more than 250 milliseconds during the self-test.

PINPOINT TEST R : U3003:16

R1 RECHECK FOR ACM (AUDIO FRONT CONTROL MODULE) DTC (DIAGNOSTIC TROUBLE CODE) U3003:16

- Ignition ON.
- Using a diagnostic scan tool, clear the ACM Diagnostic Trouble Codes (DTCs).
- Ignition OFF.
- Ignition ON.
- WAIT at least 10 seconds.
- Using a diagnostic scan tool, repeat the ACM self-test.

Is DTC U3003:16 still present?

Yes	GO to R2
No	The system is operating correctly at this time. The DTC may have been set due to a previous low battery voltage condition.

R2 CHECK FOR CHARGING SYSTEM DIAGNOSTIC TROUBLE CODES (DTCS) IN THE PCM (POWERTRAIN CONTROL MODULE)

- Using a diagnostic scan tool, retrieve the continuous memory Diagnostic Trouble Codes (DTCs) from all modules.

Are any voltage-related Diagnostic Trouble Codes (DTCs) set in the PCM ?

Yes	REFER to: Electronic Engine Controls (303-14A Electronic Engine Controls - 2.0L Duratec-HE (125kW/170PS) - MI4, Diagnosis and Testing). See DTC Chart: PCM .
No	GO to R3

R3 CHECK THE BATTERY CONDITION AND STATE OF CHARGE

- Check the battery condition and verify that the battery is fully charged.
  REFER to: Battery (414-01 Battery, Mounting and Cables, Diagnosis and Testing).
  See Battery Condition Test.

Is the battery OK and fully charged?

Yes	GO to R4
No	REFER to: Charging System - 2.0L Duratec-HE (125kW/170PS) - MI4 (414-00 Charging System - General Information, Diagnosis and Testing). See Symptom Chart: Charging System.

R4 CHECK THE ACM (AUDIO FRONT CONTROL MODULE) VOLTAGE SUPPLY

- Ignition OFF.
- Measure and record the voltage at the battery.
- Disconnect ACM C240A.
- Ignition ON.
- Measure:

Positive Lead	Measurement / Action	Negative Lead
C240A-1	V	—

Is the voltage within 0.2 volts of the recorded battery voltage?

Yes	GO to R5
No	REPAIR the circuit for high resistance.

R5 CHECK THE ACM (AUDIO FRONT CONTROL MODULE) GROUND CIRCUIT FOR CONTINUITY

- Measure:

Positive Lead	Measurement / Action	Negative Lead
C240A-1	V	C240A-13

Is the suspect module voltage greater than 11 volts?

Yes	GO to R6
No	REPAIR the circuit for high resistance.

R6 CHECK FOR CORRECT ACM (AUDIO FRONT CONTROL MODULE) OPERATION

- Ignition OFF.
- Disconnect and inspect all the ACM connectors.
- Repair:
  - corrosion (install new connector or terminals – clean module pins)
  - damaged pins - install new terminals/pins
  - pushed-out pins - install new pins as necessary
- Reconnect the ACM connectors. Make sure they seat and latch correctly.
- Operate the system and determine if the concern is still present.

Is the concern still present?

Yes	CHECK OASIS for any applicable Technical Service Bulletins (TSBs). If a TSB exists for this concern, discontinue this test and follow TSB instructions. If no Technical Service Bulletins (TSBs) address this concern, INSTALL a new ACM . REFER to: Audio Front Control Module (ACM) (415-00A Information and Entertainment System - General Information - Vehicles With: AM/FM/CD, Removal and Installation).
No	The system is operating correctly at this time. The concern may have been caused by module connections. ADDRESS the root cause of any connector or pin issues.

U3003:17

Diagnostic Overview

Diagnostics in this manual assume a certain skill level and knowledge of Ford-specific diagnostic practices. For information about these practices,
REFER to: Diagnostic Methods (100-00 General Information, Description and Operation).

Normal Operation and Fault Conditions

DTC Fault Trigger Conditions

DTC	Description	Fault Trigger Conditions
U3003:17	Battery Voltage: Circuit Voltage Above Threshold	Set by the ACM when the supply voltage is more than 15.8 volts for more than 250 milliseconds during normal operation or the self-test.

PINPOINT TEST S : U3003:17

S1 RECHECK FOR DTC (DIAGNOSTIC TROUBLE CODE) U3003:17

- Ignition ON.
- Using a diagnostic scan tool, clear the continuous memory ACM Diagnostic Trouble Codes (DTCs).
- WAIT at least 10 seconds.
- Using a diagnostic scan tool, perform the ACM self-test.

Is DTC U3003:17 present?

Yes	GO to S2
No	The system is operating correctly at this time. The DTC may have been set previously during battery charging or while jump starting the vehicle.

S2 CHECK FOR HIGH VOLTAGE DTC (DIAGNOSTIC TROUBLE CODE) SET IN OTHER MODULES

- Ignition ON.
- Using a diagnostic scan tool, retrieve all continuous Diagnostic Trouble Codes (DTCs) from all modules.

Are high voltage Diagnostic Trouble Codes (DTCs) (e.g. B1676, P0563, U3003:17) set in more than one module?

Yes	To diagnose the overcharging condition, REFER to: Charging System - 2.0L Duratec-HE (125kW/170PS) - MI4 (414-00 Charging System - General Information, Diagnosis and Testing). See Symptom Chart: Charging System.
No	GO to S3

S3 CHECK THE BATTERY VOLTAGE

- Turn off all interior lights, exterior lights, and accessories.
- Start and run the engine at approximately 2,000 RPM for 3 minutes while monitoring the battery voltage.

Does the battery voltage rise to 15.5 volts or higher?

Yes	To diagnose the overcharging condition, REFER to: Charging System - 2.0L Duratec-HE (125kW/170PS) - MI4 (414-00 Charging System - General Information, Diagnosis and Testing). See Symptom Chart: Charging System.
No	GO to S4

S4 CHECK FOR CORRECT ACM (AUDIO FRONT CONTROL MODULE) OPERATION

- Ignition OFF.
- Disconnect and inspect all the ACM connectors.
- Repair:
  - corrosion (install new connector or terminals – clean module pins)
  - damaged pins - install new terminals/pins
  - pushed-out pins - install new pins as necessary
- Reconnect the ACM connectors. Make sure they seat and latch correctly.
- Operate the system and determine if the concern is still present.

Is the concern still present?

Yes	CHECK OASIS for any applicable Technical Service Bulletins (TSBs). If a TSB exists for this concern, discontinue this test and follow TSB instructions. If no Technical Service Bulletins (TSBs) address this concern, INSTALL a new ACM . REFER to: Audio Front Control Module (ACM) (415-00A Information and Entertainment System - General Information - Vehicles With: AM/FM/CD, Removal and Installation).
No	The system is operating correctly at this time. The concern may have been caused by module connections. ADDRESS the root cause of any connector or pin issues.

U3006:16

Diagnostic Overview

Diagnostics in this manual assume a certain skill level and knowledge of Ford-specific diagnostic practices. For information about these practices,
REFER to: Diagnostic Methods (100-00 General Information, Description and Operation).

Normal Operation and Fault Conditions

DTC Fault Trigger Conditions

DTC	Description	Fault Trigger Conditions
U3006:16	Control Module Input Power “A”: Circuit Voltage Below Threshold	Set by the FCDIM when the supply voltage falls below 8.5 volts for at least 1 second during normal operation.

PINPOINT TEST T : U3006:16

T1 RECHECK FOR DTC (DIAGNOSTIC TROUBLE CODE) U3006:16

- Ignition ON.
- Using a diagnostic scan tool, clear the FCDIM Diagnostic Trouble Codes (DTCs).
- Ignition OFF.
- Ignition ON.
- WAIT at least 10 seconds.
- Using a diagnostic scan tool, repeat the FCDIM self-test.

Is DTC U3003:16 still present?

Yes	GO to T2
No	The system is operating correctly at this time. The DTC may have been set due to a previous low battery voltage condition.

T2 CHECK FOR CHARGING SYSTEM DTC (DIAGNOSTIC TROUBLE CODE) IN THE PCM (POWERTRAIN CONTROL MODULE)

- Using a diagnostic scan tool, retrieve the continuous memory Diagnostic Trouble Codes (DTCs) from all modules.

Are any voltage-related Diagnostic Trouble Codes (DTCs) set in the PCM ?

Yes	REFER to: Electronic Engine Controls (303-14A Electronic Engine Controls - 2.0L Duratec-HE (125kW/170PS) - MI4, Diagnosis and Testing). See DTC Chart: PCM .
No	GO to T3

T3 CHECK THE BATTERY CONDITION AND STATE OF CHARGE

- Check the battery condition and verify that the battery is fully charged.
  REFER to: Battery (414-01 Battery, Mounting and Cables, Diagnosis and Testing).
  See Battery Condition Test.

Is the battery OK and fully charged?

Yes	GO to T4
No	REFER to: Charging System - 2.0L Duratec-HE (125kW/170PS) - MI4 (414-00 Charging System - General Information, Diagnosis and Testing). See Symptom Chart: Charging System.

T4 CHECK THE FCDIM (FRONT CONTROL/DISPLAY INTERFACE MODULE) VOLTAGE SUPPLY

- Ignition OFF.
- Measure and record the voltage at the battery.
- Disconnect FCDIM C2123 C240A.
- Ignition ON.
- Measure:

Positive Lead	Measurement / Action	Negative Lead
C2123-1	V	—

Is the voltage within 0.2 volts of the recorded battery voltage?

Yes	GO to T5
No	REPAIR the circuit for high resistance.

T5 CHECK THE FCDIM (FRONT CONTROL/DISPLAY INTERFACE MODULE) GROUND CIRCUIT FOR CONTINUITY

- Ignition OFF.
- Measure:

Positive Lead	Measurement / Action	Negative Lead
C2123-9	Ω	—
C2123-11	Ω	—

Is the resistance less than 3 ohms?

Yes	GO to T6
No	REPAIR the circuit for high resistance.

T6 CHECK FOR CORRECT FCDIM (FRONT CONTROL/DISPLAY INTERFACE MODULE) OPERATION

- Ignition OFF.
- Disconnect and inspect the FCDIM connector.
- Repair:
  - corrosion (install new connectors or terminals - clean module pins)

damaged or bent pins - install new terminals pins
  - pushed-out pins - install new pins as necessary
- Reconnect the FCDIM connector. Make sure it seats and latches correctly.
- Operate the system and determine if the concern is still present.

Is the concern still present?

Yes	CHECK OASIS for any applicable Technical Service Bulletins (TSBs). If a TSB exists for this concern, discontinue this test and follow TSB instructions. If no Technical Service Bulletins (TSBs) address this concern, INSTALL a new FCDIM . REFER to: Front Control/Display Interface Module (FCDIM) (415-00A Information and Entertainment System - General Information - Vehicles With: AM/FM/CD, Removal and Installation).
No	The system is operating correctly at this time. The concern may have been caused by module connections. ADDRESS the root cause of any connector or pin issues.

U3006:17

Diagnostic Overview

Diagnostics in this manual assume a certain skill level and knowledge of Ford-specific diagnostic practices. For information about these practices,
REFER to: Diagnostic Methods (100-00 General Information, Description and Operation).

Normal Operation and Fault Conditions

DTC Fault Trigger Conditions

DTC	Description	Fault Trigger Conditions
U3006:17	Control Module Input Power “A”: Circuit Voltage Above Threshold	Set by the FCDIM when the supply voltage is more than 16.5 volts for at least 1 second during normal operation.

PINPOINT TEST U : U3006:17

U1 RECHECK FOR DTC (DIAGNOSTIC TROUBLE CODE) U3006:17

- Ignition ON.
- Using a diagnostic scan tool, clear the continuous memory FCDIM Diagnostic Trouble Codes (DTCs).
- WAIT at least 10 seconds.
- Using a diagnostic scan tool, perform the FCDIM self-test.

Is DTC U3006:17 present?

Yes	GO to U2
No	The system is operating correctly at this time. The DTC may have been set previously during battery charging or while jump starting the vehicle.

U2 CHECK FOR HIGH VOLTAGE DIAGNOSTIC TROUBLE CODES (DTCS) SET IN OTHER MODULES

- Ignition ON.
- Using a diagnostic scan tool, retrieve all continuous Diagnostic Trouble Codes (DTCs) from all modules.

Are high voltage Diagnostic Trouble Codes (DTCs) (e.g. B1676, P0563, U3003:17) set in more than one module?

Yes	To diagnose the overcharging condition, REFER to: Charging System - 2.0L Duratec-HE (125kW/170PS) - MI4 (414-00 Charging System - General Information, Diagnosis and Testing). See Symptom Chart: Charging System.
No	GO to U3

U3 CHECK THE BATTERY VOLTAGE

- Turn off all interior lights, exterior lights, and accessories.
- Start and run the engine at approximately 2,000 RPM for 3 minutes while monitoring the battery voltage.

Does the battery voltage rise to 16.5 volts or higher?

Yes	To diagnose the overcharging condition, REFER to: Charging System - 2.0L Duratec-HE (125kW/170PS) - MI4 (414-00 Charging System - General Information, Diagnosis and Testing). See Symptom Chart: Charging System.
No	GO to U4

U4 CHECK FOR CORRECT FCDIM (FRONT CONTROL/DISPLAY INTERFACE MODULE) OPERATION

- Ignition OFF.
- Disconnect and inspect the FCDIM connector.
- Repair:
  - corrosion (install new connectors or terminals - clean module pins)
  - damaged or bent pins - install new terminals pins
  - pushed-out pins - install new pins as necessary
- Reconnect the FCDIM connector. Make sure it seats and latches correctly.
- Operate the system and determine if the concern is still present.

Is the concern still present?

Yes	CHECK OASIS for any applicable Technical Service Bulletins (TSBs). If a TSB exists for this concern, discontinue this test and follow TSB instructions. If no Technical Service Bulletins (TSBs) address this concern, INSTALL a new FCDIM . REFER to: Front Control/Display Interface Module (FCDIM) (415-00A Information and Entertainment System - General Information - Vehicles With: AM/FM/CD, Removal and Installation).
No	The system is operating correctly at this time. The concern may have been caused by module connections. ADDRESS the root cause of any connector or pin issues.

The Clock Does Not Operate Properly

Diagnostic Overview

Diagnostics in this manual assume a certain skill level and knowledge of Ford-specific diagnostic practices. For information about these practices,

REFER to: Diagnostic Methods (100-00 General Information, Description and Operation).

Normal Operation and Fault Conditions

The BCM contains the clock software and sends the date/time data information to the FCDIM via the (id=228)Medium Speed Controller Area Network (MS-CAN). If any communication DTCs between the BCM and the FCDIM are retrieved they should be diagnosed first.

PINPOINT TEST V : THE CLOCK DOES NOT OPERATE PROPERLY

V1 CARRY OUT THE NETWORK TEST

- Ignition ON.
- Using the scan tool carry out the network test on the BCM and the FCDIM .

Do the BCM and the FCDIM pass the network test

Yes	GO to V2
No	To diagnose the module in question does not respond to the scan tool, REFER to: Communications Network (418-00 Module Communications Network, Diagnosis and Testing).

V2 VERIFY THE CUSTOMER CONCERN

NOTE: *The clock should not see more than a loss or gain of 45 seconds to 1 minute per month.*

- Verify with the customer that the clock is losing time.

Is there a loss or gain more than 1 minute per month?

Yes	GO to V3
No	If the clock display is not displaying properly, GO to Pinpoint Test Y Otherwise the clock is operating correctly at this time.

V3 CHECK FOR CORRECT BCM (BODY CONTROL MODULE) OPERATION

- Ignition OFF.
- Disconnect and inspect the BCM connector.
- Repair:
  - corrosion (install new connector or terminals – clean module pins)
  - damaged pins - install new terminals/pins
  - pushed-out pins - install new pins as necessary
- Reconnect the BCM connector. Make sure it seats and latches correctly.
- Operate the system and determine if the concern is still present.

Is the concern still present?

Yes	INSTALL a new BCM .
No	The system is operating correctly at this time. The concern may have been caused by a loose or corroded connector.

Copyright © Ford Motor Company

Specifications

Torque Specifications

Item	Nm	lb-ft	lb-in
APIM screws	1	-	9
AM/FM/Satellite antenna mounting bolt	10	-	89
ACM screws	1.3	-	12
Front door speakers	2	-	18
Rear door speaker	2	-	18
Door speaker mounting plate screws	2	-	18
FCDIM screws	1.3	-	12
FCDIM mounting bezel screws	2	-	19
FCIM screws	1.2	-	11

Copyright © Ford Motor Company

Information and Entertainment System

DTC Chart: ACM - Premium

Diagnostics in this manual assume a certain skill level and knowledge of Ford-specific diagnostic practices. For information about these practices,
REFER to: Diagnostic Methods (100-00 General Information, Description and Operation).

For a SYNC®-related concern, refer to the SYNC® System Symptom Chart before connecting the scan tool and beginning DTC -based diagnostics.

ACM DTC Chart - Premium

DTC	Description	Action
B1A01:01	Speaker #1: General Electrical Failure	• For a Left Front (LF) door speaker concern, GO to Pinpoint Test G • For a Left Front (LF) door tweeter speaker concern, GO to Pinpoint Test H
B1A01:11	Speaker #1: Circuit Short To Ground	• For a Left Front (LF) door speaker concern, GO to Pinpoint Test G • For a Left Front (LF) door tweeter speaker concern, GO to Pinpoint Test H
B1A01:12	Speaker #1: Circuit Short To Battery	• For a Left Front (LF) door speaker concern, GO to Pinpoint Test G • For a Left Front (LF) door tweeter speaker concern, GO to Pinpoint Test H
B1A01:13	Speaker #1: Circuit Open	• For a Left Front (LF) door speaker concern, GO to Pinpoint Test G • For a Left Front (LF) door tweeter speaker concern, GO to Pinpoint Test H
B1A02:01	Speaker #2: General Electrical Failure	• For a Right Front (RF) door speaker concern, GO to Pinpoint Test I • For a Right Front (RF) door tweeter speaker concern, GO to Pinpoint Test J
B1A02:11	Speaker #2: Circuit Short To Ground	• For a Right Front (RF) door speaker concern, GO to Pinpoint Test I • For a Right Front (RF) door tweeter speaker concern, GO to Pinpoint Test J
B1A02:12	Speaker #2: Circuit Short To Battery	• For a Right Front (RF) door speaker concern, GO to Pinpoint Test I • For a Right Front (RF) door tweeter speaker concern, GO to Pinpoint Test J
B1A02:13	Speaker #2: Circuit Open	• For a Right Front (RF) door speaker concern, GO to Pinpoint Test I • For a Right Front (RF) door tweeter speaker concern, GO to Pinpoint Test J
B1A03:01	Speaker #3: General Electrical Failure	GO to Pinpoint Test K
B1A03:11	Speaker #3: Circuit Short To Ground	GO to Pinpoint Test K
B1A03:12	Speaker #3:	GO to Pinpoint Test K

	Circuit Short To Battery	
B1A03:13	Speaker #3: Circuit Open	GO to Pinpoint Test K
B1A04:01	Speaker #4: General Electrical Failure	GO to Pinpoint Test L
B1A04:11	Speaker #4: Circuit Short To Ground	GO to Pinpoint Test L
B1A04:12	Speaker #4: Circuit Short To Battery	GO to Pinpoint Test L
B1A04:13	Speaker #4: Circuit Open	GO to Pinpoint Test L
B1A56:21	Antenna: Signal Amplitude < Minimum	If DTC B1A56:21 sets after running the bezel diagnostic tests, disregard this DTC . This test is used for end of line or repair bay testing at the Ford plant. Each plant has its own assigned frequency and signal strength requirements. The running and passing of this test depends on local radio stations. If no local station is broadcasting on the required frequency, the test will fail. Therefore, tests ran from the bezel diagnostic screen and the DTC generated from the test can be disregarded.
B1A89:01	Satellite Antenna: General Electric Failure	GO to Pinpoint Test B
B1A89:13	Satellite Antenna: Circuit Open	GO to Pinpoint Test B
B1D19:4B	Compact Disc Unit: Over Temperature	The ACM was over temperature. This may occur during extended use. Audio operation can resume after the ACM cools. CLEAR the DTC . This is normal operation.
B1D19:49	Compact Disc Unit: Internal Electronic Failure	• CLEAR the DTC . • WAIT at least 10 seconds. • REPEAT the self-test. • If DTC B1D19:49 is retrieved again, INSTALL a new ACM . REFER to: Audio Front Control Module (ACM) (415-00B Information and Entertainment System - General Information - Vehicles With: AM/FM/CD/SYNC, Removal and Installation).
U0155:00	Lost Communication With IPC Control Module: No Sub Type Information	GO to Pinpoint Test AA
U0253:00	Lost Communication With Accessory Protocol Interface Module: No Sub Type Information	GO to Pinpoint Test AC
U0257:00	Lost Communication With Front Control/Display	GO to Pinpoint Test AD

	Interface Module: No Sub Type Information	
U201A:51	Control Module Main Calibration Data: Not Programmed	CHECK vehicle service history for recent service actions related to this module. This DTC sets due to incomplete or incorrect Programmable Module Installation (PMI) procedures. If there have been recent service actions with this module, REPEAT/PERFORM the Programmable Module Installation (PMI) procedure as directed by the diagnostic scan tool. REFER to: Module Configuration - System Operation and Component Description (418-01 Module Configuration, Description and Operation). See Programmable Module Installation (PMI). If there have been no recent service actions, INSTALL a new ACM to correct the failure to retain configuration data. REFER to: Audio Front Control Module (ACM) (415-00B Information and Entertainment System - General Information - Vehicles With: AM/FM/CD/SYNC, Removal and Installation).
U2100:00	Initial Configuration Not Complete: No Sub Type Information	CHECK vehicle service history for recent service actions related to this module. This DTC sets due to incomplete or incorrect Programmable Module Installation (PMI) procedures. If there have been recent service actions with this module, REPEAT/PERFORM the Programmable Module Installation (PMI) procedure as directed by the diagnostic scan tool. REFER to: Module Configuration - System Operation and Component Description (418-01 Module Configuration, Description and Operation). See Programmable Module Installation (PMI). If there have been no recent service actions, INSTALL a new ACM to correct the failure to retain configuration data. REFER to: Audio Front Control Module (ACM) (415-00B Information and Entertainment System - General Information - Vehicles With: AM/FM/CD/SYNC, Removal and Installation).
U2101:00	Control Module Configuration Incompatible: No Sub Type Information	CHECK vehicle service history for recent service actions related to this module. This DTC sets due to incomplete or incorrect Programmable Module Installation (PMI) procedures. If there have been recent service actions with this module, REPEAT/PERFORM the Programmable Module Installation (PMI) procedure as directed by the diagnostic scan tool. REFER to: Module Configuration - System Operation and Component Description (418-01 Module Configuration, Description and Operation). See Programmable Module Installation (PMI). If there have been no recent service actions, INSTALL a new ACM to correct the failure to retain configuration data. REFER to: Audio Front Control Module (ACM) (415-00B Information and Entertainment System - General Information - Vehicles With: AM/FM/CD/SYNC, Removal and Installation).
U3000:41	Control Module: General Checksum Failure	• CLEAR the DTC . • WAIT at least 10 seconds. • REPEAT the self-test. • If DTC U3000:41 is retrieved again, INSTALL a new ACM . REFER to: Audio Front Control Module (ACM) (415-00B Information and Entertainment System - General Information - Vehicles With: AM/FM/CD/SYNC, Removal and Installation).
U3000:42	Control Module: General Memory Failure	• CLEAR the DTC . • WAIT at least 10 seconds. • REPEAT the self-test. • If DTC U3000:42 is retrieved again, INSTALL a new ACM . REFER to: Audio Front Control Module (ACM) (415-00B Information and Entertainment System - General Information - Vehicles With: AM/FM/CD/SYNC, Removal and Installation).
U3000:96	Control Module: Component Internal Failure	GO to Pinpoint Test B
U3003:16	Battery Voltage: Circuit Voltage Below Threshold	GO to Pinpoint Test AE
U3003:17	Battery Voltage: Circuit Voltage Above Threshold	GO to Pinpoint Test AF

DTC Chart: APIM - Premium

Diagnostics in this manual assume a certain skill level and knowledge of Ford-specific diagnostic practices. For information about these practices,
REFER to: Diagnostic Methods (100-00 General Information, Description and Operation).

APIM DTC Chart - Premium

DTC	Description	Action
B1252:04	USB Port: System Internal Failure	GO to Pinpoint Test S
B1252:11	USB Port: Circuit Short To Ground	GO to Pinpoint Test S
B12B8:04	USB Port #2: System Internal Failure	**NOTE:** *This DTC refers to USB port #2 on the APIM itself, which is not used.* • INSPECT the APIM USB port #2 for damage and REMOVE any debris. • CLEAR the Diagnostic Trouble Codes (DTCs). • WAIT at least 10 seconds. • REPEAT the self-test. • If DTC B12B8:04 is retrieved again, INSTALL a new APIM . REFER to: SYNC Module [APIM] (415-00B Information and Entertainment System - General Information - Vehicles With: AM/FM/CD/SYNC, Removal and Installation).
B12B8:11	USB Port #2: Circuit Short To Ground	**NOTE:** *This DTC refers to USB port #2 on the APIM itself, which is not used.* • INSPECT the APIM USB port #2 for damage and REMOVE any debris. • CLEAR the Diagnostic Trouble Codes (DTCs). • WAIT at least 10 seconds. • REPEAT the self-test. • If DTC B12B8:11 is retrieved again, INSTALL a new APIM . REFER to: SYNC Module [APIM] (415-00B Information and Entertainment System - General Information - Vehicles With: AM/FM/CD/SYNC, Removal and Installation).
B1D79:01	Microphone Input: General Electrical Failure	GO to Pinpoint Test Q
B1D79:11	Microphone Input: Circuit Short To Ground	GO to Pinpoint Test Q
B1D79:12	Microphone Input: Circuit Short To Battery	GO to Pinpoint Test Q
B1D79:13	Microphone Input: Circuit Open	GO to Pinpoint Test Q
U0140:00	Lost Communication With Body Control Module: No Sub Type Information	GO to Pinpoint Test Z
U0155:00	Lost Communication With IPC Module: No Sub Type Information	GO to Pinpoint Test AA

U0257:00	Lost Communication With Front Control/Display Interface Module: No Sub Type Information	GO to Pinpoint Test AD
U0423:00	Invalid Data Received From Instrument Panel Cluster Control Module: No Sub Type Information	RETRIEVE and FOLLOW Diagnostic Trouble Codes (DTCs) present in the IPC . REFER to: Instrumentation, Message Center and Warning Chimes (413-01 Instrumentation, Message Center and Warning Chimes, Diagnosis and Testing).
U2100:00	Initial Configuration Not Complete: No Sub Type Information	CHECK vehicle service history for recent service actions related to this module. This DTC set due to incomplete or incorrect Programmable Module Installation (PMI) procedures. If there have been recent service actions with this module, REPEAT/PERFORM the APIM programming as directed by the diagnostic scan tool. REFER to: SYNC Module [APIM] Programming (415-00B Information and Entertainment System - General Information - Vehicles With: AM/FM/CD/SYNC, General Procedures). If there have been no recent service actions, INSTALL a new APIM to correct the failure to retain configuration data. REFER to: SYNC Module [APIM] (415-00B Information and Entertainment System - General Information - Vehicles With: AM/FM/CD/SYNC, Removal and Installation).
U2101:00	Control Module Configuration Incompatible: No Sub Type Information	CHECK vehicle service history for recent service actions related to this module. This DTC set due to incomplete or incorrect Programmable Module Installation (PMI) procedures. If there have been recent service actions with this module, REPEAT/PERFORM the APIM programming as directed by the diagnostic scan tool. REFER to: SYNC Module [APIM] Programming (415-00B Information and Entertainment System - General Information - Vehicles With: AM/FM/CD/SYNC, General Procedures). If there have been no recent service actions, INSTALL a new APIM to correct the failure to retain configuration data. REFER to: SYNC Module [APIM] (415-00B Information and Entertainment System - General Information - Vehicles With: AM/FM/CD/SYNC, Removal and Installation).
U3000:04	Control Module: System Internal Failure	GO to Pinpoint Test N
U3000:41	Control Module: General Checksum Failure	• CLEAR the Diagnostic Trouble Codes (DTCs). • WAIT at least 10 seconds. • REPEAT the self-test. • If DTC U3000:41 is retrieved again INSTALL a new APIM . REFER to: SYNC Module [APIM] (415-00B Information and Entertainment System - General Information - Vehicles With: AM/FM/CD/SYNC, Removal and Installation).
U3000:42	Control Module: General Memory Failure	• CLEAR the Diagnostic Trouble Codes (DTCs). • WAIT at least 10 seconds. • REPEAT the self-test. • If DTC U3000:42 is retrieved again, INSTALL a new APIM . REFER to: SYNC Module [APIM] (415-00B Information and Entertainment System - General Information - Vehicles With: AM/FM/CD/SYNC, Removal and Installation).

U3000:88	Control Module: Bus Off	• Network communication/message Diagnostic Trouble Codes (DTCs) can result from intermittent concerns such as damaged wiring or low battery voltage occurrences. Additionally, vehicle repair procedures such as module reprogramming often set these Diagnostic Trouble Codes (DTCs). To avoid repeat network concerns, INSPECT for damaged or corroded wiring at the APIM .
		• TEST the vehicle battery.
		  ◦ For 2.0L Duratec-HE (125kW/170PS) - MI4,
		  REFER to: Charging System - 2.0L Duratec-HE (125kW/170PS) - MI4 (414-00 Charging System - General Information, Diagnosis and Testing).
		  ◦ For 2.0L EcoBoost (184kW/250PS) - MI4,

		REFER to: Charging System - 2.0L EcoBoost (184kW/250PS) - MI4 (414-00 Charging System - General Information, Diagnosis and Testing). • Replacing a module to resolve a network DTC is unlikely to resolve the concern. The module was unable to communicate on the network at a point in time. The fault is not currently present. • CLEAR the DTC . • REPEAT the network test with the diagnostic scan tool.
U3003:16	Battery Voltage: Circuit Voltage Below Threshold	GO to Pinpoint Test AE
U3003:17	Battery Voltage: Circuit Voltage Above Threshold	GO to Pinpoint Test AF

DTC Chart: FCDIM - Premium

Diagnostics in this manual assume a certain skill level and knowledge of Ford-specific diagnostic practices. For information about these practices,
REFER to: Diagnostic Methods (100-00 General Information, Description and Operation).

FCDIM DTC Chart - Premium

DTC	Description	Action
B11BA:1C	Steering Wheel Audio Switch Pack: Circuit Voltage Out of Range	GO to Pinpoint Test U
B11BA:63	Steering Wheel Audio Switch Pack: Circuit/Component Protection Time-Out	GO to Pinpoint Test U
U0155:00	Lost Communication With IPC Module: No Sub Type Information	GO to Pinpoint Test AA
U0184:00	Lost Communication With Radio: No Sub Type Information	GO to Pinpoint Test AB
U0253:00	Lost Communication With Accessory Protocol Interface Module: No Sub Type Information	GO to Pinpoint Test AC
U2013:87	Switch Pack: Missing Message	GO to Pinpoint Test W
U201A:51	Control Module Main Calibration Data: Not Programmed	CHECK vehicle service history for recent service actions related to this module. This DTC sets due to incomplete or incorrect Programmable Module Installation (PMI) procedures. If there have been recent service actions with this module, REPEAT/PERFORM the Programmable Module Installation (PMI) procedure as directed by the diagnostic scan tool. REFER to: Module Configuration - System Operation and Component Description (418-01 Module Configuration, Description and Operation).

		See Programmable Module Installation (PMI). If there have been no recent service actions, INSTALL a new FCDIM to correct the failure to retain configuration data. REFER to: Front Control/Display Interface Module (FCDIM) (415-00B Information and Entertainment System - General Information - Vehicles With: AM/FM/CD/SYNC, Removal and Installation).
U2100:00	Initial Configuration Not Complete: No Sub Type Information	CHECK vehicle service history for recent service actions related to this module. This DTC sets due to incomplete or incorrect Programmable Module Installation (PMI) procedures. If there have been recent service actions with this module, REPEAT/PERFORM the Programmable Module Installation (PMI) procedure as directed by the diagnostic scan tool. REFER to: Module Configuration - System Operation and Component Description (418-01 Module Configuration, Description and Operation). See Programmable Module Installation (PMI). If there have been no recent service actions, INSTALL a new FCDIM to correct the failure to retain configuration data. REFER to: Front Control/Display Interface Module (FCDIM) (415-00B Information and Entertainment System - General Information - Vehicles With: AM/FM/CD/SYNC, Removal and Installation).
U2101:00	Control Module Configuration Incompatible: No Sub Type Information	CHECK vehicle service history for recent service actions related to this module. This DTC sets due to incomplete or incorrect Programmable Module Installation (PMI) procedures. If there have been recent service actions with this module, REPEAT/PERFORM the Programmable Module Installation (PMI) procedure as directed by the diagnostic scan tool. REFER to: Module Configuration - System Operation and Component Description (418-01 Module Configuration, Description and Operation). See Programmable Module Installation (PMI). If there have been no recent service actions, INSTALL a new FCDIM to correct the failure to retain configuration data. REFER to: Front Control/Display Interface Module (FCDIM) (415-00B Information and Entertainment System - General Information - Vehicles With: AM/FM/CD/SYNC, Removal and Installation).
U3000:41	Control Module: General Checksum Failure	• CLEAR the Diagnostic Trouble Codes (DTCs). • WAIT at least 10 seconds. • REPEAT the self-test. • If DTC U3000:41 is retrieved again, INSTALL a new FCDIM . REFER to: Front Control/Display Interface Module (FCDIM) (415-00B Information and Entertainment System - General Information - Vehicles With: AM/FM/CD/SYNC, Removal and Installation).
U3000:42	Control Module: General Memory Failure	• CLEAR the Diagnostic Trouble Codes (DTCs). • WAIT at least 10 seconds. • REPEAT the self-test. • If DTC U3000:42 is retrieved again, INSTALL a new FCDIM . REFER to: Front Control/Display Interface Module (FCDIM) (415-00B Information and Entertainment System - General Information - Vehicles With: AM/FM/CD/SYNC, Removal and Installation).
U3003:16	Battery Voltage: Circuit Voltage Below Threshold	GO to Pinpoint Test AE
U3003:17	Battery Voltage: Circuit Voltage Above Threshold	GO to Pinpoint Test AF

DTC Chart: GPSM - Premium

Diagnostics in this manual assume a certain skill level and knowledge of Ford-specific diagnostic practices. For information about these practices,
REFER to: Diagnostic Methods (100-00 General Information, Description and Operation).

GPSM DTC Chart - Premium

DTC	Description	Action
U0140:00	Lost Communication With Body Control Module: No Sub Type Information	GO to Pinpoint Test Z
U0155:00	Lost Communication With IPC Module: No Sub Type Information	GO to Pinpoint Test AA
U0422:00	Invalid Data Received from Body Control Module: No Sub Type Information	RETRIEVE and FOLLOW Diagnostic Trouble Codes (DTCs) present in the BCM . REFER to: Body Control Module (BCM) (419-10 Multifunction Electronic Modules, Diagnosis and Testing).
U0423:00	Invalid Data Received From Instrument Panel Cluster Control Module: No Sub Type Information	RETRIEVE and FOLLOW Diagnostic Trouble Codes (DTCs) present in the IPC . REFER to: Instrumentation, Message Center and Warning Chimes (413-01 Instrumentation, Message Center and Warning Chimes, Diagnosis and Testing).
U3000:09	Control Module: Component Failure	• CLEAR the Diagnostic Trouble Codes (DTCs). • WAIT at least 10 seconds. • REPEAT the self-test. • If DTC U3000:09 is retrieved again, PERFORM a battery reset by disconnecting the battery for 5 minutes, then reconnecting it. • CLEAR the Diagnostic Trouble Codes (DTCs). • WAIT at least 10 seconds. • REPEAT the self-test. • If DTC U3000:09 is retrieved again, INSTALL a new GPSM . REFER to: Global Positioning System Module (GPSM) (415-00B Information and Entertainment System - General Information - Vehicles With: AM/FM/CD/SYNC, Removal and Installation).
U3000:41	Control Module: General Checksum Failure	• CLEAR the Diagnostic Trouble Codes (DTCs). • WAIT at least 10 seconds. • REPEAT the self-test. • If DTC U3000:41 is retrieved again, INSTALL a new GPSM . REFER to: Global Positioning System Module (GPSM) (415-00B Information and Entertainment System - General Information - Vehicles With: AM/FM/CD/SYNC, Removal and Installation).
U3000:42	Control Module: General Memory Failure	• CLEAR the Diagnostic Trouble Codes (DTCs). • WAIT at least 10 seconds. • REPEAT the self-test. • If DTC U3000:42 is retrieved again, INSTALL a new GPSM . REFER to: Global Positioning System Module (GPSM) (415-00B Information and Entertainment System - General Information - Vehicles With: AM/FM/CD/SYNC, Removal and Installation).
U3003:16	Battery Voltage: Circuit Voltage Below Threshold	GO to Pinpoint Test AE
U3003:17	Battery Voltage: Circuit Voltage Above Threshold	GO to Pinpoint Test AF

DTC Chart: IPC - Premium

Diagnostics in this manual assume a certain skill level and knowledge of Ford-specific diagnostic practices. For information about these practices,
REFER to: Diagnostic Methods (100-00 General Information, Description and Operation).

DTC Chart - IPC - Premium

DTC	Description	Action
C1D22:11	Steering Wheel Switch Right Module: Circuit Short To Ground	GO to Pinpoint Test V
C1D22:23	Steering Wheel Switch Right Module: Circuit Open	GO to Pinpoint Test V
U0558:64	Invalid Data Received From Front Control/Display Interface Module: Signal Plausibility Failure	• Sets when the IPC receives invalid data from the FCDIM for more than 2 seconds. • CLEAR the DTC . • REPEAT the self-test • If DTC U0558:64 returns, RETRIEVE and REPAIR all Diagnostic Trouble Codes (DTCs) set in the FCDIM . REFER to: Information and Entertainment System (415-00B Information and Entertainment System - General Information - Vehicles With: AM/FM/CD/SYNC, Diagnosis and Testing). See DTC Chart: FCDIM - Premium.
U0564:64	Invalid Data Received From Speech Recognition Module: Signal Plausibility Failure	• Sets when the IPC receives invalid data from the APIM for more than 2 seconds. • CLEAR the DTC . • REPEAT the self-test • If DTC U0564:64 returns, RETRIEVE and REPAIR all Diagnostic Trouble Codes (DTCs) set in the APIM . REFER to: Information and Entertainment System (415-00B Information and Entertainment System - General Information - Vehicles With: AM/FM/CD/SYNC, Diagnosis and Testing). See DTC Chart: APIM - Premium.

Symptom Charts

Symptom Chart: General Audio System

Diagnostics in this manual assume a certain skill level and knowledge of Ford-specific diagnostic practices. For information about these practices,
REFER to: Diagnostic Methods (100-00 General Information, Description and Operation).

Symptom Chart

Condition	Possible Sources	Actions
A module does not respond to the	• Fuse • Wiring,	REFER to: Communications Network (418-00 Module Communications Network,

diagnostic scan tool	terminals, or connectors • Module	Diagnosis and Testing). See Symptom Chart.
The lower steering wheel controls are inoperative or do not operate correctly	Refer to the Pinpoint Test.	GO to Pinpoint Test U
The upper steering wheel controls are inoperative or do not operate correctly	Refer to the Pinpoint Test.	GO to Pinpoint Test V
The CD player is inoperative or does not operate correctly	• CD • ACM	INSPECT the CD for scratches, fingerprints, a loose paper label, incorrect format, or damage. INSERT a known good CD and TEST the system. If the system operates correctly, the concern was caused by a damaged CD. If the system does not operate correctly, INSTALL a new ACM. REFER to: Audio Front Control Module (ACM) (415-00B Information and Entertainment System - General Information - Vehicles With: AM/FM/CD/SYNC, Removal and Installation).
The speed compensated volume does not operate correctly	Refer to the Pinpoint Test.	GO to Pinpoint Test C
The entire audio system is inoperative	Refer to the Pinpoint Test.	GO to Pinpoint Test D
The FCIM illumination is inoperative or does not dim	• Illumination system concern • FCIM	REFER to: Instrument Panel Cluster (IPC) and Panel Illumination (413-00 Instrument Panel Cluster (IPC) and Panel Illumination, Diagnosis and Testing). See Symptom Chart: Instrument Cluster and Panel Illumination.
The audio system does not operate correctly from the FCIM	Refer to the Pinpoint Test.	GO to Pinpoint Test W
A single FCIM button is inoperative	FCIM	INSTALL a new FCIM. REFER to: Front Controls Interface Module (FCIM) (415-00B Information and Entertainment System - General Information - Vehicles With: AM/FM/CD/SYNC, Removal and Installation).
One or more FCDIM displays are inoperative or do not operate correctly	Refer to the Pinpoint Test.	GO to Pinpoint Test Y
The FCDIM is inoperative or does not operate correctly	Refer to the Pinpoint Test.	GO to Pinpoint Test X
The FCDIM illumination is inoperative or does not dim	• Illumination system concern • FCDIM	REFER to: Instrument Panel Cluster (IPC) and Panel Illumination (413-00 Instrument Panel Cluster (IPC) and Panel Illumination, Diagnosis and Testing). See Symptom Chart: Instrument Cluster and Panel Illumination.
The clock does not operate properly	Refer to the Pinpoint Test.	GO to Pinpoint Test AG

Symptom Chart: Satellite Radio

Diagnostics in this manual assume a certain skill level and knowledge of Ford-specific diagnostic practices. For information about these practices,
REFER to: Diagnostic Methods (100-00 General Information, Description and Operation).

Symptom Chart

Condition	Possible Sources	Actions
Poor reception	Refer to the Pinpoint Test.	GO to Pinpoint Test B
Poor sound quality or no sound while in satellite radio mode - all other functions operate correctly	Refer to the Pinpoint Test.	GO to Pinpoint Test B
The satellite radio is inoperative or does not operate correctly	Refer to the Pinpoint Test.	GO to Pinpoint Test B

Symptom Chart: Sound Quality

Diagnostics in this manual assume a certain skill level and knowledge of Ford-specific diagnostic practices. For information about these practices,
REFER to: Diagnostic Methods (100-00 General Information, Description and Operation).

Symptom Chart

Condition	Possible Sources	Actions
Poor reception - AM / FM	Refer to the Pinpoint Test.	GO to Pinpoint Test A
Continuous seek or scan in AM / FM	Refer to the Pinpoint Test.	GO to Pinpoint Test A
No Sound From All Speakers	Refer to the Pinpoint Test.	GO to Pinpoint Test F
Poor Sound Quality Or Distorted Sound From One Or More Speakers (Not All Speakers)	Refer to the Pinpoint Test.	GO to Pinpoint Test E
The Left Front (LF) door speaker is inoperative	Refer to the Pinpoint Test.	GO to Pinpoint Test G
The Left Front (LF) tweeter speaker is inoperative	Refer to the Pinpoint Test.	GO to Pinpoint Test H
The Right Front (RF) door speaker is inoperative	Refer to the Pinpoint Test.	GO to Pinpoint Test I
The Right Front (RF) tweeter speaker is inoperative	Refer to the Pinpoint Test.	GO to Pinpoint Test J
The Right Rear (RR) door speaker is inoperative	Refer to the Pinpoint Test.	GO to Pinpoint Test K
The Left Rear (LR) door speaker is inoperative	Refer to the Pinpoint Test.	GO to Pinpoint Test L

Symptom Chart: SYNC® System

Diagnostics in this manual assume a certain skill level and knowledge of Ford-specific diagnostic practices. For information about these practices,
REFER to: Diagnostic Methods (100-00 General Information, Description and Operation).

Symptom Chart

Condition	Possible Sources	Actions
The SYNC® system is inoperative (no response is received from phone, voice, and media inputs)	Refer to the Pinpoint Test.	PERFORM the APIM Reset. REFER to: Reset the SYNC Module [APIM] (415-00B Information and Entertainment System - General Information - Vehicles With: AM/FM/CD/SYNC, General Procedures). If the concern is still present, GO to Pinpoint Test N
All SYNC® Services features are inoperative or inaccurate (traffic, directions, and information)	Refer to the Pinpoint Test.	PERFORM the APIM Reset. REFER to: Reset the SYNC Module [APIM] (415-00B Information and Entertainment System - General Information - Vehicles With: AM/FM/CD/SYNC, General Procedures). If the concern is still present, GO to Pinpoint Test P
The SYNC® system voice or tone prompts, Text-To-Speech (TTS) feature, or ringtones are inoperative or do not operate correctly	Refer to the Pinpoint Test.	PERFORM the APIM Reset. REFER to: Reset the SYNC Module [APIM] (415-00B Information and Entertainment System - General Information - Vehicles With: AM/FM/CD/SYNC, General Procedures). If the concern is still present, GO to Pinpoint Test O
During a phone call, no incoming audio is heard in the vehicle	Refer to the Pinpoint Test.	PERFORM the APIM Reset. REFER to: Reset the SYNC Module [APIM] (415-00B Information and Entertainment System - General Information - Vehicles With: AM/FM/CD/SYNC, General Procedures). If the concern is still present, GO to Pinpoint Test O
Voice recognition is inoperative or does not operate correctly	Refer to the Pinpoint Test.	PERFORM the APIM Reset. REFER to: Reset the SYNC Module [APIM] (415-00B Information and Entertainment System - General Information - Vehicles With: AM/FM/CD/SYNC, General Procedures). If the concern is still present, GO to Pinpoint Test Q
During a phone call, no outgoing audio is heard on the outside device	Refer to the Pinpoint Test.	PERFORM the APIM Reset. REFER to: Reset the SYNC Module [APIM] (415-00B Information and Entertainment System - General Information - Vehicles With: AM/FM/CD/SYNC, General Procedures). If the concern is still present, GO to Pinpoint Test Q
No sound from all SYNC® audio sources (Bluetooth, USB , Secure Digital (SD) card, RCA jacks)	Refer to the Pinpoint Test.	PERFORM the APIM Reset. REFER to: Reset the SYNC Module [APIM] (415-00B Information and Entertainment System - General Information - Vehicles With: AM/FM/CD/SYNC, General Procedures). If the concern is still present, GO to Pinpoint Test M
The SYNC® steering wheel switches are inoperative or do not operate correctly	Refer to the Pinpoint Test.	PERFORM the APIM Reset. REFER to: Reset the SYNC Module [APIM] (415-00B Information and Entertainment System - General Information - Vehicles With: AM/FM/CD/SYNC, General Procedures). If the concern is still present, GO to Pinpoint Test V
The audio input jack is inoperative	Refer to the Pinpoint	PERFORM the APIM Reset.

or does not operate correctly	Test.	REFER to: Reset the SYNC Module [APIM] (415-00B Information and Entertainment System - General Information - Vehicles With: AM/FM/CD/SYNC, General Procedures). If the concern is still present, GO to Pinpoint Test R
The USB port(s) is/are inoperative or do/does not operate correctly	Refer to the Pinpoint Test.	PERFORM the APIM Reset. REFER to: Reset the SYNC Module [APIM] (415-00B Information and Entertainment System - General Information - Vehicles With: AM/FM/CD/SYNC, General Procedures). If the concern is still present, GO to Pinpoint Test S
Unable to pair Bluetooth device	Refer to the Pinpoint Test.	PERFORM the APIM Reset. REFER to: Reset the SYNC Module [APIM] (415-00B Information and Entertainment System - General Information - Vehicles With: AM/FM/CD/SYNC, General Procedures). If the concern is still present, GO to Pinpoint Test T
An individual Bluetooth device feature is inoperative (text messaging, media playback or controls, phone book download, call history, or call waiting)	Customer's device compatibility	• PERFORM the APIM Reset. REFER to: Reset the SYNC Module [APIM] (415-00B Information and Entertainment System - General Information - Vehicles With: AM/FM/CD/SYNC, General Procedures). • If the concern is still present, INSTRUCT the customer to review the device compatibility list. REFER to www.syncmyride.com. It is normal operation for unsupported or incompatible Bluetooth features to be unavailable through the SYNC® system. • If the inoperative feature is compatible, ADVISE the customer to check their device for firmware updates, and if required, reset their device following the manufacturer's instructions.
SYNC® AppLink™ is inoperative or does not operate correctly	Refer to the Pinpoint Test.	• PERFORM the APIM Reset. REFER to: Reset the SYNC Module [APIM] (415-00B Information and Entertainment System - General Information - Vehicles With: AM/FM/CD/SYNC, General Procedures). • If the concern is still present, INSTRUCT the customer to review the mobile device platform, application, and application version compatibility list. REFER to www.syncmyride.com. It is normal operation for incompatible mobile device platforms, applications, and application versions to be unavailable through SYNC® AppLink™. • If the mobile device platform, application, and application version are compatible, and the device is connected through Bluetooth only, GO to Pinpoint Test T • If the mobile device platform, application, and application version are compatible, and the device is connected through Bluetooth and the USB port, GO to Pinpoint Test S

911 Assist™ or Vehicle Health Report (VHR) is inoperative or does not operate correctly	• Unregistered SYNC® owner account
	• RCM misconfiguration
	• IPC misconfiguration
		• Verify that the customer has a SYNC® Owner Account on www.syncmyride.com.
		• This error message appears due to incomplete or incorrect PMI procedures. CHECK the vehicle service history for recent service actions related to the IPC or RCM .
		  ○ If there have been recent service actions with the IPC or RCM , REPEAT/PERFORM the PMI procedure as directed by the diagnostic scan tool.
		  REFER to: Module Configuration - System Operation and Component Description (418-01 Module Configuration, Description and Operation).
		  See Programmable Module Installation (PMI).
		  ○ If there have been no recent service actions,

		INSTALL a new APIM to correct the failure to retain configuration data.

Pinpoint Tests

Poor Reception - AM - FM

Refer to Wiring Diagrams Cell 130 for schematic and connector information.

Diagnostic Overview

Diagnostics in this manual assume a certain skill level and knowledge of Ford-specific diagnostic practices. For information about these practices,
REFER to: Diagnostic Methods (100-00 General Information, Description and Operation).

Normal Operation and Fault Conditions

REFER to: Information and Entertainment System - System Operation and Component Description (415-00B Information and Entertainment System - General Information - Vehicles With: AM/FM/CD/SYNC, Description and Operation).
See AM / FM Radio.

The RDS function allows the vehicle operator to choose which genre (category) of music to listen to. When the SCAN button is pressed, the ACM only stops at channels falling within the selected category. If no channel in the selected category is found, the ACM continues to scan without stopping. This can appear to be a reception issue, but it is actually due to the customer's setting.

Possible Sources

- No channel found in the selected category
- Wiring, terminals, or connectors
- AM / FM antenna
- AM / FM antenna coaxial cable
- Charging system
- Ignition system
- Noise suppression equipment
- ACM

PINPOINT TEST A : POOR RECEPTION - AM (AMPLITUDE MODULATION) - FM (FREQUENCY MODULATION)

A1 CHECK THE AUDIO SYSTEM RECEPTION

- Operate the audio system in radio tuner AM / FM mode.
- Check the reception with the engine running, and with the engine off.

Does the poor reception only occur with the engine running?

Yes	GO to A2
No	GO to A4

A2 CHECK THE GENERATOR

- Ignition OFF.
- Disconnect: Wiring harness to the generator voltage regulator.
- Start the engine.
- Operate the audio system in radio tuner AM / FM mode.

Is the reception OK?

Yes	INSTALL a new generator. For 2.0L Duratec-HE (125kW/170PS) - MI4, REFER to: Generator - 2.0L Duratec-HE (125kW/170PS) - MI4 (414-02 Generator and Regulator, Removal and Installation). See Symptom Chart: Charging System. For 2.0L EcoBoost (184kW/250PS) - MI4, REFER to: Generator - 2.0L EcoBoost (184kW/250PS) - MI4 (414-02 Generator and Regulator, Removal and Installation). See Symptom Chart: Charging System.
No	GO to A3

A3 CHECK THE IGNITION CIRCUITS

- Ignition OFF.
- Connect: Wiring harness to the generator voltage regulator.
- Visually inspect the engine compartment and make sure all ignition coils are correctly and securely connected, and that there are no visible cracks in the coil housings.
- Inspect all the wiring harnesses and connectors for damaged insulation and loose or broken conditions.

Are the ignition components OK?

Yes	USE a jumper cable to ground various parts of the vehicle to the frame (for example: engine, fenders, quarter panels, stone deflectors, air cleaner, body sheet metal). When the noise is eliminated, PROVIDE a permanent ground where necessary.
No	REPAIR the ignition system as necessary.

A4 CHECK THE ANTENNA ENABLE CIRCUIT

- Ignition OFF.
- Disconnect: Antenna C9051 (Without Satellite Radio) Or C9021 (With Satellite Radio).
- Ignition ON.
- Operate the audio system in radio tuner AM / FM mode.
- For vehicles without satellite radio, measure:

Positive Lead	Measurement / Action	Negative Lead
C9051-1		—

- For vehicles with satellite radio, measure:

Positive Lead	Measurement / Action	Negative Lead
C9021-2		—

Is the voltage greater than 11 volts?

Yes	GO to A7

No	GO to A5

A5 CHECK THE ANTENNA ENABLE CIRCUIT FOR AN OPEN

- Ignition OFF.
- Disconnect: ACM C240A.
- For vehicles without satellite radio, measure:

Positive Lead	Measurement / Action	Negative Lead
C9051-1	Ω	C240A-2

- For vehicles with satellite radio, measure:

Positive Lead	Measurement / Action	Negative Lead
C9021-2	Ω	C240A-2

Is the resistance less than 3 ohms?

Yes	GO to A6
No	REPAIR the circuit.

A6 CHECK THE ANTENNA ENABLE CIRCUIT FOR A SHORT TO GROUND

- For vehicles without satellite radio, measure:

Positive Lead	Measurement / Action	Negative Lead
C9051-1	Ω	—

- For vehicles with satellite radio, measure:

Positive Lead	Measurement / Action	Negative Lead
C9021-2	Ω	—

Is the resistance greater than 10,000 ohms?

Yes	GO to A10
No	REPAIR the circuit.

A7 CHECK THE AM (AMPLITUDE MODULATION) / FM (FREQUENCY MODULATION) ANTENNA COAXIAL CABLE

- Ignition OFF.
- Disconnect: AM / FM Antenna In-Line Coaxial Cable Connection Behind The RH Floor Console Side Trim Panel.
  REFER to: Floor Console - Vehicles With: Center Armrest (501-12 Instrument Panel and Console, Removal and Installation).
- Disconnect: AM / FM Antenna Coaxial Cable At The ACM .
- Measure the resistance of the upper ACM antenna coaxial cable core between the antenna and the upper ACM antenna coaxial cable in-line connection; and between the upper ACM antenna coaxial cable core and shield.
- Measure the resistance of the lower ACM antenna coaxial cable core between the ACM and the lower ACM antenna coaxial cable in-line connection; and between the lower AM / FM antenna coaxial cable core and shield.

Is the resistance of each AM / FM antenna coaxial cable core less than 2 ohms, and the resistance between the core and shield of each ACM antenna coaxial cable greater than 10,000 ohms?

Yes	GO to A8
No	INSTALL a new upper or lower AM / FM antenna coaxial cable. REFER to: Audio Unit Antenna Cable (415-00B Information and Entertainment System - General Information - Vehicles With: AM/FM/CD/SYNC, Removal and Installation).

A8 ISOLATE THE ANTENNA

- Connect: AM / FM Antenna In-Line Coaxial Cable Connection Behind The RH Floor Console Side Trim Panel.
- Connect: AM / FM Antenna Coaxial Cable At the ACM .
- Install a new antenna.
  REFER to: Audio Unit Antenna (415-00B Information and Entertainment System - General Information - Vehicles With: AM/FM/CD/SYNC, Removal and Installation).
- Operate the audio system in radio tuner AM / FM mode.

Is the reception OK?

Yes	The system is operating correctly at this time. The concern was caused by an inoperative AM / FM antenna.
No	GO to A9

A9 ISOLATE THE ANTENNA COAXIAL CABLE

- Ignition OFF.
- Substitute each antenna coaxial cable by routing a new component. Do not remove the original antenna coaxial cable at this time.
- Operate the audio system in radio tuner AM / FM mode.

Is the reception OK?

Yes	INSTALL a new antenna coaxial cable for the inoperative cable. REFER to: Audio Unit Antenna Cable (415-00B Information and Entertainment System - General Information - Vehicles With: AM/FM/CD/SYNC, Removal and Installation).
No	REMOVE the substitute antenna coaxial cable. GO to A10

A10 CHECK FOR CORRECT ACM (AUDIO FRONT CONTROL MODULE) OPERATION

- Ignition OFF.
- Disconnect and inspect all the ACM connectors.
- Repair:
  - corrosion (install new connectors or terminals - clean module pins)

- damaged or bent pins - install new terminals pins
- pushed-out pins - install new pins as necessary

- Reconnect the ACM connectors. Make sure they seat and latch correctly.
- Operate the system and determine if the concern is still present.

Is the concern still present?

Yes	CHECK OASIS for any applicable Technical Service Bulletins (TSBs). If a TSB exists for this concern, discontinue this test and follow TSB instructions. If no Technical Service Bulletins (TSBs) address this concern, INSTALL a new ACM . REFER to: Audio Front Control Module (ACM) (415-00B Information and Entertainment System - General Information - Vehicles With: AM/FM/CD/SYNC, Removal and Installation).
No	The system is operating correctly at this time. The concern may have been caused by module connections. ADDRESS the root cause of any connector or pin issues.

The Satellite Radio Is Inoperative, Has Poor Reception, or No Sound

Diagnostic Overview

Diagnostics in this manual assume a certain skill level and knowledge of Ford-specific diagnostic practices. For information about these practices,
REFER to: Diagnostic Methods (100-00 General Information, Description and Operation).

Normal Operation and Fault Conditions

REFER to: Information and Entertainment System - System Operation and Component Description (415-00B Information and Entertainment System - General Information - Vehicles With: AM/FM/CD/SYNC, Description and Operation).
See Satellite Radio.

When a satellite radio subscription is activated, the Electronic Serial Number (ESN) of the built-in satellite receiver is associated with the VIN .

DTC Fault Trigger Conditions

DTC	Description	Fault Trigger Conditions
B1A89:01	Satellite Antenna: General Electric Failure	Set by the ACM when a short to ground is detected in the satellite antenna circuit for more than 250 milliseconds. This DTC can be either continuous or on-demand.
B1A89:13	Satellite Antenna: Circuit Open	Set by the ACM when an open is detected in the satellite antenna circuit. This DTC can be either continuous or on-demand.
U3000:96	Control Module: Component Internal Failure	Set by the ACM when a fault is detected in the internal satellite radio receiver. This results in complete loss of satellite radio functionality.

Possible Sources

- Expired subscription
- Incorrectly matched Electronic Serial Number (ESN)
- Wiring, terminals, or connectors

Obstructions in the antenna's line of sight
- Satellite radio antenna
- Satellite radio antenna coaxial cable
- Satellite radio system concern
- ACM

PINPOINT TEST B : THE SATELLITE RADIO IS INOPERATIVE, HAS POOR RECEPTION, OR NO SOUND

B1 VERIFY AN ACTIVE SUBSCRIPTION

- Operate the audio system in satellite radio mode and observe the infotainment display.

Does the display indicate that the subscription has expired?

Yes	The subscription has expired. INFORM the customer to contact SIRIUS to reactivate the subscription.
No	GO to B2

B2 CHECK THE RECEPTION

- Drive the vehicle to an open location that is free of obstacles (e.g. tall buildings or large trees).
- Using a diagnostic scan tool, view the ACM Parameter Identifications (PIDs).
- Monitor the satellite signal strength (SAT_SIG_STR) Parameter Identification (PID).
- If the Parameter Identification (PID) reads "No Signal" or "Poor," move the vehicle to another area and retest until "Good," "Very Good," or "Excellent" Parameter Identification (PID) values are obtained.
- Operate multiple channels with the infotainment system in satellite audio mode.

Does the satellite audio system receive multiple channels with normal sound quality?

Yes	The system is operating correctly at this time. The concern was a result of obstructions in the antenna's line of sight.
No	GO to B3

B3 CHECK FOR PROMOTIONAL CHANNEL 184

- Select channel 184.

Does the satellite audio system receive channel 184 with normal sound quality?

Yes	GO to B4
No	GO to B5

B4 VERIFY THAT THE VEHICLE IDENTIFICATION NUMBER (VIN) AND ELECTRONIC SERIAL NUMBER (ESN) ON FILE MATCH THE VEHICLE IDENTIFICATION NUMBER (VIN) AND ELECTRONIC SERIAL NUMBER (ESN) FROM THE VEHICLE

- Retrieve the satellite radio Electronic Serial Number (ESN).
  REFER to: Satellite Radio Serial Number Retrieval (415-00B Information and Entertainment System - General Information - Vehicles With: AM/FM/CD/SYNC, General Procedures).
- Contact the SIRIUS Dealer Support Line (888-465-8528).
- Ensure that the Vehicle Identification Number (VIN) and Electronic Serial Number (ESN) SIRIUS has on the customer's file match the Vehicle Identification Number (VIN) and Electronic Serial Number (ESN) retrieved from the vehicle.
- Follow the actions from step 2 to obtain "Good," "Very Good," or "Excellent" reception.
- Operate the infotainment system in satellite audio mode.

- **NOTE:** *It may take up to 30 minutes for the activation signal to be received and satellite radio functions to operate.*
  Request for SIRIUS to send the activation signal to the vehicle 2-3 times.
- Operate multiple channels with the infotainment system in satellite audio mode.

Does the satellite audio system receive multiple channels with normal sound quality?

Yes	The system is operating correctly at this time. The concern was a result of the activation signal needing to be resent or the Vehicle Identification Number (VIN) and Electronic Serial Number (ESN) SIRIUS had on file not matching the Vehicle Identification Number (VIN) and Electronic Serial Number (ESN) from the vehicle.
No	GO to B5

B5 CHECK THE ACM (AUDIO FRONT CONTROL MODULE) DIAGNOSTIC TROUBLE CODES (DTCS)

- Using a diagnostic scan tool, clear the ACM Diagnostic Trouble Codes (DTCs).
- Repeat the ACM self-test.

Are any DTCs recorded in the ACM ?

Yes	If DTC U3000:96 is present, GO to B8 If DTC B1A89:01 or DTC B1A89:13 are present, GO to B6 For all other Diagnostic Trouble Codes (DTCs), REFER to: Information and Entertainment System (415-00B Information and Entertainment System - General Information - Vehicles With: AM/FM/CD/SYNC, Diagnosis and Testing). See DTC Chart: ACM - Premium.
No	GO to B6

B6 CHECK THE SATELLITE RADIO ANTENNA COAXIAL CABLE RESISTANCE

- Ignition OFF.
- Disconnect: Satellite Radio Antenna Coaxial Cable Connection at the ACM .
- Disconnect: Satellite Radio Antenna Coaxial Cable In-Line Connection at the RH Kick Panel.
- Disconnect: Satellite Radio Antenna Coaxial Cable Connection at the Satellite Radio Antenna.
- Measure the resistance of the upper satellite radio antenna coaxial cable core between the satellite radio antenna and the satellite radio antenna in-line coaxial cable connection; and between the upper satellite radio antenna coaxial cable core and shield.
- Measure the resistance of the lower satellite radio antenna coaxial cable core between the ACM and the satellite radio antenna in-line coaxial cable connection; and between the lower satellite radio antenna coaxial cable core and shield.

Is the resistance of each satellite radio antenna coaxial cable core less than 1 ohm, and the resistance between the core and shield of each satellite radio antenna coaxial cable more than 10,000 ohms?

Yes	GO to B7
No	INSTALL a new upper or lower satellite radio antenna coaxial cable as necessary. REFER to: Audio Unit Antenna Cable (415-00B Information and Entertainment System - General Information - Vehicles With: AM/FM/CD/SYNC, Removal and Installation).

B7 ISOLATE THE SATELLITE RADIO ANTENNA

- Connect: Satellite Radio Antenna Coaxial Cable Connection at the ACM .
- Connect: Satellite Radio Antenna Coaxial Cable In-Line Connection at the RH Kick Panel.
- Install a new satellite radio antenna.
  REFER to: Audio Unit Antenna (415-00B Information and Entertainment System - General Information - Vehicles With:

AM/FM/CD/SYNC, Removal and Installation).
- Follow the actions from step 2 to obtain "Good," "Very Good," or "Excellent" reception.
- Operate multiple channels with the infotainment system in satellite audio mode.

Does the satellite audio system receive multiple channels with normal sound quality?

Yes	The system is operating correctly at this time. The concern was caused by an inoperative satellite radio antenna.
No	GO to B8

B8 CHECK FOR CORRECT ACM (AUDIO FRONT CONTROL MODULE) OPERATION

- Ignition OFF.
- Disconnect and inspect all ACM connectors.
- Repair:
  - corrosion (install new connectors or terminals - clean module pins)
  - damaged or bent pins - install new terminals pins
  - pushed-out pins - install new pins as necessary
- Reconnect the ACM connectors. Make sure they seat and latch correctly.
- Operate the system and determine if the concern is still present.

Is the concern still present?

Yes	CHECK OASIS for any applicable Technical Service Bulletins (TSBs). If a TSB exists for this concern, discontinue this test and follow TSB instructions. If no Technical Service Bulletins (TSBs) address this concern, INSTALL a new ACM . REFER to: Audio Front Control Module (ACM) (415-00B Information and Entertainment System - General Information - Vehicles With: AM/FM/CD/SYNC, Removal and Installation).
No	The system is operating correctly at this time. The concern may have been caused by module connections. ADDRESS the root cause of any connector or pin issues.

The Speed Compensated Volume Does Not Operate Correctly

Diagnostic Overview

Diagnostics in this manual assume a certain skill level and knowledge of Ford-specific diagnostic practices. For information about these practices,
REFER to: Diagnostic Methods (100-00 General Information, Description and Operation).

Normal Operation and Fault Conditions

REFER to: Information and Entertainment System - System Operation and Component Description (415-00B Information and Entertainment System - General Information - Vehicles With: AM/FM/CD/SYNC, Description and Operation).
See Speed Compensated Volume.

Possible Sources

- Speed compensated volume setting
- Vehicle Speed Sensor (VSS) signal concern
- Communication network concern
- ACM

PINPOINT TEST C : THE SPEED COMPENSATED VOLUME DOES NOT OPERATE CORRECTLY

C1 CHECK THE SPEEDOMETER OPERATION

- Drive the vehicle and observe the speedometer.

Does the speedometer operate correctly?

Yes	GO to C2
No	REFER to: Instrumentation, Message Center and Warning Chimes (413-01 Instrumentation, Message Center and Warning Chimes, Diagnosis and Testing). See The Speedometer Is Inoperative

C2 CHECK THE SPEED COMPENSATED VOLUME SETTING

- Turn the speed compensated volume off. Refer to the Owner's Literature.
- Operate the audio system in radio tuner AM / FM mode.
- Drive the vehicle at various speeds and observe the speaker volume.
- Set the speed compensated volume to maximum compensation. Refer to the Owner's Literature.
- Operate the audio system in radio tuner AM / FM mode.
- Drive the vehicle at various speeds and observe the speaker volume.

Does the volume remain constant with the speed compensated volume turned off, and increase and decrease with vehicle speed with the speed compensated volume set to maximum?

Yes	The system is operating correctly at this time. INSTRUCT the customer in the correct usage of the speed compensated volume feature.
No	GO to C3

C3 CHECK FOR DTC (DIAGNOSTIC TROUBLE CODE) U0155:00

- Using a diagnostic scan tool, retrieve all continuous Diagnostic Trouble Codes (DTCs).

Is DTC U0155:00 retrieved in any audio system module?

Yes	GO to Pinpoint Test AA
No	GO to C4

C4 CHECK FOR CORRECT ACM (AUDIO FRONT CONTROL MODULE) OPERATION

- Ignition OFF.
- Disconnect and inspect all the ACM connectors.
- Repair:
  - corrosion (install new connector or terminals - clean module pins)
  - damaged pins - install new terminals/pins
  - pushed-out pins - install new pins as necessary
- Reconnect the ACM connectors. Make sure they seat and latch correctly.
- Operate the system and determine if the concern is still present.

Is the concern still present?

Yes	CHECK OASIS for any applicable Technical Service Bulletins (TSBs). If a TSB exists for this concern, discontinue this test and follow TSB instructions. If no Technical Service Bulletins (TSBs) address this

	concern, INSTALL a new ACM . REFER to: Audio Front Control Module (ACM) (415-00B Information and Entertainment System - General Information - Vehicles With: AM/FM/CD/SYNC, Removal and Installation).
No	The system is operating correctly at this time. The concern may have been caused by module connections. ADDRESS the root cause of any connector or pin issues.

The Entire Audio System Is Inoperative

Diagnostic Overview

Diagnostics in this manual assume a certain skill level and knowledge of Ford-specific diagnostic practices. For information about these practices,
REFER to: Diagnostic Methods (100-00 General Information, Description and Operation).

Normal Operation and Fault Conditions

When the ignition in OFF, ACC, or RUN, and the FCIM ON button is pressed, a wake-up signal is provided to the FCDIM via the dedicated LIN line. The FCDIM then broadcasts a message over the Infotainment Controller Area Network (I-CAN) to the other audio system modules.

REFER to: Information and Entertainment System - System Operation and Component Description (415-00B Information and Entertainment System - General Information - Vehicles With: AM/FM/CD/SYNC, Description and Operation).
See Accessory Delay Feature, Audio Extended Play, and FCIM .

Possible Sources

- Communication network concern
- FCIM
- FCDIM
- ACM

PINPOINT TEST D : THE ENTIRE AUDIO SYSTEM IS INOPERATIVE

D1 VERIFY THAT THE ACM (AUDIO FRONT CONTROL MODULE) AND THE FCDIM (FRONT CONTROL/DISPLAY INTERFACE MODULE) PASS THE NETWORK TEST

- Using a diagnostic scan tool, perform the network test.

Do either the ACM or FCDIM fail to communicate with the diagnostic scan tool?

Yes	For no communication with the ACM , REFER to: Communications Network (418-00 Module Communications Network, Diagnosis and Testing). See The ACM Does Not Respond To The Diagnostic Scan Tool. For no communication with the FCDIM , REFER to: Communications Network (418-00 Module Communications Network, Diagnosis and Testing). See The FCDIM Does Not Respond To The Diagnostic Scan Tool.
No	GO to D2

D2 CHECK THE FCDIM (FRONT CONTROL/DISPLAY INTERFACE MODULE) POWER SWITCH INPUT PARAMETER IDENTIFICATION (PID)

- Using a diagnostic scan tool, view the FCDIM Parameter Identifications (PIDs).

Monitor the FCDIM power switch Parameter Identification (PID) (BTN_POWER) while pressing and releasing the power switch on the FCIM .

Does the Parameter Identification (PID) display the correct the power switch positions?

Yes	GO to D3
No	GO to Pinpoint Test W

D3 CHECK FOR LOST COMMUNICATION DIAGNOSTIC TROUBLE CODES (DTCS)

- Ignition ON.
- Using a diagnostic scan tool, clear continuous Diagnostic Trouble Codes (DTCs) from all modules.
- Ignition OFF.
- Ignition ON.
- Wait at least 10 seconds.
- Using a diagnostic scan tool, repeat the ACM and FCDIM self-tests.

Is DTC U0140:00, U0184:00, or U0257:00 present?

Yes	For DTC U0155:00, GO to Pinpoint Test AA For DTC U0184:00, GO to Pinpoint Test AB For DTC U0257:00, GO to Pinpoint Test AD
No	GO to D4

D4 CHECK FOR CORRECT ACM (AUDIO FRONT CONTROL MODULE) OPERATION

- Ignition OFF.
- Disconnect and inspect all the ACM connectors.
- Repair:
  - corrosion (install new connector or terminals - clean module pins)
  - damaged pins - install new terminals/pins
  - pushed-out pins - install new pins as necessary
- Reconnect the ACM connectors. Make sure they seat and latch correctly.
- Operate the system and determine if the concern is still present.

Is the concern still present?

Yes	CHECK OASIS for any applicable Technical Service Bulletins (TSBs). If a TSB exists for this concern, discontinue this test and follow TSB instructions. If no Technical Service Bulletins (TSBs) address this concern, INSTALL a new ACM . REFER to: Audio Front Control Module (ACM) (415-00B Information and Entertainment System - General Information - Vehicles With: AM/FM/CD/SYNC, Removal and Installation).
No	The system is operating correctly at this time. The concern may have been caused by module connections. ADDRESS the root cause of any connector or pin issues.

Poor Sound Quality Or Distorted Sound From One Or More Speakers (Not All Speakers)

Diagnostic Overview

Diagnostics in this manual assume a certain skill level and knowledge of Ford-specific diagnostic practices. For information about these practices,

REFER to: Diagnostic Methods (100-00 General Information, Description and Operation).

Normal Operation and Fault Conditions

The ACM sends audio signals to the speakers in the form of AC voltage, resulting in clear audio output.

Visual Inspection and Diagnostic Pre-checks

Visually inspect around the suspect area for any possible rattle conditions such as:

- Any storage compartments including cup holders (if equipped)
- Door map pockets for contents that can rattle (if equipped)
- Door pull cup attachments (if equipped)
- Door switch bezels (if equipped)
- Package tray (if equipped)
- Speaker grilles
- Trim panels and fasteners

Possible Sources

- Loose component fasteners
- Loose door handle, lock, and other trim panel components and fasteners
- Loose items in storage areas
- Loose speaker grilles
- Loose wire harnesses or wire harness fasteners
- Speaker(s)
- Water shield bonding and placement

PINPOINT TEST E : POOR SOUND QUALITY OR DISTORTED SOUND FROM ONE OR MORE SPEAKERS (NOT ALL SPEAKERS)

E1 ISOLATE THE ZONE

- Operate the audio system using digital media (CD , MP3, etc.).
- Using the audio system fade and balance feature, adjust the audio sound to each of the four zones (LF, RF, LR and RR) of the vehicle to isolate the poor sound quality.
- Locate and apply pressure to the trim panel(s) around the poor sound quality area in question.

Does applying pressure to a trim panel reduce or eliminate the audible noise?

Yes	REPAIR or REPLACE the trim panel as needed.
No	GO to E2

E2 REMOVE AND INSPECT BEHIND/UNDERNEATH THE SUSPECT TRIM PANEL(S)

- Remove the trim panel to access the suspect speaker.
- Operate the audio system using digital media (CD , MP3, etc.).
- Validate where the poor sound quality area is located.
- Check:
  - Trim panel for loose components (e.g. speaker grille) around the speaker area.
  - Trim panel joining components for missing or broken pieces.
  - Lock and handle mechanical parts for correct attachment.
  - Wire harnesses for correct routing.
  - Wire harness fasteners for correct attachment.
  - Water shield for correct placement (speaker air path not blocked).
  - Water shield for correct bonding to sheet metal.
  - Storage areas for loose items.
  - All child safety belt anchors (if equipped).
  - All safety belt retractors.

All speaker bracket fasteners and other fasteners are secured and tightened to specified torque.

Was the source of the noise located?

Yes	REPAIR or REPLACE any loose or broken component or fastener as needed.
No	GO to E3

E3 CHECK THE SUSPECT SPEAKER FOR WATER INTRUSION

- Inspect for watermarks.
- Check the:
  - Cone
  - Magnet
  - Basket

Are any watermarks present on the speaker?

Yes	VERIFY the water shield is in the correct location, REPAIR or REPLACE any trim, door, or speaker seal as required. DRY the speaker in question and TEST the system for normal operation.
No	GO to E4

E4 ISOLATE SPEAKER TO VERIFY NOISE

- Remove the suspect speaker from its location and leave the speaker connected to the harness.
- Hold the speaker away from any trim panel(s) and ensure the speaker is isolated from contact.
- Operate the audio system using digital media (CD , MP3, etc.).

Is the noise still present in the suspect speaker?

Yes	INSTALL a new speaker for the one in question.
No	LOCATE the source of the noise and REPAIR as needed.

No Sound From All Speakers

Refer to Wiring Diagrams Cell 130 for schematic and connector information.

Diagnostic Overview

Diagnostics in this manual assume a certain skill level and knowledge of Ford-specific diagnostic practices. For information about these practices,
REFER to: Diagnostic Methods (100-00 General Information, Description and Operation).

Normal Operation and Fault Conditions

When the ignition is in the START position, the ACM receives voltage on the START signal circuit and mutes the speaker output. This prevents voltage spikes from producing popping noises through the speakers. A short to voltage on this circuit causes the ACM output to be muted continuously.

A short to ground or short to voltage in the circuitry to one of the speakers may cause multiple speakers to lose sound due to the built-in overload protection feature of the ACM . In this case, a speaker fault DTC sets.

Possible Sources

- Fuse
- Wiring, terminals, or connectors
- ACM

PINPOINT TEST F : NO SOUND FROM ALL SPEAKERS

F1 CHECK FOR PCM (POWERTRAIN CONTROL MODULE) DIAGNOSTIC TROUBLE CODES (DTCS)

- Ignition ON.
- Using a diagnostic scan tool, perform the PCM self-test.

Is DTC P0615 present?

Yes	For 2.0L Duratec-HE (125kW/170PS) - MI4, REFER to: Starting System (303-06A Starting System - 2.0L Duratec-HE (125kW/170PS) - MI4, Diagnosis and Testing). See P0615. For 2.0L EcoBoost (184kW/250PS) - MI4, REFER to: Starting System (303-06B Starting System - 2.0L EcoBoost (184kW/250PS) - MI4, Diagnosis and Testing). See P0615.
No	GO to F2

F2 CHECK FOR SPEAKER DIAGNOSTIC TROUBLE CODES (DTCS)

- Ignition ON.
- Using a diagnostic scan tool, perform the ACM self-test.

Are any speaker fault Diagnostic Trouble Codes (DTCs) present?

Yes	REFER to: Information and Entertainment System (415-00B Information and Entertainment System - General Information - Vehicles With: AM/FM/CD/SYNC, Diagnosis and Testing). See DTC Chart: ACM - Premium.
No	GO to F3

F3 CHECK THE START SENSE CIRCUIT FOR A SHORT TO VOLTAGE

- Ignition OFF.
- Disconnect: ACM C240A.
- Ignition ON.
- Measure:

Positive Lead	Measurement / Action	Negative Lead
C240A-3		—

Is any voltage present?

Yes	REPAIR the circuit in question.

No	GO to F4

F4 CHECK FOR CORRECT ACM (AUDIO FRONT CONTROL MODULE) OPERATION

- Ignition OFF.
- Disconnect and inspect all the ACM connectors.
- Repair:
  - corrosion (install new connectors or terminals - clean module pins)
  - damaged or bent pins - install new terminals pins
  - pushed-out pins - install new pins as necessary
- Reconnect the ACM connectors. Make sure they seat and latch correctly.
- Operate the system and determine if the concern is still present.

Is the concern still present?

Yes	CHECK OASIS for any applicable Technical Service Bulletins (TSBs). If a TSB exists for this concern, discontinue this test and follow TSB instructions. If no Technical Service Bulletins (TSBs) address this concern, INSTALL a new ACM . REFER to: Audio Front Control Module (ACM) (415-00B Information and Entertainment System - General Information - Vehicles With: AM/FM/CD/SYNC, Removal and Installation).
No	The system is operating correctly at this time. The concern may have been caused by module connections. ADDRESS the root cause of any connector or pin issues.

The LF Door Speaker Is Inoperative

Refer to Wiring Diagrams Cell 130 for schematic and connector information.

Diagnostic Overview

Diagnostics in this manual assume a certain skill level and knowledge of Ford-specific diagnostic practices. For information about these practices,
REFER to: Diagnostic Methods (100-00 General Information, Description and Operation).

Normal Operation and Fault Conditions

REFER to: Information and Entertainment System - System Operation and Component Description (415-00B Information and Entertainment System - General Information - Vehicles With: AM/FM/CD/SYNC, Description and Operation).
See ACM .

The ACM directs audio signals to the Left Front (LF) speakers in the form of a fluctuating AC voltage. The Left Front (LF) door tweeter speaker and the Left Front (LF) door speaker share the same audio signal.

DTC Fault Trigger Conditions

DTC	Description	Fault Trigger Conditions
B1A01:01	Speaker #1: General Electrical Failure	Set by the ACM when a failure is detected on the Left Front (LF) door or tweeter speaker circuits.
B1A01:11	Speaker #1: Circuit Short To Ground	Set by the ACM when a short to ground is detected on the Left Front (LF) door or tweeter speaker circuits. When DTC B1A01:11 is set, the speaker output is disabled.

B1A01:12	Speaker #1: Circuit Short To Battery	Set by the ACM when a short to battery is detected on the Left Front (LF) door or tweeter speaker circuits. When DTC B1A01:12 is set, the speaker output is disabled.
B1A01:13	Speaker #1: Circuit Open	Set by the ACM when an open is detected on the Left Front (LF) door or tweeter speaker circuits.

Possible Sources

- Wiring, terminals, or connectors
- Speaker
- ACM

PINPOINT TEST G : THE LF DOOR SPEAKER IS INOPERATIVE

G1 CHECK THE AUDIO SIGNAL TO THE LEFT FRONT (LF) DOOR SPEAKER

- Ignition OFF.
- Disconnect: Left Front (LF) Door Speaker C523.
- Operate the audio system in radio tuner AM / FM mode.
- Measure:

Positive Lead	Measurement / Action	Negative Lead
C523-1	$\tilde{V}$	C523-4

Is a fluctuating AC voltage present?

Yes	INSTALL a new Left Front (LF) door speaker. REFER to: Front Door Speaker (415-00B Information and Entertainment System - General Information - Vehicles With: AM/FM/CD/SYNC, Removal and Installation).
No	GO to G2

G2 CHECK THE AUDIO CIRCUITS TO THE LEFT FRONT (LF) DOOR SPEAKER FOR A SHORT TO VOLTAGE

- Ignition OFF.
- Disconnect: ACM C240A.
- Ignition ON.
- Measure:

Positive Lead	Measurement / Action	Negative Lead
C523-1	⊞▽⊟	—
C523-4	⊞▽⊟	—

Is any voltage present?

Yes	REPAIR the circuit in question.

No	GO to G3

G3 CHECK THE AUDIO CIRCUITS TO THE LEFT FRONT (LF) DOOR SPEAKER FOR A SHORT TO GROUND

- Ignition OFF.
- Disconnect: Left Front (LF) Tweeter Speaker C513
- Measure:

Positive Lead	Measurement / Action	Negative Lead
C523-1	Ω	—
C523-4	Ω	—

Are the resistances greater than 10,000 ohms?

Yes	GO to G4
No	REPAIR the circuit in question.

G4 CHECK THE AUDIO CIRCUITS TO THE LEFT FRONT (LF) DOOR SPEAKER FOR AN OPEN

- Measure:

Positive Lead	Measurement / Action	Negative Lead
C523-1	Ω	C240A-22
C523-4	Ω	C240A-10

Are the resistances less than 3 ohms?

Yes	GO to G5
No	REPAIR the circuit in question.

G5 CHECK THE AUDIO CIRCUITS TO THE LEFT FRONT (LF) DOOR SPEAKER FOR A SHORT TOGETHER

- Measure:

Positive Lead	Measurement / Action	Negative Lead
C523-1	Ω	C523-4

Is the resistance greater than 10,000 ohms?

Yes	GO to G6

No	REPAIR the circuit in question.

G6 CHECK FOR CORRECT ACM (AUDIO FRONT CONTROL MODULE) OPERATION

- Disconnect and inspect all the ACM connectors.
- Repair:
  - corrosion (install new connector or terminals - clean module pins)
  - damaged pins - install new terminals/pins
  - pushed-out pins - install new pins as necessary
- Reconnect the ACM connectors. Make sure they seat and latch correctly.
- Operate the system and determine if the concern is still present.

Is the concern still present?

Yes	CHECK OASIS for any applicable Technical Service Bulletins (TSBs). If a TSB exists for this concern, discontinue this test and follow TSB instructions. If no Technical Service Bulletins (TSBs) address this concern, INSTALL a new ACM . REFER to: Audio Front Control Module (ACM) (415-00B Information and Entertainment System - General Information - Vehicles With: AM/FM/CD/SYNC, Removal and Installation).
No	The system is operating correctly at this time. The concern may have been caused by module connections. ADDRESS the root cause of any connector or pin issues.

The LF Tweeter Speaker Is Inoperative

Refer to Wiring Diagrams Cell 130 for schematic and connector information.

Diagnostic Overview

Diagnostics in this manual assume a certain skill level and knowledge of Ford-specific diagnostic practices. For information about these practices,
REFER to: Diagnostic Methods (100-00 General Information, Description and Operation).

Normal Operation and Fault Conditions

REFER to: Information and Entertainment System - System Operation and Component Description (415-00B Information and Entertainment System - General Information - Vehicles With: AM/FM/CD/SYNC, Description and Operation).
See ACM .

The ACM directs audio signals to the Left Front (LF) speakers in the form of a fluctuating AC voltage. The Left Front (LF) door tweeter speaker and the Left Front (LF) door speaker share the same audio signal.

DTC Fault Trigger Conditions

DTC	Description	Fault Trigger Conditions
B1A01:01	Speaker #1: General Electrical Failure	Set by the ACM when a failure is detected on the Left Front (LF) door or tweeter speaker circuits.
B1A01:11	Speaker #1: Circuit Short To Ground	Set by the ACM when a short to ground is detected on the Left Front (LF) door or tweeter speaker circuits. When DTC B1A01:11 is set, the speaker output is disabled.
B1A01:12	Speaker #1: Circuit	Set by the ACM when a short to battery is detected on the Left Front (LF) door or tweeter

	Short To Battery	speaker circuits. When DTC B1A01:12 is set, the speaker output is disabled.
B1A01:13	Speaker #1: Circuit Open	Set by the ACM when an open is detected on the Left Front (LF) door or tweeter speaker circuits.

Possible Sources

- Wiring, terminals, or connectors
- Speaker
- ACM

PINPOINT TEST H : THE LF TWEETER SPEAKER IS INOPERATIVE

H1 CHECK THE AUDIO SIGNAL TO THE LEFT FRONT (LF) TWEETER SPEAKER

- Ignition OFF.
- Disconnect: Left Front (LF) Tweeter Speaker C513
- Operate the audio system in radio tuner AM / FM mode.
- Measure:

Positive Lead	Measurement / Action	Negative Lead
C513-1	~V	C513-3

Is a fluctuating AC voltage present?

Yes	INSTALL a new Left Front (LF) tweeter speaker. REFER to: Front Door Tweeter Speaker (415-00B Information and Entertainment System - General Information - Vehicles With: AM/FM/CD/SYNC, Removal and Installation).
No	GO to H2

H2 CHECK THE AUDIO CIRCUITS TO THE LEFT FRONT (LF) TWEETER SPEAKER FOR A SHORT TO VOLTAGE

- Ignition OFF.
- Disconnect: ACM C240A.
- Ignition ON.
- Measure:

Positive Lead	Measurement / Action	Negative Lead
C513-1	V	—
C513-3	V	—

Is any voltage present?

Yes	REPAIR the circuit in question.
No	GO to H3

H3 CHECK THE AUDIO CIRCUITS TO THE LEFT FRONT (LF) TWEETER SPEAKER FOR A SHORT TO GROUND

- Ignition OFF.
- Disconnect: Left Front (LF) Speaker C523
- Measure:

Positive Lead	Measurement / Action	Negative Lead
C513-1	Ω	—
C513-3	Ω	—

Are the resistances greater than 10,000 ohms?

Yes	GO to H4
No	REPAIR the circuit in question.

H4 CHECK THE AUDIO CIRCUITS TO THE LEFT FRONT (LF) TWEETER SPEAKER FOR AN OPEN

- Measure:

Positive Lead	Measurement / Action	Negative Lead
C513-1	Ω	C240A-22
C513-3	Ω	C240A-10

Are the resistances less than 3 ohms?

Yes	GO to H5
No	REPAIR the circuit in question.

H5 CHECK THE AUDIO CIRCUITS TO THE LEFT FRONT (LF) DOOR SPEAKER FOR A SHORT TOGETHER

- Measure:

Positive Lead	Measurement / Action	Negative Lead
C513-1	Ω	C513-3

Is the resistance greater than 10,000 ohms?

Yes	GO to H6
No	REPAIR the circuit in question.

H6 CHECK FOR CORRECT ACM (AUDIO FRONT CONTROL MODULE) OPERATION

- Ignition OFF.
- Disconnect and inspect all the ACM connectors.
- Repair:
  - corrosion (install new connector or terminals - clean module pins)
  - damaged pins - install new terminals/pins
  - pushed-out pins - install new pins as necessary
- Reconnect the ACM connectors. Make sure they seat and latch correctly.
- Operate the system and determine if the concern is still present.

Is the concern still present?

Yes	CHECK OASIS for any applicable Technical Service Bulletins (TSBs). If a TSB exists for this concern, discontinue this test and follow TSB instructions. If no Technical Service Bulletins (TSBs) address this concern, INSTALL a new ACM . REFER to: Audio Front Control Module (ACM) (415-00B Information and Entertainment System - General Information - Vehicles With: AM/FM/CD/SYNC, Removal and Installation).
No	The system is operating correctly at this time. The concern may have been caused by module connections. ADDRESS the root cause of any connector or pin issues.

The RF Door Speaker Is Inoperative

Refer to Wiring Diagrams Cell 130 for schematic and connector information.

Diagnostic Overview

Diagnostics in this manual assume a certain skill level and knowledge of Ford-specific diagnostic practices. For information about these practices,
REFER to: Diagnostic Methods (100-00 General Information, Description and Operation).

Normal Operation and Fault Conditions

REFER to: Information and Entertainment System - System Operation and Component Description (415-00B Information and Entertainment System - General Information - Vehicles With: AM/FM/CD/SYNC, Description and Operation).
See ACM .

The ACM directs audio signals to the Right Front (RF) speakers in the form of a fluctuating AC voltage. The Right Front (RF) door tweeter speaker and the Right Front (RF) door speaker share the same audio signal.

DTC Fault Trigger Conditions

DTC	Description	Fault Trigger Conditions
B1A02:01	Speaker #2: General Electrical Failure	Set by the ACM when a failure is detected on the Right Front (RF) door or tweeter speaker circuits.
B1A02:11	Speaker #2: Circuit Short To Ground	Set by the ACM when a short to ground is detected on the Right Front (RF) door or tweeter speaker circuits. When DTC B1A02:11 is set, the speaker output is disabled.
B1A02:12	Speaker #2: Circuit	Set by the ACM when a short to battery is detected on the Right Front (RF) door or tweeter

	Short To Battery	speaker circuits. When DTC B1A02:12 is set, the speaker output is disabled.
B1A02:13	Speaker #2: Circuit Open	Set by the ACM when an open is detected on the Right Front (RF) door or tweeter speaker circuits.

Possible Sources

- Wiring, terminals, or connectors
- Speaker
- ACM

PINPOINT TEST I : THE RF DOOR SPEAKER IS INOPERATIVE

I1 CHECK THE AUDIO SIGNAL TO THE RIGHT FRONT (RF) DOOR SPEAKER

- Ignition OFF.
- Disconnect: Right Front (RF) Door Speaker C612.
- Operate the audio system in radio tuner AM / FM mode.
- Measure:

Positive Lead	Measurement / Action	Negative Lead
C612-1	~V	C612-4

Is a fluctuating AC voltage present?

Yes	INSTALL a new Right Front (RF) door speaker. REFER to: Front Door Speaker (415-00B Information and Entertainment System - General Information - Vehicles With: AM/FM/CD/SYNC, Removal and Installation).
No	GO to I2

I2 CHECK THE AUDIO CIRCUITS TO THE RIGHT FRONT (RF) DOOR SPEAKER FOR A SHORT TO VOLTAGE

- Ignition OFF.
- Disconnect: ACM C240A.
- Ignition ON.
- Measure:

Positive Lead	Measurement / Action	Negative Lead
C612-1	+V−	—
C612-4	+V−	—

Is any voltage present?

Yes	REPAIR the circuit in question.
No	GO to I3

I3 CHECK THE AUDIO CIRCUITS TO THE RIGHT FRONT (RF) DOOR SPEAKER FOR A SHORT TO GROUND

- Ignition OFF.
- Disconnect: Right Front (RF) Tweeter Speaker C613
- Measure:

Positive Lead	Measurement / Action	Negative Lead
C612-1	Ω	—
C612-4	Ω	—

Are the resistances greater than 10,000 ohms?

Yes	GO to I4
No	REPAIR the circuit in question.

I4 CHECK THE AUDIO CIRCUITS TO THE RIGHT FRONT (RF) DOOR SPEAKER FOR AN OPEN

- Measure:

Positive Lead	Measurement / Action	Negative Lead
C612-1	Ω	C240A-23
C612-4	Ω	C240A-11

Are the resistances less than 3 ohms?

Yes	GO to I5
No	REPAIR the circuit in question.

I5 CHECK THE AUDIO CIRCUITS TO THE RIGHT FRONT (RF) DOOR SPEAKER FOR A SHORT TOGETHER

- Measure:

Positive Lead	Measurement / Action	Negative Lead
C612-1	Ω	C612-4

Is the resistance greater than 10,000 ohms?

Yes	GO to I6
No	REPAIR the circuit in question.

I6 CHECK FOR CORRECT ACM (AUDIO FRONT CONTROL MODULE) OPERATION

- Ignition OFF.
- Disconnect and inspect all the ACM connectors.
- Repair:
  - corrosion (install new connector or terminals - clean module pins)
  - damaged pins - install new terminals/pins
  - pushed-out pins - install new pins as necessary
- Reconnect the ACM connectors. Make sure they seat and latch correctly.
- Operate the system and determine if the concern is still present.

Is the concern still present?

Yes	CHECK OASIS for any applicable Technical Service Bulletins (TSBs). If a TSB exists for this concern, discontinue this test and follow TSB instructions. If no Technical Service Bulletins (TSBs) address this concern, INSTALL a new ACM . REFER to: Audio Front Control Module (ACM) (415-00B Information and Entertainment System - General Information - Vehicles With: AM/FM/CD/SYNC, Removal and Installation).
No	The system is operating correctly at this time. The concern may have been caused by module connections. ADDRESS the root cause of any connector or pin issues.

The RF Tweeter Speaker Is Inoperative

Refer to Wiring Diagrams Cell 130 for schematic and connector information.

Diagnostic Overview

Diagnostics in this manual assume a certain skill level and knowledge of Ford-specific diagnostic practices. For information about these practices,
REFER to: Diagnostic Methods (100-00 General Information, Description and Operation).

Normal Operation and Fault Conditions

REFER to: Information and Entertainment System - System Operation and Component Description (415-00B Information and Entertainment System - General Information - Vehicles With: AM/FM/CD/SYNC, Description and Operation).
See ACM .

The ACM directs audio signals to the Right Front (RF) speakers in the form of a fluctuating AC voltage. The Right Front (RF) door tweeter speaker and the Right Front (RF) door speaker share the same audio signal.

DTC Fault Trigger Conditions

DTC	Description	Fault Trigger Conditions
B1A02:01	Speaker #2: General Electrical Failure	Set by the ACM when a failure is detected on the Right Front (RF) door or tweeter speaker circuits.
B1A02:11	Speaker #2: Circuit Short To Ground	Set by the ACM when a short to ground is detected on the Right Front (RF) door or tweeter speaker circuits. When DTC B1A02:11 is set, the speaker output is disabled.
B1A02:12	Speaker #2: Circuit	Set by the ACM when a short to battery is detected on the Right Front (RF) door or tweeter

	Short To Battery	speaker circuits. When DTC B1A02:12 is set, the speaker output is disabled.
B1A02:13	Speaker #2: Circuit Open	Set by the ACM when an open is detected on the Right Front (RF) door or tweeter speaker circuits.

Possible Sources

- Wiring, terminals, or connectors
- Speaker
- ACM

PINPOINT TEST J : THE RF TWEETER SPEAKER IS INOPERATIVE

J1 CHECK THE AUDIO SIGNAL TO THE RIGHT FRONT (RF) TWEETER SPEAKER

- Ignition OFF.
- Disconnect: Right Front (RF) Tweeter Speaker C613.
- Operate the audio system in radio tuner AM / FM mode.
- Measure:

Positive Lead	Measurement / Action	Negative Lead
C613-1	~V	C613-3

Is a fluctuating AC voltage present?

Yes	INSTALL a new Right Front (RF) tweeter speaker. REFER to: Front Door Tweeter Speaker (415-00B Information and Entertainment System - General Information - Vehicles With: AM/FM/CD/SYNC, Removal and Installation).
No	GO to J2

J2 CHECK THE AUDIO CIRCUITS TO THE RIGHT FRONT (RF) TWEETER SPEAKER FOR A SHORT TO VOLTAGE

- Ignition OFF.
- Disconnect: ACM C240A.
- Ignition ON.
- Measure:

Positive Lead	Measurement / Action	Negative Lead
C613-1	+V−	—
C613-3	+V−	—

Is any voltage present?

Yes	REPAIR the circuit in question.
No	GO to J3

J3 CHECK THE AUDIO CIRCUITS TO THE RIGHT FRONT (RF) TWEETER SPEAKER FOR A SHORT TO GROUND

- Ignition OFF.
- Disconnect: Left Front (RF) Speaker C612
- Measure:

Positive Lead	Measurement / Action	Negative Lead
C613-1	Ω	—
C613-3	Ω	—

Are the resistances greater than 10,000 ohms?

Yes	GO to J4
No	REPAIR the circuit in question.

J4 CHECK THE AUDIO CIRCUITS TO THE RIGHT FRONT (RF) TWEETER SPEAKER FOR AN OPEN

- Measure:

Positive Lead	Measurement / Action	Negative Lead
C613-1	Ω	C240A-23
C613-3	Ω	C240A-11

Are the resistances less than 3 ohms?

Yes	GO to J5
No	REPAIR the circuit in question.

J5 CHECK THE AUDIO CIRCUITS TO THE RIGHT FRONT (RF) DOOR TWEETER SPEAKER FOR A SHORT TOGETHER

- Measure:

Positive Lead	Measurement / Action	Negative Lead
C613-1	Ω	C613-3

Is the resistance greater than 10,000 ohms?

Yes	GO to J6

No	REPAIR the circuit in question.

J6 CHECK FOR CORRECT ACM (AUDIO FRONT CONTROL MODULE) OPERATION

- Ignition OFF.
- Disconnect and inspect all the ACM connectors.
- Repair:
  - corrosion (install new connector or terminals - clean module pins)
  - damaged pins - install new terminals/pins
  - pushed-out pins - install new pins as necessary
- Reconnect the ACM connectors. Make sure they seat and latch correctly.
- Operate the system and determine if the concern is still present.

Is the concern still present?

Yes	CHECK OASIS for any applicable Technical Service Bulletins (TSBs). If a TSB exists for this concern, discontinue this test and follow TSB instructions. If no Technical Service Bulletins (TSBs) address this concern, INSTALL a new ACM . REFER to: Audio Front Control Module (ACM) (415-00B Information and Entertainment System - General Information - Vehicles With: AM/FM/CD/SYNC, Removal and Installation).
No	The system is operating correctly at this time. The concern may have been caused by module connections. ADDRESS the root cause of any connector or pin issues.

The RR Door Speaker Is Inoperative

Refer to Wiring Diagrams Cell 130 for schematic and connector information.

Diagnostic Overview

Diagnostics in this manual assume a certain skill level and knowledge of Ford-specific diagnostic practices. For information about these practices,
REFER to: Diagnostic Methods (100-00 General Information, Description and Operation).

Normal Operation and Fault Conditions

REFER to: Information and Entertainment System - System Operation and Component Description (415-00B Information and Entertainment System - General Information - Vehicles With: AM/FM/CD/SYNC, Description and Operation).
See ACM .

The ACM directs audio signals to the Right Rear (RR) speakers in the form of a fluctuating AC voltage.

DTC Fault Trigger Conditions

DTC	Description	Fault Trigger Conditions
B1A03:01	Speaker #3: General Electrical Failure	Set by the ACM when a failure is detected on the Right Rear (RR) door speaker circuits.
B1A03:11	Speaker #3: Circuit Short To Ground	Set by the ACM when a short to ground is detected on the Right Rear (RR) door speaker circuits. When DTC B1A03:11 is set, the speaker output is disabled.
B1A03:12	Speaker #3: Circuit	Set by the ACM when a short to battery is detected on the Right Rear (RR) door speaker

	Short To Battery	circuits. When DTC B1A03:12 is set, the speaker output is disabled.
B1A03:13	Speaker #3: Circuit Open	Set by the ACM when an open is detected on the Right Rear (RR) door speaker circuits.

Possible Sources

- Wiring, terminals, or connectors
- Speaker
- ACM

PINPOINT TEST K : THE RR DOOR SPEAKER IS INOPERATIVE

K1 CHECK THE AUDIO SIGNAL TO THE RIGHT REAR (RR) DOOR SPEAKER

- Ignition OFF.
- Disconnect: Right Rear (RR) Door Speaker C802.
- Operate the audio system in radio tuner AM / FM mode.
- Measure:

Positive Lead	Measurement / Action	Negative Lead
C802-1	~V	C802-4

Is a fluctuating AC voltage present?

Yes	INSTALL a new Right Rear (RR) door speaker. G1513583
No	GO to K2

K2 CHECK THE AUDIO CIRCUITS TO THE RIGHT REAR (RR) DOOR SPEAKER FOR A SHORT TO VOLTAGE

- Ignition OFF.
- Disconnect: ACM C240A.
- Ignition ON.
- Measure:

Positive Lead	Measurement / Action	Negative Lead
C802-1	V	—
C802-4	V	—

Is any voltage present?

Yes	REPAIR the circuit in question.
No	GO to K3

K3 CHECK THE AUDIO CIRCUITS TO THE RIGHT REAR (RR) DOOR SPEAKER FOR A SHORT TO GROUND

- Ignition OFF.
- Measure:

Positive Lead	Measurement / Action	Negative Lead
C802-1	Ω	—
C802-4	Ω	—

Are the resistances greater than 10,000 ohms?

Yes	GO to K4
No	REPAIR the circuit in question.

K4 CHECK THE AUDIO CIRCUITS TO THE RIGHT REAR (RR) DOOR SPEAKER FOR AN OPEN

- Measure:

Positive Lead	Measurement / Action	Negative Lead
C802-1	Ω	C240A-24
C802-4	Ω	C240A-12

Are the resistances less than 3 ohms?

Yes	GO to K5
No	REPAIR the circuit in question.

K5 CHECK THE AUDIO CIRCUITS TO THE RIGHT REAR (RR) DOOR SPEAKER FOR A SHORT TOGETHER

- Measure:

Positive Lead	Measurement / Action	Negative Lead
C802-1	Ω	C802-4

Is the resistance greater than 10,000 ohms?

Yes	GO to K6
No	REPAIR the circuit in question.

K6 CHECK FOR CORRECT ACM (AUDIO FRONT CONTROL MODULE) OPERATION

- Disconnect and inspect all the ACM connectors.
- Repair:
  - corrosion (install new connector or terminals - clean module pins)
  - damaged pins - install new terminals/pins
  - pushed-out pins - install new pins as necessary
- Reconnect the ACM connectors. Make sure they seat and latch correctly.
- Operate the system and determine if the concern is still present.

Is the concern still present?

Yes	CHECK OASIS for any applicable Technical Service Bulletins (TSBs). If a TSB exists for this concern, discontinue this test and follow TSB instructions. If no Technical Service Bulletins (TSBs) address this concern, INSTALL a new ACM . REFER to: Audio Front Control Module (ACM) (415-00B Information and Entertainment System - General Information - Vehicles With: AM/FM/CD/SYNC, Removal and Installation).
No	The system is operating correctly at this time. The concern may have been caused by module connections. ADDRESS the root cause of any connector or pin issues.

The LR Door Speaker Is Inoperative

Refer to Wiring Diagrams Cell 130 for schematic and connector information.

Diagnostic Overview

Diagnostics in this manual assume a certain skill level and knowledge of Ford-specific diagnostic practices. For information about these practices,
REFER to: Diagnostic Methods (100-00 General Information, Description and Operation).

Normal Operation and Fault Conditions

REFER to: Information and Entertainment System - System Operation and Component Description (415-00B Information and Entertainment System - General Information - Vehicles With: AM/FM/CD/SYNC, Description and Operation).
See ACM .

The ACM directs audio signals to the Left Rear (LR) speakers in the form of a fluctuating AC voltage.

DTC Fault Trigger Conditions

DTC	Description	Fault Trigger Conditions
B1A04:01	Speaker #4: General Electrical Failure	Set by the ACM when a failure is detected on the Left Rear (LR) door speaker circuits.
B1A04:11	Speaker #4: Circuit Short To Ground	Set by the ACM when a short to ground is detected on the Left Rear (LR) door speaker circuits. When DTC B1A04:11 is set, the speaker output is disabled.
B1A04:12	Speaker #4: Circuit Short To Battery	Set by the ACM when a short to battery is detected on the Left Rear (LR) door speaker circuits. When DTC B1A04:12 is set, the speaker output is disabled.
B1A04:13	Speaker #4: Circuit Open	Set by the ACM when an open is detected on the Left Rear (LR) door speaker circuits.

Possible Sources

- Wiring, terminals, or connectors
- Speaker
- ACM

PINPOINT TEST L : THE LR DOOR SPEAKER IS INOPERATIVE

L1 CHECK THE AUDIO SIGNAL TO THE LEFT REAR (LR) DOOR SPEAKER

- Ignition OFF.
- Disconnect: Left Rear (LR) Door Speaker C702.
- Operate the audio system in radio tuner AM / FM mode.
- Measure:

Positive Lead	Measurement / Action	Negative Lead
C702-1	~V	C702-4

Is a fluctuating AC voltage present?

Yes	INSTALL a new Left Rear (LR) door speaker. G1513583
No	GO to L2

L2 CHECK THE AUDIO CIRCUITS TO THE LEFT REAR (LR) DOOR SPEAKER FOR A SHORT TO VOLTAGE

- Ignition OFF.
- Disconnect: ACM C240A.
- Ignition ON.
- Measure:

Positive Lead	Measurement / Action	Negative Lead
C702-1	+V−	—
C702-4	+V−	—

Is any voltage present?

Yes	REPAIR the circuit in question.
No	GO to L3

L3 CHECK THE AUDIO CIRCUITS TO THE LEFT REAR (LR) DOOR SPEAKER FOR A SHORT TO GROUND

- Ignition OFF.
- Measure:

Positive Lead	Measurement / Action	Negative Lead
C702-1	Ω	—
C702-4	Ω	—

Are the resistances greater than 10,000 ohms?

Yes	GO to L4
No	REPAIR the circuit in question.

L4 CHECK THE AUDIO CIRCUITS TO THE LEFT REAR (LR) DOOR SPEAKER FOR AN OPEN

- Measure:

Positive Lead	Measurement / Action	Negative Lead
C702-1	Ω	C240A-21
C702-4	Ω	C240A-9

Are the resistances less than 3 ohms?

Yes	GO to L5
No	REPAIR the circuit in question.

L5 CHECK THE AUDIO CIRCUITS TO THE LEFT REAR (LR) DOOR SPEAKER FOR A SHORT TOGETHER

- Measure:

Positive Lead	Measurement / Action	Negative Lead
C702-1	Ω	C702-4

Is the resistance greater than 10,000 ohms?

Yes	GO to L6
No	REPAIR the circuit in question.

L6 CHECK FOR CORRECT ACM (AUDIO FRONT CONTROL MODULE) OPERATION

- Disconnect and install all the ACM connectors.
- Repair:
  - corrosion (install new connector or terminals - clean module pins)
  - damaged pins - install new terminals/pins
  - pushed-out pins - install new pins as necessary

- Reconnect the ACM connectors. Make sure they seat and latch correctly.
- Operate the system and determine if the concern is still present.

Is the concern still present?

Yes	CHECK OASIS for any applicable Technical Service Bulletins (TSBs). If a TSB exists for this concern, discontinue this test and follow TSB instructions. If no Technical Service Bulletins (TSBs) address this concern, INSTALL a new ACM . REFER to: Audio Front Control Module (ACM) (415-00B Information and Entertainment System - General Information - Vehicles With: AM/FM/CD/SYNC, Removal and Installation).
No	The system is operating correctly at this time. The concern may have been caused by module connections. ADDRESS the root cause of any connector or pin issues.

No sound From All Sync® Audio Sources (Bluetooth, USB , Secure Digital (SD) Card, RCA Jacks)

Refer to Wiring Diagrams Cell 130 for schematic and connector information.

Diagnostic Overview

Diagnostics in this manual assume a certain skill level and knowledge of Ford-specific diagnostic practices. For information about these practices,
REFER to: Diagnostic Methods (100-00 General Information, Description and Operation).

Normal Operation and Fault Conditions

REFER to: Information and Entertainment System - System Operation and Component Description (415-00B Information and Entertainment System - General Information - Vehicles With: AM/FM/CD/SYNC, Description and Operation).
See SYNC® System.

The APIM transmits left and right channel analog audio signals to the ACM . These signals include inputs from the USB port, audio input jack, and Bluetooth media device. If a USB mass storage device is used to play an audio file, the SYNC® system only plays audio files that do not have Digital Rights Management (DRM) protection.

Possible Sources

- Wiring, terminals, or connectors
- APIM
- ACM

PINPOINT TEST M : NO SOUND FROM ALL SYNC® AUDIO SOURCES (BLUETOOTH, USB (UNIVERSAL SERIAL BUS) , SECURE DIGITAL (SD) CARD, RCA JACKS)

M1 VERIFY THE OPERATION OF THE SYNC® SYSTEM AUDIO SOURCES

- Connect: Multi-Media Interface Tester 105-00120.
- Using the Multi-Media Interface Tester 105-0012, test the audio output for the audio input jack, USB port, and Bluetooth.

Is there poor quality, distorted, or no sound from all SYNC® audio sources?

Yes	GO to M2
No	If there is a concern with one or more, but not all, audio sources, REFER to: Information and Entertainment System (415-00B Information and Entertainment System - General Information - Vehicles With: AM/FM/CD/SYNC, Diagnosis and Testing). See Symptom Chart: SYNC® System, to diagnose the observed symptom.

	If all audio sources operate correctly, the concern is with the customer's device.

M2 CHECK THE AUDIO SIGNALS TO THE ACM (AUDIO FRONT CONTROL MODULE)

NOTICE: This pinpoint test step directs testing circuits using a back-probe method. Use the special back-probe tool POM6411. Do not force test leads or other probes into connectors. Adequate care must be exercised to avoid connector terminal damage, while ensuring that good electrical contact is made with the circuit or terminal. Failure to follow these instructions may cause damage to wiring, terminals, or connectors, and may cause subsequent electrical faults.

- Operate the audio system in SYNC® mode and play an audio file.
- Measure the AC voltage by backprobing ACM connector C240B:

Positive Lead	Measurement / Action	Negative Lead
C240B-12	V~	C240B-26
C240B-13	V~	C240B-25

Is a fluctuating AC voltage present?

Yes	GO to M7
No	GO to M3

M3 CHECK THE AUDIO CIRCUITS TO THE ACM (AUDIO FRONT CONTROL MODULE) FOR A SHORT TO VOLTAGE

- Ignition OFF.
- Disconnect: ACM C240B.
- Disconnect: APIM C2383.
- Ignition ON.
- Measure:

Positive Lead	Measurement / Action	Negative Lead
C2383-23	V	—
C2383-24	V	—
C2383-25	V	—
C2383-26	V	—

Is any voltage present?

Yes	REPAIR the circuit in question.
No	GO to M4

M4 CHECK THE AUDIO CIRCUITS TO THE ACM (AUDIO FRONT CONTROL MODULE) FOR A SHORT TO GROUND

- Ignition OFF.
- Measure:

Positive Lead	Measurement / Action	Negative Lead
C2383-23	Ω	—
C2383-24	Ω	—
C2383-25	Ω	—
C2383-26	Ω	—

Are the resistances greater than 10,000 ohms?

Yes	GO to M5
No	REPAIR the circuit in question.

M5 CHECK THE CIRCUITS TO THE ACM (AUDIO FRONT CONTROL MODULE) FOR AN OPEN

- Measure:

Positive Lead	Measurement / Action	Negative Lead
C2383-23	Ω	C240B-13
C2383-24	Ω	C240B-26
C2383-25	Ω	C240B-12
C2383-26	Ω	C240B-25

Are the resistances less than 3 ohms?

Yes	GO to M6
No	REPAIR the circuit in question.

M6 CHECK FOR CORRECT APIM (SYNC MODULE) OPERATION

- Disconnect and inspect the APIM connector.
- Repair:
  - corrosion (install new connector or terminals - clean module pins)
  - damaged pins - install new terminals/pins
  - pushed-out pins - install new pins as necessary
- Reconnect the APIM connector. Make sure it seats and latches correctly.
- Wait at least 2 minutes for the APIM to re-initialize.
- Operate the system and determine if the concern is still present.

Is the concern still present?

Yes	CHECK OASIS for any applicable Technical Service Bulletins (TSBs). If a TSB exists for this concern, discontinue this test and follow TSB instructions. If no Technical Service Bulletins (TSBs) address this concern, INSTALL a new APIM . REFER to: SYNC Module [APIM] (415-00B Information and Entertainment System - General Information - Vehicles With: AM/FM/CD/SYNC, Removal and Installation).
No	The system is operating correctly at this time. The concern may have been caused by module connections. ADDRESS the root cause of any connector or pin issues.

M7 CHECK FOR CORRECT ACM (AUDIO FRONT CONTROL MODULE) OPERATION

- Ignition OFF.
- Disconnect and inspect all the ACM connectors.
- Repair:
  - corrosion (install new connector or terminals - clean module pins)
  - damaged pins - install new terminals/pins
  - pushed-out pins - install new pins as necessary
- Reconnect the ACM connectors. Make sure they seat and latch correctly.
- Operate the system and determine if the concern is still present.

Is the concern still present?

Yes	CHECK OASIS for any applicable Technical Service Bulletins (TSBs). If a TSB exists for this concern, discontinue this test and follow TSB instructions. If no Technical Service Bulletins (TSBs) address this concern, INSTALL a new ACM . REFER to: Audio Front Control Module (ACM) (415-00B Information and Entertainment System - General Information - Vehicles With: AM/FM/CD/SYNC, Removal and Installation).
No	The system is operating correctly at this time. The concern may have been caused by module connections. ADDRESS the root cause of any connector or pin issues.

The SYNC® System Is Inoperative (No Response Is Received From Phone, Voice, And Media Inputs)

Refer to Wiring Diagrams Cell 130 for schematic and connector information.

Diagnostic Overview

Diagnostics in this manual assume a certain skill level and knowledge of Ford-specific diagnostic practices. For information about these practices,
REFER to: Diagnostic Methods (100-00 General Information, Description and Operation).

Normal Operation and Fault Conditions

REFER to: Information and Entertainment System - System Operation and Component Description (415-00B Information and Entertainment System - General Information - Vehicles With: AM/FM/CD/SYNC, Description and Operation).
See SYNC® System.

DTC Fault Trigger Conditions

DTC	Description	Fault Trigger Conditions
U3000:04	Control Module: System Internal	Set by the APIM when it detects a fault due to a device conflict or internal

	Failure	failure.

Possible Sources

- Customer's device
- Customer error
- Audio system concern
- Communication network concern
- APIM

PINPOINT TEST N : THE SYNC® SYSTEM IS INOPERATIVE (NO RESPONSE IS RECEIVED FROM PHONE, VOICE, AND MEDIA INPUTS)

N1 VERIFY THAT THE APIM (SYNC MODULE) PASSES THE NETWORK TEST

- Using a diagnostic scan tool, perform the network test.

Did the APIM pass the network test?

Yes	GO to N2
No	REFER to: Communications Network (418-00 Module Communications Network, Diagnosis and Testing). See The APIM Does Not Respond To The Diagnostic Scan Tool.

N2 CHECK THE SYNC® SYSTEM INPUTS FOR FUNCTIONALITY

NOTE: *Carrying out a Master Reset returns all preference settings to the factory defaults, erases the phone book and call histories, and deletes any devices paired with the SYNC® system.*

- Connect: Multi-Media Interface Tester 105-00120.
- Using the Multi-Media Interface Tester 105-00120, test the audio output for the audio input jack, USB port, and Bluetooth connection using the VOICE switch on the steering wheel controls to enter each mode.

Do all of the SYNC® inputs function correctly?

Yes	The SYNC® system is operating correctly at this time. CARRY OUT a SYNC® system Master Reset. REFER to the Owner's Literature. REVIEW the SYNC® system operation with the customer. If the customer's device still does not operate correctly, the fault is with the customer's device.
No	GO to N3

N3 RESET THE APIM (SYNC MODULE) AND RECHECK SYNC® SYSTEM OPERATION

NOTE: *Carrying out a Master Reset returns all preference settings to the factory defaults, erases the phone book and call histories, and deletes any devices paired with the SYNC® system.*

- Carry out an APIM power reset by disconnecting the battery for 5 minutes, then reconnecting it.
- Connect: Multi-Media Interface Tester 105-00120.
- Using the Multi-Media Interface Tester 105-00120, test the audio output for the audio input jack, USB port, and Bluetooth connection using the VOICE switch on the steering wheel controls to enter each mode.

Do all of the SYNC® inputs function correctly?

Yes	The SYNC® system is operating correctly at this time. CARRY OUT a SYNC® system Master Reset.

	REFER to the Owner's Literature. REVIEW the SYNC® system operation with the customer. If the customer's device still does not operate correctly, the fault is with the customer's device.
No	If only some, but not all of the inputs are inoperative, REFER to: Information and Entertainment System (415-00B Information and Entertainment System - General Information - Vehicles With: AM/FM/CD/SYNC, Diagnosis and Testing). See Symptom Chart: SYNC® System to diagnose the observed symptom. If all inputs are inoperative and/or DTC U3000:04 is present, INSTALL a new APIM . REFER to: SYNC Module [APIM] (415-00B Information and Entertainment System - General Information - Vehicles With: AM/FM/CD/SYNC, Removal and Installation).

The SYNC® System Voice Or Tone Prompts, Text-To-Speech (TTS) Feature, Or Ringtones Are Inoperative Or Do Not Operate Correctly

Refer to Wiring Diagrams Cell 130 for schematic and connector information.

Diagnostic Overview

Diagnostics in this manual assume a certain skill level and knowledge of Ford-specific diagnostic practices. For information about these practices,
REFER to: Diagnostic Methods (100-00 General Information, Description and Operation).

Normal Operation and Fault Conditions

REFER to: Information and Entertainment System - System Operation and Component Description (415-00B Information and Entertainment System - General Information - Vehicles With: AM/FM/CD/SYNC, Description and Operation).
See SYNC® System and Voice Recognition.

Possible Sources

- Customer's setting
- Wiring, terminals, or connectors
- APIM
- ACM

PINPOINT TEST O : THE SYNC® SYSTEM VOICE OR TONE PROMPTS, TEXT-TO-SPEECH (TTS) FEATURE, OR RINGTONES ARE INOPERATIVE OR DO NOT OPERATE CORRECTLY

O1 CHECK THE AUDIBLE PROMPT SETTING

- Operate the audio system in SYNC® mode.
- Verify the audible prompts are enabled. Refer to "SYNC® Voice Recognition Feature" in the Owner's Literature.
- Operate the VOICE button on the steering wheel controls and observe the SYNC® audible prompt.

Does the SYNC® system produce an audible prompt correctly?

Yes	The system is operating correctly at this time. The concern was caused by the customer's setting. INSTRUCT the customer in the correct operation of the audible prompt feature.
No	GO to O2

O2 CHECK FOR A VOLTAGE SIGNAL FROM THE APIM (SYNC MODULE)

NOTICE: This pinpoint test step directs testing circuits using a back-probe method. Use the special back-probe tool POM6411. Do not force test leads or other probes into connectors. Adequate care must be exercised to avoid

connector terminal damage while ensuring that good electrical contact is made with the circuit or terminal. Failure to follow these instructions may cause damage to wiring, terminals, or connectors, and may cause subsequent electrical faults.

- Operate the audio system in SYNC® mode.
- While operating the VOICE button repeatedly, measure the AC voltage by backprobing ACM connector C240B:

Positive Lead	Measurement / Action	Negative Lead
C240B-8	$\tilde{V}$	C240B-21

Is a fluctuating AC voltage present each time the VOICE switch is operated?

Yes	GO to O7
No	GO to O3

O3 CHECK THE AUDIBLE PROMPT CIRCUITS FOR A SHORT TO VOLTAGE

- Ignition OFF.
- Disconnect: ACM C240B.
- Disconnect: APIM C2383.
- Ignition ON.
- Measure:

Positive Lead	Measurement / Action	Negative Lead
C240B-8	$\overline{V}$	—
C240B-21	$\overline{V}$	—

Is any voltage present?

Yes	REPAIR the circuit in question.
No	GO to O4

O4 CHECK THE AUDIBLE PROMPT CIRCUITS FOR A SHORT TO GROUND

- Ignition OFF.
- Measure:

Positive Lead	Measurement / Action	Negative Lead
C240B-8	Ω	—
C240B-21	Ω	—

Are the resistances greater than 10,000 ohms?

Yes	GO to O5
No	REPAIR the circuit in question.

O5 CHECK THE AUDIBLE PROMPT CIRCUITS FOR AN OPEN

- Measure:

Positive Lead	Measurement / Action	Negative Lead
C240B-8	Ω	C2383-3
C240B-21	Ω	C2383-4

Are the resistances less than 3 ohms?

Yes	GO to O6
No	REPAIR the circuit in question.

O6 CHECK FOR CORRECT APIM (SYNC MODULE) OPERATION

- Disconnect and inspect the APIM connector.
- Repair:
  - corrosion (install new connector or terminals - clean module pins)
  - damaged pins - install new terminals/pins
  - pushed-out pins - install new pins as necessary
- Reconnect the APIM connector. Make sure it seats and latches correctly.
- Wait at least 2 minutes for the APIM to re-initialize.
- Operate the system and determine if the concern is still present.

Is the concern still present?

Yes	CHECK OASIS for any applicable Technical Service Bulletins (TSBs). If a TSB exists for this concern, discontinue this test and follow TSB instructions. If no Technical Service Bulletins (TSBs) address this concern, INSTALL a new APIM . REFER to: SYNC Module [APIM] (415-00B Information and Entertainment System - General Information - Vehicles With: AM/FM/CD/SYNC, Removal and Installation).
No	The system is operating correctly at this time. The concern may have been caused by module connections. ADDRESS the root cause of any connector or pin issues.

O7 CHECK FOR CORRECT ACM (AUDIO FRONT CONTROL MODULE) OPERATION

- Ignition OFF.
- Disconnect and inspect all the ACM connectors.
- Repair:
  - corrosion (install new connector or terminals - clean module pins)
  - damaged pins - install new terminals/pins
  - pushed-out pins - install new pins as necessary
- Reconnect the ACM connectors. Make sure they seat and latch correctly.

Operate the system and determine if the concern is still present.

Is the concern still present?

Yes	CHECK OASIS for any applicable Technical Service Bulletins (TSBs). If a TSB exists for this concern, discontinue this test and follow TSB instructions. If no Technical Service Bulletins (TSBs) address this concern, INSTALL a new ACM . REFER to: Audio Front Control Module (ACM) (415-00B Information and Entertainment System - General Information - Vehicles With: AM/FM/CD/SYNC, Removal and Installation).
No	The system is operating correctly at this time. The concern may have been caused by module connections. ADDRESS the root cause of any connector or pin issues.

All SYNC® Services Features Are Inoperative Or Inaccurate (Traffic, Directions, And Information)

Diagnostic Overview

Diagnostics in this manual assume a certain skill level and knowledge of Ford-specific diagnostic practices. For information about these practices,
REFER to: Diagnostic Methods (100-00 General Information, Description and Operation).

Normal Operation and Fault Conditions

REFER to: Information and Entertainment System - System Operation and Component Description (415-00B Information and Entertainment System - General Information - Vehicles With: AM/FM/CD/SYNC, Description and Operation).
See SYNC® Traffic, Directions and Information.

Possible Sources

- Expired subscription
- APIM
- GPSM

PINPOINT TEST P : ALL SYNC® SERVICES FEATURES ARE INOPERATIVE OR INACCURATE (TRAFFIC, DIRECTIONS, AND INFORMATION)

P1 VERIFY THE CUSTOMER'S SUBSCRIPTION AND PHONE NUMBER

- **NOTE:** *Prior to performing this pinpoint test step, inquire with the customer about SYNC® traffic, directions, and information service registration.*

  Verify that the customer has an active subscription and the correct phone number is registered on the SYNC® website. Refer to www.syncmyride.com.

Is the subscription activated and the correct phone number registered?

Yes	GO to P2
No	If the subscription is not activated, INFORM the customer that in order for SYNC® traffic, directions, and information to function, the subscription needs to be activated on the SYNC® website. REFER to www.syncmyride.com. If the phone number is incorrect, INFORM the customer that the correct phone number must be registered on the SYNC® website. REFER to www.syncmyride.com.

P2 CHECK FOR APIM (SYNC MODULE) DIAGNOSTIC TROUBLE CODES (DTCS)

- Ignition ON

- Using a diagnostic scan tool, perform the APIM self-test.

Are any Diagnostic Trouble Codes (DTCs) recorded in the APIM ?

Yes	REFER to: Information and Entertainment System (415-00B Information and Entertainment System - General Information - Vehicles With: AM/FM/CD/SYNC, Diagnosis and Testing). See DTC Chart: APIM .
No	GO to P3

P3 CHECK FOR GPSM (GLOBAL POSITIONING SYSTEM MODULE) DIAGNOSTIC TROUBLE CODES (DTCS)

- Using a diagnostic scan tool, perform the GPSM self-test.

Are any Diagnostic Trouble Codes (DTCs) recorded in the GPSM ?

Yes	REFER to: Information and Entertainment System (415-00B Information and Entertainment System - General Information - Vehicles With: AM/FM/CD/SYNC, Diagnosis and Testing). See DTC Chart: GPSM .
No	GO to P4

P4 VERIFY THE CUSTOMER'S PHONE CONNECTION TO SYNC® TRAFFIC, DIRECTIONS, AND INFORMATION SERVICES

- Advise the customer to connect their phone to SYNC® traffic, directions, and information services. Caller ID blocking must be disabled on the customer's phone. Refer to the Owner's Literature.
- Operate a SYNC® traffic, directions, and information services feature.
- Verify that the phone call is placed and that the phone is connected to SYNC® traffic, directions, and information services.

Does the phone connect to SYNC® traffic, directions, and information services and operate correctly?

Yes	GO to P5
No	GO to Pinpoint Test T

P5 OBSERVE THE SYNC® TRAFFIC, DIRECTIONS, AND INFORMATION SERVICES SUBSCRIPTION COMMERCIAL

- Once the customer's phone is connected to SYNC® traffic, directions, and information services, observe the subscription commercial.

Does the SYNC® traffic, directions, and information services subscription commercial repeat with no selection option?

Yes	There is a potential SYNC® traffic, directions, and information services issue, and the problem does not reside in the vehicles audio system. CONTACT the Ford Technical Hotline for assistance.
No	GO to P6

P6 CHECK THE OPERATION OF THE DIRECTIONS FROM SYNC® TRAFFIC, DIRECTIONS, AND INFORMATION SERVICES

- When prompted, select directions from SYNC® traffic, directions, and information services and observe the audible

prompts from the audio system.

Is a single chime, audible prompt, then a short chime heard, indicating the navigation route is being sent to the vehicle?

Yes	SYNC® traffic, directions, and information services is operating correctly at this time.
No	If a single chime, audible prompt, then a repeating chime is heard, indicating the navigation route is being sent to the vehicle, GO to P7 If no chime or audible prompt is heard, indicating that the system was unable to locate the vehicle, there is a potential SYNC® traffic, directions, and information services issue. The problem does not reside in the vehicles audio system. CONTACT the Ford Technical Hotline for assistance.

P7 REPROGRAM THE APIM (SYNC MODULE)

- Perform the APIM Programming and force a Consumer Interface Processor (CIP) reflash.
  REFER to: SYNC Module [APIM] Programming (415-00B Information and Entertainment System - General Information - Vehicles With: AM/FM/CD/SYNC, General Procedures).
- Once the APIM programming is complete and the system has re-initialized, confirm that SYNC® traffic, directions, and information services operates correctly.

Does SYNC® traffic, directions, and information services operate correctly?

Yes	SYNC® traffic, directions, and information services is operating correctly at this time. The concern was resolved by reflashing the APIM.
No	GO to P8

P8 CHECK FOR CORRECT APIM (SYNC MODULE) OPERATION

- Ignition OFF.
- Disconnect and inspect the APIM connector.
- Repair:
  - corrosion (install new connector or terminals - clean module pins)
  - damaged pins - install new terminals/pins
  - pushed-out pins - install new pins as necessary
- Reconnect the APIM connector. Make sure it seats and latches correctly.
- Operate the system and determine if the concern is still present.

Is the concern still present?

Yes	CHECK OASIS for any applicable Technical Service Bulletins (TSBs). If a TSB exists for this concern, discontinue this test and follow TSB instructions. If no Technical Service Bulletins (TSBs) address this concern, INSTALL a new APIM. REFER to: SYNC Module [APIM] (415-00B Information and Entertainment System - General Information - Vehicles With: AM/FM/CD/SYNC, Removal and Installation). If the concern is still present, INSTALL a new GPSM. REFER to: Global Positioning System Module (GPSM) (415-00B Information and Entertainment System - General Information - Vehicles With: AM/FM/CD/SYNC, Removal and Installation).
No	The system is operating correctly at this time. The concern may have been caused by module connections. ADDRESS the root cause of any connector or pin issues.

The Voice Recognition Is Inoperative or Does Not Operate Correctly

Refer to Wiring Diagrams Cell 130 for schematic and connector information.

Diagnostic Overview

Diagnostics in this manual assume a certain skill level and knowledge of Ford-specific diagnostic practices. For information about these practices,
REFER to: Diagnostic Methods (100-00 General Information, Description and Operation).

Normal Operation and Fault Conditions

REFER to: Information and Entertainment System - System Operation and Component Description (415-00B Information and Entertainment System - General Information - Vehicles With: AM/FM/CD/SYNC, Description and Operation).
See Voice Recognition.

DTC Fault Trigger Conditions

DTC	Description	Fault Trigger Conditions
B1D79:01	Microphone Input: General Electrical Failure	Set by the APIM when a microphone is not detected during the on-demand self-test.
B1D79:11	Microphone Input: Circuit Short To Ground	Set by the APIM when a short to ground is detected on the microphone circuits.
B1D79:12	Microphone Input: Circuit Short To Battery	Set by the APIM when a short to battery voltage is detected on the microphone circuits.
B1D79:13	Microphone Input: Circuit Open	Set by the APIM when an open is detected on the microphone circuits.

Possible Sources

- Fuse
- Wiring, terminals, or connectors
- Steering wheel controls
- Microphone
- APIM

PINPOINT TEST Q : THE VOICE RECOGNITION IS INOPERATIVE OR DOES NOT OPERATE CORRECTLY

Q1 CHECK THE OPERATION OF THE STEERING WHEEL CONTROLS

- Operate the infotainment system in radio tuner AM / FM mode.
- Operate the VOICE switch on the steering wheel controls.

Does the infotainment system enter voice recognition mode?

Yes	GO to Q2
No	Diagnose the lower steering wheel controls. GO to Pinpoint Test U

Q2 CHECK THE MICROPHONE CIRCUITS TO THE APIM (SYNC MODULE) FOR A SHORT TO VOLTAGE

- Ignition OFF.

- Disconnect: APIM C2383.
- Ignition ON.
- Measure:

Positive Lead	Measurement / Action	Negative Lead
C2383-5	V	—
C2383-6	V	—

Is any voltage present?

Yes	REPAIR the circuit in question.
No	GO to Q3

Q3 CHECK THE MICROPHONE CIRCUITS TO THE APIM (SYNC MODULE) FOR A SHORT TO GROUND

- Ignition OFF.
- Disconnect: Microphone C9221.
- Measure:

Positive Lead	Measurement / Action	Negative Lead
C2383-5	Ω	—
C2383-6	Ω	—

Are the resistances greater than 10,000 ohms?

Yes	GO to Q4
No	REPAIR the circuit in question.

Q4 CHECK THE MICROPHONE CIRCUITS TO THE APIM (SYNC MODULE) FOR AN OPEN

- Measure:

Positive Lead	Measurement / Action	Negative Lead
C2383-5	Ω	C9221-A
C2383-6	Ω	C9221-B

Are the resistances less than 3 ohms?

Yes	GO to Q5
No	REPAIR the circuit in question.

Q5 ISOLATE THE MICROPHONE

- Connect: APIM C2383.
- Install a new microphone.
  REFER to: Microphone - Vehicles With: SYNC (415-00B Information and Entertainment System - General Information - Vehicles With: AM/FM/CD/SYNC, Removal and Installation).
- Test the voice recognition for normal operation.

Is the voice recognition functioning correctly?

Yes	The system is operating correctly at this time. The concern was caused by an inoperative microphone.
No	GO to Q6

Q6 CHECK FOR CORRECT APIM (SYNC MODULE) OPERATION

- Ignition OFF.
- Disconnect and inspect the APIM connector.
- Repair:
  - corrosion (install new connector or terminals – clean module pins)
  - damaged pins - install new terminals/pins
  - pushed-out pins - install new pins as necessary
- Reconnect the APIM connector. Make sure they seat and latch correctly.
- Wait at least 2 minutes for the APIM to re-initialize.
- Operate the system and determine if the concern is still present.

Is the concern still present?

Yes	CHECK OASIS for any applicable Technical Service Bulletins (TSBs). If a TSB exists for this concern, discontinue this test and follow TSB instructions. If no Technical Service Bulletins (TSBs) address this concern, INSTALL a new APIM . REFER to: SYNC Module [APIM] (415-00B Information and Entertainment System - General Information - Vehicles With: AM/FM/CD/SYNC, Removal and Installation).
No	The system is operating correctly at this time. The concern may have been caused by module connections. ADDRESS the root cause of any connector or pin issues.

The Audio Input Jack Is Inoperative Or Has Poor Sound Quality

Refer to Wiring Diagrams Cell 130 for schematic and connector information.

Diagnostic Overview

Diagnostics in this manual assume a certain skill level and knowledge of Ford-specific diagnostic practices. For information about these practices,
REFER to: Diagnostic Methods (100-00 General Information, Description and Operation).

Normal Operation and Fault Conditions

REFER to: Information and Entertainment System - System Operation and Component Description (415-00B Information and Entertainment System - General Information - Vehicles With: AM/FM/CD/SYNC, Description and Operation).
See Audio Input Jack Mode.

Visual Inspection and Diagnostic Pre-checks

Make sure the MP3 device is operating correctly.

Possible Sources

- Wiring, terminals, or connectors
- Audio input jack
- APIM

PINPOINT TEST R : THE AUDIO INPUT JACK IS INOPERATIVE OR HAS POOR SOUND QUALITY

R1 CHECK THE AUDIO INPUT JACK AUDIO FUNCTIONALITY

- Connect: Multi-Media Interface Tester 105-00120.
- Using the Multi-Media Interface Tester 105-00120, attempt to play an audio file using the using the audio input jack.

Is the audio output OK for the audio input jack?

Yes	The system is operating correctly at this time. The concern may be with the customer's device.
No	GO to R2

R2 CHECK THE AUDIO INPUT JACK CIRCUITS FOR A SHORT TO VOLTAGE

- Ignition OFF.
- Disconnect: Audio Input Jack C3312.
- Disconnect: APIM C2383
- Ignition ON.
- Measure:

Positive Lead	Measurement / Action	Negative Lead
C3312-1	V	—
C3312-3	V	—
C3312-4	V	—

Is any voltage present?

Yes	REPAIR the circuit in question.
No	GO to R3

R3 CHECK THE AUDIO INPUT JACK CIRCUITS FOR A SHORT TO GROUND

- Ignition OFF.
- Measure:

Positive Lead	Measurement / Action	Negative Lead
C3312-1	Ω	—
C3312-3	Ω	—
	Ω	

C3312-4		—

Is the resistance greater than 10,000 ohms?

Yes	GO to R4
No	REPAIR the circuit. TEST the system for normal operation.

R4 CHECK THE AUDIO INPUT JACK CIRCUITS FOR AN OPEN

- Measure:

Positive Lead	Measurement / Action	Negative Lead
C3312-1	Ω	C2383-47
C3312-3	Ω	C2383-46
C3312-4	Ω	C2383-45

Are the resistances less than 3 ohms?

Yes	GO to R5
No	REPAIR the circuit in question. TEST the system for normal operation.

R5 ISOLATE THE AUDIO INPUT JACK

- Connect: APIM C2383.
- Install a new audio input jack.
  REFER to: Audio Input Socket (415-00B Information and Entertainment System - General Information - Vehicles With: AM/FM/CD/SYNC, Removal and Installation).
- Connect: Multi-Media Interface Tester 105-00120.
- Using the Multi-Media Interface Tester 105-00120, attempt to play an audio file using the using the audio input jack.

Is the audio output OK for the audio input jack?

Yes	The system is now correctly at this time. The concern was caused by an inoperative audio input jack.
No	GO to R6

R6 CHECK FOR CORRECT APIM (SYNC MODULE) OPERATION

- Ignition OFF.
- Disconnect and inspect the APIM connector.
- Repair:
  - corrosion (install new connectors or terminals - clean module pins)
  - damaged or bent pins - install new terminals pins
  - pushed-out pins - install new pins as necessary
- Reconnect the APIM connector. Make sure it seats and latches correctly.
- Operate the system and determine if the concern is still present.

Is the concern still present?

Yes	CHECK OASIS for any applicable Technical Service Bulletins (TSBs). If a TSB exists for this concern, discontinue this test and follow TSB instructions. If no Technical Service Bulletins (TSBs) address this concern, INSTALL a new APIM . REFER to: SYNC Module [APIM] (415-00B Information and Entertainment System - General Information - Vehicles With: AM/FM/CD/SYNC, Removal and Installation).
No	The system is operating correctly at this time. The concern may have been caused by module connections. ADDRESS the root cause of any connector or pin issues.

The USB Port Is Inoperative Or Does Not Operate Correctly

Diagnostic Overview

Diagnostics in this manual assume a certain skill level and knowledge of Ford-specific diagnostic practices. For information about these practices,
REFER to: Diagnostic Methods (100-00 General Information, Description and Operation).

Normal Operation and Fault Conditions

REFER to: Information and Entertainment System - System Operation and Component Description (415-00B Information and Entertainment System - General Information - Vehicles With: AM/FM/CD/SYNC, Description and Operation).
See USB Audio Mode and USB Port.

The USB port is part of the USB cable, and cannot be replaced separately.

The Multi-Media Interface Tester 105-00120 is powered by the USB port.

DTC Fault Trigger Conditions

DTC	Description	Fault Trigger Conditions
B1252:04	USB Port: System Internal Failure	Set by the APIM when an over-temperature condition is detected in the USB circuit. This can be caused by a fault in the USB cable, USB port, or customer's USB device.
B1252:11	USB Port: Circuit Short to Ground	Set by the APIM when a short to ground or over-current condition is detected in the USB circuit. This can be caused by a fault in the USB cable, USB port, or customer's USB device.

Possible Sources

- USB cable/port
- Device conflict
- APIM

PINPOINT TEST S : THE USB (UNIVERSAL SERIAL BUS) PORT IS INOPERATIVE OR DOES NOT OPERATE CORRECTLY

S1 RESET THE APIM (SYNC MODULE) AND RECHECK SYNC® SYSTEM OPERATION
• Remove any devices connected to the USB port.

Carry out an APIM power reset by disconnecting the battery for 5 minutes, then reconnecting it.

- Wait at least 2 minutes for the APIM to re-initialize.
- Connect: Multi-Media Interface Tester 105-00120.
- Using the Multi-Media Interface Tester 105-00120, attempt to play an audio file using each USB port.

Is the audio output OK for the USB port?

Yes	The system is operating correctly at this time. The concern was corrected by performing the APIM power reset.
No	GO to S2

S2 CHECK THE APIM (SYNC MODULE) FOR DTC (DIAGNOSTIC TROUBLE CODE) B1252:04 OR DTC (DIAGNOSTIC TROUBLE CODE) B1252:11

- Using a diagnostic scan tool, clear the APIM Diagnostic Trouble Codes (DTCs).
- Perform the APIM self-test.

Is DTC B1252:04 or DTC B1252:11 present?

Yes	GO to S3
No	GO to S5

S3 INSPECT THE USB (UNIVERSAL SERIAL BUS) CABLE AND APIM (SYNC MODULE)

- Ignition OFF.
- Disconnect: USB Cable At APIM .
- Inspect the APIM connector port and both ends of the USB cable for damage. Remove any debris.

Is any damage present?

Yes	For the USB cable, Install a new USB cable. REFER to: SYNC Module [APIM] to Universal Serial Bus (USB) Port Cable (415-00B Information and Entertainment System - General Information - Vehicles With: AM/FM/CD/SYNC, Removal and Installation). For the APIM , Install a new APIM . REFER to: SYNC Module [APIM] (415-00B Information and Entertainment System - General Information - Vehicles With: AM/FM/CD/SYNC, Removal and Installation).
No	GO to S4

S4 CHECK THE USB (UNIVERSAL SERIAL BUS) PORT FOR FUNCTIONALITY

- Connect: USB Cable At APIM .
- Connect: Multi-Media Interface Tester 105-00120.
- Using the Multi-Media Interface Tester 105-00120, attempt to play an audio file using the USB port.

Is the audio output OK for the USB port?

Yes	The system is operating correctly at this time. The concern was caused by the USB connector not being seated correctly.
No	GO to S5

S5 ISOLATE THE USB (UNIVERSAL SERIAL BUS) CABLE/PORT

- Install a new USB cable/port.
  REFER to: SYNC Module [APIM] to Universal Serial Bus (USB) Port Cable (415-00B Information and Entertainment System - General Information - Vehicles With: AM/FM/CD/SYNC, Removal and Installation).
- Connect: Multi-Media Interface Tester 105-00120.
- Using the Multi-Media Interface Tester 105-00120, attempt to play a file using the USB port.

Is the audio output OK for the USB port?

Yes	The system is operating correctly at this time. The concern was caused by an inoperative USB cable.
No	GO to S6

S6 CHECK FOR CORRECT APIM (SYNC MODULE) OPERATION

- Ignition OFF.
- Disconnect and inspect the APIM connector.
- Repair:
  - corrosion (install new connectors or terminals - clean module pins)
  - damaged or bent pins - install new terminals pins
  - pushed-out pins - install new pins as necessary
- Reconnect the APIM connector. Make sure it seats and latches correctly.
- Wait 2 minutes for the APIM to re-initialize.
- Operate the system and determine if the concern is still present.

Is the concern still present?

Yes	CHECK OASIS for any applicable Technical Service Bulletins (TSBs). If a TSB exists for this concern, discontinue this test and follow TSB instructions. If no Technical Service Bulletins (TSBs) address this concern, INSTALL a new APIM . REFER to: SYNC Module [APIM] (415-00B Information and Entertainment System - General Information - Vehicles With: AM/FM/CD/SYNC, Removal and Installation).
No	The system is operating correctly at this time. The concern may have been caused by module connections. ADDRESS the root cause of any connector or pin issues.

Unable To Pair Bluetooth Device Or The Bluetooth Functionality Is Inoperative

Diagnostic Overview

Diagnostics in this manual assume a certain skill level and knowledge of Ford-specific diagnostic practices. For information about these practices,
REFER to: Diagnostic Methods (100-00 General Information, Description and Operation).

Normal Operation and Fault Conditions

REFER to: Information and Entertainment System - System Operation and Component Description (415-00B Information and Entertainment System - General Information - Vehicles With: AM/FM/CD/SYNC, Description and Operation).
See Bluetooth Mode.

Possible Sources

- Incompatible Bluetooth device

- Customer error
- Customer's Bluetooth device
- APIM

PINPOINT TEST T : UNABLE TO PAIR BLUETOOTH DEVICE OR THE BLUETOOTH FUNCTIONALITY IS INOPERATIVE

T1 CHECK THE BLUETOOTH CONNECTION

NOTE: *Carrying out a Master Reset returns all preference settings to the factory defaults, erases the phone book and call histories, and deletes any devices paired with the SYNC® system.*

- Connect: Multi-Media Interface Tester 105-00120.
- Using the Multi-Media Interface Tester 105-00120, connect to the SYNC® system using Bluetooth. Follow the tool instructions.
- Using a diagnostic scan tool, view the APIM Parameter Identifications (PIDs).
- Monitor the Bluetooth device paired PID (BT_PAIR) and the Bluetooth device connected PID (BT_CONN).

Do the Parameter Identifications (PIDs) both read "Yes"?

Yes	The SYNC® system is operating correctly at this time. CARRY OUT a SYNC® system Master Reset. REFER to the Owner's Literature. REVIEW the pairing process with the customer. If the customer's device still does not pair, the fault is with the customer's device.
No	GO to T2

T2 CHECK FOR CORRECT APIM (SYNC MODULE) OPERATION

- Ignition OFF.
- Disconnect and inspect the APIM connector.
- Repair:
  - corrosion (install new connector or terminals - clean module pins)
  - damaged pins - install new terminals/pins
  - pushed-out pins - install new pins as necessary
- Reconnect the APIM connector. Make sure it seats and latches correctly.
- Wait at least 2 minutes for the APIM to re-initialize.
- Operate the system and determine if the concern is still present.

Is the concern still present?

Yes	CHECK OASIS for any applicable Technical Service Bulletins (TSBs). If a TSB exists for this concern, discontinue this test and follow TSB instructions. If no Technical Service Bulletins (TSBs) address this concern, INSTALL a new APIM . REFER to: SYNC Module [APIM] (415-00B Information and Entertainment System - General Information - Vehicles With: AM/FM/CD/SYNC, Removal and Installation).
No	The system is operating correctly at this time. The concern may have been caused by module connections. ADDRESS the root cause of any connector or pin issues.

The Lower Steering Wheel Controls Are Inoperative Or Do Not Operate Correctly

Refer to Wiring Diagrams Cell 130 for schematic and connector information.

Diagnostic Overview

Diagnostics in this manual assume a certain skill level and knowledge of Ford-specific diagnostic practices. For information about these practices,
REFER to: Diagnostic Methods (100-00 General Information, Description and Operation).

Normal Operation and Fault Conditions

REFER to: Information and Entertainment System - System Operation and Component Description (415-00B Information and Entertainment System - General Information - Vehicles With: AM/FM/CD/SYNC, Description and Operation).
See Steering Wheel Switch Function.

DTC Fault Trigger Conditions

DTC	Description	Fault Trigger Conditions
B11BA:1C	Steering Wheel Audio Switch Pack: Circuit Voltage Out Of Range	Set by the FCDIM when a short to ground or open is detected in the RH lower steering wheel switch circuits.
B11BA:63	Steering Wheel Audio Switch Pack: Circuit / Component Protection Time-Out	Set by the FCDIM when the RH lower steering wheel switch is stuck for more than 2 minutes during normal operation.

Possible Sources

- Wiring, terminals, or connectors
- Clockspring
- Steering wheel switch
- FCDIM

PINPOINT TEST U : THE LOWER STEERING WHEEL CONTROLS ARE INOPERATIVE OR DO NOT OPERATE CORRECTLY

U1 CHECK THE RH (RIGHT-HAND) LOWER STEERING WHEEL SWITCH PARAMETER IDENTIFICATIONS (PIDS)

- Ignition ON.
- Using a diagnostic scan tool, view the FCDIM Parameter Identifications (PIDs).
- Monitor the steering wheel controls Parameter Identifications (PIDs) while pressing each RH lower steering wheel switch.
  - Voice (SW_VOICE)
  - Seek+ (SW_SEEKPLUS)
  - Seek- (SW_SEEKMINUS)
  - Vol+ (SW_VOLUP)
  - Vol- (SW_VOLDOWN)

Do the Parameter Identification (PID) values agree with the switch positions?

Yes	GO to U11
No	If one or more, but not all, Parameter Identification (PID) values are incorrect or always read one particular switch position, INSTALL a new RH lower steering wheel switch. REFER to: Steering Wheel Multifunction Switch (211-05 Steering Column Switches, Removal and Installation). If all Parameter Identification (PID) values are incorrect or always read one particular switch position, GO to U2

U2 CHECK THE CIRCUITRY TO THE CLOCKSPRING FOR A SHORT TO GROUND

WARNING: Turn the ignition OFF and wait one minute to deplete the backup power supply. Failure to follow this instruction may result in serious personal injury or death in the event of an accidental deployment.

- Ignition OFF.
- Disconnect: FCDIM C2123.
- Disconnect: Clockspring C218A.
- Disconnect: BCM C2280C.
- Measure:

Positive Lead	Measurement / Action	Negative Lead
C2123-7	Ω	—
C2123-10	Ω	—

Are the resistances greater than 10,000 ohms?

Yes	GO to U3
No	Repair the circuit in question.

U3 CHECK THE CIRCUITRY TO THE CLOCKSPRING FOR A SHORT TOGETHER

- Measure:

Positive Lead	Measurement / Action	Negative Lead
C2123-7	Ω	C2123-10

Is the resistance greater than 10,000 ohms?

Yes	GO to U4
No	Repair the circuit in question.

U4 CHECK THE CIRCUITRY TO THE CLOCKSPRING FOR AN OPEN

- Measure:

Positive Lead	Measurement / Action	Negative Lead
C2123-7	Ω	C218A-5
C2123-10	Ω	C218A-6

Are the resistances less than 3 ohms?

Yes	GO to U5
No	Repair the circuit in question.

U5 CHECK THE CLOCKSPRING FOR A SHORT TO GROUND

- Connect: Clockspring C218A.
- Remove the driver airbag.
  REFER to: Driver Airbag (501-20B Supplemental Restraint System, Removal and Installation).
- Disconnect: Clockspring C218B.
- Measure:

Positive Lead	Measurement / Action	Negative Lead
C2123-7	Ω	—
C2123-10	Ω	—

Are the resistances greater than 10,000 ohms?

Yes	GO to U6
No	INSTALL a new clockspring. REFER to: Clockspring (501-20B Supplemental Restraint System, Removal and Installation).

U6 CHECK THE CLOCKSPRING FOR A SHORT TOGETHER

- Measure:

Positive Lead	Measurement / Action	Negative Lead
C2123-7	Ω	C2123-10

Is the resistance greater than 10,000 ohms?

Yes	GO to U7
No	INSTALL a new clockspring. REFER to: Clockspring (501-20B Supplemental Restraint System, Removal and Installation).

U7 CHECK THE CLOCKSPRING FOR AN OPEN

- Measure:

Positive Lead	Measurement / Action	Negative Lead
C2123-7	Ω	

		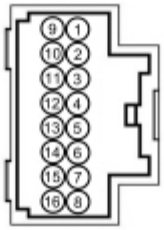 E144650 C218B-11
C2123-10	Ω	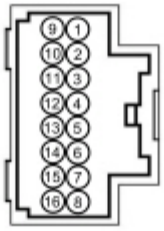 E144650 C218B-12

Are the resistances less than 3 ohms?

Yes	GO to U8
No	INSTALL a new clockspring. REFER to: Clockspring (501-20B Supplemental Restraint System, Removal and Installation).

U8 CHECK THE STEERING WHEEL HARNESS FOR A SHORT TO GROUND

- Connect: Clockspring C218B.
- Disconnect: RH Lower Steering Wheel Switch C2367.
- Measure:

Positive Lead	Measurement / Action	Negative Lead
C2123-7	Ω	—
C2123-10	Ω	—

Are the resistances greater than 10,000 ohms?

Yes	GO to U9
No	INSTALL a new steering wheel. REFER to: Clockspring (501-20B Supplemental Restraint System, Removal and Installation).

U9 CHECK THE STEERING WHEEL HARNESS FOR A SHORT TOGETHER

Measure:

Positive Lead	Measurement / Action	Negative Lead
C2123-7	Ω	C2123-10

Is the resistance greater than 10,000 ohms?

Yes	GO to U10
No	INSTALL a new steering wheel. REFER to: Clockspring (501-20B Supplemental Restraint System, Removal and Installation).

U10 CHECK THE STEERING WHEEL HARNESS FOR AN OPEN

- Measure:

Positive Lead	Measurement / Action	Negative Lead
C2123-7	Ω	C2367-2
C2123-10	Ω	C2367-3

Are the resistances less than 3 ohms?

Yes	INSTALL a new RH lower steering wheel switch. REFER to: Steering Wheel Multifunction Switch (211-05 Steering Column Switches, Removal and Installation).
No	INSTALL a new steering wheel. REFER to: Steering Wheel (211-04 Steering Column, Removal and Installation).

U11 CHECK FOR CORRECT FCDIM (FRONT CONTROL/DISPLAY INTERFACE MODULE) OPERATION

- Ignition OFF.
- Disconnect and inspect the FCDIM connector.
- Repair:
  - corrosion (install new connectors or terminals - clean module pins)
  - damaged or bent pins - install new terminals pins
  - pushed-out pins - install new pins as necessary
- Reconnect the FCDIM connector. Make sure it seats and latches correctly.
- Operate the system and determine if the concern is still present.

Is the concern still present?

Yes	CHECK OASIS for any applicable Technical Service Bulletins (TSBs). If a TSB exists for this concern, discontinue this test and follow TSB instructions. If no Technical Service Bulletins (TSBs) address this concern, INSTALL a new FCDIM .
No	The system is operating correctly at this time. The concern may have been caused by module connections. ADDRESS the root cause of any connector or pin issues.

The Upper Steering Wheel Controls Are Inoperative Or Do Not Operate Correctly

Refer to Wiring Diagrams Cell 130 for schematic and connector information.

Diagnostic Overview

Diagnostics in this manual assume a certain skill level and knowledge of Ford-specific diagnostic practices. For information about these practices,
REFER to: Diagnostic Methods (100-00 General Information, Description and Operation).

Normal Operation and Fault Conditions

REFER to: Information and Entertainment System - System Operation and Component Description (415-00B Information and Entertainment System - General Information - Vehicles With: AM/FM/CD/SYNC, Description and Operation).
See Steering Wheel Switch Function.

DTC Fault Trigger Conditions

DTC	Description	Fault Trigger Conditions
C1D22:11	Steering Wheel Switch Right Module: Circuit Short to Ground	Set by the IPC when a short to ground is detected in the RH upper steering wheel switch circuits.
C1D22:23	Steering Wheel Switch Right Module: Circuit Short To Battery	Set by the IPC when an open is detected in the RH upper steering wheel switch circuits.

Possible Sources

- Wiring, terminals, or connectors
- Clockspring
- Steering wheel switch
- SASM
- IPC

PINPOINT TEST V : THE UPPER STEERING WHEEL CONTROLS ARE INOPERATIVE OR DO NOT OPERATE CORRECTLY

V1 CHECK THE RH (RIGHT-HAND) UPPER STEERING WHEEL SWITCH PARAMETER IDENTIFICATIONS (PIDS)

- Ignition ON.
- Using a diagnostic scan tool, view the IPC Parameter Identifications (PIDs).
- Monitor the steering wheel controls Parameter Identifications (PIDs) while pressing each RH upper steering wheel switch.
  - Up (BTN_R_UP)
  - Left (BTN_R_LEFT)
  - Down (BTN_R_DOWN)
  - Right (BTN_R_RIGHT)
  - Ok (BTN_R_SET)

Do the Parameter Identification (PID) values agree with the switch positions?

Yes	GO to V17

No	If one or more, but not all, Parameter Identification (PID) values are incorrect or always read one particular switch position, INSTALL a new RH steering wheel switch. REFER to: Steering Wheel Multifunction Switch (211-05 Steering Column Switches, Removal and Installation). If all Parameter Identification (PID) values are incorrect or always read one particular switch position, GO to V2

V2 CHECK THE CIRCUITRY TO THE STEERING ANGLE SENSOR MODULE (SASM) FOR A SHORT TO GROUND

WARNING: Turn the ignition OFF and wait one minute to deplete the backup power supply. Failure to follow this instruction may result in serious personal injury or death in the event of an accidental deployment.

- Ignition OFF.
- Disconnect: IPC C220.
- Disconnect: SASM C226A.
- Measure:

Positive Lead	Measurement / Action	Negative Lead
C220-6	Ω	—
C220-8	Ω	—

Are the resistances greater than 10,000 ohms?

Yes	GO to V3
No	Repair the circuit in question.

V3 CHECK THE CIRCUITRY TO THE STEERING ANGLE SENSOR MODULE (SASM) FOR A SHORT TOGETHER

- Measure:

Positive Lead	Measurement / Action	Negative Lead
C220-6	Ω	C220-8

Is the resistance greater than 10,000 ohms?

Yes	GO to V4
No	Repair the circuit in question.

V4 CHECK THE CIRCUITRY TO THE STEERING ANGLE SENSOR MODULE (SASM) FOR AN OPEN

- Measure:

Positive Lead	Measurement / Action	Negative Lead

C220-6	Ω	C226A-8
C220-8	Ω	C226A-7

Are the resistances less than 3 ohms?

Yes	GO to V5
No	Repair the circuit in question.

V5 CHECK THE STEERING ANGLE SENSOR MODULE (SASM) FOR A SHORT TO GROUND

- Connect: SASM C226A.
- Remove the driver airbag and leave inline C260 connected.
  REFER to: Driver Airbag (501-20B Supplemental Restraint System, Removal and Installation).
- Disconnect: SASM C226B.
- Measure:

Positive Lead	Measurement / Action	Negative Lead
C220-6	Ω	—
C220-8	Ω	—

Are the resistances greater than 10,000 ohms?

Yes	GO to V6
No	INSTALL a new SASM . REFER to: Steering Angle Sensor Module (SASM) (211-05 Steering Column Switches, Removal and Installation).

V6 CHECK THE STEERING ANGLE SENSOR MODULE (SASM) FOR A SHORT TOGETHER

- Measure:

Positive Lead	Measurement / Action	Negative Lead
C220-6	Ω	C220-8

Is the resistance greater than 10,000 ohms?

Yes	GO to V7
No	INSTALL a new SASM . REFER to: Steering Angle Sensor Module (SASM) (211-05 Steering Column Switches, Removal and Installation).

V7 CHECK THE STEERING ANGLE SENSOR MODULE (SASM) FOR AN OPEN

- Measure:

Positive Lead	Measurement / Action	Negative Lead
C220-6	Ω	C226B-3
C220-8	Ω	C226B-2

Are the resistances less than 3 ohms?

Yes	GO to V8
No	INSTALL a new SASM . REFER to: Steering Angle Sensor Module (SASM) (211-05 Steering Column Switches, Removal and Installation).

V8 CHECK THE CLOCKSPRING FOR A SHORT TO GROUND

- Connect: SASM C226B.
- Disconnect: Clockspring C218B.
- Measure:

Positive Lead	Measurement / Action	Negative Lead
C220-6	Ω	—
C220-8	Ω	—

Are the resistances greater than 10,000 ohms?

Yes	GO to V9
No	INSTALL a new clockspring. REFER to: Clockspring (501-20B Supplemental Restraint System, Removal and Installation).

V9 CHECK THE CLOCKSPRING FOR A SHORT TOGETHER

- Measure:

Positive Lead	Measurement / Action	Negative Lead
C220-6	Ω	C220-8

Is the resistance greater than 10,000 ohms?

Yes	GO to V10
No	INSTALL a new clockspring.

	REFER to: Clockspring (501-20B Supplemental Restraint System, Removal and Installation).

V10 CHECK THE CLOCKSPRING FOR AN OPEN

- Measure:

Positive Lead	Measurement / Action	Negative Lead
C220-6	Ω	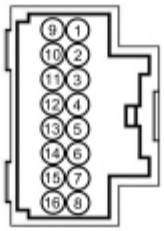 E144650 C218B-3 (Component Side)
C220-8	Ω	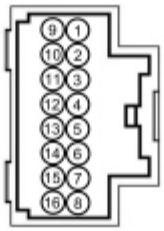 E144650 C218B-2 (Component Side)

Are the resistances less than 3 ohms?

Yes	GO to V11
No	INSTALL a new clockspring. REFER to: Clockspring (501-20B Supplemental Restraint System, Removal and Installation).

V11 CHECK THE STEERING WHEEL HARNESS FOR A SHORT TO GROUND

- Connect: Clockspring C218B.
- Disconnect: Inline C260.
- Measure:

Positive Lead	Measurement / Action	Negative Lead
C220-6	Ω	—
C220-8	Ω	—

Are the resistances greater than 10,000 ohms?

Yes	GO to V12
No	INSTALL a new steering wheel. REFER to: Steering Wheel (211-04 Steering Column, Removal and Installation).

V12 CHECK THE STEERING WHEEL HARNESS FOR A SHORT TOGETHER

- Measure:

Positive Lead	Measurement / Action	Negative Lead
C220-6	Ω	C220-8

Is the resistance greater than 10,000 ohms?

Yes	GO to V13
No	INSTALL a new steering wheel. REFER to: Steering Wheel (211-04 Steering Column, Removal and Installation).

V13 CHECK THE STEERING WHEEL HARNESS FOR AN OPEN

- Measure:

Positive Lead	Measurement / Action	Negative Lead
C220-6	Ω	C260-6
C220-8	Ω	C260-4

Are the resistances less than 3 ohms?

Yes	GO to V14
No	INSTALL a new steering wheel. REFER to: Steering Wheel (211-04 Steering Column, Removal and Installation).

V14 CHECK THE AIRBAG HARNESS FOR A SHORT TO GROUND

- Connect: Inline C260.
- Disconnect: RH Upper Steering Wheel Switch C2999.
- Disconnect: LH Upper Steering Wheel Switch C2998.
- Measure:

Positive Lead	Measurement / Action	Negative Lead
C220-6	Ω	—
	Ω	

C220-8		—

Are the resistances greater than 10,000 ohms?

Yes	GO to V15
No	INSTALL a new driver airbag. REFER to: Driver Airbag (501-20B Supplemental Restraint System, Removal and Installation).

V15 CHECK THE AIRBAG HARNESS FOR A SHORT TOGETHER

- Measure:

Positive Lead	Measurement / Action	Negative Lead
C220-6	Ω	C220-8

Is the resistance greater than 10,000 ohms?

Yes	GO to V16
No	INSTALL a new driver airbag. REFER to: Driver Airbag (501-20B Supplemental Restraint System, Removal and Installation).

V16 CHECK THE AIRBAG HARNESS FOR AN OPEN

- Measure:

Positive Lead	Measurement / Action	Negative Lead
C220-6	Ω	C2999-1
C220-8	Ω	C2999-4

Are the resistances less than 3 ohms?

Yes	INSTALL a new RH upper steering wheel switch. REFER to: Steering Wheel Multifunction Switch (211-05 Steering Column Switches, Removal and Installation).
No	INSTALL a new driver airbag. REFER to: Driver Airbag (501-20B Supplemental Restraint System, Removal and Installation).

V17 CHECK FOR CORRECT IPC (INSTRUMENT PANEL CLUSTER) OPERATION

- Disconnect and inspect the IPC connector.
- Repair:
  - corrosion (install new connector or terminals - clean module pins)

damaged pins - install new terminals/pins
  - pushed-out pins - install new pins as necessary
- Reconnect the IPC connector. Make sure it seats and latches correctly.
- Operate the system and determine if the concern is still present.

Is the concern still present?

Yes	CHECK OASIS for any applicable Technical Service Bulletins (TSBs). If a TSB exists for this concern, discontinue this test and follow TSB instructions. If no Technical Service Bulletins (TSBs) address this concern, INSTALL a new IPC . REFER to: Instrument Panel Cluster (IPC) (413-01 Instrumentation, Message Center and Warning Chimes, Removal and Installation).
No	The system is operating correctly at this time. The concern may have been caused by module connections. ADDRESS the root cause of any connector or pin issues.

The Audio System Does Not Operate Correctly From The FCIM

Diagnostic Overview

Diagnostics in this manual assume a certain skill level and knowledge of Ford-specific diagnostic practices. For information about these practices,
REFER to: Diagnostic Methods (100-00 General Information, Description and Operation).

Normal Operation and Fault Conditions

REFER to: Information and Entertainment System - System Operation and Component Description (415-00B Information and Entertainment System - General Information - Vehicles With: AM/FM/CD/SYNC, Description and Operation).
See Accessory Delay Feature, Audio Extended Play, and FCIM .

DTC Fault Trigger Conditions

DTC	Description	Fault Trigger Conditions
U2013:87	Switch Pack: Circuit / Component Protection Time-Out	Set by the FCDIM when information is not received from the FCIM over the LIN for greater than 2 seconds. This does not necessarily indicate a fault in the LIN wiring, as a loss of power or ground to the FCIM can also cause a lack of communication.

Possible Sources

- Wiring, terminals, or connectors
- FCIM
- FCDIM

PINPOINT TEST W : THE AUDIO SYSTEM DOES NOT OPERATE CORRECTLY FROM THE FCIM (FRONT CONTROLS INTERFACE MODULE)

W1 CHECK THE FCDIM (FRONT CONTROL/DISPLAY INTERFACE MODULE) BUTTON PARAMETER IDENTIFICATIONS (PIDS)
• Ignition ON.

Using a diagnostic scan tool, view the FCDIM Parameter Identification (PIDs).

- **NOTE:** *The button Parameter Identification (PIDs) begin with the prefix "BTN_" and end with the indicated button. For example, Parameter Identification (PID) BTN_EJECT correlates with the eject button on the FCIM.*

Monitor the FCDIM Parameter Identification (PIDs) while pressing each button on the FCIM.

Do the Parameter Identification (PID) values agree with the button presses?

Yes	GO to W9
No	If one or more, but not all, Parameter Identification (PID) values are incorrect or always read one particular switch position, GO to W8 If all Parameter Identification (PID) values are incorrect or always read one particular switch position, GO to W2

W2 CHECK FOR VOLTAGE TO THE FCIM (FRONT CONTROLS INTERFACE MODULE)

- Ignition OFF.
- Disconnect: FCIM C2402
- Ignition ON.
- Measure:

Positive Lead	Measurement / Action	Negative Lead
C2402-8		—

Is the voltage greater than 11 volts?

Yes	GO to W3
No	REPAIR the circuit.

W3 CHECK THE FCIM (FRONT CONTROLS INTERFACE MODULE) GROUND CIRCUIT FOR AN OPEN

- Measure:

Positive Lead	Measurement / Action	Negative Lead
C2402-8		C2402-5

Is the voltage greater than 11 volts?

Yes	GO to W4
No	REPAIR the circuit.

W4 CHECK THE LIN (LOCAL INTERCONNECT NETWORK) CIRCUIT FOR A SHORT TO VOLTAGE

- Ignition OFF.
- Disconnect: FCDIM C2123

- Ignition ON.
- Measure:

Positive Lead	Measurement / Action	Negative Lead
C2402-7	⊕ V ⊖	—

Is any voltage present?

Yes	REPAIR the circuit.
No	GO to W5

W5 CHECK THE LIN (LOCAL INTERCONNECT NETWORK) CIRCUIT FOR AN OPEN

- Ignition OFF.
- Measure:

Positive Lead	Measurement / Action	Negative Lead
C2402-7	Ω	C2123-8

Is the resistance less than 3 ohms?

Yes	GO to W6
No	REPAIR the circuit.

W6 CHECK THE LIN (LOCAL INTERCONNECT NETWORK) CIRCUIT FOR A SHORT TO GROUND

- Ignition OFF.
- Measure:

Positive Lead	Measurement / Action	Negative Lead
C2402-7	Ω	—

Is the resistance greater than 10,000 ohms?

Yes	GO to W7
No	REPAIR the circuit.

W7 RECHECK FOR DTC (DIAGNOSTIC TROUBLE CODE) U2013:87

- Ignition ON.
- Using a diagnostic scan tool, clear continuous Diagnostic Trouble Codes (DTCs) from all modules.

- Ignition OFF.
- Ignition ON.
- Wait at least 10 seconds.
- Using a diagnostic scan tool, perform the FCDIM self-test.

Is DTC U2013:87 set in the FCDIM ?

Yes	GO to W8
No	GO to W9

W8 CHECK FOR CORRECT FCIM (FRONT CONTROLS INTERFACE MODULE) OPERATION

- Ignition OFF.
- Disconnect and inspect the FCIM connector.
- Repair:
  - corrosion (install new connector or terminals - clean module pins)
  - damaged pins - install new terminals/pins
  - pushed-out pins - install new pins as necessary
- Reconnect the FCIM connector. Make sure it seats and latches correctly.
- Operate the system and determine if the concern is still present.

Is the concern still present?

Yes	CHECK OASIS for any applicable Technical Service Bulletins (TSBs). If a TSB exists for this concern, discontinue this test and follow TSB instructions. If no Technical Service Bulletins (TSBs) address this concern, INSTALL a new FCIM . REFER to: Front Controls Interface Module (FCIM) (415-00B Information and Entertainment System - General Information - Vehicles With: AM/FM/CD/SYNC, Removal and Installation).
No	The system is operating correctly at this time. The concern may have been caused by module connections. ADDRESS the root cause of any connector or pin issues.

W9 CHECK FOR CORRECT FCDIM (FRONT CONTROL/DISPLAY INTERFACE MODULE) OPERATION

- Ignition OFF.
- Disconnect and inspect the FCDIM connector.
- Repair:
  - corrosion (install new connectors or terminals - clean module pins)
  - damaged or bent pins - install new terminals pins
  - pushed-out pins - install new pins as necessary
- Reconnect the FCDIM connector. Make sure it seats and latches correctly.
- Operate the system and determine if the concern is still present.

Is the concern still present?

Yes	CHECK OASIS for any applicable Technical Service Bulletins (TSBs). If a TSB exists for this concern, discontinue this test and follow TSB instructions. If no Technical Service Bulletins (TSBs) address this concern, INSTALL a new FCDIM .
No	The system is operating correctly at this time. The concern may have been caused by module connections. ADDRESS the root cause of any connector or pin issues.

The FCDIM Is Inoperative Or Does Not Operate Correctly

Diagnostic Overview

Diagnostics in this manual assume a certain skill level and knowledge of Ford-specific diagnostic practices. For information about these practices,
REFER to: Diagnostic Methods (100-00 General Information, Description and Operation).

Normal Operation and Fault Conditions

REFER to: Information and Entertainment System - System Operation and Component Description (415-00B Information and Entertainment System - General Information - Vehicles With: AM/FM/CD/SYNC, Description and Operation).
See FCDIM .

Possible Sources

- Fuse
- Wiring, terminals, or connectors
- FCDIM

PINPOINT TEST X : THE FCDIM (FRONT CONTROL/DISPLAY INTERFACE MODULE) IS INOPERATIVE OR DOES NOT OPERATE CORRECTLY

X1 VERIFY THAT THE FCDIM (FRONT CONTROL/DISPLAY INTERFACE MODULE) PASSES THE NETWORK TEST

- Using a diagnostic scan tool, perform the network test.

Did the FCDIM pass the network test?

Yes	GO to X2
No	REFER to: Communications Network (418-00 Module Communications Network, Diagnosis and Testing). See The FCDIM Does Not Respond To The Diagnostic Scan Tool.

X2 OBSERVE THE FCDIM (FRONT CONTROL/DISPLAY INTERFACE MODULE) DISPLAY

- Turn the audio system on and verify the FCDIM operation.

Is the FCDIM screen completely inoperative or blank?

Yes	GO to X4
No	GO to X3

X3 CHECK FOR LOST COMMUNICATION DIAGNOSTIC TROUBLE CODES (DTCS) SET IN THE FCDIM (FRONT CONTROL/DISPLAY INTERFACE MODULE)

- Ignition ON.
- Using a diagnostic scan tool, retrieve all continuous Diagnostic Trouble Codes (DTCs).

Are any lost communication Diagnostic Trouble Codes (DTCs) (U-codes) present in the FCDIM ?

Yes	REFER to: Information and Entertainment System (415-00B Information and Entertainment System - General Information - Vehicles With: AM/FM/CD/SYNC, Diagnosis and Testing). See DTC Chart: FCDIM - Premium.

No	GO to X4

X4 CHECK FOR CORRECT FCDIM (FRONT CONTROL/DISPLAY INTERFACE MODULE) OPERATION

- Ignition OFF.
- Disconnect and inspect the FCDIM connector.
- Repair:
  - corrosion (install new connectors or terminals - clean module pins)
  - damaged or bent pins - install new terminals pins
  - pushed-out pins - install new pins as necessary
- Reconnect the FCDIM connector. Make sure it seats and latches correctly.
- Operate the system and determine if the concern is still present.

Is the concern still present?

Yes	CHECK OASIS for any applicable Technical Service Bulletins (TSBs). If a TSB exists for this concern, discontinue this test and follow TSB instructions. If no Technical Service Bulletins (TSBs) address this concern, INSTALL a new FCDIM .
No	The system is operating correctly at this time. The concern may have been caused by module connections. ADDRESS the root cause of any connector or pin issues.

One Or More FCDIM Displays Are Inoperative Or Do Not Operate Correctly

Diagnostic Overview

Diagnostics in this manual assume a certain skill level and knowledge of Ford-specific diagnostic practices. For information about these practices,
REFER to: Diagnostic Methods (100-00 General Information, Description and Operation).

Normal Operation and Fault Conditions

All of the displays on the FCDIM screen are controlled through network messages. The modules sending display data to the FCDIM are:

- ACM : audio system information
- APIM : SYNC® system information
- IPC : warning messages and indicators

If the FCDIM loses the signal from any of these modules, only those specific displays will be inoperative.

Possible Sources

- ACM
- APIM
- FCDIM
- IPC

PINPOINT TEST Y : ONE OR MORE FCDIM (FRONT CONTROL/DISPLAY INTERFACE MODULE) DISPLAYS ARE INOPERATIVE OR DO NOT OPERATE CORRECTLY

Y1 VERIFY THAT THE FCDIM (FRONT CONTROL/DISPLAY INTERFACE MODULE) PASSES THE NETWORK TEST

- Using a diagnostic scan tool, perform the network test.

Did the FCDIM pass the network test?

Yes	GO to Y2
No	REFER to: Communications Network (418-00 Module Communications Network, Diagnosis and Testing). See The FCDIM Does Not Respond To The Diagnostic Scan Tool.

Y2 CHECK FOR LOST COMMUNICATION DIAGNOSTIC TROUBLE CODES (DTCS) SET IN THE FCDIM (FRONT CONTROL/DISPLAY INTERFACE MODULE)

- Ignition ON.
- Using a diagnostic scan tool, retrieve all continuous Diagnostic Trouble Codes (DTCs).

Are any lost communication Diagnostic Trouble Codes (DTCs) (U-codes) present in the FCDIM ?

Yes	REFER to: Information and Entertainment System (415-00B Information and Entertainment System - General Information - Vehicles With: AM/FM/CD/SYNC, Diagnosis and Testing). See DTC Chart: FCDIM - Premium.
No	GO to Y3

Y3 CHECK THE FCDIM (FRONT CONTROL/DISPLAY INTERFACE MODULE) DISPLAY SEGMENTS

- Using a diagnostic scan tool, view the FCDIM Parameter Identifications (PIDs).
- Command all of the LCD segments on using the FCDIM active command LCD_SEG (All LCD Segments).

Do all of the FCDIM segments illuminate?

Yes	The system is operating correctly at this time. INFORM the customer of the operation of the FCDIM display.
No	GO to Y4

Y4 CHECK FOR CORRECT FCDIM (FRONT CONTROL/DISPLAY INTERFACE MODULE) OPERATION

- Ignition OFF.
- Disconnect and inspect the FCDIM connector.
- Repair:
  - corrosion (install new connectors or terminals - clean module pins)
  - damaged or bent pins - install new terminals pins
  - pushed-out pins - install new pins as necessary
- Reconnect the FCDIM connector. Make sure it seats and latches correctly.
- Operate the system and determine if the concern is still present.

Is the concern still present?

Yes	CHECK OASIS for any applicable Technical Service Bulletins (TSBs). If a TSB exists for this concern, discontinue this test and follow TSB instructions. If no Technical Service Bulletins (TSBs) address this concern, INSTALL a new FCDIM .
No	The system is operating correctly at this time. The concern may have been caused by module connections. ADDRESS the root cause of any connector or pin issues.

U0140:00

Diagnostic Overview

Diagnostics in this manual assume a certain skill level and knowledge of Ford-specific diagnostic practices. For information about these practices,
REFER to: Diagnostic Methods (100-00 General Information, Description and Operation).

Normal Operation and Fault Conditions

DTC Fault Trigger Conditions

DTC	Description	Fault Trigger Conditions
U0140:00	Lost Communication With Body Control Module: No Sub Type Information	Set by the APIM and GPSM when network messages are missing from the BCM for more than 5 seconds with the ignition in RUN.

PINPOINT TEST Z : U0140:00

Z1 VERIFY THE CUSTOMER'S CONCERN

- Ignition ON.
- Verify if there is an observable symptom present.

Is an observable symptom present?

Yes	GO to Z2
No	The system is operating correctly at this time. The DTC may have been set due to high network traffic or an intermittent fault condition.

Z2 RECHECK FOR DTC (DIAGNOSTIC TROUBLE CODE) U0140:00

- Ignition ON.
- Using a diagnostic scan tool, clear continuous Diagnostic Trouble Codes (DTCs) from all modules.
- Ignition OFF.
- Ignition ON.
- Wait at least 10 seconds.
- Using a diagnostic scan tool, retrieve the Diagnostic Trouble Codes (DTCs) from all modules.

Is DTC U0140:00 set in the APIM or GPSM ?

Yes	GO to Z3
No	The system is operating correctly at this time. The DTC may have been set due to high network traffic or an intermittent fault condition.

Z3 CHECK THE BCM (BODY CONTROL MODULE) FOR BATTERY VOLTAGE OUT-OF-RANGE DIAGNOSTIC TROUBLE CODES (DTCS)

- Using a diagnostic scan tool, perform the BCM self-test.

Are any low or high voltage Diagnostic Trouble Codes (DTCs) recorded in the BCM ?

Yes	For DTC U3003:16, REFER to: Body Control Module (BCM) (419-10 Multifunction Electronic Modules, Diagnosis and Testing). See U3003:16. For DTC U3003:17, REFER to: Body Control Module (BCM) (419-10 Multifunction Electronic Modules, Diagnosis and Testing). See U3003:17.
No	GO to Z4

Z4 CHECK FOR BATTERY VOLTAGE OUT-OF-RANGE DIAGNOSTIC TROUBLE CODES (DTCS)

- Using a diagnostic scan tool, perform the self-test for the following modules:
  - APIM
  - GPSM

Are low or high voltage Diagnostic Trouble Codes (DTCs) recorded in the APIM or GPSM ?

Yes	For DTC U3003:16, GO to Pinpoint Test AE For DTC U3003:17, GO to Pinpoint Test AF
No	GO to Z5

Z5 CHECK FOR DTC (DIAGNOSTIC TROUBLE CODE) U0140:00 SET IN MULTIPLE MODULES

- Review the recorded results from the self-test.

Is DTC U0140:00 set in more than one module?

Yes	GO to Z6
No	If there is an observable symptom, REFER to: Information and Entertainment System (415-00B Information and Entertainment System - General Information - Vehicles With: AM/FM/CD/SYNC, Diagnosis and Testing). See Symptom Chart: General Audio System. If there is no observable symptom, the system is operating correctly at this time. The DTC may have been set due to high network traffic or an intermittent fault condition.

Z6 CHECK FOR CORRECT BCM (BODY CONTROL MODULE) OPERATION

- Ignition OFF.
- Disconnect and inspect all the BCM connectors.
- Repair:
  - corrosion (install new connector or terminals – clean module pins)
  - damaged pins - install new terminals/pins
  - pushed-out pins - install new pins as necessary
- Reconnect the BCM connectors. Make sure they seat and latch correctly.
- Operate the system and determine if the concern is still present.

Is the concern still present?

Yes	CHECK OASIS for any applicable Technical Service Bulletins (TSBs). If a TSB exists for this concern, discontinue this test and follow TSB instructions. If no Technical Service Bulletins (TSBs) address this

	concern, INSTALL a new BCM . REFER to: Body Control Module (BCM) (419-10 Multifunction Electronic Modules, Removal and Installation).
No	The system is operating correctly at this time. The concern may have been caused by module connections. ADDRESS the root cause of any connector or pin issues.

U0155:00

Diagnostic Overview

Diagnostics in this manual assume a certain skill level and knowledge of Ford-specific diagnostic practices. For information about these practices,
REFER to: Diagnostic Methods (100-00 General Information, Description and Operation).

Normal Operation and Fault Conditions

DTC Fault Trigger Conditions

DTC	Description	Fault Trigger Conditions
U0155:00	Lost Communication With IPC Control Module: No Sub Type Information	Set by the ACM , APIM , FCDIM , and GPSM when network messages are missing from the IPC for more than 5 seconds with the ignition in RUN.

PINPOINT TEST AA : U0155:00

AA1 VERIFY THE CUSTOMER'S CONCERN

- Ignition ON.
- Verify there is an observable symptom present.

Is an observable symptom present?

Yes	GO to AA2
No	The system is operating correctly at this time. The DTC may have been set due to high network traffic or an intermittent fault condition.

AA2 RECHECK FOR DTC (DIAGNOSTIC TROUBLE CODE) U0155:00

- Ignition ON.
- Using a diagnostic scan tool, clear continuous Diagnostic Trouble Codes (DTCs) from all modules.
- Ignition OFF.
- Ignition ON.
- Wait at least 10 seconds.
- Using a diagnostic scan tool, retrieve the DTC from all modules.

Is DTC U0155:00 set in the ACM , APIM , FCDIM , or GPSM ?

Yes	GO to AA3
No	The system is operating correctly at this time. The DTC may have been set due to high network traffic or

	an intermittent fault condition.

AA3 CHECK THE IPC (INSTRUMENT PANEL CLUSTER) FOR BATTERY VOLTAGE OUT-OF-RANGE DIAGNOSTIC TROUBLE CODES (DTCS)

- Using a diagnostic scan tool, perform the IPC self-test.

Are any low or high voltage Diagnostic Trouble Codes (DTCs) recorded in the IPC ?

Yes	For DTC U3003:16, REFER to: Instrumentation, Message Center and Warning Chimes (413-01 Instrumentation, Message Center and Warning Chimes, Diagnosis and Testing). See U3003:16. For DTC U3003:17, REFER to: Instrumentation, Message Center and Warning Chimes (413-01 Instrumentation, Message Center and Warning Chimes, Diagnosis and Testing). See U3003:17.
No	GO to AA4

AA4 CHECK FOR BATTERY VOLTAGE OUT-OF-RANGE DIAGNOSTIC TROUBLE CODES (DTCS)

- Using a diagnostic scan tool, perform the self-test for the following modules:
  - ACM
  - APIM
  - FCDIM
  - GPSM

Are any low or high voltage Diagnostic Trouble Codes (DTCs) recorded in the ACM , APIM , FCIM , or GPSM ?

Yes	For DTC U3003:16, GO to Pinpoint Test AE For DTC U3003:17, GO to Pinpoint Test AF
No	GO to AA5

AA5 CHECK FOR DTC (DIAGNOSTIC TROUBLE CODE) U0155:00 SET IN MULTIPLE MODULES

- Review the recorded results from the self-test.

Is DTC U0155:00 set in more than one module?

Yes	GO to AA6
No	If there is an observable symptom, REFER to: Information and Entertainment System (415-00B Information and Entertainment System - General Information - Vehicles With: AM/FM/CD/SYNC, Diagnosis and Testing). See Symptom Chart: General Audio System, to diagnose the observed symptom. If there is no observable symptom, the system is operating correctly at this time. The DTC may have been set due to high network traffic or an intermittent fault condition.

AA6 CHECK FOR CORRECT IPC (INSTRUMENT PANEL CLUSTER) OPERATION

- Ignition OFF.
- Disconnect and inspect the IPC connector.
- Repair:

- corrosion (install new connector or terminals – clean module pins)
- damaged pins - install new terminals/pins
- pushed-out pins - install new pins as necessary

- Reconnect the IPC connector. Make sure it seats and latches correctly.
- Operate the system and determine if the concern is still present.

Is the concern still present?

Yes	CHECK OASIS for any applicable Technical Service Bulletins (TSBs). If a TSB exists for this concern, discontinue this test and follow TSB instructions. If no Technical Service Bulletins (TSBs) address this concern, INSTALL a new IPC . REFER to: Instrument Panel Cluster (IPC) (413-01 Instrumentation, Message Center and Warning Chimes, Removal and Installation).
No	The system is operating correctly at this time. The concern may have been caused by module connections. ADDRESS the root cause of any connector or pin issues.

U0184:00

Diagnostic Overview

Diagnostics in this manual assume a certain skill level and knowledge of Ford-specific diagnostic practices. For information about these practices,
REFER to: Diagnostic Methods (100-00 General Information, Description and Operation).

Normal Operation and Fault Conditions

DTC Fault Trigger Conditions

DTC	Description	Fault Trigger Conditions
U0184:00	Lost Communication With Radio: No Sub Type Information	Set by the FCDIM when network messages are missing from the ACM for more than 5 seconds with the ignition in RUN.

PINPOINT TEST AB : U0184:00

AB1 VERIFY THE CUSTOMER'S CONCERN

- Verify if there is an observable symptom present.

Is an observable symptom present?

Yes	GO to AB2
No	The system is operating normally at this time. This DTC may have been set due to high network traffic or an intermittent fault condition.

AB2 RECHECK FOR DTC (DIAGNOSTIC TROUBLE CODE) U0184:00

- Ignition ON.
- Using a diagnostic scan tool, clear continuous DTC from all modules.

Ignition OFF.
- Ignition ON.
- Wait at least 10 seconds.
- Using a diagnostic scan tool, retrieve the Diagnostic Trouble Codes (DTCs) from all modules.

Is DTC U0184:00 set in the FCDIM ?

Yes	GO to AB3
No	The system is operating correctly at this time. The DTC may have been set due to high network traffic or an intermittent fault condition.

AB3 CHECK FOR BATTERY VOLTAGE OUT-OF-RANGE DIAGNOSTIC TROUBLE CODES (DTCS)

- Using a diagnostic scan tool, perform the self-test for the following modules:
  - ACM
  - FCDIM

Are any low or high voltage Diagnostic Trouble Codes (DTCs) recorded in the ACM or FCDIM ?

Yes	For DTC U3003:16, GO to Pinpoint Test AE For DTC U3003:17, GO to Pinpoint Test AF
No	GO to AB4

AB4 CHECK FOR CORRECT ACM (AUDIO FRONT CONTROL MODULE) OPERATION

- Ignition OFF.
- Disconnect and inspect all the ACM connectors.
- Repair:
  - corrosion (install new connector or terminals – clean module pins)
  - damaged pins - install new terminals/pins
  - pushed-out pins - install new pins as necessary
- Reconnect the ACM connectors. Make sure they seat and latch correctly.
- Operate the system and determine if the concern is still present.

Is the concern still present?

Yes	CHECK OASIS for any applicable Technical Service Bulletins (TSBs). If a TSB exists for this concern, discontinue this test and follow TSB instructions. If no Technical Service Bulletins (TSBs) address this concern, INSTALL a new ACM . REFER to: Audio Front Control Module (ACM) (415-00B Information and Entertainment System - General Information - Vehicles With: AM/FM/CD/SYNC, Removal and Installation).
No	The system is operating correctly at this time. The concern may have been caused by module connections. ADDRESS the root cause of any connector or pin issues.

U0253:00

Diagnostic Overview

Diagnostics in this manual assume a certain skill level and knowledge of Ford-specific diagnostic practices. For information about these practices,
REFER to: Diagnostic Methods (100-00 General Information, Description and Operation).

Normal Operation and Fault Conditions

DTC Fault Trigger Conditions

DTC	Description	Fault Trigger Conditions
U0253:00	Lost Communication With Accessory Protocol Interface Module: No Sub Type Information	Set by the ACM and FCDIM when network messages are missing from the APIM for more than 5 seconds with the ignition in RUN.

PINPOINT TEST AC : U0253:00

AC1 VERIFY THE CUSTOMER'S CONCERN

- Ignition ON.
- Verify there is an observable symptom present.

Is an observable symptom present?

Yes	GO to AC2
No	The system is operating correctly at this time. The DTC may have been set due to high network traffic or an intermittent fault condition.

AC2 RECHECK FOR DTC (DIAGNOSTIC TROUBLE CODE) U0253:00

- Ignition ON.
- Using a diagnostic scan tool, clear continuous Diagnostic Trouble Codes (DTCs) from all modules.
- Ignition OFF.
- Ignition ON.
- Wait at least 10 seconds.
- Using a diagnostic scan tool, retrieve the Diagnostic Trouble Codes (DTCs) from all modules.

Is DTC U0253:00 set in the ACM or FCDIM ?

Yes	GO to AC3
No	The system is operating correctly at this time. The DTC may have been set due to high network traffic or an intermittent fault condition.

AC3 CHECK FOR BATTERY VOLTAGE OUT-OF-RANGE DIAGNOSTIC TROUBLE CODES (DTCS)

- Using a diagnostic scan tool, perform the self-test for the following modules:
  - ACM
  - APIM
  - FCDIM

Are any low or high voltage Diagnostic Trouble Codes (DTCs) recorded in the ACM , APIM , or FCDIM ?

Yes	For DTC U3003:16, GO to Pinpoint Test AE For DTC U3003:17, GO to Pinpoint Test AF
No	GO to AC4

AC4 CHECK FOR DTC (DIAGNOSTIC TROUBLE CODE) U0253:00 SET IN MULTIPLE MODULES

- Review the recorded results from the self-test.

Is DTC U0253:00 set in more than one module?

Yes	GO to AC5
No	If there is an observable symptom, REFER to: Information and Entertainment System (415-00B Information and Entertainment System - General Information - Vehicles With: AM/FM/CD/SYNC, Diagnosis and Testing). See Symptom Chart: General Audio System. If there is no observable symptom, the system is operating correctly at this time. The DTC may have been set due to high network traffic or an intermittent fault condition.

AC5 CHECK FOR CORRECT APIM (SYNC MODULE) OPERATION

- Ignition OFF.
- Disconnect and inspect the APIM connector.
- Repair:
  - corrosion (install new connector or terminals – clean module pins)
  - damaged pins - install new terminals/pins
  - pushed-out pins - install new pins as necessary
- Reconnect the APIM connector. Make sure it seats and latches correctly.
- Wait 2 minutes for the APIM to re-initialize.
- Operate the system and determine if the concern is still present.

Is the concern still present?

Yes	CHECK OASIS for any applicable Technical Service Bulletins (TSBs). If a TSB exists for this concern, discontinue this test and follow TSB instructions. If no Technical Service Bulletins (TSBs) address this concern, INSTALL a new APIM . REFER to: SYNC Module [APIM] (415-00B Information and Entertainment System - General Information - Vehicles With: AM/FM/CD/SYNC, Removal and Installation).
No	The system is operating correctly at this time. The concern may have been caused by module connections. ADDRESS the root cause of any connector or pin issues.

U0257:00

Diagnostic Overview

Diagnostics in this manual assume a certain skill level and knowledge of Ford-specific diagnostic practices. For information about these practices,
REFER to: Diagnostic Methods (100-00 General Information, Description and Operation).

Normal Operation and Fault Conditions

DTC Fault Trigger Conditions

DTC	Description	Fault Trigger Conditions

U0257:00	Lost Communication With Front Control/Display Interface Module: No Sub Type Information	Set by the ACM and APIM when Infotainment Controller Area Network (I-CAN) network messages are missing from the FCDIM for more than 5 seconds with the ignition in RUN.

PINPOINT TEST AD : U0257:00

AD1 VERIFY THE CUSTOMER'S CONCERN

- Ignition ON.
- Verify there is an observable symptom present.

Is an observable symptom present?

Yes	GO to AD2
No	The system is operating correctly at this time. The DTC may have been set due to high network traffic or an intermittent fault condition.

AD2 RECHECK FOR DTC (DIAGNOSTIC TROUBLE CODE) U0257:00

- Ignition ON.
- Using a diagnostic scan tool, clear continuous Diagnostic Trouble Codes (DTCs) from all modules.
- Ignition OFF.
- Ignition ON.
- Wait at least 10 seconds.
- Using a diagnostic scan tool, retrieve the Diagnostic Trouble Codes (DTCs) from all modules.

Is DTC U0257:00 set in the ACM or APIM ?

Yes	GO to AD3
No	The system is operating correctly at this time. The DTC may have been set due to high network traffic or an intermittent fault condition.

AD3 CHECK FOR BATTERY VOLTAGE OUT-OF-RANGE DIAGNOSTIC TROUBLE CODES (DTCS)

- Using a diagnostic scan tool, perform the self-test for the following modules:
  - ACM
  - APIM
  - FCDIM

Are any low or high voltage Diagnostic Trouble Codes (DTCs) recorded in the ACM , APIM , or FCDIM ?

Yes	For DTC U3003:16, GO to Pinpoint Test AE For DTC U3003:17, GO to Pinpoint Test AF
No	GO to AD4

AD4 CHECK FOR DTC (DIAGNOSTIC TROUBLE CODE) U0257:00 SET IN MULTIPLE MODULES

- Review the recorded results from the self-test.

Is DTC U0257:00 set in set in both the ACM and APIM ?

Yes	GO to AD5
No	If there is an observable symptom, REFER to: Information and Entertainment System (415-00B Information and Entertainment System - General Information - Vehicles With: AM/FM/CD/SYNC, Diagnosis and Testing). See Symptom Chart: General Audio System. If there is no observable symptom, the system is operating correctly at this time. The DTC may have been set due to high network traffic or an intermittent fault condition.

AD5 CHECK FOR CORRECT FCDIM (FRONT CONTROL/DISPLAY INTERFACE MODULE) OPERATION

- Ignition OFF.
- Disconnect and inspect the FCDIM connector.
- Repair:
  - corrosion (install new connectors or terminals - clean module pins)
  - damaged or bent pins - install new terminals pins
  - pushed-out pins - install new pins as necessary
- Reconnect the FCDIM connector. Make sure it seats and latches correctly.
- Operate the system and determine if the concern is still present.

Is the concern still present?

Yes	CHECK OASIS for any applicable Technical Service Bulletins (TSBs). If a TSB exists for this concern, discontinue this test and follow TSB instructions. If no Technical Service Bulletins (TSBs) address this concern, INSTALL a new FCDIM . REFER to: Front Control/Display Interface Module (FCDIM) (415-00B Information and Entertainment System - General Information - Vehicles With: AM/FM/CD/SYNC, Removal and Installation).
No	The system is operating correctly at this time. The concern may have been caused by module connections. ADDRESS the root cause of any connector or pin issues.

U3003:16

Diagnostic Overview

Diagnostics in this manual assume a certain skill level and knowledge of Ford-specific diagnostic practices. For information about these practices,
REFER to: Diagnostic Methods (100-00 General Information, Description and Operation).

Normal Operation and Fault Conditions

DTC Fault Trigger Conditions

DTC	Description	Fault Trigger Conditions
U3003:16	Battery Voltage: Circuit Voltage Below Threshold	Set by the ACM , APIM , FCDIM , and GPSM when the supply voltage falls below 10 volts for at least 10 seconds during normal operation or for more than 250 milliseconds during the self-test.

PINPOINT TEST AE : U3003:16

AE1 RECHECK FOR DTC (DIAGNOSTIC TROUBLE CODE) U3003:16

- Ignition ON.
- Using a diagnostic scan tool, clear the Diagnostic Trouble Codes (DTCs) for the module in question.
- WAIT at least 15 seconds.
- Using a diagnostic scan tool, repeat the self-test.

Is DTC U3003:16 still present?

Yes	GO to AE2
No	The system is operating correctly at this time. The DTC may have been set due to a previous low battery voltage condition.

AE2 CHECK FOR CHARGING SYSTEM DIAGNOSTIC TROUBLE CODES (DTCS) IN THE PCM (POWERTRAIN CONTROL MODULE)

- Using a diagnostic scan tool, retrieve the continuous memory Diagnostic Trouble Codes (DTCs) from all modules.

Are any voltage-related Diagnostic Trouble Codes (DTCs) set in the PCM ?

Yes	For 2.0L Duratec-HE (125kW/170PS) - MI4, REFER to: Electronic Engine Controls (303-14A Electronic Engine Controls - 2.0L Duratec-HE (125kW/170PS) - MI4, Diagnosis and Testing). See DTC Chart: PCM . For 2.0L EcoBoost (184kW/250PS) - MI4, REFER to: Electronic Engine Controls (303-14B Electronic Engine Controls - 2.0L EcoBoost (184kW/250PS) - MI4, Diagnosis and Testing). See DTC Chart: PCM .
No	GO to AE3

AE3 CHECK THE BATTERY CONDITION AND STATE OF CHARGE

- Check the battery condition and verify that the battery is fully charged.
  REFER to: Battery (414-01 Battery, Mounting and Cables, Diagnosis and Testing).
  See Battery Condition Test.

Is the battery OK and fully charged?

Yes	GO to AE4
No	For 2.0L Duratec-HE (125kW/170PS) - MI4, REFER to: Charging System - 2.0L Duratec-HE (125kW/170PS) - MI4 (414-00 Charging System - General Information, Diagnosis and Testing). See Symptom Chart: Charging System. For 2.0L EcoBoost (184kW/250PS) - MI4, REFER to: Charging System - 2.0L EcoBoost (184kW/250PS) - MI4 (414-00 Charging System - General Information, Diagnosis and Testing). See Symptom Chart: Charging System.

AE4 CHECK THE MODULE VOLTAGE SUPPLY

- Ignition OFF.
- Measure and record the voltage at the battery.
- Disconnect the audio system module setting DTC U3003:16.
- Ignition ON.

- Measure the voltage between the module setting DTC U3003:16 and ground.
- For the ACM , measure:

Positive Lead	Measurement / Action	Negative Lead
C240A-1		—

- For the APIM , measure:

Positive Lead	Measurement / Action	Negative Lead
C2383-1		—

- For the FCDIM , measure:

Positive Lead	Measurement / Action	Negative Lead
C2123-1		—

- For the GPSM , measure:

Positive Lead	Measurement / Action	Negative Lead
C2398-1		—

Is the voltage within 0.2 volts of the recorded battery voltage?

Yes	GO to AE5
No	REPAIR the circuit for high resistance.

AE5 CHECK THE SUSPECT MODULE GROUND CIRCUIT FOR CONTINUITY

- Measure the voltage at the suspect module.
- For the ACM , measure:

Positive Lead	Measurement / Action	Negative Lead
C240A-1		C240A-13

- For the APIM , measure:

Positive Lead	Measurement / Action	Negative Lead
C2383-1		C2383-37
C2383-1		C2383-38

- For the FCDIM , measure:

Positive Lead	Measurement / Action	Negative Lead
C2123-1		C2123-9
C2123-1		C2123-11

- For the GPSM , measure:

Positive Lead	Measurement / Action	Negative Lead
C2398-1		C2398-6

Is the suspect module voltage greater than 11 volts?

Yes	For the ACM , GO to AE6 For the APIM , GO to AE7 For the FCDIM , GO to AE8 For the GPSM , GO to AE9
No	REPAIR the circuit for high resistance.

AE6 CHECK FOR CORRECT ACM (AUDIO FRONT CONTROL MODULE) OPERATION

- Ignition OFF.
- Disconnect and inspect all the ACM connectors.
- Repair:
  - corrosion (install new connector or terminals – clean module pins)
  - damaged pins - install new terminals/pins
  - pushed-out pins - install new pins as necessary
- Reconnect the ACM connectors. Make sure they seat and latch correctly.
- Operate the system and determine if the concern is still present.

Is the concern still present?

Yes	CHECK OASIS for any applicable Technical Service Bulletins (TSBs). If a TSB exists for this concern, discontinue this test and follow TSB instructions. If no Technical Service Bulletins (TSBs) address this concern, INSTALL a new ACM . REFER to: Audio Front Control Module (ACM) (415-00B Information and Entertainment System - General Information - Vehicles With: AM/FM/CD/SYNC, Removal and Installation).
No	The system is operating correctly at this time. The concern may have been caused by module connections. ADDRESS the root cause of any connector or pin issues.

AE7 CHECK FOR CORRECT APIM (SYNC MODULE) OPERATION

- Ignition OFF.
- Disconnect and inspect the APIM connector.
- Repair:

corrosion (install new connector or terminals – clean module pins)
    - damaged pins - install new terminals/pins
    - pushed-out pins - install new pins as necessary
- Reconnect the APIM connector. Make sure it seats and latches correctly.
- Wait at least 2 minutes for the APIM to re-initialize.
- Operate the system and determine if the concern is still present.

Is the concern still present?

Yes	CHECK OASIS for any applicable Technical Service Bulletins (TSBs). If a TSB exists for this concern, discontinue this test and follow TSB instructions. If no Technical Service Bulletins (TSBs) address this concern, INSTALL a new APIM . REFER to: SYNC Module [APIM] (415-00B Information and Entertainment System - General Information - Vehicles With: AM/FM/CD/SYNC, Removal and Installation).
No	The system is operating correctly at this time. The concern may have been caused by module connections. ADDRESS the root cause of any connector or pin issues.

AE8 CHECK FOR CORRECT FCDIM (FRONT CONTROL/DISPLAY INTERFACE MODULE) OPERATION

- Ignition OFF.
- Disconnect and inspect the FCDIM connector.
- Repair:
    - corrosion (install new connectors or terminals - clean module pins)
    - damaged or bent pins - install new terminals pins
    - pushed-out pins - install new pins as necessary
- Reconnect the FCDIM connector. Make sure it seats and latches correctly.
- Operate the system and determine if the concern is still present.

Is the concern still present?

Yes	CHECK OASIS for any applicable Technical Service Bulletins (TSBs). If a TSB exists for this concern, discontinue this test and follow TSB instructions. If no Technical Service Bulletins (TSBs) address this concern, INSTALL a new FCDIM . REFER to: Front Control/Display Interface Module (FCDIM) (415-00B Information and Entertainment System - General Information - Vehicles With: AM/FM/CD/SYNC, Removal and Installation).
No	The system is operating correctly at this time. The concern may have been caused by module connections. ADDRESS the root cause of any connector or pin issues.

AE9 CHECK FOR CORRECT GPSM (GLOBAL POSITIONING SYSTEM MODULE) OPERATION

- Ignition OFF.
- Disconnect and inspect the GPSM connector.
- Repair:
    - corrosion (install new connector or terminals – clean module pins)
    - damaged pins - install new terminals/pins
    - pushed-out pins - install new pins as necessary
- Reconnect the GPSM connector. Make sure it seats and latches correctly.
- Operate the system and determine if the concern is still present.

Is the concern still present?

Yes	CHECK OASIS for any applicable Technical Service Bulletins (TSBs). If a TSB exists for this concern, discontinue this test and follow TSB instructions. If no Technical Service Bulletins (TSBs) address this concern, INSTALL a new GPSM . REFER to: Global Positioning System Module (GPSM) (415-00B Information and Entertainment System

	- General Information - Vehicles With: AM/FM/CD/SYNC, Removal and Installation).
No	The system is operating correctly at this time. The concern may have been caused by module connections. ADDRESS the root cause of any connector or pin issues.

U3003:17

Diagnostic Overview

Diagnostics in this manual assume a certain skill level and knowledge of Ford-specific diagnostic practices. For information about these practices,
REFER to: Diagnostic Methods (100-00 General Information, Description and Operation).

Normal Operation and Fault Conditions

DTC Fault Trigger Conditions

DTC	Description	Fault Trigger Conditions
U3003:17	Battery Voltage: Circuit Voltage Above Threshold	Set by the ACM, APIM, FCDIM, and GPSM when the supply voltage is more than 15.8 volts for more than 250 milliseconds during normal operation or the self-test.

PINPOINT TEST AF : U3003:17

AF1 RECHECK FOR DTC (DIAGNOSTIC TROUBLE CODE) U3003:17

- Turn the engine off.
- Ignition ON.
- Using a diagnostic scan tool, clear the DTC for the module in question.
- WAIT at least 10 seconds.
- Using a diagnostic scan tool, perform the self-test for the module in question.

Is DTC U3003:17 present?

Yes	GO to AF2
No	The system is operating correctly at this time. The DTC may have been set previously during battery charging or while jump starting the vehicle.

AF2 CHECK FOR HIGH VOLTAGE DIAGNOSTIC TROUBLE CODES (DTCS) SET IN OTHER MODULES

- Using a diagnostic scan tool, retrieve all continuous Diagnostic Trouble Codes (DTCs) from all modules.

Are high voltage Diagnostic Trouble Codes (DTCs) (e.g. B1676, P0563, U3003:17) set in more than one module?

Yes	To diagnose the overcharging condition for 2.0L Duratec-HE (125kW/170PS) - MI4, REFER to: Charging System - 2.0L Duratec-HE (125kW/170PS) - MI4 (414-00 Charging System - General Information, Diagnosis and Testing). See Symptom Chart: Charging System. To diagnose the overcharging condition for 2.0L EcoBoost (184kW/250PS) - MI4, REFER to: Charging System - 2.0L EcoBoost (184kW/250PS) - MI4 (414-00 Charging System - General

	Information, Diagnosis and Testing). See Symptom Chart: Charging System.
No	GO to AF3

AF3 CHECK THE BATTERY VOLTAGE

- Turn off all interior lights, exterior lights, and accessories.
- Start and run the engine at approximately 2,000 RPM for 3 minutes while monitoring the battery voltage.

Does the battery voltage rise to 15.5 volts or higher?

Yes	To diagnose the overcharging condition for 2.0L Duratec-HE (125kW/170PS) - MI4, REFER to: Charging System - 2.0L Duratec-HE (125kW/170PS) - MI4 (414-00 Charging System - General Information, Diagnosis and Testing). See Symptom Chart: Charging System. To diagnose the overcharging condition for 2.0L EcoBoost (184kW/250PS) - MI4, REFER to: Charging System - 2.0L EcoBoost (184kW/250PS) - MI4 (414-00 Charging System - General Information, Diagnosis and Testing). See Symptom Chart: Charging System.
No	For the ACM, GO to AF4 For the APIM, GO to AF5 For the FCDIM, GO to AF6 For the GPSM, GO to AF7

AF4 CHECK FOR CORRECT ACM (AUDIO FRONT CONTROL MODULE) OPERATION

- Ignition OFF.
- Disconnect and inspect all the ACM connectors.
- Repair:
  - corrosion (install new connector or terminals – clean module pins)
  - damaged pins - install new terminals/pins
  - pushed-out pins - install new pins as necessary
- Reconnect the ACM connectors. Make sure they seat and latch correctly.
- Operate the system and determine if the concern is still present.

Is the concern still present?

Yes	CHECK OASIS for any applicable Technical Service Bulletins (TSBs). If a TSB exists for this concern, discontinue this test and follow TSB instructions. If no Technical Service Bulletins (TSBs) address this concern, INSTALL a new ACM. REFER to: Audio Front Control Module (ACM) (415-00B Information and Entertainment System - General Information - Vehicles With: AM/FM/CD/SYNC, Removal and Installation).
No	The system is operating correctly at this time. The concern may have been caused by module connections. ADDRESS the root cause of any connector or pin issues.

AF5 CHECK FOR CORRECT APIM (SYNC MODULE) OPERATION

- Ignition OFF.
- Disconnect and inspect the APIM connector.
- Repair:
  - corrosion (install new connector or terminals – clean module pins)
  - damaged pins - install new terminals/pins
  - pushed-out pins - install new pins as necessary

Reconnect the APIM connector. Make sure it seats and latches correctly.
- Wait at least 2 minutes for the APIM to re-initialize.
- Operate the system and determine if the concern is still present.

Is the concern still present?

Yes	CHECK OASIS for any applicable Technical Service Bulletins (TSBs). If a TSB exists for this concern, discontinue this test and follow TSB instructions. If no Technical Service Bulletins (TSBs) address this concern, INSTALL a new APIM . REFER to: SYNC Module [APIM] (415-00B Information and Entertainment System - General Information - Vehicles With: AM/FM/CD/SYNC, Removal and Installation).
No	The system is operating correctly at this time. The concern may have been caused by module connections. ADDRESS the root cause of any connector or pin issues.

AF6 CHECK FOR CORRECT FCDIM (FRONT CONTROL/DISPLAY INTERFACE MODULE) OPERATION

- Ignition OFF.
- Disconnect and inspect the FCDIM connector.
- Repair:
  - corrosion (install new connectors or terminals - clean module pins)
  - damaged or bent pins - install new terminals pins
  - pushed-out pins - install new pins as necessary
- Reconnect the FCDIM connector. Make sure it seats and latches correctly.
- Operate the system and determine if the concern is still present.

Is the concern still present?

Yes	CHECK OASIS for any applicable Technical Service Bulletins (TSBs). If a TSB exists for this concern, discontinue this test and follow TSB instructions. If no Technical Service Bulletins (TSBs) address this concern, INSTALL a new FCDIM . REFER to: Front Control/Display Interface Module (FCDIM) (415-00B Information and Entertainment System - General Information - Vehicles With: AM/FM/CD/SYNC, Removal and Installation).
No	The system is operating correctly at this time. The concern may have been caused by module connections. ADDRESS the root cause of any connector or pin issues.

AF7 CHECK FOR CORRECT GPSM (GLOBAL POSITIONING SYSTEM MODULE) OPERATION

- Ignition OFF.
- Disconnect and inspect the GPSM connector.
- Repair:
  - corrosion (install new connector or terminals – clean module pins)
  - damaged pins - install new terminals/pins
  - pushed-out pins - install new pins as necessary
- Reconnect the GPSM connector. Make sure it seats and latches correctly.
- Operate the system and determine if the concern is still present.

Is the concern still present?

Yes	CHECK OASIS for any applicable Technical Service Bulletins (TSBs). If a TSB exists for this concern, discontinue this test and follow TSB instructions. If no Technical Service Bulletins (TSBs) address this concern, INSTALL a new GPSM . REFER to: Global Positioning System Module (GPSM) (415-00B Information and Entertainment System - General Information - Vehicles With: AM/FM/CD/SYNC, Removal and Installation).
No	The system is operating correctly at this time. The concern may have been caused by module

	connections. ADDRESS the root cause of any connector or pin issues.

The Clock Does Not Operate Properly

Diagnostic Overview

Diagnostics in this manual assume a certain skill level and knowledge of Ford-specific diagnostic practices. For information about these practices,
REFER to: Diagnostic Methods (100-00 General Information, Description and Operation).

Normal Operation and Fault Conditions

The BCM contains the clock software and sends the date/time data information to the FCDIM via the (id=228)Medium Speed Controller Area Network (MS-CAN). If any communication DTCs between the BCM and the FCDIM are retrieved they should be diagnosed first.

PINPOINT TEST AG : THE CLOCK DOES NOT OPERATE PROPERLY

AG1 CARRY OUT THE NETWORK TEST

- Ignition ON.
- Using the scan tool carry out the network test on the BCM and the FCDIM .

Do the BCM and the FCDIM pass the network test

Yes	GO to AG2
No	To diagnose the module in question does not respond to the scan tool, REFER to: Communications Network (418-00 Module Communications Network, Diagnosis and Testing).

AG2 VERIFY THE CUSTOMER CONCERN

NOTE: *The clock should not see more than a loss or gain of 45 seconds to 1 minute per month.*

- Verify with the customer that the clock is losing time.

Is there a loss or gain more than 1 minute per month?

Yes	GO to AG3
No	If the clock display is not displaying properly, GO to Pinpoint Test Y Otherwise the clock is operating correctly at this time.

AG3 CHECK FOR CORRECT BCM (BODY CONTROL MODULE) OPERATION

- Ignition OFF.
- Disconnect and inspect the BCM connector.
- Repair:
  - corrosion (install new connector or terminals – clean module pins)
  - damaged pins - install new terminals/pins
  - pushed-out pins - install new pins as necessary
- Reconnect the BCM connector. Make sure it seats and latches correctly.
- Operate the system and determine if the concern is still present.

Is the concern still present?

Yes	INSTALL a new BCM .
No	The system is operating correctly at this time. The concern may have been caused by a loose or corroded connector.

Copyright © Ford Motor Company

Specifications

Item	Nm	lb-ft	lb-in
APIM screws	1	-	9
AM/FM/Satellite antenna mounting bolt	10	-	89
ACM screws	1.3	-	12
Front door speakers	2	-	18
Rear door speaker	2	-	18
Door speaker mounting plate screws	2	-	18
FDIM screws	1.3	-	12
FDIM mounting bezel screws	1.3	-	12
FCIM screws	1.2	-	11
Subwoofer speaker nuts	5	-	48

Copyright © Ford Motor Company

Information and Entertainment System

DTC Chart: ACM - Sony Sound

For a SYNC®-related concern, refer to the SYNC® System Symptom Chart before connecting the scan tool and beginning DTC-based diagnostics.

Diagnostics in this manual assume a certain skill level and knowledge of Ford-specific diagnostic practices. For information about these practices,
REFER to: Diagnostic Methods (100-00 General Information, Description and Operation).

ACM DTC Chart - Sony Sound

DTC	Description	Action
B1A56:21	Antenna: Signal Amplitude < Minimum	If DTC B1A56:21 sets after running the bezel diagnostic tests, disregard this DTC . This test is used for end of line or repair bay testing at the Ford plant. Each plant has its own assigned frequency and signal strength requirements. The running and passing of this test depends on local radio stations. If no local station is broadcasting on the required frequency, the test will fail. Therefore, tests ran from the bezel diagnostic screen and the DTC generated from the test can be disregarded.
B1A89:01	Satellite Antenna: General Electrical Failure	GO to Pinpoint Test B
B1A89:13	Satellite Antenna: Circuit Open	GO to Pinpoint Test B
B1D19:49	Compact Disc Unit: Internal Electronic Failure	• CLEAR the DTC . • WAIT at least 10 seconds. • REPEAT the self-test. • If DTC B1D19:49 is retrieved again, INSTALL a new ACM . G1504424
B1D19:4B	Compact Disc Unit: Over Temperature	The ACM was over temperature. This may occur during extended use. Audio operation can resume after the ACM cools. CLEAR the DTC . This is normal operation.
U0155:00	Lost Communication With IPC Control Module: No Sub Type Information	GO to Pinpoint Test AG
U0238:00	Lost Communication With Digital Audio Control Module “D”: No Sub Type	GO to Pinpoint Test AJ

	Information	
U0253:00	Lost Communication With Accessory Protocol Interface Module: No Sub Type Information	GO to Pinpoint Test AK
U0256:00	Lost Communication With Front Controls Interface Module “A”: No Sub Type Information	GO to Pinpoint Test AL
U201A:51	Control Module Main Calibration Data: Not Programmed	CHECK vehicle service history for recent service actions related to this module. This DTC sets due to incomplete or incorrect Programmable Module Installation (PMI) procedures. If there have been recent service actions with this module, REPEAT/PERFORM the Programmable Module Installation (PMI) procedure as directed by the diagnostic scan tool. REFER to: Module Configuration - System Operation and Component Description (418-01 Module Configuration, Description and Operation). See Programmable Module Installation (PMI). If there have been no recent service actions, INSTALL a new ACM to correct the failure to retain configuration data. G1504424
U2100:00	Initial Configuration Not Complete: No Sub Type Information	CHECK vehicle service history for recent service actions related to this module. This DTC sets due to incomplete or incorrect Programmable Module Installation (PMI) procedures. If there have been recent service actions with this module, REPEAT/PERFORM the Programmable Module Installation (PMI) procedure as directed by the diagnostic scan tool. REFER to: Module Configuration - System Operation and Component Description (418-01 Module Configuration, Description and Operation). See Programmable Module Installation (PMI). If there have been no recent service actions, INSTALL a new ACM to correct the failure to retain configuration data. G1504424
U2101:00	Control Module Configuration Incompatible: No Sub Type Information	CHECK vehicle service history for recent service actions related to this module. This DTC sets due to incomplete or incorrect Programmable Module Installation (PMI) procedures. If there have been recent service actions with this module, REPEAT/PERFORM the Programmable Module Installation (PMI) procedure as directed by the diagnostic scan tool. REFER to: Module Configuration - System Operation and Component Description (418-01 Module Configuration, Description and Operation). See Programmable Module Installation (PMI). If there have been no recent service actions, INSTALL a new ACM to correct the failure to retain configuration data. G1504424
U3000:41	Control Module: General Checksum Failure	• CLEAR the DTC . • WAIT at least 10 seconds. • REPEAT the self-test. • If DTC U3000:41 is retrieved again, INSTALL a new ACM . G1504424
U3000:42	Control Module: General Memory Failure	• CLEAR the DTC . • WAIT at least 10 seconds. • REPEAT the self-test. • If DTC U3000:42 is retrieved again, INSTALL a new ACM . G1504424
U3000:96	Control Module: Component Internal Failure	GO to Pinpoint Test B
U3003:16	Battery Voltage: Circuit Voltage Below Threshold	GO to Pinpoint Test AM
U3003:17	Battery Voltage:	GO to Pinpoint Test AN

	Circuit Voltage Above Threshold	

DTC Chart: APIM - Sony Sound

Diagnostics in this manual assume a certain skill level and knowledge of Ford-specific diagnostic practices. For information about these practices,
REFER to: Diagnostic Methods (100-00 General Information, Description and Operation).

APIM DTC Chart - Sony Sound

DTC	Description	Action
B108E:01	Display: General Electrical Failure	GO to Pinpoint Test AC
B116A:01	Handset Microphone: General Electrical Failure	GO to Pinpoint Test T
B11BA:1C	Steering Wheel Audio Switch Pack: Circuit Voltage Out Of Range	GO to Pinpoint Test AA
B11BA:63	Steering Wheel Audio Switch Pack: Circuit/Component Protection Time-Out	GO to Pinpoint Test AA
B1215:00	External Memory Card: No Sub Type Information	GO to Pinpoint Test AD
B1252:11	USB Port: Circuit Short To Ground	• For an inoperative USB port, GO to Pinpoint Test V • For an inoperative Secure Digital (SD) card slot, GO to Pinpoint Test W
B1252:13	USB Port: Circuit Open	• For an inoperative USB port, GO to Pinpoint Test V • For an inoperative Secure Digital (SD) card slot, GO to Pinpoint Test W
B12B8:11	USB Port #2: Circuit Short To Ground	**NOTE:** *This DTC refers to USB port #2 on the APIM itself, which is not used.* • INSPECT the APIM USB port #2 for damage and REMOVE any debris. • CLEAR the Diagnostic Trouble Codes (DTCs). • WAIT at least 10 seconds. • REPEAT the self-test. • If DTC B12B8:11 is retrieved again, INSTALL a new APIM . REFER to: SYNC Module [APIM] (415-00C Information and Entertainment System - General Information - Vehicles With: SYNC/Sony AM/FM/CD, Removal and Installation).
C1001:01	Vision System Camera: General Electrical Failure	REFER to: Parking Aid (413-13A Parking Aid, Diagnosis and Testing). See The Rear Video Is Inoperative.

U0140:00	Lost Communication With Body Control Module: No Sub Type Information	GO to Pinpoint Test AE
U0151:00	Lost Communication With Restraints Control Module: No Sub Type Information	GO to Pinpoint Test AF
U0155:00	Lost Communication With IPC Module: No Sub Type Information	GO to Pinpoint Test AG
U0162:00	Lost Communication With Navigation Display Module: No Sub Type Information	GO to Pinpoint Test AC
U016A:00	Lost Communication With Global Positioning System Module: No Sub Type Information	GO to Pinpoint Test AH
U0184:00	Lost Communication With Radio: No Sub Type Information	GO to Pinpoint Test AI
U0238:00	Lost Communication With Digital Audio Control Module "D": No Sub Type Information	GO to Pinpoint Test AJ
U0256:00	Lost Communication With Front Controls Interface Module: No Sub Type Information	GO to Pinpoint Test AL
U0423:00	Invalid Data Received From Instrument Panel Cluster Control Module: No Sub Type Information	RETRIEVE and FOLLOW Diagnostic Trouble Codes (DTCs) present in the IPC . REFER to: Instrumentation, Message Center and Warning Chimes (413-01 Instrumentation, Message Center and Warning Chimes, Diagnosis and Testing).
U1A00:87	Private Communication Network: Missing Message	GO to Pinpoint Test C

U2017:45	Control Module Software #2: Program Memory Failure	• CLEAR the Diagnostic Trouble Codes (DTCs). • WAIT at least 10 seconds. • REPEAT the self-test. • If DTC U2017:45 is retrieved again, INSTALL a new APIM . REFER to: SYNC Module [APIM] (415-00C Information and Entertainment System - General Information - Vehicles With: SYNC/Sony AM/FM/CD, Removal and Installation).
U2017:51	Control Module Software #2: Not Programmed	CHECK vehicle service history for recent service actions related to this module. This DTC sets due to incomplete or incorrect Programmable Module Installation (PMI) procedures. If there have been recent service actions with this module, REPEAT/PERFORM the APIM programming as directed by the diagnostic scan tool. REFER to: Information and Entertainment System - System Operation and Component Description (415-00C Information and Entertainment System - General Information - Vehicles With: SYNC/Sony AM/FM/CD, Description and Operation). See APIM Programming. If there have been no recent service actions, INSTALL a new APIM to correct the failure to retain configuration data. REFER to: SYNC Module [APIM] (415-00C Information and Entertainment System - General Information - Vehicles With: SYNC/Sony AM/FM/CD, Removal and Installation).
U2017:52	Control Module Software #2: Not Activated	CHECK vehicle service history for recent service actions related to this module. This DTC sets due to incomplete or incorrect Programmable Module Installation (PMI) procedures. If there have been recent service actions with this module, REPEAT/PERFORM the APIM programming as directed by the diagnostic scan tool. REFER to: Information and Entertainment System - System Operation and Component Description (415-00C Information and Entertainment System - General Information - Vehicles With: SYNC/Sony AM/FM/CD, Description and Operation). See APIM Programming. If there have been no recent service actions, INSTALL a new APIM to correct the failure to retain configuration data. REFER to: SYNC Module [APIM] (415-00C Information and Entertainment System - General Information - Vehicles With: SYNC/Sony AM/FM/CD, Removal and Installation).
U2017:54	Control Module Software #2: Missing Calibration	CHECK vehicle service history for recent service actions related to this module. This DTC sets due to incomplete or incorrect Programmable Module Installation (PMI) procedures. If there have been recent service actions with this module, REPEAT/PERFORM the APIM programming as directed by the diagnostic scan tool. REFER to: Information and Entertainment System - System Operation and Component Description (415-00C Information and Entertainment System - General Information - Vehicles With: SYNC/Sony AM/FM/CD, Description and Operation). See APIM Programming. If there have been no recent service actions, INSTALL a new APIM to correct the failure to retain configuration data. REFER to: SYNC Module [APIM] (415-00C Information and Entertainment System - General Information - Vehicles With: SYNC/Sony AM/FM/CD, Removal and Installation).
U2100:00	Initial Configuration Not Complete: No Sub Type Information	CHECK vehicle service history for recent service actions related to this module. This DTC sets due to incomplete or incorrect Programmable Module Installation (PMI) procedures. If there have been recent service actions with this module, REPEAT/PERFORM the APIM programming as directed by the diagnostic scan tool. REFER to: Information and Entertainment System - System Operation and Component Description (415-00C Information and Entertainment System - General Information - Vehicles With: SYNC/Sony AM/FM/CD, Description and Operation). See APIM Programming. If there have been no recent service actions, INSTALL a new APIM to correct the failure to retain configuration data. REFER to: SYNC Module [APIM] (415-00C Information and Entertainment System - General Information - Vehicles With: SYNC/Sony AM/FM/CD, Removal and Installation).
U2101:00	Control Module Configuration Incompatible: No Sub Type Information	CHECK vehicle service history for recent service actions related to this module. This DTC sets due to incomplete or incorrect Programmable Module Installation (PMI) procedures. If there have been recent service actions with this module, REPEAT/PERFORM the APIM programming as directed by the diagnostic scan tool. REFER to: Information and Entertainment System - System Operation and Component Description (415-00C Information and Entertainment System - General Information - Vehicles With: SYNC/Sony AM/FM/CD, Description and Operation).

		See APIM Programming. If there have been no recent service actions, INSTALL a new APIM to correct the failure to retain configuration data. REFER to: SYNC Module [APIM] (415-00C Information and Entertainment System - General Information - Vehicles With: SYNC/Sony AM/FM/CD, Removal and Installation).
U3000:04	Control Module: System Internal Failure	• CLEAR the Diagnostic Trouble Codes (DTCs). • WAIT at least 10 seconds. • REPEAT the self-test. • If DTC U3000:04 is retrieved again, INSTALL a new APIM . REFER to: SYNC Module [APIM] (415-00C Information and Entertainment System - General Information - Vehicles With: SYNC/Sony AM/FM/CD, Removal and Installation).
U3000:41	Control Module: General Checksum Failure	• CLEAR the Diagnostic Trouble Codes (DTCs). • WAIT at least 10 seconds. • REPEAT the self-test. • If DTC U3000:41 is retrieved again INSTALL a new APIM . REFER to: SYNC Module [APIM] (415-00C Information and Entertainment System - General Information - Vehicles With: SYNC/Sony AM/FM/CD, Removal and Installation).
U3000:42	Control Module: General Memory Failure	• CLEAR the Diagnostic Trouble Codes (DTCs). • WAIT at least 10 seconds. • REPEAT the self-test. • If DTC U3000:42 is retrieved again, INSTALL a new APIM . REFER to: SYNC Module [APIM] (415-00C Information and Entertainment System - General Information - Vehicles With: SYNC/Sony AM/FM/CD, Removal and Installation).
U3000:88	Control Module: Bus Off	**NOTE:** *Network communication/message Diagnostic Trouble Codes (DTCs) can result from intermittent concerns such as damaged wiring or low battery voltage occurrences. Additionally, vehicle repair procedures such as module reprogramming often set these Diagnostic Trouble Codes (DTCs). To avoid repeat network concerns, INSPECT for damaged or corroded wiring at the APIM . TEST the vehicle battery. Replacing a module to resolve a network DTC is unlikely to resolve the concern.* The module was unable to communicate on the network at a point in time. The fault is currently not present. CLEAR the DTC . REPEAT the network test with the diagnostic scan tool.
U3003:16	Battery Voltage: Circuit Voltage Below Threshold	GO to Pinpoint Test AM
U3003:17	Battery Voltage: Circuit Voltage Above Threshold	GO to Pinpoint Test AN

DTC Chart: Audio DSP Module - Sony Sound

Diagnostics in this manual assume a certain skill level and knowledge of Ford-specific diagnostic practices. For information about these practices,
REFER to: Diagnostic Methods (100-00 General Information, Description and Operation).

DSP DTC Chart - Sony Sound

DTC	Description	Action
B1A01:01	Speaker #1: General Electrical Failure	GO to Pinpoint Test I

B1A01:11	Speaker #1: Circuit Short To Ground	GO to Pinpoint Test I
B1A01:12	Speaker #1: Circuit Short To Battery	GO to Pinpoint Test I
B1A01:13	Speaker #1: Circuit Open	GO to Pinpoint Test I
B1A02:01	Speaker #2: General Electrical Failure	GO to Pinpoint Test G
B1A02:11	Speaker #2: Circuit Short To Ground	GO to Pinpoint Test G
B1A02:12	Speaker #2: Circuit Short To Battery	GO to Pinpoint Test G
B1A02:13	Speaker #2: Circuit Open	GO to Pinpoint Test G
B1A03:01	Speaker #3: General Electrical Failure	GO to Pinpoint Test H
B1A03:11	Speaker #3: Circuit Short To Ground	GO to Pinpoint Test H
B1A03:12	Speaker #3: Circuit Short To Battery	GO to Pinpoint Test H
B1A03:13	Speaker #3: Circuit Open	GO to Pinpoint Test H
B1A04:01	Speaker #4: General Electrical Failure	• For a Left Rear (LR) door speaker concern, GO to Pinpoint Test O • For a Left Rear (LR) door tweeter speaker concern, GO to Pinpoint Test P
B1A04:11	Speaker #4: Circuit Short To Ground	• For a Left Rear (LR) door speaker concern, GO to Pinpoint Test O • For a Left Rear (LR) door tweeter speaker concern, GO to Pinpoint Test P
B1A04:12	Speaker #4: Circuit Short To Battery	• For a Left Rear (LR) door speaker concern, GO to Pinpoint Test O • For a Left Rear (LR) door tweeter speaker concern, GO to Pinpoint Test P
B1A04:13	Speaker #4: Circuit Open	GO to Pinpoint Test O
B1A06:01	Speaker #6: General Electrical Failure	GO to Pinpoint Test J
B1A06:11	Speaker #6: Circuit Short To Ground	GO to Pinpoint Test J
B1A06:12	Speaker #6: Circuit Short To Battery	GO to Pinpoint Test J
B1A06:13	Speaker #6: Circuit Open	GO to Pinpoint Test J
B1A07:01	Speaker #7: General Electrical Failure	GO to Pinpoint Test K
B1A07:11	Speaker #7: Circuit Short To Ground	GO to Pinpoint Test K
B1A07:12	Speaker #7: Circuit Short To Battery	GO to Pinpoint Test K
B1A07:13	Speaker #7: Circuit Open	GO to Pinpoint Test K

B1A08:01	Speaker #8: General Electrical Failure	For a Right Rear (RR) door speaker concern, GO to Pinpoint Test L • For a Right Rear (RR) door tweeter speaker concern, GO to Pinpoint Test M
B1A08:11	Speaker #8: Circuit Short To Ground	• For a Right Rear (RR) door speaker concern, GO to Pinpoint Test L • For a Right Rear (RR) door tweeter speaker concern, GO to Pinpoint Test M
B1A08:12	Speaker #8: Circuit Short To Battery	• For a Right Rear (RR) door speaker concern, GO to Pinpoint Test L • For a Right Rear (RR) door tweeter speaker concern, GO to Pinpoint Test M
B1A08:13	Speaker #8: Circuit Open	GO to Pinpoint Test L
B1A09:11	Speaker #9: Circuit Short To Ground	GO to Pinpoint Test N
B1A09:12	Speaker #9: Circuit Short To Battery	GO to Pinpoint Test N
B1A09:13	Speaker #9: Circuit Open	GO to Pinpoint Test N
B1A10:11	Speaker #10: Circuit Short To Ground	GO to Pinpoint Test N
B1A10:12	Speaker #10: Circuit Short To Battery	GO to Pinpoint Test N
B1A10:13	Speaker #10: Circuit Open	GO to Pinpoint Test N
U0155:00	Lost Communication With IPC Control Module: No Sub Type Information	GO to Pinpoint Test AG
U0184:00	Lost Communication With Radio: No Sub Type Information	GO to Pinpoint Test AI
U0253:00	Lost Communication With Accessory Protocol Interface Module: No Sub Type Information	GO to Pinpoint Test AK
U0256:00	Lost Communication With Front Controls Interface Module: No Sub Type Information	GO to Pinpoint Test AL
U0423:00	Invalid Data Received from Instrument Panel Cluster Control Module: No Sub Type Information	RETRIEVE and FOLLOW Diagnostic Trouble Codes (DTCs) present in the IPC . REFER to: Instrumentation, Message Center and Warning Chimes (413-01 Instrumentation, Message Center and Warning Chimes, Diagnosis and Testing).
U2014:01	Control Module Hardware: General Electrical Failure	• CLEAR the DTC . • WAIT at least 10 seconds. • REPEAT the self-test. • If DTC U2014:01 is retrieved again, INSTALL a new audio DSP module. REFER to: Audio Digital Signal Processing (DSP) Module (415-00C Information and Entertainment System - General Information - Vehicles With: SYNC/Sony AM/FM/CD, Removal and Installation).
U2014:41	Control Module	• CLEAR the DTC .

	Hardware: General Checksum Failure	• WAIT at least 10 seconds. • REPEAT the self-test. • If DTC U2014:41 is retrieved again, INSTALL a new audio DSP module. REFER to: Audio Digital Signal Processing (DSP) Module (415-00C Information and Entertainment System - General Information - Vehicles With: SYNC/Sony AM/FM/CD, Removal and Installation).
U201A:51	Control Module Main Calibration Data: Not Programmed	CHECK vehicle service history for recent service actions related to this module. This DTC sets due to incomplete or incorrect Programmable Module Installation (PMI) procedures. If there have been recent service actions with this module, REPEAT/PERFORM the Programmable Module Installation (PMI) procedure as directed by the diagnostic scan tool. REFER to: Module Configuration - System Operation and Component Description (418-01 Module Configuration, Description and Operation). See Programmable Module Installation (PMI). If there have been no recent service actions, INSTALL a new audio DSP module to correct the failure to retain configuration data. REFER to: Audio Digital Signal Processing (DSP) Module (415-00C Information and Entertainment System - General Information - Vehicles With: SYNC/Sony AM/FM/CD, Removal and Installation).
U2100:00	Initial Configuration Not Complete: No Sub Type Information	CHECK vehicle service history for recent service actions related to this module. This DTC sets due to incomplete or incorrect Programmable Module Installation (PMI) procedures. If there have been recent service actions with this module, REPEAT/PERFORM the Programmable Module Installation (PMI) procedure as directed by the diagnostic scan tool. REFER to: Module Configuration - System Operation and Component Description (418-01 Module Configuration, Description and Operation). See Programmable Module Installation (PMI). If there have been no recent service actions, INSTALL a new audio DSP module to correct the failure to retain configuration data. REFER to: Audio Digital Signal Processing (DSP) Module (415-00C Information and Entertainment System - General Information - Vehicles With: SYNC/Sony AM/FM/CD, Removal and Installation).
U2101:00	Control Module Configuration Incompatible: No Sub Type Information	CHECK vehicle service history for recent service actions related to this module. This DTC sets due to incomplete or incorrect Programmable Module Installation (PMI) procedures. If there have been recent service actions with this module, REPEAT/PERFORM the Programmable Module Installation (PMI) procedure as directed by the diagnostic scan tool. REFER to: Module Configuration - System Operation and Component Description (418-01 Module Configuration, Description and Operation). See Programmable Module Installation (PMI). If there have been no recent service actions, INSTALL a new audio DSP module to correct the failure to retain configuration data. REFER to: Audio Digital Signal Processing (DSP) Module (415-00C Information and Entertainment System - General Information - Vehicles With: SYNC/Sony AM/FM/CD, Removal and Installation).
U3000:41	Control Module: General Checksum Failure	• CLEAR the DTC . • WAIT at least 10 seconds. • REPEAT the self-test. • If DTC U3000:41 is retrieved again, INSTALL a new audio DSP module. REFER to: Audio Digital Signal Processing (DSP) Module (415-00C Information and Entertainment System - General Information - Vehicles With: SYNC/Sony AM/FM/CD, Removal and Installation).
U3000:42	Control Module: General Memory Failure	• CLEAR the DTC . • WAIT at least 10 seconds. • REPEAT the self-test. • If DTC U3000:42 is retrieved again, INSTALL a new audio DSP module. REFER to: Audio Digital Signal Processing (DSP) Module (415-00C Information and Entertainment System - General Information - Vehicles With: SYNC/Sony AM/FM/CD, Removal and Installation).
U3003:16	Battery Voltage: Circuit Voltage Below	GO to Pinpoint Test AM

	Threshold	
U3003:17	Battery Voltage: Circuit Voltage Above Threshold	GO to Pinpoint Test AN

DTC Chart: FCIM - Sony Sound

Diagnostics in this manual assume a certain skill level and knowledge of Ford-specific diagnostic practices. For information about these practices,
REFER to: Diagnostic Methods (100-00 General Information, Description and Operation).

FCIM DTC Chart - Sony Sound

DTC	Description	Action
U0009:88	High Speed CAN Communication Bus (-) shorted to Bus (+): Bus off	The module was unable to communicate on the network at a point in time. The fault is not currently present (the module had to communicate with the diagnostic scan tool to report this DTC. VERIFY the integrity of the connectors and wiring. Refer to Wiring Diagrams Cell 14 for schematic and connector information.
U0155:00	Lost Communication With IPC Control Module: No Sub Type Information	GO to Pinpoint Test AG
U0423:00	Invalid Data Received From Instrument Panel Cluster Control Module: No Sub Type Information	RETRIEVE and FOLLOW Diagnostic Trouble Codes (DTCs) present in the IPC. REFER to: Instrumentation, Message Center and Warning Chimes (413-01 Instrumentation, Message Center and Warning Chimes, Diagnosis and Testing).
U2013:63	Switch Pack: Circuit/Component Protection Time-Out	• CLEAR the Diagnostic Trouble Codes (DTCs). • WAIT at least 10 seconds. • REPEAT the self-test. • If DTC U2013:63 is retrieved again, INSTALL a new FCIM. REFER to: Front Controls Interface Module (FCIM) (415-00C Information and Entertainment System - General Information - Vehicles With: SYNC/Sony AM/FM/CD, Removal and Installation).
U3000:41	Control Module: General Checksum Failure	• CLEAR the Diagnostic Trouble Codes (DTCs). • WAIT at least 10 seconds. • REPEAT the self-test. • If DTC U3000:41 is retrieved again, INSTALL a new FCIM. REFER to: Front Controls Interface Module (FCIM) (415-00C Information and Entertainment System - General Information - Vehicles With: SYNC/Sony AM/FM/CD, Removal and Installation).
U3000:42	Control Module: General Memory Failure	• CLEAR the Diagnostic Trouble Codes (DTCs). • WAIT at least 10 seconds. • REPEAT the self-test. • If DTC U3000:42 is retrieved again, INSTALL a new FCIM. REFER to: Front Controls Interface Module (FCIM) (415-00C Information and Entertainment System - General Information - Vehicles With: SYNC/Sony AM/FM/CD, Removal and Installation).
U3003:16	Battery Voltage: Circuit Voltage Below Threshold	GO to Pinpoint Test AM

U3003:17	Battery Voltage: Circuit Voltage Above Threshold	GO to Pinpoint Test AN

DTC Chart: GPSM - Sony Sound

Diagnostics in this manual assume a certain skill level and knowledge of Ford-specific diagnostic practices. For information about these practices,
REFER to: Diagnostic Methods (100-00 General Information, Description and Operation).

GPSM DTC Chart - Sony Sound

DTC	Description	Action
U0140:00	Lost Communication With Body Control Module: No Sub Type Information	GO to Pinpoint Test AE
U0155:00	Lost Communication With IPC Control Module: No Sub Type Information	GO to Pinpoint Test AG
U0422:00	Invalid Data Received from Body Control Module: No Sub Type Information	RETRIEVE and FOLLOW Diagnostic Trouble Codes (DTCs) present in the BCM . REFER to: Body Control Module (BCM) (419-10 Multifunction Electronic Modules, Diagnosis and Testing).
U0423:00	Invalid Data Received From Instrument Panel Cluster Control Module: No Sub Type Information	RETRIEVE and FOLLOW Diagnostic Trouble Codes (DTCs) present in the IPC . REFER to: Instrumentation, Message Center and Warning Chimes (413-01 Instrumentation, Message Center and Warning Chimes, Diagnosis and Testing).
U2100:00	Initial Configuration Not Complete: No Sub Type Information	CHECK vehicle service history for recent service actions related to this module. This DTC sets due to incomplete or incorrect Programmable Module Installation (PMI) procedures. If there have been recent service actions with this module, REPEAT/PERFORM the Programmable Module Installation (PMI) procedure as directed by the diagnostic scan tool. REFER to: Module Configuration - System Operation and Component Description (418-01 Module Configuration, Description and Operation). See Programmable Module Installation (PMI). If there have been no recent service actions, INSTALL a new GPSM to correct the failure to retain configuration data. REFER to: Global Positioning System Module (GPSM) (415-00C Information and Entertainment System - General Information - Vehicles With: SYNC/Sony AM/FM/CD, Removal and Installation).
U2101:00	Control Module Configuration Incompatible: No Sub Type Information	CHECK vehicle service history for recent service actions related to this module. This DTC sets due to incomplete or incorrect Programmable Module Installation (PMI) procedures. If there have been recent service actions with this module, REPEAT/PERFORM the Programmable Module Installation (PMI) procedure as directed by the diagnostic scan tool. REFER to: Module Configuration - System Operation and Component Description (418-01 Module Configuration, Description and Operation). See Programmable Module Installation (PMI). If there have been no recent service actions, INSTALL a new GPSM to correct the failure to retain configuration data. REFER to: Global Positioning System Module (GPSM) (415-00C Information and Entertainment System - General Information - Vehicles With: SYNC/Sony AM/FM/CD, Removal and Installation).

U3000:09	Control Module: Component Failure	CLEAR the Diagnostic Trouble Codes (DTCs). • WAIT at least 10 seconds. • REPEAT the self-test. • If DTC U3000:09 is retrieved again, PERFORM a battery reset by disconnecting the battery for 5 minutes, then reconnecting it. • CLEAR the Diagnostic Trouble Codes (DTCs). • WAIT at least 10 seconds. • REPEAT the self-test. • If DTC U3000:09 is retrieved again, INSTALL a new GPSM . REFER to: Global Positioning System Module (GPSM) (415-00C Information and Entertainment System - General Information - Vehicles With: SYNC/Sony AM/FM/CD, Removal and Installation).
U3000:41	Control Module: General Checksum Failure	• CLEAR the Diagnostic Trouble Codes (DTCs). • WAIT at least 10 seconds. • REPEAT the self-test. • If DTC U3000:41 is retrieved again, INSTALL a new GPSM . REFER to: Global Positioning System Module (GPSM) (415-00C Information and Entertainment System - General Information - Vehicles With: SYNC/Sony AM/FM/CD, Removal and Installation).
U3000:42	Control Module: General Memory Failure	• CLEAR the Diagnostic Trouble Codes (DTCs). • WAIT at least 10 seconds. • REPEAT the self-test. • If DTC U3000:42 is retrieved again, INSTALL a new GPSM . REFER to: Global Positioning System Module (GPSM) (415-00C Information and Entertainment System - General Information - Vehicles With: SYNC/Sony AM/FM/CD, Removal and Installation).
U3003:16	Battery Voltage: Circuit Voltage Below Threshold	GO to Pinpoint Test AM
U3003:17	Battery Voltage: Circuit Voltage Above Threshold	GO to Pinpoint Test AN

DTC Chart: IPC - Sony Sound

Diagnostics in this manual assume a certain skill level and knowledge of Ford-specific diagnostic practices. For information about these practices,
REFER to: Diagnostic Methods (100-00 General Information, Description and Operation).

DTC Chart - IPC - Sony Sound

DTC	Description	Action
C1D22:11	Steering Wheel Switch Right Module: Circuit Short To Ground	GO to Pinpoint Test Z
C1D22:23	Steering Wheel Switch Right Module: Circuit Open	GO to Pinpoint Test Z
U0564:64	Invalid Data Received From Speech Recognition Module: Signal Plausibility Failure	• Sets when the IPC receives invalid data from the APIM for more than 2 seconds. • CLEAR the DTC .

		• REPEAT the self-test • If DTC U0564:64 returns, RETRIEVE and REPAIR all Diagnostic Trouble Codes (DTCs) set in the APIM . REFER to: Information and Entertainment System (415-00C Information and Entertainment System - General Information - Vehicles With: SYNC/Sony AM/FM/CD, Diagnosis and Testing). See DTC Chart: APIM - Sony Sound.

Symptom Charts

Symptom Chart: General Audio System

Diagnostics in this manual assume a certain skill level and knowledge of Ford-specific diagnostic practices. For information about these practices,
REFER to: Diagnostic Methods (100-00 General Information, Description and Operation).

Symptom Chart

Condition	Possible Sources	Actions
A module does not respond to the diagnostic scan tool	• Fuse • Wiring, terminals, or connectors • Module	REFER to: Communications Network (418-00 Module Communications Network, Diagnosis and Testing). See Symptom Chart.
The lower steering wheel controls are inoperative or do not operate correctly	Refer to the Pinpoint Test.	GO to Pinpoint Test Z
The upper steering wheel controls are inoperative or do not operate correctly	Refer to the Pinpoint Test.	GO to Pinpoint Test AA
The CD player is inoperative or does not operate correctly	• CD • ACM	INSPECT the CD for scratches, fingerprints, a loose paper label, incorrect format, or damage. INSERT a known good CD and TEST the system. If the system operates correctly, the concern was caused by a damaged CD . If the system does not operate correctly, INSTALL a new ACM . REFER to: Audio Front Control Module (ACM) (415-00C Information and Entertainment System - General Information - Vehicles With: SYNC/Sony AM/FM/CD, Removal and Installation).
The speed compensated volume does not operate correctly	Refer to the Pinpoint Test.	GO to Pinpoint Test D
The FCIM illumination is inoperative or does not dim	• Illumination system concern • FCIM	REFER to: Instrument Panel Cluster (IPC) and Panel Illumination (413-00 Instrument Panel Cluster (IPC) and Panel Illumination, Diagnosis and Testing).

The audio system does not operate correctly from the FCIM	Refer to the Pinpoint Test.	GO to Pinpoint Test AB
A single FCIM button is inoperative	FCIM	INSTALL a new FCIM . REFER to: Front Controls Interface Module (FCIM) (415-00C Information and Entertainment System - General Information - Vehicles With: SYNC/Sony AM/FM/CD, Removal and Installation).
The FDIM touchscreen display is inoperative or does not operate correctly	Refer to the Pinpoint Test.	GO to Pinpoint Test AC
The FDIM displays “SD CARD FAULT”	Refer to the Pinpoint Test.	GO to Pinpoint Test AD
The clock does not operate properly	Refer to the Pinpoint Test.	GO to Pinpoint Test AO

Symptom Chart: HD Radio® System

Diagnostics in this manual assume a certain skill level and knowledge of Ford-specific diagnostic practices. For information about these practices,
REFER to: Diagnostic Methods (100-00 General Information, Description and Operation).

Symptom Chart

Condition	Possible Sources	Actions
Data errors for text display	Data error from radio broadcaster	This condition is due to the data from the radio broadcaster. ADVISE the customer that the HD® Radio is functioning correctly.
Echo, stutter, skip, repeat, or volume fluctuation in HD	Signal alignment error from radio broadcaster	This condition is due to the signal alignment from the radio broadcaster. ADVISE the customer that the HD Radio® is functioning correctly.
Sound fading in and out or sound delay	Transition between High-definition (HD) and analog	This condition is due to the Transition between High-definition (HD) and analog. ADVISE the customer that the HD Radio® must have an available channel in order to output High-definition (HD) content.
Sound dropout or channel unavailable in HD2 or HD3	HD2 and HD3 do not have analog equivalents, causing complete signal loss when High-definition (HD) signal fades	This condition is due to the HD2 and HD3 do not have analog equivalents causing complete signal loss when High-definition (HD) signal fades. ADVISE the customer that the HD Radio® must have an available channel in order to output High-definition (HD) content.

Symptom Chart: Navigation

Diagnostics in this manual assume a certain skill level and knowledge of Ford-specific diagnostic practices. For information about these practices,
REFER to: Diagnostic Methods (100-00 General Information, Description and Operation).

Symptom Chart

Condition	Possible Sources	Actions
Navigation is inoperative	Refer to the Pinpoint Test.	GO to Pinpoint Test AD
The SIRIUS data services are not available in navigation mode	Refer to the Pinpoint Test.	GO to Pinpoint Test C

Symptom Chart: Satellite Radio

Diagnostics in this manual assume a certain skill level and knowledge of Ford-specific diagnostic practices. For information about these practices,
REFER to: Diagnostic Methods (100-00 General Information, Description and Operation).

Symptom Chart

Condition	Possible Sources	Actions
Poor reception	Refer to the Pinpoint Test.	GO to Pinpoint Test B
Poor sound quality or no sound while in satellite radio mode - all other functions operate correctly	Refer to the Pinpoint Test.	GO to Pinpoint Test B
The satellite radio is inoperative or does not operate correctly	Refer to the Pinpoint Test.	GO to Pinpoint Test B

Symptom Chart: Sound Quality

Diagnostics in this manual assume a certain skill level and knowledge of Ford-specific diagnostic practices. For information about these practices,
REFER to: Diagnostic Methods (100-00 General Information, Description and Operation).

Symptom Chart

Condition	Possible Sources	Actions
Poor reception - AM / FM	Refer to the Pinpoint Test.	GO to Pinpoint Test A
Continuous seek or scan in AM / FM	Refer to the Pinpoint Test.	GO to Pinpoint Test A
Poor Sound Quality Or Distorted Sound From One Or More Speakers (Not All Speakers)	Refer to the Pinpoint Test.	GO to Pinpoint Test E
No Sound From All Speakers	Refer to the Pinpoint Test.	GO to Pinpoint Test F
The Left Front (LF) door speaker is inoperative	Refer to the Pinpoint Test.	GO to Pinpoint Test G
The Left Front (LF) door tweeter speaker is inoperative	Refer to the Pinpoint Test.	GO to Pinpoint Test H

The instrument panel speaker is inoperative	Refer to the Pinpoint Test.	GO to Pinpoint Test I
The Right Front (RF) door speaker is inoperative	Refer to the Pinpoint Test.	GO to Pinpoint Test J
The Right Front (RF) door tweeter speaker is inoperative	Refer to the Pinpoint Test.	GO to Pinpoint Test K
The Right Rear (RR) door speaker is inoperative	Refer to the Pinpoint Test.	GO to Pinpoint Test L
The Right Rear (RR) door tweeter speaker is inoperative	Refer to the Pinpoint Test.	GO to Pinpoint Test M
The subwoofer speaker is inoperative	Refer to the Pinpoint Test.	GO to Pinpoint Test N
The Left Rear (LR) door speaker is inoperative	Refer to the Pinpoint Test.	GO to Pinpoint Test O
The Left Rear (LR) door tweeter speaker is inoperative	Refer to the Pinpoint Test.	GO to Pinpoint Test P

Symptom Chart: SYNC® System

Diagnostics in this manual assume a certain skill level and knowledge of Ford-specific diagnostic practices. For information about these practices,
REFER to: Diagnostic Methods (100-00 General Information, Description and Operation).

Symptom Chart

Condition	Possible Sources	Actions
All SYNC® Services features are inoperative or inaccurate (traffic, directions, and information)	Refer to the Pinpoint Test.	PERFORM the APIM Reset. REFER to: Reset the SYNC Module [APIM] (415-00C Information and Entertainment System - General Information - Vehicles With: SYNC/Sony AM/FM/CD, General Procedures). If the concern is still present, GO to Pinpoint Test S
The SYNC® system voice or tone prompts, Text-To-Speech (TTS) feature, or ringtones are inoperative or do not operate correctly	Refer to the Pinpoint Test.	PERFORM the APIM Reset. REFER to: Reset the SYNC Module [APIM] (415-00C Information and Entertainment System - General Information - Vehicles With: SYNC/Sony AM/FM/CD, General Procedures). If the concern is still present, GO to Pinpoint Test R
During a phone call, no incoming audio is heard in the vehicle	Refer to the Pinpoint Test.	PERFORM the APIM Reset. REFER to: Reset the SYNC Module [APIM] (415-00C Information and Entertainment System - General Information - Vehicles With: SYNC/Sony AM/FM/CD, General Procedures). If the concern is still present, GO to Pinpoint Test R
Voice recognition is inoperative or does not operate correctly	Refer to the Pinpoint Test.	PERFORM the APIM Reset. REFER to: Reset the SYNC Module [APIM] (415-00C Information and Entertainment System - General Information - Vehicles With: SYNC/Sony AM/FM/CD, General Procedures).

		If the concern is still present, GO to Pinpoint Test T
During a phone call, no outgoing audio is heard on the outside device	Refer to the Pinpoint Test.	PERFORM the APIM Reset. REFER to: Reset the SYNC Module [APIM] (415-00C Information and Entertainment System - General Information - Vehicles With: SYNC/Sony AM/FM/CD, General Procedures). If the concern is still present, GO to Pinpoint Test T
No sound from all SYNC® audio sources (Bluetooth, USB , Secure Digital (SD) card, RCA jacks)	Refer to the Pinpoint Test.	PERFORM the APIM Reset. REFER to: Reset the SYNC Module [APIM] (415-00C Information and Entertainment System - General Information - Vehicles With: SYNC/Sony AM/FM/CD, General Procedures). If the concern is still present, GO to Pinpoint Test Q
The SYNC® steering wheel switches are inoperative or do not operate correctly	Refer to the Pinpoint Test.	PERFORM the APIM Reset. REFER to: Reset the SYNC Module [APIM] (415-00C Information and Entertainment System - General Information - Vehicles With: SYNC/Sony AM/FM/CD, General Procedures). If the concern is still present, GO to Pinpoint Test AA
All media hub functions are inoperative or do not operate correctly (USB ports, Secure Digital (SD) card, and RCA jacks)	Refer to the Pinpoint Test.	PERFORM the APIM Reset. REFER to: Reset the SYNC Module [APIM] (415-00C Information and Entertainment System - General Information - Vehicles With: SYNC/Sony AM/FM/CD, General Procedures). If the concern is still present, GO to Pinpoint Test U
The USB port(s) is/are inoperative or do/does not operate correctly	Refer to the Pinpoint Test.	PERFORM the APIM Reset. REFER to: Reset the SYNC Module [APIM] (415-00C Information and Entertainment System - General Information - Vehicles With: SYNC/Sony AM/FM/CD, General Procedures). If the concern is still present, GO to Pinpoint Test V
The Secure Digital (SD) card slot is inoperative or does not operate correctly	Refer to the Pinpoint Test.	PERFORM the APIM Reset. REFER to: Reset the SYNC Module [APIM] (415-00C Information and Entertainment System - General Information - Vehicles With: SYNC/Sony AM/FM/CD, General Procedures). , If the concern is still present, GO to Pinpoint Test W
The RCA jacks are inoperative or do not operate correctly	Refer to the Pinpoint Test.	PERFORM the APIM Reset. REFER to: Reset the SYNC Module [APIM] (415-00C Information and Entertainment System - General Information - Vehicles With: SYNC/Sony AM/FM/CD, General Procedures). If the concern is still present, GO to Pinpoint Test X
Unable to pair Bluetooth device	Refer to the Pinpoint Test.	PERFORM the APIM Reset. REFER to: Reset the SYNC Module [APIM] (415-00C Information and Entertainment System - General Information - Vehicles With: SYNC/Sony AM/FM/CD, General Procedures). If the concern is still present, GO to Pinpoint Test Y
An individual Bluetooth device feature is inoperative (text messaging, media playback or controls, phone book download, call history, or call waiting)	Customer's device compatibility	• PERFORM the APIM Reset. • REFER to: Reset the SYNC Module [APIM] (415-00C Information and Entertainment System - General Information - Vehicles With: SYNC/Sony AM/FM/CD, General Procedures). If the concern is still present, INSTRUCT the customer

		to review the device compatibility list. REFER to www.syncmyride.com. It is normal operation for unsupported or incompatible Bluetooth features to be unavailable through the SYNC® system. • If the inoperative feature is compatible, ADVISE the customer to check their device for firmware updates, and if required, reset their device following the manufacturer's instructions.

911 Assist™ or Vehicle Health Report (VHR) is inoperative or does not operate correctly	• Unregistered SYNC® owner account
	• RCM misconfiguration
	• IPC misconfiguration
		• Verify that the customer has a SYNC® Owner Account on www.syncmyride.com.
		• This error message appears due to incomplete or incorrect PMI procedures. CHECK the vehicle service history for recent service actions related to the IPC or RCM .
		  ○ If there have been recent service actions with the IPC or RCM , REPEAT/PERFORM the PMI procedure as directed by the diagnostic scan tool.
		  REFER to: Module Configuration - System Operation and Component Description (418-01 Module Configuration, Description and Operation).
		  ○ If there have been no recent service actions, INSTALL a new APIM to correct the failure to retain configuration data.

Pinpoint Tests

Poor Reception - AM - FM

Refer to Wiring Diagrams Cell 130 for schematic and connector information.

Diagnostic Overview

Diagnostics in this manual assume a certain skill level and knowledge of Ford-specific diagnostic practices. For information about these practices,
REFER to: Diagnostic Methods (100-00 General Information, Description and Operation).

Normal Operation and Fault Conditions

REFER to: Information and Entertainment System - System Operation and Component Description (415-00C Information and Entertainment System - General Information - Vehicles With: SYNC/Sony AM/FM/CD, Description and Operation).
See AM / FM Radio.

The RDS function allows the vehicle operator to choose which genre (category) of music to listen to. When the SCAN button is pressed, the ACM only stops at channels falling within the selected category. If no channel in the selected category is found, the ACM continues to scan without stopping. This can appear to be a reception issue, but it is actually due to the customer's setting.

Possible Sources

- No channel found in the selected category
- Wiring, terminals, or connectors
- AM / FM antenna
- AM / FM antenna coaxial cable
- Charging system

Ignition system
- Noise suppression equipment
- ACM

PINPOINT TEST A : POOR RECEPTION - AM (AMPLITUDE MODULATION) - FM (FREQUENCY MODULATION)

A1 CHECK THE AUDIO SYSTEM RECEPTION

- Operate the audio system in radio tuner AM / FM mode.
- Check the reception with the engine running, and with the engine off.

Does the poor reception only occur with the engine running?

Yes	GO to A2
No	GO to A4

A2 CHECK THE GENERATOR

- Ignition OFF.
- Disconnect: Wiring harness to the generator voltage regulator.
- Start the engine.
- Operate the audio system in radio tuner AM / FM mode.

Is the reception OK?

Yes	INSTALL a new generator. For 2.0L Duratec-HE (125kW/170PS) - MI4, REFER to: Generator - 2.0L Duratec-HE (125kW/170PS) - MI4 (414-02 Generator and Regulator, Removal and Installation). For 2.0L EcoBoost (184kW/250PS) - MI4, REFER to: Generator - 2.0L EcoBoost (184kW/250PS) - MI4 (414-02 Generator and Regulator, Removal and Installation).
No	GO to A3

A3 CHECK THE IGNITION CIRCUITS

- Ignition OFF.
- Connect: Wiring harness to the generator voltage regulator.
- Visually inspect the engine compartment and make sure all ignition coils are correctly and securely connected, and that there are no visible cracks in the coil housings.
- Inspect all the wiring harnesses and connectors for damaged insulation and loose or broken conditions.

Are the ignition components OK?

Yes	USE a jumper cable to ground various parts of the vehicle to the frame (for example: engine, fenders, quarter panels, stone deflectors, air cleaner, body sheet metal). When the noise is eliminated, PROVIDE a permanent ground where necessary.
No	REPAIR the ignition system as necessary.

A4 CHECK THE ANTENNA ENABLE CIRCUIT

- Ignition OFF.

- Disconnect: Antenna C9021.
- Ignition ON.
- Operate the audio system in radio tuner AM / FM mode.
- Measure:

Positive Lead	Measurement / Action	Negative Lead
C9021-2	V	—

Is the voltage greater than 11 volts?

Yes	GO to A7
No	GO to A5

A5 CHECK THE ANTENNA ENABLE CIRCUIT FOR AN OPEN

- Ignition OFF.
- Disconnect: ACM C240A.
- Measure:

Positive Lead	Measurement / Action	Negative Lead
C9021-2	Ω	C240A-2

Is the resistance less than 3 ohms?

Yes	GO to A6
No	REPAIR the circuit.

A6 CHECK THE ANTENNA ENABLE CIRCUIT FOR A SHORT TO GROUND

- Measure:

Positive Lead	Measurement / Action	Negative Lead
C9021-2	Ω	—

Is the resistance greater than 10,000 ohms?

Yes	GO to A10
No	REPAIR the circuit.

A7 CHECK THE AM (AMPLITUDE MODULATION) / FM (FREQUENCY MODULATION) ANTENNA COAXIAL CABLE

- Ignition OFF.
- Disconnect: AM / FM Antenna In-Line Coaxial Cable Connection Behind The RH Floor Console Side Trim Panel.
  REFER to: Floor Console - Vehicles With: Center Armrest (501-12 Instrument Panel and Console, Removal and Installation).
- Disconnect: AM / FM Antenna Coaxial Cable At The ACM .
- Measure the resistance of the upper ACM antenna coaxial cable core between the antenna and the upper ACM antenna coaxial cable in-line connection; and between the upper ACM antenna coaxial cable core and shield.
- Measure the resistance of the lower ACM antenna coaxial cable core between the ACM and the lower ACM antenna coaxial cable in-line connection; and between the lower AM / FM antenna coaxial cable core and shield.

Is the resistance of each AM / FM antenna coaxial cable core less than 2 ohms, and the resistance between the core and shield of each ACM antenna coaxial cable greater than 10,000 ohms?

Yes	GO to A8
No	INSTALL a new upper or lower AM / FM antenna coaxial cable as necessary. REFER to: Audio Unit Antenna Cable (415-00C Information and Entertainment System - General Information - Vehicles With: SYNC/Sony AM/FM/CD, Removal and Installation).

A8 ISOLATE THE ANTENNA

- Connect: AM / FM Antenna Coaxial Cable In-Line Connection Behind The RH Floor Console Side Trim Panel.
- Connect: AM / FM Antenna Coaxial Cable At The ACM .
- Install a new antenna.
  REFER to: Audio Unit Antenna (415-00C Information and Entertainment System - General Information - Vehicles With: SYNC/Sony AM/FM/CD, Removal and Installation).
- Operate the audio system in radio tuner AM / FM mode.

Is the reception OK?

Yes	The system is operating correctly at this time. The concern was caused by an inoperative AM / FM antenna.
No	GO to A9

A9 ISOLATE THE ANTENNA COAXIAL CABLE

- Ignition OFF.
- Substitute each antenna coaxial cable by routing a new component. Do not remove the original antenna coaxial cable at this time.
- Operate the audio system in radio tuner AM / FM mode.

Is the reception OK?

Yes	INSTALL a new antenna coaxial cable for the inoperative cable. REFER to: Audio Unit Antenna Cable (415-00C Information and Entertainment System - General Information - Vehicles With: SYNC/Sony AM/FM/CD, Removal and Installation).
No	REMOVE the substitute antenna coaxial cable. GO to A10

A10 CHECK FOR CORRECT ACM (AUDIO FRONT CONTROL MODULE) OPERATION

- Ignition OFF.
- Disconnect and inspect all the ACM connectors.
- Repair:
  - corrosion (install new connectors or terminals - clean module pins)

- damaged or bent pins - install new terminals pins
- pushed-out pins - install new pins as necessary

- Reconnect the ACM connectors. Make sure they seat and latch correctly.
- Operate the system and determine if the concern is still present.

Is the concern still present?

Yes	CHECK OASIS for any applicable Technical Service Bulletins (TSBs). If a TSB exists for this concern, discontinue this test and follow TSB instructions. If no Technical Service Bulletins (TSBs) address this concern, INSTALL a new ACM . REFER to: Audio Front Control Module (ACM) (415-00C Information and Entertainment System - General Information - Vehicles With: SYNC/Sony AM/FM/CD, Removal and Installation).
No	The system is operating correctly at this time. The concern may have been caused by module connections. ADDRESS the root cause of any connector or pin issues.

The Satellite Radio Is Inoperative, Has Poor Reception, or No Sound

Diagnostic Overview

Diagnostics in this manual assume a certain skill level and knowledge of Ford-specific diagnostic practices. For information about these practices,
REFER to: Diagnostic Methods (100-00 General Information, Description and Operation).

Normal Operation and Fault Conditions

REFER to: Information and Entertainment System - System Operation and Component Description (415-00C Information and Entertainment System - General Information - Vehicles With: SYNC/Sony AM/FM/CD, Description and Operation).
See Satellite Radio.

When a satellite radio subscription is activated, the Electronic Serial Number (ESN) of the built-in satellite receiver is associated with the VIN .

DTC Fault Trigger Conditions

DTC	Description	Fault Trigger Conditions
B1A89:01	Satellite Antenna: General Electric Failure	Set by the ACM when a short to ground is detected in the satellite antenna circuit for more than 250 milliseconds. This DTC can be either continuous or on-demand.
B1A89:13	Satellite Antenna: Circuit Open	Set by the ACM when an open is detected in the satellite antenna circuit. This DTC can be either continuous or on-demand.
U3000:96	Control Module: Component Internal Failure	Set by the ACM when a fault is detected in the internal satellite radio receiver. This results in complete loss of satellite radio functionality.

Possible Sources

- Expired subscription
- Incorrectly matched Electronic Serial Number (ESN)
- Wiring, terminals, or connectors

Obstructions in the antenna's line of sight
- Satellite radio antenna
- Satellite radio antenna coaxial cable
- Satellite radio system concern
- ACM

PINPOINT TEST B : THE SATELLITE RADIO IS INOPERATIVE, HAS POOR RECEPTION, OR NO SOUND

B1 VERIFY AN ACTIVE SUBSCRIPTION

- Operate the audio system in satellite radio mode and observe the infotainment display.

Does the display indicate that the subscription has expired?

Yes	The subscription has expired. INFORM the customer to contact SIRIUS to reactivate the subscription.
No	GO to B2

B2 CHECK THE RECEPTION

- Drive the vehicle to an open location that is free of obstacles (e.g. tall buildings or large trees).
- Using a diagnostic scan tool, view the ACM Parameter Identifications (PIDs).
- Monitor the satellite signal strength (SAT_SIG_STR) Parameter Identification (PID).
- If the Parameter Identification (PID) reads "No Signal" or "Poor," move the vehicle to another area and retest until "Good," "Very Good," or "Excellent" Parameter Identification (PID) values are obtained.
- Operate multiple channels with the infotainment system in satellite audio mode.

Does the satellite audio system receive multiple channels with normal sound quality?

Yes	The system is operating correctly at this time. The concern was a result of obstructions in the antenna's line of sight.
No	GO to B3

B3 CHECK FOR PROMOTIONAL CHANNEL 184

- Select channel 184.

Does the satellite audio system receive channel 184 with normal sound quality?

Yes	GO to B4
No	GO to B5

B4 VERIFY THAT THE VEHICLE IDENTIFICATION NUMBER (VIN) AND ELECTRONIC SERIAL NUMBER (ESN) ON FILE MATCH THE VEHICLE IDENTIFICATION NUMBER (VIN) AND ELECTRONIC SERIAL NUMBER (ESN) FROM THE VEHICLE

- Retrieve the satellite radio Electronic Serial Number (ESN).
  REFER to: Satellite Radio Serial Number Retrieval (415-00C Information and Entertainment System - General Information - Vehicles With: SYNC/Sony AM/FM/CD, General Procedures).
- Contact the SIRIUS Dealer Support Line (888-465-8528).
- Ensure that the Vehicle Identification Number (VIN) and Electronic Serial Number (ESN) SIRIUS has on the customer's file match the Vehicle Identification Number (VIN) and Electronic Serial Number (ESN) retrieved from the vehicle.
- Follow the actions from step 2 to obtain "Good," "Very Good," or "Excellent" reception.
- Operate the infotainment system in satellite audio mode.

- **NOTE:** *It may take up to 30 minutes for the activation signal to be received and satellite radio functions to operate.*
  Request for SIRIUS to send the activation signal to the vehicle 2-3 times.
- Operate multiple channels with the infotainment system in satellite audio mode.

Does the satellite audio system receive multiple channels with normal sound quality?

Yes	The system is operating correctly at this time. The concern was a result of the activation signal needing to be resent or the Vehicle Identification Number (VIN) and Electronic Serial Number (ESN) SIRIUS had on file not matching the Vehicle Identification Number (VIN) and Electronic Serial Number (ESN) from the vehicle.
No	GO to B5

B5 CHECK THE ACM (AUDIO FRONT CONTROL MODULE) DIAGNOSTIC TROUBLE CODES (DTCS)

- Using a diagnostic scan tool, clear the ACM Diagnostic Trouble Codes (DTCs).
- Repeat the ACM self-test.

Is DTC U3000:96 present?

Yes	If DTC U3000:96 is present, GO to B8 If DTC B1A89:01 or DTC B1A89:13 are present, GO to B6 For all other Diagnostic Trouble Codes (DTCs), REFER to: Information and Entertainment System (415-00C Information and Entertainment System - General Information - Vehicles With: SYNC/Sony AM/FM/CD, Diagnosis and Testing). See DTC Chart: ACM - Sony Sound.
No	GO to B8

B6 CHECK THE SATELLITE RADIO ANTENNA COAXIAL CABLE RESISTANCE

- Ignition OFF.
- Disconnect: Satellite Radio Antenna Coaxial Cable Connection at the ACM .
- Disconnect: Satellite Radio Antenna Coaxial Cable In-Line Connection at the RH Kick Panel.
- Disconnect: Satellite Radio Antenna Coaxial Cable Connection at the Satellite Radio Antenna.
- Measure the resistance of the upper satellite radio antenna coaxial cable core between the satellite radio antenna and the satellite radio antenna in-line coaxial cable connection; and between the upper satellite radio antenna coaxial cable core and shield.
- Measure the resistance of the lower satellite radio antenna coaxial cable core between the ACM and the satellite radio antenna in-line coaxial cable connection; and between the lower satellite radio antenna coaxial cable core and shield.

Is the resistance of each satellite radio antenna coaxial cable core less than 1 ohm, and the resistance between the core and shield of each satellite radio antenna coaxial cable more than 10,000 ohms?

Yes	GO to B7
No	INSTALL a new upper or lower satellite radio antenna coaxial cable as necessary. REFER to: Audio Unit Antenna Cable (415-00C Information and Entertainment System - General Information - Vehicles With: SYNC/Sony AM/FM/CD, Removal and Installation).

B7 ISOLATE THE SATELLITE RADIO ANTENNA

- Connect: Satellite Radio Antenna Coaxial Cable Connection at the ACM .
- Connect: Satellite Radio Antenna Coaxial Cable In-Line Connection at the RH Kick Panel.
- Install a new satellite radio antenna.
  REFER to: Audio Unit Antenna (415-00C Information and Entertainment System - General Information - Vehicles With:

SYNC/Sony AM/FM/CD, Removal and Installation).
- Follow the actions from step 2 to obtain "Good," "Very Good," or "Excellent" reception.
- Operate multiple channels with the infotainment system in satellite audio mode.

Does the satellite audio system receive multiple channels with normal sound quality?

Yes	The system is operating correctly at this time. The concern was caused by an inoperative satellite radio antenna.
No	GO to B8

B8 CHECK FOR CORRECT ACM (AUDIO FRONT CONTROL MODULE) OPERATION

- Ignition OFF.
- Disconnect and inspect all ACM connectors.
- Repair:
  - corrosion (install new connectors or terminals - clean module pins)
  - damaged or bent pins - install new terminals pins
  - pushed-out pins - install new pins as necessary
- Reconnect the ACM connectors. Make sure they seat and latch correctly.
- Operate the system and determine if the concern is still present.

Is the concern still present?

Yes	CHECK OASIS for any applicable Technical Service Bulletins (TSBs). If a TSB exists for this concern, discontinue this test and follow TSB instructions. If no Technical Service Bulletins (TSBs) address this concern, INSTALL a new ACM . REFER to: Audio Front Control Module (ACM) (415-00C Information and Entertainment System - General Information - Vehicles With: SYNC/Sony AM/FM/CD, Removal and Installation).
No	The system is operating correctly at this time. The concern may have been caused by module connections. ADDRESS the root cause of any connector or pin issues.

The SIRIUS Data Services Are Not Available

Diagnostic Overview

Diagnostics in this manual assume a certain skill level and knowledge of Ford-specific diagnostic practices. For information about these practices,
REFER to: Diagnostic Methods (100-00 General Information, Description and Operation).

Normal Operation and Fault Conditions

REFER to: Information and Entertainment System - System Operation and Component Description (415-00C Information and Entertainment System - General Information - Vehicles With: SYNC/Sony AM/FM/CD, Description and Operation).
See SIRIUS Data Services.

DTC Fault Trigger Conditions

DTC	Description	Fault Trigger Conditions
U1A00:87	Private Communication Network:	Set by the APIM when messages are missing from the ACM on the satellite

	Missing Message	digital radio data link (SDL) circuits.

Possible Sources

- Wiring, terminals, or connectors
- APIM
- ACM
- Subscription expired

PINPOINT TEST C : THE SIRIUS DATA SERVICES ARE NOT AVAILABLE

C1 VERIFY AN ACTIVE SUBSCRIPTION

- Operate the audio system in SIRIUS data services mode and observe the infotainment display.

Does the display indicate the subscription has expired?

Yes	The subscription has expired. INFORM the customer to contact SIRIUS to reactivate the subscription.
No	GO to C2

C2 CHECK FOR SATELLITE AUDIO CONCERNS

- Ignition ON.
- Using a diagnostic scan tool, perform the ACM self-test.
- Operate the infotainment system in satellite audio mode.

Are any ACM Diagnostic Trouble Codes (DTCs) or satellite audio concerns present?

Yes	For ACM Diagnostic Trouble Codes (DTCs), REFER to: Information and Entertainment System (415-00C Information and Entertainment System - General Information - Vehicles With: SYNC/Sony AM/FM/CD, Diagnosis and Testing). See DTC Chart: ACM - Sony Sound For satellite audio concerns, GO to Pinpoint Test B
No	GO to C3

C3 CHECK THE SATELLITE DATA CIRCUITS FOR A SHORT TO VOLTAGE

- Ignition OFF.
- Disconnect: ACM C240B.
- Disconnect: APIM C2383.
- Ignition ON.
- Measure:

Positive Lead	Measurement / Action	Negative Lead
C240B-6		—
C240B-19		—

Is any voltage present?

Yes	REPAIR the circuit.
No	GO to C4

C4 CHECK THE SATELLITE DATA CIRCUITS FOR A SHORT TO GROUND

- Ignition OFF.
- Measure:

Positive Lead	Measurement / Action	Negative Lead
C240B-6	Ω	—
C240B-19	Ω	—

Are the resistances greater than 10,000 ohms?

Yes	GO to C5
No	REPAIR the circuit.

C5 CHECK THE SATELLITE DATA CIRCUITS FOR AN OPEN

- Ignition OFF.
- Measure:

Positive Lead	Measurement / Action	Negative Lead
C240B-6	Ω	C2383-51
C240B-19	Ω	C2383-52

Are the resistance less than 3 ohms?

Yes	GO to C6
No	REPAIR the circuit.

C6 CHECK FOR CORRECT ACM (AUDIO FRONT CONTROL MODULE) OPERATION

- Disconnect and inspect all the ACM connectors.
- Repair:
  - corrosion (install new connector or terminals - clean module pins)
  - damaged pins - install new terminals/pins
  - pushed-out pins - install new pins as necessary
- Reconnect the ACM connectors. Make sure they seat and latch correctly.
- Operate the system and determine if the concern is still present.

Is the concern still present?

Yes	CHECK OASIS for any applicable Technical Service Bulletins (TSBs). If a TSB exists for this concern,

	discontinue this test and follow TSB instructions. If no Technical Service Bulletins (TSBs) address this concern, INSTALL a new ACM . REFER to: Audio Front Control Module (ACM) (415-00C Information and Entertainment System - General Information - Vehicles With: SYNC/Sony AM/FM/CD, Removal and Installation).
No	The system is operating correctly at this time. The concern may have been caused by module connections. ADDRESS the root cause of any connector or pin issues.

The Speed Compensated Volume Does Not Operate Correctly

Diagnostic Overview

Diagnostics in this manual assume a certain skill level and knowledge of Ford-specific diagnostic practices. For information about these practices,
REFER to: Diagnostic Methods (100-00 General Information, Description and Operation).

Normal Operation and Fault Conditions

REFER to: Information and Entertainment System - System Operation and Component Description (415-00C Information and Entertainment System - General Information - Vehicles With: SYNC/Sony AM/FM/CD, Description and Operation).
See Speed Compensated Volume.

Possible Sources

- Speed compensated volume setting
- Vehicle Speed Sensor (VSS) signal concern
- Communication network concern
- Audio DSP module

PINPOINT TEST D : THE SPEED COMPENSATED VOLUME DOES NOT OPERATE CORRECTLY

D1 CHECK THE SPEEDOMETER OPERATION

- Drive the vehicle and observe the speedometer.

Does the speedometer operate correctly?

Yes	GO to D2
No	REFER to: Instrumentation, Message Center and Warning Chimes (413-01 Instrumentation, Message Center and Warning Chimes, Diagnosis and Testing). See The Speedometer Is Inoperative

D2 CHECK THE SPEED COMPENSATED VOLUME SETTING

- Turn the speed compensated volume off. Refer to the Owner's Literature.
- Operate the audio system in radio tuner AM / FM mode.
- Drive the vehicle at various speeds and observe the speaker volume.
- Set the speed compensated volume to maximum compensation. Refer to the Owner's Literature.
- Operate the audio system in radio tuner AM / FM mode.
- Drive the vehicle at various speeds and observe the speaker volume.

Does the volume remain constant with the speed compensated volume turned off, and increase and decrease with vehicle speed with the speed compensated volume set to maximum?

Yes	The system is operating correctly at this time. INSTRUCT the customer in the correct usage of the speed compensated volume feature.
No	GO to D3

D3 CHECK FOR DTC (DIAGNOSTIC TROUBLE CODE) U0155:00 OR U0238:00

- Using a diagnostic scan tool, retrieve all continuous Diagnostic Trouble Codes (DTCs).

Is DTC U0155:00 or U0238:00 retrieved in any audio system module?

Yes	For DTC U0155:00, GO to Pinpoint Test AG For DTC U0238:00, GO to Pinpoint Test AJ
No	GO to D4

D4 CHECK FOR CORRECT AUDIO DSP (AUDIO DIGITAL SIGNAL PROCESSING MODULE) MODULE OPERATION

- Ignition OFF.
- Disconnect and inspect all the audio DSP module connectors.
- Repair:
  - corrosion (install new connectors or terminals - clean module pins)
  - damaged or bent pins - install new terminals pins
  - pushed-out pins - install new pins as necessary
- Reconnect the audio DSP module connectors. Make sure they seat and latch correctly.
- Operate the system and determine if the concern is still present.

Is the concern still present?

Yes	CHECK OASIS for any applicable Technical Service Bulletins (TSBs). If a TSB exists for this concern, discontinue this test and follow TSB instructions. If no Technical Service Bulletins (TSBs) address this concern, INSTALL a new audio DSP module. REFER to: Audio Digital Signal Processing (DSP) Module (415-00C Information and Entertainment System - General Information - Vehicles With: SYNC/Sony AM/FM/CD, Removal and Installation).
No	The system is operating correctly at this time. The concern may have been caused by module connections. ADDRESS the root cause of any connector or pin issues.

Poor Sound Quality Or Distorted Sound From One Or More Speakers (Not All Speakers)

Diagnostic Overview

Diagnostics in this manual assume a certain skill level and knowledge of Ford-specific diagnostic practices. For information about these practices,
REFER to: Diagnostic Methods (100-00 General Information, Description and Operation).

Normal Operation and Fault Conditions

The ACM sends audio signals to the speakers in the form of AC voltage, resulting in clear audio output.

Visual Inspection and Diagnostic Pre-checks

Visually inspect around the suspect area for any possible rattle conditions such as:

- Any storage compartments including cup holders (if equipped)

Door map pockets for contents that can rattle (if equipped)
- Door pull cup attachments (if equipped)
- Door switch bezels (if equipped)
- Luggage compartment subwoofer enclosure
- Package tray (if equipped)
- Speaker grilles
- Trim panels and fasteners

Possible Sources

- Loose component fasteners
- Loose door handle, lock, and other trim panel components and fasteners
- Loose items in storage areas
- Loose speaker grilles
- Loose wire harnesses or wire harness fasteners
- Speaker(s)
- Water shield bonding and placement

PINPOINT TEST E : POOR SOUND QUALITY OR DISTORTED SOUND FROM ONE OR MORE SPEAKERS (NOT ALL SPEAKERS)

E1 ISOLATE THE ZONE

- Operate the audio system using digital media (CD , MP3, etc.).
- Using the audio system fade and balance feature, adjust the audio sound to each of the four zones (LF, RF, LR and RR) of the vehicle to isolate the poor sound quality.
- Locate and apply pressure to the trim panel(s) around the poor sound quality area in question.

Does applying pressure to a trim panel reduce or eliminate the audible noise?

Yes	REPAIR or REPLACE the trim panel as needed.
No	GO to E2

E2 REMOVE AND INSPECT BEHIND/UNDERNEATH THE SUSPECT TRIM PANEL(S)

- Remove the trim panel to access the suspect speaker.
- Operate the audio system using digital media (CD , MP3, etc.).
- Validate where the poor sound quality area is located.
- Check:
  - Trim panel for loose components (e.g. speaker grille) around the speaker area.
  - Trim panel joining components for missing or broken pieces.
  - Lock and handle mechanical parts for correct attachment.
  - Wire harnesses for correct routing.
  - Wire harness fasteners for correct attachment.
  - Water shield for correct placement (speaker air path not blocked).
  - Water shield for correct bonding to sheet metal.
  - Storage areas for loose items.
  - All child safety belt anchors (if equipped).
  - All safety belt retractors.
  - All speaker bracket fasteners and other fasteners are secured and tightened to specified torque.

Was the source of the noise located?

Yes	REPAIR or REPLACE any loose or broken component or fastener as needed.
No	GO to E3

E3 CHECK THE SUSPECT SPEAKER FOR WATER INTRUSION

- Inspect for watermarks.
- Check the:
  - Cone
  - Magnet
  - Basket

Are any watermarks present on the speaker?

Yes	VERIFY the water shield is in the correct location, REPAIR or REPLACE any trim, door, or speaker seal as required. DRY the speaker in question and TEST the system for normal operation.
No	GO to E4

E4 ISOLATE SPEAKER TO VERIFY NOISE

- Remove the suspect speaker from its location and leave the speaker connected to the harness.
- Hold the speaker away from any trim panel(s) and ensure the speaker is isolated from contact.
- Operate the audio system using digital media (CD , MP3, etc.).

Is the noise still present in the suspect speaker?

Yes	INSTALL a new speaker for the one in question.
No	LOCATE the source of the noise and REPAIR as needed.

No Sound From All Speakers

Refer to Wiring Diagrams Cell 130 for schematic and connector information.

Diagnostic Overview

Diagnostics in this manual assume a certain skill level and knowledge of Ford-specific diagnostic practices. For information about these practices,
REFER to: Diagnostic Methods (100-00 General Information, Description and Operation).

Normal Operation and Fault Conditions

When the ignition is in the START position, the ACM receives voltage on the START signal circuit and mutes the speaker output. This prevents voltage spikes from producing popping noises through the speakers. A short to voltage on this circuit causes the ACM output to be muted continuously.

The audio DSP module is enabled through software. Additionally, the ACM can mute the audio DSP module through the mute/unmute circuit. If the audio DSP module detects less than 3.5 volts on the mute/unmute circuit, it mutes the speaker output. As a result, an open or short to ground in the mute/unmute circuit causes the audio system to produce no sound, because the enable signal does not reach the audio DSP module. In the event of an overload, the audio DSP module clips the audio output signal to the speakers and subwoofer (heard as distortion) in order to prevent damage to the speakers.

A short to ground or short to voltage in the circuitry to one of the speakers may cause multiple speakers to lose sound due to the built-in overload protection feature of the ACM . In this case, a speaker fault DTC sets.

Possible Sources

- Fuse

Wiring, terminals, or connectors
- ACM
- Audio DSP module

PINPOINT TEST F : NO SOUND FROM ALL SPEAKERS

F1 CHECK FOR PCM (POWERTRAIN CONTROL MODULE) PCM (POWERTRAIN CONTROL MODULE) DIAGNOSTIC TROUBLE CODES (DTCS)

- Ignition ON.
- Using a diagnostic scan tool, perform the PCM self-test.

Is DTC P0615 present?

Yes	REFER to: Starting System (303-06A Starting System - 2.0L Duratec-HE (125kW/170PS) - MI4, Diagnosis and Testing). See P0615.
No	GO to F2

F2 CHECK FOR SPEAKER DIAGNOSTIC TROUBLE CODES (DTCS)

- Ignition ON.
- Using a diagnostic scan tool, perform the audio DSP module self-test.

Are any speaker fault Diagnostic Trouble Codes (DTCs) present?

Yes	REFER to: Information and Entertainment System (415-00C Information and Entertainment System - General Information - Vehicles With: SYNC/Sony AM/FM/CD, Diagnosis and Testing). See DTC Chart: Audio Digital Signal Processing (DSP) Module - Sony Sound.
No	GO to F3

F3 CHECK THE START SENSE CIRCUIT FOR A SHORT TO VOLTAGE

- Ignition OFF.
- Disconnect: ACM C240A.
- Ignition ON.
- Measure:

Positive Lead	Measurement / Action	Negative Lead
C240A-3		—

Is any voltage present?

Yes	REPAIR the circuit in question.
No	GO to F4

F4 CHECK THE AUDIO DSP (AUDIO DIGITAL SIGNAL PROCESSING MODULE) MODULE VOLTAGE SUPPLY

- Ignition OFF.
- Disconnect: DSP C4326C.
- Ignition ON.
- Measure:

Positive Lead	Measurement / Action	Negative Lead
C4326C-5		—
C4326C-6		—

Are the voltages greater than 11 volts?

Yes	GO to F5
No	VERIFY the RJB fuse 23 (25A) is OK. If OK, REPAIR the circuit in question.

F5 CHECK THE AUDIO DSP (AUDIO DIGITAL SIGNAL PROCESSING MODULE) MODULE GROUND CIRCUITS

- Measure:

Positive Lead	Measurement / Action	Negative Lead
C4326C-5		C4326C-13
C4326C-6		C4326C-14

Are the voltages greater than 11 volts?

Yes	GO to F6
No	REPAIR the circuit in question.

F6 CHECK THE AUDIO DSP (AUDIO DIGITAL SIGNAL PROCESSING MODULE) MODULE ENABLE CIRCUIT FOR CORRECT VOLTAGE

- Ignition OFF.
- Disconnect: DSP C4326A.
- Ignition ON.
- Operate the audio system in radio tuner AM / FM mode.
- Measure:

Positive Lead	Measurement / Action	Negative Lead
C4326A-3		—

Is the voltage between 3.5 and 5 volts?

Yes	GO to F11
No	GO to F7

F7 CHECK THE AUDIO DSP (AUDIO DIGITAL SIGNAL PROCESSING MODULE) MODULE ENABLE CIRCUIT FOR A SHORT TO VOLTAGE

- Ignition OFF.
- Disconnect: ACM C240B.
- Ignition ON.
- Measure:

Positive Lead	Measurement / Action	Negative Lead
C4326A-3	⊕ V ⊖	—

Is any voltage present?

Yes	REPAIR the circuit.
No	GO to F8

F8 CHECK THE AUDIO DSP (AUDIO DIGITAL SIGNAL PROCESSING MODULE) MODULE ENABLE CIRCUIT FOR A SHORT TO GROUND

- Ignition OFF.
- Measure:

Positive Lead	Measurement / Action	Negative Lead
C4326A-3	Ω	—

Is the resistance greater than 10,000 ohms?

Yes	GO to F9
No	REPAIR the circuit in question.

F9 CHECK THE AUDIO DSP (AUDIO DIGITAL SIGNAL PROCESSING MODULE) MODULE ENABLE CIRCUIT FOR AN OPEN

- Measure:

Positive Lead	Measurement / Action	Negative Lead
C4326A-3	Ω	C240B-18

Is the resistance less than 3 ohms?

Yes	GO to F10
No	REPAIR the circuit in question.

F10 CHECK FOR CORRECT ACM (AUDIO FRONT CONTROL MODULE) OPERATION

- Ignition OFF.
- Disconnect and inspect all the ACM connectors.
- Repair:
  - corrosion (install new connectors or terminals - clean module pins)
  - damaged or bent pins - install new terminals pins
  - pushed-out pins - install new pins as necessary
- Reconnect the ACM connectors. Make sure they seat and latch correctly.
- Operate the system and determine if the concern is still present.

Is the concern still present?

Yes	CHECK OASIS for any applicable Technical Service Bulletins (TSBs). If a TSB exists for this concern, discontinue this test and follow TSB instructions. If no Technical Service Bulletins (TSBs) address this concern, INSTALL a new ACM . REFER to: Audio Front Control Module (ACM) (415-00C Information and Entertainment System - General Information - Vehicles With: SYNC/Sony AM/FM/CD, Removal and Installation).
No	The system is operating correctly at this time. The concern may have been caused by module connections. ADDRESS the root cause of any connector or pin issues.

F11 CHECK FOR CORRECT AUDIO DSP (AUDIO DIGITAL SIGNAL PROCESSING MODULE) MODULE OPERATION

- Ignition OFF.
- Disconnect and inspect all the audio DSP module connectors.
- Repair:
  - corrosion (install new connectors or terminals - clean module pins)
  - damaged or bent pins - install new terminals pins
  - pushed-out pins - install new pins as necessary
- Reconnect the audio DSP module connectors. Make sure they seat and latch correctly.
- Operate the system and determine if the concern is still present.

Is the concern still present?

Yes	CHECK OASIS for any applicable Technical Service Bulletins (TSBs). If a TSB exists for this concern, discontinue this test and follow TSB instructions. If no Technical Service Bulletins (TSBs)Technical Service Bulletins (TSBs) address this concern, INSTALL a new audio DSP module. REFER to: Audio Digital Signal Processing (DSP) Module (415-00C Information and Entertainment System - General Information - Vehicles With: SYNC/Sony AM/FM/CD, Removal and Installation).
No	The system is operating correctly at this time. The concern may have been caused by module connections. ADDRESS the root cause of any connector or pin issues.

The LF Door Speaker Is Inoperative

Refer to Wiring Diagrams Cell 130 for schematic and connector information.

Diagnostic Overview

Diagnostics in this manual assume a certain skill level and knowledge of Ford-specific diagnostic practices. For information about these practices,
REFER to: Diagnostic Methods (100-00 General Information, Description and Operation).

Normal Operation and Fault Conditions

REFER to: Information and Entertainment System - System Operation and Component Description (415-00C Information and Entertainment System - General Information - Vehicles With: SYNC/Sony AM/FM/CD, Description and Operation).
See Digital Signal Processing (DSP).

The audio DSP module directs audio signals to the Left Front (LF) door speaker in the form of a fluctuating AC voltage.

DTC Fault Trigger Conditions

DTC	Description	Fault Trigger Conditions
B1A02:01	Speaker #2: General Electrical Failure	Set by the audio DSP module when a failure is detected on the Left Front (LF) door speaker circuits.
B1A02:11	Speaker #2: Circuit Short To Ground	Set by the audio DSP module when a short to ground is detected on the Left Front (LF) door speaker circuits. When DTC B1A01:11 is set, the speaker output is disabled.
B1A02:12	Speaker #2: Circuit Short To Battery	Set by the audio DSP module when a short to battery is detected on the Left Front (LF) door speaker circuits. When DTC B1A01:12 is set, the speaker output is disabled.
B1A02:13	Speaker #2: Circuit Open	Set by the audio DSP module when an open is detected on the Left Front (LF) door speaker circuits.

Possible Sources

- Wiring, terminals, or connectors
- Speaker
- ACM
- Audio DSP module

PINPOINT TEST G : THE LF DOOR SPEAKER IS INOPERATIVE

G1 CHECK THE AUDIO SIGNAL TO THE LEFT FRONT (LF) DOOR SPEAKER

- Ignition OFF.
- Disconnect: Left Front (LF) Door Speaker C523.
- Operate the audio system in radio tuner AM / FM mode.
- Measure:

Positive Lead	Measurement / Action	Negative Lead
C523-1	$\tilde{V}$	C523-4

Is a fluctuating AC voltage present?

Yes	INSTALL a new Left Front (LF) door speaker. REFER to: Front Door Speaker (415-00C Information and Entertainment System - General Information - Vehicles With: SYNC/Sony AM/FM/CD, Removal and Installation).
No	GO to G2

G2 CHECK THE AUDIO CIRCUITS TO THE LEFT FRONT (LF) DOOR SPEAKER FOR A SHORT TO VOLTAGE

- Ignition OFF.
- Disconnect: Audio DSP module C4326B.
- Ignition ON.
- Measure:

Positive Lead	Measurement / Action	Negative Lead
C523-1	✱ ▽ ▬	—
C523-4	✱ ▽ ▬	—

Is any voltage present?

Yes	REPAIR the circuit in question.
No	GO to G3

G3 CHECK THE AUDIO CIRCUITS TO THE LEFT FRONT (LF) DOOR SPEAKER FOR A SHORT TO GROUND

- Ignition OFF.
- Measure:

Positive Lead	Measurement / Action	Negative Lead
C523-1	Ω	—
C523-4	Ω	—

Are the resistances greater than 10,000 ohms?

Yes	GO to G4
No	REPAIR the circuit in question.

G4 CHECK THE AUDIO CIRCUITS TO THE LEFT FRONT (LF) DOOR SPEAKER FOR AN OPEN

- Measure:

Positive Lead	Measurement / Action	Negative Lead
C523-1	Ω	C4326B-2
C523-4	Ω	C4326B-10

Are the resistances less than 3 ohms?

Yes	GO to G5
No	REPAIR the circuit in question.

G5 CHECK THE AUDIO CIRCUITS TO THE LEFT FRONT (LF) DOOR SPEAKER FOR A SHORT TOGETHER

- Measure:

Positive Lead	Measurement / Action	Negative Lead
C523-1	Ω	C523-4

Is the resistance greater than 10,000 ohms?

Yes	GO to G6
No	REPAIR the circuit in question.

G6 CHECK THE LEFT FRONT (LF) AUDIO SIGNAL TO THE AUDIO DSP (AUDIO DIGITAL SIGNAL PROCESSING MODULE) MODULE

- Ignition OFF.
- Disconnect: Audio DSP module C4326A.
- Ignition ON.
- Operate the audio system in radio tuner AM / FM mode.
- Measure:

Positive Lead	Measurement / Action	Negative Lead
C4326A-7	V~	C4326A-17

Is a fluctuating AC voltage present?

Yes	GO to G12
No	GO to G7

G7 CHECK THE LEFT FRONT (LF) AUDIO SIGNAL TO THE AUDIO DSP (AUDIO DIGITAL SIGNAL PROCESSING MODULE) MODULE FOR A SHORT TO VOLTAGE

- Ignition OFF.
- Disconnect: ACM C240A.
- Ignition ON.

Measure:

Positive Lead	Measurement / Action	Negative Lead
C4326A-7	V	—
C4326A-17	V	—

Is any voltage present?

Yes	REPAIR the circuit in question.
No	GO to G8

G8 CHECK THE LEFT FRONT (LF) AUDIO SIGNAL TO THE AUDIO DSP (AUDIO DIGITAL SIGNAL PROCESSING MODULE) MODULE FOR A SHORT TO GROUND

- Ignition OFF.
- Measure:

Positive Lead	Measurement / Action	Negative Lead
C4326A-7	Ω	—
C4326A-17	Ω	—

Are the resistances greater than 10,000 ohms?

Yes	GO to G9
No	REPAIR the circuit in question.

G9 CHECK THE LEFT FRONT (LF) AUDIO SIGNAL TO THE AUDIO DSP (AUDIO DIGITAL SIGNAL PROCESSING MODULE) MODULE FOR AN OPEN

- Measure:

Positive Lead	Measurement / Action	Negative Lead
C4326A-7	Ω	C240A-22
C4326A-17	Ω	C240A-10

Are the resistances less than 3 ohms?

Yes	GO to G10
No	REPAIR the circuit in question.

G10 CHECK THE LEFT FRONT (LF) AUDIO SIGNAL TO THE AUDIO DSP (AUDIO DIGITAL SIGNAL PROCESSING MODULE) MODULE FOR A SHORT TOGETHER

- Measure:

Positive Lead	Measurement / Action	Negative Lead
C4326A-7	Ω	C4326A-17

Is the resistance greater than 10,000 ohms?

Yes	GO to G11
No	REPAIR the circuit in question.

G11 CHECK FOR CORRECT ACM (AUDIO FRONT CONTROL MODULE) OPERATION

- Ignition OFF.
- Disconnect and inspect all the ACM connectors.
- Repair:
  - corrosion (install new connector or terminals - clean module pins)
  - damaged pins - install new terminals/pins
  - pushed-out pins - install new pins as necessary
- Reconnect the ACM connectors. Make sure they seat and latch correctly.
- Operate the system and determine if the concern is still present.

Is the concern still present?

Yes	CHECK OASIS for any applicable Technical Service Bulletins (TSBs). If a TSB exists for this concern, discontinue this test and follow TSB instructions. If no Technical Service Bulletins (TSBs) address this concern, INSTALL a new ACM . REFER to: Audio Front Control Module (ACM) (415-00C Information and Entertainment System - General Information - Vehicles With: SYNC/Sony AM/FM/CD, Removal and Installation).
No	The system is operating correctly at this time. The concern may have been caused by module connections. ADDRESS the root cause of any connector or pin issues.

G12 CHECK FOR CORRECT AUDIO DSP (AUDIO DIGITAL SIGNAL PROCESSING MODULE) MODULE OPERATION

- Ignition OFF.
- Disconnect and inspect all the audio DSP module connectors.
- Repair:
  - corrosion (install new connectors or terminals - clean module pins)
  - damaged or bent pins - install new terminals pins
  - pushed-out pins - install new pins as necessary
- Reconnect the audio DSP module connectors. Make sure they seat and latch correctly.
- Operate the system and determine if the concern is still present.

Is the concern still present?

Yes	CHECK OASIS for any applicable Technical Service Bulletins (TSBs). If a TSB exists for this concern, discontinue this test and follow TSB instructions. If no Technical Service Bulletins (TSBs) address this concern, INSTALL a new audio DSP module. REFER to: Audio Digital Signal Processing (DSP) Module (415-00C Information and Entertainment

	System - General Information - Vehicles With: SYNC/Sony AM/FM/CD, Removal and Installation).
No	The system is operating correctly at this time. The concern may have been caused by module connections. ADDRESS the root cause of any connector or pin issues.

The LF Door Tweeter Speaker Is Inoperative

Refer to Wiring Diagrams Cell 130 for schematic and connector information.

Diagnostic Overview

Diagnostics in this manual assume a certain skill level and knowledge of Ford-specific diagnostic practices. For information about these practices,
REFER to: Diagnostic Methods (100-00 General Information, Description and Operation).

Normal Operation and Fault Conditions

REFER to: Information and Entertainment System - System Operation and Component Description (415-00C Information and Entertainment System - General Information - Vehicles With: SYNC/Sony AM/FM/CD, Description and Operation).
See Digital Signal Processing (DSP).

The audio DSP module directs audio signals to the Left Front (LF) door tweeter speaker in the form of a fluctuating AC voltage.

DTC Fault Trigger Conditions

DTC	Description	Fault Trigger Conditions
B1A03:01	Speaker #3: General Electrical Failure	Set by the audio DSP module when a failure is detected on the Left Front (LF) door speaker circuits.
B1A03:11	Speaker #3: Circuit Short To Ground	Set by the audio DSP module when a short to ground is detected on the Left Front (LF) door speaker circuits. When DTC B1A03:11 is set, the speaker output is disabled.
B1A03:12	Speaker #3: Circuit Short To Battery	Set by the audio DSP module when a short to battery is detected on the Left Front (LF) door speaker circuits. When DTC B1A03:12 is set, the speaker output is disabled.
B1A03:13	Speaker #3: Circuit Open	Set by the audio DSP module when an open is detected on the Left Front (LF) door speaker circuits.

Possible Sources

- Wiring, terminals, or connectors
- Speaker
- Audio DSP module

PINPOINT TEST H : THE LF DOOR TWEETER SPEAKER IS INOPERATIVE

H1 CHECK THE AUDIO SIGNAL TO THE LEFT FRONT (LF) DOOR TWEETER SPEAKER
• Ignition OFF. • Disconnect: Left Front (LF) Door Tweeter Speaker C513. • Operate the audio system in radio tuner AM / FM mode. • Measure:

Positive Lead	Measurement / Action	Negative Lead
C513-1	~V	C513-3

Is a fluctuating AC voltage present?

Yes	INSTALL a new Left Front (LF) door tweeter speaker. REFER to: Front Door Tweeter Speaker (415-00C Information and Entertainment System - General Information - Vehicles With: SYNC/Sony AM/FM/CD, Removal and Installation).
No	GO to H2

H2 CHECK THE AUDIO CIRCUITS TO THE LEFT FRONT (LF) DOOR TWEETER SPEAKER FOR A SHORT TO VOLTAGE

- Ignition OFF.
- Disconnect: Audio DSP Module C4326B.
- Ignition ON.
- Measure:

Positive Lead	Measurement / Action	Negative Lead
C513-1	V	—
C513-3	V	—

Is any voltage present?

Yes	REPAIR the circuit in question.
No	GO to H3

H3 CHECK THE AUDIO CIRCUITS TO THE LEFT FRONT (LF) DOOR TWEETER SPEAKER FOR A SHORT TO GROUND

- Ignition OFF.
- Measure:

Positive Lead	Measurement / Action	Negative Lead
C513-1	Ω	—
C513-3	Ω	—

Are the resistances greater than 10,000 ohms?

Yes	GO to H4

No	REPAIR the circuit in question.

H4 CHECK THE AUDIO CIRCUITS TO THE LEFT FRONT (LF) DOOR TWEETER SPEAKER FOR AN OPEN

- Measure:

Positive Lead	Measurement / Action	Negative Lead
C513-1	Ω	C4326B-3
C513-3	Ω	C4326B-11

Are the resistances less than 3 ohms?

Yes	GO to H5
No	REPAIR the circuit in question.

H5 CHECK THE AUDIO CIRCUITS TO THE LEFT FRONT (LF) DOOR SPEAKER FOR A SHORT TOGETHER

- Measure:

Positive Lead	Measurement / Action	Negative Lead
C513-1	Ω	C513-3

Is the resistance greater than 10,000 ohms?

Yes	GO to H6
No	REPAIR the circuit in question.

H6 CHECK THE LEFT FRONT (LF) AUDIO SIGNAL TO THE AUDIO DSP (AUDIO DIGITAL SIGNAL PROCESSING MODULE) MODULE

- Ignition OFF.
- Disconnect: Audio DSP module C4326A.
- Ignition ON.
- Operate the audio system in radio tuner AM / FM mode.
- Measure:

Positive Lead	Measurement / Action	Negative Lead
C4326A-7	$\tilde{V}$	C4326A-17

Is a fluctuating AC voltage present?

Yes	GO to H12
No	GO to H7

H7 CHECK THE LEFT FRONT (LF) AUDIO SIGNAL TO THE AUDIO DSP (AUDIO DIGITAL SIGNAL PROCESSING MODULE) MODULE FOR A SHORT TO VOLTAGE

- Ignition OFF.
- Disconnect: ACM C240A.
- Ignition ON.
- Measure:

Positive Lead	Measurement / Action	Negative Lead
C4326A-7	V	—
C4326A-17	V	—

Is any voltage present?

Yes	REPAIR the circuit in question.
No	GO to H8

H8 CHECK THE LEFT FRONT (LF) AUDIO SIGNAL TO THE AUDIO DSP (AUDIO DIGITAL SIGNAL PROCESSING MODULE) MODULE FOR A SHORT TO GROUND

- Ignition OFF.
- Measure:

Positive Lead	Measurement / Action	Negative Lead
C4326A-7	Ω	—
C4326A-17	Ω	—

Are the resistances greater than 10,000 ohms?

Yes	GO to H9
No	REPAIR the circuit in question.

H9 CHECK THE LEFT FRONT (LF) AUDIO SIGNAL TO THE AUDIO DSP (AUDIO DIGITAL SIGNAL PROCESSING MODULE) MODULE FOR AN OPEN

- Measure:

Positive Lead	Measurement / Action	Negative Lead

C4326A-7	Ω	C240A-22
C4326A-17	Ω	C240A-10

Are the resistances less than 3 ohms?

Yes	GO to H10
No	REPAIR the circuit in question.

H10 CHECK THE LEFT FRONT (LF) AUDIO SIGNAL TO THE AUDIO DSP (AUDIO DIGITAL SIGNAL PROCESSING MODULE) MODULE FOR A SHORT TOGETHER

- Measure:

Positive Lead	Measurement / Action	Negative Lead
C4326A-7	Ω	C4326A-17

Is the resistance greater than 10,000 ohms?

Yes	GO to H11
No	REPAIR the circuit in question.

H11 CHECK FOR CORRECT ACM (AUDIO FRONT CONTROL MODULE) OPERATION

- Ignition OFF.
- Disconnect and inspect all the ACM connectors.
- Repair:
  - corrosion (install new connector or terminals - clean module pins)
  - damaged pins - install new terminals/pins
  - pushed-out pins - install new pins as necessary
- Reconnect the ACM connectors. Make sure they seat and latch correctly.
- Operate the system and determine if the concern is still present.

Is the concern still present?

Yes	CHECK OASIS for any applicable Technical Service Bulletins (TSBs). If a TSB exists for this concern, discontinue this test and follow TSB instructions. If no Technical Service Bulletins (TSBs) address this concern, INSTALL a new ACM . REFER to: Audio Front Control Module (ACM) (415-00C Information and Entertainment System - General Information - Vehicles With: SYNC/Sony AM/FM/CD, Removal and Installation).
No	The system is operating correctly at this time. The concern may have been caused by module connections. ADDRESS the root cause of any connector or pin issues.

H12 CHECK FOR CORRECT AUDIO DSP (AUDIO DIGITAL SIGNAL PROCESSING MODULE) MODULE OPERATION

- Ignition OFF.
- Disconnect and inspect all the audio DSP module connectors.

- Repair:
  - corrosion (install new connectors or terminals - clean module pins)
  - damaged or bent pins - install new terminals pins
  - pushed-out pins - install new pins as necessary
- Reconnect the audio DSP module connectors. Make sure they seat and latch correctly.
- Operate the system and determine if the concern is still present.

Is the concern still present?

Yes	CHECK OASIS for any applicable Technical Service Bulletins (TSBs). If a TSB exists for this concern, discontinue this test and follow TSB instructions. If no Technical Service Bulletins (TSBs) address this concern, INSTALL a new audio DSP module. REFER to: Audio Digital Signal Processing (DSP) Module (415-00C Information and Entertainment System - General Information - Vehicles With: SYNC/Sony AM/FM/CD, Removal and Installation).
No	The system is operating correctly at this time. The concern may have been caused by module connections. ADDRESS the root cause of any connector or pin issues.

The Instrument Panel Speaker Is Inoperative

Refer to Wiring Diagrams Cell 130 for schematic and connector information.

Diagnostic Overview

Diagnostics in this manual assume a certain skill level and knowledge of Ford-specific diagnostic practices. For information about these practices,
REFER to: Diagnostic Methods (100-00 General Information, Description and Operation).

Normal Operation and Fault Conditions

REFER to: Information and Entertainment System - System Operation and Component Description (415-00C Information and Entertainment System - General Information - Vehicles With: SYNC/Sony AM/FM/CD, Description and Operation).
See Digital Signal Processing (DSP).

The audio DSP module directs audio signals to the instrument panel speaker in the form of a fluctuating AC voltage.

DTC Fault Trigger Conditions

DTC	Description	Fault Trigger Conditions
B1A01:01	Speaker #1: General Electrical Failure	Set by the audio DSP module when a failure is detected on the Instrument Panel speaker circuits.
B1A01:11	Speaker #1: Circuit Short To Ground	Set by the audio DSP module when a short to ground is detected on the Instrument Panel speaker circuits. When DTC B1A01:11 is set, the speaker output is disabled.
B1A01:12	Speaker #1: Circuit Short To Battery	Set by the audio DSP module when a short to battery is detected on the Instrument Panel speaker circuits. When DTC B1A01:12 is set, the speaker output is disabled.
B1A01:13	Speaker #1: Circuit Open	Set by the audio DSP module when an open is detected on the Instrument Panel speaker circuits.

Possible Sources

- Wiring, terminals, or connectors
- Speaker
- Audio DSP module

PINPOINT TEST I : THE INSTRUMENT PANEL SPEAKER IS INOPERATIVE

I1 CHECK THE AUDIO SIGNAL TO THE INSTRUMENT PANEL SPEAKER

- Ignition OFF.
- Disconnect: Instrument Panel Speaker C2356.
- Operate the audio system in radio tuner AM / FM mode.
- Measure:

Positive Lead	Measurement / Action	Negative Lead
C2356-1	$\tilde{V}$	C2356-2

Is a fluctuating AC voltage present?

Yes	INSTALL a new instrument panel speaker. REFER to: Instrument Panel Center Speaker (415-00C Information and Entertainment System - General Information - Vehicles With: SYNC/Sony AM/FM/CD, Removal and Installation).
No	GO to I2

I2 CHECK THE AUDIO CIRCUITS TO THE INSTRUMENT PANEL SPEAKER FOR A SHORT TO VOLTAGE

- Ignition OFF.
- Disconnect: Audio DSP Module C4326B.
- Ignition ON.
- Measure:

Positive Lead	Measurement / Action	Negative Lead
C2356-1	$\overset{+}{\underset{-}{V}}$	—
C2356-2	$\overset{+}{\underset{-}{V}}$	—

Is any voltage present?

Yes	REPAIR the circuit in question.
No	GO to I3

I3 CHECK THE AUDIO CIRCUITS TO THE INSTRUMENT PANEL SPEAKER FOR A SHORT TO GROUND

- Ignition OFF.
- Measure:

Positive Lead	Measurement / Action	Negative Lead
C2356-1	Ω	—
C2356-2	Ω	—

Are the resistances greater than 10,000 ohms?

Yes	GO to I4
No	REPAIR the circuit in question.

I4 CHECK THE AUDIO CIRCUITS TO THE INSTRUMENT PANEL SPEAKER FOR AN OPEN

- Measure:

Positive Lead	Measurement / Action	Negative Lead
C2356-1	Ω	C4326B-1
C2356-2	Ω	C4326B-9

Are the resistances less than 3 ohms?

Yes	GO to I5
No	REPAIR the circuit in question.

I5 CHECK THE AUDIO CIRCUITS TO THE INSTRUMENT PANEL SPEAKER FOR A SHORT TOGETHER

- Measure:

Positive Lead	Measurement / Action	Negative Lead
C2356-1	Ω	C2356-2

Is the resistance greater than 10,000 ohms?

Yes	GO to I6
No	REPAIR the circuit in question.

I6 CHECK FOR CORRECT AUDIO DSP (AUDIO DIGITAL SIGNAL PROCESSING MODULE) MODULE OPERATION

- Ignition OFF.
- Disconnect and inspect all the audio DSP module connectors.
- Repair:
  - corrosion (install new connectors or terminals - clean module pins)

- damaged or bent pins - install new terminals pins
- pushed-out pins - install new pins as necessary

- Reconnect the audio DSP module connectors. Make sure they seat and latch correctly.
- Operate the system and determine if the concern is still present.

Is the concern still present?

Yes	CHECK OASIS for any applicable Technical Service Bulletins (TSBs). If a TSB exists for this concern, discontinue this test and follow TSB instructions. If no Technical Service Bulletins (TSBs) address this concern, INSTALL a new audio DSP module. REFER to: Audio Digital Signal Processing (DSP) Module (415-00C Information and Entertainment System - General Information - Vehicles With: SYNC/Sony AM/FM/CD, Removal and Installation).
No	The system is operating correctly at this time. The concern may have been caused by module connections. ADDRESS the root cause of any connector or pin issues.

The RF Door Speaker Is Inoperative

Refer to Wiring Diagrams Cell 130 for schematic and connector information.

Diagnostic Overview

Diagnostics in this manual assume a certain skill level and knowledge of Ford-specific diagnostic practices. For information about these practices,
REFER to: Diagnostic Methods (100-00 General Information, Description and Operation).

Normal Operation and Fault Conditions

REFER to: Information and Entertainment System - System Operation and Component Description (415-00C Information and Entertainment System - General Information - Vehicles With: SYNC/Sony AM/FM/CD, Description and Operation).
See Digital Signal Processing (DSP).

The audio DSP module directs audio signals to the Right Front (RF) door speaker in the form of a fluctuating AC voltage.

DTC Fault Trigger Conditions

DTC	Description	Fault Trigger Conditions
B1A06:01	Speaker #6: General Electrical Failure	Set by the audio DSP module when a failure is detected on the Right Front (RF) door speaker circuits.
B1A06:11	Speaker #6: Circuit Short To Ground	Set by the audio DSP module when a short to ground is detected on the Right Front (RF) door speaker circuits. When DTC B1A06:11 is set, the speaker output is disabled.
B1A06:12	Speaker #6: Circuit Short To Battery	Set by the audio DSP module when a short to battery is detected on the Right Front (RF) door speaker circuits. When DTC B1A06:12 is set, the speaker output is disabled.
B1A06:13	Speaker #6: Circuit Open	Set by the audio DSP module when an open is detected on the Right Front (RF) door speaker circuits.

PINPOINT TEST J : THE RF DOOR SPEAKER IS INOPERATIVE

J1 CHECK THE AUDIO SIGNAL TO THE RIGHT FRONT (RF) DOOR SPEAKER

- Ignition OFF.
- Disconnect: Right Front (RF) Door Speaker C612.
- Operate the audio system in radio tuner AM / FM mode.
- Measure:

Positive Lead	Measurement / Action	Negative Lead
C612-1	~V	C612-4

Is a fluctuating AC voltage present?

Yes	INSTALL a new Right Front (RF) door speaker. REFER to: Front Door Speaker (415-00C Information and Entertainment System - General Information - Vehicles With: SYNC/Sony AM/FM/CD, Removal and Installation).
No	GO to J2

J2 CHECK THE AUDIO CIRCUITS TO THE RIGHT FRONT (RF) DOOR SPEAKER FOR A SHORT TO VOLTAGE

- Ignition OFF.
- Disconnect: Audio DSP module C4326B.
- Ignition ON.
- Measure:

Positive Lead	Measurement / Action	Negative Lead
C612-1	*▽▬	—
C612-4	*▽▬	—

Is any voltage present?

Yes	REPAIR the circuit in question.
No	GO to J3

J3 CHECK THE AUDIO CIRCUITS TO THE RIGHT FRONT (RF) DOOR SPEAKER FOR A SHORT TO GROUND

- Ignition OFF.
- Measure:

Positive Lead	Measurement / Action	Negative Lead
C612-1	Ω	—
C612-4	Ω	—

Are the resistances greater than 10,000 ohms?

Yes	GO to J4
No	REPAIR the circuit in question.

J4 CHECK THE AUDIO CIRCUITS TO THE RIGHT FRONT (RF) DOOR SPEAKER FOR AN OPEN

- Measure:

Positive Lead	Measurement / Action	Negative Lead
C612-1	Ω	C4326B-6
C612-4	Ω	C4326B-14

Are the resistances less than 3 ohms?

Yes	GO to J5
No	REPAIR the circuit in question.

J5 CHECK THE AUDIO CIRCUITS TO THE RIGHT FRONT (RF) DOOR SPEAKER FOR A SHORT TOGETHER

- Measure:

Positive Lead	Measurement / Action	Negative Lead
C612-1	Ω	C612-4

Is the resistance greater than 10,000 ohms?

Yes	GO to J6
No	REPAIR the circuit in question.

J6 CHECK THE RIGHT FRONT (RF) AUDIO SIGNAL TO THE AUDIO DSP (AUDIO DIGITAL SIGNAL PROCESSING MODULE) MODULE

- Ignition OFF.
- Disconnect: Audio DSP module C4326A.
- Ignition ON.
- Operate the audio system in radio tuner AM / FM mode.
- Measure:

Positive Lead	Measurement / Action	Negative Lead
C4326A-9	$\tilde{V}$	C4326A-19

Is a fluctuating AC voltage present?

Yes	GO to J12
No	GO to J7

J7 CHECK THE RIGHT FRONT (RF) AUDIO SIGNAL TO THE AUDIO DSP (AUDIO DIGITAL SIGNAL PROCESSING MODULE) MODULE FOR A SHORT TO VOLTAGE

- Ignition OFF.
- Disconnect: ACM C240A.
- Ignition ON.
- Measure:

Positive Lead	Measurement / Action	Negative Lead
C4326A-9	✱ V ▬	—
C4326A-19	✱ V ▬	—

Is any voltage present?

Yes	REPAIR the circuit in question.
No	GO to J8

J8 CHECK THE RIGHT FRONT (RF) AUDIO SIGNAL TO THE AUDIO DSP (AUDIO DIGITAL SIGNAL PROCESSING MODULE) MODULE FOR A SHORT TO GROUND

- Ignition OFF.
- Measure:

Positive Lead	Measurement / Action	Negative Lead
C4326A-9	Ω	—
C4326A-19	Ω	—

Are the resistances greater than 10,000 ohms?

Yes	GO to J9
No	REPAIR the circuit in question.

J9 CHECK THE RIGHT FRONT (RF) AUDIO SIGNAL TO THE AUDIO DSP (AUDIO DIGITAL SIGNAL PROCESSING MODULE) MODULE FOR AN OPEN

- Measure:

Positive Lead	Measurement / Action	Negative Lead
C4326A-9	Ω	C240A-23
C4326A-19	Ω	C240A-11

Are the resistances less than 3 ohms?

Yes	GO to J10
No	REPAIR the circuit in question.

J10 CHECK THE RIGHT FRONT (RF) AUDIO SIGNAL TO THE AUDIO DSP (AUDIO DIGITAL SIGNAL PROCESSING MODULE) MODULE FOR A SHORT TOGETHER

- Measure:

Positive Lead	Measurement / Action	Negative Lead
C4326A-9	Ω	C4326A-19

Is the resistance greater than 10,000 ohms?

Yes	GO to J11
No	REPAIR the circuit in question.

J11 CHECK FOR CORRECT ACM (AUDIO FRONT CONTROL MODULE) OPERATION

- Ignition OFF.
- Disconnect and inspect all the ACM connectors.
- Repair:
  - corrosion (install new connector or terminals - clean module pins)
  - damaged pins - install new terminals/pins
  - pushed-out pins - install new pins as necessary
- Reconnect the ACM connectors. Make sure they seat and latch correctly.
- Operate the system and determine if the concern is still present.

Is the concern still present?

Yes	CHECK OASIS for any applicable Technical Service Bulletins (TSBs). If a TSB exists for this concern, discontinue this test and follow TSB instructions. If no Technical Service Bulletins (TSBs) address this concern, INSTALL a new ACM . REFER to: Audio Front Control Module (ACM) (415-00C Information and Entertainment System - General Information - Vehicles With: SYNC/Sony AM/FM/CD, Removal and Installation).
No	The system is operating correctly at this time. The concern may have been caused by module connections. ADDRESS the root cause of any connector or pin issues.

J12 CHECK FOR CORRECT AUDIO DSP (AUDIO DIGITAL SIGNAL PROCESSING MODULE) MODULE OPERATION

• Ignition OFF.
• Disconnect and inspect all the audio DSP module connectors.
• Repair:
  • corrosion (install new connectors or terminals - clean module pins)
  • damaged or bent pins - install new terminals pins
  • pushed-out pins - install new pins as necessary
• Reconnect the audio DSP module connectors. Make sure they seat and latch correctly.
• Operate the system and determine if the concern is still present.
 	
Is the concern still present?

Yes	CHECK OASIS for any applicable Technical Service Bulletins (TSBs). If a TSB exists for this concern, discontinue this test and follow TSB instructions. If no Technical Service Bulletins (TSBs) address this concern, INSTALL a new audio DSP module. REFER to: Audio Digital Signal Processing (DSP) Module (415-00C Information and Entertainment System - General Information - Vehicles With: SYNC/Sony AM/FM/CD, Removal and Installation).
No	The system is operating correctly at this time. The concern may have been caused by module connections. ADDRESS the root cause of any connector or pin issues.

The RF Door Tweeter Speaker Is Inoperative

Refer to Wiring Diagrams Cell 130 for schematic and connector information.

Diagnostic Overview

Diagnostics in this manual assume a certain skill level and knowledge of Ford-specific diagnostic practices. For information about these practices,
REFER to: Diagnostic Methods (100-00 General Information, Description and Operation).

Normal Operation and Fault Conditions

REFER to: Information and Entertainment System - System Operation and Component Description (415-00C Information and Entertainment System - General Information - Vehicles With: SYNC/Sony AM/FM/CD, Description and Operation).
See Digital Signal Processing (DSP).

The audio DSP module directs audio signals to the Right Front (RF) door tweeter speaker in the form of a fluctuating AC voltage.

DTC Fault Trigger Conditions

DTC	Description	Fault Trigger Conditions
B1A07:01	Speaker #7: General Electrical Failure	Set by the audio DSP module when a failure is detected on the Right Front (RF) door tweeter speaker circuits.
B1A07:11	Speaker #7: Circuit Short To Ground	Set by the audio DSP module when a short to ground is detected on the Right Front (RF) door tweeter speaker circuits. When DTC B1A07:11 is set, the speaker output is disabled.
B1A07:12	Speaker #7: Circuit Short To Battery	Set by the audio DSP module when a short to battery is detected on the Right Front (RF) door tweeter speaker circuits. When DTC B1A072:12 is set, the speaker output is disabled.
B1A07:13	Speaker #7: Circuit	Set by the audio DSP module when an open is detected on the Right Front (RF) door tweeter

	Open	speaker circuits.

Possible Sources

- Wiring, terminals, or connectors
- Speaker
- Audio DSP module

PINPOINT TEST K : THE RF DOOR TWEETER SPEAKER IS INOPERATIVE

K1 CHECK THE AUDIO SIGNAL TO THE RIGHT FRONT (RF) DOOR TWEETER SPEAKER

- Ignition OFF.
- Disconnect: Right Front (RF) Door Tweeter Speaker C613.
- Operate the audio system in radio tuner AM / FM mode.
- Measure:

Positive Lead	Measurement / Action	Negative Lead
C613-1	V~	C613-3

Is a fluctuating AC voltage present?

Yes	INSTALL a new Right Front (RF) door tweeter speaker. REFER to: Front Door Tweeter Speaker (415-00C Information and Entertainment System - General Information - Vehicles With: SYNC/Sony AM/FM/CD, Removal and Installation).
No	GO to K2

K2 CHECK THE AUDIO CIRCUITS TO THE RIGHT FRONT (RF) DOOR TWEETER SPEAKER FOR A SHORT TO VOLTAGE

- Ignition OFF.
- Disconnect: Audio DSP Module C4326B.
- Ignition ON.
- Measure:

Positive Lead	Measurement / Action	Negative Lead
C613-1	+ V −	—
C613-3	+ V −	—

Is any voltage present?

Yes	REPAIR the circuit in question.
No	GO to K3

K3 CHECK THE AUDIO CIRCUITS TO THE RIGHT FRONT (RF) DOOR TWEETER SPEAKER FOR A SHORT TO GROUND

- Ignition OFF.
- Measure:

Positive Lead	Measurement / Action	Negative Lead
C613-1	Ω	—
C613-3	Ω	—

Are the resistances greater than 10,000 ohms?

Yes	GO to K4
No	REPAIR the circuit in question.

K4 CHECK THE AUDIO CIRCUITS TO THE RIGHT FRONT (RF) DOOR TWEETER SPEAKER FOR AN OPEN

- Measure:

Positive Lead	Measurement / Action	Negative Lead
C613-1	Ω	C4326B-7
C613-3	Ω	C4326B-15

Are the resistances less than 3 ohms?

Yes	GO to K5
No	REPAIR the circuit in question.

K5 CHECK THE AUDIO CIRCUITS TO THE RIGHT FRONT (RF) DOOR TWEETER SPEAKER FOR A SHORT TOGETHER

- Measure:

Positive Lead	Measurement / Action	Negative Lead
C613-1	Ω	C613-3

Is the resistance greater than 10,000 ohms?

Yes	GO to K6
No	REPAIR the circuit in question.

K6 CHECK THE RIGHT FRONT (RF) AUDIO SIGNAL TO THE AUDIO DSP (AUDIO DIGITAL SIGNAL PROCESSING MODULE) MODULE

- Ignition OFF.
- Disconnect: Audio DSP module C4326A.
- Ignition ON.
- Operate the audio system in radio tuner AM / FM mode.
- Measure:

Positive Lead	Measurement / Action	Negative Lead
C4326A-9	~V	C4326A-19

Is a fluctuating AC voltage present?

Yes	GO to K12
No	GO to K7

K7 CHECK THE RIGHT FRONT (RF) AUDIO SIGNAL TO THE AUDIO DSP (AUDIO DIGITAL SIGNAL PROCESSING MODULE) MODULE FOR A SHORT TO VOLTAGE

- Ignition OFF.
- Disconnect: ACM C240A.
- Ignition ON.
- Measure:

Positive Lead	Measurement / Action	Negative Lead
C4326A-9	+V−	—
C4326A-19	+V−	—

Is any voltage present?

Yes	REPAIR the circuit in question.
No	GO to K8

K8 CHECK THE RIGHT FRONT (RF) AUDIO SIGNAL TO THE AUDIO DSP (AUDIO DIGITAL SIGNAL PROCESSING MODULE) MODULE FOR A SHORT TO GROUND

- Ignition OFF.
- Measure:

Positive Lead	Measurement / Action	Negative Lead
C4326A-9	Ω	—

C4326A-19	Ω	—

Are the resistances greater than 10,000 ohms?

Yes	GO to K9
No	REPAIR the circuit in question.

K9 CHECK THE RIGHT FRONT (RF) AUDIO SIGNAL TO THE AUDIO DSP (AUDIO DIGITAL SIGNAL PROCESSING MODULE) MODULE FOR AN OPEN

- Measure:

Positive Lead	Measurement / Action	Negative Lead
C4326A-9	Ω	C240A-23
C4326A-19	Ω	C240A-11

Are the resistances less than 3 ohms?

Yes	GO to K10
No	REPAIR the circuit in question.

K10 CHECK THE RIGHT FRONT (RF) AUDIO SIGNAL TO THE AUDIO DSP (AUDIO DIGITAL SIGNAL PROCESSING MODULE) MODULE FOR A SHORT TOGETHER

- Measure:

Positive Lead	Measurement / Action	Negative Lead
C4326A-9	Ω	C4326A-19

Is the resistance greater than 10,000 ohms?

Yes	GO to K11
No	REPAIR the circuit in question.

K11 CHECK FOR CORRECT ACM (AUDIO FRONT CONTROL MODULE) OPERATION

- Ignition OFF.
- Disconnect and inspect all the ACM connectors.
- Repair:
  - corrosion (install new connector or terminals - clean module pins)
  - damaged pins - install new terminals/pins
  - pushed-out pins - install new pins as necessary

- Reconnect the ACM connectors. Make sure they seat and latch correctly.
- Operate the system and determine if the concern is still present.

Is the concern still present?

Yes	CHECK OASIS for any applicable Technical Service Bulletins (TSBs). If a TSB exists for this concern, discontinue this test and follow TSB instructions. If no Technical Service Bulletins (TSBs) address this concern, INSTALL a new ACM . REFER to: Audio Front Control Module (ACM) (415-00C Information and Entertainment System - General Information - Vehicles With: SYNC/Sony AM/FM/CD, Removal and Installation).
No	The system is operating correctly at this time. The concern may have been caused by module connections. ADDRESS the root cause of any connector or pin issues.

K12 CHECK FOR CORRECT AUDIO DSP (AUDIO DIGITAL SIGNAL PROCESSING MODULE) MODULE OPERATION

- Ignition OFF.
- Disconnect and inspect all the audio DSP module connectors.
- Repair:
  - corrosion (install new connectors or terminals - clean module pins)
  - damaged or bent pins - install new terminals pins
  - pushed-out pins - install new pins as necessary
- Reconnect the audio DSP module connectors. Make sure they seat and latch correctly.
- Operate the system and determine if the concern is still present.

Is the concern still present?

Yes	CHECK OASIS for any applicable Technical Service Bulletins (TSBs). If a TSB exists for this concern, discontinue this test and follow TSB instructions. If no Technical Service Bulletins (TSBs) address this concern, INSTALL a new audio DSP module. REFER to: Audio Digital Signal Processing (DSP) Module (415-00C Information and Entertainment System - General Information - Vehicles With: SYNC/Sony AM/FM/CD, Removal and Installation).
No	The system is operating correctly at this time. The concern may have been caused by module connections. ADDRESS the root cause of any connector or pin issues.

The RR Door Speaker Is Inoperative

Refer to Wiring Diagrams Cell 130 for schematic and connector information.

Diagnostic Overview

Diagnostics in this manual assume a certain skill level and knowledge of Ford-specific diagnostic practices. For information about these practices,
REFER to: Diagnostic Methods (100-00 General Information, Description and Operation).

Normal Operation and Fault Conditions

REFER to: Information and Entertainment System - System Operation and Component Description (415-00C Information and Entertainment System - General Information - Vehicles With: SYNC/Sony AM/FM/CD, Description and Operation).
See Digital Signal Processing (DSP).

The audio DSP module directs audio signals to the Right Rear (RR) door speaker in the form of a fluctuating AC voltage. The Right Rear (RR) door speaker and the Right Rear (RR) door tweeter speaker share the same audio signal.

v Fault Trigger Conditions

DTC	Description	Fault Trigger Conditions
B1A08:01	Speaker #8: General Electrical Failure	Set by the audio DSP module when a failure is detected on the Right Rear (RR) door or Right Rear (RR) door tweeter speaker circuits.
B1A08:11	Speaker #8: Circuit Short To Ground	Set by the audio DSP module when a short to ground is detected on the Right Rear (RR) door or Right Rear (RR) door tweeter speaker circuits. When DTC B1A08:11 is set, the speaker output is disabled.
B1A08:12	Speaker #8: Circuit Short To Battery	Set by the audio DSP module when a short to battery is detected on the Right Rear (RR) door or Right Rear (RR) door tweeter speaker circuits. When DTC B1A08:12 is set, the speaker output is disabled.
B1A08:13	Speaker #8: Circuit Open	Set by the audio DSP module when an open is detected on the Right Rear (RR) door speaker circuits.

Possible Sources

- Wiring, terminals, or connectors
- Speaker
- ACM
- Audio DSP module

PINPOINT TEST L : THE RR DOOR SPEAKER IS INOPERATIVE

L1 CHECK THE AUDIO SIGNAL TO THE RIGHT REAR (RR) DOOR SPEAKER

- Ignition OFF.
- Disconnect: Right Rear (RR) Door Speaker C802.
- Operate the audio system in radio tuner AM / FM mode.
- Measure:

Positive Lead	Measurement / Action	Negative Lead
C802-1	$\tilde{V}$	C802-4

Is a fluctuating AC voltage present?

Yes	INSTALL a new Right Rear (RR) door speaker. REFER to: Rear Door Speaker (415-00C Information and Entertainment System - General Information - Vehicles With: SYNC/Sony AM/FM/CD, Removal and Installation).
No	GO to L2

L2 CHECK THE AUDIO CIRCUITS TO THE RIGHT REAR (RR) DOOR SPEAKER FOR A SHORT TO VOLTAGE

- Ignition OFF.
- Disconnect: Audio DSP Module C4326B.

- Ignition ON.
- Measure:

Positive Lead	Measurement / Action	Negative Lead
C802-1	V	—
C802-4	V	—

Is any voltage present?

Yes	REPAIR the circuit in question.
No	GO to L3

L3 CHECK THE AUDIO CIRCUITS TO THE RIGHT REAR (RR) DOOR SPEAKER FOR A SHORT TO GROUND

- Ignition OFF.
- Measure:

Positive Lead	Measurement / Action	Negative Lead
C802-1	Ω	—
C802-4	Ω	—

Are the resistances greater than 10,000 ohms?

Yes	GO to L4
No	REPAIR the circuit in question.

L4 CHECK THE AUDIO CIRCUITS TO THE RIGHT REAR (RR) DOOR SPEAKER FOR AN OPEN

- Measure:

Positive Lead	Measurement / Action	Negative Lead
C802-1	Ω	C4326B-8
C802-4	Ω	C4326B-16

Are the resistances less than 3 ohms?

Yes	GO to L5
No	REPAIR the circuit in question.

L5 CHECK THE AUDIO CIRCUITS TO THE RIGHT REAR (RR) DOOR SPEAKER FOR A SHORT TOGETHER

- Measure:

Positive Lead	Measurement / Action	Negative Lead
C802-1	Ω	C802-4

Is the resistance greater than 10,000 ohms?

Yes	GO to L6
No	REPAIR the circuit in question.

L6 CHECK THE RIGHT REAR (RR) AUDIO SIGNAL TO THE AUDIO DSP (AUDIO DIGITAL SIGNAL PROCESSING MODULE) MODULE

- Ignition OFF.
- Disconnect: Audio DSP module C4326A.
- Ignition ON.
- Operate the audio system in radio tuner AM / FM mode.
- Measure:

Positive Lead	Measurement / Action	Negative Lead
C4326A-4	Ṽ	C4326A-14

Is a fluctuating AC voltage present?

Yes	GO to L12
No	GO to L7

L7 CHECK THE RIGHT REAR (RR) AUDIO SIGNAL TO THE AUDIO DSP (AUDIO DIGITAL SIGNAL PROCESSING MODULE) MODULE FOR A SHORT TO VOLTAGE

- Ignition OFF.
- Disconnect: ACM C240A.
- Ignition ON.
- Measure:

Positive Lead	Measurement / Action	Negative Lead
C4326A-4	+ V −	—
C4326A-14	+ V −	—

Is any voltage present?

Yes	REPAIR the circuit in question.
No	GO to L8

L8 CHECK THE RIGHT REAR (RR) AUDIO SIGNAL TO THE AUDIO DSP (AUDIO DIGITAL SIGNAL PROCESSING MODULE) MODULE FOR A SHORT TO GROUND

- Ignition OFF.
- Measure:

Positive Lead	Measurement / Action	Negative Lead
C4326A-4	Ω	—
C4326A-14	Ω	—

Are the resistances greater than 10,000 ohms?

Yes	GO to L9
No	REPAIR the circuit in question.

L9 CHECK THE RIGHT REAR (RR) AUDIO SIGNAL TO THE AUDIO DSP (AUDIO DIGITAL SIGNAL PROCESSING MODULE) MODULE FOR AN OPEN

- Measure:

Positive Lead	Measurement / Action	Negative Lead
C4326A-4	Ω	C240A-24
C4326A-14	Ω	C240A-12

Are the resistances less than 3 ohms?

Yes	GO to L10
No	REPAIR the circuit in question.

L10 CHECK THE RIGHT REAR (RR) AUDIO SIGNAL TO THE AUDIO DSP (AUDIO DIGITAL SIGNAL PROCESSING MODULE) MODULE FOR A SHORT TOGETHER

- Measure:

Positive Lead	Measurement / Action	Negative Lead
C4326A-4	Ω	C4326A-14

Is the resistance greater than 10,000 ohms?

Yes	GO to L11
No	REPAIR the circuit in question.

L11 CHECK FOR CORRECT ACM (AUDIO FRONT CONTROL MODULE) OPERATION

- Ignition OFF.
- Disconnect and inspect all the ACM connectors.
- Repair:
  - corrosion (install new connector or terminals - clean module pins)
  - damaged pins - install new terminals/pins
  - pushed-out pins - install new pins as necessary
- Reconnect the ACM connectors. Make sure they seat and latch correctly.
- Operate the system and determine if the concern is still present.

Is the concern still present?

Yes	CHECK OASIS for any applicable Technical Service Bulletins (TSBs). If a TSB exists for this concern, discontinue this test and follow TSB instructions. If no Technical Service Bulletins (TSBs) address this concern, INSTALL a new ACM . REFER to: Audio Front Control Module (ACM) (415-00C Information and Entertainment System - General Information - Vehicles With: SYNC/Sony AM/FM/CD, Removal and Installation).
No	The system is operating correctly at this time. The concern may have been caused by module connections. ADDRESS the root cause of any connector or pin issues.

L12 CHECK FOR CORRECT AUDIO DSP (AUDIO DIGITAL SIGNAL PROCESSING MODULE) MODULE OPERATION

- Ignition OFF.
- Disconnect and inspect all the audio DSP module connectors.
- Repair:
  - corrosion (install new connectors or terminals - clean module pins)
  - damaged or bent pins - install new terminals pins
  - pushed-out pins - install new pins as necessary
- Reconnect the audio DSP module connectors. Make sure they seat and latch correctly.
- Operate the system and determine if the concern is still present.

Is the concern still present?

Yes	CHECK OASIS for any applicable Technical Service Bulletins (TSBs). If a TSB exists for this concern, discontinue this test and follow TSB instructions. If no Technical Service Bulletins (TSBs) address this concern, INSTALL a new audio DSP module. REFER to: Audio Digital Signal Processing (DSP) Module (415-00C Information and Entertainment System - General Information - Vehicles With: SYNC/Sony AM/FM/CD, Removal and Installation).
No	The system is operating correctly at this time. The concern may have been caused by module connections. ADDRESS the root cause of any connector or pin issues.

The RR Door Tweeter Speaker Is Inoperative

Refer to Wiring Diagrams Cell 130 for schematic and connector information.

Diagnostic Overview

Diagnostics in this manual assume a certain skill level and knowledge of Ford-specific diagnostic practices. For information about these practices,
REFER to: Diagnostic Methods (100-00 General Information, Description and Operation).

Normal Operation and Fault Conditions

REFER to: Information and Entertainment System - System Operation and Component Description (415-00C Information and Entertainment System - General Information - Vehicles With: SYNC/Sony AM/FM/CD, Description and Operation).
See Digital Signal Processing (DSP).

The audio DSP module directs audio signals to the Right Rear (RR) door tweeter speaker in the form of a fluctuating AC voltage. The Right Rear (RR) door speaker and the Right Rear (RR) door tweeter speaker share the same audio signal.

DTC Fault Trigger Conditions

DTC	Description	Fault Trigger Conditions
B1A08:01	Speaker #8: General Electrical Failure	Set by the audio DSP module when a failure is detected on the Right Rear (RR) door or Right Rear (RR) door tweeter speaker circuits.
B1A08:11	Speaker #8: Circuit Short To Ground	Set by the audio DSP module when a short to ground is detected on the Right Rear (RR) door or Right Rear (RR) door tweeter speaker circuits. When DTC B1A08:11 is set, the speaker output is disabled.
B1A08:12	Speaker #8: Circuit Short To Battery	Set by the audio DSP module when a short to battery is detected on the Right Rear (RR) door or Right Rear (RR) door tweeter speaker circuits. When DTC B1A08:12 is set, the speaker output is disabled.

Possible Sources

- Wiring, terminals, or connectors
- Speaker

PINPOINT TEST M : THE RR DOOR TWEETER SPEAKER IS INOPERATIVE

M1 CHECK THE RIGHT REAR (RR) DOOR SPEAKER

- Ignition OFF.
- Operate the audio system in radio tuner AM / FM mode.

Does the Right Rear (RR) door speaker operate correctly?

Yes	GO to M2
No	GO to Pinpoint Test L

M2 CHECK THE AUDIO SIGNAL TO THE RIGHT REAR (RR) DOOR TWEETER SPEAKER

- Ignition OFF.
- Disconnect: Right Rear (RR) Door Tweeter Speaker C830.

- Operate the audio system in radio tuner AM / FM mode.
- Measure:

Positive Lead	Measurement / Action	Negative Lead
C830-1	~V	C830-3

Is a fluctuating AC voltage present?

Yes	INSTALL a new Right Rear (RR) door tweeter speaker. REFER to: Rear Door Tweeter Speaker (415-00C Information and Entertainment System - General Information - Vehicles With: SYNC/Sony AM/FM/CD, Removal and Installation).
No	GO to M3

M3 CHECK THE AUDIO CIRCUITS TO THE RIGHT REAR (RR) DOOR TWEETER SPEAKER FOR A SHORT TO VOLTAGE

- Ignition OFF.
- Disconnect: Right Rear (RR) Door Speaker C802.
- Ignition ON.
- Measure:

Positive Lead	Measurement / Action	Negative Lead
C830-1	V	—
C830-3	V	—

Is any voltage present?

Yes	REPAIR the circuit in question.
No	GO to M4

M4 CHECK THE AUDIO CIRCUITS TO THE RIGHT REAR (RR) DOOR TWEETER SPEAKER FOR A SHORT TO GROUND

- Ignition OFF.
- Measure:

Positive Lead	Measurement / Action	Negative Lead
C830-1	Ω	—
C830-3	Ω	—

Are the resistances greater than 10,000 ohms?

Yes	GO to M5
No	REPAIR the circuit in question.

M5 CHECK THE AUDIO CIRCUITS TO THE RIGHT REAR (RR) DOOR TWEETER SPEAKER FOR AN OPEN

- Measure:

Positive Lead	Measurement / Action	Negative Lead
C830-1	Ω	C802-2
C830-3	Ω	C802-3

Are the resistances less than 3 ohms?

Yes	GO to M6
No	REPAIR the circuit in question.

M6 CHECK THE AUDIO CIRCUITS TO THE RIGHT REAR (RR) DOOR TWEETER SPEAKER FOR A SHORT TOGETHER

- Measure:

Positive Lead	Measurement / Action	Negative Lead
C830-1	Ω	C830-3

Is the resistance greater than 10,000 ohms?

Yes	INSTALL a new Right Rear (RR) door speaker. REFER to: Rear Door Speaker (415-00C Information and Entertainment System - General Information - Vehicles With: SYNC/Sony AM/FM/CD, Removal and Installation).
No	REPAIR the circuit in question.

The Subwoofer Speaker Is Inoperative

Refer to Wiring Diagrams Cell 130 for schematic and connector information.

Diagnostic Overview

Diagnostics in this manual assume a certain skill level and knowledge of Ford-specific diagnostic practices. For information about these practices,
REFER to: Diagnostic Methods (100-00 General Information, Description and Operation).

Normal Operation and Fault Conditions

REFER to: Information and Entertainment System - System Operation and Component Description (415-00C Information and Entertainment System - General Information - Vehicles With: SYNC/Sony AM/FM/CD, Description and Operation).
See Digital Signal Processing (DSP).

The audio DSP module directs audio signals to the subwoofer speaker in the form of a fluctuating AC voltage.

DTC Fault Trigger Conditions

DTC	Description	Fault Trigger Conditions
B1A09:11	Speaker #9: Circuit Short To Ground	Set by the audio DSP module when a short to ground is detected on the subwoofer speaker circuits. When DTC B1A09:11 is set, the speaker output is disabled.
B1A09:12	Speaker #9: Circuit Short To Battery	Set by the audio DSP module when a short to battery is detected on the subwoofer speaker circuits. When DTC B1A09:12 is set, the speaker output is disabled.
B1A09:13	Speaker #9: Circuit Open	Set by the audio DSP module when an open is detected on the subwoofer speaker circuits.
B1A10:11	Speaker #10: Circuit Short To Ground	Set by the audio DSP module when a short to ground is detected on the subwoofer speaker circuits. When DTC B1A10:11 is set, the speaker output is disabled.
B1A10:12	Speaker #10: Circuit Short To Battery	Set by the audio DSP module when a short to battery is detected on the subwoofer speaker circuits. When DTC B1A10:12 is set, the speaker output is disabled.
B1A10:13	Speaker #10: Circuit Open	Set by the audio DSP module when an open is detected on the subwoofer speaker circuits.

Possible Sources

- Wiring, terminals, or connectors
- Speaker
- Audio DSP module

PINPOINT TEST N : THE SUBWOOFER SPEAKER IS INOPERATIVE

N1 CHECK THE AUDIO SIGNAL TO THE SUBWOOFER SPEAKER

- Ignition OFF.
- Disconnect: Subwoofer Speaker C4212.
- Operate the audio system in radio tuner AM / FM mode.
- Measure:

Positive Lead	Measurement / Action	Negative Lead
C4212-1	$\tilde{V}$	C4212-2
C4212-3	$\tilde{V}$	C4212-4

Is a fluctuating AC voltage present?

Yes	INSTALL a new subwoofer speaker. REFER to: Subwoofer Speaker (415-00C Information and Entertainment System - General Information - Vehicles With: SYNC/Sony AM/FM/CD, Removal and Installation).
No	GO to N2

N2 CHECK THE AUDIO CIRCUITS TO THE SUBWOOFER SPEAKER FOR A SHORT TO VOLTAGE

- Ignition OFF.
- Disconnect: Audio DSP Module C4326C.
- Ignition ON.
- Measure:

Positive Lead	Measurement / Action	Negative Lead
C4212-1	V	—
C4212-2	V	—
C4212-3	V	—
C4212-4	V	—

Is any voltage present?

Yes	REPAIR the circuit in question.
No	GO to N3

N3 CHECK THE AUDIO CIRCUITS TO THE SUBWOOFER SPEAKER FOR A SHORT TO GROUND

- Ignition OFF.
- Measure:

Positive Lead	Measurement / Action	Negative Lead
C4212-1	Ω	—
C4212-2	Ω	—
C4212-3	Ω	—
C4212-4	Ω	—

Are the resistances greater than 10,000 ohms?

Yes	GO to N4
No	REPAIR the circuit in question.

N4 CHECK THE AUDIO CIRCUITS TO THE SUBWOOFER SPEAKER FOR AN OPEN

Measure:

Positive Lead	Measurement / Action	Negative Lead
C4212-1	Ω	C4326C-1
C4212-2	Ω	C4326C-9
C4212-3	Ω	C4326C-2
C4212-4	Ω	C4326C-10

Are the resistances less than 3 ohms?

Yes	GO to N5
No	REPAIR the circuit in question.

N5 CHECK THE AUDIO CIRCUITS TO THE SUBWOOFER SPEAKER FOR A SHORT TOGETHER

- Measure:

Positive Lead	Measurement / Action	Negative Lead
C4212-1	Ω	C4212-2
C4212-1	Ω	C4212-3
C4212-1	Ω	C4212-4
C4212-2	Ω	C4212-3
C4212-2	Ω	C4212-4
C4212-3	Ω	C4212-4

Are the resistances greater than 10,000 ohms?

Yes	GO to N6
No	REPAIR the circuit in question.

N6 CHECK FOR CORRECT AUDIO DSP (AUDIO DIGITAL SIGNAL PROCESSING MODULE) MODULE OPERATION

- Ignition OFF.
- Disconnect and inspect all the audio DSP module connectors.
- Repair:
  - corrosion (install new connectors or terminals - clean module pins)
  - damaged or bent pins - install new terminals pins
  - pushed-out pins - install new pins as necessary
- Reconnect the audio DSP module connectors. Make sure they seat and latch correctly.
- Operate the system and determine if the concern is still present.

Is the concern still present?

Yes	CHECK OASIS for any applicable Technical Service Bulletins (TSBs). If a TSB exists for this concern, discontinue this test and follow TSB instructions. If no Technical Service Bulletins (TSBs) address this concern, INSTALL a new audio DSP module. REFER to: Audio Digital Signal Processing (DSP) Module (415-00C Information and Entertainment System - General Information - Vehicles With: SYNC/Sony AM/FM/CD, Removal and Installation).
No	The system is operating correctly at this time. The concern may have been caused by module connections. ADDRESS the root cause of any connector or pin issues.

The LR Door Speaker Is Inoperative

Refer to Wiring Diagrams Cell 130 for schematic and connector information.

Diagnostic Overview

Diagnostics in this manual assume a certain skill level and knowledge of Ford-specific diagnostic practices. For information about these practices,
REFER to: Diagnostic Methods (100-00 General Information, Description and Operation).

Normal Operation and Fault Conditions

REFER to: Information and Entertainment System - System Operation and Component Description (415-00C Information and Entertainment System - General Information - Vehicles With: SYNC/Sony AM/FM/CD, Description and Operation).
See Digital Signal Processing (DSP).

The audio DSP module directs audio signals to the Left Rear (LR) door speaker in the form of a fluctuating AC voltage. The Left Rear (LR) door tweeter speaker and the Left Rear (LR) door speaker share the same audio signal.

DTC Fault Trigger Conditions

DTC	Description	Fault Trigger Conditions
B1A04:01	Speaker #4: General Electrical Failure	Set by the audio DSP module when a failure is detected on the Left Rear (LR) door or Left Rear (LR) door tweeter speaker circuits.
B1A04:11	Speaker #4: Circuit Short To Ground	Set by the audio DSP module when a short to ground is detected on the Left Rear (LR) door or Left Rear (LR) door tweeter speaker circuits. When DTC B1A04:11 is set, the speaker output is disabled.
B1A04:12	Speaker #4: Circuit Short To Battery	Set by the audio DSP module when a short to battery is detected on the Left Rear (LR) door or Left Rear (LR) door tweeter speaker circuits. When DTC B1A04:12 is set, the speaker output is disabled.
B1A04:13	Speaker #4: Circuit Open	Set by the audio DSP module when an open is detected on the Left Rear (LR) door speaker circuits. When DTC B1A04:13 is set, the speaker output is disabled.

Possible Sources

- Wiring, terminals, or connectors
- Speaker
- ACM
- Audio DSP module

PINPOINT TEST O : THE LR DOOR SPEAKER IS INOPERATIVE

O1 CHECK THE AUDIO SIGNAL TO THE LEFT REAR (LR) DOOR SPEAKER

- Ignition OFF.
- Disconnect: Left Rear (LR) Door Speaker C702.
- Operate the audio system in radio tuner AM / FM mode.
- Measure:

Positive Lead	Measurement / Action	Negative Lead
C702-1	Ṽ	C702-4

Is a fluctuating AC voltage present?

Yes	INSTALL a new Left Rear (LR) door speaker. REFER to: Rear Door Speaker (415-00C Information and Entertainment System - General Information - Vehicles With: SYNC/Sony AM/FM/CD, Removal and Installation).
No	GO to O2

O2 CHECK THE AUDIO CIRCUITS TO THE LEFT REAR (LR) DOOR SPEAKER FOR A SHORT TO VOLTAGE

- Ignition OFF.
- Disconnect: Audio DSP Module C4326B.
- Ignition ON.
- Measure:

Positive Lead	Measurement / Action	Negative Lead
C702-1	✱▽▬	—
C702-4	✱▽▬	—

Is any voltage present?

Yes	REPAIR the circuit in question.
No	GO to O3

O3 CHECK THE AUDIO CIRCUITS TO THE LEFT REAR (LR) DOOR SPEAKER FOR A SHORT TO GROUND

- Ignition OFF.
- Measure:

Positive Lead	Measurement / Action	Negative Lead
C702-1	Ω	—
	Ω	

C702-4		—

Are the resistances greater than 10,000 ohms?

Yes	GO to O4
No	REPAIR the circuit in question.

O4 CHECK THE AUDIO CIRCUITS TO THE LEFT REAR (LR) DOOR SPEAKER FOR AN OPEN

- Measure:

Positive Lead	Measurement / Action	Negative Lead
C702-1	Ω	C4326B-4
C702-4	Ω	C4326B-12

Are the resistances less than 3 ohms?

Yes	GO to O5
No	REPAIR the circuit in question.

O5 CHECK THE AUDIO CIRCUITS TO THE LEFT REAR (LR) DOOR SPEAKER FOR A SHORT TOGETHER

- Measure:

Positive Lead	Measurement / Action	Negative Lead
C702-1	Ω	C702-4

Is the resistance greater than 10,000 ohms?

Yes	GO to O6
No	REPAIR the circuit in question.

O6 CHECK THE LEFT REAR (LR) AUDIO SIGNAL TO THE AUDIO DSP (AUDIO DIGITAL SIGNAL PROCESSING MODULE) MODULE

- Ignition OFF.
- Disconnect: Audio DSP module C4326A.
- Ignition ON.
- Operate the audio system in radio tuner AM / FM mode.
- Measure:

Positive Lead	Measurement / Action	Negative Lead
C4326A-2	~V	C4326A-12

Is a fluctuating AC voltage present?

Yes	GO to O12
No	GO to O7

O7 CHECK THE LEFT REAR (LR) AUDIO SIGNAL TO THE AUDIO DSP (AUDIO DIGITAL SIGNAL PROCESSING MODULE) MODULE FOR A SHORT TO VOLTAGE

- Ignition OFF.
- Disconnect: ACM C240A.
- Ignition ON.
- Measure:

Positive Lead	Measurement / Action	Negative Lead
C4326A-2	▽	—
C4326A-12	▽	—

Is any voltage present?

Yes	REPAIR the circuit in question.
No	GO to O8

O8 CHECK THE LEFT REAR (LR) AUDIO SIGNAL TO THE AUDIO DSP (AUDIO DIGITAL SIGNAL PROCESSING MODULE) MODULE FOR A SHORT TO GROUND

- Ignition OFF.
- Measure:

Positive Lead	Measurement / Action	Negative Lead
C4326A-2	Ω	—
C4326A-12	Ω	—

Are the resistances greater than 10,000 ohms?

Yes	GO to O9
No	REPAIR the circuit in question.

O9 CHECK THE LEFT REAR (LR) AUDIO SIGNAL TO THE AUDIO DSP (AUDIO DIGITAL SIGNAL PROCESSING MODULE) MODULE FOR AN OPEN

- Measure:

Positive Lead	Measurement / Action	Negative Lead
C4326A-2	Ω	C240A-21
C4326A-12	Ω	C240A-19

Are the resistances less than 3 ohms?

Yes	GO to O10
No	REPAIR the circuit in question.

O10 CHECK THE LEFT REAR (LR) AUDIO SIGNAL TO THE AUDIO DSP (AUDIO DIGITAL SIGNAL PROCESSING MODULE) MODULE FOR A SHORT TOGETHER

- Measure:

Positive Lead	Measurement / Action	Negative Lead
C4326A-2	Ω	C4326A-12

Is the resistance greater than 10,000 ohms?

Yes	GO to O11
No	REPAIR the circuit in question.

O11 CHECK FOR CORRECT ACM (AUDIO FRONT CONTROL MODULE) OPERATION

- Ignition OFF.
- Disconnect and inspect all the ACM connectors.
- Repair:
  - corrosion (install new connector or terminals - clean module pins)
  - damaged pins - install new terminals/pins
  - pushed-out pins - install new pins as necessary
- Reconnect the ACM connectors. Make sure they seat and latch correctly.
- Operate the system and determine if the concern is still present.

Is the concern still present?

Yes	CHECK OASIS for any applicable Technical Service Bulletins (TSBs). If a TSB exists for this concern, discontinue this test and follow TSB instructions. If no Technical Service Bulletins (TSBs) address this concern, INSTALL a new ACM . REFER to: Rear Door Speaker (415-00C Information and Entertainment System - General Information - Vehicles With: SYNC/Sony AM/FM/CD, Removal and Installation).
No	The system is operating correctly at this time. The concern may have been caused by module

	connections. ADDRESS the root cause of any connector or pin issues.

O12 CHECK FOR CORRECT AUDIO DSP (AUDIO DIGITAL SIGNAL PROCESSING MODULE) MODULE OPERATION

- Ignition OFF.
- Disconnect and inspect all the audio DSP module connectors.
- Repair:
  - corrosion (install new connectors or terminals - clean module pins)
  - damaged or bent pins - install new terminals pins
  - pushed-out pins - install new pins as necessary
- Reconnect the audio DSP module connectors. Make sure they seat and latch correctly.
- Operate the system and determine if the concern is still present.

Is the concern still present?

Yes	CHECK OASIS for any applicable Technical Service Bulletins (TSBs). If a TSB exists for this concern, discontinue this test and follow TSB instructions. If no Technical Service Bulletins (TSBs) address this concern, INSTALL a new audio DSP module. REFER to: Audio Digital Signal Processing (DSP) Module (415-00C Information and Entertainment System - General Information - Vehicles With: SYNC/Sony AM/FM/CD, Removal and Installation).
No	The system is operating correctly at this time. The concern may have been caused by module connections. ADDRESS the root cause of any connector or pin issues.

The LR Door Tweeter Speaker Is Inoperative

Refer to Wiring Diagrams Cell 130 for schematic and connector information.

Diagnostic Overview

Diagnostics in this manual assume a certain skill level and knowledge of Ford-specific diagnostic practices. For information about these practices,
REFER to: Diagnostic Methods (100-00 General Information, Description and Operation).

Normal Operation and Fault Conditions

REFER to: Information and Entertainment System - System Operation and Component Description (415-00C Information and Entertainment System - General Information - Vehicles With: SYNC/Sony AM/FM/CD, Description and Operation).
See Digital Signal Processing (DSP).

The audio DSP module directs audio signals to the Left Rear (LR) door tweeter speaker in the form of a fluctuating AC voltage. The Left Rear (LR) door tweeter speaker and the Left Rear (LR) door speaker share the same audio signal.

DTC Fault Trigger Conditions

DTC	Description	Fault Trigger Conditions
B1A04:01	Speaker #4: General Electrical Failure	Set by the audio DSP module when a failure is detected on the Left Rear (LR) door or Left Rear (LR) door tweeter speaker circuits.
B1A04:11	Speaker #4:	Set by the audio DSP module when a short to ground is detected on the Left Rear (LR) door or

	Circuit Short To Ground	Left Rear (LR) door tweeter speaker circuits. When DTC B1A04:11 is set, the speaker output is disabled.
B1A04:12	Speaker #4: Circuit Short To Battery	Set by the audio DSP module when a short to battery is detected on the Left Rear (LR) door or Left Rear (LR) door tweeter speaker circuits. When DTC B1A04:12 is set, the speaker output is disabled.

Possible Sources

- Wiring, terminals, or connectors
- Speaker

PINPOINT TEST P : THE LR DOOR TWEETER SPEAKER IS INOPERATIVE

P1 CHECK THE LEFT REAR (LR) DOOR SPEAKER

- Ignition OFF.
- Operate the audio system in radio tuner AM / FM mode.

Does the Left Rear (LR) door speaker operate correctly?

Yes	GO to P2
No	GO to Pinpoint Test O

P2 CHECK THE AUDIO SIGNAL TO THE LEFT REAR (LR) DOOR TWEETER SPEAKER

- Ignition OFF.
- Disconnect: Left Rear (LR) Door Tweeter Speaker C730.
- Operate the audio system in radio tuner AM / FM mode.
- Measure:

Positive Lead	Measurement / Action	Negative Lead
C730-1	$\tilde{V}$	C730-3

Is a fluctuating AC voltage present?

Yes	INSTALL a new Left Rear (LR) door tweeter speaker. REFER to: Rear Door Tweeter Speaker (415-00C Information and Entertainment System - General Information - Vehicles With: SYNC/Sony AM/FM/CD, Removal and Installation).
No	GO to P3

P3 CHECK THE AUDIO CIRCUITS TO THE LEFT REAR (LR) DOOR TWEETER SPEAKER FOR A SHORT TO VOLTAGE

- Ignition OFF.
- Disconnect: Left Rear (LR) Door Speaker C702.
- Ignition ON.
- Measure:

Positive Lead	Measurement / Action	Negative Lead
C730-1	V	—
C730-3	V	—

Is any voltage present?

Yes	REPAIR the circuit in question.
No	GO to P4

P4 CHECK THE AUDIO CIRCUITS TO THE LEFT REAR (LR) DOOR TWEETER SPEAKER FOR A SHORT TO GROUND

- Ignition OFF.
- Measure:

Positive Lead	Measurement / Action	Negative Lead
C730-1	Ω	—
C730-3	Ω	—

Are the resistances greater than 10,000 ohms?

Yes	GO to P5
No	REPAIR the circuit in question.

P5 CHECK THE AUDIO CIRCUITS TO THE LEFT REAR (LR) DOOR TWEETER SPEAKER FOR AN OPEN

- Measure:

Positive Lead	Measurement / Action	Negative Lead
C730-1	Ω	C702-2
C730-3	Ω	C702-3

Are the resistances less than 3 ohms?

Yes	GO to P6
No	REPAIR the circuit in question.

P6 CHECK THE AUDIO CIRCUITS TO THE LEFT REAR (LR) DOOR TWEETER SPEAKER FOR A SHORT TOGETHER

Measure:

Positive Lead	Measurement / Action	Negative Lead
C730-1	Ω	C730-3

Is the resistance greater than 10,000 ohms?

Yes	INSTALL a new Left Rear (LR) door speaker. REFER to: Rear Door Speaker (415-00C Information and Entertainment System - General Information - Vehicles With: SYNC/Sony AM/FM/CD, Removal and Installation).
No	REPAIR the circuit in question.

No Sound From All SYNC® Audio Sources (Bluetooth, USB , Secure Digital (SD) Card, RCA Jacks)

Refer to Wiring Diagrams Cell 130 for schematic and connector information.

Normal Operation and Fault Conditions

REFER to: Information and Entertainment System - System Operation and Component Description (415-00C Information and Entertainment System - General Information - Vehicles With: SYNC/Sony AM/FM/CD, Description and Operation).
See SYNC® System.

The APIM transmits left and right channel analog audio signals to the ACM . These signals include inputs from the USB port, Secure Digital (SD) card slot, RCA jacks, and a Bluetooth media device. If a USB mass storage device is used to play an audio file, the SYNC® system only plays audio files that do not have Digital Rights Management (DRM) protection.

Possible Sources

- Customer's device
- Wiring, terminals, or connectors
- APIM
- ACM

PINPOINT TEST Q : NO SOUND FROM ALL SYNC® AUDIO SOURCES (BLUETOOTH, USB (UNIVERSAL SERIAL BUS) , SECURE DIGITAL (SD) CARD, RCA JACKS)

Q1 VERIFY THE OPERATION OF THE SYNC® SYSTEM AUDIO SOURCES

- Connect: Multi-Media Interface Tester 105-00120.
- Using the Multi-Media Interface Tester 105-00120 and RCA Adapter 105-00121, test the audio output for the RCA jacks, USB port, and Bluetooth.

Is there poor quality, distorted, or no sound from all SYNC® audio sources?

Yes	GO to Q2
No	If there is a concern with one or more, but not all audio sources, REFER to: Information and Entertainment System (415-00C Information and Entertainment System - General Information - Vehicles With: SYNC/Sony AM/FM/CD, Diagnosis and Testing). See Symptom Chart: SYNC® System, to diagnose the observed symptom. If all audio sources operate correctly, the concern is with the customer's device.

Q2 CHECK THE AUDIO SIGNALS TO THE ACM (AUDIO FRONT CONTROL MODULE)

NOTICE: This pinpoint test step directs testing circuits using a back-probe method. Use the special back-probe tool POM6411. Do not force test leads or other probes into connectors. Adequate care must be exercised to avoid connector terminal damage, while ensuring that good electrical contact is made with the circuit or terminal. Failure to follow these instructions may cause damage to wiring, terminals, or connectors, and may cause subsequent electrical faults.

- Operate the audio system in SYNC® mode and play an audio file.
- Measure the AC voltage by backprobing ACM connector C240B:

Positive Lead	Measurement / Action	Negative Lead
C240B-12	~V	C240B-26
C240B-13	~V	C240B-25

Is a fluctuating AC voltage present?

Yes	GO to Q7
No	GO to Q3

Q3 CHECK THE AUDIO CIRCUITS TO THE ACM (AUDIO FRONT CONTROL MODULE) FOR A SHORT TO VOLTAGE

- Ignition OFF.
- Disconnect: ACM C240B.
- Disconnect: APIM C2383.
- Ignition ON.
- Measure:

Positive Lead	Measurement / Action	Negative Lead
C2383-23	+V−	—
C2383-24	+V−	—
C2383-25	+V−	—
C2383-26	+V−	—

Is any voltage present?

Yes	REPAIR the circuit in question.
No	GO to Q4

Q4 CHECK THE AUDIO CIRCUITS TO THE ACM (AUDIO FRONT CONTROL MODULE) FOR A SHORT TO GROUND

- Ignition OFF.
- Measure:

Positive Lead	Measurement / Action	Negative Lead
C2383-23	Ω	—
C2383-24	Ω	—
C2383-25	Ω	—
C2383-26	Ω	—

Are the resistances greater than 10,000 ohms?

Yes	GO to Q5
No	REPAIR the circuit in question.

Q5 CHECK THE CIRCUITS TO THE ACM (AUDIO FRONT CONTROL MODULE) FOR AN OPEN

- Measure:

Positive Lead	Measurement / Action	Negative Lead
C2383-23	Ω	C240B-12
C2383-24	Ω	C240B-25
C2383-25	Ω	C240B-13
C2383-26	Ω	C240B-26

Are the resistances less than 3 ohms?

Yes	GO to Q6
No	REPAIR the circuit in question.

Q6 CHECK FOR CORRECT APIM (SYNC MODULE) OPERATION

- Disconnect and inspect the APIM connector.
- Repair:
  - corrosion (install new connector or terminals - clean module pins)
  - damaged pins - install new terminals/pins
  - pushed-out pins - install new pins as necessary
- Reconnect the APIM connector. Make sure it seats and latches correctly.
- Wait at least 2 minutes for the APIM to re-initialize.
- Operate the system and determine if the concern is still present.

Is the concern still present?

Yes	CHECK OASIS for any applicable Technical Service Bulletins (TSBs). If a TSB exists for this concern, discontinue this test and follow TSB instructions. If no Technical Service Bulletins (TSBs) address this

	concern, INSTALL a new APIM . REFER to: SYNC Module [APIM] (415-00C Information and Entertainment System - General Information - Vehicles With: SYNC/Sony AM/FM/CD, Removal and Installation).
No	The system is operating correctly at this time. The concern may have been caused by module connections. ADDRESS the root cause of any connector or pin issues.

Q7 CHECK FOR CORRECT ACM (AUDIO FRONT CONTROL MODULE) OPERATION

- Ignition OFF.
- Disconnect and inspect all the ACM connectors.
- Repair:
  - corrosion (install new connector or terminals - clean module pins)
  - damaged pins - install new terminals/pins
  - pushed-out pins - install new pins as necessary
- Reconnect the ACM connectors. Make sure they seat and latch correctly.
- Operate the system and determine if the concern is still present.

Is the concern still present?

Yes	CHECK OASIS for any applicable Technical Service Bulletins (TSBs). If a TSB exists for this concern, discontinue this test and follow TSB instructions. If no Technical Service Bulletins (TSBs) address this concern, INSTALL a new ACM . REFER to: Audio Front Control Module (ACM) (415-00C Information and Entertainment System - General Information - Vehicles With: SYNC/Sony AM/FM/CD, Removal and Installation).
No	The system is operating correctly at this time. The concern may have been caused by module connections. ADDRESS the root cause of any connector or pin issues.

The SYNC® System Voice Or Tone Prompts, Text-To-Speech (TTS) Feature, Or Ringtones Are Inoperative Or Do Not Operate Correctly

Refer to Wiring Diagrams Cell 130 for schematic and connector information.

Diagnostic Overview

Diagnostics in this manual assume a certain skill level and knowledge of Ford-specific diagnostic practices. For information about these practices,
REFER to: Diagnostic Methods (100-00 General Information, Description and Operation).

Normal Operation and Fault Conditions

REFER to: Information and Entertainment System - System Operation and Component Description (415-00C Information and Entertainment System - General Information - Vehicles With: SYNC/Sony AM/FM/CD, Description and Operation).
See SYNC® System and Voice Recognition.

Possible Sources

- Customer's setting
- Wiring, terminals, or connectors
- APIM
- Audio DSP module

PINPOINT TEST R : THE SYNC® SYSTEM VOICE OR TONE PROMPTS, TEXT-TO-SPEECH (TTS) FEATURE, OR

RINGTONES ARE INOPERATIVE OR DO NOT OPERATE CORRECTLY

R1 CHECK THE AUDIBLE PROMPT SETTING

- Operate the audio system in SYNC® mode.
- Verify the audible prompts are enabled. Refer to "SYNC® Voice Recognition Feature" in the Owner's Literature.
- Operate the VOICE button on the steering wheel controls and observe the SYNC® audible prompt.

Does the SYNC® system produce an audible prompt correctly?

Yes	The system is operating correctly at this time. The concern was caused by a customer's setting. INSTRUCT the customer in the correct operation of the audible prompt feature.
No	GO to R2

R2 CHECK FOR A VOLTAGE SIGNAL FROM THE APIM (SYNC MODULE)

NOTICE: This pinpoint test step directs testing circuits using a back-probe method. Use the special back-probe tool POM6411. Do not force test leads or other probes into connectors. Adequate care must be exercised to avoid connector terminal damage while ensuring that good electrical contact is made with the circuit or terminal. Failure to follow these instructions may cause damage to wiring, terminals, or connectors, and may cause subsequent electrical faults.

- Operate the audio system in SYNC® mode.
- While operating the VOICE button repeatedly, measure the AC voltage by backprobing audio DSP module C4326A:

Positive Lead	Measurement / Action	Negative Lead
C4326A-5	~V	C4326A-15

Is a fluctuating AC voltage present each time the VOICE switch is operated?

Yes	GO to R7
No	GO to R3

R3 CHECK THE AUDIBLE PROMPT CIRCUITS FOR A SHORT TO VOLTAGE

- Ignition OFF.
- Disconnect: Audio DSP Module C4326A.
- Disconnect: APIM C2383.
- Ignition ON.
- Measure:

Positive Lead	Measurement / Action	Negative Lead
C4326A-5	+V−	—
C4326A-15	+V−	—

Is any voltage present?

Yes	REPAIR the circuit in question.
No	GO to R4

R4 CHECK THE AUDIBLE PROMPT CIRCUITS FOR A SHORT TO GROUND

- Ignition OFF.
- Measure:

Positive Lead	Measurement / Action	Negative Lead
C4326A-5	Ω	—
C4326A-15	Ω	—

Are the resistances greater than 10,000 ohms?

Yes	GO to R5
No	REPAIR the circuit in question.

R5 CHECK THE AUDIBLE PROMPT CIRCUITS FOR AN OPEN

- Measure:

Positive Lead	Measurement / Action	Negative Lead
C4326A-5	Ω	C2383-3
C4326A-15	Ω	C2383-4

Are the resistances less than 3 ohms?

Yes	GO to R6
No	REPAIR the circuit in question.

R6 CHECK FOR CORRECT APIM (SYNC MODULE) OPERATION

- Disconnect and inspect the APIM connector.
- Repair:
  - corrosion (install new connector or terminals - clean module pins)
  - damaged pins - install new terminals/pins
  - pushed-out pins - install new pins as necessary
- Reconnect the APIM connector. Make sure it seats and latches correctly.
- Wait at least 2 minutes for the APIM to re-initialize.
- Operate the system and determine if the concern is still present.

Is the concern still present?

Yes	CHECK OASIS for any applicable Technical Service Bulletins (TSBs). If a TSB exists for this concern,

	discontinue this test and follow TSB instructions. If no Technical Service Bulletins (TSBs) address this concern, INSTALL a new APIM . REFER to: SYNC Module [APIM] (415-00C Information and Entertainment System - General Information - Vehicles With: SYNC/Sony AM/FM/CD, Removal and Installation).
No	The system is operating correctly at this time. The concern may have been caused by module connections. ADDRESS the root cause of any connector or pin issues.

R7 CHECK FOR CORRECT AUDIO DSP (AUDIO DIGITAL SIGNAL PROCESSING MODULE) MODULE OPERATION

- Ignition OFF.
- Disconnect and inspect all the audio DSP module connectors.
- Repair:
  - corrosion (install new connectors or terminals - clean module pins)
  - damaged or bent pins - install new terminals pins
  - pushed-out pins - install new pins as necessary
- Reconnect the audio DSP module connectors. Make sure they seat and latch correctly.
- Operate the system and determine if the concern is still present.

Is the concern still present?

Yes	CHECK OASIS for any applicable Technical Service Bulletins (TSBs). If a TSB exists for this concern, discontinue this test and follow TSB instructions. If no Technical Service Bulletins (TSBs) address this concern, INSTALL a new audio DSP module. REFER to: Audio Digital Signal Processing (DSP) Module (415-00C Information and Entertainment System - General Information - Vehicles With: SYNC/Sony AM/FM/CD, Removal and Installation).
No	The system is operating correctly at this time. The concern may have been caused by module connections. ADDRESS the root cause of any connector or pin issues.

Services Features Are Inoperative Or Inaccurate (Traffic, Directions, And Information)

Diagnostic Overview

Diagnostics in this manual assume a certain skill level and knowledge of Ford-specific diagnostic practices. For information about these practices,
REFER to: Diagnostic Methods (100-00 General Information, Description and Operation).

Normal Operation and Fault Conditions

REFER to: Information and Entertainment System - System Operation and Component Description (415-00C Information and Entertainment System - General Information - Vehicles With: SYNC/Sony AM/FM/CD, Description and Operation).
See SYNC® Traffic, Directions and Information.

Possible Sources

- Unregistered SYNC® owner account
- Unregistered or expired SYNC® Services subscription
- Unregistered mobile phone number
- Mobile phone being used not selected as "Active"
- SYNC® Services server
- APIM
- GPSM

PINPOINT TEST S : ALL SYNC® SERVICES FEATURES ARE INOPERATIVE OR INACCURATE (TRAFFIC,

DIRECTIONS, AND INFORMATION)

S1 VERIFY THE CUSTOMER'S SUBSCRIPTION AND PHONE NUMBER

- **NOTE:** *Prior to performing this pinpoint test step, inquire with the customer about SYNC® traffic, directions, and information service registration.*

  Verify that the customer has an active subscription and the correct phone number is registered on the SYNC® website. Refer to www.syncmyride.com.

Is the subscription activated and the correct phone number registered?

Yes	GO to S2
No	If the subscription is not activated, INFORM the customer that in order for SYNC® traffic, directions, and information to function, the subscription needs to be activated on the SYNC® website. REFER to www.syncmyride.com. If the phone number is incorrect, INFORM the customer that the correct phone number must be registered on the SYNC® website. REFER to www.syncmyride.com.

S2 CHECK FOR APIM (SYNC MODULE) DIAGNOSTIC TROUBLE CODES (DTCS)

- Ignition ON
- Using a diagnostic scan tool, perform the APIM self-test.

Are any Diagnostic Trouble Codes (DTCs) recorded in the APIM ?

Yes	REFER to: Information and Entertainment System (415-00C Information and Entertainment System - General Information - Vehicles With: SYNC/Sony AM/FM/CD, Diagnosis and Testing). See DTC Chart: APIM .
No	GO to S3

S3 CHECK FOR GPSM (GLOBAL POSITIONING SYSTEM MODULE) DIAGNOSTIC TROUBLE CODES (DTCS)

- Using a diagnostic scan tool, perform the GPSM self-test.

Are any Diagnostic Trouble Codes (DTCs) recorded in the GPSM ?

Yes	REFER to: Information and Entertainment System (415-00C Information and Entertainment System - General Information - Vehicles With: SYNC/Sony AM/FM/CD, Diagnosis and Testing). See DTC Chart: GPSM .
No	GO to S4

S4 VERIFY THE CUSTOMER'S PHONE CONNECTION TO SYNC® TRAFFIC, DIRECTIONS, AND INFORMATION SERVICES

- Advise the customer to connect their phone to SYNC® traffic, directions, and information services. Caller ID blocking must be disabled on the customer's phone. Refer to the Owner's Literature.
- Operate a SYNC® traffic, directions, and information services feature.
- Verify that the phone call is placed and that the phone is connected to SYNC® traffic, directions, and information services.

Does the phone connect to SYNC® traffic, directions, and information services and operate correctly?

Yes	GO to S5

No	GO to Pinpoint Test Y

S5 OBSERVE THE SYNC® TRAFFIC, DIRECTIONS, AND INFORMATION SERVICES SUBSCRIPTION COMMERCIAL

- Once the customer's phone is connected to SYNC® traffic, directions, and information services, observe the subscription commercial.

Does the SYNC® traffic, directions, and information services subscription commercial repeat with no selection option?

Yes	There is a potential SYNC® traffic, directions, and information services issue, and the problem does not reside in the vehicles audio system. CONTACT the Ford Technical Hotline for assistance.
No	GO to S6

S6 CHECK THE OPERATION OF THE DIRECTIONS FROM SYNC® TRAFFIC, DIRECTIONS, AND INFORMATION SERVICES

- When prompted, select directions from SYNC® traffic, directions, and information services and observe the audible prompts from the audio system.

Is a single chime, audible prompt, then a short chime heard, indicating the navigation route is being sent to the vehicle?

Yes	SYNC® traffic, directions, and information services is operating correctly at this time.
No	If a single chime, audible prompt, then a repeating chime is heard, indicating the navigation route is being sent to the vehicle, GO to S7 If no chime or audible prompt is heard, indicating that the system was unable to locate the vehicle, there is a potential SYNC® traffic, directions, and information services issue. The problem does not reside in the vehicles audio system. CONTACT the Ford Technical Hotline for assistance.

S7 REPROGRAM THE APIM (SYNC MODULE)

- Perform the APIM Standard Programming and force a Consumer Interface Processor (CIP) reflash.
  REFER to: SYNC Module [APIM] Standard Programming (415-00C Information and Entertainment System - General Information - Vehicles With: SYNC/Sony AM/FM/CD, General Procedures).
- Once the APIM programming is complete and the system has re-initialized, confirm that SYNC® traffic, directions, and information services operates correctly.

Does SYNC® traffic, directions, and information services operate correctly?

Yes	SYNC® traffic, directions, and information services is operating correctly at this time. The concern was resolved by reflashing the APIM .
No	GO to S8

S8 CHECK FOR CORRECT APIM (SYNC MODULE) OPERATION

- Ignition OFF.
- Disconnect and inspect the APIM connector.
- Repair:
  - corrosion (install new connector or terminals – clean module pins)
  - damaged pins - install new terminals/pins
  - pushed-out pins - install new pins as necessary

- Reconnect the APIM connector. Make sure it seats and latches correctly.
- Operate the system and determine if the concern is still present.

Is the concern still present?

Yes	CHECK OASIS for any applicable Technical Service Bulletins (TSBs). If a TSB exists for this concern, discontinue this test and follow TSB instructions. If no Technical Service Bulletins (TSBs) address this concern, INSTALL a new APIM . REFER to: SYNC Module [APIM] (415-00C Information and Entertainment System - General Information - Vehicles With: SYNC/Sony AM/FM/CD, Removal and Installation). If the concern is still present, INSTALL a new GPSM . REFER to: Global Positioning System Module (GPSM) (415-00C Information and Entertainment System - General Information - Vehicles With: SYNC/Sony AM/FM/CD, Removal and Installation).
No	The system is operating correctly at this time. The concern may have been caused by module connections. ADDRESS the root cause of any connector or pin issues.

The Voice Recognition Is Inoperative or Does Not Operate Correctly

Refer to Wiring Diagrams Cell 130 for schematic and connector information.

Diagnostic Overview

Diagnostics in this manual assume a certain skill level and knowledge of Ford-specific diagnostic practices. For information about these practices,
REFER to: Diagnostic Methods (100-00 General Information, Description and Operation).

Normal Operation and Fault Conditions

REFER to: Information and Entertainment System - System Operation and Component Description (415-00C Information and Entertainment System - General Information - Vehicles With: SYNC/Sony AM/FM/CD, Description and Operation).
See Voice Recognition.

DTC Fault Trigger Conditions

DTC	Description	Fault Trigger Conditions
B116A:01	Handset Microphone: General Electrical Failure	Set by the APIM when it detects a short to voltage, short to ground, or an open on the microphone circuits.

Possible Sources

- Fuse
- Wiring, terminals, or connectors
- Steering wheel controls
- Microphone
- APIM

PINPOINT TEST T : THE VOICE RECOGNITION IS INOPERATIVE OR DOES NOT OPERATE CORRECTLY

T1 CHECK THE OPERATION OF THE STEERING WHEEL CONTROLS

- Operate the infotainment system in radio tuner AM / FM mode.
- Operate the VOICE switch on the steering wheel controls.

Does the infotainment system enter voice recognition mode?

Yes	GO to T2
No	Diagnose the lower steering wheel controls, GO to Pinpoint Test Z

T2 CHECK THE MICROPHONE CIRCUITS TO THE APIM (SYNC MODULE) FOR A SHORT TO VOLTAGE

- Ignition OFF.
- Disconnect: APIM C2383.
- Ignition ON.
- Measure:

Positive Lead	Measurement / Action	Negative Lead
C2383-12	V	—
C2383-13	V	—

Is any voltage present?

Yes	REPAIR the circuit in question.
No	GO to T3

T3 CHECK THE MICROPHONE CIRCUITS TO THE APIM (SYNC MODULE) FOR A SHORT TO GROUND

- Ignition OFF.
- Disconnect: Microphone.
- Measure:

Positive Lead	Measurement / Action	Negative Lead
C2383-12	Ω	—
C2383-13	Ω	—

Are the resistances greater than 10,000 ohms?

Yes	GO to T4
No	REPAIR the circuit in question.

T4 CHECK THE MICROPHONE CIRCUITS TO THE APIM (SYNC MODULE) FOR AN OPEN

- Measure:

Positive Lead	Measurement / Action	Negative Lead
C2383-12	Ω	C9221-A
C2383-13	Ω	C9221-B

Are the resistances less than 3 ohms?

Yes	GO to T5
No	REPAIR the circuit in question.

T5 ISOLATE THE MICROPHONE

- Install a new microphone.
  REFER to: Microphone - Vehicles With: SYNC (415-00B Information and Entertainment System - General Information - Vehicles With: AM/FM/CD/SYNC, Removal and Installation).
- Test the voice recognition for normal operation.

Is the voice recognition functioning correctly?

Yes	The system is operating correctly at this time. The concern was caused by an inoperative microphone.
No	GO to T6

T6 CHECK FOR CORRECT APIM (SYNC MODULE) OPERATION

- Ignition OFF.
- Disconnect and inspect the APIM connector.
- Repair:
  - corrosion (install new connector or terminals - clean module pins)
  - damaged pins - install new terminals/pins
  - pushed-out pins - install new pins as necessary
- Reconnect the APIM connector. Make sure they seat and latch correctly.
- Wait at least 2 minutes for the APIM to re-initialize.
- Operate the system and determine if the concern is still present.

Is the concern still present?

Yes	CHECK OASIS for any applicable Technical Service Bulletins (TSBs). If a TSB exists for this concern, discontinue this test and follow TSB instructions. If no Technical Service Bulletins (TSBs) address this concern, INSTALL a new APIM . REFER to: SYNC Module [APIM] (415-00C Information and Entertainment System - General Information - Vehicles With: SYNC/Sony AM/FM/CD, Removal and Installation).
No	The system is operating correctly at this time. The concern may have been caused by module connections. ADDRESS the root cause of any connector or pin issues.

All Media Hub Functions Are Inoperative

Diagnostic Overview

Diagnostics in this manual assume a certain skill level and knowledge of Ford-specific diagnostic practices. For information about these practices,
REFER to: Diagnostic Methods (100-00 General Information, Description and Operation).

Normal Operation and Fault Conditions

REFER to: Information and Entertainment System - System Operation and Component Description (415-00C Information and Entertainment System - General Information - Vehicles With: SYNC/Sony AM/FM/CD, Description and Operation).
See Media Hub, Composite Audio-Video Input Mode, SD (Secure Digital) Card Mode, and USB Mode.

The media hub requires a power and ground circuit from the APIM to operate. Loss of power or ground disables all media hub functionality.

Possible Sources

- Device conflict
- Wiring, terminals, or connectors
- Media hub
- APIM

PINPOINT TEST U : ALL MEDIA HUB FUNCTIONS ARE INOPERATIVE

U1 CHECK FOR APIM (SYNC MODULE) BATTERY VOLTAGE OUT-OF-RANGE DIAGNOSTIC TROUBLE CODES (DTCS)

- Using a diagnostic scan tool, perform the APIM self-test.

Are any low or high voltage Diagnostic Trouble Codes (DTCs) recorded in the APIM ?

Yes	For DTC U3003:16, GO to Pinpoint Test AM For DTC U3003:17, GO to Pinpoint Test AN
No	GO to U2

U2 RESET THE APIM (SYNC MODULE)

- Remove any devices connected to the media hub.
- Carry out an APIM power reset by disconnecting the battery for 5 minutes, then reconnecting it.
- Wait at least 2 minutes for the APIM to re-initialize.
- Test the system for normal operation.

Does the system operate correctly?

Yes	The system is operating correctly at this time. The concern was corrected by performing the APIM power reset.
No	GO to U3

U3 CHECK THE MEDIA HUB VOLTAGE SUPPLY CIRCUIT

- Ignition OFF.
- Disconnect: Media Hub C3618.
- Ignition ON.
- Measure:

Positive Lead	Measurement / Action	Negative Lead

C3618-1	V	—

Is the voltage greater than 11 volts?

Yes	GO to U4
No	GO to U5

U4 CHECK THE MEDIA HUB GROUND CIRCUIT

- Measure:

Positive Lead	Measurement / Action	Negative Lead
C3618-1	V	C3618-10

Is the voltage greater than 11 volts?

Yes	Install a new media hub. REFER to: Media Hub (415-00C Information and Entertainment System - General Information - Vehicles With: SYNC/Sony AM/FM/CD, Removal and Installation).
No	GO to U5

U5 CHECK THE MEDIA HUB VOLTAGE SUPPLY CIRCUIT AND GROUND CIRCUIT FOR A SHORT TOGETHER

- Ignition OFF.
- Disconnect: APIM C2383.
- Measure:

Positive Lead	Measurement / Action	Negative Lead
C3618-1	Ω	C3618-10

Is the resistance greater than 10,000 ohms?

Yes	GO to U6
No	Repair the circuit in question.

U6 CHECK THE MEDIA HUB VOLTAGE SUPPLY CIRCUIT AND GROUND CIRCUIT FOR AN OPEN

- Measure:

Positive Lead	Measurement / Action	Negative Lead
	Ω	

C3618-1		C2383-8
C3618-10	Ω	C2383-38

Are the resistances less than 3 ohms?

Yes	GO to U7
No	Repair the circuit in question.

U7 CHECK THE MEDIA HUB VOLTAGE SUPPLY CIRCUIT FOR A SHORT TO GROUND

- Measure:

Positive Lead	Measurement / Action	Negative Lead
C3618-1	Ω	—

Is the resistance greater than 10,000 ohms?

Yes	GO to U8
No	REPAIR the circuit.

U8 CHECK THE MEDIA HUB GROUND CIRCUIT FOR A SHORT TO VOLTAGE

- Ignition ON.
- Measure:

Positive Lead	Measurement / Action	Negative Lead
C3618-10	V	—

Is any voltage present?

Yes	REPAIR the circuit.
No	GO to U9

U9 CHECK FOR CORRECT APIM (SYNC MODULE) OPERATION

- Ignition OFF.
- Disconnect and inspect the APIM connector.
- Repair:
  - corrosion (install new connectors or terminals - clean module pins)
  - damaged or bent pins - install new terminals pins
  - pushed-out pins - install new pins as necessary
- Reconnect the APIM connector. Make sure it seats and latches correctly.

- Operate the system and determine if the concern is still present.

Is the concern still present?

Yes	CHECK OASIS for any applicable Technical Service Bulletins (TSBs). If a TSB exists for this concern, discontinue this test and follow TSB instructions. If no Technical Service Bulletins (TSBs) address this concern, INSTALL a new APIM . REFER to: SYNC Module [APIM] (415-00C Information and Entertainment System - General Information - Vehicles With: SYNC/Sony AM/FM/CD, Removal and Installation).
No	The system is operating correctly at this time. The concern may have been caused by module connections. ADDRESS the root cause of any connector or pin issues.

The USB Port Is Inoperative Or Does Not Operate Correctly

Diagnostic Overview

Diagnostics in this manual assume a certain skill level and knowledge of Ford-specific diagnostic practices. For information about these practices,
REFER to: Diagnostic Methods (100-00 General Information, Description and Operation).

Normal Operation and Fault Conditions

REFER to: Information and Entertainment System - System Operation and Component Description (415-00C Information and Entertainment System - General Information - Vehicles With: SYNC/Sony AM/FM/CD, Description and Operation).
See Media Hub and USB Mode.

Although there are two USB ports, there is only one USB cable connecting the media hub to the APIM . The USB cable is used for data transfer; and does not supply power. The Multi-Media Interface Tester 105-00120 is powered by the USB port.

USB and Secure Digital (SD) card data is transmitted to the APIM through the USB cable.

DTC Fault Trigger Conditions

DTC	Description	Fault Trigger Conditions
B1252:11	USB Port: Circuit Short to Ground	Set by the APIM when a short to ground or over-current condition is detected in the USB cable. This can be caused by a fault in the USB cable, USB port, or by the customer's USB or SD card device.
B1252:13	USB Port: Circuit Open	Set by the APIM when it detects an open in the USB cable.

Possible Sources

- Device conflict
- USB cable
- Media hub
- APIM

PINPOINT TEST V : THE USB (UNIVERSAL SERIAL BUS) PORT IS INOPERATIVE OR DOES NOT OPERATE

CORRECTLY

V1 CHECK THE USB (UNIVERSAL SERIAL BUS) PORT FOR POWER OUTPUT

- Connect: Multi-Media Interface Tester 105-00120.

Does the Multi-Media Interface Tester 105-00120 power on from both USB ports?

Yes	GO to V2
No	If the Multi-Media Interface Tester 105-00120 powers on from only one USB port, INSTALL a new media hub. REFER to: Media Hub (415-00C Information and Entertainment System - General Information - Vehicles With: SYNC/Sony AM/FM/CD, Removal and Installation). If the Multi-Media Interface Tester 105-00120 does not power on from either USB port, GO to Pinpoint Test U

V2 RESET THE APIM (SYNC MODULE)

- Remove any devices connected to the media hub.
- Carry out an APIM power reset by disconnecting the battery for 5 minutes, then reconnecting it.
- Wait at least 2 minutes for the APIM to re-initialize.
- Connect: Multi-Media Interface Tester 105-00120.
- Using the Multi-Media Interface Tester 105-00120, attempt to play an audio file using each USB port.

Is the audio output OK for each USB port?

Yes	The system is operating correctly at this time. The concern was corrected by performing the APIM power reset.
No	If the audio output is not OK from one USB port, Install a new media hub. REFER to: Media Hub (415-00C Information and Entertainment System - General Information - Vehicles With: SYNC/Sony AM/FM/CD, Removal and Installation). If the audio output is not OK from both USB ports, GO to V3

V3 CHECK THE SECURE DIGITAL (SD) CARD SLOT FUNCTIONALITY

- Using a known good Secure Digital (SD) card, attempt to play an audio file using the Secure Digital (SD) card slot.

Is the audio output OK for the Secure Digital (SD) card slot?

Yes	Install a new media hub. REFER to: Media Hub (415-00C Information and Entertainment System - General Information - Vehicles With: SYNC/Sony AM/FM/CD, Removal and Installation).
No	GO to V4

V4 CHECK THE APIM (SYNC MODULE) FOR DTC (DIAGNOSTIC TROUBLE CODE) B1252:11 OR DTC (DIAGNOSTIC TROUBLE CODE) B1252:13

- Using a diagnostic scan tool, clear the APIM Diagnostic Trouble Codes (DTCs).
- Perform the APIM self-test.

Is DTC B1252:11 or DTC B1252:13 present?

Yes	GO to V5
No	GO to V7

V5 INSPECT THE USB (UNIVERSAL SERIAL BUS) CABLE, MEDIA HUB, AND APIM (SYNC MODULE)

- Ignition OFF.
- Disconnect: USB Cable At Media Hub.
- Disconnect: USB Cable At APIM .
- Inspect the USB cable ends, media hub USB connector port, and APIM USB connector port for damage. Remove any debris.

Is any damage present?

Yes	For the USB cable, Install a new USB cable. REFER to: SYNC Module [APIM] to Universal Serial Bus (USB) Port Cable (415-00C Information and Entertainment System - General Information - Vehicles With: SYNC/Sony AM/FM/CD, Removal and Installation). For the media hub, Install a new media hub. REFER to: Media Hub (415-00C Information and Entertainment System - General Information - Vehicles With: SYNC/Sony AM/FM/CD, Removal and Installation). For the APIM , Install a new APIM . REFER to: SYNC Module [APIM] (415-00C Information and Entertainment System - General Information - Vehicles With: SYNC/Sony AM/FM/CD, Removal and Installation).
No	GO to V6

V6 CHECK EACH USB (UNIVERSAL SERIAL BUS) PORT FOR FUNCTIONALITY

- Connect: USB Cable At Media Hub.
- Connect: USB Cable At APIM .
- Connect: Multi-Media Interface Tester 105-00120.
- Using the Multi-Media Interface Tester 105-00120, attempt to play an audio file using each USB port.

Is the audio output OK for each USB port?

Yes	The system is operating correctly at this time. The concern was caused by the USB connector not being seated correctly.
No	GO to V7

V7 ISOLATE THE USB (UNIVERSAL SERIAL BUS) CABLE

- Install a new USB cable.
  REFER to: SYNC Module [APIM] to Universal Serial Bus (USB) Port Cable (415-00C Information and Entertainment System - General Information - Vehicles With: SYNC/Sony AM/FM/CD, Removal and Installation).
- Connect: Multi-Media Interface Tester 105-00120.
- Using the Multi-Media Interface Tester 105-00120, attempt to play an audio file using each USB port.

Is the audio output OK for each USB port?

Yes	The system is operating correctly at this time. The concern was caused by an inoperative USB cable.
No	GO to V8

V8 CHECK FOR CORRECT APIM (SYNC MODULE) OPERATION

- Ignition OFF.
- Disconnect and inspect the APIM connector.
- Repair:
  - corrosion (install new connectors or terminals - clean module pins)
  - damaged or bent pins - install new terminals pins
  - pushed-out pins - install new pins as necessary
- Reconnect the APIM connector. Make sure it seats and latches correctly.
- Operate the system and determine if the concern is still present.

Is the concern still present?

Yes	CHECK OASIS for any applicable Technical Service Bulletins (TSBs). If a TSB exists for this concern, discontinue this test and follow TSB instructions. If no Technical Service Bulletins (TSBs) address this concern, INSTALL a new APIM . REFER to: SYNC Module [APIM] (415-00C Information and Entertainment System - General Information - Vehicles With: SYNC/Sony AM/FM/CD, Removal and Installation).
No	The system is operating correctly at this time. The concern may have been caused by module connections. ADDRESS the root cause of any connector or pin issues.

The Secure Digital (SD) Card Slot Is Inoperative

Diagnostic Overview

Diagnostics in this manual assume a certain skill level and knowledge of Ford-specific diagnostic practices. For information about these practices,
REFER to: Diagnostic Methods (100-00 General Information, Description and Operation).

Normal Operation and Fault Conditions

REFER to: Information and Entertainment System - System Operation and Component Description (415-00C Information and Entertainment System - General Information - Vehicles With: SYNC/Sony AM/FM/CD, Description and Operation).
See Media Hub and SD (Secure Digital) Card Mode.

Secure Digital (SD) card data is transmitted to the APIM through the USB cable.

DTC Fault Trigger Conditions

DTC	Description	Fault Trigger Conditions
B1252:11	USB Port: Circuit Short to Ground	Set by the APIM when a short to ground or over-current condition is detected in the USB cable. This can be caused by a fault in the USB cable, USB port, or by the customer's USB or SD card device.
B1252:13	USB Port: Circuit Open	Set by the APIM when it detects an open in the USB cable.

Possible Sources

- Device conflict
- USB cable
- Media hub
- APIM

PINPOINT TEST W : THE SECURE DIGITAL (SD) CARD SLOT IS INOPERATIVE

W1 RESET THE APIM (SYNC MODULE)

- Remove any devices connected to the media hub.
- Carry out an APIM power reset by disconnecting the battery for 5 minutes, then reconnecting it.
- Wait at least 2 minutes for the APIM to re-initialize.
- Using a known good Secure Digital (SD) card, attempt to play an audio file using the Secure Digital (SD) card slot.

Is the audio output OK for the Secure Digital (SD) card slot?

Yes	The system is operating correctly at this time. The concern was corrected by performing the APIM power reset.
No	GO to W2

W2 CHECK THE USB (UNIVERSAL SERIAL BUS) PORTS FOR FUNCTIONALITY

- Using the Multi-Media Interface Tester 105-00120, attempt to play an audio file using each USB port.

Is the audio output OK for each USB port?

Yes	Install a new media hub. REFER to: Media Hub (415-00C Information and Entertainment System - General Information - Vehicles With: SYNC/Sony AM/FM/CD, Removal and Installation).
No	If the audio output is not OK from one USB port, Install a new media hub. REFER to: Media Hub (415-00C Information and Entertainment System - General Information - Vehicles With: SYNC/Sony AM/FM/CD, Removal and Installation). If the audio output is not OK from both USB ports, GO to W3

W3 CHECK THE APIM (SYNC MODULE) FOR DTC (DIAGNOSTIC TROUBLE CODE) B1252:11 OR DTC (DIAGNOSTIC TROUBLE CODE) B1252:13

- Using a diagnostic scan tool, clear the APIM Diagnostic Trouble Codes (DTCs).
- Perform the APIM self-test.

Is DTC B1252:11 or DTC B1252:13 present?

Yes	GO to W4
No	Isolate the USB cable. INSTALL a new USB cable. REFER to: SYNC Module [APIM] to Universal Serial Bus (USB) Port Cable (415-00C Information and Entertainment System - General Information - Vehicles With: SYNC/Sony AM/FM/CD, Removal and Installation). Retest the system for normal operation. If the concern is still present, GO to W6

W4 INSPECT USB (UNIVERSAL SERIAL BUS) CABLE, MEDIA HUB, AND APIM (SYNC MODULE)

- Ignition OFF.

- Disconnect: USB Cable At Media Hub.
- Disconnect: USB Cable At APIM .
- Inspect the USB cable ends, media hub USB connector port, and APIM USB connector port for damage and remove any debris.

Is any damage present?

Yes	For the USB cable, Install a new USB cable. REFER to: SYNC Module [APIM] to Universal Serial Bus (USB) Port Cable (415-00C Information and Entertainment System - General Information - Vehicles With: SYNC/Sony AM/FM/CD, Removal and Installation). For the media hub, Install a new media hub. REFER to: Media Hub (415-00C Information and Entertainment System - General Information - Vehicles With: SYNC/Sony AM/FM/CD, Removal and Installation). For the APIM , Install a new APIM . REFER to: SYNC Module [APIM] (415-00C Information and Entertainment System - General Information - Vehicles With: SYNC/Sony AM/FM/CD, Removal and Installation).
No	GO to W5

W5 RECHECK FOR APIM (SYNC MODULE) DTC (DIAGNOSTIC TROUBLE CODE) B1252:11 OR DTC (DIAGNOSTIC TROUBLE CODE) B1252:13

- Using a diagnostic scan tool, clear the APIM Diagnostic Trouble Codes (DTCs).
- Perform the APIM self-test.

Is DTC B1252:11 or DTC B1252:13 present?

Yes	GO to W6
No	Isolate the USB cable. Install a new USB cable. REFER to: SYNC Module [APIM] to Universal Serial Bus (USB) Port Cable (415-00C Information and Entertainment System - General Information - Vehicles With: SYNC/Sony AM/FM/CD, Removal and Installation). Retest the system for normal operation. If the concern is still present, GO to W6

W6 CHECK FOR CORRECT APIM (SYNC MODULE) OPERATION

- Ignition OFF.
- Disconnect and inspect the APIM connector.
- Repair:
  - corrosion (install new connectors or terminals - clean module pins)
  - damaged or bent pins - install new terminals pins
  - pushed-out pins - install new pins as necessary
- Reconnect the APIM connector. Make sure it seats and latches correctly.
- Operate the system and determine if the concern is still present.

Is the concern still present?

Yes	CHECK OASIS for any applicable Technical Service Bulletins (TSBs). If a TSB exists for this concern, discontinue this test and follow TSB instructions. If no Technical Service Bulletins (TSBs) address this concern, INSTALL a new APIM . REFER to: SYNC Module [APIM] (415-00C Information and Entertainment System - General Information - Vehicles With: SYNC/Sony AM/FM/CD, Removal and Installation).

No	The system is operating correctly at this time. The concern may have been caused by module connections. ADDRESS the root cause of any connector or pin issues.

The RCA Jacks Are Inoperative Or Have Poor Sound Quality

Diagnostic Overview

Diagnostics in this manual assume a certain skill level and knowledge of Ford-specific diagnostic practices. For information about these practices,
REFER to: Diagnostic Methods (100-00 General Information, Description and Operation).

Normal Operation and Fault Conditions

REFER to: Information and Entertainment System - System Operation and Component Description (415-00C Information and Entertainment System - General Information - Vehicles With: SYNC/Sony AM/FM/CD, Description and Operation).
See Media Hub and Composite Audio-Video Input Mode.

The data transmitted through the RCA cables to the media hub is sent to the APIM through dedicated audio and video circuits.

Possible Sources

- Device conflict
- Wiring, terminals, or connectors
- Media hub
- APIM

PINPOINT TEST X : THE RCA JACKS ARE INOPERATIVE OR HAVE POOR SOUND QUALITY

X1 RESET THE APIM (SYNC MODULE)

- Remove any devices connected to the media hub.
- Carry out an APIM power reset by disconnecting the battery for 5 minutes, then reconnecting it.
- Wait at least 2 minutes for the APIM to re-initialize.
- Using the Multi-Media Interface Tester 105-00120 and RCA Adapter 105-00121, attempt to play audio content using the RCA jacks.

Is the audio output OK for the RCA jacks?

Yes	The system is operating correctly at this time. The concern was corrected by performing the APIM power reset.
No	GO to X2

X2 CHECK THE RCA CIRCUITS FOR A SHORT TO VOLTAGE

- Ignition OFF.
- Disconnect: Media Hub C3618.
- Disconnect: APIM C2383.
- Ignition ON.
- Measure:

Positive Lead	Measurement / Action	Negative Lead
C3618-2		—

C3618-3		—
C3618-4		—
C3618-5		—
C3618-6		—
C3618-9		—
C3618-11		—
C3618-12		—

Is any voltage present?

Yes	REPAIR the circuit in question.
No	GO to X3

X3 CHECK THE RCA CIRCUITS FOR A SHORT TO GROUND

- Ignition OFF.
- Measure:

Positive Lead	Measurement / Action	Negative Lead
C3618-2	Ω	—
C3618-3	Ω	—
C3618-4	Ω	—
C3618-5	Ω	—
C3618-6	Ω	—
C3618-9	Ω	—
C3618-11	Ω	—
C3618-12	Ω	—

Are the resistances greater than 10,000 ohms?

Yes	GO to X4
No	REPAIR the circuit in question.

X4 CHECK THE RCA CIRCUITS FOR AN OPEN

- Measure:

Positive Lead	Measurement / Action	Negative Lead
C3618-2	Ω	C2383-36
C3618-3	Ω	C2383-34

C3618-4	Ω	C2383-9
C3618-5	Ω	C2383-10
C3618-6	Ω	C2383-11
C3618-9	Ω	C2383-35
C3618-11	Ω	C2383-28
C3618-12	Ω	C2383-29

Are the resistance less than 3 ohms?

Yes	INSTALL a new media hub. REFER to: Media Hub (415-00C Information and Entertainment System - General Information - Vehicles With: SYNC/Sony AM/FM/CD, Removal and Installation). Retest the system for normal operation. If the concern is still present, GO to X5
No	REPAIR the circuit in question.

X5 CHECK FOR CORRECT APIM (SYNC MODULE) OPERATION

- Ignition OFF.
- Disconnect and inspect the APIM connector.
- Repair:
  - corrosion (install new connectors or terminals - clean module pins)
  - damaged or bent pins - install new terminals pins
  - pushed-out pins - install new pins as necessary
- Reconnect the APIM connector. Make sure it seats and latches correctly.
- Operate the system and determine if the concern is still present.

Is the concern still present?

Yes	CHECK OASIS for any applicable Technical Service Bulletins (TSBs). If a TSB exists for this concern, discontinue this test and follow TSB instructions. If no Technical Service Bulletins (TSBs) address this concern, INSTALL a new APIM . REFER to: SYNC Module [APIM] (415-00C Information and Entertainment System - General Information - Vehicles With: SYNC/Sony AM/FM/CD, Removal and Installation).
No	The system is operating correctly at this time. The concern may have been caused by module connections. ADDRESS the root cause of any connector or pin issues.

Unable To Pair Bluetooth Device Or The Bluetooth Functionality Is Inoperative

Diagnostic Overview

Diagnostics in this manual assume a certain skill level and knowledge of Ford-specific diagnostic practices. For information about these practices,
REFER to: Diagnostic Methods (100-00 General Information, Description and Operation).

Normal Operation and Fault Conditions

REFER to: Information and Entertainment System - System Operation and Component Description (415-00C Information and Entertainment System - General Information - Vehicles With: SYNC/Sony AM/FM/CD, Description and Operation).

See Bluetooth Mode.

Possible Sources

- Incompatible Bluetooth device
- Customer error
- Customer's Bluetooth device
- APIM

PINPOINT TEST Y : UNABLE TO PAIR BLUETOOTH DEVICE OR THE BLUETOOTH FUNCTIONALITY IS INOPERATIVE

Y1 CHECK THE BLUETOOTH CONNECTION

NOTE: *Carrying out a Master Reset returns all preference settings to the factory defaults, erases the phone book and call histories, and deletes any devices paired with the SYNC® system.*

- Connect: Multi-Media Interface Tester 105-00120.
- Using the Multi-Media Interface Tester 105-00120, connect to the SYNC® system using Bluetooth. Follow the tool instructions.
- Using a diagnostic scan tool, view the APIM Parameter Identifications (PIDs).
- Monitor the Bluetooth device paired PID (BT_PAIR) and the Bluetooth device connected PID (BT_CONN).

Do the Parameter Identifications (PIDs) both read "Yes"?

Yes	The SYNC® system is operating correctly at this time. CARRY OUT a SYNC® system Master Reset. REFER to the Owner's Literature. REVIEW the pairing process with the customer. If the customer's device still does not pair, the fault is with the customer's device.
No	GO to Y2

Y2 CHECK FOR CORRECT APIM (SYNC MODULE) OPERATION

- Ignition OFF.
- Disconnect and inspect the APIM connector.
- Repair:
  - corrosion (install new connector or terminals - clean module pins)
  - damaged pins - install new terminals/pins
  - pushed-out pins - install new pins as necessary
- Reconnect the APIM connector. Make sure it seats and latches correctly.
- Wait at least 2 minutes for the APIM to re-initialize.
- Operate the system and determine if the concern is still present.

Is the concern still present?

Yes	CHECK OASIS for any applicable Technical Service Bulletins (TSBs). If a TSB exists for this concern, discontinue this test and follow TSB instructions. If no Technical Service Bulletins (TSBs) address this concern, INSTALL a new APIM . REFER to: SYNC Module [APIM] (415-00C Information and Entertainment System - General Information - Vehicles With: SYNC/Sony AM/FM/CD, Removal and Installation).
No	The system is operating correctly at this time. The concern may have been caused by module connections. ADDRESS the root cause of any connector or pin issues.

The Lower Steering Wheel Controls Are Inoperative Or Do Not Operate Correctly

Refer to Wiring Diagrams Cell 130 for schematic and connector information.

Diagnostic Overview

Diagnostics in this manual assume a certain skill level and knowledge of Ford-specific diagnostic practices. For information about these practices,
REFER to: Diagnostic Methods (100-00 General Information, Description and Operation).

Normal Operation and Fault Conditions

REFER to: Information and Entertainment System - System Operation and Component Description (415-00C Information and Entertainment System - General Information - Vehicles With: SYNC/Sony AM/FM/CD, Description and Operation).
See Steering Wheel Switch Function.

DTC Fault Trigger Conditions

DTC	Description	Fault Trigger Conditions
C1D22:11	Steering Wheel Switch Right Module: Circuit Short to Ground	Set by the IPC when a short to ground is detected in the RH lower steering wheel switch circuits.
C1D22:23	Steering Wheel Switch Right Module: Signal Stuck Low	Set by the IPC when the RH lower steering wheel switch is stuck for more than 2 minutes during normal operation.

Possible Sources

- Wiring, terminals, or connectors
- Clockspring
- Steering wheel switch
- SASM
- IPC

PINPOINT TEST Z : THE LOWER STEERING WHEEL CONTROLS ARE INOPERATIVE OR DO NOT OPERATE CORRECTLY

Z1 CHECK THE RH (RIGHT-HAND) LOWER STEERING WHEEL SWITCH PARAMETER IDENTIFICATIONS (PIDS)

- Ignition ON.
- Using a diagnostic scan tool, view the IPC Parameter Identifications (PIDs).
- Monitor the lower steering wheel controls Parameter Identifications (PIDs) while pressing each RH lower steering wheel switch.
  - Voice (SW_VOICE)
  - Star 1 (SW_STAR)
  - Star 2 (SW_STAR)
  - Send call (SW_SEND)
  - End call (SW_END)

Do the Parameter Identification (PID) values agree with the switch positions?

Yes	GO to Z14
No	If one or more, but not all Parameter Identification (PID) values are incorrect or always read one particular switch position, INSTALL a new RH steering wheel switch. REFER to: Steering Wheel Multifunction Switch (211-05 Steering Column Switches, Removal and Installation).

	If all Parameter Identification (PID) values are incorrect or always read one particular switch position, GO to Z2

Z2 CHECK THE CIRCUITRY TO THE STEERING ANGLE SENSOR MODULE (SASM) FOR A SHORT TO GROUND

WARNING: Turn the ignition OFF and wait one minute to deplete the backup power supply. Failure to follow this instruction may result in serious personal injury or death in the event of an accidental deployment.

- Ignition OFF.
- Disconnect: IPC C220.
- Disconnect: SASM C226A.
- Measure:

Positive Lead	Measurement / Action	Negative Lead
C220-6	Ω	—
C220-8	Ω	—

Are the resistances greater than 10,000 ohms?

Yes	GO to Z3
No	Repair the circuit in question.

Z3 CHECK THE CIRCUITRY TO THE STEERING ANGLE SENSOR MODULE (SASM) FOR A SHORT TOGETHER

- Measure:

Positive Lead	Measurement / Action	Negative Lead
C220-6	Ω	C220-8

Is the resistance greater than 10,000 ohms?

Yes	GO to Z4
No	Repair the circuit in question.

Z4 CHECK THE CIRCUITRY TO THE STEERING ANGLE SENSOR MODULE (SASM) FOR AN OPEN

- Measure:

Positive Lead	Measurement / Action	Negative Lead
C220-6	Ω	C226A-8
C220-8	Ω	C226A-7

Are the resistances less than 3 ohms?

Yes	GO to Z5
No	Repair the circuit in question.

Z5 CHECK THE STEERING ANGLE SENSOR MODULE (SASM) FOR A SHORT TO GROUND

- Connect: SASM C226A.
- Remove the driver airbag.
  REFER to: Driver Airbag (501-20B Supplemental Restraint System, Removal and Installation).
- Disconnect: SASM C226B.
- Measure:

Positive Lead	Measurement / Action	Negative Lead
C220-6	Ω	—
C220-8	Ω	—

Are the resistances greater than 10,000 ohms?

Yes	GO to Z6
No	INSTALL a new SASM . REFER to: Steering Angle Sensor Module (SASM) (211-05 Steering Column Switches, Removal and Installation).

Z6 CHECK THE STEERING ANGLE SENSOR MODULE (SASM) FOR A SHORT TOGETHER

- Measure:

Positive Lead	Measurement / Action	Negative Lead
C220-6	Ω	C220-8

Is the resistance greater than 10,000 ohms?

Yes	GO to Z7
No	INSTALL a new SASM . REFER to: Steering Angle Sensor Module (SASM) (211-05 Steering Column Switches, Removal and Installation).

Z7 CHECK THE STEERING ANGLE SENSOR MODULE (SASM) FOR AN OPEN

- Measure:

Positive Lead	Measurement / Action	Negative Lead
C220-6	Ω	C226B-3
C220-8	Ω	C226B-2

Are the resistances less than 3 ohms?

Yes	GO to Z8
No	INSTALL a new SASM . REFER to: Steering Angle Sensor Module (SASM) (211-05 Steering Column Switches, Removal and Installation).

Z8 CHECK THE CLOCKSPRING FOR A SHORT TO GROUND

- Connect: SASM C226B.
- Disconnect: Clockspring C218B.
- Measure:

Positive Lead	Measurement / Action	Negative Lead
C220-6	Ω	—
C220-8	Ω	—

Are the resistances greater than 10,000 ohms?

Yes	GO to Z9
No	INSTALL a new clockspring. REFER to: Clockspring (501-20B Supplemental Restraint System, Removal and Installation).

Z9 CHECK THE CLOCKSPRING FOR A SHORT TOGETHER

- Measure:

Positive Lead	Measurement / Action	Negative Lead
C220-6	Ω	C220-8

Is the resistance greater than 10,000 ohms?

Yes	GO to Z10
No	INSTALL a new clockspring. REFER to: Clockspring (501-20B Supplemental Restraint System, Removal and Installation).

Z10 CHECK THE CLOCKSPRING FOR AN OPEN

- Measure:

Positive Lead	Measurement / Action	Negative Lead
C220-6	Ω	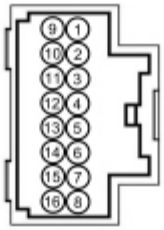 E144650 C218B-3 (Component Side)
C220-8	Ω	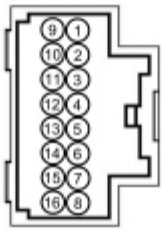 E144650 C218B-2 (Component Side)

Are the resistances less than 3 ohms?

Yes	GO to Z11
No	INSTALL a new clockspring. REFER to: Clockspring (501-20B Supplemental Restraint System, Removal and Installation).

Z11 CHECK THE STEERING WHEEL HARNESS FOR A SHORT TO GROUND

- Connect: Clockspring C218B.
- Disconnect: RH Lower Steering Wheel Switch C2367.
- Measure:

Positive Lead	Measurement / Action	Negative Lead
C220-6	Ω	—
C220-8	Ω	—

Are the resistances greater than 10,000 ohms?

Yes	GO to Z12
No	INSTALL a new steering wheel. REFER to: Steering Wheel (211-04 Steering Column, Removal and Installation).

Z12 CHECK THE STEERING WHEEL HARNESS FOR A SHORT TOGETHER

- Measure:

Positive Lead	Measurement / Action	Negative Lead
C220-6	Ω	C220-8

Is the resistance greater than 10,000 ohms?

Yes	GO to Z13
No	INSTALL a new steering wheel. REFER to: Steering Wheel (211-04 Steering Column, Removal and Installation).

Z13 CHECK THE STEERING WHEEL HARNESS FOR AN OPEN

- Measure:

Positive Lead	Measurement / Action	Negative Lead
C220-6	Ω	C2367-1
C220-8	Ω	C2367-4

Are the resistances less than 3 ohms?

Yes	INSTALL a new RH lower steering wheel switch. REFER to: Steering Wheel Multifunction Switch (211-05 Steering Column Switches, Removal and Installation).
No	INSTALL a new steering wheel. REFER to: Steering Wheel (211-04 Steering Column, Removal and Installation).

Z14 CHECK FOR CORRECT IPC (INSTRUMENT PANEL CLUSTER) OPERATION

- Disconnect and inspect the IPC connector.
- Repair:
  - corrosion (install new connector or terminals - clean module pins)
  - damaged pins - install new terminals/pins
  - pushed-out pins - install new pins as necessary
- Reconnect the IPC connector. Make sure it seats and latches correctly.
- Operate the system and determine if the concern is still present.

Is the concern still present?

Yes	CHECK OASIS for any applicable Technical Service Bulletins (TSBs). If a TSB exists for this concern, discontinue this test and follow TSB instructions. If no Technical Service Bulletins (TSBs) address this concern, INSTALL a new IPC .

	REFER to: Instrument Panel Cluster (IPC) (413-01 Instrumentation, Message Center and Warning Chimes, Removal and Installation).
No	The system is operating correctly at this time. The concern may have been caused by module connections. ADDRESS the root cause of any connector or pin issues.

The Upper Steering Wheel Controls Are Inoperative Or Do Not Operate Correctly

Refer to Wiring Diagrams Cell 130 for schematic and connector information.

Diagnostic Overview

Diagnostics in this manual assume a certain skill level and knowledge of Ford-specific diagnostic practices. For information about these practices,
REFER to: Diagnostic Methods (100-00 General Information, Description and Operation).

Normal Operation and Fault Conditions

REFER to: Information and Entertainment System - System Operation and Component Description (415-00C Information and Entertainment System - General Information - Vehicles With: SYNC/Sony AM/FM/CD, Description and Operation).
See Steering Wheel Switch Function.

DTC Fault Trigger Conditions

DTC	Description	Fault Trigger Conditions
B11BA:1C	Steering Wheel Audio Switch Pack: Circuit Voltage Out Of Range	Set by the APIM when a short to ground or open is detected in the RH upper steering wheel switch circuits.
B11BA:63	Steering Wheel Audio Switch Pack: Circuit / Component Protection Time-Out	Set by the APIM when the RH upper steering wheel switch is stuck for more than 2 minutes during normal operation.

Possible Sources

- Wiring, terminals, or connectors
- Clockspring
- Steering wheel switch
- APIM

PINPOINT TEST AA : THE UPPER STEERING WHEEL CONTROLS ARE INOPERATIVE OR DO NOT OPERATE CORRECTLY

AA1 CHECK THE RH (RIGHT-HAND) UPPER STEERING WHEEL SWITCH PARAMETER IDENTIFICATIONS (PIDS)

• Ignition ON.
• Using a diagnostic scan tool, view the APIM Parameter Identifications (PIDs).
• Monitor the steering wheel controls Parameter Identifications (PIDs) while pressing each RH upper steering wheel switch.
  • Mode (SW_MODE)
  • Seek+ (SW_SEEKPLUS)
  • Seek– (SW_SEEKMINUS
  • Vol+ (SW_VOLUP)
  • Vol- (SW_VOLDOWN)

Do the Parameter Identification (PID) values agree with the switch positions?

Yes	GO to AA14
No	If one or more, but not all Parameter Identification (PID) values are incorrect or always read one particular switch position, INSTALL a new RH steering wheel switch. REFER to: Steering Wheel Multifunction Switch (211-05 Steering Column Switches, Removal and Installation). If all Parameter Identification (PID) values are incorrect or always read one particular switch position, GO to AA2

AA2 CHECK THE CIRCUITRY TO THE CLOCKSPRING FOR A SHORT TO GROUND

WARNING: Turn the ignition OFF and wait one minute to deplete the backup power supply. Failure to follow this instruction may result in serious personal injury or death in the event of an accidental deployment.

- Ignition OFF.
- Disconnect: APIM C2383.
- Disconnect: Clockspring C218A.
- Measure:

Positive Lead	Measurement / Action	Negative Lead
C2383-47	Ω	—
C2383-46	Ω	—

Are the resistances greater than 10,000 ohms?

Yes	GO to AA3
No	Repair the circuit in question.

AA3 CHECK THE CIRCUITRY TO THE CLOCKSPRING FOR A SHORT TOGETHER

- Measure:

Positive Lead	Measurement / Action	Negative Lead
C2383-47	Ω	C2383-46

Is the resistance greater than 10,000 ohms?

Yes	GO to AA4
No	Repair the circuit in question.

AA4 CHECK THE CIRCUITRY TO THE CLOCKSPRING FOR AN OPEN

- Measure:

Positive Lead	Measurement / Action	Negative Lead
C2383-47	Ω	C218A-6
C2383-46	Ω	C218A-5

Are the resistances less than 3 ohms?

Yes	GO to AA5
No	Repair the circuit in question.

AA5 CHECK THE CLOCKSPRING FOR A SHORT TO GROUND

- Connect: Clockspring C218A.
- Remove the driver airbag and leave inline C260 connected.
  REFER to: Driver Airbag (501-20B Supplemental Restraint System, Removal and Installation).
- Disconnect: Clockspring C218B.
- Measure:

Positive Lead	Measurement / Action	Negative Lead
C2383-47	Ω	—
C2383-46	Ω	—

Are the resistances greater than 10,000 ohms?

Yes	GO to AA6
No	INSTALL a new clockspring. REFER to: Clockspring (501-20B Supplemental Restraint System, Removal and Installation).

AA6 CHECK THE CLOCKSPRING FOR A SHORT TOGETHER

- Measure:

Positive Lead	Measurement / Action	Negative Lead
C2383-47	Ω	C2383-46

Is the resistance greater than 10,000 ohms?

Yes	GO to AA7
No	INSTALL a new clockspring. REFER to: Clockspring (501-20B Supplemental Restraint System, Removal and Installation).

AA7 CHECK THE CLOCKSPRING FOR AN OPEN

- Measure:

Positive Lead	Measurement / Action	Negative Lead
C2383-47	Ω	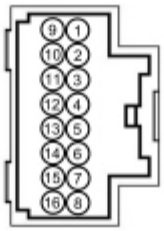 E144650 C218B-12 (Component Side)
C2383-46	Ω	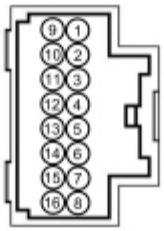 E144650 C218B-11 (Component Side)

Are the resistances less than 3 ohms?

Yes	GO to AA8
No	INSTALL a new clockspring. REFER to: Clockspring (501-20B Supplemental Restraint System, Removal and Installation).

AA8 CHECK THE STEERING WHEEL HARNESS FOR A SHORT TO GROUND

- Connect: Clockspring C218B.
- Disconnect: Inline C260.
- Measure:

Positive Lead	Measurement / Action	Negative Lead
C2383-47	Ω	—
C2383-46	Ω	—

Are the resistances greater than 10,000 ohms?

Yes	GO to AA9
No	INSTALL a new steering wheel. REFER to: Steering Wheel (211-04 Steering Column, Removal and Installation).

AA9 CHECK THE STEERING WHEEL HARNESS FOR A SHORT TOGETHER

- Measure:

Positive Lead	Measurement / Action	Negative Lead
C2383-47	Ω	C2383-46

Is the resistance greater than 10,000 ohms?

Yes	GO to AA10
No	INSTALL a new steering wheel. REFER to: Steering Wheel (211-04 Steering Column, Removal and Installation).

AA10 CHECK THE STEERING WHEEL HARNESS FOR AN OPEN

- Measure:

Positive Lead	Measurement / Action	Negative Lead
C2383-47	Ω	C260-5
C2383-46	Ω	C260-4

Are the resistances less than 3 ohms?

Yes	GO to AA11
No	INSTALL a new steering wheel. REFER to: Steering Wheel (211-04 Steering Column, Removal and Installation).

AA11 CHECK THE AIRBAG HARNESS FOR A SHORT TO GROUND

- Connect: Inline C260.
- Disconnect: RH Upper Steering Wheel Switch C2999.
- Measure:

Positive Lead	Measurement / Action	Negative Lead
C2383-47	Ω	—
C2383-46	Ω	—

Are the resistances greater than 10,000 ohms?

Yes	GO to AA12
No	INSTALL a new driver airbag. REFER to: Driver Airbag (501-20B Supplemental Restraint System, Removal and Installation).

AA12 CHECK THE AIRBAG HARNESS FOR A SHORT TOGETHER

- Measure:

Positive Lead	Measurement / Action	Negative Lead
C2383-47	Ω	C2383-46

Is the resistance greater than 10,000 ohms?

Yes	GO to AA13
No	INSTALL a new driver airbag. REFER to: Driver Airbag (501-20B Supplemental Restraint System, Removal and Installation).

AA13 CHECK THE AIRBAG HARNESS FOR AN OPEN

- Measure:

Positive Lead	Measurement / Action	Negative Lead
C2383-47	Ω	C2493-5
C2383-46	Ω	C2493-4

Are the resistances less than 3 ohms?

Yes	INSTALL a new RH steering wheel switch. REFER to: Steering Wheel Multifunction Switch (211-05 Steering Column Switches, Removal and Installation).
No	INSTALL a new driver airbag. REFER to: Driver Airbag (501-20B Supplemental Restraint System, Removal and Installation).

AA14 CHECK FOR CORRECT APIM (SYNC MODULE) OPERATION

- Ignition OFF.
- Disconnect and inspect the APIM connector.
- Repair:
  - corrosion (install new connector or terminals - clean module pins)
  - damaged pins - install new terminals/pins
  - pushed-out pins - install new pins as necessary
- Reconnect the APIM connector. Make sure it seats and latches correctly.

- Operate the system and determine if the concern is still present.

Is the concern still present?

Yes	CHECK OASIS for any applicable Technical Service Bulletins (TSBs). If a TSB exists for this concern, discontinue this test and follow TSB instructions. If no Technical Service Bulletins (TSBs) address this concern, INSTALL a new APIM . REFER to: SYNC Module [APIM] (415-00C Information and Entertainment System - General Information - Vehicles With: SYNC/Sony AM/FM/CD, Removal and Installation).
No	The system is operating correctly at this time. The concern may have been caused by module connections. ADDRESS the root cause of any connector or pin issues.

The Audio System Does Not Operate Correctly From The FCIM

Diagnostic Overview

Diagnostics in this manual assume a certain skill level and knowledge of Ford-specific diagnostic practices. For information about these practices,
REFER to: Diagnostic Methods (100-00 General Information, Description and Operation).

Normal Operation and Fault Conditions

REFER to: Information and Entertainment System - System Operation and Component Description (415-00C Information and Entertainment System - General Information - Vehicles With: SYNC/Sony AM/FM/CD, Description and Operation).
See Accessory Delay Feature, Audio Extended Play, and FCIM .

Possible Sources

- Communication network concern
- FCIM

PINPOINT TEST AB : THE AUDIO SYSTEM DOES NOT OPERATE CORRECTLY FROM THE FCIM (FRONT CONTROLS INTERFACE MODULE)

AB1 CHECK THE FDIM (FRONT DISPLAY INTERFACE MODULE) OPERATION

- Verify the FDIM screen operation.

Does the FDIM operate correctly?

Yes	GO to AB2
No	GO to Pinpoint Test AC

AB2 VERIFY THAT THE ACM (AUDIO FRONT CONTROL MODULE) , APIM (SYNC MODULE) , AND FCIM (FRONT CONTROLS INTERFACE MODULE) PASS THE NETWORK TEST

- Using a diagnostic scan tool, perform the network test.

Did the ACM , APIM , and FCIM pass the network test?

Yes	GO to AB3
No	If the ACM failed the network test, REFER to: Communications Network (418-00 Module Communications Network, Diagnosis and

	Testing). See The ACM Does Not Respond To The Diagnostic Scan Tool. If the APIM failed the network test, REFER to: Communications Network (418-00 Module Communications Network, Diagnosis and Testing). See The APIM Does Not Respond To The Diagnostic Scan Tool. If the FCIM failed the network test, REFER to: Communications Network (418-00 Module Communications Network, Diagnosis and Testing). See The FCIM Does Not Respond To The Diagnostic Scan Tool.

AB3 RESET THE AUDIO SYSTEM MODULES AND RECHECK THE FCIM (FRONT CONTROLS INTERFACE MODULE) OPERATION

- Disconnect the battery for 5 minutes, then reconnect it.
- Turn the infotainment system on.
- Test the FCIM for normal operation.

Does the FCIM operate correctly?

Yes	The FCIM is operating correctly at this time. The concern was corrected by resetting the audio system modules.
No	GO to AB4

AB4 RETRIEVE THE ACM (AUDIO FRONT CONTROL MODULE) , APIM (SYNC MODULE) , AND FCIM (FRONT CONTROLS INTERFACE MODULE) DIAGNOSTIC TROUBLE CODES (DTCS)

- Using a diagnostic scan tool, perform the self-test for the following modules:
  - ACM
  - APIM
  - FCIM

Are any Diagnostic Trouble Codes (DTCs) present in the ACM , APIM , or FCIM ?

Yes	For ACM Diagnostic Trouble Codes (DTCs), REFER to: Information and Entertainment System (415-00C Information and Entertainment System - General Information - Vehicles With: SYNC/Sony AM/FM/CD, Diagnosis and Testing). See DTC Chart: ACM . For APIM Diagnostic Trouble Codes (DTCs), REFER to: Information and Entertainment System (415-00C Information and Entertainment System - General Information - Vehicles With: SYNC/Sony AM/FM/CD, Diagnosis and Testing). See DTC Chart: APIM . For FCIM Diagnostic Trouble Codes (DTCs), REFER to: Information and Entertainment System (415-00C Information and Entertainment System - General Information - Vehicles With: SYNC/Sony AM/FM/CD, Diagnosis and Testing). See DTC Chart: FCIM .
No	GO to AB5

AB5 CHECK FOR CORRECT FCIM (FRONT CONTROLS INTERFACE MODULE) OPERATION

- Ignition OFF.
- Disconnect the FCIM connector.
- Repair:
  - corrosion (install new connector or terminals – clean module pins)

- damaged pins - install new terminals/pins
- pushed-out pins - install new pins as necessary

- Reconnect the FCIM connector and make sure it seats and latches correctly.
- Operate the system and determine if the concern is still present.

Is the concern still present?

Yes	CHECK OASIS for any applicable Technical Service Bulletins (TSBs). If a TSB exists for this concern, discontinue this test and follow TSB instructions. If no Technical Service Bulletins (TSBs) address this concern, INSTALL a new FCIM . REFER to: Front Controls Interface Module (FCIM) (415-00C Information and Entertainment System - General Information - Vehicles With: SYNC/Sony AM/FM/CD, Removal and Installation).
No	The system is operating correctly at this time. The concern may have been caused by module connections. Address the root cause of any connector or pin issues.

The FDIM Touchscreen Is Inoperative Or Does Not Operate Correctly

Diagnostic Overview

Diagnostics in this manual assume a certain skill level and knowledge of Ford-specific diagnostic practices. For information about these practices,
REFER to: Diagnostic Methods (100-00 General Information, Description and Operation).

Normal Operation and Fault Conditions

REFER to: Information and Entertainment System - System Operation and Component Description (415-00C Information and Entertainment System - General Information - Vehicles With: SYNC/Sony AM/FM/CD, Description and Operation).
See FDIM .

DTC Fault Trigger Conditions

DTC	Description	Fault Trigger Conditions
B108E:01	Display: General Electrical Failure	Sets in the APIM when an error is detected in the touch sensing ability of the FDIM .
U0162:00	Lost Communication With Navigation Display Module: No Sub Type Information	Set by the APIM when communication is missing from the FDIM for more than 1 second with the ignition in the RUN position.

Possible Sources

- Communication network concern
- FDIM

PINPOINT TEST AC : THE FDIM (FRONT DISPLAY INTERFACE MODULE) TOUCHSCREEN IS INOPERATIVE OR DOES NOT OPERATE CORRECTLY

AC1 OBSERVE THE FDIM (FRONT DISPLAY INTERFACE MODULE) SCREEN
• Verify the FDIM Operation

Is the FDIM screen completely inoperative or blank?

Yes	GO to AC2
No	GO to AC4

AC2 VERIFY THAT THE APIM (SYNC MODULE) PASSES THE NETWORK TEST

- Using a diagnostic scan tool, perform the network test.

Did the APIM pass the network test?

Yes	GO to AC3
No	REFER to: Communications Network (418-00 Module Communications Network, Diagnosis and Testing). See The APIM Does Not Respond To The Diagnostic Scan Tool.

AC3 CHECK FOR DTC (DIAGNOSTIC TROUBLE CODE) U0162:00 SET IN THE APIM (SYNC MODULE)

- Ignition ON.
- Using a diagnostic scan tool, perform the APIM self-test.

Is DTC U0162:00 present?

Yes	INSTALL a new FDIM . REFER to: Front Display Interface Module (FDIM) (415-00C Information and Entertainment System - General Information - Vehicles With: SYNC/Sony AM/FM/CD, Removal and Installation).
No	GO to AC6

AC4 VERIFY THE TOUCHSCREEN RESPONDS TO TOUCH COMMANDS

- While pressing each tab of the 4 corners on the FDIM , observe the touchscreen operation.

Does the FDIM respond correctly when each tab is pressed?

Yes	VERIFY the customer's concern and the steps to reproduce the inoperative state. If the inoperative state is not duplicated, the system is operating correctly at this time. INFORM the customer on the operation of the FDIM display.
No	GO to AC5

AC5 VERIFY THE TOUCHSCREEN IS CALIBRATED

- Enter the ACM self-diagnostic mode. ACM
- Press and hold the SEEK DOWN button to enter Touch Screen Calibration and follow the on-screen instructions.
- Once the touchscreen calibration is complete, verify the touchscreen operation.

Does the FDIM touchscreen respond correctly?

Yes	The system is operating correctly at this time. The concern was a result of the touchscreen not being calibrated.

No	GO to AC6

AC6 CHECK FOR DTC (DIAGNOSTIC TROUBLE CODE) B108E:01 SET IN THE APIM (SYNC MODULE)

- Ignition ON.
- Using a diagnostic scan tool, perform the APIM self-test.

Is DTC B108E:01 present?

Yes	INSTALL a new FDIM . REFER to: Front Display Interface Module (FDIM) (415-00C Information and Entertainment System - General Information - Vehicles With: SYNC/Sony AM/FM/CD, Removal and Installation).
No	GO to AC7

AC7 RESET THE APIM (SYNC MODULE) AND RECHECK THE SYSTEM OPERATION

NOTE: *Performing a Master Reset returns all preference settings to the factory defaults, erases all the phone book and call histories, and deletes any devices paired with the SYNC® system.*

- Carry out an APIM power reset by disconnecting the battery for 5 minutes, then reconnecting it.
- Wait at least 2 minutes for the APIM to re-initialize.
- Turn the infotainment system on.
- While pressing each tab of the 4 corners on the FDIM , observe the touchscreen operation.

Does the touchscreen operate correctly?

Yes	The FDIM is operating correctly at this time. PERFORM a SYNC® system Master Reset. REFER to the Owner's Literature.
No	GO to AC8

AC8 CHECK FOR CORRECT APIM (SYNC MODULE) OPERATION

- Ignition OFF.
- Disconnect and inspect the APIM connector.
- Repair:
  - corrosion (install new connectors or terminals - clean module pins)
  - damaged or bent pins - install new terminals pins
  - pushed-out pins - install new pins as necessary
- Reconnect the APIM connector. Make sure it seats and latches correctly.
- Operate the system and determine if the concern is still present.

Is the concern still present?

Yes	CHECK OASIS for any applicable Technical Service Bulletins (TSBs). If a TSB exists for this concern, discontinue this test and follow TSB instructions. If no Technical Service Bulletins (TSBs) address this concern, INSTALL a new APIM . REFER to: SYNC Module [APIM] (415-00C Information and Entertainment System - General Information - Vehicles With: SYNC/Sony AM/FM/CD, Removal and Installation).
No	The system is operating correctly at this time. The concern may have been caused by module connections. ADDRESS the root cause of any connector or pin issues.

Navigation Is Inoperative

Refer to Wiring Diagrams Cell 130 for schematic and connector information.

Diagnostic Overview

Diagnostics in this manual assume a certain skill level and knowledge of Ford-specific diagnostic practices. For information about these practices,
REFER to: Diagnostic Methods (100-00 General Information, Description and Operation).

Normal Operation and Fault Conditions

REFER to: Information and Entertainment System - System Operation and Component Description (415-00C Information and Entertainment System - General Information - Vehicles With: SYNC/Sony AM/FM/CD, Description and Operation).
See Navigation.

DTC Fault Trigger Conditions

DTC	Description	Fault Trigger Conditions
B1215:00	External Memory Card: No Sub Type Information	Set by the APIM when the navigation Secure Digital (SD) card is missing.

Removal of the navigation Secure Digital (SD) card results in loss of navigation while the card is removed. This is normal operation.

Visual Inspection and Diagnostic Pre-check

- Inspect to make sure that the navigation Secure Digital (SD) card is present in the Secure Digital (SD) card slot.

Possible Sources

- Navigation map Secure Digital (SD) card not present
- Communications network concern
- APIM
- GPSM

PINPOINT TEST AD : NAVIGATION IS INOPERATIVE

AD1 CHECK THE NAVIGATION SYSTEM OPERATION

- Verify the navigation system operation.

Does the FDIM display "Secure Digital (SD) CARD FAULT?"

Yes	GO to AD2
No	GO to AD3

AD2 VERIFY THE SECURE DIGITAL (SD) CARD WITH NAVIGATION MAP IS PRESENT

- Check for the presence of a Secure Digital (SD) card with map data in the Secure Digital (SD) slot of the media hub.

Is the navigation map Secure Digital (SD) card present?

Yes	GO to AD3
No	INSTALL the navigation map Secure Digital (SD) card. TEST the system for normal operation.

AD3 CHECK FOR DIAGNOSTIC SCAN TOOL COMMUNICATION WITH THE GPSM (GLOBAL POSITIONING SYSTEM MODULE)

- Ignition ON.
- Using a diagnostic scan tool, perform the network test.

Does the diagnostic scan tool communicate with the GPSM ?

Yes	GO to AD4
No	REFER to: Communications Network (418-00 Module Communications Network, Diagnosis and Testing). See The GPSM Does Not Respond To The Diagnostic Scan Tool.

AD4 RETRIEVE THE DIAGNOSTIC TROUBLE CODES (DTCS) FROM THE APIM (SYNC MODULE) AND GPSM (GLOBAL POSITIONING SYSTEM MODULE) SELF-TESTS

- Using a diagnostic scan tool, preform the APIM and GPSM self-tests.

Are any Diagnostic Trouble Codes (DTCs) present?

Yes	For APIM Diagnostic Trouble Codes (DTCs), REFER to: Information and Entertainment System (415-00C Information and Entertainment System - General Information - Vehicles With: SYNC/Sony AM/FM/CD, Diagnosis and Testing). See DTC Chart: APIM - Sony Sound. For GPSM Diagnostic Trouble Codes (DTCs), REFER to: Information and Entertainment System (415-00C Information and Entertainment System - General Information - Vehicles With: SYNC/Sony AM/FM/CD, Diagnosis and Testing). See DTC Chart: GPSM - Sony Sound.
No	GO to AD5

AD5 CHECK FOR CORRECT GPSM (GLOBAL POSITIONING SYSTEM MODULE) OPERATION

- Ignition OFF.
- Disconnect and inspect the GPSM connector.
- Repair:
  - corrosion (install new connectors or terminals - clean module pins)
  - damaged or bent pins - install new terminals pins
  - pushed-out pins - install new pins as necessary
- Reconnect the GPSM connector. Make sure it seats and latches correctly.
- Operate the system and determine if the concern is still present.

Is the concern still present?

Yes	CHECK OASIS for any applicable Technical Service Bulletins (TSBs). If a TSB exists for this concern, discontinue this test and follow TSB instructions. If no Technical Service Bulletins (TSBs) address this concern, INSTALL a new GPSM . REFER to: Global Positioning System Module (GPSM) (415-00C Information and Entertainment System

	- General Information - Vehicles With: SYNC/Sony AM/FM/CD, Removal and Installation).
No	The system is operating correctly at this time. The concern may have been caused by module connections. ADDRESS the root cause of any connector or pin issues.

U0140:00

Diagnostic Overview

Diagnostics in this manual assume a certain skill level and knowledge of Ford-specific diagnostic practices. For information about these practices,
REFER to: Diagnostic Methods (100-00 General Information, Description and Operation).

Normal Operation and Fault Conditions

DTC Fault Trigger Conditions

DTC	Description	Fault Trigger Conditions
U0140:00	Lost Communication With Body Control Module: No Sub Type Information	Set by the APIM and GPSM when network messages are missing from the BCM for more than 5 seconds with the ignition in RUN.

PINPOINT TEST AE : U0140:00

AE1 VERIFY THE CUSTOMER'S CONCERN

- Ignition ON.
- Verify there is an observable symptom present.

Is an observable symptom present?

Yes	GO to AE2
No	The system is operating correctly at this time. The DTC may have been set due to high network traffic or an intermittent fault condition.

AE2 RECHECK FOR DTC (DIAGNOSTIC TROUBLE CODE) U0140:00

- Ignition ON.
- Using a diagnostic scan tool, clear continuous Diagnostic Trouble Codes (DTCs) from all modules.
- Ignition OFF.
- Ignition ON.
- Wait at least 10 seconds.
- Using a diagnostic scan tool, retrieve the Diagnostic Trouble Codes (DTCs) from all modules.

Is DTC U0140:00 set in the APIM or GPSM ?

Yes	GO to AE3
No	The system is operating correctly at this time. The DTC may have been set due to high network traffic or an intermittent fault condition.

AE3 CHECK THE BCM (BODY CONTROL MODULE) FOR BATTERY VOLTAGE OUT-OF-RANGE DIAGNOSTIC TROUBLE CODES (DTCS)

- Using a diagnostic scan tool, perform the BCM self-test.

Are any low or high voltage Diagnostic Trouble Codes (DTCs) recorded in the BCM ?

Yes	For DTC U3003:16, REFER to: Body Control Module (BCM) (419-10 Multifunction Electronic Modules, Diagnosis and Testing). See U3003:16. For DTC U3003:17, REFER to: Body Control Module (BCM) (419-10 Multifunction Electronic Modules, Diagnosis and Testing). See U3003:17.
No	GO to AE4

AE4 CHECK FOR BATTERY VOLTAGE OUT-OF-RANGE DIAGNOSTIC TROUBLE CODES (DTCS)

- Using a diagnostic scan tool, perform the self-test for the following modules:
  - APIM
  - GPSM

Are any low or high voltage Diagnostic Trouble Codes (DTCs) recorded in the APIM or GPSM ?

Yes	For DTC U3003:16, GO to Pinpoint Test AM For DTC U3003:17, GO to Pinpoint Test AN
No	GO to AE5

AE5 CHECK FOR DTC (DIAGNOSTIC TROUBLE CODE) U0140:00 SET IN MULTIPLE MODULES

- Review the recorded results from the self-test.

Is DTC U0140:00 set in more than one module?

Yes	GO to AE6
No	If there is an observable symptom, REFER to: Information and Entertainment System (415-00C Information and Entertainment System - General Information - Vehicles With: SYNC/Sony AM/FM/CD, Diagnosis and Testing). See Symptom Chart: General Audio System. If there is no observable symptom, the system is operating correctly at this time. The DTC may have been set due to high network traffic or an intermittent fault condition.

AE6 CHECK FOR CORRECT BCM (BODY CONTROL MODULE) OPERATION

- Ignition OFF.
- Disconnect and inspect all the BCM connectors.
- Repair:
  - corrosion (install new connector or terminals – clean module pins)
  - damaged pins - install new terminals/pins
  - pushed-out pins - install new pins as necessary
- Reconnect the BCM connectors. Make sure they seat and latch correctly.

- Operate the system and determine if the concern is still present.

Is the concern still present?

Yes	CHECK OASIS for any applicable Technical Service Bulletins (TSBs). If a TSB exists for this concern, discontinue this test and follow TSB instructions. If no Technical Service Bulletins (TSBs) address this concern, INSTALL a new BCM . REFER to: Body Control Module (BCM) (419-10 Multifunction Electronic Modules, Removal and Installation).
No	The system is operating correctly at this time. The concern may have been caused by module connections. ADDRESS the root cause of any connector or pin issues.

U0151:00

Diagnostic Overview

Diagnostics in this manual assume a certain skill level and knowledge of Ford-specific diagnostic practices. For information about these practices,
REFER to: Diagnostic Methods (100-00 General Information, Description and Operation).

Normal Operation and Fault Conditions

DTC Fault Trigger Conditions

DTC	Description	Fault Trigger Conditions
U0151:00	Lost Communication With Restraints Control Module: No Sub Type Information	Set by the APIM when the air bag deployment notification message from the RCM is missing for more than 5 seconds with the ignition in the RUN position.

PINPOINT TEST AF : U0151:00

AF1 VERIFY THE CUSTOMER'S CONCERN

- Ignition ON.
- Verify there is an observable symptom present.

Is an observable symptom present?

Yes	GO to AF2
No	The system is operating correctly at this time. The DTC may have been set due to high network traffic or an intermittent fault condition.

AF2 RECHECK FOR DTC (DIAGNOSTIC TROUBLE CODE) U0151:00

- Ignition ON.
- Using a diagnostic scan tool, clear continuous Diagnostic Trouble Codes (DTCs) from all modules.
- Ignition OFF.
- Ignition ON.

- Wait at least 10 seconds.
- Using a diagnostic scan tool, retrieve the Diagnostic Trouble Codes (DTCs) from all modules.

Is DTC U0151:00 set in the APIM ?

Yes	GO to AF3
No	The system is operating correctly at this time. The DTC may have been set due to high network traffic or an intermittent fault condition.

AF3 CHECK THERCM (RESTRAINTS CONTROL MODULE) FOR BATTERY VOLTAGE OUT-OF-RANGE DIAGNOSTIC TROUBLE CODES (DTCS)

- Using a diagnostic scan tool, perform the RCM self-test.

Are any low or high voltage Diagnostic Trouble Codes (DTCs) recorded in the RCM ?

Yes	For DTC U3003:16, REFER to: Airbag Supplemental Restraint System (SRS) - Vehicles Built From: 11-June-2012 (501-20B Supplemental Restraint System, Diagnosis and Testing). See U3003:16. For DTC U3003:17, REFER to: Airbag Supplemental Restraint System (SRS) - Vehicles Built From: 11-June-2012 (501-20B Supplemental Restraint System, Diagnosis and Testing). See U3003:17.
No	GO to AF4

AF4 CHECK FOR APIM (SYNC MODULE) BATTERY VOLTAGE OUT-OF-RANGE DIAGNOSTIC TROUBLE CODES (DTCS)

- Using a diagnostic scan tool, perform the APIM self-test.

Are any low or high voltage Diagnostic Trouble Codes (DTCs) recorded in the APIM ?

Yes	For DTC U3003:16, GO to Pinpoint Test AM For DTC U3003:17, GO to Pinpoint Test AN
No	GO to AF5

AF5 CHECK FOR CORRECT RCM (RESTRAINTS CONTROL MODULE) OPERATION

- Ignition OFF.
- Disconnect and inspect all the RCM connectors.
- Repair:
  - corrosion (install new connector or terminals – clean module pins)
  - damaged pins - install new terminals/pins
  - pushed-out pins - install new pins as necessary
- Reconnect the RCM connectors. Make sure they seat and latch correctly.
- Operate the system and determine if the concern is still present.

Is the concern still present?

Yes	CHECK OASIS for any applicable Technical Service Bulletins (TSBs). If a TSB exists for this concern, discontinue this test and follow TSB instructions. If no Technical Service Bulletins (TSBs) address this concern, INSTALL a new RCM .

	REFER to: Restraints Control Module (RCM) (501-20B Supplemental Restraint System, Removal and Installation).
No	The system is operating correctly at this time. The concern may have been caused by module connections. ADDRESS the root cause of any connector or pin issues.

U0155:00

Diagnostic Overview

Diagnostics in this manual assume a certain skill level and knowledge of Ford-specific diagnostic practices. For information about these practices,
REFER to: Diagnostic Methods (100-00 General Information, Description and Operation).

Normal Operation and Fault Conditions

DTC Fault Trigger Conditions

DTC	Description	Fault Trigger Conditions
U0155:00	Lost Communication With IPC Control Module: No Sub Type Information	Set by the ACM, APIM, audio DSP module, FCIM, and GPSM when network messages are missing from the IPC for more than 5 seconds with the ignition in RUN.

PINPOINT TEST AG : U0155:00

AG1 VERIFY THE CUSTOMER'S CONCERN

- Ignition ON.
- Verify there is an observable symptom present.

Is an observable symptom present?

Yes	GO to AG2
No	The system is operating correctly at this time. The DTC may have been set due to high network traffic or an intermittent fault condition.

AG2 RECHECK FOR DTC (DIAGNOSTIC TROUBLE CODE) U0155:00

- Ignition ON.
- Using a diagnostic scan tool, clear continuous Diagnostic Trouble Codes (DTCs) from all modules.
- Ignition OFF.
- Ignition ON.
- Wait at least 10 seconds.
- Using a diagnostic scan tool, retrieve the DTC from all modules.

Is DTC U0155:00 set in the ACM, APIM, audio DSP module, FCIM, or GPSM?

Yes	GO to AG3
No	The system is operating correctly at this time. The DTC may have been set due to high network traffic or

	an intermittent fault condition.

AG3 CHECK THE IPC (INSTRUMENT PANEL CLUSTER) FOR BATTERY VOLTAGE OUT-OF-RANGE DIAGNOSTIC TROUBLE CODES (DTCS)

- Using a diagnostic scan tool, perform the IPC self-test.

Are any low or high voltage Diagnostic Trouble Codes (DTCs) recorded in the IPC ?

Yes	For DTC U3003:16, REFER to: Instrumentation, Message Center and Warning Chimes (413-01 Instrumentation, Message Center and Warning Chimes, Diagnosis and Testing). See U3003:16. For DTC U3003:17, REFER to: Instrumentation, Message Center and Warning Chimes (413-01 Instrumentation, Message Center and Warning Chimes, Diagnosis and Testing). See U3003:17.
No	GO to AG4

AG4 CHECK THE AUDIO SYSTEM MODULES FOR BATTERY VOLTAGE OUT-OF-RANGE DIAGNOSTIC TROUBLE CODES (DTCS)

- Using a diagnostic scan tool, perform the self-test for the following modules:
  - ACM
  - APIM
  - Audio DSP module
  - FCIM
  - GPSM

Are any low or high voltage Diagnostic Trouble Codes (DTCs) recorded in the ACM , APIM , audio DSP module, FCIM , or GPSM ?

Yes	For DTC U3003:16, GO to Pinpoint Test AM For DTC U3003:17, GO to Pinpoint Test AN
No	GO to AG5

AG5 CHECK FOR DTC (DIAGNOSTIC TROUBLE CODE) U0155:00 SET IN MULTIPLE MODULES

- Review the recorded results from the self-test.

Is DTC U0155:00 set in more than one module?

Yes	GO to AG6
No	If there is an observable symptom, REFER to: Information and Entertainment System (415-00C Information and Entertainment System - General Information - Vehicles With: SYNC/Sony AM/FM/CD, Diagnosis and Testing). See Symptom Chart: General Audio System, to diagnose the observed symptom. If there is no observable symptom, the system is operating correctly at this time. The DTC may have been set due to high network traffic or an intermittent fault condition.

AG6 CHECK FOR CORRECT IPC (INSTRUMENT PANEL CLUSTER) OPERATION

- Ignition OFF.
- Disconnect and inspect the IPC connector.
- Repair:
  - corrosion (install new connector or terminals – clean module pins)
  - damaged pins - install new terminals/pins
  - pushed-out pins - install new pins as necessary
- Reconnect the IPC connector. Make sure it seats and latches correctly.
- Operate the system and determine if the concern is still present.

Is the concern still present?

Yes	CHECK OASIS for any applicable Technical Service Bulletins (TSBs). If a TSB exists for this concern, discontinue this test and follow TSB instructions. If no Technical Service Bulletins (TSBs) address this concern, INSTALL a new IPC . REFER to: Instrument Panel Cluster (IPC) (413-01 Instrumentation, Message Center and Warning Chimes, Removal and Installation).
No	The system is operating correctly at this time. The concern may have been caused by module connections. ADDRESS the root cause of any connector or pin issues.

U016A:00

Diagnostic Overview

Diagnostics in this manual assume a certain skill level and knowledge of Ford-specific diagnostic practices. For information about these practices,
REFER to: Diagnostic Methods (100-00 General Information, Description and Operation).

Normal Operation and Fault Conditions

DTC Fault Trigger Conditions

DTC	Description	Fault Trigger Conditions
U016A:00	Lost Communication With Global Positioning System Module: No Sub Type Information	Set by the APIM when it is missing network messages from the GPSM for more than 5 seconds with the ignition in the RUN position.

PINPOINT TEST AH : U016A:00

AH1 VERIFY THE CUSTOMER'S CONCERN

- Ignition ON.
- Verify there is an observable symptom present.

Is an observable symptom present?

Yes	GO to AH2
No	The system is operating correctly at this time. The DTC may have been set due to high network traffic or an intermittent fault condition.

AH2 CHECK THE COMMUNICATION NETWORK

- Connect the diagnostic tool.
- Using a scan tool, perform a network test.
- Carry out the network test.

Does the GPSM pass the network test?

Yes	GO to AH3
No	

AH3 CHECK FOR ANY RECENT PMI (PROGRAMMABLE MODULE INSTALLATION) CHANGES

- Check the vehicle service history for recent service actions related to the GPSM or the APIM .

Has there been any recent service actions with either module?

Yes	CARRY out a manual PMI on the applicable module using As- Built data. REFER to the diagnostic scan tool instructions.
No	GO to AH4

AH4 RETRIEVE THE RECORDED DIAGNOSTIC TROUBLE CODES (DTCS) FROM THE GPSM (GLOBAL POSITIONING SYSTEM MODULE) SELF-TEST

- Using a diagnostic scan tool, perform the GPSM self-test.

Is DTC U3003:16 or (id=88)DTC U3003:17 recorded?

Yes	REFER to the GPSM DTC chart in this section.
No	GO to AH5

AH5 RETRIEVE THE RECORDED DTCS FROM THE APIM (SYNC MODULE) SELF-TEST

- Using a scan tool, perform the APIM elf-test.

Is DTC U3003:16 or DTC U3003:17?

Yes	For DTC U3003:16, GO to Pinpoint Test AM For DTC U3003:17, GO to Pinpoint Test AN
No	GO to AH6

AH6 RECHECK FOR APIM (SYNC MODULE) DIAGNOSTIC TROUBLE CODES (DTCS)

- Clear the Diagnostic Trouble Codes (DTCs).
- WAIT at least 10 seconds.
- Repeat the APIM self-test.

Is DTC U016A:00 still present?

Yes	GO to AH7

No	The system is operating correctly at this time. The DTC may have been set due to high network traffic or an intermittent fault condition.

AH7 CHECK FOR DTC U016A:00 SET IN OTHER MODULES

- Clear the Diagnostic Trouble Codes (DTCs).
- Ignition OFF.
- Ignition ON.
- WAIT at least 10 seconds.
- Using the scan tool, perform self-test.
- Retrieve the continuous memory DTCs from all modules.

Is DTC U016A:00 set in any other modulet?

Yes	GO to AH8
No	GO to AH9

AH8 CHECK FOR CORRECT GPSM OPERATION

-

Yes	CHECK OASIS for any applicable Technical Service Bulletins (TSBs). If a TSB exists for this concern, DISCONTINUE this test and FOLLOW TSB instructions. If no Technical Service Bulletins (TSBs) address this concern, INSTALL a new GPSM .
No	The system is operating correctly at this time. The concern may have been caused by module connections. ADDRESS the root cause of any connector or pin issues.

AH9 CHECK FOR CORRECT APIM OPERATION

- Ignition OFF.
- Disconnect and inspect the APIM connector.
- Repair:
  - corrosion (install new connector or terminals - clean module pins)
  - damaged pins - install new terminals/pins
  - pushed-out pins - install new pins as necessary
- Reconnect the APIM connector. Make sure it seats and latches correctly.
- Operate the system and determine if the concern is still present.

Is the concern still present?

Yes	CHECK OASIS for any applicable Technical Service Bulletins (TSBs). If a TSB exists for this concern, DISCONTINUE this test and FOLLOW TSB instructions. If no Technical Service Bulletins (TSBs) address this concern, INSTALL a new APIM . REFER to: SYNC Module [APIM] (415-00 Information and Entertainment System - General Information - Vehicles With: AM/FM/CD/SYNC/Sony Audio System) .
No	The system is operating correctly at this time. The concern may have been caused by module connections. ADDRESS the root cause of any connector or pin issues.

U0184:00

Diagnostic Overview

Diagnostics in this manual assume a certain skill level and knowledge of Ford-specific diagnostic practices. For information about these practices,
REFER to: Diagnostic Methods (100-00 General Information, Description and Operation).

Normal Operation and Fault Conditions

DTC Fault Trigger Conditions

DTC	Description	Fault Trigger Conditions
U0184:00	Lost Communication With Radio: No Sub Type Information	Set by the APIM and audio DSP module when network messages are missing from the ACM for more than 5 seconds with the ignition in RUN.

PINPOINT TEST AI : U0184:00

AI1 VERIFY THE CUSTOMER'S CONCERN

- Ignition ON.
- Verify there is an observable symptom present.

Is an observable symptom present?

Yes	GO to AI2
No	The system is operating normally at this time. This DTC may have been set due to high network traffic or an intermittent fault condition.

AI2 RECHECK FOR DTC (DIAGNOSTIC TROUBLE CODE) U0184:00

- Ignition ON.
- Using a diagnostic scan tool, clear continuous DTC from all modules.
- Ignition OFF.
- Ignition ON.
- Wait at least 10 seconds.
- Using a diagnostic scan tool, retrieve the Diagnostic Trouble Codes (DTCs) from all modules.

Is DTC U0184:00 set in the APIM or audio DSP module?

Yes	GO to AI3
No	The system is operating correctly at this time. The DTC may have been set due to high network traffic or an intermittent fault condition.

AI3 CHECK FOR BATTERY VOLTAGE OUT-OF-RANGE DIAGNOSTIC TROUBLE CODES (DTCS)

- Using a diagnostic scan tool, perform the self-test for the following modules:
  - ACM
  - Audio DSP module
  - APIM

Are any low or high voltage Diagnostic Trouble Codes (DTCs) recorded in the ACM , audio DSP module, or APIM ?

Yes	For DTC U3003:16, GO to Pinpoint Test AM For DTC U3003:17, GO to Pinpoint Test AN
No	GO to AI4

AI4 CHECK FOR DTC (DIAGNOSTIC TROUBLE CODE) U0184:00 SET IN MULTIPLE MODULES

- Review the recorded results from the self-test.

Is DTC U0184:00 set in more than one module?

Yes	GO to AI5
No	If there is an observable symptom, REFER to: Information and Entertainment System (415-00C Information and Entertainment System - General Information - Vehicles With: SYNC/Sony AM/FM/CD, Diagnosis and Testing). See Symptom Chart: General Audio System. If there is no observable symptom, the system is operating correctly at this time. The DTC may have been set due to high network traffic or an intermittent fault condition.

AI5 CHECK FOR CORRECT ACM (AUDIO FRONT CONTROL MODULE) OPERATION

- Ignition OFF.
- Disconnect and inspect all the ACM connectors.
- Repair:
  - corrosion (install new connector or terminals – clean module pins)
  - damaged pins - install new terminals/pins
  - pushed-out pins - install new pins as necessary
- Reconnect the ACM connectors. Make sure they seat and latch correctly.
- Operate the system and determine if the concern is still present.

Is the concern still present?

Yes	CHECK OASIS for any applicable Technical Service Bulletins (TSBs). If a TSB exists for this concern, discontinue this test and follow TSB instructions. If no Technical Service Bulletins (TSBs) address this concern, INSTALL a new ACM . REFER to: Audio Front Control Module (ACM) (415-00C Information and Entertainment System - General Information - Vehicles With: SYNC/Sony AM/FM/CD, Removal and Installation).
No	The system is operating correctly at this time. The concern may have been caused by module connections. ADDRESS the root cause of any connector or pin issues.

U0238:00

Diagnostic Overview

Diagnostics in this manual assume a certain skill level and knowledge of Ford-specific diagnostic practices. For information about these practices,
REFER to: Diagnostic Methods (100-00 General Information, Description and Operation).

Normal Operation and Fault Conditions

DTC Fault Trigger Conditions

DTC	Description	Fault Trigger Conditions
U0238:00	Lost Communication With Digital Audio Control Module “D”: No Sub Type Information	Set by the ACM and APIM when network messages are missing from the audio DSP module for more than 5 seconds with the ignition in the RUN position.

PINPOINT TEST AJ : U0238:00

AJ1 VERIFY THE CUSTOMER'S CONCERN

- Ignition ON.
- Verify there is an observable symptom present.

Is an observable symptom present?

Yes	GO to AJ2
No	The system is operating correctly at this time. The DTC may have been set due to high network traffic or an intermittent fault condition.

AJ2 RECHECK FOR DTC (DIAGNOSTIC TROUBLE CODE) U0238:00

- Ignition ON.
- Using a diagnostic scan tool, clear continuous Diagnostic Trouble Codes (DTCs) from all modules.
- Ignition OFF.
- Ignition ON.
- Wait at least 10 seconds.
- Using a diagnostic scan tool, retrieve the Diagnostic Trouble Codes (DTCs) from all modules.

Is DTC U0238:00 set in the ACM or APIM ?

Yes	GO to AJ3
No	The system is operating correctly at this time. The DTC may have been set due to high network traffic or an intermittent fault condition.

AJ3 CHECK FOR BATTERY VOLTAGE OUT-OF-RANGE DIAGNOSTIC TROUBLE CODES (DTCS)

- Using a diagnostic scan tool, perform the self-test for the following modules:
  - ACM
  - Audio DSP module
  - APIM

Are any low or high voltage Diagnostic Trouble Codes (DTCs) recorded in the ACM , audio DSP module, or APIM ?

Yes	For DTC U3003:16, GO to Pinpoint Test AM For DTC U3003:17, GO to Pinpoint Test AN
No	GO to AJ4

AJ4 CHECK FOR DTC (DIAGNOSTIC TROUBLE CODE) U0238:00 SET IN MULTIPLE MODULES

- Review the recorded results from the self-test.

Is DTC U0238:00 set in more than one module?

Yes	GO to AJ5
No	If there is an observable symptom, REFER to: Information and Entertainment System (415-00C Information and Entertainment System - General Information - Vehicles With: SYNC/Sony AM/FM/CD, Diagnosis and Testing). See Symptom Chart: General Audio System. If there is no observable symptom, the system is operating correctly at this time. The DTC may have been set due to high network traffic or an intermittent fault condition.

AJ5 CHECK FOR CORRECT AUDIO DSP (AUDIO DIGITAL SIGNAL PROCESSING MODULE) MODULE OPERATION

- Ignition OFF.
- Disconnect and inspect all the audio DSP module connectors.
- Repair:
  - corrosion (install new connectors or terminals - clean module pins)
  - damaged or bent pins - install new terminals pins
  - pushed-out pins - install new pins as necessary
- Reconnect the audio DSP module connectors. Make sure they seat and latch correctly.
- Operate the system and determine if the concern is still present.

Is the concern still present?

Yes	CHECK OASIS for any applicable Technical Service Bulletins (TSBs). If a TSB exists for this concern, discontinue this test and follow TSB instructions. If no Technical Service Bulletins (TSBs) address this concern, INSTALL a new audio DSP module. REFER to: Audio Digital Signal Processing (DSP) Module (415-00C Information and Entertainment System - General Information - Vehicles With: SYNC/Sony AM/FM/CD, Removal and Installation).
No	The system is operating correctly at this time. The concern may have been caused by module connections. ADDRESS the root cause of any connector or pin issues.

U0253:00

Diagnostic Overview

Diagnostics in this manual assume a certain skill level and knowledge of Ford-specific diagnostic practices. For information about these practices,
REFER to: Diagnostic Methods (100-00 General Information, Description and Operation).

Normal Operation and Fault Conditions

DTC Fault Trigger Conditions

DTC	Description	Fault Trigger Conditions
U0253:00	Lost Communication With Accessory Protocol Interface Module: No Sub Type	Set by the ACM and audio DSP module when network messages are missing from the APIM for more than 5 seconds with the ignition in the

	Information	RUN position.

PINPOINT TEST AK : U0253:00

AK1 VERIFY THE CUSTOMER'S CONCERN

- Ignition ON.
- Verify there is an observable symptom present.

Is an observable symptom present?

Yes	GO to AK2
No	The system is operating correctly at this time. The DTC may have been set due to high network traffic or an intermittent fault condition.

AK2 RECHECK FOR DTC U0253:00

- Ignition ON.
- Using a diagnostic scan tool, clear continuous Diagnostic Trouble Codes (DTCs) from all modules.
- Ignition OFF.
- Ignition ON.
- Wait at least 10 seconds.
- Using a diagnostic scan tool, retrieve the Diagnostic Trouble Codes (DTCs) from all modules.

Is DTC U0253:00 set in the ACM or audio DSP module?

Yes	GO to AK3
No	The system is operating correctly at this time. The DTC may have been set due to high network traffic or an intermittent fault condition.

AK3 CHECK FOR BATTERY VOLTAGE OUT-OF-RANGE DIAGNOSTIC TROUBLE CODES (DTCS)

- Using a diagnostic scan tool, perform the self-test for the following modules:
  - ACM
  - APIM
  - Audio DSP module

Are any low or high voltage Diagnostic Trouble Codes (DTCs) recorded in the ACM , APIM , or audio DSP module?

Yes	For DTC U3003:16, GO to Pinpoint Test AM For DTC U3003:17, GO to Pinpoint Test AN
No	GO to AK4

AK4 CHECK FOR DTC (DIAGNOSTIC TROUBLE CODE) U0253:00 SET IN MULTIPLE MODULES

- Review the recorded results from the self-test.

Is DTC U0253:00 set in more than one module?

Yes	GO to AK5

No	If there is an observable symptom, REFER to: Information and Entertainment System (415-00C Information and Entertainment System - General Information - Vehicles With: SYNC/Sony AM/FM/CD, Diagnosis and Testing). See Symptom Chart: General Audio System. If there is no observable symptom, the system is operating correctly at this time. The DTC may have been set due to high network traffic or an intermittent fault condition.

AK5 CHECK FOR CORRECT APIM (SYNC MODULE) OPERATION

- Ignition OFF.
- Disconnect and inspect the APIM connector.
- Repair:
  - corrosion (install new connector or terminals – clean module pins)
  - damaged pins - install new terminals/pins
  - pushed-out pins - install new pins as necessary
- Reconnect the APIM connector. Make sure it seats and latches correctly.
- Operate the system and determine if the concern is still present.

Is the concern still present?

Yes	CHECK OASIS for any applicable Technical Service Bulletins (TSBs). If a TSB exists for this concern, discontinue this test and follow TSB instructions. If no Technical Service Bulletins (TSBs) address this concern, INSTALL a new APIM . REFER to: SYNC Module [APIM] (415-00C Information and Entertainment System - General Information - Vehicles With: SYNC/Sony AM/FM/CD, Removal and Installation).
No	The system is operating correctly at this time. The concern may have been caused by module connections. ADDRESS the root cause of any connector or pin issues.

U0256:00

Diagnostic Overview

Diagnostics in this manual assume a certain skill level and knowledge of Ford-specific diagnostic practices. For information about these practices,
REFER to: Diagnostic Methods (100-00 General Information, Description and Operation).

Normal Operation and Fault Conditions

DTC Fault Trigger Conditions

DTC	Description	Fault Trigger Conditions
U0256:00	Lost Communication With Front Controls Interface Module "A": No Sub Type Information	Set by the ACM , APIM , and audio DSP module when network messages are missing from the FCIM for more than 5 seconds with the ignition in the RUN position.

PINPOINT TEST AL : U0256:00

AL1 VERIFY THE CUSTOMER'S CONCERN

Ignition ON.
- Verify there is an observable symptom present.

Is an observable symptom present?

Yes	GO to AL2
No	The system is operating correctly at this time. The DTC may have been set due to high network traffic or an intermittent fault condition.

AL2 RECHECK FOR DTC (DIAGNOSTIC TROUBLE CODE) U0256:00

- Ignition ON.
- Using a diagnostic scan tool, clear continuous Diagnostic Trouble Codes (DTCs) from all modules.
- Ignition OFF.
- Ignition ON.
- Wait at least 10 seconds.
- Using a diagnostic scan tool, retrieve the Diagnostic Trouble Codes (DTCs) from all modules.

Is DTC U0256:00 set in the ACM , APIM , or audio DSP module?

Yes	GO to AL3
No	The system is operating correctly at this time. The DTC may have been set due to high network traffic or an intermittent fault condition.

AL3 CHECK FOR BATTERY VOLTAGE OUT-OF-RANGE DIAGNOSTIC TROUBLE CODES (DTCS)

- Using a diagnostic scan tool, perform the self-test for the following modules:
  - ACM
  - APIM
  - Audio DSP module
  - FCIM

Are any low or high voltage Diagnostic Trouble Codes (DTCs) recorded in the ACM , APIM , Audio DSP module, or FCIM ?

Yes	For DTC U3003:16, GO to Pinpoint Test AM For DTC U3003:17, GO to Pinpoint Test AN
No	GO to AL4

AL4 CHECK FOR DTC (DIAGNOSTIC TROUBLE CODE) U0256:00 SET IN MULTIPLE MODULES

- Review the recorded results from the self-test.

Is DTC U0256:00 set in more than one audio system module?

Yes	GO to AL5
No	If there is an observable symptom, REFER to: Information and Entertainment System (415-00C Information and Entertainment System - General Information - Vehicles With: SYNC/Sony AM/FM/CD, Diagnosis and Testing). See Symptom Chart: General Audio System, to diagnose the observed symptom. If there is no observable symptom, the system is operating correctly at this time. The DTC may have been set due to high network traffic or an intermittent fault condition.

AL5 CHECK FOR CORRECT FCIM (FRONT CONTROLS INTERFACE MODULE) OPERATION

- Ignition OFF.
- Disconnect the FCIM connector.
- Repair:
  - corrosion (install new connector or terminals – clean module pins)
  - damaged pins - install new terminals/pins
  - pushed-out pins - install new pins as necessary
- Reconnect the FCIM connector and make sure it seats and latches correctly.
- Operate the system and determine if the concern is still present.

Is the concern still present?

Yes	CHECK OASIS for any applicable Technical Service Bulletins (TSBs). If a TSB exists for this concern, discontinue this test and follow TSB instructions. If no Technical Service Bulletins (TSBs) address this concern, INSTALL a new FCIM . REFER to: Front Controls Interface Module (FCIM) (415-00C Information and Entertainment System - General Information - Vehicles With: SYNC/Sony AM/FM/CD, Removal and Installation).
No	The system is operating correctly at this time. The concern may have been caused by module connections. Address the root cause of any connector or pin issues.

U3003:16

Diagnostic Overview

Diagnostics in this manual assume a certain skill level and knowledge of Ford-specific diagnostic practices. For information about these practices,
REFER to: Diagnostic Methods (100-00 General Information, Description and Operation).

Normal Operation and Fault Conditions

DTC Fault Trigger Conditions

DTC	Description	Fault Trigger Conditions
U3003:16	Battery Voltage: Circuit Voltage Below Threshold	Set by the ACM , APIM , audio DSP module, FCIM , and GPSM when the supply voltage falls below 10 volts for at least 10 seconds during normal operation or for more than 250 milliseconds during the self-test.

PINPOINT TEST AM : U3003:16

AM1 RECHECK FOR DTC (DIAGNOSTIC TROUBLE CODE) U3003:16

- Ignition ON.
- Using a diagnostic scan tool, clear the Diagnostic Trouble Codes (DTCs) for the module in question.
- WAIT at least 15 seconds.
- Using a diagnostic scan tool, repeat the self-test.

Is DTC U3003:16 still present?

Yes	GO to AM2
No	The system is operating correctly at this time. The DTC may have been set due to a previous low battery voltage condition.

AM2 CHECK FOR CHARGING SYSTEM DIAGNOSTIC TROUBLE CODES (DTCS) IN THE PCM (POWERTRAIN CONTROL MODULE)

- Using a diagnostic scan tool, retrieve the continuous memory Diagnostic Trouble Codes (DTCs) from all modules.

Are any voltage-related Diagnostic Trouble Codes (DTCs) set in the PCM ?

Yes	For 2.0L Duratec-HE (125kW/170PS) - MI4, REFER to: Electronic Engine Controls (303-14A Electronic Engine Controls - 2.0L Duratec-HE (125kW/170PS) - MI4, Diagnosis and Testing). See DTC Chart: PCM . For 2.0L EcoBoost (184kW/250PS) - MI4, REFER to: Electronic Engine Controls (303-14B Electronic Engine Controls - 2.0L EcoBoost (184kW/250PS) - MI4, Diagnosis and Testing). See DTC Chart: PCM .
No	GO to AM3

AM3 CHECK THE BATTERY CONDITION AND STATE OF CHARGE

- Check the battery condition and verify that the battery is fully charged.
  REFER to: Battery (414-01 Battery, Mounting and Cables, Diagnosis and Testing).
  See Battery Condition Test.

Is the battery OK and fully charged?

Yes	GO to AM4
No	For 2.0L Duratec-HE (125kW/170PS) - MI4, REFER to: Charging System - 2.0L Duratec-HE (125kW/170PS) - MI4 (414-00 Charging System - General Information, Diagnosis and Testing). See Symptom Chart: Charging System. For 2.0L EcoBoost (184kW/250PS) - MI4, REFER to: Charging System - 2.0L EcoBoost (184kW/250PS) - MI4 (414-00 Charging System - General Information, Diagnosis and Testing). See Symptom Chart: Charging System.

AM4 CHECK THE MODULE VOLTAGE SUPPLY

- Ignition OFF.
- Measure and record the voltage at the battery.
- Disconnect the audio system module setting DTC U3003:16.
- Ignition ON.
- Measure the voltage between the module setting DTC U3003:16 and ground.
- For the ACM , measure:

Positive Lead	Measurement / Action	Negative Lead
C240A-1		—

- For the APIM , measure:

Positive Lead	Measurement / Action	Negative Lead
C2383-1		—

- For the audio DSP module, measure:

Positive Lead	Measurement / Action	Negative Lead
C4326C-5		—
C4326C-6		—

- For the FCIM , measure:

Positive Lead	Measurement / Action	Negative Lead
C2402-8		—

- For the GPSM , measure:

Positive Lead	Measurement / Action	Negative Lead
C2398-1		—

Is the voltage within 0.2 volts of the recorded battery voltage?

Yes	GO to AM5
No	REPAIR the circuit for high resistance.

AM5 CHECK THE SUSPECT MODULE GROUND CIRCUIT FOR CONTINUITY

- Measure the voltage at the suspect module.
- For the ACM , measure:

Positive Lead	Measurement / Action	Negative Lead
C240A-1		C240A-13

- For the APIM , measure:

Positive Lead	Measurement / Action	Negative Lead
C2383-1		C2383-37

C2383-1		C2383-38

- For the audio DSP module, measure:

Positive Lead	Measurement / Action	Negative Lead
C4326C-5		C4326C-13
C4326C-6		C4326C-14

- For the FCIM , measure:

Positive Lead	Measurement / Action	Negative Lead
C2402-8		C2402-5

- For the GPSM , measure:

Positive Lead	Measurement / Action	Negative Lead
C2398-1		C2398-6

Is the suspect module voltage greater than 11 volts?

Yes	For the ACM , GO to AM6 For the APIM , GO to AM7 For the audio DSP module, GO to AM8 For the FCIM , GO to AM9 For the GPSM , GO to AM10
No	REPAIR the circuit for high resistance.

AM6 CHECK FOR CORRECT ACM (AUDIO FRONT CONTROL MODULE) OPERATION

- Ignition OFF.
- Disconnect and inspect all the ACM connectors.
- Repair:
  - corrosion (install new connector or terminals – clean module pins)
  - damaged pins - install new terminals/pins
  - pushed-out pins - install new pins as necessary
- Reconnect the ACM connectors. Make sure they seat and latch correctly.
- Operate the system and determine if the concern is still present.

Is the concern still present?

Yes	CHECK OASIS for any applicable Technical Service Bulletins (TSBs). If a TSB exists for this concern, discontinue this test and follow TSB instructions. If no Technical Service Bulletins (TSBs) address this concern, INSTALL a new ACM . REFER to: Audio Front Control Module (ACM) (415-00C Information and Entertainment System - General Information - Vehicles With: SYNC/Sony AM/FM/CD, Removal and Installation).

No	The system is operating correctly at this time. The concern may have been caused by module connections. ADDRESS the root cause of any connector or pin issues.

AM7 CHECK FOR CORRECT APIM (SYNC MODULE) OPERATION

- Ignition OFF.
- Disconnect and inspect the APIM connector.
- Repair:
  - corrosion (install new connector or terminals – clean module pins)
  - damaged pins - install new terminals/pins
  - pushed-out pins - install new pins as necessary
- Reconnect the APIM connector. Make sure it seats and latches correctly.
- Wait at least 2 minutes for the APIM to re-initialize.
- Operate the system and determine if the concern is still present.

Is the concern still present?

Yes	CHECK OASIS for any applicable Technical Service Bulletins (TSBs). If a TSB exists for this concern, discontinue this test and follow TSB instructions. If no Technical Service Bulletins (TSBs) address this concern, INSTALL a new APIM . REFER to: SYNC Module [APIM] (415-00C Information and Entertainment System - General Information - Vehicles With: SYNC/Sony AM/FM/CD, Removal and Installation).
No	The system is operating correctly at this time. The concern may have been caused by module connections. ADDRESS the root cause of any connector or pin issues.

AM8 CHECK FOR CORRECT AUDIO DSP (AUDIO DIGITAL SIGNAL PROCESSING MODULE) MODULE OPERATION

- Ignition OFF.
- Disconnect and inspect all the audio DSP module connectors.
- Repair:
  - corrosion (install new connectors or terminals - clean module pins)
  - damaged or bent pins - install new terminals pins
  - pushed-out pins - install new pins as necessary
- Reconnect the audio DSP module connectors. Make sure they seat and latch correctly.
- Operate the system and determine if the concern is still present.

Is the concern still present?

Yes	CHECK OASIS for any applicable Technical Service Bulletins (TSBs). If a TSB exists for this concern, discontinue this test and follow TSB instructions. If no Technical Service Bulletins (TSBs) address this concern, INSTALL a new audio DSP module. REFER to: Audio Digital Signal Processing (DSP) Module (415-00C Information and Entertainment System - General Information - Vehicles With: SYNC/Sony AM/FM/CD, Removal and Installation).
No	The system is operating correctly at this time. The concern may have been caused by module connections. ADDRESS the root cause of any connector or pin issues.

AM9 CHECK FOR CORRECT FCIM (FRONT CONTROLS INTERFACE MODULE) OPERATION

- Ignition OFF.
- Disconnect and inspect the FCIM connector.
- Repair:
  - corrosion (install new connector or terminals – clean module pins)
  - damaged pins - install new terminals/pins
  - pushed-out pins - install new pins as necessary

- Reconnect the FCIM connector. Make sure it seats and latches correctly.
- Operate the system and determine if the concern is still present.

Is the concern still present?

Yes	CHECK OASIS for any applicable Technical Service Bulletins (TSBs). If a TSB exists for this concern, discontinue this test and follow TSB instructions. If no Technical Service Bulletins (TSBs) address this concern, INSTALL a new FCIM . REFER to: Front Controls Interface Module (FCIM) (415-00C Information and Entertainment System - General Information - Vehicles With: SYNC/Sony AM/FM/CD, Removal and Installation).
No	The system is operating correctly at this time. The concern may have been caused by module connections. ADDRESS the root cause of any connector or pin issues.

AM10 CHECK FOR CORRECT GPSM (GLOBAL POSITIONING SYSTEM MODULE) OPERATION

- Ignition OFF.
- Disconnect and inspect the GPSM connector.
- Repair:
  - corrosion (install new connector or terminals – clean module pins)
  - damaged pins - install new terminals/pins
  - pushed-out pins - install new pins as necessary
- Reconnect the GPSM connector. Make sure it seats and latches correctly.
- Operate the system and determine if the concern is still present.

Is the concern still present?

Yes	CHECK OASIS for any applicable Technical Service Bulletins (TSBs). If a TSB exists for this concern, discontinue this test and follow TSB instructions. If no Technical Service Bulletins (TSBs) address this concern, INSTALL a new GPSM . REFER to: Global Positioning System Module (GPSM) (415-00C Information and Entertainment System - General Information - Vehicles With: SYNC/Sony AM/FM/CD, Removal and Installation).
No	The system is operating correctly at this time. The concern may have been caused by module connections. ADDRESS the root cause of any connector or pin issues.

U3003:17

Diagnostic Overview

Diagnostics in this manual assume a certain skill level and knowledge of Ford-specific diagnostic practices. For information about these practices,
REFER to: Diagnostic Methods (100-00 General Information, Description and Operation).

Normal Operation and Fault Conditions

DTC Fault Trigger Conditions

DTC	Description	Fault Trigger Conditions
U3003:17	Battery Voltage: Circuit Voltage Above Threshold	Set by the ACM , APIM , audio DSP module, FCIM , and GPSM when the supply voltage is more than 15.8 volts for more than 250 milliseconds during normal operation or the self-test.

PINPOINT TEST AN : U3003:17

AN1 RECHECK FOR DTC (DIAGNOSTIC TROUBLE CODE) U3003:17

- Turn the engine off.
- Ignition ON.
- Using a diagnostic scan tool, clear the DTC for the module in question.
- WAIT at least 10 seconds.
- Using a diagnostic scan tool, perform the self-test for the module in question.

Is DTC U3003:17 present?

Yes	GO to AN2
No	The system is operating correctly at this time. The DTC may have been set previously during battery charging or while jump starting the vehicle.

AN2 CHECK FOR HIGH VOLTAGE DIAGNOSTIC TROUBLE CODES (DTCS) SET IN OTHER MODULES

- Ignition ON.
- Using a diagnostic scan tool, retrieve all continuous Diagnostic Trouble Codes (DTCs) from all modules.

Are high voltage Diagnostic Trouble Codes (DTCs) (e.g. B1676, P0563, U3003:17) set in more than one module?

Yes	To diagnose the overcharging condition for 2.0L Duratec-HE (125kW/170PS) - MI4, REFER to: Charging System - 2.0L Duratec-HE (125kW/170PS) - MI4 (414-00 Charging System - General Information, Diagnosis and Testing). See Symptom Chart: Charging System. To diagnose the overcharging condition for 2.0L EcoBoost (184kW/250PS) - MI4, REFER to: Charging System - 2.0L EcoBoost (184kW/250PS) - MI4 (414-00 Charging System - General Information, Diagnosis and Testing). See Symptom Chart: Charging System.
No	GO to AN3

AN3 CHECK THE BATTERY VOLTAGE

- Turn off all interior lights, exterior lights, and accessories.
- Start and run the engine at approximately 2,000 RPM for 3 minutes while monitoring the battery voltage.

Does the battery voltage rise to 15.5 volts or higher?

Yes	To diagnose the overcharging condition for 2.0L Duratec-HE (125kW/170PS) - MI4, REFER to: Charging System - 2.0L Duratec-HE (125kW/170PS) - MI4 (414-00 Charging System - General Information, Diagnosis and Testing). See Symptom Chart: Charging System. To diagnose the overcharging condition for 2.0L EcoBoost (184kW/250PS) - MI4, REFER to: Charging System - 2.0L EcoBoost (184kW/250PS) - MI4 (414-00 Charging System - General Information, Diagnosis and Testing). See Symptom Chart: Charging System.
No	For the ACM, GO to AN4 For the APIM, GO to AN5 For the audio DSP module, GO to AN6 For the FCIM, GO to AN7

	For the GPSM , GO to AN8

AN4 CHECK FOR CORRECT ACM (AUDIO FRONT CONTROL MODULE) OPERATION

- Ignition OFF.
- Disconnect and inspect all the ACM connectors.
- Repair:
  - corrosion (install new connector or terminals – clean module pins)
  - damaged pins - install new terminals/pins
  - pushed-out pins - install new pins as necessary
- Reconnect the ACM connectors. Make sure they seat and latch correctly.
- Operate the system and determine if the concern is still present.

Is the concern still present?

Yes	CHECK OASIS for any applicable Technical Service Bulletins (TSBs). If a TSB exists for this concern, discontinue this test and follow TSB instructions. If no Technical Service Bulletins (TSBs) address this concern, INSTALL a new ACM . REFER to: Audio Front Control Module (ACM) (415-00C Information and Entertainment System - General Information - Vehicles With: SYNC/Sony AM/FM/CD, Removal and Installation).
No	The system is operating correctly at this time. The concern may have been caused by module connections. ADDRESS the root cause of any connector or pin issues.

AN5 CHECK FOR CORRECT APIM (SYNC MODULE) OPERATION

- Ignition OFF.
- Disconnect and inspect the APIM connector.
- Repair:
  - corrosion (install new connector or terminals – clean module pins)
  - damaged pins - install new terminals/pins
  - pushed-out pins - install new pins as necessary
- Reconnect the APIM connector. Make sure it seats and latches correctly.
- Wait at least 2 minutes for the APIM to re-initialize.
- Operate the system and determine if the concern is still present.

Is the concern still present?

Yes	CHECK OASIS for any applicable Technical Service Bulletins (TSBs). If a TSB exists for this concern, discontinue this test and follow TSB instructions. If no Technical Service Bulletins (TSBs) address this concern, INSTALL a new APIM . REFER to: SYNC Module [APIM] (415-00C Information and Entertainment System - General Information - Vehicles With: SYNC/Sony AM/FM/CD, Removal and Installation).
No	The system is operating correctly at this time. The concern may have been caused by module connections. ADDRESS the root cause of any connector or pin issues.

AN6 CHECK FOR CORRECT AUDIO DSP (AUDIO DIGITAL SIGNAL PROCESSING MODULE) MODULE OPERATION

- Ignition OFF.
- Disconnect and inspect all the audio DSP module connectors.
- Repair:
  - corrosion (install new connectors or terminals - clean module pins)
  - damaged or bent pins - install new terminals pins
  - pushed-out pins - install new pins as necessary
- Reconnect the audio DSP module connectors. Make sure they seat and latch correctly.

- Operate the system and determine if the concern is still present.

Is the concern still present?

Yes	CHECK OASIS for any applicable Technical Service Bulletins (TSBs). If a TSB exists for this concern, discontinue this test and follow TSB instructions. If no Technical Service Bulletins (TSBs) address this concern, INSTALL a new audio DSP module. REFER to: Audio Digital Signal Processing (DSP) Module (415-00C Information and Entertainment System - General Information - Vehicles With: SYNC/Sony AM/FM/CD, Removal and Installation).
No	The system is operating correctly at this time. The concern may have been caused by module connections. ADDRESS the root cause of any connector or pin issues.

AN7 CHECK FOR CORRECT FCIM (FRONT CONTROLS INTERFACE MODULE) OPERATION

- Ignition OFF.
- Disconnect and inspect the FCIM connector.
- Repair:
  - corrosion (install new connector or terminals – clean module pins)
  - damaged pins - install new terminals/pins
  - pushed-out pins - install new pins as necessary
- Reconnect the FCIM connector. Make sure it seats and latches correctly.
- Operate the system and determine if the concern is still present.

Is the concern still present?

Yes	CHECK OASIS for any applicable Technical Service Bulletins (TSBs). If a TSB exists for this concern, discontinue this test and follow TSB instructions. If no Technical Service Bulletins (TSBs) address this concern, INSTALL a new FCIM . REFER to: SYNC Module [APIM] (415-00C Information and Entertainment System - General Information - Vehicles With: SYNC/Sony AM/FM/CD, Removal and Installation).
No	The system is operating correctly at this time. The concern may have been caused by module connections. ADDRESS the root cause of any connector or pin issues.

AN8 CHECK FOR CORRECT GPSM (GLOBAL POSITIONING SYSTEM MODULE) OPERATION

- Ignition OFF.
- Disconnect and inspect the GPSM connector.
- Repair:
  - corrosion (install new connector or terminals – clean module pins)
  - damaged pins - install new terminals/pins
  - pushed-out pins - install new pins as necessary
- Reconnect the GPSM connector. Make sure it seats and latches correctly.
- Operate the system and determine if the concern is still present.

Is the concern still present?

Yes	CHECK OASIS for any applicable Technical Service Bulletins (TSBs). If a TSB exists for this concern, discontinue this test and follow TSB instructions. If no Technical Service Bulletins (TSBs) address this concern, INSTALL a new GPSM . REFER to: Global Positioning System Module (GPSM) (415-00C Information and Entertainment System - General Information - Vehicles With: SYNC/Sony AM/FM/CD, Removal and Installation).
No	The system is operating correctly at this time. The concern may have been caused by module connections. ADDRESS the root cause of any connector or pin issues.

The Clock Does Not Operate Properly

Diagnostic Overview

Diagnostics in this manual assume a certain skill level and knowledge of Ford-specific diagnostic practices. For information about these practices,
REFER to: Diagnostic Methods (100-00 General Information, Description and Operation).

Normal Operation and Fault Conditions

The BCM contains the clock software and sends the date/time data information to the APIM via the (id=228)Medium Speed Controller Area Network (MS-CAN). If any communication DTCs between the BCM and the APIM are retrieved they should be diagnosed first. Additionally the customer may choose to have the clock time updated automatically by the GPSM by selecting GPS time synchronization and choosing the ON position. In this instance the BCM is no longer used. Only the APIM and the GPSM are used for the GPS time synchronization.

PINPOINT TEST AO : THE CLOCK DOES NOT OPERATE PROPERLY

AO1 DETERMINE IF MANUAL OR GPS TIME SYNCHRONIZATION IS ENABLED

- Inspect the clock settings using the touchscreen.

Is GPS time synchronization set to ON?

Yes	GO to AO5
No	GO to AO2

AO2 CARRY OUT THE NETWORK TEST

- Ignition ON.
- Using the scan tool carry out the network test on the BCM and the APIM .

Do the BCM and the APIM pass the network test

Yes	GO to AO3
No	To diagnose the module in question does not respond to the scan tool, REFER to: Communications Network (418-00 Module Communications Network, Diagnosis and Testing).

AO3 VERIFY THE CUSTOMER CONCERN

NOTE: *The clock should not see more than a loss or gain of 45 seconds to 1 minute per month.*

- Verify with the customer that the clock is losing time.

Is there a loss or gain of more than 1 minute per month?

Yes	GO to AO4
No	If the clock display is not displaying properly, GO to Pinpoint Test AC Otherwise the clock is operating correctly at this time.

AO4 CHECK FOR CORRECT BCM (BODY CONTROL MODULE) OPERATION

- Ignition OFF.
- Disconnect and inspect the BCM connector.
- Repair:
  - corrosion (install new connector or terminals – clean module pins)
  - damaged pins - install new terminals/pins
  - pushed-out pins - install new pins as necessary
- Reconnect the BCM connector. Make sure it seats and latches correctly.
- Operate the system and determine if the concern is still present.

Is the concern still present?

Yes	INSTALL a new BCM .
No	The system is operating correctly at this time. The concern may have been caused by a loose or corroded connector.

AO5 CARRY OUT THE NETWORK TEST

- Ignition ON.
- Using the scan tool carry out the network test on the GPSM and the APIM .

Do the GPSM and the APIM pass the network test

Yes	GO to AO6
No	To diagnose the module in question does not respond to the scan tool, REFER to: Communications Network (418-00 Module Communications Network, Diagnosis and Testing).

AO6 CHECK FOR CORRECT GPSM (GLOBAL POSITIONING SYSTEM MODULE) OPERATION

- Ignition OFF.
- Disconnect and inspect the GPSM connector.
- Repair:
  - corrosion (install new connector or terminals – clean module pins)
  - damaged pins - install new terminals/pins
  - pushed-out pins - install new pins as necessary
- Reconnect the GPSM connector. Make sure it seats and latches correctly.
- Operate the system and determine if the concern is still present.

Is the concern still present?

Yes	CHECK OASIS for any applicable Technical Service Bulletins (TSBs). If a TSB exists for this concern, discontinue this test and follow TSB instructions. If no Technical Service Bulletins (TSBs) address this concern, INSTALL a new GPSM . REFER to: Global Positioning System Module (GPSM) (415-00C Information and Entertainment System - General Information - Vehicles With: SYNC/Sony AM/FM/CD, Removal and Installation).
No	The system is operating correctly at this time. The concern may have been caused by module connections. ADDRESS the root cause of any connector or pin issues.

Copyright © Ford Motor Company

Diagnostic Methods

Effective Diagnostic Techniques

NOTE: *Do not use this document in place of Ford-prescribed Symptom Based Diagnostics or Workshop Manual diagnostics. Diagnostic Methods is intended to provide Ford vehicle diagnostic information only for support of Ford-prescribed diagnostics.*

The following diagnostic process is critical for consistently successful diagnoses. Random methods work inconsistently and often lead to multiple repairs and the accompanying frustration.

- Understand and verify the **symptom** .
  - Understanding a symptom requires understanding normal operation.
  - Duplicate the concern. Recreate the same conditions that demonstrated the original concern (road testing may be necessary).
- Determine the responsible **system** .
  - Gather data, such as a visual inspection and an OASIS report.
  - Perform system tests, such as pressure tests or DTC retrieval.
- Identify the responsible **component** .
  - Test the suspect component and related parts.
- Determine the root **cause**
  - Examine related components (wiring faults, misalignments, incorrect adjustments) that may be the actual cause or may have caused the component failure.
  - Repair all related faults to avoid repeat failures.
  - Verify the repair has corrected the concern (and not created any new ones) using the identical conditions that demonstrated the original concern.

Diagnostic Scan Tool Testing

Network Test

Performing a network test is always recommended for analysis of electronic system concerns. Always solve network issues before addressing individual symptoms or DTC s.

Recommended Practices: Refer to section 418-00 Module Communications Network, Diagnosis and Testing, to diagnose a network outage or no response from an individual module (or modules).

Diagnostic Trouble Code Retrieval

Generally, a good diagnostic strategy is to resolve all on-demand codes related to the system concern. Retrieving all continuous DTC s can also be beneficial to understand historic issues or issues outside of the suspect system that may be affecting your concern. On-demand testing should be done to ensure the fault represented by a continuous DTC is still present.

Continuous Memory Diagnostic Trouble Codes

Modules that produce diagnostic trouble codes have a program that evaluates system conditions, normally while the vehicle or system is in use. Module inputs can be checked for values indicating an electrical fault with the monitoring circuit or component. Module outputs can be monitored for correct function. Codes are stored when predefined limits are exceeded and retained even if the ignition is turned off (generally a DTC is retained for 40+ ignition cycles). Not all continuous codes have a matching on-demand code - and vice versa. This varies with different modules. For example, some network communication codes are continuous only. It is important to note that the presence of a continuous DTC does not guarantee that the fault currently exists.

Ford On-Demand Diagnostic Trouble Codes

Ford Motor Company modules have a unique feature that performs a special diagnostic program at the request of the technician (using a diagnostic scan tool). This "On-demand" diagnostic program can exercise system outputs not normally running when the car is parked and record observed faults. These diagnostic codes are communicated to the scan tool, but are not recorded in module memory. An on-demand test is an effective tool for evaluating real input and output conditions during module activity –

activity that might not normally be occurring during service bay conditions. For example, an air suspension module on-demand test can run the compressor, vent the system, and observe the report from the height sensor even when the car is already at correct trim height and not requiring height adjustment.

Network Communication Diagnostic Trouble Codes

Network DTC s (U-prefix codes) are often a result of intermittent concerns such as damaged wiring or low battery voltage occurrences. Additionally, vehicle repair procedures (such as module reprogramming or diagnostics with modules disconnected) often set network DTC s. Replacing a module to resolve a network DTC is unlikely to resolve the concern. To prevent recurrence of intermittent network concerns, inspect all network wiring, especially in-line and module connectors. Test the vehicle battery to make sure the vehicle voltage will be stable.

Recommended practice: Clear the DTC and retest. If the DTC repeats, test the vehicle communication network.

DTC Nomenclature (SAE J2012 and ISO 14229)

Many modules use 5-character DTC s followed by a 2-character failure-type code. The failure-type (sometimes called "fault byte") codes provide information about specific fault conditions such as opens or shorts to ground. Continuous memory DTC s have an additional 2-character DTC status code suffix to assist in determining DTC history.

Integrated Diagnostic System Scan Tool Usage

If The Integrated Diagnostic System Scan Tool Does Not Communicate With The Vehicle Communication Module

1. Check the Vehicle Communication Module connection and power from the DLC .
2. Check the communication between the scan tool and the Vehicle Communication Module.
3. Follow scan tool instructions to retry.

If The Integrated Diagnostic System Scan Tool Does Not Communicate With The Vehicle

The IDS scan tool first attempts to communicate with the PCM . After establishing communication with the PCM , the scan tool then attempts to communicate with all other modules on the vehicle.

1. Verify the scan tool operation with a known good vehicle.
2. Verify the ignition is ON.
3. If an IDS session cannot be established with the vehicle, (IDS may state "No communication can be established with the PCM"):
    - Choose "NO" when the scan tool prompts to retry communication.
    - Enter a PCM engineering part number, tear tag, or calibration number to identify the vehicle and start a session. These identifying numbers may be found:
        - The PCM engineering part number and the 4-character tear tag are printed on the PCM label.
        - (PTS website users only) The PCM engineering part number can be determined from OASIS using the VIN . Choose “HVBoM” from the OASIS tab menu and search Powertrain engine modules for the PCM engineering part number (If the first character is a "P" in the part number, enter only the characters following the "P" into IDS).
    - Establish a session based on the PCM information (above).
4. Using the tool box menu, run the network test.
    - Determine if all modules on the network are unresponsive or if only the PCM does not communicate.
    - **Recommended practice:** Refer to section 418-00 Module Communications Network, Diagnosis and Testing, to diagnose the network outage or no response from the PCM .

Measuring Automotive Circuits

Wiring Pin (Terminal) Fit And The Use Of Rotunda Flex Probes

- To avoid wiring pin (terminal) damage, Rotunda Flex Probes NUD105-R025D or Terminal Probe Kit 29-011A must be used to connect test equipment or jumper wires to pins (terminals).
- Male to female pin (terminal) fit is critical for correct connection and durability.
    - Pin (terminal) fit may be checked by using the mating pin (terminal) to test for normal separation force (a damaged

pin or terminal will have very low separation force from the mating pin or terminal)
    - Correctly checking the separation force of small pins (terminals) may require removal of the connector terminal guide/retainer if it adds drag to the pin (terminal) insertion or removal
- Replace damaged connectors or pins (terminals).

Checking Power-Providing Circuits

- Measuring a power wire with the intended load disconnected using a Digital Multimeter (DMM) will only find open circuits (open fuse or wire).
- **Recommended practice:** Circuits carrying approximately 200-1000 mA* may be loaded with a 250-350 mA test light. Measure circuit voltage with a Digital Multimeter (DMM) while the test light is connected and illuminated. A reduction in the voltage present during test-light-loading indicates excessive circuit resistance.
- **Recommended practice:** Circuits carrying more than one ampere* should be loaded with a device requiring similar current (e.g., a headlamp bulb may be effective). A reduction in the voltage present during loading indicates excessive resistance.
- *Circuit current is matched to wire gauge/size; Examples:
    - Conductor sizes of 24 gauge (.5 mm) or smaller are generally used to carry approximately 1 ampere (1000 mA) or less. Use of the test light to load these circuits is appropriate.
    - Conductor sizes of 20 gauge (.8 mm) or larger are generally used to carry approximately 5 amperes (5000 mA) or more. Match the substitute load (measure substitute load current first as necessary) to this current level.

Checking Ground-Providing Circuits

- The best method of checking ground circuits is to measure the circuit voltage drop during component operation (or attempted operation).
- An ohmmeter may be accurately used if the battery has been disconnected.
- **Recommended practice:** Expect less than 2 ohms for most small diameter (18 gauge and smaller) wires.
- Ohmmeter accuracy is limited to circuits carrying less than approximately 5 amperes (this is due to the fact that very small resistances, undetectable by a Digital Multimeter (DMM), cause significant voltage loss in higher current circuits).
- Digital Multimeter (DMM) ohmmeter readings are easily corrupted by the normal voltage present (battery connected) in many ground circuits.
    - **Recommended practice:** Reverse the leads and check for changes in the measurement. Reversing the Digital Multimeter (DMM) lead connections should never change the resistance measurement (unless the circuit contains a semi-conductor). Measurement (non-semi-conductor) differences when leads are interchanged at the test points indicate invalid test results. The presence of voltage corrupts the reading, and causes the meter reading to change when the leads are reversed.

Checking Circuit Continuity

- **Recommended practice:** Expect less than 2 ohms of resistance for most wires.
- Ohmmeter low-resistance resolution (approximately 0.1 ohm) limits its use to circuits carrying less than approximately 5 amperes. This is due to the fact that very small resistances, below the resolution of a Digital Multimeter (DMM), cause significant voltage loss in higher current circuits.
- The Digital Multimeter (DMM) applies a small amount of voltage to the circuit or component to calculate resistance. As a result, Digital Multimeter (DMM) ohmmeters are very sensitive to any level of voltage present. Voltage present in the circuit will corrupt the Digital Multimeter (DMM) reading.

Checking For Unintended Continuity (Shorts) To Other Circuits

- A Digital Multimeter (DMM) ohmmeter may be used to detect undesired circuit connections to:
    - Ground
    - Other unpowered circuits
- **Recommended practice:** Expect greater than 10,000 ohms of resistance between two separate circuits; the best result is an open circuit Digital Multimeter (DMM) indication (no detected resistance).
- Shorts to voltage are checked with a voltmeter
- **Recommended practice:** Turn ignition on (with battery connected) and measure the circuit for any voltage present (none should be present)

Checking Circuits By Back-Probing A Connector

- Back-probing should be a testing method of last resort. It should only be employed where a diagnostic step requires a circuit to be tested under actual operating conditions. Back-probing is a risky testing method due to the uncertainty of the probe connection and the possibility of damaging terminals.

Do not force test leads or other probes into connectors. Adequate care must be exercised to avoid connector terminal damage while ensuring that good electrical contact is made with the circuit or terminal. Failure to follow these instructions may cause damage to wiring, terminals, or connectors and subsequent electrical faults.
    - Use back probes specifically designed for the purpose to assist in making a good test connection and to prevent connector or terminal damage during back-probing.
- Do not test for the presence of voltage at a single point where zero volts is a possible result (you cannot tell the difference between a bad probe contact and a zero volt result).
- Do not test for continuity/opens (using an ohmmeter) between two points (you cannot tell the difference between bad probe contacts and an open circuit).
- Back-probing may be used where the circuit must be analyzed with the voltage-drop method (if the circuit carries greater than 5 amperes and no other means of testing will definitively eliminate circuit resistance as a possible fault). A zero-volt result indicates incorrect test conditions (no current flow) or bad back-probe connections.
- Occasionally, module failure mode behavior will change the operation of a circuit when it is opened for testing. Back-probing is an acceptable remedy for these testing dilemmas.

Circuit Analysis Using Jumper Wires (Creating Substitute Circuits)

- Jumper wires may be employed for circuit analysis.
- **Cautions:**
    - Always use fused jumper wires — the recommended universal-testing jumper wire fuse is 2-5 amperes; larger fuse ratings should be used only in special circumstances.
    - Use flex probes or equivalent to prevent connector terminal damage (flex probes are not intended to carry higher currents necessary to operate motors such as a cooling fan or blower motor).
    - Follow workshop manual testing directions when using jumper wires to avoid component or harness damage due to incorrect jumper connections.
    - Never repair a circuit by adding a new wire in parallel to the old one (overlaying the circuit) without fully understanding what caused the circuit to fail. Always find, examine, and repair the fault to correct the root cause and to repair any adjacent wiring that has been damaged.

Checking Modules

- Generally, module failure rate is very low and therefore replacement modules usually do not resolve the root cause. Incorrect replacement of a module is often the result of inadequate testing.
    - Understand the correct module function.
    - Make sure programmable parameters are set correctly for the function in question (Refer to 418-01 Module Configuration for more information).
    - Resolve DTCs first — as directed by Diagnostic Routines.
    - Test all inputs, both hard-wired and networked.
    - Test outputs (see "Checking module switching circuits" below).
    - Check applicable TSBs for module software changes (flash programming).
- Checking module switching circuits.
    - Using the scan tool module-output command function (for example, IDS Output State Control) to activate components is a fast way to confirm an output is capable of being switched on by the module. Testing that reveals normal module-output function confirms the need to analyze the module inputs.
    - Don't apply ground or power directly to module-switched components with jumper wires (unless directed by a workshop manual procedure), as the component could be damaged by a direct connection to ground/power.

Copyright © Ford Motor Company

Audio Front Control Module (ACM)

Removal

NOTE: *Removal steps in this procedure may contain installation details.*

1. **WARNING: Before beginning any service procedure in this section, refer to Safety Warnings in section 100-00 General Information. Failure to follow this instruction may result in serious personal injury.**

   Refer to: Health and Safety Precautions (100-00 General Information, Description and Operation).

2. **NOTE:** *If installing a new module, it is necessary to upload the module configuration information to the scan tool prior to removing the module. This information must be downloaded into the new module after installation.*

   Upload the ACM configuration information to the scan tool by following the scan tool on screen instructions.

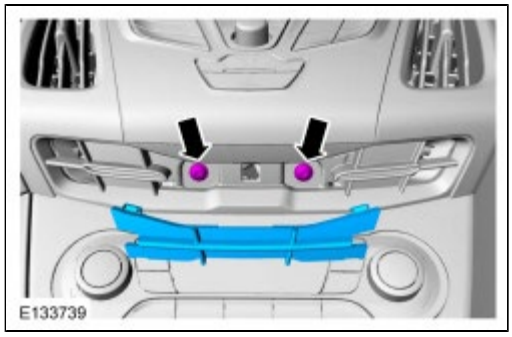

3.

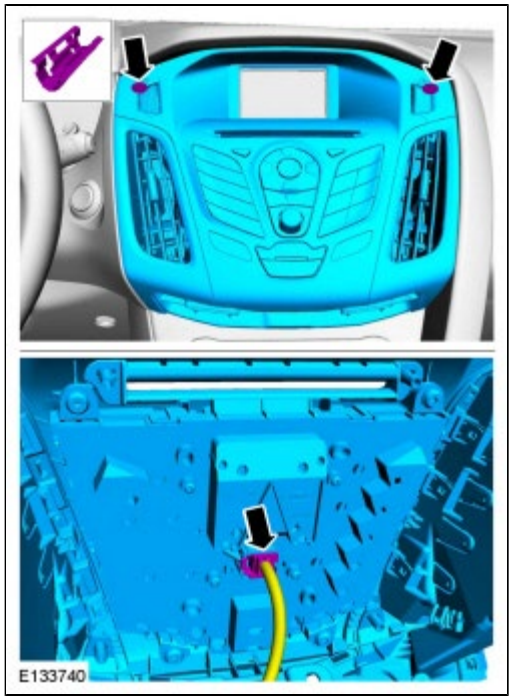

4. *Torque* : 1.3 Nm

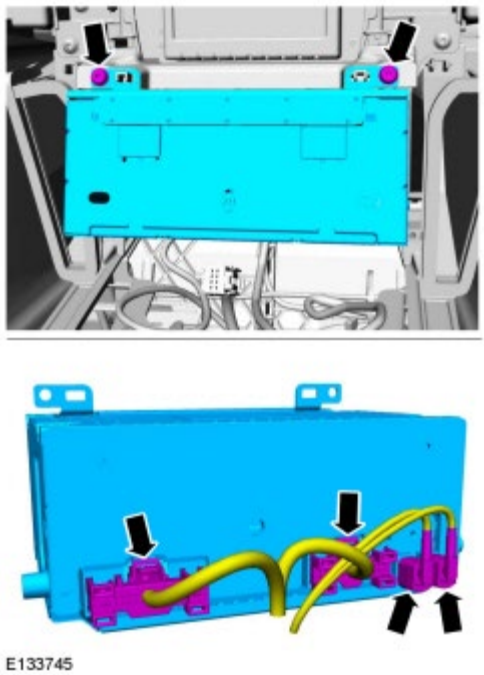

Installation

1. To install, reverse the removal procedure.
2. If installing a new ACM , download the ACM configuration information from the scan tool to the new ACM following the scan tool on screen instructions.

Copyright © Ford Motor Company

Audio Input Socket

Removal

NOTE: *Removal steps in this procedure may contain installation details.*

1. **WARNING: Before beginning any service procedure in this section, refer to Safety Warnings in section 100-00 General Information. Failure to follow this instruction may result in serious personal injury.**

   Refer to: Health and Safety Precautions (100-00 General Information, Description and Operation).

2. 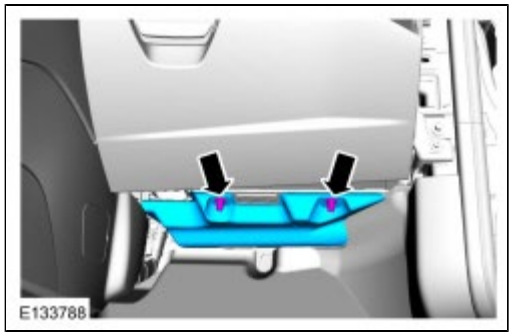

3. Remove the RH instrument panel side trim panel.

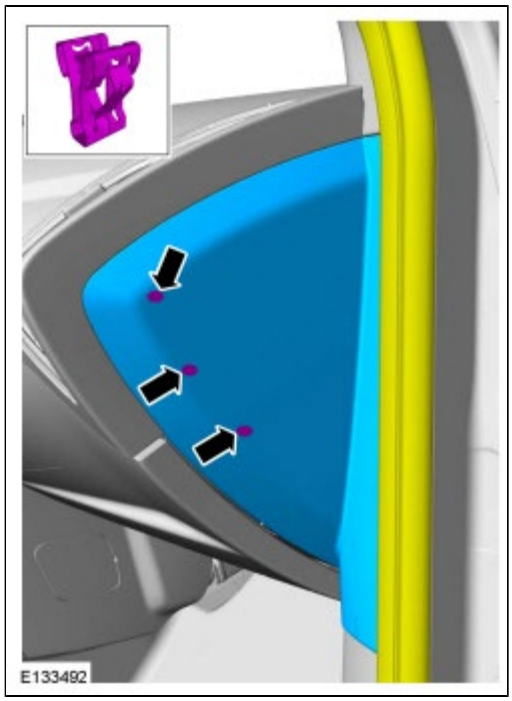

4. Remove the glove compartment.

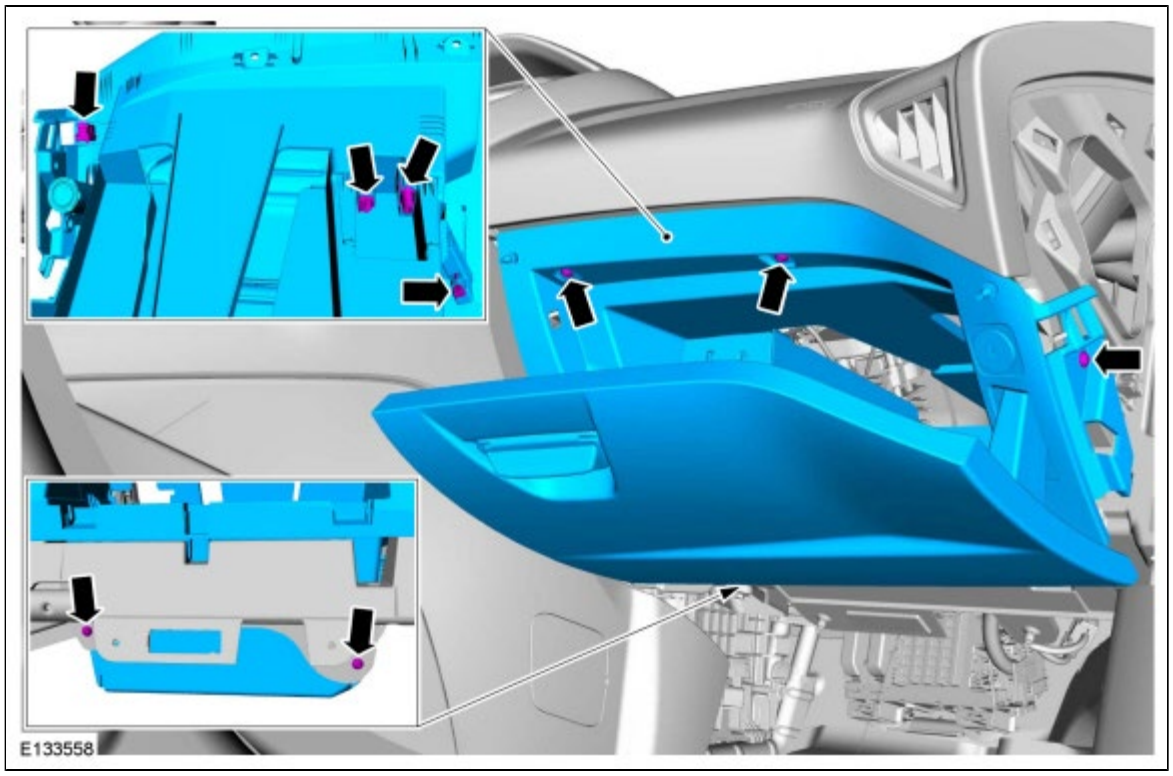

5.

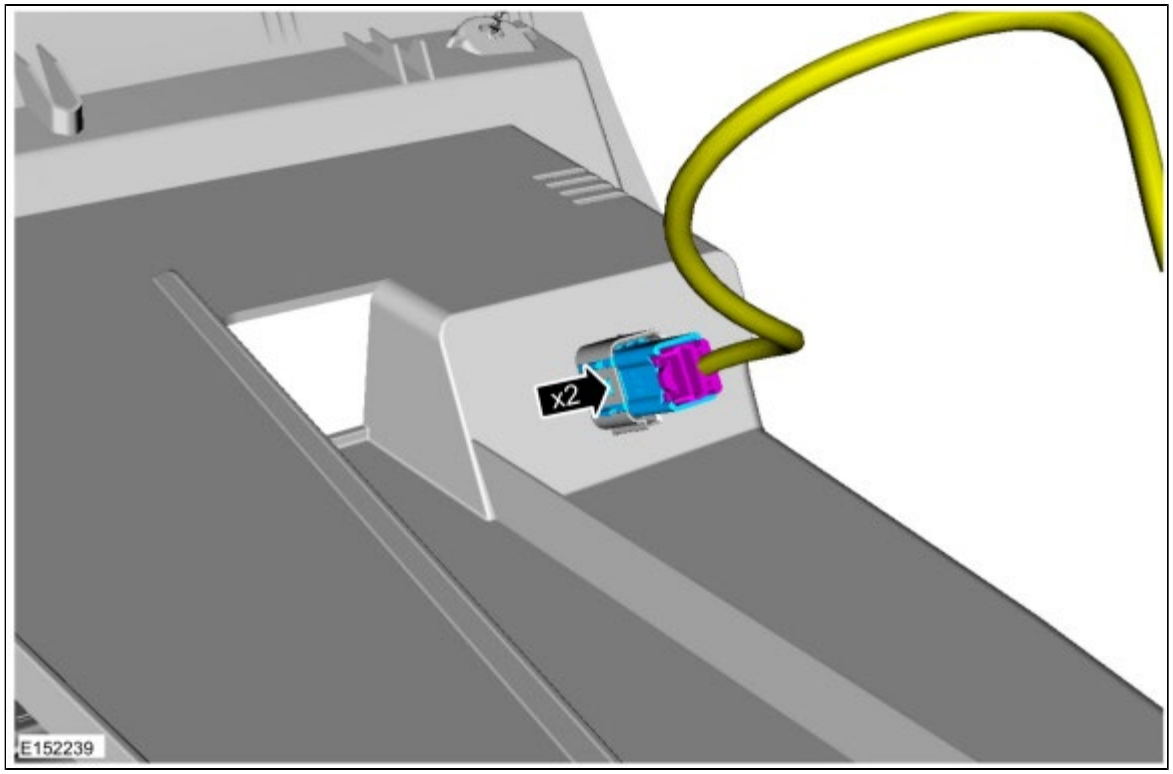

Installation

1. To install, reverse the removal procedure.

Copyright © Ford Motor Company

Audio Unit Antenna

Removal

NOTE: *Removal steps in this procedure may contain installation details.*

1. **WARNING: Before beginning any service procedure in this section, refer to Safety Warnings in section 100-00 General Information. Failure to follow this instruction may result in serious personal injury.**

   Refer to: Health and Safety Precautions (100-00 General Information, Description and Operation).

2. Remove the D-pillar trim panels.
   Refer to: D-Pillar Trim Panel - Vehicles With: 4-Door (501-05 Interior Trim and Ornamentation, Removal and Installation).
   Refer to: D-Pillar Trim Panel - Vehicles With: 5-Door (501-05 Interior Trim and Ornamentation, Removal and Installation).

3. Lower the rear of the headliner for access.

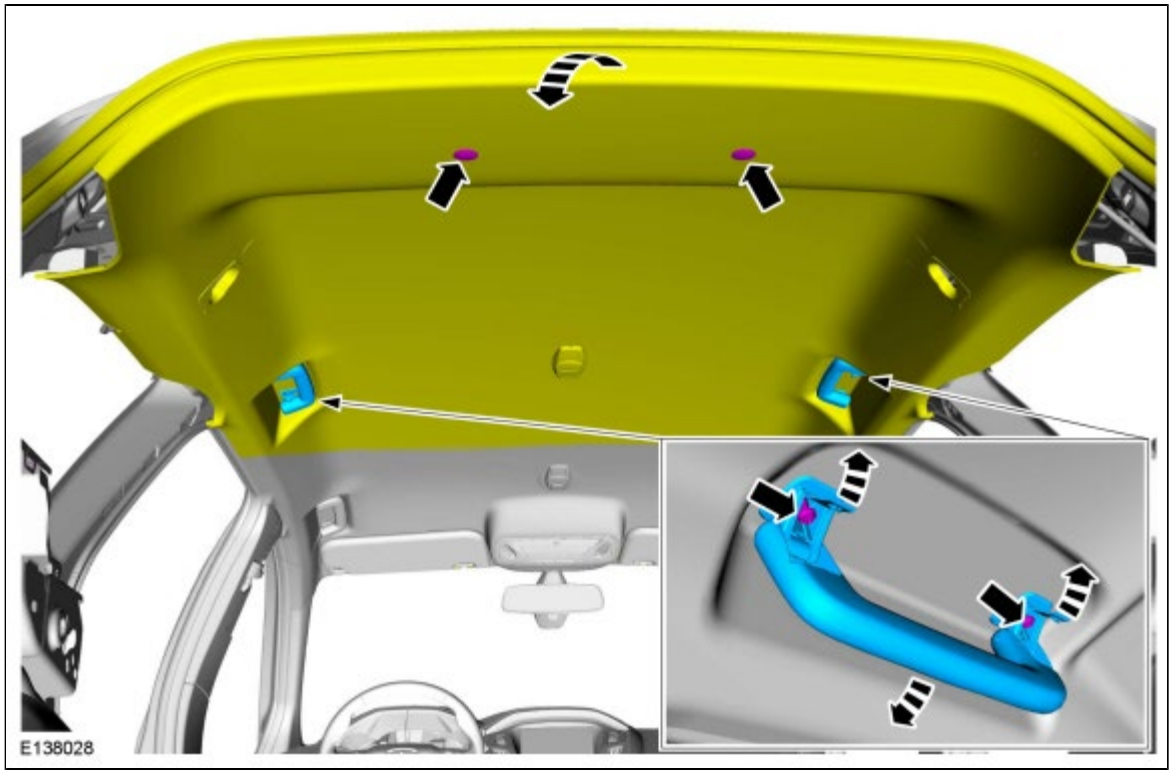

4. *Torque* : 10 Nm

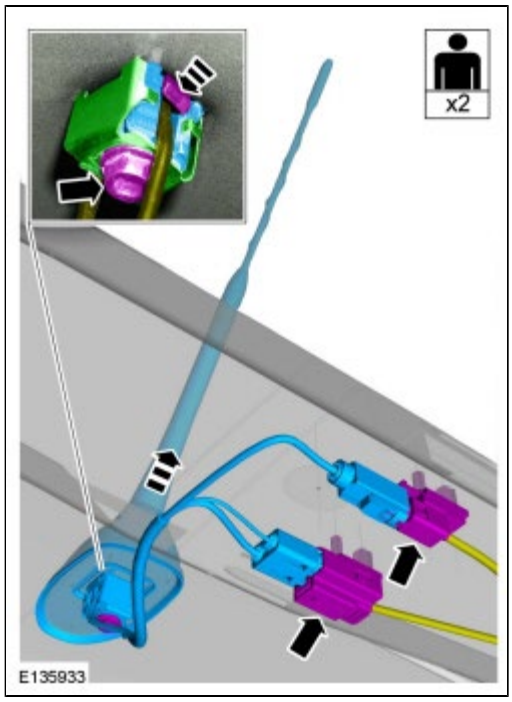

Installation

1. To install, reverse the removal procedure.

Copyright © Ford Motor Company

Audio Unit Antenna Cable

Removal

NOTE: *Removal steps in this procedure may contain installation details.*

NOTE: *The antenna cables are part of the vehicle wiring harness Because the cables cannot be removed from the harness, this procedure applies to the replacement of the cables only.*

1. **WARNING: Before beginning any service procedure in this section, refer to Safety Warnings in section 100-00 General Information. Failure to follow this instruction may result in serious personal injury.**

   Refer to: Health and Safety Precautions (100-00 General Information, Description and Operation).

NOTE: *Steps 2 thru 17 apply for access to the lower antenna cable only.*

2. Vehicles with manual transmission.

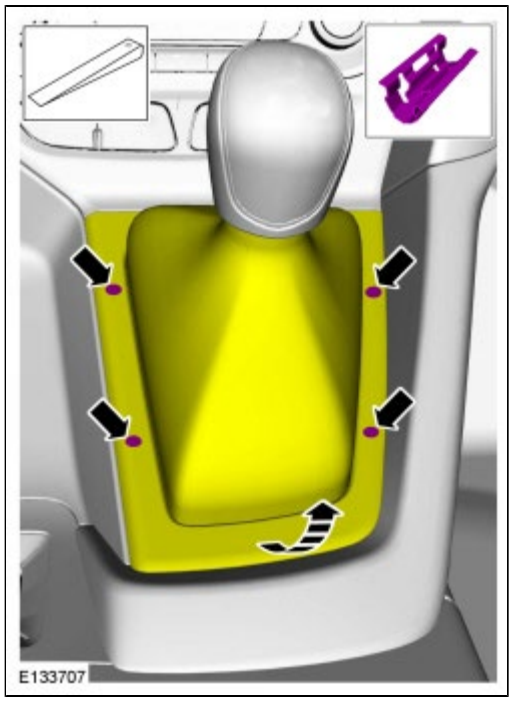

3. Vehicles with automatic transmission.

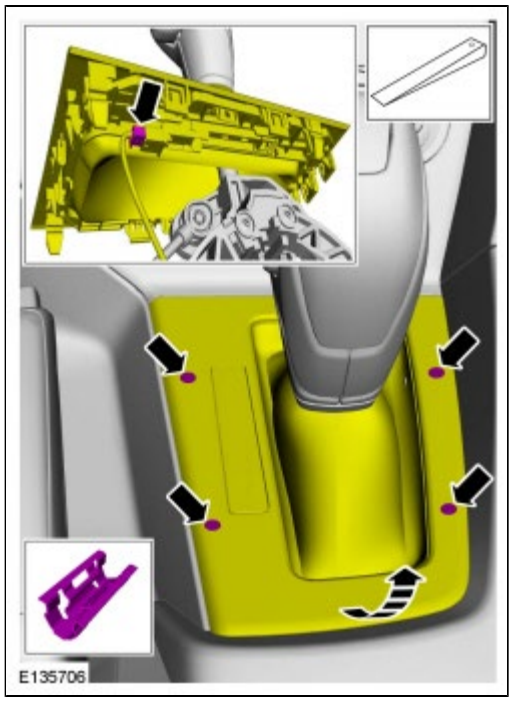

4.

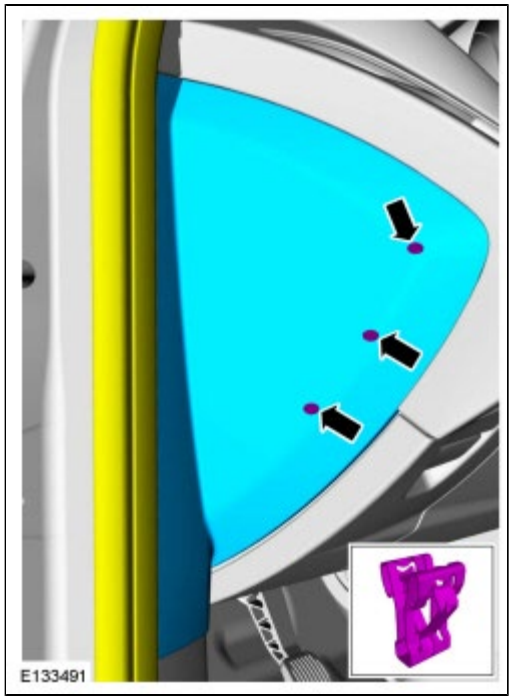

5.

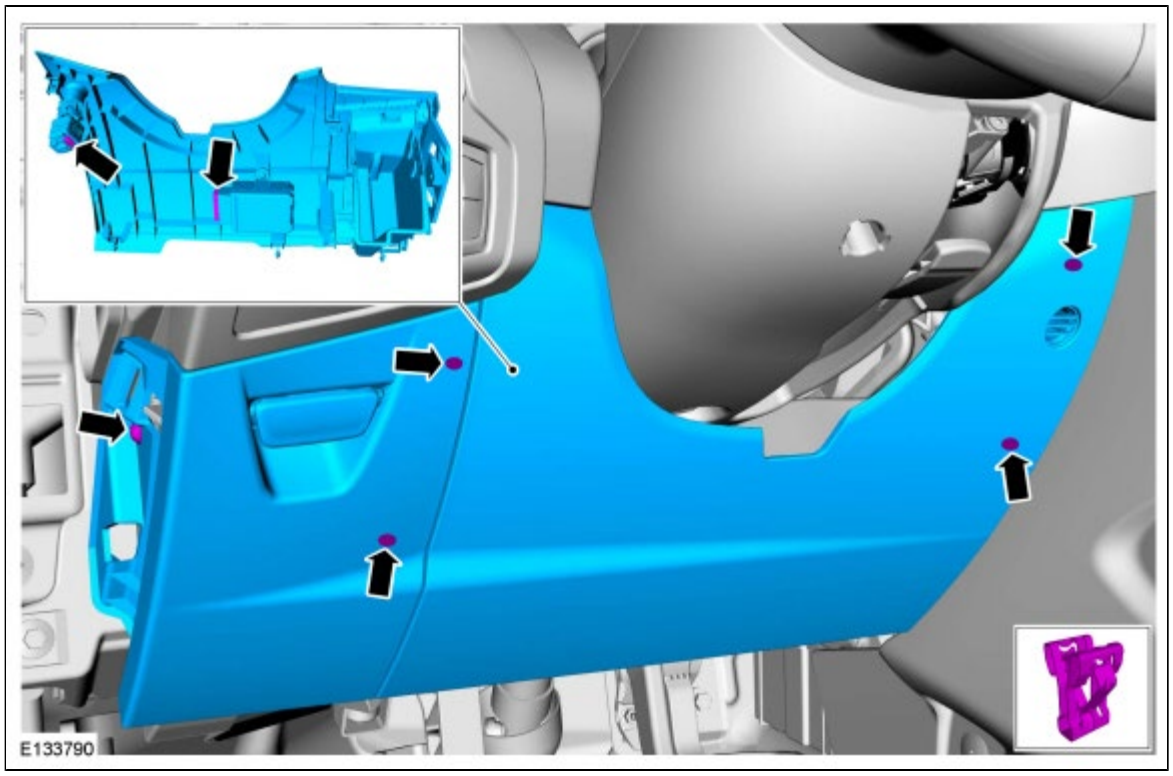

6. Vehicles without center armrest.

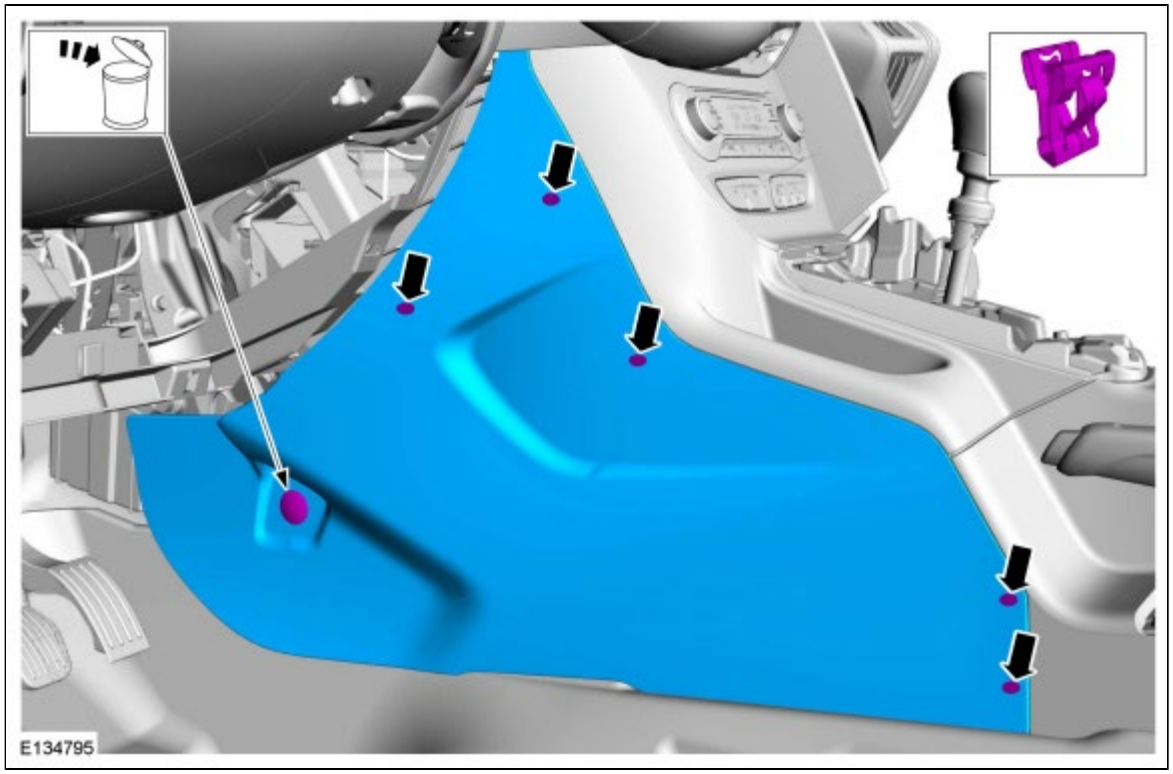

7. Vehicles with center armrest.

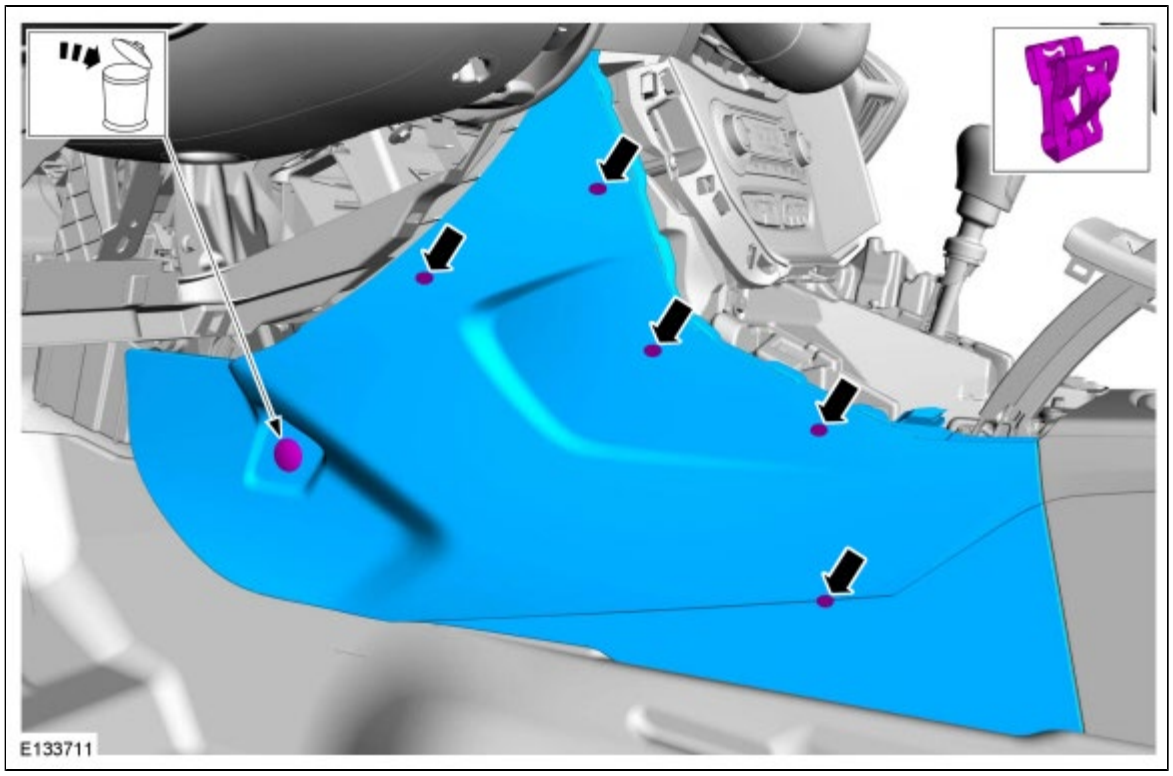

8. Vehicles without center armrest.

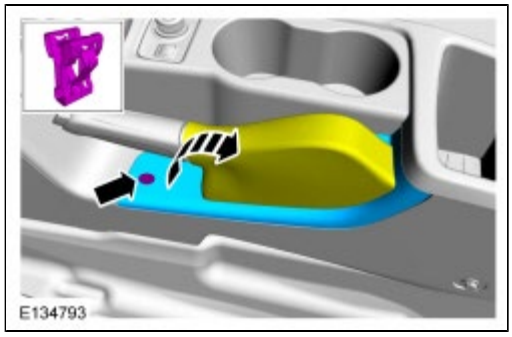

9. Vehicles without center armrest.
   Torque : 2 Nm

10. Vehicle with center armrest.

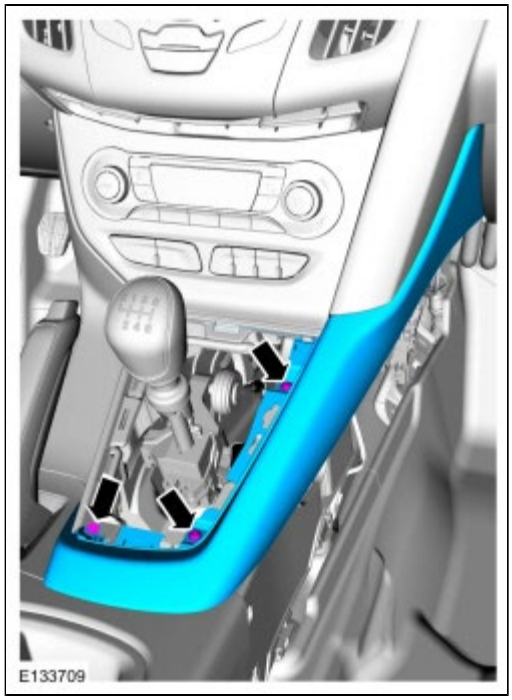

11.

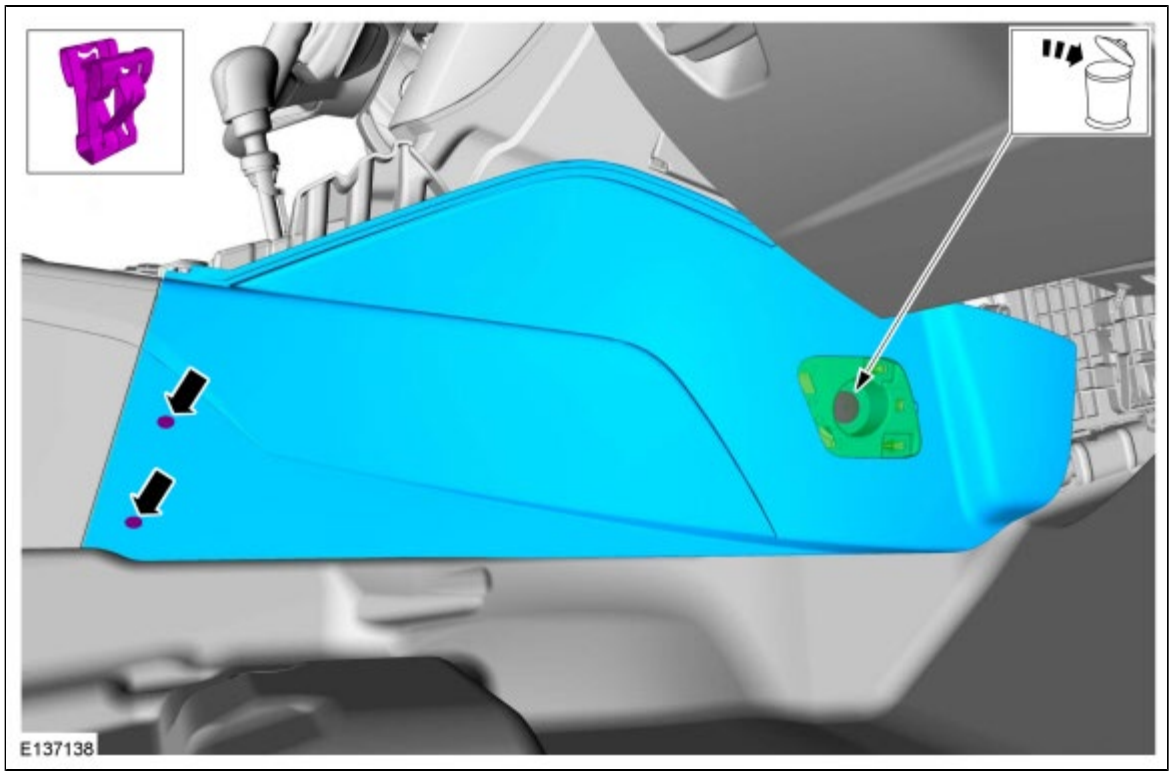

12. Vehicles with center armrest.

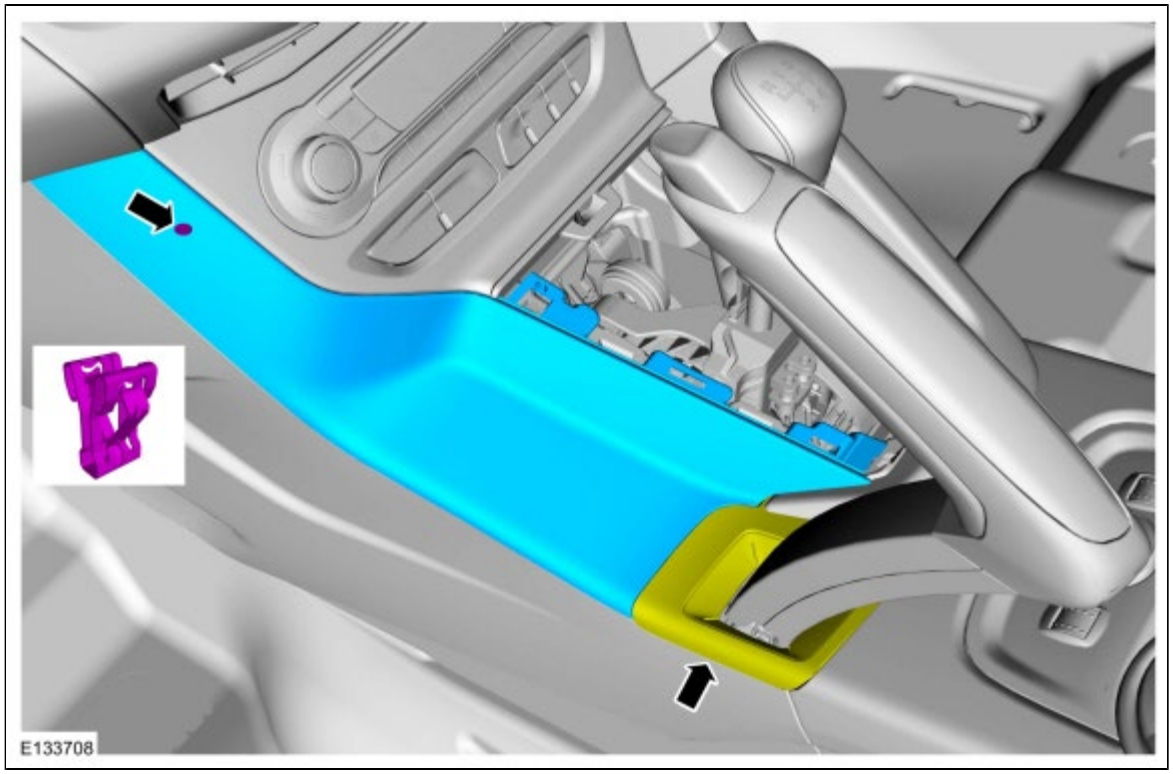

13. Vehicles without center armrest.

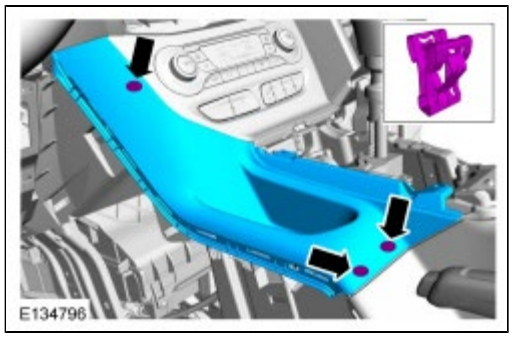

NOTE: *Sony® sound shown, premium and base audio similar.*

14. Disconnect antenna connector(s).

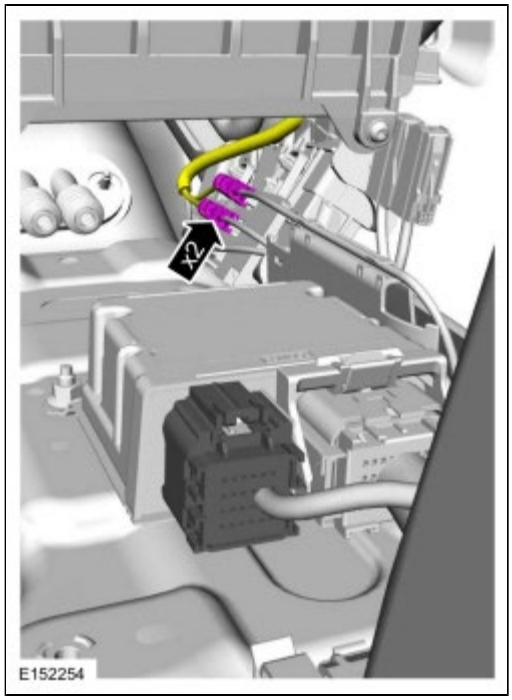

15. *Torque* : 1 Nm

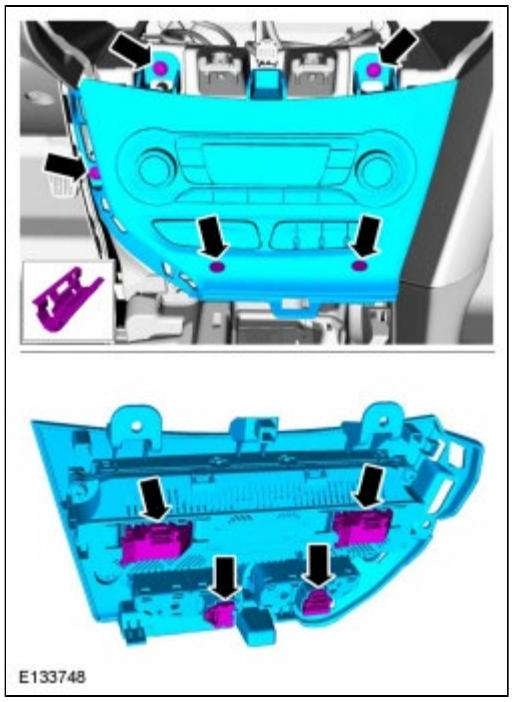

16. Remove the ACM .
    Refer to: Audio Front Control Module (ACM) (415-00A Information and Entertainment System - General Information - Vehicles With: AM/FM/CD, Removal and Installation).
    Refer to: Audio Front Control Module (ACM) (415-00B Information and Entertainment System - General Information - Vehicles With: AM/FM/CD/SYNC, Removal and Installation).
    Refer to: Audio Front Control Module (ACM) (415-00C Information and Entertainment System - General Information - Vehicles With: SYNC/Sony AM/FM/CD, Removal and Installation).

17.

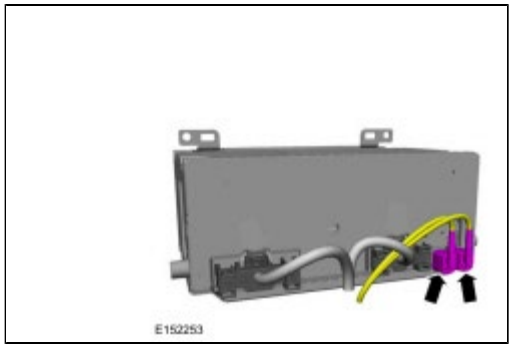

18. **NOTE:** *Steps 18 thru 23 apply for access to the upper antenna cable only.*

    Remove the headliner.
    Refer to: Headliner - Vehicles With: 4-Door (501-05 Interior Trim and Ornamentation, Removal and Installation).
    Refer to: Headliner - Vehicles With: 5-Door (501-05 Interior Trim and Ornamentation, Removal and Installation).
    Refer to: Headliner - Vehicles With: 5-Door (501-05 Interior Trim and Ornamentation, Removal and Installation).

19. Remove lower B-pillar trim panel.

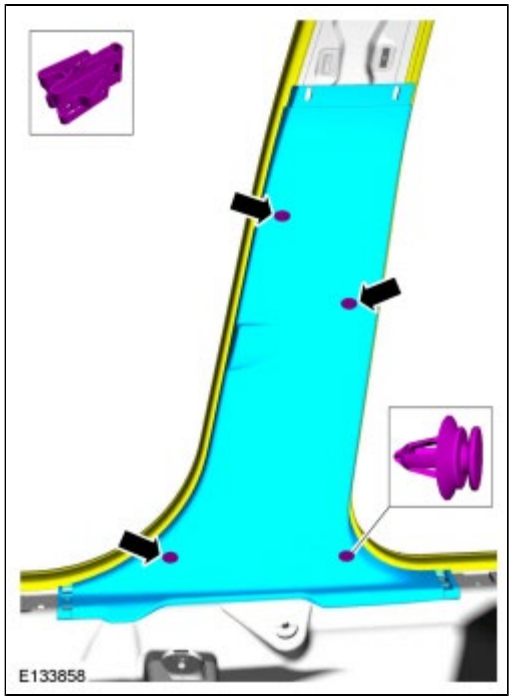

20. **NOTE:** *5-door only*

    Remove the following items:
    1. Remove the passenger front seat.
       Refer to: Front Seat (501-10 Seating, Removal and Installation).
    2. Remove the gearshift lever.
       Refer to: Gearshift Lever - Vehicles With: 5-Speed Manual Transmission - B5/IB5/5-Speed Manual Transmission - MTX75 (308-06 Manual Transmission External Controls, Removal and Installation).

Refer to: Gearshift Lever - Vehicles With: 6-Speed Manual Transmission - B6/6-Speed Manual Transmission - MMT6 (308-06 Manual Transmission External Controls, Removal and Installation).
Refer to: Selector Lever Assembly (307-05 Automatic Transmission External Controls, Removal and Installation).

3. Remove the parking brake control.
   Refer to: Parking Brake Control (206-05 Parking Brake and Actuation, Removal and Installation).

21.

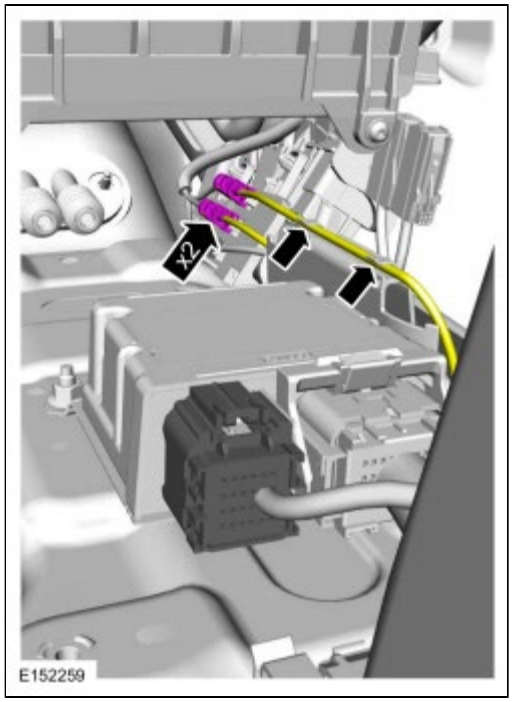

22. *Torque* : 10 Nm

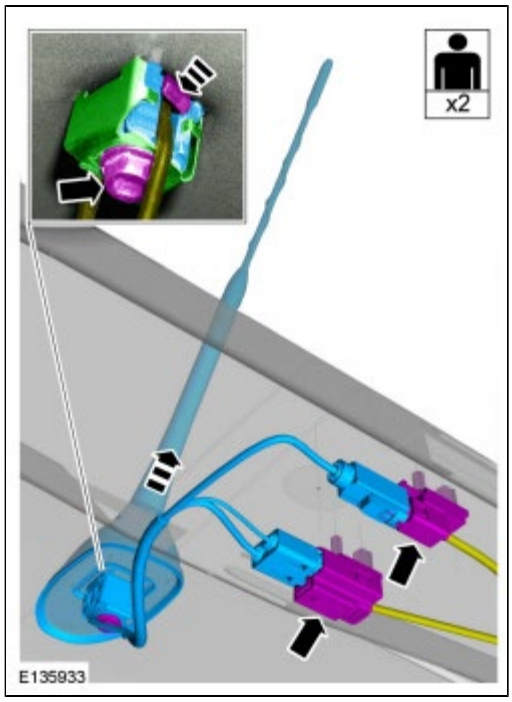

23.

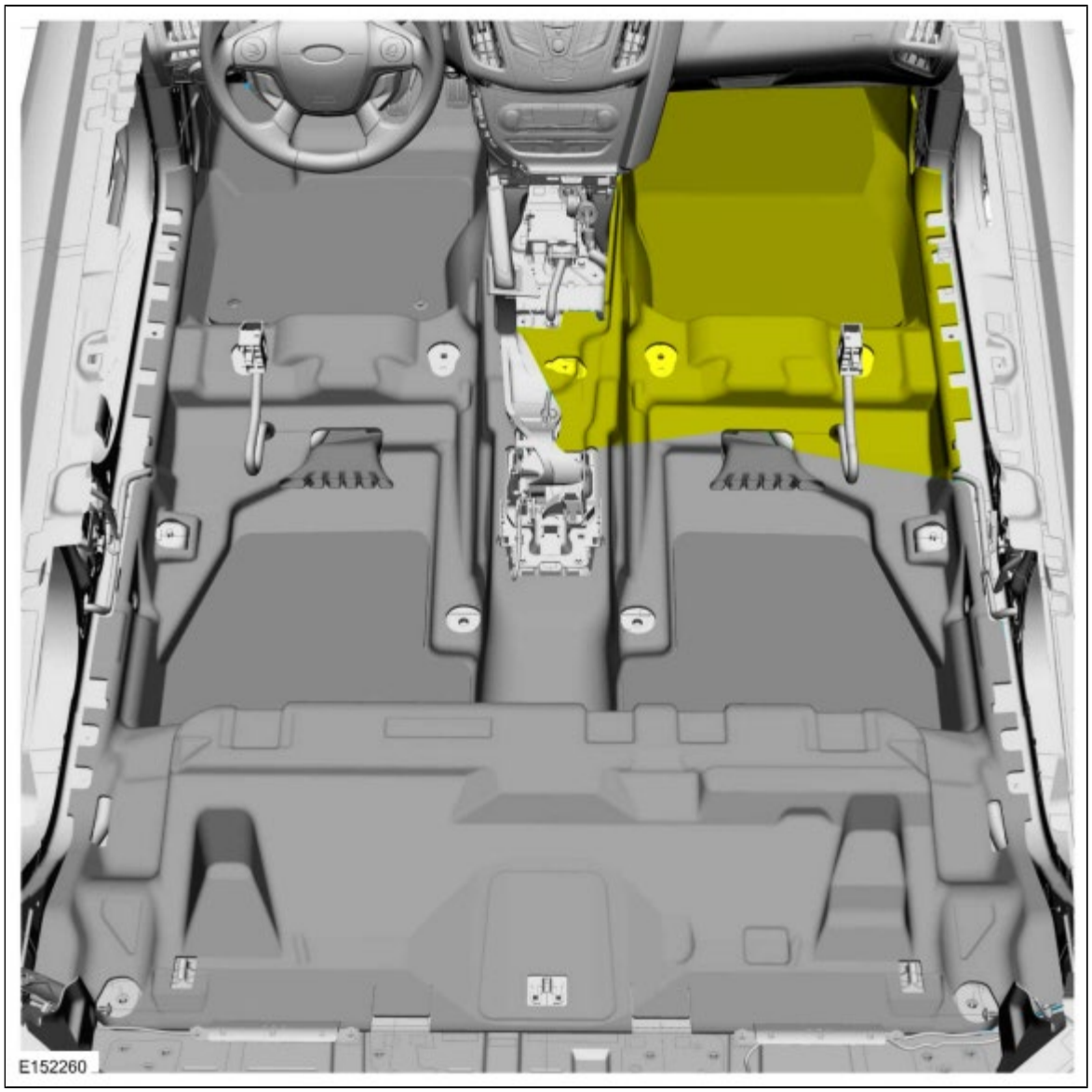

Installation

NOTE: *The antenna cables are part of the vehicle wiring harness. Because the cables cannot be removed from the harness, this procedure applies to the replacement of the cables only.*

1. **NOTE:** *Upper antenna cable*

   Overlay the new upper antenna cable on the vehicle wiring harness, following the routing of the original cable. Cut the ends off of the existing cable(s).

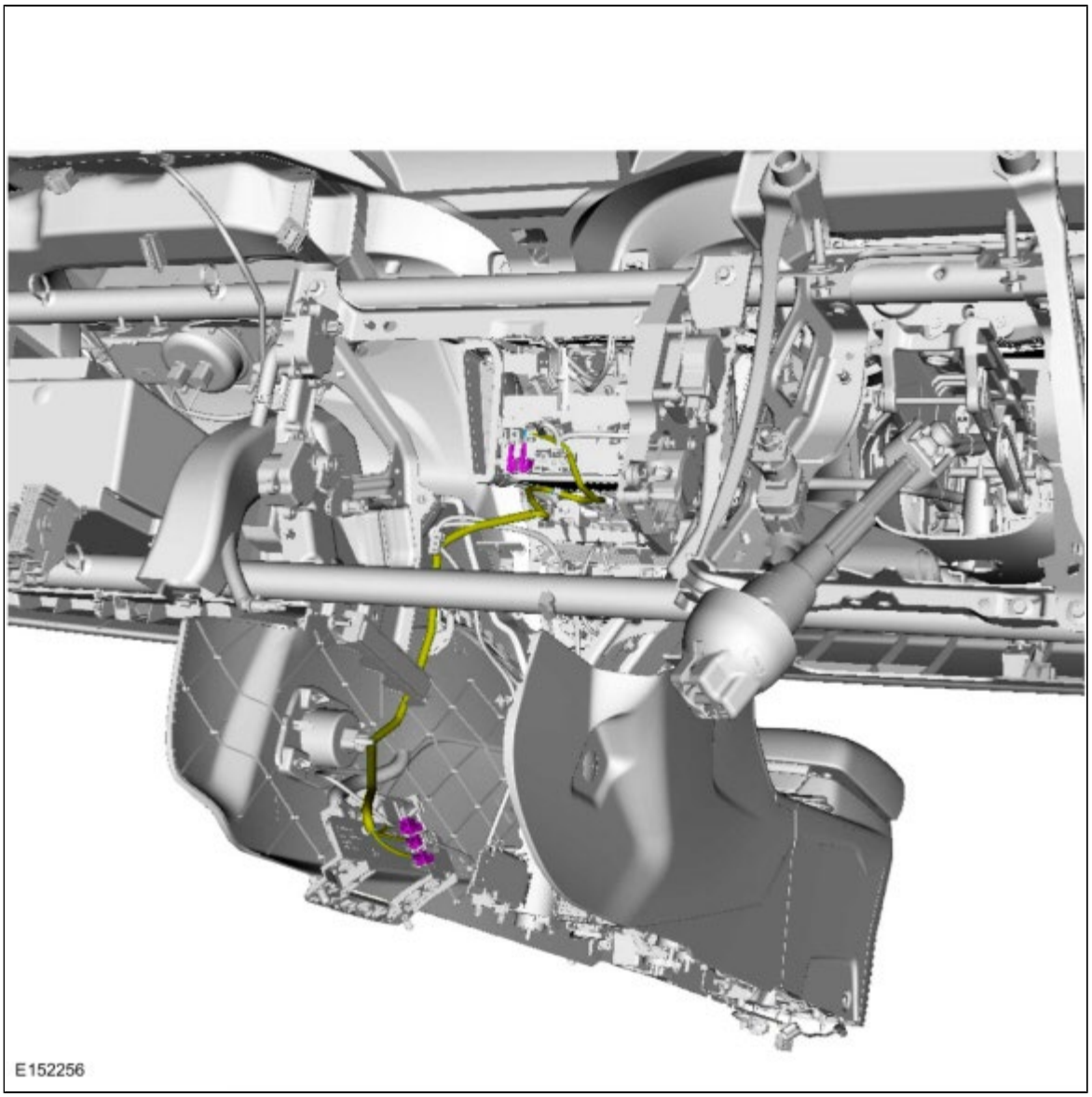

2. **NOTE:** *Lower antenna cable*

   Overlay the new lower antenna cable on the vehicle wiring harness, following the routing of the original cable. Cut the ends off of the existing cable(s).

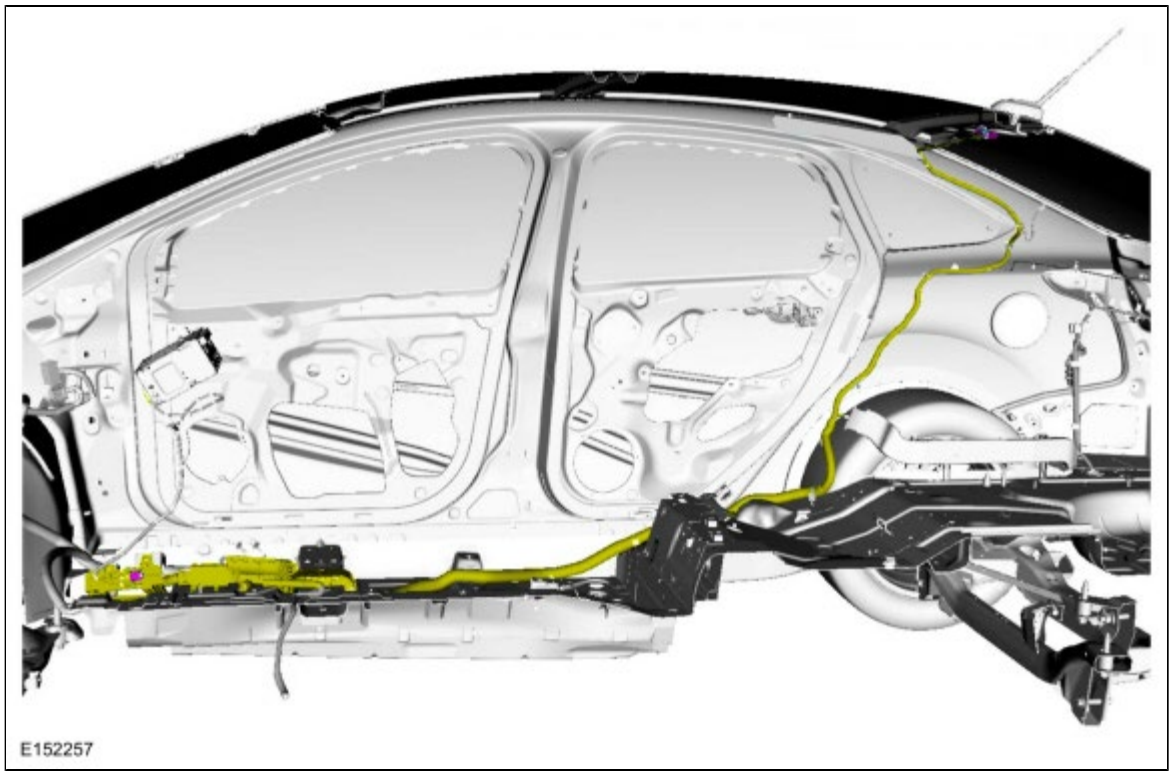

3. To install, reverse the removal procedure.

Copyright © Ford Motor Company

Front Control/Display Interface Module (FCDIM)

Removal

NOTE: *Removal steps in this procedure may contain installation details.*

1. **WARNING: Before beginning any service procedure in this section, refer to Safety Warnings in section 100-00 General Information. Failure to follow this instruction may result in serious personal injury.**

   Refer to: Health and Safety Precautions (100-00 General Information, Description and Operation).

2. **NOTE:** *If installing a new module, it is necessary to upload the module configuration information to the scan tool prior to removing the module. This information must be downloaded into the new module after installation.*

   Upload the FCDIM configuration information to the scan tool by following the scan tool on screen instructions.

3. Remove the ACM .
   Refer to: Audio Front Control Module (ACM) (415-00A Information and Entertainment System - General Information - Vehicles With: AM/FM/CD, Removal and Installation).

4. *Torque* : 1.3 Nm

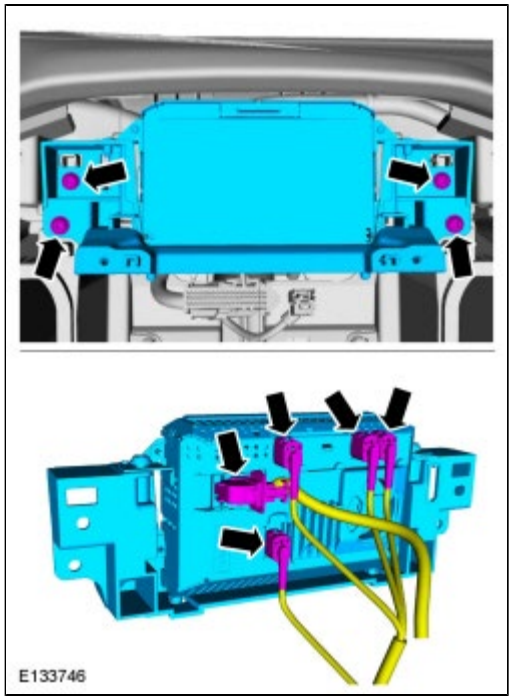

5. **NOTE:** *This step is only necessary when installing a new component.*

   Torque : 2 Nm

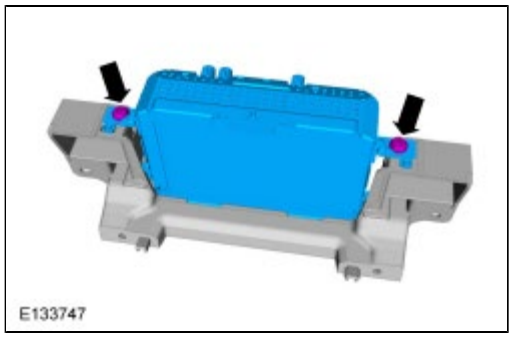

Installation

1. To install, reverse the removal procedure.
2. If installing a new FCDIM , download the FCDIM configuration information from the scan tool to the new FCDIM following the scan tool on screen instructions.

Copyright © Ford Motor Company

Front Controls Interface Module (FCIM)

Removal

NOTE: *Removal steps in this procedure may contain installation details.*

1. **WARNING: Before beginning any service procedure in this section, refer to Safety Warnings in section 100-00 General Information. Failure to follow this instruction may result in serious personal injury.**

   Refer to: Health and Safety Precautions (100-00 General Information, Description and Operation).

2. 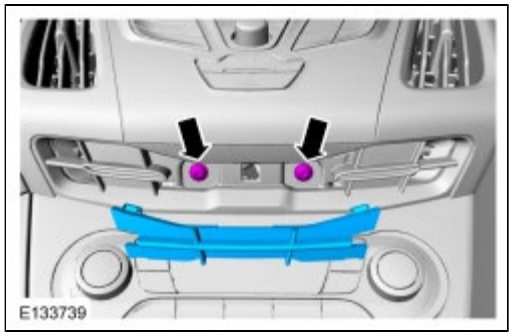

3. 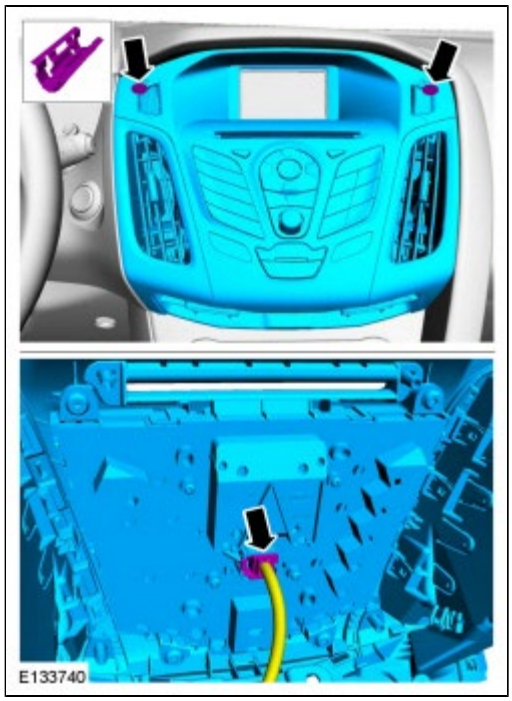

4. **NOTE:** *This step is only necessary when installing a new component.*

   Torque : 1.2 Nm

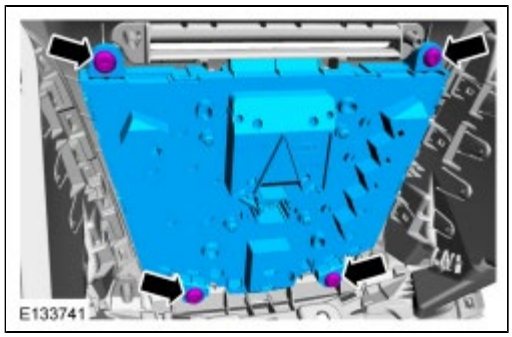

Installation

1. To install, reverse the removal procedure.

Copyright © Ford Motor Company

Front Door Speaker

Removal

NOTE: *Removal steps in this procedure may contain installation details.*

1. **WARNING: Before beginning any service procedure in this section, refer to Safety Warnings in section 100-00 General Information. Failure to follow this instruction may result in serious personal injury.**

   Refer to: Health and Safety Precautions (100-00 General Information, Description and Operation).

2. Remove the front door trim panel.
   Refer to: Front Door Trim Panel (501-05 Interior Trim and Ornamentation, Removal and Installation).

3. *Torque* : 2 Nm

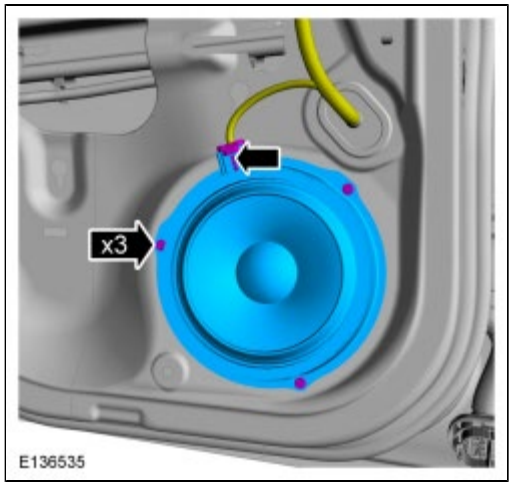

Installation

1. To install, reverse the removal procedure.

Copyright © Ford Motor Company

Rear Door Speaker

Removal

NOTE: *Removal steps in this procedure may contain installation details.*

1. **WARNING: Before beginning any service procedure in this section, refer to Safety Warnings in section 100-00 General Information. Failure to follow this instruction may result in serious personal injury.**

   Refer to: Health and Safety Precautions (100-00 General Information, Description and Operation).

2. Remove the rear door trim panel.
   Refer to: Rear Door Trim Panel (501-05 Interior Trim and Ornamentation, Removal and Installation).

3. *Torque* : 2 Nm

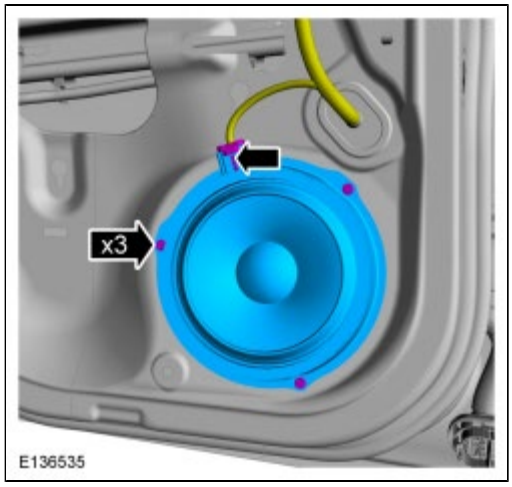

Installation

1. To install, reverse the removal procedure.

Copyright © Ford Motor Company

SYNC Module [APIM]

Removal

NOTE: *Removal steps in this procedure may contain installation details.*

1. **WARNING: Before beginning any service procedure in this section, refer to Safety Warnings in section 100-00 General Information. Failure to follow this instruction may result in serious personal injury.**

   Refer to: Health and Safety Precautions (100-00 General Information, Description and Operation).

2. Remove the FCIM .
   Refer to: Front Controls Interface Module (FCIM) (415-00B Information and Entertainment System - General Information - Vehicles With: AM/FM/CD/SYNC, Removal and Installation).

3. Remove the LH instrument panel trim panel.

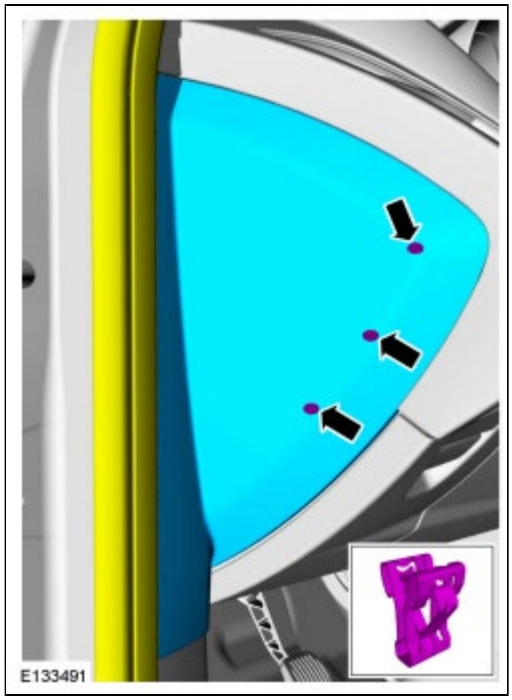

4. If equipped.
   Refer to: Driver Lower Airbag - Vehicles Built From: 11-June-2012 (501-20B Supplemental Restraint System, Removal and Installation).

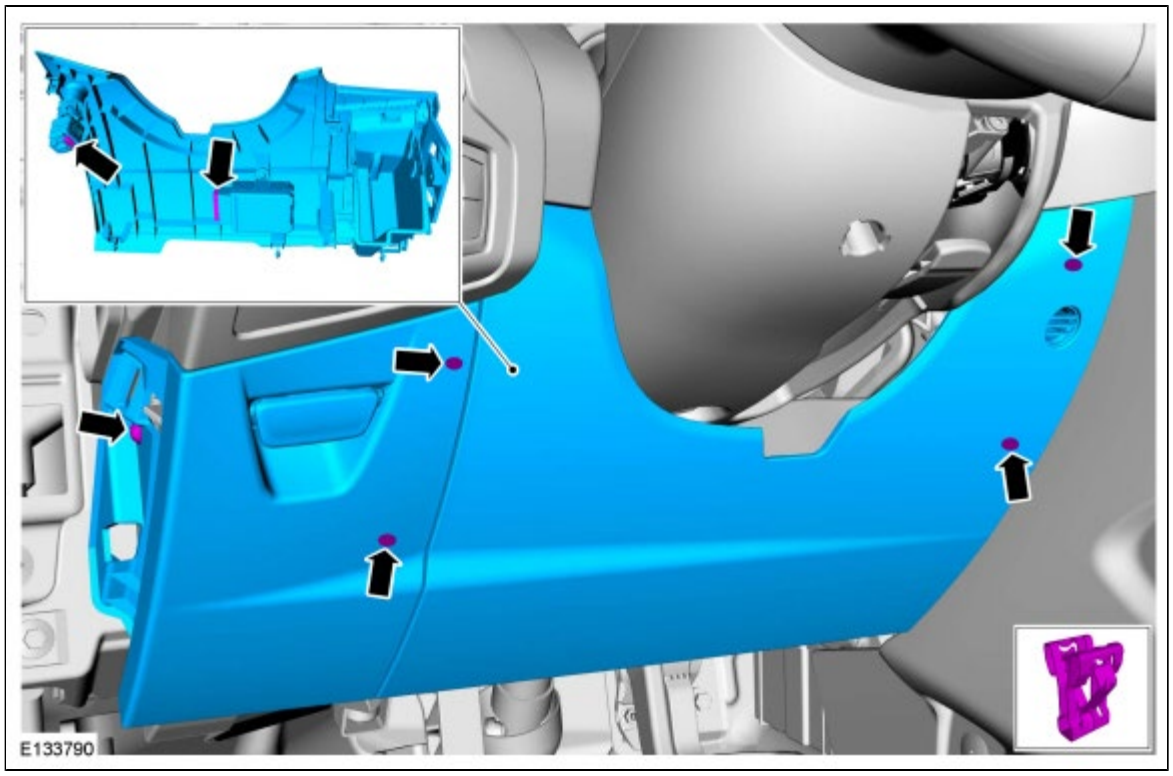

5.

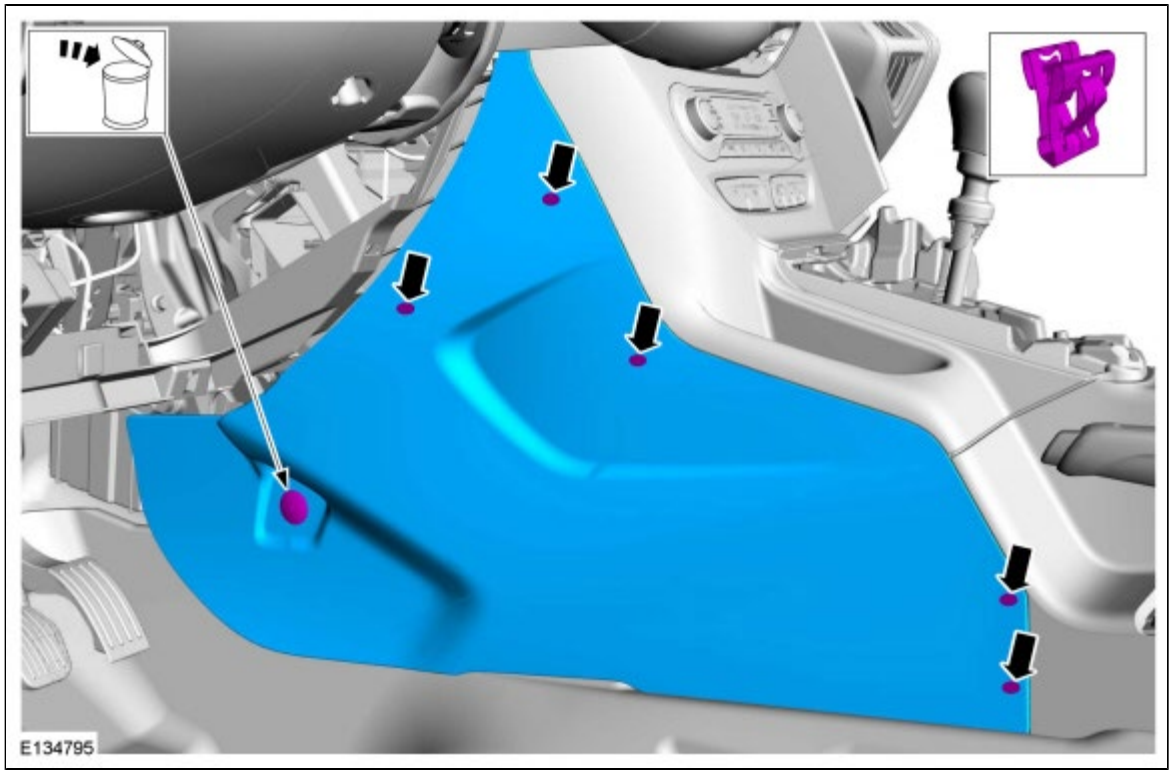

6.

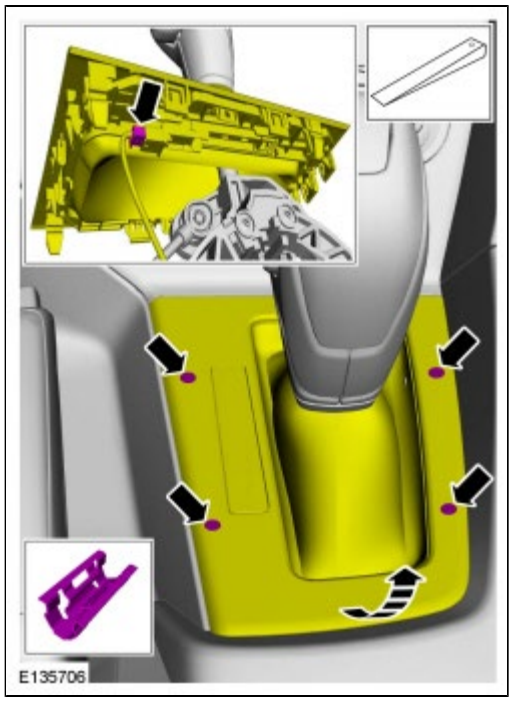

7. *Torque* : 1 Nm

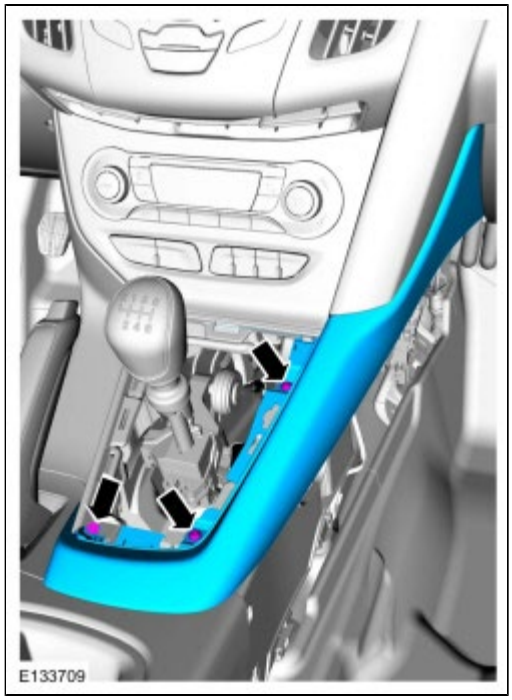

8.

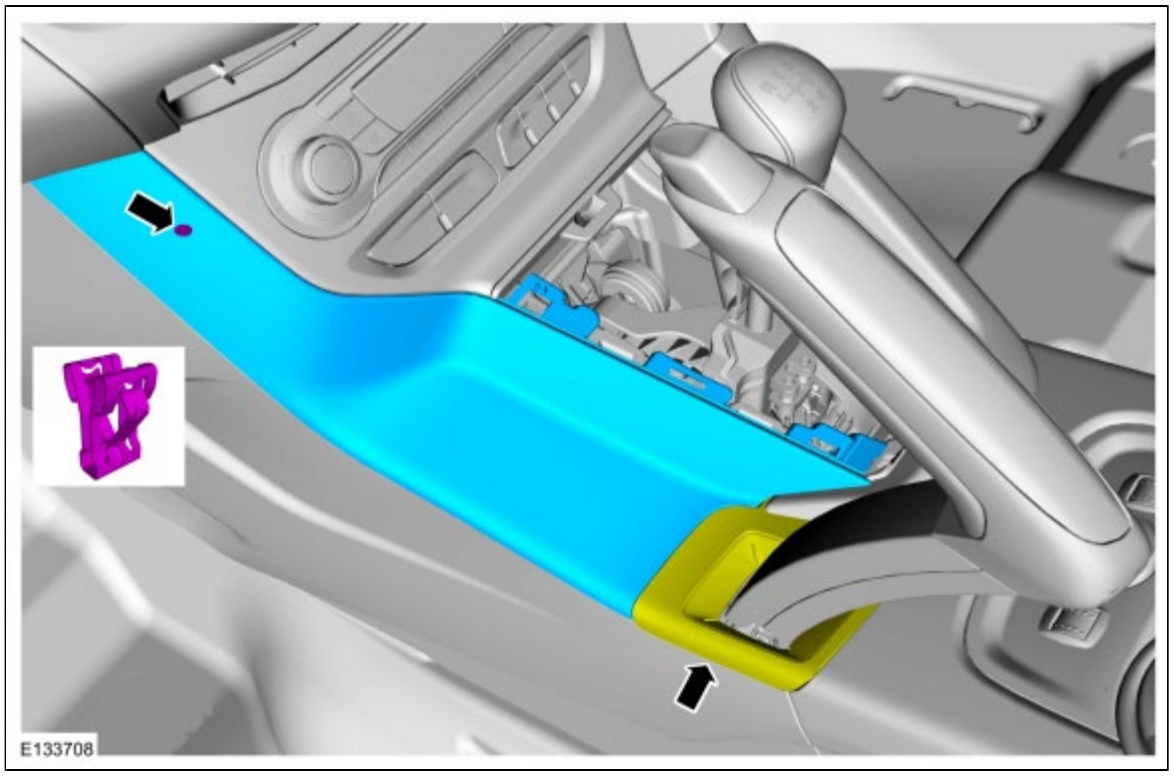

9. *Torque* : 2.6 Nm

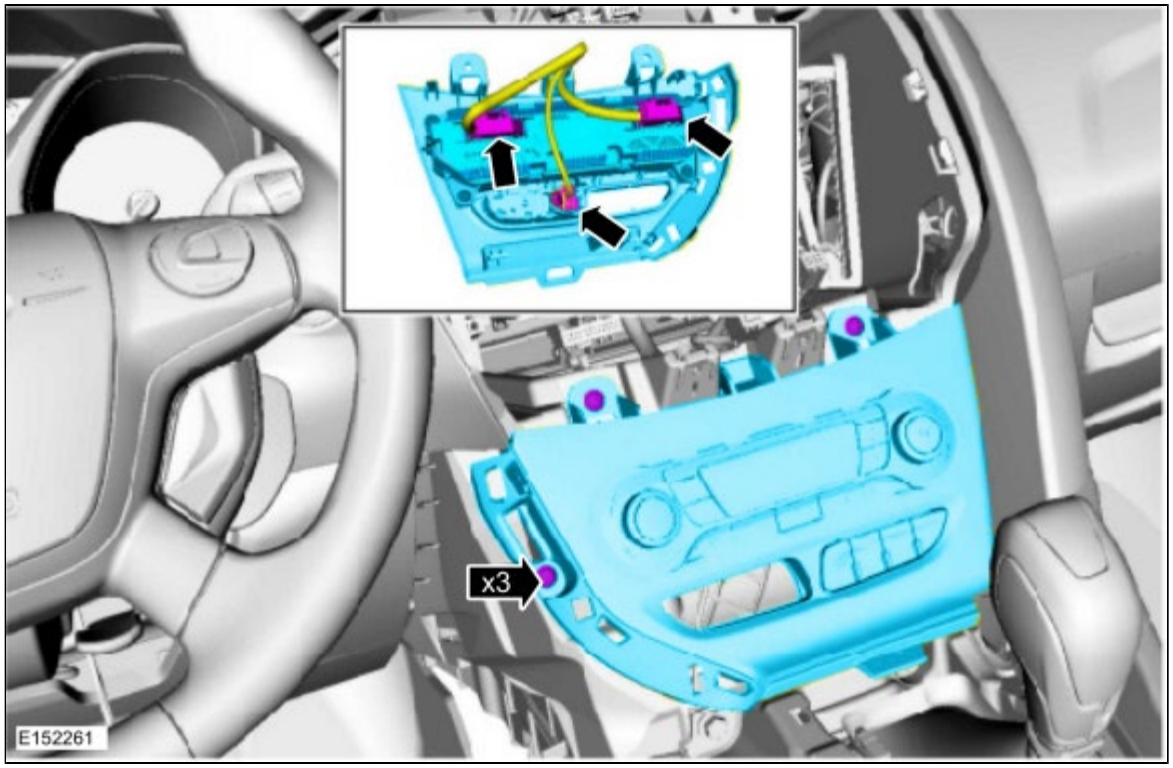

10. *Torque* : 2.6 Nm

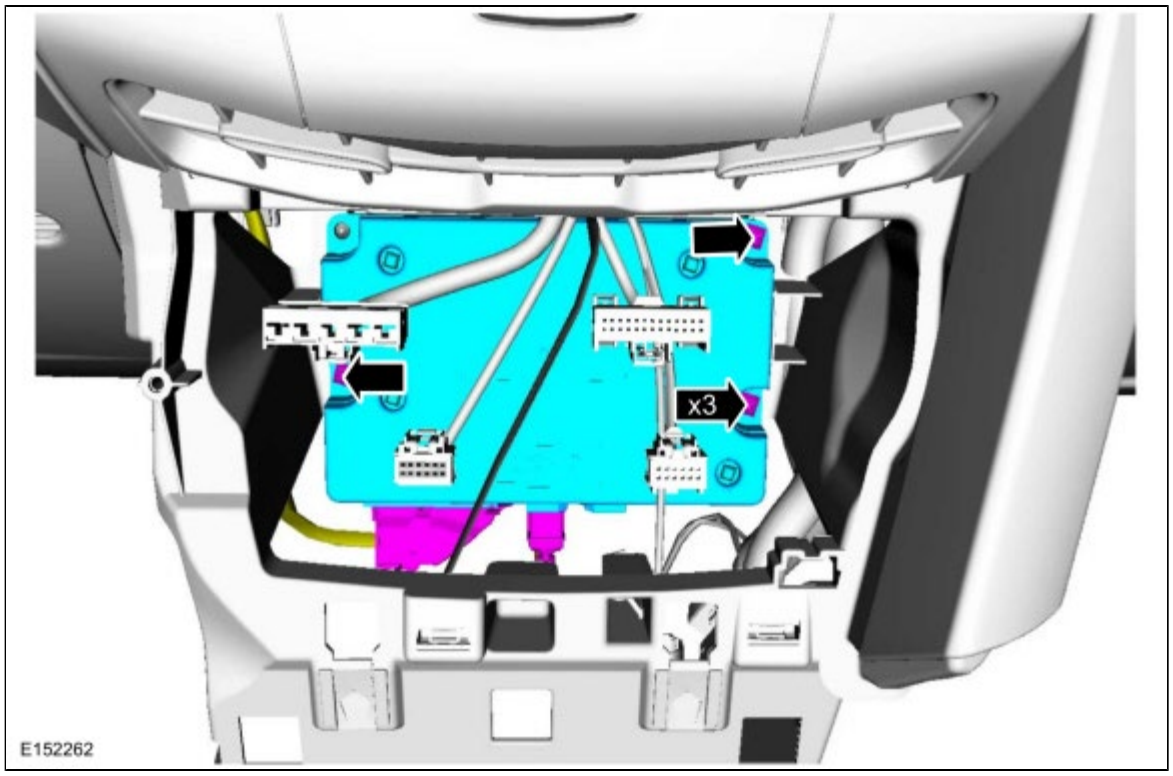

Installation

1. To install, reverse the removal procedure.

2. If installing a new APIM , program the APIM .
   Refer to: SYNC Module [APIM] Programming (415-00B Information and Entertainment System - General Information - Vehicles With: AM/FM/CD/SYNC, General Procedures).

Copyright © Ford Motor Company

SYNC Module [APIM] to Universal Serial Bus (USB) Port Cable

Removal

NOTE: *Removal steps in this procedure may contain installation details.*

NOTE: *The USB cables are part of the vehicle wiring harness. Because the cables cannot be removed from the harness, this procedure applies to the replacement of the cables only.*

1. **WARNING: Before beginning any service procedure in this section, refer to Safety Warnings in section 100-00 General Information. Failure to follow this instruction may result in serious personal injury.**

   Refer to: Health and Safety Precautions (100-00 General Information, Description and Operation).

2. **NOTE:** *Steps 2 thru 19 apply for access to the instrument panel USB cable only.*

   Vehicles with manual transmission.

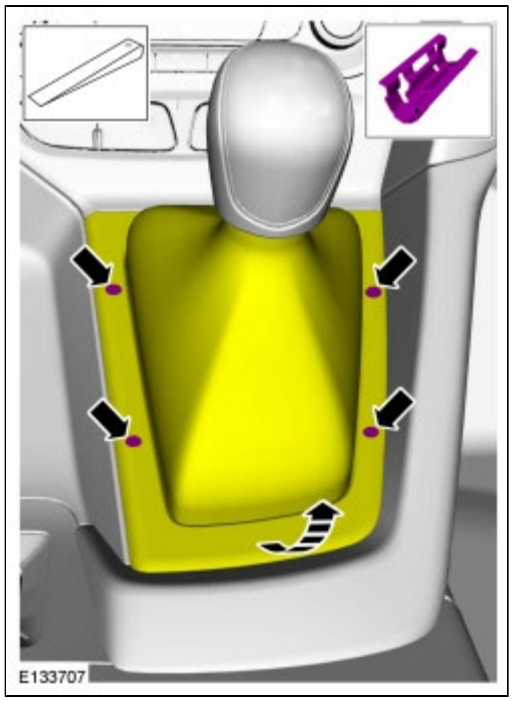

3. Vehicles with automatic transmission.

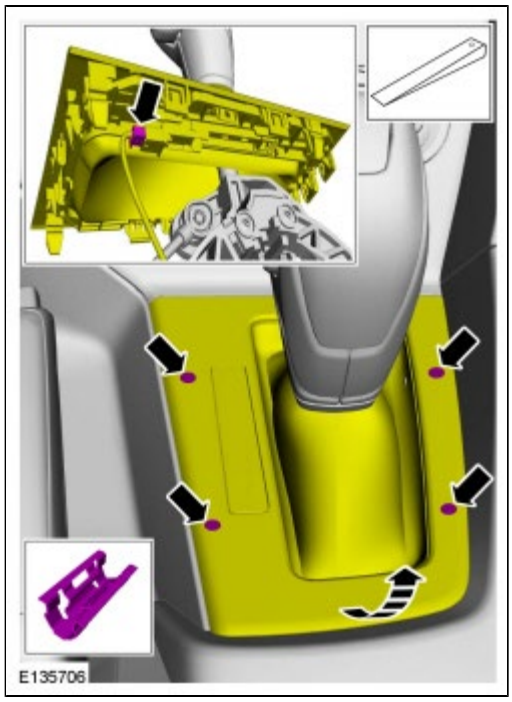

4.

5.

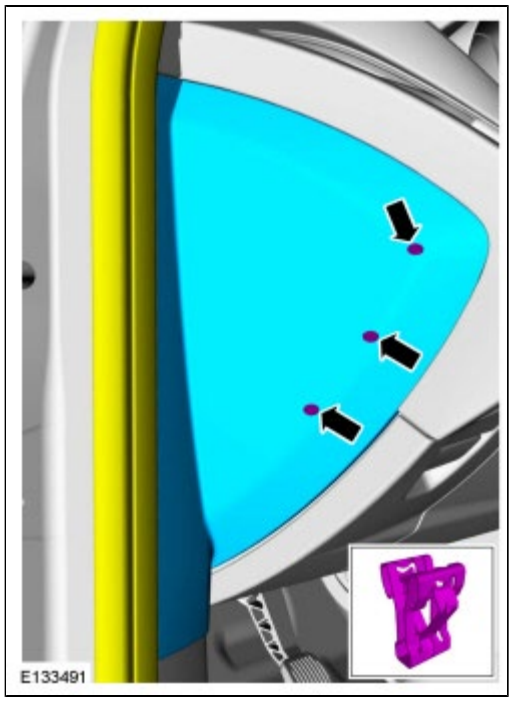

6. If equipped.
   Refer to: Driver Lower Airbag - Vehicles Built From: 11-June-2012 (501-20B Supplemental Restraint System, Removal and Installation).

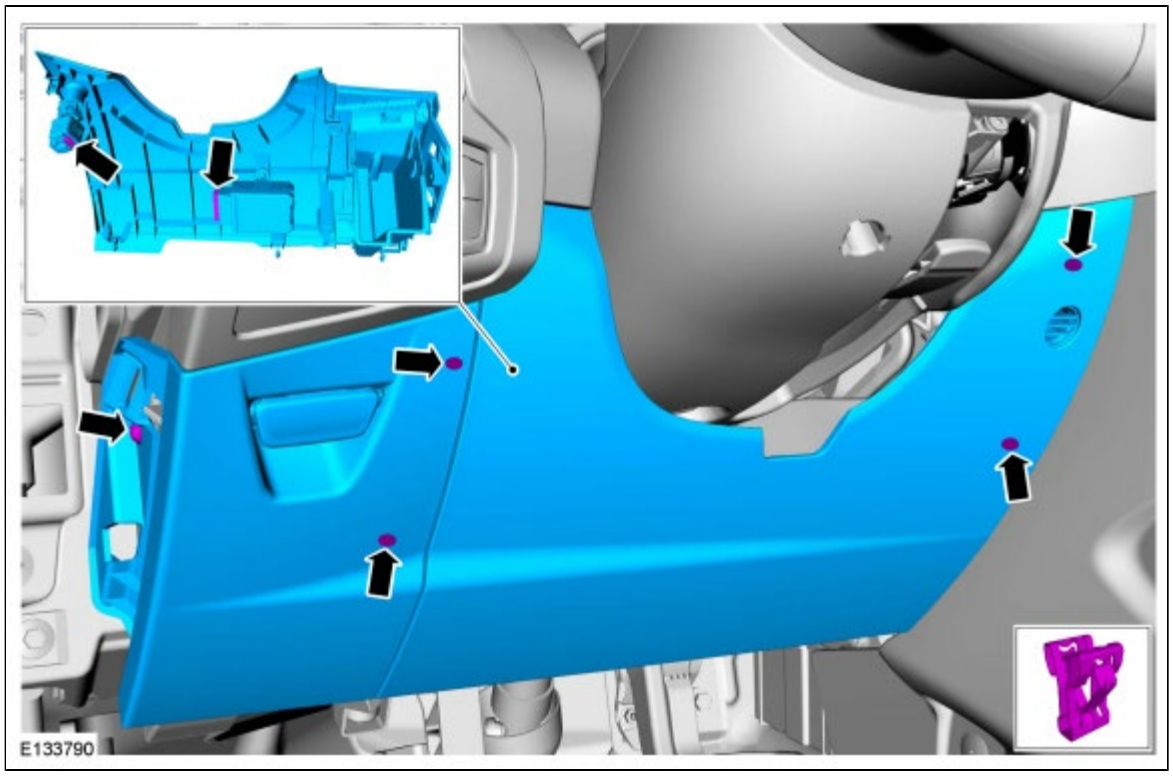

7. Vehicles without center armrest.

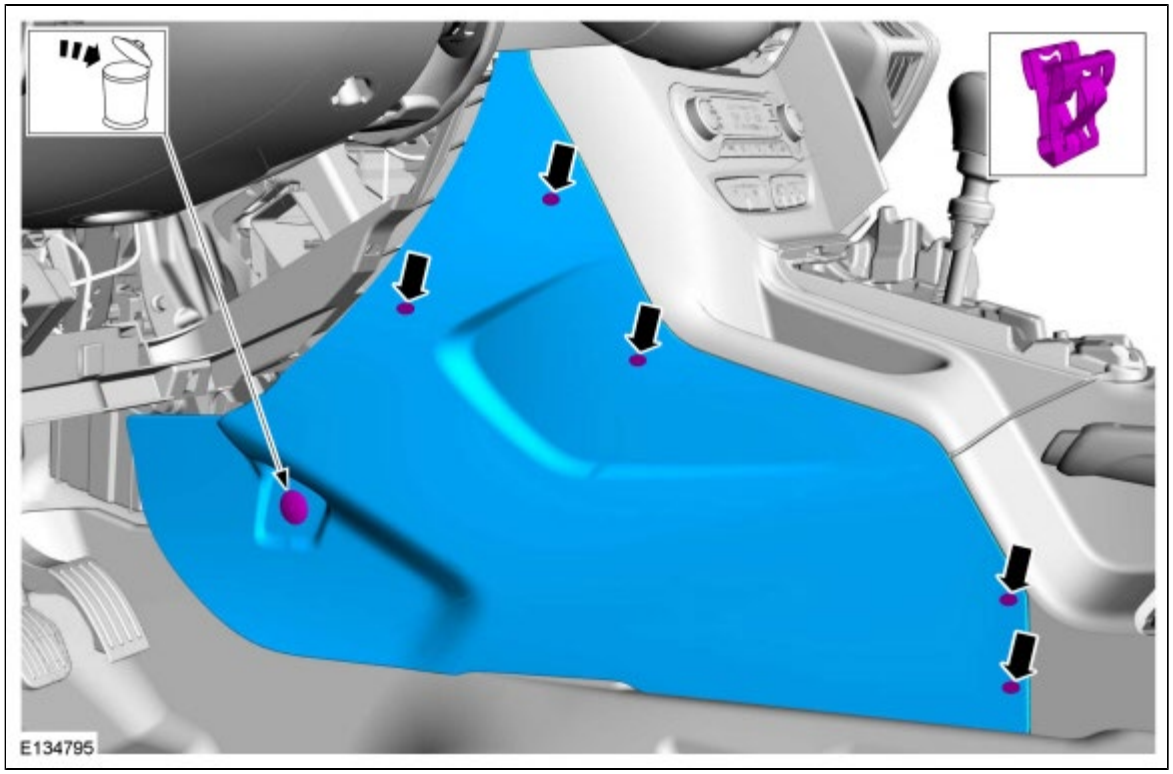

8. Vehicles with center armrest.

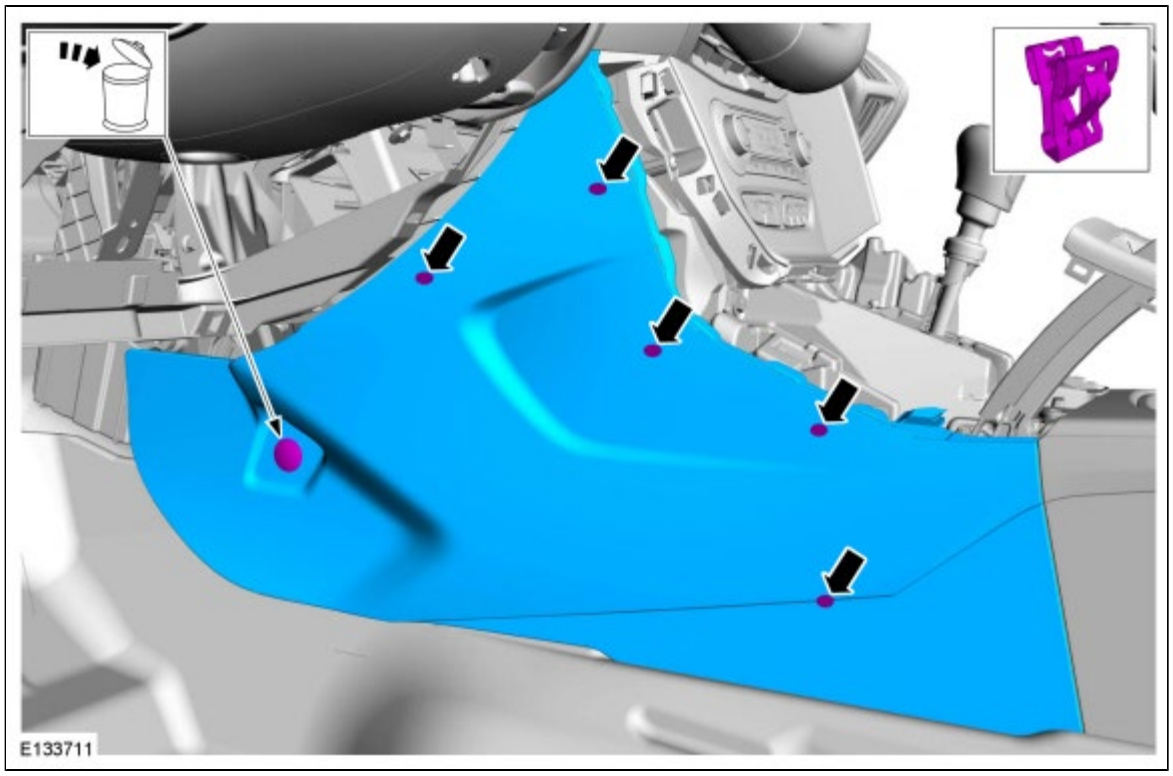

9. Vehicles without center armrest.

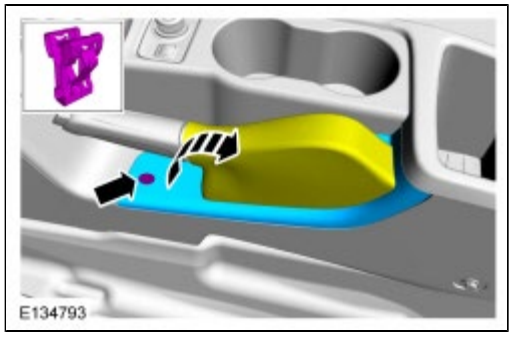

10. Vehicles without center armrest.
    Torque : 2 Nm

11. Vehicles with center armrest.
    Torque : 2 Nm

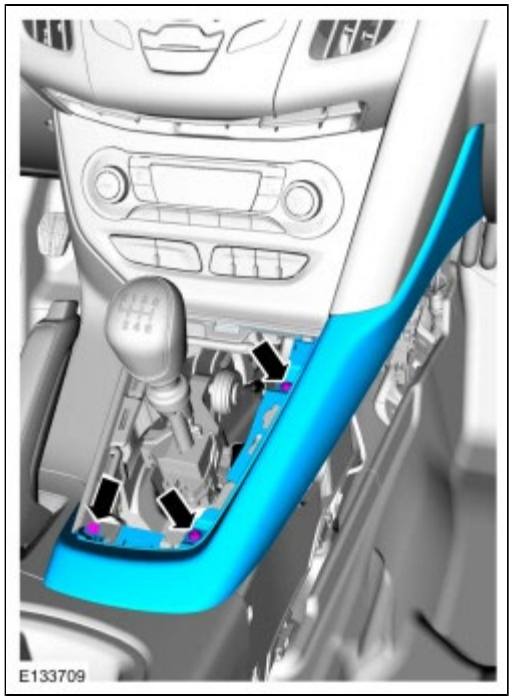

12.

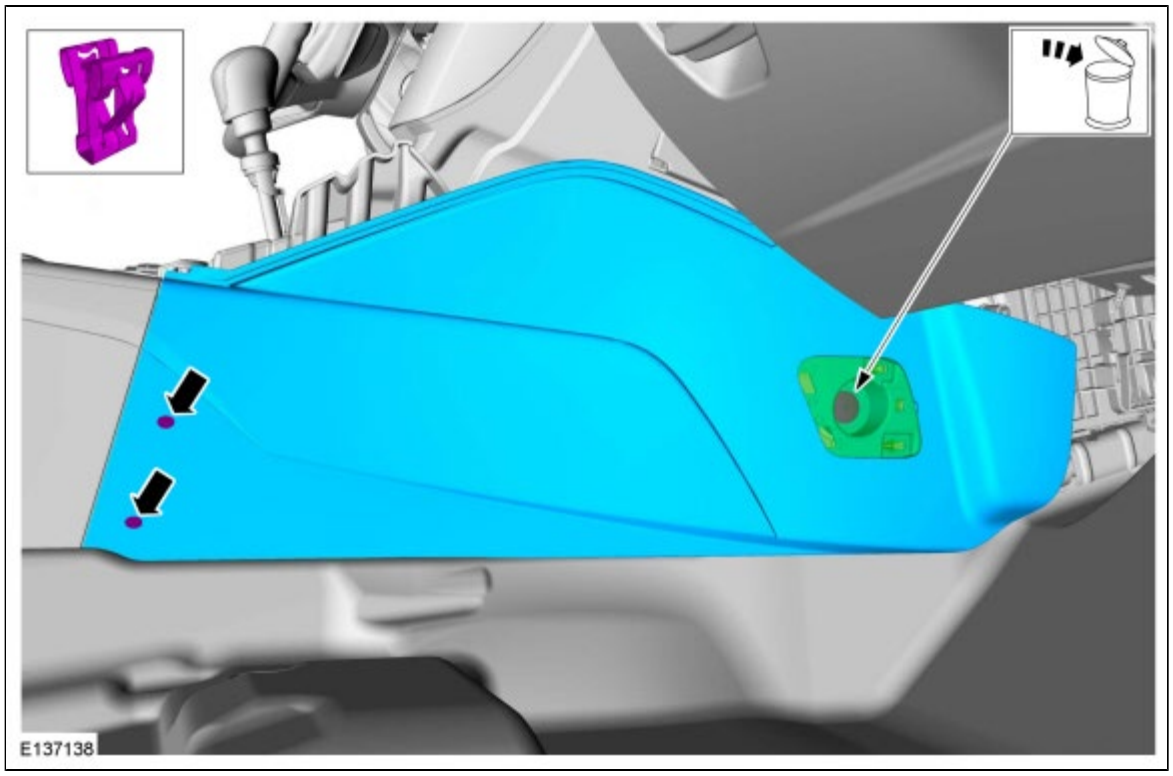

13. Vehicles with center armrest.

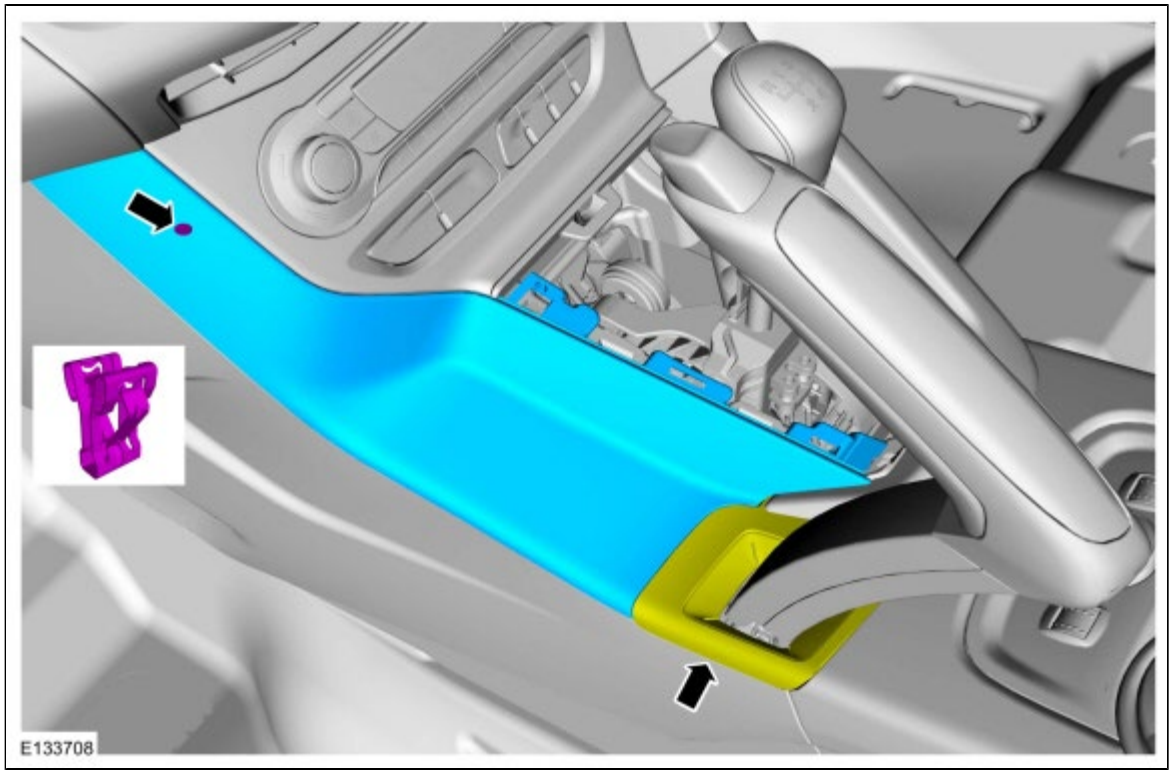

14. Vehicles without center armrest.

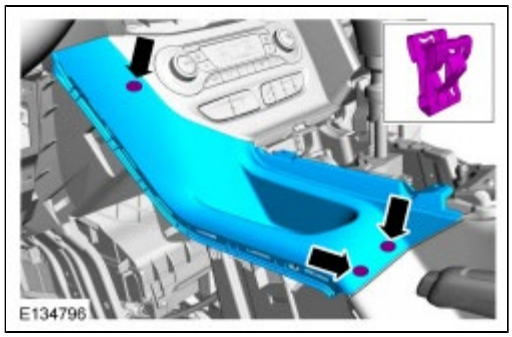

15. **NOTE:** *Armrest console shown, all others similar.*

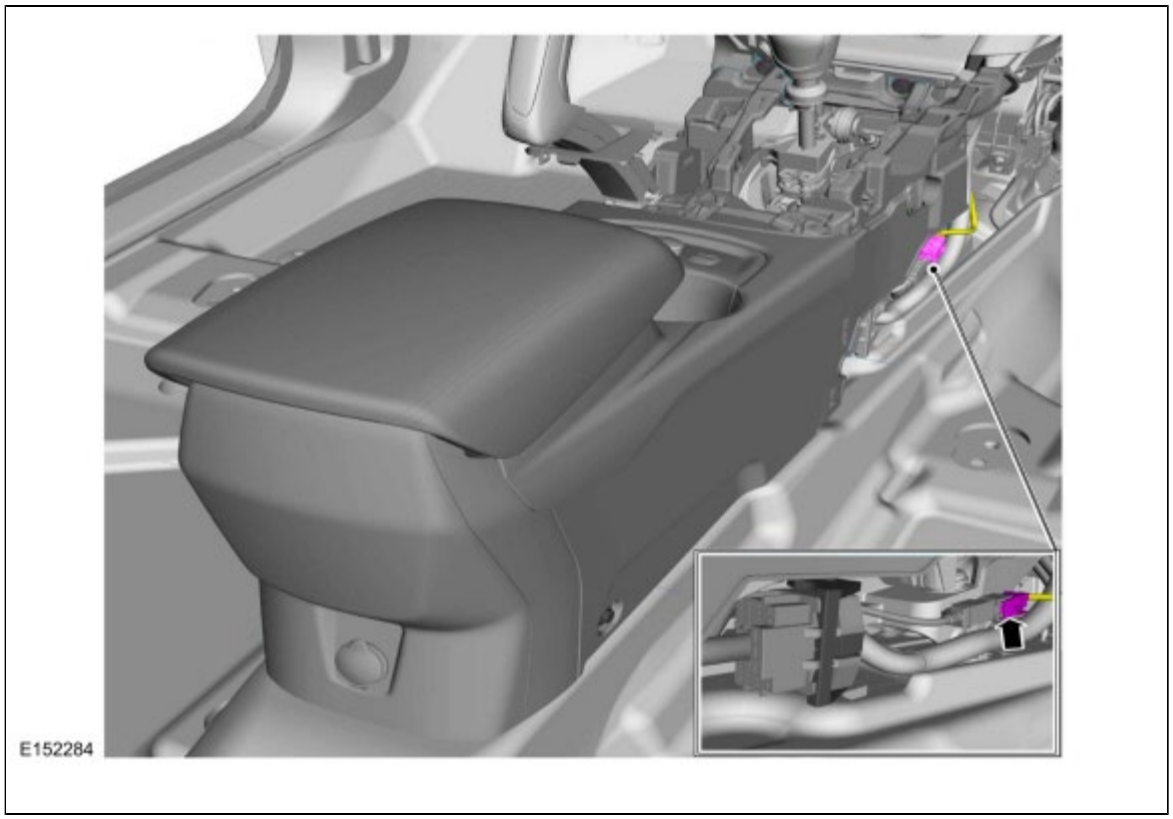

16. *Torque* : 2.6 Nm

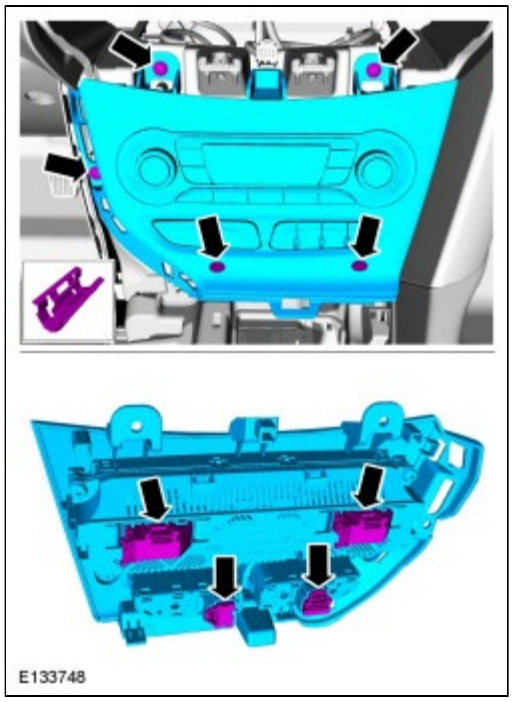

17. Depending on option content. Remove the FCDIM or the FDIM .
    Refer to: Front Controls Interface Module (FCIM) (415-00B Information and Entertainment System - General Information - Vehicles With: AM/FM/CD/SYNC, Removal and Installation).
    Refer to: Front Control/Display Interface Module (FCDIM) (415-00B Information and Entertainment System - General Information - Vehicles With: AM/FM/CD/SYNC, Removal and Installation).

18. **NOTE:** *Premium audio shown.*

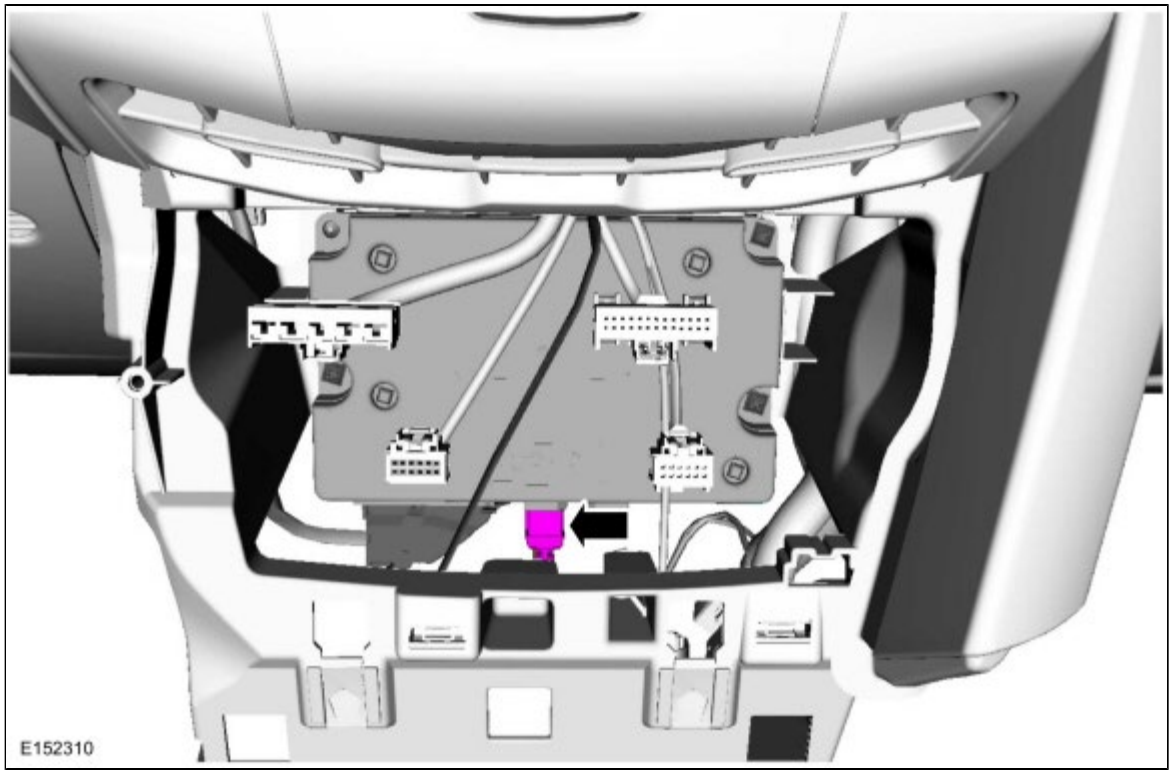

19. **NOTE:** *Sony® sound shown.*

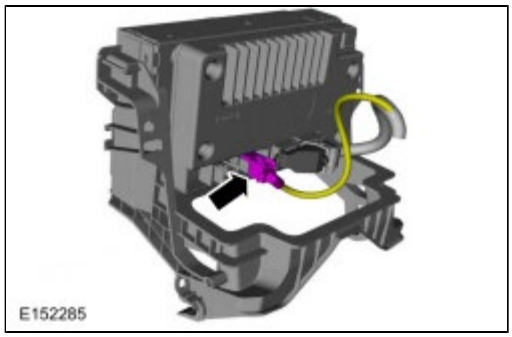

20. **NOTE:** *Steps 20 thru 22 apply for access to the center floor console USB cable only.*

    Remove the center front floor console.
    Refer to: Floor Console - Vehicles Without: Center Armrest (501-12 Instrument Panel and Console, Removal and Installation).
    Refer to: Floor Console - Vehicles With: Center Armrest (501-12 Instrument Panel and Console, Removal and Installation).

21.

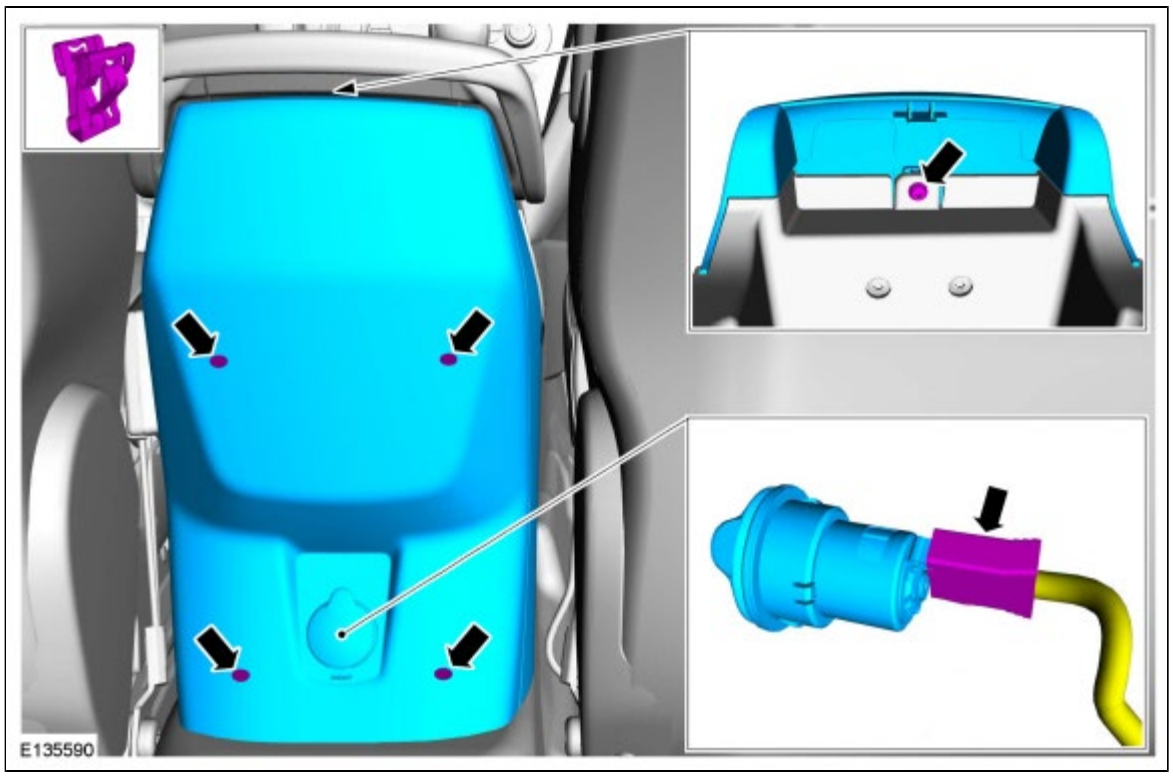

22.

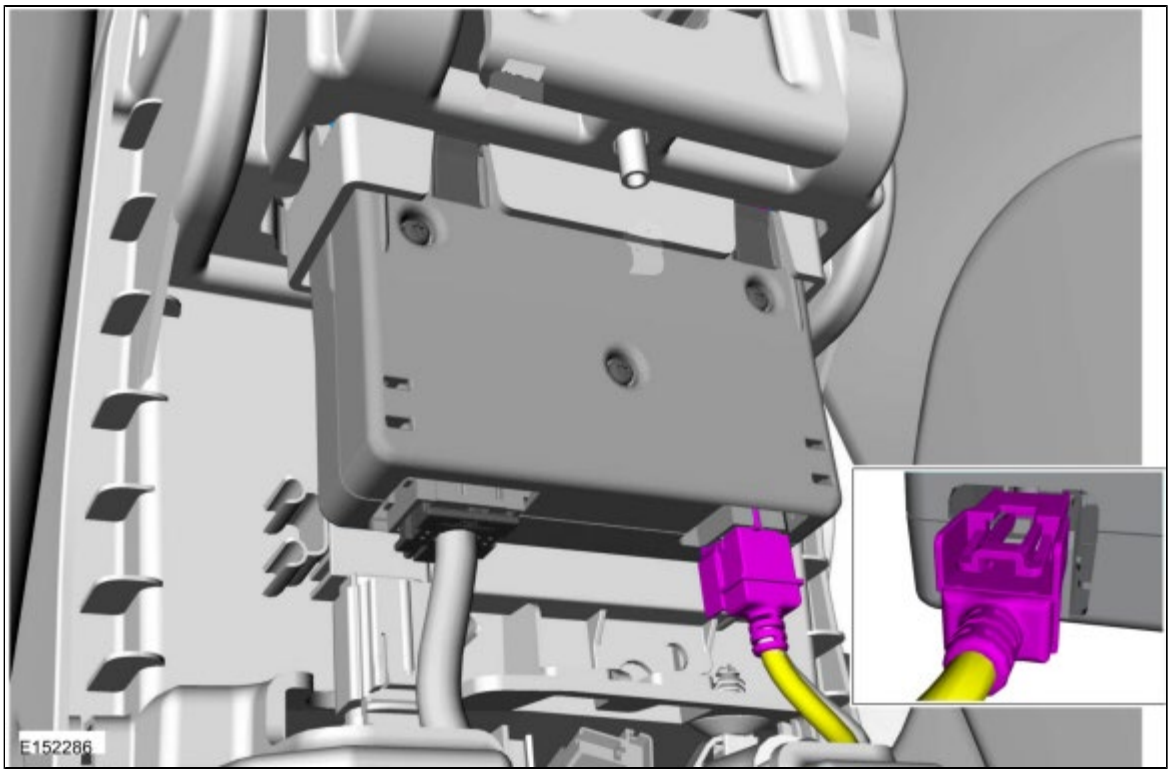

Installation

NOTE: *The USB cables are part of the vehicle wiring harness. Because the cables cannot be removed from the harness, this procedure applies to the replacement of the cables only.*

1. **NOTE:** *Instrument panel USB cable*

   Overlay the new USB cable on the vehicle wiring harness, following the routing of the original cable. Cut the ends off the exisiting cable.

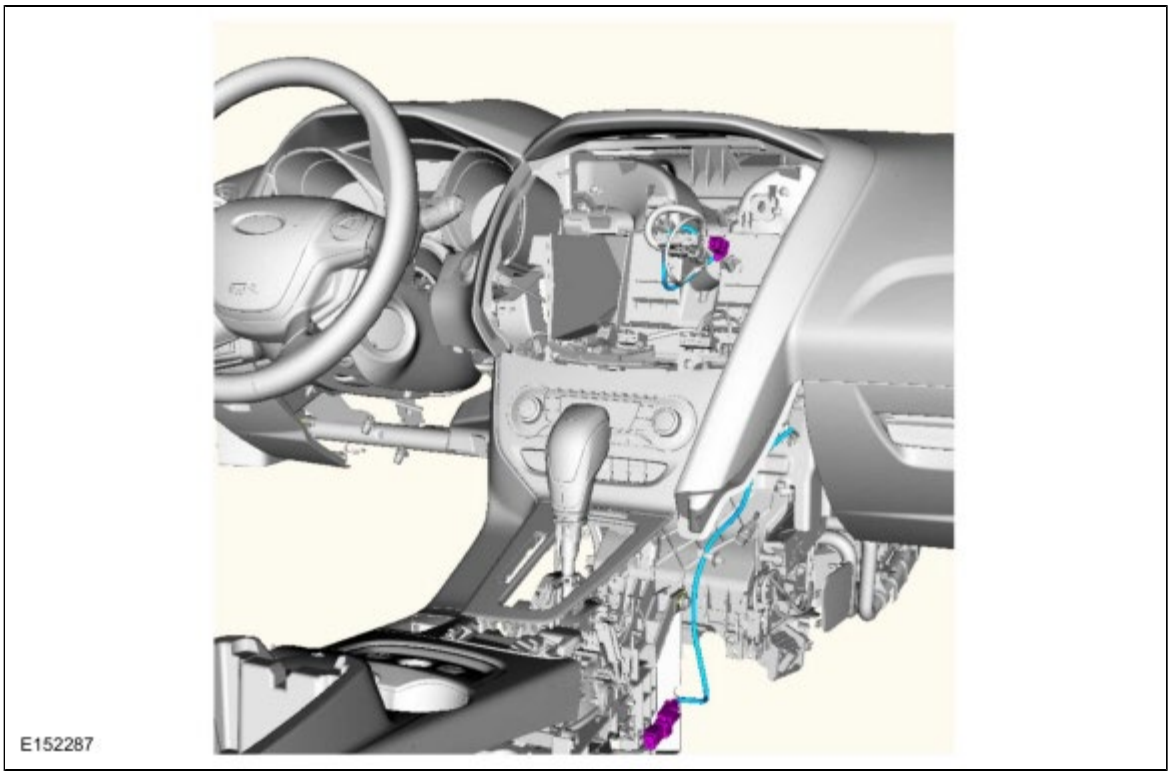

2. **NOTE:** *Floor console USB cable*

Overlay the new USB cable on the vehicle wiring harness, following the routing of the original cable. Cut the ends off the exisiting cable.

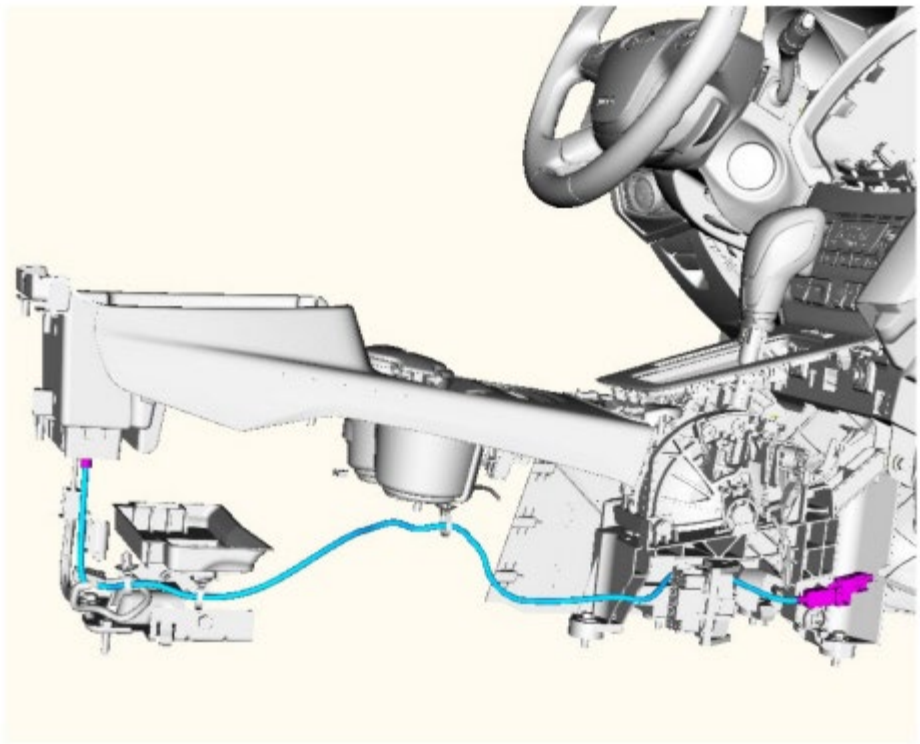

3. To install, reverse the removal procedure.

Copyright © Ford Motor Company

Audio Front Control Module (ACM)

Removal

NOTE: *Removal steps in this procedure may contain installation details.*

1. **WARNING: Before beginning any service procedure in this section, refer to Safety Warnings in section 100-00 General Information. Failure to follow this instruction may result in serious personal injury.**

   Refer to: Health and Safety Precautions (100-00 General Information, Description and Operation).

2. **NOTE:** *If installing a new module, it is necessary to upload the module configuration information to the scan tool prior to removing the module. This information must be downloaded into the new module after installation.*

   Upload the ACM configuration information to the scan tool by following the scan tool on screen instructions.

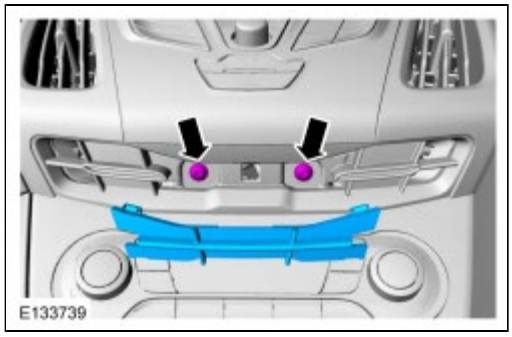

3.

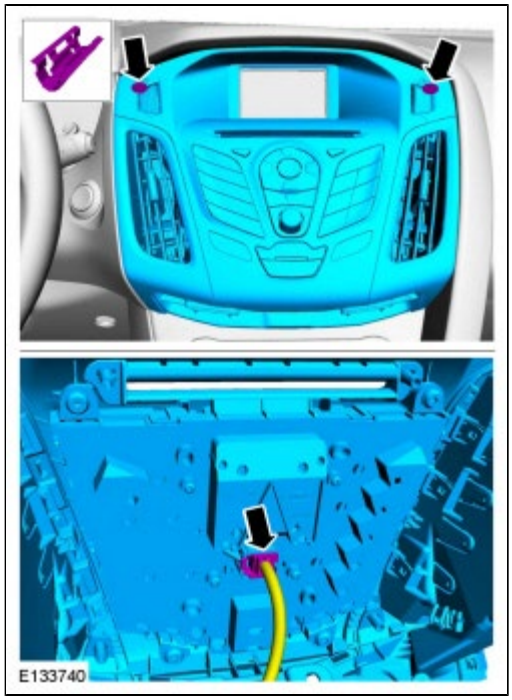

4. *Torque* : 1.3 Nm

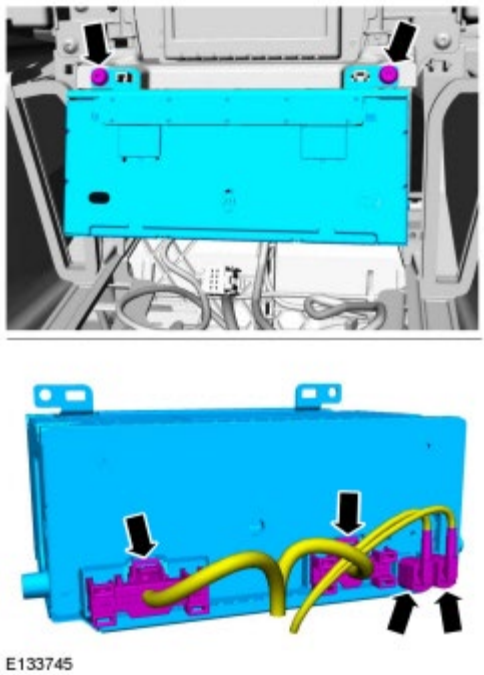

Installation

1. To install, reverse the removal procedure.
2. If installing a new ACM , download the ACM configuration information from the scan tool to the new ACM following the scan tool on screen instructions.

Copyright © Ford Motor Company

Audio Input Socket

Removal

NOTE: *Removal steps in this procedure may contain installation details.*

1. **WARNING: Before beginning any service procedure in this section, refer to Safety Warnings in section 100-00 General Information. Failure to follow this instruction may result in serious personal injury.**

   Refer to: Health and Safety Precautions (100-00 General Information, Description and Operation).

2. 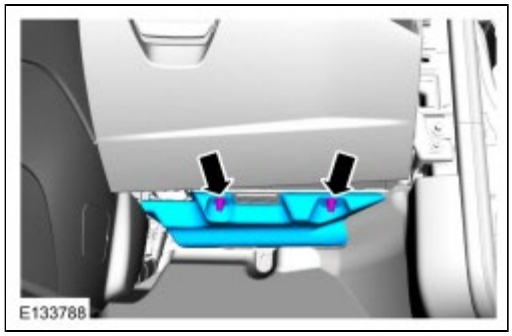

3. Remove the RH instrument panel side trim panel.

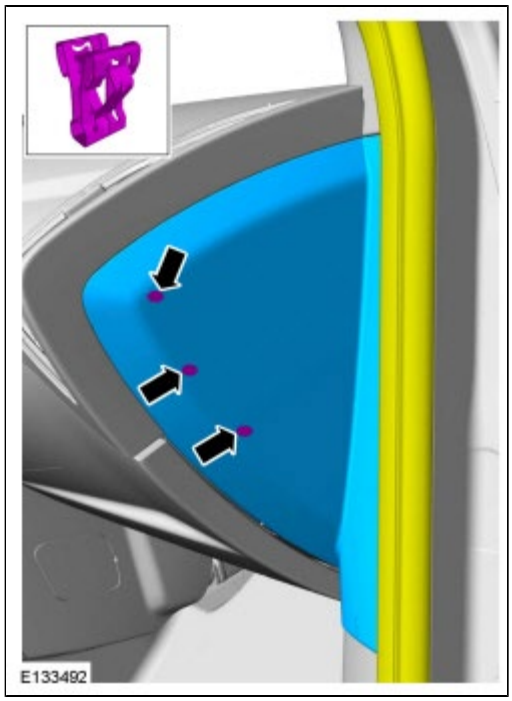

4. Remove the glove compartment.

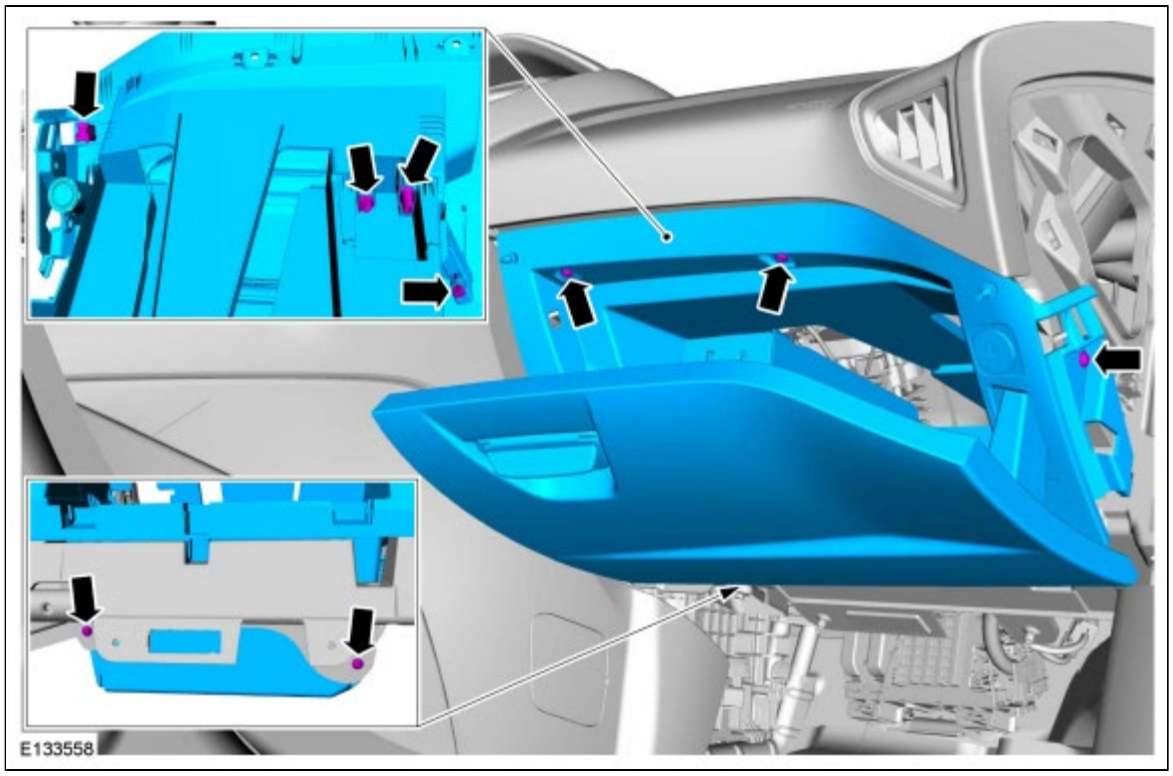

5.

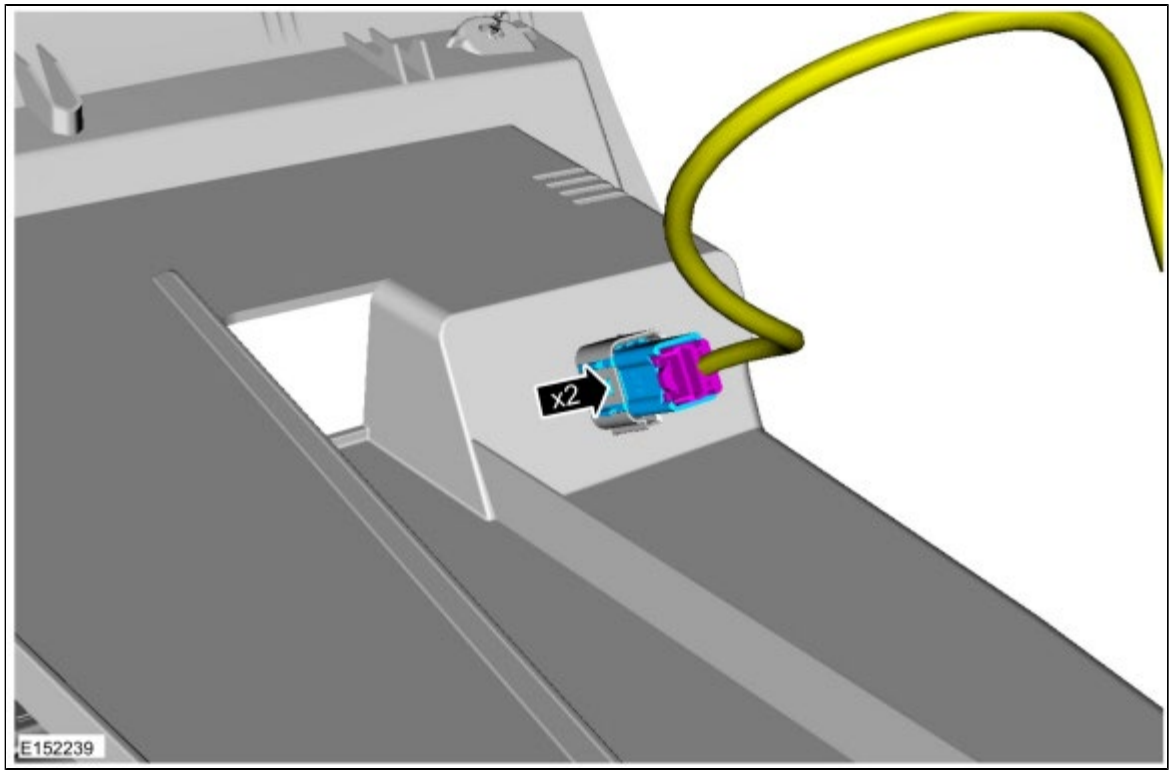

Installation

1. To install, reverse the removal procedure.

Copyright © Ford Motor Company

Audio Unit Antenna

Removal

NOTE: *Removal steps in this procedure may contain installation details.*

1. **WARNING: Before beginning any service procedure in this section, refer to Safety Warnings in section 100-00 General Information. Failure to follow this instruction may result in serious personal injury.**

   Refer to: Health and Safety Precautions (100-00 General Information, Description and Operation).

2. [References to D-pillar trim panel - 4 Door Sedan, D-pillar Trim Panel - 5 Door Hatchback: 501-05.]

3. Lower the rear of the headliner for access.

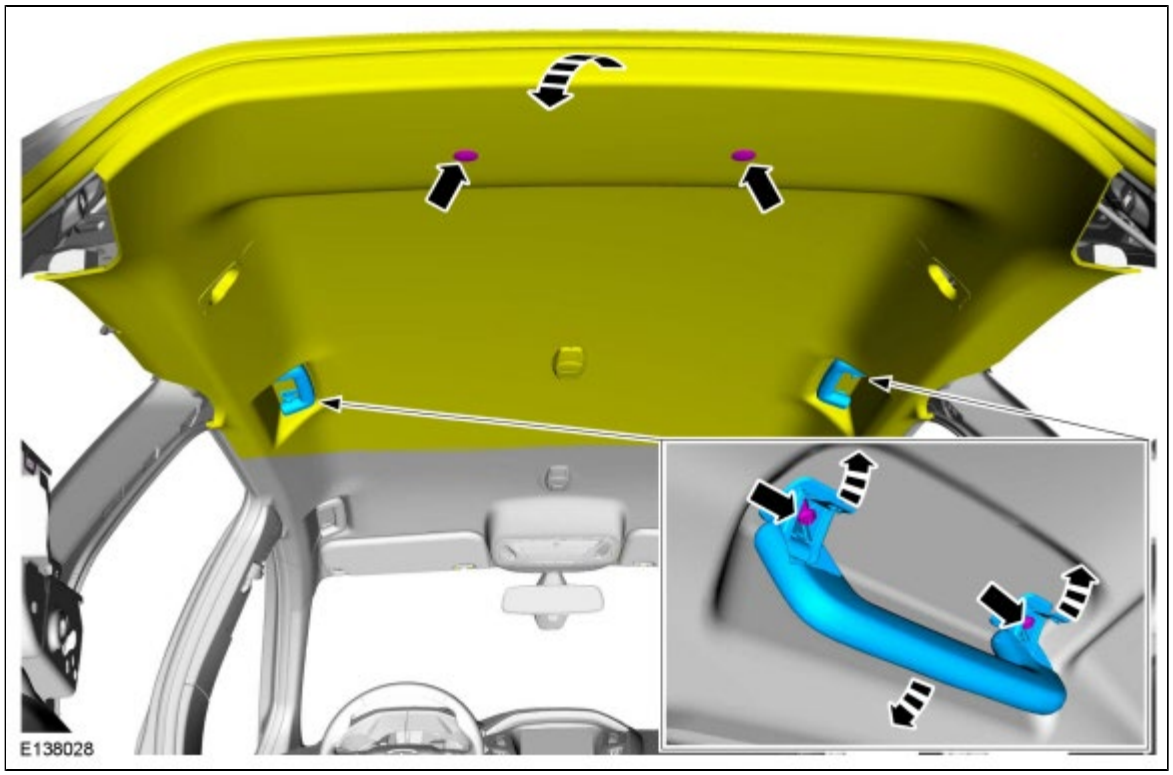

4. *Torque* : 10 Nm

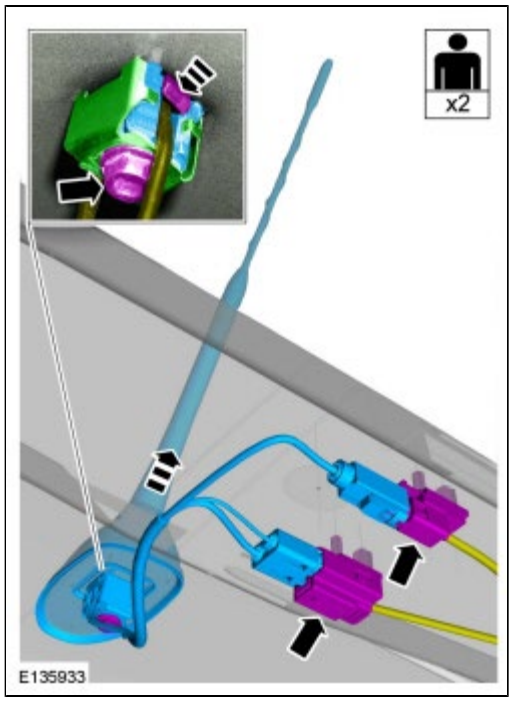

Installation

1. To install, reverse the removal procedure.

Copyright © Ford Motor Company

Audio Unit Antenna Cable

Removal

NOTE: *Removal steps in this procedure may contain installation details.*

NOTE: *The antenna cables are part of the vehicle wiring harness Because the cables cannot be removed from the harness, this procedure applies to the replacement of the cables only.*

1. **WARNING: Before beginning any service procedure in this section, refer to Safety Warnings in section 100-00 General Information. Failure to follow this instruction may result in serious personal injury.**

   Refer to: Health and Safety Precautions (100-00 General Information, Description and Operation).

NOTE: *Steps 2 thru 17 apply for access to the lower antenna cable only.*

2. Vehicles with manual transmission.

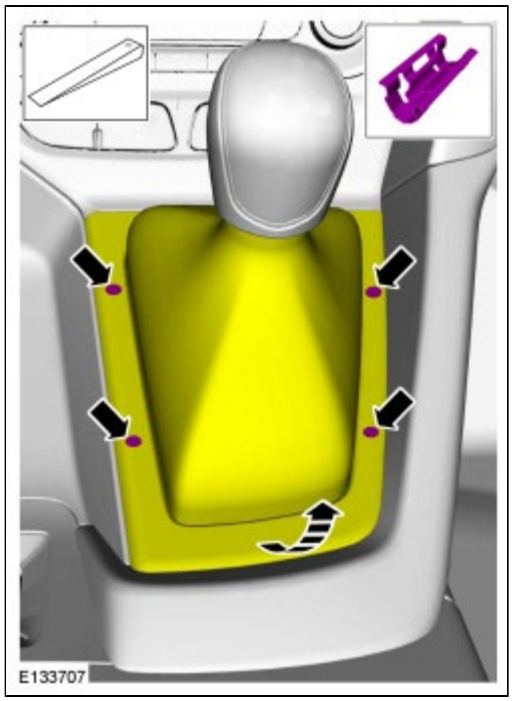

3. Vehicles with automatic transmission.

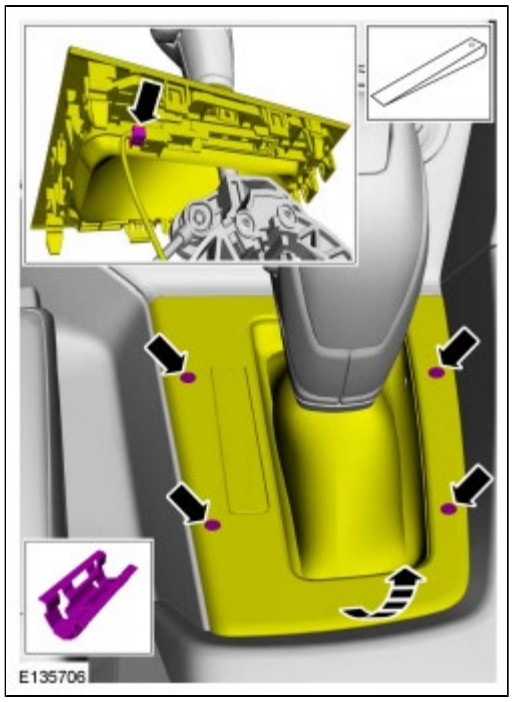

4.

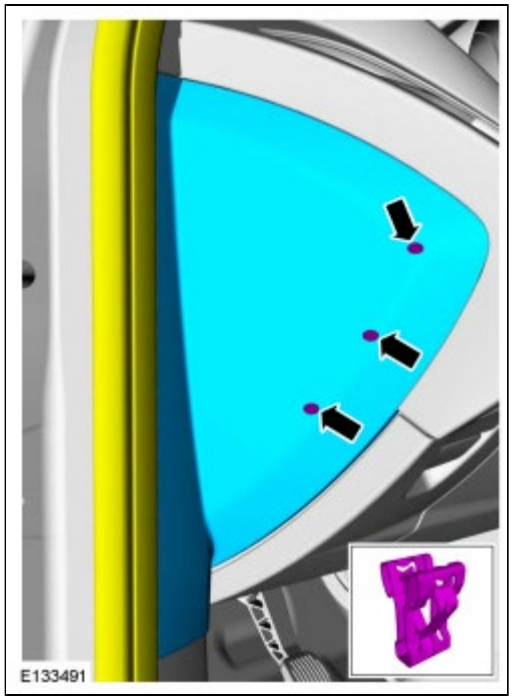

5. If equipped.
   Refer to: Driver Lower Airbag - Vehicles Built From: 11-June-2012 (501-20B Supplemental Restraint System, Removal and Installation).

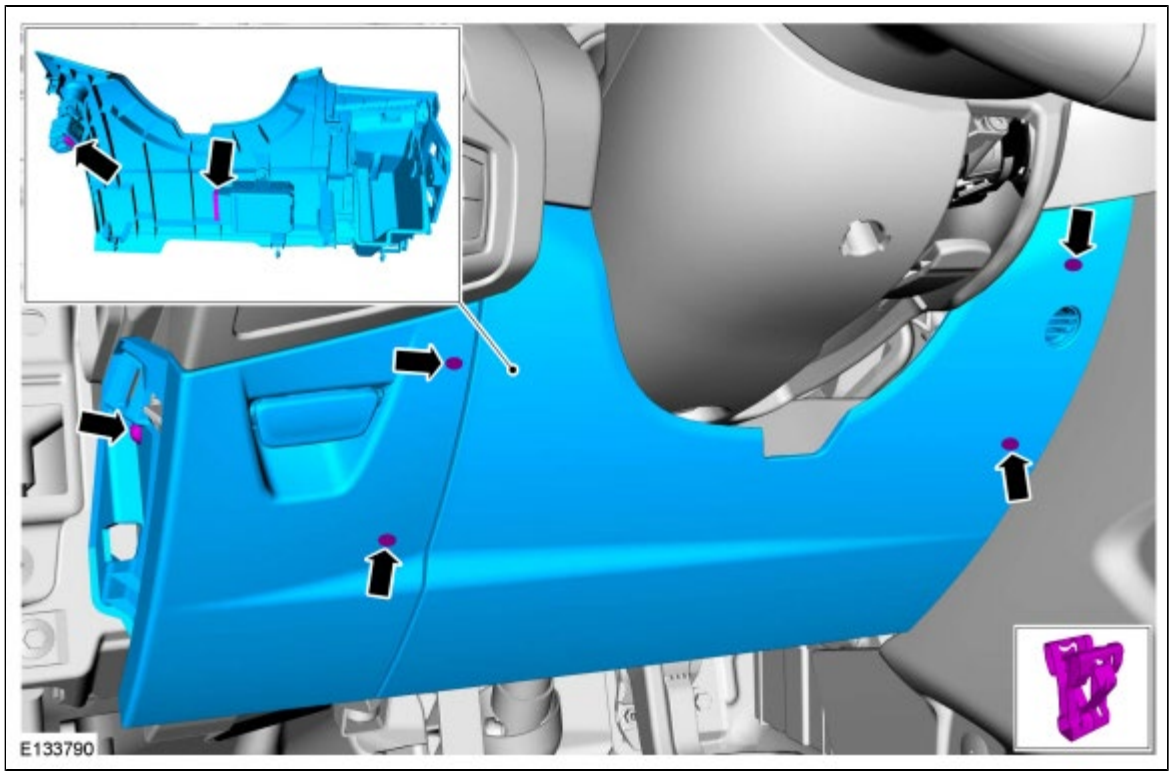

6. Vehicles without center armrest.

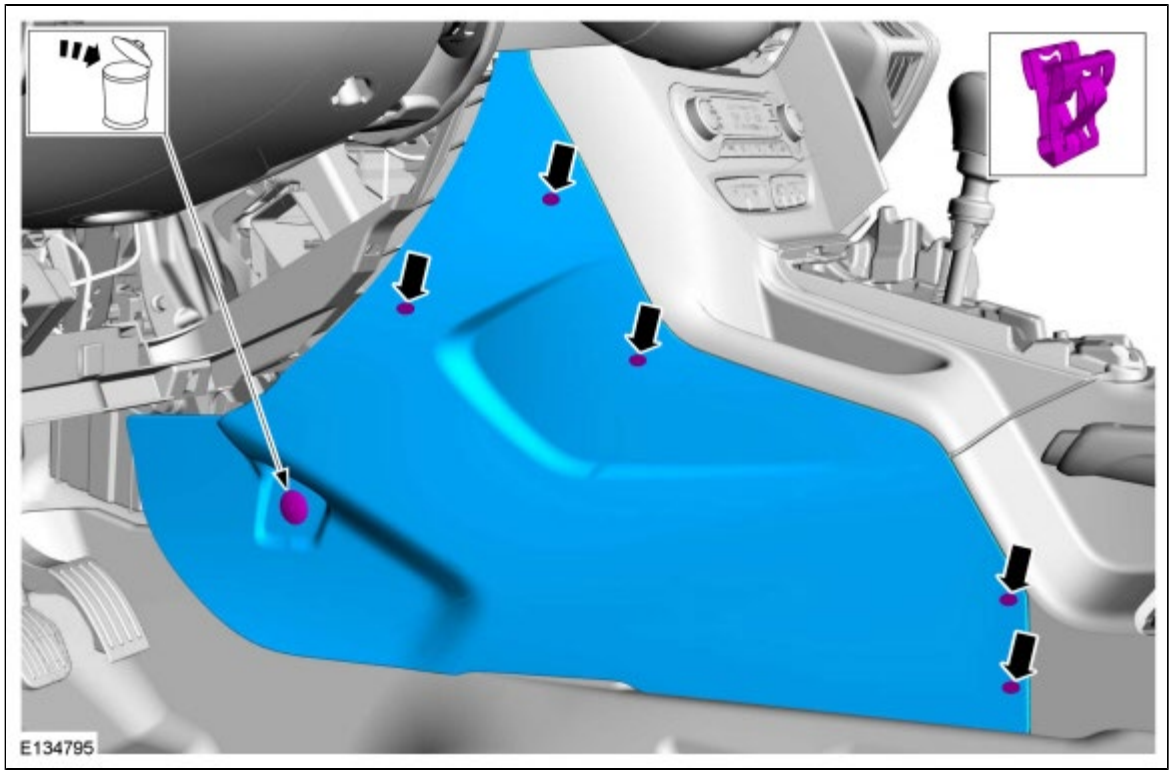

7. Vehicles with center armrest.

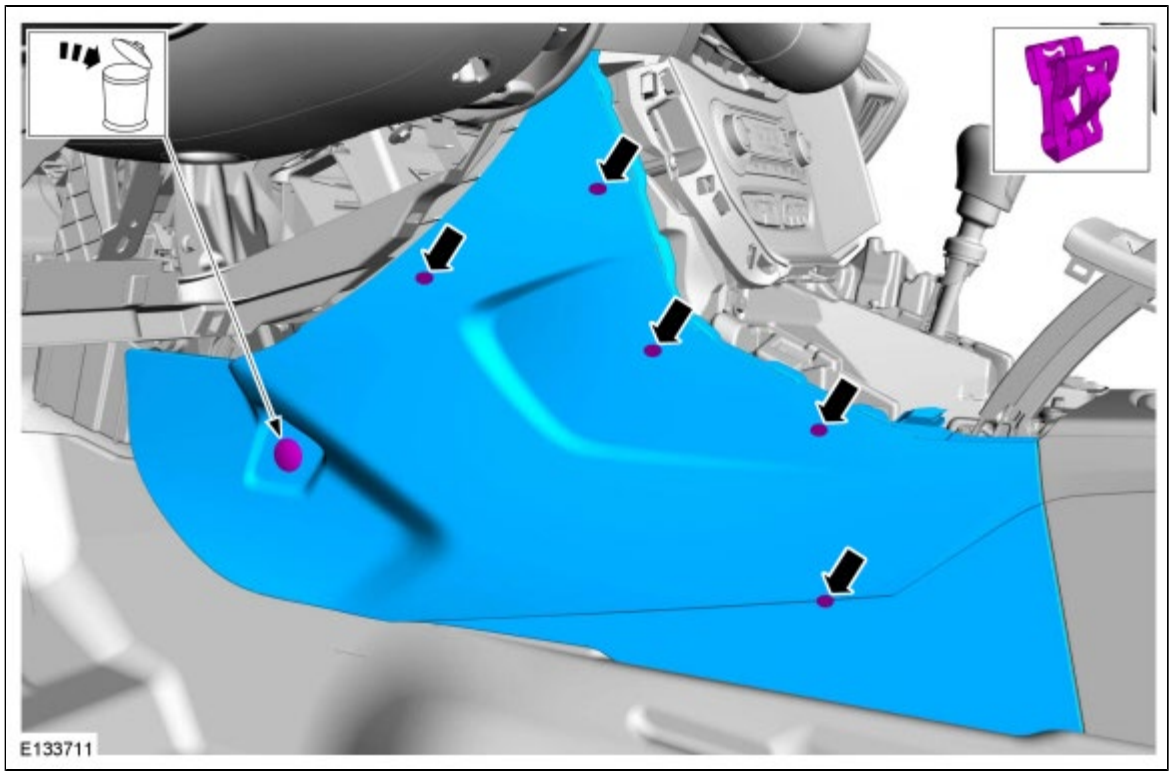

8. Vehicles without center armrest.

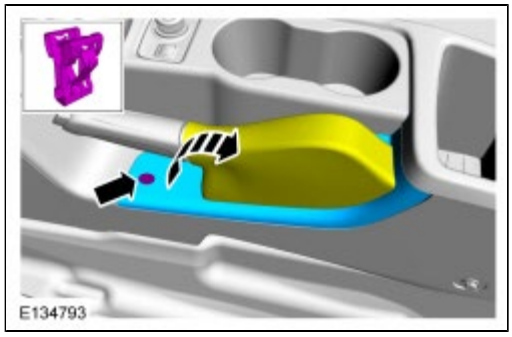

9. Vehicles without center armrest.
   Torque : 2 Nm

10. Vehicle with center armrest.

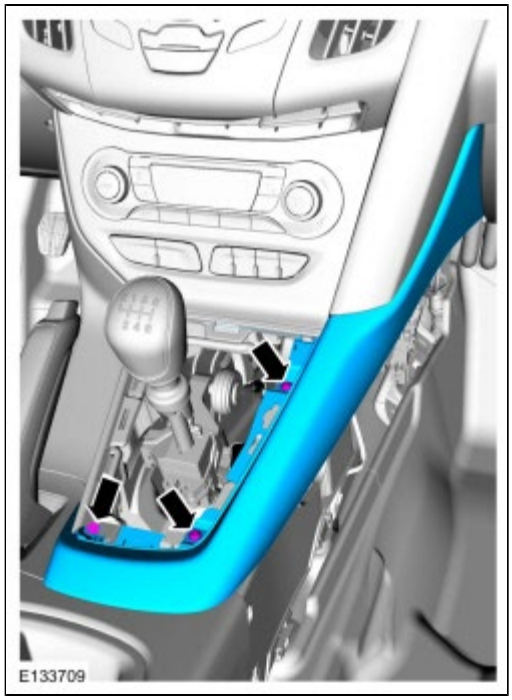

11.

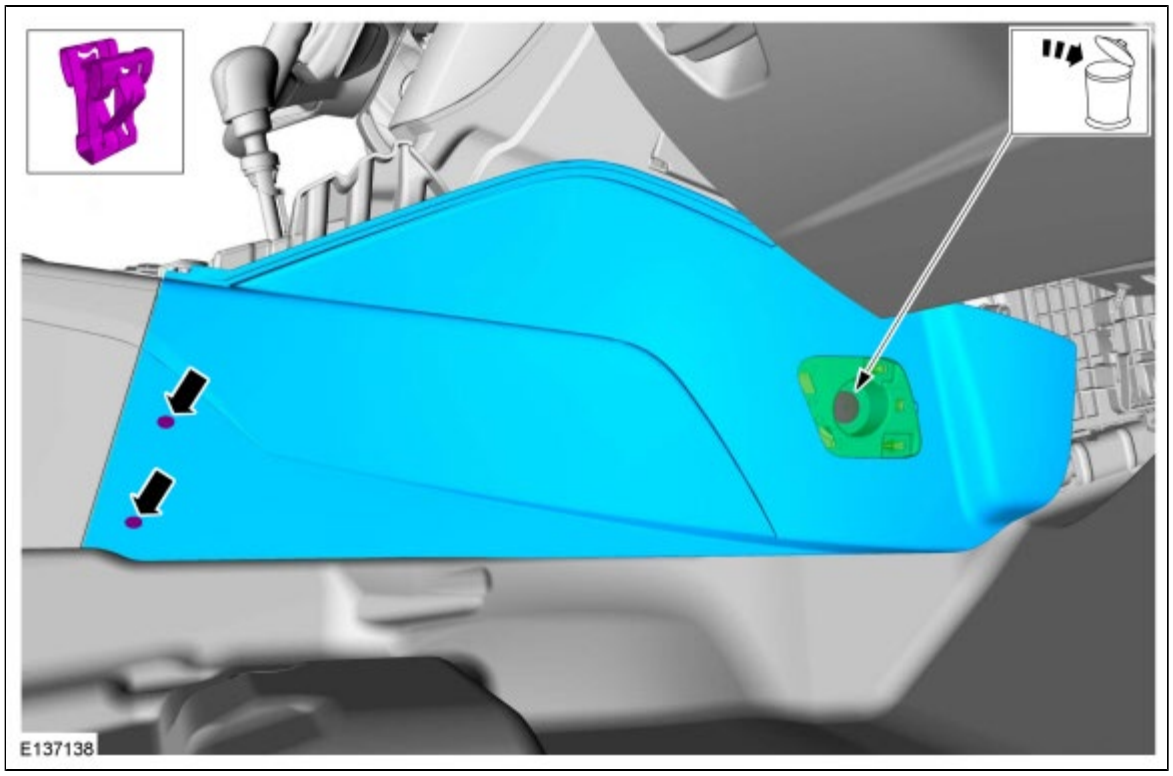

12. Vehicles with center armrest.

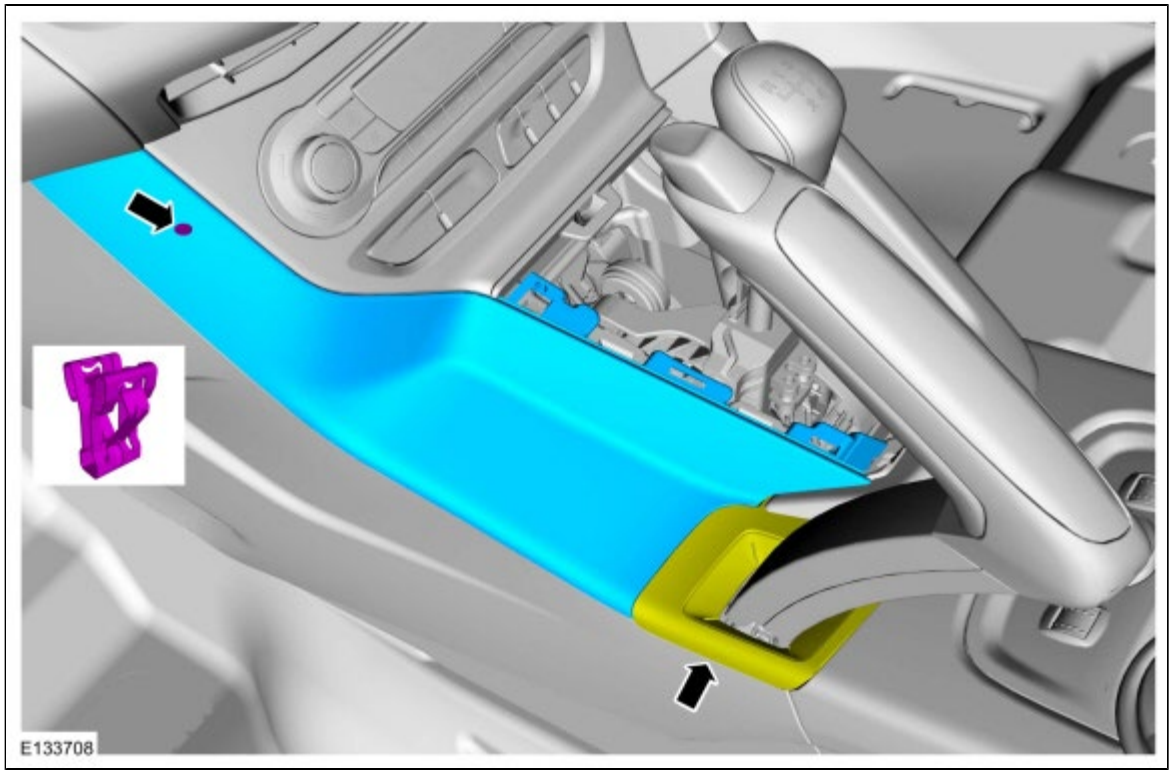

13. Vehicles without center armrest.

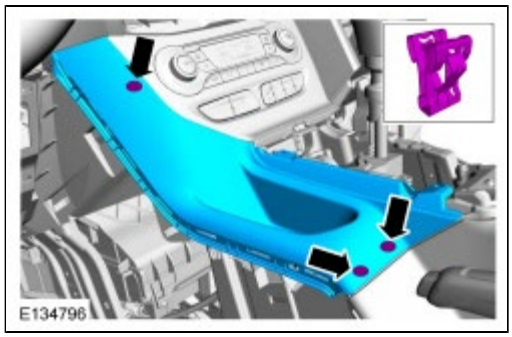

NOTE: *Sony® sound shown, premium and base audio similar.*

14. Disconnect antenna connector(s).

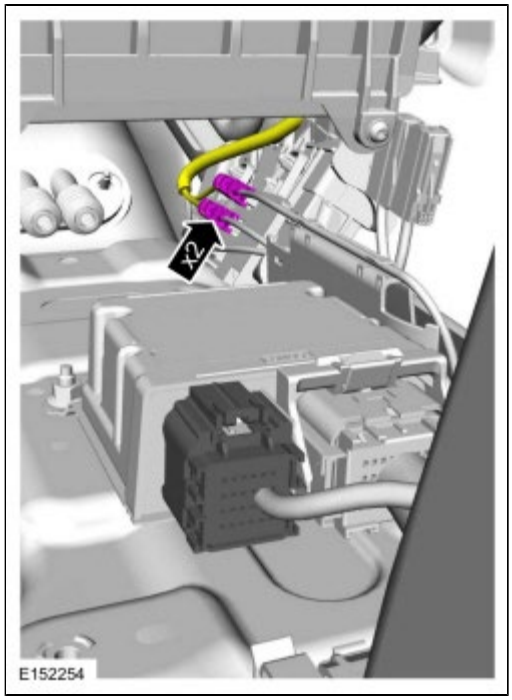

15. *Torque* : 1 Nm

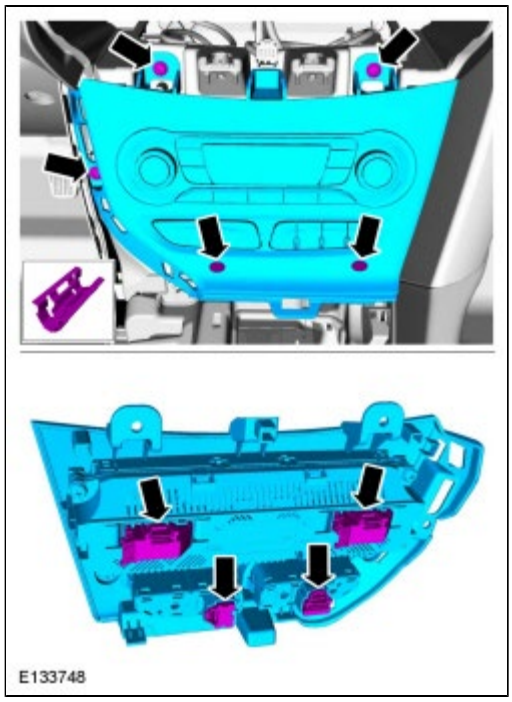

16. Remove the ACM .
    Refer to: Audio Front Control Module (ACM) (415-00A Information and Entertainment System - General Information - Vehicles With: AM/FM/CD, Removal and Installation).
    Refer to: Audio Front Control Module (ACM) (415-00B Information and Entertainment System - General Information - Vehicles With: AM/FM/CD/SYNC, Removal and Installation).
    Refer to: Audio Front Control Module (ACM) (415-00C Information and Entertainment System - General Information - Vehicles With: SYNC/Sony AM/FM/CD, Removal and Installation).

17.

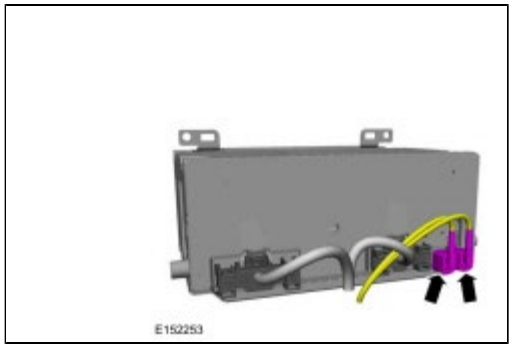

18. **NOTE:** *Steps 18 thru 23 apply for access to the upper antenna cable only.*

    Remove the headliner.
    Refer to: Headliner - Vehicles With: 5-Door (501-05 Interior Trim and Ornamentation, Removal and Installation).
    Refer to: Headliner - Vehicles With: 5-Door (501-05 Interior Trim and Ornamentation, Removal and Installation).
    Refer to: Headliner - Vehicles With: 4-Door (501-05 Interior Trim and Ornamentation, Removal and Installation).

19. Remove lower B-pillar trim panel.

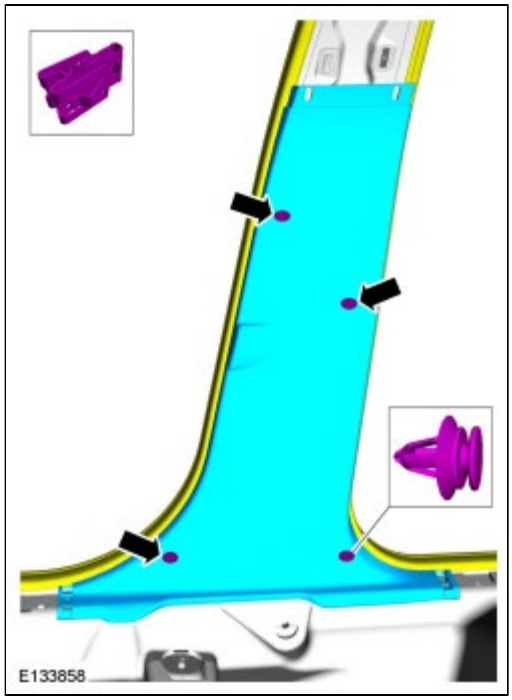

20. **NOTE:** *5-door only*

    Remove the following items:
    1. Remove the passenger front seat.
       Refer to: Front Seat (501-10 Seating, Removal and Installation).
    2. Remove the gearshift lever.
       Refer to: Gearshift Lever - Vehicles With: 5-Speed Manual Transmission - B5/IB5/5-Speed Manual Transmission - MTX75 (308-06 Manual Transmission External Controls, Removal and Installation).

Refer to: Gearshift Lever - Vehicles With: 6-Speed Manual Transmission - B6/6-Speed Manual Transmission - MMT6 (308-06 Manual Transmission External Controls, Removal and Installation).
Refer to: Selector Lever Assembly (307-05 Automatic Transmission External Controls, Removal and Installation).

3. Remove the parking brake control.
   Refer to: Parking Brake Control (206-05 Parking Brake and Actuation, Removal and Installation).

21.

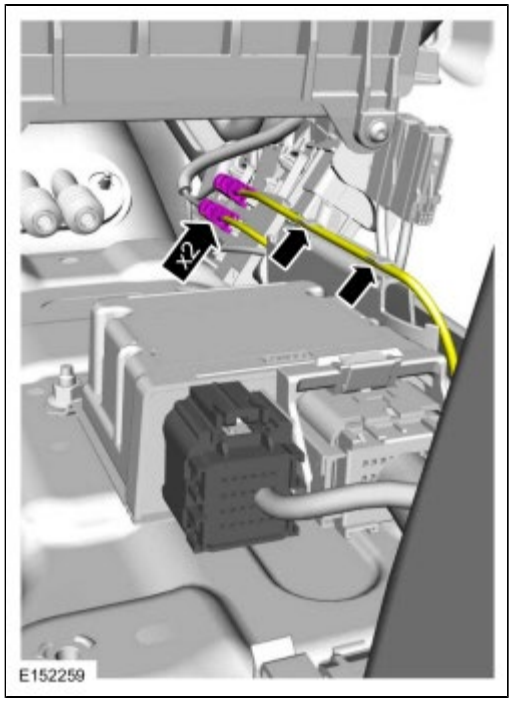

22. *Torque* : 10 Nm

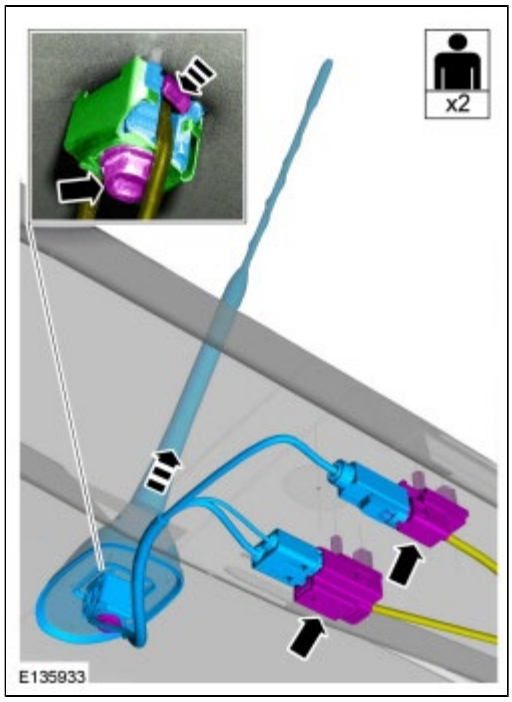

23.

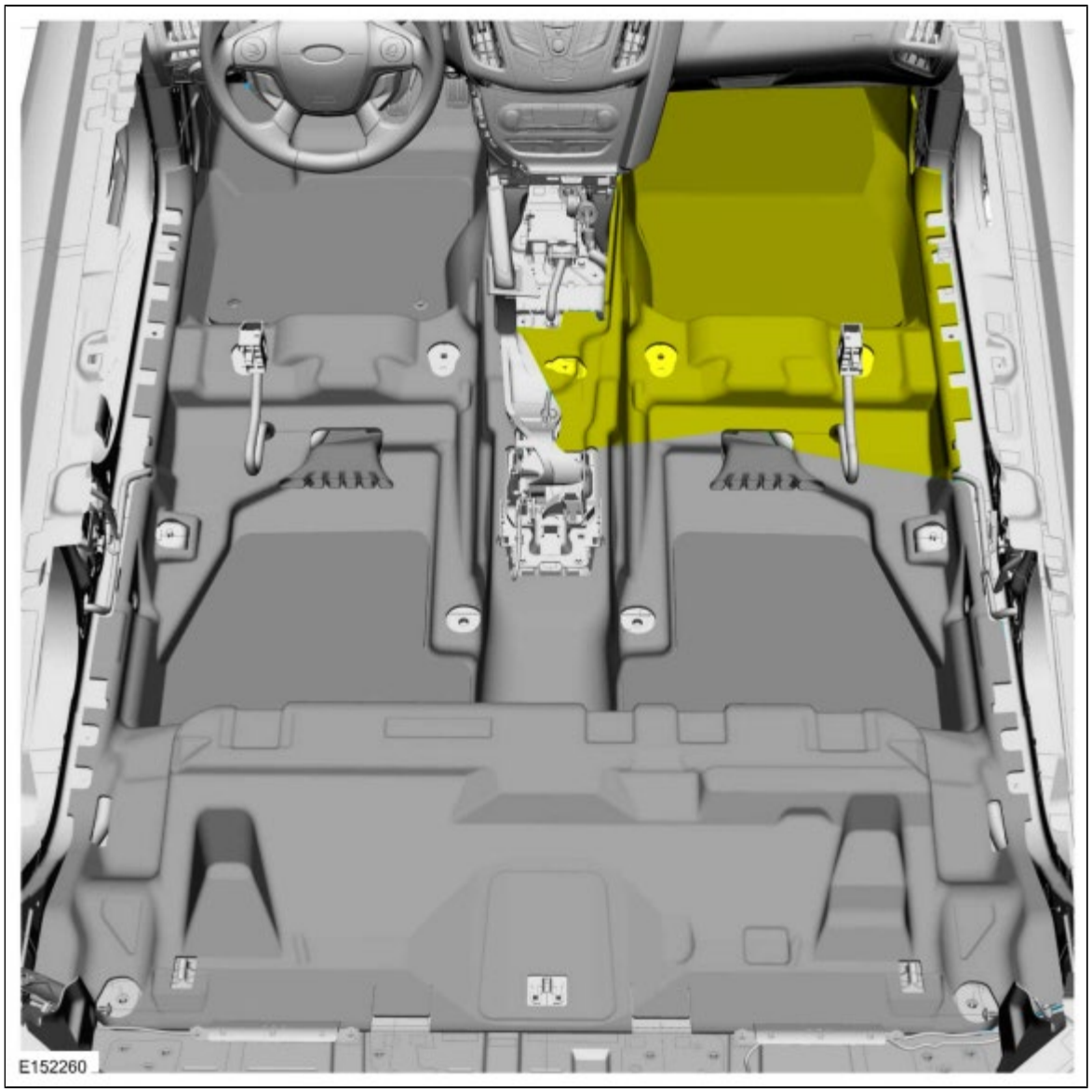

Installation

NOTE: *The antenna cables are part of the vehicle wiring harness. Because the cables cannot be removed from the harness, this procedure applies to the replacement of the cables only.*

1. **NOTE:** *Upper antenna cable*

   Overlay the new upper antenna cable on the vehicle wiring harness, following the routing of the original cable. Cut the ends off of the existing cable(s).

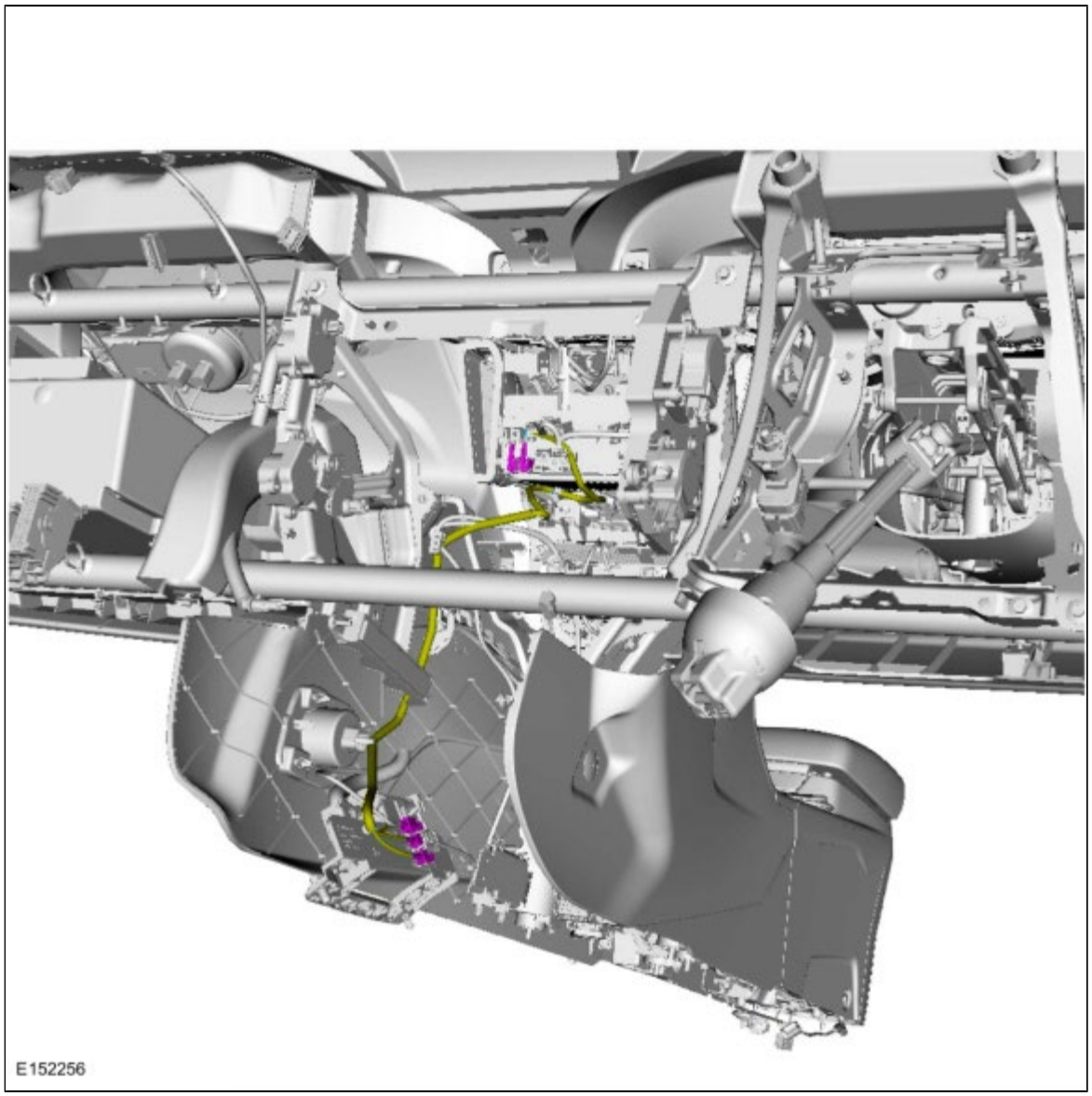

2. **NOTE:** *Lower antenna cable*

   Overlay the new lower antenna cable on the vehicle wiring harness, following the routing of the original cable. Cut the ends off of the existing cable(s).

3. To install, reverse the removal procedure.

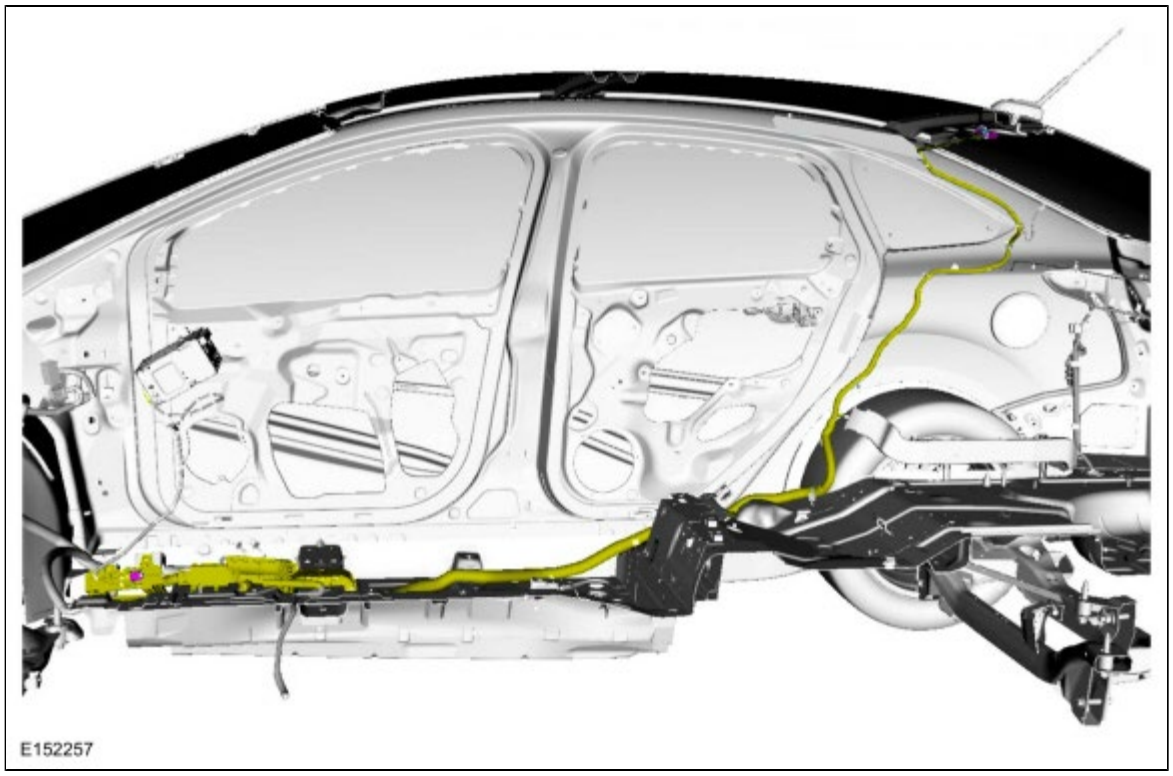

Copyright © Ford Motor Company

Front Control/Display Interface Module (FCDIM)

Removal

NOTE: *Removal steps in this procedure may contain installation details.*

1. **WARNING: Before beginning any service procedure in this section, refer to Safety Warnings in section 100-00 General Information. Failure to follow this instruction may result in serious personal injury.**

   Refer to: Health and Safety Precautions (100-00 General Information, Description and Operation).

2. **NOTE:** *If installing a new module, it is necessary to upload the module configuration information to the scan tool prior to removing the module. This information must be downloaded into the new module after installation.*

   Upload the FCDIM configuration information to the scan tool by following the scan tool on screen instructions.

3. Remove the ACM .
   Refer to: Audio Front Control Module (ACM) (415-00A Information and Entertainment System - General Information - Vehicles With: AM/FM/CD, Removal and Installation).

4. *Torque* : 1.3 Nm

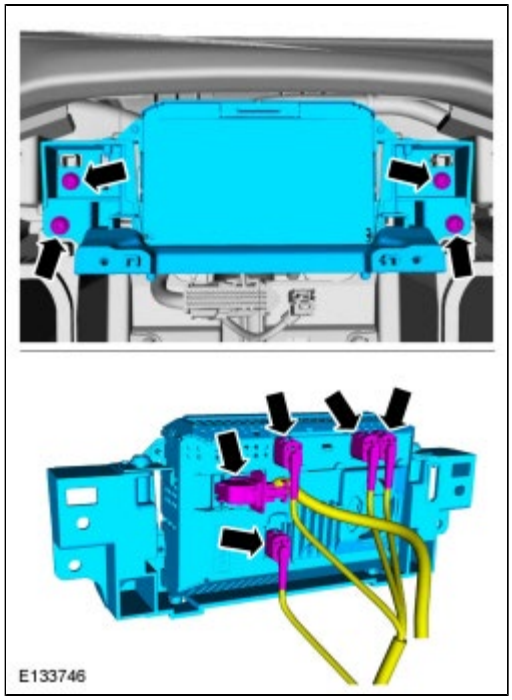

5. **NOTE:** *This step is only necessary when installing a new component.*

   Torque : 2 Nm

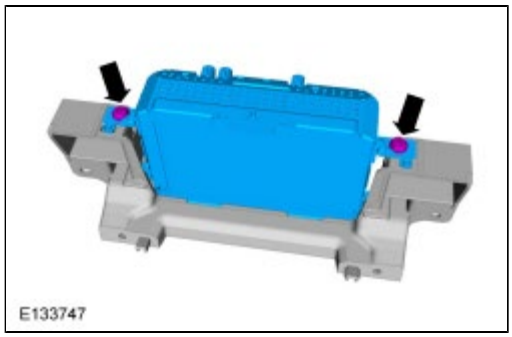

Installation

1. To install, reverse the removal procedure.
2. If installing a new FCDIM , download the FCDIM configuration information from the scan tool to the new FCDIM following the scan tool on screen instructions.

Copyright © Ford Motor Company

Front Controls Interface Module (FCIM)

Removal

NOTE: *Removal steps in this procedure may contain installation details.*

1. **WARNING: Before beginning any service procedure in this section, refer to Safety Warnings in section 100-00 General Information. Failure to follow this instruction may result in serious personal injury.**

   Refer to: Health and Safety Precautions (100-00 General Information, Description and Operation).

2. 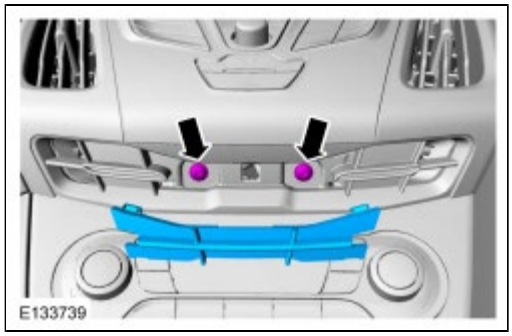

3. 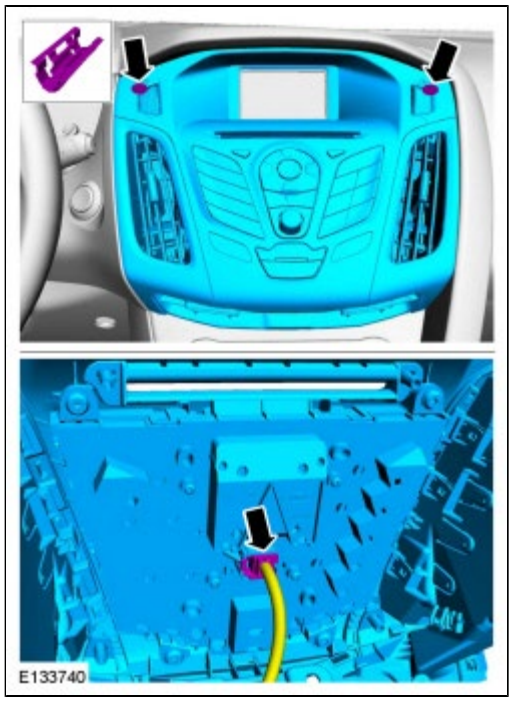

4. **NOTE:** *This step is only necessary when installing a new component.*

   Torque : 1.2 Nm

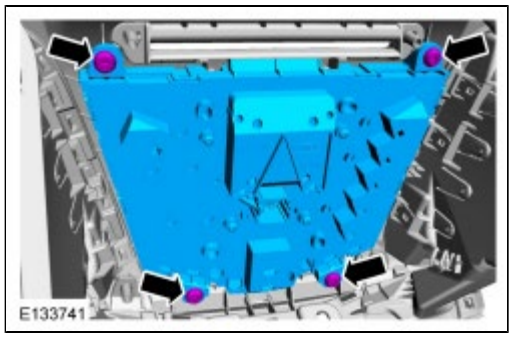

Installation

1. To install, reverse the removal procedure.

Copyright © Ford Motor Company

Front Door Speaker

Removal

NOTE: *Removal steps in this procedure may contain installation details.*

1. **WARNING: Before beginning any service procedure in this section, refer to Safety Warnings in section 100-00 General Information. Failure to follow this instruction may result in serious personal injury.**

   Refer to: Health and Safety Precautions (100-00 General Information, Description and Operation).

2. Remove the front door trim panel.
   Refer to: Front Door Trim Panel (501-05 Interior Trim and Ornamentation, Removal and Installation).

3. *Torque* : 2 Nm

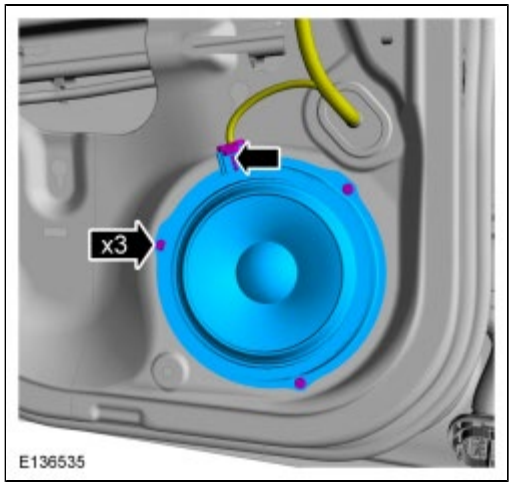

Installation

1. To install, reverse the removal procedure.

Copyright © Ford Motor Company

Front Door Tweeter Speaker

Removal

NOTE: *Removal steps in this procedure may contain installation details.*

1. **WARNING: Before beginning any service procedure in this section, refer to Safety Warnings in section 100-00 General Information. Failure to follow this instruction may result in serious personal injury.**

   Refer to: Health and Safety Precautions (100-00 General Information, Description and Operation).

2.

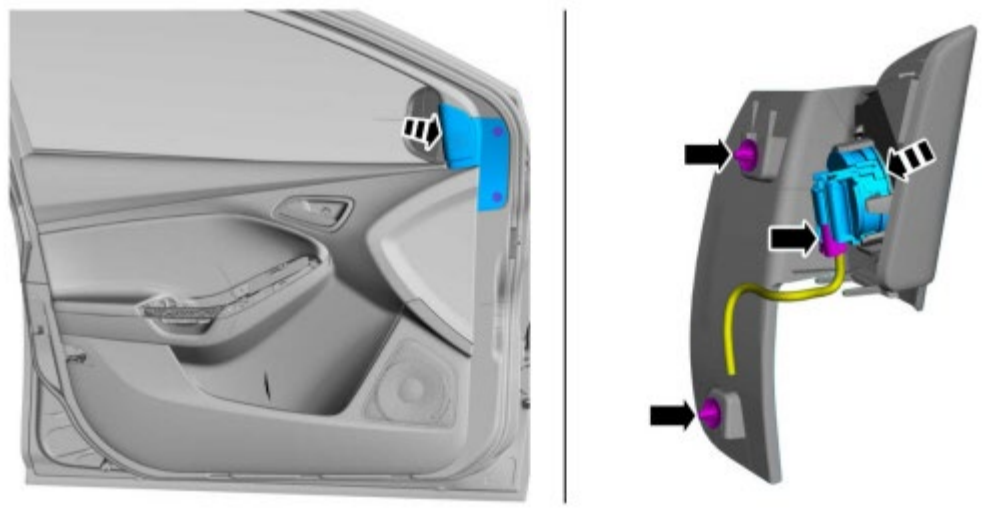

E152315

Installation

1. To install, reverse the removal procedure.

Copyright © Ford Motor Company

Global Positioning System Module (GPSM)

Removal

NOTE: *If installing a new module, it is necessary to upload the module configuration information to the scan tool prior to removing the module. This information must be downloaded into the new module after installation.*

NOTE: *Removal steps in this procedure may contain installation details.*

1. Upload the GPSM configuration information to the scan tool by following the scan tool on screen instructions.

2. **WARNING: Before beginning any service procedure in this section, refer to Safety Warnings in section 100-00 General Information. Failure to follow this instruction may result in serious personal injury.**

   Refer to: Health and Safety Precautions (100-00 General Information, Description and Operation).

3.

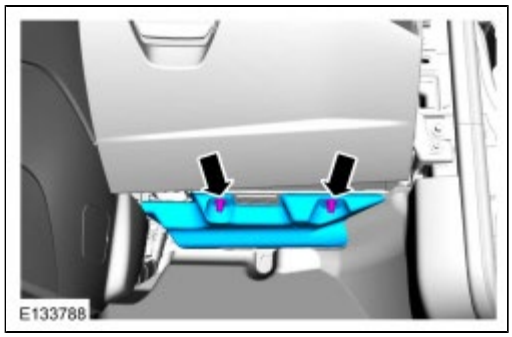

4.

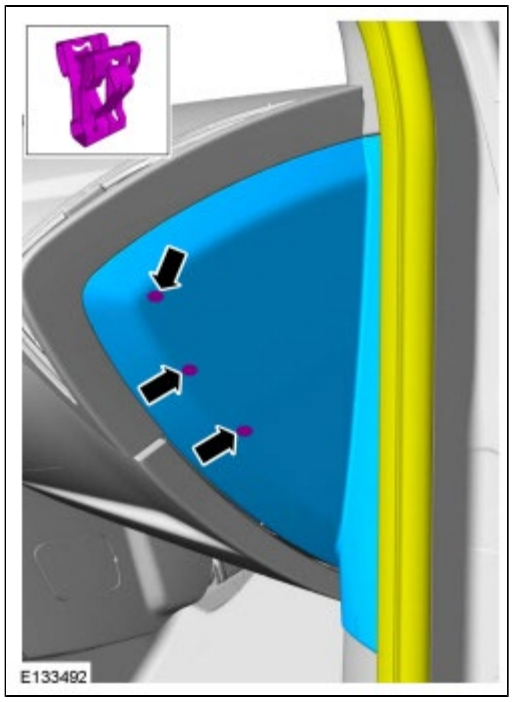

5.

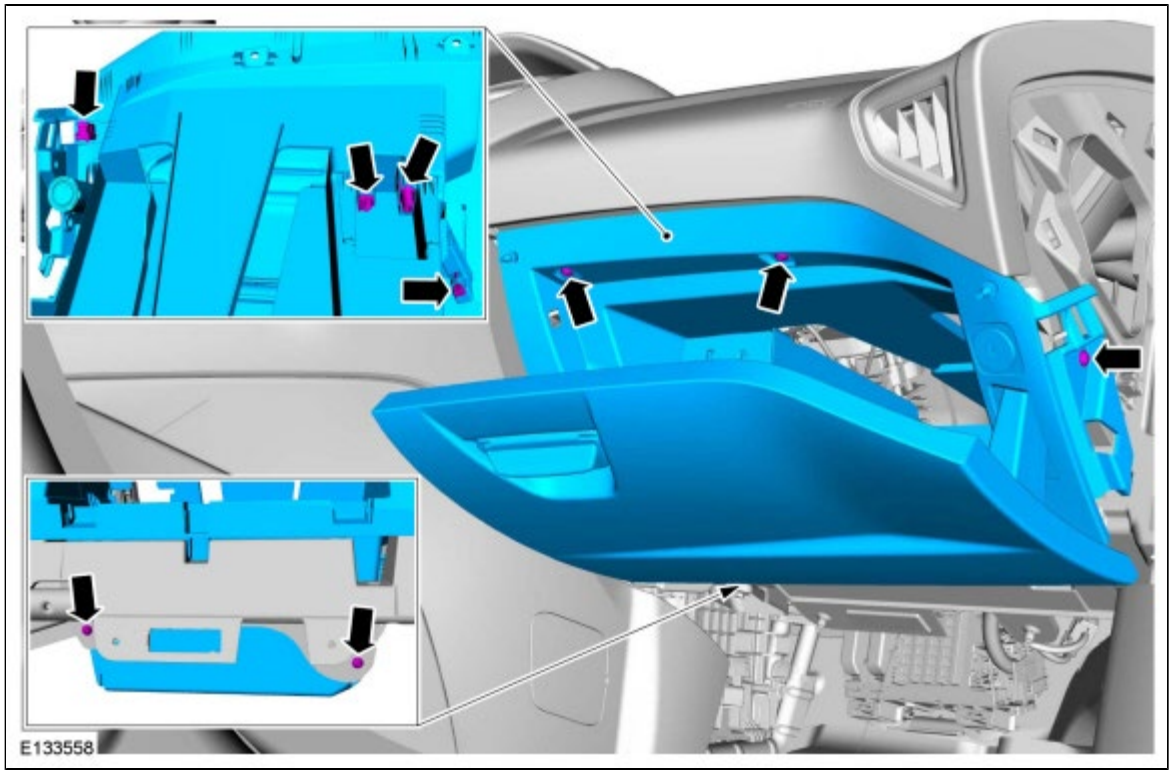

6.

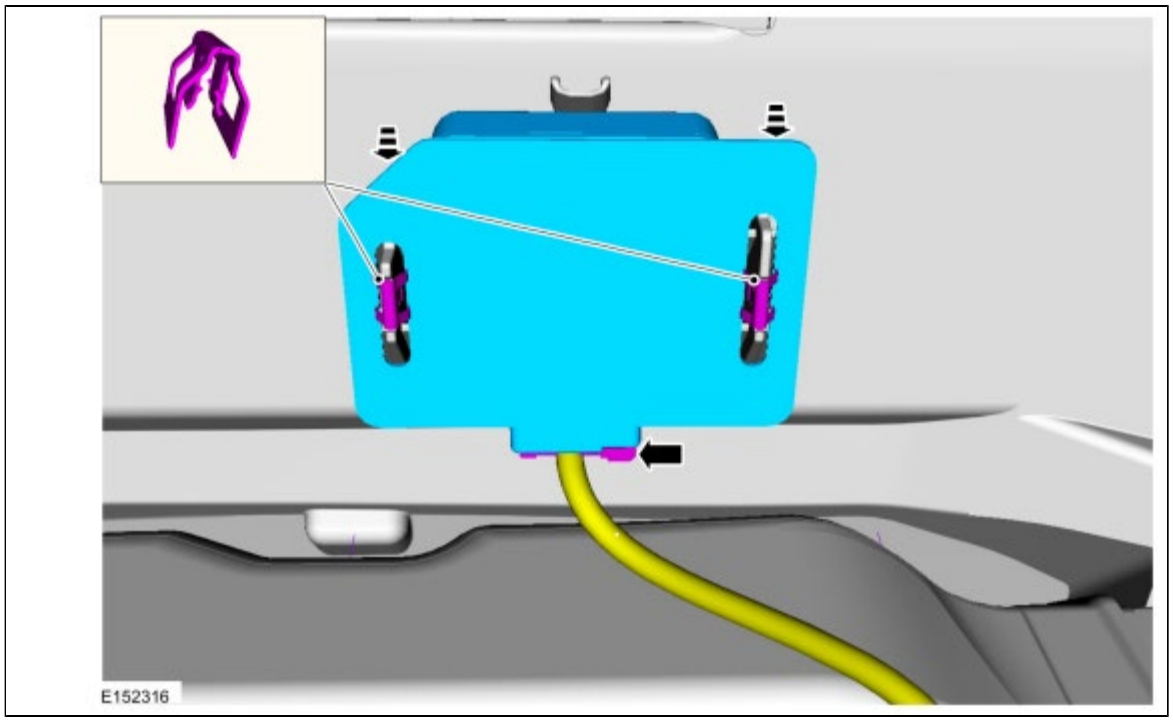

Installation

1. To install, reverse the removal procedure.
2. Download the GPSM configuration information from the scan tool to the new GPSM following the on-screen instructions.

Copyright © Ford Motor Company

Rear Door Speaker

Removal

NOTE: *Removal steps in this procedure may contain installation details.*

1. **WARNING: Before beginning any service procedure in this section, refer to Safety Warnings in section 100-00 General Information. Failure to follow this instruction may result in serious personal injury.**

   Refer to: Health and Safety Precautions (100-00 General Information, Description and Operation).

2. Remove rear door trim panel.
   Refer to: Rear Door Trim Panel (501-05 Interior Trim and Ornamentation, Removal and Installation).

3. *Torque* : 2 Nm

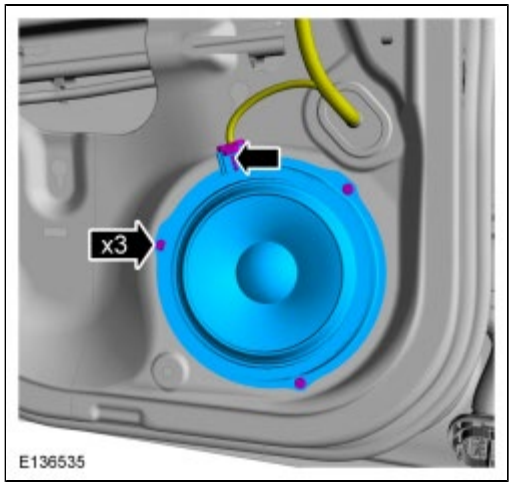

Installation

1. To install, reverse the removal procedure.

Copyright © Ford Motor Company

SYNC Module [APIM]

Removal

NOTE: *Removal steps in this procedure may contain installation details.*

1. **WARNING: Before beginning any service procedure in this section, refer to Safety Warnings in section 100-00 General Information. Failure to follow this instruction may result in serious personal injury.**

   Refer to: Health and Safety Precautions (100-00 General Information, Description and Operation).

2. Remove the FDIM .
   Refer to: Front Display Interface Module (FDIM) (415-00C Information and Entertainment System - General Information - Vehicles With: SYNC/Sony AM/FM/CD, Removal and Installation).

3. *Torque* : 1 Nm

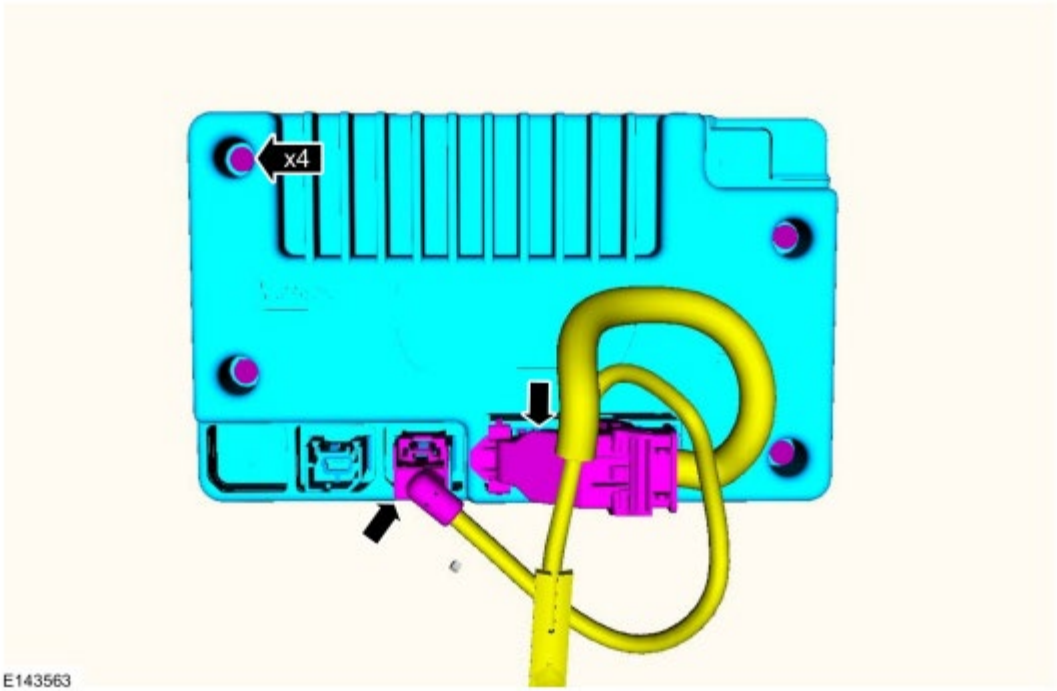

Installation

1. To install, reverse the removal procedure.

2. If installing a new APIM , program the APIM .
   Refer to: SYNC Module [APIM] Replacement Programming (415-00C Information and Entertainment System - General Information - Vehicles With: SYNC/Sony AM/FM/CD, General Procedures).

Copyright © Ford Motor Company

SYNC Module [APIM] to Universal Serial Bus (USB) Port Cable

Removal

NOTE: *Removal steps in this procedure may contain installation details.*

NOTE: *The USB cables are part of the vehicle wiring harness. Because the cables cannot be removed from the harness, this procedure applies to the replacement of the cables only.*

1. **WARNING: Before beginning any service procedure in this section, refer to Safety Warnings in section 100-00 General Information. Failure to follow this instruction may result in serious personal injury.**

   Refer to: Health and Safety Precautions (100-00 General Information, Description and Operation).

2. **NOTE:** *Steps 2 thru 19 apply for acess to the instrument panel USB cable only.*

   Vehicles with manual transmission.

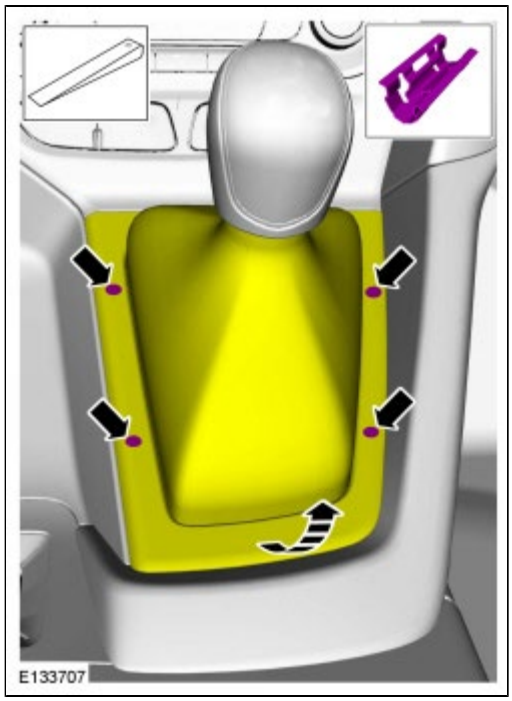

3. Vehicles with automatic transmission.

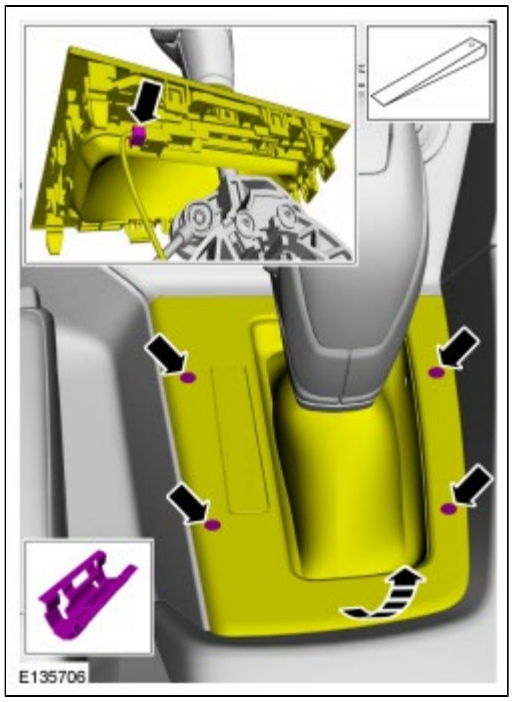

4.

5.

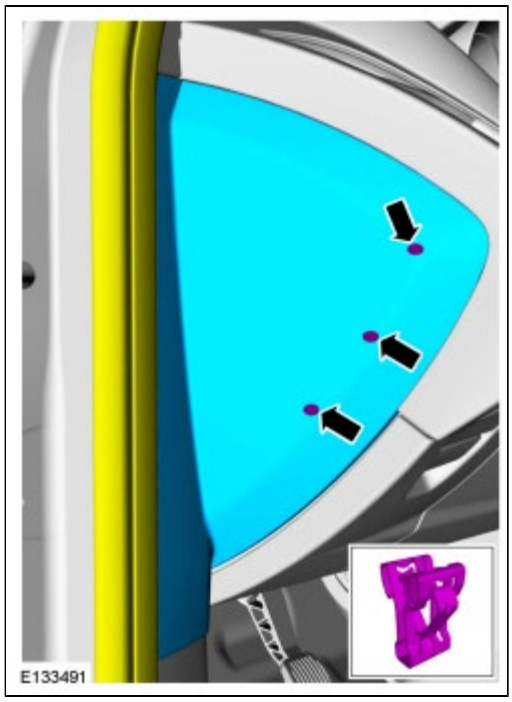

6. If equipped.
   Refer to: Driver Lower Airbag - Vehicles Built From: 11-June-2012 (501-20B Supplemental Restraint System, Removal and Installation).

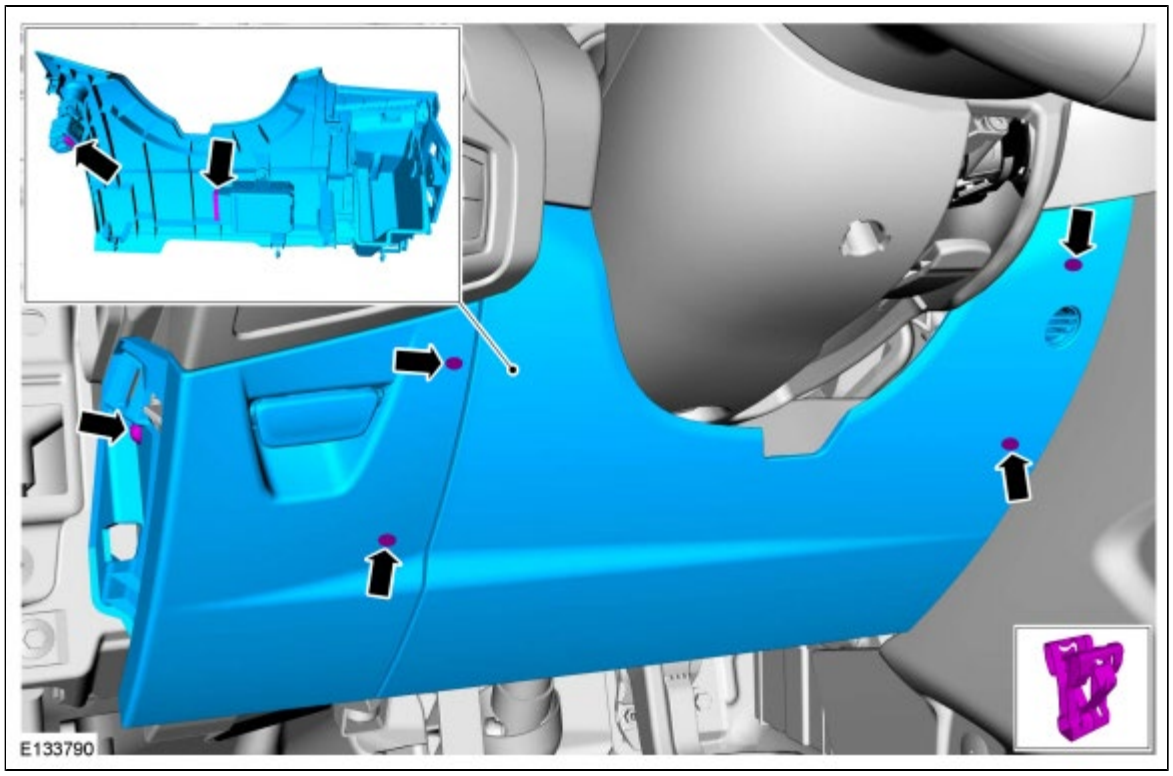

7. Vehicles without center armrest.

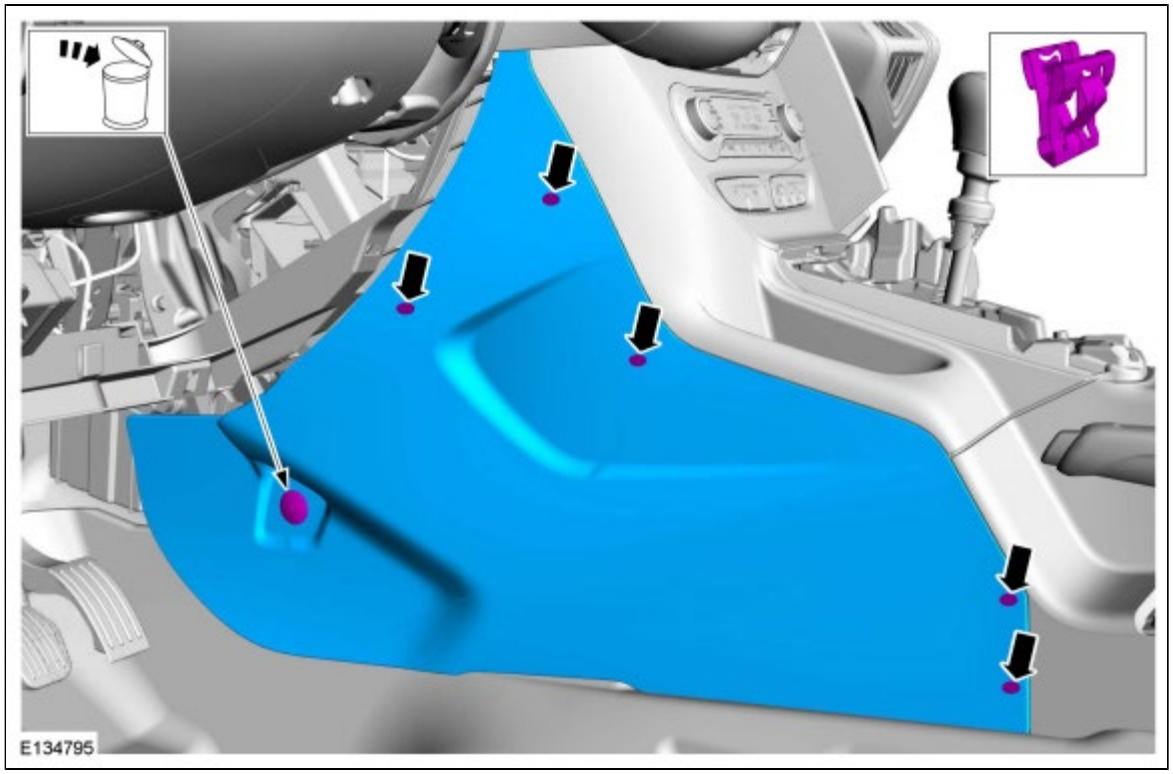

8. Vehicles with center armrest.

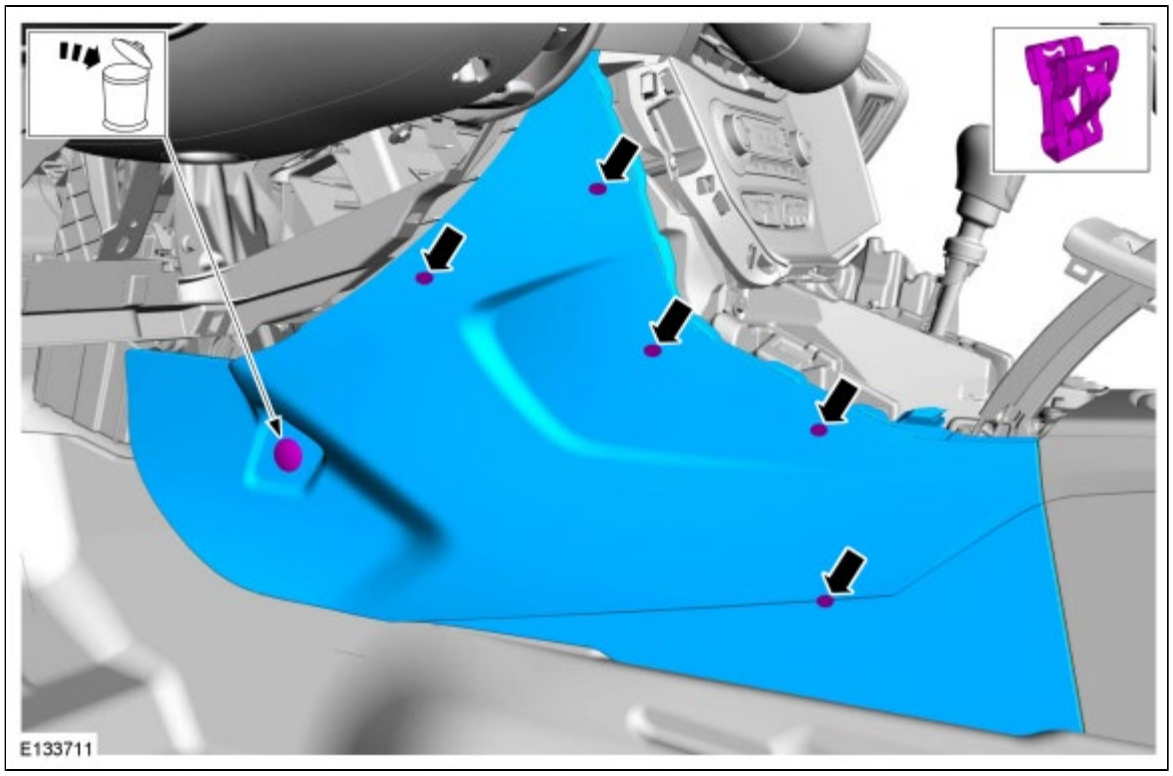

9. Vehicles without center armrest.

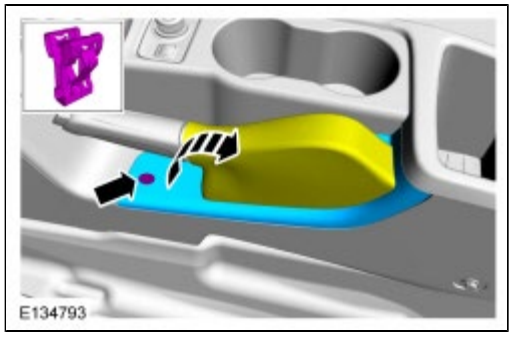

10. Vehicles without center armrest.
    Torque : 2 Nm

11. Vehicles with center armrest.
    Torque : 2 Nm

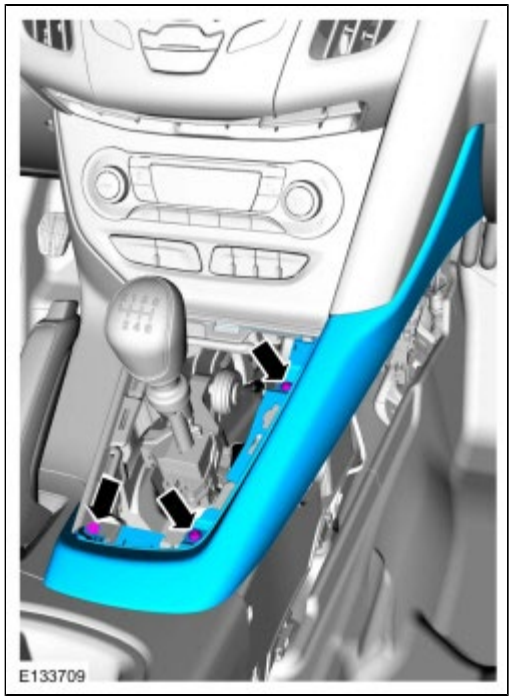

12.

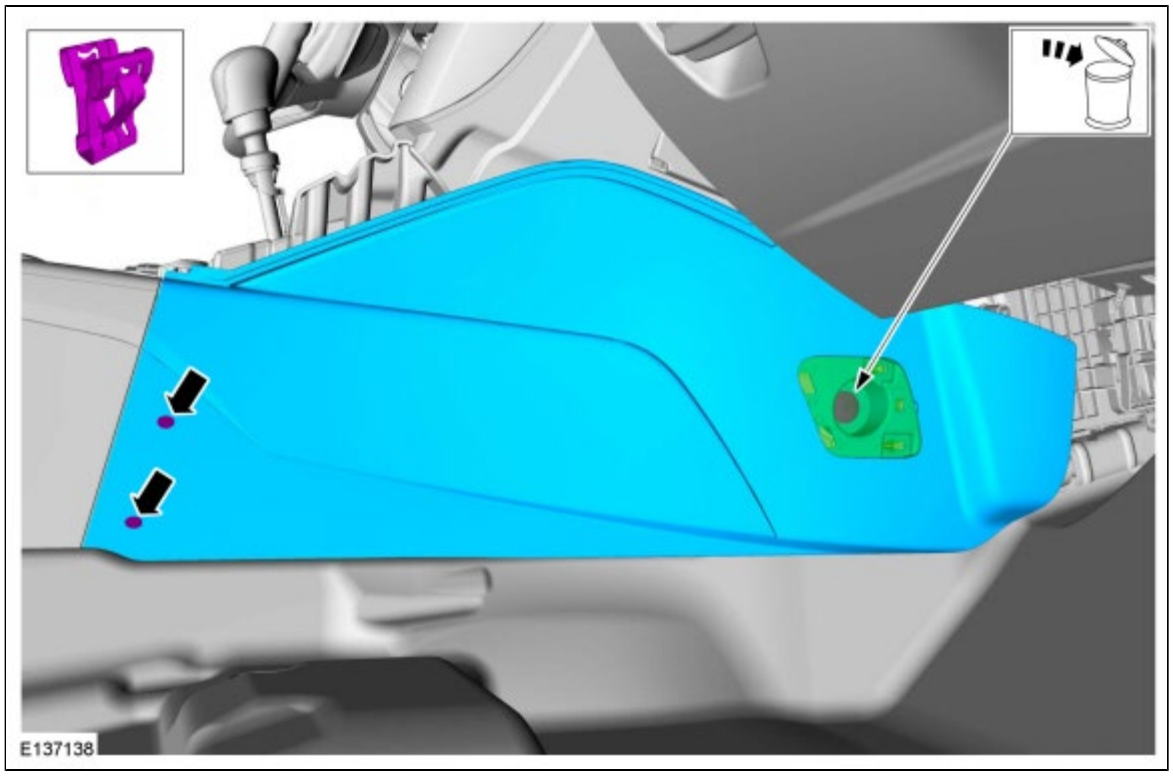

13. Vehicles with center armrest.

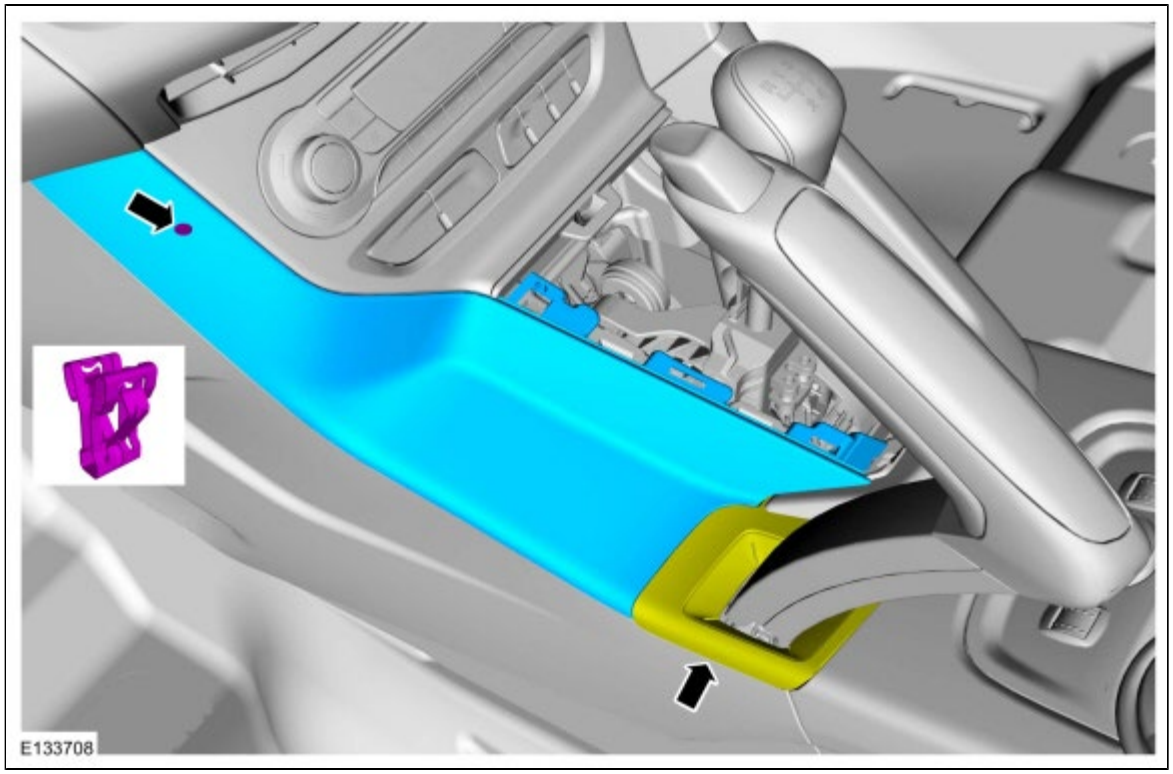

14. Vehicles without center armrest.

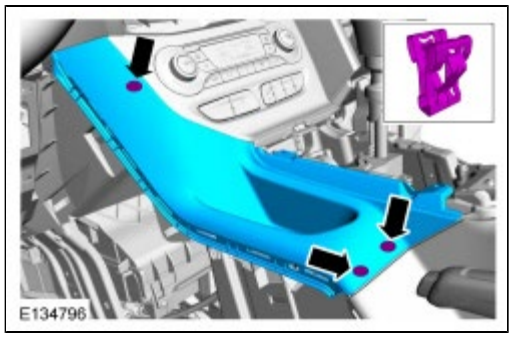

15. **NOTE:** *Arm rest console shown, all others similar.*

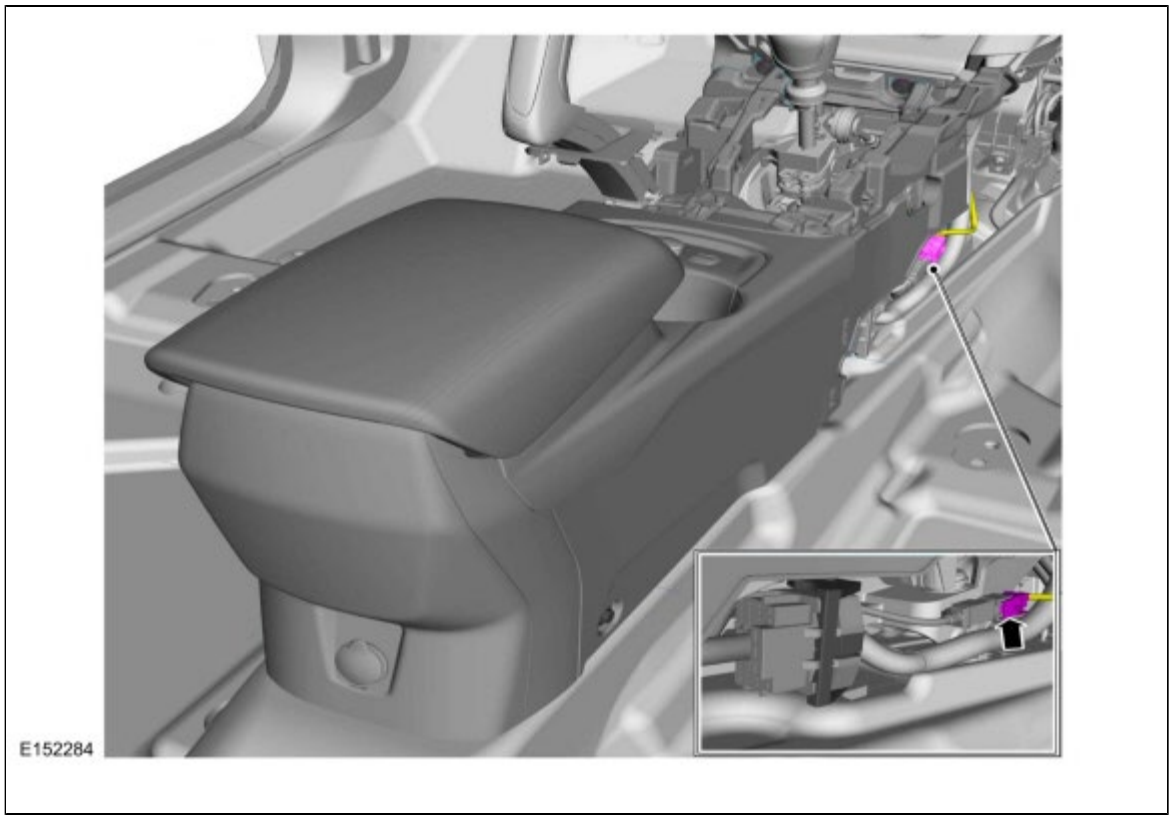

16. *Torque* : 2.6 Nm

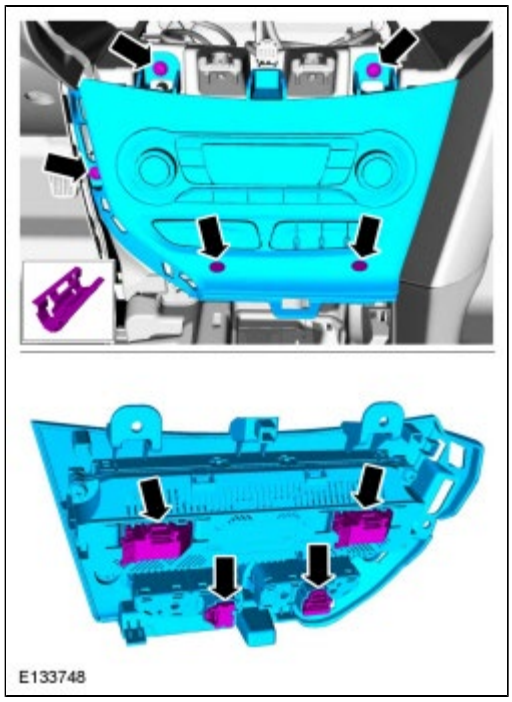

17. Depending on option content. Remove the FCDIM or the FDIM .
    Refer to: Front Controls Interface Module (FCIM) (415-00B Information and Entertainment System - General Information - Vehicles With: AM/FM/CD/SYNC, Removal and Installation).
    Refer to: Front Control/Display Interface Module (FCDIM) (415-00B Information and Entertainment System - General Information - Vehicles With: AM/FM/CD/SYNC, Removal and Installation).

18. **NOTE:** *Premium audio shown.*

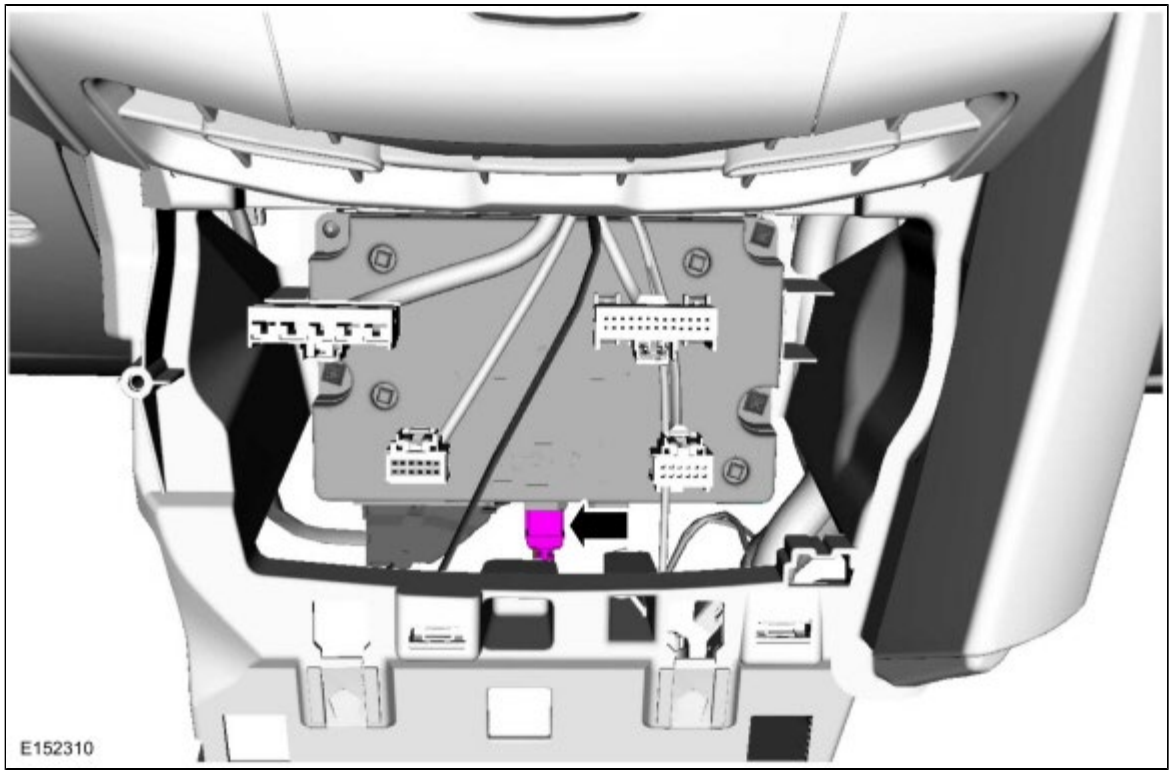

19. **NOTE:** *Sony® sound shown.*

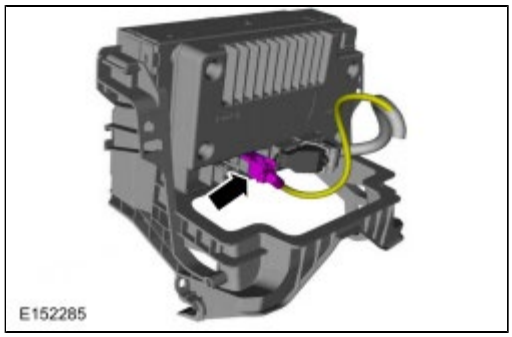

20. **NOTE:** *Steps 20 thru 22 apply for acess to the center floor console USB cable only.*

    Remove the center front floor console.
    Refer to: Floor Console - Vehicles Without: Center Armrest (501-12 Instrument Panel and Console, Removal and Installation).
    Refer to: Floor Console - Vehicles With: Center Armrest (501-12 Instrument Panel and Console, Removal and Installation).

21.

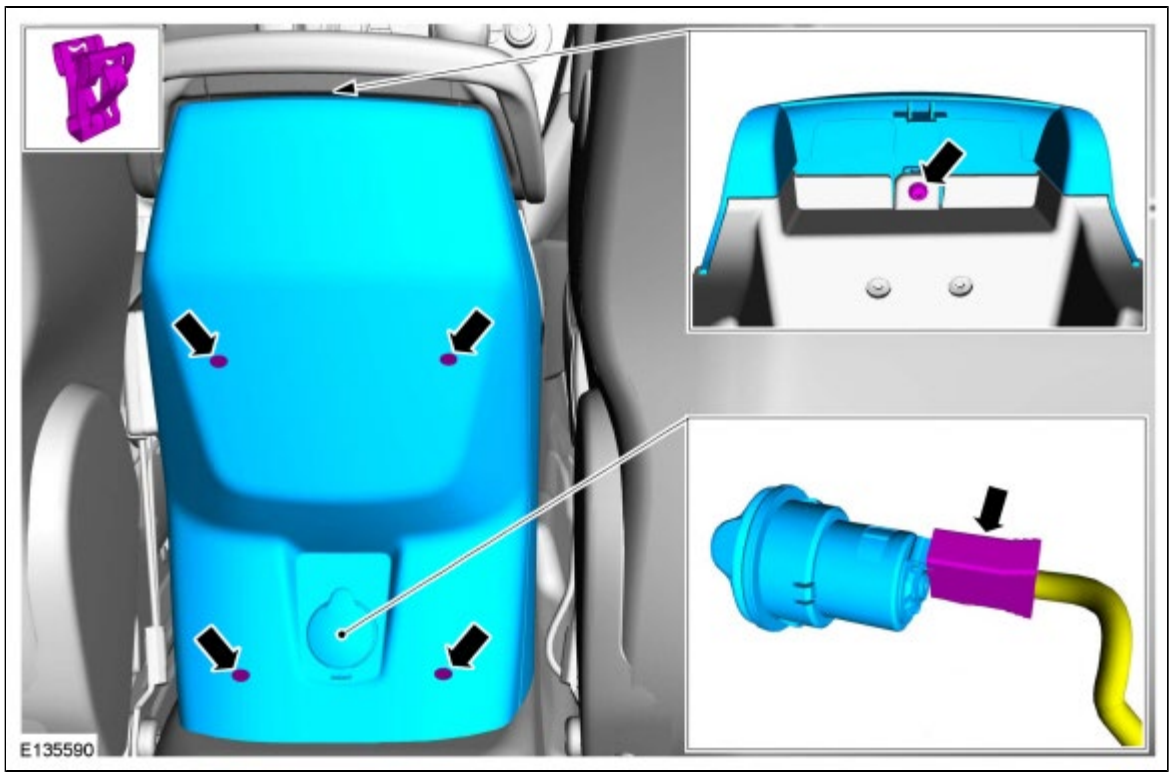

22.

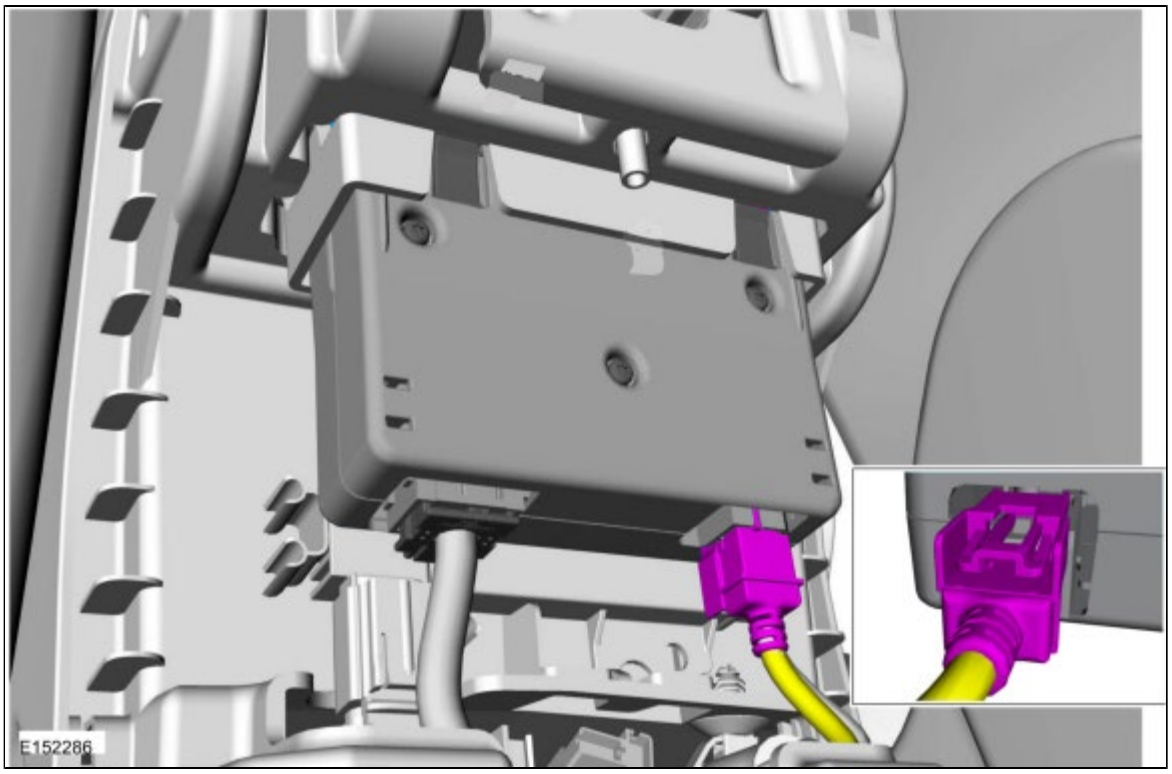

Installation

NOTE: *The USB cables are part of the vehicle wiring harness. Because the cables cannot be removed from the harness, this procedure applies to the replacement of the cables only.*

1. **NOTE:** *Instrument panel USB cable*

   Overlay the new USB cable on the vehicle wiring harness, following the routing of the original cable. Cut the ends off the existing cable.

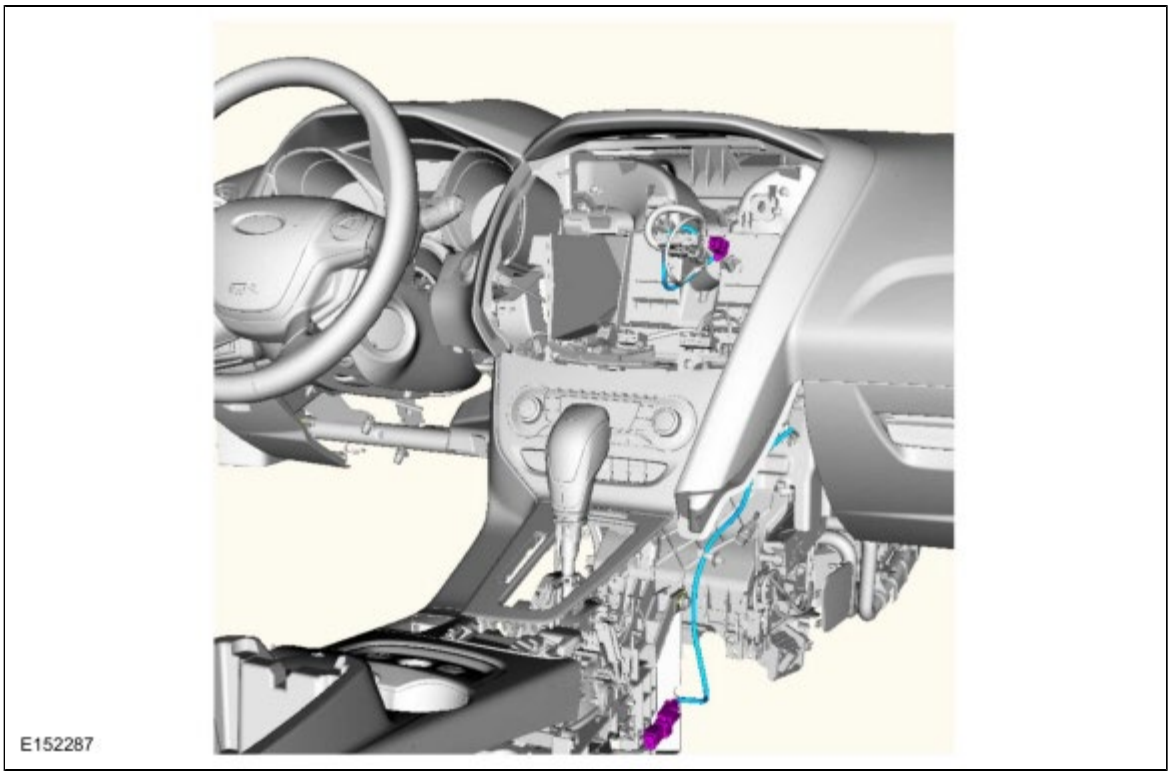

2. **NOTE:** *Floor console USB cable*

Overlay the new USB cable on the vehicle wiring harness, following the routing of the original cable. Cut the ends off the existing cable.

3. To install, reverse the removal procedure.

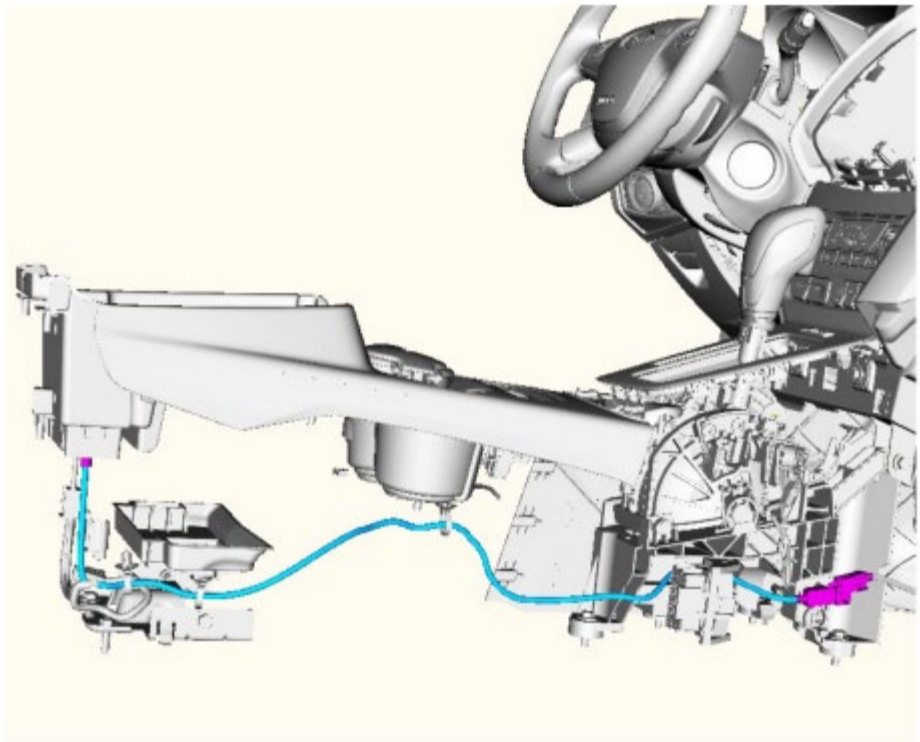

Copyright © Ford Motor Company

Audio Unit Antenna

Removal

NOTE: *Removal steps in this procedure may contain installation details.*

1. **WARNING: Before beginning any service procedure in this section, refer to Safety Warnings in section 100-00 General Information. Failure to follow this instruction may result in serious personal injury.**

   Refer to: Health and Safety Precautions (100-00 General Information, Description and Operation).

2. Remove D-pillar trim panel.
   Refer to: D-Pillar Trim Panel - Vehicles With: 4-Door (501-05 Interior Trim and Ornamentation, Removal and Installation).
   Refer to: D-Pillar Trim Panel - Vehicles With: 5-Door (501-05 Interior Trim and Ornamentation, Removal and Installation).

3. Lower the rear of the headliner for access.

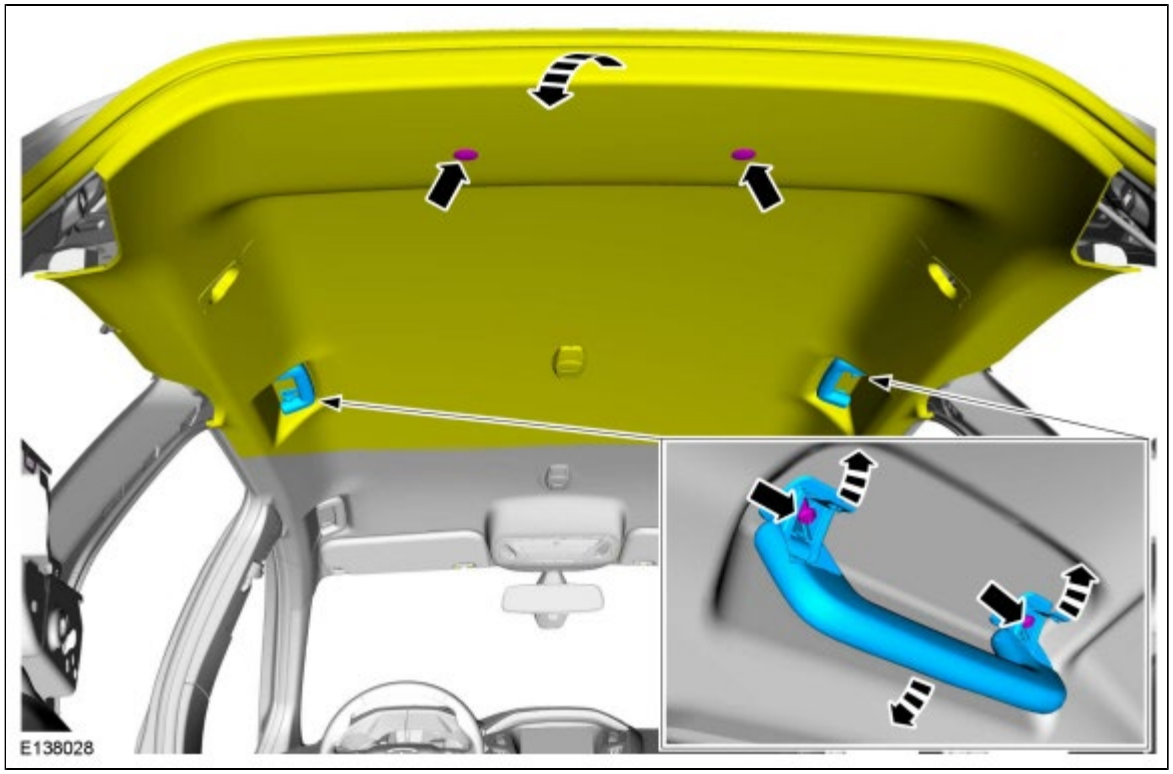

4. *Torque* : 10 Nm

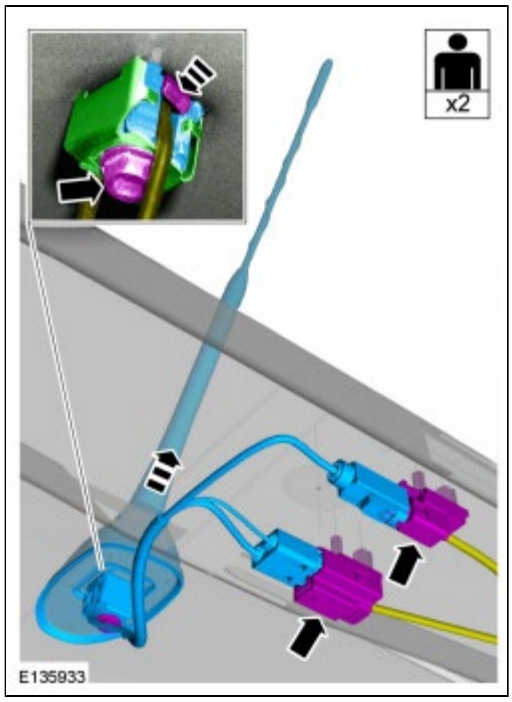

Installation

1. To install, reverse the removal procedure.

Copyright © Ford Motor Company

Audio Unit Antenna Cable

Removal

NOTE: *Removal steps in this procedure may contain installation details.*

NOTE: *The antenna cables are part of the vehicle wiring harness Because the cables cannot be removed from the harness, this procedure applies to the replacement of the cables only.*

1. **WARNING: Before beginning any service procedure in this section, refer to Safety Warnings in section 100-00 General Information. Failure to follow this instruction may result in serious personal injury.**

   Refer to: Health and Safety Precautions (100-00 General Information, Description and Operation).

NOTE: *Steps 2 thru 17 apply for access to the lower antenna cable only.*

2. Vehicles with manual transmission.

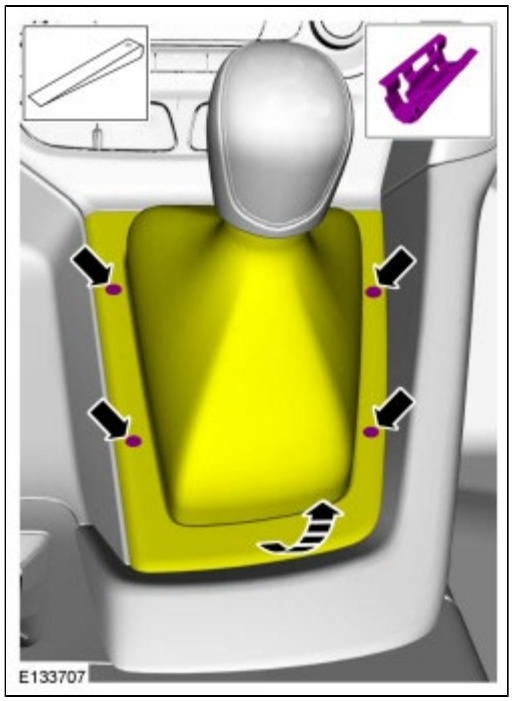

3. Vehicles with automatic transmission.

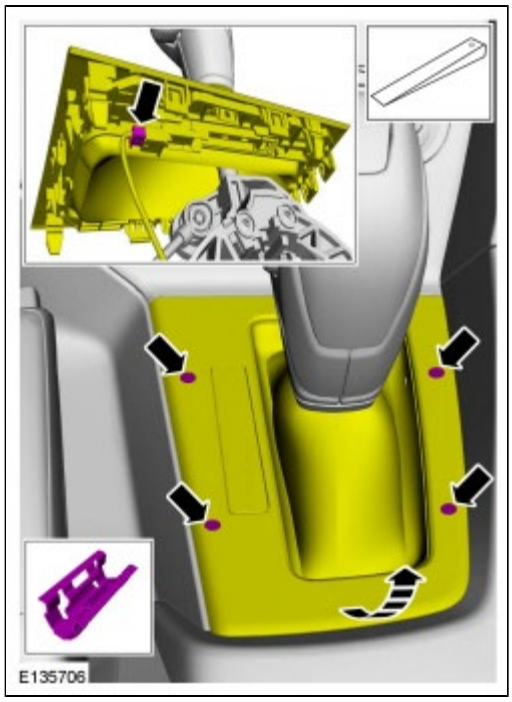

4.

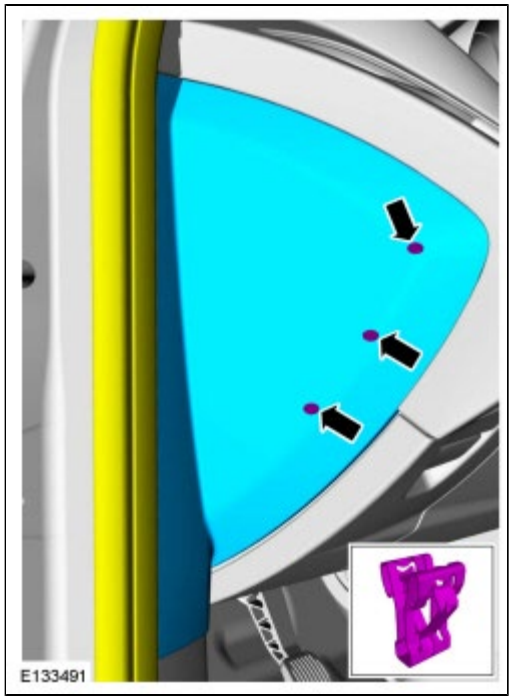

5. If equipped.
   Refer to: Driver Lower Airbag - Vehicles Built From: 11-June-2012 (501-20B Supplemental Restraint System, Removal and Installation).

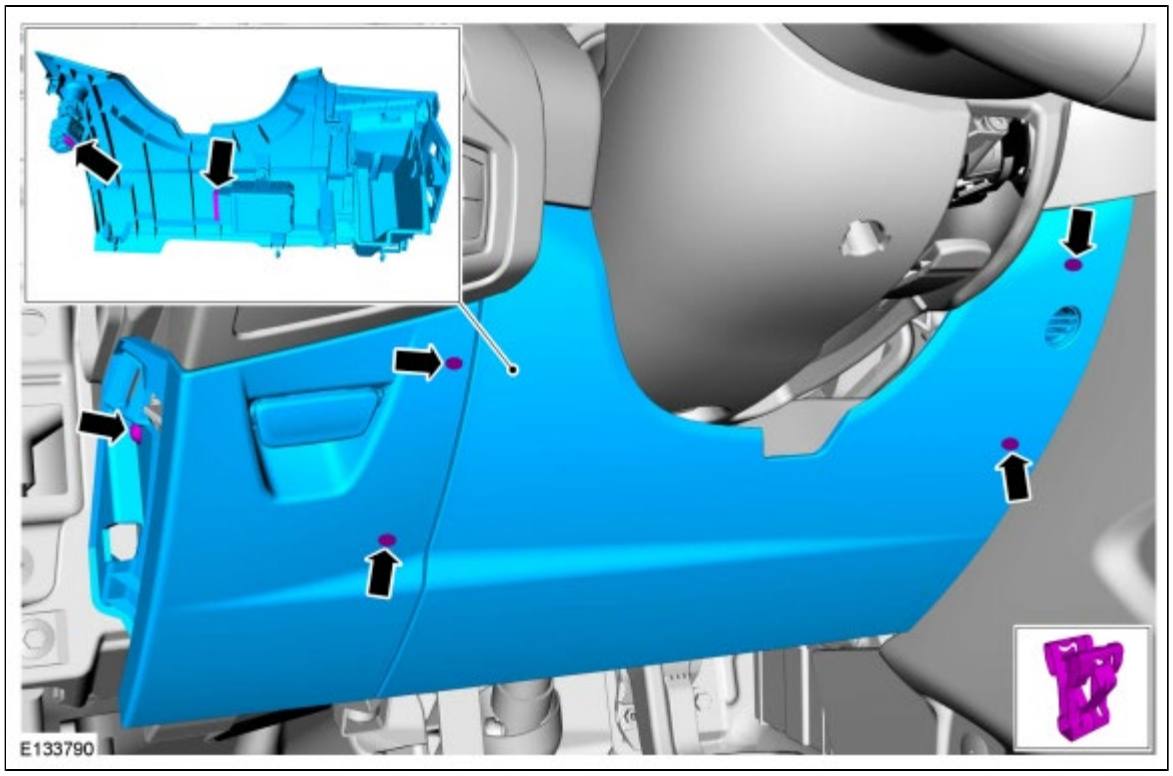

6. Vehicles without center armrest.

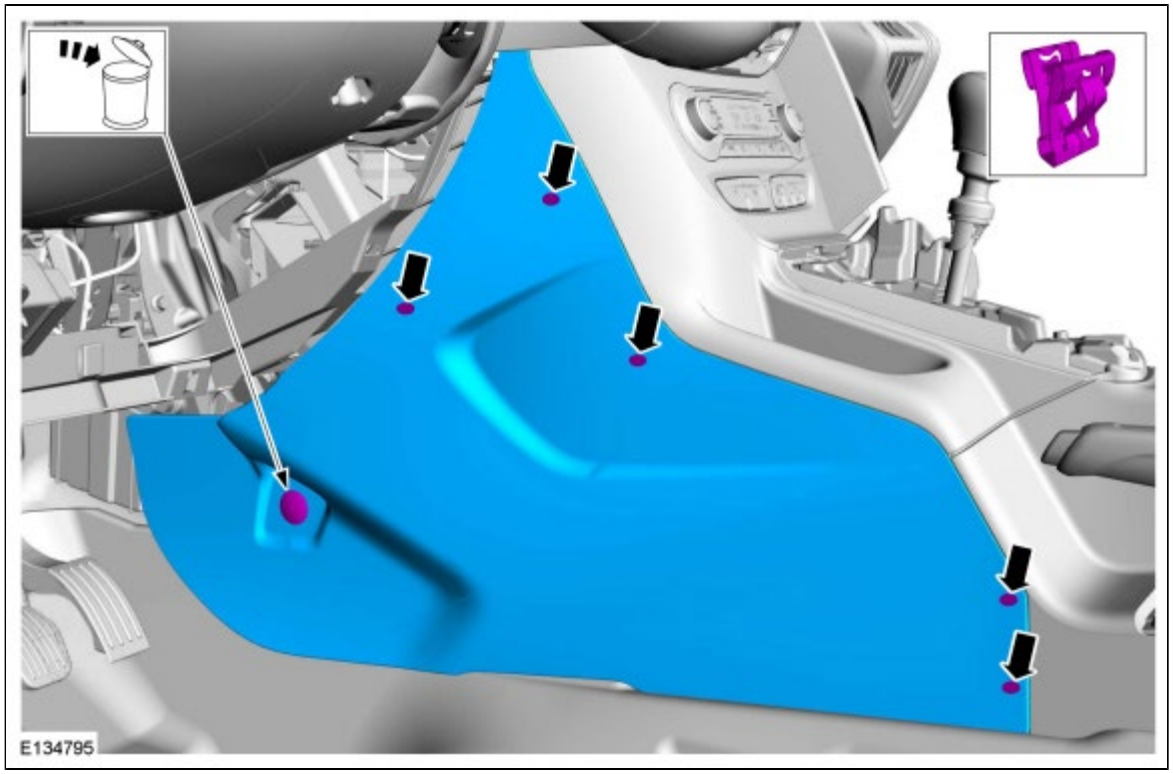

7. Vehicles with center armrest.

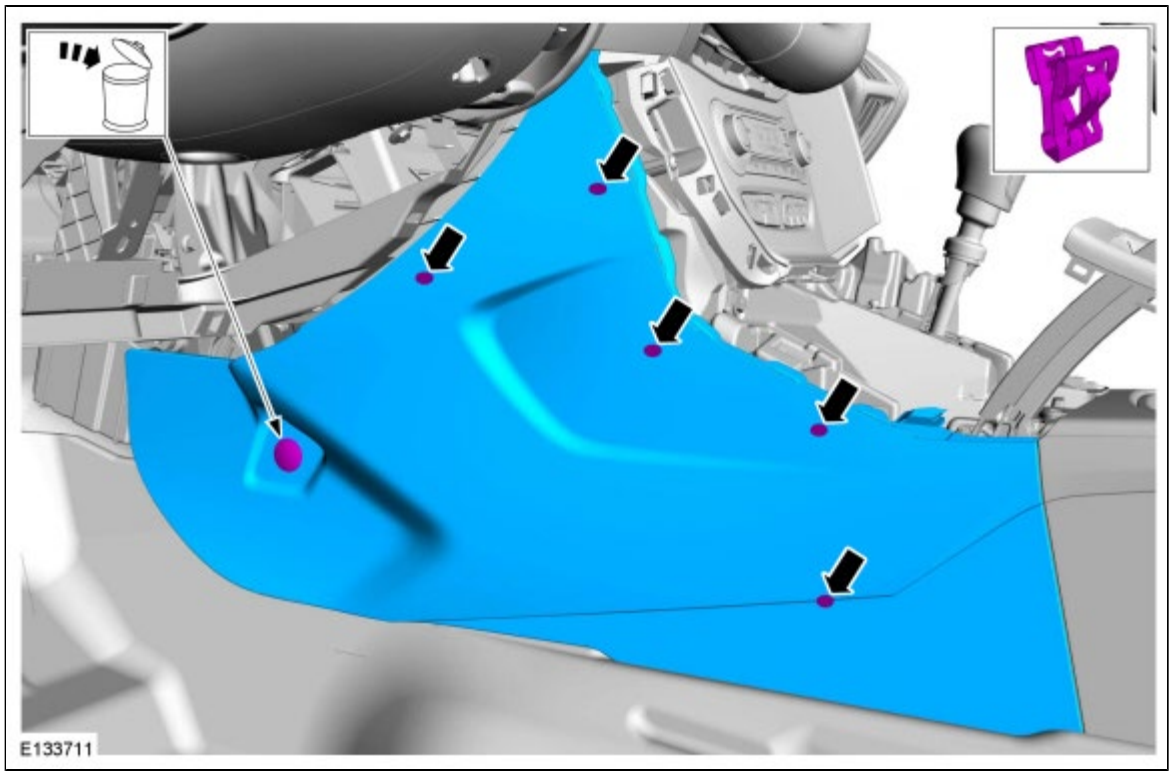

8. Vehicles without center armrest.

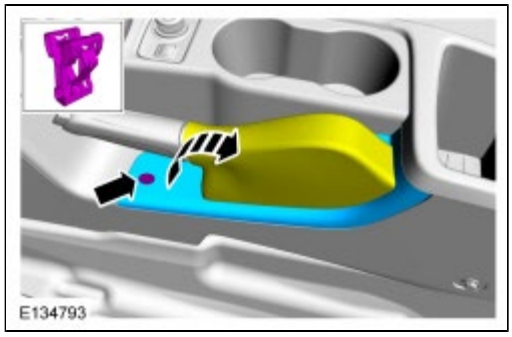

9. Vehicles without center armrest.
   Torque : 2 Nm

10. Vehicle with center armrest.

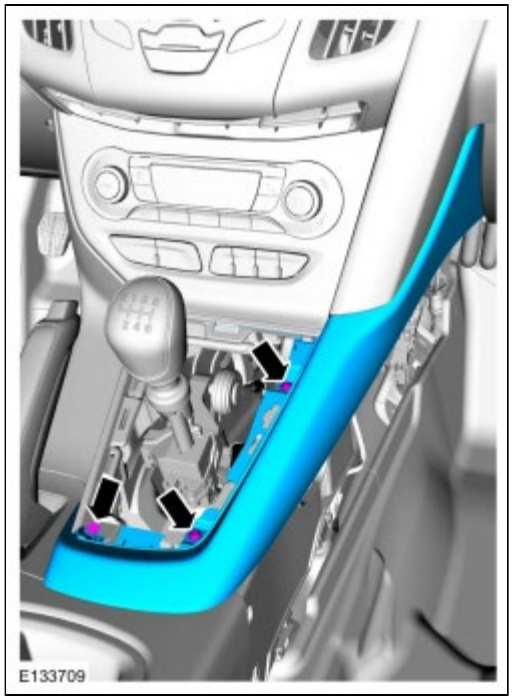

11.

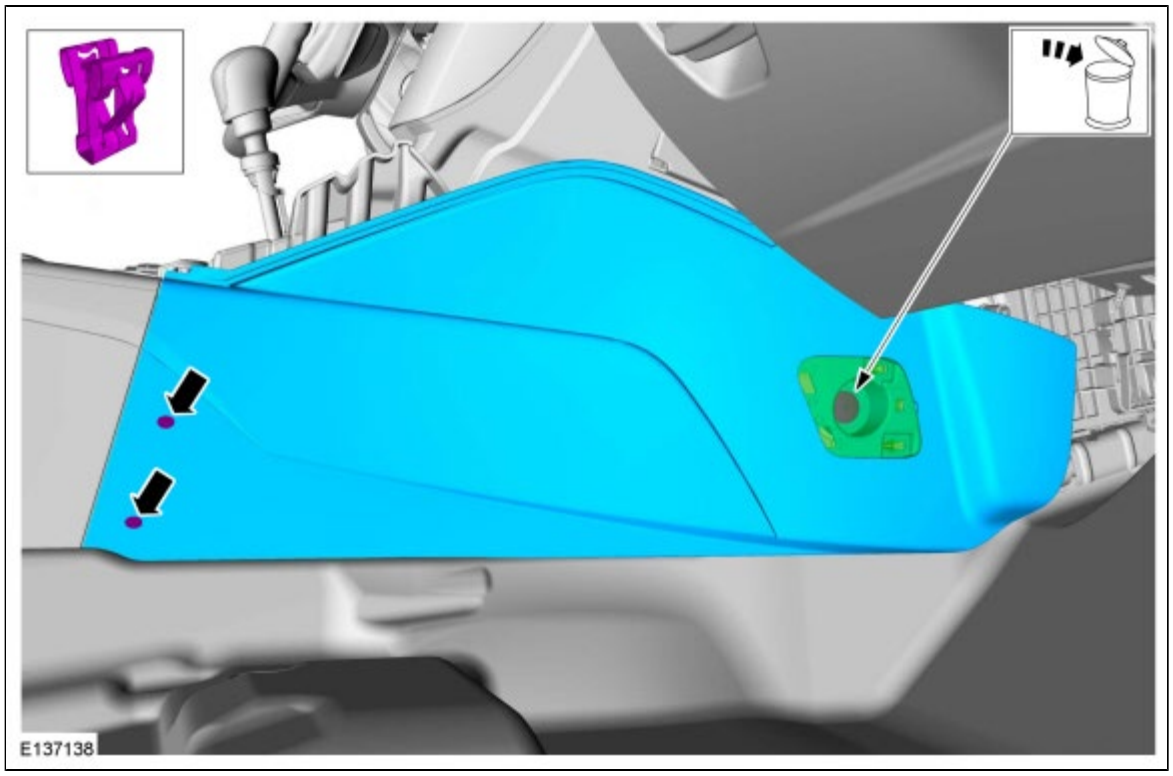

12. Vehicles with center armrest.

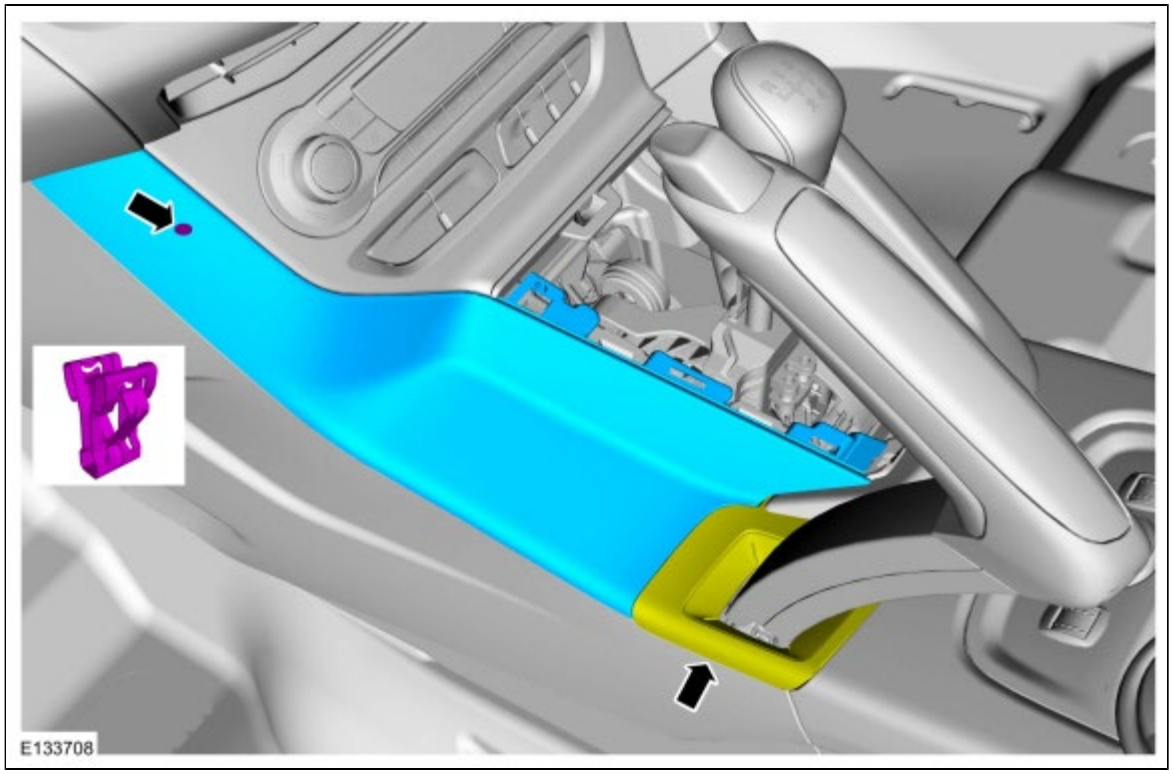

13. Vehicles without center armrest.

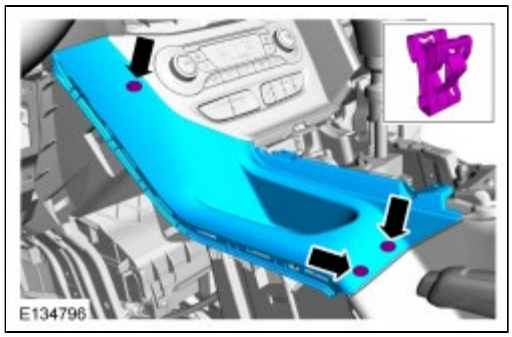

NOTE: *Sony® sound shown, premium and base audio similar.*

14. Disconnect antenna connector(s).

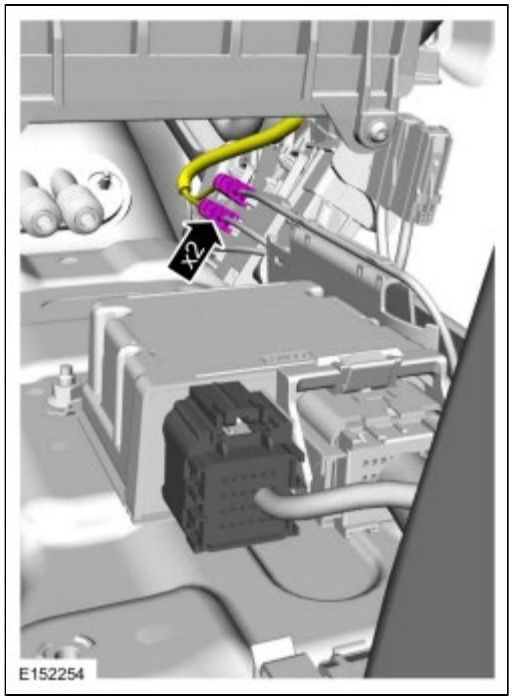

15. *Torque* : 1 Nm

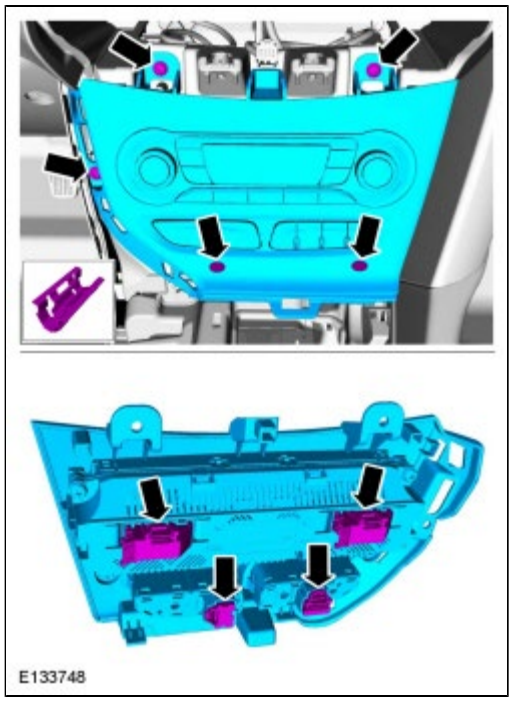

16. Remove the ACM .
    Refer to: Audio Front Control Module (ACM) (415-00A Information and Entertainment System - General Information - Vehicles With: AM/FM/CD, Removal and Installation).
    Refer to: Audio Front Control Module (ACM) (415-00B Information and Entertainment System - General Information - Vehicles With: AM/FM/CD/SYNC, Removal and Installation).
    Refer to: Audio Front Control Module (ACM) (415-00C Information and Entertainment System - General Information - Vehicles With: SYNC/Sony AM/FM/CD, Removal and Installation).

17.

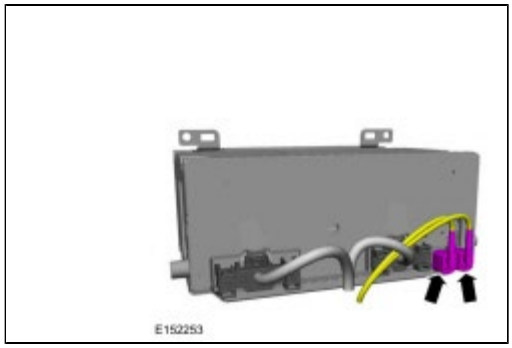

18. **NOTE:** *Steps 18 thru 23 apply for access to the upper antenna cable only.*

    Remove the headliner.
    Refer to: Headliner - Vehicles With: 4-Door (501-05 Interior Trim and Ornamentation, Removal and Installation).
    Refer to: Headliner - Vehicles With: 5-Door (501-05 Interior Trim and Ornamentation, Removal and Installation).
    Refer to: Headliner - Vehicles With: 5-Door (501-05 Interior Trim and Ornamentation, Removal and Installation).

19. Remove lower B-pillar trim panel.

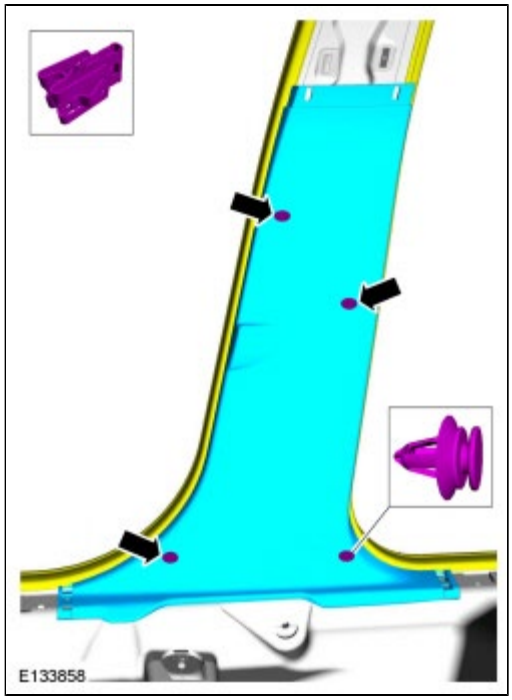

20. **NOTE:** *5-door only*

    Remove the following items:
    1. Remove the passenger front seat.
       Refer to: Front Seat (501-10 Seating, Removal and Installation).
    2. Remove the gearshift lever.
       Refer to: Gearshift Lever - Vehicles With: 5-Speed Manual Transmission - B5/IB5/5-Speed Manual Transmission - MTX75 (308-06 Manual Transmission External Controls, Removal and Installation).

Refer to: Gearshift Lever - Vehicles With: 6-Speed Manual Transmission - B6/6-Speed Manual Transmission - MMT6 (308-06 Manual Transmission External Controls, Removal and Installation).
Refer to: Selector Lever Assembly (307-05 Automatic Transmission External Controls, Removal and Installation).

3. Remove the parking brake control.
   Refer to: Parking Brake Control (206-05 Parking Brake and Actuation, Removal and Installation).

21.

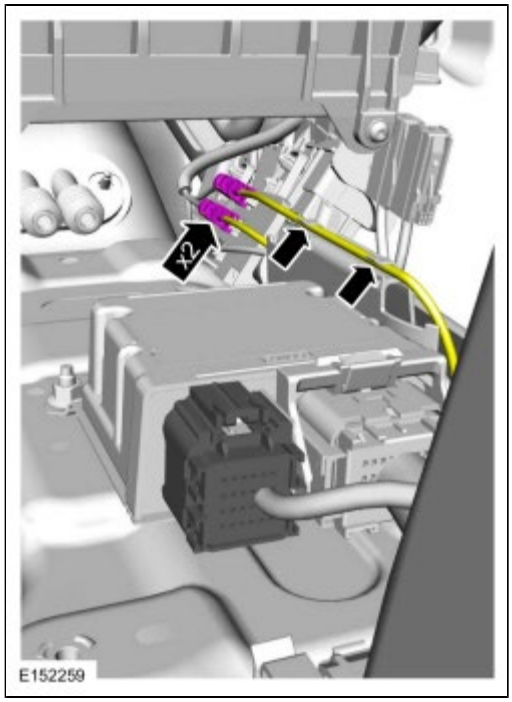

22. *Torque* : 10 Nm

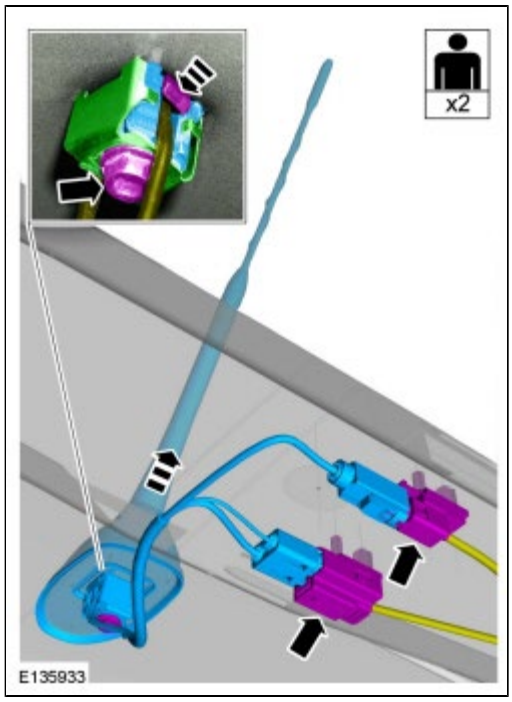

23.

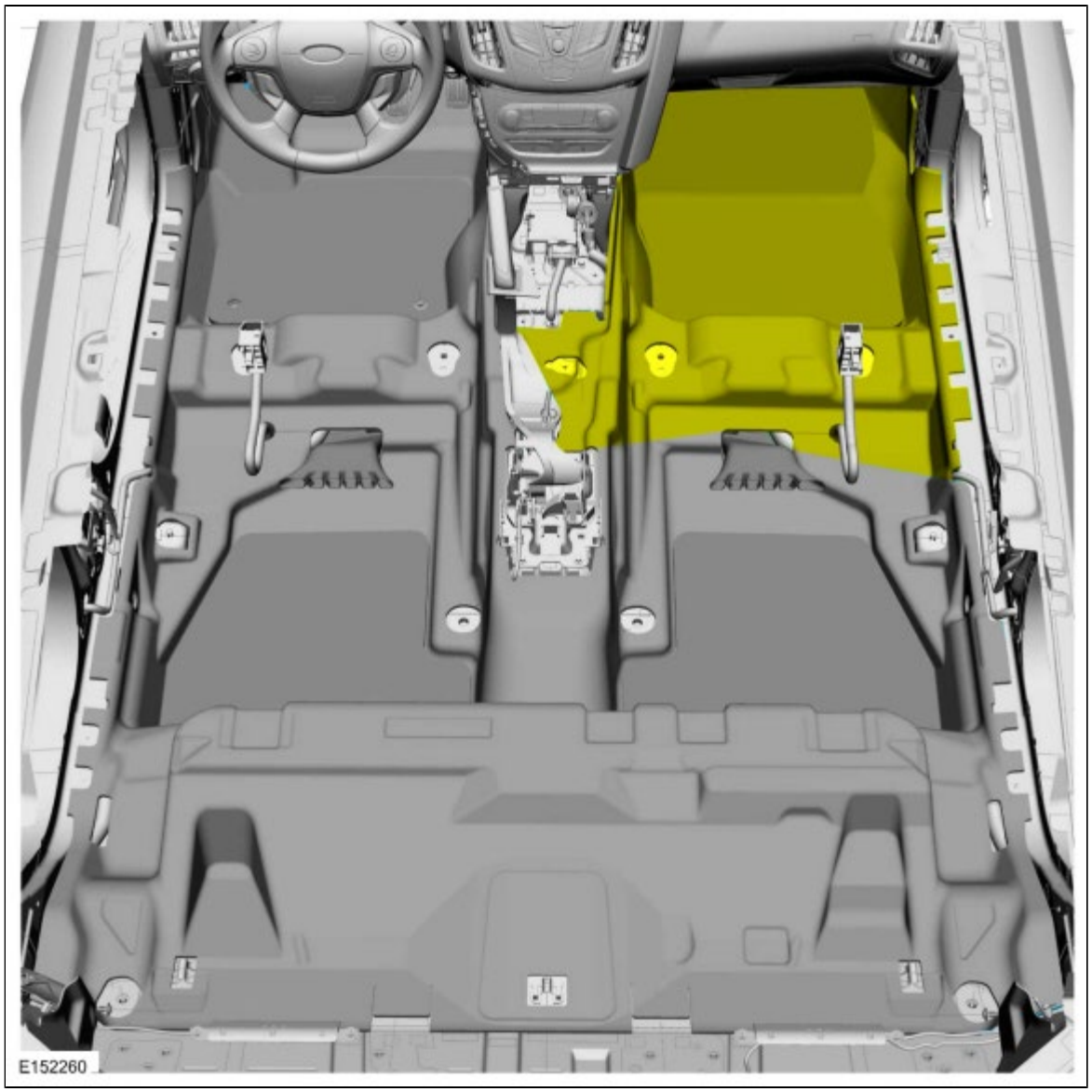

Installation

NOTE: *The antenna cables are part of the vehicle wiring harness. Because the cables cannot be removed from the harness, this procedure applies to the replacement of the cables only.*

1. **NOTE:** *Upper antenna cable*

   Overlay the new upper antenna cable on the vehicle wiring harness, following the routing of the original cable. Cut the ends off of the exisiting cable(s).

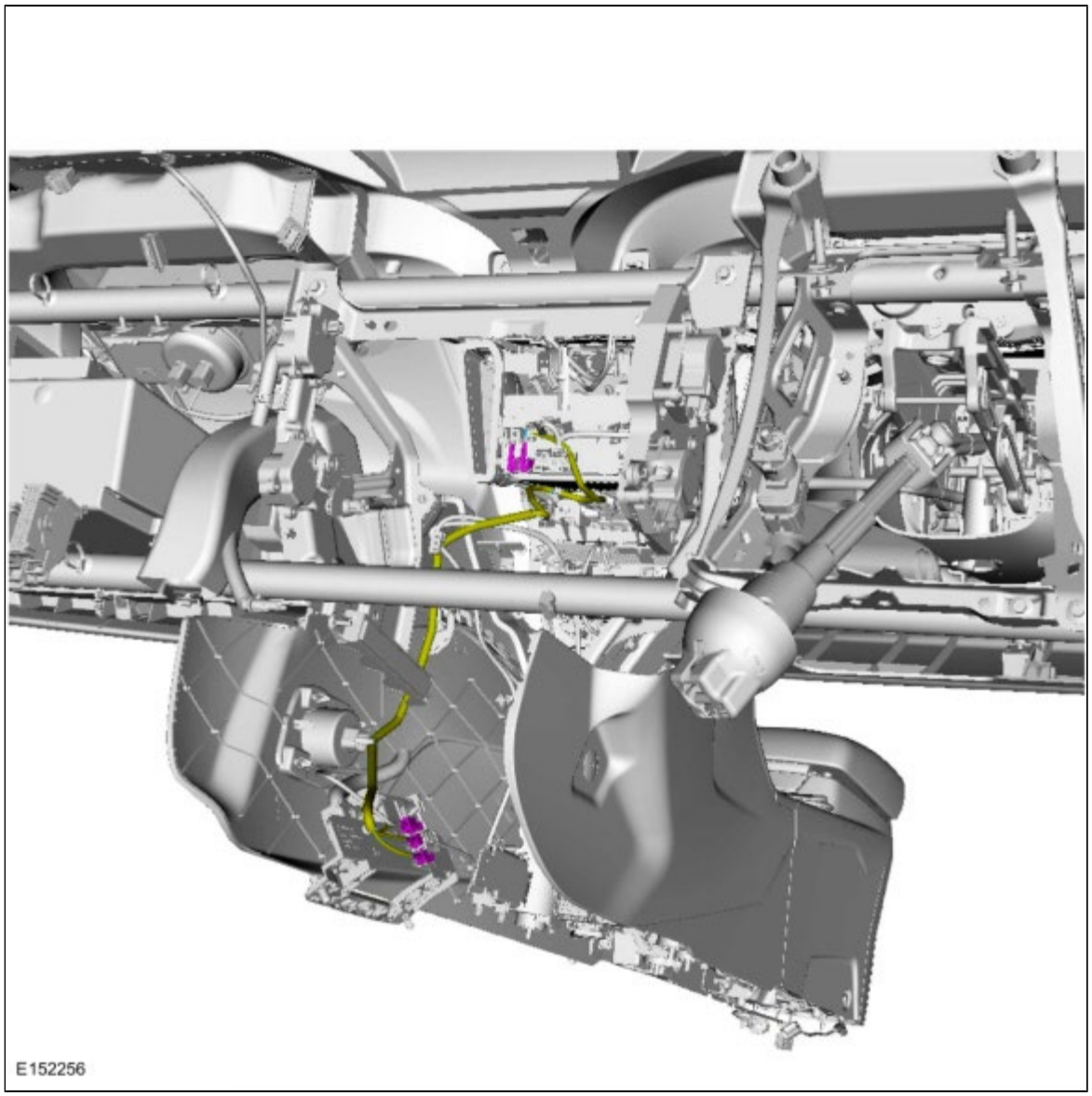

2. **NOTE:** *Lower antenna cable*

   Overlay the new lower antenna cable on the vehicle wiring harness, following the routing of the original cable. Cut the ends off of the exisiting cable(s).

3. To install, reverse the removal procedure.

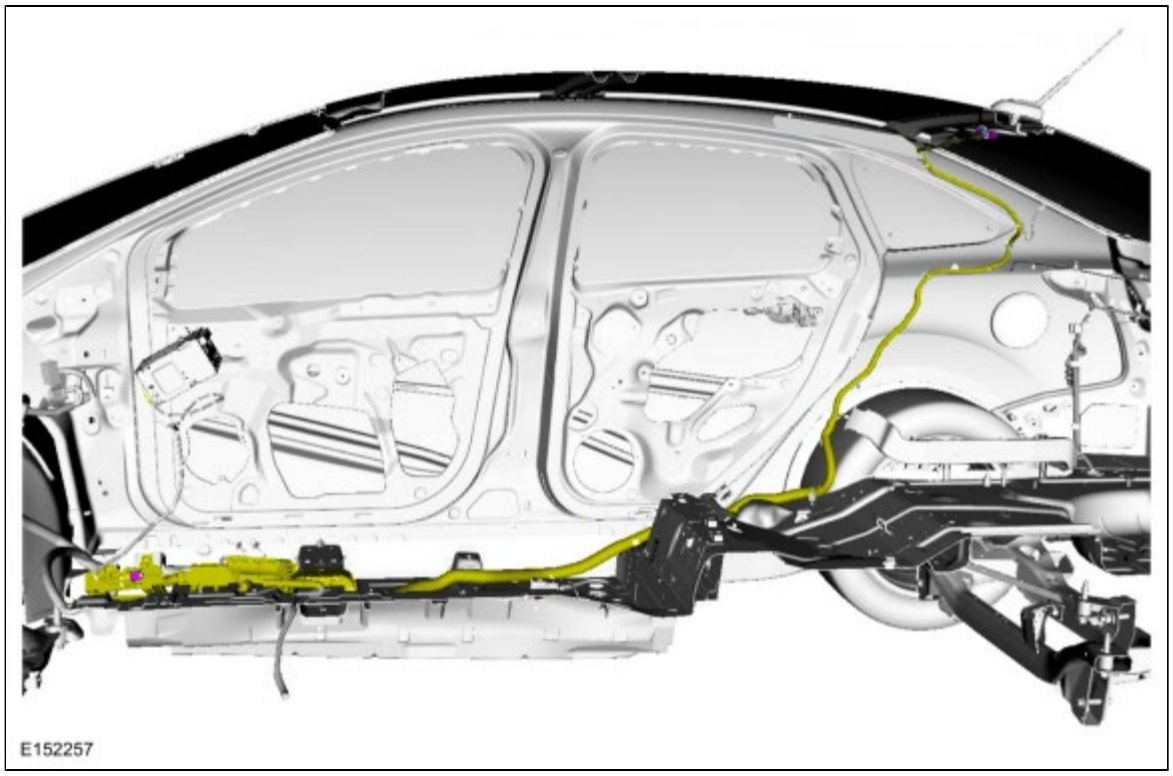

Copyright © Ford Motor Company

Front Controls Interface Module (FCIM)

Removal

NOTE: *Removal steps in this procedure may contain installation details.*

1. **WARNING: Before beginning any service procedure in this section, refer to Safety Warnings in section 100-00 General Information. Failure to follow this instruction may result in serious personal injury.**

   Refer to: Health and Safety Precautions (100-00 General Information, Description and Operation).

2. 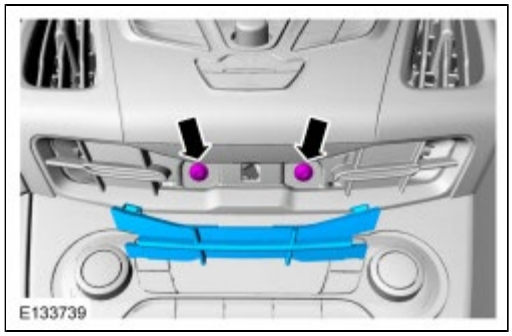

3.

4. **NOTE:** *This step is only necessary when installing a new component.*

   Torque : 1.3 Nm

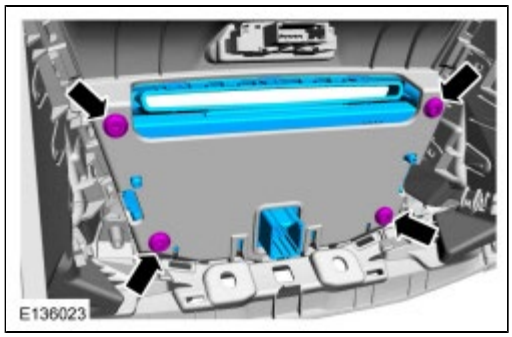

Installation

1. To install, reverse the removal procedure.

Copyright © Ford Motor Company

Front Display Interface Module (FDIM)

Removal

NOTE: *Removal steps in this procedure may contain installation details.*

1. **WARNING: Before beginning any service procedure in this section, refer to Safety Warnings in section 100-00 General Information. Failure to follow this instruction may result in serious personal injury.**

   Refer to: Health and Safety Precautions (100-00 General Information, Description and Operation).

2. 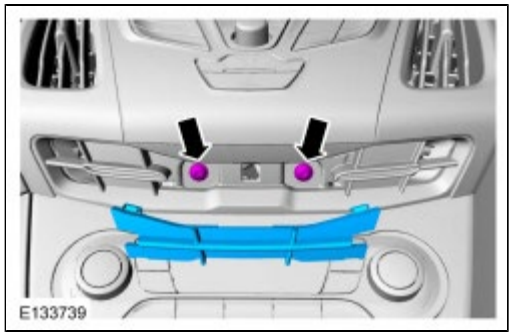

3.

4. *Torque* : 1.3 Nm

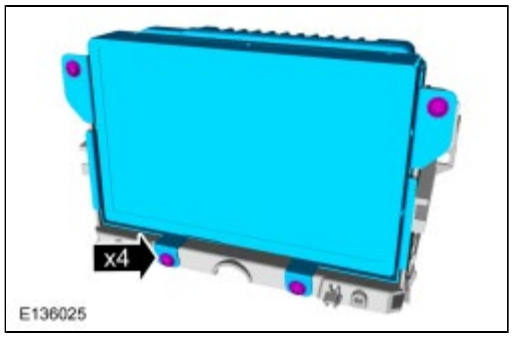

Installation

1. To install, reverse the removal procedure.

Copyright © Ford Motor Company

Front Door Speaker

Removal

NOTE: *Removal steps in this procedure may contain installation details.*

1. **WARNING: Before beginning any service procedure in this section, refer to Safety Warnings in section 100-00 General Information. Failure to follow this instruction may result in serious personal injury.**

   Refer to: Health and Safety Precautions (100-00 General Information, Description and Operation).

2. Remove the front door trim panel.
   Refer to: Front Door Trim Panel (501-05 Interior Trim and Ornamentation, Removal and Installation).
   Torque : 2 Nm

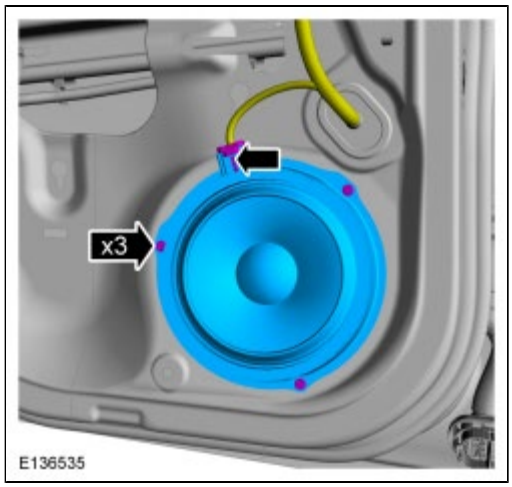

Installation

1. To install, reverse the removal procedure.

Copyright © Ford Motor Company

Front Door Tweeter Speaker

Removal

NOTE: *Removal steps in this procedure may contain installation details.*

1. **WARNING: Before beginning any service procedure in this section, refer to Safety Warnings in section 100-00 General Information. Failure to follow this instruction may result in serious personal injury.**

   Refer to: Health and Safety Precautions (100-00 General Information, Description and Operation).

2.

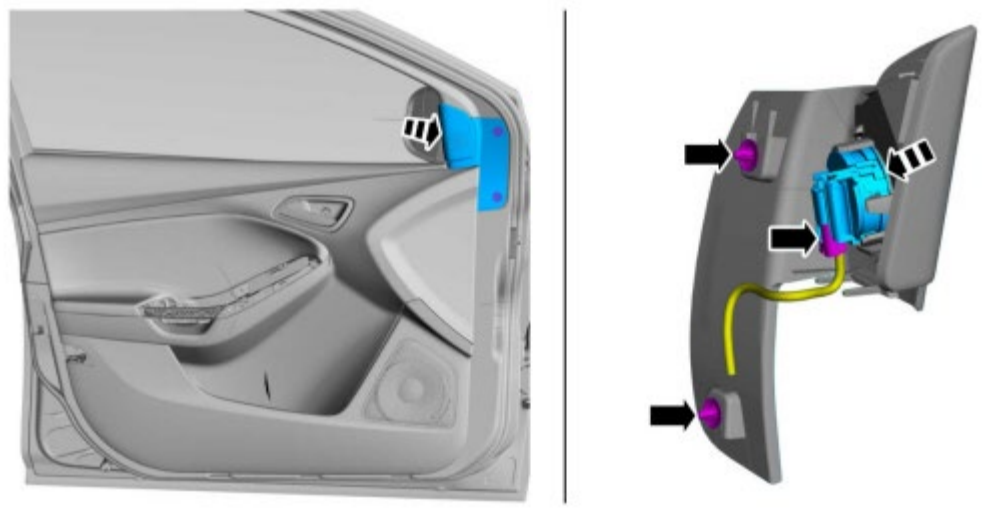

Installation

1. To install, reverse the removal procedure.

Copyright © Ford Motor Company

Global Positioning System Module (GPSM)

Removal

NOTE: *Removal steps in this procedure may contain installation details.*

1. **WARNING: Before beginning any service procedure in this section, refer to Safety Warnings in section 100-00 General Information. Failure to follow this instruction may result in serious personal injury.**

   Refer to: Health and Safety Precautions (100-00 General Information, Description and Operation).

2.

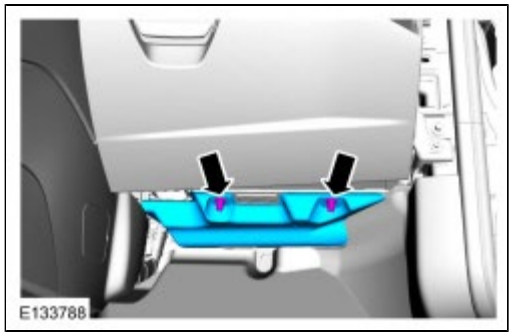

3.

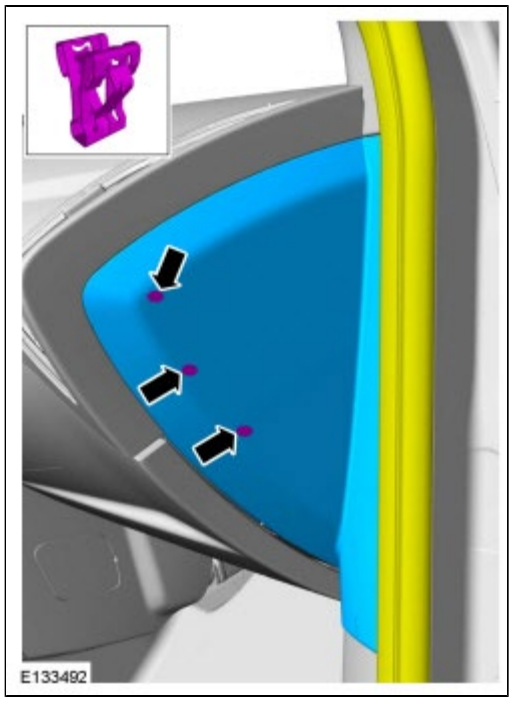

4.

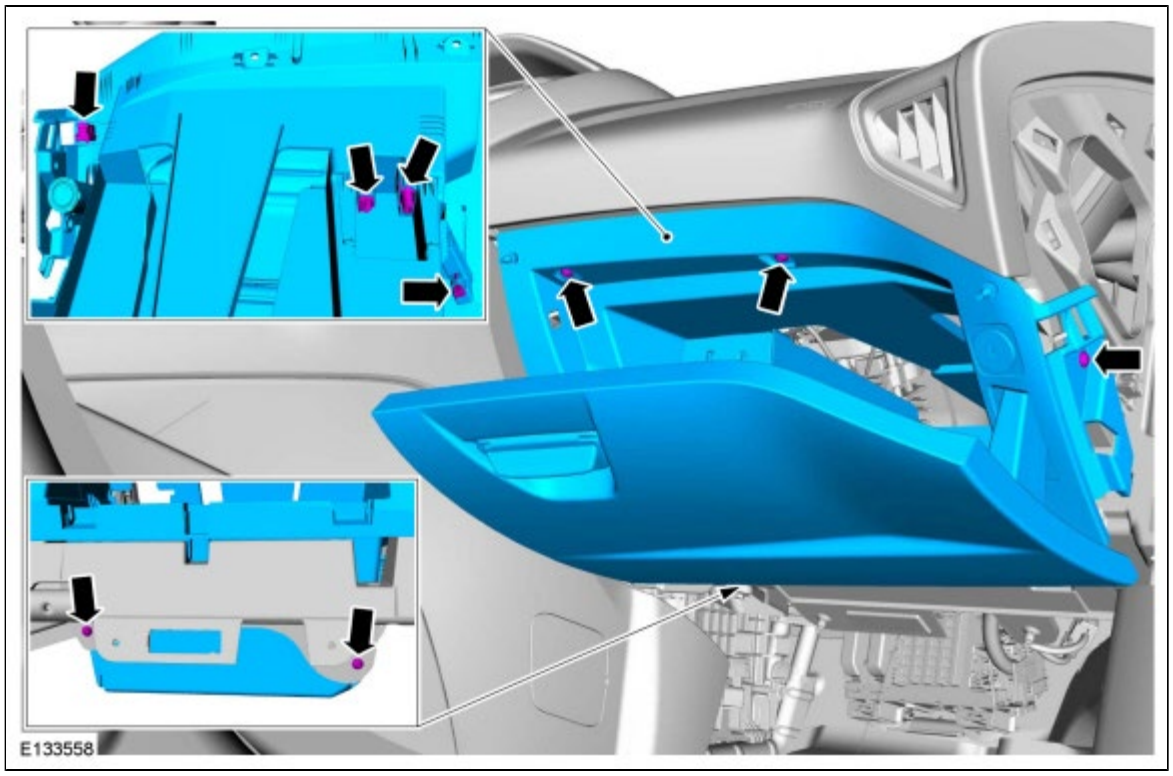

5.

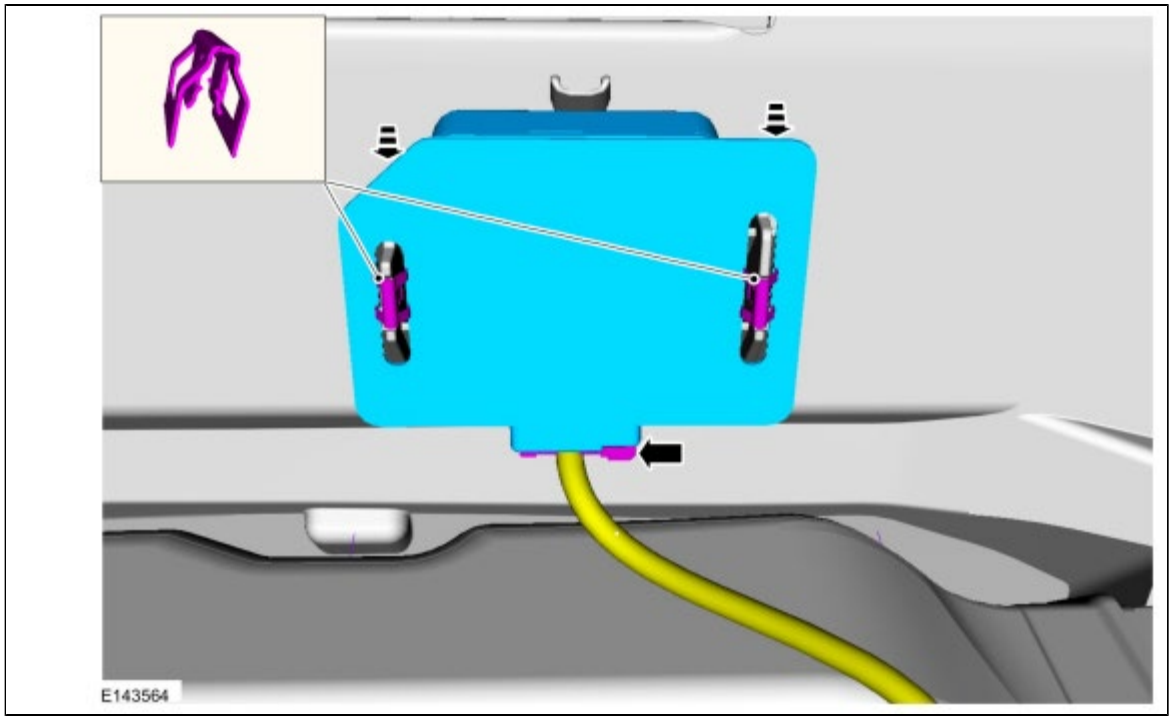

Installation

1. To install, reverse the removal procedure.

Copyright © Ford Motor Company

Instrument Panel Center Speaker

Removal

NOTE: *Removal steps in this procedure may contain installation details.*

1. **WARNING: Before beginning any service procedure in this section, refer to Safety Warnings in section 100-00 General Information. Failure to follow this instruction may result in serious personal injury.**

   Refer to: Health and Safety Precautions (100-00 General Information, Description and Operation).

2.

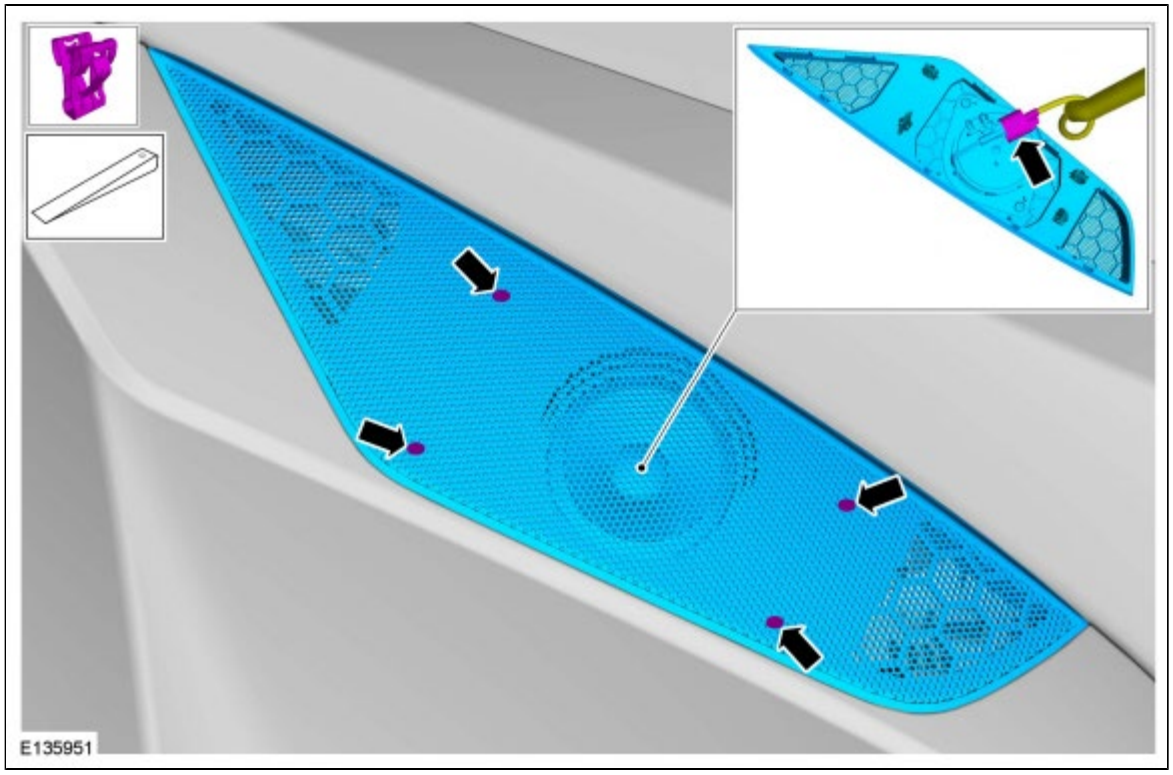

3.

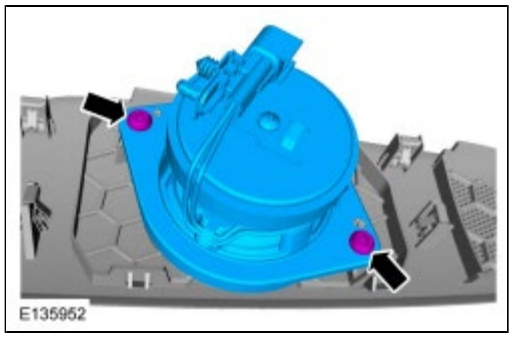

Installation

1. To install, reverse the removal procedure.

Copyright © Ford Motor Company

Media Hub

Removal

NOTE: *Removal steps in this procedure may contain installation details.*

1. **WARNING: Before beginning any service procedure in this section, refer to Safety Warnings in section 100-00 General Information. Failure to follow this instruction may result in serious personal injury.**

   Refer to: Health and Safety Precautions (100-00 General Information, Description and Operation).

2. 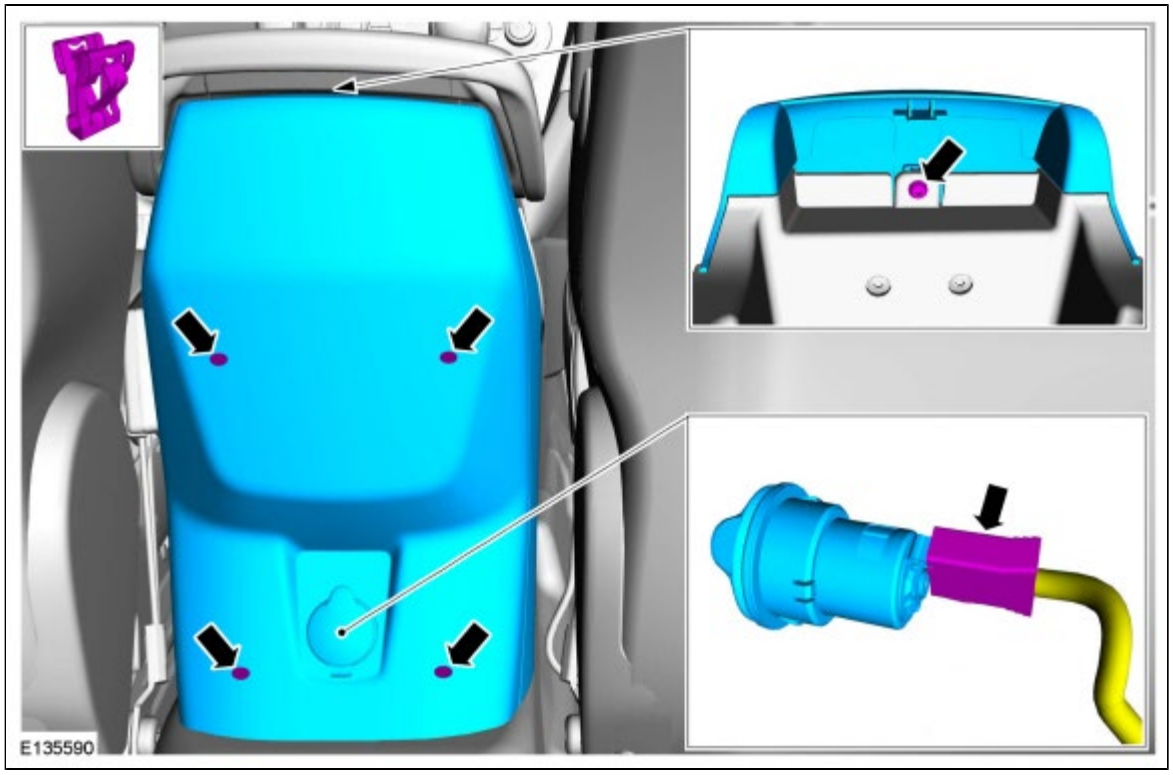

3.

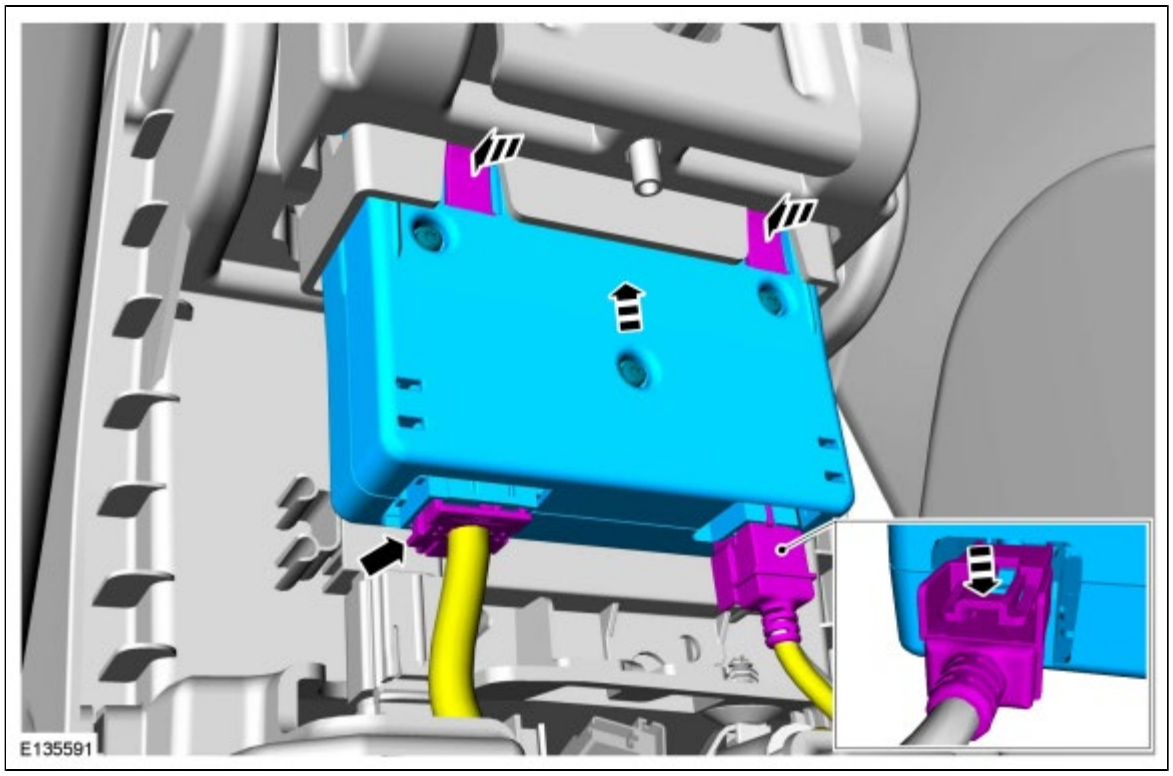

Installation

1. To install, reverse the removal procedure.

Copyright © Ford Motor Company

Rear Door Speaker

Removal

NOTE: *Removal steps in this procedure may contain installation details.*

1. **WARNING: Before beginning any service procedure in this section, refer to Safety Warnings in section 100-00 General Information. Failure to follow this instruction may result in serious personal injury.**

   Refer to: Health and Safety Precautions (100-00 General Information, Description and Operation).

2. Remove the rear door trim panel.
   Refer to: Rear Door Trim Panel (501-05 Interior Trim and Ornamentation, Removal and Installation).
   Torque : 2 Nm

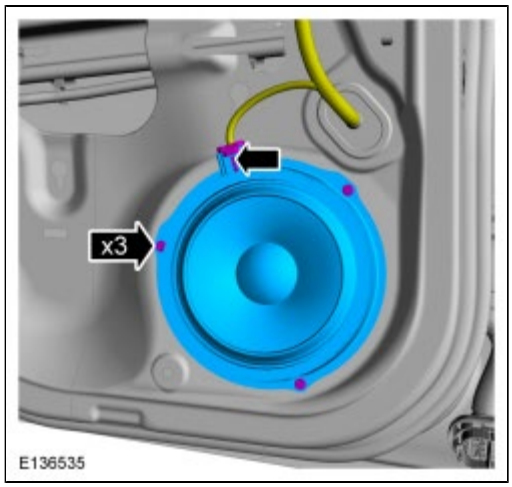

Installation

1. To install, reverse the removal procedure.

Copyright © Ford Motor Company

Rear Door Tweeter Speaker

Removal

NOTE: *Removal steps in this procedure may contain installation details.*

1. **WARNING: Before beginning any service procedure in this section, refer to Safety Warnings in section 100-00 General Information. Failure to follow this instruction may result in serious personal injury.**

   Refer to: Health and Safety Precautions (100-00 General Information, Description and Operation).

2. Remove the rear door trim panel.
   Refer to: Rear Door Trim Panel (501-05 Interior Trim and Ornamentation, Removal and Installation).

3.

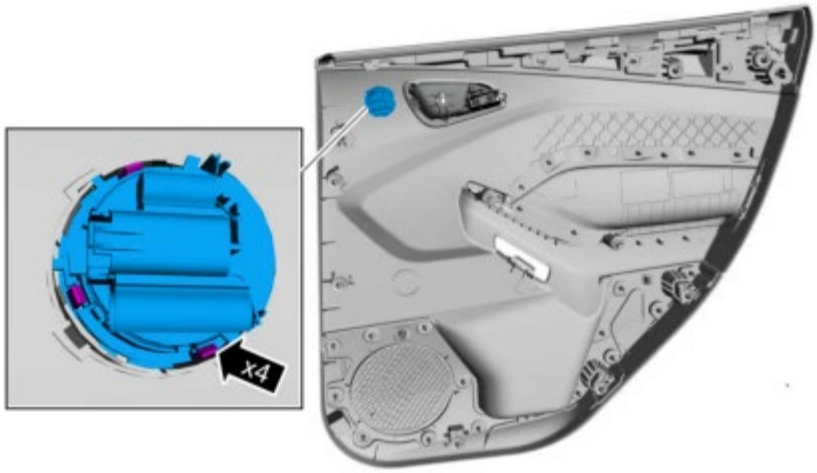

E145497

Installation

1. To install, reverse the removal procedure.

Copyright © Ford Motor Company

Subwoofer Speaker

Removal

NOTE: *Removal steps in this procedure may contain installation details.*

1. **WARNING: Before beginning any service procedure in this section, refer to Safety Warnings in section 100-00 General Information. Failure to follow this instruction may result in serious personal injury.**

   Refer to: Health and Safety Precautions (100-00 General Information, Description and Operation).

2.

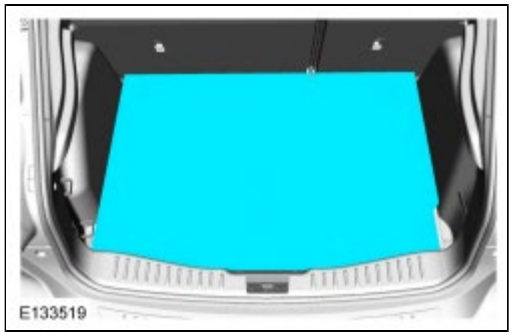

3.

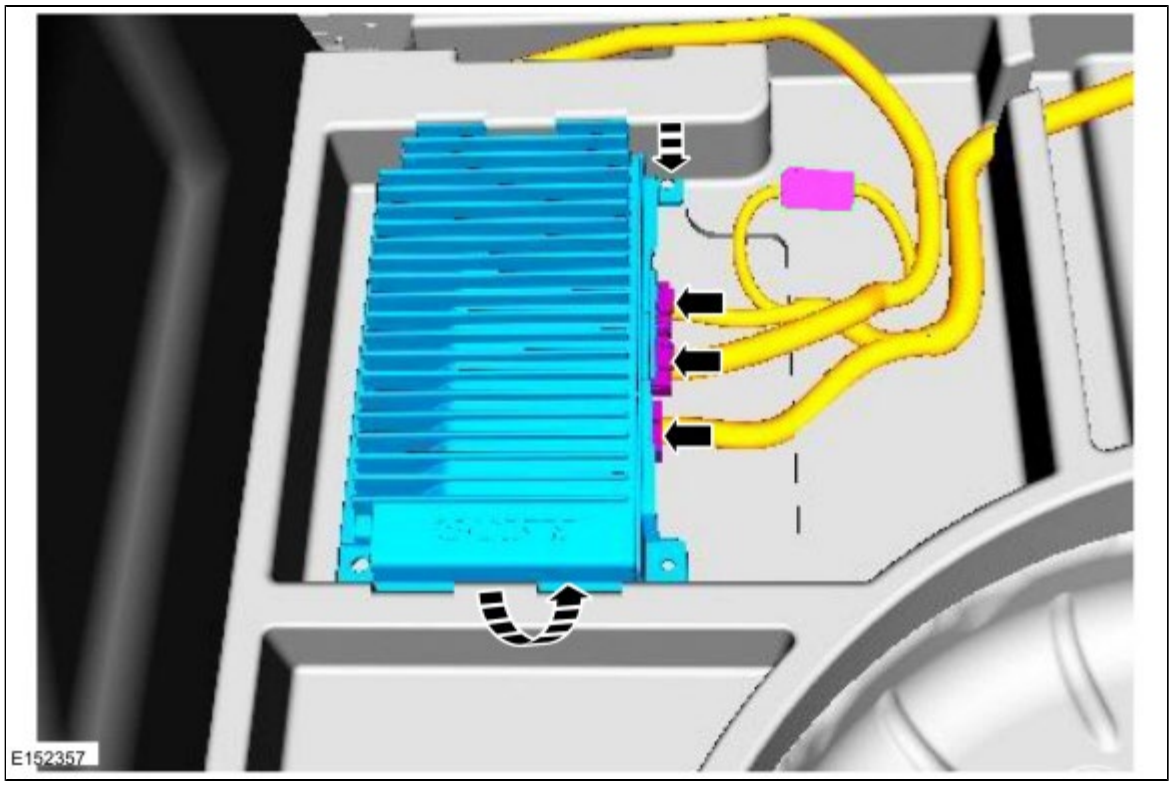

4.

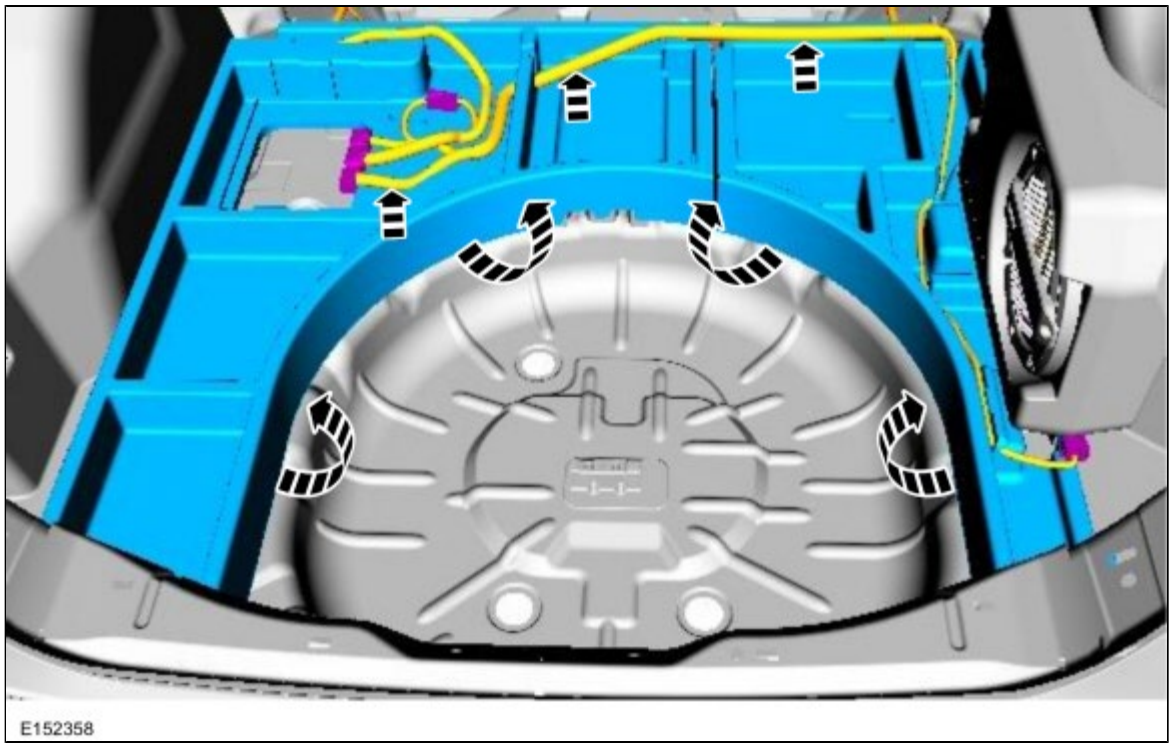

5. *Torque* : 5 Nm

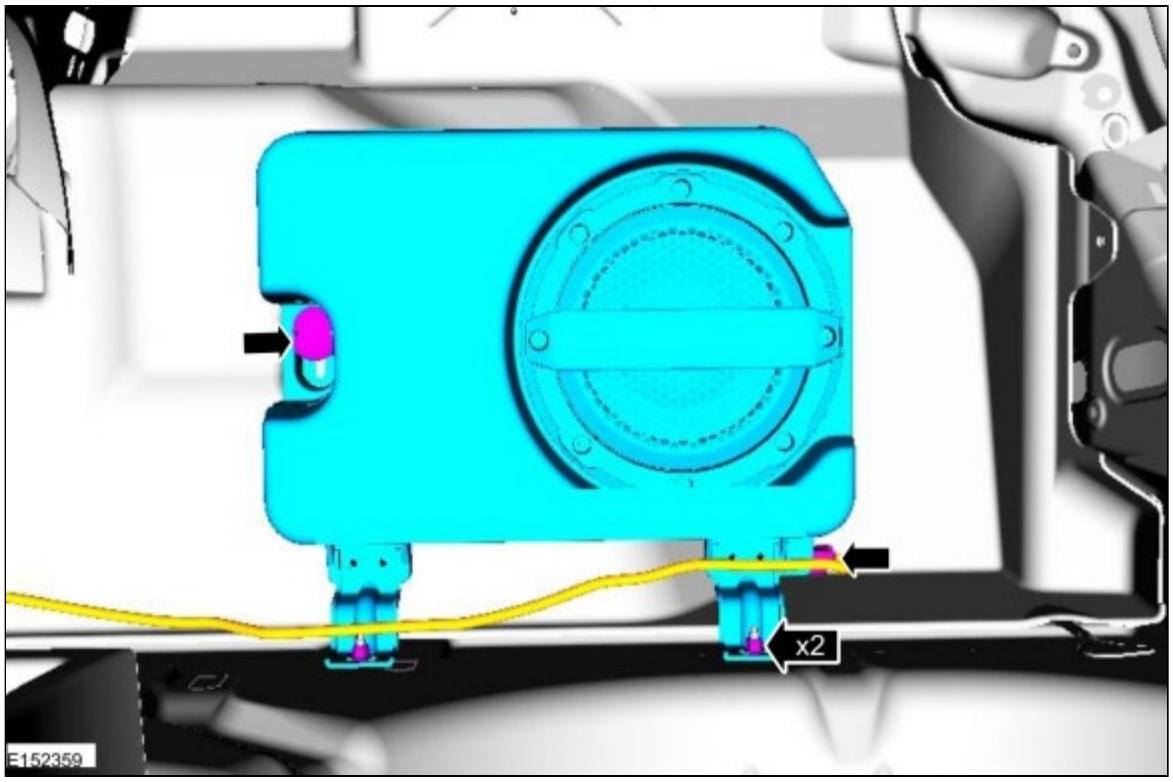

Installation

1. To install, reverse the removal procedure.

Copyright © Ford Motor Company

Specifications

Torque Specifications

Item	Nm	lb-ft	lb-in
Crankcase vent oil separator bolts	10	-	89

Copyright © Ford Motor Company

Engine Emission Control - Component Location

2.0L Gasoline Direct Injection (GDI)

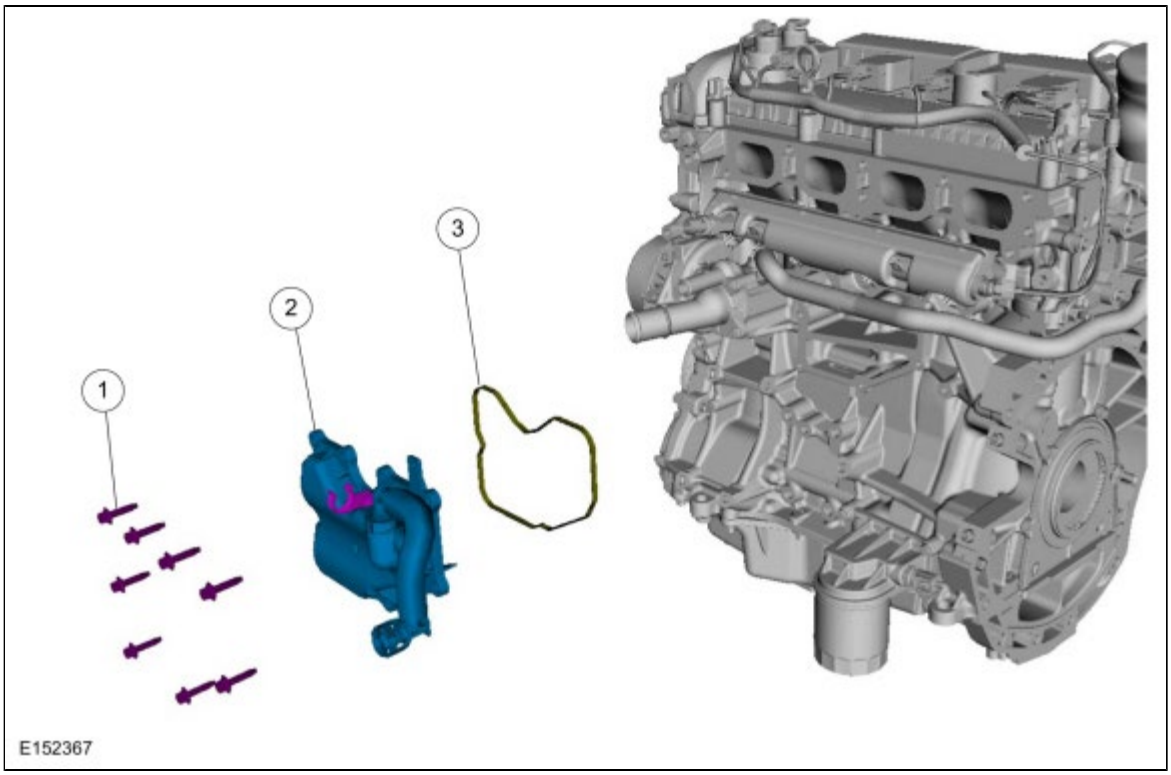

Item	Description
1	Crankcase vent oil separator bolt (8 required)
2	Crankcase vent oil separator
3	Crankcase vent oil separator gasket

Copyright © Ford Motor Company

Engine Emission Control

General Equipment

Ford diagnostic equipment

1. For PCM Diagnostic Trouble Codes (DTCs),
   REFER to: Electronic Engine Controls (303-14A Electronic Engine Controls - 2.0L Duratec-HE (125kW/170PS) - MI4, Diagnosis and Testing).
   MIL Code List. For driveability symptoms without Diagnostic Trouble Codes (DTCs), Refer to Powertrain Control/Emissions Diagnosis (PC/ED) manual. section 3 Symptom Charts.

Copyright © Ford Motor Company

Crankcase Vent Oil Separator

Removal

WARNING: Before beginning any service procedure in this section, refer to Safety Warnings in section 100-00 General Information. Failure to follow this instruction may result in serious personal injury.

1. Refer to: Health and Safety Precautions (100-00 General Information, Description and Operation).
   Refer to: Engine Emission Control - Component Location (303-08A Engine Emission Control - 2.0L Duratec-HE (125kW/170PS) - MI4, Description and Operation).
2. Refer to: Intake Manifold (303-01A Engine - 2.0L Duratec-HE (125kW/170PS) - MI4, Removal and Installation).
3. Release the bypass hose from the retainer clip and position aside.
4. Remove the 8 bolts and crankcase vent oil separator.
5. Remove and discard the gasket.

Installation

1. Using a new gasket, install the crankcase vent oil separator and 8 bolts.
   Torque : 10 Nm
2. Attach the bypass hose to the retainer clip.
3. Refer to: Intake Manifold (303-01A Engine - 2.0L Duratec-HE (125kW/170PS) - MI4, Removal and Installation).

Copyright © Ford Motor Company

Specifications

Torque Specifications

Item	Nm	lb-ft	lb-in
Starter motor solenoid battery cable nut	12	-	106
Starter motor solenoid wire nut	6	-	53
Starter motor stud bolts	35	26	-
Support bracket nuts	11	-	97

General Specifications

Item	Specification
Normal engine cranking speed	200-250 RPM
Starting circuit maximum voltage drop (Engine at normal operating temperature)	0.5 volt
Starter motor maximum load current draw	800 amps
Starter motor no-load current draw	60-80 amps
Starter motor normal load current draw	130-190 amps

Copyright © Ford Motor Company

Starting System

DTC Charts

Diagnostics in this manual assume a certain skill level and knowledge of Ford-specific diagnostic practices.
REFER to: Diagnostic Methods (100-00 General Information, Description and Operation).
for information about these practices.

PCM DTC Chart

DTC	Description	Action
PCM DTCs	PCM Diagnostic Trouble Codes (DTCs) not listed in this chart	REFER to: Electronic Engine Controls (303-14A Electronic Engine Controls - 2.0L Duratec-HE (125kW/170PS) - MI4, Diagnosis and Testing).
P0615	Starter Relay Circuit	GO to Pinpoint Test D
P0850	Park/Neutral Switch Input Circuit	Without push button start, GO to Pinpoint Test A With push button start, GO to Pinpoint Test B
P0851	Park/Neutral Switch Input Circuit Low	Without push button start, GO to Pinpoint Test A With push button start, GO to Pinpoint Test B
P2531	Ignition Switch Run Position Circuit Low	GO to Pinpoint Test E
P2532	Ignition Switch Run Position Circuit High	GO to Pinpoint Test E
P2534	Ignition Switch Run/Start Position Circuit Low	GO to Pinpoint Test F
P2535	Ignition Switch Run/Start Position Circuit High	GO to Pinpoint Test F

BCM DTC Chart

DTC	Description	Action
BCM DTCs	BCM Diagnostic Trouble Codes (DTCs) not listed in this chart	REFER to: Body Control Module (BCM) (419-10 Multifunction Electronic Modules, Diagnosis and Testing).
P0833:23	Clutch Pedal Switch B Circuit: Signal Stuck Low	Without push button start, GO to Pinpoint Test A With push button start, GO to Pinpoint Test B
B10E5:11	PCM Wake-up Signal: Circuit Short to Ground	GO to Pinpoint Test G
B10E5:15	PCM Wake-up Signal: Circuit Short to Battery or Open	GO to Pinpoint Test G

RFA DTC Chart

DTC	Description	Action
RFA DTCs	All RFA Diagnostic Trouble Codes (DTCs).	REFER to: Remote Function Actuator (RFA) Module (419-10 Multifunction Electronic Modules, Diagnosis and Testing).

Symptom Chart(s)

Symptom Chart: Starting System

Diagnostics in this manual assume a certain skill level and knowledge of Ford-specific diagnostic practices.
REFER to: Diagnostic Methods (100-00 General Information, Description and Operation).
for information about these practices.

Symptom Chart

Condition	Possible Sources	Actions
The engine does not crank (without push button start)	Refer to the Diagnostic Routine.	GO to Pinpoint Test A
The engine does not crank (with push button start)	Refer to the Diagnostic Routine.	GO to Pinpoint Test B
The engine cranks slowly	Refer to the Diagnostic Routine.	CARRY OUT the starter system component test. Refer to Starter Motor - Positive Circuit Test in this section.
The engine cranks but will not start	Ignition fault	Refer to Powertrain Control/Emissions Diagnosis (PC/ED) manual.
Unusual starter noise	Refer to the Diagnostic Routine.	GO to Pinpoint Test C
The starter spins but the engine does not crank	Starter motor	INSPECT the starter motor mounting and engagement. REPAIR as necessary.
	Damaged flexplate	INSPECT the flexplate for damaged, missing or worn teeth. REPAIR as necessary.
The starter does not disengage from the flexplate	• Starter relay • Wiring, terminals or connectors	REMOVE the starter relay. If the engine stops cranking, INSTALL a new relay. If the engine continues to crank, REPAIR circuit CDC35 (BU/WH) for a short to voltage.
The remote start is inoperative	Refer to the Diagnostic	GO to Pinpoint Test H

	Routine.	

Pinpoint Test(s)

Engine Does Not Crank (Without Push Button Start)

Refer to Wiring Diagrams Cell 20 for schematic and connector information.

Normal Operation and Fault Conditions

REFER to: Starting System - Vehicles With: Push Button Start - System Operation and Component Description (303-06A Starting System - 2.0L Duratec-HE (125kW/170PS) - MI4, Description and Operation).

DTC Fault Trigger Conditions

DTC	Description	Fault Trigger Conditions
P0850	Park/Neutral Switch Input Circuit	This DTC sets when the PCM detects a mismatch between the hardwired park/neutral circuit and the message broadcast over the High Speed Controller Area Network (HS-CAN).
P0851	Park/Neutral Switch Input Circuit Low	This DTC sets when the PCM detects a short to ground on the park/neutral circuit.
P0833:23	Clutch Pedal Switch B Circuit: Signal Stuck Low	This DTC sets when the BCM detects a short to ground on the clutch bottom of travel circuit during an on-demand self test.

Possible Sources

- Battery
- Battery cables
- Starter motor
- BJB starter relay
- CPP switch (manual transmission only).

Visual Inspection and Diagnostic Pre-checks

- Inspect the high current BJB connections.
- Verify the BJB fuse 13 (30A).
- Verify the BCM fuse 78 (5A).
- Inspect the Integrated Keyhead Transmitter (IKT).

PINPOINT TEST A : ENGINE DOES NOT CRANK (WITHOUT PUSH BUTTON START)

A1 CHECK THE BATTERY
• Check the battery condition and state of charge. REFER to: Battery (414-01 Battery, Mounting and Cables, Diagnosis and Testing). . **Is the battery OK?** **Yes** GO to A2

No	CHARGE or INSTALL a new battery as necessary. REFER to: Battery (414-01 Battery, Mounting and Cables, Removal and Installation).

A2 RETRIEVE DTCS

- Ignition ON.
- Using a diagnostic scan tool, perform self-tests for:
  - BCM .
  - PCM
  - TCM

Are any Diagnostic Trouble Codes (DTCs) present?

Yes	For all TCM Diagnostic Trouble Codes (DTCs), REFER to: Automatic Transmission (307-01 Automatic Transmission - Vehicles With: 6-Speed PowerShift Transmission - DPS6/6DCT250, Diagnosis and Testing). . For PCM DTC P0850, GO to A6 For DTC P0851, GO to A10 For all other PCM Diagnostic Trouble Codes (DTCs), REFER to: Electronic Engine Controls (303-14A Electronic Engine Controls - 2.0L Duratec-HE (125kW/170PS) - MI4, Diagnosis and Testing). . For BCM DTC P0833:23, GO to A26
No	GO to A3

A3 CHECK THE PCM (POWERTRAIN CONTROL MODULE) ENGINE CRANKING (ENG_CRANK) PID

- Using a diagnostic scan tool, view the PCM Parameter Identifications (PIDs).
- For automatic transmission, make sure the transmission is in PARK or NEUTRAL.
- For manual transmission, fully apply the clutch pedal.
- Using a diagnostic scan tool, view the PCM PID ENG_CRANK, while holding the key in the START position.

Does the PCM PID ENG_CRANK change from Inactive to Active?

Yes	For automatic transmission, GO to A6 For manual transmission, GO to A12
No	GO to A4

A4 CHECK THE CRANK DETECT CIRCUIT FOR VOLTAGE AT THE PCM (POWERTRAIN CONTROL MODULE)

- Ignition OFF.
- Disconnect PCM C175B .
- While holding the key in the START position, measure:

Positive Lead	Measurement / Action	Negative Lead
C175B-17	V	—

Is the voltage greater than 11 volts?

Yes	GO to A28
No	GO to A5

A5 CHECK THE IGNITION SWITCH

- Ignition OFF.
- Carry out the Ignition Switch Component Test.
  Refer to Wiring Diagrams Cell 149 for schematic and connector information.

Did the ignition switch pass the component test?

Yes	REPAIR circuit CDC12 (BU/YE) for an open.
No	INSTALL a new ignition switch. REFER to: Ignition Switch (211-05 Steering Column Switches, Removal and Installation).

A6 CHECK THE TCM (TRANSMISSION CONTROL MODULE) TR_CRANK PID

- Using a diagnostic scan tool, while viewing the TCM PID TR_CRANK, place the gear selector in PARK and then NEUTRAL.

Does the TCM PID TR_CRANK read YES in both positions?

Yes	GO to A7
No	Diagnose the TR sensor, REFER to: Automatic Transmission (307-01 Automatic Transmission - Vehicles With: 6-Speed PowerShift Transmission - DPS6/6DCT250, Diagnosis and Testing).

A7 CHECK THE PCM (POWERTRAIN CONTROL MODULE) IN_GEAR PID

- Using a diagnostic scan tool, view the PCM Parameter Identifications (PIDs).
- While observing the PCM PID IN_GEAR, place the gear selector in PARK and then NEUTRAL.

Does the PID read No in both positions?

Yes	GO to A13
No	GO to A8

A8 CHECK THE PARK/NEUTRAL CIRCUIT FOR A SHORT TO VOLTAGE

- Ignition OFF.
- Disconnect PCM C175B .
- Disconnect TCM C1750A .
- Ignition ON.
- Measure:

Positive Lead	Measurement / Action	Negative Lead
C175B-13		—

Is any voltage present?

Yes	REPAIR the circuit.
No	GO to A9

A9 CHECK THE PARK/NEUTRAL CIRCUIT FOR AN OPEN

- Ignition OFF.
- Measure:

Positive Lead	Measurement / Action	Negative Lead
C175B-13	Ω	C1750A-39

Is the resistance less than 3 ohms?

Yes	GO to A10
No	REPAIR the circuit.

A10 CHECK FOR DTCS WITH TCM (TRANSMISSION CONTROL MODULE) DISCONNECTED

- Ignition OFF.
- Disconnect TCM C1750A .
- Ignition ON.
- Using a diagnostic scan tool, perform PCM self-test.

Was DTC P0851 retrieved on-demand during self-test?

Yes	GO to A11
No	GO to A29

A11 CHECK THE PARK/NEUTRAL CIRCUIT FOR A SHORT TO GROUND

- Ignition OFF.
- Disconnect PCM C175B .
- Measure:

Positive Lead	Measurement / Action	Negative Lead
C175B-13	Ω	—

Is the resistance greater than 10,000 ohms?

Yes	GO to A28
No	REPAIR the circuit.

A12 CHECK THE PCM (POWERTRAIN CONTROL MODULE) CLUTCH PEDAL AT OR NEAR BOTTOM OF TRAVEL (CPP_BOT) PID

- Using a diagnostic scan tool, while viewing the PCM PID CPP_BOT, fully apply the clutch pedal and release.

Does the PID change from NO to YES when the clutch pedal is fully applied?

Yes	GO to A11
No	GO to A23

A13 CHECK THE STARTER RELAY CONTROL OPERATION

NOTICE: The following step uses a test light to simulate normal circuit loads. Use only the test light recommended in the Special Tools table at the beginning of this section. To avoid connector terminal damage, use the Flex Probe Kit for the test light probe connection to the vehicle. Do not use the test light probe directly on any connector.

- Remove the BJB starter relay.
- Measure:

Positive Lead	Measurement / Action	Negative Lead
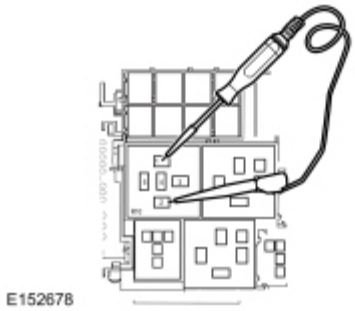 BJB starter relay pin 1		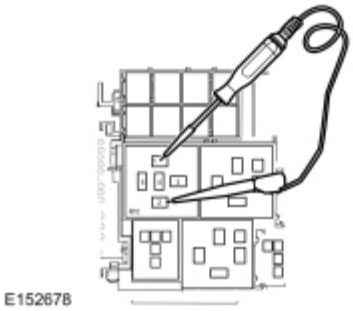 BJB starter relay pin 2

- For automatic transmission , make sure the transmission is in PARK or NEUTRAL.
- For manual transmission , fully apply the clutch pedal.
- While holding the key in the START position, observe the test light.

Does the test light illuminate when the key is in the START position?

Yes	GO to A14
No	GO to A21

A14 CHECK THE VOLTAGE TO THE STARTER RELAY

- Measure:

Positive Lead	Measurement / Action	Negative Lead

E149481 BJB starter relay pin 3		—

Is the voltage greater than 11 volts?

Yes	GO to A15
No	VERIFY BJB fuse 13 (30A) is OK. If OK, REPAIR the circuit for an open. If not OK, REFER to the Wiring Diagrams manual to identify the possible causes of the circuit short.

A15 CHECK THE STARTER MOTOR OPERATION AT THE STARTER RELAY

- Ignition OFF.
- With the transmission in PARK or NEUTRAL, momentarily connect a fused jumper wire:

Positive Lead	Measurement / Action	Negative Lead
E149481 BJB starter relay pin 3		E149481 BJB starter relay pin 5

-

Did the starter engage and the engine crank?

Yes	INSTALL a new starter relay.
No	GO to A16

A16 CHECK THE BATTERY GROUND CABLES

- Measure:

Positive Lead	Measurement / Action	Negative Lead

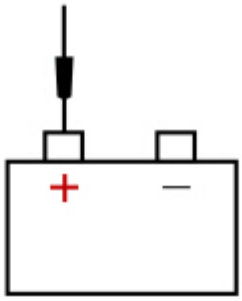 E148840		Ground G100
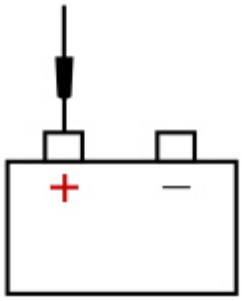 E148840		Ground G101
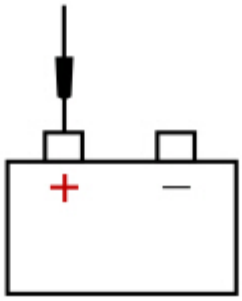 E148840		Ground G102

Are the voltages greater than 11 volts?

Yes	GO to A17
No	CLEAN or INSTALL new negative battery cables as necessary. REFER to: Battery Cables - 2.0L Duratec-HE (125kW/170PS) - MI4 (414-01 Battery, Mounting and Cables, Removal and Installation).

A17 CHECK THE STARTER MOTOR GROUND

- Measure:

Positive Lead	Measurement / Action	Negative Lead

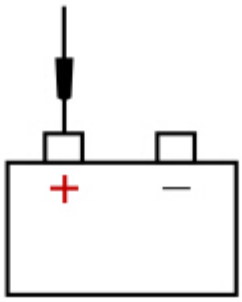		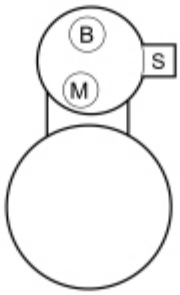 Starter motor case

Is the voltage greater than 11 volts?

Yes	GO to A18
No	CLEAN the starter motor mounting flange and MAKE SURE the starter motor is correctly mounted.

A18 CHECK THE VOLTAGE TO THE STARTER MOTOR

- Measure:

Positive Lead	Measurement / Action	Negative Lead
C197A-1		—

Is the voltage greater than 11 volts?

Yes	GO to A19
No	INSTALL a new positive battery cable. REFER to: Battery Cables - 2.0L Duratec-HE (125kW/170PS) - MI4 (414-01 Battery, Mounting and Cables, Removal and Installation).

A19 CHECK THE STARTER MOTOR FOR CORRECT OPERATION

- With the transmission in PARK or NEUTRAL, momentarily connect a fused jumper wire:

Did the starter engage and the engine crank?

Yes	GO to A20
No	INSTALL a new starter motor. REFER to: Starter Motor (303-06A Starting System - 2.0L Duratec-HE (125kW/170PS) - MI4, Removal and Installation).

A20 CHECK FOR START INPUT AT THE STARTER

- Connect BJB starter relay..
- Disconnect Starter solenoid C197B .

NOTE: *For manual transmission, fully apply the clutch pedal.*

While holding the key in the START position, measure:

Positive Lead	Measurement / Action	Negative Lead
C197B-1	✱ ▽ ▬	—

Is the voltage greater than 11 volts?

Yes	CLEAN the starter solenoid "S" terminal and starter solenoid connector. CHECK the wiring and the starter motor for a loose or intermittent connection.
No	REPAIR the circuit for an open.

A21 CHECK THE PCM (POWERTRAIN CONTROL MODULE) STARTER RELAY CIRCUITS FOR A SHORT TO GROUND

- Ignition OFF.
- Disconnect ACM C240A .
- Disconnect PCM C175B .
- Measure:

Positive Lead	Measurement / Action	Negative Lead
C175B-9	Ω	—
C175B-11	Ω	—

Are the resistances greater than 10,000 ohms?

Yes	GO to A22
No	REPAIR the affected circuit.

A22 CHECK THE PCM (POWERTRAIN CONTROL MODULE) STARTER RELAY CIRCUITS FOR AN OPEN

- Measure:

Positive Lead	Measurement / Action	Negative Lead
C175B-9	Ω	E149481

		BJB start relay pin 2
C175B-11	Ω	BJB start relay pin 1

Are the resistances less than 3 ohms?

Yes	GO to A28
No	REPAIR the affected circuit.

A23 CHECK THE CPP (CLUTCH PEDAL POSITION) SWITCH

- Ignition OFF.
- Disconnect PCM C175B .
- While fully applying the clutch pedal, measure:

Positive Lead	Measurement / Action	Negative Lead
C175B-13	Ω	—

Is the resistance less than 3 ohms?

Yes	GO to A28
No	GO to A24

A24 CHECK THE CPP (CLUTCH PEDAL POSITION) GROUND CIRCUIT FOR AN OPEN

- Disconnect CPP switch C257 .
- Measure:

Positive Lead	Measurement / Action	Negative Lead
C257-2	Ω	—

Is the resistance less than 3 ohms?

Yes	GO to A25

No	REPAIR the circuit.

A25 CHECK THE CPP (CLUTCH PEDAL POSITION) SWITCH CIRCUIT FOR AN OPEN

- Measure:

Positive Lead	Measurement / Action	Negative Lead
C175B-13	Ω	C257-1

Is the resistance less than 3 ohms?

Yes	INSTALL a new CPP switch. REFER to: Clutch Pedal Position (CPP) Switch (303-14A Electronic Engine Controls - 2.0L Duratec-HE (125kW/170PS) - MI4, Removal and Installation).
No	REPAIR the circuit.

A26 CHECK FOR DTC WITH CPP (CLUTCH PEDAL POSITION) SWITCH DISCONNECTED

- Ignition OFF.
- Disconnect CPP switch C257 .
- Ignition ON.
- Using a diagnostic scan tool, perform BCM self-test.

Was DTC P0833:23 retrieved during on-demand self-test with the CPP switch disconnected?

Yes	GO to A27
No	INSTALL a new CPP switch. REFER to: Clutch Pedal Position (CPP) Switch (303-14A Electronic Engine Controls - 2.0L Duratec-HE (125kW/170PS) - MI4, Removal and Installation).

A27 CHECK THE CLUTCH BOTTOM TRAVEL CIRCUIT FOR A SHORT TO GROUND

- Ignition OFF.
- Disconnect BCM C2280A .
- Disconnect PCM C175B .
- Measure:

Positive Lead	Measurement / Action	Negative Lead
C175B-13	Ω	—

Is the resistance greater than 10,000 ohms?

Yes	GO to A30
No	REPAIR the circuit.

A28 CHECK FOR CORRECT PCM (POWERTRAIN CONTROL MODULE) OPERATION

- Ignition OFF.
- Disconnect and inspect all PCM connectors.
- Repair:
  - corrosion (install new connectors or terminals - clean module pins)
  - damaged or bent pins - install new terminals/pins
  - pushed-out pins - install new pins as necessary
- Reconnect the PCM connectors. Make sure they seat and latch correctly.
- Operate the system and determine if the concern is still present.

Is the concern still present?

Yes	CHECK OASIS for any applicable Technical Service Bulletins (TSBs). If a TSB exists for this concern, DISCONTINUE this test and FOLLOW the TSB instructions. If no Technical Service Bulletins (TSBs) address this concern, INSTALL a new PCM . REFER to: Powertrain Control Module (PCM) (303-14A Electronic Engine Controls - 2.0L Duratec-HE (125kW/170PS) - MI4, Removal and Installation).
No	The system is operating correctly at this time. The concern may have been caused by module connections. ADDRESS the root cause of any connector or pin issues.

A29 CHECK FOR CORRECT TCM (TRANSMISSION CONTROL MODULE) OPERATION

- Ignition OFF.
- Disconnect and inspect all TCM connectors.
- Repair:
  - corrosion (install new connectors or terminals - clean module pins)
  - damaged or bent pins - install new terminals/pins
  - pushed-out pins - install new pins as necessary
- Reconnect the TCM connectors. Make sure they seat and latch correctly.
- Operate the system and determine if the concern is still present.

Is the concern still present?

Yes	CHECK OASIS for any applicable Technical Service Bulletins (TSBs). If a TSB exists for this concern, DISCONTINUE this test and FOLLOW the TSB instructions. If no Technical Service Bulletins (TSBs) address this concern, INSTALL a new TCM . REFER to: Transmission Control Module (TCM) (307-01 Automatic Transmission - Vehicles With: 6-Speed PowerShift Transmission - DPS6/6DCT250, Removal and Installation).
No	The system is operating correctly at this time. The concern may have been caused by module connections. ADDRESS the root cause of any connector or pin issues.

A30 CHECK FOR CORRECT BCM (BODY CONTROL MODULE) OPERATION

- Ignition OFF.
- Disconnect and inspect all BCM connectors.
- Repair:
  - corrosion (install new connectors or terminals - clean module pins)
  - damaged or bent pins - install new terminals/pins
  - pushed-out pins - install new pins as necessary
- Reconnect the BCM connectors. Make sure they seat and latch correctly.
- Connect CPP C257 .
- Connect PCM C175B .
- Operate the system and determine if the concern is still present.

Is the concern still present?

Yes	CHECK OASIS for any applicable Technical Service Bulletins (TSBs). If a TSB exists for this concern, DISCONTINUE this test and FOLLOW the TSB instructions. If no TSB addresses this concern, INSTALL a new BCM . REFER to: Body Control Module (BCM) (419-10 Multifunction Electronic Modules, Removal and Installation).
No	The system is operating correctly at this time. The concern may have been caused by module connections. ADDRESS the root cause of any connector or pin issues.

Engine Does Not Crank (With Push Button Start)

Refer to Wiring Diagrams Cell 20 for schematic and connector information.

Refer to Wiring Diagrams Cell 90 for schematic and connector information.

Normal Operation and Fault Conditions

REFER to: Starting System - Vehicles With: Push Button Start - Overview (303-06A Starting System - 2.0L Duratec-HE (125kW/170PS) - MI4, Description and Operation).

DTC Fault Trigger Conditions

DTC	Description	Fault Trigger Conditions
P0850	Park/Neutral Switch Input Circuit	This DTC sets when the PCM detects a mismatch between the hardwired park/neutral circuit and the message broadcast over the High Speed Controller Area Network (HS-CAN).
P0851	Park/Neutral Switch Input Circuit Low	This DTC sets when the PCM detects a short to ground on the park/neutral circuit.
P0833:23	Clutch Pedal Switch B Circuit: Signal Stuck Low	This DTC sets when the BCM detects a short to ground on the clutch bottom of travel circuit during an on-demand self test.

Possible Sources

- Battery
- Battery cables
- Starter motor
- BJB starter relay
- Inspect the CPP switch (manual transmission only).

Visual Inspection and Diagnostic Pre-checks

- Inspect high current BJB connections.
- Verify the BJB fuse 13 (30A).
- Verify the BCM fuse 78 (5A).
- Inspect the CPP switch (manual transmission only).

PINPOINT TEST B : ENGINE DOES NOT CRANK (WITH PUSH BUTTON START)

B1 CHECK THE BATTERY

- Check the battery condition and state of charge.
  REFER to: Battery (414-01 Battery, Mounting and Cables, Diagnosis and Testing).

Is the battery OK?

Yes	GO to B2
No	CHARGE or INSTALL a new battery as necessary. REFER to: Battery (414-01 Battery, Mounting and Cables, Removal and Installation).

B2 CHECK FOR NO KEY DETECTED MESSAGE IN THE MESSAGE CENTER

- Check the message center while pressing the ignition switch - push button start.

Is No Key Detected displayed?

Yes	Diagnose "No Key Found" Message. REFER to: Passive Anti-Theft System (PATS) (419-01C Passive Anti-Theft System (PATS) - Vehicles With: Push Button Start, Diagnosis and Testing).
No	GO to B3

B3 CHECK THE IPC (INSTRUMENT PANEL CLUSTER) OPERATION

- Observe the IPC operation while pressing the ignition switch - push button start.

Do some indicators in the IPC illuminate?

Yes	GO to B5
No	GO to B4

B4 CHECK FOR COMMUNICATION WITH THE SCAN TOOL

- Ignition ON.
- Using a diagnostic scan tool, perform the Network Test.

Does the BCM , IPC and RFA module pass the Network Test?

Yes	Diagnose No Power in On. REFER to: Steering Wheel and Column Electrical Components (211-05 Steering Column Switches, Diagnosis and Testing).
No	REFER to: Communications Network (418-00 Module Communications Network, Diagnosis and Testing).

B5 RETRIEVE DTCS

- Ignition ON.
- Using a diagnostic scan tool, perform self-tests for:

- TCM (if equipped).
- RFA
- BCM
- PCM

Were Diagnostic Trouble Codes (DTCs) retrieved on-demand during self-test?

Yes	For all TCM Diagnostic Trouble Codes (DTCs), REFER to: Automatic Transmission (307-01 Automatic Transmission - Vehicles With: 6-Speed PowerShift Transmission - DPS6/6DCT250, Diagnosis and Testing). For all RFA module Diagnostic Trouble Codes (DTCs), REFER to: Remote Function Actuator (RFA) Module (419-10 Multifunction Electronic Modules, Diagnosis and Testing). For BCM DTC P0833:23, GO to B31 For all other BCM Diagnostic Trouble Codes (DTCs), REFER to: Body Control Module (BCM) (419-10 Multifunction Electronic Modules, Diagnosis and Testing). For PCM DTC P0850,GO to B9 For DTC P0851,GO to B13 For all other PCM Diagnostic Trouble Codes (DTCs), REFER to: Electronic Engine Controls (303-14A Electronic Engine Controls - 2.0L Duratec-HE (125kW/170PS) - MI4, Diagnosis and Testing).
No	For automatic transmission, GO to B6 For manual transmission, GO to B15

B6 CHECK THE OPERATION OF THE STOPLAMPS

- While observing the stoplamps, apply the brake pedal.

Do the stoplamps illuminate?

Yes	GO to B7
No	Diagnose All the Stoplamps are inoperative. REFER to: Stoplamps (417-01 Exterior Lighting, Diagnosis and Testing).

B7 CHECK THE PCM (POWERTRAIN CONTROL MODULE) BRAKE PEDAL POSITION (BOO1)

- Using a diagnostic scan tool, view the PCM PID BOO1 while applying the brake pedal.

Does the PID read On?

Yes	GO to B10
No	GO to B8

B8 CHECK THE BPP (BRAKE PEDAL POSITION) SWITCH CIRCUIT FOR VOLTAGE AT THE PCM (POWERTRAIN CONTROL MODULE)

- Ignition OFF.
- Disconnect PCM C175B .
- While applying the brake pedal, measure:

Positive Lead	Measurement / Action	Negative Lead
C175B-30		—

Is the voltage greater than 11 volts?

Yes	GO to B33
No	REPAIR the circuit.

B9 CHECK THE TCM (TRANSMISSION CONTROL MODULE) TR_CRANK PID

- Ignition ON.
- Using a diagnostic scan tool, view the TCM PID TR_CRANK, place the gear selector in PARK and then NEUTRAL.

Does the TCM PID TR_CRANK read YES in both positions?

Yes	GO to B10
No	Diagnose the TR sensor, REFER to: Automatic Transmission (307-01 Automatic Transmission - Vehicles With: 6-Speed PowerShift Transmission - DPS6/6DCT250, Diagnosis and Testing).

B10 CHECK THE PCM (POWERTRAIN CONTROL MODULE) IN_GEAR PID

- Using a diagnostic scan tool, while viewing the PCM PID IN_GEAR, place the gear selector in PARK and then NEUTRAL.

Does the PID read No in both positions?

Yes	GO to B16
No	GO to B11

B11 CHECK THE PARK/NEUTRAL CIRCUIT FOR A SHORT TO VOLTAGE

- Ignition OFF.
- Disconnect PCM C175B .
- Disconnect TCM C1750A .
- Ignition ON.
- Measure:

Positive Lead	Measurement / Action	Negative Lead
C175B-13		—

Is any voltage present?

Yes	REPAIR the circuit.
No	GO to B12

B12 CHECK THE PARK/NEUTRAL CIRCUIT FOR AN OPEN

- Ignition OFF.
- Measure:

Positive Lead	Measurement / Action	Negative Lead
C175B-13	Ω	C1750A-39

Is the resistance less than 3 ohms?

Yes	GO to B13
No	REPAIR the circuit.

B13 CHECK FOR DTC WITH TCM (TRANSMISSION CONTROL MODULE) DISCONNECTED

- Ignition OFF.
- Disconnect TCM C1750A .
- Ignition ON.
- Using a diagnostic scan tool, perform PCM self-test.

Was DTC P0851 retrieved on-demand during self-test?

Yes	GO to B14
No	GO to B34

B14 CHECK THE PARK/NEUTRAL SWITCH CIRCUIT FOR A SHORT TO GROUND

- Ignition OFF.
- Disconnect PCM C175B .
- Measure:

Positive Lead	Measurement / Action	Negative Lead
C175B-13	Ω	—

Is the resistance greater than 10,000 ohms?

Yes	GO to B33
No	REPAIR the circuit.

B15 CHECK THE PCM (POWERTRAIN CONTROL MODULE) CLUTCH PEDAL AT OR NEAR BOTTOM OF TRAVEL (CPP_BOT) PID

- Using a diagnostic scan tool, while viewing the PCM PID CPP_BOT, fully apply the clutch pedal and release.

Does the PID change from NO to YES when the clutch pedal is fully applied?

Yes	GO to B16
No	GO to B28

B16 CHECK THE PCM (POWERTRAIN CONTROL MODULE) ENGINE CRANKING (ENG_CRANK) PID

- Make sure the transmission is in PARK or NEUTRAL.
- Using a diagnostic scan tool, while viewing the PCM PID ENG_CRANK, press the ignition switch - push button start and the brake pedal.

Does the PID change from Inactive to Active?

Yes	GO to B17
No	GO to B27

B17 CHECK THE STARTER RELAY CONTROL OPERATION

NOTICE: The following step uses a test light to simulate normal circuit loads. Use only the test light recommended in the Special Tools table at the beginning of this section. To avoid connector terminal damage, use the Flex Probe Kit for the test light probe connection to the vehicle. Do not use the test light probe directly on any connector.

- Remove the BJB starter relay.
- Measure:

Positive Lead	Measurement / Action	Negative Lead
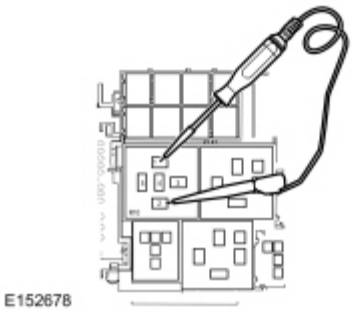 BJB starter relay pin 1		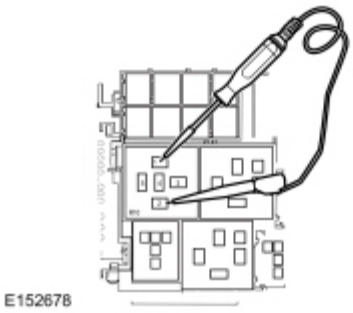 BJB starter relay pin 2

- Make sure the transmission is in PARK or NEUTRAL.
- While pressing the ignition switch - push button start and the brake pedal, observe the test light.

Does the test light illuminate when the ignition switch - push button start and brake pedal are pressed?

Yes	GO to B18
No	GO to B25

B18 CHECK THE VOLTAGE TO THE STARTER RELAY

- Ignition OFF.
- Disconnect: Starter Relay.

- Measure:

Positive Lead	Measurement / Action	Negative Lead
BJB starter relay pin 3		—

Is the voltage greater than 11 volts?

Yes	GO to B19
No	VERIFY BJB fuse 13 (30A) is OK. If OK, REPAIR the circuit for an open. If not OK, REFER to the Wiring Diagrams manual to identify the possible causes of the circuit short.

B19 CHECK THE STARTER MOTOR OPERATION AT THE STARTER RELAY

- Ignition OFF.
- Make sure the transmission is in PARK or NEUTRAL.
- Measure:

Positive Lead	Measurement / Action	Negative Lead
BJB starter relay pin 3		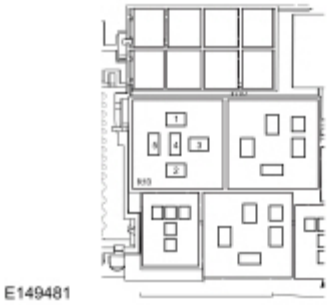 BJB starter relay pin 5

Did the starter engage and the engine crank?

Yes	INSTALL a new starter relay.
No	GO to B20

B20 CHECK THE BATTERY GROUND CABLES

- Measure:

Positive Lead	Measurement / Action	Negative Lead
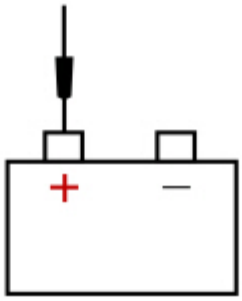 E148840		Ground G100
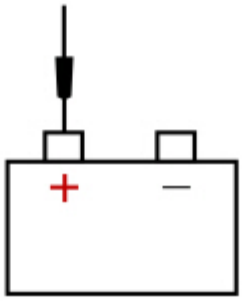 E148840		Ground G101
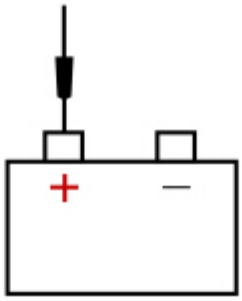 E148840		Ground G102

Are the voltages greater than 11 volts?

Yes	GO to B21
No	CLEAN or INSTALL new negative battery cables as necessary. REFER to: Battery Cables - 2.0L Duratec-HE (125kW/170PS) - MI4 (414-01 Battery, Mounting and Cables, Removal and Installation).

B21 CHECK THE STARTER MOTOR GROUND

- Measure:

Positive Lead	Measurement / Action	Negative Lead

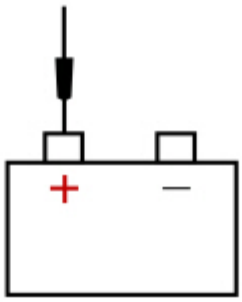 E148840		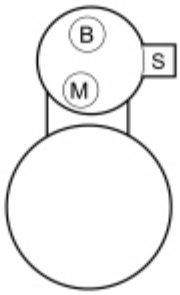 E148837 Starter motor case

Is the voltage greater than 11 volts?

Yes	GO to B22
No	CLEAN the starter motor mounting flange and MAKE SURE the starter motor is correctly mounted.

B22 CHECK THE VOLTAGE TO THE STARTER MOTOR

- Measure:

Positive Lead	Measurement / Action	Negative Lead
C197A-1		—

Is the voltage greater than 11 volts?

Yes	GO to B23
No	INSTALL a new positive battery cable. REFER to: Battery Cables - 2.0L Duratec-HE (125kW/170PS) - MI4 (414-01 Battery, Mounting and Cables, Removal and Installation).

B23 CHECK THE STARTER MOTOR FOR CORRECT OPERATION

- Ignition OFF.
- With the transmission in PARK or NEUTRAL, momentarily connect a fused jumper wire:

Positive Lead	Measurement / Action	Negative Lead
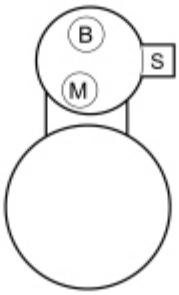 E148837		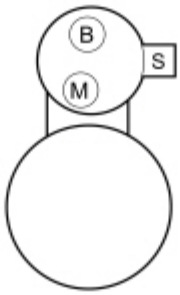 E148837

C197A-1 ("B" terminal)		C197B-1 ("S" terminal)

Did the starter engage and the engine crank?

Yes	GO to B24
No	INSTALL a new starter motor. REFER to: Starter Motor (303-06A Starting System - 2.0L Duratec-HE (125kW/170PS) - MI4, Removal and Installation).

B24 CHECK FOR START INPUT AT THE STARTER

- Connect: Starter Relay.
- Disconnect Starter C197B-1 ("S"-terminal).
- Press the ignition switch - push button start and the brake or clutch pedal.
- Measure:

Positive Lead	Measurement / Action	Negative Lead
C197B-1	▽	—

Is the voltage greater than 11 volts?

Yes	CLEAN the starter solenoid "S" terminal and starter solenoid connector. CHECK the wiring and the starter motor for a loose or intermittent connection.
No	REPAIR the circuit for an open.

B25 CHECK THE PCM (POWERTRAIN CONTROL MODULE) STARTER RELAY CIRCUITS FOR A SHORT TO GROUND

- Ignition OFF.
- Disconnect ACM C240A .
- Disconnect PCM C175B .
- Measure:

Positive Lead	Measurement / Action	Negative Lead
C175B-9	Ω	—
C175B-11	Ω	—

Are the resistances greater than 10,000 ohms?

Yes	GO to B26
No	REPAIR the affected circuit.

B26 CHECK THE PCM (POWERTRAIN CONTROL MODULE) STARTER RELAY CIRCUITS FOR AN OPEN

- Measure:

Positive Lead	Measurement / Action	Negative Lead
C175B-9	Ω	BJB start relay pin 2
C175B-11	Ω	BJB start relay pin 1

Are the resistances less than 3 ohms?

Yes	GO to B33
No	REPAIR the affected circuit.

B27 CHECK THE CRANK DETECT CIRCUIT FOR VOLTAGE AT THE PCM (POWERTRAIN CONTROL MODULE)

- Ignition OFF.
- Disconnect PCM C175B .
- While pressing the ignition switch - push button start, measure:

Positive Lead	Measurement / Action	Negative Lead
C175B-17	V	—

Is the voltage greater than 11 volts?

Yes	GO to B33
No	REPAIR the circuit.

B28 CHECK THE CPP (CLUTCH PEDAL POSITION) SWITCH

- Ignition OFF.
- Disconnect PCM C175B .
- While fully applying the clutch pedal, measure:

Positive Lead	Measurement / Action	Negative Lead
C175B-13	Ω	—

Is the resistance less than 3 ohms?

Yes	GO to B33
No	GO to B29

B29 CHECK THE CPP (CLUTCH PEDAL POSITION) GROUND CIRCUIT FOR AN OPEN

- Disconnect CPP switch C257 .
- Measure:

Positive Lead	Measurement / Action	Negative Lead
C257-2	Ω	—

Is the resistance less than 3 ohms?

Yes	GO to B30
No	REPAIR the circuit.

B30 CHECK THE CPP (CLUTCH PEDAL POSITION) SWITCH CIRCUIT FOR AN OPEN

- Measure:

Positive Lead	Measurement / Action	Negative Lead
C175B-13	Ω	C257-1

Is the resistance less than 3 ohms?

Yes	INSTALL a new Clutch Pedal Position (CPP) switch. REFER to: Clutch Pedal Position (CPP) Switch (303-14A Electronic Engine Controls - 2.0L Duratec-HE (125kW/170PS) - MI4, Removal and Installation).
No	REPAIR the circuit.

B31 CHECK FOR DTC WITH CPP (CLUTCH PEDAL POSITION) SWITCH DISCONNECTED

- Ignition OFF.
- Disconnect CPP switch C257 .
- Ignition ON.
- Using a diagnostic scan tool, perform BCM self-test.

Was DTC P0833:23 retrieved during on-demand self-test with the Clutch Pedal Position (CPP) switch disconnected?

Yes	GO to B32
No	INSTALL a new Clutch Pedal Position (CPP) switch. REFER to: Clutch Pedal Position (CPP) Switch (303-14A Electronic Engine Controls - 2.0L Duratec-HE (125kW/170PS) - MI4, Removal and Installation).

B32 CHECK THE CLUTCH BOTTOM TRAVEL CIRCUIT FOR A SHORT TO GROUND

- Ignition OFF.
- Disconnect BCM C2280A .
- Disconnect PCM C175B .
- Measure:

Positive Lead	Measurement / Action	Negative Lead
C175B-13	Ω	—

Is the resistance greater than 10,000 ohms?

Yes	GO to B35
No	REPAIR the circuit.

B33 CHECK FOR CORRECT PCM (POWERTRAIN CONTROL MODULE) OPERATION

- Ignition OFF.
- Disconnect and inspect all PCM connectors.
- Repair:
  - corrosion (install new connectors or terminals - clean module pins)
  - damaged or bent pins - install new terminals/pins
  - pushed-out pins - install new pins as necessary
- Reconnect the PCM connectors. Make sure they seat and latch correctly.
- Operate the system and determine if the concern is still present.

Is the concern still present?

Yes	CHECK OASIS for any applicable Technical Service Bulletins (TSBs). If a TSB exists for this concern, DISCONTINUE this test and FOLLOW the TSB instructions. If no Technical Service Bulletins (TSBs) address this concern, INSTALL a new PCM . REFER to: Powertrain Control Module (PCM) (303-14A Electronic Engine Controls - 2.0L Duratec-HE (125kW/170PS) - MI4, Removal and Installation).
No	The system is operating correctly at this time. The concern may have been caused by module connections. ADDRESS the root cause of any connector or pin issues.

B34 CHECK FOR CORRECT TCM (TRANSMISSION CONTROL MODULE) OPERATION

- Ignition OFF.
- Disconnect and inspect all TCM connectors.
- Repair:
  - corrosion (install new connectors or terminals - clean module pins)
  - damaged or bent pins - install new terminals/pins
  - pushed-out pins - install new pins as necessary
- Reconnect the TCM connectors. Make sure they seat and latch correctly.
- Operate the system and determine if the concern is still present.

Is the concern still present?

Yes	CHECK OASIS for any applicable Technical Service Bulletins (TSBs). If a TSB exists for this concern, DISCONTINUE this test and FOLLOW the TSB instructions. If no Technical Service Bulletins (TSBs) address this concern, INSTALL a new TCM . REFER to: Transmission Control Module (TCM) (307-01 Automatic Transmission - Vehicles With: 6-Speed PowerShift Transmission - DPS6/6DCT250, Removal and Installation).
No	The system is operating correctly at this time. The concern may have been caused by module connections. ADDRESS the root cause of any connector or pin issues.

B35 CHECK FOR CORRECT BCM (BODY CONTROL MODULE) OPERATION

- Ignition OFF.
- Disconnect and inspect all BCM connectors.
- Repair:
  - corrosion (install new connectors or terminals - clean module pins)
  - damaged or bent pins - install new terminals/pins
  - pushed-out pins - install new pins as necessary
- Reconnect the BCM connectors. Make sure they seat and latch correctly.
- Connect CPP C257 .
- Connect PCM C175B .
- Operate the system and determine if the concern is still present.

Is the concern still present?

Yes	CHECK OASIS for any applicable Technical Service Bulletins (TSBs). If a TSB exists for this concern, DISCONTINUE this test and FOLLOW the TSB instructions. If no TSB addresses this concern, INSTALL a new BCM . REFER to: Body Control Module (BCM) (419-10 Multifunction Electronic Modules, Removal and Installation).
No	The system is operating correctly at this time. The concern may have been caused by module connections. ADDRESS the root cause of any connector or pin issues.

Unusual Starter Noise

Normal Operation and Fault Conditions

Correct starter operation relies on correct mounting of the starter to the engine, alignment of the starter ring gear to the flexplate and correct functioning of the starter assembly (internal gears, bearings).

Possible Sources

- Engine
- Starter motor.
- Starter motor mounting.

Visual Inspection and Diagnostic Pre-checks

- Inspect the starter motor.
- Inspect the starter motor mounting.

PINPOINT TEST C : UNUSUAL STARTER NOISE

C1 CHECK THE STARTER MOUNTING

- Inspect the starter mounting bolts for looseness.

Is the starter motor mounted correctly?

Yes	GO to C2
No	INSTALL the starter motor correctly. REFER to: Starter Motor (303-06A Starting System - 2.0L Duratec-HE (125kW/170PS) - MI4, Removal and Installation).

C2 CHECK FOR ENGINE NOISE

- Ignition OFF.
- Connect a remote starter switch between the starter solenoid C197A-1 ("B" terminal) and C197B-1 ("B" terminal).

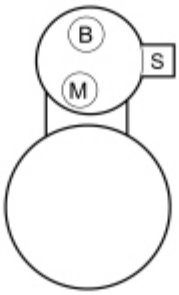

E148837

- Engage the starter and verify the noise is due to starter operation.

Is the noise due to the starter engagement?

Yes	REFER to: Starter Motor Drive Gear and Flywheel Ring Gear Inspection (303-06A Starting System - 2.0L Duratec-HE (125kW/170PS) - MI4, General Procedures).
No	REFER to: Engine (303-00 Engine System - General Information, Diagnosis and Testing). to continue diagnosis.

P0615

Refer to Wiring Diagrams Cell 20 for schematic and connector information.

Normal Operation and Fault Conditions

Without push button start,
REFER to: Starting System - Vehicles With: Push Button Start - Overview (303-06A Starting System - 2.0L Duratec-HE (125kW/170PS) - MI4, Description and Operation).

With push button start,
REFER to: Starting System - Vehicles With: Push Button Start - Overview (303-06A Starting System - 2.0L Duratec-HE (125kW/170PS) - MI4, Description and Operation).

DTC Fault Trigger Conditions

DTC	Description	Fault Trigger Conditions
P0615	Starter Relay Circuit	This DTC is set when the PCM detects a fault in the starter relay control circuit(s).

Possible Sources

- Wiring, terminals or connectors
- PCM

Visual Inspection and Diagnostic Pre-checks

- Verify the BJB fuse 13 (30A).

PINPOINT TEST D : P0615

D1 CHECK THE PCM (POWERTRAIN CONTROL MODULE) STARTER RELAY CIRCUITS FOR A SHORT TO VOLTAGE

- Ignition OFF.
- Disconnect ACM C240A .
- Disconnect PCM C175B .
- Disconnect BJB starter relay..
- Ignition ON.
- Measure:

Positive Lead	Measurement / Action	Negative Lead
C175B-9	V	—
C175B-11	V	—

Is any voltage present?

Yes	REPAIR the affected circuit.
No	GO to D2

D2 CHECK THE PCM (POWERTRAIN CONTROL MODULE) STARTER RELAY CIRCUITS FOR A SHORT TO GROUND

- Ignition OFF.
- Measure:

Positive Lead	Measurement / Action	Negative Lead
C175B-9	Ω	—
C175B-11	Ω	—

Are the resistances greater than 10,000 ohms?

Yes	GO to D3
No	REPAIR the affected circuit.

D3 CHECK THE PCM (POWERTRAIN CONTROL MODULE) STARTER RELAY CIRCUITS FOR AN OPEN

- Measure:

Positive Lead	Measurement / Action	Negative Lead
C175B-9	Ω	BJB start relay pin 2
C175B-11	Ω	BJB start relay pin 1

Are the resistances less than 3 ohms?

Yes	GO to D4
No	REPAIR the affected circuit.

D4 CHECK BJB (BATTERY JUNCTION BOX) STARTER RELAY

- Ignition OFF.

- Connect ACM C240A .
- Connect PCM C175B .
- Replace BJB starter relay with a known good relay.
- Ignition ON.
- Using a diagnostic scan tool, perform the PCM self-test.

Is PCM DTC P2534 still present?

Yes	GO to D5
No	INSTALL a new BJB starter relay.

D5 CHECK FOR CORRECT PCM (POWERTRAIN CONTROL MODULE) OPERATION

- Ignition OFF.
- Disconnect and inspect all PCM connectors.
- Repair:
  - corrosion (install new connectors or terminals - clean module pins)
  - damaged or bent pins - install new terminals/pins
  - pushed-out pins - install new pins as necessary
- Reconnect the PCM connectors. Make sure they seat and latch correctly.
- Operate the system and determine if the concern is still present.

Is the concern still present?

Yes	CHECK OASIS for any applicable Technical Service Bulletins (TSBs). If a TSB exists for this concern, DISCONTINUE this test and FOLLOW the TSB instructions. If no Technical Service Bulletins (TSBs) address this concern, INSTALL a new PCM . REFER to: Powertrain Control Module (PCM) (303-14A Electronic Engine Controls - 2.0L Duratec-HE (125kW/170PS) - MI4, Removal and Installation).
No	The system is operating correctly at this time. The concern may have been caused by module connections. ADDRESS the root cause of any connector or pin issues.

P2531 or P2532

Refer to Wiring Diagrams Cell 23 for schematic and connector information.

Normal Operation and Fault Conditions

When the ignition is in the ON or START mode, the BCM supplies ground for the coil (control) side of the ignition relay. The energized ignition relay supplies battery voltage to the BJB , the PCM and multiple components through the ignition relay output circuit. The BCM sends ignition mode information via the High Speed Controller Area Network (HS-CAN).

DTC Fault Trigger Conditions

DTC	Description	Fault Trigger Conditions
P2531	Ignition Switch Run Position Circuit Low	This DTC is set when the PCM detects no voltage on the ignition relay output circuit when the BCM indicates ignition is in the ON or START mode.
P2532	Ignition Switch Run	This DTC is set when the PCM detects voltage on the ignition relay output circuit when the

	Position Circuit High	BCM indicates ignition is in the OFF mode.

Possible Sources

- Ignition switch (without Push button start)
- Ignition switch - push button start (with Push button start)
- Wiring, terminals or connectors
- PCM

Visual Inspection and Diagnostic Pre-checks

- Verify the BCM fuse 78 (5A).
- Verify the BJB fuse 38 (15A).

PINPOINT TEST E : P2531 OR P2532

E1 RETRIEVE DTCS

- Using a diagnostic scan tool, perform the BCM self-test.
- Using a diagnostic scan tool, perform PCM self-test.
- Record all Diagnostic Trouble Codes (DTCs).

Is PCM DTC P2532 present?

Yes	For DTC P2532, GO to E2
No	For all BCM Diagnostic Trouble Codes (DTCs), REFER to: Body Control Module (BCM) (419-10 Multifunction Electronic Modules, Diagnosis and Testing). For DTC P2531, GO to E4 For all other PCM Diagnostic Trouble Codes (DTCs), REFER to: Electronic Engine Controls (303-14A Electronic Engine Controls - 2.0L Duratec-HE (125kW/170PS) - MI4, Diagnosis and Testing).

E2 CHECK THE IGNITION RELAY OUTPUT CIRCUIT FOR A SHORT TO VOLTAGE

- Ignition OFF.
- Disconnect PCM C175B .
- Measure:

Positive Lead	Measurement / Action	Negative Lead
C175B-15		—

Is any voltage present?

Yes	GO to E3
No	GO to E5

E3 CHECK THE IGNITION RELAY OUTPUT CIRCUIT FOR A SHORT TO VOLTAGE WITH IGNITION RELAY REMOVED

- Ignition OFF.
- Remove the BJB starter relay.
- Measure:

Positive Lead	Measurement / Action	Negative Lead
C175B-15		—

Is any voltage present?

Yes	REPAIR the circuit. REFER to the Wiring Diagrams manual to identify the possible causes of the circuit short.
No	INSTALL a new ignition relay.

E4 CHECK THE IGNITION RELAY OUTPUT CIRCUIT FOR AN OPEN

- Ignition OFF.
- Disconnect PCM C175B .
- Ignition ON.
- Measure:

Positive Lead	Measurement / Action	Negative Lead
C175B-15		—

Is the voltage greater than 11 volts?

Yes	GO to E5
No	VERIFY BJB fuse 38 (15A) is OK. If OK, REPAIR the circuit. If not OK, REFER to the Wiring Diagrams manual to identify the possible causes of the circuit short.

E5 CHECK FOR CORRECT PCM (POWERTRAIN CONTROL MODULE) OPERATION

- Ignition OFF.
- Disconnect and inspect all PCM connectors.
- Repair:
  - corrosion (install new connectors or terminals - clean module pins)
  - damaged or bent pins - install new terminals/pins
  - pushed-out pins - install new pins as necessary
- Reconnect the PCM connectors. Make sure they seat and latch correctly.
- Operate the system and determine if the concern is still present.

Is the concern still present?

Yes	CHECK OASIS for any applicable Technical Service Bulletins (TSBs). If a TSB exists for this concern, DISCONTINUE this test and FOLLOW the TSB instructions. If no Technical Service Bulletins (TSBs) address this concern, INSTALL a new PCM . REFER to: Powertrain Control Module (PCM) (303-14A Electronic Engine Controls - 2.0L Duratec-HE (125kW/170PS) - MI4, Removal and Installation).

No	The system is operating correctly at this time. The concern may have been caused by module connections. ADDRESS the root cause of any connector or pin issues.

P2534 or P2535

Refer to Wiring Diagrams Cell 20 for schematic and connector information.

Normal Operation and Fault Conditions

When the ignition is turned to the START position or the ignition switch - push button start has been pressed, the PCM receives a voltage signal on the crank detect circuit. When the required inputs have been received, the PCM supplies voltage and ground to the starter relay coil.

DTC Fault Trigger Conditions

DTC	Description	Fault Trigger Conditions
P2534	Ignition Switch Run/Start Position Circuit Low	This DTC is set when the PCM detects a short to ground on the crank detect circuit. The fault condition is observed as no power in any ignition mode due to BCM fuse 78 (5A) opening after the ignition switch - push button start is pressed (with push button start) or the ignition switch is placed in the START position (without push button start).
P2535	Ignition Switch Run/Start Position Circuit High	This DTC is set when the PCM detects a short to voltage on the crank detect circuit while engine is running.

Possible Sources

- Ignition switch (without Push button start)
- Ignition switch - push button start (with Push button start)
- Wiring, terminals or connectors
- PCM

Visual Inspection and Diagnostic Pre-checks

- Verify the BCM fuse 78 (5A).

PINPOINT TEST F : P2534 OR P2535

F1 CHECK FOR PCM (POWERTRAIN CONTROL MODULE) DTCS

- Ignition ON.
- Using a diagnostic scan tool, perform PCM self-test.

Is PCM DTC P2535 present?

Yes	GO to F2
No	For DTC P2534, GO to F4

	For all other PCM Diagnostic Trouble Codes (DTCs), REFER to: Electronic Engine Controls (303-14A Electronic Engine Controls - 2.0L Duratec-HE (125kW/170PS) - MI4, Diagnosis and Testing).

F2 CHECK THE CRANK DETECT CIRCUIT FOR A SHORT TO VOLTAGE WITH THE PCM (POWERTRAIN CONTROL MODULE) DISCONNECTED

- Ignition OFF.
- Disconnect PCM C175B .
- Ignition ON.
- Measure:

Positive Lead	Measurement / Action	Negative Lead
C175B-17		—

Is any voltage present?

Yes	GO to F3
No	GO to F10

F3 CHECK THE CRANK DETECT CIRCUIT FOR A SHORT TO VOLTAGE WITH THE IGNITION SWITCH OR IGNITION SWITCH - PUSH BUTTON START DISCONNECTED

- Ignition OFF.
- Disconnect Ignition switch C250 (without push button start).
- Disconnect Ignition switch - push button start C2195 (with push button start).
- Ignition ON.
- Measure:

Positive Lead	Measurement / Action	Negative Lead
C175B-17		—

Is any voltage present?

Yes	Without push button start, GO to F10 With push button start, GO to F4
No	INSTALL a new ignition switch or ignition switch - push button start. Without Push button start, REFER to: Ignition Switch (211-05 Steering Column Switches, Removal and Installation). With Push button start, REFER to: Ignition Switch - Vehicles With: Push Button Start (211-05 Steering Column Switches, Removal and Installation).

F4 CHECK THE CRANK DETECT CIRCUIT FOR A SHORT TO VOLTAGE WITH THE RFA (REMOTE FUNCTION ACTUATOR) DISCONNECTED

- Ignition OFF.
- Disconnect RFA C4392D .
- Ignition ON.

- Measure:

Positive Lead	Measurement / Action	Negative Lead
C175B-17	▽	—

Is any voltage present?

Yes	GO to F5
No	Replace the RFA module, REFER to: Remote Function Actuator (RFA) Module (419-10 Multifunction Electronic Modules, Removal and Installation).

F5 CHECK THE CRANK DETECT CIRCUIT FOR A SHORT TO VOLTAGE WITH THE BCM (BODY CONTROL MODULE) DISCONNECTED

- Ignition OFF.
- Disconnect BCM C2280C .
- Ignition ON.
- Measure:

Positive Lead	Measurement / Action	Negative Lead
C175B-17	▽	—

Is any voltage present?

Yes	Repair the circuit.
No	Replace the BCM , REFER to: Body Control Module (BCM) (419-10 Multifunction Electronic Modules, Removal and Installation).

F6 CHECK THE CRANK DETECT CIRCUIT FOR A SHORT TO GROUND WITH THE PCM (POWERTRAIN CONTROL MODULE) DISCONNECTED

- Ignition OFF.
- Disconnect PCM C175B .
- Measure:

Positive Lead	Measurement / Action	Negative Lead
C175B-17	Ω	—

Is the resistance greater than 10,000 ohms?

Yes	GO to F10

No	GO to F7

F7 CHECK THE CRANK DETECT CIRCUIT FOR A SHORT TO GROUND WITH THE IGNITION SWITCH OR IGNITION SWITCH - PUSH BUTTON START DISCONNECTED

- Disconnect Ignition switch C250 (without push button start).
- Disconnect Ignition switch - push button start C2195 (with push button start).
- Measure:

Positive Lead	Measurement / Action	Negative Lead
C175B-17	Ω	—

Is the resistance greater than 10,000 ohms?

Yes	Without push-button start, GO to F10 With push-button start, GO to F8
No	INSTALL a new ignition switch or ignition switch - push button start. Without Push button start, REFER to: Ignition Switch (211-05 Steering Column Switches, Removal and Installation). With Push button start, REFER to: Ignition Switch - Vehicles With: Push Button Start (211-05 Steering Column Switches, Removal and Installation).

F8 CHECK THE CRANK DETECT CIRCUIT FOR A SHORT TO GROUND WITH THE RFA (REMOTE FUNCTION ACTUATOR) DISCONNECTED

- Disconnect RFA C4392D .
- Measure:

Positive Lead	Measurement / Action	Negative Lead
C175B-17	Ω	—

Is the resistance greater than 10,000 ohms?

Yes	GO to F9
No	Replace the RFA module, REFER to: Remote Function Actuator (RFA) Module (419-10 Multifunction Electronic Modules, Removal and Installation).

F9 CHECK THE CRANK DETECT CIRCUIT FOR A SHORT TO GROUND WITH THE BCM (BODY CONTROL MODULE) DISCONNECTED

- Disconnect BCM C2280C .
- Measure:

Positive Lead	Measurement / Action	Negative Lead
C175B-17	Ω	—

Is the resistance greater than 10,000 ohms?

Yes	Repair the circuit.
No	Replace the BCM , REFER to: Body Control Module (BCM) (419-10 Multifunction Electronic Modules, Removal and Installation).

F10 CHECK FOR CORRECT OPERATION

- Ignition OFF.
- Disconnect and inspect all PCM connectors.
- Repair:
  - corrosion (install new connectors or terminals - clean module pins)
  - damaged or bent pins - install new terminals/pins
  - pushed-out pins - install new pins as necessary
- Reconnect the PCM connectors. Make sure they seat and latch correctly.
- Operate the system and determine if the concern is still present.

Is the concern still present?

Yes	CHECK OASIS for any applicable Technical Service Bulletins (TSBs). If a TSB exists for this concern, DISCONTINUE this test and FOLLOW the TSB instructions. If no Technical Service Bulletins (TSBs) address this concern, INSTALL a new PCM . REFER to: Powertrain Control Module (PCM) (303-14A Electronic Engine Controls - 2.0L Duratec-HE (125kW/170PS) - MI4, Removal and Installation).
No	The system is operating correctly at this time. The concern may have been caused by module connections. ADDRESS the root cause of any connector or pin issues.

B10E5:11 or B10E5:15

Refer to Wiring Diagrams Cell 23 for schematic and connector information.

Normal Operation and Fault Conditions

The wake-up control circuit wakes up the PCM prior to engine cranking. The PCM needs to wake up prior to a crank request so it has time to go through its initialization. The wake-up control circuit is controlled by the BCM . The BCM activates the wake-up control circuit when: the driver door is opened. a key is inserted into the ignition. or when the ignition is in the ON or START position.

DTC Fault Trigger Conditions

DTC	Description	Fault Trigger Conditions
B10E5:11	PCM Wake-up Signal: Circuit Short to Ground	Set by the BCM when a short to ground is detected on the wake-up control circuit.
B10E5:15	PCM Wake-up Signal: Circuit Short to	Set by the BCM when a short to voltage or an open is detected on the

	Battery or Open	wake-up control circuit.

Possible Sources

- BCM
- PCM
- Wiring, terminals or connectors

PINPOINT TEST G : B10E5:11 OR B10E5:15

G1 CHECK FOR BCM (BODY CONTROL MODULE) DTCS

- Ignition ON.
- Using a diagnostic scan tool, perform BCM self-test.

Is DTC B10E5:11 present?

Yes	GO to G2
No	If DTC B10E5:15 is present, GO to G3 For all other BCM Diagnostic Trouble Codes (DTCs), REFER to: Body Control Module (BCM) (419-10 Multifunction Electronic Modules, Diagnosis and Testing).

G2 CHECK THE PCM (POWERTRAIN CONTROL MODULE) FOR A SHORT TO GROUND

- Ignition OFF.
- Disconnect PCM C175B .
- Ignition ON.
- Using a diagnostic scan tool, clear the BCM Continuous Diagnostic Trouble Codes (DTCs).
- Using a diagnostic scan tool, perform BCM self-test.

Is BCM DTC B10E5:11 present?

Yes	GO to G3
No	GO to G7

G3 CHECK THE PCM (POWERTRAIN CONTROL MODULE) WAKE-UP SIGNAL CIRCUIT FOR A SHORT TO VOLTAGE

- Ignition OFF.
- Disconnect BCM C2280A .
- Disconnect PCM C175B .
- Ignition ON.
- Measure:

Positive Lead	Measurement / Action	Negative Lead
C175B-14		—

Is any voltage present?

Yes	REPAIR the circuit.
No	GO to G4

G4 CHECK THE PCM (POWERTRAIN CONTROL MODULE) WAKE-UP SIGNAL CIRCUIT FOR A SHORT TO GROUND

- Ignition OFF.
- Measure:

Positive Lead	Measurement / Action	Negative Lead
C175B-14	Ω	—

Is the resistance greater than 10,000 ohms?

Yes	GO to G5
No	REPAIR the circuit.

G5 CHECK THE PCM (POWERTRAIN CONTROL MODULE) WAKE-UP SIGNAL CIRCUIT FOR AN OPEN

- Ignition OFF.
- Measure:

Positive Lead	Measurement / Action	Negative Lead
C175B-14	Ω	C2280A-32

Is the resistance less than 3 ohms?

Yes	GO to G6
No	REPAIR the circuit.

G6 CHECK FOR CORRECT BCM (BODY CONTROL MODULE) OPERATION

- Ignition OFF.
- Disconnect and inspect all BCM connectors.
- Repair:
  - corrosion (install new connectors or terminals - clean module pins)
  - damaged or bent pins - install new terminals/pins
  - pushed-out pins - install new pins as necessary
- Reconnect the BCM connectors. Make sure they seat and latch correctly.
- Operate the system and determine if the concern is still present.

Is the concern still present?

Yes	CHECK OASIS for any applicable Technical Service Bulletins (TSBs). If a TSB exists for this concern,

	DISCONTINUE this test and FOLLOW the TSB instructions. If no TSB addresses this concern, INSTALL a new BCM . REFER to: Body Control Module (BCM) (419-10 Multifunction Electronic Modules, Removal and Installation).
No	The system is operating correctly at this time. The concern may have been caused by module connections. ADDRESS the root cause of any connector or pin issues.

G7 CHECK FOR CORRECT PCM (POWERTRAIN CONTROL MODULE) OPERATION

- Ignition OFF.
- Disconnect and inspect all PCM connectors.
- Repair:
  - corrosion (install new connectors or terminals - clean module pins)
  - damaged or bent pins - install new terminals/pins
  - pushed-out pins - install new pins as necessary
- Reconnect the PCM connectors. Make sure they seat and latch correctly.
- Operate the system and determine if the concern is still present.

Is the concern still present?

Yes	CHECK OASIS for any applicable Technical Service Bulletins (TSBs). If a TSB exists for this concern, DISCONTINUE this test and FOLLOW the TSB instructions. If no Technical Service Bulletins (TSBs) address this concern, INSTALL a new PCM . REFER to: Powertrain Control Module (PCM) (303-14A Electronic Engine Controls - 2.0L Duratec-HE (125kW/170PS) - MI4, Removal and Installation).
No	The system is operating correctly at this time. The concern may have been caused by module connections. ADDRESS the root cause of any connector or pin issues.

The Remote Start Is Inoperative

Refer to Wiring Diagrams Cell 20 for schematic and connector information.

Normal Operation and Fault Conditions

REFER to: Starting System - Vehicles With: Push Button Start - System Operation and Component Description (303-06A Starting System - 2.0L Duratec-HE (125kW/170PS) - MI4, Description and Operation).

Possible Sources

- Remote start feature not enabled
- Passive Key
- External Antenna
- Hood switch input
- PCM
- Wiring, terminals or connectors

Visual Inspection and Diagnostic Pre-checks

- Hood closed
- Passive Key for damage
- Remote start feature enabled

PINPOINT TEST H : THE REMOTE START IS INOPERATIVE

H1 CHECK THE OPERATION OF THE PASSIVE KEY

- Press all buttons on the Passive key and check for correct operation

Is the remote start the only function that is inoperative?

Yes	GO to H2
No	Diagnose and repair the RKE system. REFER to: Locks, Latches and Entry Systems (501-14B Handles, Locks, Latches and Entry Systems - Vehicles With: One-Touch Up Door Window, Diagnosis and Testing).

H2 CHECK THE ENGINE FOR CRANKING

- With the gear selector in PARK or NEUTRAL, attempt to crank the engine by pressing the start/stop switch and the brake pedal.

Did the engine crank?

Yes	GO to H3
No	This not a remote start issue. To diagnose the no crank condition GO to Pinpoint Test B

H3 CHECK FOR ILLUMINATED ENGINE WARNING LAMPS

- With the engine running, check the instrument cluster for illuminated warning lamps.

Are any engine warning lamps illuminated?

Yes	CARRY OUT self-test of the PCM . DIAGNOSE and REPAIR any Diagnostic Trouble Codes (DTCs) present. REFER to PCM DTC Chart in this section.
No	GO to H4

H4 RETRIEVE RFA (REMOTE FUNCTION ACTUATOR) DIAGNOSTIC TROUBLE CODES (DTCS)

- Using a diagnostic scan tool, perform the RFA self-test.

Are any RFA Diagnostic Trouble Codes (DTCs) present?

Yes	REFER to RFA DTC Chart in this section.
No	GO to H5

H5 RETRIEVE BCM (BODY CONTROL MODULE) DIAGNOSTIC TROUBLE CODES (DTCS)

- Using a diagnostic scan tool, perform the BCM self-test.

Are any BCM Diagnostic Trouble Codes (DTCs) present?

Yes	REFER to BCM DTC Chart in this section.
No	GO to H6

H6 CONFIRM THE REMOTE START FUNCTION IS ENABLED

- Ignition ON.
- Check the message center and confirm the remote start function is enabled. Refer to the Owner's Literature.

Is the remote start function enabled?

Yes	GO to H7
No	ENABLE the remote start function.

H7 CHECK THE REMOTE START PRECONDITIONS FOR CORRECT OPERATION

NOTE: *The BCM acknowledges the remote start request and that all preconditions have been met by providing 2 short flashes of the turn indicators and a system complete chirp.*

- Check the vehicle for the following:
  - No RFA , BCM , or PCM Diagnostic Trouble Codes (DTCs) present.
  - Hood is closed.
  - Ignition must be off for a minimum of 15 seconds.
  - Vehicle must be in PARK.
  - Remote start feature is configured ON.
  - Remote start events do not exceed allowed time. (2 events in a 1 hour duration).

Have all preconditions for remote start been met and is the remote start system still inoperative?

Yes	REPLACE Passive key and PROGRAM. REFER to: Erase All Keys and Key Programming (419-01C Passive Anti-Theft System (PATS) - Vehicles With: Push Button Start, General Procedures). RETEST Remote start for correct operation. If Remote start is still inoperative, GO to H8
No	The system is operating correctly. A required precondition was not met and was the cause of the concern.

H8 CHECK FOR CORRECT PCM (POWERTRAIN CONTROL MODULE) OPERATION

- Ignition OFF.
- Disconnect and inspect all PCM connectors.
- Repair:
  - corrosion (install new connectors or terminals - clean module pins)
  - damaged or bent pins - install new terminals/pins
  - pushed-out pins - install new pins as necessary
- Reconnect the PCM connectors. Make sure they seat and latch correctly.
- Operate the system and determine if the concern is still present.

Is the concern still present?

Yes	CHECK OASIS for any applicable Technical Service Bulletins (TSBs). If a TSB exists for this concern, DISCONTINUE this test and FOLLOW the TSB instructions. If no Technical Service Bulletins (TSBs) address this concern, INSTALL a new PCM . REFER to: Powertrain Control Module (PCM) (303-14A Electronic Engine Controls - 2.0L Duratec-HE (125kW/170PS) - MI4, Removal and Installation).
No	The system is operating correctly at this time. The concern may have been caused by module connections. ADDRESS the root cause of any connector or pin issues.

Component Test(s)

Starter Motor - Positive Circuit Test

WARNING: Before beginning any service procedure in this section, refer to Safety Warnings in section 100-00 General Information. Failure to follow this instruction may result in serious personal injury.

REFER to: Health and Safety Precautions (100-00 General Information, Description and Operation).

NOTE: *Always make the digital multimeter connection at the component terminal rather than at the wiring end of the connector. Making a connection at the wiring end of the connector could result in false readings because the meter will not pick up a high resistance between the wiring connector and component.*

1. Make sure the battery is fully charged.
   REFER to: Battery (414-01 Battery, Mounting and Cables, Diagnosis and Testing).

2. Perform a battery drain test.
   REFER to: Battery Drain Check (414-01 Battery, Mounting and Cables, General Procedures).

3. Connect a remote starter switch between starter solenoid “S” terminal and the battery positive terminal.

4. Connect the digital multimeter positive lead to the battery positive post. Connect the negative lead to the starter solenoid "M" terminal.

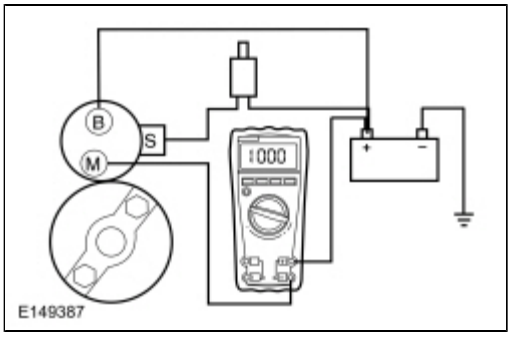

5. Place gear select lever in Park or Neutral.

6. Engage the remote starter switch. Read and record the voltage. The voltage reading should be 0.5 volt or less.

7. If the voltage reading is 0.5 volt or less, perform Starter Motor - Ground Circuit Test in this section.

8. A voltage reading greater than 0.5 volt, this is an indication of excessive resistance in the connections, the positive battery cable or in the starter solenoid. Remove the cables from the solenoid "B", "S" and "M" terminals. Clean the cables and connections and reinstall the cables to the correct terminals. Repeat Steps 3 through 6.

9. If the voltage reading is still greater than 0.5 volt when checked at the "M" terminal, move the digital multimeter negative lead to the starter solenoid “B” terminal and repeat Step 5.

10. If the voltage reading at the "B" terminal is lower than 0.5 volt, the concern is in the connections at the starter solenoid or in the solenoid contacts. Install a new starter motor.
    REFER to: Starter Motor (303-06A Starting System - 2.0L Duratec-HE (125kW/170PS) - MI4, Removal and Installation).

11. If the voltage reading taken at the solenoid "B" terminal is greater than 0.5 volt after cleaning the cables and connections at the solenoid, the concern is in the positive battery cable connection or in the positive battery cable itself. Clean the positive battery cable connection. If this does not resolve the concern, install a new positive battery cable.
    REFER to: Battery Cables - 2.0L Duratec-HE (125kW/170PS) - MI4 (414-01 Battery, Mounting and Cables, Removal and Installation).

Starter Motor - Ground Circuit Test

WARNING: Before beginning any service procedure in this section, refer to Safety Warnings in section 100-00 General Information. Failure to follow this instruction may result in serious personal injury.

REFER to: Health and Safety Precautions (100-00 General Information, Description and Operation).

A slow cranking condition can be caused by resistance in the ground or return portion of the cranking circuit. This procedure will check the voltage drop in the ground circuit.

1. Connect a remote starter switch between starter solenoid "S" terminal and the battery positive terminal.
2. Connect the digital multimeter positive lead to the starter motor housing (the connection must be clean and free of rust or grease). Connect the negative lead to the negative battery terminal.
3. Place gear select lever in Park or Neutral.
4. Engage the remote starter switch and crank the engine. Read and record the voltage reading. The reading should be 0.5 volt or less.

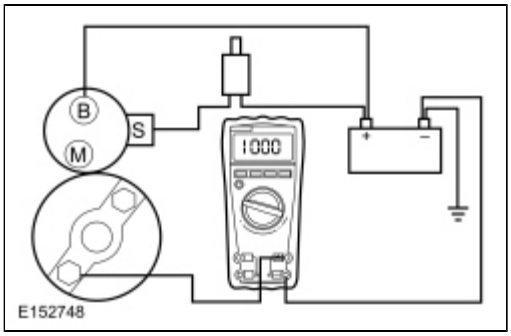

5. If the voltage reading is greater than 0.5 volt, clean the negative cable connections at the battery, the body ground connections and the starter ground connection. Retest.
6. If the voltage reading is greater than 0.5 volt, install a new negative battery cable.
   REFER to: Battery Cables - 2.0L Duratec-HE (125kW/170PS) - MI4 (414-01 Battery, Mounting and Cables, Removal and Installation).
7. If the voltage reading is less than 0.5 volt and the engine still cranks slowly, install a new starter motor.
   REFER to: Starter Motor (303-06A Starting System - 2.0L Duratec-HE (125kW/170PS) - MI4, Removal and Installation).

Copyright © Ford Motor Company

Starter Motor Drive Gear and Flywheel Ring Gear Inspection

WARNING: Before beginning any service procedure in this section, refer to Safety Warnings in section 100-00 General Information. Failure to follow this instruction may result in serious personal injury.

1. Refer to: Health and Safety Precautions (100-00 General Information, Description and Operation).

2. Remove the starter motor.
   Refer to: Starter Motor (303-06A Starting System - 2.0L Duratec-HE (125kW/170PS) - MI4, Removal and Installation).

3. Visual check. Check the wear patterns on the starter drive gear and the flywheel or flexplate ring gear. If the wear pattern is normal, install the starter motor.
   Refer to: Starter Motor (303-06A Starting System - 2.0L Duratec-HE (125kW/170PS) - MI4, Removal and Installation).

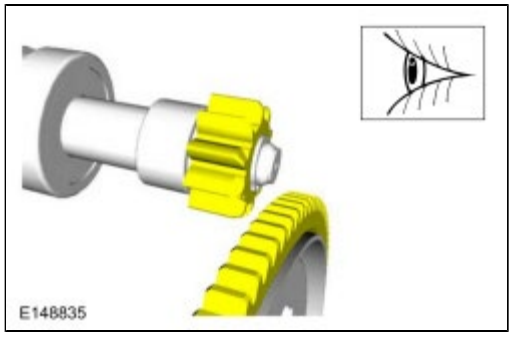

4. If the starter drive gear and the flywheel or flexplate ring gear are not fully meshing and the gears are scored or damaged, install a new starter motor.
   Refer to: Starter Motor (303-06A Starting System - 2.0L Duratec-HE (125kW/170PS) - MI4, Removal and Installation).

5. If necessary, install a new flywheel or flexplate.
   Refer to: Flywheel (303-01A Engine - 2.0L Duratec-HE (125kW/170PS) - MI4, Removal and Installation).
   Refer to: Flexplate (303-01A Engine - 2.0L Duratec-HE (125kW/170PS) - MI4, Removal and Installation).

Copyright © Ford Motor Company

Starter Motor

Removal

WARNING: Before beginning any service procedure in this section, refer to Safety Warnings in section 100-00 General Information. Failure to follow this instruction may result in serious personal injury.

NOTE: *Removal steps in this procedure may contain installation details.*

1. Refer to: Health and Safety Precautions (100-00 General Information, Description and Operation).
2. Refer to: Jacking and Lifting - Overview (100-02 Jacking and Lifting, Description and Operation).
3. Refer to: Battery Disconnect and Connect (414-01 Battery, Mounting and Cables, General Procedures).
4. 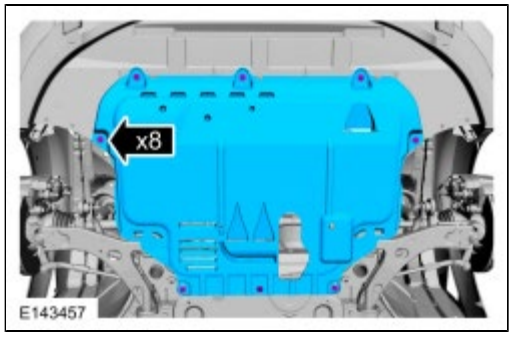

5.
   1. *Torque* : 6 Nm
   2. *Torque* : 12 Nm

   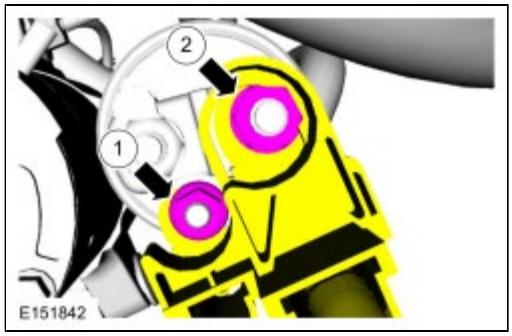

6. 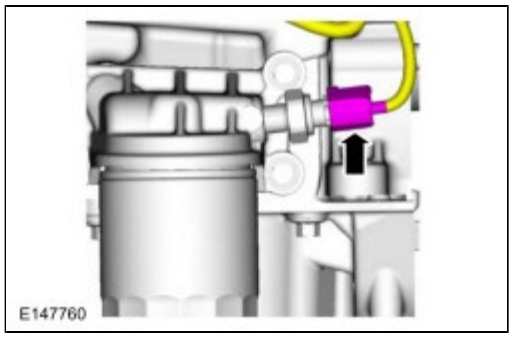

7.
    2. *Torque* : 11 Nm

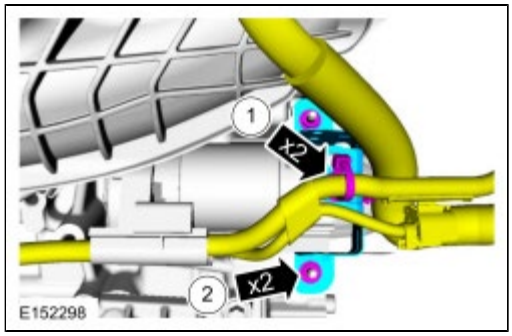

8. *Torque* : 35 Nm

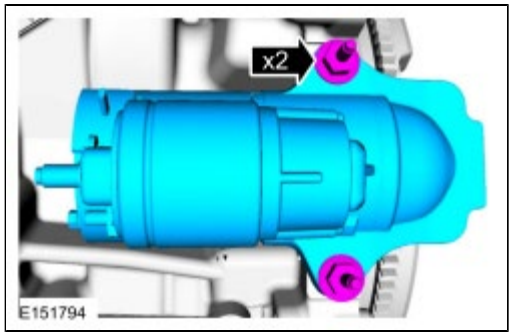

Installation

1. To install, reverse the removal procedure.

Copyright © Ford Motor Company

Intake Air Distribution and Filtering - Overview

Overview

The air intake system cleans intake air with a replaceable, dry-type engine Air Cleaner (ACL) element made of treated, pleated paper. A new Air Cleaner (ACL) element must be installed periodically as scheduled. Engine performance and fuel economy are adversely affected when maximum restriction of the Air Cleaner (ACL) element is reached.

The air intake system measures airflow and air temperature with the MAF sensor.

Copyright © Ford Motor Company

Intake Air Distribution and Filtering

Engine Diagnostic Information

Diagnostics in this manual assume a certain skill level and knowledge of Ford-specific diagnostic practices. For information about these,
REFER to: Diagnostic Methods (100-00 General Information, Description and Operation).

For PCM DTC ,
REFER to: Electronic Engine Controls (303-14A Electronic Engine Controls - 2.0L Duratec-HE (125kW/170PS) - MI4, Diagnosis and Testing).

For driveability symptoms without DTC , Refer to Powertrain Control/Emissions Diagnosis (PC/ED) manual. See Section 3, Symptom Charts.

Copyright © Ford Motor Company

Air Cleaner Outlet Pipe

Removal

1. **WARNING: Before beginning any service procedure in this section, refer to Safety Warnings in section 100-00 General Information. Failure to follow this instruction may result in serious personal injury.**

   Refer to: Health and Safety Precautions (100-00 General Information, Description and Operation).

NOTE: *Removal steps in this procedure may contain installation details.*

2.
   1. Refer to: Quick Release Coupling (310-00A Fuel System - General Information, General Procedures).
   2. *Torque* : 3 Nm

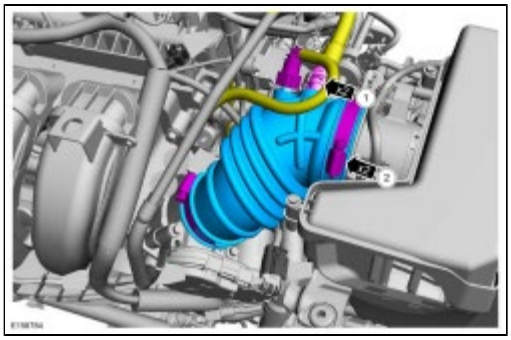

Installation

1. To install, reverse the removal procedure.

Copyright © Ford Motor Company

Exhaust System - Overview

Overview

NOTICE: Do not use leaded fuel in a vehicle equipped with a catalytic converter. In a vehicle that is continually misfueled, the lead in the fuel will be deposited in the catalytic converter and completely blanket the catalyst. Lead reacts with platinum to "poison" the catalyst. Continuous use of leaded fuel can destroy the catalyst and render the catalytic converter useless. The addition of lead to the catalytic converter can also solidify the catalyst, causing excessive back pressure in the exhaust system and possibly causing engine damage.

NOTICE: Extremely high temperatures of 1,100°C (2,012°F) or above due to misfiring or an over-rich fuel/air mixture will cause the ceramic substrate to sinter or burn, destroying the catalytic converter. Do not continue to operate the vehicle if the engine is misfiring, there is a power loss or other unusual operating conditions, such as engine overheating and backfiring.

NOTICE: Do not use oil or grease-based lubricants on the isolators. These lubricants may cause deterioration of the rubber. This can lead to separation of the isolator from the exhaust hanger bracket during vehicle operation.

NOTE: *The production muffler and tailpipe assembly is one-piece construction. The service muffler and tailpipe is 3-piece construction for Partial Zero Emissions Vehicle (PZEV) and 2-piece construction for non-Partial Zero Emissions Vehicle (PZEV).*

The exhaust system provides an exit for exhaust gases and reduces engine noise by passing exhaust gases through the catalytic converters and a muffler assembly. The catalytic converters also play a major role in reducing air pollutants.

The exhaust system consists of:

- a one-piece catalytic converter manifold with exhaust flexible pipe.
- a resonator.
- a underbody catalyst assembly (Partial Zero Emissions Vehicle (PZEV) only).
- a muffler and tailpipe assembly with isolators.

The catalytic converter plays a major role in the emission control system. The catalytic converter operates as a gas reactor. Its catalytic function is to speed the heat-producing chemical reaction of components in the exhaust gases in order to reduce air pollutants.

The catalyst material inside the catalytic converter consists of a ceramic substrate.

The catalytic converter is designed to provide a long life. No maintenance is necessary for the catalytic converter.

Sound insulators and shields, attached to the underbody, protect the vehicle from exhaust system heat and should be inspected at regular intervals to make sure they are not dented or out of position. If a sound insulator and shield is damaged or shows evidence of deterioration, install a new insulator and shield. The sound insulators and shields for the muffler, muffler pipe, resonator and catalytic converter pipe are installed separately.

Some exhaust fasteners must be discarded and new ones installed as indicated in the procedures. Also, any damaged or heavily corroded fasteners should be discarded and new ones installed. Some exhaust fasteners are of a prevailing torque design. Use only new fasteners with the same part number as the original. Torque values must be used as specified during reassembly to make sure of correct retention of exhaust components.

Copyright © Ford Motor Company

Exhaust System

Symptom Chart(s)

Symptom Chart: Symptom Chart - Exhaust System

Diagnostics in this manual assume a certain skill level and knowledge of Ford-specific diagnostic practices. for information regarding Ford-specific diagnostic practices.

Verify the customer concern and then inspect the components of the exhaust system for obvious signs of damage or other mechanical concerns using the following chart.

Visual Inspection Chart - Mechanical

Mechanical
• Exhaust pipe pinched or crushed • Damaged muffler • Broken or damaged exhaust hanger brackets • Damaged catalytic converter • Cracked exhaust manifold • Loose or damaged heat shields

Verify the exhaust system is installed correctly, with clamps correctly located and tightened to specifications. If the fault is not visually evident, determine the symptom. GO to Symptom Chart below or

Symptom Chart

Condition	Possible Sources	Actions
Vehicle has low or no power — vehicle performance complaint	• Exhaust pipe pinched or crushed • Damaged catalytic converter • Loose obstruction in exhaust	REFER to the Powertrain Control/Emissions Diagnosis (PC/ED) manual.
	Restricted exhaust (possible frozen condensate in muffler)	CHECK drain holes for foreign material. PARK the vehicle inside to thaw. TEST the vehicle for normal operation. If the concern is still present, REFER to the Powertrain Control/Emissions Diagnosis (PC/ED) manual.
Burning smell — usually	• Foreign	INSPECT the exhaust system for foreign material or missing heat shields.

occurs at idle, with possible traces of smoke	material caught in exhaust system • Missing heat shields	REPAIR or INSTALL new components as necessary. TEST the system for normal operation after the repair.
Odor — described as a sulfur or rotten egg smell	• Catalytic converter • Excessive sulfur content in fuel	At times, a slight sulfur smell is normal for catalytic converters. The cause is the sulfur content in the gasoline being used. ADVISE the customer no repair is required.
	• Rich fuel conditions • Misfire conditions	REFER to the Powertrain Control/Emissions Diagnosis (PC/ED) manual.
Visible rust on surface of exhaust pipes	Catalytic converter/exhaust system	Surface rust is a characteristic of materials used on exhaust systems. Exposure to heat or road salt may result in surface rust. INSPECT for perforations. If there are no perforations, the condition is normal.

Symptom Chart: Symptom Chart - NVH

Diagnostics in this manual assume a certain skill level and knowledge of Ford-specific diagnostic practices. for information regarding Ford-specific diagnostic practices.

NOTE: *Noise, Vibration, or Harshness (NVH) symptoms should be identified using the diagnostic tools that are available. For a list of these tools, an explanation of their uses and a glossary of common terms, Since it is possible any one of multiple systems may be the cause of a symptom, it may be necessary to use a process of elimination type of diagnostic approach to pinpoint the responsible system. If this is not the causal system for the symptom, for the next likely system and continue diagnosis.*

Symptom Chart

Condition	Possible Sources	Actions
Rattle, squeaks or buzz type noise — from the bottom of the vehicle	Loose or damaged heat shield	INSPECT the exhaust system for loose or missing heat shields or foreign material trapped between the heat shields and the exhaust system components. If any heat shields are loose, INSTALL worm gear clamp 7L5Z-5A231-AA and tighten to . If the heat shields are missing, INSTALL new heat shields or exhaust system components as necessary. If a rattle, noise or buzz condition persists, INSTALL a new heat shield or component as necessary. TEST the system for normal operation after the repair.
	Loose or damaged exhaust isolators	VERIFY the exhaust isolators are correctly installed. INSPECT the exhaust isolators for wear or damage. INSTALL new isolators as necessary. TEST the system for normal operation after the repair.
	Damaged exhaust isolator hanger bracket	INSPECT the exhaust system components for damage or broken hangers. INSTALL new components as necessary. CHECK for loose or damaged exhaust hanger brackets or fasteners. TIGHTEN the bolts to specification or INSTALL new components as necessary. TEST the system for normal operation after the repair.
	Loose or damaged catalytic	MOVE the exhaust system to simulate the bouncing action of the vehicle, checking for exhaust-to-body contact while moving the exhaust system. Using a rubber mallet, TAP on the exhaust components to duplicate the noise concern. Lightly TAP on the

	converter or muffler	muffler, then the catalytic converter. DETERMINE if there are loose or broken baffles in the muffler or a loose or broken element in the catalytic converter. REPAIR or INSTALL new components as necessary. TEST the system for normal operation after the repair.
	Exhaust grounded to chassis	INSPECT for signs of exhaust components-to-body contact. If necessary, CARRY OUT the Exhaust System Alignment procedure. REFER to: Exhaust System Alignment (309-00A Exhaust System - 2.0L Duratec-HE (125kW/170PS) - MI4, General Procedures).
Drone or clunk type noise — from the bottom of the vehicle	Loose or damaged exhaust isolators	INSPECT the exhaust isolators for wear or damage. INSTALL new isolators as necessary. TEST the system for normal operation after the repair.
	Exhaust grounded to chassis	INSPECT for signs of exhaust components-to-body contact. If necessary, CARRY OUT the Exhaust System Alignment procedure. REFER to: Exhaust System Alignment (309-00A Exhaust System - 2.0L Duratec-HE (125kW/170PS) - MI4, General Procedures).
Whistles, boom, hum or ticking type noise — noise tends to change as the engine warms. The noises are often accompanied by exhaust fumes	Exhaust system leak	INSPECT the entire exhaust system for leaks. CHECK for punctures, loose or damaged clamps/fasteners, gaskets, sensors or broken welds. EXAMINE the chassis for grayish-white or black exhaust soot, which indicates exhaust leakage at that point. To magnify a small leak, have an assistant hold a shop towel over the tail pipe outlet while listening for a leak. REPAIR or INSTALL new components as necessary. TEST the system for normal operation after the repair.
	Catalytic converter	MOVE the exhaust system to simulate the bouncing action of the vehicle, checking for exhaust-to-body contact while moving the exhaust system. Using a rubber mallet, TAP on the exhaust components to duplicate the noise concern. Lightly TAP on the muffler and the catalytic converter. DETERMINE if there are loose or broken baffles in the muffler, or a loose or broken element in the catalytic converter. REPAIR or INSTALL new components as necessary. TEST the system for normal operation after the repair.
	Exhaust muffler/resonator drain hole enlarged due to corrosion	CONFIRM the drain holes are the noise source. INSTALL new components as necessary. TEST the system for normal operation after the repair.
Hissing or rushing noise — high frequency sound. Vehicle performance is unaffected	Exhaust system. Exhaust flow through pipes	CHECK the exhaust system for leaks. Using a rubber mallet, TAP on the exhaust components to duplicate the noise concern. Lightly TAP on the muffler and the catalytic converter. Determine if there are loose or broken baffles in the muffler, or a loose or broken element in the catalytic converter. REPAIR or INSTALL new components as necessary. TEST the system for normal operation after the repair.
Pinging noise — occurs when exhaust system is hot, engine turned off	Catalytic converter/exhaust system	Cool down pinging is a result of the exhaust system expanding and contracting during heating and cooling. This is a normal condition.
Vibration — occurs at idle and at low speeds. Also accompanied by a clunk or buzz type noise	Loose or damaged exhaust isolator	INSPECT the exhaust isolators for wear or damage. INSTALL new isolators as necessary. TEST the system for normal operation after the repair.
	Loose or damaged exhaust isolator hanger brackets	INSPECT the exhaust isolator hanger brackets for wear or damage. INSTALL or REPAIR as necessary. TEST the system for normal operation after the repair.
	Exhaust system grounded to chassis	CARRY OUT the Exhaust System Alignment procedure. REFER to: Exhaust System Alignment (309-00A Exhaust System - 2.0L Duratec-HE (125kW/170PS) - MI4, General Procedures).
Engine drumming noise — normally accompanied by	Damaged or misaligned exhaust system	INSPECT the exhaust system for loose or damaged fasteners or isolators. CARRY OUT the Exhaust System Alignment procedure. REFER to: Exhaust System Alignment (309-00A Exhaust System - 2.0L Duratec-HE

vibration		(125kW/170PS) - MI4, General Procedures).
Sputter type noise — noise worse when cold, lessens or disappears when the vehicle is at operating temperature	Damaged or worn exhaust system	INSPECT the exhaust system for leaks or damage. REPAIR as necessary. TEST the system for normal operation after the repair.
Thumping noise — from the bottom of the vehicle, worse during acceleration	Misaligned exhaust system	CHECK the exhaust system to chassis clearance. CHECK the exhaust system isolators for damage. REPAIR as necessary. TEST the system for normal operation after the repair.
Engine vibration — is felt with increases and decreases in engine rpm	Strain on exhaust system isolators	CARRY OUT the Exhaust System Alignment procedure. REFER to: Exhaust System Alignment (309-00A Exhaust System - 2.0L Duratec-HE (125kW/170PS) - MI4, General Procedures). REPAIR as necessary. TEST the system for normal operation after the repair.
Drumming noise — occurs inside the vehicle during idle or high idle, hot or cold. Very low-frequency drumming is very rpm dependent	Exhaust system vibration excites the body resonances inducing interior noise	GO to Pinpoint Test A

Pinpoint Test(s)

Drumming Noise

PINPOINT TEST A : DRUMMING NOISE

A1 CHECK THE EXHAUST SYSTEM

- Start the engine.
- Increase the engine rpm until the noise is the loudest. Note the engine rpm.
- Ignition OFF.
- Add approximately 9 kg (20 lb) of weight to the exhaust system. First, place the weight at the tail pipe and test. Repeat at the front pipe.
- Start the engine.
- Increase the engine rpm and listen for the drumming noise. Note the engine rpm if the noise occurs.
- Ignition OFF.
- Remove the weight from the exhaust system.

Is the noise/vibration reduced or eliminated, or does the noise/vibration occur at a different rpm?

Yes	REFER to: Exhaust System Alignment (309-00A Exhaust System - 2.0L Duratec-HE (125kW/170PS) - MI4, General Procedures). TEST the system for normal operation.
No	CONDUCT diagnosis on other suspect systems. Repair as neccessary.

Copyright © Ford Motor Company

Catalytic Converter

Removal

WARNING: Before beginning any service procedure in this section, refer to Safety Warnings in section 100-00 General Information. Failure to follow this instruction may result in serious personal injury.

1. Refer to: Health and Safety Precautions (100-00 General Information, Description and Operation).
2. With the vehicle in NEUTRAL, position it on a hoist.
   Refer to: Jacking and Lifting - Overview (100-02 Jacking and Lifting, Description and Operation).
3. 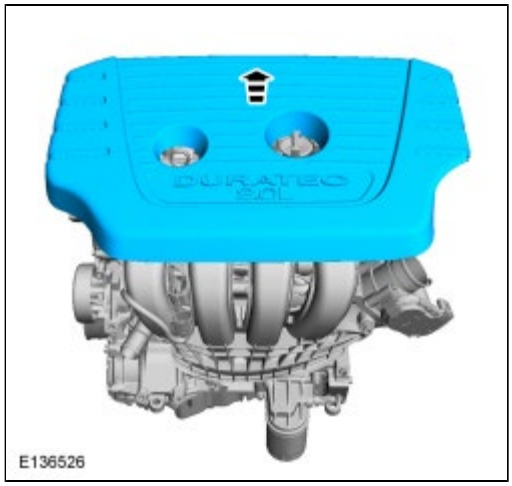

4. 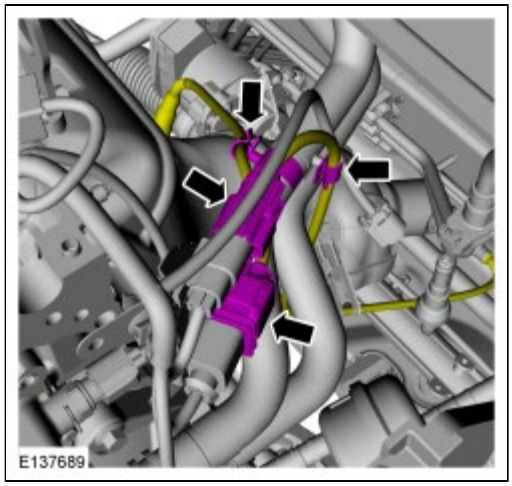

5. *Torque* : 10 Nm

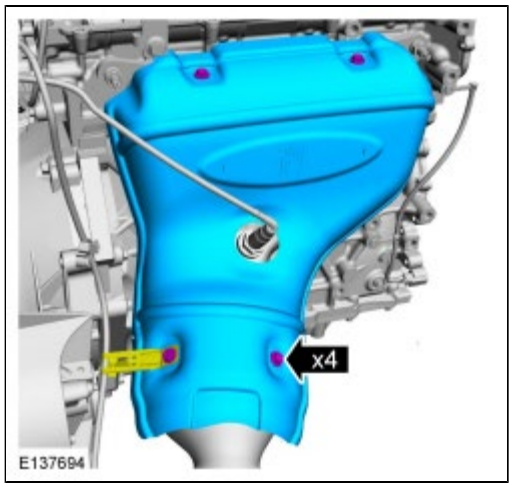

6. **NOTICE: Failure to tighten the catalytic converter manifold nuts to specification a second time may cause the converter to develop an exhaust leak.**

   NOTE: *Discard the nuts.*

   NOTE: *Always install new fasteners and gaskets as indicated. Clean flange faces prior to new gasket installation to make sure of proper sealing.*

   During installation, install 5 new catalytic converter manifold-to-cylinder head nuts and tighten in 2 stages in the sequence shown.
   Torque : 55 Nm

7. *Torque* : 55 Nm

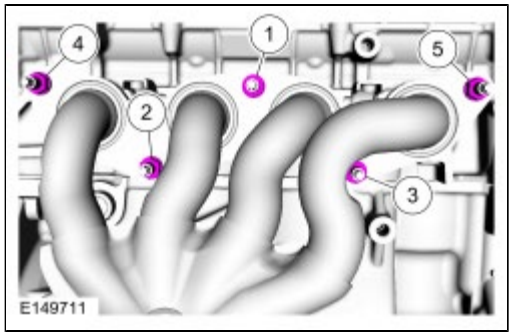

8. Remove the front subframe.
   Refer to: Front Subframe (502-00 Uni-Body, Subframe and Mounting System, Removal and Installation).

9. **NOTICE: Failure to tighten the catalytic converter manifold-to-muffler and tailpipe nuts to specification in this sequence may cause the catalytic converter manifold-to-muffler and tailpipe flange to develop an exhaust leak.**

   NOTE: *Always install new fasteners and gaskets as indicated. Clean flange faces prior to new gasket installation to make sure of proper sealing.*

   During installation, install 2 new catalytic converter manifold-to-muffler and tailpipe nuts and tighten in 2 stages in the sequence shown.
   Torque : 48 Nm

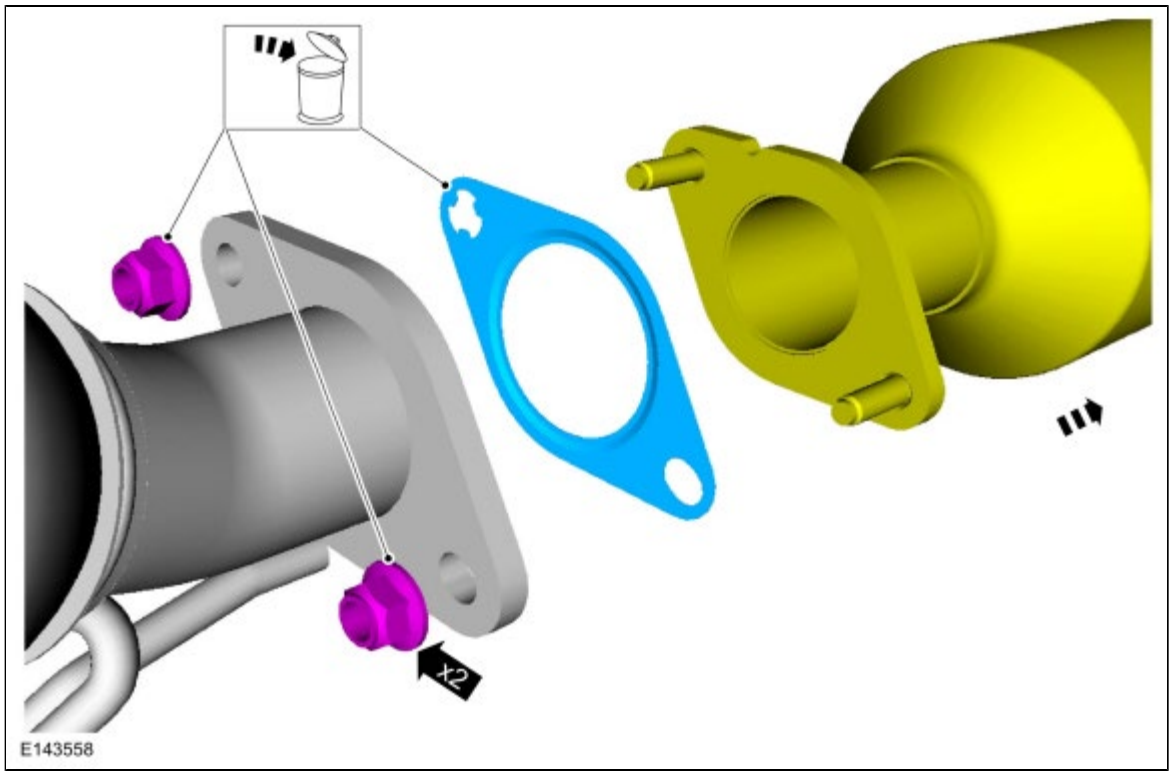

10. *Torque* : 25 Nm

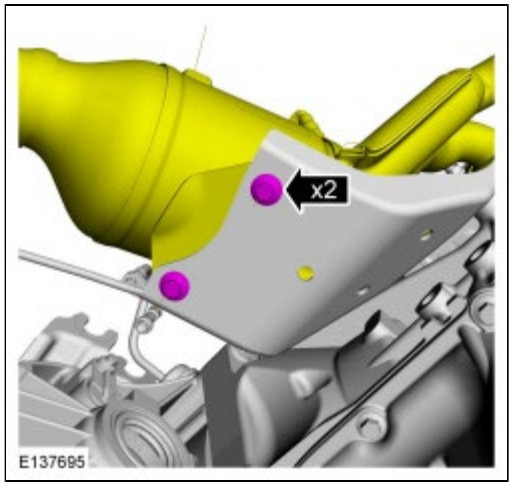

11. *Torque* : 17 Nm

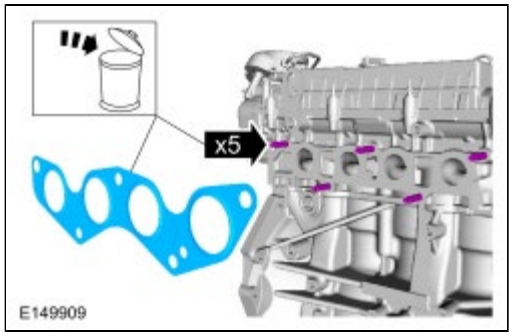

Installation

1. To install, reverse the removal procedure.

Copyright © Ford Motor Company

Specifications

General Specifications

Item	Specification
Fuel Capacity	12.40 gal (46.94 L)
Fuel Pressure	
Engine running - 2.0L GTDI	55.1 –79.7 psi (380 –550 kPa)
Key ON Engine OFF (KOEO)	58.0 psi (400 kPa)
Engine running - 2.0L GDI	79.7 psi (550 kPa)
Key ON Engine OFF (KOEO)	72.5 psi (500 kPa)

Copyright © Ford Motor Company

Fuel System - Overview

Fuel System

Overview

The fuel system consist of:

- a Closed Loop Pressure Control System (CLPCS).
- a standard fuel tank.
- fuel, vapor and brake tubes in an integrated bundle assembly attached to the underside of the vehicle by retaining clips.
- a FTP sensor (part of the fuel vapor tube assembly).
- a lifetime fuel filter (serviced as part of the FP module).
- a FP module that supplies fuel under pressure to the high pressure FP.
- a serviceable fuel level sender mounted on the FP module.
- an Easy Fuel™ fuel tank filler pipe assembly, which cannot be modified in any way and is serviced only by the installation of a new fuel tank filler pipe assembly.
- a supplemental refueling adapter located in the spare tire compartment.

FP Shut-off Feature

In the event of a moderate to severe collision, the vehicle is equipped with a FP shut-off feature that is initiated by the event notification signal.

Copyright © Ford Motor Company

Fuel System

Symptom Chart(s)

Symptom Chart: Fuel System

Diagnostics in this manual assume a certain skill level and knowledge of Ford-specific diagnostic practices.
REFER to: Diagnostic Methods (100-00 General Information, Description and Operation).
for information regarding Ford-specific diagnostic practices.

NOTE: *The following procedure diagnoses a slow to fill concern only. For all other concerns, refer to Refer to Powertrain Control/Emissions Diagnosis (PC/ED) manual.*

Symptom Chart

Condition	Possible Sources	Actions
Slow to fill	• Fuel tank filler pipe • Fuel tank filler pipe vent tube, if equipped • Evaporative Emission (EVAP) system • Fuel tank inlet check valve (part of the fuel tank) • Fuel level vent valve (part of the fuel tank)	Refer to Diagnostic Routine A: Slow to Fill. GO to Pinpoint Test A A
All other fuel system concerns	Fuel system components	Refer to Powertrain Control/Emissions Diagnosis (PC/ED) manual.

Diagnostic Routine(s)

Slow to Fill

Normal Operation and Fault Conditions

Under normal operation, fuel should flow at a steady rate through the fuel tank filler pipe into the fuel tank. As fuel enters the fuel tank air is vented through the filler pipe or the ORVR system.

PINPOINT TEST A A : SLOW TO FILL

A1 A1 CHECK COMPONENTS FOR SIGNS OF DAMAGE

• Visually inspect the following components for signs of damage:
  • Fuel tank filler pipe
  • Fuel tank filler pipe vent tube, if equipped
  • EVAP system
  • Fuel tank inlet check valve (part of the fuel tank)
  • Fuel level vent valve (part of the fuel tank)
 	
Was the cause of the concern found?

Yes	REPAIR or INSTALL new components to correct the concern.
No	GO to A2 A2

A2 A2 CHECK THE FUEL TANK FILLER PIPE ASSEMBLY FOR BLOCKAGE OR RESTRICTION

- Remove the fuel tank filler pipe assembly.
  REFER to: Fuel Tank Filler Pipe (310-01A Fuel Tank and Lines, Removal and Installation).
- Inspect the fuel tank filler pipe and fuel tank filler pipe vent tube (if equipped) for a blockage or restriction.

Is the fuel tank filler pipe or fuel tank filler pipe vent tube (if equipped) blocked or restricted?

Yes	If possible, REPAIR the blockage or restriction. If the blockage or restriction cannot be repaired, INSTALL a new fuel tank filler pipe or fuel tank filler pipe vent tube.
No	GO to A3 A3

A3 A3 CHECK THE FUEL TANK INLET CHECK VALVE

- Inspect the fuel tank inlet check valve for restriction or sticking.

Is the fuel tank filler pipe inlet check valve restricted or sticking?

Yes	If possible, REPAIR the restriction. If the restriction cannot be repaired, INSTALL a new fuel tank. REFER to: Fuel Tank (310-01A Fuel Tank and Lines, Removal and Installation).
No	INSTALL a new fuel tank.

Copyright © Ford Motor Company

Fuel System Pressure Release

WARNING: Before beginning any service procedure in this section, refer to Safety Warnings in section 100-00 General Information. Failure to follow this instruction may result in serious personal injury.

1. Refer to: Gasoline and Gasoline-Ethanol Fuel Systems Health and Safety Precautions (100-00 General Information, Description and Operation).

2. Remove the 2 instrument panel insulator retainers and the instrument panel insulator.

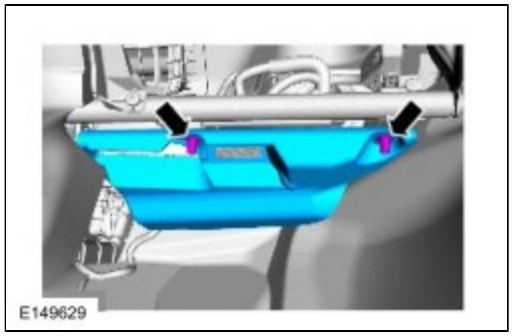

3. **NOTE:** *The Fuel Pump (FP) control module fuse is located in the Body Control Module (BCM), location F56.*

   Remove theFuel Pump (FP) control module fuse.

4. **NOTE:** *A message center warning display 'engine malfunction service now' may display on the Instrument Panel Cluster (IPC). Reset the message center by pressing the OK button on the steering wheel controls.*

   Start the engine and allow it to idle until it stalls.

5. After the engine stalls, crank the engine for approximately 20 seconds to make sure the fuel system pressure has been released.

6. Turn the ignition switch to the OFF position.

7. When fuel system service is complete, install the Fuel Pump (FP) control module fuse.

8. **NOTE:** *It may take more than one key cycle to pressurize the fuel system.*

   Cycle the ignition key and wait 3 seconds to pressurize the fuel system. Check for leaks before starting the engine.

9. Install the instrument panel insulator and retainers.

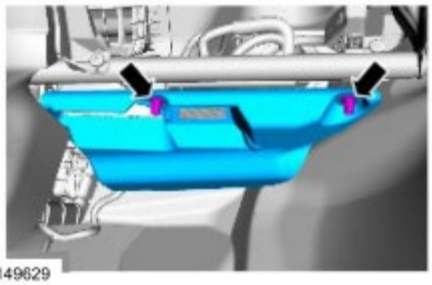

Copyright © Ford Motor Company

Fuel System Pressure Check

WARNING: Before beginning any service procedure in this section, refer to Safety Warnings in section 100-00 General Information. Failure to follow this instruction may result in serious personal injury.

1. Refer to: Gasoline and Gasoline-Ethanol Fuel Systems Health and Safety Precautions (100-00 General Information, Description and Operation).

2. Release the fuel system pressure.
   Refer to: Fuel System Pressure Release (310-00A Fuel System - General Information, General Procedures).

3. Disconnect the battery ground cable.
   Refer to: Battery Cables - 2.0L Duratec-HE (125kW/170PS) - MI4 (414-01 Battery, Mounting and Cables, Removal and Installation).

4. Disconnect the fuel tube-to-fuel jumper tube quick connect coupling. or

5. Install the Fuel Pressure Test Adapter and the Fuel Pressure Test Kit between the fuel tube and the fuel jumper tube.
   Special Tool(s) : 310-D009 (D95L-7211-A) Fuel Pressure Test Kit

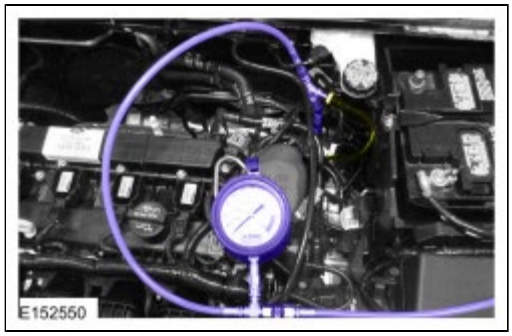

6. **NOTE:** *The Fuel Pump (FP) control module fuse was previously removed to release the fuel system pressure and must be installed to test the fuel system pressure.*

   Install the Fuel Pump (FP) control module fuse.

7. Connect the battery ground cable.
   Refer to: Battery Cables - 2.0L Duratec-HE (125kW/170PS) - MI4 (414-01 Battery, Mounting and Cables, Removal and Installation).

8. **NOTE:** *Carry out a ignition ON engine OFF visual inspection for fuel leaks prior to completing the fuel system pressure test.*

   NOTE: *After completing the fuel system pressure test, open the drain valve on the Fuel Pressure Test Kit and release any residual fuel into a suitable container prior to removing the tool.*

   Test the fuel system pressure to make sure it is within the specified range.

Copyright © Ford Motor Company

Fuel Tank Draining

WARNING: Before beginning any service procedure in this section, refer to Safety Warnings in section 100-00 General Information. Failure to follow this instruction may result in serious personal injury.

1. Refer to: Gasoline and Gasoline-Ethanol Fuel Systems Health and Safety Precautions (100-00 General Information, Description and Operation).

2. Disconnect the battery ground cable.
   Refer to: Battery Cables - 2.0L Duratec-HE (125kW/170PS) - MI4 (414-01 Battery, Mounting and Cables, Removal and Installation).

3. **NOTE:** *The supplement refueling adapter is located in the luggage compartment.*

   Install the supplemental refueling adapter and a length of semi-rigid fuel drain tube into the Easy Fuel (capless) fuel tank filler pipe.

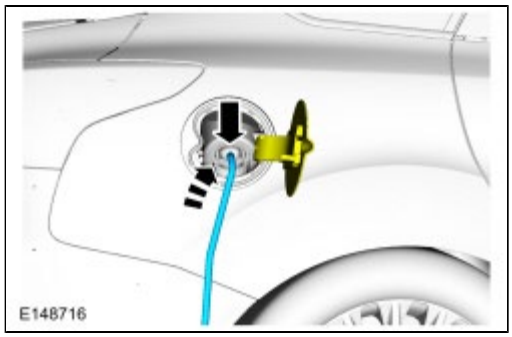

4. Attach the Fuel Tanker to the fuel drain tube and drain as much fuel as possible from the fuel tank filler pipe.

5. **NOTE:** *Some residual fuel may remain in the fuel tank filler pipe. Carefully drain into a suitable container.*

   Release the clamp and remove the fuel tank filler pipe hose from the fuel tank.

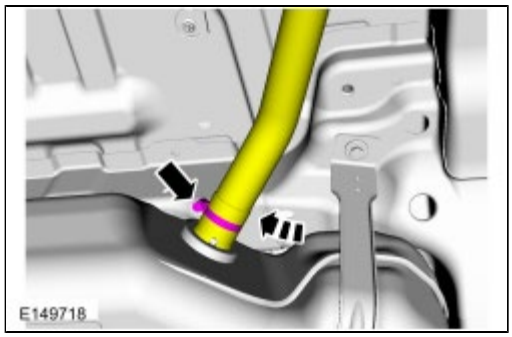

6. Insert the fuel drain tube into the fuel tank inlet spout, attach the Fuel Storage Tanker and drain as much fuel as possible from the fuel tank.

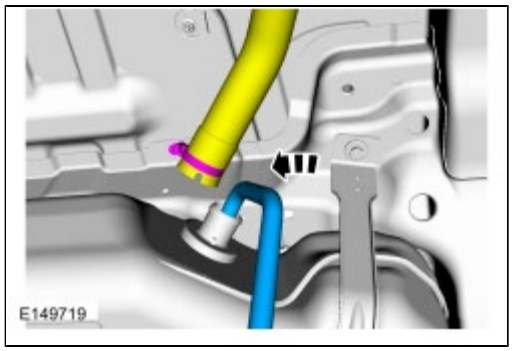

Copyright © Ford Motor Company

Spring Lock Couplings

1. If servicing a liquid fuel tube spring lock coupling, release the fuel system pressure.
   Refer to: Fuel System Pressure Release (310-00A Fuel System - General Information, General Procedures).

2. Disconnect the battery ground cable.
   Refer to: Battery Cables - 2.0L Duratec-HE (125kW/170PS) - MI4 (414-01 Battery, Mounting and Cables, Removal and Installation).

3. Install the Spring Lock Coupling Disconnect Tool on the tube and push into the spring lock coupling to release.
   Special Tool(s) : 310-S039 (T90T-9550-S) Disconnect Tool, Spring Lock Coupling

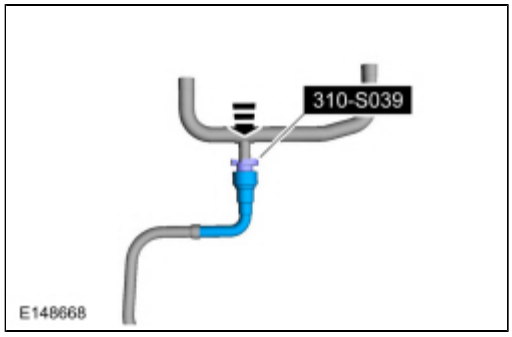

4. Separate the spring lock coupling from the tube.

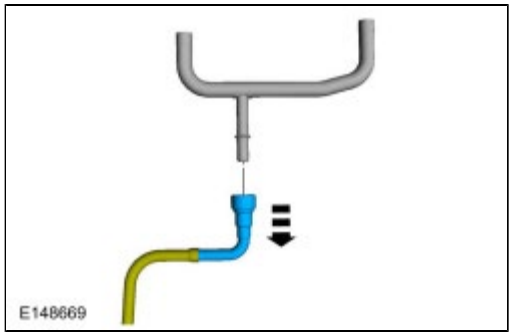

1. Align and push the spring lock coupling onto the tube until fully seated.

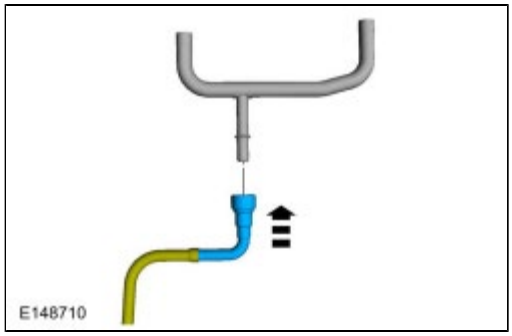

2. Pull on the coupling to make sure it is fully engaged.

3. Connect the battery ground cable.
   Refer to: Battery Cables - 2.0L Duratec-HE (125kW/170PS) - MI4 (414-01 Battery, Mounting and Cables, Removal and Installation).

Copyright © Ford Motor Company

Specifications

General Specifications

Item	Specification
Fuel tank capacity	12.40 gal (46.95 L)

Copyright © Ford Motor Company

Fuel Tank and Lines - Overview

Overview

The fuel system consists of:

- a Closed Loop Pressure Control System (CLPCS).
- a standard fuel tank.
- fuel, vapor and brake tubes in an integrated bundle assembly attached to the underside of the vehicle by retaining clips.
- a Fuel Tank Pressure (FTP) sensor (part of the fuel vapor tube assembly).
- a lifetime fuel filter (serviced as part of the Fuel Pump (FP) module).
- a Fuel Pump (FP) module that supplies fuel under pressure to the high pressure Fuel Pump (FP).
- a serviceable fuel level sender mounted on the Fuel Pump (FP) module.
- an Easy Fuel™ fuel tank filler pipe assembly, which cannot be modified in any way and is serviced only by the installation of a new fuel tank filler pipe assembly.
- a supplemental refueling adapter located in the spare tire compartment.

FP Shut-off Feature

In the event of a moderate to severe collision, the vehicle is equipped with a FP shut-off feature that is initiated by the event notification signal.

Copyright © Ford Motor Company

Fuel Tank and Lines

Symptom Chart(s)

Refer to Powertrain Control/Emissions Diagnosis (PC/ED) manual., Section 3. Symptom Charts.

Copyright © Ford Motor Company

Fuel Tank

Removal

WARNING: Before beginning any service procedure in this section, refer to Safety Warnings in section 100-00 General Information. Failure to follow this instruction may result in serious personal injury.

1. Refer to: Gasoline and Gasoline-Ethanol Fuel Systems Health and Safety Precautions (100-00 General Information, Description and Operation).

2. With the vehicle in NEUTRAL, position it on a hoist.
   Refer to: Jacking and Lifting - Overview (100-02 Jacking and Lifting, Description and Operation).

3. Release the fuel system pressure.
   Refer to: Fuel System Pressure Release (310-00B Fuel System - General Information, General Procedures).

4. Disconnect the battery ground cable.
   Refer to: Battery Cables - 2.0L Duratec-HE (125kW/170PS) - MI4 (414-01 Battery, Mounting and Cables, Removal and Installation).

5. Drain the fuel tank.
   Refer to: Fuel Tank Draining (310-00B Fuel System - General Information, General Procedures).

6. Remove the 5 nuts and position fuel tank heat shield aside.
   Torque : 5 Nm

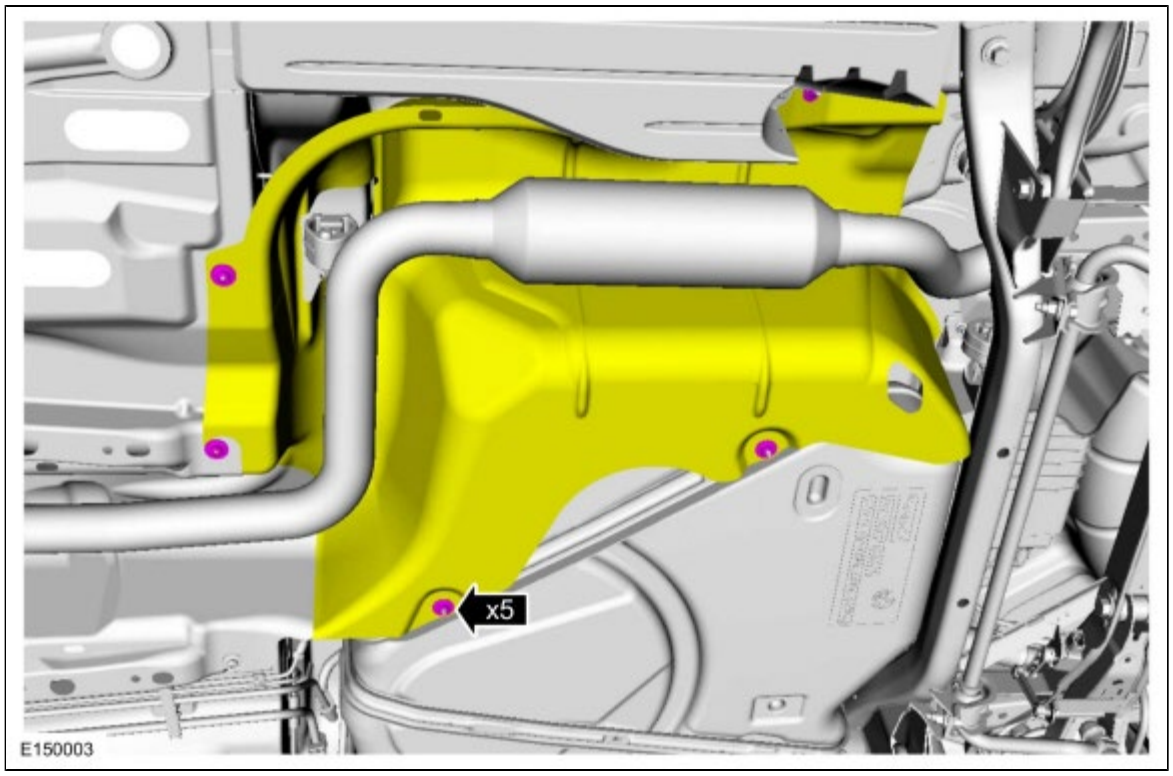

7. Disconnect the Evaporative Emission (EVAP) tube assembly-to-fuel tank tube quick release coupling and the fuel tank jumper tube-to-Fuel Pump (FP) assembly quick release coupling.
   Refer to: Quick Release Coupling (310-00B Fuel System - General Information, General Procedures).

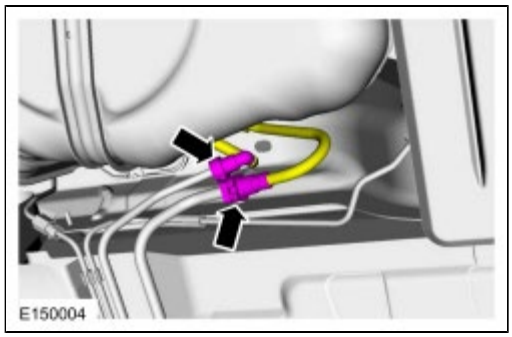

8. Disconnect the fuel vapor tube assembly-to-fuel tank quick release coupling and the vapor tube assembly-to-Evaporative Emission (EVAP) canister quick release coupling.
   Refer to: Quick Release Coupling (310-00B Fuel System - General Information, General Procedures).

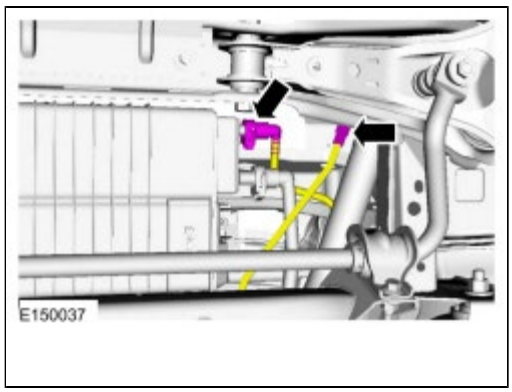

9. Loosen the hose clamp and disconnect the fuel tank filler pipe from the fuel tank.

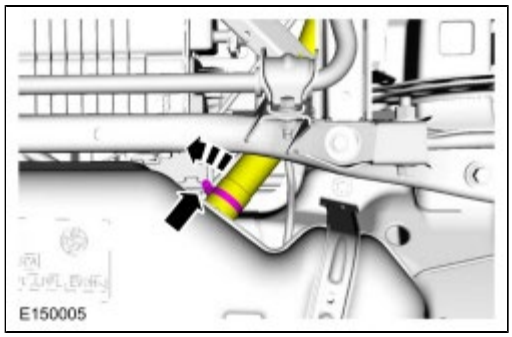

10. Position the Powertrain Jack under the fuel tank.
    General Equipment : Powertrain Jack

11. Remove the 3 fuel tank strap bolts.
    Torque : 25 Nm

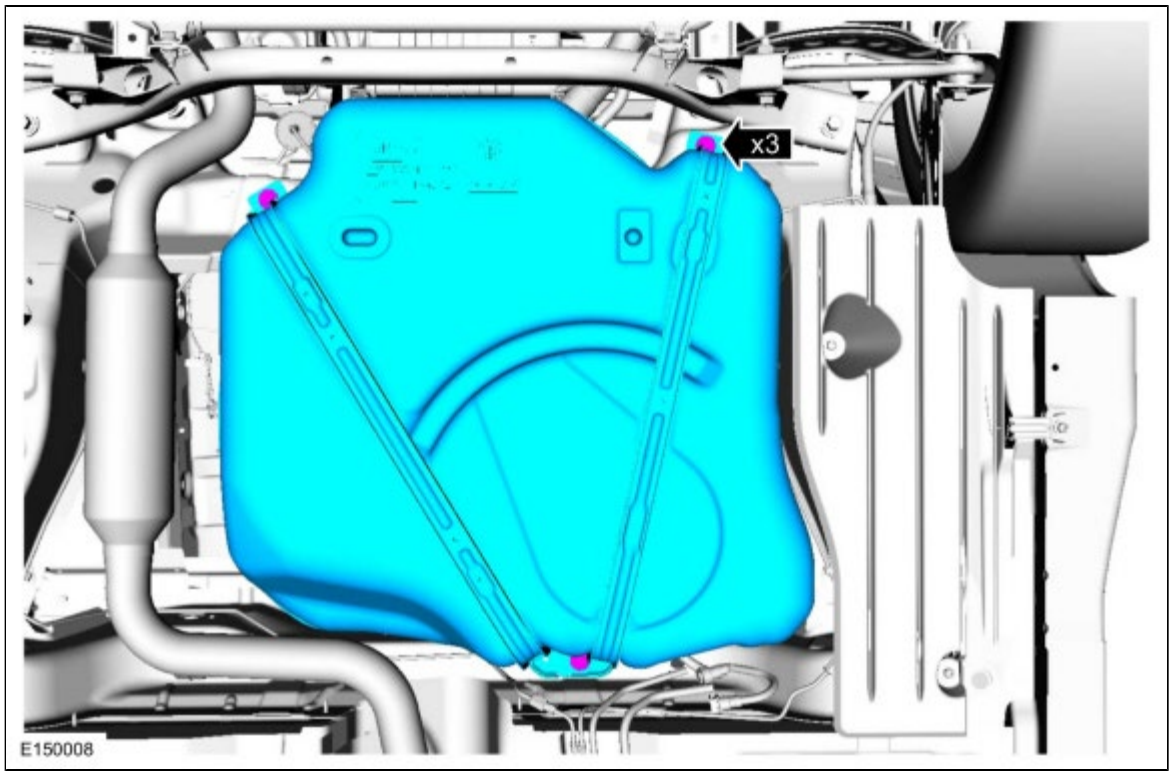

12. Partially lower the fuel tank for access.
13. Disconnect the Fuel Tank Pressure (FTP) sensor electrical connector.

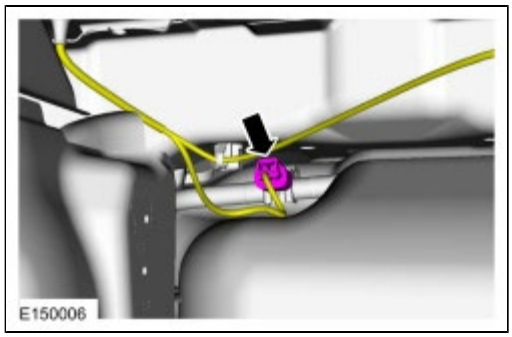

14. Disconnect the Fuel Pump (FP) module electrical connector.

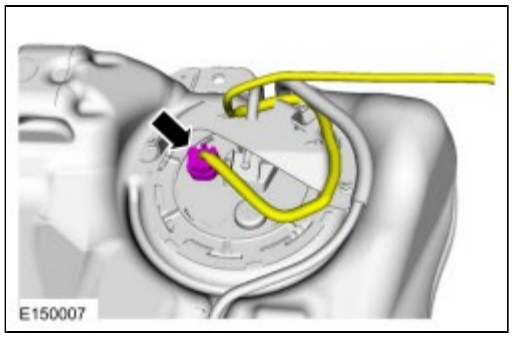

15. Lower the fuel tank.

Installation

1. To install, reverse the removal procedure.

Copyright © Ford Motor Company

Fuel Tank Filler Pipe

Removal

WARNING: Before beginning any service procedure in this section, refer to Safety Warnings in section 100-00 General Information. Failure to follow this instruction may result in serious personal injury.

1. Refer to: Gasoline and Gasoline-Ethanol Fuel Systems Health and Safety Precautions (100-00 General Information, Description and Operation).

2. With the vehicle in NEUTRAL, position it on a hoist.
   Refer to: Jacking and Lifting - Overview (100-02 Jacking and Lifting, Description and Operation).

3. Disconnect the battery ground cable.
   Refer to: Battery Cables - 2.0L Duratec-HE (125kW/170PS) - MI4 (414-01 Battery, Mounting and Cables, Removal and Installation).

4. **NOTE:** *The supplemental refueling adapter is located in the luggage compartment.*

   Install the supplemental refueling adapter and a length of semi-rigid fuel drain tube into the Easy Fuel (capless) fuel tank filler pipe.

5. **NOTE:** *If the fuel tank is completely full, this step will lower the fuel level to the fuel tank inlet.*

   Attach the Fuel Storage Tanker to the fuel drain tube and remove any residual fuel in the fuel tank filler pipe.

6. Remove the information bezel.

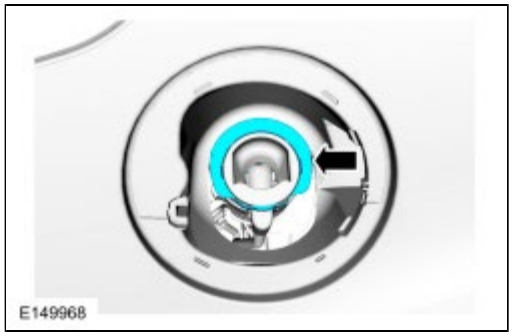

7. Remove the Right Rear (RR) wheel and tire.
   Refer to: Wheel and Tire (204-04A Wheels and Tires, Removal and Installation).

8. If equipped, remove the rear deflector.
   Torque : 2 Nm

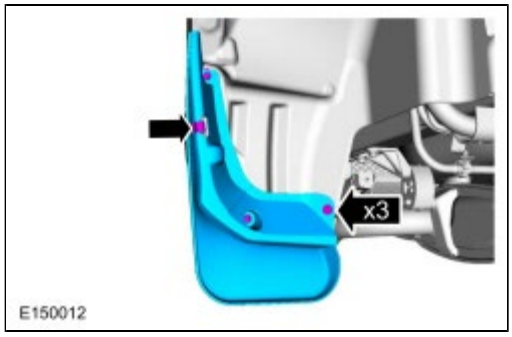

9. Remove the 6 retainers and the Right Rear (RR) fender splash shield.

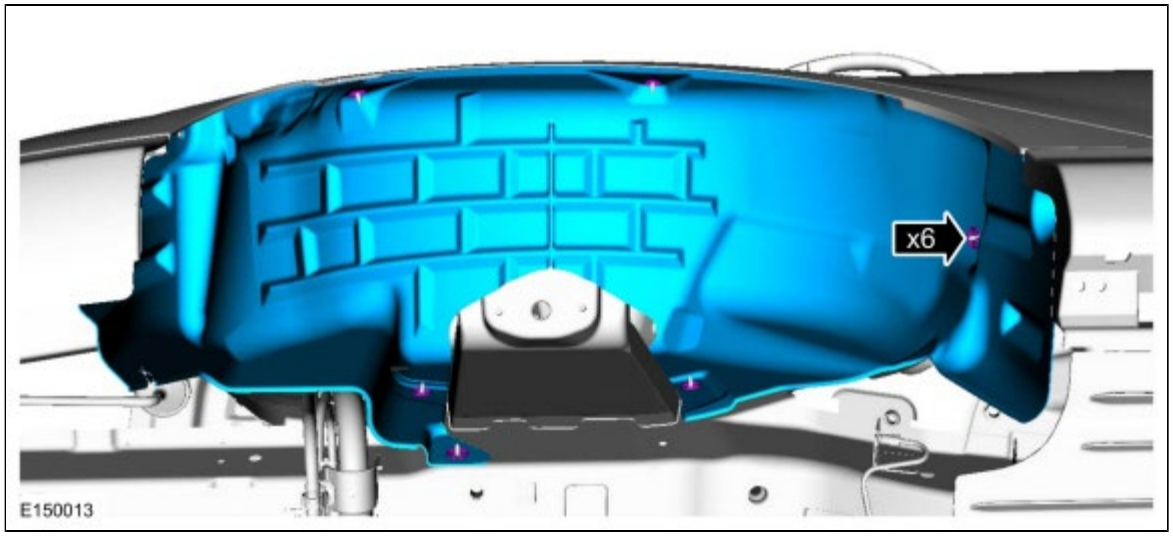

10. Disconnect the Evaporative Emission (EVAP) tube assembly-to-fuel tank filler pipe recirculation tube quick connect coupling.

11. Release the clamp and disconnect the fuel tank filler pipe from the fuel tank.
    Torque : 4 Nm

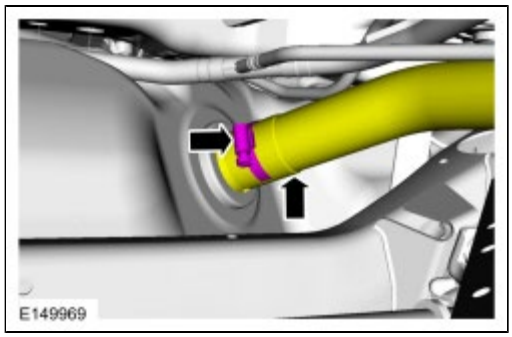

12. Disconnect the fresh air hose from the fuel tank filler pipe.

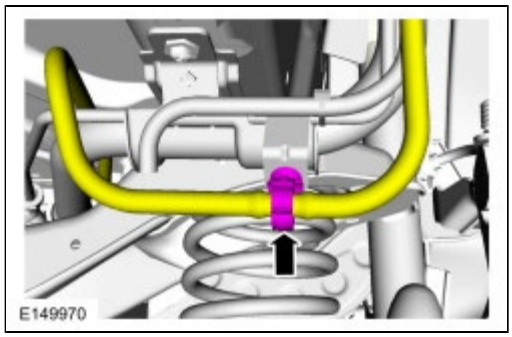

13. Remove the 2 fuel tank filler pipe bracket bolts and remove the fuel tank filler pipe from the vehicle.
    Torque : 9 Nm

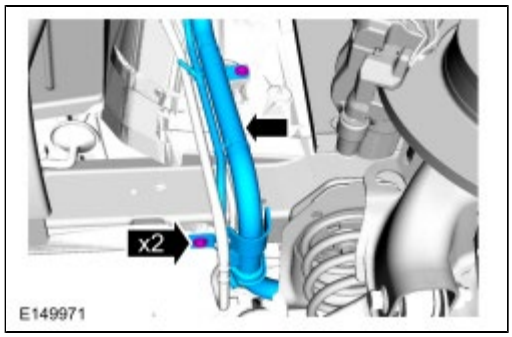

Installation

1. To install, reverse the removal procedure.

Copyright © Ford Motor Company

Fuel Pump

Removal

WARNING: Before beginning any service procedure in this section, refer to Safety Warnings in section 100-00 General Information. Failure to follow this instruction may result in serious personal injury.

1. Refer to: Gasoline and Gasoline-Ethanol Fuel Systems Health and Safety Precautions (100-00 General Information, Description and Operation).

2. Remove the fuel tank.
   Refer to: Fuel Tank (310-01A Fuel Tank and Lines, Removal and Installation).

3. **NOTE:** *Clean the Fuel Pump (FP) module connections, couplings, flange surfaces and the immediate surrounding area of any dirt or foreign material.*

   Detach the fuel vapor tube, disconnect the fuel supply tube-to-Fuel Pump (FP) module quick connect coupling. Remove the 3 fuel tank shield nut and remove the fuel tank shield.
   Torque : 9 Nm

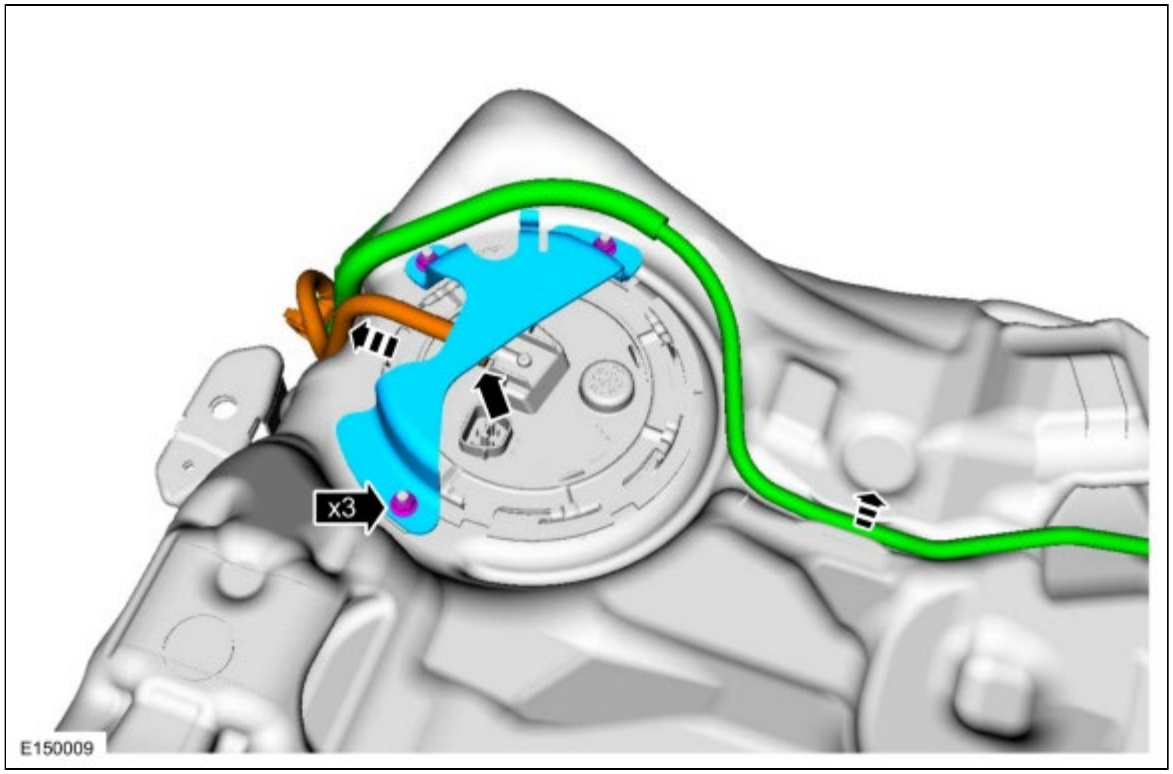

4. **NOTICE: Carefully install the lock ring wrench to avoid damaging the Fuel Pump (FP) module when removing the lock ring.**

   NOTICE: The Fuel Pump (FP) module must be handled carefully to avoid damage to the float arm.

   NOTE: *The Fuel Pump (FP) module will have residual fuel remaining internally, drain into a suitable container.*

   NOTE: *Inspect the mating surfaces of the Fuel Pump (FP) module flange and the fuel tank O-ring seal contact surfaces. Do not polish or adjust the O-ring seal contact area of the fuel tank flange or the fuel tank. Install a new Fuel Pump (FP) module or fuel tank if the O-ring seal contact area is bent, scratched or corroded.*

NOTE:

Using the lock ring wrench, rotate the lock ring counterclockwise and remove the Fuel Pump (FP) module lock ring. Remove the Fuel Pump (FP) module from the fuel tank.
Special Tool(s) : 310-123 Locking Ring, Fuel Tank

5. Remove and discard the Fuel Pump (FP) module O-ring seal.

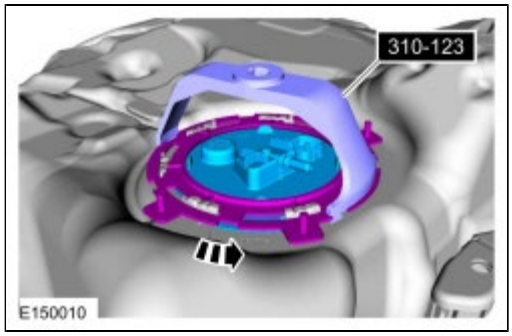

Installation

1. To install, reverse the removal procedure.
2. Make sure the alignment arrows on the Fuel Pump (FP) module and the fuel tank meet before tightening the Fuel Pump (FP) module lock ring.
3. Tighten the Fuel Pump (FP) lock ring until it meets the stop tabs on the fuel tank.

Copyright © Ford Motor Company

Fuel Level Sender

Removal

WARNING: Before beginning any service procedure in this section, refer to Safety Warnings in section 100-00 General Information. Failure to follow this instruction may result in serious personal injury.

1. Refer to: Gasoline and Gasoline-Ethanol Fuel Systems Health and Safety Precautions (100-00 General Information, Description and Operation).
2. Remove the Fuel Pump (FP) assembly.
   Refer to: Fuel Pump (310-01B Fuel Tank and Lines, Removal and Installation).
3. Disconnect the fuel level sender electrical connector. Depress the lock tabs and slide the fuel level sender upwards, and remove the sender from theFuel Pump (FP) assembly.

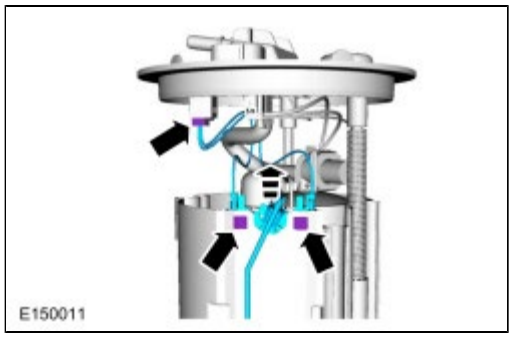

Installation

1. To install, reverse the removal procedure.

Copyright © Ford Motor Company

Fuel Lines

Removal

WARNING: Before beginning any service procedure in this section, refer to Safety Warnings in section 100-00 General Information. Failure to follow this instruction may result in serious personal injury.

1. Refer to: Gasoline and Gasoline-Ethanol Fuel Systems Health and Safety Precautions (100-00 General Information, Description and Operation).

2. Release the fuel system pressure.
   Refer to: Fuel System Pressure Release (310-00A Fuel System - General Information, General Procedures).

3. Remove the battery.
   Refer to: Battery (414-01 Battery, Mounting and Cables, Removal and Installation).

4. Disconnect the fuel jumper tube-to-fuel injection pump spring lock coupling. Disconnect the Evaporative Emission (EVAP) vapor tube quick release coupling. Disconnect the fuel pressure sensor electrical connector, and disconnect the 2 front brake tube fitting-to-middle brake tube fitting.
   Torque : 15 Nm

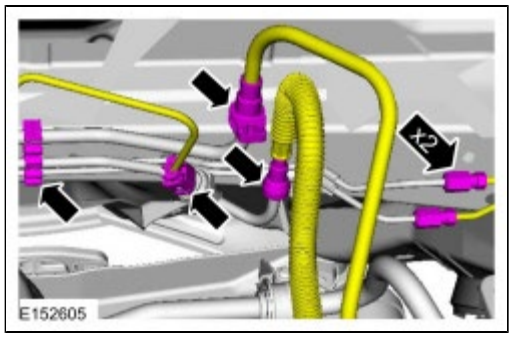

5. Remove the crossmember support crossbrace.

6. Remove the 4 crossmember support bracket-to-body bolts.
   Torque : 20 Nm

7. Remove the 2 crossmember support bracket nuts.
   Torque : 20 Nm

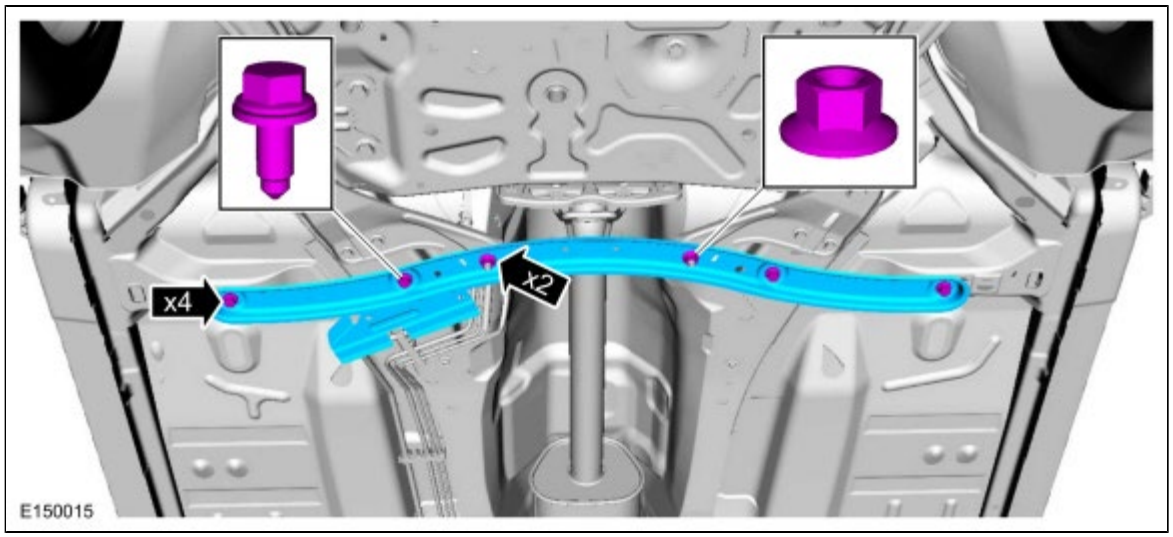

8. Remove the Right Hand (RH) crossmember support bracket.

9. Remove and discard the Right Hand (RH) subframe rearward bolt.
   Torque : 140 Nm

10. To install, tighten the new subframe rearward bolt in 2 stages.

11. Remove the 2 crossmember support bracket-to-body bolts.
    Torque : 20 Nm

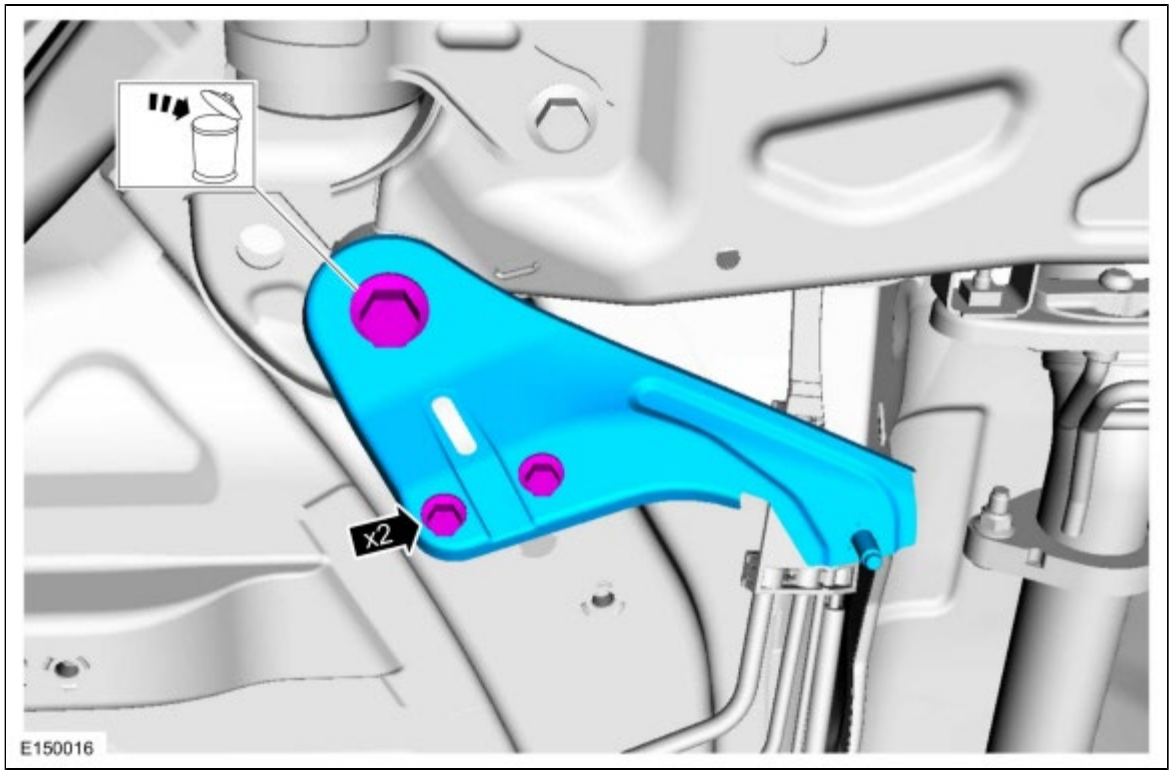

12. Remove the 6 nuts and position aside the exhaust heat shield.
    Torque : 5 Nm

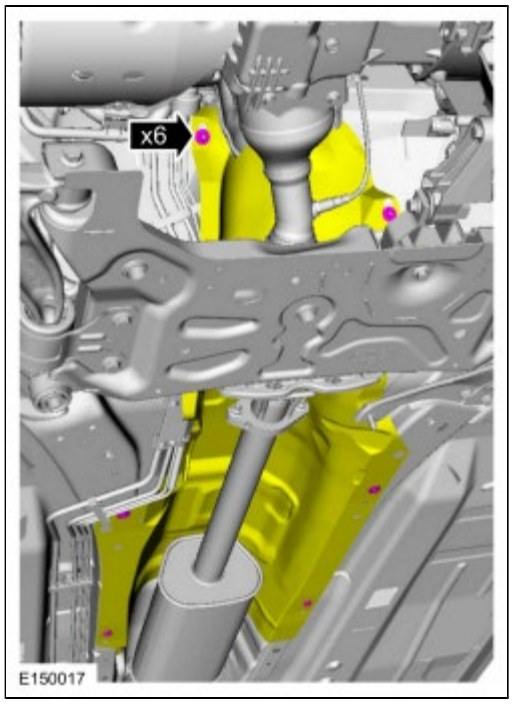

13. Disconnect the 2 middle brake tube fitting-to-rear brake tube fitting. Disconnect the fuel supply tube and Evaporative Emission (EVAP) vapor tube quick release coupling.
    Torque : 15 Nm

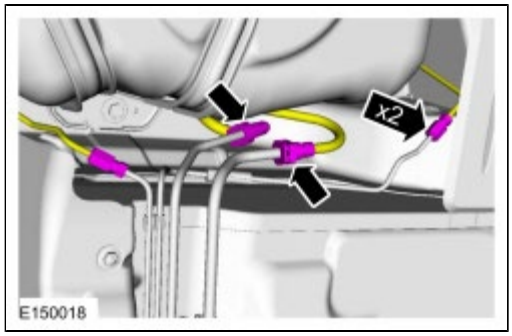

14. Disconnect the 5 fuel tube bundle retainers and remove fuel tube bundle.

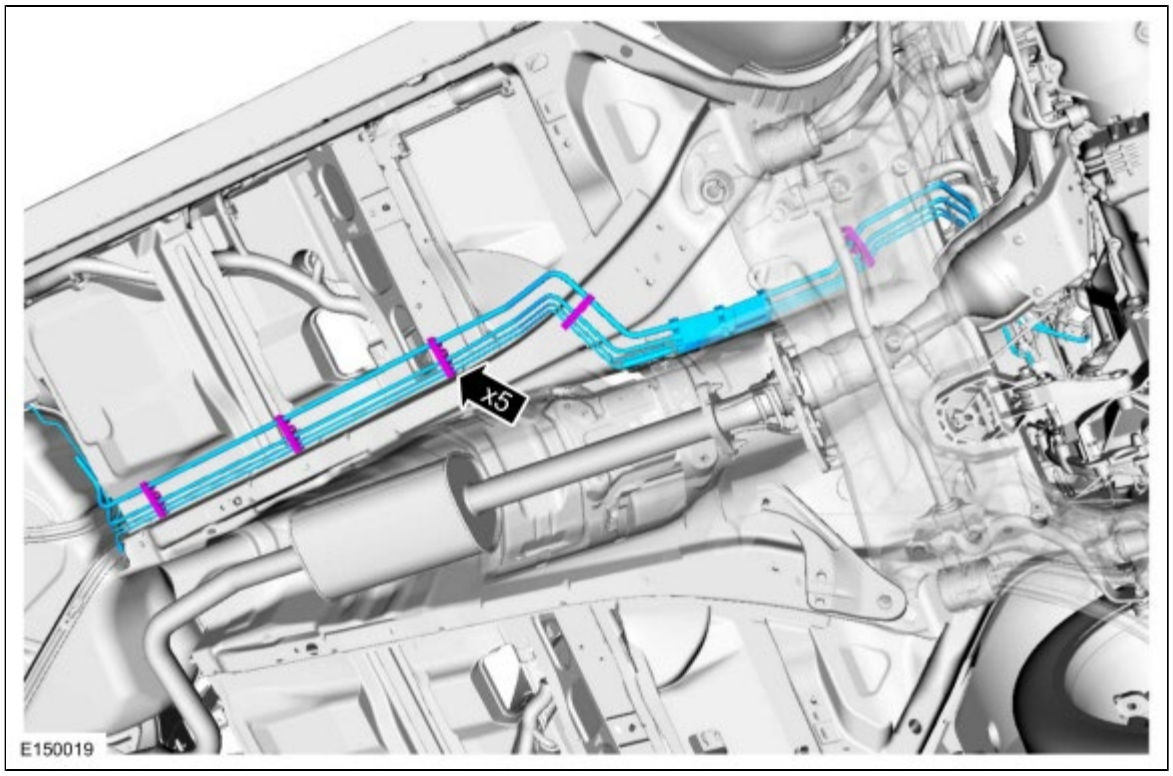

Installation

1. To install, reverse the removal procedure.

2. Bleed the brake system.
   Refer to: Brake System Bleeding (206-00 Brake System - General Information, General Procedures).

Copyright © Ford Motor Company

Acceleration Control - Overview

Overview

The acceleration controls consist of the accelerator pedal and sensor assembly.

The throttle is controlled by an APP sensor on the accelerator pedal assembly. The APP sensor sends a signal to the PCM in response to throttle pedal movements initiated by the driver. The PCM sends a signal to the electronic throttle control which increases and decreases throttle position.

The engine management system electronically operates the throttle of the engine in response to throttle pedal movements initiated by the driver. In the event of a system failure, the engine management system provides a "limp home" mode which allows the car to be driven with limited performance.

Copyright © Ford Motor Company

Acceleration Control

Symptom Chart(s)

REFER to Powertrain Control/Emissions Diagnosis (PC/ED) manual. See Section 3, Symptom Charts.

Copyright © Ford Motor Company

Accelerator Pedal

Removal

NOTE: *Removal steps in this procedure may contain installation details.*

NOTE: *To prevent setting Diagnostic Trouble Codes (DTCs), make sure the ignition switch is in the OFF position prior to disconnecting the accelerator pedal electrical connector.*

NOTE: *The sport metallic accelerator pedal pad is not to be re-used. If the sport metallic accelerator pedal pad is removed it should be discarded and replaced with a new sport metallic accelerator pedal pad.*

1. *Torque* : 8 Nm

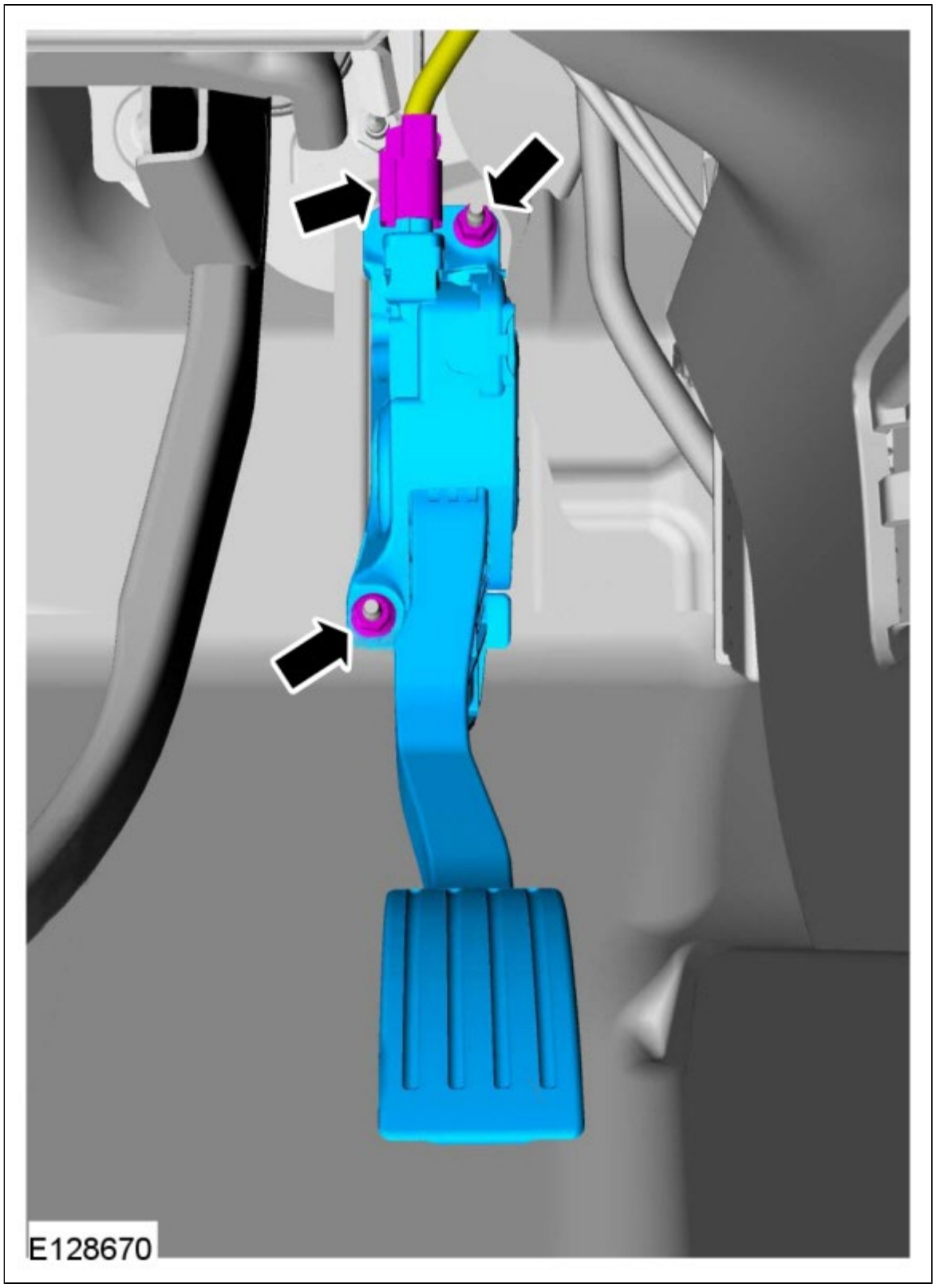

Installation

1. To install, reverse the removal procedure.

Copyright © Ford Motor Company

Charging System - 2.0L Duratec-HE (125kW/170PS) - MI4

DTC Charts

Diagnostics in this manual assume a certain skill level and knowledge of Ford-specific diagnostic practices.
REFER to: Diagnostic Methods (100-00 General Information, Description and Operation).
for information about these practices.

PCM DTC Chart

DTC	Description	Action
PCM DTCs	PCM Diagnostic Trouble Codes (DTCs) not listed in this chart	Refer to Powertrain Control/Emissions Diagnosis (PC/ED) Section 3 Symptom Charts.
P0562	System Voltage Low	GO to Pinpoint Test B .
P0563	System Voltage High	GO to Pinpoint Test A .
P065B	Generator Control Circuit Range/Performance	INSTALL a new generator. REFER to: Generator - 2.0L Duratec-HE (125kW/170PS) - MI4 (414-02 Generator and Regulator, Removal and Installation). , for
P065C	Generator Mechanical Performance	GO to Pinpoint Test C .
P0A3B	Generator Over Temperature	CARRY OUT self-test of the PCM and DIAGNOSE any grille shutter or cooling fan Diagnostic Trouble Codes (DTCs). If no grille shutter or cooling fan Diagnostic Trouble Codes (DTCs) are present, INSTALL a new generator. REFER to: Generator - 2.0L Duratec-HE (125kW/170PS) - MI4 (414-02 Generator and Regulator, Removal and Installation).
U012D	Lost Communication With Generator Control Module	GO to Pinpoint Test G .
U042E	Invalid Data Received From Generator Control Module	GO to Pinpoint Test G .

BCM DTC Chart

DTC	Description	Action
BCM DTCs	BCM Diagnostic Trouble Codes (DTCs) not listed in this chart	REFER to: Body Control Module (BCM) (419-10 Multifunction Electronic Modules, Diagnosis and Testing).
B11DB:83	Battery Monitoring Module "A": Value of Signal	GO to Pinpoint Test E

	Protection Calculation Incorrect	
U1007:00	Lost Communication With Battery Monitoring Sensor "A": No Sub Type Information	GO to Pinpoint Test F

Symptom Chart(s)

Symptom Chart: Charging System

Diagnostics in this manual assume a certain skill level and knowledge of Ford-specific diagnostic practices.
REFER to: Diagnostic Methods (100-00 General Information, Description and Operation).
for information about these practices.

Symptom Chart

Condition	Possible Sources	Actions
System voltage high	Refer to the Diagnostic Routine	GO to Pinpoint Test A .
System voltage low or battery is discharged	Refer to the Diagnostic Routine	GO to Pinpoint Test B .
The generator is noisy	Refer to the Diagnostic Routine	GO to Pinpoint Test C .
Radio interference	Refer to the Diagnostic Routine	GO to Pinpoint Test D .
Charging system warning indicator is never or always on	• Wiring, terminals or connectors • IPC • Generator • PCM	RETRIEVE Diagnostic Trouble Codes (DTCs) from all modules. If any charging system Diagnostic Trouble Codes (DTCs) are found, Refer to DTC Chart in this section. If no charging system Diagnostic Trouble Codes (DTCs) are found, REFER to: Instrumentation, Message Center and Warning Chimes (413-01 Instrumentation, Message Center and Warning Chimes, Diagnosis and Testing).

Pinpoint Tests

System Voltage High

Refer to Wiring Diagrams Cell 12 for schematic and connector information.

NOTE: *Diagnostic Trouble Code (DTC) P0563 can be set if the vehicle has been recently jump started or the battery has been recently charged. The battery may become discharged due to excessive load(s) on the charging system from aftermarket accessories or if vehicle accessories have been operating for an extended period of time without the engine running.*

Normal Operation and Fault Conditions

With the engine running, the charging system supplies voltage to the battery and the vehicle electrical system through the high

current BJB and battery B+ cable. The voltage that is supplied to the vehicle electrical system is used for the operation of the various vehicle systems and modules. Many modules monitor this voltage and if it rises above or below their calibrated setpoints, a DTC sets.

Diagnostic Trouble Code (DTC) Fault Trigger Conditions

DTC	Description	Fault Trigger Conditions
P0563	System Voltage High	This DTC sets if the PCM detects voltage from the charging system greater than 15.9 volts with vehicle speed above 8 km/h (5 mph).

Possible Sources

- Wiring, terminals or connetors
- Engine, generator or battery ground
- Battery
- Generator
- PCM

Visual Inspection and Diagnostic Pre-checks

- Inspect high current BJB for loose or corroded connections.

PINPOINT TEST A : SYSTEM VOLTAGE HIGH

NOTE: *Make sure battery voltage is greater than 12.2 volts prior to and during this pinpoint test.*

NOTE: *Do not have a battery charger attached during vehicle testing.*

A1 CHECK BATTERY CONDITION

- Check the battery condition and state of charge.
  REFER to: Battery (414-01 Battery, Mounting and Cables, Diagnosis and Testing).

Does the battery pass the condition test?

Yes	GO to A2
No	CHARGE or INSTALL a new battery as necessary. REFER to: Battery (414-01 Battery, Mounting and Cables, Removal and Installation).

A2 MONITOR THE GENERATOR VOLTAGE DESIRED (GENVDSD) PID

- Start the engine.
- Using a diagnostic scan tool, view the PCM Parameter Identification (PID) GENVDSD.

Does the Parameter Identification (PID) indicate 15.9 volts or less?

Yes	GO to A3
No	GO to A9

A3 COMPARE THE GENERATOR VOLTAGE DESIRED (GENVDSD) PID WITH BATTERY VOLTAGE

- With the engine still running at idle, measure and record:

Positive Lead	Measurement / Action	Negative Lead
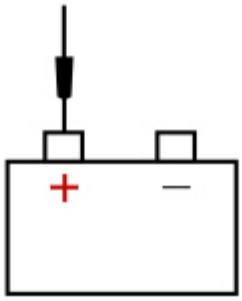 E148840		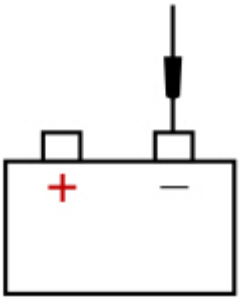 E148841

- Using a diagnostic scan tool, view the PCM Parameter Identification (PID) GENVDSD.

Is the recorded battery voltage within ±0.5 volt of the Parameter Identification (PID)?

Yes	The system is operating correctly at this time. The concern may have been caused by an intermittently loose or corroded connector. ADDRESS the root cause of any connector or pin issues.
No	GO to A4

A4 CHECK THE VEHICLE GROUND VOLTAGE DROP

- With the engine still running at idle, headlamps on and heater blower on high, measure:

Positive Lead	Measurement / Action	Negative Lead
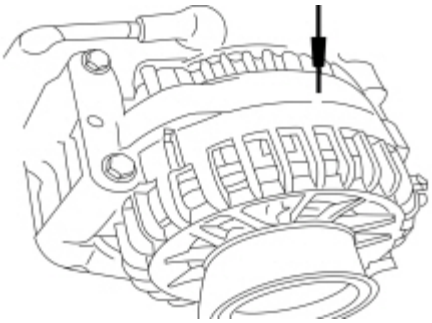 Generator case		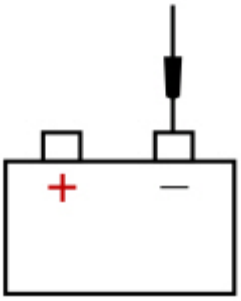 E148841

Is the voltage drop less than 0.5 volt?

Yes	GO to A5
No	INSPECT and REPAIR the engine ground, generator ground or the battery ground for corrosion.

A5 MONITOR THE GENERATOR VOLTAGE DESIRED (GENVDSD) PID WHILE COMMANDED

- Using a diagnostic scan tool, view the PCM Parameter Identification (PID) GENVDSD.
- Using a diagnostic scan tool, active command, set the PCM Parameter Identification (PID) GENVDSD to 14 volts.

- With the engine still running at idle, measure battery voltage and record.

Is the recorded battery voltage within ±0.5 volt of the Parameter Identification (PID)?

Yes	GO to A6
No	INSTALL a new generator. REFER to: Generator - 2.0L Duratec-HE (125kW/170PS) - MI4 (414-02 Generator and Regulator, Removal and Installation).

A6 CHECK THE GENERATOR OUTPUT

- Increase engine Revolutions Per Minute (RPM) until generator starts to generate output.
- With the engine running, measure and record:

Positive Lead	Measurement / Action	Negative Lead
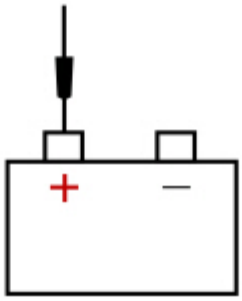 E148840		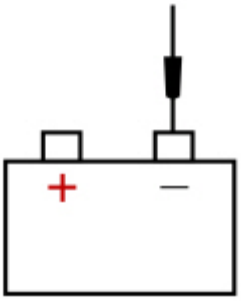 E148841

Is the voltage greater than 15.2 volts?

Yes	INSTALL a new generator. REFER to: Generator - 2.0L Duratec-HE (125kW/170PS) - MI4 (414-02 Generator and Regulator, Removal and Installation).
No	GO to A7

A7 COMPARE THE SUPPLY VOLTAGE (VPWR) PID TO BATTERY VOLTAGE

- With the engine still running at idle, measure and record:

Positive Lead	Measurement / Action	Negative Lead
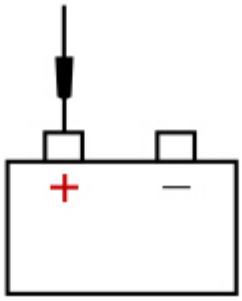 E148840		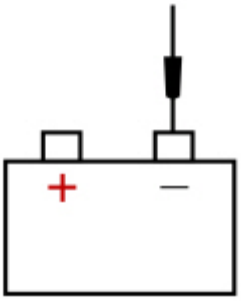 E148841

- Using a diagnostic scan tool, view the PCM Parameter Identification (PID) VPWR.

Does the Parameter Identification (PID) accurately display battery voltage within ±0.5 volt of the recorded battery voltage?

Yes	INSTALL a new generator. REFER to: Generator - 2.0L Duratec-HE (125kW/170PS) - MI4 (414-02 Generator and Regulator, Removal and Installation).
No	GO to A8

A8 CHECK PCM SUPPLY VOLTAGE CIRCUITS

- Ignition OFF.
- Disconnect PCM C175B .
- Ignition ON.
- Measure and record:

Positive Lead	Measurement / Action	Negative Lead
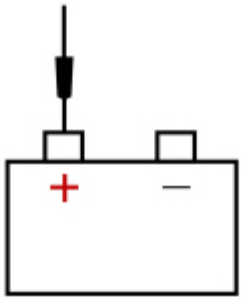 E148840		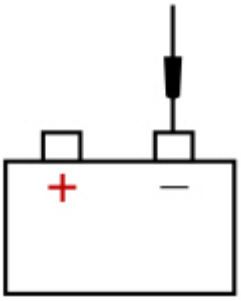 E148841

- Measure:

Positive Lead	Measurement / Action	Negative Lead
C175B-5		—
C175B-6		—
C175B-15		—

Are the voltages within 0.5 volt of the recorded battery voltage?

Yes	GO to A9
No	REPAIR the affected circuit(s) for high resistance. CLEAR all Diagnostic Trouble Codes (DTCs) in all modules.

A9 CHECK FOR CORRECT PCM OPERATION

- Ignition OFF.
- Disconnect and inspect all PCM connectors.
- Repair:

- corrosion (install new connector or terminals – clean module pins)
- damaged or bent pins – install new terminals/pins
- pushed-out pins – install new pins as necessary

- Reconnect the PCM connectors. Make sure they seat and latch correctly.
- Operate the system and determine if the concern is still present.

Is the concern still present?

Yes	CHECK OASIS for any applicable Technical Service Bulletins (TSBs). If a TSB exists for this concern, DISCONTINUE this test and FOLLOW the TSB instructions. If no Technical Service Bulletins (TSBs) address this concern, INSTALL a new PCM . REFER to: Powertrain Control Module (PCM) (303-14A Electronic Engine Controls - 2.0L Duratec-HE (125kW/170PS) - MI4, Removal and Installation). CLEAR all Diagnostic Trouble Codes (DTCs) in all modules.
No	The system is operating correctly at this time. The concern may have been caused by module connections. ADDRESS the root cause of any connector or pin issues.

System Voltage Low or Battery is Discharged

Refer to Wiring Diagrams Cell 12 for schematic and connector information.

Normal Operation and Fault Conditions

With the engine running, the charging system supplies voltage to the battery and the vehicle electrical system through the high current BJB and battery B+ cable. The PCM monitors this B+ voltage through its own voltage supply circuit.

Diagnostic Trouble Code (DTC) Fault Trigger Conditions

DTC	Description	Fault Trigger Conditions
P0562	System Voltage Low	If voltage drops 1.5 volts or more below the generator voltage desired (calculated by the PCM), this DTC sets after 30 seconds.
P065B	Generator Control Circuit Range/Performance	This DTC sets when the generator reports an internal regulator failure to the PCM .

Possible Sources

- Wiring, terminals or connetors
- Excessive ignition-OFF current drain
- Battery
- Generator
- PCM
- High current BJB

Visual Inspection and Diagnostic Pre-checks

- Inspect for abnormal ignition-off current drain(s).
- Inspect the battery.
- Inspect high current BJB for loose or corroded connections.
- Inspect the generator clutch.

PINPOINT TEST B : SYSTEM VOLTAGE LOW OR BATTERY IS DISCHARGED

NOTE: *Make sure battery voltage is greater than 12.2 volts prior to and during this pinpoint test.*

NOTE: *Do not have a battery charger attached during vehicle testing.*

B1 RETRIEVE PCM DTCS

- Ignition ON.
- Using a diagnostic scan tool, perform PCM self-test.

Is DTC P065B present?

Yes	If P065B is present, INSTALL a new generator. REFER to: Generator - 2.0L Duratec-HE (125kW/170PS) - MI4 (414-02 Generator and Regulator, Removal and Installation).
No	For all other PCM Diagnostic Trouble Codes (DTCs) REFER to the PCM DTC Chart in this section. If no Diagnostic Trouble Codes (DTCs) are present, GO to B2

B2 CHECK BATTERY CONDITION

- Ignition OFF.
- Check the battery condition and state of charge.
  REFER to: Battery (414-01 Battery, Mounting and Cables, Diagnosis and Testing).

Does the battery pass the condition test?

Yes	GO to B3
No	INSTALL a new battery. REFER to: Battery (414-01 Battery, Mounting and Cables, Removal and Installation).

B3 CHECK THE GENERATOR CONNECTIONS

- Disconnect and inspect all generator connectors.
- Repair:
  - corrosion (install new connector or terminals – clean module pins)
  - damaged or bent pins – install new terminals/pins
  - pushed-out pins – install new pins as necessary
- Reconnect the generator connectors. Make sure they seat and latch correctly.
- Measure and record:

Positive Lead	Measurement / Action	Negative Lead
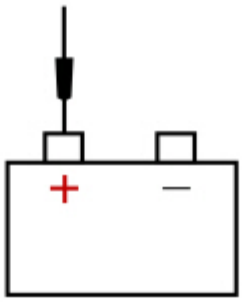 E148840		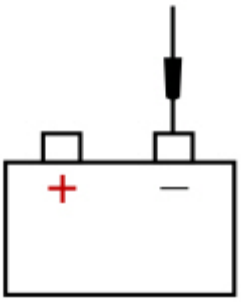 E148841

- Measure:

Positive Lead	Measurement / Action	Negative Lead
C102B-1		—

Is the voltage within 0.5 volt of the recorded battery voltage?

Yes	GO to B4
No	TIGHTEN or INSTALL a new C102B (B+ nut) as needed. REFER to: Charging System - 2.0L Duratec-HE (125kW/170PS) - MI4 (414-00 Charging System - General Information, Diagnosis and Testing). VERIFY high current BJB MEGA 2 fuse (150A) is OK. If OK, REPAIR the circuit. If not OK, REFER to the Wiring Diagrams manual to identify the possible causes of the circuit short.

B4 CHECK THE VOLTAGE DROP IN THE GENERATOR B+ CIRCUIT

- Start the engine.
- With the engine running at idle, headlamps on and blower on high, measure:

Positive Lead	Measurement / Action	Negative Lead
C102B-1		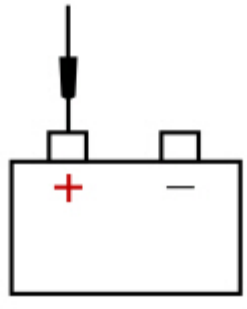

- Carry out a wiggle test of the generator wiring and connections while measuring voltage drop.

Is the voltage drop less than 0.5 volt?

Yes	GO to B5
No	INSPECT and REPAIR any corrosion in the generator B+ circuit or positive battery cable connections.

B5 CHECK THE VOLTAGE DROP IN THE VEHICLE GROUNDS

- With the engine still running at idle, headlamps on and heater blower on high, measure:

Positive Lead	Measurement / Action	Negative Lead

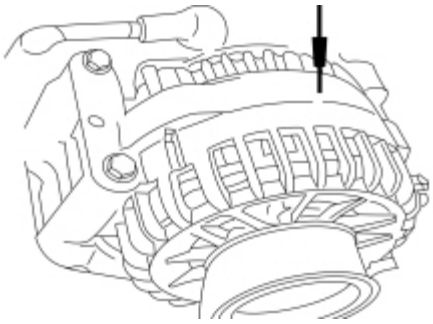 Generator case		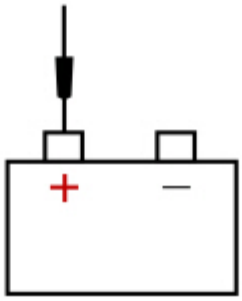 E148840

Is the voltage drop less than 0.5 volt?

Yes	GO to B6
No	INSPECT and REPAIR the engine ground, generator ground or the battery ground for corrosion.

B6 MONITOR THE GENERATOR VOLTAGE DESIRED (GENVDSD) PID WHILE COMMANDED

- Using a diagnostic scan tool, view the PCM GENVDSD Parameter Identification (PID).
- Using a diagnostic scan tool active command, set the PCM Parameter Identification (PID) GENVDSD to 14 volts.
- With the engine still running at idle, measure battery and record:

Positive Lead	Measurement / Action	Negative Lead
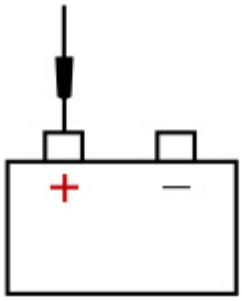 E148840		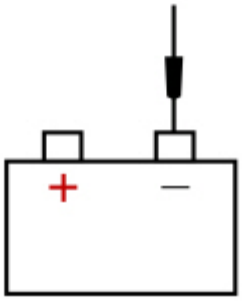 E148841

Is the recorded battery voltage within ±0.5 volt of the Parameter Identification (PID)?

Yes	GO to B7
No	GO to B10

B7 COMPARE THE SUPPLY VOLTAGE (VPWR) PID TO BATTERY VOLTAGE

- With the engine still running at idle, headlamps on and blower on high, measure and record:

Positive Lead	Measurement / Action	Negative Lead

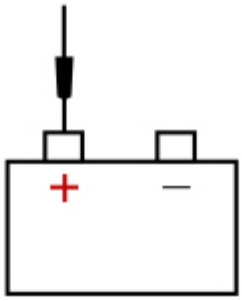 E148840		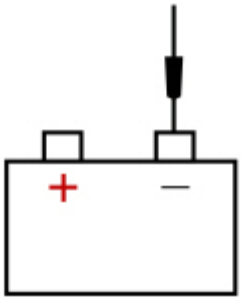 E148841

- Using a diagnostic scan tool, view the PCM Parameter Identification (PID) VPWR.

Does the Parameter Identification (PID) accurately display battery voltage within ±0.5 volt of the recorded battery voltage?

Yes	GO to B8
No	REPAIR high resistance or loose connections in the affected PCM power circuit(s).

B8 CHECK PCM GROUND FOR HIGH RESISTANCE

- **NOTE:** *Measure battery voltage at the battery.*

  With the engine still running at idle, turn off all accessory loads, measure and record:

Positive Lead	Measurement / Action	Negative Lead
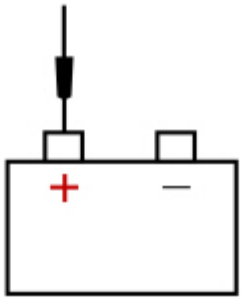 E148840		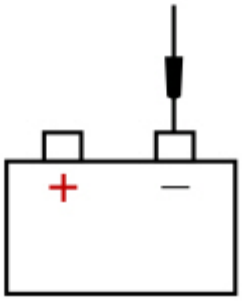 E148841

- Using a diagnostic scan tool, view PCM Parameter Identification (PID) VPWR and record.
- With the engine still running at idle, turn headlamps on and blower on high.
- Measure and record:

Positive Lead	Measurement / Action	Negative Lead
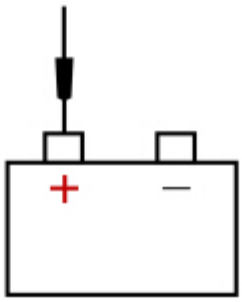 E148840		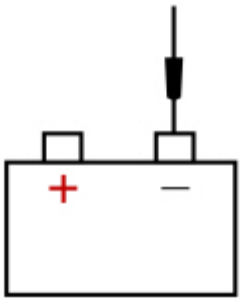 E148841

- Using a diagnostic scan tool, view PCM Parameter Identification (PID) VPWR and record.

Does the Parameter Identification (PID) read within ±0.5 volt of battery voltage with accessory loads on and off?

Yes	GO to B9
No	REPAIR the affected PCM ground circuit(s).

B9 MONITOR THE SUPPLY VOLTAGE (VPWR) PID

- **NOTE:** *Measure battery voltage at the battery.*

  With the engine still running at idle, turn off all accessory loads.
- Measure and record:

Positive Lead	Measurement / Action	Negative Lead
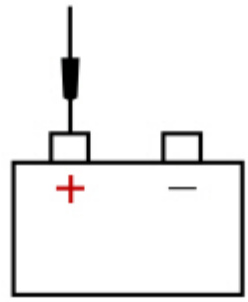		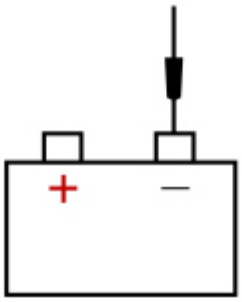

- Using a diagnostic scan tool, view PCM Parameter Identification (PID) VPWR and record.
- Momentarily accelerate the engine to Wide Open Throttle (WOT) and release. Repeat this step 4-5 times while continuing to monitor the Parameter Identification (PID).

Does the Parameter Identification (PID) stay within 0.5 volt of the recorded battery voltage when the engine Revolutions Per Minute (RPM) are increased?

Yes	The system is operating correctly at this time. The concern may have been caused by a loose or corroded connector. INSPECT and REPAIR any connector or pin issues found. If no connector or pin issues are found, CARRY OUT the battery drain test. REFER to: Battery Drain Check (414-01 Battery, Mounting and Cables, General Procedures).
No	GO to B11

B10 CHECK GENERATOR CLUTCH OPERATION

- Ignition OFF.
- Carry out the generator clutch component test in this section.

Is the generator clutch OK?

Yes	INSTALL a new generator. REFER to: Generator - 2.0L Duratec-HE (125kW/170PS) - MI4 (414-02 Generator and Regulator, Removal and Installation).
No	INSTALL a new generator clutch.

	REFER to: Generator Pulley (414-02 Generator and Regulator, Removal and Installation).

B11 CHECK FOR CORRECT PCM OPERATION

- Ignition OFF.
- Disconnect and inspect all PCM connectors.
- Repair:
  - corrosion (install new connector or terminals – clean module pins)
  - damaged or bent pins – install new terminals/pins
  - pushed-out pins – install new pins as necessary
- Reconnect the PCM connectors. Make sure they seat and latch correctly.
- Operate the system and determine if the concern is still present.

Is the concern still present?

Yes	CHECK OASIS for any applicable Technical Service Bulletins (TSBs). If a TSB exists for this concern, DISCONTINUE this test and FOLLOW the TSB instructions. If no Technical Service Bulletins (TSBs) address this concern, INSTALL a new PCM . REFER to: Powertrain Control Module (PCM) (303-14A Electronic Engine Controls - 2.0L Duratec-HE (125kW/170PS) - MI4, Removal and Installation). CLEAR all Diagnostic Trouble Codes (DTCs) in all modules.
No	The system is operating correctly at this time. The concern may have been caused by a loose or corroded connector. ADDRESS the root cause of any connector or pin issues.

The Generator is Noisy

Normal Operation and Fault Conditions

The generator is belt-driven by the engine accessory drive system. There are several sources of generator noise which include bearing noise, electrical fault noise, generator or belt pulley misalignment. A generator with certain types of diode or stator failures can also produce an audible noise.

DTC Fault Trigger Conditions

DTC	Description	Fault Trigger Conditions
P065C	Generator Mechanical Performance	This DTC sets when the generator reports an internal mechanical failure.

Possible Sources

- FEAD belt
- Loose bolts/brackets
- Generator/pulleys

Visual Inspection and Diagnostic Pre-checks

- Inspect the FEAD belt.
- Inspect for loose bolts/brackets.
- Inspect the generator/pulley.

PINPOINT TEST C : THE GENERATOR IS NOISY

C1 CHECK FOR ACCESSORY DRIVE BELT NOISE AND LOOSE MOUNTING BRACKETS

- Ignition OFF.
- Check the FEAD belt and tensioner for damage and correct installation.
  REFER to: Accessory Drive (303-05A Accessory Drive - 2.0L Duratec-HE (125kW/170PS) - MI4, Diagnosis and Testing).

Is the accessory drive OK?

Yes	GO to C2
No	REPAIR as necessary.

C2 CHECK THE GENERATOR MOUNTING

- Check the generator mounting for loose bolts or misalignment.

Is the generator mounted correctly?

Yes	GO to C3
No	REPAIR as necessary.

C3 CHECK THE GENERATOR FOR NOISE

- Start the engine.
- With the engine running, use a stethoscope or equivalent listening device to probe the generator and the accessory drive area for unusual mechanical noise.

Is the generator the noise source?

Yes	GO to C4
No	REFER to: Engine (303-00 Engine System - General Information, Diagnosis and Testing). to diagnose the source of the engine noise.

C4 CHECK GENERATOR CLUTCH OPERATION

- Ignition OFF.
- Carry out the generator clutch component test in this section.

Is the generator clutch OK?

Yes	INSTALL a new generator. REFER to: Generator - 2.0L Duratec-HE (125kW/170PS) - MI4 (414-02 Generator and Regulator, Removal and Installation).
No	INSTALL a new generator clutch. REFER to: Generator Pulley (414-02 Generator and Regulator, Removal and Installation).

Radio Interference

Refer to Wiring Diagrams Cell 12 for schematic and connector information.

Normal Operation and Fault Conditions

The generator radio suppression equipment reduces interference transmitted through the speakers by the vehicle electrical system.

NOTE: *If the Original Equipment Manufacturer (OEM) Audio Control Module (ACM) has been replaced with an aftermarket unit, the vehicle may not pass this test. Return the vehicle to Original Equipment Manufacturer (OEM) condition before following this pinpoint test.*

NOTE: *If the engine is operated at greater than 2,000 Revolutions Per Minute (RPM) momentarily, the generator self-excites. Make sure when the generator is disconnected the engine rpm stays below 2,000 Revolutions Per Minute (RPM). If it rises above 2,000 Revolutions Per Minute (RPM), turn the ignition to the OFF position and start the test over again.*

NOTE: *Inspect for any aftermarket accessories that have been added to the vehicle. Check the wiring for these accessories and be sure they have not been attached to the generator circuits and are positioned away from the generator wiring.*

Possible Sources

- Generator
- Wiring, terminals or connectors
- In-vehicle entertainment system

Visual Inspection and Diagnostic Pre-checks

- Inspect the generator.
- Inspect the in-vehicle entertainment system.

PINPOINT TEST D : RADIO INTERFERENCE

D1 VERIFY THE GENERATOR IS THE SOURCE OF THE AUDIO SYSTEM INTERFERENCE

- Start the engine and allow the engine to idle.
- Tune the audio system to a station where interference is present.
- Ignition OFF.
- Disconnect Generator C102B .
- Start the engine and allow the engine to idle.

Is the interference present with the generator disconnected?

Yes	REFER to: Information and Entertainment System (415-00A Information and Entertainment System - General Information - Vehicles With: AM/FM/CD, Diagnosis and Testing). (Base), or REFER to: Information and Entertainment System (415-00B Information and Entertainment System - General Information - Vehicles With: AM/FM/CD/SYNC, Diagnosis and Testing). (Premium), or REFER to: Information and Entertainment System (415-00C Information and Entertainment System - General Information - Vehicles With: SYNC/Sony AM/FM/CD, Diagnosis and Testing). (with Sony Sound)
No	INSTALL a new generator. REFER to: Generator - 2.0L Duratec-HE (125kW/170PS) - MI4 (414-02 Generator and Regulator, Removal and Installation).

B11DB:83

Refer to Wiring Diagrams Cell 12 for schematic and connector information.

Normal Operation and Fault Conditions

The BCM monitors the battery state of charge using the battery monitoring sensor attached to the negative battery cable. Battery voltage is hardwired to the battery monitoring sensor and data is transferred from the battery monitoring sensor to the BCM via a LIN circuit.

Diagnostic Trouble Code (DTC) Fault Trigger Conditions

DTC	Description	Fault Trigger Conditions
B11DB:83	Battery Monitoring Module "A": Value of Signal Protection Calculation Incorrect	This Continuos Memory Diagnostic Trouble Code (CMDTC) sets if the BCM receives corrupted data from the battery monitoring sensor over the LIN .

Possible Sources

- Battery monitoring sensor
- Wiring, terminals or connectors
- BCM

Visual Inspection and Diagnostic Pre-checks

- Inspect battery monitoring sensor
- Inspect battery monitoring sensor connector
- Inspect BJB fuse 22 (15A)

PINPOINT TEST E : B11DB:83

E1 RETRIEVE BCM DTCS WITH BATTERY MONITORING SENSOR FUSE REMOVED

- Ignition OFF.
- Remove BJB fuse 22 (15A).
- Ignition ON.
- Using a diagnostic scan tool, perform BCM self-test.
- Check the BCM Diagnostic Trouble Codes (DTCs) from the self-test.

Did DTC B11DB:83 return?

Yes	GO to E2
No	INSTALL BJB fuse 22 (15A). CLEAR all BCM Diagnostic Trouble Codes (DTCs). PERFORM self-test again. If DTC B11DB:83 returns, INSTALL a new negative battery cable. REFER to: Battery Cables - 2.0L Duratec-HE (125kW/170PS) - MI4 (414-01 Battery, Mounting and Cables, Removal and Installation). CLEAR all Diagnostic Trouble Codes (DTCs) in all modules.

E2 CHECK FOR CORRECT BCM OPERATION

- Ignition OFF.
- Install BCM fuse 22 (15A).
- Disconnect and inspect all BCM connectors.
- Repair:
  - corrosion (install new connectors or terminals – clean module pins)

damaged or bent pins – install new terminals/pins
  - pushed-out pins – install new pins as necessary
- Reconnect the BCM connectors. Make sure they seat and latch correctly.
- Operate the system and determine if the concern is still present.

Is the concern still present?

Yes	CHECK OASIS for any applicable Technical Service Bulletins (TSBs). If a TSB exists for this concern, DISCONTINUE this test and FOLLOW the TSB instructions. If no Technical Service Bulletins (TSBs) address this concern, INSTALL a new BCM . REFER to: Body Control Module (BCM) (419-10 Multifunction Electronic Modules, Removal and Installation).
No	The system is operating correctly at this time. The concern may have been caused by module connections. ADDRESS the root cause of any connector or pin issues.

U1007

Refer to Wiring Diagrams Cell 12 for schematic and connector information.

Normal Operation and Fault Conditions

The battery monitoring sensor is attached to the negative battery cable. It is supplied battery voltage by the BJB . It communicates battery conditions to the BCM through a dedicated LIN circuit.

Diagnostic Trouble Code (DTC) Fault Trigger Conditions

DTC	Description	Fault Trigger Conditions
U1007:00	Lost Communication With Battery Monitoring Sensor "A": No Sub Type Information	This DTC sets if the BCM does not detect communication through the LIN circuit. This can be a result of an open or short in the LIN circuit or the voltage supply circuit.
B1131:87	Wiper Motor Module: Missing Message	This continuous DTC sets when the BCM does not receive a reply from the driver side windshield wiper motor over the LIN . An internal failure of the driver side windshield wiper motor, a voltage supply or ground circuit can cause this concern.

Possible Sources

- Battery monitoring sensor
- Wiring, terminals or connectors

Visual Inspection and Diagnostic Pre-checks

- Inspect the battery monitoring sensor.
- Inspect Battery monitoring sensor connector
- Inspect the BJB fuse 22 (15A).

PINPOINT TEST F : U1007

NOTE: *Make sure battery voltage is greater than 12.2 volts prior to and during this pinpoint test.*

NOTE: *Do not have a battery charger attached during vehicle testing.*

F1 RETRIEVE BCM DTCS

- Ignition ON.
- Using a diagnostic scan tool, perform BCM self-test.

Is DTC B1131:87 present?

Yes	DIAGNOSE wipers. REFER to: Wipers and Washers (501-16 Wipers and Washers, Diagnosis and Testing).
No	GO to F2

F2 CHECK THE BATTERY MONITORING SENSOR VOLTAGE

- Ignition OFF.
- Disconnect Battery Monitoring Sensor C1646 .
- Measure and record:

Positive Lead	Measurement / Action	Negative Lead
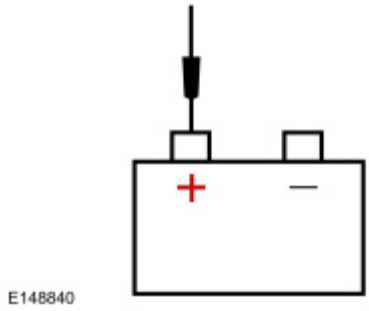		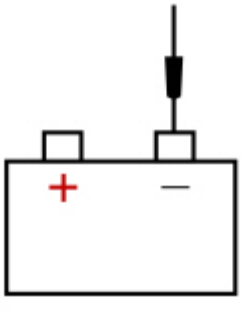

- Measure:

Positive Lead	Measurement / Action	Negative Lead
C1646-1		—

Is the voltage within 0.5 volt of the recorded battery voltage?

Yes	GO to F3
No	VERIFY BJB fuse 22 (15A) is OK. If OK, REPAIR the circuit. If not OK, REFER to the Wiring Diagrams manual to identify the possible causes of the circuit short.

F3 CHECK THE BATTERY MONITORING SENSOR LIN CIRCUIT FOR A SHORT TO VOLTAGE

- Disconnect BCM C2280A .
- Disconnect Left Hand (LH) Windshield Wiper Motor C1655 .
- Ignition ON.
- Measure:

Positive Lead	Measurement / Action	Negative Lead
C1646-2	V	—

Is any voltage present?

Yes	REPAIR the circuit. CLEAR all Diagnostic Trouble Codes (DTCs) in all modules.
No	GO to F4

F4 CHECK THE BATTERY MONITORING SENSOR LIN CIRCUIT FOR A SHORT TO GROUND

- Ignition OFF.
- Ignition OFF.
- Measure:

Positive Lead	Measurement / Action	Negative Lead
C1646-2	Ω	—

Is the resistance greater than 10,000 ohms?

Yes	GO to F5
No	REPAIR the circuit. CLEAR all Diagnostic Trouble Codes (DTCs) in all modules.

F5 CHECK THE BATTERY MONITORING SENSOR LIN CIRCUIT FOR AN OPEN

- Measure:

Positive Lead	Measurement / Action	Negative Lead
C1646-2	Ω	C2280A-42

Positive Lead	Measurement / Action	Negative Lead
C1646-2	Ω	C1655-1

Are the resistances less than 3 ohms?

Yes	INSTALL a new negative battery cable. REFER to: Battery Cables - 2.0L Duratec-HE (125kW/170PS) - MI4 (414-01 Battery, Mounting and Cables, Removal and Installation). CLEAR Diagnostic Trouble Codes (DTCs) in all modules.

No	REPAIR the circuit. CLEAR Diagnostic Trouble Codes (DTCs) in all modules.

U012D, U042E

Refer to Wiring Diagrams Cell 12 for schematic and connector information.

Normal Operation and Fault Conditions

The charging system supplies voltage to the battery and the vehicle electrical system through the battery B+ cable. The PCM monitors the generator output through a dedicated LIN communication circuit. The generator uses this LIN circuit to communicate the desired voltage setpoint from the PCM to the internal voltage regulator. The generator also uses this LIN circuit to communicate the generator load and error conditions to the PCM .

Diagnostic Trouble Code (DTC) Fault Trigger Conditions

DTC	Description	Fault Trigger Conditions
U012D	Lost Communication With Generator Control Module	This DTC sets if the PCM does not detect communication through the LIN circuit. This can be a result of an open or short in the LIN circuit. This DTC also sets if the generator B+ circuit is open.
U042E	Invalid Data Received From Generator Control Module	This DTC sets when the PCM receives invalid data from the generator.

Possible Sources

- Active grille shutters (if equipped)
- Battery monitoring sensor
- Generator
- Wiring, terminals or connectors

Visual Inspection and Diagnostic Pre-checks

- Inspect high current BJB fuse 2 (150A).
- Inspect high current BJB for loose or corroded connections.

PINPOINT TEST G : U012D, U042E

NOTE: *Make sure battery voltage is greater than 12.2 volts prior to and during this pinpoint test.*

NOTE: *Do not have a battery charger attached during vehicle testing.*

G1 CHECK VEHICLE FOR PRESENCE OF GRILLE SHUTTERS

- While looking through the grille opening, inspect the vehicle for the presence of grille shutters. REFER to 501-02. REFER to: Active Grille Shutter - Overview (501-02 Front End Body Panels, Description and Operation).

Is the vehicle equipped with grille shutters?

Yes	GO to G2
No	GO to G3

G2 RETRIEVE PCM DTCS WITH GRILLE SHUTTER ACTUATOR DISCONNECTED

- Ignition OFF.
- Disconnect Grill Shutter Actuator C1651 .
- Ignition ON.
- Using a diagnostic scan tool, perform PCM self-test.

Is DTC U012D or U042E present?

Yes	GO to G3
No	INSTALL new grille shutter actuator. Refer to Grille Shutter Actuator 501-02. REFER to: Active Grille Shutter (501-02 Front End Body Panels, Removal and Installation).

G3 COMPARE THE GENERATOR B+ CIRCUIT TO BATTERY VOLTAGE

- Measure and record:

Positive Lead	Measurement / Action	Negative Lead
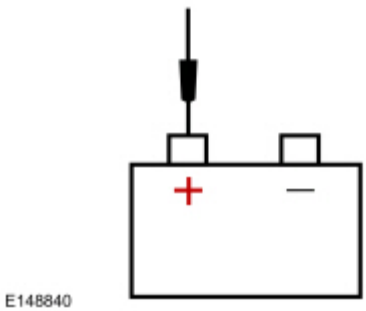		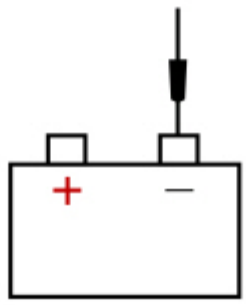

- Measure:

Positive Lead	Measurement / Action	Negative Lead
C102B-1		—

Is the voltage within 0.5 volt of the recorded battery voltage?

Yes	GO to G4
No	TIGHTEN or INSTALL a new C102B (B+ nut) as needed. REFER to: Charging System - 2.0L Duratec-HE (125kW/170PS) - MI4 (414-00 Charging System - General Information, Diagnosis and Testing). VERIFY high current BJB MEGA 2 fuse (150A) is OK. If OK, REPAIR the circuit. If not OK, REFER to the Wiring Diagrams manual to identify the possible causes of the circuit short.

G4 CHECK THE GENERATOR LIN CIRCUIT FOR A SHORT TO VOLTAGE

- Ignition OFF.

- Disconnect Generator C102A .
- Disconnect PCM C175E .
- Ignition ON.
- Measure:

Positive Lead	Measurement / Action	Negative Lead
C102A-1	V	—

Is any voltage present?

Yes	REPAIR the circuit.
No	GO to G5

G5 CHECK THE GENERATOR LIN CIRCUIT FOR A SHORT TO GROUND

- Ignition OFF.
- Measure:

Positive Lead	Measurement / Action	Negative Lead
C102A-1	Ω	—

Is the resistance greater than 10,000 ohms?

Yes	GO to G6
No	REPAIR the circuit.

G6 CHECK THE GENERATOR LIN CIRCUIT FOR AN OPEN

- Measure:

Positive Lead	Measurement / Action	Negative Lead
C102A-1	Ω	C1651-2

Positive Lead	Measurement / Action	Negative Lead
C102A-1	Ω	C175E-41

Is the resistance less than 3 ohms?

Yes	INSTALL a new generator. REFER to: Generator - 2.0L Duratec-HE (125kW/170PS) - MI4 (414-02 Generator and Regulator, Removal and Installation). CLEAR the Diagnostic Trouble Codes (DTCs). REPEAT the PCM self-test. If DTC U012D is retrieved again, GO to G7
No	REPAIR the affected circuit.

G7 CHECK FOR CORRECT PCM OPERATION

- Ignition OFF.
- Disconnect and inspect all PCM connectors.
- Repair:
  - corrosion (install new connector or terminals - clean module pins)
  - damaged or bent pins - install new terminals/pins
  - pushed-out pins - install new pins as necessary
- Reconnect the PCM connectors. Make sure they seat and latch correctly.
- Operate the system and determine if the concern is still present.

Is the concern still present?

Yes	CHECK OASIS for any applicable Technical Service Bulletins (TSBs). If a TSB exists for this concern, DISCONTINUE this test and FOLLOW the TSB instructions. If no Technical Service Bulletins (TSBs) address this concern, INSTALL a new PCM. REFER to: Powertrain Control Module (PCM) (303-14A Electronic Engine Controls - 2.0L Duratec-HE (125kW/170PS) - MI4, Removal and Installation). CLEAR all Diagnostic Trouble Codes (DTCs) in all modules.
No	The system is operating correctly at this time. The concern may have been caused by loose or corroded connector. ADDRESS the root cause of any connector or pin issues.

Component Test- Generator Clutch

1. Remove the generator.
   REFER to: Generator - 2.0L Duratec-HE (125kW/170PS) - MI4 (414-02 Generator and Regulator, Removal and Installation).

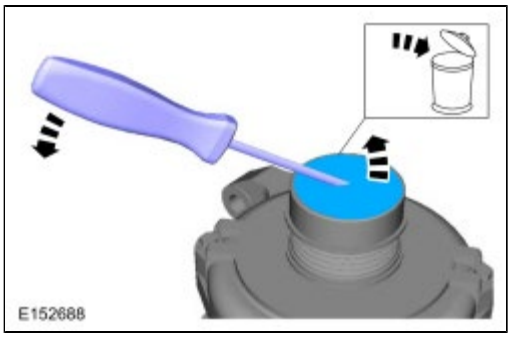

2. Using a small screwdriver or similar tool, insert the tool through the rubber button on the center of the pulley cap and pry off the cap. Discard the cap. A new cap must be installed if the clutch is OK.

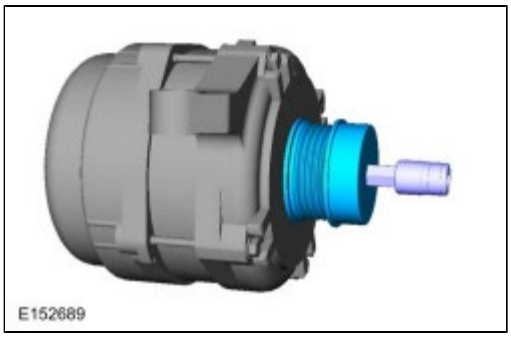

3. Using a 17 mm hex tool bit (such as a Snap-on® SAM17E2 or equivalent) and socket wrench, insert the 17 mm hex tool bit into the end of the clutch shaft.

4. While holding the clutch pulley firmly by hand, turn the clutch shaft clockwise. The shaft should rotate smooth and freely. If the shaft rotation is rough or seized, install a new generator clutch.
   REFER to: Generator Pulley (414-02 Generator and Regulator, Removal and Installation).

5. While holding the clutch pulley firmly by hand, turn the clutch shaft counterclockwise. There should be some resistance (a spring feel). If the shaft rotates freely, install a new generator clutch.
   REFER to: Generator Pulley (414-02 Generator and Regulator, Removal and Installation).
   .

Copyright © Ford Motor Company

Specifications

General Specifications

Item	Specification
Automatic transmission and ST vehicles	
Voltage	12 Volts
Battery amps rating	56 amp/hr
Battery amps rating	590 Cold Cranking Amps (CCA)
Manual transmission, except ST vehicles	
Voltage	12 Volts
Battery amps rating	48 amp/hr
Battery amps rating	500 Cold Cranking Amps (CCA)

Copyright © Ford Motor Company

Battery Disconnect and Connect

NOTE: *When the battery is disconnected and connected, some abnormal drive symptoms may occur while the vehicle relearns its adaptive strategy. The vehicle may need to be driven to allow the PCM to relearn the adaptive strategy values.*

1. **WARNING: Before beginning any service procedure in this section, refer to Safety Warnings in section 100-00 General Information. Failure to follow this instruction may result in serious personal injury.**

   Refer to: Health and Safety Precautions (100-00 General Information, Description and Operation).

Disconnecting the battery ground cable to interrupt power to the vehicle electrical system only

2. *Torque* : 22 Nm

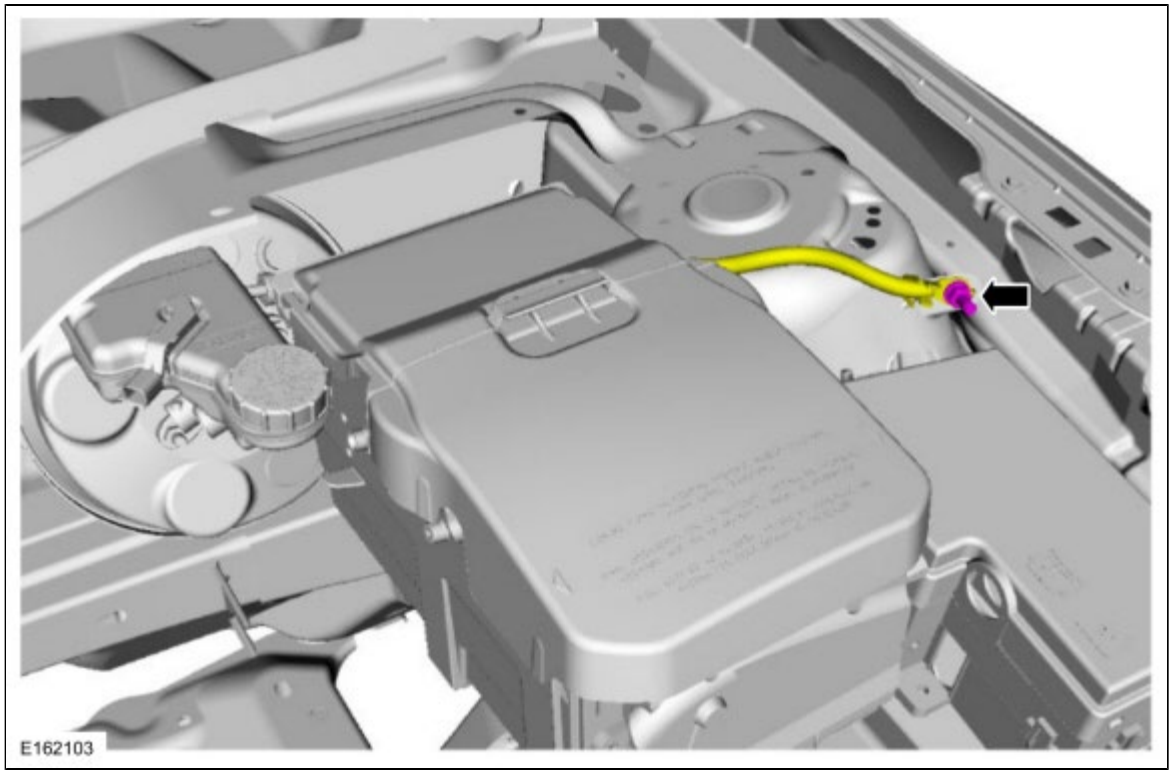

3.

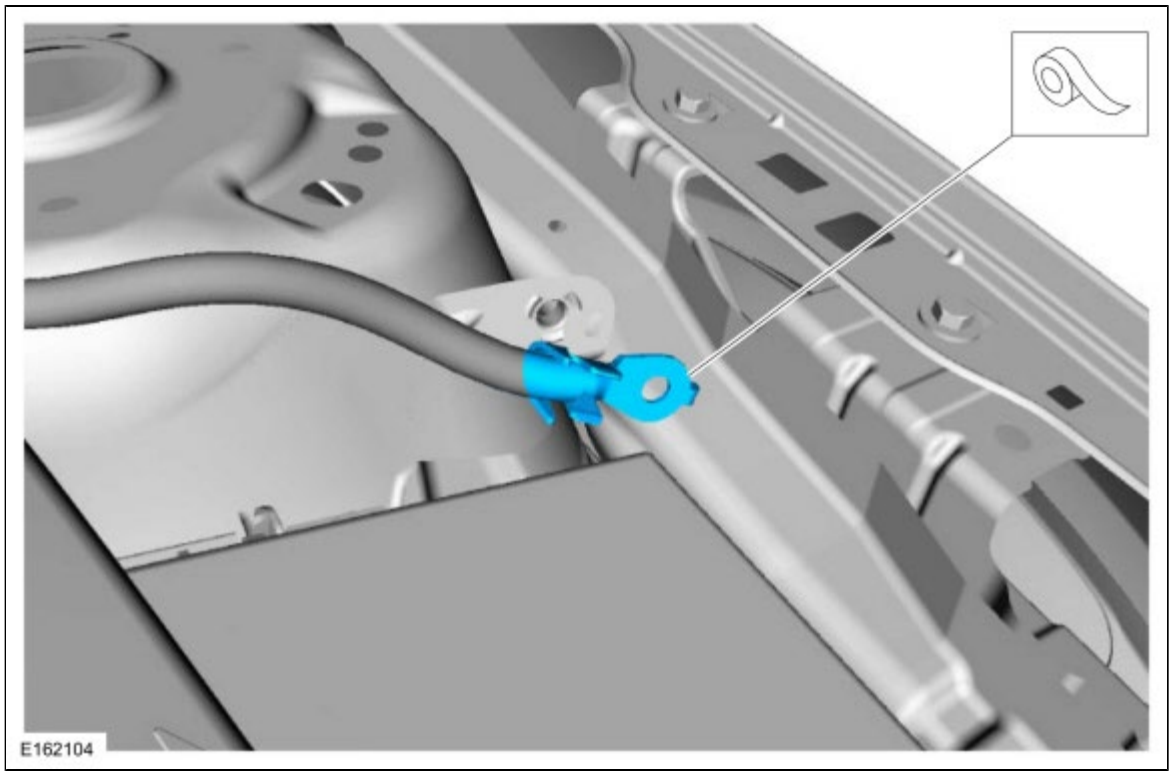

Disconnecting the battery cables

NOTE: *The cowl panel is removed for clarity only.*

4.

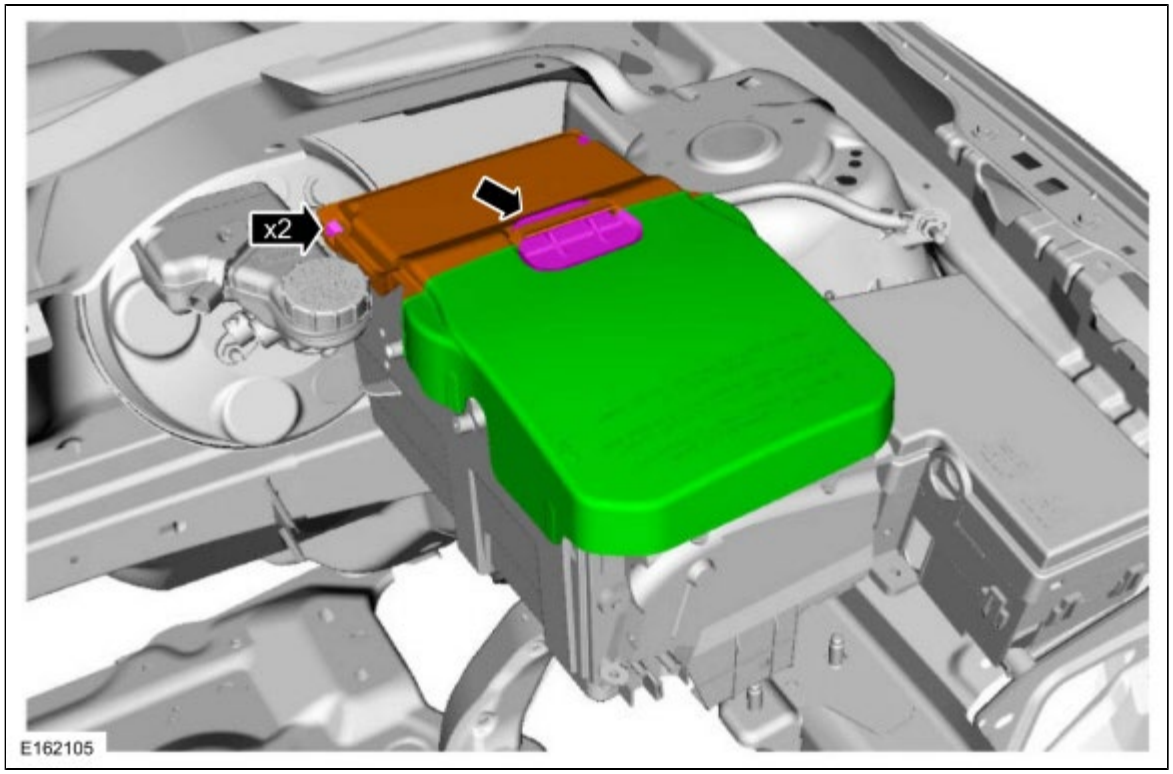

5.

- Refer to: Air Cleaner (303-12A Intake Air Distribution and Filtering - 2.0L Duratec-HE (125kW/170PS) - MI4, Removal and Installation).
- Refer to: Air Cleaner (303-12B Intake Air Distribution and Filtering - 2.0L EcoBoost (184kW/250PS) - MI4, Removal and Installation).

6. *Torque* : 8 Nm

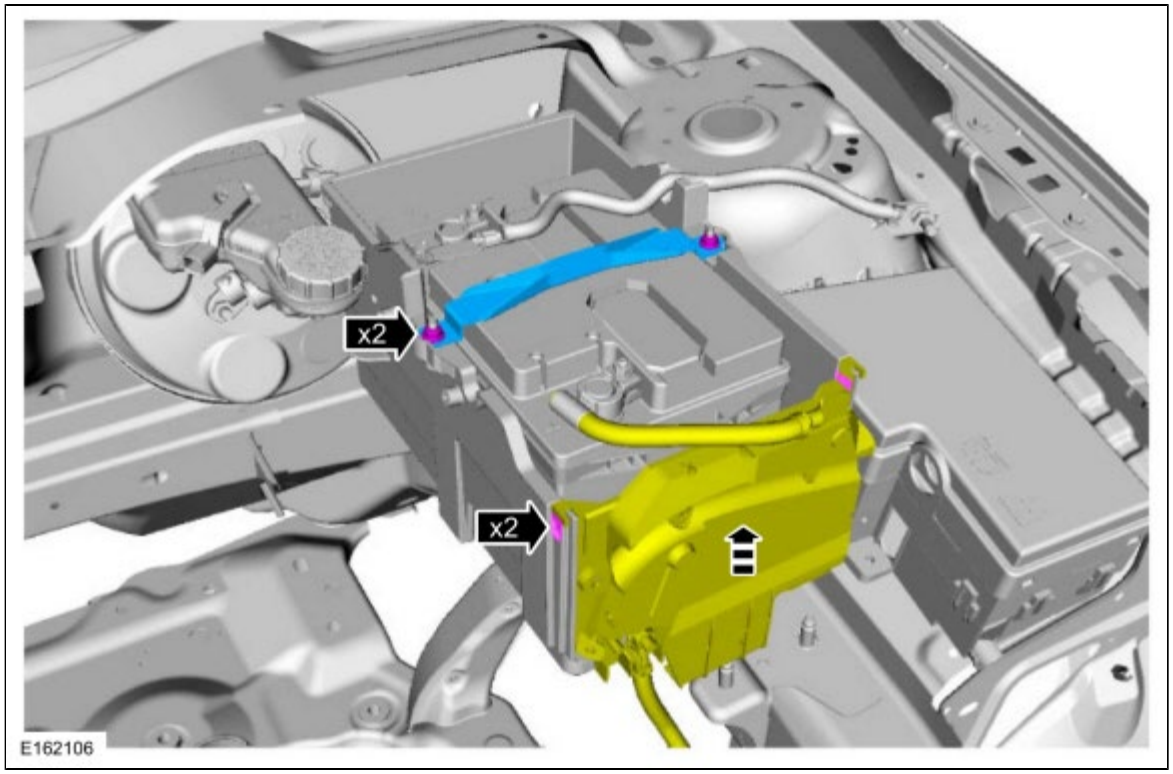

7.

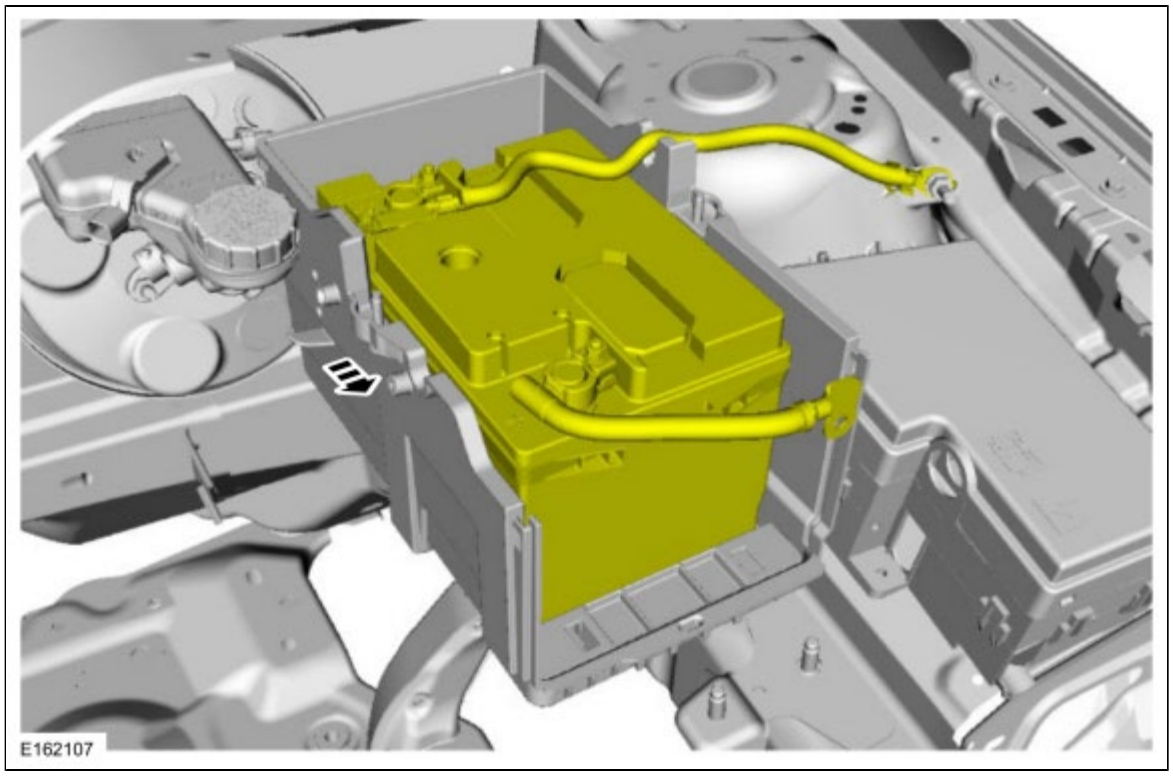

8. *Torque* : 5 Nm

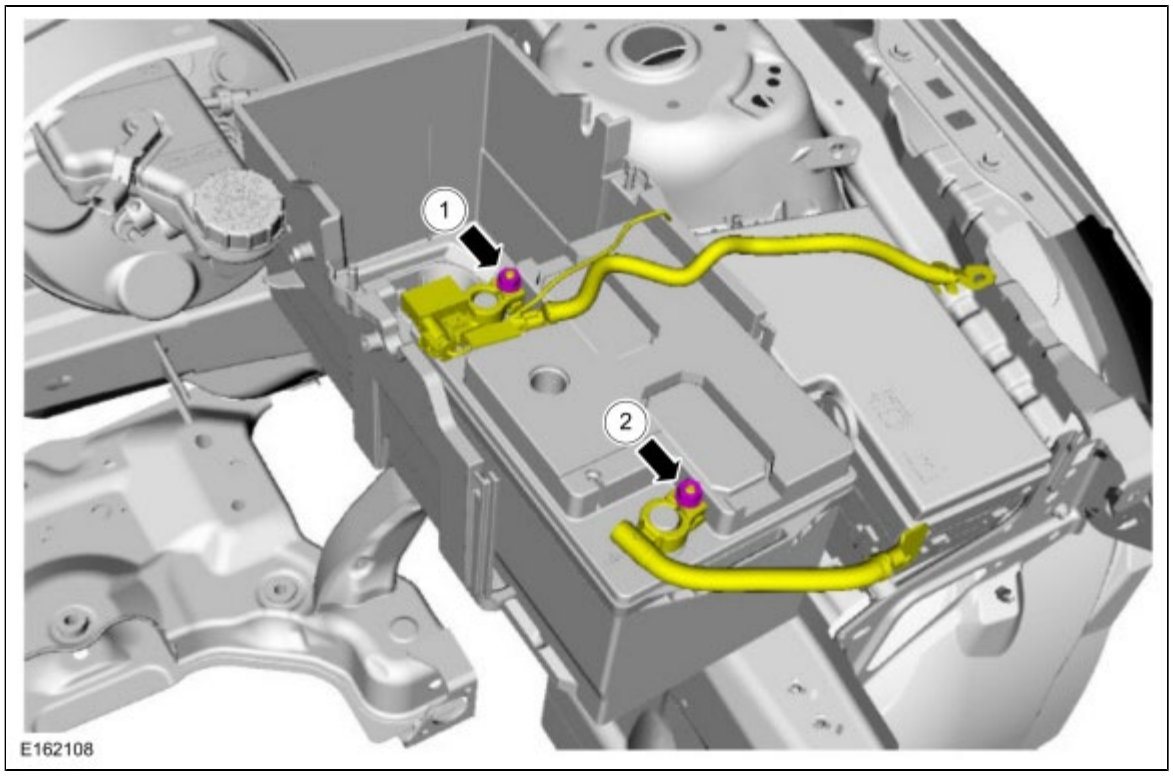

1.
   - Reverse the disconnection procedure.
   - For vehicles with one-touch window, perform the power door window initialization.
     Refer to: Power Door Window Initialization (501-11B Glass, Frames and Mechanisms - Vehicles With: One-Touch Up Door Window, General Procedures).

Copyright © Ford Motor Company

Battery

Removal

1. **WARNING: Before beginning any service procedure in this section, refer to Safety Warnings in section 100-00 General Information. Failure to follow this instruction may result in serious personal injury.**

   Refer to: Health and Safety Precautions (100-00 General Information, Description and Operation).

2. Refer to: Battery Disconnect and Connect (414-01 Battery, Mounting and Cables, General Procedures).

3.

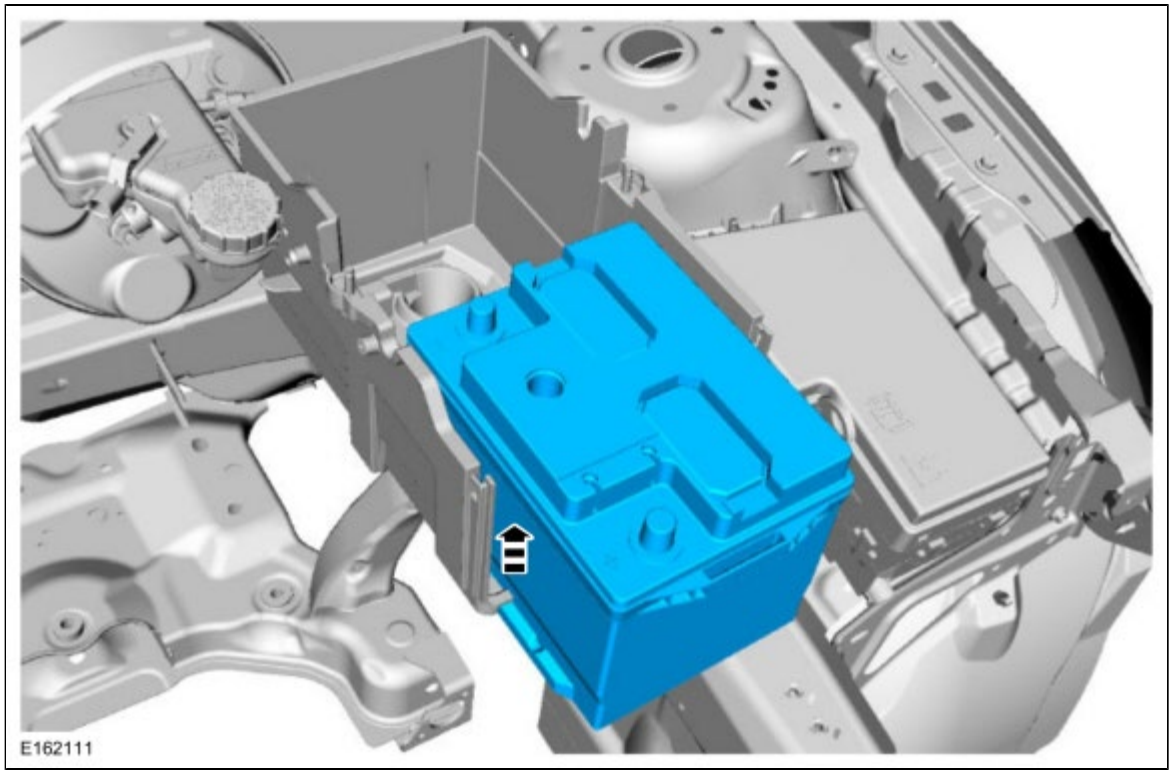

Installation

1.
   - To install, reverse the removal procedure.
   - If installing a new battery, use the scan tool to carry out the Battery Monitoring System (BMS) reset after the battery is connected.

Copyright © Ford Motor Company

Battery Cables - 2.0L Duratec-HE (125kW/170PS) - MI4

Removal

NOTE: *This procedure provides information about routing, retaining points and connectors of the cable. It does not include the steps for removing components to gain access to the cable.*

1. **WARNING: Before beginning any service procedure in this section, refer to Safety Warnings in section 100-00 General Information. Failure to follow this instruction may result in serious personal injury.**

   Refer to: Health and Safety Precautions (100-00 General Information, Description and Operation).

2. Refer to: Jacking and Lifting - Overview (100-02 Jacking and Lifting, Description and Operation).

3. Refer to: Battery Disconnect and Connect (414-01 Battery, Mounting and Cables, General Procedures).

4.
   1. *Torque* : 12 Nm
   2. *Torque* : 5 Nm
   3. *Torque* : 10 Nm
   4. *Torque* : 22 Nm

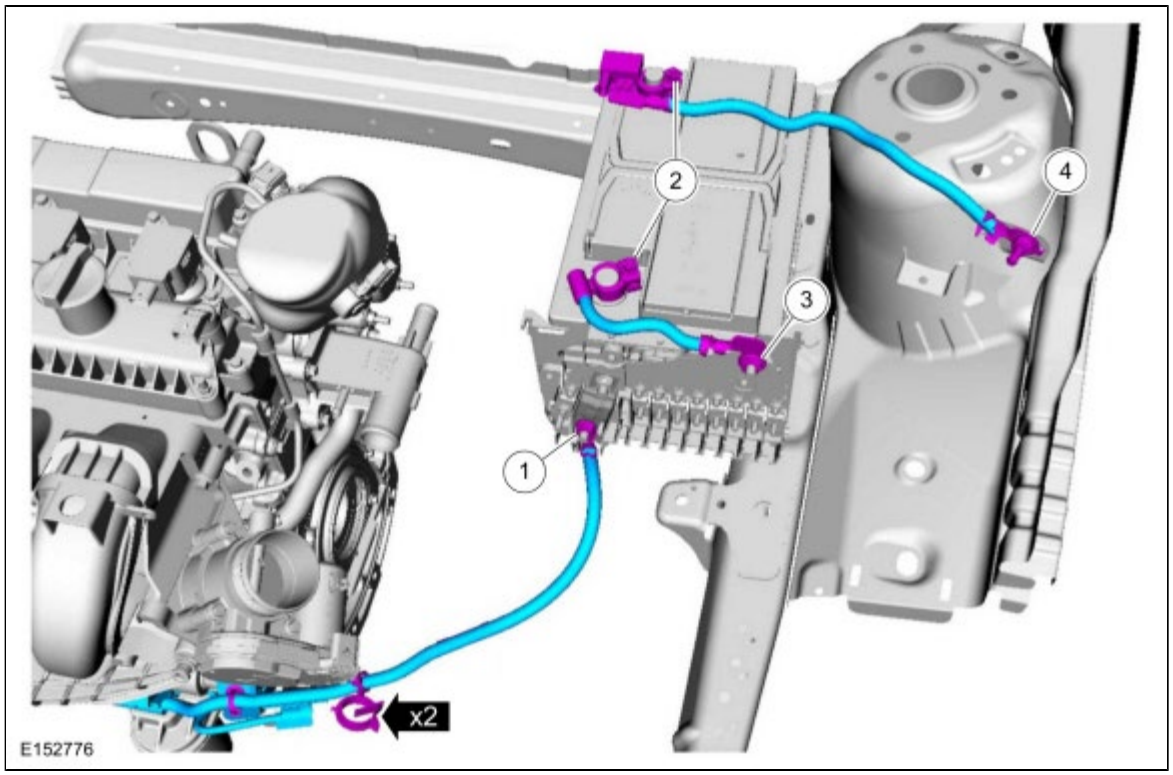

5.
   1. *Torque* : 17 Nm
   2. *Torque* : 12 Nm
   3. *Torque* : 6 Nm

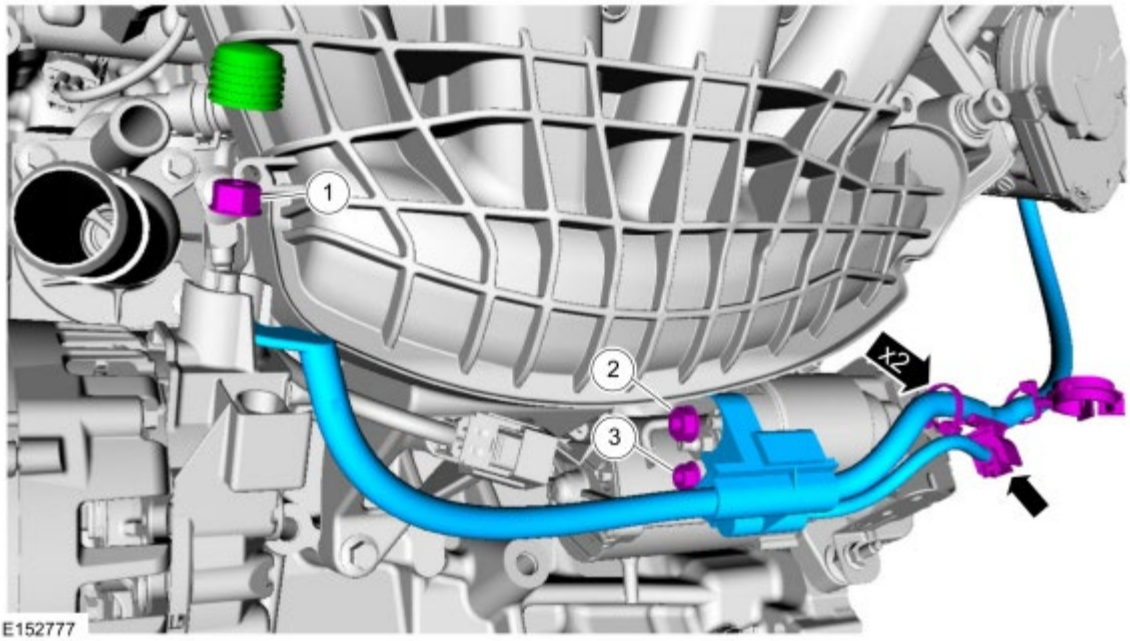

Installation

1. To install, reverse the removal procedure.

Copyright © Ford Motor Company

Specifications

Item	Specification
Roof opening panel glass clearance-front edge	-0.039 –0.000 in (-1 – mm)
Roof opening panel glass clearance-rear edge	0.000 –0.039 in (–1 mm)

Copyright © Ford Motor Company

Roof Opening Panel

The roof opening panel motor must be initialized when repairs are carried out on any part of the roof opening panel system or when the roof opening panel motor, glass, assembly, or air deflector has been removed or replaced for any reason.

Symptom Charts

Symptom Chart: Operation

Diagnostics in this manual assume a certain skill level and knowledge of Ford-specific diagnostic practices.
REFER to: Diagnostic Methods (100-00 General Information, Description and Operation).

Condition	Possible Sources	Actions
The roof opening panel leaks	• Refer to Diagnostic Routine	• GO to Pinpoint Test B
The roof opening panel does not open or close	• Refer to Diagnostic Routine	• GO to Pinpoint Test E
The one-touch open feature is inoperative	• Roof opening panel motor not initialized • Roof opening panel motor/module	• INITIALIZE the roof opening panel motor/module. REFER to: Power Roof Opening Panel Initialization (501-17 Roof Opening Panel, General Procedures). If the concern is still present after initialization, replace the motor. REFER to: Roof Opening Panel Motor (501-17 Roof Opening Panel, Removal and Installation).
The roof opening panel does not seat in flush position from any position	• Incorrect roof opening panel adjustment	• REFER to: Roof Opening Panel Alignment (501-17 Roof Opening Panel, General Procedures).

Symptom Chart: NVH

Diagnostics in this manual assume a certain skill level and knowledge of Ford-specific diagnostic practices.
REFER to: Diagnostic Methods (100-00 General Information, Description and Operation).

Condition	Possible Sources	Actions
The roof opening panel has excessive wind noise	• Refer to Diagnostic Routine	• GO to Pinpoint Test A

The roof opening panel rattles	Refer to Diagnostic Routine	GO to Pinpoint Test C
Roof opening panel is noisy during operation	• Refer to Diagnostic Routine	• GO to Pinpoint Test D

Diagnostic Routines

Pinpoint Test A: The Roof Opening Panel Has Excessive Wind Noise

Normal Operation and Fault Conditions

When the roof opening panel glass is completely closed, it is flush with the roof panel. The roof opening panel weatherstrip provides a seal against adverse weather conditions such as rain and wind, preventing them from entering the passenger compartment. A damaged, deformed or incorrectly installed weatherstrip is unable to effectively seal the glass. The roof opening panel air deflector deflects the air flow over the roof opening panel when the panel is in the VENT or OPEN positions, a damaged or incorrectly installed air deflector is unable to effectively deflect the air flow. An incorrectly installed roof opening panel frame may also allow air/wind to leak into the passenger compartment.

Possible Sources

- Incorrect roof opening panel alignment
- Poorly fitting roof opening panel seal/weatherstrip
- Incorrect installation of the roof opening panel and motor/module
- Incorrect curvature of the air deflector

Visual Inspection

- Roof opening panel air deflector assembly
- Roof opening panel seal

If an obvious cause for an observed or reported concern is found, correct the cause (if possible) before proceeding to the pinpoint test.

PINPOINT TEST A : THE ROOF OPENING PANEL HAS EXCESSIVE WIND NOISE

A1 VERIFY ROOF OPENING PANEL NOISE

- Road test the vehicle with the roof opening panel in the CLOSED and OPEN positions.

Is the wind noise present only in the OPEN position?

Yes	GO to A4
No	GO to A2

A2 CHECK THE ROOF OPENING PANEL WEATHERSTRIP

- **NOTE:** *Make sure the weatherstrip is secured to the glass, not cut, cracked, pinched, loose or obstructed in CLOSED, VENT and OPEN positions.*

  Check the roof opening panel weatherstrip.

Is the roof opening panel weatherstrip OK?

Yes	GO to A3
No	INSTALL a new roof opening panel weatherstrip. TEST the system for normal operation.

A3 CHECK ROOF OPENING PANEL ALIGNMENT

- Check the roof opening panel alignment.

Is the alignment OK?

Yes	CHECK for correct installation of the roof opening panel and motor/module. TEST the system for normal operation.
No	ALIGN the roof opening panel. REFER to: Roof Opening Panel Alignment (501-17 Roof Opening Panel, General Procedures). TEST the system for normal operation.

A4 CHECK THE AIR DEFLECTOR

- Make sure the air deflector is securely attached.

Is the air deflector OK?

Yes	PARTIALLY CLOSE the roof opening panel until the noise is eliminated. If the noise is eliminated, INFORM the customer that changing glass location will eliminate the wind noise. If the wind noise is not eliminated, INSTALL a new air deflector. REFER to: Air Deflector (501-17 Roof Opening Panel, Removal and Installation). TEST the system for normal operation.
No	INSTALL new air deflector. REFER to: Air Deflector (501-17 Roof Opening Panel, Removal and Installation). TEST the system for normal operation.

Pinpoint Test B: The Roof Opening Panel Leaks

Normal Operation and Fault Conditions

When the roof opening panel glass is completely closed, it is flush with the roof panel. The roof opening panel weatherstrip provides a seal against adverse weather conditions such as rain and wind, preventing them from entering the passenger compartment. A damaged, deformed or incorrectly installed weatherstrip is unable to seal the glass efficiently. The roof opening panel trough assembly and drain hoses provide a route for water to drain away from the opening panel, damaged or obstructed drain hoses or trough assembly will allow water to collect and possibly leak into the passenger compartment.

NOTE: *Water may accumulate on both outside front corners of the glass panel after rain or after a car wash. If the glass panel is opened with water in the front corners, this water will fall into the channel for the glass panel track (which is not sealed) and down into the headliner. If the source of a suspected leak cannot be determined, this situation may be the source. This is a normal condition, do not replace any part of the roof opening panel system due to this condition.*

Possible Sources

- Incorrect roof opening panel adjustments
- Damaged roof opening panel drain hoses
- Damaged roof opening panel seal/weatherstrip
- Damaged roof opening panel frame
- Incorrect position of the roof opening panel glass

Visual Inspection

- Roof opening panel trough
- Roof opening panel seal

If an obvious cause for an observed or reported concern is found, correct the cause (if possible) before proceeding to the pinpoint test.

PINPOINT TEST B : THE ROOF OPENING PANEL LEAKS

B1 CHECK THE ALIGNMENT OF THE ROOF OPENING PANEL

- **NOTE:** *Make sure the roof opening panel weatherstrip is not cracked or loose.*

  Check the roof opening panel weatherstrip.

Does the roof opening panel seal correctly?

Yes	GO to B2
No	ALIGN the roof opening panel. REFER to: Roof Opening Panel Alignment (501-17 Roof Opening Panel, General Procedures). TEST the system for normal operation.

B2 CHECK THE ROOF OPENING PANEL DRAIN HOSES

- **NOTE:** *Make sure the roof opening panel weatherstrip is not cracked or loose.*

  Check the 4 roof opening panel drain hoses for correct operation.

Are the roof opening panel drain hoses OK?

Yes	GO to B3
No	REPAIR or INSTALL a new roof opening panel drain hose(s). TEST the system for normal operation.

B3 CHECK THE ROOF OPENING PANEL DRAIN HOSE ATTACHMENT POINTS

- **NOTE:** *Make sure the roof opening panel drain hose attachment points are not damaged or obstructed.*

  Check the roof opening panel drain hose attachment points for correct attachment.

Are the roof opening panel drain hose attachment points OK?

Yes	GO to B4
No	REPAIR or INSTALL a new roof opening frame. REFER to: Roof Opening Panel Frame - Vehicles With: 4-Door (501-17 Roof Opening Panel, Removal and Installation). or REFER to: Roof Opening Panel Frame - Vehicles With: 5-Door (501-17 Roof Opening Panel, Removal and Installation). TEST the system for normal operation.

B4 CHECK THE ROOF OPENING PANEL REAR TROUGH CONDITION

- Check the roof opening panel rear trough for damage.

Is the roof opening panel trough OK?

Yes	GO to B5
No	REPAIR or INSTALL a new roof opening panel rear trough. REFER to: Trough Assembly (501-17 Roof Opening Panel, Removal and Installation). TEST the system for normal operation.

B5 CHECK THE CONDITION OF THE ROOF OPENING PANEL FRAME
• Check the roof opening panel frame for damage that may cause the roof opening panel glass seal to seat incorrectly. **Is the roof opening panel frame OK?**

Yes	INSTALL a new roof opening panel glass. REFER to: Roof Opening Panel Glass (501-17 Roof Opening Panel, Removal and Installation). TEST the system for normal operation.
No	REPAIR or INSTALL a new roof opening frame. REFER to: Roof Opening Panel Frame - Vehicles With: 4-Door (501-17 Roof Opening Panel, Removal and Installation). or REFER to: Roof Opening Panel Frame - Vehicles With: 5-Door (501-17 Roof Opening Panel, Removal and Installation). TEST the system for normal operation.

Pinpoint Test C: The Roof Opening Panel Rattles

Normal Operation and Fault Conditions

When the roof opening panel glass is completely closed, it is flush with the roof panel. All components should be secured correctly. The roof opening panel system is made up of many components that require specific torque specifications and correct installation in order to avoid any NVH concerns. Over time, components may become loose or damaged, fasteners may become loose, sound insulating material may wear out and foreign material may collect in the roof opening panel frame. It is possible that one or more of these conditions may lead to a rattle concern in the roof opening panel system.

Possible Sources

- Roof opening panel
- Roof opening panel air deflector assembly
- Roof opening panel trough
- Roof opening panel lifter assemblies
- Roof opening panel motor/module pad
- Roof opening panel frame

Visual Inspection

- Roof opening panel glass
- Roof opening panel lifter assemblies
- Roof opening panel trough
- Roof opening panel air deflector assembly
- Roof opening panel seal
- Roof opening panel shield

If an obvious cause for an observed or reported concern is found, correct the cause (if possible) before proceeding to the pinpoint test.

PINPOINT TEST C : THE ROOF OPENING PANEL RATTLES

C1 CHECK THE ROOF OPENING PANEL WEATHERSTRIP
• **NOTE:** *Make sure the weatherstrip is secured to the glass, not cut, cracked, pinched, loose or obstructed in CLOSED, VENT and OPEN positions.* Check the roof opening panel weatherstrip.

Is the roof opening panel weatherstrip OK?

Yes	GO to C2
No	INSTALL a new roof opening panel weatherstrip. TEST the system for normal operation.

C2 CHECK THE ROOF OPENING PANEL TIGHTNESS

- Manually push up and fore/aft.

Is the roof opening panel loose?

Yes	ALIGN the roof opening panel. REFER to: Roof Opening Panel Alignment (501-17 Roof Opening Panel, General Procedures). TEST the system for normal operation.
No	GO to C3

C3 CHECK THE ROOF OPENING PANEL TRACKS

- Open the roof opening panel.
- Check the roof opening panel tracks for obstructions and damage.

Are the roof opening panel tracks OK?

Yes	GO to C4
No	REMOVE all the roof opening panel track obstructions and REPAIR the roof opening panel tracks. If the roof opening panel tracks cannot be repaired, INSTALL a new roof opening panel frame. REFER to: Roof Opening Panel Frame - Vehicles With: 4-Door (501-17 Roof Opening Panel, Removal and Installation). or REFER to: Roof Opening Panel Frame - Vehicles With: 5-Door (501-17 Roof Opening Panel, Removal and Installation). TEST the system for normal operation.

C4 CHECK THE ROOF OPENING PANEL TROUGH AND TROUGH GUIDES

- Check the water roof opening panel trough and trough guides for any loose obstructions.

Are the roof opening panel trough and trough guides installed securely and free from obstructions?

Yes	GO to C5
No	REMOVE all obstructions from the roof opening panel trough guides and INSTALL securely. INSTALL a new roof opening panel frame if the trough guides are damaged. REFER to: Roof Opening Panel Frame - Vehicles With: 4-Door (501-17 Roof Opening Panel, Removal and Installation). or REFER to: Roof Opening Panel Frame - Vehicles With: 5-Door (501-17 Roof Opening Panel, Removal and Installation). TEST the system for normal operation.

C5 CHECK THE ROOF OPENING PANEL SHIELD (SUNSHADE)

- Check the roof opening panel shield for correct installation.

Is the roof opening panel shield installed correctly?

Yes	GO to C6
No	INSTALL the roof opening panel shield correctly. REFER to: Roof Opening Panel Shield (501-17 Roof Opening Panel, Removal and Installation). TEST the system for normal operation.

C6 CHECK THE ROOF OPENING PANEL AIR DEFLECTOR ASSEMBLY

- Check the roof opening panel air deflector assembly for obstructions and damage.

Is the roof opening panel air deflector assembly OK?

Yes	GO to C7
No	REMOVE all obstructions and REPAIR or INSTALL a new roof opening panel air deflector assembly. REFER to: Air Deflector (501-17 Roof Opening Panel, Removal and Installation). TEST the system for normal operation.

C7 CHECK THE ROOF OPENING PANEL GLASS

- VERIFY the roof opening panel glass is free from obstructions and damage, and is securely fastened.

Is the roof opening panel glass OK?

Yes	GO to C8
No	REPAIR or INSTALL a new roof opening panel glass. REFER to: Roof Opening Panel Glass (501-17 Roof Opening Panel, Removal and Installation). TEST the system for normal operation.

C8 CHECK THE ROOF OPENING PANEL LIFTER ASSEMBLIES

- VERIFY the roof opening panel lifter assemblies are free from obstructions and damage.

Are the roof opening panel lifter assemblies OK?

Yes	GO to C9
No	REMOVE all obstructions from the roof opening panel lifter assemblies and REPAIR any damage. If the roof opening panel lifter assemblies cannot be repaired, INSTALL a new roof opening panel frame. REFER to: Roof Opening Panel Frame - Vehicles With: 4-Door (501-17 Roof Opening Panel, Removal and Installation). or REFER to: Roof Opening Panel Frame - Vehicles With: 5-Door (501-17 Roof Opening Panel, Removal and Installation). TEST the system for normal operation.

C9 CHECK ROOF OPENING PANEL FRAME INSTALLATION

- Check all roof opening fasteners for correct torque and verify correct installation of the roof opening panel frame.
  REFER to: Roof Opening Panel Frame - Vehicles With: 4-Door (501-17 Roof Opening Panel, Removal and Installation).
  or REFER to: Roof Opening Panel Frame - Vehicles With: 5-Door (501-17 Roof Opening Panel, Removal and Installation).

Is the roof opening panel correctly installed and tightened to specification?

Yes	GO to C10
No	TIGHTEN the loose fasteners or REINSTALL the roof opening panel frame. REFER to: Roof Opening Panel Frame - Vehicles With: 4-Door (501-17 Roof Opening Panel, Removal and Installation). or REFER to: Roof Opening Panel Frame - Vehicles With: 5-Door (501-17 Roof Opening Panel, Removal and Installation). TEST the system for normal operation.

C10 CHECK THE ROOF OPENING PANEL FRAME FOR RATTLES

- Check the roof opening panel frame assembly for any loose parts or for any condition that will cause rattles.

Is there a condition that will cause rattles?

Yes	INSTALL a suitable sound damper material to correct the condition. If the rattle still persists, INSTALL a new roof opening panel frame. REFER to: Roof Opening Panel Frame - Vehicles With: 4-Door (501-17 Roof Opening Panel, Removal and Installation). or REFER to: Roof Opening Panel Frame - Vehicles With: 5-Door (501-17 Roof Opening Panel, Removal and Installation). TEST the system for normal operation.
No	INSTALL a new roof opening panel frame. REFER to: Roof Opening Panel Frame - Vehicles With: 4-Door (501-17 Roof Opening Panel, Removal and Installation). or REFER to: Roof Opening Panel Frame - Vehicles With: 5-Door (501-17 Roof Opening Panel, Removal and Installation). TEST the system for normal operation.

Pinpoint Test D: The Roof Opening Panel is Noisy During Operation

Normal Operation and Fault Conditions

When the roof opening panel glass closes, it should do so quietly and smoothly. The roof opening panel system is made up of many components that require specific torque specifications and correct installation in order to avoid any NVH concerns. Over time, components may become loose or damaged, fasteners may become loose, sound insulating material may wear out and foreign material may collect in the roof opening panel frame. It is possible that one or more of these conditions may lead to a noise concern in the roof opening panel system.

Possible Sources

- Roof opening panel
- Obstructed or damaged roof opening panel
- Obstructed or damaged roof opening panel lifter assemblies
- Noisy roof opening panel motor/module
- Incorrect roof opening panel adjustment

Visual Inspection

- Roof opening panel obstructions
- Roof opening panel lifter assemblies
- Roof opening panel shield

If an obvious cause for an observed or reported concern is found, correct the cause (if possible) before proceeding to the pinpoint

test.

PINPOINT TEST D : THE ROOF OPENING PANEL IS NOISY DURING OPERATION

D1 CHECK THE ROOF OPENING PANEL FOR OBSTRUCTIONS OR DAMAGE

- Check the roof opening panel for any obstructions and damage.

Are there any obstructions and/or damage?

Yes	REMOVE all obstructions. REPAIR any damage. If the damage cannot be repaired, INSTALL a new roof opening panel frame. REFER to: Roof Opening Panel Frame - Vehicles With: 4-Door (501-17 Roof Opening Panel, Removal and Installation). or REFER to: Roof Opening Panel Frame - Vehicles With: 5-Door (501-17 Roof Opening Panel, Removal and Installation). TEST the system for normal operation.
No	GO to D2

D2 CHECK THE ROOF OPENING PANEL OPERATION

- Check the roof opening panel during operation.

Is the roof opening panel loose or incorrectly aligned?

Yes	ALIGN the roof opening panel. REFER to: Roof Opening Panel Alignment (501-17 Roof Opening Panel, General Procedures). TEST the system for normal operation.
No	GO to D3

D3 CHECK THE ROOF OPENING PANEL TRACKS

- Open the roof.
- Check the roof opening panel tracks for obstructions and damage.

Are the roof opening panel tracks OK?

Yes	GO to D4
No	REMOVE all obstructions and REPAIR any damage. If the roof opening panel tracks cannot be repaired, INSTALL a new roof opening panel frame. REFER to: Roof Opening Panel Frame - Vehicles With: 4-Door (501-17 Roof Opening Panel, Removal and Installation). or REFER to: Roof Opening Panel Frame - Vehicles With: 5-Door (501-17 Roof Opening Panel, Removal and Installation). TEST the system for normal operation.

D4 CHECK THE ROOF OPENING PANEL SHIELD

- Check the roof opening panel shield for correct movement.

Is the roof opening panel shield moving correctly?

Yes	GO to D5

No	REMOVE and REINSTALL the roof opening panel shield. REFER to: Roof Opening Panel Shield (501-17 Roof Opening Panel, Removal and Installation). TEST the system for normal operation.

D5 CHECK THE ROOF OPENING PANEL LIFTER ASSEMBLIES

- Check the roof opening panel lifter assemblies for obstructions and damage.

Are the roof opening panel lifter assemblies OK?

Yes	GO to D6
No	REMOVE all obstructions and REPAIR any damage. If the roof opening panel lifter assemblies cannot be repaired, INSTALL a new roof opening panel frame. REFER to: Roof Opening Panel Frame - Vehicles With: 4-Door (501-17 Roof Opening Panel, Removal and Installation). or REFER to: Roof Opening Panel Frame - Vehicles With: 5-Door (501-17 Roof Opening Panel, Removal and Installation). TEST the system for normal operation.

D6 CHECK THE ROOF OPENING PANEL MOTOR/MODULE

- Remove the roof opening panel motor/module and leave the electrical connector connected.
- Operate the roof opening panel to the full OPEN and CLOSED position.

Does the motor/module make excessive noise?

Yes	INSTALL a new roof opening panel motor/module. REFER to: Roof Opening Panel Motor (501-17 Roof Opening Panel, Removal and Installation). TEST the system for normal operation.
No	REINSTALL the roof opening panel motor/module. REFER to: Roof Opening Panel Motor (501-17 Roof Opening Panel, Removal and Installation). TEST the system for normal operation. If the roof opening panel is no longer noisy, the system is operating correctly. The concern may have been caused by an incorrectly installed roof opening panel motor. If the roof opening panel is still noisy, INSTALL a new roof opening panel frame. REFER to: Roof Opening Panel Frame - Vehicles With: 4-Door (501-17 Roof Opening Panel, Removal and Installation). or REFER to: Roof Opening Panel Frame - Vehicles With: 5-Door (501-17 Roof Opening Panel, Removal and Installation). TEST the system for normal operation.

Pinpoint Test E: The Roof Opening Panel Does Not Open or Close

Refer to Wiring Diagrams Cell 101 for schematic and connector information.

Normal Operation and Fault Conditions

The roof opening panel motor/module receives voltage from the accessory delay relay when the ignition is in the ACC or RUN position. The overhead console switch supplies ground signals to the roof opening panel motor/module to operate the roof opening panel. A failure in the power, ground, or control circuits, an internal failure of the switch or motor/module or a motor/module that has not been initialized all cause the roof opening panel to become inoperative.

Possible Sources

- Fuse(s)
- Wiring, terminals or connectors
- Roof opening panel switch
- Roof opening panel motor/module assembly
- Accessory delay relay
- Roof opening panel motor not initialized

Visual Inspection

- Roof opening panel
- Roof opening panel frame
- Roof opening panel drain hoses
- Roof opening panel lifter assemblies
- Roof opening panel trough
- Roof opening panel air deflector assembly
- Roof opening panel seal
- Roof opening panel shield

Diagnostic Pre-checks

- BCM fuse (80) (20A)
- RJB fuse (37) (5A)
- Circuitry
- Accessory delay relay
- Roof opening panel switch

If an obvious cause for an observed or reported concern is found, correct the cause (if possible) before proceeding to the pinpoint test.

PINPOINT TEST E : THE ROOF OPENING PANEL DOES NOT OPEN OR CLOSE

E1 CHECK THE MOTOR/MODULE FOR INITIALIZATION

- Carry out the roof opening panel motor initialization procedure.
  REFER to: Power Roof Opening Panel Initialization (501-17 Roof Opening Panel, General Procedures).
- Operate the system and determine if the concern is still present.

Is the concern still present?

Yes	GO to E2
No	The system is operating normally at this time. The roof opening panel motor was not initialized.

E2 CHECK THE ROOF OPENING PANEL SWITCH

- Ignition OFF.
- Disconnect C912Roof Opening Panel Switch.
- Carry out the Roof Opening Panel Switch component test.
  Refer to Wiring Diagrams Cell 149 for schematic and connector information.

Is the roof opening panel switch OK?

Yes	GO to E3
No	INSTALL a new roof opening panel switch. REFER to: Roof Opening Panel Control Switch (501-17 Roof Opening Panel, Removal and Installation). TEST the system for normal operation

E3 CHECK THE ROOF OPENING PANEL MOTOR/MODULE VOLTAGE SUPPLY

- Ignition OFF.
- Disconnect Roof Opening Panel Motor C921 .
- Ignition ON.
- Measure:

Positive Lead	Measurement / Action	Negative Lead
C921-6	V	—
C921-3	V	—

Is each voltage within 0.2 volt of battery voltage?

Yes	GO to E4
No	VERIFY BCM fuse 80 (20A) and RJB fuse 37 (5A) are OK. If OK, REPAIR the affected circuit for high resistance or an open. TEST the system for normal operation. If not OK, REFER to the Wiring Diagrams manual to identify the cause of the circuit short. TEST the system for normal operation.

E4 CHECK THE ROOF OPENING PANEL MOTOR GROUND CIRCUIT FOR AN OPEN

- Ignition OFF.
- Disconnect the battery negative cable.
  REFER to: Battery Disconnect and Connect (414-01 Battery, Mounting and Cables, General Procedures).
- Measure:

Positive Lead	Measurement / Action	Negative Lead
C921-1	Ω	—

Is the resistance less than 3 ohms?

Yes	GO to E5
No	REPAIR the circuit. TEST the system for normal operation.

E5 CHECK ROOF OPENING PANEL SWITCH TO ROOF OPENING PANEL MOTOR CIRCUITS FOR AN OPEN

- Measure:

Positive Lead	Measurement / Action	Negative Lead
C912-11	Ω	C921-10
C912-12	Ω	C921-5

Are the resistances less than 3 ohms?

Yes	GO to E6
No	REPAIR the circuit. TEST the system for normal operation.

E6 CHECK THE ROOF OPENING PANEL SWITCH GROUND CIRCUIT FOR AN OPEN

- Measure:

Positive Lead	Measurement / Action	Negative Lead
C912-5	Ω	—

Is the resistance less than 3 ohms?

Yes	GO to E7
No	REPAIR the circuit. TEST the system for normal operation.

E7 CHECK THE ROOF OPENING PANEL MOTOR/MODULE FOR CORRECT OPERATION

- Check the roof opening panel motor connector for:
  - Corrosion (if corroded, install new connector or terminal or clean module pins)
  - Damaged or pushed-out pins (if damaged or pushed out, install new terminals/pins as necessary)
- Connect the roof opening panel motor/module connector and switch connector. Make sure both seat correctly.
- Connect the battery negative cable.
  REFER to: Battery Disconnect and Connect (414-01 Battery, Mounting and Cables, General Procedures).
- Operate the system and verify the concern is still present.

Is the concern still present?

Yes	INSTALL a new roof opening panel motor/module. REFER to: Roof Opening Panel Motor (501-17 Roof Opening Panel, Removal and Installation). TEST the system for normal operation.
No	The system is operating correctly at this time. The concern may have been caused by a loose or corroded connector.

Copyright © Ford Motor Company

Timing Adjustment

NOTE: *Any time a roof opening panel motor is removed, the cables/mechanisms can experience free-play movement. It is important that the cables do not move. They are timed to be parallel with each other. If one or both are moved in either direction, the Timing Adjustment must be performed.*

NOTE: *The roof opening panel motor must be initialized when repairs are carried out on any part of the roof opening panel system or when the roof opening panel motor, glass, assembly, or air deflector has been removed or replaced for any reason.*

1. **WARNING: Before beginning any service procedure in this section, refer to Safety Warnings in section 100-00 General Information. Failure to follow this instruction may result in serious personal injury.**

   Refer to: Health and Safety Precautions (100-00 General Information, Description and Operation).

2. Refer to: Roof Opening Panel Glass (501-17 Roof Opening Panel, Removal and Installation).

3. With the roof opening panel glass removed, position the roof opening panel to the CLOSED position.

4. Refer to: Roof Opening Panel Motor (501-17 Roof Opening Panel, Removal and Installation).

5. **NOTE:** *The trough assembly arms are pulled out and the trough moved rearward to release the trough assembly guide arm pins from the roof opening panel frame and to access the alignment holes.*

   Both sides.

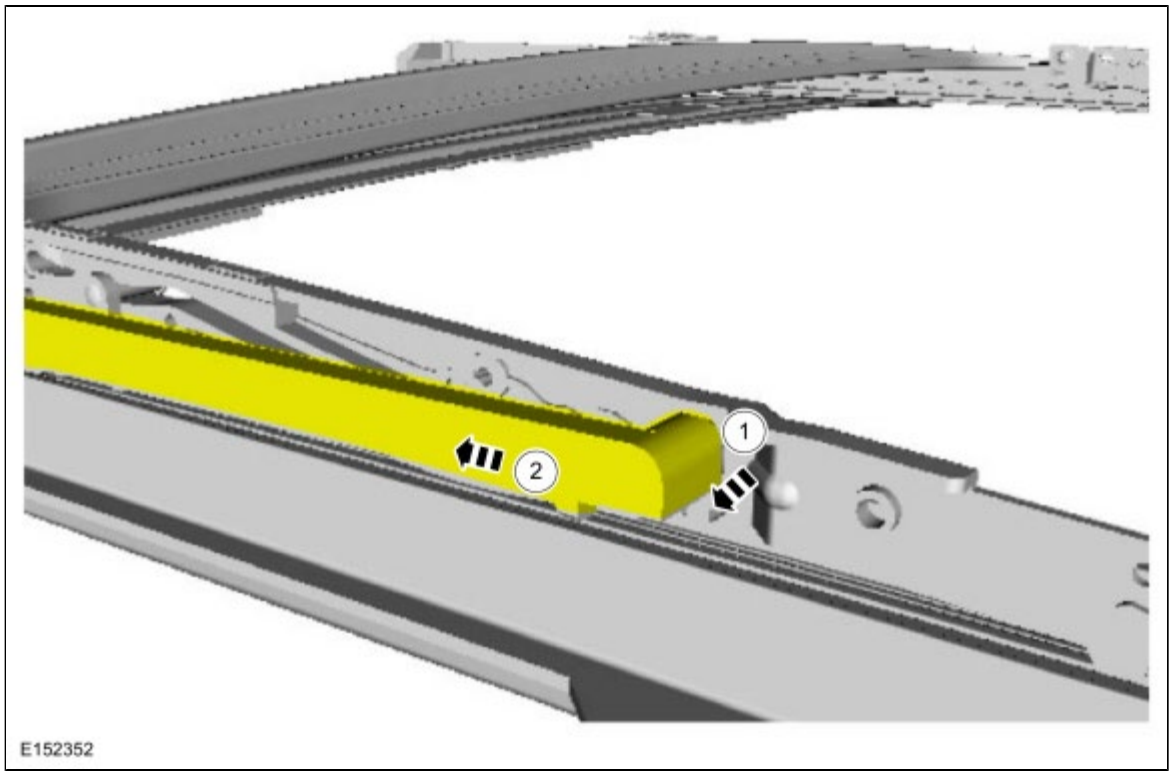

6. **NOTE:** *There is a hole in the lifter arm and a hole in the cable link. They will only align in one position.*

   Move the affected cables by hand until the timing holes are aligned with each other.

7. **NOTE:** *There is a hole in the lifter arm and a hole in the cable link. They will only align in one position, and may need to be moved to align prior to inserting alignment tool. The alignment tool must remain in position until the trough assembly arms*

are repositioned.

Punch. Both sides

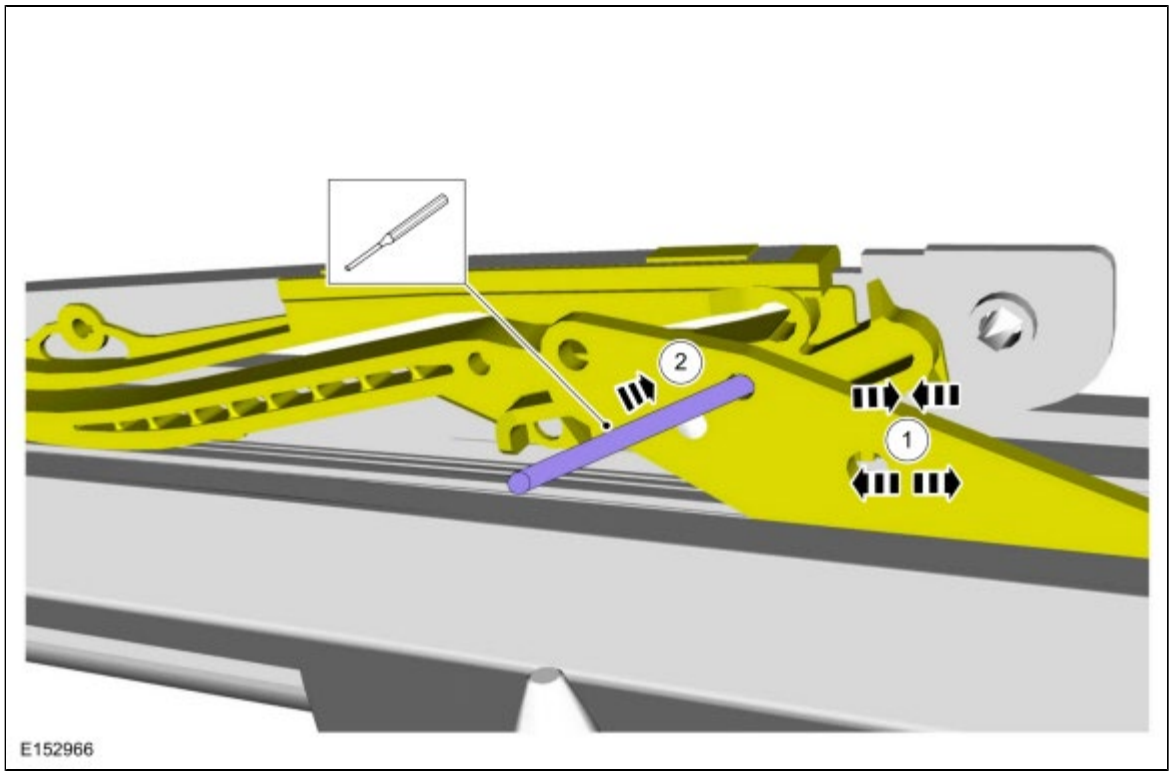

8. **NOTE:** *When positioning the roof opening panel motor, it may be necessary to turn the roof opening panel motor slightly to engage the drive splines.*

   Refer to: Roof Opening Panel Motor (501-17 Roof Opening Panel, Removal and Installation).

9. **NOTE:** *Remove the Allen wrench or pick **only** after both trough assembly arms are properly attached.*

   Both sides.

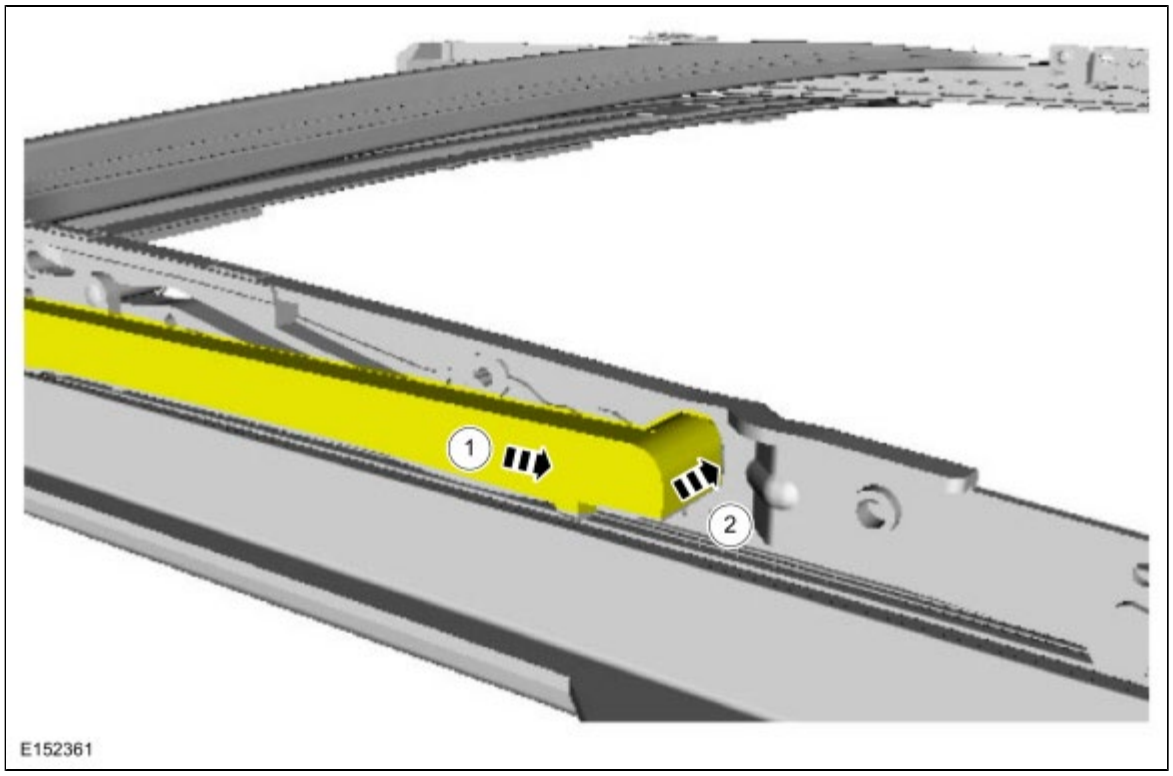

10. Refer to: Roof Opening Panel Glass (501-17 Roof Opening Panel, Removal and Installation).
11. Refer to: Roof Opening Panel Motor (501-17 Roof Opening Panel, Removal and Installation).

Copyright © Ford Motor Company

Roof Opening Panel Alignment

1. **WARNING: Before beginning any service procedure in this section, refer to Safety Warnings in section 100-00 General Information. Failure to follow this instruction may result in serious personal injury.**

   Refer to: Health and Safety Precautions (100-00 General Information, Description and Operation).

2. **NOTE:** *The roof opening panel must be in the CLOSED position.*

   Both sides. Loosen only, for alignment.

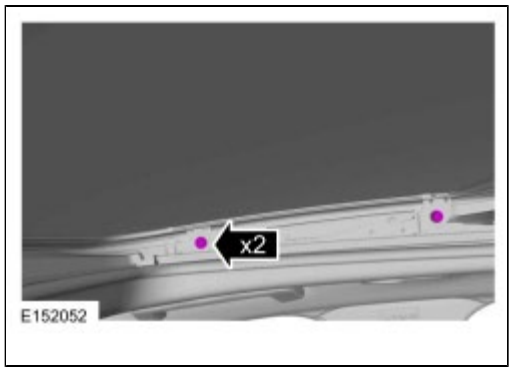

3.

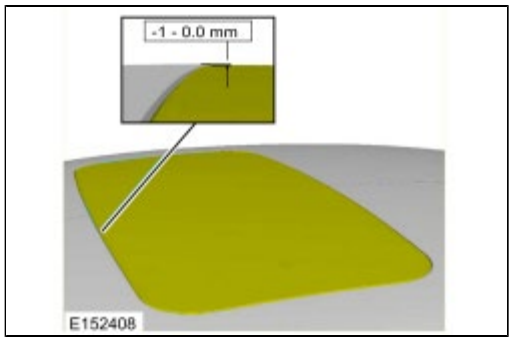

4.

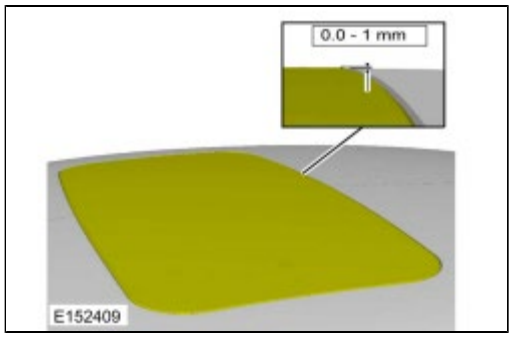

5. Both sides.
   Torque : 4 Nm

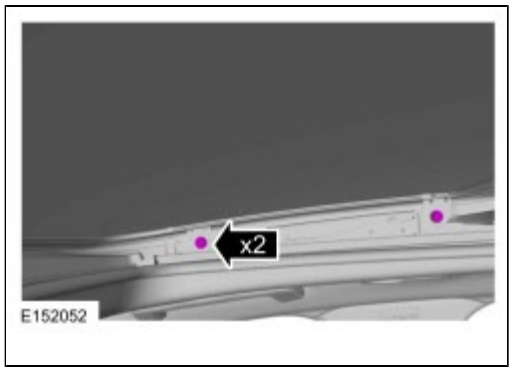

6. Refer to: Power Roof Opening Panel Initialization (501-17 Roof Opening Panel, General Procedures).

Copyright © Ford Motor Company

Power Roof Opening Panel Initialization

1. **WARNING: Before beginning any service procedure in this section, refer to Safety Warnings in section 100-00 General Information. Failure to follow this instruction may result in serious personal injury.**

   Refer to: Health and Safety Precautions (100-00 General Information, Description and Operation).

NOTE: *Until the initialization procedure is complete, the one-touch open and one-touch close function is disabled.*

NOTE: *An initialization procedure that was interrupted or not completed can be started again after cycling the ignition from ON to OFF and back to ON again.*

2. Place the ignition switch in the RUN position. For initializing an existing roof opening panel motor, skip to Step 6.
3. **For a new roof opening panel motor** , press and hold the front portion of the control switch until the roof opening panel glass moves slightly past the full VENT position (approximately 2 mm (0.0787 in)) and stops.
4. Quickly (within 0.5 second) release, then press and hold the front portion of the control switch while the roof opening panel glass move to the full OPEN position and then back to the full CLOSED position.
5. Release the switch and verify successful initialization by performing one-touch open and one-touch closed operations.
6. **For an existing roof opening panel motor** , press and hold the front portion of control switch until the roof opening panel glass moves to the full VENT position, then release the switch.
7. Press and hold the front portion of the control switch for approximately 30 seconds until the roof opening panel glass moves slightly past the full VENT position (approximately 2 mm (0.0787 in)) and stops.
8. Quickly (within 0.5 second) release, then press and hold the front portion of the control switch while the roof opening panel glass moves to the full OPEN position and then back to the full CLOSED position.
9. Release the switch and verify successful initialization by performing one-touch open and one-touch closed operations.

Copyright © Ford Motor Company

Air Deflector

Removal

NOTE: *Removal steps in this procedure may contain installation details.*

1. **WARNING: Before beginning any service procedure in this section, refer to Safety Warnings in section 100-00 General Information. Failure to follow this instruction may result in serious personal injury.**

   Refer to: Health and Safety Precautions (100-00 General Information, Description and Operation).

2. **NOTE:** *The roof opening panel glass must be in the full OPEN position.*

   Both sides.

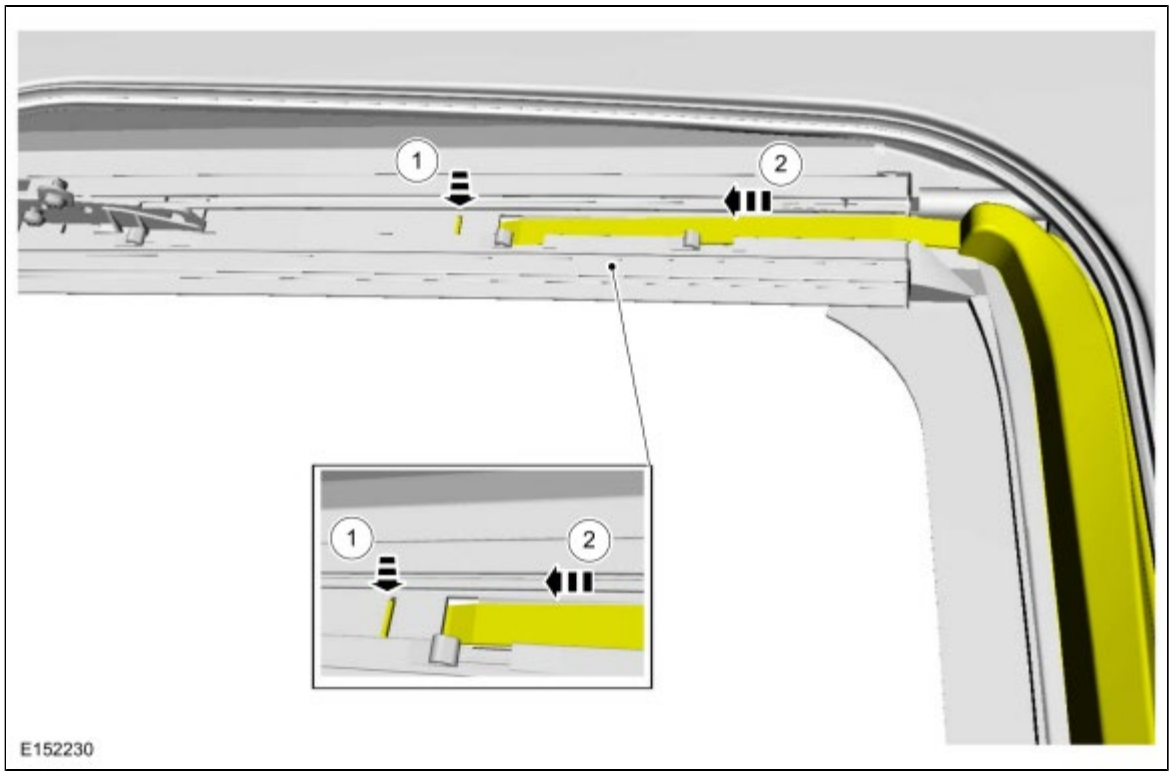

3. Both sides.

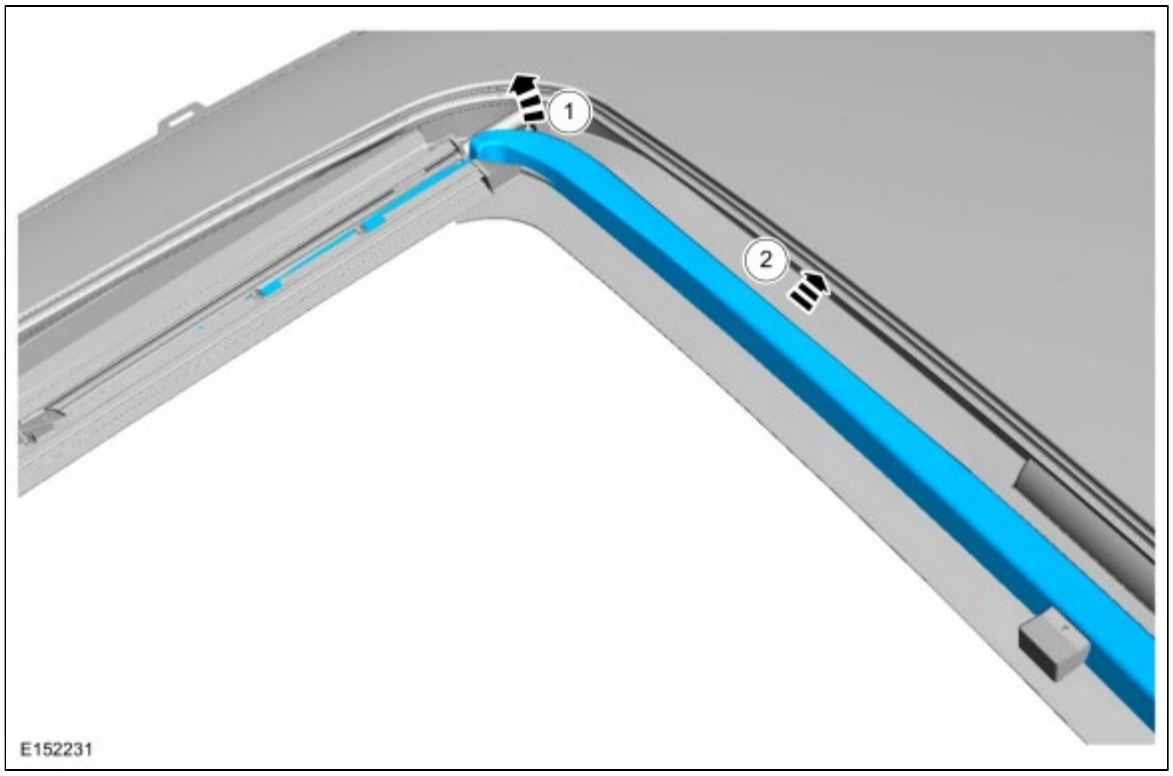

Installation

1. **NOTE:** *Make sure air deflector locating tabs are firmly locked in place.*

   To install, reverse the removal procedure.

2. Refer to: Power Roof Opening Panel Initialization (501-17 Roof Opening Panel, General Procedures).

Copyright © Ford Motor Company

Roof Opening Panel Control Switch

Removal

NOTE: *Removal steps in this procedure may contain installation details.*

1. **WARNING: Before beginning any service procedure in this section, refer to Safety Warnings in section 100-00 General Information. Failure to follow this instruction may result in serious personal injury.**

   Refer to: Health and Safety Precautions (100-00 General Information, Description and Operation).

2. *General Equipment* : Interior Trim Remover

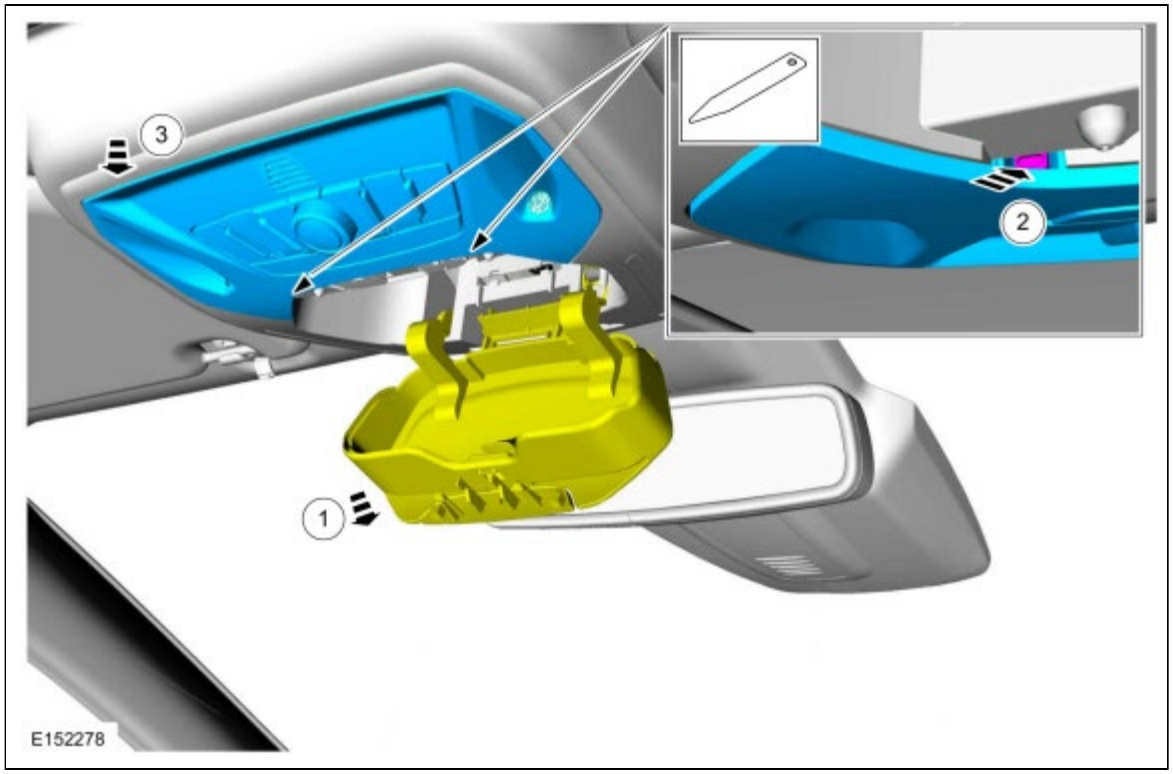

3.

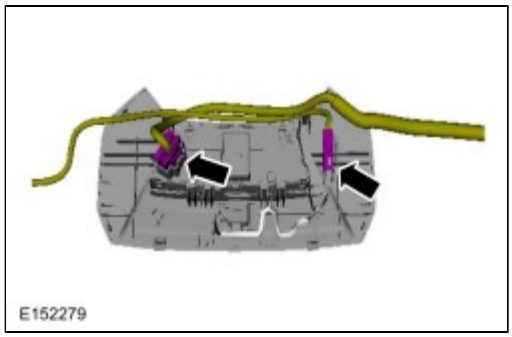

4.

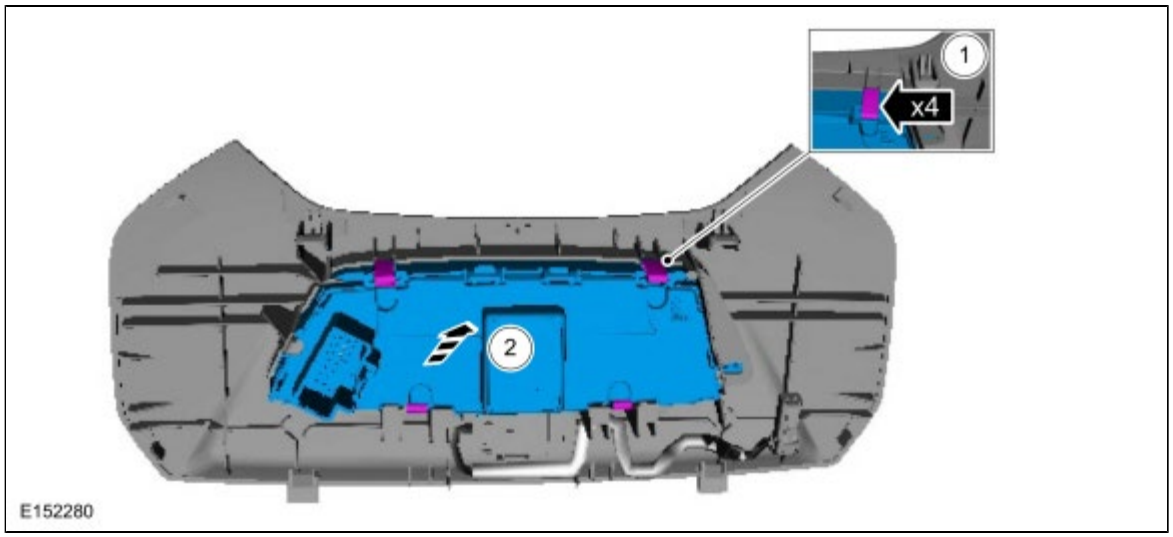

Installation

1. To install, reverse the removal procedure.

Copyright © Ford Motor Company

Trough Assembly

Removal

NOTE: *Removal steps in this procedure may contain installation details.*

1. **WARNING: Before beginning any service procedure in this section, refer to Safety Warnings in section 100-00 General Information. Failure to follow this instruction may result in serious personal injury.**

   Refer to: Health and Safety Precautions (100-00 General Information, Description and Operation).

2. Refer to: Roof Opening Panel Glass (501-17 Roof Opening Panel, Removal and Installation).

3. Both sides.

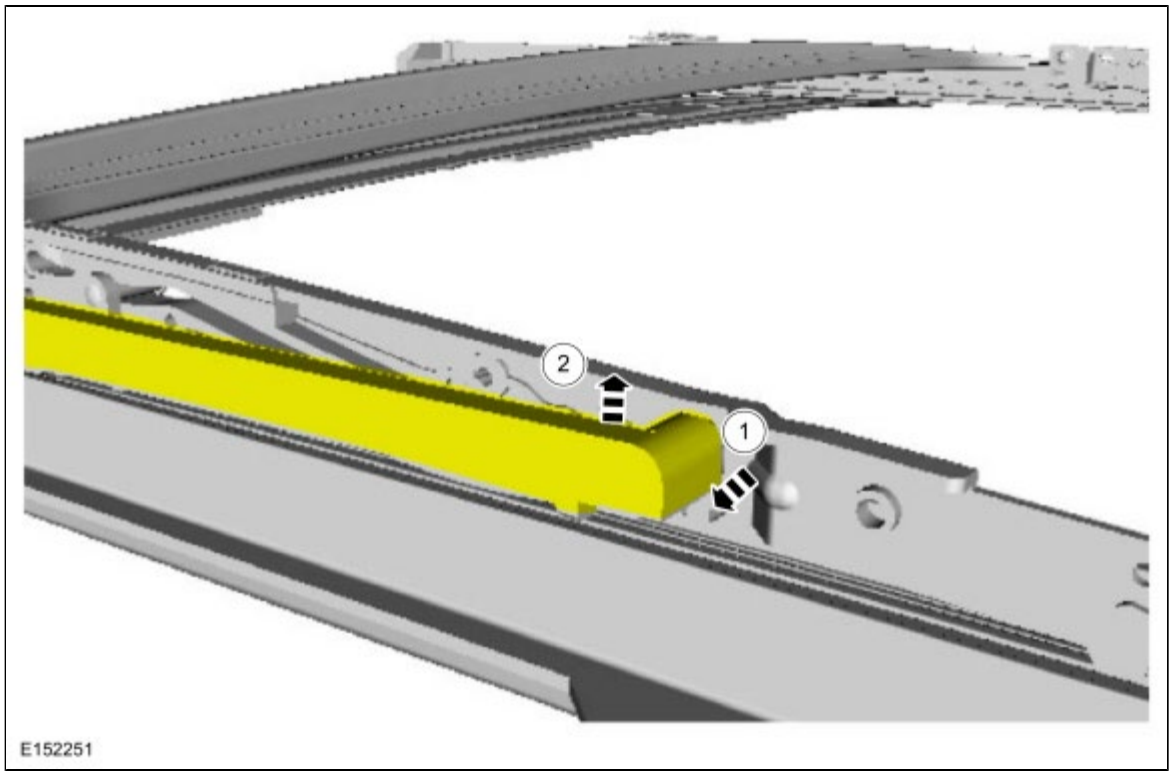

4. Both sides.

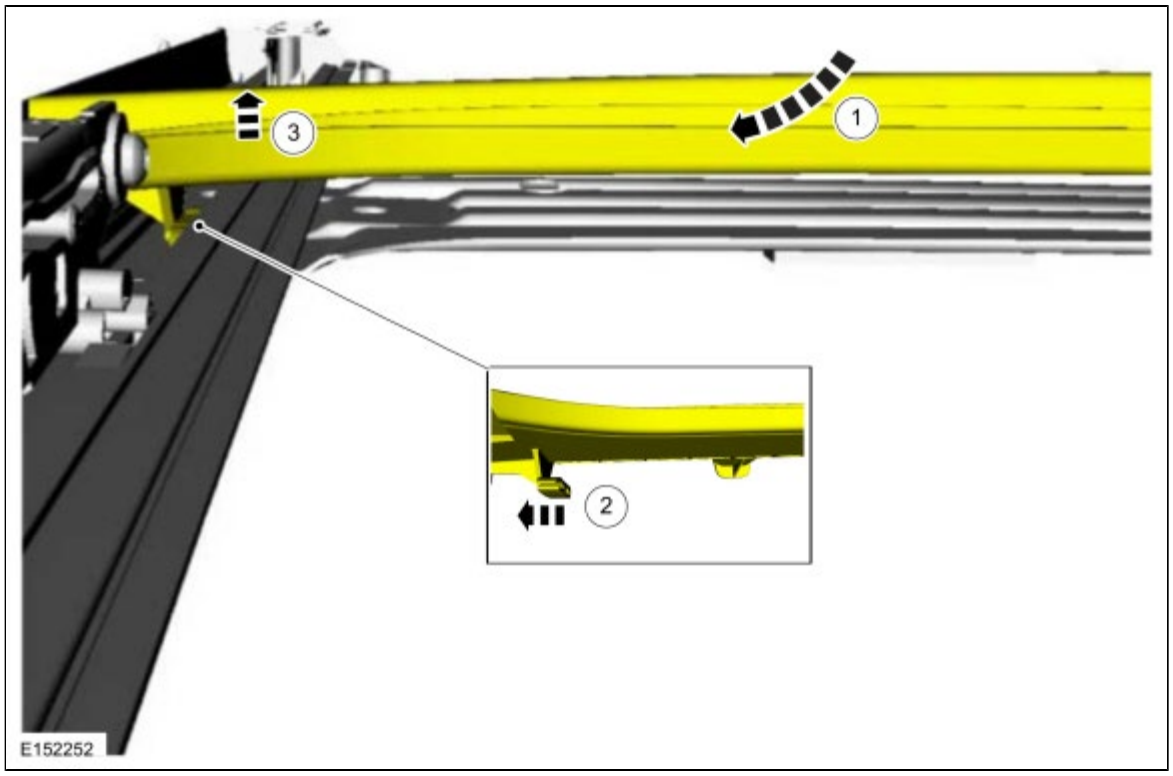

5.

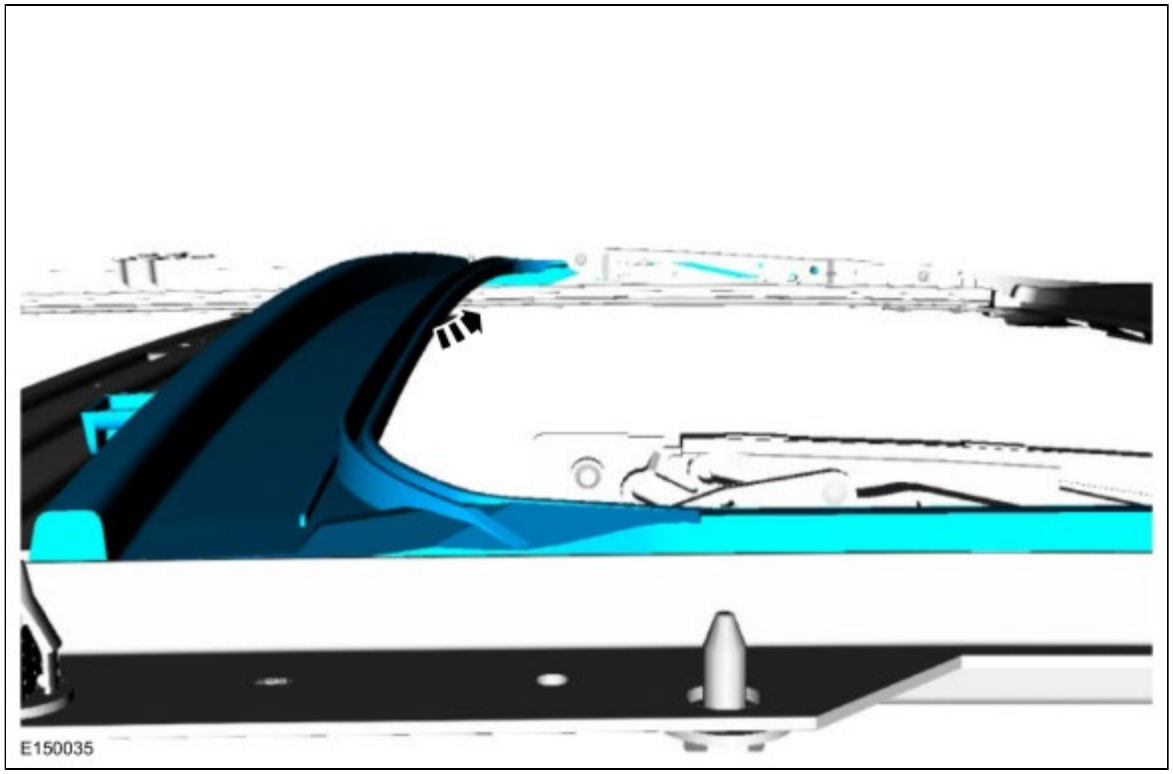

Installation

1. To install, reverse the removal procedure.

Copyright © Ford Motor Company

Roof Opening Panel Frame - Vehicles With: 4-Door

Removal

NOTE: *Removal steps in this procedure may contain installation details.*

1. **WARNING: Before beginning any service procedure in this section, refer to Safety Warnings in section 100-00 General Information. Failure to follow this instruction may result in serious personal injury.**

   Refer to: Health and Safety Precautions (100-00 General Information, Description and Operation).

2. Refer to: Headliner - Vehicles With: 4-Door (501-05 Interior Trim and Ornamentation, Removal and Installation).

3. 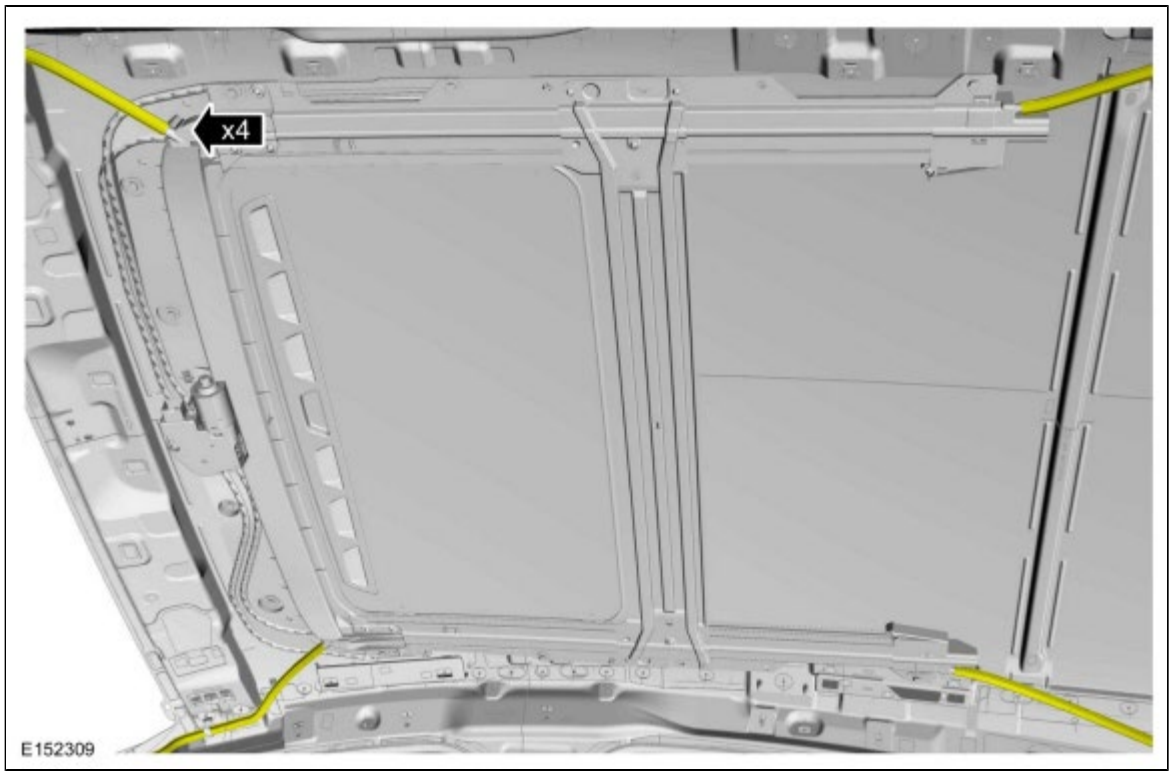

4.

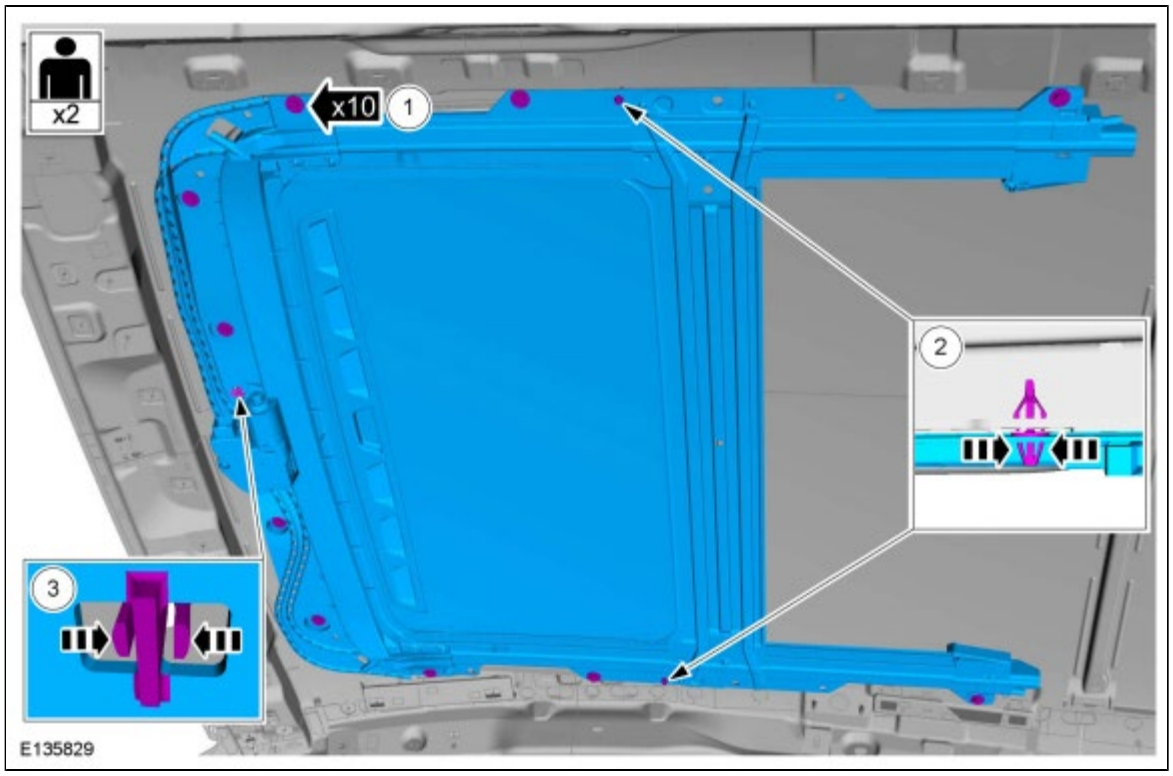

5.

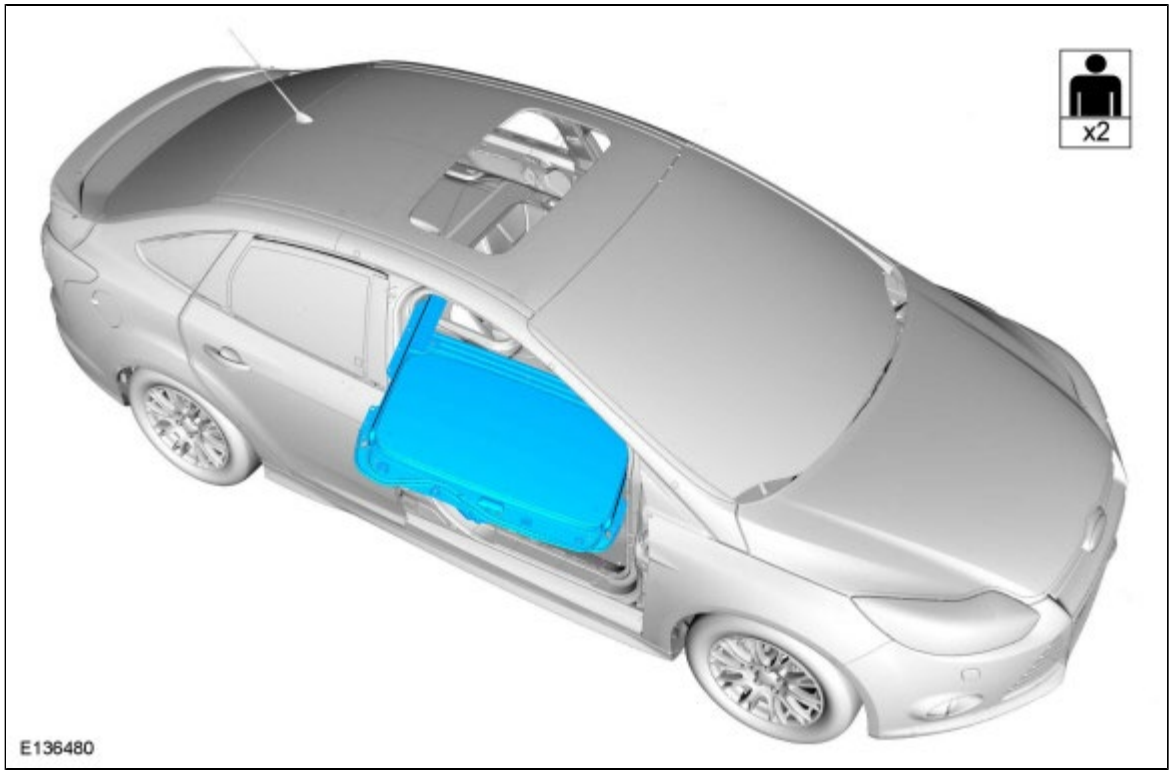

Installation

1. To install, reverse the removal procedure.
2. Transfer parts as necessary.
3. Tighten the retaining bolts as indicated.
   Torque : 6 Nm

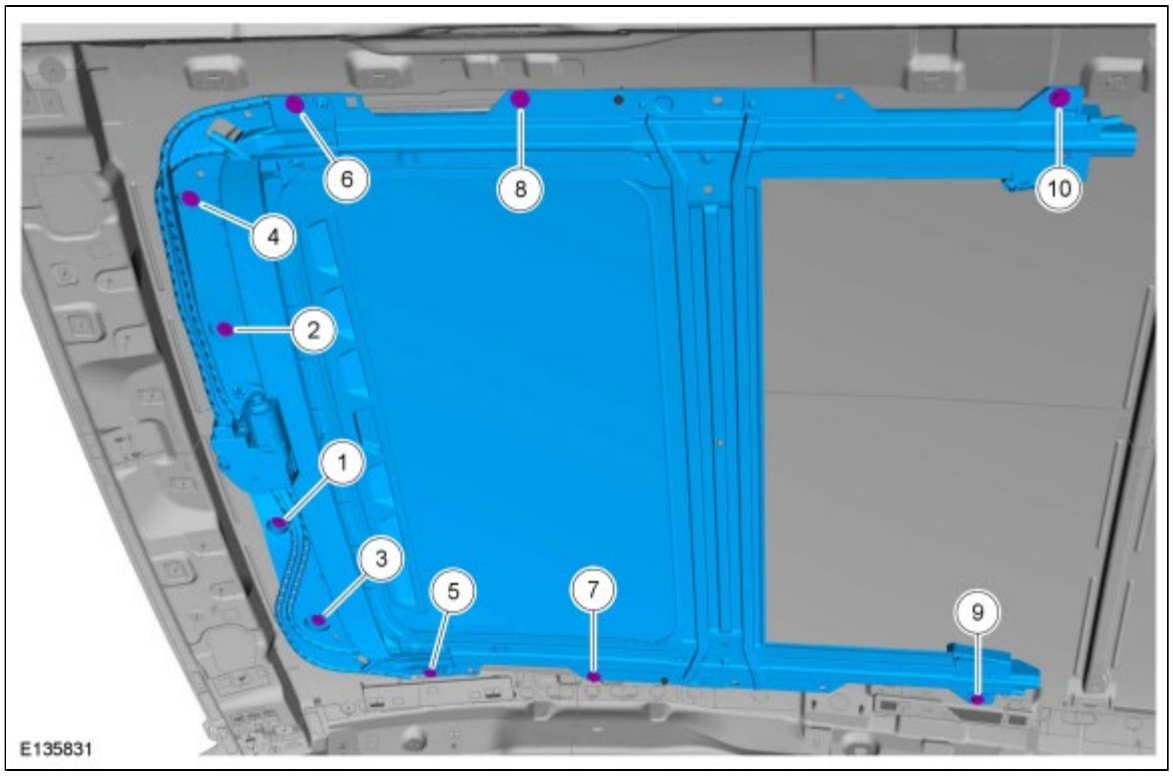

4. Refer to: Roof Opening Panel Alignment (501-17 Roof Opening Panel, General Procedures).
5. Refer to: Power Roof Opening Panel Initialization (501-17 Roof Opening Panel, General Procedures).

Copyright © Ford Motor Company

Roof Opening Panel Frame - Vehicles With: 5-Door

Removal

NOTE: *Removal steps in this procedure may contain installation details.*

1. **WARNING: Before beginning any service procedure in this section, refer to Safety Warnings in section 100-00 General Information. Failure to follow this instruction may result in serious personal injury.**

   Refer to: Health and Safety Precautions (100-00 General Information, Description and Operation).

2. Refer to: Headliner - Vehicles With: 5-Door (501-05 Interior Trim and Ornamentation, Removal and Installation).

3. 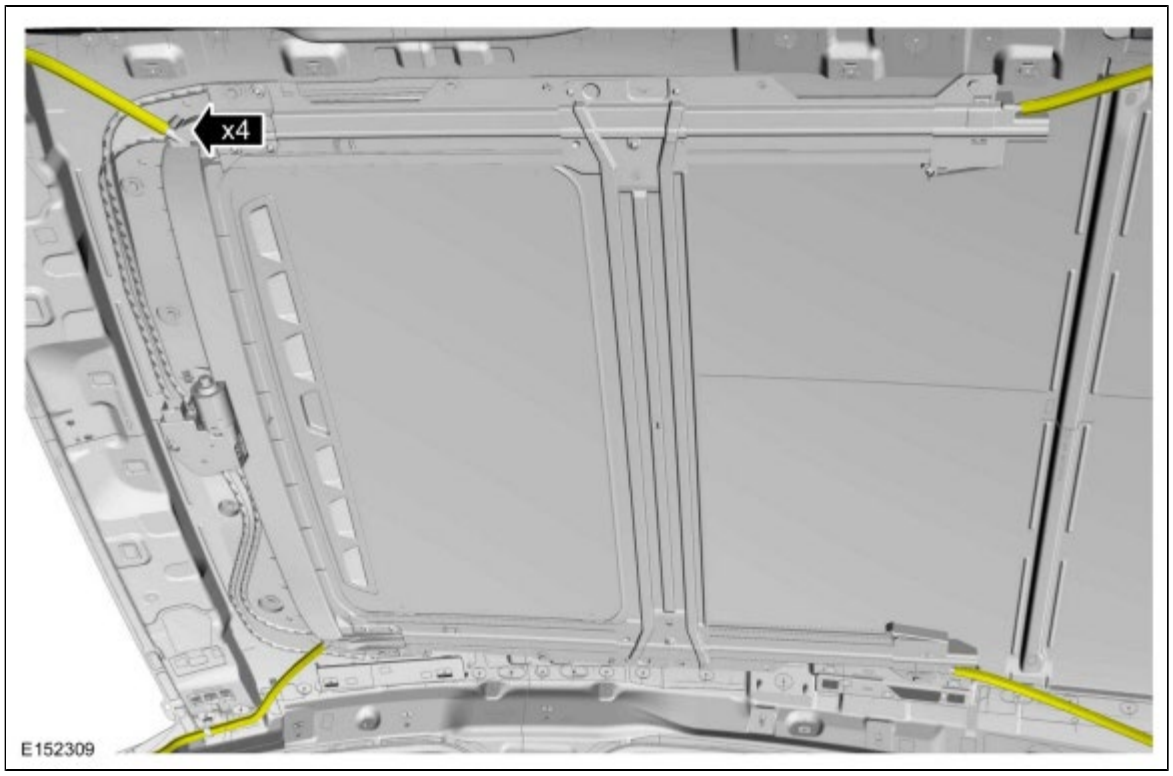

4.

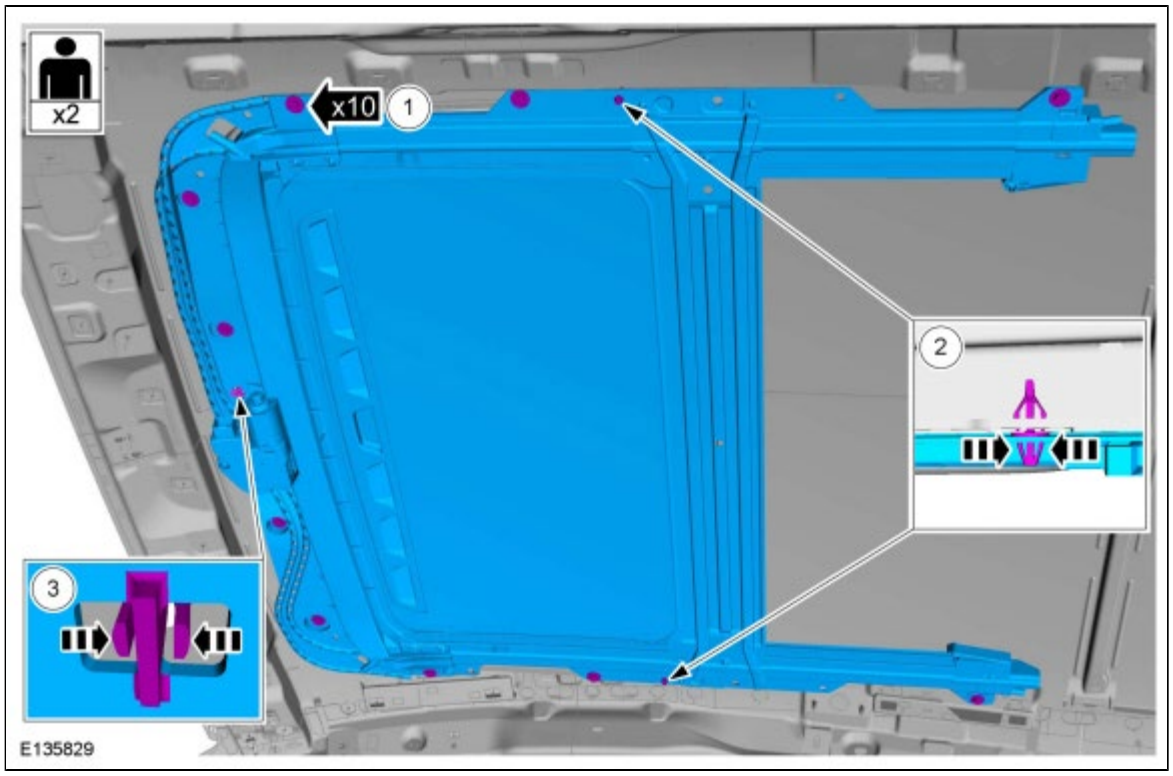

5.

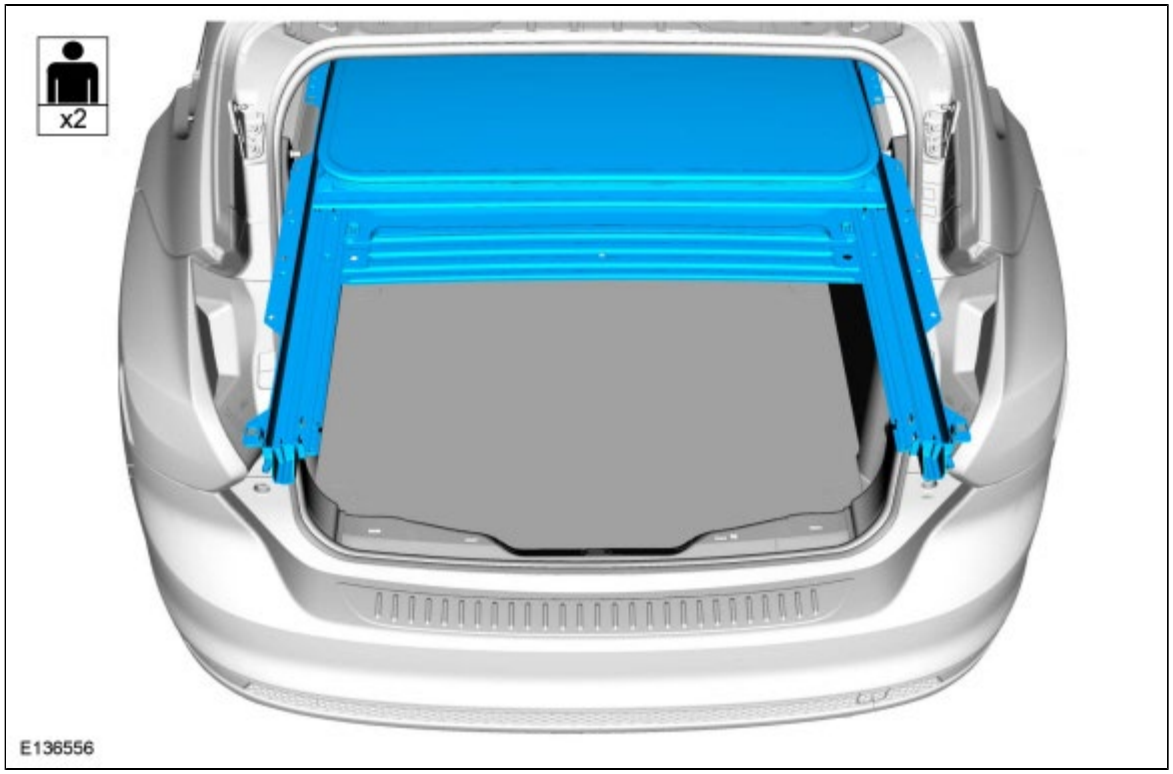

Installation

1. To install, reverse the removal procedure.
2. Transfer parts as necessary.
3. Tighten the retaining bolts as indicated.
   Torque : 6 Nm

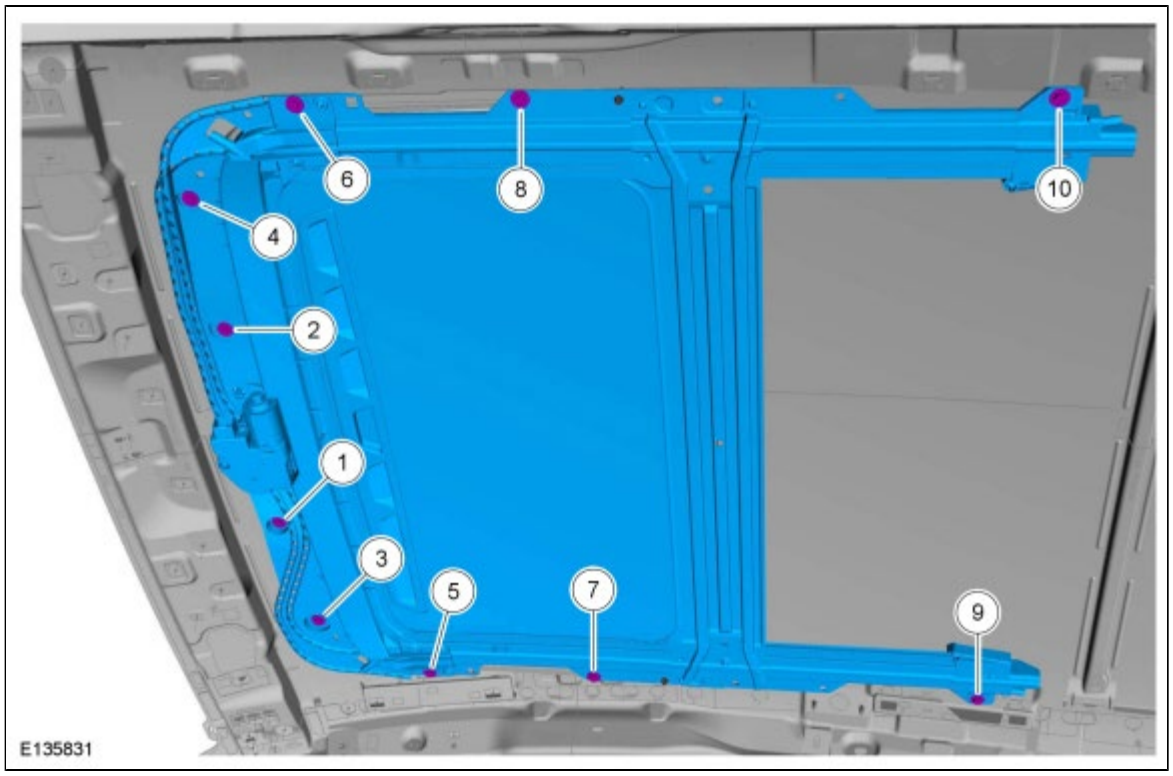

4. Refer to: Roof Opening Panel Alignment (501-17 Roof Opening Panel, General Procedures).
5. Refer to: Power Roof Opening Panel Initialization (501-17 Roof Opening Panel, General Procedures).

Copyright © Ford Motor Company

Roof Opening Panel Glass

Removal

NOTE: *Removal steps in this procedure may contain installation details.*

1. **WARNING: Before beginning any service procedure in this section, refer to Safety Warnings in section 100-00 General Information. Failure to follow this instruction may result in serious personal injury.**

   Refer to: Health and Safety Precautions (100-00 General Information, Description and Operation).

2. **NOTE:** *The roof opening panel must be open to the vent position.*

   Both sides.
   Torque : 4 Nm

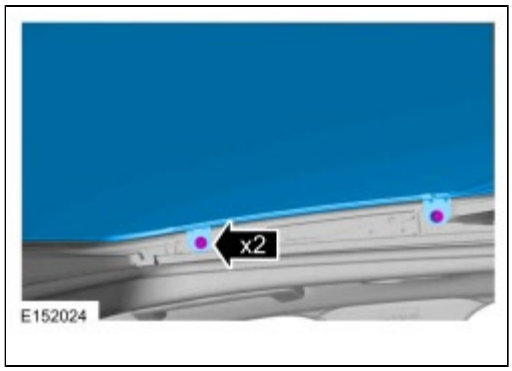

3.

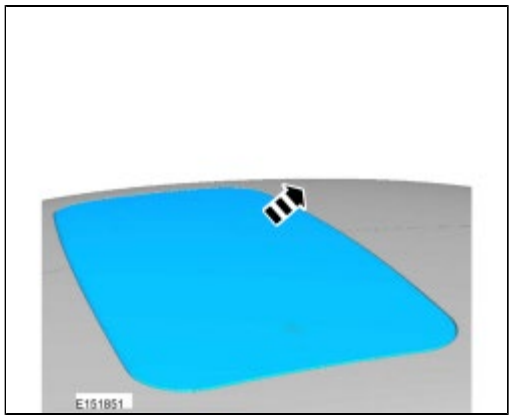

Installation

1. To install, reverse the removal procedure.
2. Refer to: Roof Opening Panel Alignment (501-17 Roof Opening Panel, General Procedures).
3. Initialize the roof opening panel motor.
   Refer to: Power Roof Opening Panel Initialization (501-17 Roof Opening Panel, General Procedures).

Copyright © Ford Motor Company

Roof Opening Panel Motor

Removal

NOTE: *Removal steps in this procedure may contain installation details.*

1. **WARNING: Before beginning any service procedure in this section, refer to Safety Warnings in section 100-00 General Information. Failure to follow this instruction may result in serious personal injury.**

   Refer to: Health and Safety Precautions (100-00 General Information, Description and Operation).

2. **NOTE:** *Make sure that the roof opening panel glass is in the CLOSED position.*

   Refer to: Overhead Console (501-12 Instrument Panel and Console, Removal and Installation).

3. *Torque* : 2 Nm

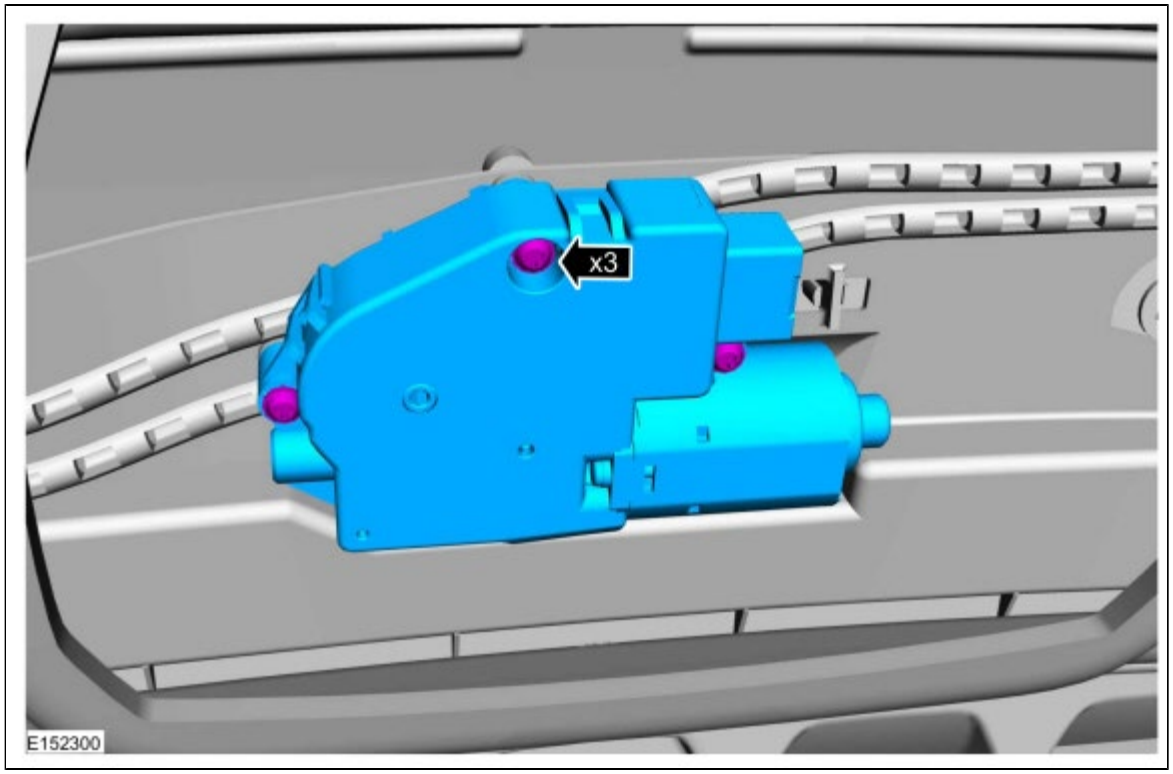

Installation

1. **NOTE:** *When installing the roof opening panel motor, it may be necessary to turn the roof opening panel motor slightly to engage the drive splines.*

   To install, reverse the removal procedure

2. Refer to: Power Roof Opening Panel Initialization (501-17 Roof Opening Panel, General Procedures).

Copyright © Ford Motor Company

Anti-Lock Brake System (ABS) and Stability Control

Diagnostic Trouble Code (DTC) Chart

DTC Chart: Anti-Lock Brake System (ABS) Module

Diagnostics in this manual assume a certain skill level and knowledge of Ford-specific diagnostic practices.
REFER to: Diagnostic Methods (100-00 General Information, Description and Operation).

Anti-Lock Brake System (ABS) DTC Chart

DTC	Description	Action
B10DF:46	Master Cylinder Isolation Valve: Calibration/Parameter Memory Failure	• This DTC sets due to an internal failure of the ABS module or due to a calibration failure between the HCU and the ABS module. • CLEAR the DTC and REPEAT the self-test. If the DTC returns, INSTALL a new ABS module and HCU assembly. REFER to: Hydraulic Control Unit (HCU) (206-09 Anti-Lock Brake System (ABS) and Stability Control, Removal and Installation).
C0001:01	TCS Control Channel "A" Valve 1: General Electrical Failure	• This DTC indicates that part of the ABS module has failed internally. CLEAR the Diagnostic Trouble Codes (DTCs). REPEAT the self-test. • If the DTC returns, INSTALL a new ABS module and HCU assembly. REFER to: Hydraulic Control Unit (HCU) (206-09 Anti-Lock Brake System (ABS) and Stability Control, Removal and Installation).
C0002:01	TCS Control Channel "A" Valve 2: General Electrical Failure	• This DTC indicates that part of the ABS module has failed internally. CLEAR the Diagnostic Trouble Codes (DTCs). REPEAT the self-test. • If the DTC returns, INSTALL a new ABS module and HCU assembly. REFER to: Hydraulic Control Unit (HCU) (206-09 Anti-Lock Brake System (ABS) and Stability Control, Removal and Installation).
C0003:01	TCS Control Channel "B" Valve 1: General Electrical Failure	• This DTC indicates that part of the ABS module has failed internally. CLEAR the Diagnostic Trouble Codes (DTCs). REPEAT the self-test. • If the DTC returns, INSTALL a new ABS module and HCU assembly. REFER to: Hydraulic Control Unit (HCU) (206-09 Anti-Lock Brake System (ABS) and Stability Control, Removal and Installation).
C0004:01	TCS Control Channel "B" Valve 2: General Electrical Failure	• This DTC indicates that part of the ABS module has failed internally. CLEAR the Diagnostic Trouble Codes (DTCs). REPEAT the self-test. • If the DTC returns, INSTALL a new ABS module and HCU assembly. REFER to: Hydraulic Control Unit (HCU) (206-09 Anti-Lock Brake System (ABS) and Stability Control, Removal and Installation).
C0010:01	Left Front Inlet Control: General Electrical Failure	• This DTC indicates that part of the ABS module has failed internally. CLEAR the Diagnostic Trouble Codes (DTCs). REPEAT the self-test. • If the DTC returns, INSTALL a new ABS module and HCU assembly. REFER to: Hydraulic Control Unit (HCU) (206-09 Anti-Lock Brake System (ABS) and Stability Control, Removal and Installation).

C0011:01	Left Front Outlet Control: General Electrical Failure	This DTC indicates that part of the ABS module has failed internally. CLEAR the Diagnostic Trouble Codes (DTCs). REPEAT the self-test. • If the DTC returns, INSTALL a new ABS module and HCU assembly. REFER to: Hydraulic Control Unit (HCU) (206-09 Anti-Lock Brake System (ABS) and Stability Control, Removal and Installation).
C0014:01	Right Front Inlet Control: General Electrical Failure	• This DTC indicates that part of the ABS module has failed internally. CLEAR the Diagnostic Trouble Codes (DTCs). REPEAT the self-test. • If the DTC returns, INSTALL a new ABS module and HCU assembly. REFER to: Hydraulic Control Unit (HCU) (206-09 Anti-Lock Brake System (ABS) and Stability Control, Removal and Installation).
C0015:01	Right Front Outlet Control: General Electrical Failure	• This DTC indicates that part of the ABS module has failed internally. CLEAR the Diagnostic Trouble Codes (DTCs). REPEAT the self-test. • If the DTC returns, INSTALL a new ABS module and HCU assembly. REFER to: Hydraulic Control Unit (HCU) (206-09 Anti-Lock Brake System (ABS) and Stability Control, Removal and Installation).
C0018:01	Left Rear Inlet Control: General Electrical Failure	• This DTC indicates that part of the ABS module has failed internally. CLEAR the Diagnostic Trouble Codes (DTCs). REPEAT the self-test. • If the DTC returns, INSTALL a new ABS module and HCU assembly. REFER to: Hydraulic Control Unit (HCU) (206-09 Anti-Lock Brake System (ABS) and Stability Control, Removal and Installation).
C0019:01	Left Rear Outlet Control: General Electrical Failure	• This DTC indicates that part of the ABS module has failed internally. CLEAR the Diagnostic Trouble Codes (DTCs). REPEAT the self-test. • If the DTC returns, INSTALL a new ABS module and HCU assembly. REFER to: Hydraulic Control Unit (HCU) (206-09 Anti-Lock Brake System (ABS) and Stability Control, Removal and Installation).
C001C:01	Right Rear Inlet Control: General Electrical Failure	• This DTC indicates that part of the ABS module has failed internally. CLEAR the Diagnostic Trouble Codes (DTCs). REPEAT the self-test. • If the DTC returns, INSTALL a new ABS module and HCU assembly. REFER to: Hydraulic Control Unit (HCU) (206-09 Anti-Lock Brake System (ABS) and Stability Control, Removal and Installation).
C001D:01	Right Rear Outlet Control: General Electrical Failure	• This DTC indicates that part of the ABS module has failed internally. CLEAR the Diagnostic Trouble Codes (DTCs). REPEAT the self-test. • If the DTC returns, INSTALL a new ABS module and HCU assembly. REFER to: Hydraulic Control Unit (HCU) (206-09 Anti-Lock Brake System (ABS) and Stability Control, Removal and Installation).
C0020:01	ABS Pump Motor Control: General Electrical Failure	GO to Pinpoint Test H
C0020:1C	ABS Pump Motor Control: Circuit Voltage Out of Range	GO to Pinpoint Test H
C0020:71	ABS Pump Motor Control: Actuator Stuck	GO to Pinpoint Test H
C0030:07	Left Front Tone Wheel: Mechanical Failure	GO to Pinpoint Test B
C0031:07	Left Front Wheel Speed Sensor:	GO to Pinpoint Test B

	Mechanical Failure	
C0031:11	Left Front Wheel Speed Sensor: Circuit Short to Ground	GO to Pinpoint Test O
C0031:15	Left Front Wheel Speed Sensor: Circuit Short to Battery or Open	GO to Pinpoint Test O
C0031:4A	Left Front Wheel Speed Sensor: Incorrect Component Installed	• This DTC sets when the incorrect type of wheel speed sensor has been installed, bi-directional versus non-bi-directional. For information on wheel speed sensor types, REFER to: Anti-Lock Brake System (ABS) and Stability Control - System Operation and Component Description (206-09 Anti-Lock Brake System (ABS) and Stability Control, Description and Operation). • VERIFY the correct wheel speed sensor has been installed (part number is stamped on the sensor). If the incorrect wheel speed sensor has been installed, INSTALL a new wheel speed sensor. REFER to: Front Wheel Speed Sensor (206-09 Anti-Lock Brake System (ABS) and Stability Control, Removal and Installation). CYCLE the ignition. DRIVE the vehicle and reach a speed of at least 20 km/h (12 mph) for the ABS module carry out a wheel speed sensor self-test. • If the correct wheel speed sensor is installed, INSTALL a new ABS module and HCU assembly. REFER to: Hydraulic Control Unit (HCU) (206-09 Anti-Lock Brake System (ABS) and Stability Control, Removal and Installation).
C0033:07	Right Front Tone Wheel: Mechanical Failure	GO to Pinpoint Test B
C0034:07	Right Front Wheel Speed Sensor: Mechanical Failure	GO to Pinpoint Test B
C0034:11	Right Front Wheel Speed Sensor: Circuit Short to Ground	GO to Pinpoint Test O
C0034:15	Right Front Wheel Speed Sensor: Circuit Short to Battery or Open	GO to Pinpoint Test O
C0034:4A	Right Front Wheel Speed Sensor: Incorrect Component Installed	• This DTC sets when the incorrect type of wheel speed sensor has been installed, bi-directional versus non-bi-directional. For information on wheel speed sensor types, REFER to: Anti-Lock Brake System (ABS) and Stability Control - System Operation and Component Description (206-09 Anti-Lock Brake System (ABS) and Stability Control, Description and Operation). • VERIFY the correct wheel speed sensor has been installed (part number is stamped on the sensor). If the incorrect wheel speed sensor has been installed, INSTALL a new wheel speed sensor. REFER to: Front Wheel Speed Sensor (206-09 Anti-Lock Brake System (ABS) and Stability Control, Removal and Installation). CYCLE the ignition. DRIVE the vehicle and reach a speed of at least 20 km/h (12 mph) for the ABS module carry out a wheel speed sensor self-test. • If the correct wheel speed sensor is installed, INSTALL a new ABS module and HCU assembly. REFER to: Hydraulic Control Unit (HCU) (206-09 Anti-Lock Brake System (ABS) and Stability Control, Removal and Installation).
C0036:07	Left Rear Tone	GO to Pinpoint Test B

	Wheel: Mechanical Failure	
C0037:07	Left Rear Wheel Speed Sensor: Mechanical Failure	GO to Pinpoint Test B
C0037:11	Left Rear Wheel Speed Sensor: Circuit Short to Ground	GO to Pinpoint Test P
C0037:15	Left Rear Wheel Speed Sensor: Circuit Short to Battery or Open	GO to Pinpoint Test P
C0037:4A	Left Rear Wheel Speed Sensor: Incorrect Component Installed	• This DTC sets due to incomplete or improper Programmable Module Installation (PMI) procedures or when the incorrect type of wheel speed sensor has been installed, bi-directional versus non-bi-directional. For information on wheel speed sensor types, REFER to: Anti-Lock Brake System (ABS) and Stability Control - System Operation and Component Description (206-09 Anti-Lock Brake System (ABS) and Stability Control, Description and Operation). • If ABS module Diagnostic Trouble Codes (DTCs) U2300:51 or U2300:56 is also present, DIAGNOSE those Diagnostic Trouble Codes (DTCs) before diagnosing DTC C0037:4A. DIAGNOSE U2300:51 before diagnosing U2300:56. • If ABS module Diagnostic Trouble Codes (DTCs) U2300:51 or U2300:56 are not present, VERIFY the correct wheel speed sensor has been installed (part number is stamped on the sensor). If the incorrect wheel speed sensor has been installed, INSTALL a new wheel speed sensor. REFER to: Rear Wheel Speed Sensor (206-09 Anti-Lock Brake System (ABS) and Stability Control, Removal and Installation). CYCLE the ignition. DRIVE the vehicle and reach a speed of at least 20 km/h (12 mph) for the ABS module carry out a wheel speed sensor self-test. • If the correct wheel speed sensor is installed, INSTALL a new ABS module and HCU assembly. REFER to: Hydraulic Control Unit (HCU) (206-09 Anti-Lock Brake System (ABS) and Stability Control, Removal and Installation).
C0039:07	Right Rear Tone Wheel: Mechanical Failure	GO to Pinpoint Test B
C003A:07	Right Rear Wheel Speed Sensor: Mechanical Failure	GO to Pinpoint Test B
C003A:11	Right Rear Wheel Speed Sensor: Circuit Short to Ground	GO to Pinpoint Test P
C003A:15	Right Rear Wheel Speed Sensor: Circuit Short to Battery or Open	GO to Pinpoint Test P
C003A:4A	Right Rear Wheel Speed Sensor: Incorrect Component Installed	• This DTC sets due to incomplete or improper Programmable Module Installation (PMI) procedures or when the incorrect type of wheel speed sensor has been installed, bi-directional versus non-bi-directional. For information on wheel speed sensor types, REFER to: Anti-Lock Brake System (ABS) and Stability Control - System Operation and Component Description (206-09 Anti-Lock Brake System (ABS) and Stability Control, Description and Operation). • If ABS module Diagnostic Trouble Codes (DTCs) U2300:51 or U2300:56 is also present, DIAGNOSE those Diagnostic Trouble Codes (DTCs) before diagnosing DTC C003A:4A. DIAGNOSE U2300:51 before diagnosing U2300:56.

		• If ABS module Diagnostic Trouble Codes (DTCs) U2300:51 or U2300:56 are not present, VERIFY the correct wheel speed sensor has been installed (part number is stamped on the sensor). If the incorrect wheel speed sensor has been installed, INSTALL a new wheel speed sensor. REFER to: Rear Wheel Speed Sensor (206-09 Anti-Lock Brake System (ABS) and Stability Control, Removal and Installation). CYCLE the ignition. DRIVE the vehicle and reach a speed of at least 20 km/h (12 mph) for the ABS module carry out a wheel speed sensor self-test. • If the correct wheel speed sensor is installed, INSTALL a new ABS module and HCU assembly. REFER to: Hydraulic Control Unit (HCU) (206-09 Anti-Lock Brake System (ABS) and Stability Control, Removal and Installation).
C0040:64	Brake Pedal Switch "A": Signal Plausibility Failure	GO to Pinpoint Test C
C0040:87	Brake Pedal Switch "A": Missing Message	GO to Pinpoint Test I
C0044:01	Brake Pressure Sensor "A": General Electrical Failure	• DIAGNOSE DTC C0040:64 before diagnosing this DTC . • If DTC C0040:64 is not present, RECORD and then CLEAR all ABS module Diagnostic Trouble Codes (DTCs). • CYCLE the ignition from ON to OFF and back to ON. CARRY OUT the ABS module self-test. If this DTC returns, INSTALL a new ABS module and HCU assembly. REFER to: Hydraulic Control Unit (HCU) (206-09 Anti-Lock Brake System (ABS) and Stability Control, Removal and Installation).
C0044:28	Brake Pressure Sensor "A": Signal Bias Level Out of Range/Zero Adjustment Failure	• DIAGNOSE DTC C0040:64 before diagnosing this DTC . • If Diagnostic Trouble Code (DTC) C0040:64 is not present, RECORD and CLEAR all ABS module Diagnostic Trouble Codes (DTCs). CYCLE the ignition from ON to OFF and back to ON. CARRY OUT the IVD Initialization procedure, FOLLOW the diagnostic scan tool instructions. • If the module fails the initialization procedure, INSTALL a new ABS module and HCU assembly. REFER to: Hydraulic Control Unit (HCU) (206-09 Anti-Lock Brake System (ABS) and Stability Control, Removal and Installation). • If the module passes the initialization procedure, CARRY OUT the ABS module self-test. If the DTC returns, INSTALL a new ABS module and HCU assembly. REFER to: Hydraulic Control Unit (HCU) (206-09 Anti-Lock Brake System (ABS) and Stability Control, Removal and Installation).
C0044:54	Brake Pressure Sensor "A": Missing Calibration	• DIAGNOSE DTC C0040:64 before diagnosing this DTC . • If Diagnostic Trouble Code (DTC) C0040:64 is not present, RECORD and CLEAR all ABS module Diagnostic Trouble Codes (DTCs). CYCLE the ignition from ON to OFF and back to ON. CARRY OUT the IVD Initialization procedure, FOLLOW the diagnostic scan tool instructions. • If the module fails the initialization procedure, INSTALL a new ABS module and HCU assembly. REFER to: Hydraulic Control Unit (HCU) (206-09 Anti-Lock Brake System (ABS) and Stability Control, Removal and Installation). • If the module passes the initialization procedure, CARRY OUT the ABS module self-test. If the DTC returns, INSTALL a new ABS module and HCU assembly. REFER to: Hydraulic Control Unit (HCU) (206-09 Anti-Lock Brake System (ABS) and Stability Control, Removal and Installation).
C0044:64	Brake Pressure Sensor "A": Signal Plausibility Failure	• DIAGNOSE DTC C0040:64 before diagnosing this DTC . • If DTC C0040:64 is not present, BLEED the brake system. REFER to: Brake System Bleeding (206-00 Brake System - General Information, General Procedures).

		• CYCLE the ignition from ON to OFF and back to ON. CARRY OUT the ABS module self-test. If this DTC returns, INSTALL a new ABS module and HCU assembly. REFER to: Hydraulic Control Unit (HCU) (206-09 Anti-Lock Brake System (ABS) and Stability Control, Removal and Installation).
C0051:28	Steering Wheel Position Sensor: Signal Bias Level Out of Range/Zero Adjustment Failure	GO to Pinpoint Test M
C0051:54	Steering Wheel Position Sensor: Missing Calibration	GO to Pinpoint Test M
C0061:28	Lateral Acceleration Sensor: Signal Bias Level Out of Range/Zero Adjustment Failure	GO to Pinpoint Test G
C0061:2F	Lateral Acceleration Sensor: Signal Erratic	GO to Pinpoint Test G
C0061:54	Lateral Acceleration Sensor: Missing Calibration	• This DTC sets if the stability sensors in the RCM have not been calibrated or the calibration has been lost. CARRY OUT the IVD Initialization procedure, FOLLOW the diagnostic scan tool instructions. • If the module fails the initialization procedure, VERIFY the RCM is installed correctly and that the fasteners are tightened to specifications. REINSTALL or INSTALL new as necessary. REFER to: Restraints Control Module (RCM) (501-20B Supplemental Restraint System, Removal and Installation). If the RCM is OK, CARRY OUT the RCM self-test. RETRIEVE and RECORD any Diagnostic Trouble Codes (DTCs). REFER to: Airbag Supplemental Restraint System (SRS) - Vehicles Built From: 11-June-2012 (501-20B Supplemental Restraint System, Diagnosis and Testing). • If the module passes the initialization procedure, CLEAR the Diagnostic Trouble Codes (DTCs). CYCLE the ignition from ON to OFF and back to ON. CARRY OUT the ABS module self-test. If the DTC returns, INSTALL a new ABS module and HCU assembly. REFER to: Hydraulic Control Unit (HCU) (206-09 Anti-Lock Brake System (ABS) and Stability Control, Removal and Installation).
C0061:64	Lateral Acceleration Sensor: Signal Plausibility Failure	GO to Pinpoint Test G
C0062:01	Longitudinal Acceleration Sensor: General Electrical Failure	• This DTC sets if there is an internal failure of the stability sensor inside the RCM . • CLEAR the Diagnostic Trouble Codes (DTCs). CYCLE the ignition from ON to OFF and back to ON. CARRY OUT the ABS module self-test. If the DTC returns, INSTALL a new RCM . REFER to: Restraints Control Module (RCM) (501-20B Supplemental Restraint System, Removal and Installation).
C0062:28	Longitudinal Acceleration Sensor: Signal Bias Level Out of Range/Zero Adjustment Failure	GO to Pinpoint Test G
C0062:4A	Longitudinal Acceleration Sensor: Incorrect Component	• This DTC sets due to incomplete or improper Programmable Module Installation (PMI) procedures or when an incorrect RCM has been installed. • CHECK vehicle service history for recent service actions related to the RCM . If there

	Installed	have been recent service actions with the RCM , REPEAT the Programmable Module Installation (PMI) procedure as directed by the diagnostic scan tool. • If there have been no recent service actions related to the RCM , INSTALL a new RCM . REFER to: Restraints Control Module (RCM) (501-20B Supplemental Restraint System, Removal and Installation). Be sure to follow all diagnostic scan tool instructions as they relate to Programmable Module Installation (PMI).
C0062:54	Longitudinal Acceleration Sensor: Missing Calibration	• This DTC sets if the stability sensors in the RCM have not been calibrated or the calibration has been lost. CARRY OUT the IVD Initialization procedure, FOLLOW the diagnostic scan tool instructions. • If the module fails the initialization procedure, VERIFY the RCM is installed correctly and that the fasteners are tightened to specifications. REINSTALL or INSTALL new as necessary. REFER to: Restraints Control Module (RCM) (501-20B Supplemental Restraint System, Removal and Installation). If the RCM is OK, CARRY OUT the RCM self-test. RETRIEVE and RECORD any Diagnostic Trouble Codes (DTCs). REFER to: Airbag Supplemental Restraint System (SRS) - Vehicles Built From: 11-June-2012 (501-20B Supplemental Restraint System, Diagnosis and Testing). • If the module passes the initialization procedure, CLEAR the Diagnostic Trouble Codes (DTCs). CYCLE the ignition from ON to OFF and back to ON. CARRY OUT the ABS module self-test. If the DTC returns, INSTALL a new ABS module and HCU assembly. REFER to: Hydraulic Control Unit (HCU) (206-09 Anti-Lock Brake System (ABS) and Stability Control, Removal and Installation).
C0062:64	Longitudinal Acceleration Sensor: Signal Plausibility Failure	GO to Pinpoint Test G
C0062:76	Longitudinal Acceleration Sensor: Wrong Mounting Position	• Due to the nature of the longitudinal acceleration sensor, the RCM must be installed in the correct orientation to the centerline of the vehicle. This DTC sets if the RCM has been installed in the wrong position. • VERIFY the RCM is installed correctly and the fasteners are tightened to specifications. REINSTALL or INSTALL new as necessary. REFER to: Restraints Control Module (RCM) (501-20B Supplemental Restraint System, Removal and Installation). • If the RCM is OK, CARRY OUT the RCM self-test. RETRIEVE and RECORD any Diagnostic Trouble Codes (DTCs). REFER to: Airbag Supplemental Restraint System (SRS) - Vehicles Built From: 11-June-2012 (501-20B Supplemental Restraint System, Diagnosis and Testing).
C0063:01	Yaw Rate Sensor: General Electrical Failure	• This DTC sets if there is an internal failure of the stability sensor inside the RCM . • CLEAR the Diagnostic Trouble Codes (DTCs). CYCLE the ignition from ON to OFF and back to ON. CARRY OUT the ABS module self-test. If the DTC returns, INSTALL a new RCM . REFER to: Restraints Control Module (RCM) (501-20B Supplemental Restraint System, Removal and Installation).
C0063:28	Yaw Rate Sensor: Signal Bias Level Out of Range/Zero Adjustment Failure	GO to Pinpoint Test G
C0063:2F	Yaw Rate Sensor: Signal Erratic	GO to Pinpoint Test G
C0063:64	Yaw Rate Sensor: Signal Plausibility	GO to Pinpoint Test G

	Failure	
C006B:00	Stability System Active Too Long: No Sub Type Information	This DTC is for informational purposes only and sets along with one or more stability sensor Diagnostic Trouble Codes (DTCs). RETRIEVE and DIAGNOSE all other ABS module Diagnostic Trouble Codes (DTCs).
C0072:68	Brake Temperature Too High: Event Information	This DTC sets when the temperature of the brake discs/drums, as calculated by the ABS module, exceeds a predetermined threshold, 450°C (841.4°F). This DTC usually sets due to the stability system being activated too long, excessive traction control events, excessive anti-lock events, etc. RETRIEVE and DIAGNOSE all other ABS module Diagnostic Trouble Codes (DTCs).
C1A41:64	Clutch Pedal Sensor: Signal Plausibility Failure	GO to Pinpoint Test N
P1701:81	Reverse Engagement Error: Invalid Serial Data Received	• This DTC sets when the ABS module receives invalid network data from the TCM (automatic transmission) or PCM (manual transmission). • RETRIEVE and REPAIR all non-network Diagnostic Trouble Codes (DTCs) in the TCM or PCM . For TCM Diagnostic Trouble Codes (DTCs), REFER to: Automatic Transmission (307-01 Automatic Transmission - Vehicles With: 6-Speed PowerShift Transmission - DPS6/6DCT250, Diagnosis and Testing). For PCM Diagnostic Trouble Codes (DTCs), REFER to: Electronic Engine Controls (303-14A Electronic Engine Controls - 2.0L Duratec-HE (125kW/170PS) - MI4, Diagnosis and Testing).
U0001:88	High Speed CAN Communication Bus: Bus Off	• The module could not communicate on the network at a point in time. The fault is not currently present since the module had to communicate with the diagnostic scan tool to report this DTC . • VERIFY the integrity of the connectors and wiring. Refer to Wiring Diagrams Cell 14 for schematic and connector information.
U0028:55	Vehicle Communication Bus "A": Not Configured	• The ABS module and the RCM exchange and store identification information for future reference. This DTC sets due to incomplete or improper Programmable Module Installation (PMI) procedures. • CHECK vehicle service history for recent service actions related to the RCM and ABS module. If there have been recent service actions with one or both of the modules, REPEAT the Programmable Module Installation (PMI) procedure as directed by the diagnostic scan tool. • If there have been no recent service actions, INSTALL a new RCM to correct the failure to retain configuration data. REFER to: Restraints Control Module (RCM) (501-20B Supplemental Restraint System, Removal and Installation).
U0028:88	Vehicle Communication Bus "A": Bus Off	GO to Pinpoint Test G
U0100:00	Lost Communication With ECM/PCM "A": No Sub Type Information	GO to Pinpoint Test I
U0101:00	Lost Communication With TCM: No Sub Type Information	GO to Pinpoint Test J
U0126:00	Lost Communication With Steering Angle Sensor Module: No Sub Type Information	GO to Pinpoint Test K
U0140:00	Lost Communication With Body Control	GO to Pinpoint Test D

	Module: No Sub Type Information	
U0151:00	Lost Communication With Restraints Control Module: No Sub Type Information	GO to Pinpoint Test G
U0300:00	Internal Control Module Software Incompatibility: No Sub Type Information	GO to Pinpoint Test R
U0300:51	Internal Control Module Software Incompatibility: Not Programmed	• CHECK vehicle service history for recent service actions related to the ABS module. This DTC sets due to incomplete or improper flash programming procedures. • If there have been recent service actions with the ABS module, REPEAT the programming procedure as directed by the diagnostic scan tool. • If there have been no recent service actions, INSTALL a new ABS module and HCU assembly. REFER to: Hydraulic Control Unit (HCU) (206-09 Anti-Lock Brake System (ABS) and Stability Control, Removal and Installation).
U0401:00	Invalid Data Received From ECM/PCM "A": No Sub Type Information	This DTC sets when the ABS module receives invalid network data from the PCM. RETRIEVE and REPAIR all non-network Diagnostic Trouble Codes (DTCs) in the PCM. REFER to: Electronic Engine Controls (303-14A Electronic Engine Controls - 2.0L Duratec-HE (125kW/170PS) - MI4, Diagnosis and Testing).
U0401:41	Invalid Data Received From ECM/PCM "A": General Checksum Failure	This DTC sets when the ABS module receives invalid network data from the PCM. RETRIEVE and REPAIR all non-network Diagnostic Trouble Codes (DTCs) in the PCM. REFER to: Electronic Engine Controls (303-14A Electronic Engine Controls - 2.0L Duratec-HE (125kW/170PS) - MI4, Diagnosis and Testing).
U0401:68	Invalid Data Received From ECM/PCM "A": Event Information	This DTC sets when the ABS module receives invalid network data from the PCM. RETRIEVE and REPAIR all non-network Diagnostic Trouble Codes (DTCs) in the PCM. REFER to: Electronic Engine Controls (303-14A Electronic Engine Controls - 2.0L Duratec-HE (125kW/170PS) - MI4, Diagnosis and Testing).
U0402:68	Invalid Data Received From TCM: Event Information	This DTC sets when the ABS module receives invalid network data from the TCM. RETRIEVE and REPAIR all non-network Diagnostic Trouble Codes (DTCs) in the TCM. REFER to: Automatic Transmission (307-01 Automatic Transmission - Vehicles With: 6-Speed PowerShift Transmission - DPS6/6DCT250, Diagnosis and Testing).
U0428:00	Invalid Data Received From Steering Angle Sensor Module: No Sub Type Information	GO to Pinpoint Test M
U0428:2F	Invalid Data Received From Steering Angle Sensor Module: Signal Erratic	• This is an intermittent DTC that is stored only due to temporary disturbances of the signals received from the SASM. • If DTC U0428:64 is also present, GO to Pinpoint Test M • If this is the only ABS module DTC retrieved; CLEAR the DTC, TEST DRIVE the vehicle above 20 km/h (12 mph) and make at least 2 right turns and 2 left turns. If the DTC returns, GO to Pinpoint Test M If the DTC does not return, RELEASE the vehicle.
U0428:41	Invalid Data Received From Steering Angle Sensor Module: General Checksum Failure	• If DTC U0126:00 is also present, DIAGNOSE DTC U0126:00 first. • This DTC sets when the ABS module receives invalid network data from the SASM. RETRIEVE and REPAIR all non-network Diagnostic Trouble Codes (DTCs) in the SASM.
U0428:61	Invalid Data Received From Steering Angle Sensor Module: Signal Calculation	GO to Pinpoint Test M

	Failure	
U0428:62	Invalid Data Received From Steering Angle Sensor Module: Signal Compare Failure	GO to Pinpoint Test M
U0428:64	Invalid Data Received From Steering Angle Sensor Module: Signal Plausibility Failure	GO to Pinpoint Test M
U0428:68	Invalid Data Received From Steering Angle Sensor Module: Event Information	GO to Pinpoint Test M
U0452:41	Invalid Data Received From Restraints Control Module: General Checksum Failure	• If DTC U0151:00 is also present, DIAGNOSE DTC U0151:00 first. • This DTC sets when the ABS module receives invalid network data from the RCM . RETRIEVE and REPAIR all non-network Diagnostic Trouble Codes (DTCs) in the RCM . REFER to: Airbag Supplemental Restraint System (SRS) - Vehicles Built From: 11-June-2012 (501-20B Supplemental Restraint System, Diagnosis and Testing).
U0452:4A	Invalid Data Received From Restraints Control Module: Incorrect Component Installed	• This DTC sets when the RCM installed in the vehicle is either the wrong module, has not been configured or has been configured incorrectly. • CHECK vehicle service history for recent service actions related to the RCM . If there have been recent service actions with the RCM , REPEAT the Programmable Module Installation (PMI) procedure as directed by the diagnostic scan tool. • If there have been no recent service actions, INSTALL a new RCM to correct the failure to retain configuration data. REFER to: Restraints Control Module (RCM) (501-20B Supplemental Restraint System, Removal and Installation).
U0452:86	Invalid Data Received From Restraints Control Module: Signal Invalid	GO to Pinpoint Test G
U1A14:00	CAN Initialization Failure: No Sub Type Information	• CLEAR the DTC . CYCLE the ignition. CARRY OUT the ABS module self-test. • If the DTC returns, INSTALL a new ABS module and HCU assembly to correct the failure to retain configuration data. REFER to: Hydraulic Control Unit (HCU) (206-09 Anti-Lock Brake System (ABS) and Stability Control, Removal and Installation). • If the DTC does not return, the condition to set the DTC is not present at this time. The cause may be intermittent.
U2007:46	Valve(s): Calibration/Parameter Memory Failure	• This DTC sets due to an internal failure of the ABS module or due to a calibration failure between the HCU and the ABS module. • CLEAR the DTC and REPEAT the self-test. If the DTC returns, INSTALL a new ABS module and HCU assembly. REFER to: Hydraulic Control Unit (HCU) (206-09 Anti-Lock Brake System (ABS) and Stability Control, Removal and Installation).
U2100:00	Initial Configuration Not Complete: No Sub Type Information	• CHECK the service history for recent service actions related to the ABS module. This DTC sets due to incomplete or improper Programmable Module Installation (PMI) procedures. • If there have been recent service actions with this module, REPEAT the Programmable Module Installation (PMI) procedure as directed by the diagnostic scan tool. • If there have been no recent service actions, INSTALL a new ABS module and HCU

		assembly to correct the failure to retain configuration data. REFER to: Hydraulic Control Unit (HCU) (206-09 Anti-Lock Brake System (ABS) and Stability Control, Removal and Installation).
U2101:00	Control Module Configuration Incompatible: No Sub Type Information	• This DTC sets if the vehicle configuration information sent from the BCM does not match what is stored in the ABS module. • DIAGNOSE all BCM Diagnostic Trouble Codes (DTCs) and any ABS module lost communication or invalid data Diagnostic Trouble Codes (DTCs) that are preset before diagnosing this DTC . • If there are no BCM Diagnostic Trouble Codes (DTCs) or ABS module lost communication or invalid data Diagnostic Trouble Codes (DTCs) present, CHECK vehicle service history for recent service actions related to the ABS module or BCM . This DTC sets due to incomplete or improper flash programming procedures. If there have been recent service actions with the ABS module or BCM , REPEAT the programming procedure as directed by the diagnostic scan tool. • If there have been no recent service actions, INSTALL a new ABS module and HCU assembly to correct the failure to retain configuration data. REFER to: Hydraulic Control Unit (HCU) (206-09 Anti-Lock Brake System (ABS) and Stability Control, Removal and Installation).
U2300:51	Central Configuration: Not Programmed	• CHECK the service history for recent service actions related to the ABS module. This DTC sets due to incomplete or improper Programmable Module Installation (PMI) procedures. • If there have been recent service actions with this module, REPEAT the Programmable Module Installation (PMI) procedure as directed by the diagnostic scan tool. • If there have been no recent service actions, INSTALL a new ABS module and HCU assembly to correct the failure to retain configuration data. REFER to: Hydraulic Control Unit (HCU) (206-09 Anti-Lock Brake System (ABS) and Stability Control, Removal and Installation).
U2300:54	Central Configuration: Missing Calibration	• This DTC sets when the ABS module has not received the vehicle configuration from the BCM . • If ABS module DTC U0140:00 is also present, DIAGNOSE U0140:00 before diagnosing DTC U2300:54. • If DTC U0140:00 is not present, RETRIEVE and DIAGNOSE all BCM Diagnostic Trouble Codes (DTCs). If the BCM does not communicate with the diagnostic scan tool, REFER to: Communications Network (418-00 Module Communications Network, Diagnosis and Testing). • If there are no Diagnostic Trouble Codes (DTCs) present in the BCM , then the BCM or ABS module could not communicate on the network at a point in time. The fault is not currently present since the ABS module had to communicate with the diagnostic scan tool to report this DTC . VERIFY the integrity of the connectors and wiring. Refer to Wiring Diagrams Cell 14 for schematic and connector information.
U2300:55	Central Configuration: Not Configured	• CHECK the service history for recent service actions related to the ABS module. This DTC sets due to incomplete or improper Programmable Module Installation (PMI) procedures. • If there have been recent service actions with this module, REPEAT the Programmable Module Installation (PMI) procedure as directed by the diagnostic scan tool. • If there have been no recent service actions, INSTALL a new ABS module and HCU assembly to correct the failure to retain configuration data. REFER to: Hydraulic Control Unit (HCU) (206-09 Anti-Lock Brake System (ABS) and Stability Control, Removal and Installation).
U2300:56	Central Configuration: Invalid / Incompatible Configuration	• CHECK the service history for recent service actions related to the ABS module and BCM . This DTC sets due to incomplete or improper Programmable Module Installation (PMI) procedures. • If there have been recent service actions with the ABS module or BCM , REPEAT the Programmable Module Installation (PMI) procedure as directed by the diagnostic scan

		tool. • If there have been no recent service actions, INSTALL a new BCM to correct the failure to retain software data. REFER to: Body Control Module (BCM) (419-10 Multifunction Electronic Modules, Removal and Installation).
U3000:48	Control Module: Supervision Software Failure	• CLEAR the DTC . CYCLE the ignition. CARRY OUT the ABS module self-test. • If the DTC returns, INSTALL a new ABS module and HCU assembly to correct the failure to retain configuration data. REFER to: Hydraulic Control Unit (HCU) (206-09 Anti-Lock Brake System (ABS) and Stability Control, Removal and Installation). • If the DTC does not return, the condition to set the DTC is not present at this time. The cause may be intermittent.
U3000:49	Control Module: Internal Electronic Failure	• CLEAR the Diagnostic Trouble Codes (DTCs). CARRY OUT the ABS module self-test. RETRIEVE and RECORD all Diagnostic Trouble Codes (DTCs). • If the DTC returns INSTALL a new ABS module and HCU assembly. REFER to: Hydraulic Control Unit (HCU) (206-09 Anti-Lock Brake System (ABS) and Stability Control, Removal and Installation).
U3003:08	Battery Voltage: Bus Signal / Message Failure	• This DTC sets when the High Speed Controller Area Network (HS-CAN) network is shorted together, shorted to ground, shorted to voltage or open. • If DTC U3003:16 is also present, DIAGNOSE DTC U3003:16 before diagnosing DTC U3003:08. • If DTC U3003:16 is not present, DIAGNOSE the communication network. REFER to: Communications Network (418-00 Module Communications Network, Diagnosis and Testing).
U3003:16	Battery Voltage: Circuit Voltage Below Threshold	GO to Pinpoint Test A
U3003:17	Battery Voltage: Circuit Voltage Above Threshold	GO to Pinpoint Test F
U3003:62	Battery Voltage: Signal Compare Failure	GO to Pinpoint Test Q

DTC Chart: Steering Angle Sensor Module (SASM)

Diagnostics in this manual assume a certain skill level and knowledge of Ford-specific diagnostic practices.
REFER to: Diagnostic Methods (100-00 General Information, Description and Operation).

Steering Angle Sensor Module (SASM) DTC Chart

DTC	Description	Action
C1B00:49	Steering Angle Sensor: Internal Electrical Failure	• CHECK vehicle service history for recent service actions related to the SASM . This DTC sets due to incomplete or improper flash programming procedures. If there have been recent service actions with the SASM , REPEAT the programming procedure as directed by the diagnostic scan tool. • If there have been no recent service actions, CLEAR the DTC , CYCLE the ignition, CARRY OUT the SASM self-test. If the DTC returns, INSTALL a new SASM to correct the

		failure to retain software data. REFER to: Restraints Control Module (RCM) (501-20B Supplemental Restraint System, Removal and Installation).
C1B00:61	Steering Angle Sensor: Signal Calculation Failure	• This DTC indicates that part of the SASM has failed internally. CLEAR the Diagnostic Trouble Codes (DTCs). REPEAT the self-test. • If the DTC returns, INSTALL a new SASM . REFER to: Steering Angle Sensor Module (SASM) (211-05 Steering Column Switches, Removal and Installation).
C1B00:62	Steering Angle Sensor: Signal Compare Failure	• This DTC indicates that part of the SASM has failed internally. CLEAR the Diagnostic Trouble Codes (DTCs). REPEAT the self-test. • If the DTC returns, INSTALL a new SASM . REFER to: Steering Angle Sensor Module (SASM) (211-05 Steering Column Switches, Removal and Installation).
C1B00:64	Steering Angle Sensor: Signal Plausibility Failure	CLEAR the DTC . TEST DRIVE the vehicle and CARRY OUT at least 1 left turn and 1 right turn. CARRY OUT a SASM self-test. If the DTC returns, INSTALL a new SASM . REFER to: Steering Angle Sensor Module (SASM) (211-05 Steering Column Switches, Removal and Installation).
C1B00:81	Steering Angle Sensor: Invalid Serial Data Received	• This DTC indicates that part of the SASM has failed internally. CLEAR the Diagnostic Trouble Codes (DTCs). REPEAT the self-test. • If the DTC returns, INSTALL a new SASM . REFER to: Steering Angle Sensor Module (SASM) (211-05 Steering Column Switches, Removal and Installation).
C1B00:85	Steering Angle Sensor: Signal Above Allowable Range	• SET the front wheels to the straight ahead position. • Using a diagnostic scan tool, OBSERVE the SASM steering wheel angle (SW_ANGLE) Parameter Identification (PID). • If the Parameter Identification (PID) displays 0 degrees, CLEAR the DTC , REPEAT the SASM self-test. If the DTC returns, INSTALL a new SASM . REFER to: Steering Angle Sensor Module (SASM) (211-05 Steering Column Switches, Removal and Installation). • If the Parameter Identification (PID) displays more than 360 degrees, SET the ignition to OFF. REMOVE the SASM , REFER to: Steering Angle Sensor Module (SASM) (211-05 Steering Column Switches, Removal and Installation). Leave the electrical connector connected. SET the ignition to ON (this causes Diagnostic Trouble Codes (DTCs) to set in multiple modules). Manually ADJUST the SASM until the SW_ANGLE Parameter Identification (PID) displays 0 degrees. SET the ignition to OFF. INSTALL the SASM . CLEAR all Continuous Memory Diagnostic Trouble Codes (CMDTCs) in all modules.
C1B00:87	Steering Angle Sensor: Missing Message	REFER to: Communications Network (418-00 Module Communications Network, Diagnosis and Testing).
C1B00:92	Steering Angle Sensor: Performance or Incorrect Operation	CLEAR the DTC . TEST DRIVE the vehicle and CARRY OUT at least 1 left turn and 1 right turn. CARRY OUT a SASM self-test. If the DTC returns, INSTALL a new SASM . REFER to: Steering Angle Sensor Module (SASM) (211-05 Steering Column Switches, Removal and Installation).
C1B00:96	Steering Angle Sensor: Component Internal Failure	• This DTC indicates that part of the SASM has failed internally. CLEAR the Diagnostic Trouble Codes (DTCs). REPEAT the self-test. • If the DTC returns, INSTALL a new SASM . REFER to: Steering Angle Sensor Module (SASM) (211-05 Steering Column Switches, Removal and Installation).

U0001:88	High Speed CAN Communication Bus: Bus Off	• The module could not communicate on the network at a point in time. The fault is not currently present since the module had to communicate with the diagnostic scan tool to report this DTC . • VERIFY the integrity of the connectors and wiring. Refer to Wiring Diagrams Cell 14 for schematic and connector information.
U0140:00	Lost Communication With Body Control Module: No Sub Type Information	GO to Pinpoint Test D
U0300:00	Internal Control Module Software Incompatibility: No Sub Type Information	GO to Pinpoint Test R
U3003:62	Battery Voltage: Signal Compare Failure	GO to Pinpoint Test L

Symptom Chart(s)

Symptom Chart: Anti-Lock Brake System (ABS) and Stability Control

Diagnostics in this manual assume a certain skill level and knowledge of Ford-specific diagnostic practices.
REFER to: Diagnostic Methods (100-00 General Information, Description and Operation).

Symptom Chart

Condition	Possible Sources	Actions
A module does not respond to the scan tool	• Fuse • Wiring, terminals or connectors • ABS module concern • SASM concern	REFER to: Communications Network (418-00 Module Communications Network, Diagnosis and Testing).
The brake warning indicator is always or never on	• Low brake fluid level • Brake fluid level sensor • Parking brake applied • Parking brake switch	RETRIEVE and DIAGNOSE all ABS module Diagnostic Trouble Codes (DTCs). If there are no ABS module Diagnostic Trouble Codes (DTCs), DIAGNOSE the brake warning indicator. REFER to: Instrumentation, Message Center and Warning Chimes (413-01 Instrumentation, Message Center and Warning Chimes, Diagnosis and Testing).

	• Brake booster vacuum sensor • IPC concern • ABS concern	
The ABS warning indicator is always or never on	• IPC concern • ABS concern • SASM concern	RETRIEVE and DIAGNOSE all ABS module and SASM Diagnostic Trouble Codes (DTCs). If there are no ABS module or SASM Diagnostic Trouble Codes (DTCs), DIAGNOSE the ABS warning indicator. REFER to: Instrumentation, Message Center and Warning Chimes (413-01 Instrumentation, Message Center and Warning Chimes, Diagnosis and Testing).
The stability/traction control OFF indicator (sliding-car OFF icon) is always on	• IPC concern • ABS concern • SASM concern	RETRIEVE and DIAGNOSE all ABS module and SASM Diagnostic Trouble Codes (DTCs). If there are no ABS module or SASM Diagnostic Trouble Codes (DTCs), DIAGNOSE the ABS warning indicator. REFER to: Instrumentation, Message Center and Warning Chimes (413-01 Instrumentation, Message Center and Warning Chimes, Diagnosis and Testing).
ABS false activation, ABS too sensitive, ABS activates on normal stop	Front or rear suspension concern	ELIMINATE the front or rear suspension as the cause of the problem. REFER to: Suspension System (204-00 Suspension System - General Information, Diagnosis and Testing).
	RCM mounting	CONFIRM the RCM is mounted correctly. REINSTALL as necessary. REFER to: Restraints Control Module (RCM) (501-20B Supplemental Restraint System, Removal and Installation).
	Loose wheel speed sensor or excessive air gap	INSPECT wheel speed sensor for looseness or excessive air gap. TIGHTEN or INSTALL new as necessary. For front wheel speed sensors, REFER to: Front Wheel Speed Sensor (206-09 Anti-Lock Brake System (ABS) and Stability Control, Removal and Installation). For rear wheel speed sensors, REFER to: Rear Wheel Speed Sensor (206-09 Anti-Lock Brake System (ABS) and Stability Control, Removal and Installation).
	Parking brake shoes out of adjustment (dragging)	CHECK and if necessary, ADJUST the parking brake shoes. For vehicles equipped with rear drum brakes, REFER to: Parking Brake Cable Adjustment - Vehicles With: Rear Drum Brakes (206-05 Parking Brake and Actuation, General Procedures). For vehicles equipped with rear disc brakes, REFER to: Parking Brake Cable Adjustment - Vehicles With: Rear Disc Brakes (206-05 Parking Brake and Actuation, General Procedures).
The traction control system cannot be disabled — vehicles equipped with a 2.0L Gasoline Direct Injection (GDI) engine	Refer to the Diagnostic Routine	GO to Pinpoint Test E
The traction control system cannot be disabled — vehicles equipped with a 2.0L Gasoline Turbocharged Direct Injection (GTDI) engine	Refer to the Diagnostic Routine	GO to Pinpoint Test S

Diagnostic Routines

U3003:16

Refer to Wiring Diagrams Cell 42 for schematic and connector information.

Normal Operation and Fault Conditions

The Anti-Lock Brake System (ABS) module, hydraulic pump and solenoid valves require an operating voltage that is between 10 and 17 volts. The ABS module receives this voltage from the BJB . The ABS module has a single ground circuit located in the engine compartment wiring harness. Excessive resistance or an open in one or more of these circuits, a discharged battery or a inoperative charging system results in the ABS module setting a DTC .

DTC Fault Trigger Conditions

DTC	Description	Fault Trigger Conditions
U3003:16	Battery Voltage: Circuit Voltage Below Threshold	This DTC sets in continuous memory and on-demand if the voltage supplied to the ABS module falls below 10 volts.

Possible Causes

- Fuses
- Wiring, terminals or connectors
- ABS module

Visual Inspection and Diagnostic Pre-checks

- Make sure the vehicle battery terminals and cables are free of any corrosion and other contaminants.
- Make sure the vehicle battery terminals are tightened to their correct torque specifications.
- Make sure BJB fuses 7 (40A), 8 (30A) and 19 (5A) are OK.

PINPOINT TEST A : U3003:16

A1 RECHECK THE ABS (ANTI-LOCK BRAKE SYSTEM) MODULE DIAGNOSTIC TROUBLE CODES (DTCS)

- Using a diagnostic scan tool, clear the ABS module Diagnostic Trouble Codes (DTCs).
- Ignition OFF.
- Ignition ON.
- Using a diagnostic scan tool, carry out the ABS module self-test.

Is DTC U3003:16 still present?

Yes	GO to A2
No	The system is operating correctly at this time. The DTC may have set due to a previous low battery voltage condition.

A2 CHECK FOR CHARGING SYSTEM DIAGNOSTIC TROUBLE CODES (DTCS) IN THE PCM (POWERTRAIN CONTROL MODULE)

- Using a diagnostic scan tool, retrieve all Continuous Memory Diagnostic Trouble Codes (CMDTCs).

Is DTC B1317, B1318, B1676, U3003:16 or U3003:17 present in one or more modules AND are any charging system

Diagnostic Trouble Codes (DTCs) present in the PCM ?

Yes	DIAGNOSE the charging system. REFER to: Charging System - 2.0L Duratec-HE (125kW/170PS) - MI4 (414-00 Charging System - General Information, Diagnosis and Testing). REFER to: Charging System - 2.0L EcoBoost (184kW/250PS) - MI4 (414-00 Charging System - General Information, Diagnosis and Testing).
No	GO to A3

A3 CHECK THE BATTERY CONDITION AND STATE OF CHARGE

- Carry out the Battery Condition Test diagnostic routine.
  REFER to: Battery (414-01 Battery, Mounting and Cables, Diagnosis and Testing).

Did the battery pass the condition test?

Yes	If the battery passed the condition test but required a recharge, DIAGNOSE the charging system. REFER to: Charging System - 2.0L Duratec-HE (125kW/170PS) - MI4 (414-00 Charging System - General Information, Diagnosis and Testing). REFER to: Charging System - 2.0L EcoBoost (184kW/250PS) - MI4 (414-00 Charging System - General Information, Diagnosis and Testing). If the battery passed the condition test and did not require a recharge, GO to A4
No	INSTALL a new battery. REFER to: Battery (414-01 Battery, Mounting and Cables, Removal and Installation).

A4 CHECK THE ABS (ANTI-LOCK BRAKE SYSTEM) MODULE VOLTAGE (VPWR_ABS) PARAMETER IDENTIFICATION (PID)

- Ignition ON.
- Measure and record the voltage at the battery.
- Using a diagnostic scan tool, monitor the VPWR_ABS Parameter Identification (PID).

Is the Parameter Identification (PID) display within 0.2 volt of the recorded battery voltage?

Yes	GO to A7
No	GO to A5

A5 CHECK THE ABS (ANTI-LOCK BRAKE SYSTEM) MODULE VOLTAGE SUPPLY

- Ignition OFF.
- Disconnect ABS module C135.
- Ignition ON.
- Measure:

Positive Lead	Measurement / Action	Negative Lead

C135-1	✱▽▬	—
C135-8	✱▽▬	—
C135-32	✱▽▬	—

Is each voltage within 0.2 volt of the recorded battery voltage?

Yes	GO to A6
No	VERIFY BJB fuses 7 (40A), 8 (30A) and 19 (5A) are OK. If not OK, REFER to the Wiring Diagrams manual to identify the cause of the circuit short. If OK, REPAIR the affected circuit for high resistance or an open.

A6 CHECK THE ABS (ANTI-LOCK BRAKE SYSTEM) MODULE GROUND CIRCUIT FOR AN OPEN

- Ignition OFF.
- Disconnect the battery negative cable.
  REFER to: Battery Disconnect and Connect (414-01 Battery, Mounting and Cables, General Procedures).
- Measure:

Positive Lead	Measurement / Action	Negative Lead
C135-47	Ω	—

Is the resistance less than 3 ohms?

Yes	GO to A7
No	REPAIR the circuit.

A7 CHECK FOR CORRECT ABS (ANTI-LOCK BRAKE SYSTEM) MODULE OPERATION

- Ignition OFF.
- Disconnect and inspect ABS module C135 (if not previously disconnected).
- Repair:
  - corrosion (install new connector or terminal - clean module pins)
  - damaged or bent pins - install new terminals/pins
  - pushed-out pins - install new pins as necessary
- Connect ABS module C135. Make sure it seats and latches correctly.
- Connect the battery negative cable.
  REFER to: Battery Disconnect and Connect (414-01 Battery, Mounting and Cables, General Procedures).
- Operate the system and determine if the concern is still present.

Is the concern still present?

Yes	CHECK OASIS for any applicable Technical Service Bulletins (TSBs). If a TSB exists for this concern, DISCONTINUE this test and FOLLOW the TSB instructions. If no Technical Service Bulletins (TSBs) address this concern, INSTALL a new ABS module and HCU . REFER to: Hydraulic Control Unit (HCU) (206-09 Anti-Lock Brake System (ABS) and Stability Control, Removal and Installation).
No	The system is operating correctly at this time. The concern may have been caused by a loose or

	corroded connector. ADDRESS the root cause of any connector or pin issues.

Wheel Speed Sensor Erratic Signal Diagnostic Trouble Codes (DTCs)

Normal Operation and Fault Conditions

The wheel speed sensor uses the encoder (tone wheel) on the wheel bearing to generate a square wave signal proportional to wheel speed that is sent to the ABS module. The wheel bearing, encoder and wheel speed sensor must be undamaged and free from any contamination to produce a clean signal for use by the ABS module. Also, all 4 tires and wheels must be of the same manufacturer recommended size for the wheel speed sensor to generate an accurate wheel speed signal.

Diagnostic Trouble Code (DTC) Fault Trigger Conditions

DTC	Description	Fault Trigger Conditions
C0030:07	Left Front Tone Wheel: Mechanical Failure	These Diagnostic Trouble Codes (DTCs) set in continuous memory and on-demand if there is damage to the wheel speed sensor encoder, damage to the wheel bearing, or contamination or deformation of the wheel bearing seal.
C0033:07	Right Front Tone Wheel: Mechanical Failure	
C0036:07	Left Rear Tone Wheel: Mechanical Failure	
C0039:07	Right Rear Tone Wheel: Mechanical Failure	
C0031:07	Left Front Wheel Speed Sensor: Mechanical Failure	These Diagnostic Trouble Codes (DTCs) set in continuous memory and on-demand if the wheel speed sensor, encoder and/or wheel bearing is damaged, or if the wheel bearing is not installed correctly. These Diagnostic Trouble Codes (DTCs) also set if an incorrectly sized tire is installed on the vehicle or if an excessive air gap exists between the wheel speed sensor and the encoder due to an incorrect component being installed.
C0034:07	Right Front Wheel Speed Sensor: Mechanical Failure	
C0037:07	Left Rear Wheel Speed Sensor:	

	Mechanical Failure	
C003A:07	Right Rear Wheel Speed Sensor: Mechanical Failure	

PINPOINT TEST B : WHEEL SPEED SENSOR ERRATIC SIGNAL DIAGNOSTIC TROUBLE CODES (DTCS)

B1 CHECK FOR ABS (ANTI-LOCK BRAKE SYSTEM) MODULE DIAGNOSTIC TROUBLE CODES (DTCS)

- Ignition ON.
- Using a diagnostic scan tool, carry out the ABS module self-test.
- Retrieve and record all ABS module Diagnostic Trouble Codes (DTCs).

Is DTC C0031:07, C0034:07, C0037:07 and/or C003A:07 present?

Yes	GO to B2
No	If DTC C0030:07, C0033:07, C0036:07 or C0039:07 is present, GO to B5 For all other ABS module Diagnostic Trouble Codes (DTCs), GO to the ABS Module DTC Chart.

B2 CHECK THE TIRES SIZE AND PRESSURE

- Ignition OFF.
- Verify that all the tires and wheels are the same size and the tire size and inflation pressures are correct as indicated on the VC label.

Are the tires and wheels OK?

Yes	GO to B3
No	INSTALL the correct size tire/wheel or ADJUST tire pressure as necessary.

B3 CHECK THE WHEEL SPEED SENSOR FOR DAMAGE

- With the vehicle in NEUTRAL, position it on a hoist.
  REFER to: Jacking and Lifting - Overview (100-02 Jacking and Lifting, Description and Operation).
- Disconnect the suspect wheel speed sensor electrical connector.
- Inspect the wheel speed sensor and harness for abrasions, broken connector tabs or water intrusion.

Is the wheel speed sensor and harness OK?

Yes	GO to B4
No	INSTALL a new wheel speed sensor. For front wheel speed sensors, REFER to: Front Wheel Speed Sensor (206-09 Anti-Lock Brake System (ABS) and Stability Control, Removal and Installation). For rear wheel speed sensors, REFER to: Rear Wheel Speed Sensor (206-09 Anti-Lock Brake System (ABS) and Stability Control, Removal and Installation).

B4 INSPECT THE WHEEL SPEED SENSOR MOUNTING

- Inspect the wheel speed sensor and fastener for looseness.

Are the wheel speed sensor and fastener tight?

Yes	GO to B5
No	TIGHTEN the wheel speed sensor fastener to specification.

B5 CHECK WHEEL BEARING AND ENCODER FOR DAMAGE

- Inspect the wheel bearings for abnormal wear or roughness and for deformation or contamination of the seal and encoder.

Are the wheel bearing and encoder OK?

Yes	GO to B6
No	INSTALL a new wheel bearing as necessary. For the front wheel bearing, REFER to: Front Wheel Bearing (204-01 Front Suspension, Removal and Installation). For the rear wheel bearing, REFER to: Wheel Bearing and Wheel Hub (204-02 Rear Suspension, Removal and Installation).

B6 CHECK FOR RETURNING DIAGNOSTIC TROUBLE CODES (DTCS)

- Using a diagnostic scan tool, clear all ABS module Diagnostic Trouble Codes (DTCs).
- Test drive the vehicle under normal driving conditions above 20 km/h (12 mph).
- Using a diagnostic scan tool, carry out the ABS module self-test.

Are any Diagnostic Trouble Codes (DTCs) present in the ABS module?

Yes	If Diagnostic Trouble Code (DTC) C0031:07, C0034:07, C0037:07 or C003A:07 is present, INSTALL a new wheel speed sensor. For front wheel speed sensors, REFER to: Front Wheel Speed Sensor (206-09 Anti-Lock Brake System (ABS) and Stability Control, Removal and Installation). For rear wheel speed sensors, REFER to: Rear Wheel Speed Sensor (206-09 Anti-Lock Brake System (ABS) and Stability Control, Removal and Installation). If Diagnostic Trouble Code (DTC) C0030:07, C0033:07, C0036:07 or C0039:07 is present, INSTALL a new wheel bearing as necessary. For the front wheel bearing, REFER to: Front Wheel Bearing (204-01 Front Suspension, Removal and Installation). For the rear wheel bearing, REFER to: Wheel Bearing and Wheel Hub (204-02 Rear Suspension, Removal and Installation).
No	The system is operating correctly at this time. The concern may have been caused by a loose or corroded connector. ADDRESS the root cause of any connector or pin issues.

C0040:64

Refer to Wiring Diagrams Cell 31 for schematic and connector information.

Normal Operation and Fault Conditions

The ABS module receives brake pedal switch input from the PCM over the High Speed Controller Area Network (HS-CAN). The ABS module compares this information against wheel speed sensor input to determine if the brake pedal input is valid. As vehicle speed decreases, the ABS module looks for a change in the brake pedal switch input, if vehicle speed decreases but there is no change in the brake pedal switch, the ABS sets a DTC . An incorrectly installed brake pedal switch can cause a signal plausibility concern. Also, an implausible signal can been created if a driver is resting one foot on the brake pedal while using the other foot to press the accelerator.

DTC Fault Trigger Conditions

DTC	Description	Fault Trigger Conditions
C0040:64	Brake Pedal Switch "A": Signal Plausibility Failure	This DTC sets in continuous memory if brake pedal switch input is continuously active for more than 6 minutes when driving faster than 20 km/h (12 mph) or after accelerating up to a speed greater than 40 km/h (25 mph) and decelerating down to a speed less than 3 km/h (2 mph) 4 times with no change in brake pedal switch input.

Possible Causes

- Brake pedal (stoplamp) switch
- Communication concern
- ABS module

Visual Inspection and Diagnostic Pre-checks

- Make sure the stoplamp switch electrical connector is connected and free of corrosion and other contaminants.
- Make sure the stoplamp switch is installed correctly.
- Make sure the stoplamp switch is operating correctly.

PINPOINT TEST C : C0040:64

C1 CHECK THE STOPLAMP SWITCH AND SPEED CONTROL DEACTIVATION SWITCH OPERATION

- Inspect the stoplamp switch (cruise control deactivation switch is part of the stoplamp switch) and brake pedal assembly to verify there is no brake pedal pressure applied due to incorrect switch or pedal assembly installation.
- Confirm that all brake pedal bracket fasteners are tightened to specifications.
- Set the ignition to RUN.
- **NOTE:** *Using the diagnostic scan tool recording function makes it easier to observe the brake pressure sensor readings.*

  Using a diagnostic scan tool, monitor the Brake Switch Parameters.
- **NOTE:** *The rate of brake pedal apply must not exceed 35 kPa (5.08 psi) per second as indicated by the diagnostic scan tool.*

  Slowly apply the brake pedal to generate the pressure graph for the master cylinder pressure (MC_PRESS) Parameter Identification (PID).
- Record the initial value of the MC_PRESS Parameter Identification (PID) when the brake lamp (BRAKE_LAMP) and cruise control cancel (CRUISE_CANCL) Parameter Identifications (PIDs) change from OFF to ON.

Do the BRAKE_LAMP and CRUISE_CANCL Parameter Identifications (PIDs) transition to ON before the MC_PRESS

Parameter Identification (PID) reaches 304 kPa (44.09 psi)?

Yes	GO to C2
No	REMOVE and REINSTALL the stoplamp switch. REFER to: Stoplamp Switch (417-01 Exterior Lighting, Removal and Installation). CLEAR the ABS module Diagnostic Trouble Codes (DTCs). VERIFY if the concern is still present using the diagnostic scan tool as instructed previously. If the concern is still present, INSTALL a new stoplamp switch. REFER to: Stoplamp Switch (417-01 Exterior Lighting, Removal and Installation). If the concern is no longer present, the concern was most likely cause by an incorrectly installed stoplamp switch.

C2 CHECK THE ABS (ANTI-LOCK BRAKE SYSTEM) MODULE DIAGNOSTIC TROUBLE CODES (DTCS)

- Using a diagnostic scan tool, carry out the ABS module self-test.
- Retrieve and record all ABS module Diagnostic Trouble Codes (DTCs).

Are any communication (U-code) Diagnostic Trouble Codes (DTCs) present in the ABS module?

Yes	DIAGNOSE all ABS module communication Diagnostic Trouble Codes (DTCs) before diagnosing DTC C0040:64. GO to the ABS Module DTC Chart.
No	GO to C3

C3 CHECK THE PCM (POWERTRAIN CONTROL MODULE) FOR DIAGNOSTIC TROUBLE CODES (DTCS)

- Using a diagnostic scan tool, carry out the PCM KOEO self-test.
- Retrieve and record all PCM Diagnostic Trouble Codes (DTCs).

Are any Diagnostic Trouble Codes (DTCs) present in the PCM ?

Yes	REFER to: Electronic Engine Controls (303-14A Electronic Engine Controls - 2.0L Duratec-HE (125kW/170PS) - MI4, Diagnosis and Testing).
No	GO to C4

C4 CHECK FOR CORRECT ABS (ANTI-LOCK BRAKE SYSTEM) MODULE OPERATION

- Ignition OFF.
- Disconnect and inspect ABS module C135.
- Repair:
  - corrosion (install new connector or terminal - clean module pins)
  - damaged or bent pins - install new terminals/pins
  - pushed-out pins - install new pins as necessary
- Connect ABS module C135. Make sure it seats and latches correctly.
- Operate the system and determine if the concern is still present.

Is the concern still present?

Yes	CHECK OASIS for any applicable Technical Service Bulletins (TSBs). If a TSB exists for this concern, DISCONTINUE this test and FOLLOW the TSB instructions. If no Technical Service Bulletins (TSBs) address this concern, INSTALL a new ABS module and HCU .

	REFER to: Hydraulic Control Unit (HCU) (206-09 Anti-Lock Brake System (ABS) and Stability Control, Removal and Installation).
No	The system is operating correctly at this time. The concern may have been caused by a loose or corroded connector. ADDRESS the root cause of any connector or pin issues.

U0140:00

Refer to Wiring Diagrams Cell 42 for schematic and connector information.

Normal Operation and Fault Conditions

With the ignition ON, the BCM sends messages to the ABS module and the SASM over the High Speed Controller Area Network (HS-CAN). If the ABS module or the SASM do not receive these messages within the specified time frame, the modules set Diagnostic Trouble Codes (DTCs). This can be due to a BCM failure, a circuit failure on the High Speed Controller Area Network (HS-CAN) or an excessive load on the network. For information on the messages sent to the ABS module and the SASM by the BCM ,
REFER to: Anti-Lock Brake System (ABS) and Stability Control - System Operation and Component Description (206-09 Anti-Lock Brake System (ABS) and Stability Control, Description and Operation).

DTC Fault Trigger Conditions

DTC	Description	Fault Trigger Conditions
U0140:00	Lost Communication With Body Control Module: No Sub Type Information	• This DTC sets in continuous memory and on-demand in the ABS module if any of the following messages is missing from the BCM ; odometer value, parking brake status, vehicle mode or vehicle configuration information. • This DTC sets in continuous memory and on-demand in the SASM if the module does not receive the power mode or vehicle configuration information messages.

Possible Causes

- Wiring, terminals or connectors
- Over or undervoltage concerns
- BCM
- ABS module
- SASM

PINPOINT TEST D : U0140:00

D1 CHECK THE COMMUNICATION NETWORK

- Ignition ON.
- Using a diagnostic scan tool, carry out the Network Test.

Does the BCM pass the Network Test?

Yes	GO to D2
No	To diagnose the BCM does not communicate with the diagnostic scan tool, REFER to: Communications Network (418-00 Module Communications Network, Diagnosis and

	Testing).

D2 CHECK THE ABS (ANTI-LOCK BRAKE SYSTEM) MODULE OR SASM (STEERING ANGLE SENSOR MODULE) CONTINUOUS MEMORY DIAGNOSTIC TROUBLE CODES (CMDTCS)

- Using a diagnostic scan tool, carry out the ABS module self-test or the SASM self-test.
- Retrieve and record all ABS module or SASM Diagnostic Trouble Codes (DTCs).
- Clear the Diagnostic Trouble Codes (DTCs).
- Ignition OFF.
- Ignition ON.
- Repeat the ABS module or SASM self-test.

Is DTC U0140:00 retrieved again?

Yes	GO to D3
No	The system is operating correctly at this time. The DTC may have been set due to high network traffic or an intermittent fault condition.

D3 CHECK FOR VOLTAGE DIAGNOSTIC TROUBLE CODES (DTCS) FROM THE ABS (ANTI-LOCK BRAKE SYSTEM) MODULE OR SASM (STEERING ANGLE SENSOR MODULE) SELF-TEST

- Review the recorded Diagnostic Trouble Codes (DTCs) from the ABS module or SASM self-test.

Is DTC U3003:16 or U3003:17 present in the ABS module or DTC U3003:62 present in the SASM ?

Yes	For ABS module DTC U3003:16, GO to Pinpoint Test A For ABS module DTC U3003:17, GO to Pinpoint Test F For SASM DTC U3003:62, GO to Pinpoint Test L
No	GO to D4

D4 RETRIEVE ALL DIAGNOSTIC TROUBLE CODES (DTCS) FROM THE BCM (BODY CONTROL MODULE)

- Using a diagnostic scan tool, carry out the BCM self-test.
- Retrieve and record all Diagnostic Trouble Codes (DTCs) from the BCM self-test.

Is DTC U3003:16 or U3003:17 present in the BCM ?

Yes	DIAGNOSE the BCM Diagnostic Trouble Codes (DTCs). REFER to: Body Control Module (BCM) (419-10 Multifunction Electronic Modules, Diagnosis and Testing).
No	GO to D5

D5 CHECK FOR DTC (DIAGNOSTIC TROUBLE CODE) U0140:00 SET IN OTHER MODULES

- Using the diagnostic scan tool, carry out the self-test for all modules.
- Retrieve and record the Continuous Memory Diagnostic Trouble Codes (CMDTCs) from all modules.

Is DTC U0140:00 set in 2 or more modules other than the ABS module or SASM ?

Yes	CHECK OASIS for any applicable Technical Service Bulletins (TSBs). If a TSB exists for this concern, DISCONTINUE this test and FOLLOW the TSB instructions. If no Technical Service Bulletins (TSBs)

	address this concern, INSTALL a new BCM . REFER to: Body Control Module (BCM) (419-10 Multifunction Electronic Modules, Removal and Installation).
No	CHECK OASIS for any applicable Technical Service Bulletins (TSBs). If a TSB exists for this concern, DISCONTINUE this test and FOLLOW the TSB instructions. If no Technical Service Bulletins (TSBs) address this concern, INSTALL a new ABS module and HCU . REFER to: Hydraulic Control Unit (HCU) (206-09 Anti-Lock Brake System (ABS) and Stability Control, Removal and Installation). If no Technical Service Bulletins (TSBs) address this concern, INSTALL a new SASM . REFER to: Steering Angle Sensor Module (SASM) (211-05 Steering Column Switches, Removal and Installation).

The Traction Control System Cannot Be Disabled — Vehicles Equipped With a 2.0L Gasoline Direct Injection (GDI) Engine

Refer to Wiring Diagrams Cell 60 for schematic and connector information.

Normal Operation and Fault Conditions

When the driver deactivates traction control using the message center, the IPC sends a message to the BCM over the Medium Speed Controller Area Network (MS-CAN) to disable traction control. The BCM , acting as a gateway, relays this message to the ABS module over the High Speed Controller Area Network (HS-CAN). The ABS module continues to monitor for excessive wheel spin, but no longer takes any action when a traction event is detected.

After receiving the message from the BCM , the ABS module sends a message to the BCM over the High Speed Controller Area Network (HS-CAN) to illuminate the stability/traction control disabled indicator (sliding car OFF icon). The BCM , acting as a gateway, relays this message to the IPC over the Medium Speed Controller Area Network (MS-CAN). The IPC responds by illuminating the stability/traction control disabled indicator (sliding car OFF icon). Traction control remains deactivated until the driver changes the traction control state in the message center or until the ignition is cycled.

If equipped, MyKey® allows users to configure traction control to be either always on or selectable. If a MyKey® restricted key is in use with the MyKey® traction control feature configured to "always on", traction control cannot be disabled. An admin key must be used to enable and disable traction control.

NOTE: *For vehicles equipped with Intelligent Access (IA), this test requires the use of at least 2 Intelligent Access (IA) keys programmed to the vehicle, one admin Intelligent Access (IA) key and one restricted Intelligent Access (IA) key.*

NOTE: *For vehicles not equipped with Intelligent Access (IA), this test requires the use of at least 2 Integrated Keyhead Transmitters (IKTs) programmed to the vehicle, one admin Integrated Keyhead Transmitter (IKT) and one restricted Integrated Keyhead Transmitter (IKT).*

Possible Causes

- A MyKey® restricted key is in use
- Network communication concern
- IPC concern
- Message center concern

PINPOINT TEST E : THE TRACTION CONTROL SYSTEM CANNOT BE DISABLED — VEHICLES EQUIPPED WITH A 2.0L GASOLINE DIRECT INJECTION (GDI) ENGINE

E1 VERIFY THAT THE KEY IN USE IS NOT RESTRICTED

• For vehicles equipped with Intelligent Access (IA),
  ◦ place 1 of the Intelligent Access (IA) keys inside the vehicle and all other Intelligent Access (IA) keys at least 1 meter (3 feet) away from the vehicle.
  ◦ press the start/stop button without pressing the brake pedal.

- For vehicles not equipped with Intelligent Access (IA), turn the ignition to the ON position.
- Monitor the message center.

Does the message center display MYKEY ACTIVE DRIVE SAFELY?

Yes	The current Intelligent Access (IA) key or Integrated Keyhead Transmitter (IKT) is a restricted key and is operating correctly. REPEAT the test using different Intelligent Access (IA) keys or Integrated Keyhead Transmitters (IKTs) until the message center **does not** display MYKEY ACTIVE DRIVE SAFELY. GO to E2
No	GO to E2

E2 VERIFY THE MYKEY® TRACTION CONTROL SETTING

- Using the message center, verify the MyKey® traction control setting. Refer to the Owner's Literature for instructions on setting the MyKey® functions.

Is the MyKey® traction control setting configured to “always on”?

Yes	GO to E3
No	GO to E4

E3 VERIFY TRACTION CONTROL FUNCTION CAN BE DISABLED USING THE ADMIN INTELLIGENT ACCESS (IA) KEY OR THE ADMIN INTEGRATED KEYHEAD TRANSMITTER (IKT)

- Using the message center, verify traction control can be enabled and disabled using the admin Intelligent Access (IA) key or the admin Integrated Keyhead Transmitter (IKT). Refer to the Owner's Literature for instructions on enabling and disabling traction control.

Can traction control be enabled and disabled using the admin Intelligent Access (IA) key or the admin Integrated Keyhead Transmitter (IKT)?

Yes	The system is operating correctly at this time. The concern may have been caused by the use of a restricted Intelligent Access (IA) key or restricted Integrated Keyhead Transmitter (IKT). INFORM the customer that traction control can only be disabled using an admin Intelligent Access (IA) key or an admin Integrated Keyhead Transmitter (IKT) when the MyKey® traction control setting is configured to "always on".
No	GO to E4

E4 CHECK FOR ABS (ANTI-LOCK BRAKE SYSTEM) MODULE DIAGNOSTIC TROUBLE CODES (DTCS)

- Using a diagnostic scan tool, carry out the ABS module self-test.
- Retrieve and record all ABS module Diagnostic Trouble Codes (DTCs).

Are any Diagnostic Trouble Codes (DTCs) present in the ABS module?

Yes	GO to the ABS Module DTC Chart.
No	GO to E5

E5 CHECK FOR IPC (INSTRUMENT PANEL CLUSTER) DIAGNOSTIC TROUBLE CODES (DTCS)

- Using a diagnostic scan tool, carry out the IPC self-test.

- Retrieve and record all IPC Diagnostic Trouble Codes (DTCs).

Are any Diagnostic Trouble Codes (DTCs) present in the IPC ?

Yes	REFER to: Instrumentation, Message Center and Warning Chimes (413-01 Instrumentation, Message Center and Warning Chimes, Diagnosis and Testing).
No	GO to E6

E6 CHECK FOR BCM (BODY CONTROL MODULE) DIAGNOSTIC TROUBLE CODES (DTCS)

- Using a diagnostic scan tool, carry out the BCM self-test.
- Retrieve and record all BCM Diagnostic Trouble Codes (DTCs).

Are any Diagnostic Trouble Codes (DTCs) present in the BCM ?

Yes	DIAGNOSE the BCM Diagnostic Trouble Codes (DTCs). REFER to: Body Control Module (BCM) (419-10 Multifunction Electronic Modules, Removal and Installation).
No	The system is operating correctly at this time. The concern may have been caused due to high network traffic or an intermittent fault condition.

U3003:17

Normal Operation and Fault Conditions

The ABS module, hydraulic pump and solenoid valves require an operating voltage between 10 and 17 volts. The ABS module receives this voltage from the BJB . The ABS module has a single ground circuit located in the engine compartment wiring harness. An overcharging condition in the charging system results in the ABS module setting a DTC . This DTC may also set in the ABS module due to battery charging or vehicle jump starting events.

DTC Fault Trigger Conditions

DTC	Description	Fault Trigger Conditions
U3003:17	Battery Voltage: Circuit Voltage Above Threshold	This DTC sets in continuous memory and on-demand if the voltage supplied to the ABS module is above 17 volts.

Possible Causes

- Charging system concern
- ABS module

PINPOINT TEST F : U3003:17

F1 CHECK FOR HIGH VOLTAGE DIAGNOSTIC TROUBLE CODES (DTCS) SET IN OTHER MODULES

- Ignition ON.
- Using a diagnostic scan tool, retrieve and record all Continuous Memory Diagnostic Trouble Codes (CMDTCs).

Is DTC B1317, B1318, B1676, U3003:16 or U3003:17 present in one or more modules AND are any charging system Diagnostic Trouble Codes (DTCs) present in the PCM ?

Yes	DIAGNOSE the PCM Diagnostic Trouble Codes (DTCs), REFER to: Electronic Engine Controls (303-14A Electronic Engine Controls - 2.0L Duratec-HE (125kW/170PS) - MI4, Diagnosis and Testing).
No	GO to F2

F2 CHECK THE BATTERY VOLTAGE

- Turn off all interior lights, exterior lights and accessories.
- Start and run the engine at approximately 1,500 Revolutions Per Minute (RPM) for 3 minutes while monitoring the battery voltage.

Is the battery voltage between 13 and 15.2 volts ?

Yes	GO to F3
No	DIAGNOSE the overcharging condition. REFER to: Charging System - 2.0L Duratec-HE (125kW/170PS) - MI4 (414-00 Charging System - General Information, Diagnosis and Testing). REFER to: Charging System - 2.0L EcoBoost (184kW/250PS) - MI4 (414-00 Charging System - General Information, Diagnosis and Testing).

F3 RECHECK FOR DTC (DIAGNOSTIC TROUBLE CODE) U3003:17

- Turn the engine off.
- Ignition ON.
- Using a diagnostic scan tool, carry out the ABS module self-test.
- Clear the ABS module Diagnostic Trouble Codes (DTCs).
- Ignition OFF.
- Ignition ON.
- Repeat the ABS module self-test.

Is DTC U3003:17 still present?

Yes	GO to F4
No	The system is operating normally at this time. The DTC may have been set previously during battery charging or while jump starting the vehicle.

F4 CHECK FOR CORRECT ABS (ANTI-LOCK BRAKE SYSTEM) MODULE OPERATION

- Ignition OFF.
- Disconnect and inspect ABS module C135 (if not previously disconnected).
- Repair:
  - corrosion (install new connector or terminal - clean module pins)
  - damaged or bent pins - install new terminals/pins
  - pushed-out pins - install new pins as necessary
- Connect ABS module C135. Make sure it seats and latches correctly.
- Operate the system and determine if the concern is still present.

Is the concern still present?

Yes	CHECK OASIS for any applicable Technical Service Bulletins (TSBs). If a TSB exists for this concern, DISCONTINUE this test and FOLLOW the TSB instructions. If no Technical Service Bulletins (TSBs) address this concern, INSTALL a new ABS module and HCU . REFER to: Hydraulic Control Unit (HCU) (206-09 Anti-Lock Brake System (ABS) and Stability Control, Removal and Installation).
No	The system is operating correctly at this time. The concern may have been caused by a loose or corroded connector. ADDRESS the root cause of any connector or pin issues.

Stability Control Sensor Signal Failure DTCs

Refer to Wiring Diagrams Cell 42 for schematic and connector information.

Normal Operation and Fault Conditions

The RCM measures vehicle yaw rate, lateral acceleration and longitudinal acceleration and sends the information to the ABS module over a private High Speed Controller Area Network (HS-CAN). This private High Speed Controller Area Network (HS-CAN) is used only for communication between the RCM and the ABS module. The yaw rate sensor, lateral and longitudinal accelerometers are contained in the RCM . A failure of the private High Speed Controller Area Network (HS-CAN), RCM or the internal sensors causes the ABS module to set one or more Diagnostic Trouble Codes (DTCs).

DTC Fault Trigger Conditions

DTC	Description	Fault Trigger Conditions
C0061:28, C0062:28, C0063:28	Lateral Acceleration, Longitudinal Acceleration, Yaw Rate Sensor: Signal Bias Level Out of Range/Zero Adjustment Failure	These Diagnostic Trouble Codes (DTCs) set in continuous memory and on-demand if the sensor signal is greater than the programmed sensor maximum plausible signal.
C0061:2F, C0063:2F	Lateral Acceleration, Yaw Rate Sensor: Signal Erratic	These Diagnostic Trouble Codes (DTCs) set in continuous memory and on-demand if the sensor signal is out of range when the vehicle is standing still.
C0061:64, C0062:64, C0063:64	Lateral Acceleration, Longitudinal Acceleration, Yaw Rate Sensor: Signal Plausibility Failure	These Diagnostic Trouble Codes (DTCs) set in continuous memory and on-demand if the sensor signal does not match the other stability sensor signals (steering angle, yaw rate, longitudinal acceleration or lateral acceleration).
U0028:88	Vehicle Communication Bus "A": Bus Off	This DTC sets in continuous memory and on-demand due to a circuit failure in the private High Speed Controller Area Network (HS-CAN) between the ABS module and the RCM .
U0151:00	Lost Communication With Restraints Control Module: No Sub Type Information	This DTC sets in continuous memory and on-demand if the expected RCM messages such as yaw rate sensor, lateral and longitudinal accelerometers are missing for more than 5 seconds.
U0452:86	Invalid Data Received from Restraints Control Module: Signal Invalid	This DTC sets in continuous memory and on-demand if one or more of the stability sensors inside the RCM fails and the sensor signal provided does not match other stability control sensor input.

Possible Causes

- Wiring, terminals or connectors
- RCM
- ABS module

PINPOINT TEST G : STABILITY CONTROL SENSOR SIGNAL FAILURE DTCS

G1 CHECK THE COMMUNICATION NETWORK

- Ignition ON.
- Using the diagnostic scan tool, carry out the Network Test.

Does the RCM pass the Network Test?

Yes	GO to G2
No	To diagnose the RCM does not communicate with the diagnostic scan tool, REFER to: Communications Network (418-00 Module Communications Network, Diagnosis and Testing).

G2 CHECK THE ABS (ANTI-LOCK BRAKE SYSTEM) MODULE CONTINUOUS MEMORY DIAGNOSTIC TROUBLE CODES (CMDTCS)

- Using a diagnostic scan tool, carry out the ABS module self-test.
- Retrieve and record all ABS module Diagnostic Trouble Codes (DTCs).
- Clear the Diagnostic Trouble Codes (DTCs).
- Ignition OFF.
- Ignition ON.
- Repeat the ABS module self-test.

Is DTC U0151:00 retrieved again?

Yes	GO to G3
No	For Diagnostic Trouble Codes (DTCs) C0061:28, 2F, 64; C0062:28, 64; C0063:28, 2F, 64; U0028:88 or U0452:86, GO to G7 For all other ABS module Diagnostic Trouble Codes (DTCs), GO to the ABS Module DTC Chart. If no Diagnostic Trouble Codes (DTCs) return, the system is operating correctly at this time. The DTC may have been set due to high network traffic or an intermittent fault condition.

G3 REVIEW THE RECORDED DIAGNOSTIC TROUBLE CODES (DTCS) FROM THE ABS (ANTI-LOCK BRAKE SYSTEM) MODULE SELF-TEST

- Review the recorded Diagnostic Trouble Codes (DTCs) from the ABS module self-test.

Is DTC U3003:16 or U3003:17 present in the ABS module?

Yes	For DTC U3003:16, GO to Pinpoint Test A For DTC U3003:17, GO to Pinpoint Test F
No	GO to G4

G4 RETRIEVE ANY DIAGNOSTIC TROUBLE CODES (DTCS) FROM THE RCM (RESTRAINTS CONTROL MODULE)

- Using a diagnostic scan tool, carry out the RCM self-test.

Is DTC U3003:16 or U3003:17 present in the RCM ?

Yes	DIAGNOSE the RCM Diagnostic Trouble Codes (DTCs), REFER to: Airbag Supplemental Restraint System (SRS) - Vehicles Built From: 11-June-2012 (501-20B Supplemental Restraint System, Diagnosis and Testing).
No	GO to G5

G5 CHECK FOR DTC (DIAGNOSTIC TROUBLE CODE) U0151:00 SET IN OTHER MODULES

- Using the diagnostic scan tool, carry out the self-test for all modules.
- Retrieve and record the Continuous Memory Diagnostic Trouble Codes (CMDTCs) from all modules.

Is DTC U0151:00 recorded in any other module?

Yes	GO to G13
No	GO to G6

G6 VERIFY THE RCM (RESTRAINTS CONTROL MODULE) PART NUMBER

- Using a diagnostic scan tool, retrieve and record the RCM part number from the log viewer.
- Check the part number recorded against the number listed in the parts catalog or equivalent.

Does the part number on the RCM match the part number listed in the parts catalog or equivalent?

Yes	GO to G7
No	INSTALL the correct RCM . REFER to: Restraints Control Module (RCM) (501-20B Supplemental Restraint System, Removal and Installation).

G7 CHECK THE ABS (ANTI-LOCK BRAKE SYSTEM) MODULE IVD INITIALIZATION

- Using a diagnostic scan tool, carry out the ABS module IVD Initialization.

Does the ABS module IVD Initialization complete successfully?

Yes	GO to G8
No	GO to G9

G8 CHECK THE ABS (ANTI-LOCK BRAKE SYSTEM) MODULE DIAGNOSTIC TROUBLE CODES (DTCS)

- Ignition OFF.
- Ignition ON.
- Using a diagnostic scan tool, carry out the ABS module self-test.

Are any stability control sensor Diagnostic Trouble Codes (DTCs), including no communication, invalid data and bus off Diagnostic Trouble Codes (DTCs) present in the ABS module?

Yes	GO to G9
No	The condition that set the DTC is not present at this time. The concern may have been caused due to a failed or an incomplete initialization.

G9 CHECK THE PRIVATE HIGH SPEED CONTROLLER AREA NETWORK (HS-CAN) CIRCUITS FOR A SHORT TO VOLTAGE

- Depower the SRS .
  REFER to: Supplemental Restraint System (SRS) Depowering and Repowering (501-20B Supplemental Restraint System, General Procedures).
- Disconnect both RCM electrical connectors.
- Disconnect ABS module C135.
- Ignition ON.
- Measure:

Positive Lead	Measurement / Action	Negative Lead
C135-18	V	—
C135-19	V	—

Is any voltage present?

Yes	REPAIR the affected circuit(s).
No	GO to G10

G10 CHECK THE PRIVATE HIGH SPEED CONTROLLER AREA NETWORK (HS-CAN) CIRCUITS FOR A SHORT TO GROUND

- Ignition OFF.
- Measure:

Positive Lead	Measurement / Action	Negative Lead
C135-18	Ω	—
C135-19	Ω	—

Are the resistances greater than 10,000 ohms?

Yes	GO to G11
No	REPAIR the affected circuit(s).

G11 CHECK THE PRIVATE HIGH SPEED CONTROLLER AREA NETWORK (HS-CAN) CIRCUITS FOR A SHORT TOGETHER

- Measure:

Positive Lead	Measurement / Action	Negative Lead
C135-18	Ω	C135-19

Is the resistance greater than 10,000 ohms?

Yes	GO to G12
No	REPAIR the affected circuit(s).

G12 CHECK THE PRIVATE HIGH SPEED CONTROLLER AREA NETWORK (HS-CAN) CIRCUITS FOR AN OPEN

- Measure:

Positive Lead	Measurement / Action	Negative Lead
C135-18	Ω	C310B-32
C135-19	Ω	C310B-31

Are the resistances less than 3 ohms?

Yes	GO to G13
No	REPAIR the affected circuit(s).

G13 CHECK FOR CORRECT RCM (RESTRAINTS CONTROL MODULE) OPERATION

- Ignition OFF.
- Disconnect and inspect the RCM electrical connectors (if not previously disconnected).
- Repair:
  - corrosion (install new connector or terminal - clean module pins)
  - damaged or bent pins - install new terminals/pins
  - pushed-out pins - install new pins as necessary
- Connect the RCM electrical connectors. Make sure they seat and latch correctly.
- Repower the SRS .
  REFER to: Supplemental Restraint System (SRS) Depowering and Repowering (501-20B Supplemental Restraint System, General Procedures).
- Operate the system and determine if the concern is still present.

Is the concern still present?

Yes	CHECK OASIS for any applicable Technical Service Bulletins (TSBs). If a TSB exists for this concern, DISCONTINUE this test and FOLLOW the TSB instructions. If no Technical Service Bulletins (TSBs) address this concern, INSTALL a new RCM . REFER to: Restraints Control Module (RCM) (501-20B Supplemental Restraint System, Removal and Installation).
No	The system is operating correctly at this time. The concern may have been caused by a loose or corroded connector. ADDRESS the root cause of any connector or pin issues.

C0020:01, C0020:1C, C0020:71

Refer to Wiring Diagrams Cell 42 for schematic and connector information.

Normal Operation and Fault Conditions

The ABS module uses an internal solid state switch to operate the hydraulic pump motor. The ABS module tests the hydraulic pump motor by activating it for 30 milliseconds. While the pump motor is activated, the ABS module monitors the voltage drop across the hydraulic pump motor. After 30 milliseconds have passed, the ABS module stops applying voltage to the pump motor and monitors the voltage that the spinning hydraulic pump motor is generating and the voltage drop across the hydraulic pump motor solid state switch. If the monitored voltages are not within the specifications, the ABS module sets one or more Diagnostic Trouble Codes (DTCs).

DTC Fault Trigger Conditions

DTC	Description	Fault Trigger Conditions
C0020:01	ABS Pump Motor Control: General Electrical Failure	This DTC sets in continuous memory and on-demand if there is an ABS module voltage supply concern, a module ground concern, a shorted hydraulic pump motor or an internal failure of the ABS module.
C0020:1C	ABS Pump Motor Control: Circuit Voltage Out of Range	This DTC sets in continuous memory and on-demand if of the following conditions exist: the voltage supplied to the ABS module is less than 11 volts, there is an open or high resistance in the module voltage supply circuit or the module ground circuit, the voltage drop across the activated pump motor is greater than 7.3 volts, the voltage output of the deactivated pump motor is less than 6 volts, the voltage drop across the solid state switch is greater than 0.93 volt or there is an open or high resistance on the hydraulic pump motor circuit between the ABS module and the HCU .
C0020:71	ABS Pump Motor Control: Actuator Stuck	This DTC sets in continuous memory and on-demand if the ABS module detects the hydraulic pump motor is not rotating when it is commanded to run.

Possible Causes

- Fuse
- Wiring, terminals or connectors
- HCU
- ABS module

Visual Inspection and Diagnostic Pre-checks

- Make sure the vehicle battery terminals and cables are free of any corrosion and other contaminants.
- Make sure the vehicle battery terminals are tightened to their correct torque specifications.
- Make sure BJB fuse 7 (40A) and the fuse socket are OK.

PINPOINT TEST H : C0020:01, C0020:1C, C0020:71

H1 CHECK THE ABS (ANTI-LOCK BRAKE SYSTEM) MODULE DIAGNOSTIC TROUBLE CODES (DTCS)
• Using a diagnostic scan tool, carry out the ABS module self-test. • Retrieve and record all ABS module Diagnostic Trouble Codes (DTCs). **Is Diagnostic Trouble Code (DTC) C0020:71 present in the ABS module?**

Yes	GO to H2
No	If only DTC C0020:1C is present, GO to H3 If both Diagnostic Trouble Codes (DTCs) C0020:1C and C0020:01 are present, GO to H3 If only DTC C0020:01 is present, GO to H6 For all other ABS module Diagnostic Trouble Codes (DTCs), GO to the ABS Module DTC Chart.

H2 CHECK PUMP MOTOR OPERATION

- Using a diagnostic scan tool, activate the ABS pump motor (PMP_MTR) active command.
- Listen for the ABS pump motor noise.

Does the ABS pump motor run for approximately 2 seconds?

Yes	GO to H3
No	GO to H6

H3 CHECK FOR FAULT REPEATABILITY

- Using a diagnostic scan tool, clear the ABS module Diagnostic Trouble Codes (DTCs).
- Ignition OFF.
- Ignition ON.
- Test drive the vehicle at speeds greater than 20 km/h (12 mph).
- Ignition OFF.
- Ignition ON.
- Using a diagnostic scan tool, carry out the ABS module self-test.
- Retrieve and record all ABS module Diagnostic Trouble Codes (DTCs).

Are any ABS module Diagnostic Trouble Codes (DTCs) retrieved?

Yes	For Diagnostic Trouble Code (DTC) C0020:71, GO to H6 For Diagnostic Trouble Code (DTC) C0020:1C, GO to H4 For all other ABS module Diagnostic Trouble Codes (DTCs), GO to the ABS Module DTC Chart.
No	The concern that caused the DTC is not present at this time. DISCONNECT and INSPECT the ABS module electrical connector. CLEAN or REPAIR the connector as necessary. ADDRESS the root cause of any connector or pin issues.

H4 CHECK THE PUMP MOTOR VOLTAGE SUPPLY TO THE ABS (ANTI-LOCK BRAKE SYSTEM) MODULE

- Ignition OFF.
- Disconnect ABS module C135.
- Measure:

Positive Lead	Measurement / Action	Negative Lead
C135-1	V	—

Is the voltage greater than 11 volts?

Yes	GO to H5

No	VERIFY that BJB fuse 7 (40A) is OK. If OK, REPAIR the circuit. If not OK, REFER to the Wiring Diagrams manual to identify the cause of the circuit short.

H5 CHECK THE ABS (ANTI-LOCK BRAKE SYSTEM) MODULE GROUND CIRCUIT FOR AN OPEN

- Ignition OFF.
- Disconnect the battery negative cable.
  REFER to: Battery Disconnect and Connect (414-01 Battery, Mounting and Cables, General Procedures).
- Measure:

Positive Lead	Measurement / Action	Negative Lead
C135-47	Ω	—

Is the resistance less than 3 ohms?

Yes	GO to H6
No	REPAIR the circuit.

H6 CHECK FOR CORRECT ANTI-LOCK BRAKE SYSTEM (ABS) MODULE OPERATION

- Ignition OFF.
- Disconnect and inspect ABS module C135 (if not previously disconnected).
- Repair:
  - corrosion (install new connector or terminal - clean module pins)
  - damaged or bent pins - install new terminals/pins
  - pushed-out pins - install new pins as necessary
- Connect ABS module C135. Make sure it seats and latches correctly.
- Connect the battery negative cable.
  REFER to: Battery Disconnect and Connect (414-01 Battery, Mounting and Cables, General Procedures).
- Operate the system and determine if the concern is still present.

Is the concern still present?

Yes	CHECK OASIS for any applicable Technical Service Bulletins (TSBs). If a TSB exists for this concern, DISCONTINUE this test and FOLLOW the TSB instructions. If no Technical Service Bulletins (TSBs) address this concern, INSTALL a new ABS module and HCU . REFER to: Hydraulic Control Unit (HCU) (206-09 Anti-Lock Brake System (ABS) and Stability Control, Removal and Installation).
No	The system is operating correctly at this time. The concern may have been caused by a loose or corroded connector. ADDRESS the root cause of any connector or pin issues.

C0040:87 or U0100:00

Refer to Wiring Diagrams Cell 42 for schematic and connector information.

Normal Operation and Fault Conditions

With the ignition ON, the PCM sends messages to the ABS module over the High Speed Controller Area Network (HS-CAN). If the ABS module does not receive these messages within the specified time frame, the ABS module sets Diagnostic Trouble Codes (DTCs). This can be due to a PCM failure, a circuit failure on the High Speed Controller Area Network (HS-CAN) or an excessive load on the network. For information on the messages sent to the ABS module by the PCM ,
REFER to: Anti-Lock Brake System (ABS) and Stability Control - System Operation and Component Description (206-09 Anti-Lock Brake System (ABS) and Stability Control, Description and Operation).

DTC Fault Trigger Conditions

DTC	Description	Fault Trigger Conditions
C0040:87	Brake Pedal Switch "A": Missing Message	This DTC sets in continuous memory and on-demand if the brake pedal position message is missing for more than 500 ms. This can be due to a PCM failure, a stoplamp switch failure, a circuit failure on the High Speed Controller Area Network (HS-CAN) or an excessive load on the network.
U0100:00	Lost Communication With ECM/PCM "A": No Sub Type Information	This DTC sets in continuous memory and on-demand if any one of the following messages is missing; accelerator pedal position, cruise control status, power pack status or reverse gear. This can be due to a PCM failure, a circuit failure on the High Speed Controller Area Network (HS-CAN) or an excessive load on the network.

Possible Causes

- Wiring, terminals or connectors
- PCM
- ABS module

PINPOINT TEST I : C0040:87 OR U0100:00

I1 CHECK THE COMMUNICATION NETWORK

- Ignition ON.
- Using a diagnostic scan tool, carry out the Network Test.

Does the PCM pass the Network Test?

Yes	GO to I2
No	To diagnose the PCM does not communicate with the diagnostic scan tool, REFER to: Communications Network (418-00 Module Communications Network, Diagnosis and Testing).

I2 CHECK THE ABS (ANTI-LOCK BRAKE SYSTEM) CONTINUOUS MEMORY DIAGNOSTIC TROUBLE CODES (CMDTCS)

- Ignition ON.
- Using a diagnostic scan tool, carry out the ABS module self-test.
- Clear the ABS module Diagnostic Trouble Codes (DTCs).
- Ignition OFF.
- Ignition ON.
- Using a diagnostic scan tool, carry out the ABS module self-test.
- Retrieve and record the ABS module Diagnostic Trouble Codes (DTCs).

Is DTC C0040:87 or U0100:00 retrieved again?

Yes	GO to I3
No	The system is operating correctly at this time. The DTC may have been set due to high network traffic or an intermittent fault condition.

I3 RETRIEVE THE RECORDED DIAGNOSTIC TROUBLE CODES (DTCS) FROM THE ABS (ANTI-LOCK BRAKE SYSTEM) SELF-TEST

- Check the recorded Diagnostic Trouble Codes (DTCs) from the ABS self-test.

Is Diagnostic Trouble Code (DTC) U3003:16 or U3003:17 recorded?

Yes	For DTC U3003:16, GO to Pinpoint Test A For DTC U3003:17, GO to Pinpoint Test F
No	GO to I4

I4 RETRIEVE THE RECORDED DIAGNOSTIC TROUBLE CODES (DTCS) FROM THE PCM (POWERTRAIN CONTROL MODULE) SELF-TEST

- Using a diagnostic scan tool, carry out the PCM KOEO self-test.

Is DTC P0562 or P0563 present?

Yes	DIAGNOSE the PCM Diagnostic Trouble Codes (DTCs), REFER to: Electronic Engine Controls (303-14A Electronic Engine Controls - 2.0L Duratec-HE (125kW/170PS) - MI4, Diagnosis and Testing).
No	GO to I5

I5 CHECK FOR DTC (DIAGNOSTIC TROUBLE CODE) U0100:00 SET IN OTHER MODULES

- Ignition ON.
- Using a diagnostic scan tool, carry out the self-test for all modules.
- Retrieve the Continuous Memory Diagnostic Trouble Codes (CMDTCs) from all modules.

Is DTC U0100:00 set in 1 or more modules in addition to the ABS module?

Yes	CHECK OASIS for any applicable Technical Service Bulletins (TSBs). If a TSB exists for this concern, DISCONTINUE this test and FOLLOW the TSB instructions. If no Technical Service Bulletins (TSBs) address this concern, INSTALL a new PCM. REFER to: Powertrain Control Module (PCM) (303-14A Electronic Engine Controls - 2.0L Duratec-HE (125kW/170PS) - MI4, Removal and Installation).
No	CHECK OASIS for any applicable Technical Service Bulletins (TSBs). If a TSB exists for this concern, DISCONTINUE this test and FOLLOW the TSB instructions. If no Technical Service Bulletins (TSBs) address this concern, INSTALL a new ABS module and HCU. REFER to: Hydraulic Control Unit (HCU) (206-09 Anti-Lock Brake System (ABS) and Stability Control, Removal and Installation).

U0101:00

Normal Operation and Fault Conditions

With the ignition ON, the TCM sends messages to the ABS module over the High Speed Controller Area Network (HS-CAN). If the ABS module does not receive these messages within the specified time frame, the ABS module sets Diagnostic Trouble Codes (DTCs). This can be due to a TCM failure, a circuit failure on the High Speed Controller Area Network (HS-CAN) or an excessive load on the network. For information on the messages sent to the ABS module by the TCM ,
REFER to: Anti-Lock Brake System (ABS) and Stability Control - System Operation and Component Description (206-09 Anti-Lock Brake System (ABS) and Stability Control, Description and Operation).

DTC Fault Trigger Conditions

DTC	Description	Fault Trigger Conditions
U0101:00	Lost Communication With TCM: No Sub Type Information	This DTC sets in continuous memory and on-demand if the selector lever (PRNDL) status message is missing.

Possible Causes

- Wiring, terminals or connectors
- TCM
- ABS module

PINPOINT TEST J : U0101:00

J1 CHECK THE COMMUNICATION NETWORK

- Ignition ON.
- Using a diagnostic scan tool, carry out the Network Test.

Does the TCM pass the Network Test?

Yes	GO to J2
No	To DIAGNOSE the TCM does not communicate with the diagnostic scan tool, REFER to: Communications Network (418-00 Module Communications Network, Diagnosis and Testing).

J2 CHECK THE ABS (ANTI-LOCK BRAKE SYSTEM) CONTINUOUS MEMORY DIAGNOSTIC TROUBLE CODES (CMDTCS)

- Ignition ON.
- Using a diagnostic scan tool, carry out the ABS module self-test.
- Clear the ABS module Diagnostic Trouble Codes (DTCs).
- Ignition OFF.
- Ignition ON.
- Using a diagnostic scan tool, carry out the ABS module self-test.
- Retrieve and record the ABS module Diagnostic Trouble Codes (DTCs).

Is DTC U0101:00 retrieved again?

Yes	GO to J3
No	The system is operating correctly at this time. The DTC may have been set due to high network traffic or

	an intermittent fault condition.

J3 REVIEW THE RECORDED DIAGNOSTIC TROUBLE CODES (DTCS) FROM THE ABS (ANTI-LOCK BRAKE SYSTEM) MODULE SELF-TEST

- Review the recorded Diagnostic Trouble Codes (DTCs) from the ABS module self-test.

Is DTC U3003:16 or U3003:17 present in the ABS module?

Yes	For DTC U3003:16, GO to Pinpoint Test A For DTC U3003:17, GO to Pinpoint Test F
No	GO to J4

J4 RETRIEVE THE RECORDED DIAGNOSTIC TROUBLE CODES (DTCS) FROM THE TCM (TRANSMISSION CONTROL MODULE) SELF-TEST

- Using a diagnostic scan tool, carry out the TCM self-test.

Is DTC P0702, P0882, P0883 or P1397 present?

Yes	DIAGNOSE the TCM Diagnostic Trouble Codes (DTCs), REFER to: Automatic Transmission (307-01 Automatic Transmission - Vehicles With: 6-Speed PowerShift Transmission - DPS6/6DCT250, Diagnosis and Testing).
No	GO to J5

J5 CHECK FOR DTC (DIAGNOSTIC TROUBLE CODE) U0101:00 SET IN OTHER MODULES

- Ignition ON.
- Using a diagnostic scan tool, carry out the self-test for all modules.
- Retrieve the Continuous Memory Diagnostic Trouble Codes (CMDTCs) from all modules.

Is DTC U0101:00 present in 1 or more modules in addition to the ABS module?

Yes	CHECK OASIS for any applicable Technical Service Bulletins (TSBs). If a TSB exists for this concern, DISCONTINUE this test and FOLLOW the TSB instructions. If no Technical Service Bulletins (TSBs) address this concern, INSTALL a new PCM, the TCM is part of the PCM. REFER to: Powertrain Control Module (PCM) (303-14A Electronic Engine Controls - 2.0L Duratec-HE (125kW/170PS) - MI4, Removal and Installation).
No	CHECK OASIS for any applicable Technical Service Bulletins (TSBs). If a TSB exists for this concern, DISCONTINUE this test and FOLLOW the TSB instructions. If no Technical Service Bulletins (TSBs) address this concern, INSTALL a new ABS module and HCU. REFER to: Hydraulic Control Unit (HCU) (206-09 Anti-Lock Brake System (ABS) and Stability Control, Removal and Installation).

U0126:00

Refer to Wiring Diagrams Cell 42 for schematic and connector information.

Normal Operation and Fault Conditions

With the ignition ON, the SASM sends messages to the ABS module over the High Speed Controller Area Network (HS-CAN). If the ABS module does not receive these messages within the specified time frame, the ABS module sets Diagnostic Trouble Codes (DTCs). This can be due to a steering angle sensor failure, a circuit failure on the High Speed Controller Area Network (HS-CAN) or an excessive load on the network. For information on the messages sent to the ABS module by the SASM ,
REFER to: Anti-Lock Brake System (ABS) and Stability Control - System Operation and Component Description (206-09 Anti-Lock Brake System (ABS) and Stability Control, Description and Operation).

DTC Fault Trigger Conditions

DTC	Description	Fault Trigger Conditions
U0126:00	Lost Communication With Steering Angle Sensor Module: No Sub Type Information	This DTC sets in continuous memory and on-demand if either the steering angle count or the steering angle status messages is missing.

Possible Causes

- Wiring, terminals or connectors
- SASM
- ABS module

PINPOINT TEST K : U0126:00

K1 CHECK THE COMMUNICATION NETWORK

- Ignition ON.
- Using a diagnostic scan tool, carry out the Network Test.

Does the SASM pass the Network Test?

Yes	GO to K2
No	To DIAGNOSE the SASM does not communicate with the diagnostic scan tool, REFER to: Communications Network (418-00 Module Communications Network, Diagnosis and Testing).

K2 CHECK THE ABS (ANTI-LOCK BRAKE SYSTEM) CONTINUOUS MEMORY DIAGNOSTIC TROUBLE CODES (CMDTCS)

- Ignition ON.
- Using a diagnostic scan tool, carry out the ABS module self-test.
- Clear the ABS module Diagnostic Trouble Codes (DTCs).
- Ignition OFF.
- Ignition ON.
- Using a diagnostic scan tool, carry out the ABS module self-test.
- Retrieve and record the ABS module Diagnostic Trouble Codes (DTCs).

Is DTC U0126:00 retrieved again?

Yes	GO to K3
No	The system is operating correctly at this time. The DTC may have been set due to high network traffic or an intermittent fault condition.

K3 REVIEW THE RECORDED DIAGNOSTIC TROUBLE CODES (DTCS) FROM THE ABS (ANTI-LOCK BRAKE SYSTEM) MODULE SELF-TEST

- Review the recorded Diagnostic Trouble Codes (DTCs) from the ABS module self-test.

Is DTC U3003:16 or U3003:17 present in the ABS module?

Yes	For DTC U3003:16, GO to Pinpoint Test A For DTC U3003:17, GO to Pinpoint Test F
No	GO to K4

K4 RETRIEVE THE RECORDED DIAGNOSTIC TROUBLE CODES (DTCS) FROM THE SASM (STEERING ANGLE SENSOR MODULE) SELF-TEST

- Using a diagnostic scan tool, carry out the SASM self-test.

Is DTC U3003:62 present in the SASM ?

Yes	GO to Pinpoint Test L
No	GO to K5

K5 CHECK FOR DTC (DIAGNOSTIC TROUBLE CODE) U0126:00 SET IN OTHER MODULES

- Ignition ON.
- Using a diagnostic scan tool, carry out the self-test for all modules.
- Retrieve the Continuous Memory Diagnostic Trouble Codes (CMDTCs) from all modules.

Is DTC U0126:00 set in 1 or more modules in addition to the ABS module?

Yes	CHECK OASIS for any applicable Technical Service Bulletins (TSBs). If a TSB exists for this concern, DISCONTINUE this test and FOLLOW the TSB instructions. If no Technical Service Bulletins (TSBs) address this concern, INSTALL a new SASM . REFER to: Steering Angle Sensor Module (SASM) (211-05 Steering Column Switches, Removal and Installation).
No	CHECK OASIS for any applicable Technical Service Bulletins (TSBs). If a TSB exists for this concern, DISCONTINUE this test and FOLLOW the TSB instructions. If no Technical Service Bulletins (TSBs) address this concern, INSTALL a new ABS module and HCU . REFER to: Hydraulic Control Unit (HCU) (206-09 Anti-Lock Brake System (ABS) and Stability Control, Removal and Installation).

U3003:62 - SASM

Refer to Wiring Diagrams Cell 31 for schematic and connector information.

Normal Operation and Fault Conditions

The SASM receives battery voltage from the BCM and has a single ground circuit located in the instrument panel wiring harness. Excessive resistance or an open in one or both of these circuits, a discharged battery, an inoperative charging system or an overcharging condition in the charging system results in the SASM setting a DTC .

This DTC may also set in the SASM due to battery charging or vehicle jump starting events.

DTC Fault Trigger Conditions

DTC	Description	Fault Trigger Conditions
U3003:62	Battery Voltage: Signal Compare Failure	This DTC sets when the voltage received by the SASM falls below 6 volts or raises above 21 volts.

Possible Causes

- Fuse
- Wiring, terminals or connectors
- Charging system concern
- SASM
- ABS module

Visual Inspection and Diagnostic Pre-checks

- Make sure the vehicle battery terminals and cables are free of any corrosion and other contaminants.
- Make sure the vehicle battery terminals are tightened to their correct torque specifications.
- Make sure BCM fuse 72 (7.5A) is OK.

PINPOINT TEST L : U3003:62 - SASM (STEERING ANGLE SENSOR MODULE)

L1 CHECK FOR CHARGING SYSTEM DIAGNOSTIC TROUBLE CODES (DTCS) IN THE PCM (POWERTRAIN CONTROL MODULE)

- Ignition ON.
- Using a diagnostic scan tool, retrieve ALL Continuous Memory Diagnostic Trouble Codes (CMDTCs).

Is DTC B1317, B1318, B1676, U3003:16 or U3003:17 present in one or more modules AND are any charging system Diagnostic Trouble Codes (DTCs) present in the PCM ?

Yes	DIAGNOSE the charging system. REFER to: Charging System - 2.0L Duratec-HE (125kW/170PS) - MI4 (414-00 Charging System - General Information, Diagnosis and Testing). REFER to: Charging System - 2.0L EcoBoost (184kW/250PS) - MI4 (414-00 Charging System - General Information, Diagnosis and Testing).
No	GO to L2

L2 CHECK THE BATTERY CONDITION AND STATE OF CHARGE

- Ignition OFF.
- Carry out the Battery Condition Test diagnostic routine.
  REFER to: Battery (414-01 Battery, Mounting and Cables, Diagnosis and Testing).

Did the battery pass the condition test?

Yes	If the battery passed the condition test but required a recharge, DIAGNOSE the charging system.

	REFER to: Charging System - 2.0L Duratec-HE (125kW/170PS) - MI4 (414-00 Charging System - General Information, Diagnosis and Testing). REFER to: Charging System - 2.0L EcoBoost (184kW/250PS) - MI4 (414-00 Charging System - General Information, Diagnosis and Testing). If the battery passed the condition test and did not require a recharge, GO to L3
No	INSTALL a new battery. REFER to: Battery (414-01 Battery, Mounting and Cables, Removal and Installation).

L3 CHECK THE CHARGING SYSTEM VOLTAGE

NOTE: *Do not allow the engine speed to increase above 2,000 Revolutions Per Minute (RPM) while performing this step or the generator may self-excite and result in default charging system output voltage. If engine speed goes above 2,000 Revolutions Per Minute (RPM), turn the vehicle off and restart the engine before performing this step.*

- Start the engine.
- Measure the voltage of the battery with and without a load on the charging system as follows:
  - Turn off all accessories and run the engine at 1,500 Revolutions Per Minute (RPM) for a minimum of 2 minutes while measuring the battery voltage.
  - Turn on the headlights and the HVAC fan on high and run the engine at 1,500 Revolutions Per Minute (RPM) for a minimum of 2 minutes while measuring the battery voltage.

Is the battery voltage between 13 and 15.2 volts?

Yes	GO to L4
No	DIAGNOSE the charging system. REFER to: Charging System - 2.0L Duratec-HE (125kW/170PS) - MI4 (414-00 Charging System - General Information, Diagnosis and Testing). REFER to: Charging System - 2.0L EcoBoost (184kW/250PS) - MI4 (414-00 Charging System - General Information, Diagnosis and Testing).

L4 CHECK THE SASM (STEERING ANGLE SENSOR MODULE) BATTERY VOLTAGE STATUS (VBATT_STATUS) PARAMETER IDENTIFICATION (PID)

- Ignition OFF.
- Ignition ON.
- Measure and record the voltage at the battery.
- Using a diagnostic scan tool, monitor the SASM VBATT_Status Parameter Identification (PID).

Is the Parameter Identification (PID) display within 0.2 volt of the recorded battery voltage?

Yes	GO to L7
No	GO to L5

L5 CHECK THE VOLTAGE SUPPLY TO THE SASM (STEERING ANGLE SENSOR MODULE)

- Ignition OFF.
- Disconnect SASM C226A.

Measure:

Positive Lead	Measurement / Action	Negative Lead
C226A-1	V	—

Is the voltage within 0.2 volt of the recorded battery voltage?

Yes	GO to L6
No	VERIFY BCM fuse 72 (7.2A) is OK. If OK, REPAIR the circuit. If not OK, REFER to the Wiring Diagrams manual to identify the cause of the circuit short.

L6 CHECK THE SASM (STEERING ANGLE SENSOR MODULE) GROUND CIRCUIT FOR AN OPEN

- Measure:

Positive Lead	Measurement / Action	Negative Lead
C226A-14	Ω	—

Is the resistance less than 3 ohms?

Yes	GO to L7
No	REPAIR the circuit.

L7 CHECK FOR CORRECT SASM (STEERING ANGLE SENSOR MODULE) OPERATION

- Ignition OFF.
- Disconnect and inspect all SASM electrical connectors.
- Repair:
  - corrosion (install new connector or terminal - clean module pins)
  - damaged or bent pins - install new terminals/pins
  - pushed-out pins - install new pins as necessary
- Connect the SASM electrical connectors. Make sure they seat and latch correctly.
- Operate the system and determine if the concern is still present.

Is the concern still present?

Yes	CHECK OASIS for any applicable Technical Service Bulletins (TSBs). If a TSB exists for this concern, DISCONTINUE this test and FOLLOW the TSB instructions. If no Technical Service Bulletins (TSBs) address this concern, INSTALL a new SASM . REFER to: Steering Angle Sensor Module (SASM) (211-05 Steering Column Switches, Removal and Installation).
No	The system is operating correctly at this time. The concern may have been caused by a loose or corroded connector. ADDRESS the root cause of any connector or pin issues.

Steering Angle Sensor Module (SASM) Signal Failure DTCs

The SASM monitors steering wheel rotation speed, angle and direction of rotation and sends the information to the ABS module over the High Speed Controller Area Network (HS-CAN). A failure of the High Speed Controller Area Network (HS-CAN), SASM or the internal sensors causes the ABS module to set one or more Diagnostic Trouble Codes (DTCs).

DTC Fault Trigger Conditions

DTC	Description	Fault Trigger Conditions
C0051:28	Steering Wheel Position Sensor: Signal Bias Level Out of Range/Zero Adjustment Failure	This DTC sets in continuous memory and on-demand if the absolute value of the measured steering wheel angle sensor is greater than 720 degrees or if the calculated steering angle offset is greater than 15 degrees. This is most likely caused by loose or worn steering or suspension components that result in a vehicle tracking or pull/drift issue. Also, an incorrectly installed SASM or clockspring may cause the steering angle to be offset.
C0051:54	Steering Wheel Position Sensor: Missing Calibration	This DTC sets in continuous memory and on-demand if the steering angle status message "Not Initialized" is received by the ABS module for longer than 800 ms with vehicle speed above 15 km/h (9 mph). This is most likely caused by a new SASM that has not been calibrated, an undervoltage at the module or an internal failure of the module.
U0428:00	Invalid Data Received from Steering Angle Sensor Module: No Sub Type Information	This DTC sets in continuous memory and on-demand if the steering angle status message sent by the SASM is “defective”.
U0428:2F	Invalid Data Received from Steering Angle Sensor Module: Signal Erratic	The steering angle is measured in increments of 1 degree. This DTC sets in continuous memory and on-demand if the steering angle sensor signal increases or decreases when it should remain stable.
U0428:61	Invalid Data Received from Steering Angle Sensor Module: Signal Calculation Failure	This DTC sets in continuous memory and on-demand if the calculated steering angle and the actual steering angle differ by more than 15 degrees. This is most likely caused by an incorrectly installed or damaged SASM but can also be caused by loose or worn steering or suspension components that result in excessive play in the steering system.
U0428:62	Invalid Data Received from Steering Angle Sensor Module: Signal Compare Failure	These Diagnostic Trouble Codes (DTCs) set in continuous memory and on-demand if the steering angle sensor signal does not match other stability sensor signals (yaw rate, longitudinal acceleration, lateral acceleration, etc.).
U0428:64	Invalid Data Received from Steering Angle Sensor Module: Signal Plausibility Failure	
U0428:68	Invalid Data Received from Steering Angle Sensor Module: Event Information	

PINPOINT TEST M : STEERING ANGLE SENSOR MODULE (SASM) SIGNAL FAILURE DTCS

M1 CHECK FOR ABS (ANTI-LOCK BRAKE SYSTEM) MODULE DIAGNOSTIC TROUBLE CODES (DTCS)

- Ignition ON.
- Using a diagnostic scan tool, carry out the ABS module self-test.
- Retrieve and record all ABS module Diagnostic Trouble Codes (DTCs).

Is DTC C0051:28 or C0051:54 present in the ABS module?

Yes	GO to M2
No	If Diagnostic Trouble Codes (DTCs) U0428:00, 61, 68 or 2F are present, GO to M4 If Diagnostic Trouble Codes (DTCs) U0428:62 or 64 are present, GO to M3 For all other ABS module Diagnostic Trouble Codes (DTCs), GO to the ABS Module DTC Chart.

M2 VERIFY SASM (STEERING ANGLE SENSOR MODULE) CALIBRATION

- Using a diagnostic scan tool, carry out the IVD Initialization procedure. Follow the diagnostic scan tool directions.
- Ignition OFF.
- Ignition ON.
- Test drive the vehicle above 20 km/h (12 mph) and make at least 1 left turn and 1 right turn.
- Using a diagnostic scan tool, carry out the ABS module self-test.

Is DTC C0051:28 or C0051:54 present in the ABS module?

Yes	INSPECT the front suspension, rear suspension, wheels and tires for a pulling condition. REPAIR as necessary. REFER to: Suspension System (204-00 Suspension System - General Information, Diagnosis and Testing). INSPECT the front suspension and the steering system for loose or worn components. REPAIR as necessary. For the front suspension, REFER to: Front Suspension - Overview (204-01 Front Suspension, Description and Operation). For the rear suspension, REFER to: Rear Suspension - Overview (204-02 Rear Suspension, Description and Operation). For the steering system, REFER to: Power Steering - System Operation and Component Description (211-02 Power Steering, Description and Operation).
No	The condition that caused the concern is no longer present. The concern was most likely due to an incomplete calibration or a failed calibration of the SASM . RETURN the vehicle to the customer.

M3 CHECK THE SASM (STEERING ANGLE SENSOR MODULE) PARAMETER IDENTIFICATIONS (PIDS)

- Park the vehicle with the wheels in the straight ahead position.
- Using a diagnostic scan tool, monitor the SASM steering wheel angle (SW_ANGLE) Parameter Identification (PID).
- Starting from the center (straight ahead) position, turn the steering wheel to the right until it stops. Record the SW_ANGLE Parameter Identification (PID) display.
- Starting from the center (straight ahead) position, turn the steering wheel to the left until it stops. Record the SW_ANGLE Parameter Identification (PID) display.

Does the Parameter Identification (PID) display at least 380 degrees after reaching each end of travel point?

Yes	GO to M6
No	CHECK the vehicle history and VERIFY if a new clockspring or SASM has been installed. If a new clockspring has been installed, VERIFY correct clockspring installation. REFER to: Clockspring (501-20B Supplemental Restraint System, Removal and Installation). If a new SASM has been installed, GO to M4 If a new clockspring or SASM have not been installed, INSTALL a new SASM . REFER to: Steering Angle Sensor Module (SASM) (211-05 Steering Column Switches, Removal and Installation).

M4 INSPECT THE SASM (STEERING ANGLE SENSOR MODULE) INSTALLATION

- Ignition OFF.
- Remove the clockspring.
  REFER to: Clockspring (501-20B Supplemental Restraint System, Removal and Installation).
- Inspect the SASM and the SASM electrical connector for any obvious signs of damage, corrosion, foreign material or looseness.

Are the SASM and electrical connector OK?

Yes	GO to M5
No	REPAIR or INSTALL new as necessary. REFER to: Steering Angle Sensor Module (SASM) (211-05 Steering Column Switches, Removal and Installation).

M5 VERIFY THE SASM (STEERING ANGLE SENSOR MODULE) ZERO POSITION

- Ignition ON.
- Using a diagnostic scan tool, monitor the SASM steering wheel angle (SW_ANGLE) Parameter Identification (PID).
- Turn the SASM rotor by hand until the SW_ANGLE displays 0 degrees.
- Ignition OFF.
- Install the clockspring.
  REFER to: Clockspring (501-20B Supplemental Restraint System, Removal and Installation).
- Ignition ON.
- Using a diagnostic scan tool, clear all Continuous Memory Diagnostic Trouble Codes (CMDTCs).
- Ignition OFF.
- Ignition ON.
- Using a diagnostic scan tool, carry out the ABS module self-test.

Are Diagnostic Trouble Codes (DTCs) U0428:00, 61, 68, 2F; U0428:62 or 64 present in the ABS module?

Yes	INSTALL a new SASM . REFER to: Steering Angle Sensor Module (SASM) (211-05 Steering Column Switches, Removal and Installation).
No	The condition that caused the concern is no longer present. The concern was most likely due to an incorrectly installed SASM . RETURN the vehicle to the customer. For all other ABS module Diagnostic Trouble Codes (DTCs), GO to the ABS Module DTC Chart.

M6 CHECK THE ABS (ANTI-LOCK BRAKE SYSTEM) MODULE YAW RATE VALUE (YAW_RATE) PARAMETER IDENTIFICATION (PID)

- Monitor the YAW_RATE Parameter Identification (PID).

Is the YAW_RATE Parameter Identification (PID) value between -0.05 and 0.05?

Yes	GO to M7
No	GO to M9

M7 CHECK THE ABS (ANTI-LOCK BRAKE SYSTEM) MODULE LATERAL ACCELERATION (LAT_ACCL) PARAMETER IDENTIFICATION (PID)

- Monitor the LAT_ACCL Parameter Identification (PID).

Is the LAT_ACCL Parameter Identification (PID) value between -0.4 and 0.4?

Yes	GO to M8
No	GO to M9

M8 CHECK THE ABS (ANTI-LOCK BRAKE SYSTEM) MODULE LONGITUDINAL ACCELERATION (LNGACC) PARAMETER IDENTIFICATION (PID)

- NOTE: The vehicle must be on level ground and at a complete standstill. Any vehicle movement results in false values for this test.
- Monitor the LNGACC Parameter Identification (PID).

Is the LNGACC Parameter Identification (PID) value between -0.4 and 0.4?

Yes	GO to M10
No	GO to M9

M9 CHECK THE RCM (RESTRAINTS CONTROL MODULE) INSTALLATION AND MOUNTING SURFACE

- Ignition OFF.
- Depower the SRS .
  REFER to: Supplemental Restraint System (SRS) Depowering and Repowering (501-20B Supplemental Restraint System, General Procedures).
- Inspect the RCM installation and make sure the fasteners are fully seated and tightened correctly.
  REFER to: Restraints Control Module (RCM) (501-20B Supplemental Restraint System, Removal and Installation).
- Inspect the RCM mounting surface for damage, corrosion or dirt.

Is the RCM installed correctly and is the mounting surface clean and free from damage?

Yes	GO to M10
No	REPAIR or INSTALL new as necessary. REFER to: Restraints Control Module (RCM) (501-20B Supplemental Restraint System, Removal and Installation).

M10 CHECK FOR CORRECT SASM (STEERING ANGLE SENSOR MODULE) OPERATION

- Ignition OFF.
- Disconnect and inspect all SASM electrical connectors (if not previously disconnected).
- Repair:

- corrosion (install new connector or terminal - clean module pins)
- damaged or bent pins - install new terminals/pins
- pushed-out pins - install new pins as necessary

- Connect the SASM electrical connectors. Make sure it seats and latches correctly.
- Connect all RCM electrical connectors. Make sure they seat and latch correctly.
- Repower the Supplemental Restraint System (SRS).
  REFER to: Supplemental Restraint System (SRS) Depowering and Repowering (501-20B Supplemental Restraint System, General Procedures).
- Operate the system and determine if the concern is still present.

Is the concern still present?

Yes	CHECK OASIS for any applicable Technical Service Bulletins (TSBs). If a TSB exists for this concern, DISCONTINUE this test and FOLLOW the TSB instructions. If no Technical Service Bulletins (TSBs) address this concern, INSTALL a new SASM . REFER to: Steering Angle Sensor Module (SASM) (211-05 Steering Column Switches, Removal and Installation).
No	The system is operating correctly at this time. The concern may have been caused by a loose or corroded connector. ADDRESS the root cause of any connector or pin issues.

C1A41:64

Refer to Wiring Diagrams Cell 31 for schematic and connector information.

Normal Operation and Fault Conditions

The ABS module receives CPP switch input from the PCM over the High Speed Controller Area Network (HS-CAN). The ABS module compares this information against brake pedal switch and sensor input to determine if the clutch pedal input is valid. An incorrectly installed CPP switch can cause a signal plausibility concern. Also, an implausible signal can be created if a driver is resting one foot on the clutch pedal while using the other foot to press the accelerator.

DTC Fault Trigger Conditions

DTC	Description	Fault Trigger Conditions
C1A41:64	Clutch Pedal Switch "A": Signal Plausibility Failure	This DTC sets in continuous memory if the ABS module receives the brake pedal switch message but does not receive the clutch pedal switch message.

Possible Causes

- CPP switch
- Communication concern
- PCM
- ABS module

Visual Inspection and Diagnostic Pre-checks

- Make sure the CPP switch electrical connector is connected and free of corrosion and other contaminants.
- Make sure the CPP switch is installed correctly.
- Make sure the CPP switch is operating correctly.

PINPOINT TEST N : C1A41:64

N1 CHECK THE PCM (POWERTRAIN CONTROL MODULE) CLUTCH PEDAL BEYOND TOP OF TRAVEL SWITCH POINT (CPP_TOP) PARAMETER IDENTIFICATION (PID)

- Ignition ON.
- Using a diagnostic scan tool, monitor the PCM CPP_TOP Parameter Identification (PID) while pressing and releasing the clutch pedal.

Does the Parameter Identification (PID) display YES with the pedal pressed and NO with the pedal released?

Yes	GO to N2
No	DIAGNOSE the CPP switch. REFER to: Cruise Control (419-03 Cruise Control, Diagnosis and Testing).

N2 CHECK THE ABS (ANTI-LOCK BRAKE SYSTEM) MODULE DIAGNOSTIC TROUBLE CODES (DTCS)

- Using a diagnostic scan tool, carry out the ABS module self-test.
- Retrieve and record all ABS module Diagnostic Trouble Codes (DTCs).

Are any communication (U-code) Diagnostic Trouble Codes (DTCs) present in the ABS module?

Yes	DIAGNOSE all ABS module communication Diagnostic Trouble Codes (DTCs) before diagnosing DTC C1A41:64. GO to the ABS Module DTC Chart.
No	GO to N3

N3 CHECK THE PCM (POWERTRAIN CONTROL MODULE) FOR DIAGNOSTIC TROUBLE CODES (DTCS)

- Using a diagnostic scan tool, carry out the PCM KOEO self-test.
- Retrieve and record all PCM Diagnostic Trouble Codes (DTCs).

Are any Diagnostic Trouble Codes (DTCs) present in the PCM ?

Yes	DIAGNOSE the PCM Diagnostic Trouble Codes (DTCs). REFER to: Electronic Engine Controls (303-14A Electronic Engine Controls - 2.0L Duratec-HE (125kW/170PS) - MI4, Diagnosis and Testing).
No	GO to N4

N4 CHECK FOR CORRECT ABS (ANTI-LOCK BRAKE SYSTEM) MODULE OPERATION

- Ignition OFF.
- Disconnect and inspect ABS module C135.
- Repair:
  - corrosion (install new connector or terminal - clean module pins)
  - damaged or bent pins - install new terminals/pins
  - pushed-out pins - install new pins as necessary
- Connect ABS module C135. Make sure it seats and latches correctly.
- Operate the system and determine if the concern is still present.

Is the concern still present?

Yes	CHECK OASIS for any applicable Technical Service Bulletins (TSBs). If a TSB exists for this concern, DISCONTINUE this test and FOLLOW the TSB instructions. If no Technical Service Bulletins (TSBs)

	address this concern, INSTALL a new ABS module and HCU .
No	The system is operating correctly at this time. The concern may have been caused by a loose or corroded connector. ADDRESS the root cause of any connector or pin issues.

Wheel Speed Sensor Electrical Fault DTCs - Front

Refer to Wiring Diagrams Cell 42 for schematic and connector information.

Normal Operation and Fault Conditions

Active wheel speed sensors generate a square wave signal proportional to wheel speed which is sent to the ABS module. Each wheel speed sensor is connected to the ABS module through 2 wires and a connector at each wheel speed sensor. One wire is for sensor voltage supply from the ABS module and the other wire is for the signal return to the ABS module. When the ignition is set to RUN, the ABS module carries out a self-test by sending a reference voltage through the wheel speed sensors and their circuitry.

Diagnostic Trouble Code (DTC) Fault Trigger Conditions

DTC	Description	Fault Trigger Conditions
C0031:11	Left Front Wheel Speed Sensor: Circuit Short to Ground	These Diagnostic Trouble Codes (DTCs) set in continuous memory and on-demand if there is a short to ground in the sensor signal return circuit or if the sensor has an internal short to ground.
C0034:11	Right Front Wheel Speed Sensor: Circuit Short to Ground	
C0031:15	Left Front Wheel Speed Sensor: Circuit Short to Battery or Open	These Diagnostic Trouble Codes (DTCs) set in continuous memory and on-demand if there is a short to battery voltage or an open in the sensor signal return circuit. A short to battery voltage may be due to the sensor signal return circuit and the sensor voltage supply circuit shorted together. These Diagnostic Trouble Codes (DTCs) also set if the sensor has an internal short to battery voltage or an open circuit.
C0034:15	Right Front Wheel Speed Sensor: Circuit Short to Battery or Open	

Possible Causes

- Wiring, terminals or connectors
- Wheel speed sensor
- ABS module

Visual Inspection and Diagnostic Pre-checks

- Make sure the wheel speed sensor harness is routed correctly and is undamaged.
- Make sure the wheel speed sensor electrical connector is free from any corrosion or other contaminants.

PINPOINT TEST O : WHEEL SPEED SENSOR ELECTRICAL FAULT DTCS - FRONT

O1 CHECK FOR FAULT REPEATABILITY

- Ignition ON.
- Using a diagnostic scan tool, clear all ABS module Diagnostic Trouble Codes (DTCs).
- Ignition OFF.
- Ignition ON.
- Test drive the vehicle above 20 km/h (12 mph).
- Bring the vehicle to a safe stop.
- Using a diagnostic scan tool, carry out the ABS module self-test.

Is Diagnostic Trouble Code (DTC) C0031:11, C0031:15, C0034:11 and/or C0034:15 present?

Yes	If the Rotunda Active Wheel Speed Sensor Tester is available, GO to O2 If the Rotunda Active Wheel Speed Sensor Tester is not available and DTC C0031:15 or C0034:15 is present, GO to O5 If the Rotunda Active Wheel Speed Sensor Tester is not available and DTC C0031:11 or C0034:11 is present, GO to O7
No	The system is operating correctly at this time. INSPECT both front wheel speed sensor electrical connectors and the ABS module electrical connector. REPAIR or CLEAN the connector as necessary. ADDRESS the root cause of any connector or pin issues.

O2 CHECK THE ABS (ANTI-LOCK BRAKE SYSTEM) MODULE OUTPUT USING THE ROTUNDA ACTIVE WHEEL SPEED SENSOR TESTER

- Ignition OFF.
- Disconnect the suspect wheel speed sensor electrical connector.
- Connect the Rotunda Active Wheel Speed Sensor Tester to the wheel speed sensor connectors.
- Ignition ON.
- Select the correct system polarity on the Rotunda Active Wheel Speed Sensor Tester and turn the power switch to the ON position.

Is the tester output LED illuminated?

Yes	GO to O3
No	GO to O5

O3 CHECK THE WHEEL SPEED SENSOR FOR A SHORT TO VOLTAGE WITH THE ROTUNDA ACTIVE WHEEL SPEED SENSOR TESTER

- Observe the current overload LED on the Rotunda Active Wheel Speed Sensor Tester.

Is the current overload LED illuminated?

Yes	REPAIR the suspect wheel speed sensor circuit for a short to voltage.
No	GO to O4

O4 CHECK THE WHEEL SPEED SENSOR OUTPUT WITH THE ROTUNDA ACTIVE WHEEL SPEED SENSOR TESTER

- Raise the suspect wheel until it can spin freely.
  REFER to: Jacking and Lifting - Overview (100-02 Jacking and Lifting, Description and Operation).
- While monitoring the Rotunda Active Wheel Speed Sensor Tester, slowly spin the suspect wheel.

Do the sensor output Light-emitting Diodes (LEDs) illuminate and flash?

Yes	The system is operating correctly at this time. INSPECT all wheel speed sensor electrical connectors and the ABS module electrical connectors. REPAIR or CLEAN the connector as necessary. ADDRESS the root cause of any connector or pin issues.
No	INSTALL a new wheel speed sensor. REFER to: Front Wheel Speed Sensor (206-09 Anti-Lock Brake System (ABS) and Stability Control, Removal and Installation).

O5 CHECK THE WHEEL SPEED SENSOR CIRCUITS FOR A SHORT TO BATTERY VOLTAGE

- Ignition OFF.
- Disconnect ABS module C135.
- Disconnect the suspect wheel speed sensor.
- Ignition ON.
- For the Left Front (LF) wheel speed sensor, measure:

Positive Lead	Measurement / Action	Negative Lead
C135-45	V	—
C135-46	V	—

- For the Right Front (RF) wheel speed sensor, measure:

Positive Lead	Measurement / Action	Negative Lead
C135-33	V	—
C135-34	V	—

Is any voltage present?

Yes	REPAIR the affected circuit(s).
No	GO to O6

O6 CHECK THE WHEEL SPEED SENSOR CIRCUITS FOR AN OPEN

- Ignition OFF.
- For the Left Front (LF) wheel speed sensor, measure:

Positive Lead	Measurement / Action	Negative Lead
C135-45	Ω	C150-1
C135-46	Ω	C150-2

- For the Right Front (RF) wheel speed sensor, measure:

Positive Lead	Measurement / Action	Negative Lead
C135-33	Ω	C160-2
C135-34	Ω	C160-1

Are the resistances less than 3 ohms?

Yes	GO to O7
No	REPAIR the affected circuit(s).

O7 CHECK FOR SHORTED WHEEL SPEED SENSOR CIRCUITS

- Ignition OFF.
- Disconnect ABS module C135 (if not previously disconnected).
- Disconnect the suspect wheel speed sensor (if not previously disconnected).
- For the Left Front (LF) wheel speed sensor, measure:

Positive Lead	Measurement / Action	Negative Lead
C150-1	Ω	C150-2

- For the Right Front (RF) wheel speed sensor, measure:

Positive Lead	Measurement / Action	Negative Lead
C160-1	Ω	C160-2

Is the resistance greater 10,000 ohms?

Yes	If DTC C0031:11 or C0034:11 are present, GO to O8 If DTC C0031:15 or C0034:15 are present, GO to O9
No	REPAIR the affected circuit(s).

O8 CHECK THE WHEEL SPEED SENSOR CIRCUITS FOR A SHORT TO GROUND

- For the Left Front (LF) wheel speed sensor, measure:

Positive Lead	Measurement / Action	Negative Lead
C135-45	Ω	—
C135-46	Ω	—

- For the Right Front (RF) wheel speed sensor, measure:

Positive Lead	Measurement / Action	Negative Lead
C135-33	Ω	—
C135-34	Ω	—

Are the resistances greater than 10,000 ohms?

Yes	GO to O9
No	REPAIR the affected circuit(s).

O9 CHECK THE ABS (ANTI-LOCK BRAKE SYSTEM) MODULE OUTPUT

- Ignition OFF.
- Connect ABS module C135.
- Ignition ON.
- For the Left Front (LF) wheel speed sensor, measure:

Positive Lead	Measurement / Action	Negative Lead
C150-1	▽	C150-2

- For the Right Front (RF) wheel speed sensor, measure:

Positive Lead	Measurement / Action	Negative Lead
C160-1	▽	C160-2

Is the voltage greater 10 volts?

Yes	INSTALL a new wheel speed sensor. REFER to: Front Wheel Speed Sensor (206-09 Anti-Lock Brake System (ABS) and Stability Control, Removal and Installation).
No	GO to O10

O10 CHECK FOR CORRECT ABS (ANTI-LOCK BRAKE SYSTEM) MODULE OPERATION

- Ignition OFF.
- Disconnect and inspect ABS module C135 (if not previously disconnected).
- Repair:
  - corrosion (install new connector or terminal - clean module pins)
  - damaged or bent pins - install new terminals/pins
  - pushed-out pins - install new pins as necessary
- Connect ABS module C135. Make sure it seats and latches correctly.
- Connect the suspect wheel speed sensor.

- Operate the system and determine if the concern is still present.

Is the concern still present?

Yes	CHECK OASIS for any applicable Technical Service Bulletins (TSBs). If a TSB exists for this concern, DISCONTINUE this test and FOLLOW the TSB instructions. If no Technical Service Bulletins (TSBs) address this concern, INSTALL a new ABS module and HCU . REFER to: Hydraulic Control Unit (HCU) (206-09 Anti-Lock Brake System (ABS) and Stability Control, Removal and Installation).
No	The system is operating correctly at this time. The concern may have been caused by a loose or corroded connector. ADDRESS the root cause of any connector or pin issues.

Wheel Speed Sensor Electrical Fault DTCs - Rear

Refer to Wiring Diagrams Cell 42 for schematic and connector information.

Normal Operation and Fault Conditions

Active wheel speed sensors generate a square wave signal proportional to wheel speed which is sent to the ABS module. Each wheel speed sensor is connected to the ABS module through 2 wires and a connector at each wheel speed sensor. One wire is for sensor voltage supply from the ABS module and the other wire is for the signal return to the ABS module. When the ignition is set to RUN, the ABS module carries out a self-test by sending a reference voltage through the wheel speed sensors and their circuitry.

Diagnostic Trouble Code (DTC) Fault Trigger Conditions

DTC	Description	Fault Trigger Conditions
C0037:11	Left Rear Wheel Speed Sensor: Circuit Short to Ground	These Diagnostic Trouble Codes (DTCs) set in continuous memory and on-demand if there is a short to ground in the sensor signal return circuit or if the sensor has an internal short to ground.
C003A:11	Right Rear Wheel Speed Sensor: Circuit Short to Ground	
C0037:15	Left Rear Wheel Speed Sensor: Circuit Short to Battery or Open	These Diagnostic Trouble Codes (DTCs) set in continuous memory and on-demand if there is a short to battery voltage or an open in the sensor signal return circuit. A short to battery voltage may be due to the sensor signal return circuit and the sensor voltage supply circuit shorted together. These Diagnostic Trouble Codes (DTCs) also set if the sensor has an internal short to battery voltage or an open circuit.
C003A:15	Right Rear Wheel Speed Sensor: Circuit Short to Battery or Open	

Possible Causes

- Wiring, terminals or connectors
- Wheel speed sensor
- ABS module

Visual Inspection and Diagnostic Pre-checks

- Make sure the wheel speed sensor harness is routed correctly and is undamaged.
- Make sure the wheel speed sensor electrical connector is free from any corrosion or other contaminants.

PINPOINT TEST P : WHEEL SPEED SENSOR ELECTRICAL FAULT DTCS - REAR

P1 CHECK FOR FAULT REPEATABILITY

- Ignition ON.
- Using a diagnostic scan tool, clear all ABS module Diagnostic Trouble Codes (DTCs).
- Ignition OFF.
- Ignition ON.
- Test drive the vehicle above 20 km/h (12 mph).
- Bring the vehicle to a safe stop.
- Using a diagnostic scan tool, carry out the ABS module self-test.

Is DTC C0031:11, C0031:15, C0034:11 and/or C0034:15 present?

Yes	If the Rotunda Active Wheel Speed Sensor Tester is available, GO to P2 If the Rotunda Active Wheel Speed Sensor Tester is not available and DTC C0037:15 or C003A:15 is present, GO to P5 If the Rotunda Active Wheel Speed Sensor Tester is not available and DTC C0037:11 or C003A:11 is present, GO to P7
No	The system is operating correctly at this time. INSPECT both front wheel speed sensor electrical connectors and the ABS module electrical connector. REPAIR or CLEAN the connector as necessary. ADDRESS the root cause of any connector or pin issues.

P2 CHECK THE ABS (ANTI-LOCK BRAKE SYSTEM) MODULE OUTPUT USING THE ROTUNDA ACTIVE WHEEL SPEED SENSOR TESTER

- Ignition OFF.
- Disconnect the suspect wheel speed sensor electrical connector.
- Connect the Rotunda Active Wheel Speed Sensor Tester to the wheel speed sensor connectors.
- Ignition ON.
- Select the correct system polarity on the Rotunda Active Wheel Speed Sensor Tester and turn the power switch to the ON position.

Is the tester output LED illuminated?

Yes	GO to P3
No	GO to P5

P3 CHECK THE WHEEL SPEED SENSOR FOR A SHORT TO VOLTAGE WITH THE ROTUNDA ACTIVE WHEEL SPEED SENSOR TESTER

- Observe the current overload LED on the Rotunda Active Wheel Speed Sensor Tester.

Is the current overload LED illuminated?

Yes	REPAIR the suspect wheel speed sensor circuit for a short to voltage.
No	GO to P4

P4 CHECK THE WHEEL SPEED SENSOR OUTPUT WITH THE ROTUNDA ACTIVE WHEEL SPEED SENSOR TESTER

- Raise the suspect wheel until it can spin freely.
  REFER to: Jacking and Lifting - Overview (100-02 Jacking and Lifting, Description and Operation).
- While monitoring the Rotunda Active Wheel Speed Sensor Tester, slowly spin the suspect wheel.

Do the sensor output Light-emitting Diodes (LEDs) illuminate and flash?

Yes	The system is operating correctly at this time. INSPECT all wheel speed sensor electrical connectors and the ABS module electrical connectors. REPAIR or CLEAN the connector as necessary. ADDRESS the root cause of any connector or pin issues.
No	INSTALL a new wheel speed sensor. REFER to: Rear Wheel Speed Sensor (206-09 Anti-Lock Brake System (ABS) and Stability Control, Removal and Installation).

P5 CHECK THE WHEEL SPEED SENSOR CIRCUITS FOR A SHORT TO BATTERY VOLTAGE

- Ignition OFF.
- Disconnect ABS module C135.
- Disconnect the suspect wheel speed sensor.
- Ignition ON.
- For the Right Rear (RR) wheel speed sensor, measure:

Positive Lead	Measurement / Action	Negative Lead
C135-42	V	—
C135-43	V	—

Is any voltage present?

Yes	REPAIR the affected circuit(s).
No	GO to P6

P6 CHECK THE WHEEL SPEED CIRCUITS FOR AN OPEN

- Ignition OFF.
- For the Left Rear (LR) wheel speed sensor, measure:

Positive Lead	Measurement / Action	Negative Lead
C135-36	Ω	C440-1
C135-37	Ω	C440-2

- For the Right Rear (RR) wheel speed sensor, measure:

Positive Lead	Measurement / Action	Negative Lead
C135-42	Ω	C426-2
C135-43	Ω	C426-1

Are the resistances less than 3 ohms?

Yes	GO to P7
No	REPAIR the affected circuit(s).

P7 CHECK FOR SHORTED WHEEL SPEED SENSOR CIRCUITS

- Ignition OFF.
- Disconnect ABS module C135 (if not previously disconnected).
- Disconnect the suspect wheel speed sensor (if not previously disconnected).
- For the Left Rear (LR) wheel speed sensor, measure:

Positive Lead	Measurement / Action	Negative Lead
C440-1	Ω	C440-2

- For the Right Rear (RR) wheel speed sensor, measure:

Positive Lead	Measurement / Action	Negative Lead
C426-1	Ω	C426-2

Is the resistance greater 10,000 ohms?

Yes	If DTC C0037:11 or C003A:11 are present, GO to P8 If DTC C0037:15 or C003A:15 are present, GO to P9
No	REPAIR the affected circuit(s).

P8 CHECK THE WHEEL SPEED SENSOR CIRCUITS FOR A SHORT TO GROUND

- For the Left Rear (LR) wheel speed sensor, measure:

Positive Lead	Measurement / Action	Negative Lead
C135-36	Ω	—
C135-37	Ω	—

- For the Right Rear (RR) wheel speed sensor, measure:

Positive Lead	Measurement / Action	Negative Lead
C135-42	Ω	—
C135-43	Ω	—

Are the resistances greater than 10,000 ohms?

Yes	GO to P9
No	REPAIR the affected circuit(s).

P9 CHECK THE ABS (ANTI-LOCK BRAKE SYSTEM) MODULE OUTPUT

- Ignition OFF.
- Connect ABS module C135.
- Ignition ON.
- For the Left Rear (LR) wheel speed sensor, measure:

Positive Lead	Measurement / Action	Negative Lead
C440-1	V	C440-2

- For the Right Rear (RR) wheel speed sensor, measure:

Positive Lead	Measurement / Action	Negative Lead
C426-1	V	C426-2

Is the voltage greater 10 volts?

Yes	INSTALL a new wheel speed sensor. REFER to: Rear Wheel Speed Sensor (206-09 Anti-Lock Brake System (ABS) and Stability Control, Removal and Installation).
No	GO to P10

P10 CHECK FOR CORRECT ABS (ANTI-LOCK BRAKE SYSTEM) MODULE OPERATION

- Ignition OFF.
- Disconnect and inspect ABS module C135 (if not previously disconnected).
- Repair:
  - corrosion (install new connector or terminal - clean module pins)
  - damaged or bent pins - install new terminals/pins
  - pushed-out pins - install new pins as necessary
- Connect ABS module C135. Make sure it seats and latches correctly.
- Connect the suspect wheel speed sensor.

Operate the system and determine if the concern is still present.

Is the concern still present?

Yes	CHECK OASIS for any applicable Technical Service Bulletins (TSBs). If a TSB exists for this concern, DISCONTINUE this test and FOLLOW the TSB instructions. If no Technical Service Bulletins (TSBs) address this concern, INSTALL a new ABS module and HCU . REFER to: Hydraulic Control Unit (HCU) (206-09 Anti-Lock Brake System (ABS) and Stability Control, Removal and Installation).
No	The system is operating correctly at this time. The concern may have been caused by a loose or corroded connector. ADDRESS the root cause of any connector or pin issues.

U3003:62 - ABS Module

Refer to Wiring Diagrams Cell 42 for schematic and connector information.

Normal Operation and Fault Conditions

The ABS module, hydraulic pump and solenoid valves require an operating voltage that is between 10 and 17 volts. The ABS module receives this voltage from the BJB . The BCM broadcasts a vehicle voltage message on the High Speed Controller Area Network (HS-CAN) for other modules to use as a check for their own voltage inputs. Excessive resistance or an open in the ABS module voltage circuits, a discharged battery, an inoperative charging system or a communication concern results in the ABS module setting a Diagnostic Trouble Code (DTC). This is most likely due to a concern in the High Speed Controller Area Network (HS-CAN) or a concern in the vehicle battery or charging system.

DTC Fault Trigger Conditions

DTC	Description	Fault Trigger Conditions
U3003:62	Battery Voltage: Signal Compare Failure	This DTC sets when the vehicle voltage message sent from the BCM varies by more than 2 volts from the actual voltage measured by the ABS module.

Possible Causes

- Fuse
- Wiring, terminals or connectors
- Communication concern
- Charging system concern
- Vehicle battery
- BCM
- ABS module

PINPOINT TEST Q : U3003:62 - ABS MODULE

Q1 CHECK FOR ABS (ANTI-LOCK BRAKE SYSTEM) MODULE BATTERY VOLTAGE DIAGNOSTIC TROUBLE CODES (DTCS)
• Ignition ON. • Using a diagnostic scan tool, carry out the ABS module self-test.

Is DTC U3003:16 or U3003:17 present?

Yes	For DTC U3003:16 GO to Pinpoint Test A For DTC U3003:17 GO to Pinpoint Test F
No	GO to Q2

Q2 CHECK FOR ABS (ANTI-LOCK BRAKE SYSTEM) MODULE COMMUNICATION DIAGNOSTIC TROUBLE CODES (DTCS)

- Review the results of the previous ABS module self-test.

Is DTC U0140:00 present in the ABS module?

Yes	GO to Pinpoint Test D
No	GO to Q3

Q3 CHECK FOR BCM (BODY CONTROL MODULE) BATTERY VOLTAGE DIAGNOSTIC TROUBLE CODES (DTCS)

- Using a diagnostic scan tool, carry out the BCM self-test.

Is DTC U3003:16 and/or U3003:17 present in the BCM ?

Yes	DIAGNOSE the BCM Diagnostic Trouble Codes (DTCs). REFER to: Body Control Module (BCM) (419-10 Multifunction Electronic Modules, Diagnosis and Testing).
No	GO to Q4

Q4 CHECK THE ABS (ANTI-LOCK BRAKE SYSTEM) MODULE VOLTAGE SUPPLY (VPWR_ABS) PARAMETER IDENTIFICATION (PID) AND THE BCM (BODY CONTROL MODULE) BATTERY VOLTAGE (V_BATT) PARAMETER IDENTIFICATION (PID)

- Measure and record the voltage at the battery.
- Using a diagnostic scan tool, observe the ABS module VPWR_ABS and the BCM V_BATT Parameter Identifications (PIDs).

Do both Parameter Identifications (PIDs) display within 0.2 volt of the recorded battery voltage?

Yes	The condition that caused the DTC to set is not present at this time. The DTC may have been set due to excessive resistance at the battery terminals or in the High Speed Controller Area Network (HS-CAN). INSPECT the battery terminals for dirt, corrosion and other foreign material that could cause excessive resistance. VERIFY the integrity of the module connectors and wiring. REPAIR as necessary.
No	If the ABS module VPWR_ABS Parameter Identification (PID) does not display within 0.2 volt of battery voltage, GO to Pinpoint Test A If the BCM V_BATT Parameter Identification (PID) does not display within 0.2 volt of battery voltage, DIAGNOSE the BCM . REFER to: Body Control Module (BCM) (419-10 Multifunction Electronic Modules, Removal and Installation).

U0300:00

Refer to Wiring Diagrams Cell 42 for schematic and connector information.

Normal Operation and Fault Conditions

The ABS module and the SASM require correct vehicle configuration information to operate correctly. This information is programmed into the module when a new module is installed. The BCM is also programmed with the vehicle configuration information and shares this information with other modules over the High Speed Controller Area Network (HS-CAN). Incomplete or improper flash programming procedures, a loss of communication between the BCM and ABS module or SASM , swapping modules between vehicles or an internal failure of one or more modules causes a mismatch of vehicle configuration information between the modules.

DTC Fault Trigger Conditions

DTC	Description	Fault Trigger Conditions
U0300:00	Internal Control Module Software Incompatibility: No Sub Type Information	This DTC sets when the vehicle configuration information transmitted by the BCM does not match what is stored in the ABS module or the SASM .

PINPOINT TEST R : U0300:00

R1 CHECK THE ABS (ANTI-LOCK BRAKE SYSTEM) MODULE OR SASM (STEERING ANGLE SENSOR MODULE) AND BCM (BODY CONTROL MODULE) DIAGNOSTIC TROUBLE CODES (DTCS)

- Ignition ON.
- Using a diagnostic scan tool, carry out the ABS module or SASM self-test.
- Using a diagnostic scan tool, carry out the BCM self-test.

Are there any communication or module internal failure Diagnostic Trouble Codes (DTCs) present in either of the modules?

Yes	For ABS module Diagnostic Trouble Codes (DTCs), GO to the ABS Module DTC Chart. For SASM Diagnostic Trouble Codes (DTCs), GO to the SASM DTC Chart. For BCM Diagnostic Trouble Codes (DTCs), REFER to: Body Control Module (BCM) (419-10 Multifunction Electronic Modules, Diagnosis and Testing).
No	If DTC U0300:00 is present in the ABS module, GO to R2 If DTC U0300:00 is present in the SASM , GO to R3

R2 PROGRAM THE ABS (ANTI-LOCK BRAKE SYSTEM) MODULE

- Using a diagnostic scan tool, program the ABS module using as-built data.
- Ignition OFF.
- Ignition ON.
- Using a diagnostic scan tool, carry out the ABS module self-test.

Is DTC U0300:00 present in the ABS module?

Yes	GO to R4
No	The concern was caused by an incomplete or improperly programmed ABS module, the repair is complete.

R3 PROGRAM THE SASM (STEERING ANGLE SENSOR MODULE)

- Using a diagnostic scan tool, program the SASM using as-built data.
- Ignition OFF.
- Ignition ON.
- Using a diagnostic scan tool, carry out the SASM self-test.

Is DTC U0300:00 present in the SASM ?

Yes	GO to R4
No	The concern was caused by an incomplete or improperly programmed SASM , the repair is complete.

R4 PROGRAM THE BCM (BODY CONTROL MODULE)

- Using a diagnostic scan tool, program the BCM using as-built data.
- Ignition OFF.
- Ignition ON.
- Using a diagnostic scan tool, carry out the ABS module or SASM self-test.

Is DTC U0300:00 present in the ABS module or SASM ?

Yes	If DTC U0300:00 is present in the ABS module, GO to R5 If DTC U0300:00 is present in the SASM , GO to R6
No	The concern was caused by a incomplete or improperly programmed BCM , the repair is complete.

R5 CHECK FOR CORRECT ABS (ANTI-LOCK BRAKE SYSTEM) MODULE OPERATION

- Ignition OFF.
- Disconnect and inspect ABS module C135.
- Repair:
  - corrosion (install new connector or terminal - clean module pins)
  - damaged or bent pins - install new terminals/pins
  - pushed-out pins - install new pins as necessary
- Connect ABS module C135. Make sure it seats and latches correctly.
- Operate the system and determine if the concern is still present.

Is the concern still present?

Yes	CHECK OASIS for any applicable Technical Service Bulletins (TSBs). If a TSB exists for this concern, DISCONTINUE this test and FOLLOW the TSB instructions. If no Technical Service Bulletins (TSBs) address this concern, INSTALL a new ABS module and HCU . REFER to: Hydraulic Control Unit (HCU) (206-09 Anti-Lock Brake System (ABS) and Stability Control, Removal and Installation).
No	The system is operating correctly at this time. The concern may have been caused by a loose or corroded connector. ADDRESS the root cause of any connector or pin issues.

R6 CHECK FOR CORRECT SASM (STEERING ANGLE SENSOR MODULE) OPERATION

- Ignition OFF.
- Disconnect and inspect the SASM electrical connectors.
- Repair:

- corrosion (install new connector or terminal - clean module pins)
- damaged or bent pins - install new terminals/pins
- pushed-out pins - install new pins as necessary

- Connect the SASM electrical connectors. Make sure they seat and latch correctly.
- Operate the system and determine if the concern is still present.

Is the concern still present?

Yes	CHECK OASIS for any applicable Technical Service Bulletins (TSBs). If a TSB exists for this concern, DISCONTINUE this test and FOLLOW the TSB instructions. If no Technical Service Bulletins (TSBs) address this concern, INSTALL a new SASM . REFER to: Steering Angle Sensor Module (SASM) (211-05 Steering Column Switches, Removal and Installation).
No	The system is operating correctly at this time. The concern may have been caused by a loose or corroded connector. ADDRESS the root cause of any connector or pin issues.

The Traction Control System Cannot Be Disabled — Vehicles Equipped With a 2.0L Gasoline Turbocharged Direct Injection (GTDI) Engine

Refer to Wiring Diagrams Cell 60 for schematic and connector information.

Normal Operation and Fault Conditions

When the driver deactivates traction control or Electronic Stability Control (ESC) using the Electronic Stability Control (ESC) OFF switch, the ABS module continues to monitor for vehicle instability and excessive wheel spin but no longer takes any action when either condition is detected.

The Electronic Stability Control (ESC) OFF switch uses 2 circuits, one circuit is hardwired to the ABS module and the other circuit is ground. When the switch is pressed, the ABS module detects the ground signal and sends a message to the BCM over the High Speed Controller Area Network (HS-CAN) to illuminate the stability/traction control disabled indicator (sliding car OFF icon). The BCM , acting as a gateway, relays this message to the IPC over the Medium Speed Controller Area Network (MS-CAN). The IPC responds by illuminating the stability/traction control disabled indicator (sliding car OFF icon).

A short to ground in the ABS module hardwired circuit, an open in one or both of the circuits, an inoperative switch or an internal failure in the ABS module causes the traction control disable function to become inoperative.

If equipped, MyKey® allows users to configure traction control to be either always on or selectable. If a MyKey® restricted key is in use with the MyKey® traction control feature configured to "always on", traction control cannot be disabled. An admin key must be used to enable and disable traction control.

NOTE: *For vehicles equipped with Intelligent Access (IA), this test requires the use of at least 2 Intelligent Access (IA) keys programmed to the vehicle, one admin Intelligent Access (IA) key and one restricted Intelligent Access (IA) key.*

NOTE: *For vehicles not equipped with Intelligent Access (IA), this test requires the use of at least 2 Integrated Keyhead Transmitters (IKTs) programmed to the vehicle, one admin Integrated Keyhead Transmitter (IKT) and one restricted Integrated Keyhead Transmitter (IKT).*

PINPOINT TEST S : THE TRACTION CONTROL SYSTEM CANNOT BE DISABLED — VEHICLES EQUIPPED WITH A 2.0L GASOLINE TURBOCHARGED DIRECT INJECTION (GTDI) ENGINE

S1 VERIFY THAT THE KEY IN USE IS NOT RESTRICTED

- For vehicles equipped with Intelligent Access (IA),
  - place 1 Intelligent Access (IA) key inside the vehicle and all other Intelligent Access (IA) keys at least 1 meter (3 feet) away from the vehicle.
  - press the start/stop button without pressing the brake pedal.

For vehicles without Intelligent Access (IA), turn the ignition to the ON position.
- Monitor the message center.

Does the message center display MYKEY ACTIVE DRIVE SAFELY?

Yes	The current Intelligent Access (IA) key or Integrated Keyhead Transmitter (IKT) is a restricted key and is functioning correctly. REPEAT the test using different Intelligent Access (IA) keys or Integrated Keyhead Transmitters (IKTs) until the message center **does not** display MYKEY ACTIVE DRIVE SAFELY. GO to S2
No	GO to S2

S2 VERIFY THE MYKEY® TRACTION CONTROL SETTING

- Using the message center, verify the MyKey® traction control setting configuration. Refer to the Owner's Literature for information on configuring the MyKey® functions.

Is the MyKey® traction control setting configured to "always on"?

Yes	GO to S3
No	GO to S4

S3 VERIFY TRACTION CONTROL FUNCTION CAN BE DISABLED USING THE ADMIN INTELLIGENT ACCESS (IA) KEY OR INTEGRATED KEYHEAD TRANSMITTER (IKT)

- With the admin Intelligent Access (IA) key or Integrated Keyhead Transmitter (IKT) in the vehicle or ignition, press the Electronic Stability Control (ESC) OFF switch once.

Does the sliding car OFF icon illuminate and does the message center display TRACTION CONTROL OFF?

Yes	The system is operating correctly at this time. The concern may have been caused by the use of a restricted Intelligent Access (IA) key or Integrated Keyhead Transmitter (IKT) with the MyKey® traction control setting configured to "always on". INFORM the customer that traction control can only be disabled using an admin Intelligent Access (IA) key or Integrated Keyhead Transmitter (IKT) when the MyKey® traction control setting is configured to "always on".
No	GO to S4

S4 CHECK THE ABS (ANTI-LOCK BRAKE SYSTEM) MODULE TRACTION CONTROL SWITCH STATUS (TC_SW_STAT) PARAMETER IDENTIFICATION (PID)

- Using a diagnostic scan tool, view the ABS module TC_SW_STAT Parameter Identification (PID).
- Press and release the Electronic Stability Control (ESC) OFF switch while monitoring the ABS module TC_SW_STAT Parameter Identification (PID).

Does the Parameter Identification (PID) display ON when the switch is pressed and OFF when the switch is released?

Yes	GO to S5
No	GO to S6

S5 CHECK THE ABS (ANTI-LOCK BRAKE SYSTEM) MODULE TRACTION CONTROL SYSTEM STATUS (TC_SYS_STAT) PARAMETER IDENTIFICATION (PID)

- Press and release the Electronic Stability Control (ESC) OFF switch while monitoring the ABS module TC_SYS_STAT Parameter Identification (PID).

Does the Parameter Identification (PID) display ON when the switch is pressed and OFF when the switch is released?

Yes	DIAGNOSE the stability/traction control disabled indicator (sliding car OFF icon) and message center. REFER to: Instrumentation, Message Center and Warning Chimes (413-01 Instrumentation, Message Center and Warning Chimes, Diagnosis and Testing).
No	GO to S6

S6 CHECK THE ELECTRONIC STABILITY CONTROL (ESC) OFF SWITCH

- Ignition OFF.
- Disconnect Electronic Stability Control (ESC) OFF switch C280.
- While pressing and releasing the Electronic Stability Control (ESC) OFF switch, measure:

Positive Lead	Measurement / Action	Negative Lead
C280-4 **Component Side**	Ω	C280-12 **Component Side**

Is the resistance less than 3 ohms when the switch is pressed and greater than 10,000 ohms when the switch is released?

Yes	GO to S7
No	INSTALL a new Electronic Stability Control (ESC) OFF switch.

S7 CHECK THE ELECTRONIC STABILITY CONTROL (ESC) OFF SWITCH CIRCUITS FOR AN OPEN

- Disconnect ABS module C135.
- Measure:

Positive Lead	Measurement / Action	Negative Lead
C280-4	Ω	C135-4

- Measure:

Positive Lead	Measurement / Action	Negative Lead
C280-12	Ω	—

Are the resistances less than 3 ohms?

Yes	GO to S8
No	REPAIR the affected circuit.

S8 CHECK THE ABS (ANTI-LOCK BRAKE SYSTEM) MODULE HARDWIRED CIRCUIT FOR A SHORT TO GROUND

- Measure:

Positive Lead	Measurement / Action	Negative Lead
C280-4	Ω	—

Is the resistance greater than 10,000 ohms?

Yes	GO to S9
No	REPAIR the circuit.

S9 CHECK FOR CORRECT ABS (ANTI-LOCK BRAKE SYSTEM) MODULE OPERATION

- Inspect ABS module C135.
- Repair:
  - corrosion (install new connector or terminal - clean module pins)
  - damaged or bent pins - install new terminals/pins
  - pushed-out pins - install new pins as necessary
- Connect ABS module C135. Make sure it seats and latches correctly.
- Connect Electronic Stability Control (ESC) OFF switch C280.
- Operate the system and determine if the concern is still present.

Is the concern still present?

Yes	CHECK OASIS for any applicable Technical Service Bulletins (TSBs). If a TSB exists for this concern, DISCONTINUE this test and FOLLOW the TSB instructions. If no Technical Service Bulletins (TSBs) address this concern, INSTALL a new ABS module and HCU . REFER to: Hydraulic Control Unit (HCU) (206-09 Anti-Lock Brake System (ABS) and Stability Control, Removal and Installation).
No	The system is operating correctly at this time. The concern may have been caused by a loose or corroded connector. ADDRESS the root cause of any connector or pin issues.

Copyright © Ford Motor Company

External Controls

Inspection and Verification

1. Verify the customer concern.
2. Visually inspect for obvious signs of mechanical or electrical damage.
3. If an obvious cause for an observed or reported concern is found, correct the cause (if possible) before proceeding to the next step.
4. If the cause is not visually evident, verify the symptom and refer to the Symptom Chart.

Mechanical	Electrical
Transmission selector lever cable	BJB fuse 38 (15A)
Manual control lever	BPP switch
Selector lever	Brake Shift Interlock Actuator (BSIA)
Selector lever knob	Wiring harness
	Terminals
	Connectors
	SelectShift™ switch
	TCS

DTC Chart(s)

DTC Chart - BCM

DTC	Description	Action
B1319:11	Brake Shift Interlock Output Circuit Short To Ground	GO to Pinpoint Test A
B1319:15	Brake Shift Interlock Output Circuit Short To Battery or Open	GO to Pinpoint Test B

DTC Chart(s)

DTC Chart - TCM

DTC	Description	Action
P0815	Upshift Switch Circuit	GO to Pinpoint Test C
P0816	Downshift Switch Circuit	GO to Pinpoint Test C
P1780	Transmission Control Switch (O/D Cancel) Circuit Out Of Self-Test Range	GO to Pinpoint Test D

Symptom Chart(s)

Symptom Chart: External Controls

Diagnostics in this manual assume a certain skill level and knowledge of Ford-specific diagnostic practices.
REFER to: Diagnostic Methods (100-00 General Information, Description and Operation).

In most circumstances, the PCM sets a DTC to help guide with diagnostics. Refer to the DTC Chart before using the Symptom Chart. The Symptom column lists the vehicle condition. The Possible Sources column lists a detailed vehicle condition. The Action column lists the action to be performed to determine the cause of the condition. Each action lists the components that can cause the condition and the individual components in that system. The components are listed in order of disassembly. Use the list of components and the required action to focus on disassembly inspections for the root cause of the concern.

Symptom	Possible Sources	Action
• Brake shift interlock system does not release/lock correctly	• Circuitry shorted to ground • BCM	• GO to Pinpoint Test A or GO to Pinpoint Test B
	• BPP switch	• CHECK the BPP switch connector. ALIGN or INSTALL a new BPP if necessary.
	• Brake Shift Interlock Actuator (BSIA) solenoid	• INSTALL a new selector lever assembly. REFER to: Selector Lever Assembly (307-05 Automatic Transmission External Controls, Removal and Installation).
• Selector lever will not shift from PARK	• Selector lever cable	• VERIFY selector lever cable adjustment. REFER to: Selector Lever Cable Adjustment (307-05 Automatic Transmission External Controls, General Procedures).
	• Selector lever cable retaining clip or bracket	• INSTALL a new selector lever cable retaining clip or bracket. REFER to: Selector Lever Cable (307-05 Automatic Transmission External Controls, Removal and Installation).
	• Broken selector lever cable	• INSTALL a new selector lever cable. REFER to: Selector Lever Cable (307-05 Automatic Transmission External Controls, Removal and Installation).
• SelectShift™ does not operate correctly	• Circuitry open or shorted to ground • TCM • SelectShift™ switch	• CLEAR the DTC and PERFORM the KOER self-test. If the Diagnostic Trouble Codes (DTCs) return, GO to Pinpoint Test C
• TCS / O/D cancel switch does not operate correctly	• Circuitry open/shorted • BJB fuse • TCS / O/D cancel switch	• GO to Pinpoint Test D
	• IPC	• REFER to: Instrumentation, Message Center and Warning Chimes (413-01 Instrumentation, Message Center and Warning Chimes, Diagnosis and Testing).
• Selector lever linkage is out of correct gear relationship	• Selector lever linkage out of adjustment • Manual control lever not aligned correctly on the	• REFER to: Selector Lever Cable Adjustment (307-05 Automatic Transmission External Controls, General Procedures).

	sensor (flat surfaces do not line up) • Loose selector lever cable bracket	
• Vibration - a high frequency (20-80 Hz) that is felt through the seat or selector lever. Changes with engine speed	• Selector lever cable grounded out or loose	• REFER to: Selector Lever Cable (307-05 Automatic Transmission External Controls, Removal and Installation).

Pinpoint Tests

Diagnostic Overview

Diagnostics in this manual assume a certain skill level and knowledge of Ford-specific diagnostic practices.
REFER to: Diagnostic Methods (100-00 General Information, Description and Operation).

Refer to Wiring Diagrams Cell 37 for schematic and connector information.

Brake Shift Interlock Actuator (BSIA) B1319:11

Normal Operation and Fault Conditions

The BCM provides power to the Brake Shift Interlock Actuator (BSIA) solenoid. When the BCM receives a brake pedal applied input, voltage is applied to the brake shift interlock solenoid. When the solenoid is energized, the plunger is pulled inward allowing the selector lever to move from the park position.

DTC Fault Trigger Conditions

DTC	Description	Fault Trigger Conditions
B1319:11	Brake Shift Interlock Output Circuit Short To Ground	Short to ground in the Brake Shift Interlock Actuator (BSIA) circuitry.

Possible Sources

- Connectors damaged or pushed-out terminals, corrosion, loose wires and missing or damaged seals
- Brake Shift Interlock Actuator (BSIA) solenoid
- BCM

PINPOINT TEST A : BRAKE SHIFT INTERLOCK ACTUATOR (BSIA) B1379:11

A1 RETRIEVE AND RECORD ALL DTCS

- Using the diagnostic scan tool, retrieve all Diagnostic Trouble Codes (DTCs).

Is DTC B1319:11 present?

Yes	GO to A2
No	The issue may not be the Brake Shift Interlock Actuator (BSIA) electrical system. REFER to Symptom Chart.

A2 CHECK THE BRAKE SHIFT INTERLOCK ACTUATOR POWER CIRCUIT FOR A SHORT TO GROUND

- Disconnect Floor Shifter C3245 .
- Disconnect BCM C2280C .
- Inspect for damaged or pushed-out terminals.
- Measure the **resistance** between.

Positive Lead	Measurement / Action	Negative Lead
C3245-3	Ω	—

Is the resistance greater than 10,000 ohms?

Yes	INSTALL a new selector lever assembly. REFER to: Selector Lever Assembly (307-05 Automatic Transmission External Controls, Removal and Installation).
No	REPAIR the circuit.

Diagnostic Overview

Diagnostics in this manual assume a certain skill level and knowledge of Ford-specific diagnostic practices.
REFER to: Diagnostic Methods (100-00 General Information, Description and Operation).

Refer to Wiring Diagrams Cell 37 for schematic and connector information.

Brake Shift Interlock Actuator (BSIA) B1319:15

Normal Operation and Fault Conditions

The BCM provides power to the Brake Shift Interlock Actuator (BSIA) solenoid. When the BCM receives a brake pedal applied input, voltage is applied to the brake shift interlock solenoid. When the solenoid is energized, the plunger is pulled inward allowing the selector lever to move from the park position.

DTC Fault Trigger Conditions

DTC	Description	Fault Trigger Conditions
B1319:15	Brake Shift Interlock Output Circuit Short To Battery or Open	Short to power or open in the Brake Shift Interlock Actuator (BSIA) circuitry.

Possible Sources

- Connectors damaged or pushed-out terminals, corrosion, loose wires and missing or damaged seals
- Brake Shift Interlock Actuator (BSIA) solenoid
- BCM

PINPOINT TEST B : BRAKE SHIFT INTERLOCK ACTUATOR (BSIA) B1319:15

B1 RETRIEVE AND RECORD ALL DTCS

- Using the diagnostic scan tool, retrieve all Diagnostic Trouble Codes (DTCs).

Is DTC B1319:15 present?

Yes	GO to B2
No	The issue may not be in the Brake Shift Interlock Actuator (BSIA) electrical system. Go to Symptom Chart.

B2 CHECK THE BRAKE SHIFT INTERLOCK ACTUATOR POWER CIRCUIT FOR AN OPEN

- Disconnect Floor Shifter C3245 .
- Disconnect BCM C2280C .
- Inspect for damaged or pushed-out terminals.
- Measure the **resistance** between.

Positive Lead	Measurement / Action	Negative Lead
C3245-3	Ω	C2280C-41

Is the resistance less than 3 ohms?

Yes	GO to B3
No	REPAIR the circuit.

B3 CHECK THE BRAKE SHIFT INTERLOCK ACTUATOR GROUND CIRCUIT FOR AN OPEN

- Measure the **resistance** between.

Positive Lead	Measurement / Action	Negative Lead
C3245-4	Ω	—

Is the resistance less than 3 ohms?

Yes	GO to B4
No	REPAIR the circuit.

B4 CHECK THE BRAKE SHIFT INTERLOCK ACTUATOR POWER CIRCUIT FOR VOLTAGE

- Ignition ON.
- Measure the **voltage** between.

Positive Lead	Measurement / Action	Negative Lead
C3245-3	V	—

Is any voltage present?

Yes	REPAIR the circuit.
No	INSTALL a new selector lever assembly. REFER to: Selector Lever Assembly (307-05 Automatic Transmission External Controls, Removal and Installation).

Diagnostic Overview

Diagnostics in this manual assume a certain skill level and knowledge of Ford-specific diagnostic practices.
REFER to: Diagnostic Methods (100-00 General Information, Description and Operation).

Refer to Wiring Diagrams Cell 37 for schematic and connector information.

SelectShift™

Normal Operation and Fault Conditions

The SelectShift™ switch is a toggle switch integral to the selector lever knob. When the selector lever is placed in the S position, the upshift/downshift feature becomes activated. If a new switch is required install a new selector lever knob.

DTC Fault Trigger Conditions

DTC	Description	Fault Trigger Conditions
P0815	Upshift Switch Circuit	The TCM detects a voltage high signal when an upshift is requested.
P0816	Downshift Switch Circuit	The TCM detects a voltage high signal when a downshift is requested.

Possible Sources

- Connectors damaged or pushed-out terminals, corrosion, loose wires and missing or damaged seals
- SelectShift™ switch
- TCM

PINPOINT TEST C : SELECTSHIFT™

C1 RETRIEVE AND RECORD ALL DTCS

- Using the diagnostic scan tool, retrieve all Diagnostic Trouble Codes (DTCs).

IS DTC P0815 or P0816 present?

Yes	If DTC P0815 is present, GO to C2
No	If DTC P0816 is present, GO to C7

C2 CHECK THE UPSHIFT SIGNAL CIRCUIT FOR VOLTAGE

- Disconnect Floor Shifter C3245 .
- Inspect for damaged or pushed-out terminals.
- Ignition ON.
- Measure the **voltage** between.

Positive Lead	Measurement / Action	Negative Lead
C3245-9	▽	—

Is the voltage greater than 11 volts?

Yes	GO to C5
No	GO to C3

C3 CHECK THE UPSHIFT SIGNAL CIRCUIT FOR AN OPEN

- Ignition OFF.
- Disconnect TCM C1750A .
- Inspect for damaged or pushed-out terminals.
- Measure the **resistance** between.

Positive Lead	Measurement / Action	Negative Lead
C1750A-9	Ω	C3245-9

Is the resistance less than 3 ohms?

Yes	GO to C4
No	REPAIR the circuit.

C4 CHECK THE UPSHIFT SIGNAL CIRCUIT FOR A SHORT TO GROUND

- Measure the **resistance** between.

Positive Lead	Measurement / Action	Negative Lead
C3245-9	Ω	—

Is the resistance greater than 10,000 ohms?

Yes	GO to C6
No	REPAIR the circuit.

C5 CHECK THE SIGNAL RETURN CIRCUIT FOR AN OPEN

- Measure the **voltage** between.

Positive Lead	Measurement / Action	Negative Lead
C3245-9	V	C3245-8

Is the voltage greater than 11 volts?

Yes	GO to C6
No	REPAIR the circuit. If an open circuit is not found, INSTALL a new TCM . REFER to: Transmission Control Module (TCM) (307-01 Automatic Transmission - Vehicles With: 6-Speed PowerShift Transmission - DPS6/6DCT250, Removal and Installation).

C6 CHECK THE SELECTSHIFT™ SWITCH

- Disconnect SelectShift™ connector in the selector lever assembly.
- Measure the **component side resistance** while cycling the SelectShift™ upshift switch between.

Positive Lead	Measurement / Action	Negative Lead
C3245-9	Ω	C3245-8

Is the resistance less than 1.5 ohms with upshift selected and greater than 10,000 ohms when released?

Yes	CHECK OASIS for any applicable TSB . If a TSB exists for this concern, discontinue this test and follow the TSB instructions. If no TSB address this concern, INSTALL a new TCM . REFER to: Transmission Control Module (TCM) (307-01 Automatic Transmission - Vehicles With: 6-Speed PowerShift Transmission - DPS6/6DCT250, Removal and Installation).
No	INSTALL a new selector lever knob. REFER to: Selector Lever Knob (307-05 Automatic Transmission External Controls, Removal and Installation).

C7 CHECK THE DOWNSHIFT SIGNAL CIRCUIT FOR VOLTAGE

- Disconnect Floor Shifter C3245 .
- Inspect for damaged or pushed-out terminals.
- Ignition ON.
- Measure the **voltage** between.

Positive Lead	Measurement / Action	Negative Lead
C3245-10	V	—

Is the voltage greater than 11 volts?

Yes	GO to C10
No	GO to C8

C8 CHECK THE DOWNSHIFT SIGNAL CIRCUIT FOR AN OPEN

- Ignition OFF.
- Disconnect TCM C1750A .
- Inspect for damaged or pushed-out terminals.
- Measure the **resistance** between.

Positive Lead	Measurement / Action	Negative Lead
C1750A-10	Ω	C3245-10

Is the resistance less than 3 ohms?

Yes	GO to C9
No	REPAIR the circuit.

C9 CHECK THE DOWNSHIFT SIGNAL CIRCUIT FOR A SHORT TO GROUND

- Measure the **resistance** between.

Positive Lead	Measurement / Action	Negative Lead
C3245-10	Ω	—

Is the resistance greater than 10,000 ohms?

Yes	GO to C10
No	REPAIR the circuit.

C10 CHECK THE SIGNAL RETURN CIRCUIT FOR AN OPEN

- Measure the **voltage** between.

Positive Lead	Measurement / Action	Negative Lead
C3245-3	V	—

Is the voltage greater than 11 volts?

Yes	GO to C11

No	REPAIR the circuit. If an open circuit is not found, INSTALL a new TCM . REFER to: Transmission Control Module (TCM) (307-01 Automatic Transmission - Vehicles With: 6-Speed PowerShift Transmission - DPS6/6DCT250, Removal and Installation).

C11 CHECK THE SELECTSHIFT™ SWITCH

- Disconnect SelectShift™ connector in the selector lever assembly.
- Measure the **component side resistance** while cycling the SelectShift™ upshift switch between.

Positive Lead	Measurement / Action	Negative Lead
C3245-10	Ω	C3245-8

Is the resistance less than 1.5 ohms with upshift selected and greater than 10,000 ohms when released?

Yes	CHECK OASIS for any applicable TSB . If a TSB exists for this concern, discontinue this test and follow the TSB instructions. If no TSB address this concern, INSTALL a new TCM . REFER to: Transmission Control Module (TCM) (307-01 Automatic Transmission - Vehicles With: 6-Speed PowerShift Transmission - DPS6/6DCT250, Removal and Installation).
No	INSTALL a new selector lever knob. REFER to: Selector Lever Knob (307-05 Automatic Transmission External Controls, Removal and Installation).

Diagnostic Overview

Diagnostics in this manual assume a certain skill level and knowledge of Ford-specific diagnostic practices.
REFER to: Diagnostic Methods (100-00 General Information, Description and Operation).

Refer to Wiring Diagrams Cell 37 for schematic and connector information.

TCS /Grade Assist

Normal Operation and Fault Conditions

The TCS /Grade Assist is a momentary contact switch located on the selector lever. Pressing the TCS will engage or disengage the O/D function of the transmission. When the O/D is disengaged, the O/D icon will illuminate OFF on the IPC . Each time the ignition switch is cycled, the transmission will automatically provide O/D operation regardless of TCS position the last time the engine was running.

DTC Fault Trigger Conditions

DTC	Description	Fault Trigger Conditions
P1780	TCS / O/D Circuit Out Of Self-Test Range	The TCS / O/D switch or circuit failed during the self-test.

Possible Sources

- Connectors damaged or pushed-out terminals, corrosion, loose wires and missing or damaged seals
- TCS
- TCM

PINPOINT TEST D : TCS (TRANSMISSION CONTROL SWITCH) /GRADE ASSIST

D1 RETRIEVE AND RECORD ALL DTCS

- Using the diagnostic scan tool, retrieve all Diagnostic Trouble Codes (DTCs).

Is DTC P1780 present?

Yes	GO to D2
No	REFER to: Instrumentation, Message Center and Warning Chimes (413-01 Instrumentation, Message Center and Warning Chimes, Diagnosis and Testing).

D2 CHECK THE BJB FUSE

- Ignition OFF.
- Remove the BJB fuse 38 (15A).
- CHECK Fuse 38 (15A).

Is the resistance less than 3 ohms?

Yes	GO to D6
No	GO to D3

D3 CHECK FOR PCM DTCS

- Using the diagnostic scan tool, retrieve PCM Diagnostic Trouble Codes (DTCs).

Is DTC P0562 or U0100 present?

Yes	REFER to PC/ED .
No	GO to D4

D4 CHECK THE TCS POWER CIRCUIT FOR A SHORT TO GROUND

- Disconnect Floor Shifter C3245 .
- Measure the **resistance** between.

Positive Lead	Measurement / Action	Negative Lead
C3245-6	Ω	—

Is the resistance greater than 10,000 ohms?

Yes	GO to D5

No	REPAIR the circuit.

D5 CHECK THE TCS INPUT CIRCUIT FOR A SHORT TO GROUND

- Disconnect TCM C1750A .
- Measure the **resistance** between.

Positive Lead	Measurement / Action	Negative Lead
C3245-5	Ω	—

Is the resistance greater than 10,000 ohms?

Yes	GO to D8
No	REPAIR the circuit.

D6 CHECK THE TCS POWER CIRCUIT FOR AN OPEN

- Disconnect Floor Shifter C3245 .
- Measure the **resistance** between.

Positive Lead	Measurement / Action	Negative Lead
C3245-6	Ω	BJB fuse 38 (15A)

Is the resistance less than 3 ohms?

Yes	GO to D7
No	REPAIR the circuit.

D7 CHECK THE TCS INPUT CIRCUIT FOR AN OPEN

- Disconnect TCM C1750A .
- Measure the **resistance** between.

Positive Lead	Measurement / Action	Negative Lead
C3245-5	Ω	C1750A-11

Is the resistance less than 3 ohms?

Yes	GO to D8
No	REPAIR the circuit.

D8 CHECK THE TCS SWITCH

- Measure the **component side resistance** while cycling the TCS between.

Positive Lead	Measurement / Action	Negative Lead
C3245-5	Ω	C3245-6

Is the resistance less than 1.5 ohms with the switch pressed and greater than 10,000 ohms when released?

Yes	GO to D9
No	INSTALL a new selector lever knob. REFER to: Selector Lever Knob (307-05 Automatic Transmission External Controls, Removal and Installation).

D9 CHECK THE TCM

- Install fuse 38 (15A).
- Connect Floor Shifter C3245 .
- Ignition ON.
- Measure the **voltage** between.

Positive Lead	Measurement / Action	Negative Lead
C1750A-11	V	—

Is the voltage greater than 10 volts with the switch pressed and less than 5 volts when released?

Yes	INSTALL a new TCM . REFER to: Transmission Control Module (TCM) (307-01 Automatic Transmission - Vehicles With: 6-Speed PowerShift Transmission - DPS6/6DCT250, Removal and Installation).
No	REPAIR the circuit.

Copyright © Ford Motor Company

Clutch

Symptom Chart(s)

Symptom Chart: Clutch

Diagnostics in this manual assume a certain skill level and knowledge of Ford-specific diagnostic practices.

Condition	Possible Sources	Actions
Clutch slippage	• Clutch pedal reserve • Worn or damaged pressure plate • Clutch disc facing • Hardened or oiled clutch disc facing surface • Flywheel	GO to Pinpoint Test A
Clutch chatter, rattle or shudder	• Loose or damaged engine or transaxle mounts • Oil on clutch disc facing • Worn pressure plate • Clutch disc facing • Loose or damaged flywheel • Worn clutch disc	GO to Pinpoint Test B
Clutch drag	• Insufficient clutch hydraulic fluid • Air in hydraulic system • Clutch pedal reserve • Diaphragm springs • Clutch disc • Clutch disc splines • Oil on clutch disc facing	GO to Pinpoint Test C
Clutch pedal pulsation	• Clutch and brake pedal pivot shaft not correctly lubricated • Flywheel • Worn pressure plate springs	GO to Pinpoint Test B
Clutch related vibrations	• Engine component grounding against frame • Accessory drive belt • Flywheel bolts loose • Flywheel • Imbalanced clutch pressure plate	GO to Pinpoint Test B
Hard shifting	• Insufficient clutch hydraulic fluid	GO to Pinpoint Test C

	Clutch pedal reserve • Transaxle concern	
Clutch system leakage	• Clutch master cylinder • Clutch slave cylinder • Clutch hydraulic tubes	INSPECT the clutch master cylinder, the clutch slave cylinder and all hydraulic system tubes for leakage. REPAIR as necessary.

Pinpoint Test(s)

PINPOINT TEST A :

A1 TEST CLUTCH SLIPPAGE

- Apply the parking brake.
- Start engine and engage 4th gear.
- Run the engine at approximately 2,000 rpm.
- Slowly release clutch pedal.

Does the engine stall when the clutch pedal is fully released?

Yes	Clutch is OK.
No	GO to A2

A2 MEASURE THE CLUTCH RESERVE

NOTE: *If equipped, remove the floor mat to allow the clutch pedal to travel to the downstop.*

- Install a cable tie to the clutch pedal, than attach a tape measure to the cable tie.
- Pull the tape measure up to the steering wheel. Position it through the steering wheel opening. Put a piece of masking tape on the steering wheel and index mark the masking tape.
- Press the clutch pedal fully and start the vehicle.
- Shift the transaxle into REVERSE gear, then move the gearshift lever forward to the position in between REVERSE gear and NEUTRAL. Slowly release the clutch pedal (if the vehicle creeps rearward, move the gearshift lever forward a little more). The transaxle will work as if in NEUTRAL, but the reverse gear synchronizer will be bypassed.
- With the clutch pedal released, gently pull the gearshift lever toward the REVERSE gear position. Gear clash can now be heard.
- Slowly press the clutch pedal. Using the mark on the tape as a reference, note the measurement when the gear clash stops or the gearshift lever slides into REVERSE gear. Press the clutch pedal to the downstop. The difference between the measurement taken when the gear clash stopped and the measurement taken at the downstop is the clutch reserve.

Item	Pedal Position
1	Gear clash begins
2	Gear clash ends
3	Clutch pedal downstop

Is the clutch reserve between – ?

Yes	Clutch pedal reserve is OK. VERIFY customer concern.

No	INSTALL a new pressure plate and clutch disc. Refer to REFER to: Clutch Disc and Pressure Plate - Vehicles With: 5-Speed Manual Transmission - MTX75 (308-01 Clutch, Removal and Installation).

PINPOINT TEST B :

B1 CHECK THE ENGINE OR TRANSAXLE MOUNTS

- Inspect all the engine and transaxle mounts for looseness or damage.

Are any of the engine or transaxle mounts loose or damaged?

Yes	TIGHTEN or INSTALL new engine or transaxle mounts. TEST the system for normal operation.
No	GO to B2

B2 INSPECT THE PRESSURE PLATE BOLTS

- Inspect the pressure plate-to-flywheel bolts.

Are any of the pressure plate-to-flywheel bolts loose?

Yes	TIGHTEN or INSTALL new bolts. Refer to REFER to: Clutch Disc and Pressure Plate - Vehicles With: 5-Speed Manual Transmission - MTX75 (308-01 Clutch, Removal and Installation).
No	GO to B3

B3 INSPECT THE PRESSURE PLATE

- Remove the clutch pressure plate.
- Inspect the clutch pressure plate for wear or damage.

Are any signs of damage present on the clutch pressure plate?

Yes	INSTALL a new clutch pressure plate. Refer to REFER to: Clutch Disc and Pressure Plate - Vehicles With: 5-Speed Manual Transmission - MTX75 (308-01 Clutch, Removal and Installation). TEST the system for normal operation.
No	GO to B4

B4 CHECK THE CLUTCH DISC

- NOTE: If the internal damper of the clutch disc is damaged or contaminated with grease or oil, it will sound similar to a "transaxle rattle".
- Check the clutch disc for wear or damage.

Is the clutch disc OK?

Yes	GO to B5
No	INSTALL a new clutch disc. Refer to REFER to: Clutch Disc and Pressure Plate - Vehicles With: 5-Speed Manual Transmission - MTX75

	(308-01 Clutch, Removal and Installation). TEST the system for normal operation.

B5 INSPECT THE FLYWHEEL

- Inspect the flywheel for wear or damage.

Is the flywheel OK?

Yes	GO to B6
No	REPAIR or INSTALL a new flywheel as necessary. Refer to REFER to: Flywheel (303-01A Engine - 2.0L Duratec-HE (125kW/170PS) - MI4, Removal and Installation). TEST the system for normal operation.

B6 INSPECT THE INPUT SHAFT

- Inspect the input shaft for signs of wear, damage or corrosion.

Are any signs of wear damage, or corrosion present on the input shaft?

Yes	If wear or damage is found, INSTALL a new input shaft. REFER to: Manual Transmission (308-03A Manual Transmission - Vehicles With: 5-Speed Manual Transmission - MTX75, Diagnosis and Testing). or REFER to: Manual Transmission (308-03B Manual Transmission - Vehicles With: 6-Speed Manual Transmission - MMT6, Diagnosis and Testing). If corrosion is found on the splines of the input shaft, apply a small amount of grease to the splines of the input shaft.
No	VERIFY the customer concern. Refer to Symptom Chart: Transmission REFER to: Manual Transmission (308-03A Manual Transmission - Vehicles With: 5-Speed Manual Transmission - MTX75, Diagnosis and Testing). or REFER to: Manual Transmission (308-03B Manual Transmission - Vehicles With: 6-Speed Manual Transmission - MMT6, Diagnosis and Testing).

PINPOINT TEST C :

C1 CHECK CLUTCH FLUID LEVEL

- Check clutch fluid level.

Is the clutch fluid level between the MAX and MIN marks on the brake fluid reservoir?

Yes	GO to C2
No	FILL reservoir to specification, CHECK the brake and clutch systems for leaks. TEST clutch system for normal operation.

C2 TEST CLUTCH PEDAL FREE TRAVEL

- Manually operate the clutch pedal to the point of resistance and release.
- Measure pedal travel.

Is the measured dimension within ?

Yes	GO to C3
No	GO to C2

C3 CHECK THE BELLEVILLE SPRING WASHER OF THE CLUTCH PRESSURE PLATE

- Remove transmission. Refer to
  REFER to: Manual Transmission (308-03A Manual Transmission - Vehicles With: 5-Speed Manual Transmission - MTX75, Diagnosis and Testing).
  or REFER to: Manual Transmission (308-03B Manual Transmission - Vehicles With: 6-Speed Manual Transmission - MMT6, Diagnosis and Testing).

Does the clutch pressure plate or the Belleville spring washer of the clutch pressure plate show signs of wear or damage?

Yes	INSTALL a new clutch pressure plate. Refer to REFER to: Clutch Disc and Pressure Plate - Vehicles With: 5-Speed Manual Transmission - MTX75 (308-01 Clutch, Removal and Installation). TEST the system for normal operation.
No	VERIFY the customer concern.

COMPONENT TEST(S)

Clutch

1. Slowly press and release the clutch pedal to see if the pedal is binding. Make sure the clutch pedal can be fully pressed and is not restricted by the floor mat. Verify the pedal return spring is present and is functioning correctly.
2. Measure the clutch reserve. GO to Pinpoint Test A
3. With the engine idling, the parking brake on and the clutch pedal up, gently move the gearshift lever into a forward or reverse gear, until gear clash can be heard. Slowly press the clutch pedal.
4. If the gears cease to clash (full disengage at – from the floor), hold the pedal at the point of disengagement and increase engine to 4,000 rpm. If the clutch remains disengaged, it is functioning correctly.
5. Any concerns indicate a worn or damaged clutch. Repair as necessary.
6. With the engine idling, move the gearshift lever into 4th gear. Increase the engine to 2,000 rpm and slowly release the clutch pedal.
7. If the engine stalls, the clutch is OK.
8. If the engine does not stall, the clutch is slipping. Repair as necessary.
9. Compare the road test results with the symptom chart. The chart is a list of conditions that are typical faults.
   REFER to: Clutch (308-01 Clutch, Diagnosis and Testing).

Copyright © Ford Motor Company

Clutch Controls

Symptom Chart(s)

Symptom Chart: Clutch Controls

Diagnostics in this manual assume a certain skill level and knowledge of Ford-specific diagnostic practices.

Condition	Possible Sources	Actions
Clutch slippage	• Clutch pedal reserve • Worn or damaged pressure plate • Clutch disc facing • Hardened or oiled clutch disc facing surface • Flywheel	GO to Pinpoint Test A
Clutch chatter, rattle or shudder	• Loose or damaged engine or transmission mounts • Oil on clutch disc facing • Worn pressure plate • Clutch disc facing • Loose or damaged flywheel • Worn clutch disc	GO to Pinpoint Test B
Clutch drag	• Insufficient clutch hydraulic fluid • Air in hydraulic system • Clutch pedal reserve • Diaphragm springs • Clutch disc • Clutch disc splines • Oil on clutch disc facing	GO to Pinpoint Test C
Clutch pedal pulsation	• Clutch and brake pedal pivot shaft not correctly lubricated • Flywheel • Worn pressure plate springs	GO to Pinpoint Test B
Clutch related vibrations	• Engine component grounding against frame • Accessory drive belt • Flywheel bolts loose • Flywheel • Imbalanced clutch pressure plate	GO to Pinpoint Test B
Hard shifting	• Insufficient clutch hydraulic fluid	GO to Pinpoint Test C

	Clutch pedal reserve • Transmission concern	
Clutch system leakage	• Clutch master cylinder • Clutch slave cylinder • Clutch hydraulic tubes	INSPECT the clutch master cylinder, the clutch slave cylinder and all hydraulic system tubes for leakage. REPAIR as necessary.

Pinpoint Test(s)

PINPOINT TEST A :

A1 TEST CLUTCH SLIPPAGE

- Apply the parking brake.
- Start engine and engage 4th gear.
- Run the engine at approximately 2,000 rpm.
- Slowly release clutch pedal.

Does the engine stall when the clutch pedal is fully released?

Yes	Clutch is OK.
No	GO to A2

A2 MEASURE THE CLUTCH RESERVE

NOTE: *If equipped, remove the floor mat to allow the clutch pedal to travel to the downstop.*

- Install a cable tie to the clutch pedal, than attach a tape measure to the cable tie.
- Pull the tape measure up to the steering wheel. Position it through the steering wheel opening. Put a piece of masking tape on the steering wheel and index mark the masking tape.
- Press the clutch pedal fully and start the vehicle.
- Shift the transmission into REVERSE gear, then move the gearshift lever forward to the position in between REVERSE gear and NEUTRAL. Slowly release the clutch pedal (if the vehicle creeps rearward, move the gearshift lever forward a little more). The transmission will work as if in NEUTRAL, but the reverse gear synchronizer will be bypassed.
- With the clutch pedal released, gently pull the gearshift lever toward the REVERSE gear position. Gear clash can now be heard.
- Slowly press the clutch pedal. Using the mark on the tape as a reference, note the measurement when the gear clash stops or the gearshift lever slides into REVERSE gear. Press the clutch pedal to the downstop. The difference between the measurement taken when the gear clash stopped and the measurement taken at the downstop is the clutch reserve.

Item	Pedal Position
1	Gear clash begins
2	Gear clash ends
3	Clutch pedal downstop

Is the clutch reserve between 0.9843 in (25 mm) – 1.4961 in (38 mm)?

Yes	Clutch pedal reserve is OK. VERIFY customer concern.

No	INSTALL a new pressure plate and clutch disc. REFER to: Clutch Disc and Pressure Plate - Vehicles With: 5-Speed Manual Transmission - MTX75 (308-01 Clutch, Removal and Installation).

PINPOINT TEST B :

B1 CHECK THE ENGINE OR TRANSMISSION MOUNTS

- Inspect all the engine and transmission mounts for looseness or damage.

Are any of the engine or transmission mounts loose or damaged?

Yes	TIGHTEN or INSTALL new engine or transmission mounts. TEST the system for normal operation.
No	GO to B2

B2 INSPECT THE PRESSURE PLATE BOLTS

- Inspect the pressure plate-to-flywheel bolts.

Are any of the pressure plate-to-flywheel bolts loose?

Yes	TIGHTEN or INSTALL new bolts. REFER to: Clutch Disc and Pressure Plate - Vehicles With: 5-Speed Manual Transmission - MTX75 (308-01 Clutch, Removal and Installation).
No	GO to B3

B3 INSPECT THE PRESSURE PLATE

- Remove the clutch pressure plate.
- Inspect the clutch pressure plate for wear or damage.

Are any signs of damage present on the clutch pressure plate?

Yes	INSTALL a new clutch pressure plate. REFER to: Clutch Disc and Pressure Plate - Vehicles With: 5-Speed Manual Transmission - MTX75 (308-01 Clutch, Removal and Installation). TEST the system for normal operation.
No	GO to B4

B4 CHECK THE CLUTCH DISC

- NOTE: If the internal damper of the clutch disc is damaged or contaminated with grease or oil, it will sound similar to a "transmission rattle".
- Check the clutch disc for wear or damage.

Is the clutch disc OK?

Yes	GO to B5
No	INSTALL a new clutch disc. REFER to: Clutch Disc and Pressure Plate - Vehicles With: 5-Speed Manual Transmission - MTX75

	(308-01 Clutch, Removal and Installation). TEST the system for normal operation.

B5 INSPECT THE FLYWHEEL

- Inspect the flywheel for wear or damage.

Is the flywheel OK?

Yes	GO to B6
No	REPAIR or INSTALL a new flywheel as necessary. REFER to: Flywheel (303-01A Engine - 2.0L Duratec-HE (125kW/170PS) - MI4, Removal and Installation). TEST the system for normal operation.

B6 INSPECT THE INPUT SHAFT

- Inspect the input shaft for signs of wear, damage or corrosion.

Are any signs of wear damage, or corrosion present on the input shaft?

Yes	If wear or damage is found, INSTALL a new input shaft. REFER to: Manual Transmission (308-03A Manual Transmission - Vehicles With: 5-Speed Manual Transmission - MTX75, Diagnosis and Testing). or REFER to: Manual Transmission (308-03B Manual Transmission - Vehicles With: 6-Speed Manual Transmission - MMT6, Diagnosis and Testing). If corrosion is found on the splines of the input shaft, apply a small amount of grease to the splines of the input shaft.
No	VERIFY the customer concern. Refer to Symptom Chart: Transmission REFER to: Manual Transmission (308-03A Manual Transmission - Vehicles With: 5-Speed Manual Transmission - MTX75, Diagnosis and Testing). or REFER to: Manual Transmission (308-03B Manual Transmission - Vehicles With: 6-Speed Manual Transmission - MMT6, Diagnosis and Testing).

PINPOINT TEST C :

C1 CHECK CLUTCH FLUID LEVEL

- Check clutch fluid level.

Is the clutch fluid level between the MAX and MIN marks on the brake fluid reservoir?

Yes	GO to C2
No	FILL reservoir to specification, CHECK the brake and clutch systems for leaks. TEST clutch system for normal operation.

C2 BLEED THE CLUTCH SYSTEM

- Bleed the clutch system.
  REFER to: Clutch System Bleeding (308-00 Manual Transmission and Clutch - General Information) .
-

Does the clutch pedal show improved disengaging characteristics after bleeding the clutch system?

Yes	Clutch OK.
No	GO to C3

C3 CHECK THE CLUTCH PEDAL FREE PLAY

- Measure the clutch pedal free play.
- Press the clutch pedal until resistance is felt, then release it.

Is the pedal travel approximately 0.3937 in (10 mm)?

Yes	GO to C4
No	Check that the clutch pedal moves freely, remove the clutch pedal if necessary.

C4 CHECK THE BELLEVILLE SPRING WASHER OF THE CLUTCH PRESSURE PLATE

- Remove transmission.
  REFER to: Manual Transmission (308-03A Manual Transmission - Vehicles With: 5-Speed Manual Transmission - MTX75, Diagnosis and Testing).
  or REFER to: Manual Transmission (308-03B Manual Transmission - Vehicles With: 6-Speed Manual Transmission - MMT6, Diagnosis and Testing).

Does the clutch pressure plate or the Belleville spring washer of the clutch pressure plate show signs of wear or damage?

Yes	INSTALL a new clutch pressure plate. REFER to: Clutch Disc and Pressure Plate - Vehicles With: 5-Speed Manual Transmission - MTX75 (308-01 Clutch, Removal and Installation). TEST the system for normal operation.
No	VERIFY the customer concern.

Component Test(s)

Clutch Hydraulic System

1. Verify the clutch hydraulic fluid reservoir is filled to the correct level.
2. If the fluid level is low, add fluid as necessary. Check the clutch hydraulic system for leaks and repair as necessary.
3. If the fluid is at the correct level, proceed to clutch check.
4. Apply and release the clutch pedal slowly to check for pedal binding. Make sure the clutch pedal can be fully applied and is not restricted by the floor mat. Verify the pedal return spring is present and functions correctly.
5. Measure the clutch reserve. GO to Pinpoint Test A
6. Set the park brake. The clutch pedal is in the up position and the engine idling, gently move the gearshift lever forward toward reverse gear until gear clash can be heard. Apply the clutch pedal slowly.
7. If the gears cease to clash (full disengage at to from the floor), hold the clutch pedal at the point of disengagement and increase engine speed to 4,000 rpm. The clutch should remain disengaged, clutch OK.

8. With the engine idling and the clutch pedal applied, move the gearshift lever into 4th gear. Increase the engine speed to 2,000 rpm and slowly release the clutch pedal.
9. If the engine does not stall, clutch is slipping. Repair as necessary.
   REFER to: Clutch Disc and Pressure Plate - Vehicles With: 5-Speed Manual Transmission - MTX75 (308-01 Clutch, Removal and Installation).
10. If the engine stalls, clutch is OK.

Copyright © Ford Motor Company

External Controls

Symptom Chart(s)

Symptom Chart: External Controls

Diagnostics in this manual assume a certain skill level and knowledge of Ford-specific diagnostic practices.

Symptom Chart

Condition	Possible Sources	Actions
One of the gears cannot be selected	Fault between the gearshift lever and gearshift lever housing	Adjust the gearshift mechanism. Vehicles equipped with a MTX75, REFER to: Gearshift Cables - Vehicles With: 5-Speed Manual Transmission - MTX75 (308-06 Manual Transmission External Controls, Removal and Installation). Vehicles equipped with a MMT6, REFER to: Gearshift Cables - Vehicles With: 6-Speed Manual Transmission - MMT6 (308-06 Manual Transmission External Controls, Removal and Installation).
Reverse gear cannot be selected	Gearshift lever	Check the gearshift lever for damage. Remove the gearshift lever to see if reverse can be selected. Vehicles equipped with a MTX75, REFER to: Gearshift Lever - Vehicles With: 5-Speed Manual Transmission - B5/IB5/5-Speed Manual Transmission - MTX75 (308-06 Manual Transmission External Controls, Removal and Installation). Vehicles equipped with a MMT6,REFER to: Gearshift Lever - Vehicles With: 6-Speed Manual Transmission - B6/6-Speed Manual Transmission - MMT6 (308-06 Manual Transmission External Controls, Removal and Installation).

Copyright © Ford Motor Company

Manual Transmission

Symptom Chart(s)

Symptom Chart: Transmission

Diagnostics in this manual assume a certain skill level and knowledge of Ford-specific diagnostic practices.

Condition	Possible Sources	Actions
Gears clash when shifting from one forward gear to another	Gear teeth/synchronizer damaged	REFER to: Input Shaft (308-03A Manual Transmission - Vehicles With: 5-Speed Manual Transmission - MTX75, Disassembly and Assembly of Subassemblies). and/or REFER to: Output Shaft (308-03A Manual Transmission - Vehicles With: 5-Speed Manual Transmission - MTX75, Disassembly and Assembly of Subassemblies).
Transmission jumps out of gear	Bolts retaining transmission to engine loose	REFER to: Transmission (308-03A Manual Transmission - Vehicles With: 5-Speed Manual Transmission - MTX75, Installation).
	Preload incorrect and/or internal components damaged	CHECK preload. INSPECT the synchronizer for free movement on their hubs. INSPECT the synchronizer blocking rings for widened index slots, rounded clutch teeth and smooth internal surface. CHECK the countershaft cluster gear for excessive end play. INSPECT the shift forks for wear. CHECK for loose shift forks on the shift rails. INSPECT the synchronizer sliding sleeve and the gear clutch teeth for wear and damage. REPAIR as necessary. REFER to: Input Shaft (308-03A Manual Transmission - Vehicles With: 5-Speed Manual Transmission - MTX75, Disassembly and Assembly of Subassemblies). and/or REFER to: Output Shaft (308-03A Manual Transmission - Vehicles With: 5-Speed Manual Transmission - MTX75, Disassembly and Assembly of Subassemblies).
	Gear teeth worn/damaged	INSPECT and REPAIR as necessary. REFER to: Input Shaft (308-03A Manual Transmission - Vehicles With: 5-Speed Manual Transmission - MTX75, Disassembly and Assembly of Subassemblies). and/or REFER to: Output Shaft (308-03A Manual Transmission - Vehicles With: 5-Speed Manual Transmission - MTX75, Disassembly and Assembly of Subassemblies).
Transmission will not shift into one gear - all others OK	Internal components	For the gear in question, INSPECT the shift rail and fork, the synchronizer, and the gear clutch teeth for restricted travel. REPAIR as necessary. REFER to: Input Shaft (308-03A Manual Transmission - Vehicles With: 5-Speed Manual Transmission - MTX75, Disassembly and Assembly of Subassemblies). and/or REFER to: Output Shaft (308-03A Manual Transmission - Vehicles With: 5-Speed Manual Transmission - MTX75, Disassembly and Assembly of Subassemblies).
Transmission is locked in one gear and will not shift out of that gear	Internal components	INSPECT the gears, the shift rails, the forks and the synchronizer for wear or damage. REPAIR as necessary. REFER to: Input Shaft (308-03A Manual Transmission - Vehicles With: 5-Speed Manual Transmission - MTX75, Disassembly and Assembly of Subassemblies). and/or REFER to: Output Shaft (308-03A Manual Transmission - Vehicles With: 5-Speed Manual Transmission - MTX75, Disassembly and Assembly of Subassemblies).
Significant effort required when	Gear synchronization is inadequate. Gear teeth/synchronizer	INSTALL a new synchronizer assembly with synchronizer rings. INSTALL two new gears belonging to the synchronizer assembly. REFER to: Input Shaft (308-03A Manual Transmission - Vehicles With: 5-Speed Manual Transmission - MTX75, Disassembly and Assembly of Subassemblies).

downshifting	damaged	and/or REFER to: Output Shaft (308-03A Manual Transmission - Vehicles With: 5-Speed Manual Transmission - MTX75, Disassembly and Assembly of Subassemblies).
Stiff gearshift	Transmission fluid	CHECK that the transmission is filled with the specified transmission fluid and, if necessary, FILL and ADD transmission fluid as necessary. REFER to: Transmission Fluid Level Check (308-03A Manual Transmission - Vehicles With: 5-Speed Manual Transmission - MTX75, General Procedures).
	Damaged synchronizer rings or inner selector mechanism	CHECK the internal components for wear or damage, REPAIR as necessary. REFER to: Input Shaft (308-03A Manual Transmission - Vehicles With: 5-Speed Manual Transmission - MTX75, Disassembly and Assembly of Subassemblies). and/or REFER to: Output Shaft (308-03A Manual Transmission - Vehicles With: 5-Speed Manual Transmission - MTX75, Disassembly and Assembly of Subassemblies).
One of the gears can not be selected	Fault between the gearshift lever and gearshift lever housing	INSPECT the gearshift lever. REFER to: Gearshift Cable Adjustment - Vehicles With: 5-Speed Manual Transmission - MTX75 (308-00 Manual Transmission and Clutch - General Information) .
Reverse gear can not be selected	Gearshift lever	CHECK the gearshift lever for damage. REPAIR as necessary, remove the gearshift lever to see whether reverse gear can be selected. REFER to: Gearshift Cable Adjustment - Vehicles With: 5-Speed Manual Transmission - MTX75 (308-00 Manual Transmission and Clutch - General Information) .
	Internal components	CHECK the reverse idler gear and the appropriate selector fork, shift rail and synchronizer unit. REPAIR as necessary. REFER to: Input Shaft (308-03A Manual Transmission - Vehicles With: 5-Speed Manual Transmission - MTX75, Disassembly and Assembly of Subassemblies). and/or REFER to: Output Shaft (308-03A Manual Transmission - Vehicles With: 5-Speed Manual Transmission - MTX75, Disassembly and Assembly of Subassemblies).
Grinding or clashing noises when shifting into 3rd gear	Deflected lubrication condition causing early 3rd gear wear	INSTALL a new 3rd gear, 3rd/4th gear shift fork, outer synchronizer ring, inner synchronizer ring, 3rd gear synchronizer cone, 3rd/4th gear synchronizer assembly. REFER to: Input Shaft (308-03A Manual Transmission - Vehicles With: 5-Speed Manual Transmission - MTX75, Disassembly and Assembly of Subassemblies). and/or REFER to: Output Shaft (308-03A Manual Transmission - Vehicles With: 5-Speed Manual Transmission - MTX75, Disassembly and Assembly of Subassemblies).

Copyright © Ford Motor Company

Manual Transmission

Symptom Chart(s)

Symptom Chart: Transmission

Diagnostics in this manual assume a certain skill level and knowledge of Ford-specific diagnostic practices.

Condition	Possible Sources	Actions
Gears clash when shifting from one forward gear to another	Gear teeth/synchronizer damaged	Replace transmission. REFER to: Transmission - 2.0L EcoBoost (184kW/250PS) - MI4 (308-03B Manual Transmission - Vehicles With: 6-Speed Manual Transmission - MMT6, Removal).
Transaxle jumps out of gear	Bolts retaining transaxle to engine loose	REFER to: Transmission - 2.0L EcoBoost (184kW/250PS) - MI4 (308-03B Manual Transmission - Vehicles With: 6-Speed Manual Transmission - MMT6, Installation).
	• Preload incorrect • Internal components damaged	Replace transmission. REFER to: Transmission - 2.0L EcoBoost (184kW/250PS) - MI4 (308-03B Manual Transmission - Vehicles With: 6-Speed Manual Transmission - MMT6, Removal).
	Gear teeth worn/damaged	Replace transmission. REFER to: Transmission - 2.0L EcoBoost (184kW/250PS) - MI4 (308-03B Manual Transmission - Vehicles With: 6-Speed Manual Transmission - MMT6, Removal).
Transaxle will not shift into one gear - all others OK	Internal components	Replace transmission. REFER to: Transmission - 2.0L EcoBoost (184kW/250PS) - MI4 (308-03B Manual Transmission - Vehicles With: 6-Speed Manual Transmission - MMT6, Removal).
Transaxle is locked in one gear and will not shift out of that gear	Internal components	Replace transmission. REFER to: Transmission - 2.0L EcoBoost (184kW/250PS) - MI4 (308-03B Manual Transmission - Vehicles With: 6-Speed Manual Transmission - MMT6, Removal).
Significant effort required when downshifting	Gear synchronization is inadequate. Gear teeth/synchronizer damaged	Replace transmission. REFER to: Transmission - 2.0L EcoBoost (184kW/250PS) - MI4 (308-03B Manual Transmission - Vehicles With: 6-Speed Manual Transmission - MMT6, Removal).
Stiff gearshift	Transmission fluid	CHECK that the transaxle is filled with the specified transmission fluid and, if necessary, FILL and ADD transmission fluid as necessary. REFER to: Transmission Draining and Filling (308-03B Manual Transmission - Vehicles With: 6-Speed Manual Transmission - MMT6, General Procedures).
	Damaged synchronizer rings or inner selector mechanism	Replace transmission. REFER to: Transmission - 2.0L EcoBoost (184kW/250PS) - MI4 (308-03B Manual Transmission - Vehicles With: 6-Speed Manual Transmission - MMT6, Removal).

One of the gears can not be selected	Fault between the gearshift lever and gearshift lever housing	INSPECT the gearshift lever. REFER to: Gearshift Cable Adjustment - Vehicles With: 6-Speed Manual Transmission - MMT6 (308-06 Manual Transmission External Controls, General Procedures).
Reverse gear can not be selected	Gearshift lever	CHECK the gearshift lever for damage. REPAIR as necessary, remove the gearshift lever to see whether reverse gear can be selected. REFER to: Gearshift Cable Adjustment - Vehicles With: 6-Speed Manual Transmission - MMT6 (308-06 Manual Transmission External Controls, General Procedures).
	Internal components	Replace transmission. REFER to: Transmission - 2.0L EcoBoost (184kW/250PS) - MI4 (308-03B Manual Transmission - Vehicles With: 6-Speed Manual Transmission - MMT6, Removal).
Grinding or clashing noises when shifting into 3rd gear	Deflected lubrication condition causing early 3rd gear wear	Replace transmission. REFER to: Transmission - 2.0L EcoBoost (184kW/250PS) - MI4 (308-03B Manual Transmission - Vehicles With: 6-Speed Manual Transmission - MMT6, Removal).

Copyright © Ford Motor Company

Specifications

Engine

Item	Specification
Displacement	2.0L (122 CID)
No. of cylinders	4
Bore/stroke	3.4 –3.3 in (87.5 –83.1 mm)
Firing order	1-3-4-2
Compression ratio	12:1
Engine weight - Automatic	235.0 lb (106.6 kg)
Engine weight - Manual	266.1 lb (120.7 kg)
Engine and automatic transmission weight	402.6 lb (182.6 kg)
Engine and manual transmission weight	380.7 lb (172.7 kg)

Lubricants

Item	Specification
Motorcraft® SAE 5W-20 Premium Synthetic Blend Motor Oil (US); Motorcraft® SAE 5W-20 Super Premium Motor Oil (Canada)	XO-5W20-QSP (US); CXO-5W20-LSP12 (Canada)

Engine Oil Capacity

Item	Specification
Service fill including oil filter	4.54 qt (4.3 L)

Oil Pressure

Item	Specification
Oil pressure (hot @ 2,000 rpm)	29.0 –38.8 psi (200 –268 kPa)

Cylinder Block

Item	Specification
Cylinder bore diameter	3.445 –3.446 in (87.5 –87.52 mm)
Cylinder bore maximum out-of-round	0.0003 in (.008 mm)
Main bearing bore diameter	2.245 –2.246 in (57.02 –57.038 mm)
Head gasket surface flatness	0.1 mm/general 0.05 mm/200 x 200 (0.004 in/ general) (0.0019 in/7.87 x 7.87)

Piston

Item	Specification
Piston diameter (single grade)	3.444 –3.444 in (87.473 –87.487 mm)
Piston-to-bore clearance	0.001 –0.002 in (.013 –.047 mm)
Ring groove width - top	0.048 –0.049 in (1.23 –1.25 mm)
Piston ring groove width - compression (bottom)	0.048 –0.049 in (1.23 –1.25 mm)
Ring groove width - oil	0.080 –0.081 in (2.03 –2.05 mm)
Piston skirt coating thickness	0.0003 –0.0007 in (.007 –.017 mm)

Piston Pin

Item	Specification
Diameter	0.827 –0.827 in (20.997 –21 mm)
Length	2.08 –2.09 in (52.8 –53.1 mm)
Piston-to-pin clearance	0.0002 –0.0004 in (.004 –.011 mm)
Piston pin-to-rod clearance	0.0001 –0.0007 in (.003 –.018 mm)

Cylinder Head

Item	Specification
Cylinder head flatness	0.08 mm (0.0031 in) maxim overall, a maximum of 0.05 mm (0.0020 in) within 150 mm (5.9055 in) and a maximum of 0.025 mm (0.0010 in) within 25 mm (0.9843 in)

Valve lift @ zero lash (exhaust)	0.346 in (8.8 mm)
Valve lift @ zero lash (intake)	0.346 in (8.8 mm)
Valve guide diameter	0.217 –0.218 in (5.509 –5.539 mm)
Valve seat width - intake/exhaust	0.0551 ± 0.0591 in (1.4 ± 1.5 mm)
Valve seat angle	44.5
Valve seat runout	0.003 in (.075 mm)
Valve lash adjuster bore diameter	1.22 –1.22 in (31 –31.03 mm)
Cam bore diameter	0.985 –0.986 in (25.015 –25.04 mm)
Cam bore diameter - front journal	1.341 –1.340 in (34.07 –34.045 mm)

Valve

Item	Specification
Valve head diameter - intake	1.372 ± 1.384 in (34.85 ± 35.15 mm)
Valve head diameter - exhaust	1.136 ± 1.148 in (28.85 ± 29.15 mm)
Valve stem diameter - intake	0.2154 ± 0.2159 in (5.47 ± 5.485 mm)
Valve stem diameter - exhaust	0.2152 ± 0.2157 in (5.465 ± 5.48 mm)
Valve stem-to-guide clearance - intake	0.0012 –0.0028 in (.03 –.07 mm)
Valve stem-to-guide clearance - exhaust	0.0012 –0.0028 in (.03 –.07 mm)
Valve face runout	0.002 in (.05 mm)
Valve face angle	45.25 –45.75

Valve Spring — Compression Pressure

Item	Specification
Intake and exhaust (installed)	37.478 lb (17 kg)
Intake (valve open) 9.2 mm (0.3622 in) of lift	85.979 lb (39 kg)
Exhaust (valve open) 9.2 mm (0.3622 in) of lift	85.979 lb (39 kg)
Free length	1.8701 in (47.5 mm)
Assembled height	1.4921 in (37.9 mm)

Crankshaft

Item	Specification
Main bearing journal diameter	2.046 –2.047 in (51.98 –52 mm)
Production repair	2,036.614 –2,037.402 in (51.73 –51.75 m)
Main bearing clearance	0.0007 –0.0014 in (.019 –.035 mm)
Connecting rod journal diameter	1.850 –1.850 in (46.98 –47 mm)
End play	0.009 –0.018 in (.22 –.45 mm)

Rings

Item	Specification
Width - top	0.0461 –0.0469 in (1.17 –1.19 mm)
Width - bottom	0.0461 –0.0469 in (1.17 –1.19 mm)
Width - oil expander	0.0701 –0.0776 in (1.78 –1.97 mm)
Ring gap (in bore) - top	0.0067 –0.0106 in (.17 –.27 mm)
Ring gap (in bore) - bottom	0.0177 –0.0256 in (.45 –.65 mm)
Ring gap (in bore) - oil	0.0059 –0.0177 in (.15 –.45 mm)

Valve Tappet

Item	Specification
Diameter	1.219 –1.219 in (30.97 –30.964 mm)
Tappet-to-valve clearance - intake	0.009 –0.013 in (.23 –.33 mm)
Tappet-to-valve clearance - exhaust	0.012 –0.016 in (.31 –.41 mm)
Tappet-to-bore clearance	0.0008 –0.0024 in (.02 –.06 mm)

Camshaft

Item	Specification
Lobe lift - intake	0.35 in (8.8 mm)
Lobe lift - exhaust	0.346 in (8.8 mm)
Runout	0.0012 in (.03 mm)
Thrust clearance	0.00 –0.01 in (.115 –.145 mm)

Journal diameter	0.9827 –0.9835 in (24.96 –24.98 mm)
Journal-to-bore clearance	0.0014 –0.0031 in (.035 –.08 mm)

Connecting Rod

Item	Specification
Connecting rod bearing-to-crankshaft clearance	0.0011 –0.0020 in (.027 –.052 mm)
Connecting rod bearing thickness	0.0589 –0.0598 in (1.496 –1.52 mm)
Connecting rod crankshaft bore diameter	1.969 –1.970 in (50.025 –50.045 mm)
Connecting rod pin bore diameter	0.827 –0.827 in (21.003 –21.015 mm)
Connecting rod length (center-to-center)	5.76 in (146.25 mm)
Connecting rod side clearance (assembled to crank)	0.1020 –0.1453 in (2.59 –3.69 mm)
Axial clearance	0.0055 –0.0154 in (.139 –.391 mm)

Copyright © Ford Motor Company

Engine - Overview

Overview

The 2.0L Twin Independent Variable Cam Timing (Ti-VCT) Gasoline Direct Injection (GDI) 4-cylinder engine has the following features:

- Dual overhead camshafts
- Four valves per cylinder
- Composite intake manifold
- Aluminum cylinder head
- Gasoline Direct Injection (GDI)
- Twin Independent Variable Cam Timing (Ti-VCT)
- An electronic ignition system with 4 ignition coil-on-plugs

Engine Identification

Always refer to these labels when installation of new parts is necessary or when checking engine calibrations. The engine parts often differ within a CID family. Verification of the identification codes will make sure the correct parts are obtained. These codes contain all the pertinent information relating to the dates, optional equipment and revisions.

Engine Code Information Label

The engine code information label, located on the front cover, contains the following:

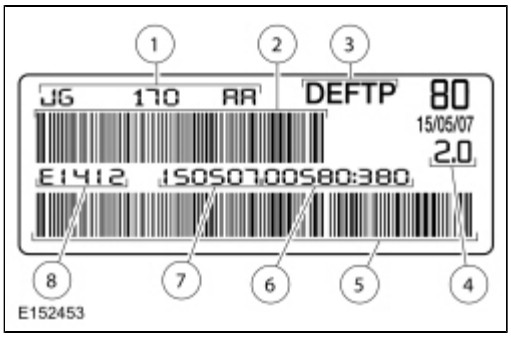

Item	Description
1	Engine part number
2	Bar code
3	Dearborn engine plant
4	Engine displacement
5	Bar code
6	Bar code
6	Running number
7	Engine build date (DDMMYY)
8	Plant shift line

Engine Cylinder Identification

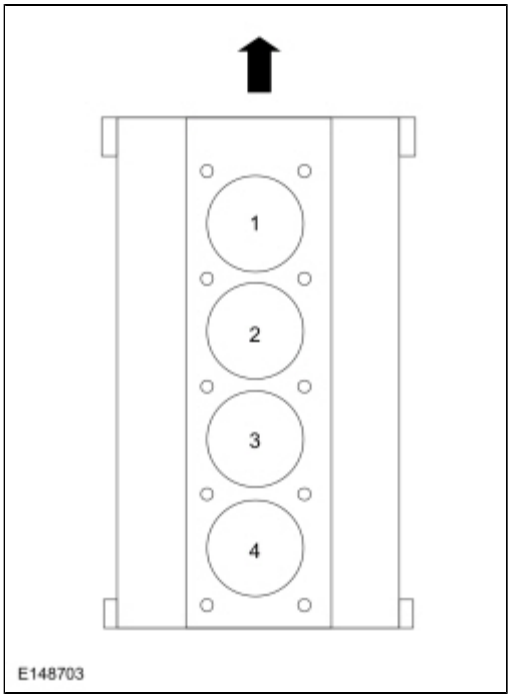

Oil Flow Diagram

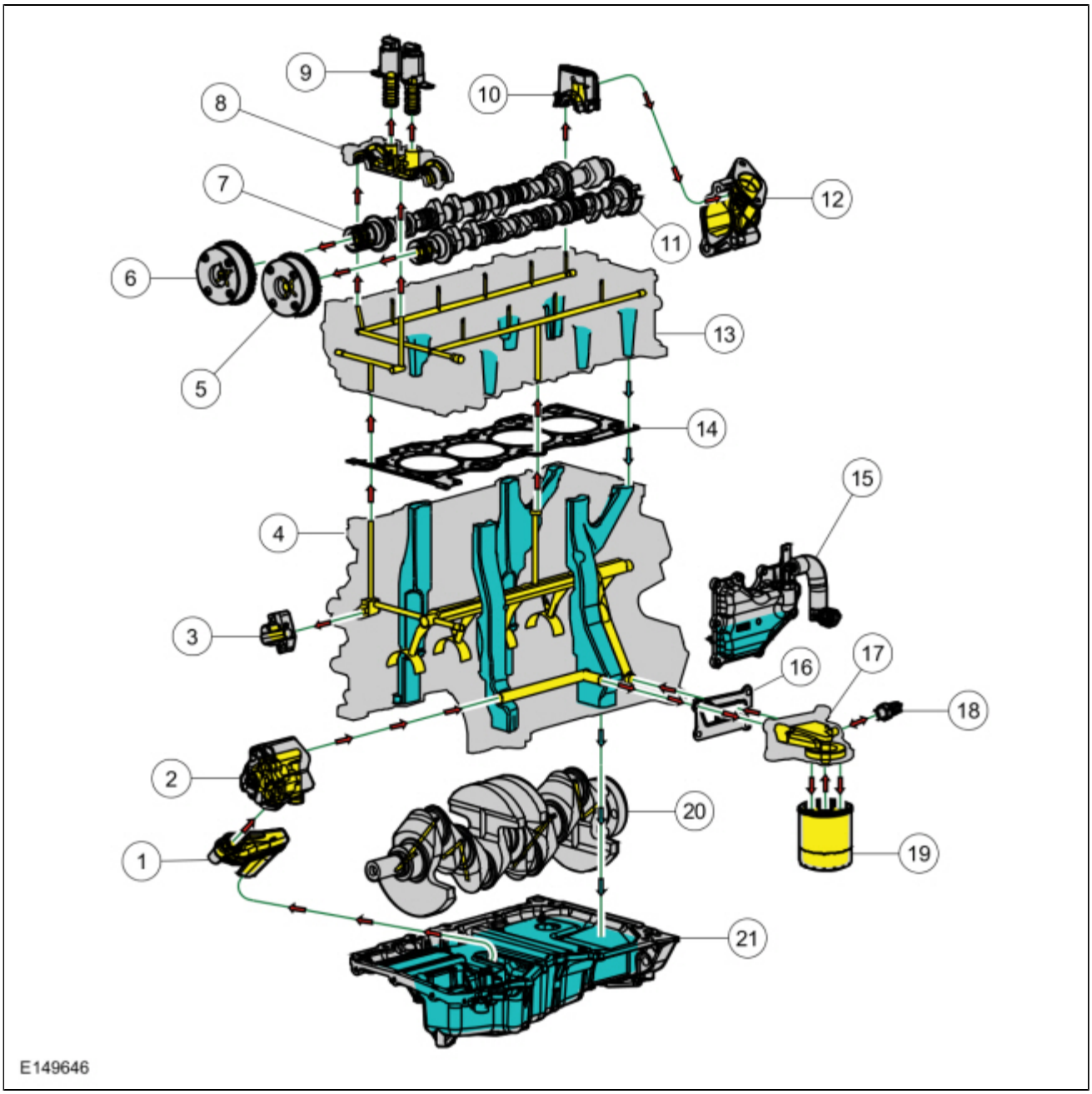

Item	Service Part Number	Description
1	6622	Oil pump screen and pickup tube
2	6600	Oil pump
3	6K254	Timing chain tensioner
4	6010	Cylinder block
5	6C524	Intake VCT unit
6	6C525	Exhaust VCT unit
7	6A272	Exhaust camshaft
8	6B280	Camshaft front bearing cap
9	6B297	VCT oil control solenoid
10	6B284	Camshaft rear bearing cap

11	6A271	Intake camshaft
12	9A413	Fuel pump housing
13	6049	Cylinder head
14	6051	Head gasket
15	6A785	Crankcase vent oil separator
16	6A636	Oil filter adapter gasket
17	6884	Oil filter adapter
18	9278	Oil Pressure switch
19	6714	Oil filter
20	6303	Crankshaft
21	6675	Oil pan

System Operation

Valve Train

The valve train uses Direct Acting Mechanical Buckets (DAMB). The camshaft lobes are positioned directly above mechanical buckets which are positioned on top of the valves.

Twin Independent Variable Cam Timing (Ti-VCT) System

The Twin Independent Variable Cam Timing (Ti-VCT) system allows variable control of intake valve closing which optimizes combustion at full load providing improved power and low speed torque (broadening the torque curve) which enables variable valve overlap which provides better fuel economy and emissions and provides optimized cold start operation with improved exhaust emissions.

PCV System

All engines are equipped with a closed-type Positive Crankcase Ventilation (PCV) system recycling the crankcase vapors to the intake manifold.

Lubrication System

The engine lubrication system is of the force-feed type in which oil is supplied under full pressure to the crankshaft, connecting rod bearings, timing chain tensioners, camshaft bearing caps and VCT solenoids. The flow of oil to the valve tappets and valve train is controlled by a restricting orifice located in the cylinder head gasket.

The lubrication system is designed to provide optimum oil flow to critical components of the engine through its entire operating range.

The heart of the system is a positive displacement internal gear oil pump.

Generically, this design is known as a gerotor pump, which operates as follows:

- The oil pump is chain driven off of the crankshaft. The oil pump is chain driven off of the crankshaft.
- System pressure is limited by an integral, internally-vented relief valve which directs the bypassed oil back to the inlet side of the oil pump. System pressure is limited by an integral, internally-vented relief valve which directs the bypassed oil back to the inlet side of the oil pump.
- Oil pump displacement has been selected to provide adequate volume to make sure of correct oil pressure both at hot idle and maximum speed. Oil pump displacement has been selected to provide adequate volume to make sure of correct oil pressure both at hot idle and maximum speed.
- The relief valve calibration protects the system from excessive pressure during high-viscosity conditions. The relief valve calibration protects the system from excessive pressure during high-viscosity conditions.
- The relief valve is designed to provide adequate connecting rod bearing lubrication under high temperature and high-speed conditions. The relief valve is designed to provide adequate connecting rod bearing lubrication under high temperature and

high-speed conditions.

Copyright © Ford Motor Company

Engine

For basic engine mechanical concerns.
REFER to: Engine (303-00 Engine System - General Information, Diagnosis and Testing).
For driveability symptoms. Refer to Powertrain Control/Emissions Diagnosis (PC/ED) manual.

Copyright © Ford Motor Company

Valve Clearance Check

1. Refer to: Valve Cover (303-01A Engine - 2.0L Duratec-HE (125kW/170PS) - MI4, Removal and Installation).

2. **NOTE:** *Turn the engine clockwise only, and only use the crankshaft bolt.*

   NOTE: *Before removing the camshafts, measure the clearance of each valve at base circle, with the lobe pointed away from the tappet. Failure to measure all clearances prior to removing the camshafts will necessitate repeated removal and installation and wasted labor time.*

   Measure the clearance of each valve and record its location. A midrange clearance is the most desirable.
   General Equipment : Feeler Gauge

   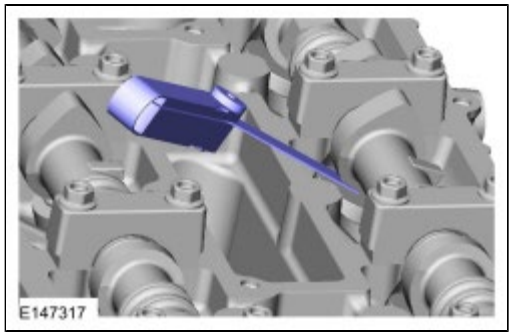

3. **NOTE:** *The number on the valve tappet reflects the thickness of the valve tappet. For example, a tappet with the number 3.310 has the thickness of 3.31 mm (0.1303 in).*

   NOTE: *The number on the valve tappet reflects the thickness of the valve tappet. For example, a tappet with the number 3.310 has the thickness of 3.31 mm (0.1303 in).*

   - Intake: 0.23 mm (0.0091 in) - 0.33 mm (0.0130 in).
   - Exhaust: 0.31 mm (0.0122 in) - 0.41 mm (0.0161 in).

4. If any of the valve clearances are out of specification, select new tappets using this formula: tappet thickness = measured clearance + the base tappet thickness - most desirable thickness. Select the tappets and mark the installation location.

5. If any tappets do not measure within specifications, install new tappets in these locations.
   Refer to: Valve Tappets (303-01A Engine - 2.0L Duratec-HE (125kW/170PS) - MI4, Removal and Installation).

Copyright © Ford Motor Company

Intake Manifold

Removal

1. Refer to: Jacking and Lifting - Overview (100-02 Jacking and Lifting, Description and Operation).
2. Refer to: Battery Disconnect and Connect (414-01 Battery, Mounting and Cables, General Procedures).
3. 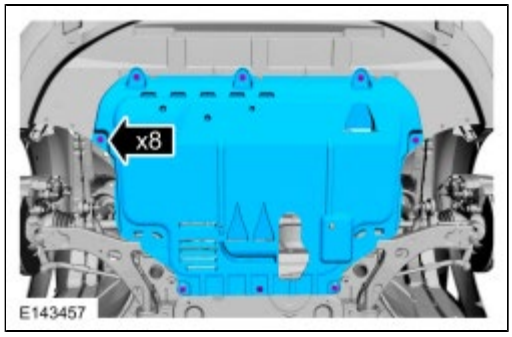

4. 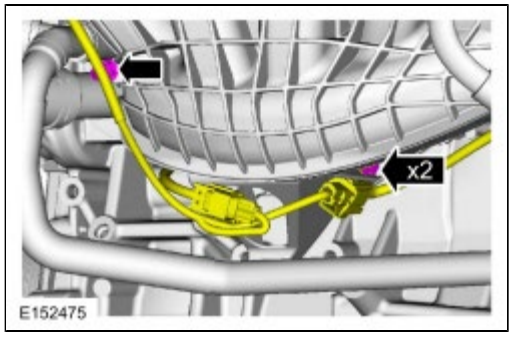

5. 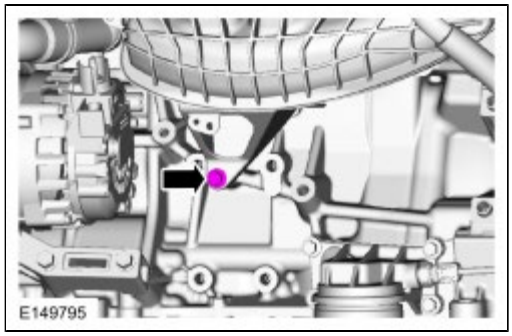

6.

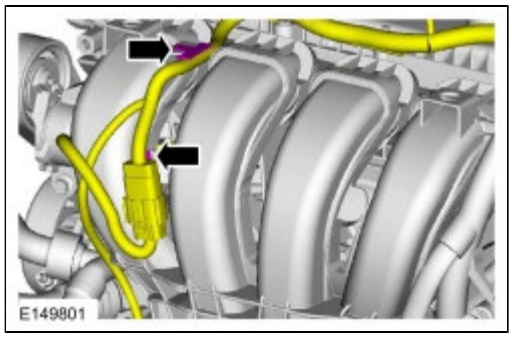

7. Refer to: Air Cleaner Outlet Pipe (303-12A Intake Air Distribution and Filtering - 2.0L Duratec-HE (125kW/170PS) - MI4, Removal and Installation).

8.

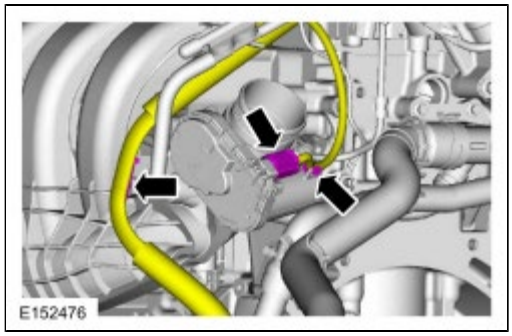

9. Refer to: Quick Release Coupling (310-00A Fuel System - General Information, General Procedures).

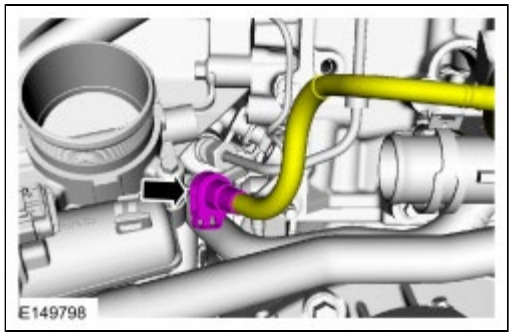

10.

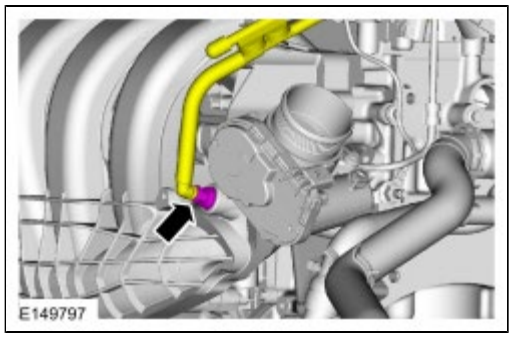

11. **NOTE:** *Position back the intake manifold to allow access to disconnect the crankcase ventilation oil separator tube from the intake manifold.*

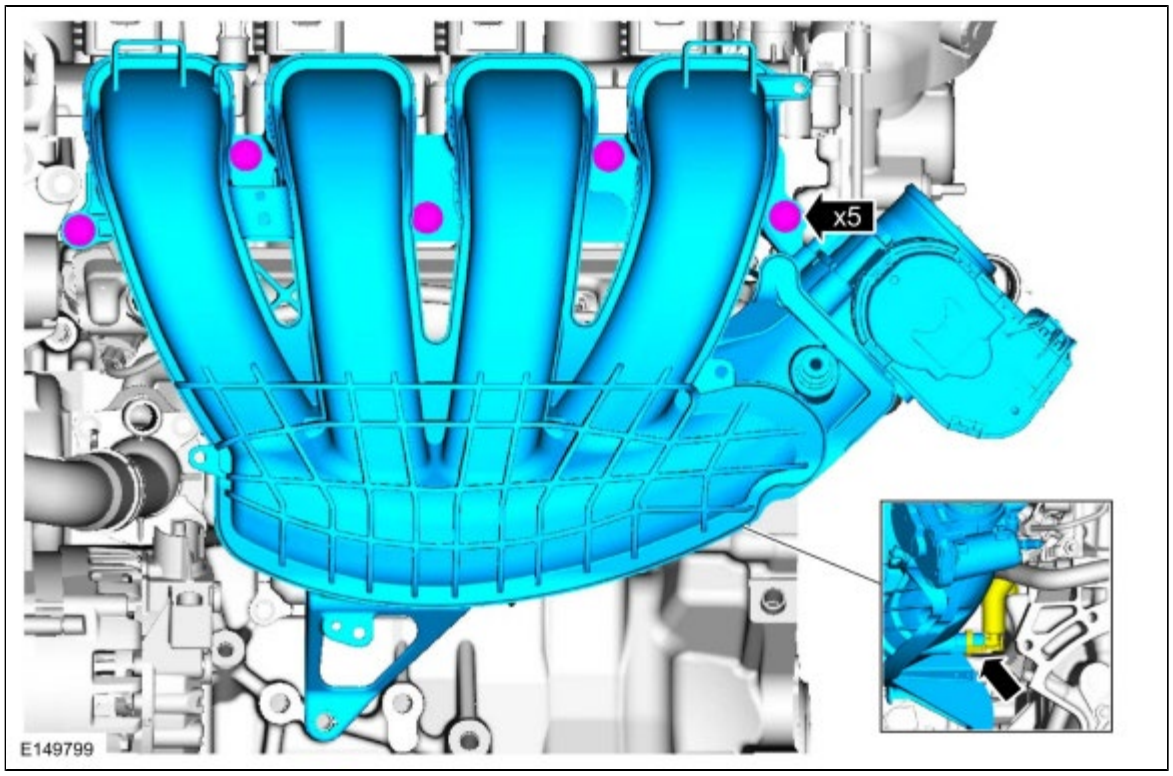

Installation

NOTICE: If the engine is repaired or replaced because of upper engine failure, typically including valve or piston damage, check the intake manifold for metal debris. If metal debris is found, install a new intake manifold. Failure to follow these instructions can result in engine damage.

1. **NOTE:** *Install new intake manifold gaskets if necessary.*

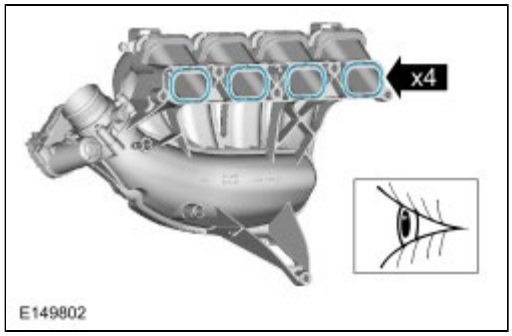

2. Finger tight.

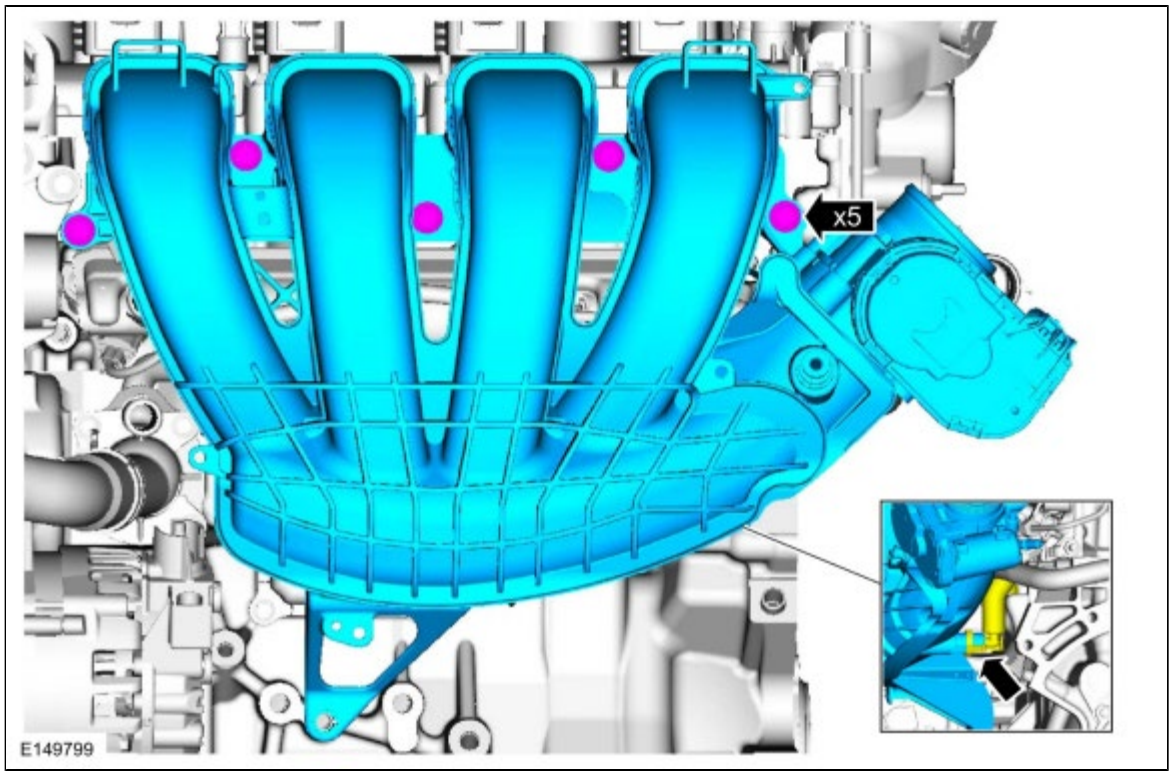

3. Finger tight.

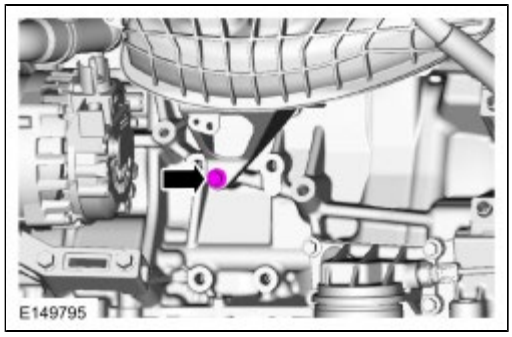

4. *Torque* : 20 Nm

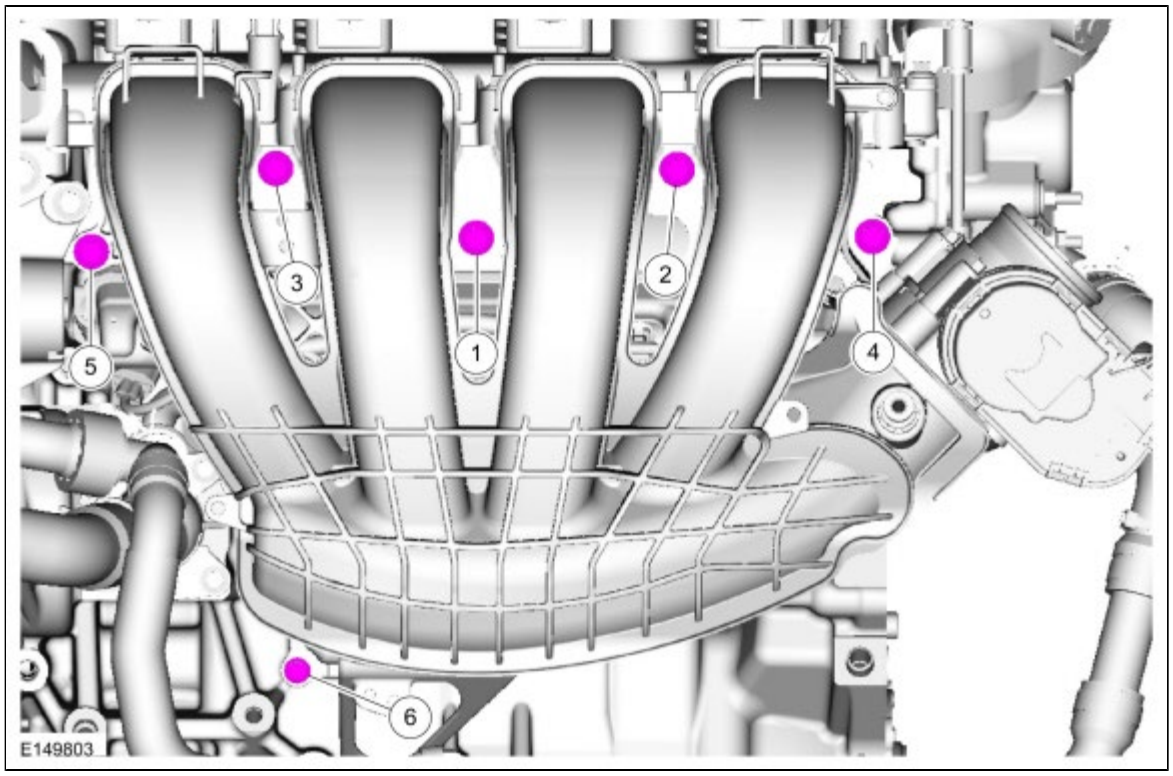

5.

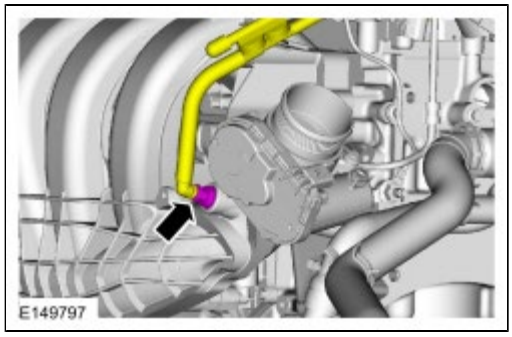

6. Refer to: Quick Release Coupling (310-00A Fuel System - General Information, General Procedures).

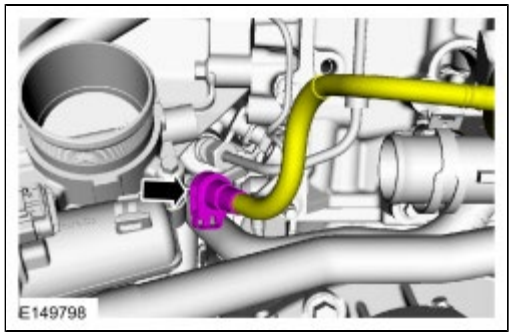

7.

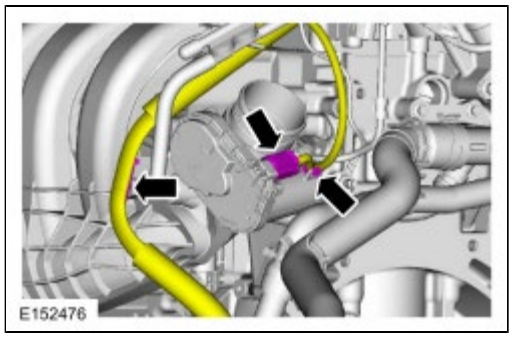

8. Refer to: Air Cleaner Outlet Pipe (303-12A Intake Air Distribution and Filtering - 2.0L Duratec-HE (125kW/170PS) - MI4, Removal and Installation).

9.

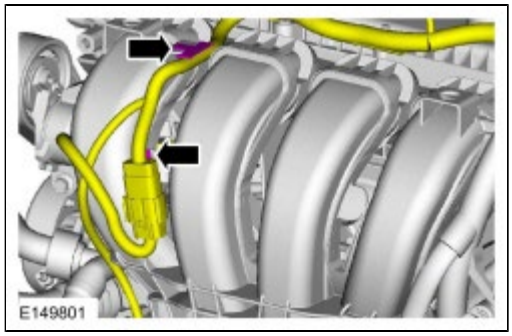

10.

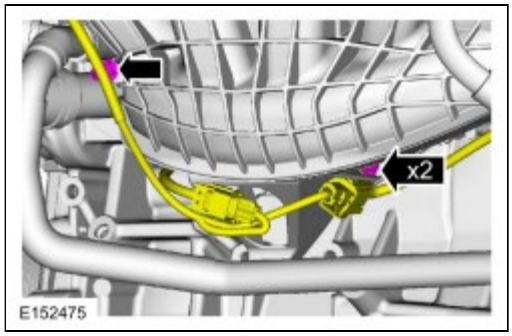

11.

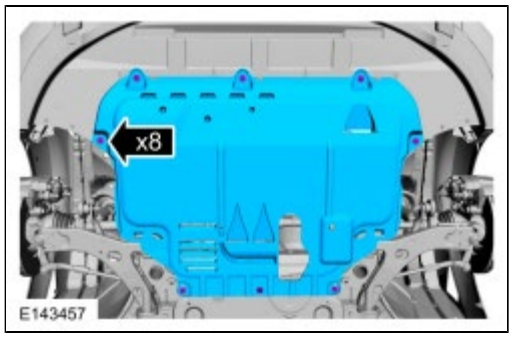

12. Refer to: Battery Disconnect and Connect (414-01 Battery, Mounting and Cables, General Procedures).

Copyright © Ford Motor Company

Valve Cover

Removal

NOTICE: During engine repair procedures, cleanliness is extremely important. Any foreign material, including any material created while cleaning gasket surfaces, that enters the oil passages, coolant passages or the oil pan can cause engine failure.

1. Refer to: Ignition Coil-On-Plug (303-07A Engine Ignition - 2.0L Duratec-HE (125kW/170PS) - MI4, Removal and Installation).
2. 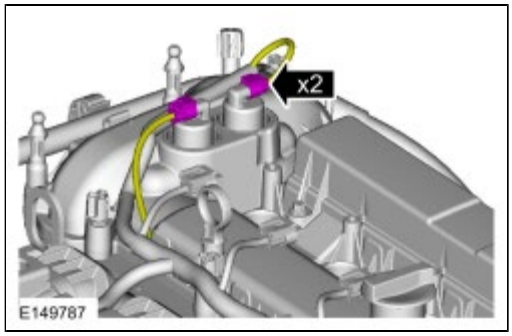

3. 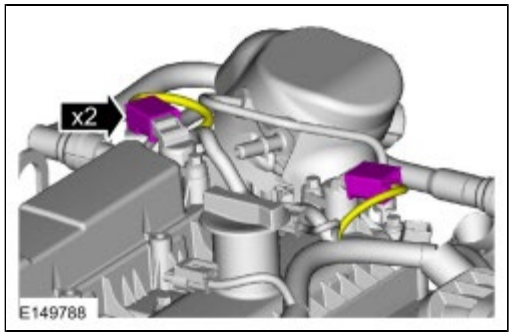

4. 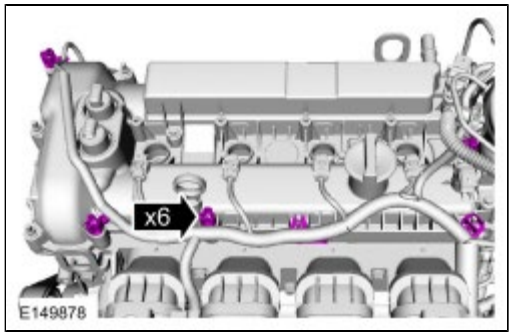

5. Refer to: Quick Release Coupling (310-00A Fuel System - General Information, General Procedures).

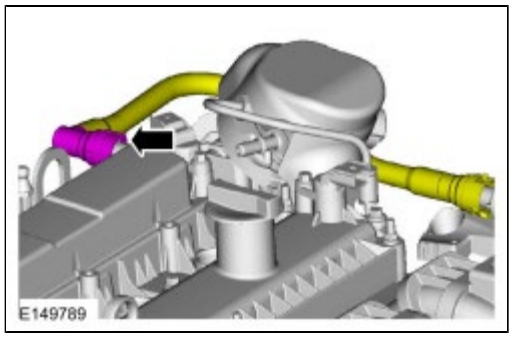

6.

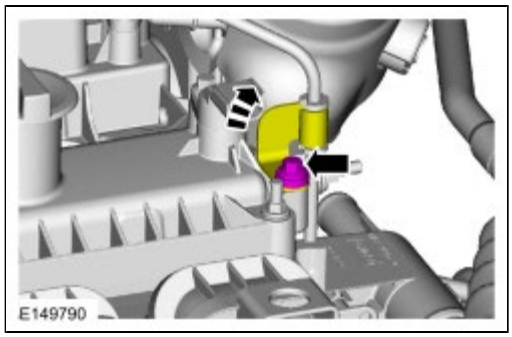

7.

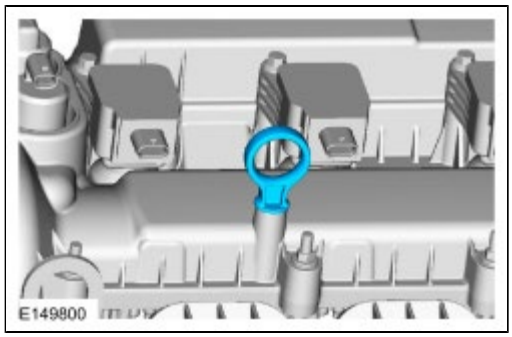

8. If equipped.

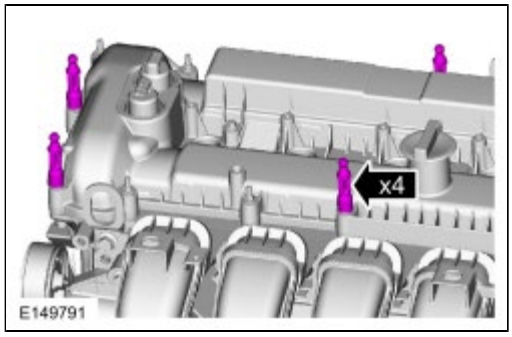

9. **NOTE:** *Discard the valve cover gasket.*

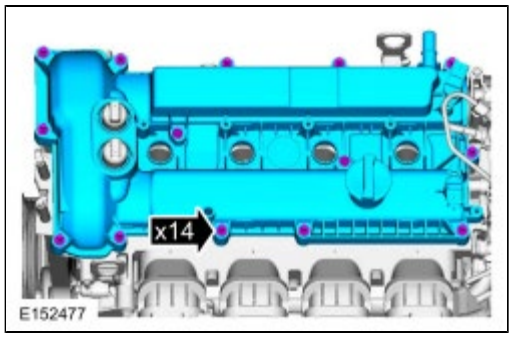

10. **NOTE:** *The Variable Camshaft Timing (VCT) solenoid seals should only be replaced if they are damaged.*

    Special Tool(s) : 205-153 (T80T-4000-W) Handle , 303-1247/1 Remover, VCT Spark Plug Tube Seal

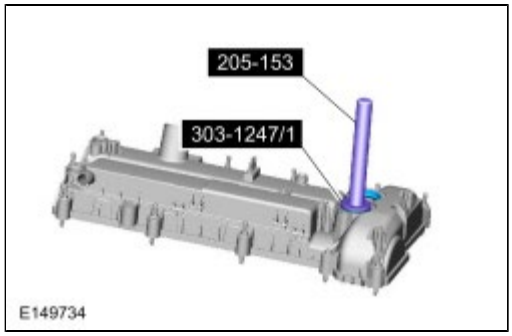

Installation

1. **NOTICE: Do not use metal scrapers, wire brushes, power abrasive discs or other abrasive means to clean the sealing surfaces. These tools cause scratches and gouges which make leak paths.**

   Clean and inspect the sealing surfaces.

2. **NOTE:** *Installation of new seals is only required if damaged seals were removed during removal of the valve cover.*

   Special Tool(s) : 205-153 (T80T-4000-W) Handle , 303-1247/2 Installer, VCT Spark Plug Tube Seal

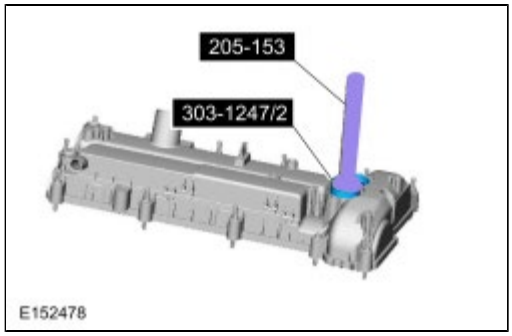

3. **NOTE:** *The valve cover must be secured within 10 minutes of silicone gasket application. If the valve cover is not secured within 10 minutes, the sealant must be removed and the sealing area cleaned with Motorcraft Metal Surface Prep.*

   Material : Silicone Gasket and Sealant / TA-30 (WSE-M4G323-A4)

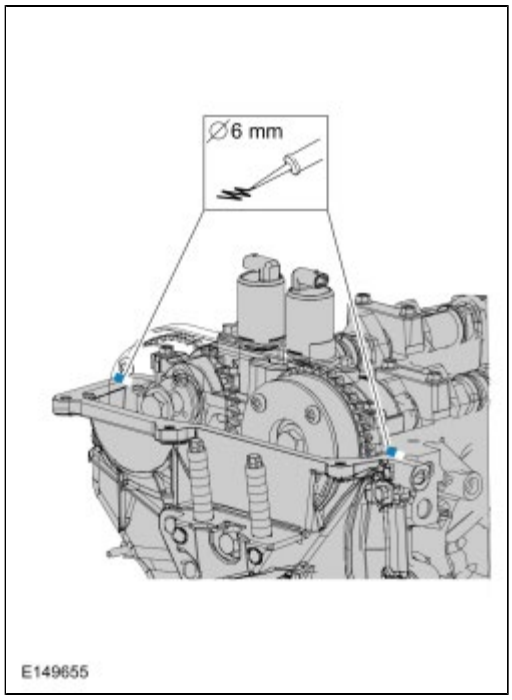

4. **NOTE:** *Install a new valve cover gasket.*

   Torque : 10 Nm

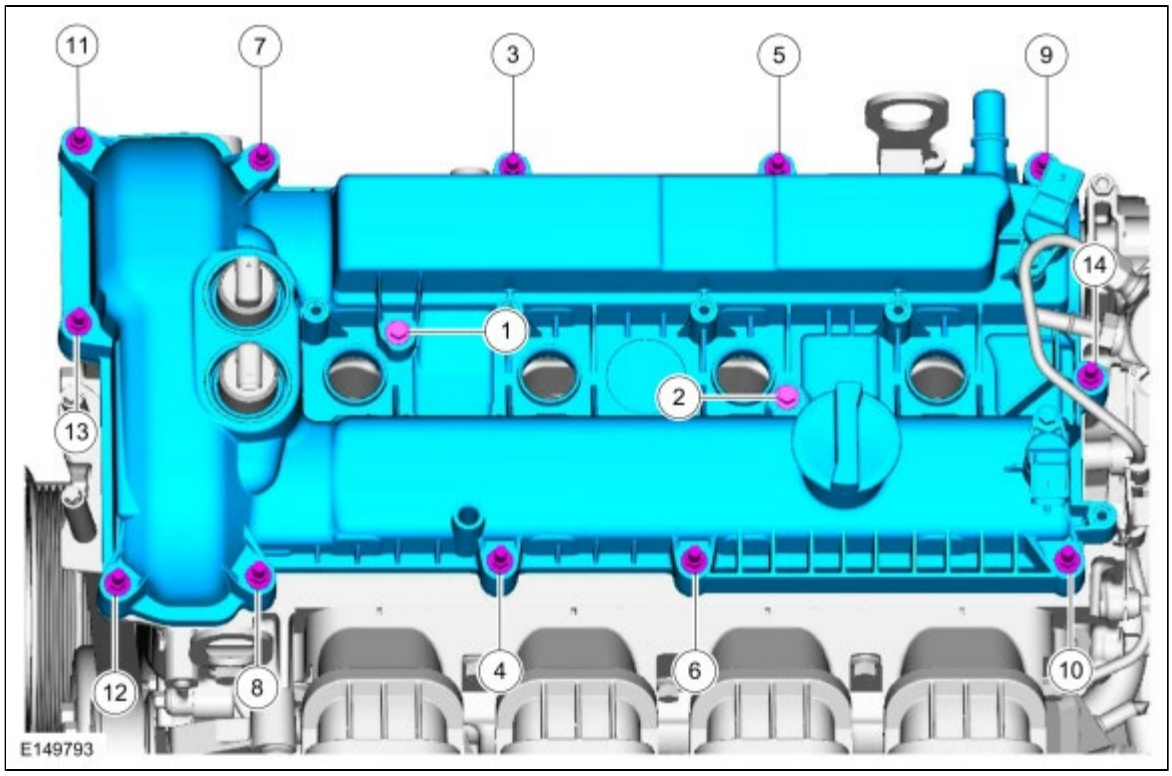

5. If equipped.
   Torque : 3 Nm

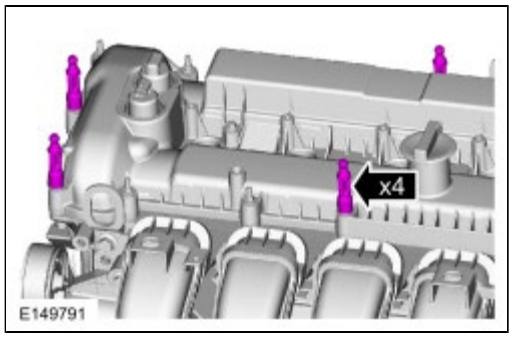

6.

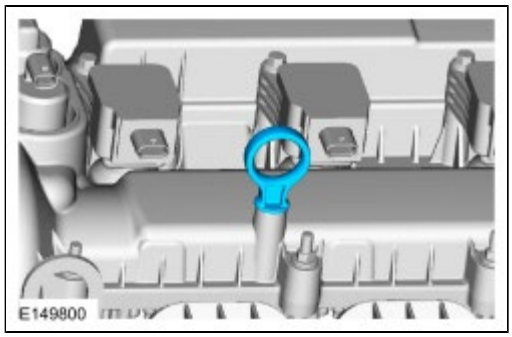

7. *Torque* : 10 Nm

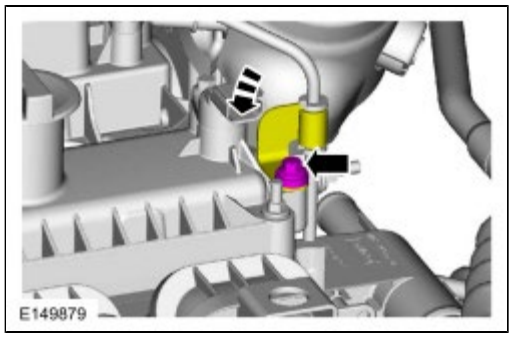

8. Refer to: Quick Release Coupling (310-00A Fuel System - General Information, General Procedures).

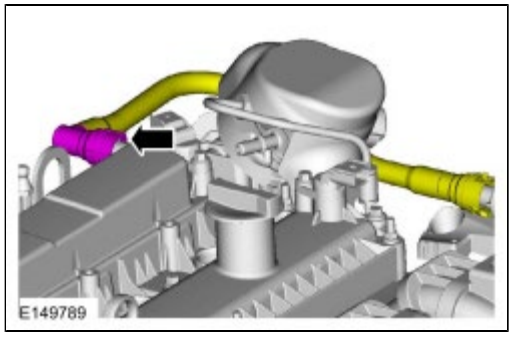

9.

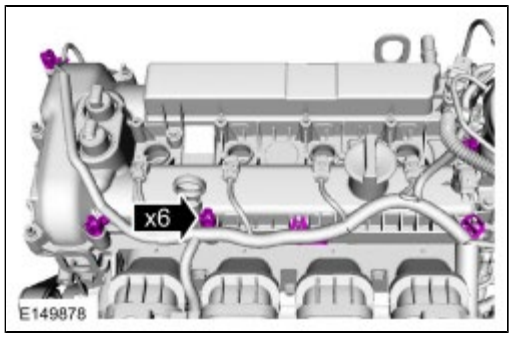

10.

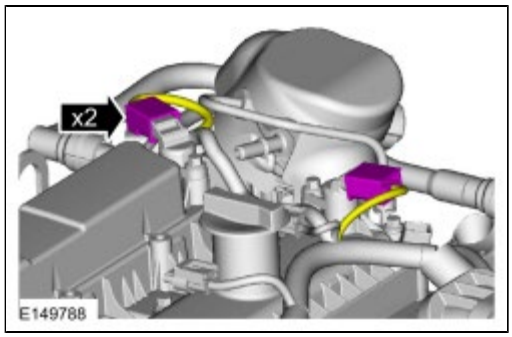

11.

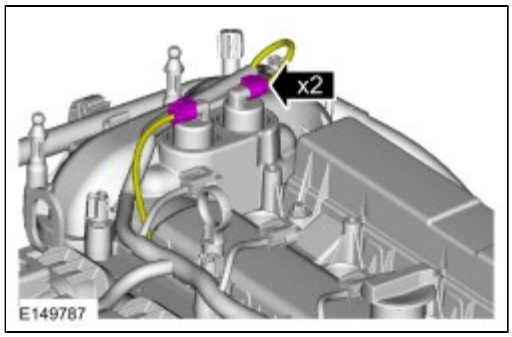

12. Refer to: Ignition Coil-On-Plug (303-07A Engine Ignition - 2.0L Duratec-HE (125kW/170PS) - MI4, Removal and Installation).

Copyright © Ford Motor Company

Crankshaft Pulley

Removal

NOTICE: Do not loosen or remove the crankshaft pulley bolt without first installing the special tools as instructed in this procedure. The crankshaft pulley and the crankshaft timing sprocket are not keyed to the crankshaft. The crankshaft, the crankshaft sprocket and the pulley are fitted together by friction, using diamond washers between the flange faces on each part. For that reason, the crankshaft sprocket is also unfastened if the pulley bolt is loosened. Before any repair requiring loosening or removal of the crankshaft pulley bolt, the crankshaft and camshafts must be locked in place by the special service tools, otherwise severe engine damage can occur.

NOTICE: During engine repair procedures, cleanliness is extremely important. Any foreign material, including any material created while cleaning gasket surfaces, that enters the oil passages, coolant passages or the oil pan can cause engine failure.

NOTE: *Early build engines have a 6-rib crankshaft pulley, late build engines have a 4-rib crankshaft pulley. Early built shown.*

1. Refer to: Jacking and Lifting - Overview (100-02 Jacking and Lifting, Description and Operation).
2. 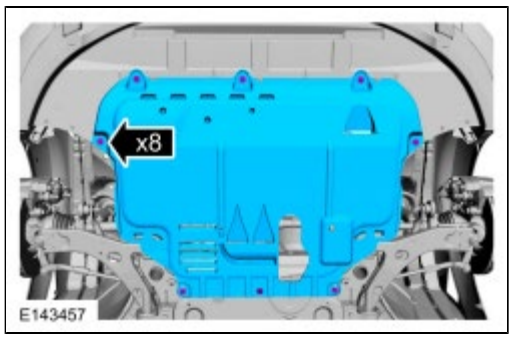

3. Remove the following items:
   1. Remove the RH front fender splash shield.
      Refer to: Fender Splash Shield (501-02 Front End Body Panels, Removal and Installation).
   2. Refer to: Air Cleaner Outlet Pipe (303-12A Intake Air Distribution and Filtering - 2.0L Duratec-HE (125kW/170PS) - MI4, Removal and Installation).
   3. Refer to: Accessory Drive Belt (303-05A Accessory Drive - 2.0L Duratec-HE (125kW/170PS) - MI4, Removal and Installation).
   4. Refer to: Valve Cover (303-01A Engine - 2.0L Duratec-HE (125kW/170PS) - MI4, Removal and Installation).
4. 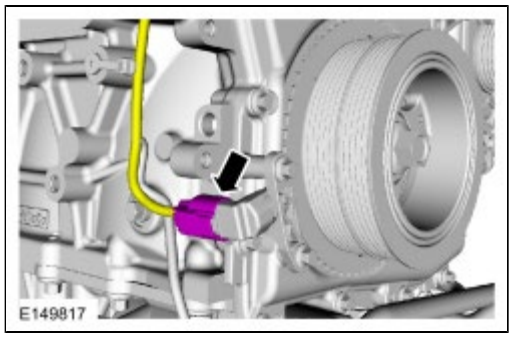

5.

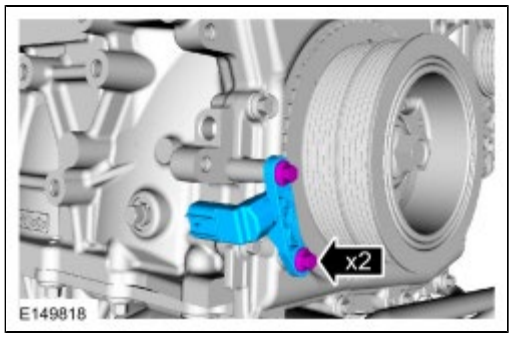

6. Turn the crankshaft until piston No.1 is 45 degrees before TDC by using the guide holes on the engine front cover and the crankshaft pulley.

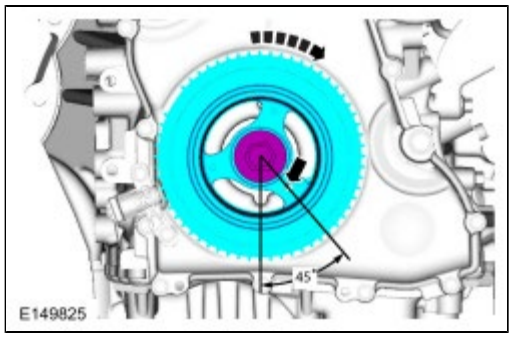

7.

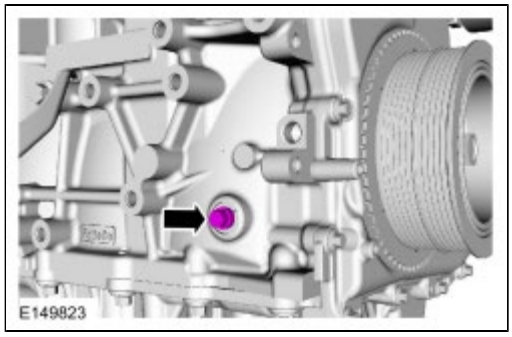

8. **NOTE:** *The special tool will contact the crankshaft and prevent it from turning past TDC . However, the crankshaft can still be rotated in the counterclockwise direction. The crankshaft must remain at the TDC position during the crankshaft pulley removal and installation.*

   Install the special tool and using the crankshaft pulley bolt, turn the crankshaft clockwise slowly until contact is made with the special tool.
   Special Tool(s) : 303-507 Timing Peg, Crankshaft TDC

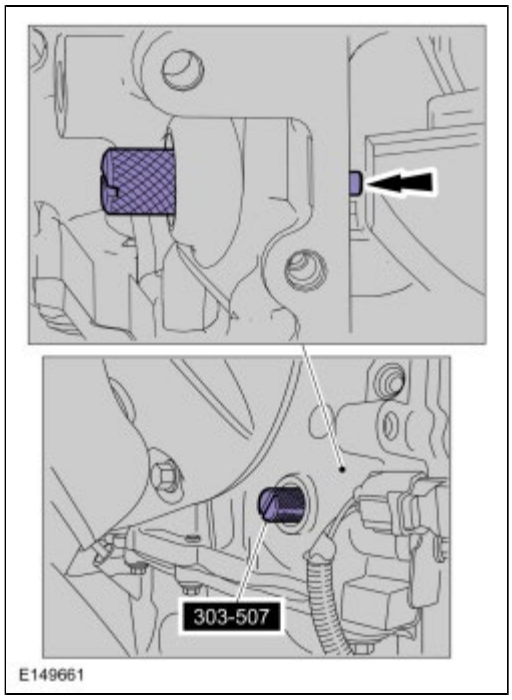

9. **NOTICE: The special tool is for camshaft alignment only. Using this tool to prevent engine rotation can result in engine damage.**

   NOTE: *The camshaft timing slots are offset. If the special tool cannot be installed, remove the special tool and rotate the crankshaft three-fourths of a revolution clockwise and repeat the previous step of this procedure.*

   Rotate the special tool so the tool number faces down and install into the rear of the intake camshaft slot as shown.
   Special Tool(s) : 303-1565 Alignment Tool, Camshaft

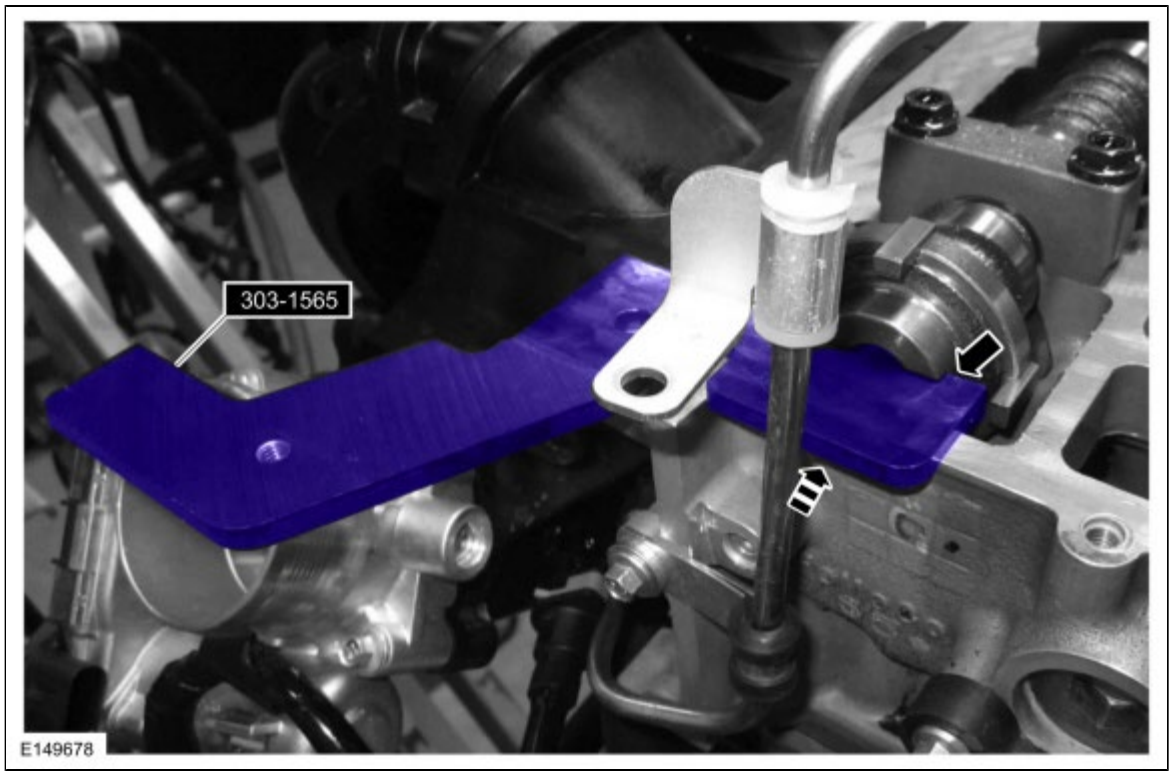

10. **NOTE:** *The crankshaft must remain in the TDC position during removal of the pulley bolt or damage to the engine can occur. Therefore, the crankshaft pulley must be held in place with the special tool , and the crankshaft pulley bolt should be removed using an air impact wrench (1/2-in drive minimum).*

    NOTE: *The crankshaft sprocket diamond washer may come off with the crankshaft pulley.*

- Use the special tool to hold the crankshaft pulley. Use an air impact wrench to remove the crankshaft pulley bolt.
  Special Tool(s) : 303-D055 (D85L-6000-A) Strap Wrench
- Remove and discard the crankshaft pulley bolt and washer.
- Remove the crankshaft pulley.

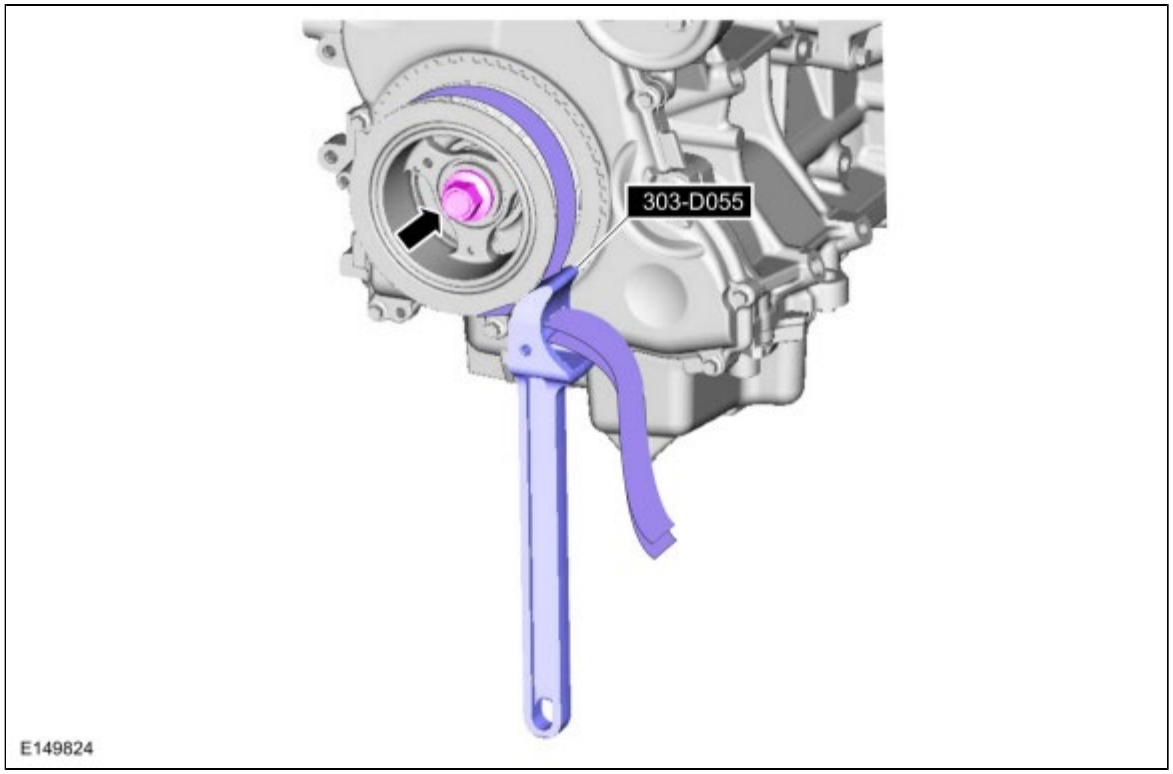

11. If the diamond washer did not come off with the crankshaft pulley, remove the diamond washer.

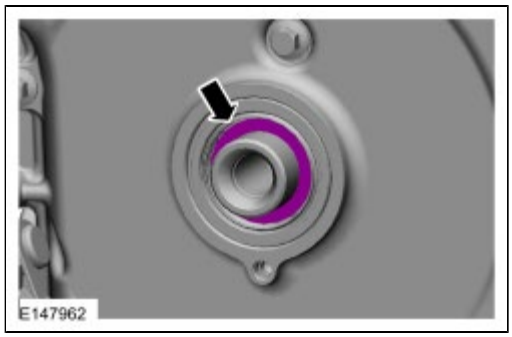

Installation

1. **NOTICE: The crankshaft sprocket diamond washer may come off with the crankshaft pulley. The diamond washer should be cleaned and inspected for any damage. If damage is evident, replace the diamond washer. If no damage, the diamond washer is to be reused. If the diamond washer is not installed, engine damage may occur.**

   Install the diamond washer onto the crankshaft.

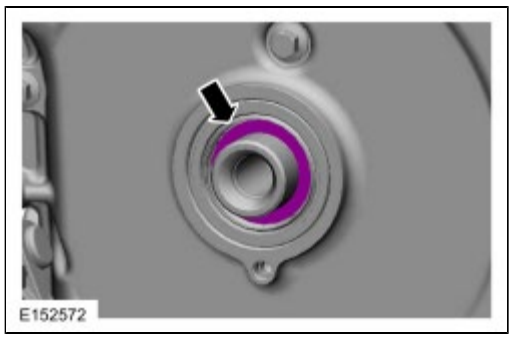

2. **NOTE:** *Do not install the crankshaft pulley bolt at this time.*

   NOTE: *Apply clean engine oil on the seal area before installing.*

   Position the crankshaft pulley onto the crankshaft with the crankshaft pulley TDC guide hole at the 6 o'clock position.
   Material : Motorcraft® SAE 5W-20 Premium Synthetic Blend Motor Oil / XO-5W20-QSP (WSS-M2C945-A)

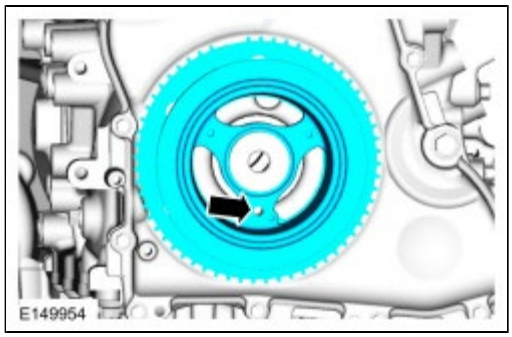

3. **NOTE:** *This step will correctly align the crankshaft pulley to the crankshaft.*

   Install a standard bolt through the crankshaft pulley TDC guide hole and into the engine front cover TDC guide hole.

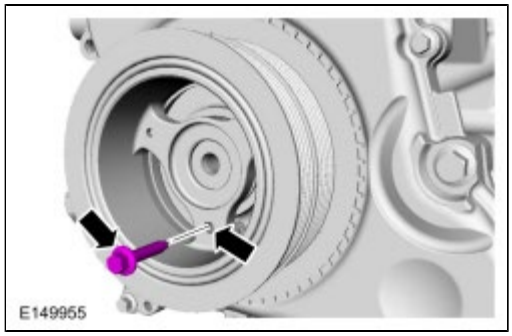

4. **NOTICE: The crankshaft must remain in the TDC position during installation of the pulley bolt or damage to the engine can occur. Therefore, the crankshaft pulley must be held in place with the special tool and a new bolt should be installed using hand tools only.**

   NOTE: *Do not reuse the crankshaft pulley bolt.*

   Install a new crankshaft pulley bolt. Use the special tool to hold the crankshaft pulley, tighten the crankshaft pulley bolt in 2 stages:
   Special Tool(s) : 303-D055 (D85L-6000-A) Strap Wrench
   Torque :
   Stage 1: 100 Nm
   Stage 2: Tighten an additional 90°

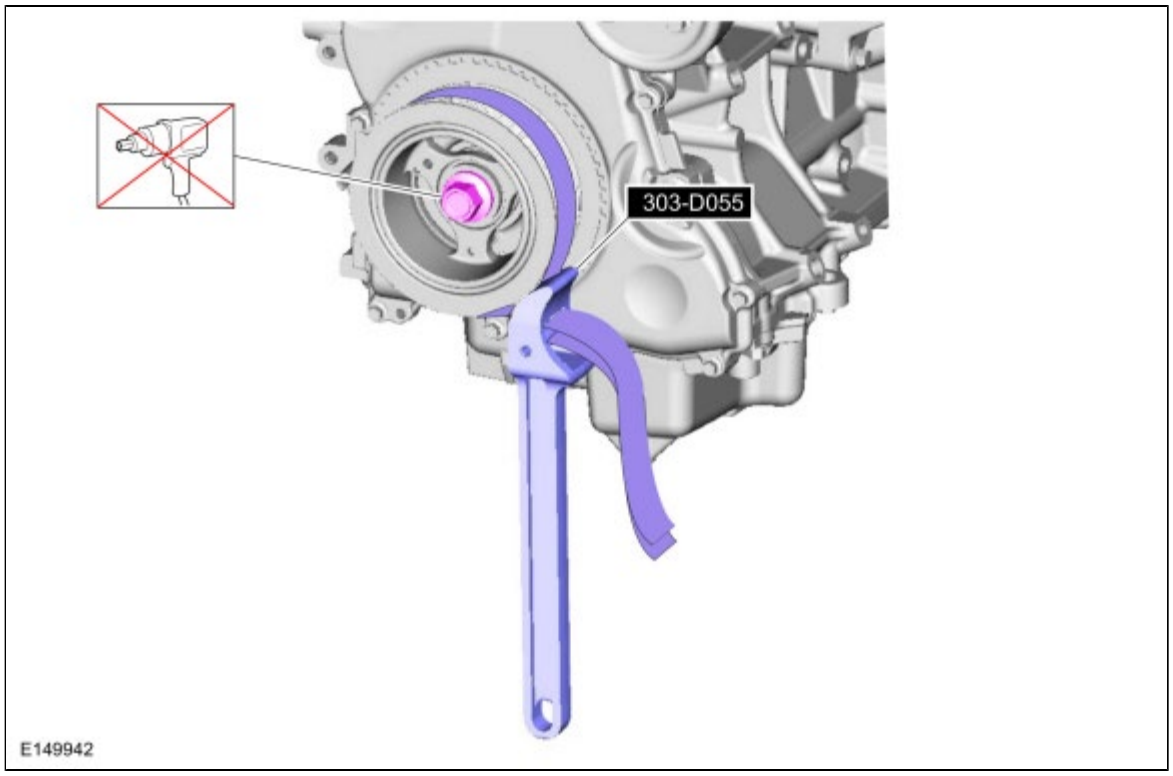

5. Remove.

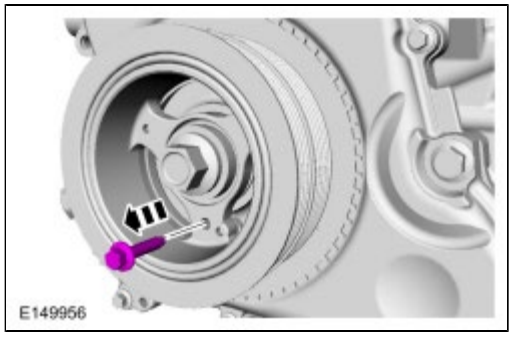

6. Do not tighten the bolts at this time.

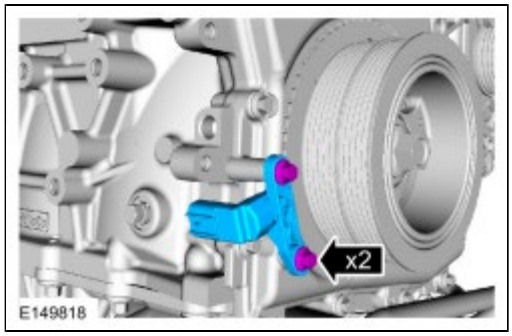

7. Install the special tool to set the CKP sensor position and tighten the 2 bolts.
   Special Tool(s) : 303-1521 Alignment Tool, Crankshaft Position Sensor
   Torque : 7 Nm

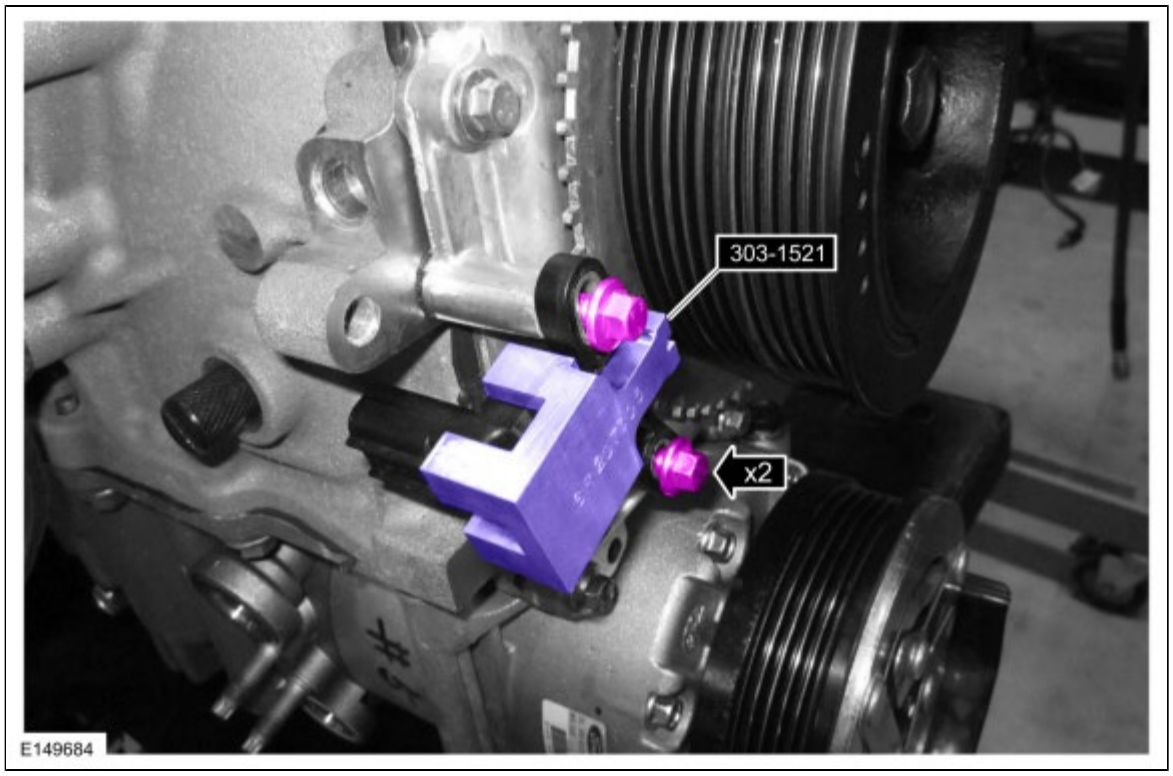

8.

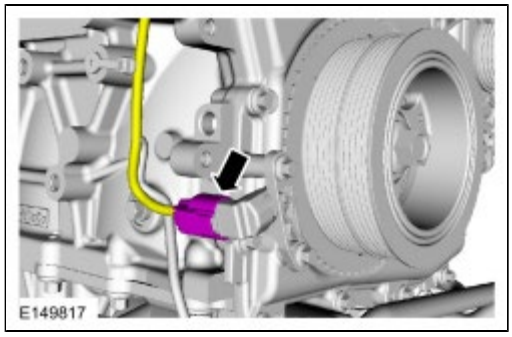

9. *Torque* : 20 Nm

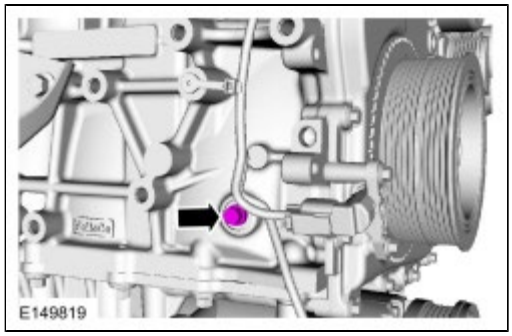

10. *Remove Special Service Tool* : 303-1565 Alignment Tool, Camshaft

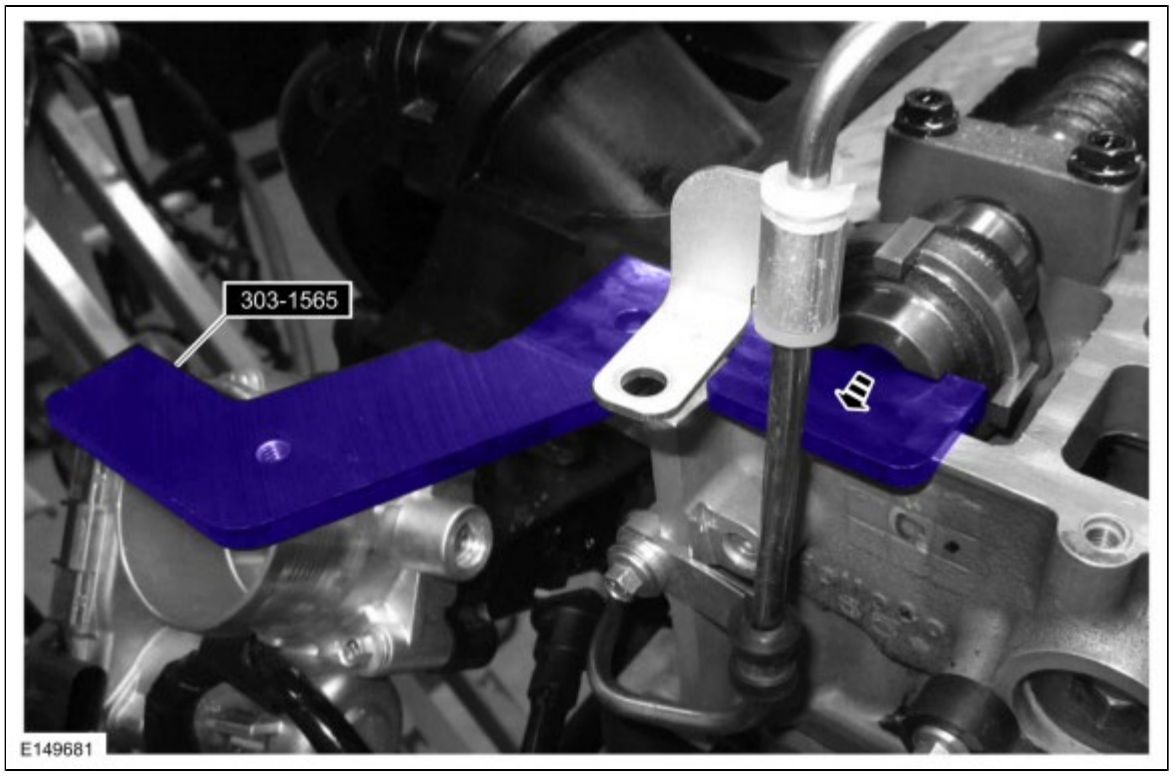

11. Install the following items:
    1. Refer to: Valve Cover (303-01A Engine - 2.0L Duratec-HE (125kW/170PS) - MI4, Removal and Installation).
    2. Refer to: Air Cleaner Outlet Pipe (303-12A Intake Air Distribution and Filtering - 2.0L Duratec-HE (125kW/170PS) - MI4, Removal and Installation).
    3. Refer to: Accessory Drive Belt (303-05A Accessory Drive - 2.0L Duratec-HE (125kW/170PS) - MI4, Removal and Installation).
    4. Install the RH fender splash shield.
       Refer to: Fender Splash Shield (501-02 Front End Body Panels, Removal and Installation).

12.

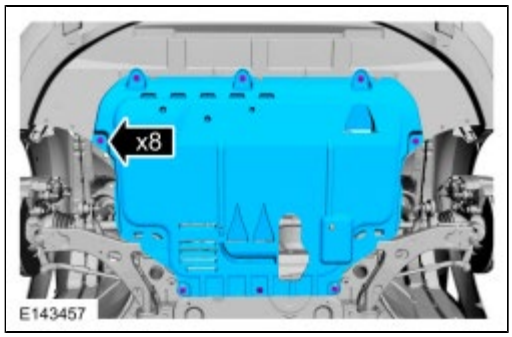

Copyright © Ford Motor Company

Crankshaft Front Seal

Removal

NOTICE: Do not loosen or remove the crankshaft pulley bolt without first installing the special tools as instructed in this procedure. The crankshaft pulley and the crankshaft timing sprocket are not keyed to the crankshaft. The crankshaft, the crankshaft sprocket and the pulley are fitted together by friction, using diamond washers between the flange faces on each part. For that reason, the crankshaft sprocket is also unfastened if the pulley bolt is loosened. Before any repair requiring loosening or removal of the crankshaft pulley bolt, the crankshaft and camshafts must be locked in place by the special service tools, otherwise severe engine damage can occur.

NOTICE: During engine repair procedures, cleanliness is extremely important. Any foreign material, including any material created while cleaning gasket surfaces, that enters the oil passages, coolant passages or the oil pan can cause engine failure.

1. Refer to: Crankshaft Pulley (303-01A Engine - 2.0L Duratec-HE (125kW/170PS) - MI4, Removal and Installation).
2. **NOTICE: Use care not to damage the crankshaft or the engine front cover when removing the seal.**

   Special Tool(s) : 303-409 (T92C-6700-CH) Remover, Crankshaft Seal

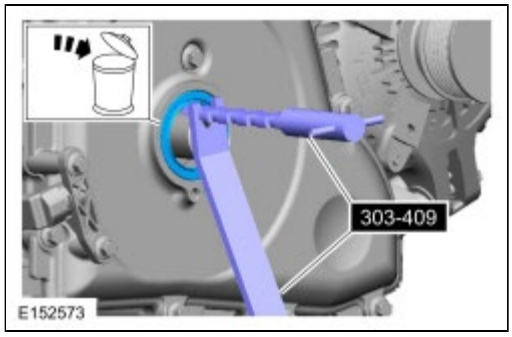

Installation

1. **NOTE:** *Remove the through-bolt from the special tool.*

   Special Tool(s) : 303-096 (T74P-6150-A) Installer, Camshaft Front Oil Seal
   Material : Motorcraft® SAE 5W-20 Premium Synthetic Blend Motor Oil / XO-5W20-QSP (WSS-M2C945-A)

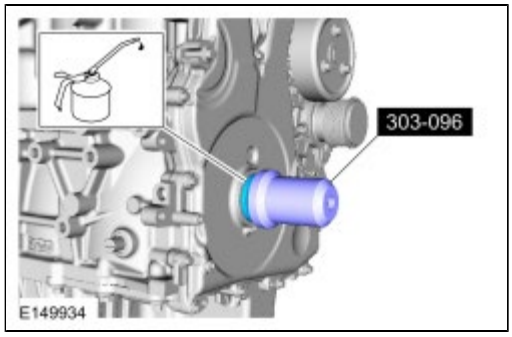

2. Refer to: Crankshaft Pulley (303-01A Engine - 2.0L Duratec-HE (125kW/170PS) - MI4, Removal and Installation).

Copyright © Ford Motor Company

Engine Front Cover

Removal

1. Refer to: Air Conditioning (A/C) System Recovery, Evacuation and Charging (412-00 Climate Control System - General Information, General Procedures).

2. 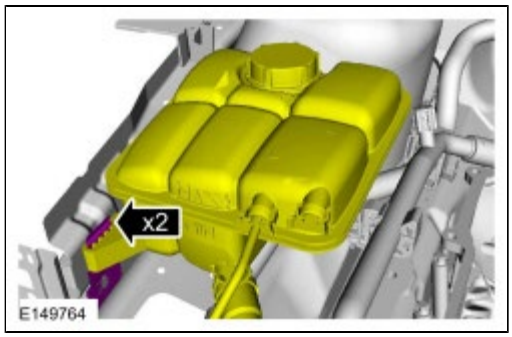

3. Loosen.

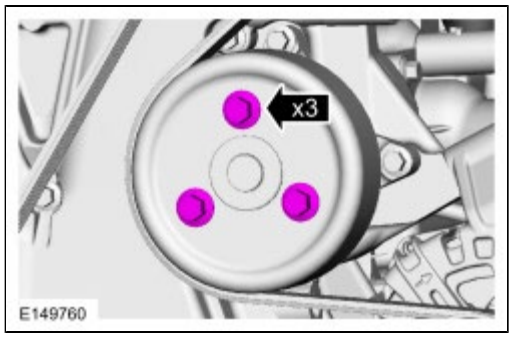

4. Refer to: Cowl Panel Grille (501-02 Front End Body Panels, Removal and Installation).

5. *Install Special Service Tool* : 303-F072 Support Bar, Engine

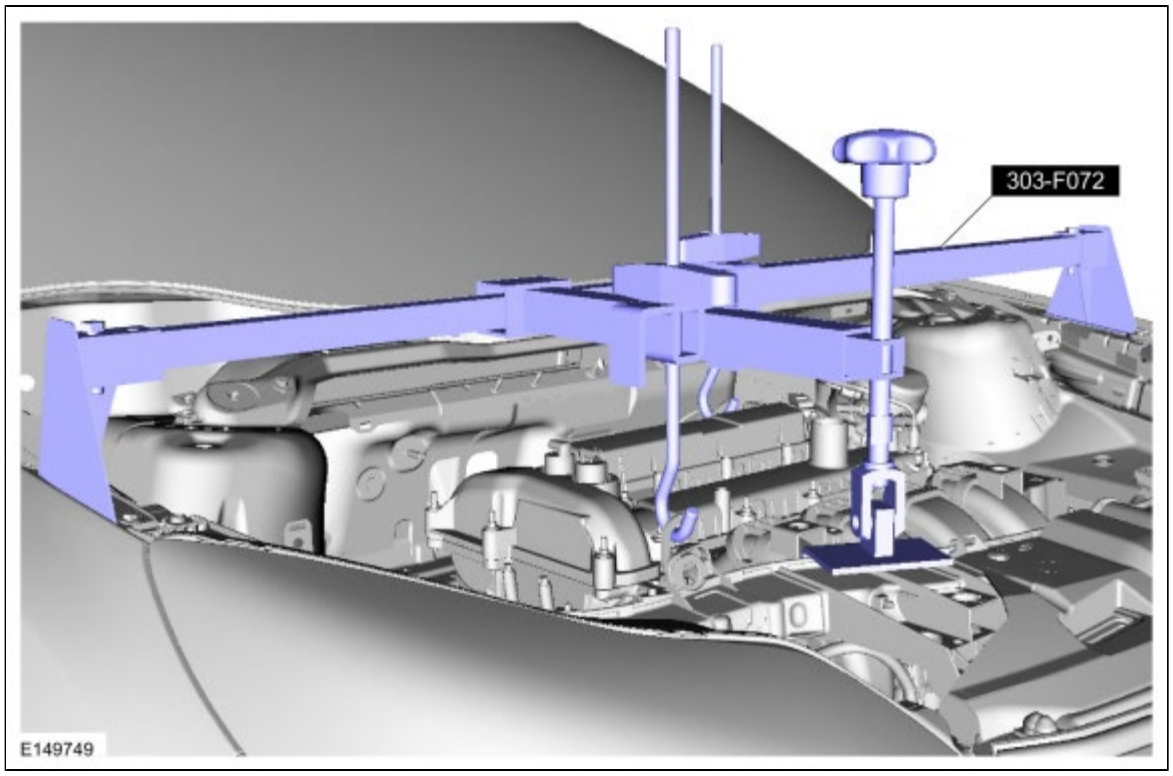

6. Refer to: Crankshaft Front Seal (303-01A Engine - 2.0L Duratec-HE (125kW/170PS) - MI4, Removal and Installation).

7.

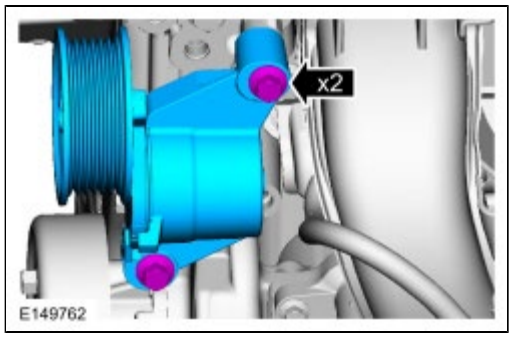

8.

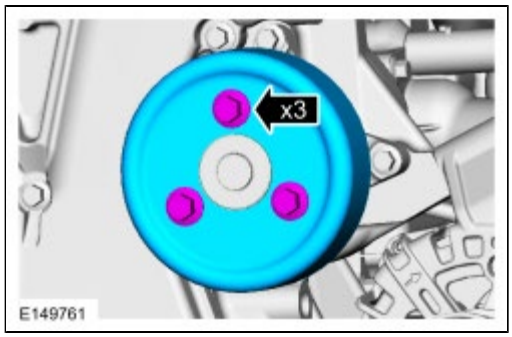

9. **NOTE:** *Discard the O-ring seal.*

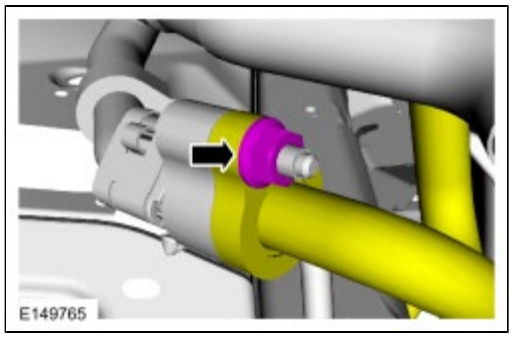

10.

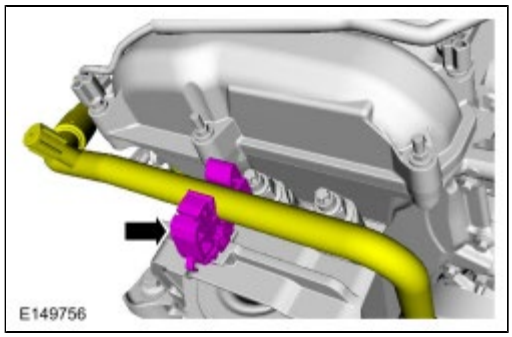

11.

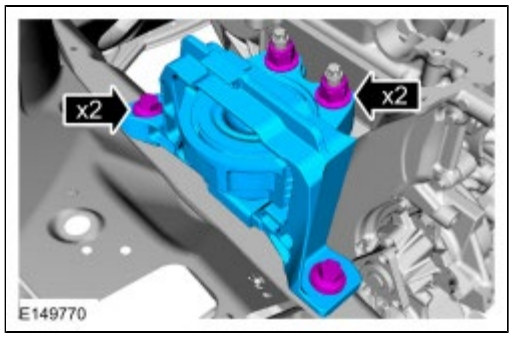

12.

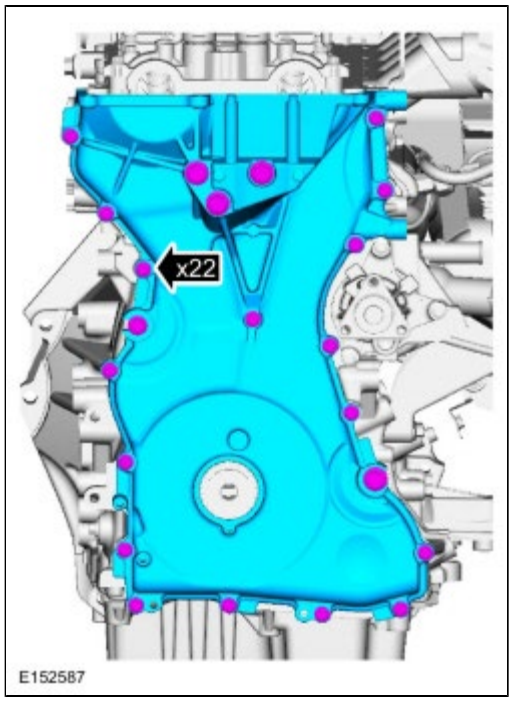

Installation

1. **NOTICE: Do not use metal scrapers, wire brushes, power abrasive disks or other abrasive means to clean sealing surfaces. These tools cause scratches and gouges which make leak paths.**

   Clean and inspect the mounting surfaces of the engine and the front cover.
   Material : Motorcraft® Silicone Gasket Remover / ZC-30
   Material : Motorcraft® Metal Surface Prep / ZC-31-A

2. **NOTE:** *The engine front cover must be secured within 10 minutes of Silicone Gasket and Sealant application. If the valve cover is not secured within 10 minutes, the sealant must be removed and the sealing area cleaned with Motorcraft Metal Surface Prep.*

   Material : Silicone Gasket and Sealant / TA-30 (WSE-M4G323-A4)

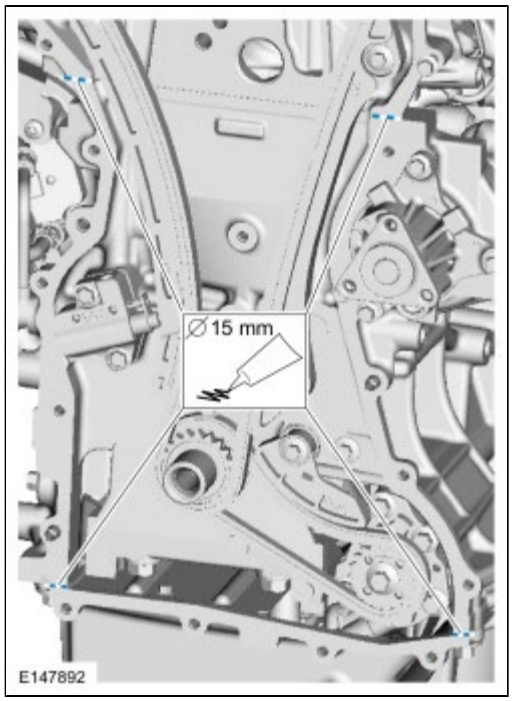

3. **NOTE:** *The engine front cover must be secured within 10 minutes of Silicone Gasket and Sealant application. If the valve cover is not secured within 10 minutes, the sealant must be removed and the sealing area cleaned with Motorcraft Metal Surface Prep.*

   Material : Silicone Gasket and Sealant / TA-30 (WSE-M4G323-A4)

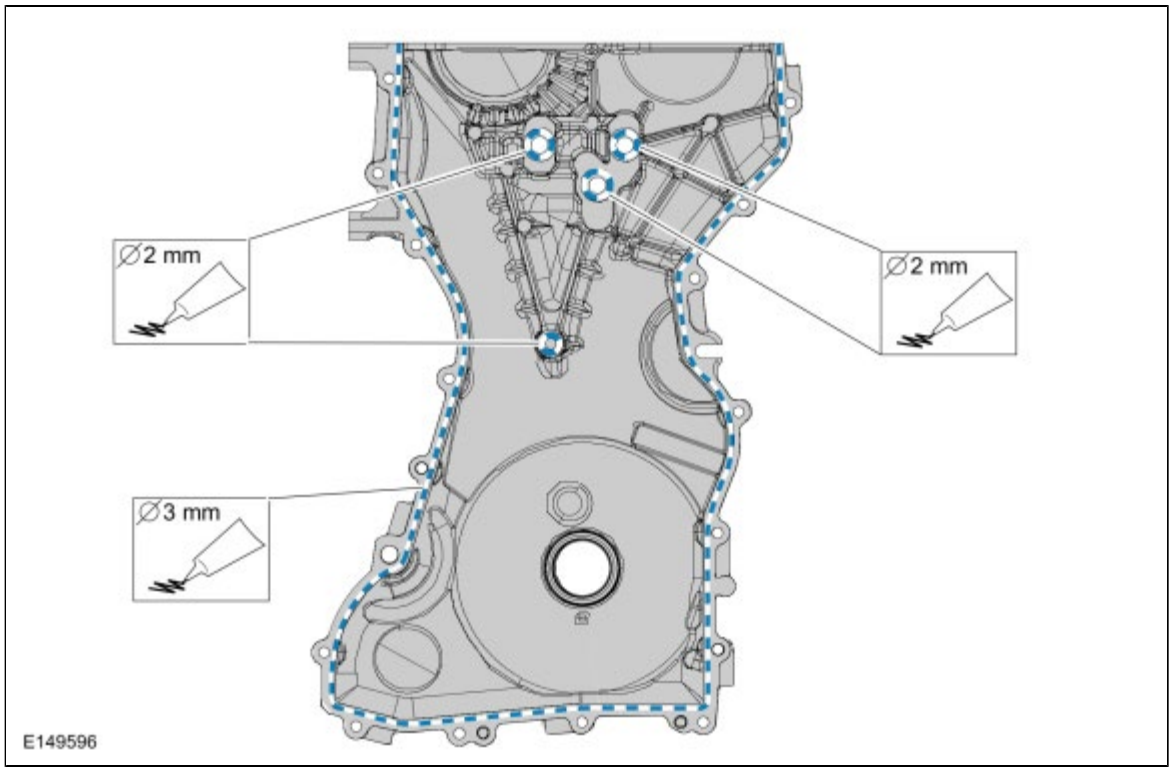

4.

- *Torque* : Tighten bolts 1 through 17 to 10 Nm
- *Torque* : Tighten bolts 19 through 21 to 48 Nm
- *Torque* : Tighten bolt 22 to 25 Nm
- *Torque* : Tighten bolt 18 to 48 Nm

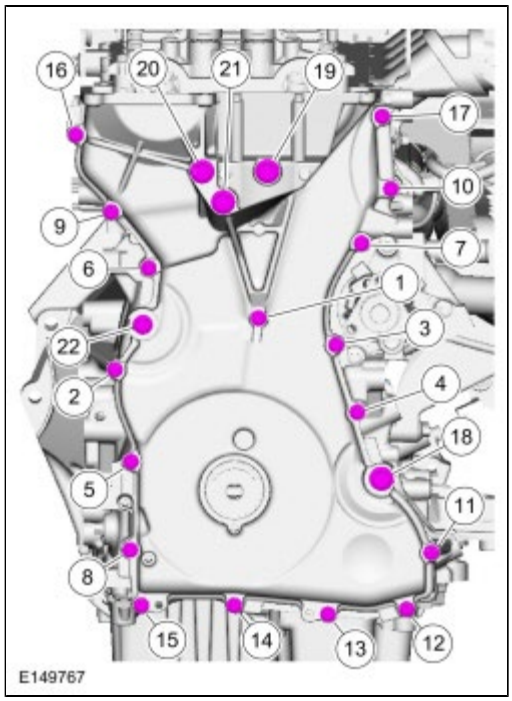

5.

6.

- *Torque* : Tighten the 2 bolts to 90 Nm
- *Torque* : Tighten the 2 nuts to 80 Nm

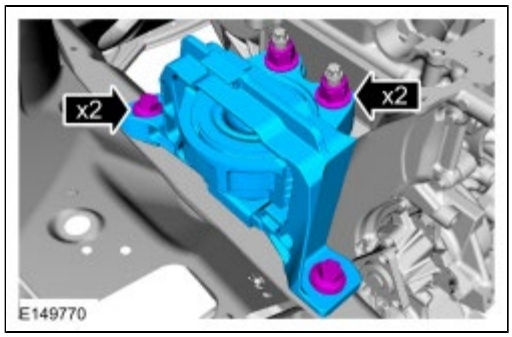

7.

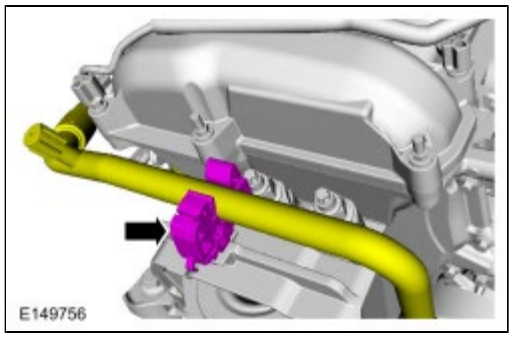

8. **NOTE:** *Use a new O-ring seal.*

   Torque : 15 Nm

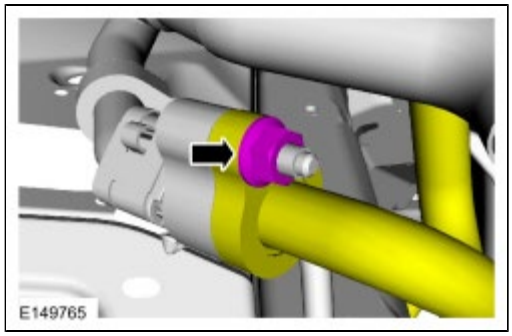

9. Finger tight.

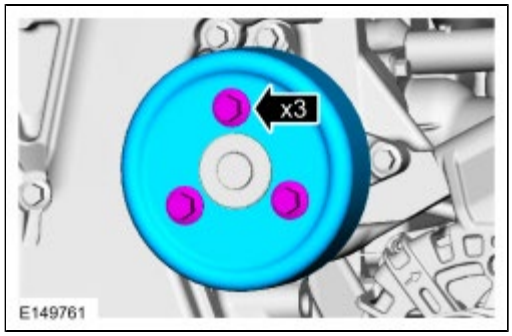

10. *Torque* : 25 Nm

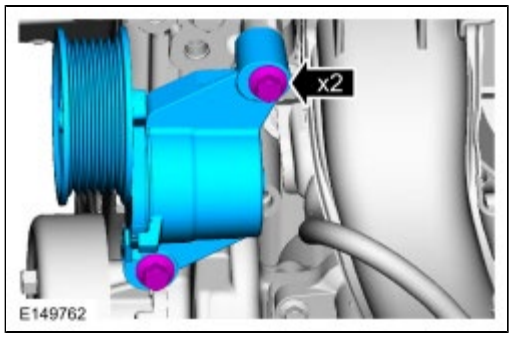

11. Refer to: Crankshaft Front Seal (303-01A Engine - 2.0L Duratec-HE (125kW/170PS) - MI4, Removal and Installation).

12. *Remove Special Service Tool* : 303-F072 Support Bar, Engine

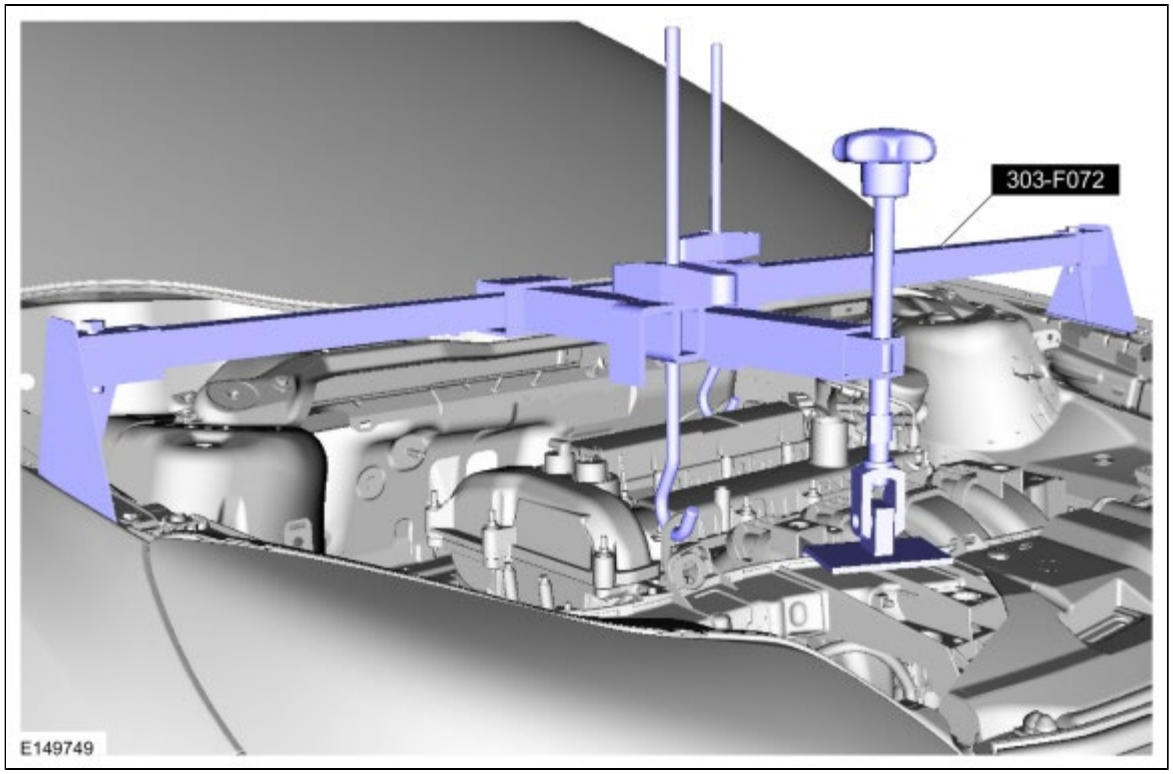

13. Refer to: Cowl Panel Grille (501-02 Front End Body Panels, Removal and Installation).

14. *Torque* : 20 Nm

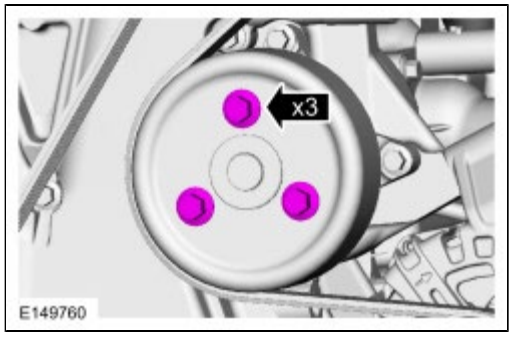

15.

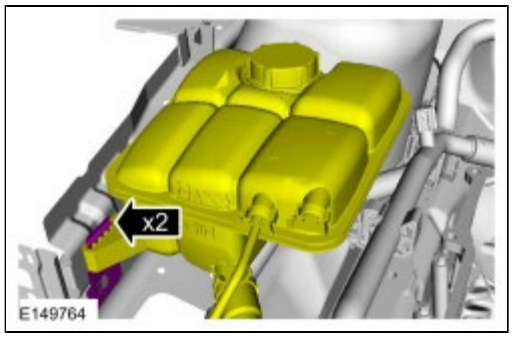

16. Refer to: Air Conditioning (A/C) System Recovery, Evacuation and Charging (412-00 Climate Control System - General Information, General Procedures).

Copyright © Ford Motor Company

Timing Drive Components

Removal

NOTICE: Do not loosen or remove the crankshaft pulley bolt without first installing the special tools as instructed in this procedure. The crankshaft pulley and the crankshaft timing sprocket are not keyed to the crankshaft. The crankshaft, the crankshaft sprocket and the pulley are fitted together by friction, using diamond washers between the flange faces on each part. For that reason, the crankshaft sprocket is also unfastened if the pulley bolt is loosened. Before any repair requiring loosening or removal of the crankshaft pulley bolt, the crankshaft and camshafts must be locked in place by the special service tools, otherwise severe engine damage can occur.

NOTICE: During engine repair procedures, cleanliness is extremely important. Any foreign material, including any material created while cleaning gasket surfaces, that enters the oil passages, coolant passages or the oil pan can cause engine failure.

1. Refer to: Jacking and Lifting - Overview (100-02 Jacking and Lifting, Description and Operation).

2. Remove the following items:
    1. Refer to: Fuel Injection Pump (303-04A Fuel Charging and Controls - 2.0L Duratec-HE (125kW/170PS) - MI4, Removal and Installation).
    2. Refer to: Engine Front Cover (303-01A Engine - 2.0L Duratec-HE (125kW/170PS) - MI4, Removal and Installation).

3.

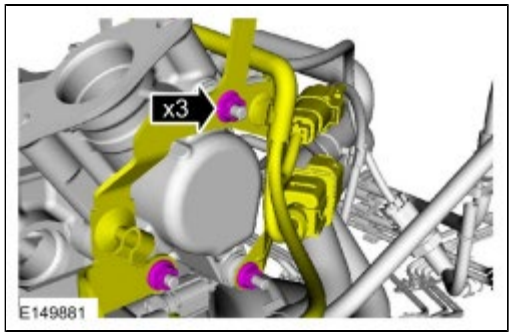

4.

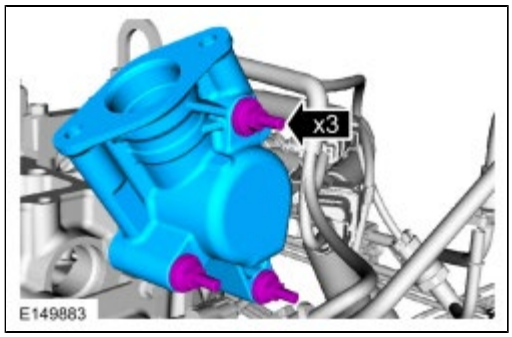

5. **NOTICE: The Camshaft Alignment Tool is for camshaft alignment only. Using this tool to prevent engine rotation can result in engine damage.**

   Install the Camshaft Alignment Tool into the rear of both of the camshaft slots as shown and tighten the retainer.
   Special Tool(s) : 303-1565 Alignment Tool, Camshaft

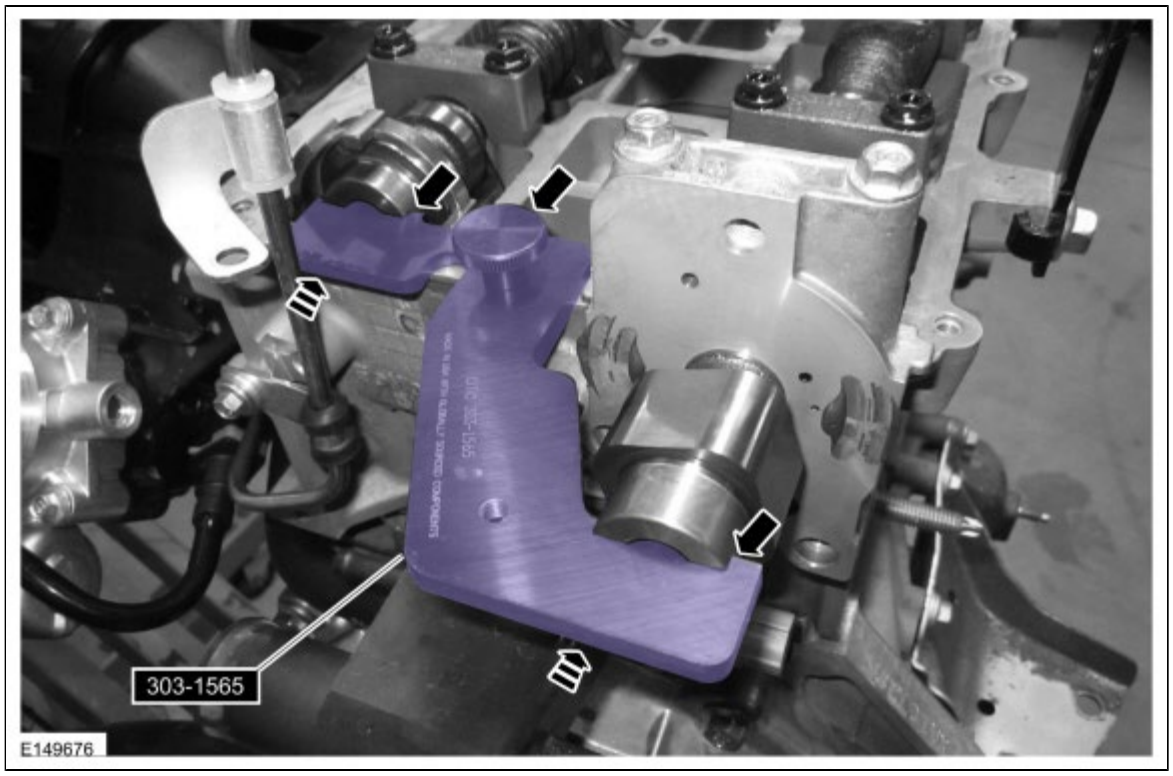

6. **NOTICE: The Camshaft Alignment Tool is for camshaft alignment only. Using this tool to prevent engine rotation can result in engine damage.**

   Using the flats on the exhaust and intake camshaft to prevent camshaft rotation, loosen the exhaust and intake VCT unit bolts.

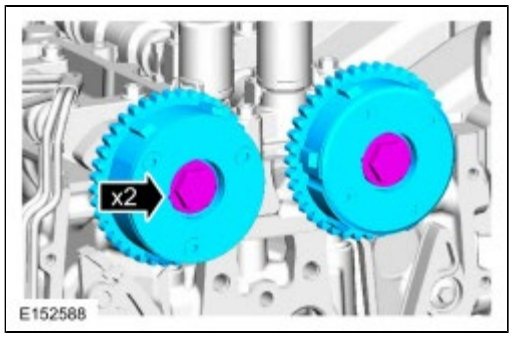

7.
   1. Using a small pick, release and hold the ratchet mechanism.
   2. While holding the ratchet mechanism in the released position, compress the tensioner by pushing the timing chain arm toward the tensioner.
   3. Insert a holding pin into the hole to retain the tensioner.

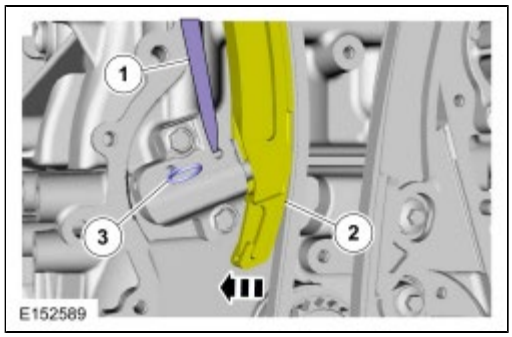

8.

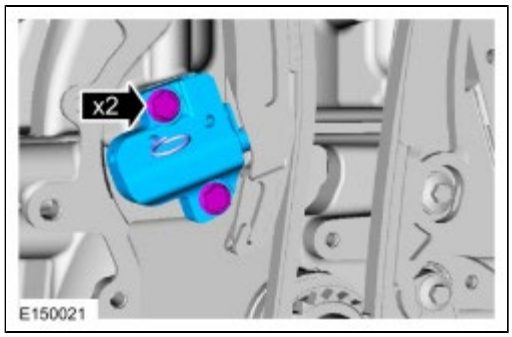

9.

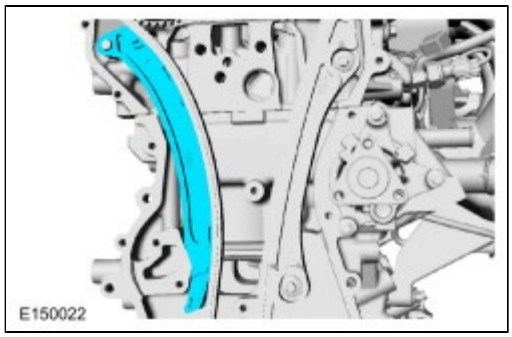

10.

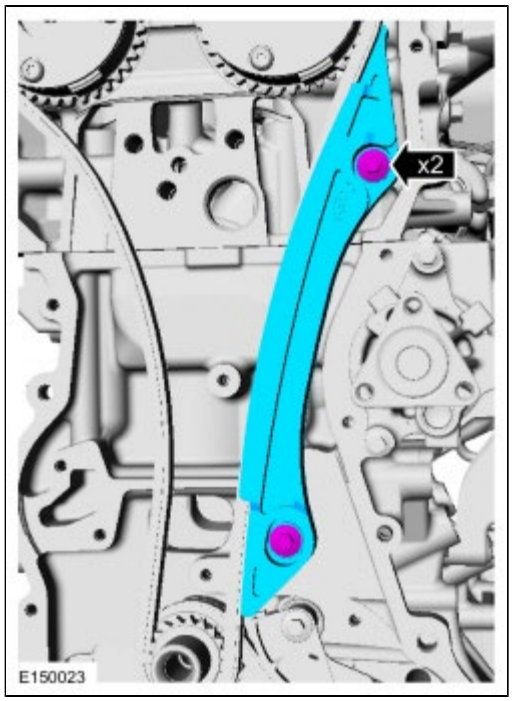

11.

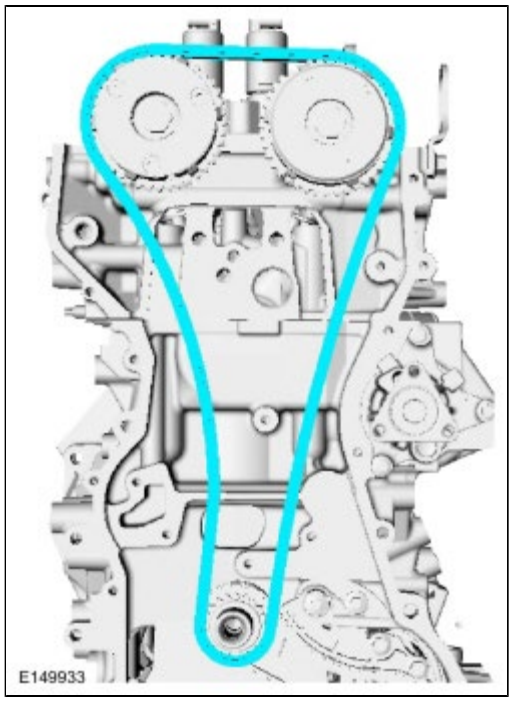

Installation

1.

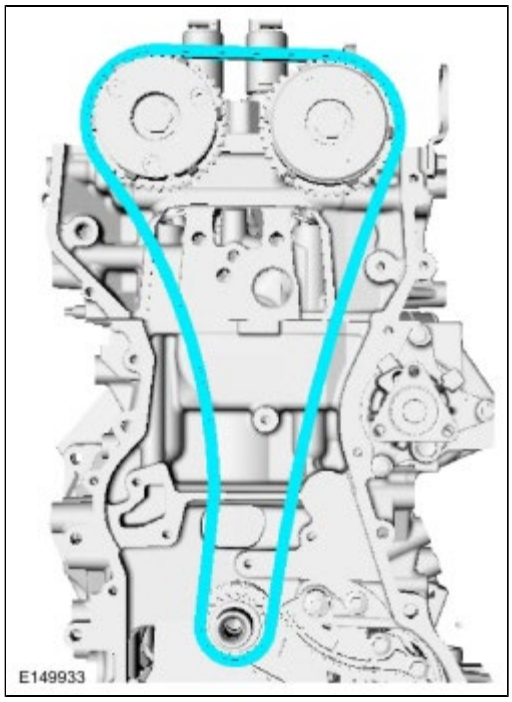

2. *Torque* : 10 Nm

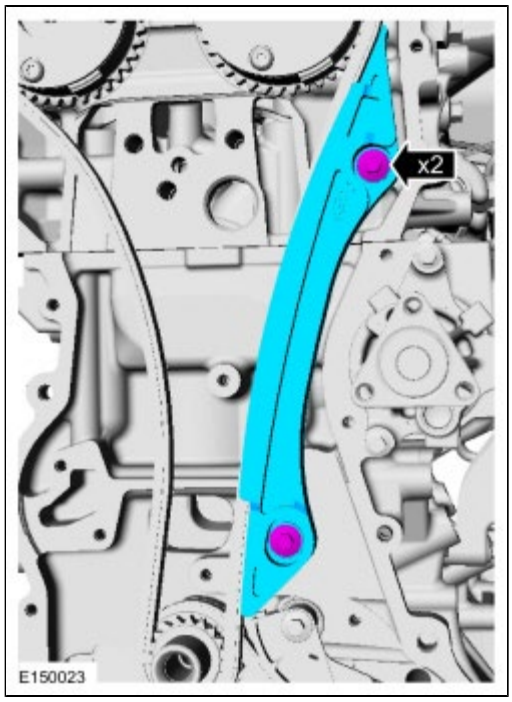

3.

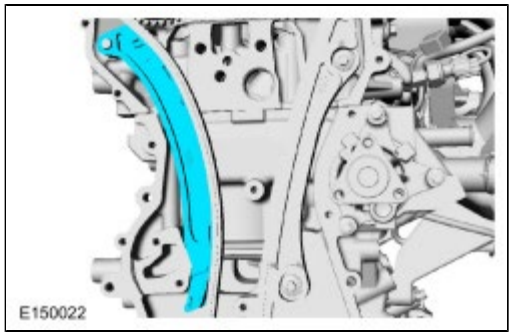

NOTE: *If the timing chain tensioner plunger and ratchet assembly are not pinned in the compressed position, follow the next 4 steps.*

4. **NOTICE: Do not compress the ratchet assembly. This will damage the ratchet assembly.**

   Using the edge of a vise, compress the timing chain tensioner plunger.

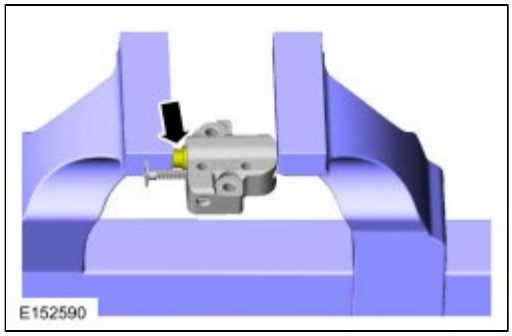

5. Using a small pick, push back and hold the ratchet mechanism.

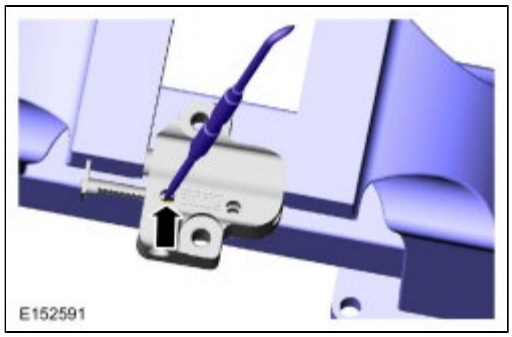

6. While holding the ratchet mechanism, push the ratchet arm back into the tensioner housing.

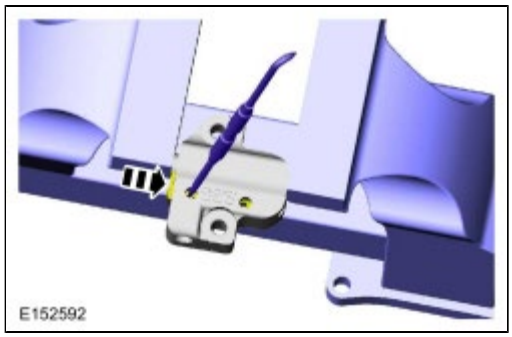

7. Install a paper clip into the hole in the tensioner housing to hold the ratchet assembly and the plunger in during installation.

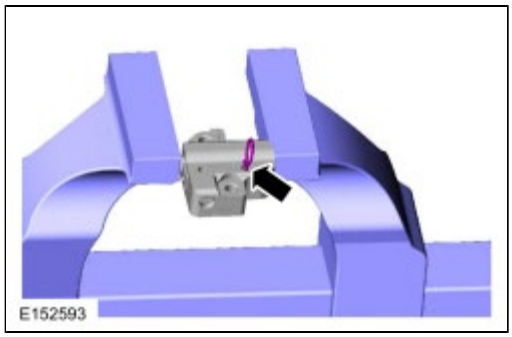

8. *Torque* : 10 Nm

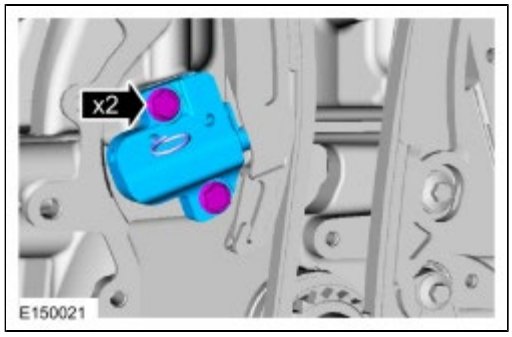

9. **NOTICE: The Camshaft Alignment Tool is for camshaft alignment only. Using this tool to prevent engine rotation can result in engine damage.**

   NOTE: *Using the flats on the camshafts to prevent camshaft rotation.*

   Torque :
   Stage 1: 50 Nm
   Stage 2: Tighten an additional 90°

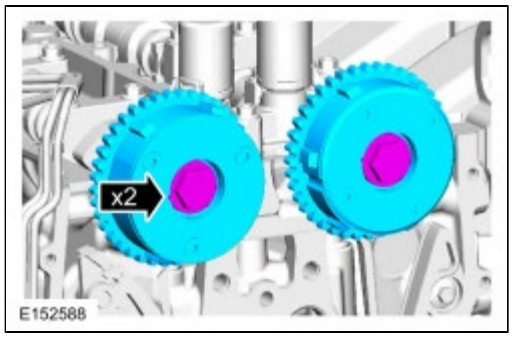

10. *Remove Special Service Tool* : 303-1565 Alignment Tool, Camshaft

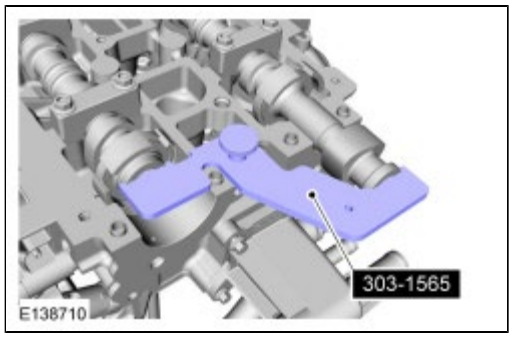

11. *Torque* :
    Stage 1: 8 Nm
    Stage 2: Tighten an additional 60°

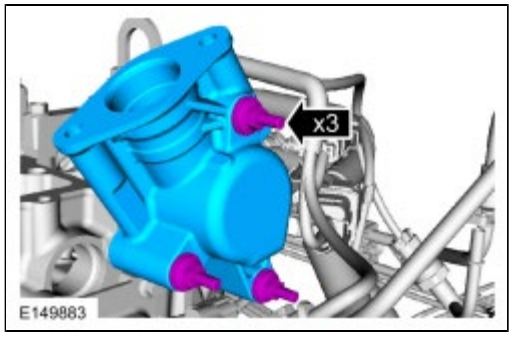

12. *Torque* : 20 Nm

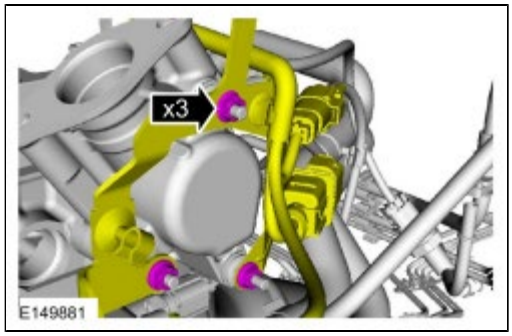

13. Install the following items:
    1. Refer to: Engine Front Cover (303-01A Engine - 2.0L Duratec-HE (125kW/170PS) - MI4, Removal and Installation).
    2. Refer to: Fuel Injection Pump (303-04A Fuel Charging and Controls - 2.0L Duratec-HE (125kW/170PS) - MI4, Removal and Installation).

Copyright © Ford Motor Company

Camshaft

Removal

NOTICE: During engine repair procedures, cleanliness is extremely important. Any foreign material (including any material created while cleaning gasket surfaces) that enters the oil passages, coolant passages or the oil pan can cause engine failure.

NOTICE: Do not rotate the camshafts unless instructed to in this procedure. Rotating the camshafts or crankshaft with timing components loosened or removed can cause serious damage to the valves and pistons.

NOTICE: Failure to position the No. 1 piston at TDC can result in damage to the engine. Turn the engine in the normal direction of rotation only.

NOTICE: The Camshaft Alignment Tool is for camshaft alignment only. Using this tool to prevent engine rotation can result in engine damage.

NOTE: *The Crankshaft TDC Timing Peg will contact the crankshaft and prevent it from turning past TDC . However, the crankshaft can still be rotated in the counterclockwise direction. The crankshaft must remain at the TDC position during the camshaft removal and installation*

1. Refer to: Jacking and Lifting - Overview (100-02 Jacking and Lifting, Description and Operation).
2. Refer to: Variable Valve Timing (VVT) Unit (303-01A Engine - 2.0L Duratec-HE (125kW/170PS) - MI4, Removal and Installation).
3. Refer to: Valve Clearance Check (303-01A Engine - 2.0L Duratec-HE (125kW/170PS) - MI4, General Procedures).
4. **NOTICE: The Camshaft Alignment Tool is for camshaft alignment only. Using this tool to prevent engine rotation can result in engine damage.**

   Remove Special Service Tool : 303-1565 Alignment Tool, Camshaft

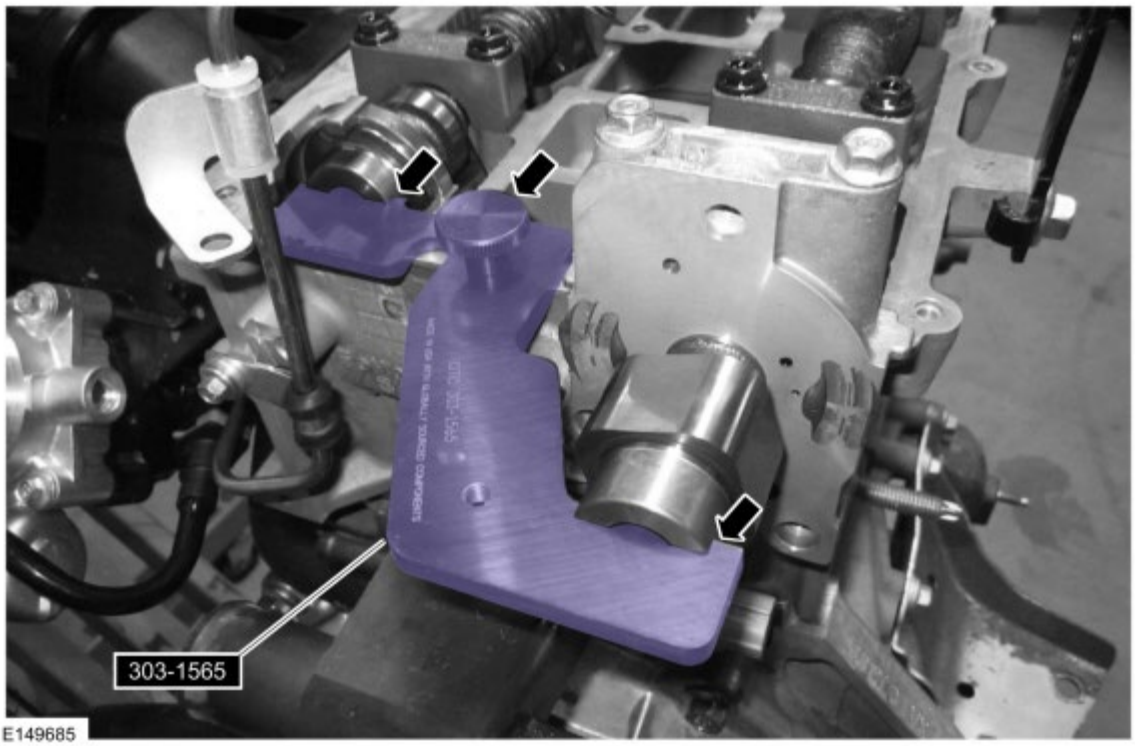

5.

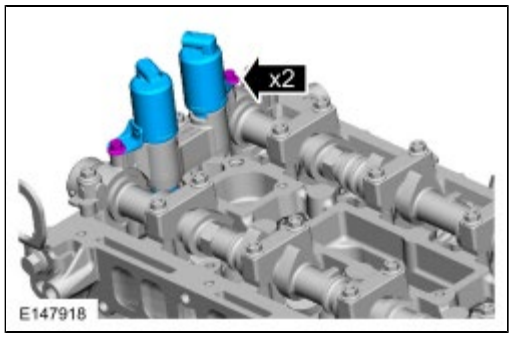

6. **NOTE:** *Do not mark the camshaft lobe surface. If any material is applied to the camshaft lobe surface, the lobe must be cleaned with Motorcraft Metal Surface Prep.*

   Depending on the camshaft being serviced, mark the camshaft lobe orientation onto the camshaft bearing cap.

NOTE: ***Exhaust Camshaft***

7. **NOTICE: Failure to follow the camshaft bearing cap loosening procedure can result in damage to the camshafts.**

   NOTE: *Mark the location and orientation of each camshaft bearing cap.*

   If servicing the exhaust camshaft, remove the camshaft bearing cap bolts in the sequence shown and remove the exhaust camshaft.

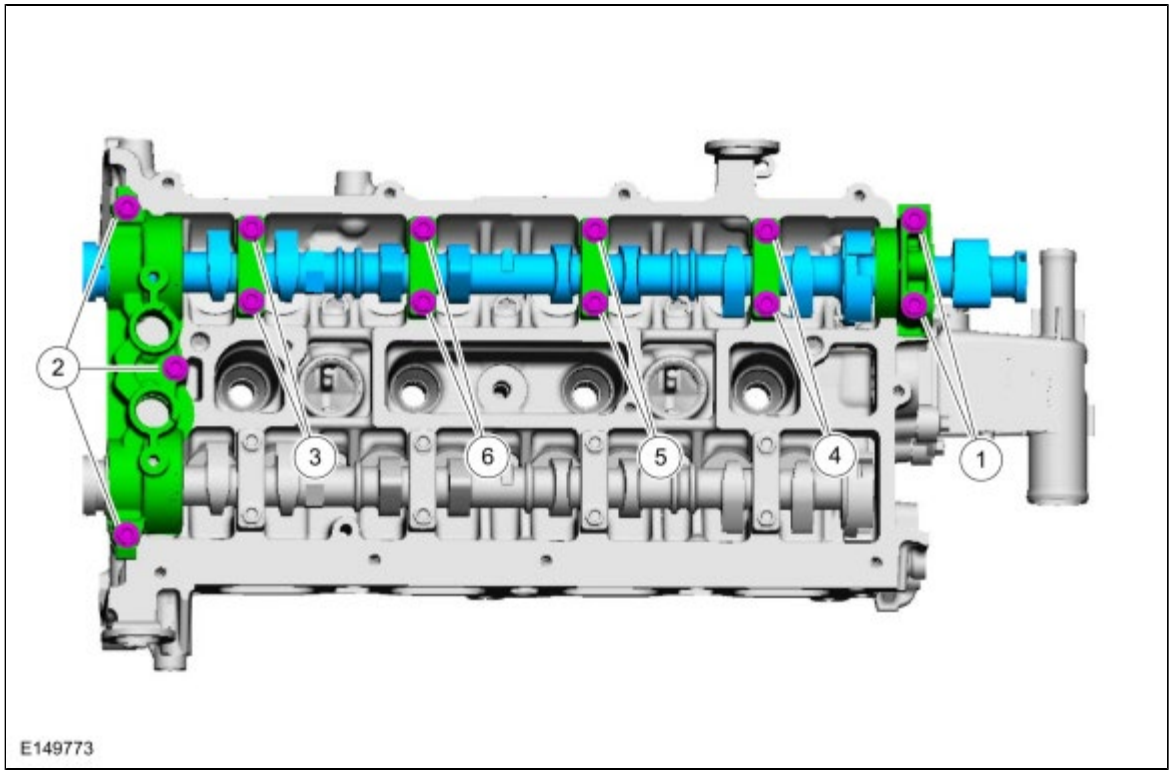

NOTE: ***Intake Camshaft***

8. **NOTICE: Failure to follow the camshaft bearing cap loosening procedure can result in damage to the camshafts.**

   NOTE: *Mark the location and orientation of each camshaft bearing cap.*

   If servicing the intake camshaft, remove the camshaft bearing cap bolts in the sequence shown and remove the intake camshaft.

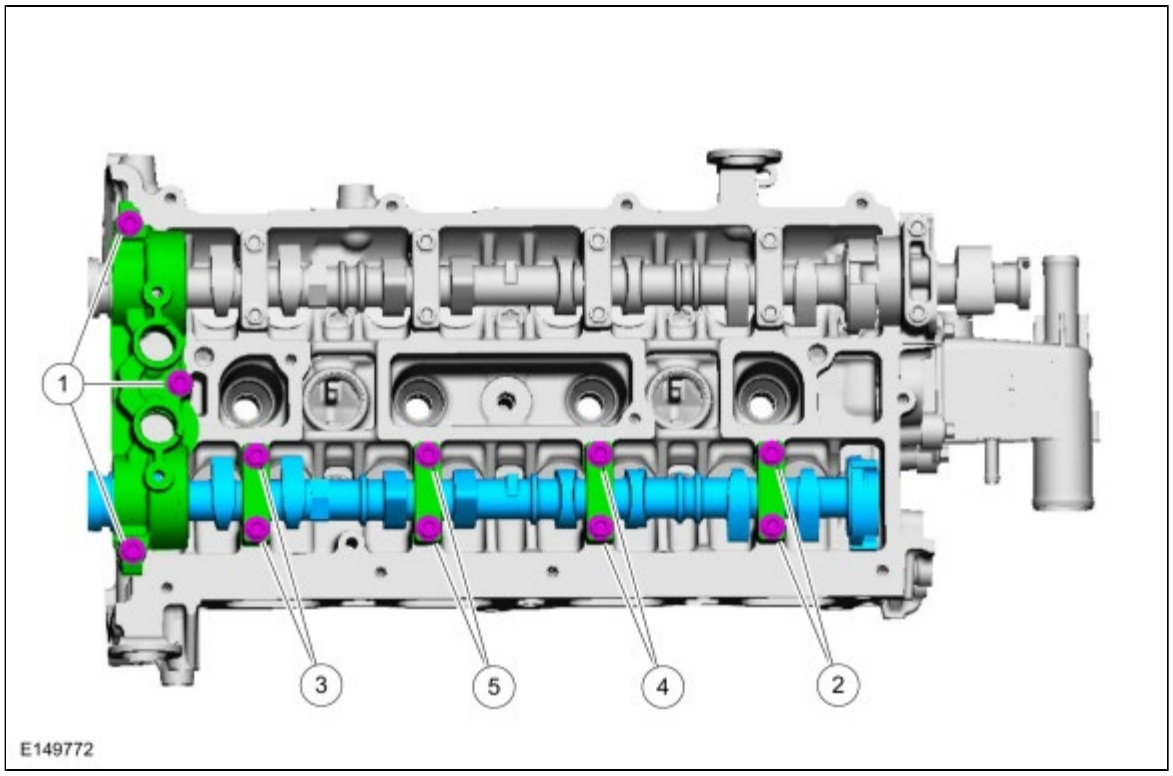

9. Inspect the camshaft.

Installation

1. **NOTICE: Install the camshafts with the alignment slots in the camshafts lined up so the Camshaft Alignment Tool can be installed without rotating the camshafts. Make sure the lobes on the No. 1 cylinder are in the same position as noted in the removal procedure. Rotating the camshafts when the timing chain is removed, or installing the camshafts 180 degrees out of position can cause severe damage to the valves and pistons.**

   Lubricate the cylinder head and camshaft journals with clean engine oil and position the camshafts onto the cylinder head in their original location and orientation.
   Material : Motorcraft® SAE 5W-20 Premium Synthetic Blend Motor Oil / XO-5W20-QSP (WSS-M2C945-A)

2. **NOTE:** *The exhaust camshaft rear bearing cap must be secured within 10 minutes of Gasket Maker application. If the exhaust camshaft rear bearing cap is not secured within 10 minutes, the sealant must be removed and the sealing area cleaned with Motorcraft Metal Surface Prep.*

   NOTE: *Do not allow Gasket Maker to enter the camshaft bearing journal. If Gasket Maker is applied to the camshaft bearing journal, the journal and sealing area must be cleaned with Motorcraft Metal Surface Prep.*

   Apply a bead of the specified diameter from the specified tube.
   Material : Flange Sealant / CU7Z-19B508-A (WSS-M2G348-A11)

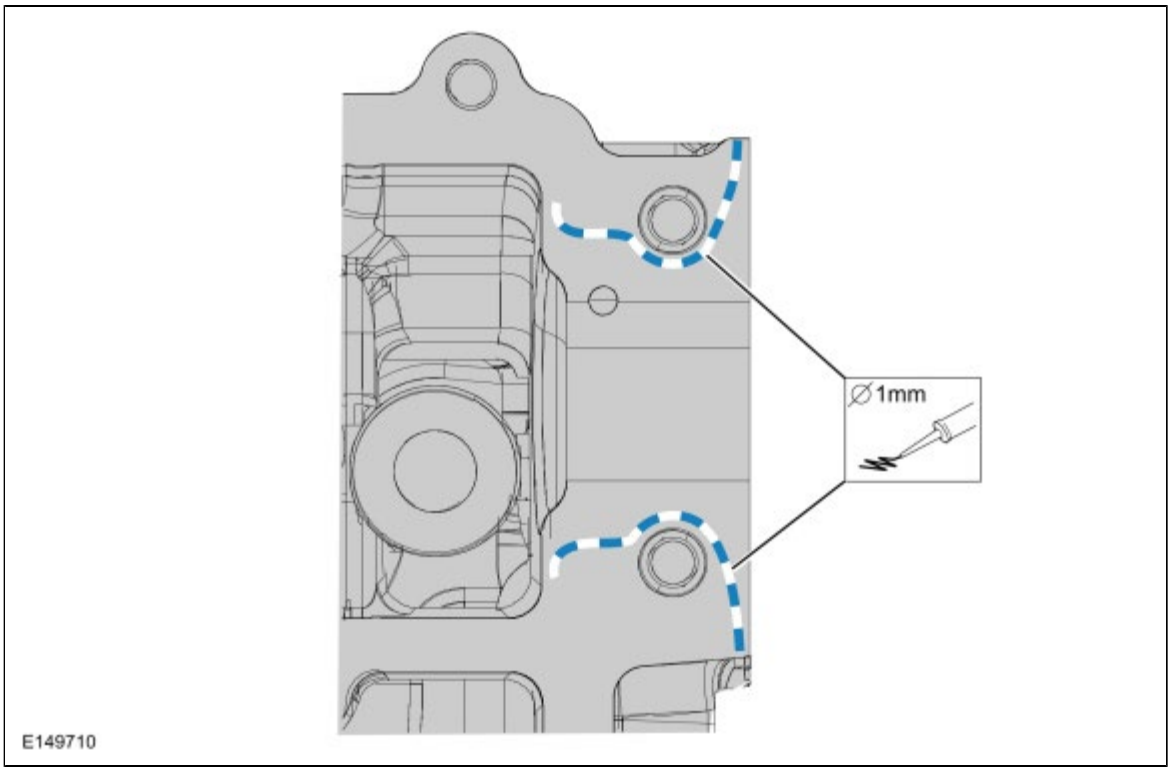

NOTE: ***Exhaust Camshaft***

3. **NOTICE: Failure to follow the camshaft bearing cap tightening procedure can result in damage to the camshafts.**

   NOTE: *Lubricate the bearing cap journals with clean engine oil prior to installation.*

   If servicing the exhaust camshaft, install the camshaft bearing caps in their original location and orientation and tighten the camshaft bearing cap bolts in pairs in the sequence shown in 2 stages:
   Material : Motorcraft® SAE 5W-20 Premium Synthetic Blend Motor Oil / XO-5W20-QSP (WSS-M2C945-A)
   Torque :
   Stage 1: 7 Nm
   Stage 2: 16 Nm

NOTE: ***Intake Camshaft***

4. **NOTICE: Failure to follow the camshaft bearing cap tightening procedure can result in damage to the camshafts.**

   NOTE: *Lubricate the bearing cap journals with clean engine oil prior to installation.*

   If servicing the intake camshaft, install the camshaft bearing caps in their original location and orientation and tighten the camshaft bearing cap bolts in pairs in the sequence shown in 2 stages:
   Material : Motorcraft® SAE 5W-20 Premium Synthetic Blend Motor Oil / XO-5W20-QSP (WSS-M2C945-A)
   Torque :
   Stage 1: 7 Nm
   Stage 2: 16 Nm

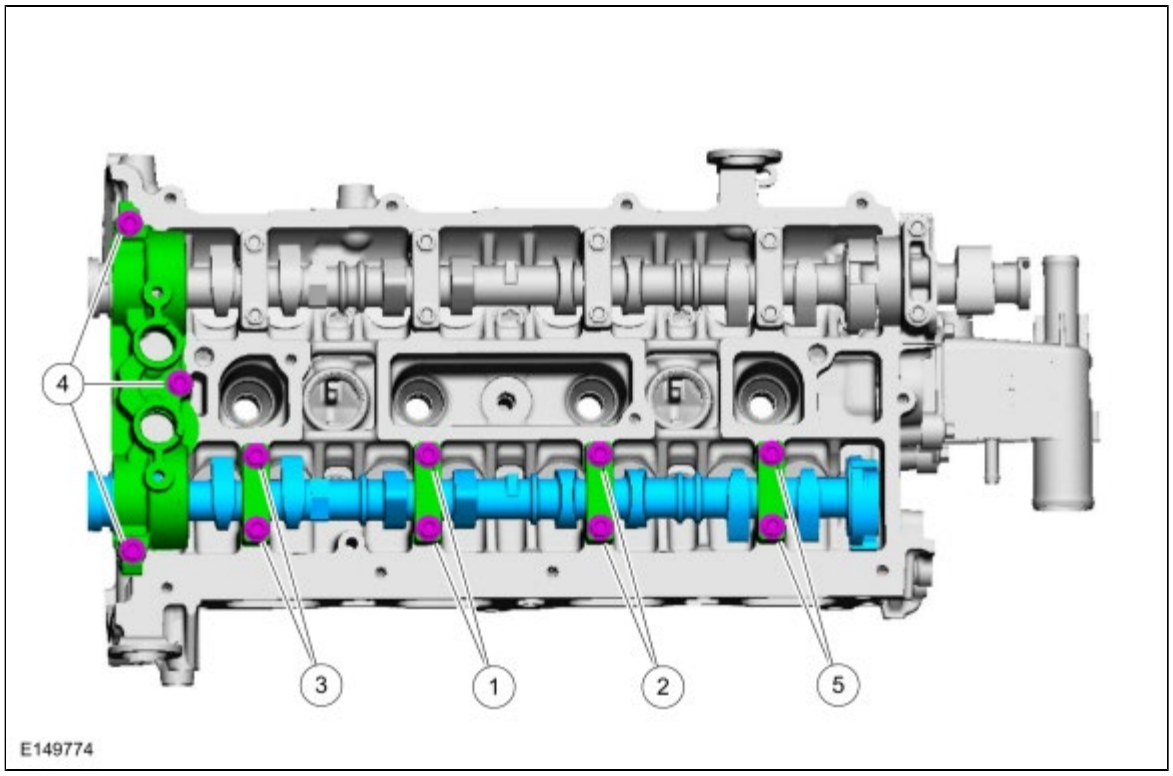

5. If exhaust or intake camshafts were replaced, check the valve clearance.
   Refer to: Valve Clearance Check (303-01A Engine - 2.0L Duratec-HE (125kW/170PS) - MI4, General Procedures).

6. **NOTICE: The Camshaft Alignment Tool is for camshaft alignment only. Using this tool to prevent engine rotation can result in engine damage.**

   Install the Camshaft Alignment Tool into the rear of both of the camshaft slots as shown and tighten the retainer.
   Install Special Service Tool : 303-1565 Alignment Tool, Camshaft

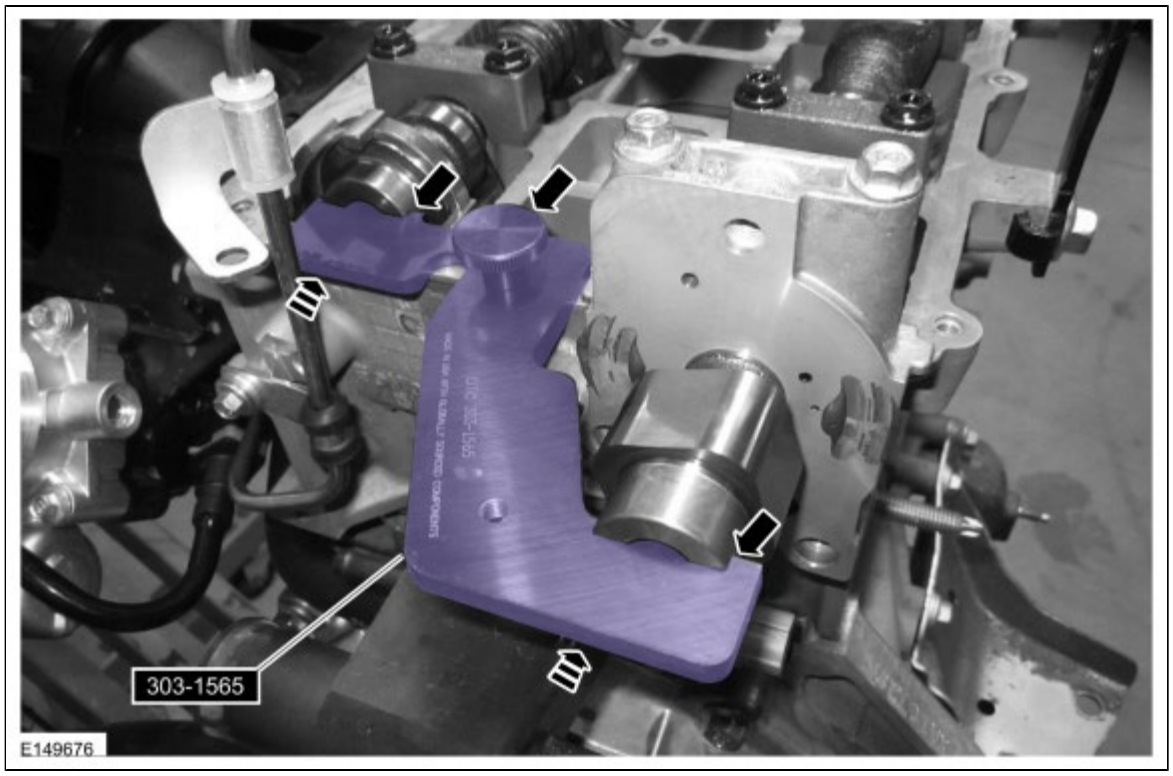

7. **NOTE:** *Lubricate the VCT oil control solenoids with clean engine oil.*

   Material : Motorcraft® SAE 5W-20 Premium Synthetic Blend Motor Oil / XO-5W20-QSP (WSS-M2C945-A)

Torque : 10 Nm

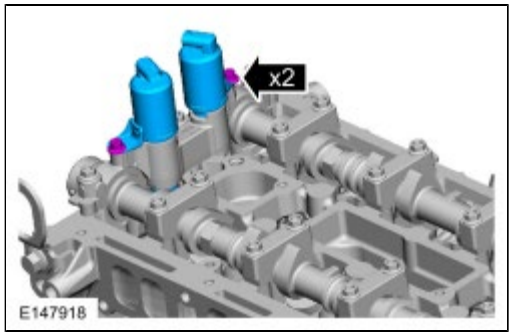

8. Refer to: Variable Valve Timing (VVT) Unit (303-01A Engine - 2.0L Duratec-HE (125kW/170PS) - MI4, Removal and Installation).

Copyright © Ford Motor Company

Valve Tappets

Removal

1. Refer to: Camshaft (303-01A Engine - 2.0L Duratec-HE (125kW/170PS) - MI4, Removal and Installation).
2. **NOTE:** *If the camshafts and valve tappets are to be reused, mark the location of the valve tappets to make sure they are assembled in their original positions.*

   Material : Motorcraft® SAE 5W-20 Premium Synthetic Blend Motor Oil / XO-5W20-QSP (WSS-M2C945-A)

   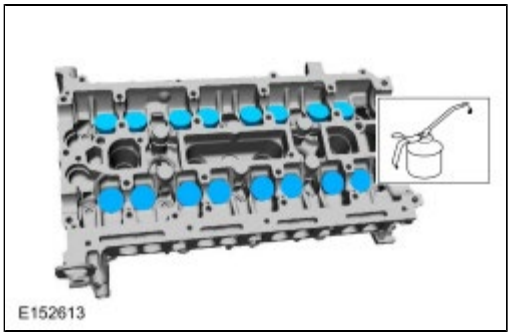

3. **NOTE:** *The number on the valve tappets only reflects the digits that follow the decimal. For example, a tappet with the number 0.650 has the thickness of .*

   Install new components as necessary.

   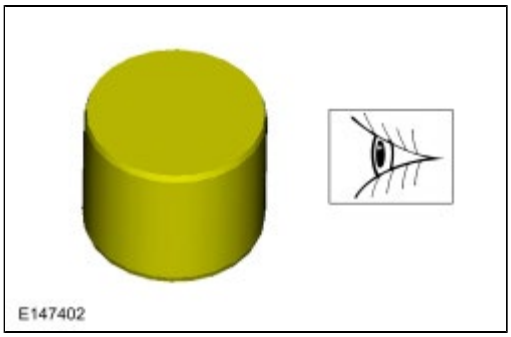

Installation

1. To install, reverse the removal procedure.

Copyright © Ford Motor Company

Valve Springs

Removal

NOTICE: During engine repair procedures, cleanliness is extremely important. Any foreign material, including any material created while cleaning gasket surfaces, that enters the oil passages, coolant passages or the oil pan can cause engine failure.

1. Refer to: Jacking and Lifting - Overview (100-02 Jacking and Lifting, Description and Operation).
2. Remove the following items:
   1. Refer to: Valve Tappets (303-01A Engine - 2.0L Duratec-HE (125kW/170PS) - MI4, Removal and Installation).
   2. Refer to: Spark Plugs (303-07A Engine Ignition - 2.0L Duratec-HE (125kW/170PS) - MI4, Removal and Installation).
3. **NOTICE: Use compressed air at 7 to 10 bars (100-150 psi). Do not disconnect the compressed air from the cylinder until the valve spring, valve spring retainer and valve collet is installed. Any loss of air pressure will allow the valve to fall into the cylinder.**

   Connect a compressed air supply to the cylinder that is being serviced.
4. **NOTE:** *Place all parts in order to one side.*

   NOTE: *Remove the valve collet, using some multi-purpose grease and a small screwdriver.*

   Apply compressed air to the cylinder and remove the valve spring.
   Special Tool(s) : 303-300 (T87C-6565-A) Set, Valve Spring Compressor , 303-350 (T89P-6565-A) Compressor, Valve Spring , 303-472 (T94P-6565-AH) Adapter, Valve Spring Compressor , 303-1249 Valve Spring Compressor
   Material : Multi-Purpose Grease / Motorcraft® XL-5 (aerosol), CRC® SL3151 (ESB-M1C93-B)

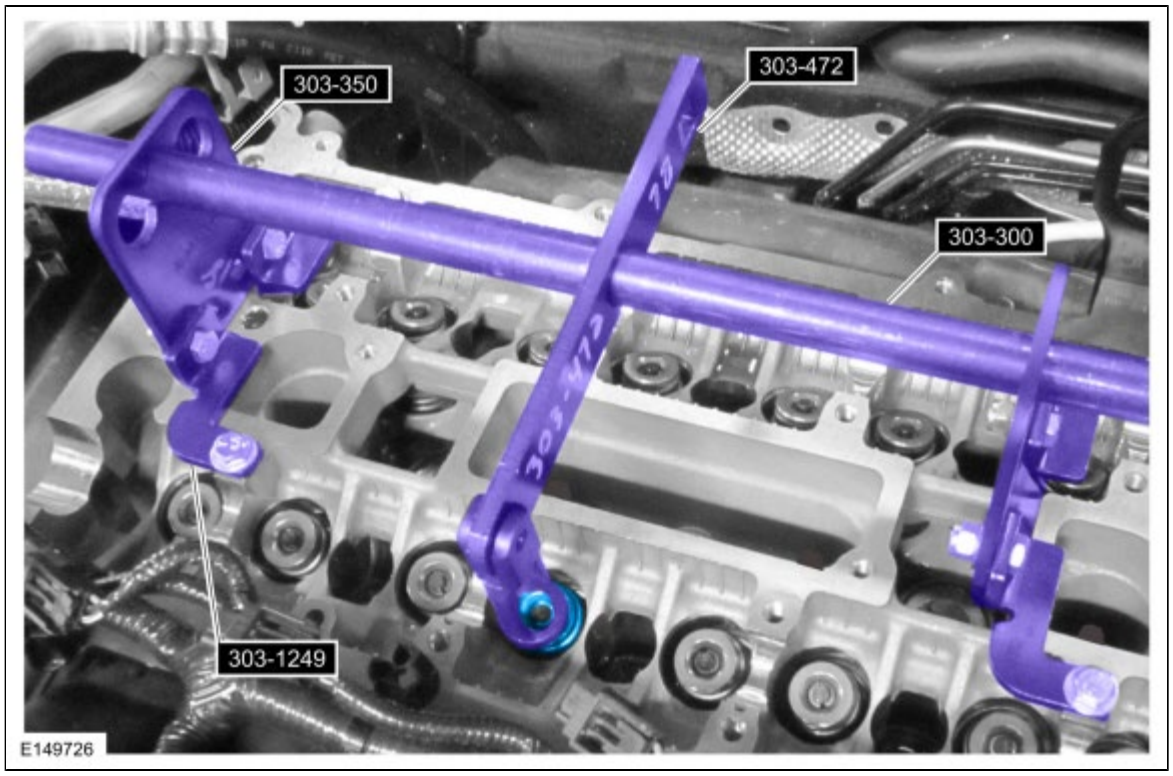

5. Repeat the appropriate removal steps for all of the other cylinders
6. Install new parts, as necessary.

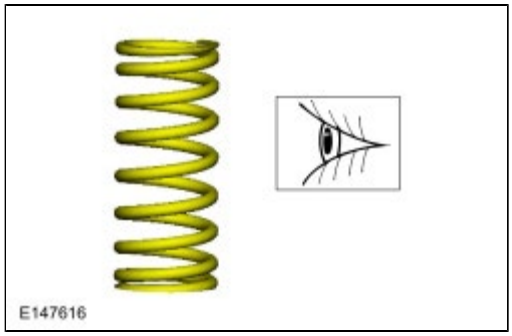

Installation

1. **NOTE:** *Install the valve collet, using some multi-purpose grease and a small screwdriver.*

   NOTE: *Check the seating of the valve collet.*

   Special Tool(s) : 303-300 (T87C-6565-A) Set, Valve Spring Compressor , 303-350 (T89P-6565-A) Compressor, Valve Spring , 303-472 (T94P-6565-AH) Adapter, Valve Spring Compressor , 303-1249 Valve Spring Compressor
   Material : Multi-Purpose Grease / Motorcraft® XL-5 (aerosol), CRC® SL3151 (ESB-M1C93-B)

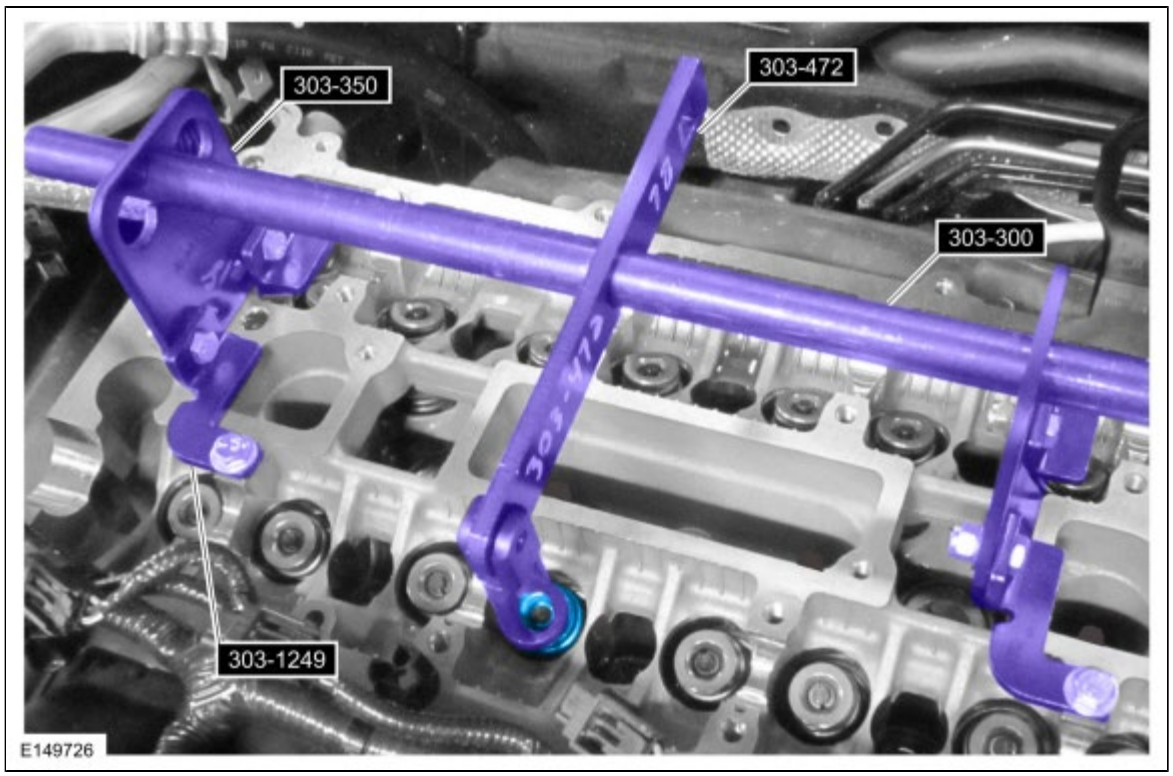

2. Disconnect the compressed air supply.

3. Install the following items:
   1. Refer to: Valve Tappets (303-01A Engine - 2.0L Duratec-HE (125kW/170PS) - MI4, Removal and Installation).
   2. Refer to: Spark Plugs (303-07A Engine Ignition - 2.0L Duratec-HE (125kW/170PS) - MI4, Removal and Installation).

Copyright © Ford Motor Company

Cylinder Head

Removal

NOTICE: During engine repair procedures, cleanliness is extremely important. Any foreign material, including any material created while cleaning gasket surfaces, that enters the oil passages, coolant passages or the oil pan can cause engine failure.

1. Refer to: Jacking and Lifting - Overview (100-02 Jacking and Lifting, Description and Operation).

2. Refer to: Cooling System Draining and Vacuum Filling (303-03A Engine Cooling - 2.0L Duratec-HE (125kW/170PS) - MI4, General Procedures).
   Refer to: Cooling System Draining, Filling and Bleeding (303-03A Engine Cooling - 2.0L Duratec-HE (125kW/170PS) - MI4, General Procedures).

3. Remove the following items:
   1. Refer to: Fuel Injector (303-04A Fuel Charging and Controls - 2.0L Duratec-HE (125kW/170PS) - MI4, Removal and Installation).
   2. Refer to: Heated Oxygen Sensor (HO2S) (303-14A Electronic Engine Controls - 2.0L Duratec-HE (125kW/170PS) - MI4, Removal and Installation).

4.

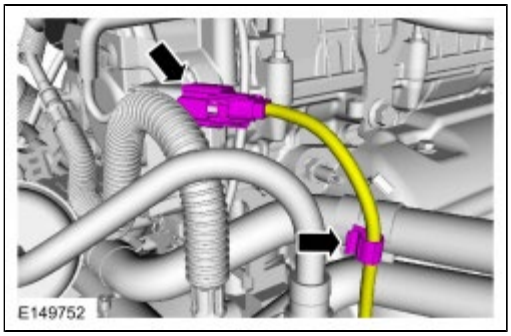

5.

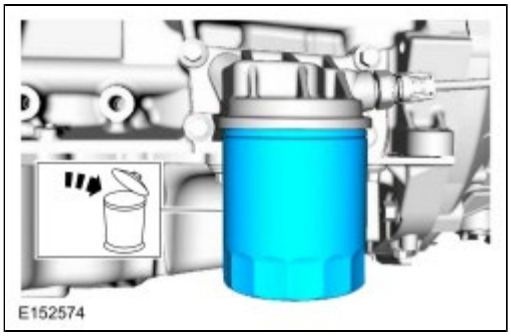

6.

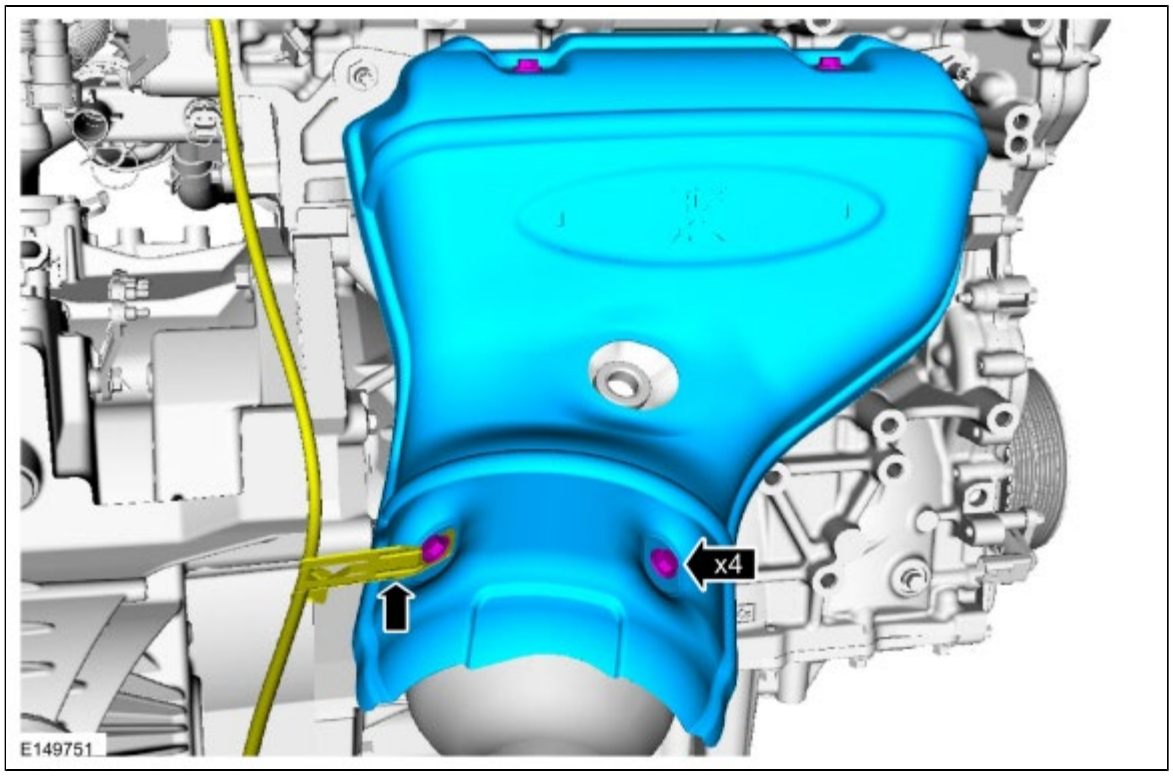

7.

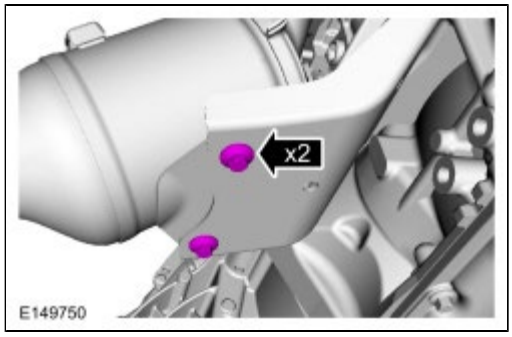

8. **NOTE:** *Discard the gasket.*

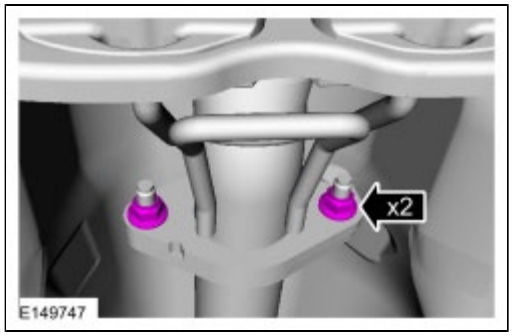

9.

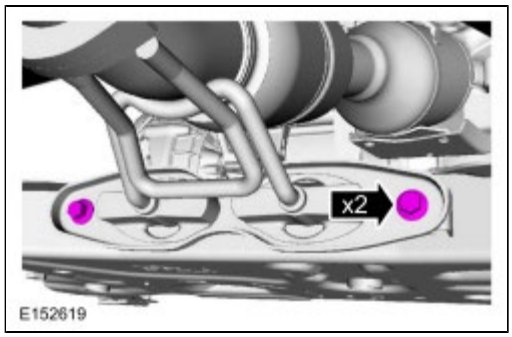

10. **NOTE:** *Discard the nuts and catalytic converter gasket.*

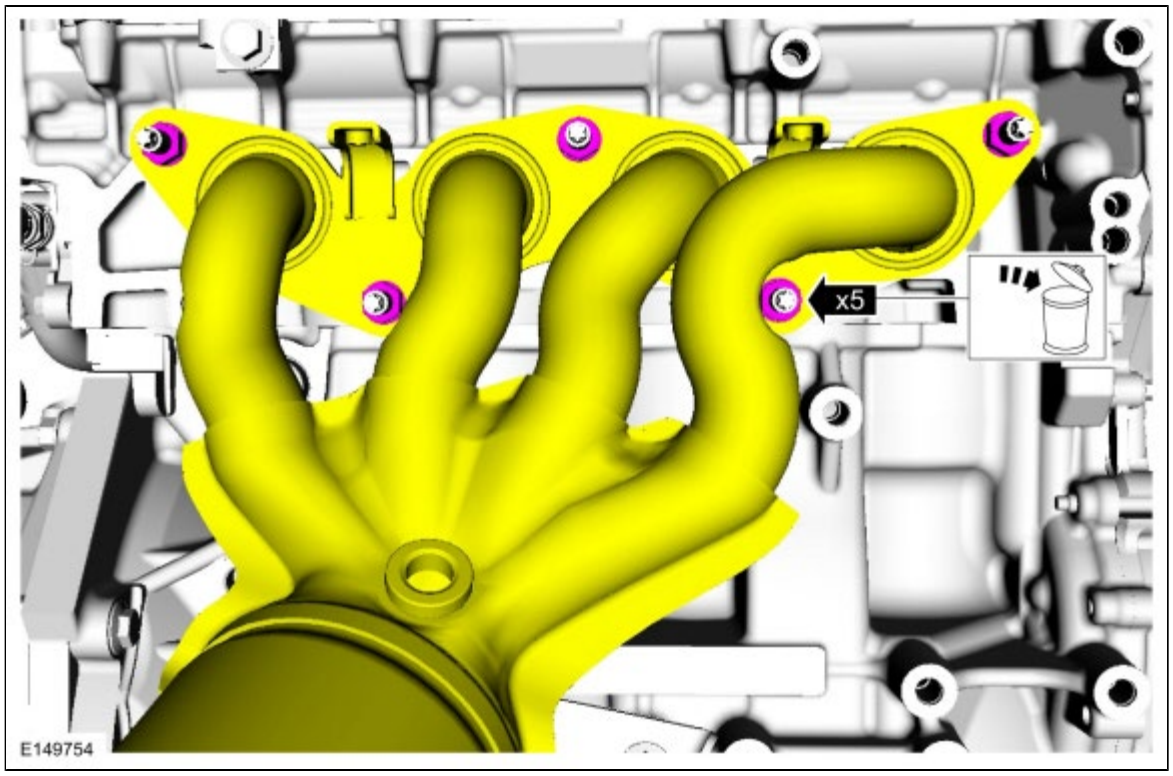

11.

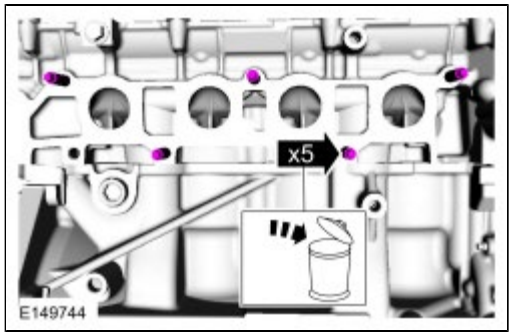

12. Refer to: Camshaft (303-01A Engine - 2.0L Duratec-HE (125kW/170PS) - MI4, Removal and Installation).

13.

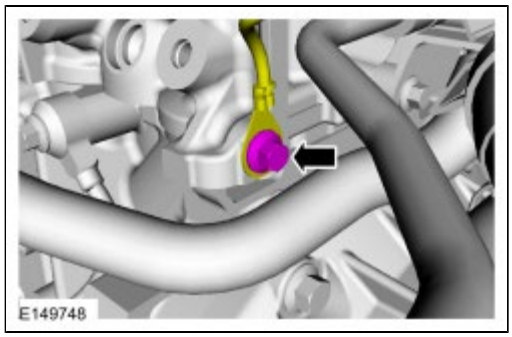

14.

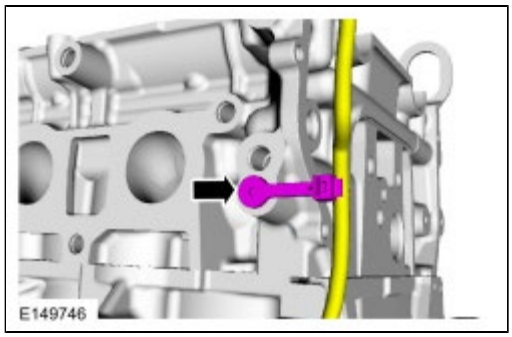

15. *General Equipment* : Hose Clamp Remover/Installer

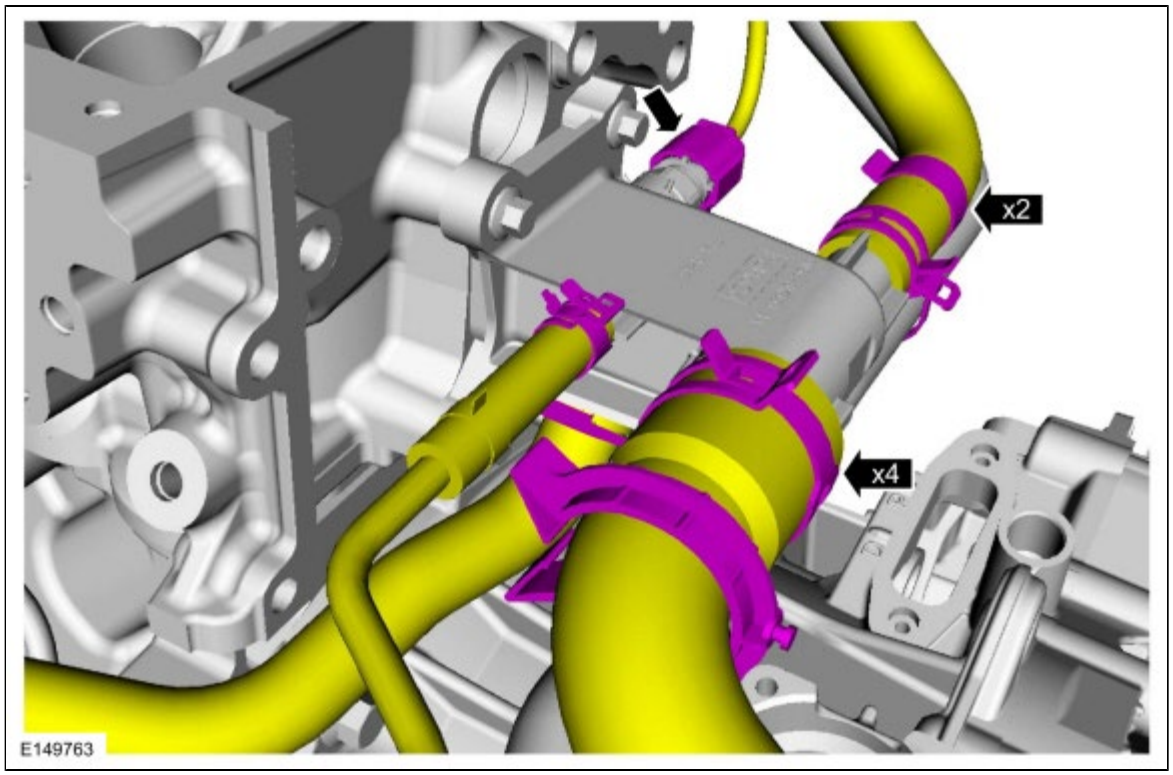

16. **NOTE:** *If the valve tappets are to be reused, mark the location of the valve tappets to make sure they are assembled in their original positions.*

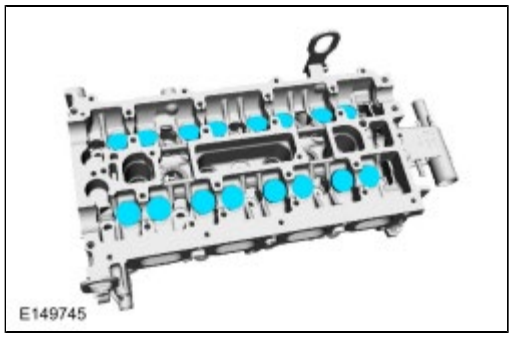

17.

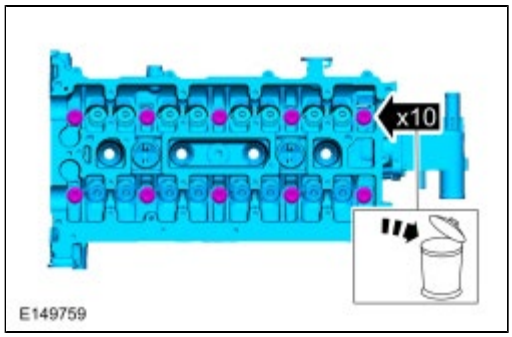

18.

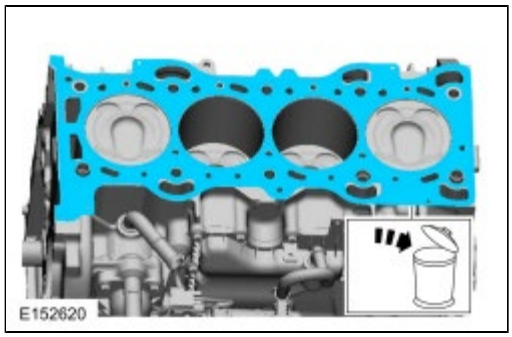

Installation

1. **NOTE:** *Observe all warnings or cautions and follow all application directions contained on the packaging of the silicone gasket remover and the metal surface prep.*

   NOTE: *Clean the cylinder head bolt holes in the cylinder block. Make sure all coolant, oil or other foreign material is removed.*

   NOTE: *If there is no residual gasket material present, metal surface prep can be used to clean and prepare the surfaces.*

   1. Remove any large deposits of silicone or gasket material with a plastic scraper.
   2. Apply Motorcraft Silicone Gasket Remover following package directions, and allow to set for several minutes.
      Material : Motorcraft® Silicone Gasket Remover / ZC-30
   3. Remove the Motorcraft Silicone Gasket Remover with a plastic scraper. A second application of Motorcraft Silicone Gasket Remover may be required if residual traces of silicone or gasket material remain.
      Material : Motorcraft® Silicone Gasket Remover / ZC-30
   4. Apply Motorcraft Metal Surface Prep following package directions, to remove any traces of oil or coolant, and to prepare the surfaces to bond with the new gasket. Do not attempt to make the metal shiny. Some staining of the metal surfaces is normal.
      Material : Motorcraft® Metal Surface Prep / ZC-31-A

2. Clean and inspect the catalytic converter flange.
   Refer to: Exhaust Manifold Cleaning and Inspection (303-00 Engine System - General Information, General Procedures).

3. Refer to: Cylinder Head Distortion (303-00 Engine System - General Information, General Procedures).

Refer to: Cylinder Block Distortion (303-00 Engine System - General Information, General Procedures).

4.

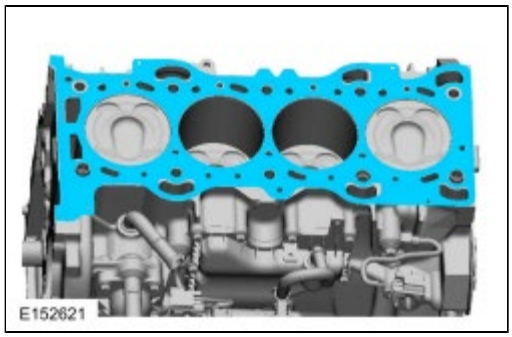

5. **NOTE:** *The cylinder head bolts are torque-to-yield and must not be reused. New cylinder head bolts must be installed.*

Torque :
Stage 1: 7 Nm
Stage 2: 15 Nm
Stage 3: 45 Nm
Stage 4: 90°
Stage 5: Tighten an additional 90°

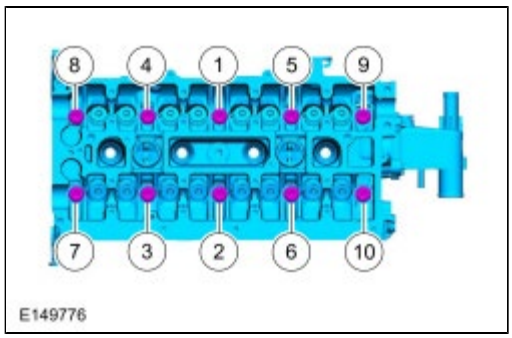

6. **NOTE:** *Install the 16 valve tappets in their original positions.*

Material : Motorcraft® SAE 5W-20 Premium Synthetic Blend Motor Oil / XO-5W20-QSP (WSS-M2C945-A)

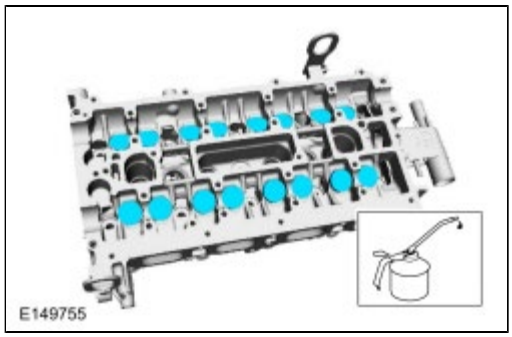

7. *General Equipment* : Hose Clamp Remover/Installer

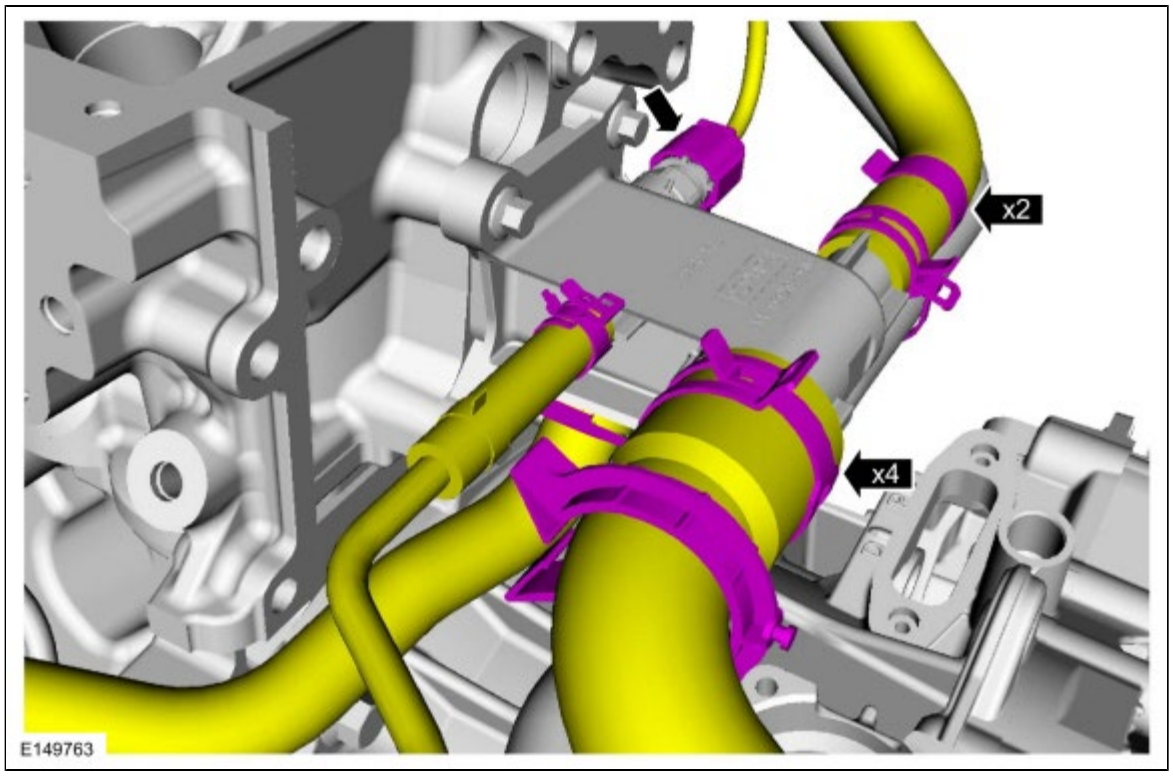

8.

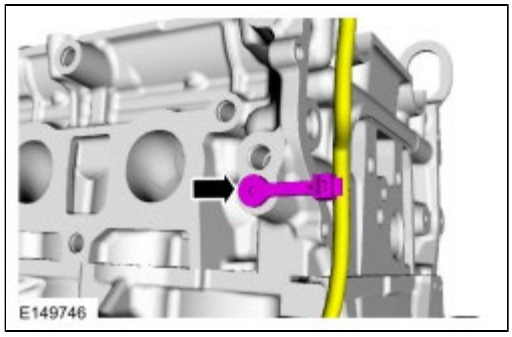

9. *Torque* : 10 Nm

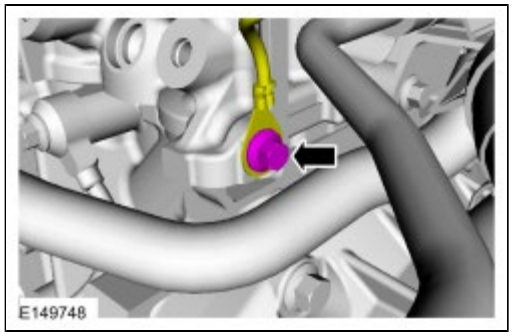

10. Refer to: Camshaft (303-01A Engine - 2.0L Duratec-HE (125kW/170PS) - MI4, Removal and Installation).

11. *Torque* : 17 Nm

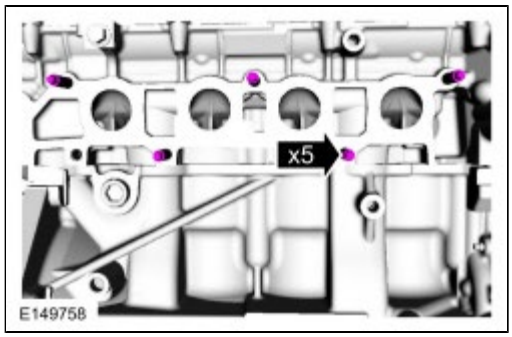

12. **NOTICE: Failure to tighten the catalytic converter manifold nuts to specification a second time may cause the converter to develop an exhaust leak.**

    NOTE: *Always install new fasteners and gaskets as indicated. Clean flange faces prior to new gasket installation to make sure of proper sealing.*

    Torque :
    Stage 1: 55 Nm
    Stage 2: Re-tighten to 55 Nm

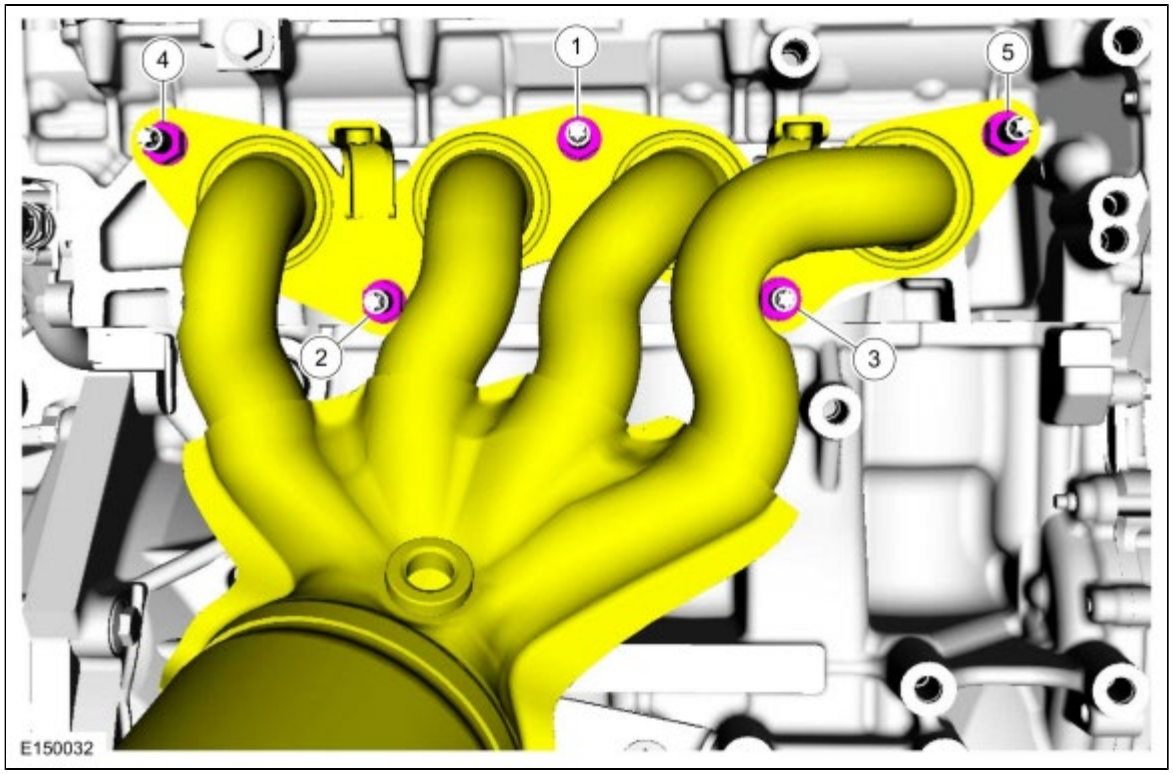

13. *Torque* : 25 Nm

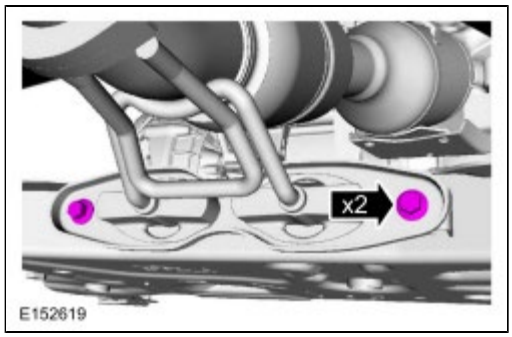

14.
    - *Torque* : Tighten the first nut to 48 Nm

- *Torque* : Tighten the second nut to 48 Nm
- *Torque* : Re-tighten the first nut to 48 Nm

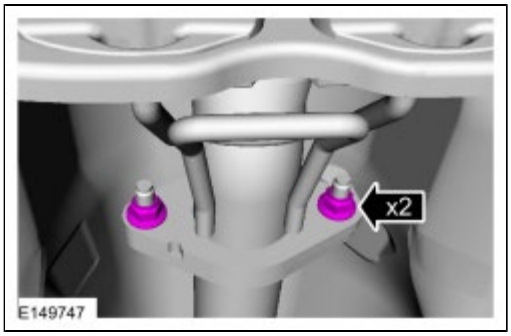

15. *Torque* : 25 Nm

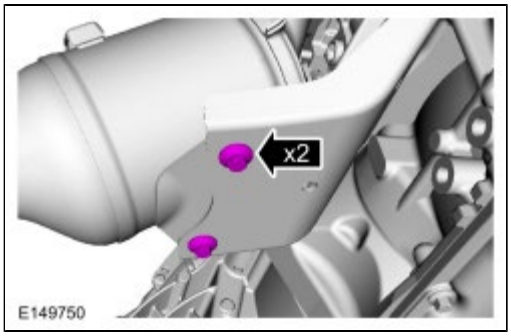

16. *Torque* : 10 Nm

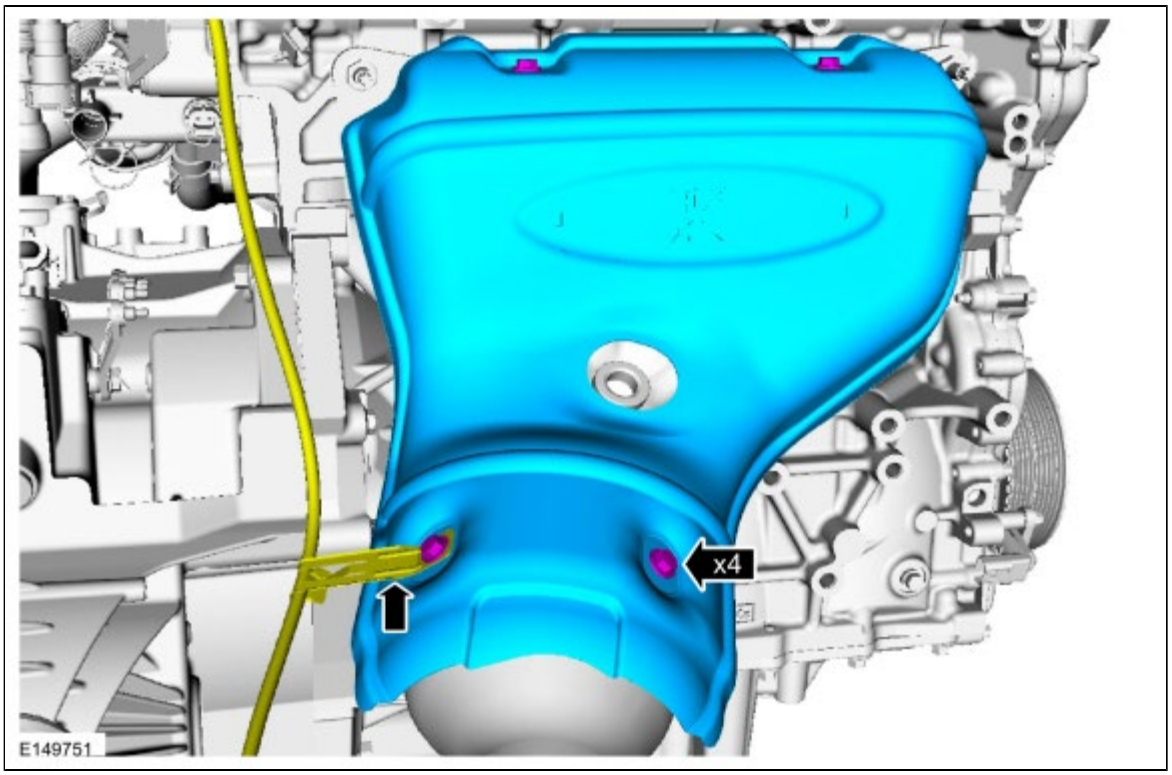

17.

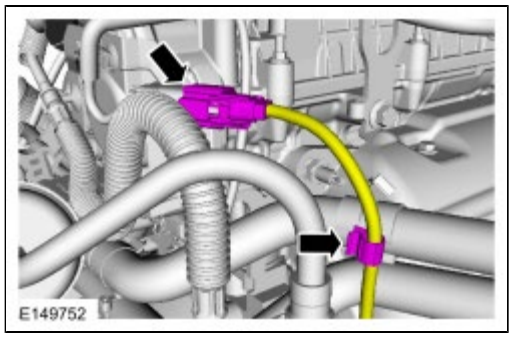

18. Drain and install the drain plug.
    Torque : 27 Nm

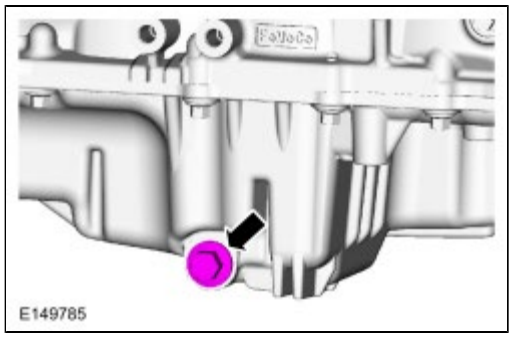

19. **NOTE:** *Lubricate the engine oil filter gasket with clean engine oil prior to installing the oil filter.*

    Material : Motorcraft® SAE 5W-20 Premium Synthetic Blend Motor Oil / XO-5W20-QSP (WSS-M2C945-A)
    Torque :
    Stage 1: 8 Nm
    Stage 2: 180°

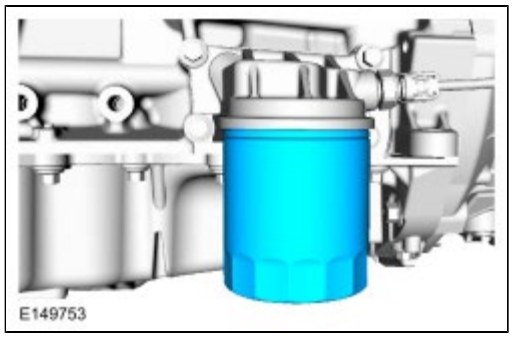

20. Remove the following items:
    1. Refer to: Heated Oxygen Sensor (HO2S) (303-14A Electronic Engine Controls - 2.0L Duratec-HE (125kW/170PS) - MI4, Removal and Installation).
    2. Refer to: Fuel Injector (303-04A Fuel Charging and Controls - 2.0L Duratec-HE (125kW/170PS) - MI4, Removal and Installation).

21. Refer to: Cooling System Draining and Vacuum Filling (303-03A Engine Cooling - 2.0L Duratec-HE (125kW/170PS) - MI4, General Procedures).
    Refer to: Cooling System Draining, Filling and Bleeding (303-03A Engine Cooling - 2.0L Duratec-HE (125kW/170PS) - MI4, General Procedures).

22. Fill the engine with clean engine oil.
    Material : Motorcraft® SAE 5W-20 Premium Synthetic Blend Motor Oil / XO-5W20-QSP (WSS-M2C945-A)

Copyright © Ford Motor Company

Exhaust Manifold

Removal

1. The exhaust manifold is an integral part of the catalytic converter and serviced as an assembly.
   Refer to: Catalytic Converter (309-00A Exhaust System - 2.0L Duratec-HE (125kW/170PS) - MI4, Removal and Installation).

Installation

1. The exhaust manifold is an integral part of the catalytic converter and serviced as an assembly.
   Refer to: Catalytic Converter (309-00A Exhaust System - 2.0L Duratec-HE (125kW/170PS) - MI4, Removal and Installation).

Copyright © Ford Motor Company

Oil Pan

Removal

All vehicles

NOTE: *Automatic transmission shown, manual transmission similar.*

1. Refer to: Jacking and Lifting - Overview (100-02 Jacking and Lifting, Description and Operation).
2. 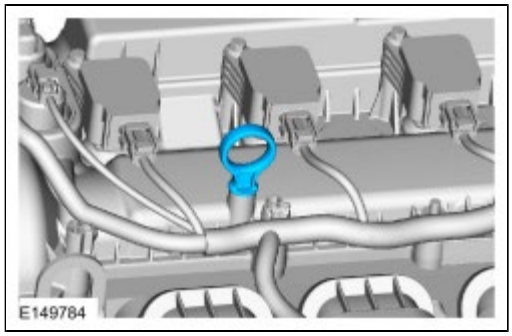

3. **NOTE:** *This step does not apply if the engine front cover is removed.*

   Refer to: Air Cleaner (303-12A Intake Air Distribution and Filtering - 2.0L Duratec-HE (125kW/170PS) - MI4, Removal and Installation).
   Refer to: Air Cleaner Outlet Pipe (303-12A Intake Air Distribution and Filtering - 2.0L Duratec-HE (125kW/170PS) - MI4, Removal and Installation).

Vehicles with automatic transmission

4. **NOTE:** *This step does not apply if the engine front cover is removed.*
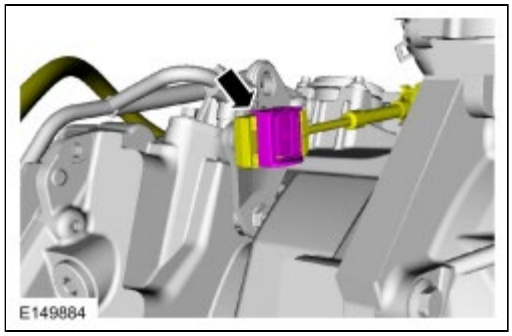

5. **NOTE:** *This step does not apply if the engine front cover is removed.*

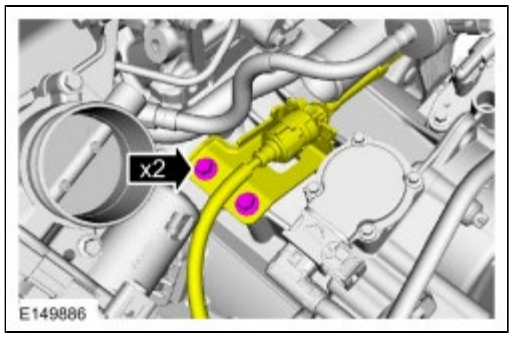

All vehicles

6. **NOTICE: To prevent damage to the transmission, do not loosen the transmission-to-engine bolts more than (0.197 in) 5 mm.**

   NOTE: *This step does not apply if the engine front cover is removed.*

   Loosen.
   Distance : 0.197 in (5 mm)

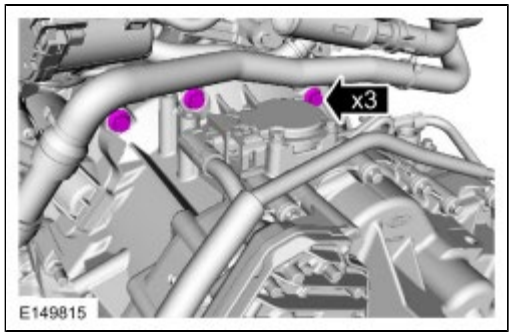

7. **NOTE:** *This step does not apply if the engine front cover is removed.*

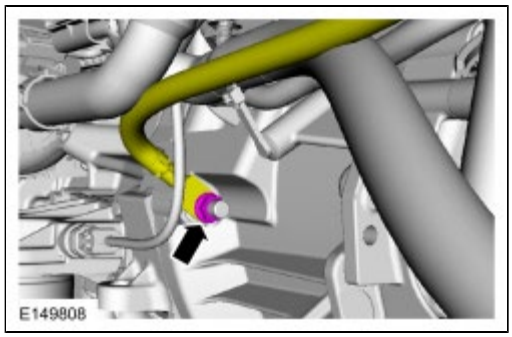

8. **NOTE:** *This step does not apply if the engine front cover is removed.*

   Loosen.
   Distance : 0.197 in (5 mm)

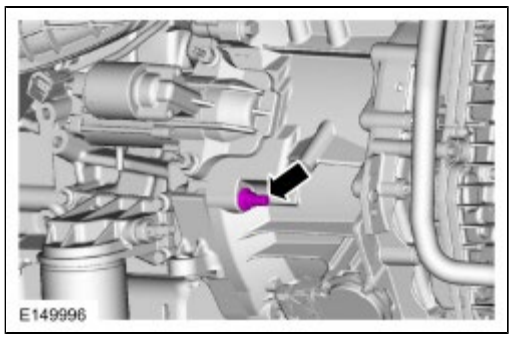

9. Refer to: Air Conditioning (A/C) Compressor Belt (303-05A Accessory Drive - 2.0L Duratec-HE (125kW/170PS) - MI4, Removal and Installation).

10.

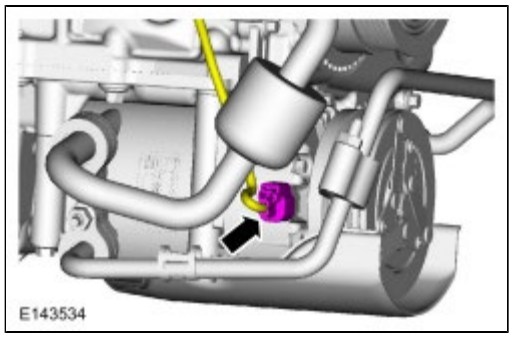

11.

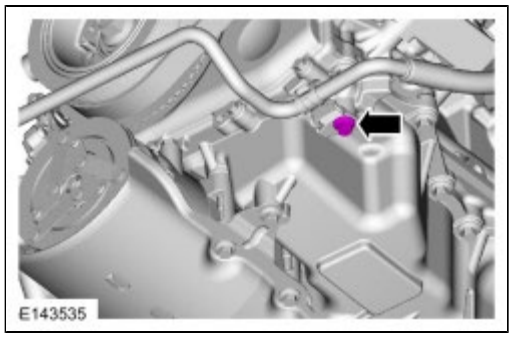

12. **NOTICE: Support the A/C compressor. Do not allow the A/C compressor to hang by the A/C lines or damage to the A/C compressor and tubes may occur.**

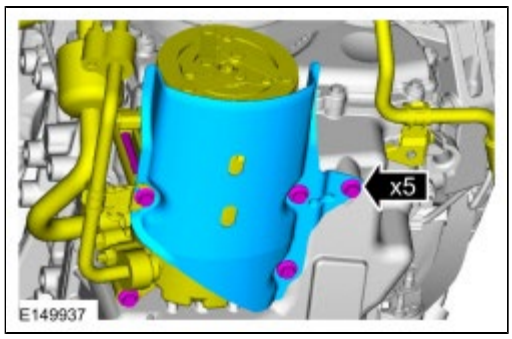

13. Drain and install the drain plug.
    Torque : 27 Nm

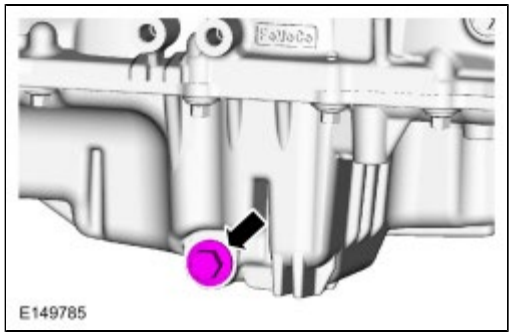

14.

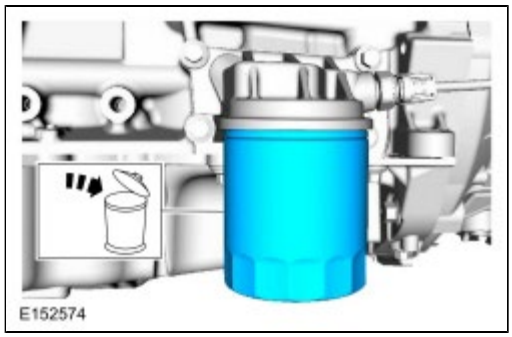

15. Remove.

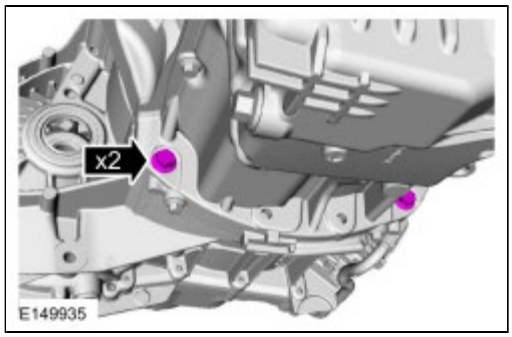

16. Remove.

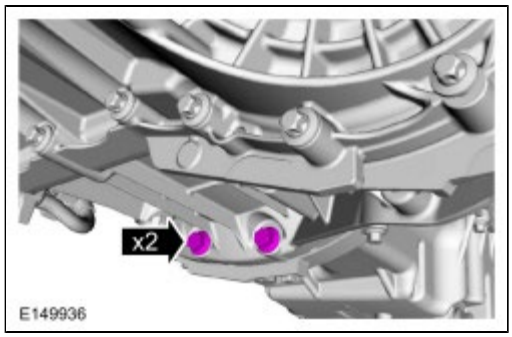

17. **NOTE:** *This step does not apply if the engine front cover is removed.*

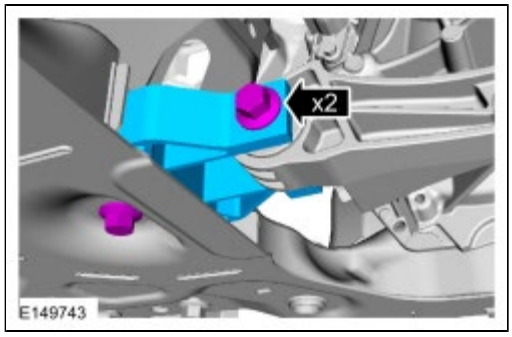

18. **NOTE:** *This step does not apply if the engine front cover is removed.*

    Loosen.
    Distance : 0.197 in (5 mm)

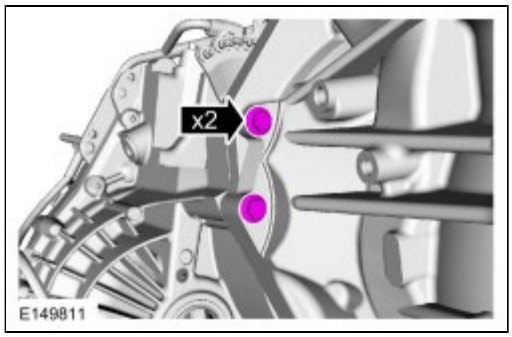

19. **NOTE:** *This step does not apply if the engine front cover is removed.*

    Separate the engine and transaxle.
    Distance : 0.197 in (5 mm)

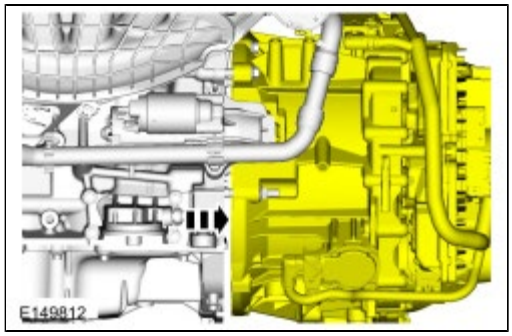

20. **NOTE:** *This step does not apply if the engine front cover is removed.*

    Remove.

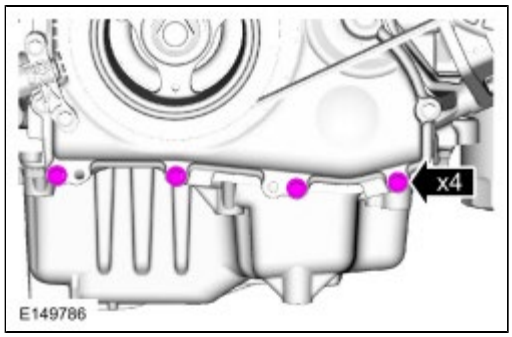

21.

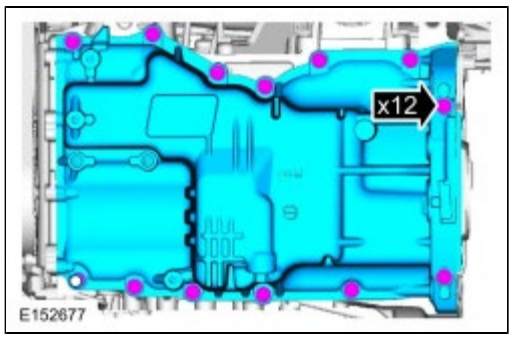

Installation

All vehicles

1. **NOTICE: Do not use metal scrapers, wire brushes, power abrasive discs or other abrasive means to clean the sealing surfaces. These tools cause scratches and gouges, which make leak paths. Use a plastic scraping tool to**

remove traces of sealant.

Clean and inspect all mating surfaces.
Material : Motorcraft® Metal Surface Prep / ZC-31-A
Material : Motorcraft® Silicone Gasket Remover / ZC-30

2. **NOTE:** *Do not apply sealant to oil pan-to-engine front cover mating surface if the engine front cover is removed.*

   NOTE: *If the oil pan is not secured within 10 minutes of sealant application, the sealant must be removed and the sealing area cleaned with metal surface prep. Allow to dry until there is no sign of wetness, or 10 minutes, whichever is longer. Failure to follow this procedure can cause future oil leakage.*

   NOTE: *Apply sealant to the oil pan-to-engine block and to the oil pan-to-engine front cover mating surfaces.*

   Material : Silicone Gasket and Sealant / TA-30 (WSE-M4G323-A4)

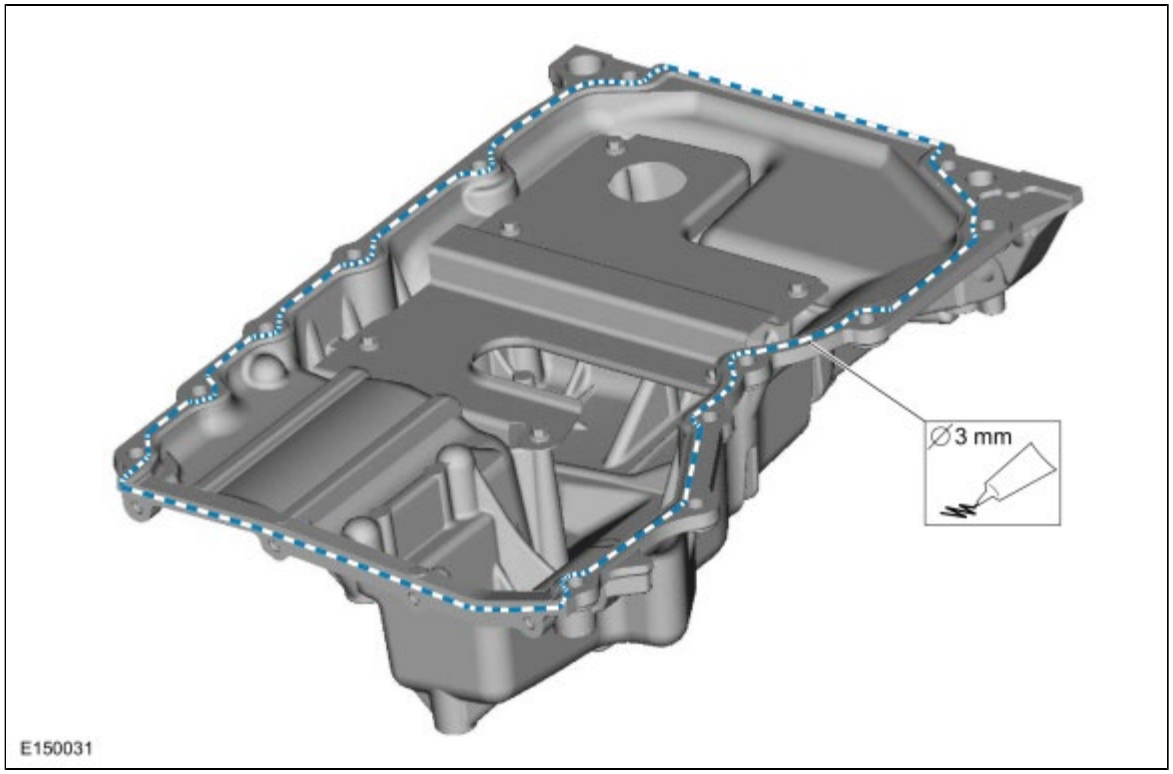

3. Finger-tight.

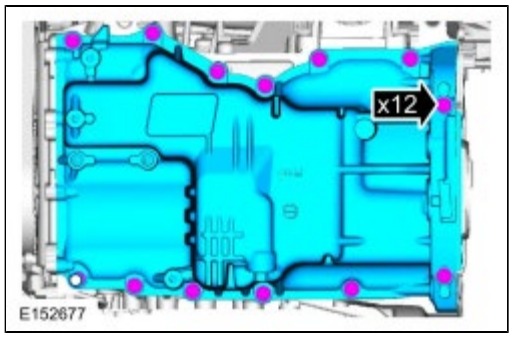

4. **NOTE:** *The engine front cover-to-oil pan fasteners must be tightened first to align the front surface of the oil pan flush with the front surface of the engine block.*

   NOTE: *This step does not apply if the engine front cover is removed.*

   Torque : 10 Nm

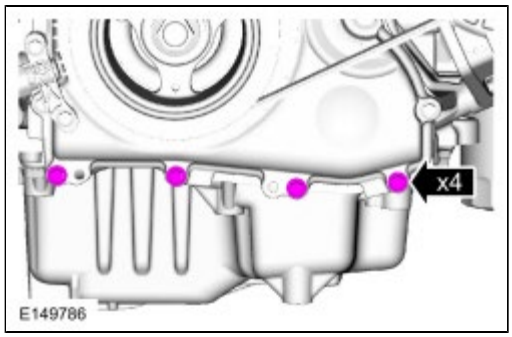

5. *Torque* : 20 Nm

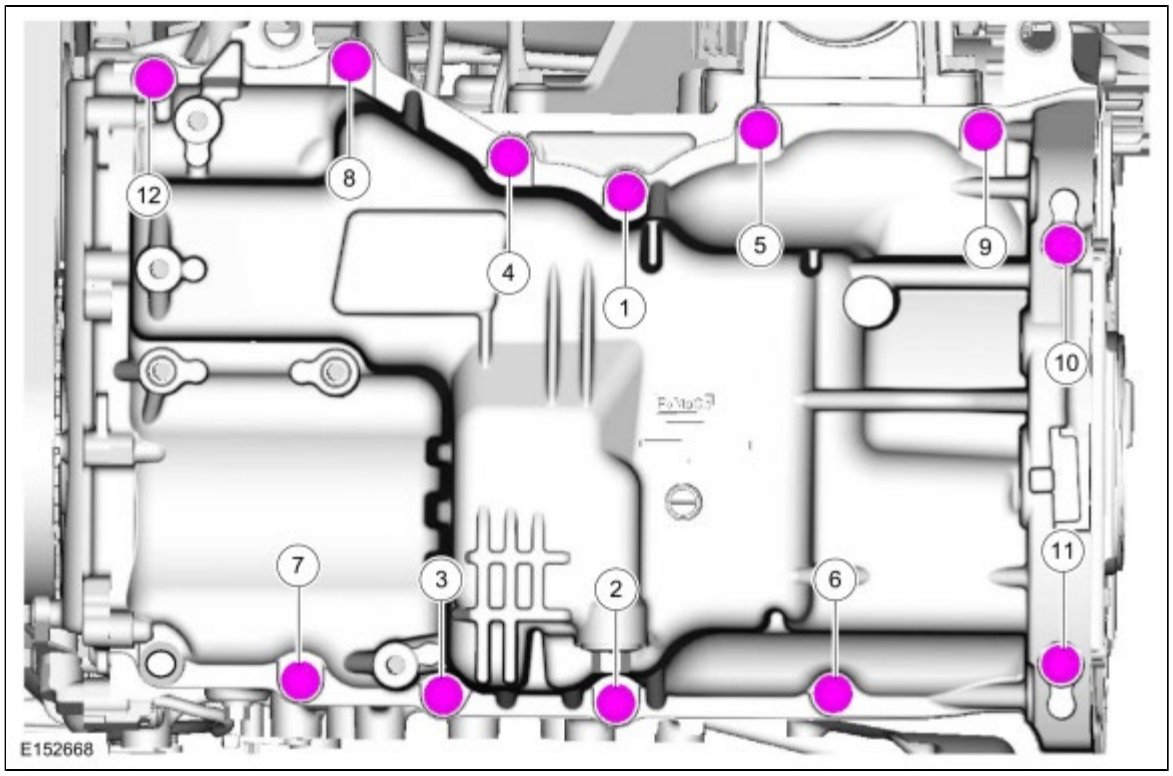

6. **NOTE:** *This step does not apply if the engine front cover is removed.*

   NOTE: *Alternate tightening the LH bellhousing-to-engine and RH engine-to-bellhousing lower bolts to draw the transaxle and engine together.*

   Torque : 48 Nm

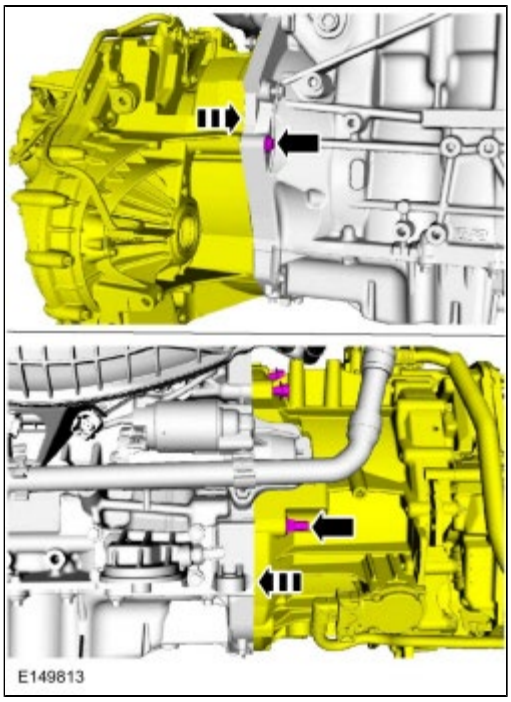

7. *Torque* : 48 Nm

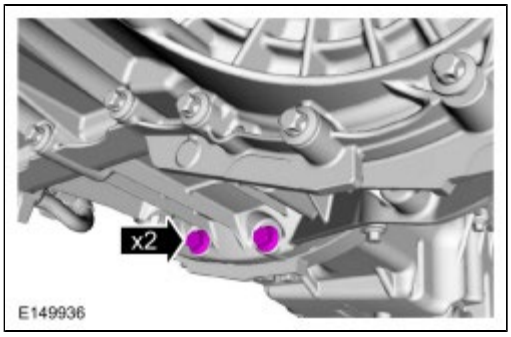

8. *Torque* : 48 Nm

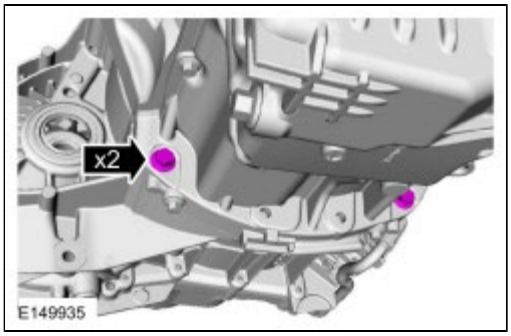

9. **NOTE:** *This step does not apply if the engine front cover is removed.*

   Torque : 86 Nm

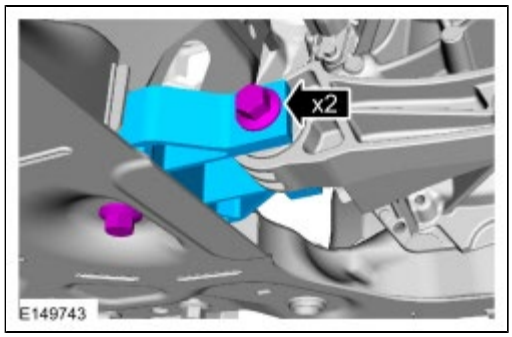

10. **NOTE:** *This step does not apply if the engine front cover is removed.*

    Torque : 48 Nm

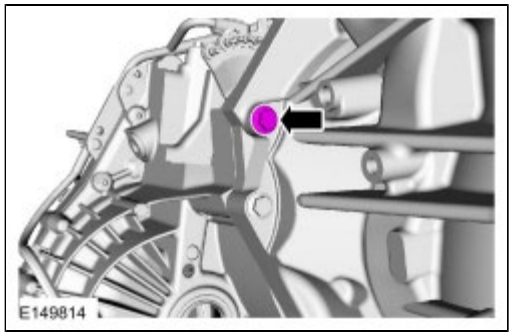

11. *Torque* : 25 Nm

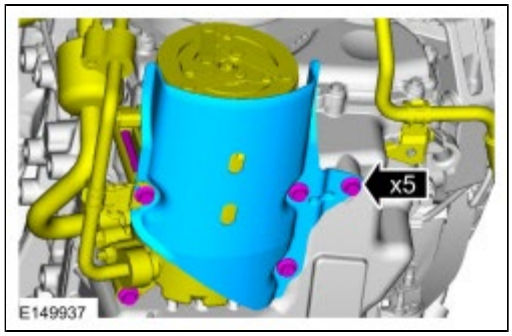

12. *Torque* : 18 Nm

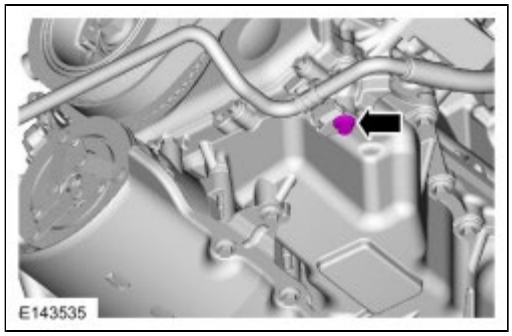

13.

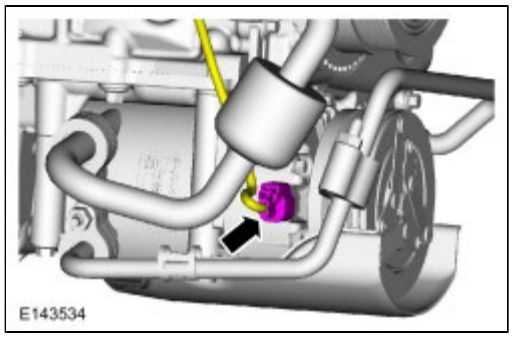

14. **NOTE:** *Lubricate the engine oil filter gasket with clean engine oil prior to installing the oil filter.*

    Material : Motorcraft® SAE 5W-20 Premium Synthetic Blend Motor Oil / XO-5W20-QSP (WSS-M2C945-A)
    Torque :
    Stage 1: 8 Nm
    Stage 2: 180°

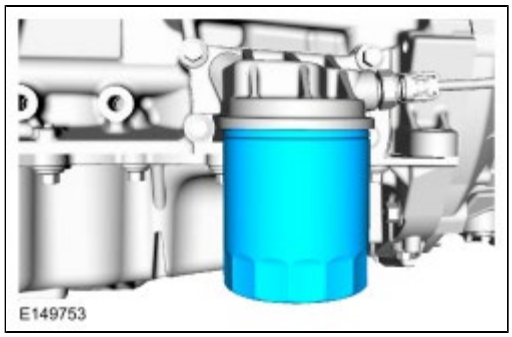

15. **NOTE:** *This step does not apply if the engine front cover is removed.*

    Torque : 20 Nm

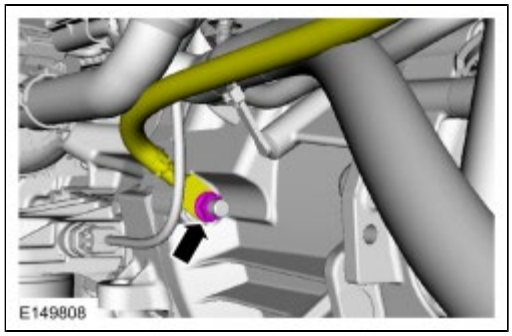

16. Refer to: Air Conditioning (A/C) Compressor Belt (303-05A Accessory Drive - 2.0L Duratec-HE (125kW/170PS) - MI4, Removal and Installation).

17. **NOTE:** *This step does not apply if the engine front cover is removed.*

    Torque : 48 Nm

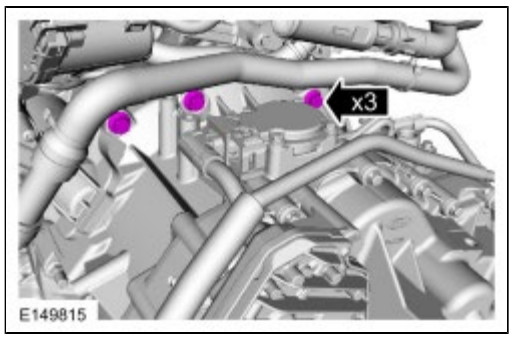

Vehicles with automatic transmission

18. **NOTE:** *This step does not apply if the engine front cover is removed.*

    Torque : 10 Nm

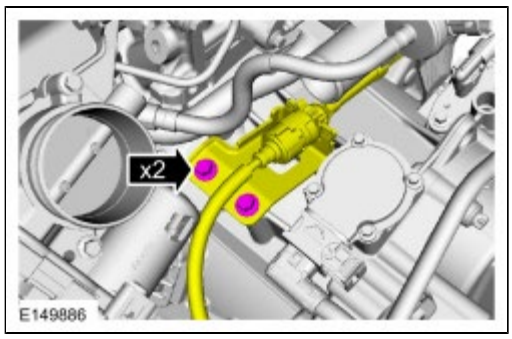

19. **NOTE:** *This step does not apply if the engine front cover is removed.*

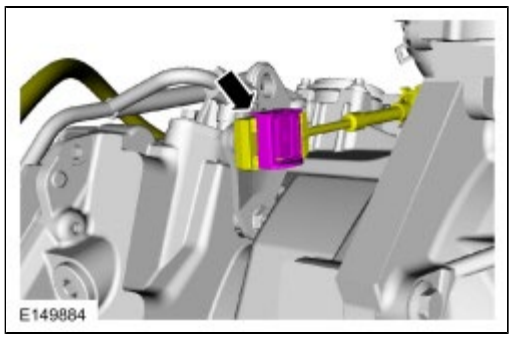

All vehicles

20. **NOTE:** *This step does not apply if the engine front cover is removed.*

    Refer to: Air Cleaner (303-12A Intake Air Distribution and Filtering - 2.0L Duratec-HE (125kW/170PS) - MI4, Removal and Installation).
    Refer to: Air Cleaner Outlet Pipe (303-12A Intake Air Distribution and Filtering - 2.0L Duratec-HE (125kW/170PS) - MI4, Removal and Installation).

21.

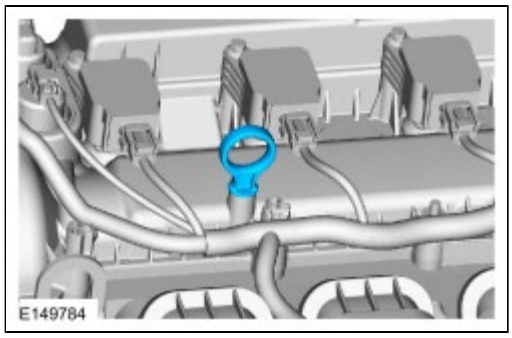

22. Fill the engine with clean engine oil.
    Material : Motorcraft® SAE 5W-20 Premium Synthetic Blend Motor Oil / XO-5W20-QSP (WSS-M2C945-A)

Copyright © Ford Motor Company

Oil Pump

Removal

NOTICE: During engine repair procedures, cleanliness is extremely important. Any foreign material, including any material created while cleaning gasket surfaces, that enters the oil passages, coolant passages or the oil pan can cause engine failure.

NOTE: *Automatic transmission shown, manual transmission similar.*

1. Refer to: Jacking and Lifting - Overview (100-02 Jacking and Lifting, Description and Operation).
2. Refer to: Engine Front Cover (303-01A Engine - 2.0L Duratec-HE (125kW/170PS) - MI4, Removal and Installation).
3. 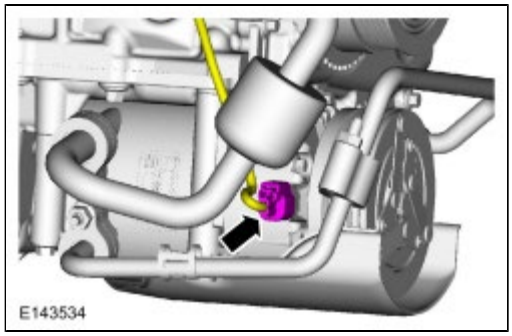

4. 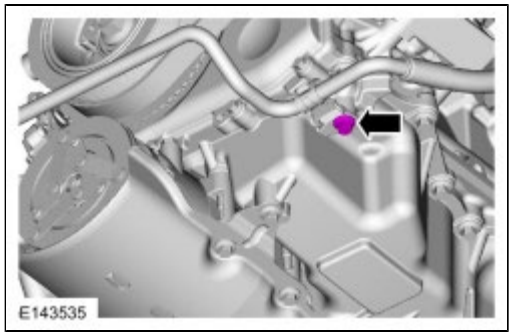

5. **NOTICE: Support the A/C compressor. Do not allow the A/C compressor to hang by the A/C lines or damage to the A/C compressor and tubes may occur.**
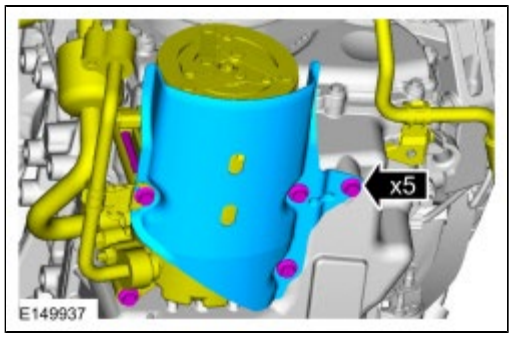

6. Drain and install the drain plug.
   Torque : 27 Nm

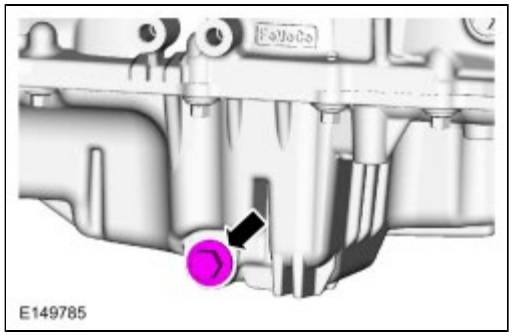

7.

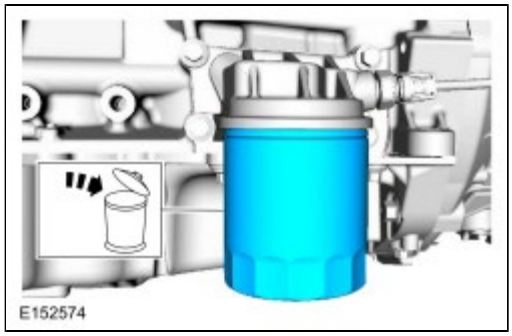

8.

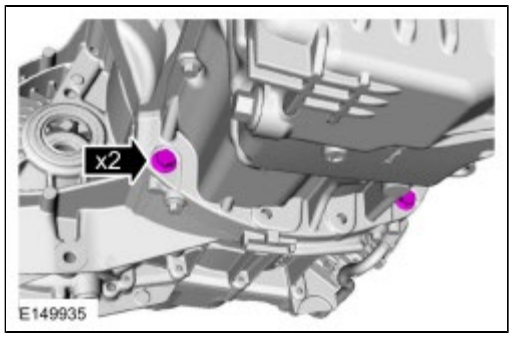

9.

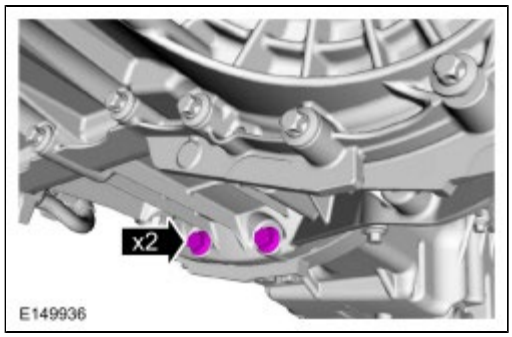

10.

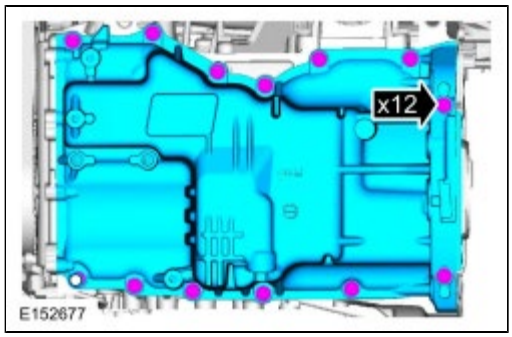

11. **NOTE:** *Discard the gasket.*

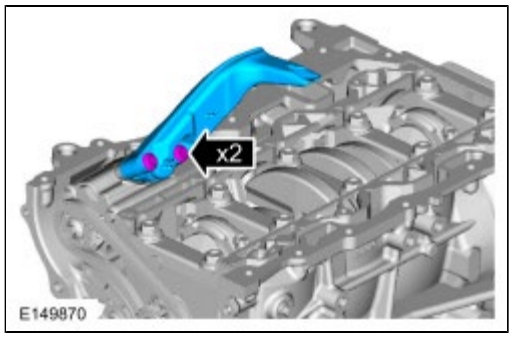

12.
    1. Push the tensioner spring down and release the spring from under the shoulder bolt.
    2. Remove the 2 shoulder bolts and the tensioner and chain.

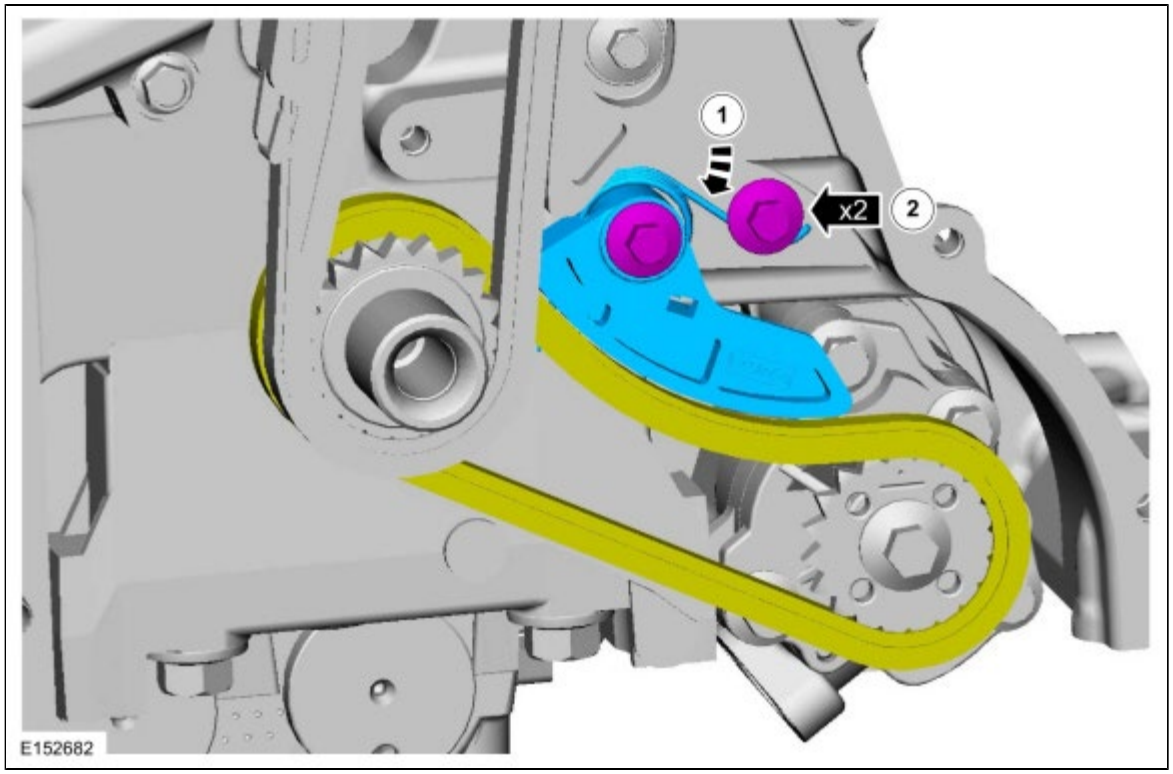

13.

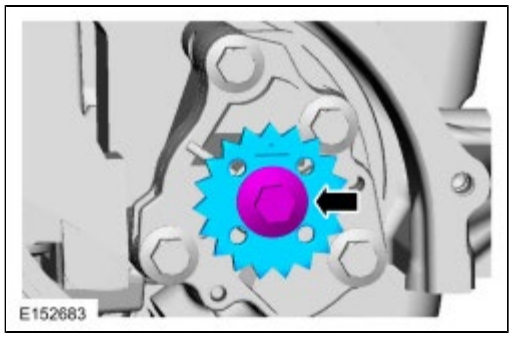

14.

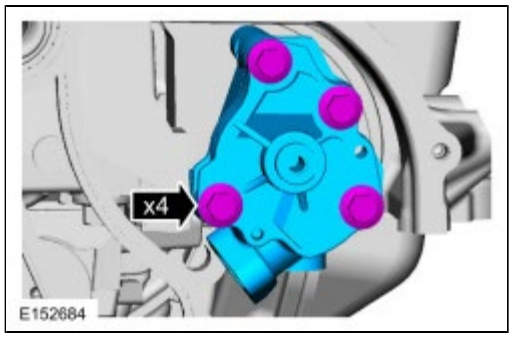

Installation

1. Clean the oil pump and cylinder block mating surfaces.
   Material : Motorcraft® Silicone Gasket Remover / ZC-30

2. *Torque* :
   Stage 1: 10 Nm
   Stage 2: 20 Nm

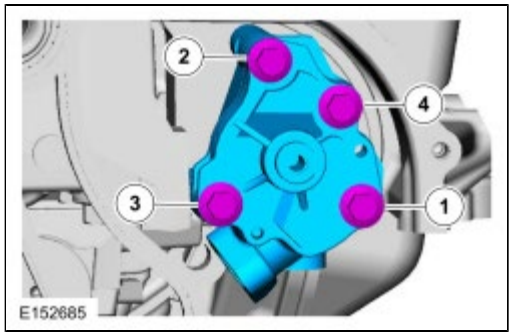

3. *Torque* : 25 Nm

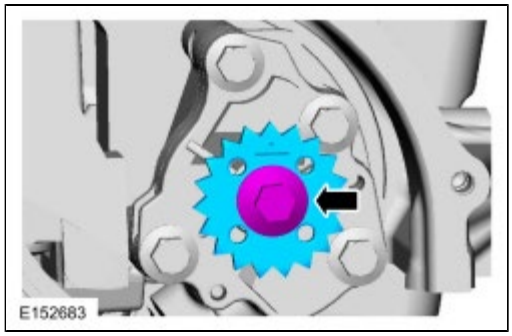

4.
   1. Install the tensioner and the 2 shoulder bolts.
      Torque : 10 Nm
   2. Push the tensioner spring down and position the spring under the shoulder bolt.

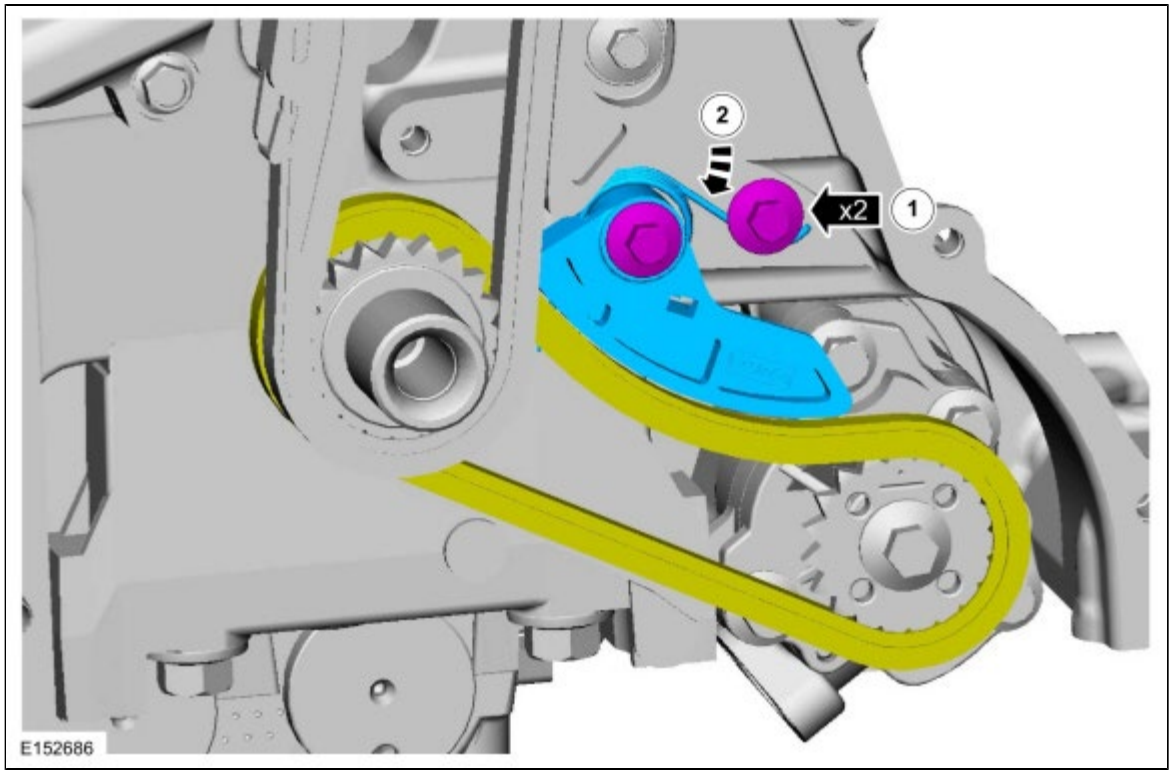

5. **NOTE:** *Install a new gasket.*

   Torque : 10 Nm

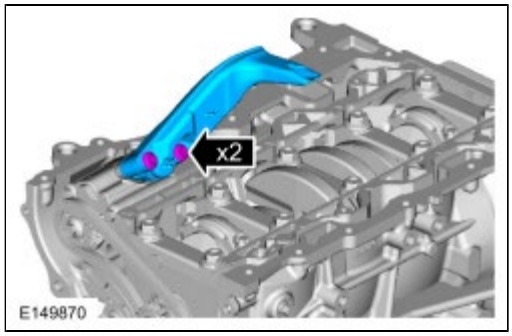

6. **NOTICE: Do not use metal scrapers, wire brushes, power abrasive discs or other abrasive means to clean the sealing surfaces. These tools cause scratches and gouges, which make leak paths. Use a plastic scraping tool to remove traces to sealant.**

   Clean and inspect all mating surfaces.
   Material : Motorcraft® Metal Surface Prep / ZC-31-A
   Material : Motorcraft® Silicone Gasket Remover / ZC-30

7. **NOTE:** *If the oil pan is not secured within 10 minutes of sealant application, the sealant must be removed and the sealing area cleaned with metal surface prep. Allow to dry until there is no sign of wetness, or 10 minutes, whichever is longer. Failure to follow this procedure can cause future oil leakage.*

   Material : Silicone Gasket and Sealant / TA-30 (WSE-M4G323-A4)

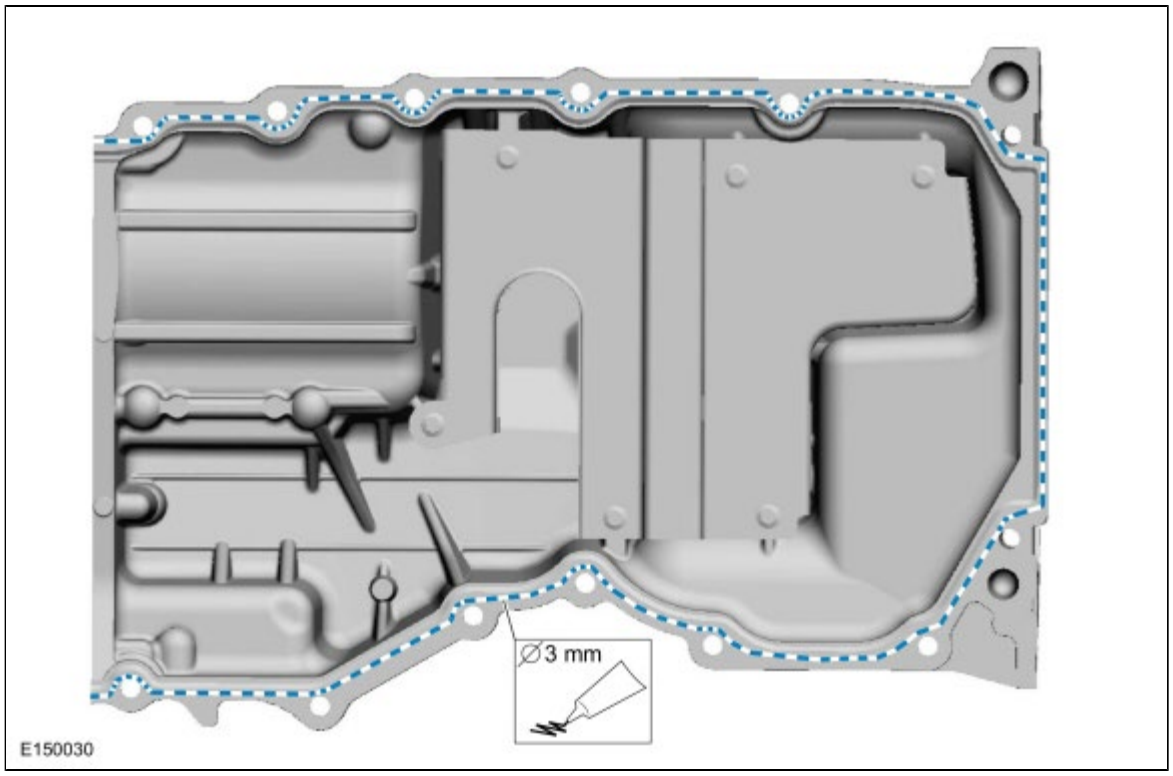

8. **NOTE:** *Do not tighten the oil pan bolts at this time.*

   Finger tight.

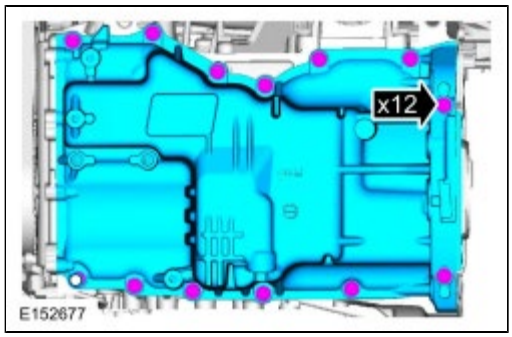

9. Align the front surface of the oil pan flush with the front surface of the engine block.
   General Equipment : Round-Ended Steel Rule

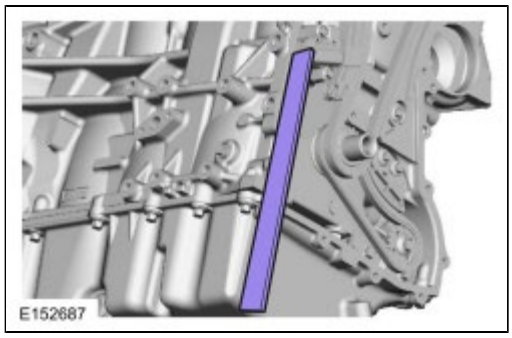

10. *Torque* : 20 Nm

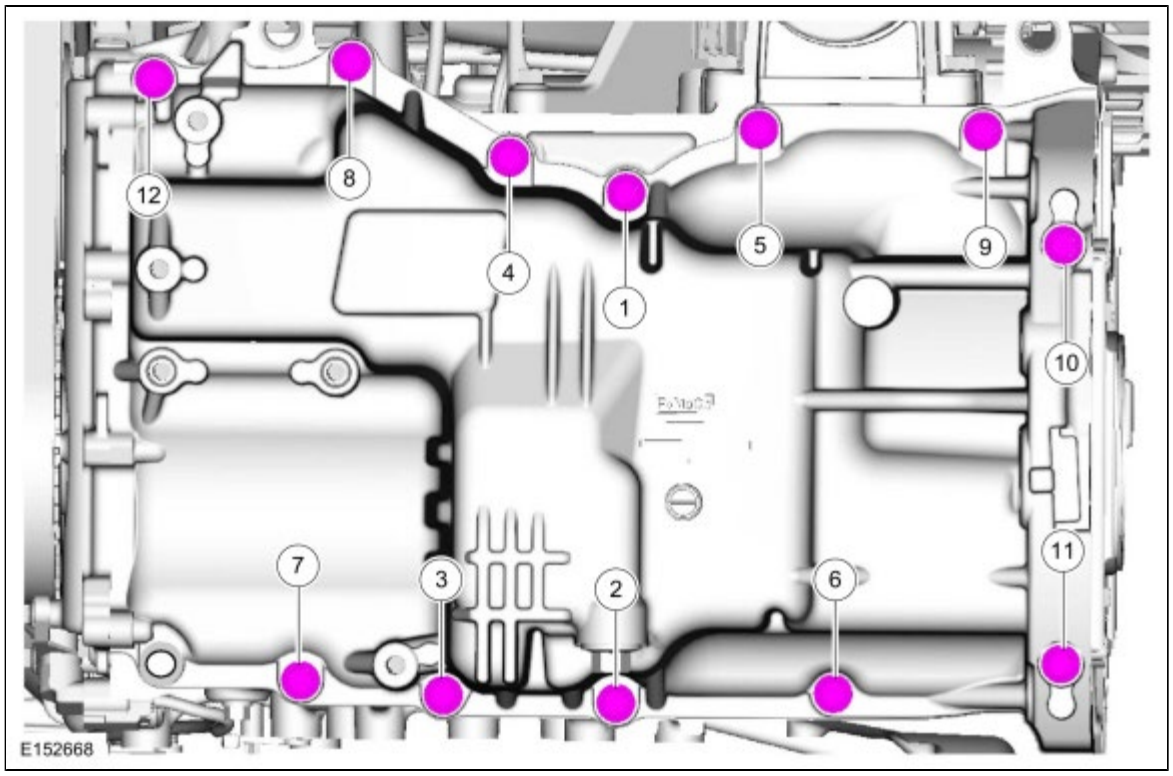

11. *Torque* : 48 Nm

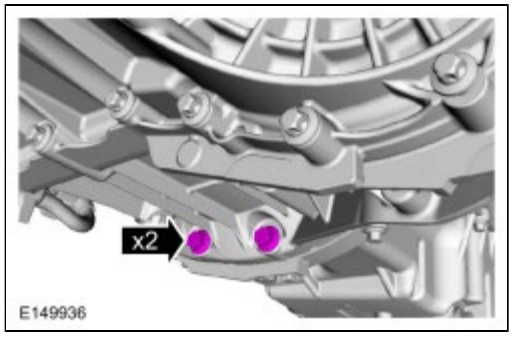

12. *Torque* : 48 Nm

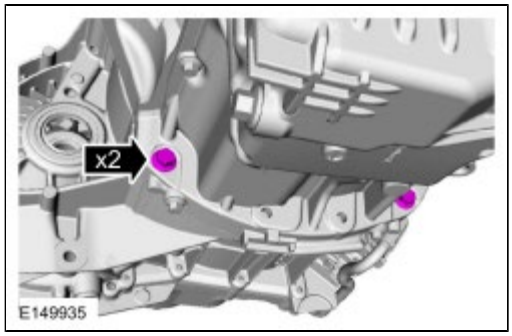

13. **NOTE:** *Lubricate the engine oil filter gasket with clean engine oil prior to installing the oil filter.*

    Material : Motorcraft® SAE 5W-20 Premium Synthetic Blend Motor Oil / XO-5W20-QSP (WSS-M2C945-A)
    Torque :
    Stage 1: 8 Nm
    Stage 2: 180°

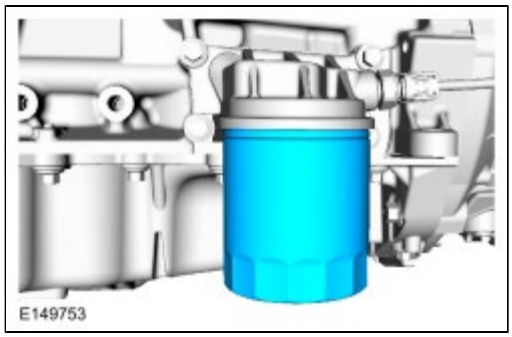

14. *Torque* : 25 Nm

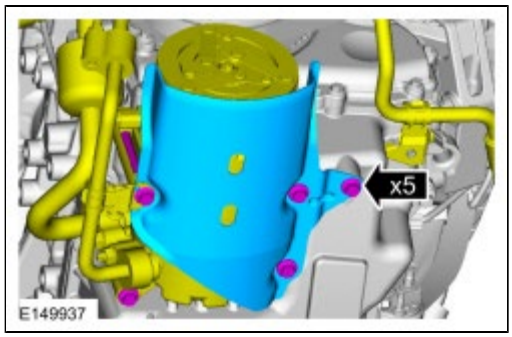

15. *Torque* : 18 Nm

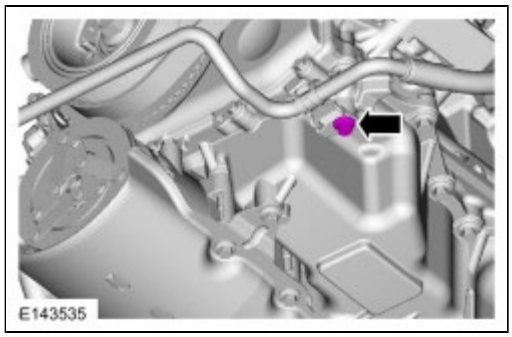

16.

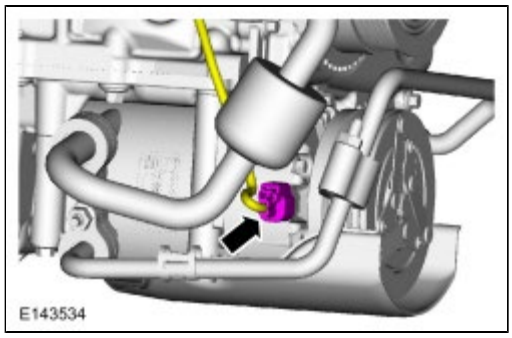

17. Refer to: Engine Front Cover (303-01A Engine - 2.0L Duratec-HE (125kW/170PS) - MI4, Removal and Installation).

18. Fill the engine with clean engine oil.
    Material : Motorcraft® SAE 5W-20 Premium Synthetic Blend Motor Oil / XO-5W20-QSP (WSS-M2C945-A)

Copyright © Ford Motor Company

Oil Pump Screen and Pickup Tube

Removal

NOTE: *Removal steps in this procedure may contain installation details.*

1. Refer to: Oil Pan (303-01A Engine - 2.0L Duratec-HE (125kW/170PS) - MI4, Removal and Installation).
2. **NOTE:** *A new gasket must be installed.*

   Torque : 10 Nm

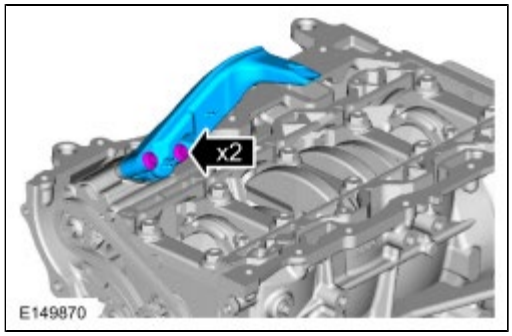

Installation

1. To install, reverse the removal procedure.

Copyright © Ford Motor Company

Oil Filter Adapter

Removal

1. Refer to: Jacking and Lifting - Overview (100-02 Jacking and Lifting, Description and Operation).
2. 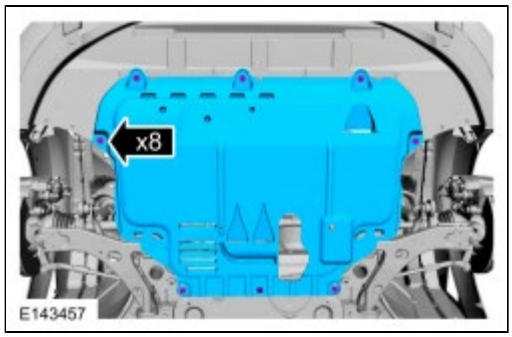

3. 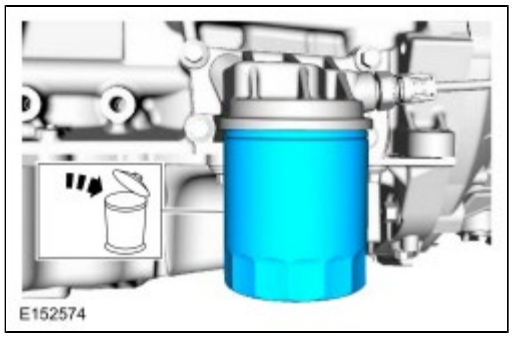

4. 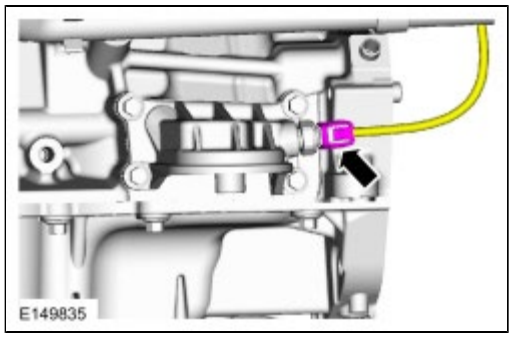

5. **NOTE:** *Discard the gasket.*

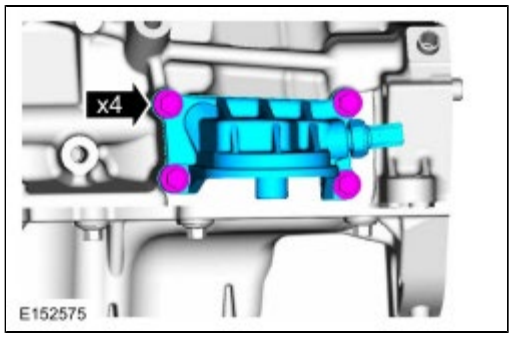

Installation

1. Clean and inspect the mating surfaces.
2. **NOTE:** *Install a new gasket.*

   Torque : 25 Nm

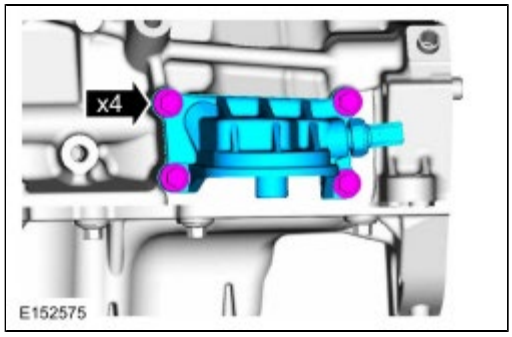

3.

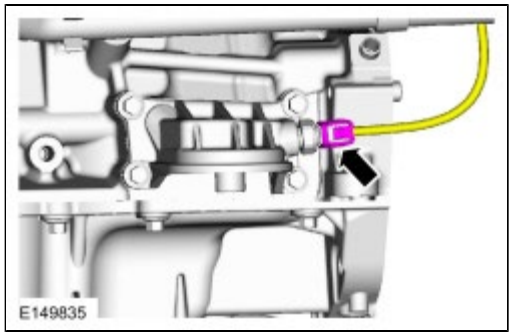

4. **NOTE:** *Lubricate the oil filter gasket with clean engine oil.*

   Material : Motorcraft® SAE 5W-20 Premium Synthetic Blend Motor Oil / XO-5W20-QSP (WSS-M2C945-A)
   Torque :
   Stage 1: 8 Nm
   Stage 2: 180°

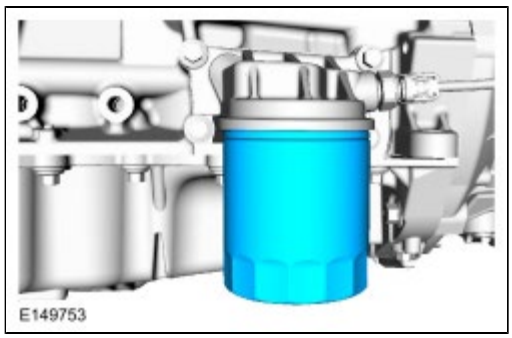

5.

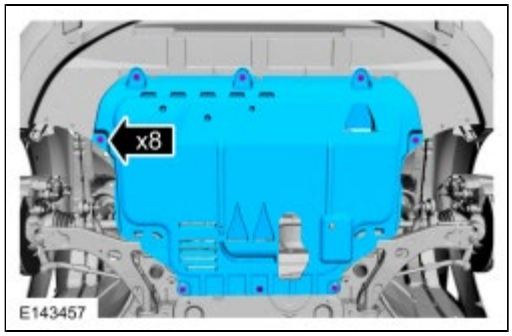

Copyright © Ford Motor Company

Flywheel

Removal

1. Refer to: Jacking and Lifting - Overview (100-02 Jacking and Lifting, Description and Operation).
2. Refer to: Clutch Disc and Pressure Plate - Vehicles With: 5-Speed Manual Transmission - MTX75 (308-01 Clutch, Removal and Installation).
3. *Special Tool(s)* : 303-103 (T74P-6375-A) Holding Tool, Flywheel

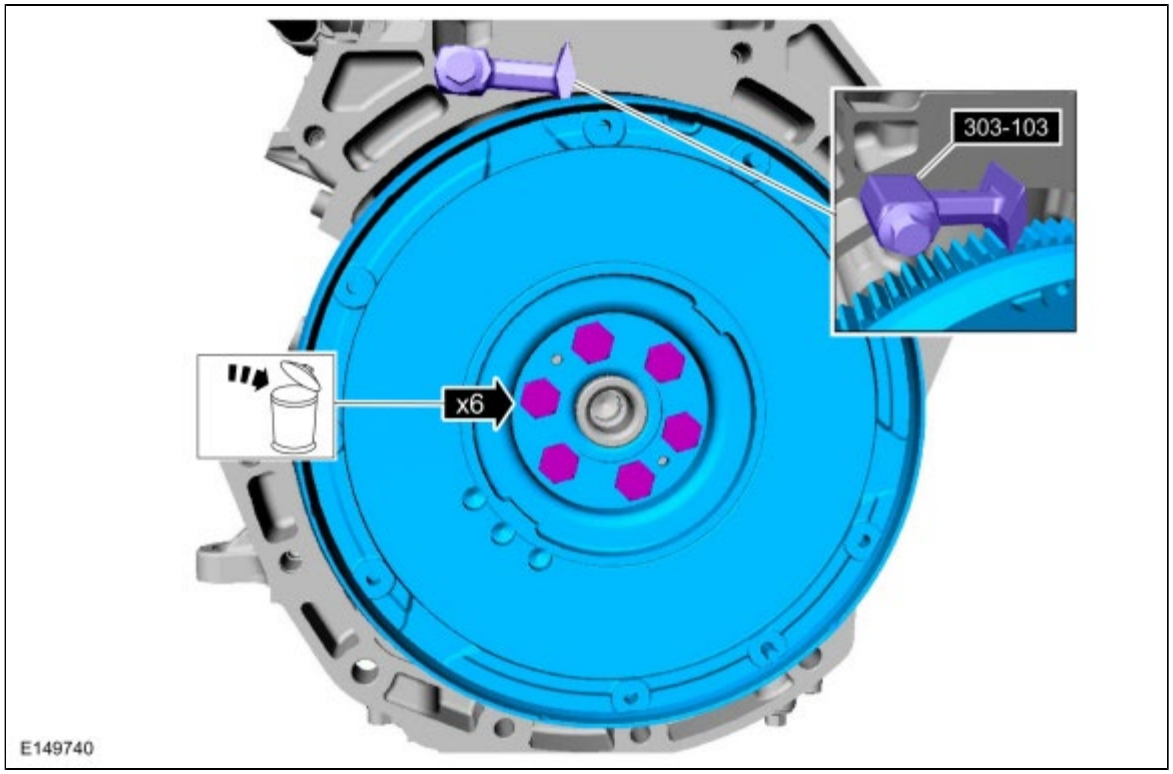

Installation

1. **NOTE:** *Special bolts are used for installation. Do not use standard bolts.*

   Special Tool(s) : 303-103 (T74P-6375-A) Holding Tool, Flywheel

2.
   - *Torque* : 50 Nm
   - *Torque* : 80 Nm
   - *Torque* : 112 Nm

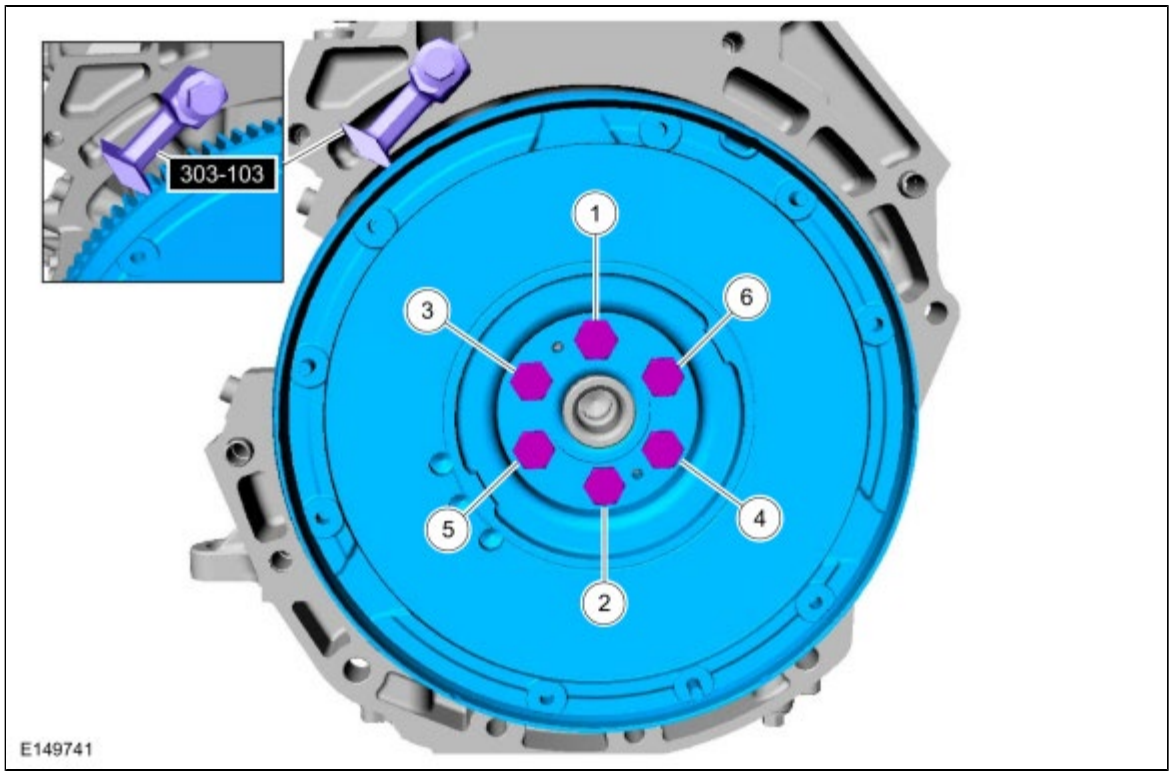

3. Refer to: Clutch Disc and Pressure Plate - Vehicles With: 5-Speed Manual Transmission - MTX75 (308-01 Clutch, Removal and Installation).

Copyright © Ford Motor Company

Flexplate

Removal

1. Refer to: Jacking and Lifting - Overview (100-02 Jacking and Lifting, Description and Operation).
2. Refer to: Transmission - 2.0L Duratec-HE (125kW/170PS) - MI4 (307-01 Automatic Transmission - Vehicles With: 6-Speed PowerShift Transmission - DPS6/6DCT250, Removal).
3. *Special Tool(s)* : 303-103 (T74P-6375-A) Holding Tool, Flywheel

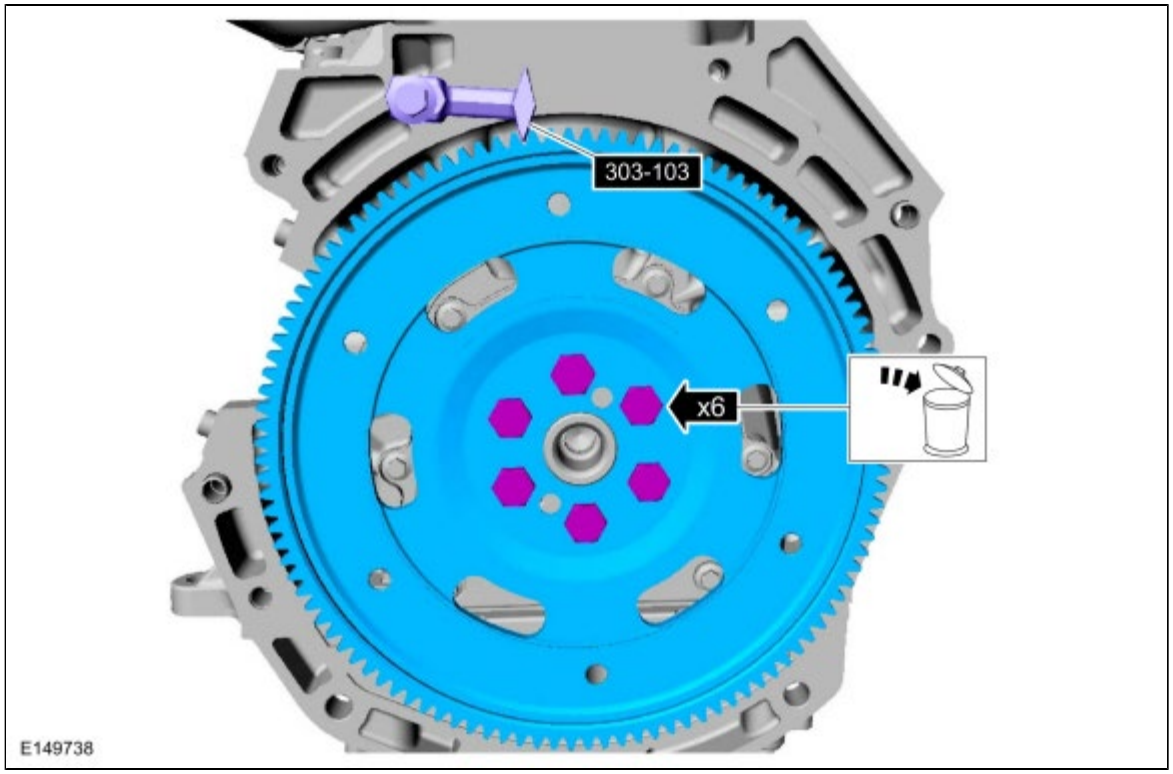

Installation

1. **NOTE:** *Special bolts are used for installation. Do not use standard bolts.*

   Special Tool(s) : 303-103 (T74P-6375-A) Holding Tool, Flywheel

2.
   - *Torque* : 50 Nm
   - *Torque* : 80 Nm
   - *Torque* : 112 Nm

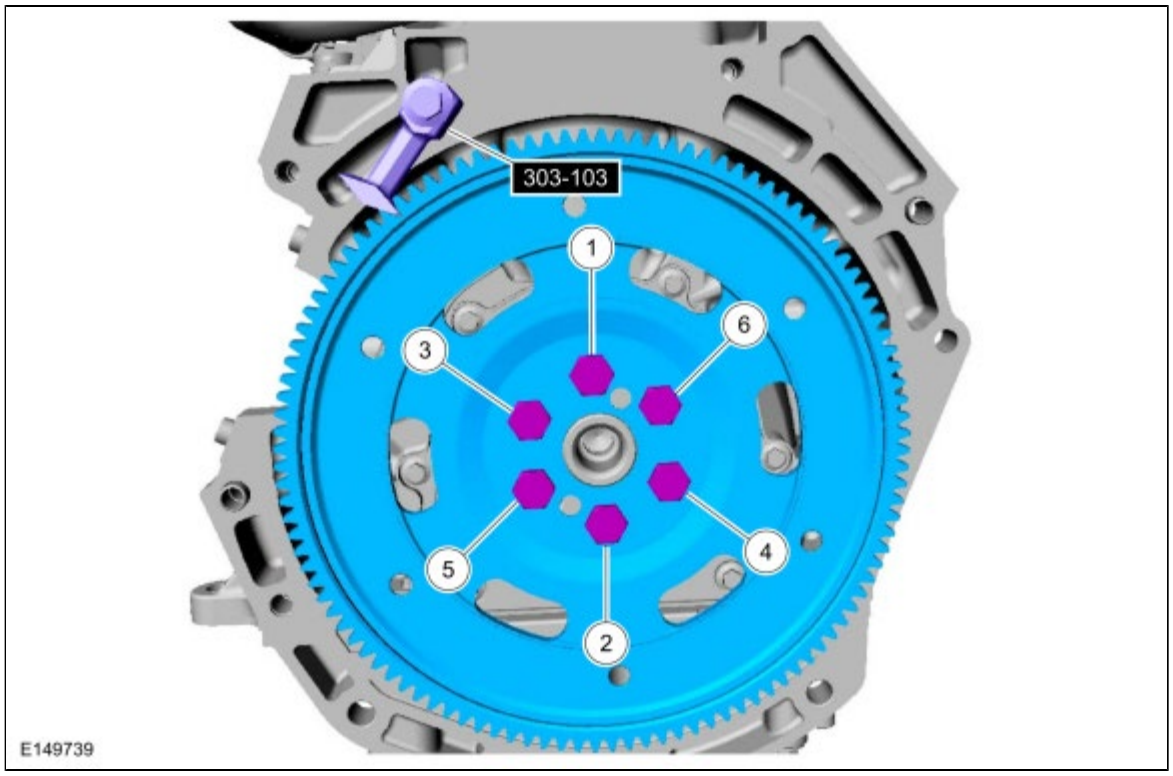

3. Refer to: Transmission - 2.0L Duratec-HE (125kW/170PS) - MI4 (307-01 Automatic Transmission - Vehicles With: 6-Speed PowerShift Transmission - DPS6/6DCT250, Installation).

Copyright © Ford Motor Company

Crankshaft Rear Seal

Removal

1. Refer to: Jacking and Lifting - Overview (100-02 Jacking and Lifting, Description and Operation).
2. 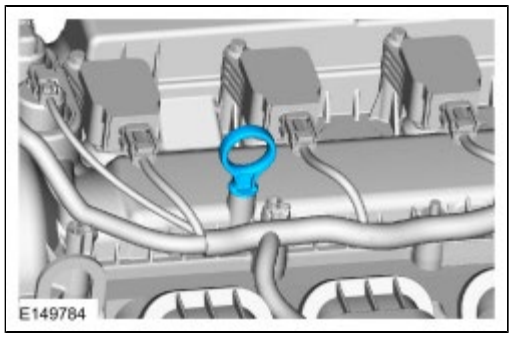

3. Refer to: Flexplate (303-01A Engine - 2.0L Duratec-HE (125kW/170PS) - MI4, Removal and Installation).
   Refer to: Flywheel (303-01A Engine - 2.0L Duratec-HE (125kW/170PS) - MI4, Removal and Installation).
4. Refer to: Air Conditioning (A/C) Compressor Belt (303-05A Accessory Drive - 2.0L Duratec-HE (125kW/170PS) - MI4, Removal and Installation).
5. 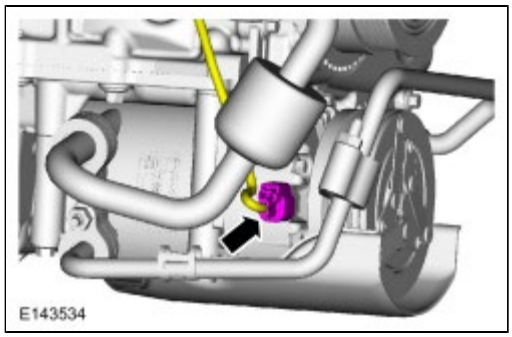

6. 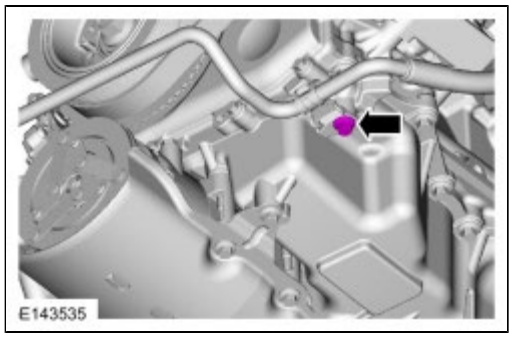

7. **NOTICE: Support the A/C compressor. Do not allow the A/C compressor to hang by the A/C lines or damage to the A/C compressor and tubes may occur.**

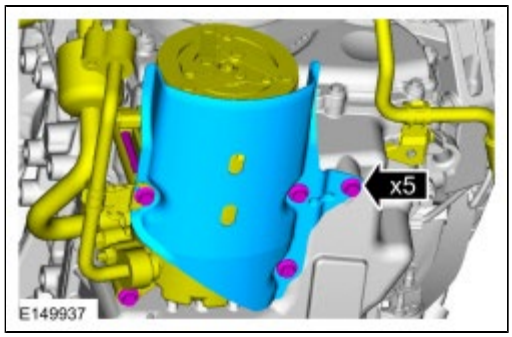

8. Drain and install the drain plug.
   Torque : 27 Nm

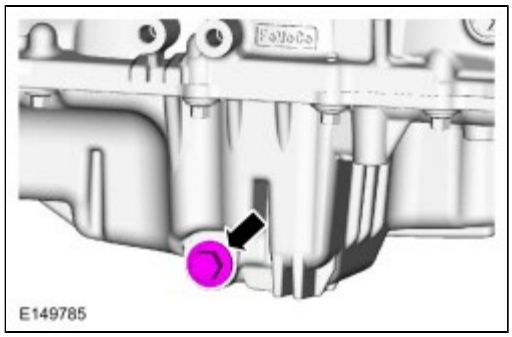

9.

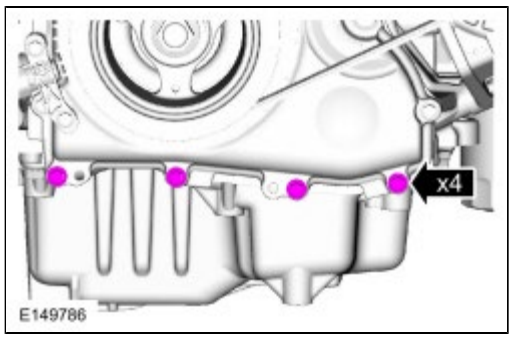

10.

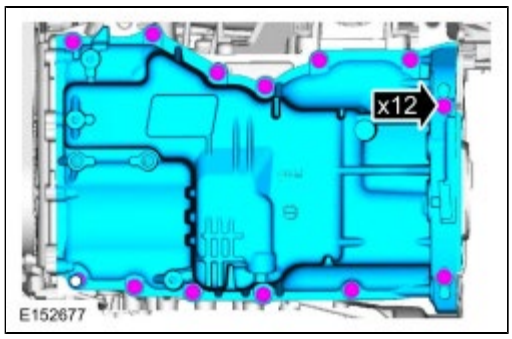

11.

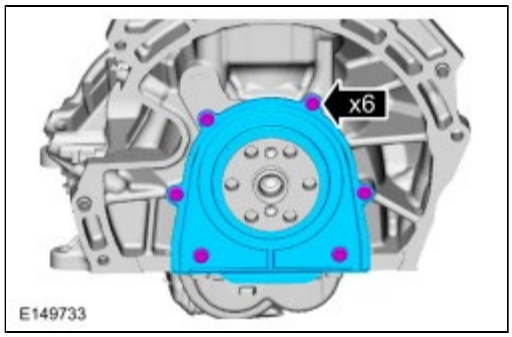

Installation

1. **NOTICE: Do not use metal scrapers, wire brushes, power abrasive discs or other abrasive means to clean the sealing surfaces. These tools cause scratches and gouges, which make leak paths. Use a plastic scraping tool to remove traces of sealant.**

   Clean and inspect all the oil pan and cylinder block mating surfaces.

2. Using the special tool, position the crankshaft rear oil seal with retainer plate onto the crankshaft.
   Special Tool(s) : 303-328 (T88P-6701-B1) Replacer, Rear Seal
   Torque : 10 Nm

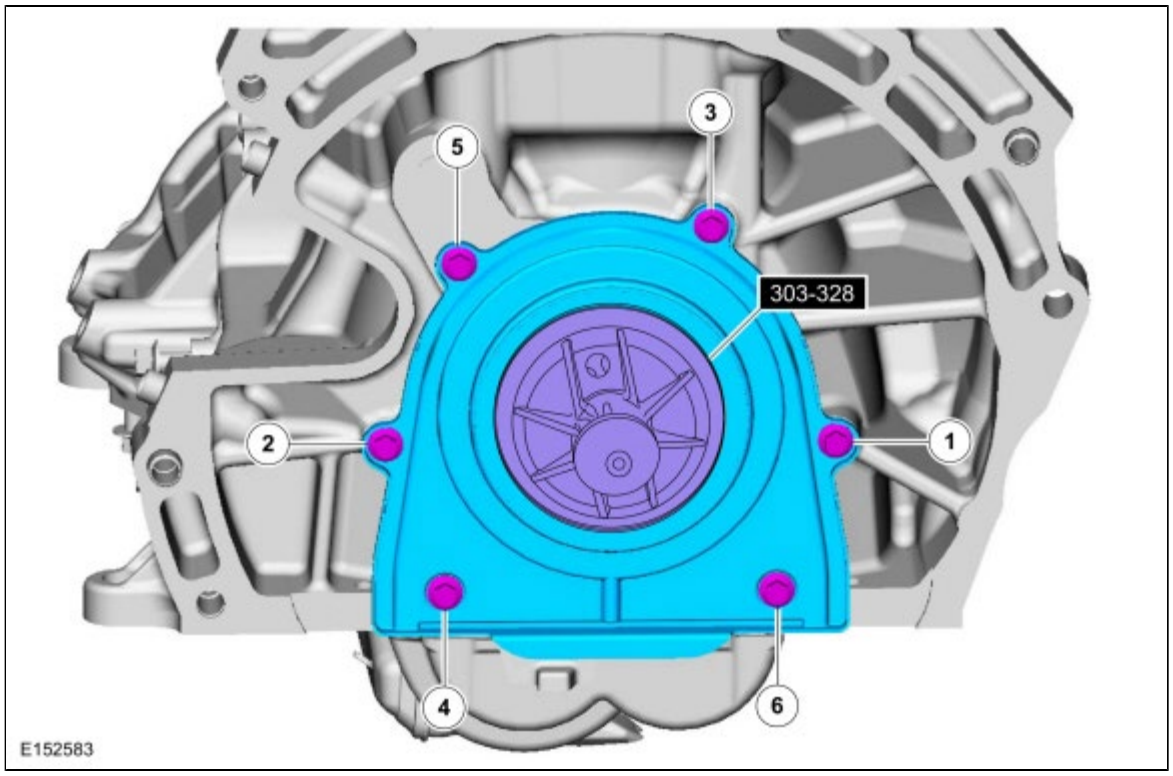

3. **NOTE:** *If the oil pan is not secured within 10 minutes of sealant application, the sealant must be removed and the sealing area cleaned with metal surface prep. Allow to dry until there is no sign of wetness, or 10 minutes, whichever is longer. Failure to follow this procedure can cause future oil leakage.*

   Material : Silicone Gasket and Sealant / TA-30 (WSE-M4G323-A4)

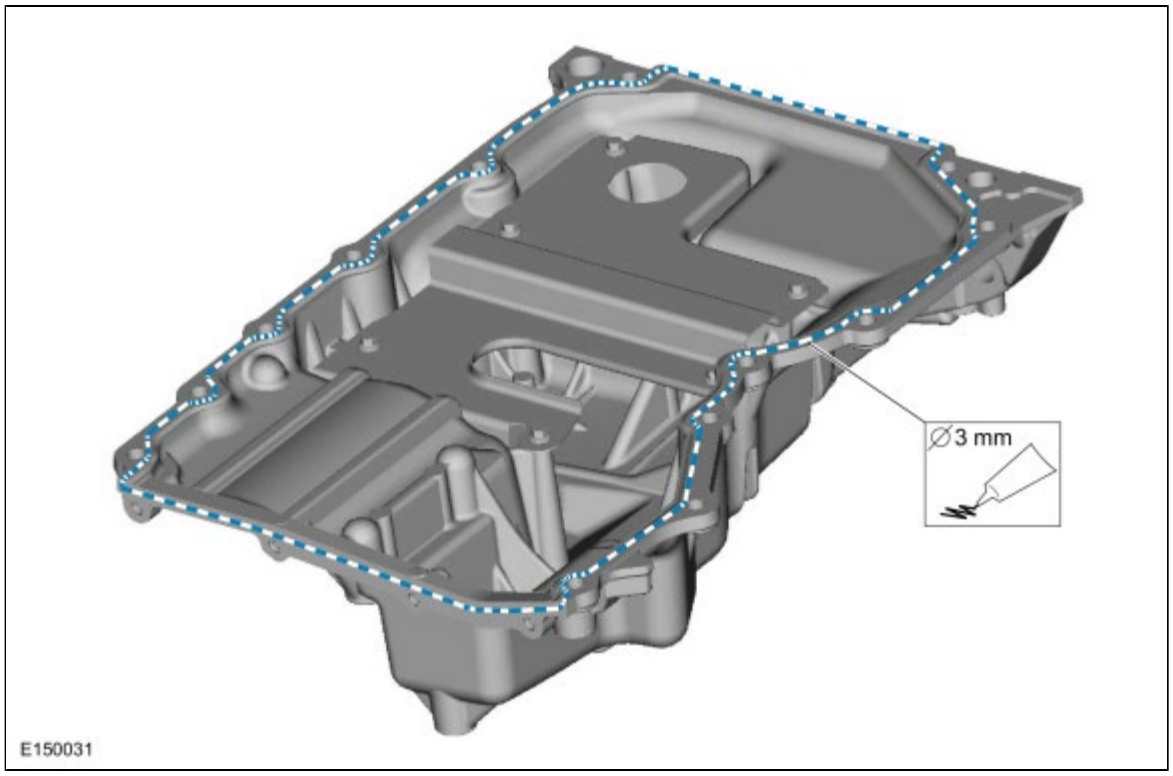

4. Finger-tight.

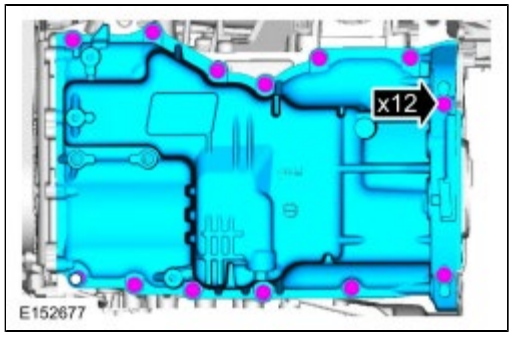

5. **NOTE:** *The engine front cover-to-oil pan fasteners must be tightened first to align the front surface of the oil pan flush with the front surface of the engine block.*

   Torque : 10 Nm

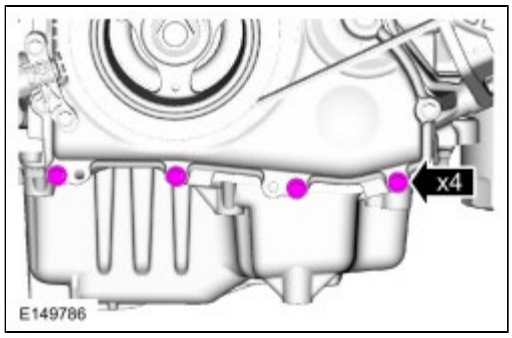

6. *Torque* : 20 Nm

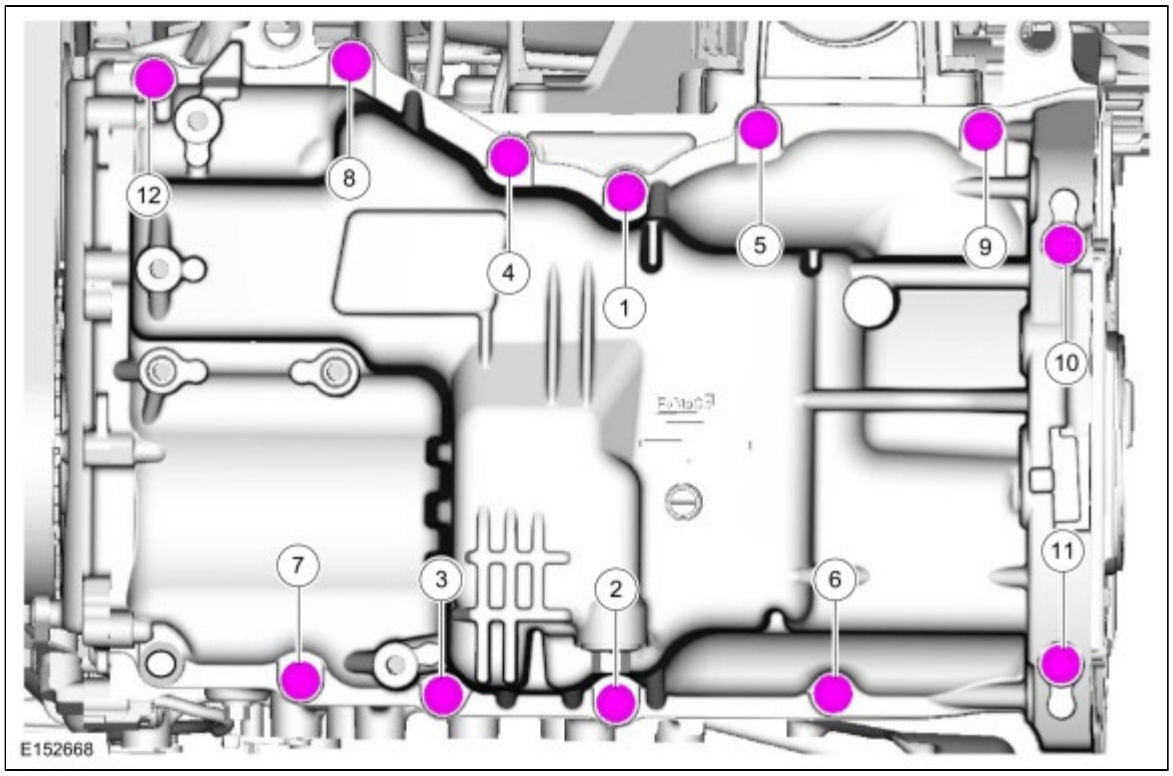

7. *Torque* : 25 Nm

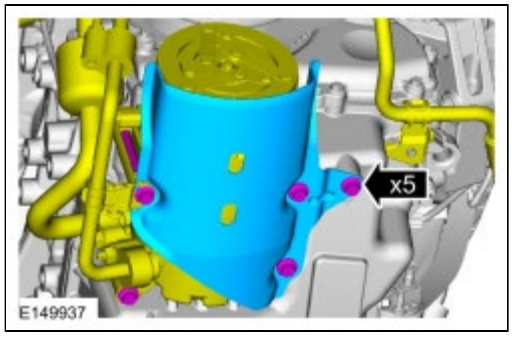

8. *Torque* : 18 Nm

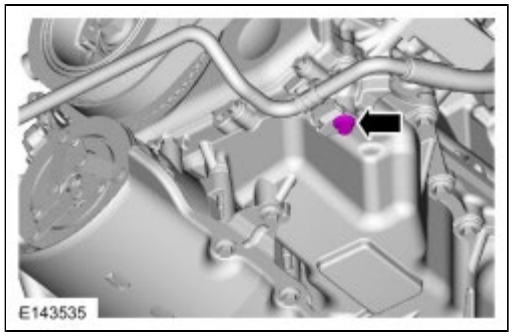

9.

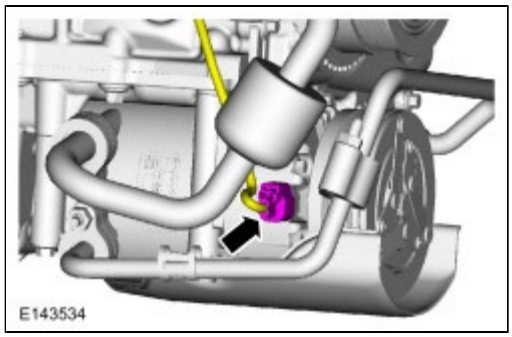

10. Refer to: Air Conditioning (A/C) Compressor Belt (303-05A Accessory Drive - 2.0L Duratec-HE (125kW/170PS) - MI4, Removal and Installation).

11. Refer to: Flexplate (303-01A Engine - 2.0L Duratec-HE (125kW/170PS) - MI4, Removal and Installation).
    Refer to: Flywheel (303-01A Engine - 2.0L Duratec-HE (125kW/170PS) - MI4, Removal and Installation).

12.

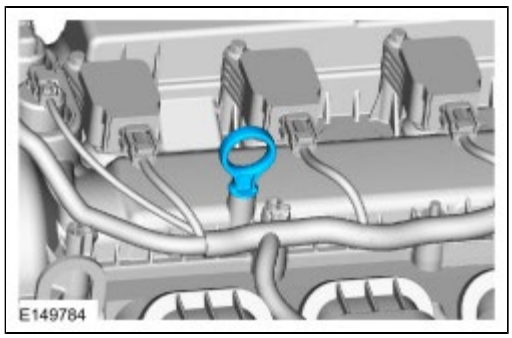

13. Fill the engine with clean engine oil.
    Material : Motorcraft® SAE 5W-20 Premium Synthetic Blend Motor Oil / XO-5W20-QSP (WSS-M2C945-A)

Copyright © Ford Motor Company

Engine Mount

Removal

1. Refer to: Jacking and Lifting - Overview (100-02 Jacking and Lifting, Description and Operation).
2. 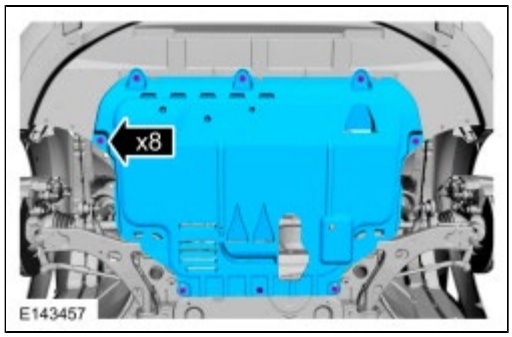

3. 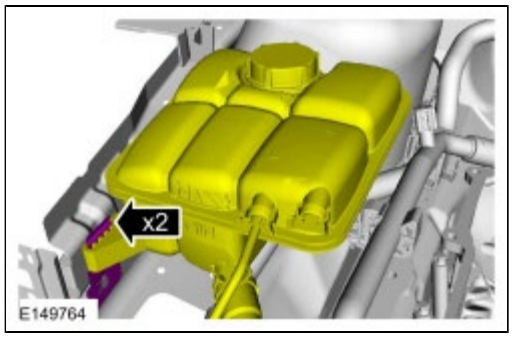

4. 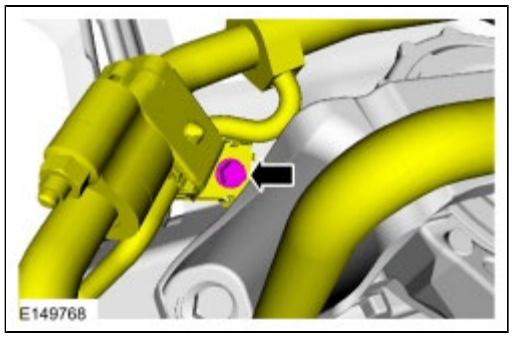

5.

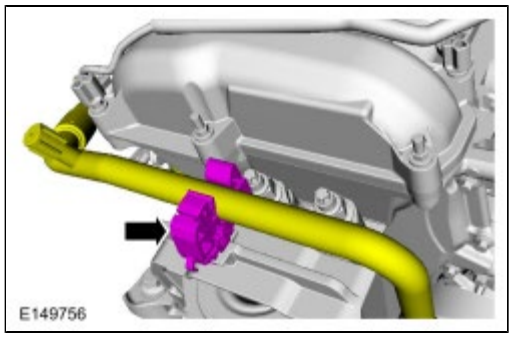

6. **NOTE:** *Do not support the engine on the Air Conditioning (A/C) compressor.*

   Support the engine using the oil pan.
   General Equipment : Trolley Jack
   General Equipment : Wooden Block

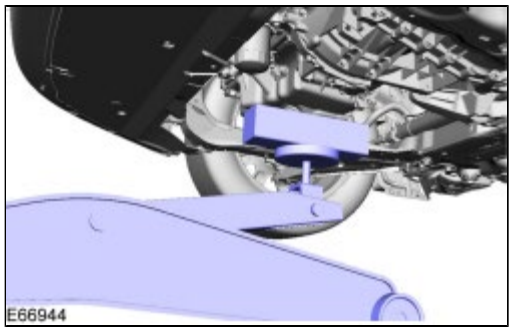

7.

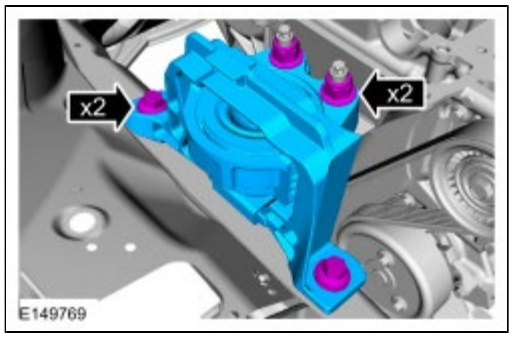

Installation

1.
   - *Torque* : Tighten the 2 nuts to 80 Nm
   - *Torque* : Tighten the 2 bolts to 90 Nm

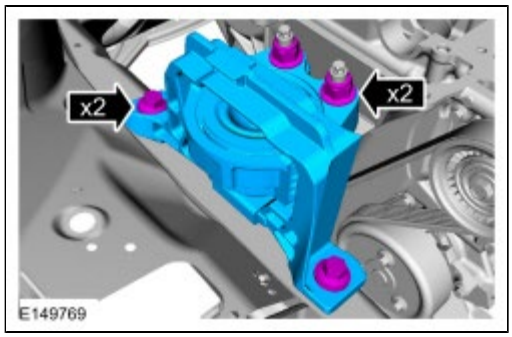

2.

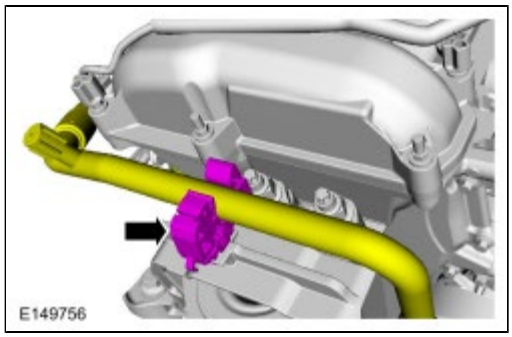

3. *Torque* : 11 Nm

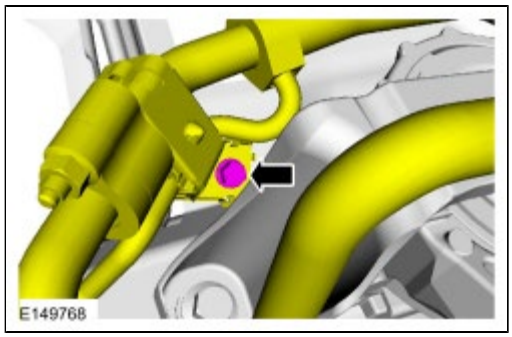

4.

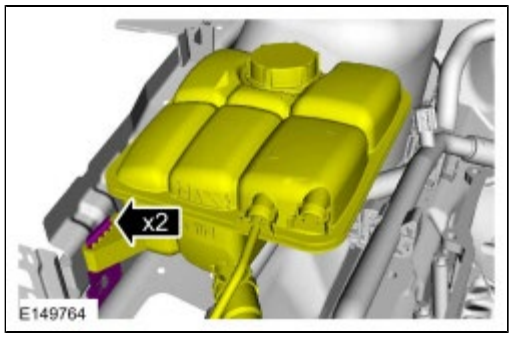

5.

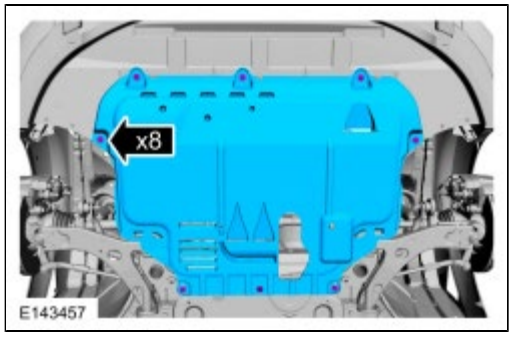

Copyright © Ford Motor Company

Engine

1. **WARNING: Before beginning any service procedure in this section, refer to Safety Warnings in section 100-00 General Information. Failure to follow this instruction may result in serious personal injury.**

   Refer to: Health and Safety Precautions (100-00 General Information, Description and Operation).

2. Refer to: Jacking and Lifting - Overview (100-02 Jacking and Lifting, Description and Operation).

3. Refer to: Air Conditioning (A/C) System Recovery, Evacuation and Charging (412-00 Climate Control System - General Information, General Procedures).

4. Refer to: Fuel System Pressure Release (310-00A Fuel System - General Information, General Procedures).

5.

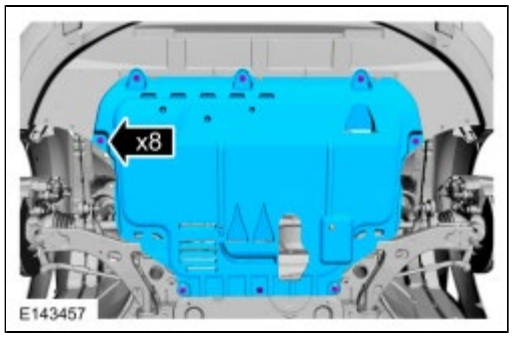

6. Refer to: Cooling System Draining and Vacuum Filling (303-03A Engine Cooling - 2.0L Duratec-HE (125kW/170PS) - MI4, General Procedures).
   Refer to: Cooling System Draining, Filling and Bleeding (303-03A Engine Cooling - 2.0L Duratec-HE (125kW/170PS) - MI4, General Procedures).

7. Remove the following items:
   1. Refer to: Degas Bottle (303-03A Engine Cooling - 2.0L Duratec-HE (125kW/170PS) - MI4, Removal and Installation).
   2. Refer to: Battery Tray (414-01 Battery, Mounting and Cables, Removal and Installation).
   3. Refer to: Air Cleaner (303-12A Intake Air Distribution and Filtering - 2.0L Duratec-HE (125kW/170PS) - MI4, Removal and Installation).
      Refer to: Air Cleaner Outlet Pipe (303-12A Intake Air Distribution and Filtering - 2.0L Duratec-HE (125kW/170PS) - MI4, Removal and Installation).

8. If equipped with automatic transmission.

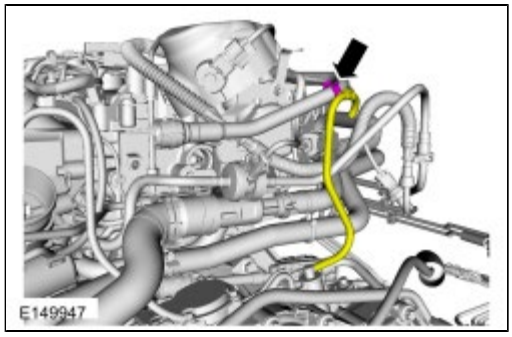

9.

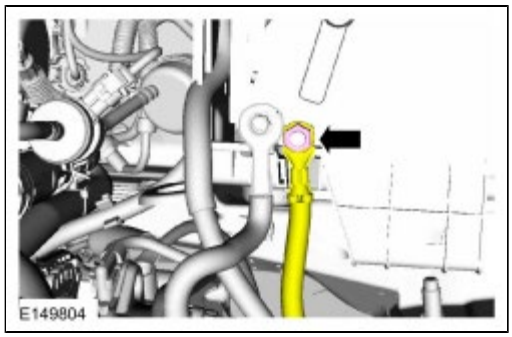

10.

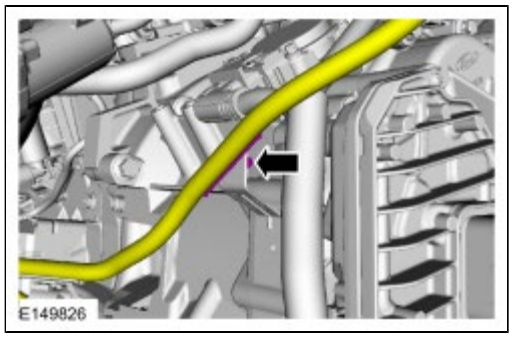

11. Refer to: Powertrain Control Module (PCM) (303-14A Electronic Engine Controls - 2.0L Duratec-HE (125kW/170PS) - MI4, Removal and Installation).

12. **NOTE:** *The electrical connector is located behind the PCM case.*

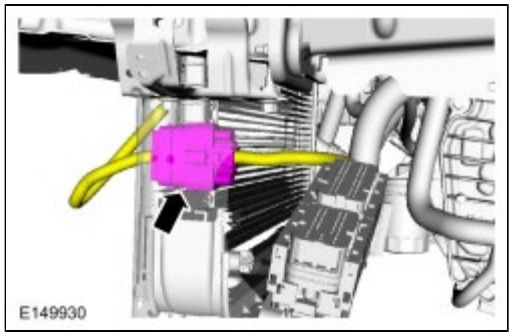

13.

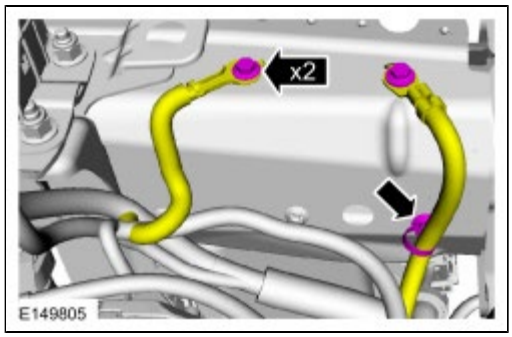

14.

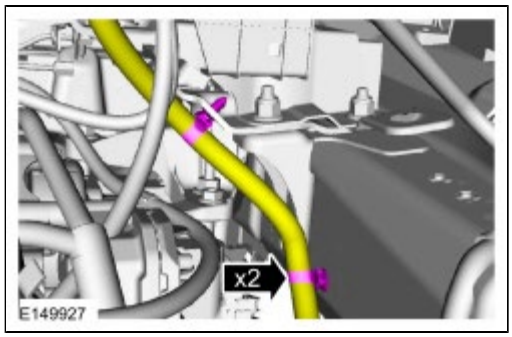

15.

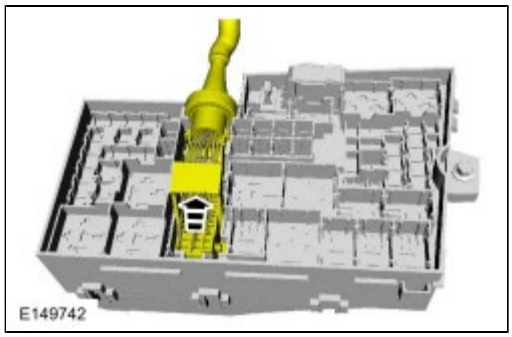

16. *General Equipment* : Hose Clamp Remover/Installer

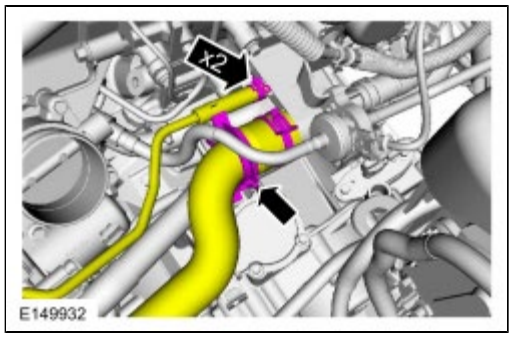

17.

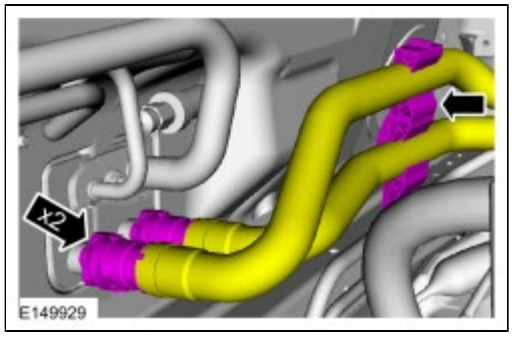

18. If equipped.

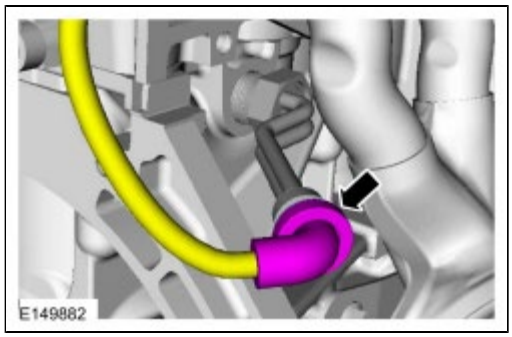

19. Refer to: Heated Oxygen Sensor (HO2S) (303-14A Electronic Engine Controls - 2.0L Duratec-HE (125kW/170PS) - MI4, Removal and Installation).

20.

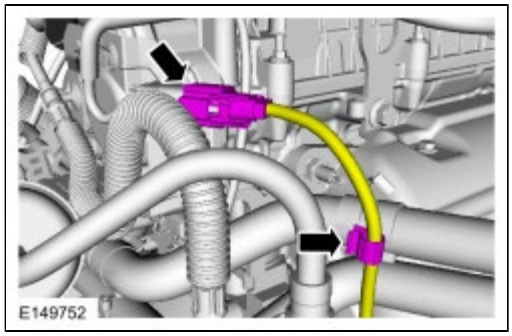

21.

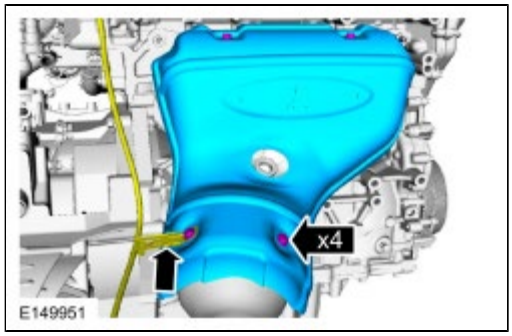

22.

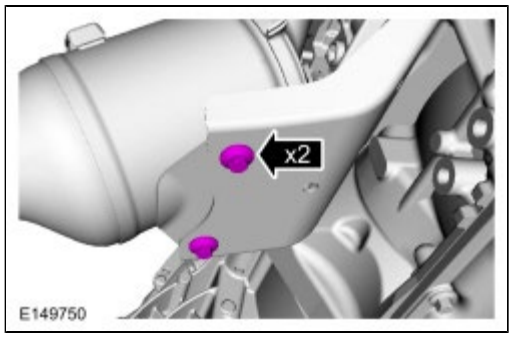

23. **NOTE:** *Discard the gasket.*

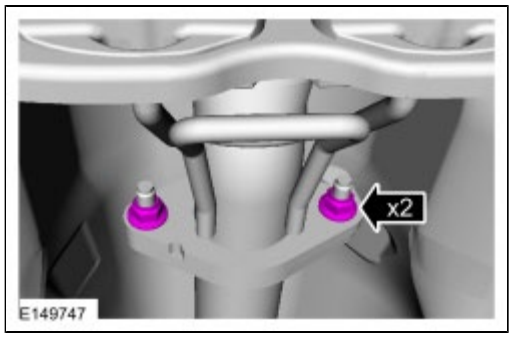

24.

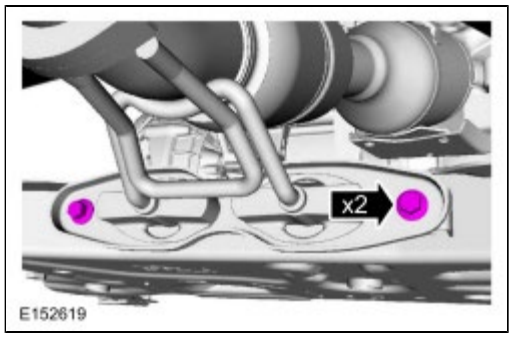

25. **NOTE:** *Discard the catalytic converter nuts and gasket.*

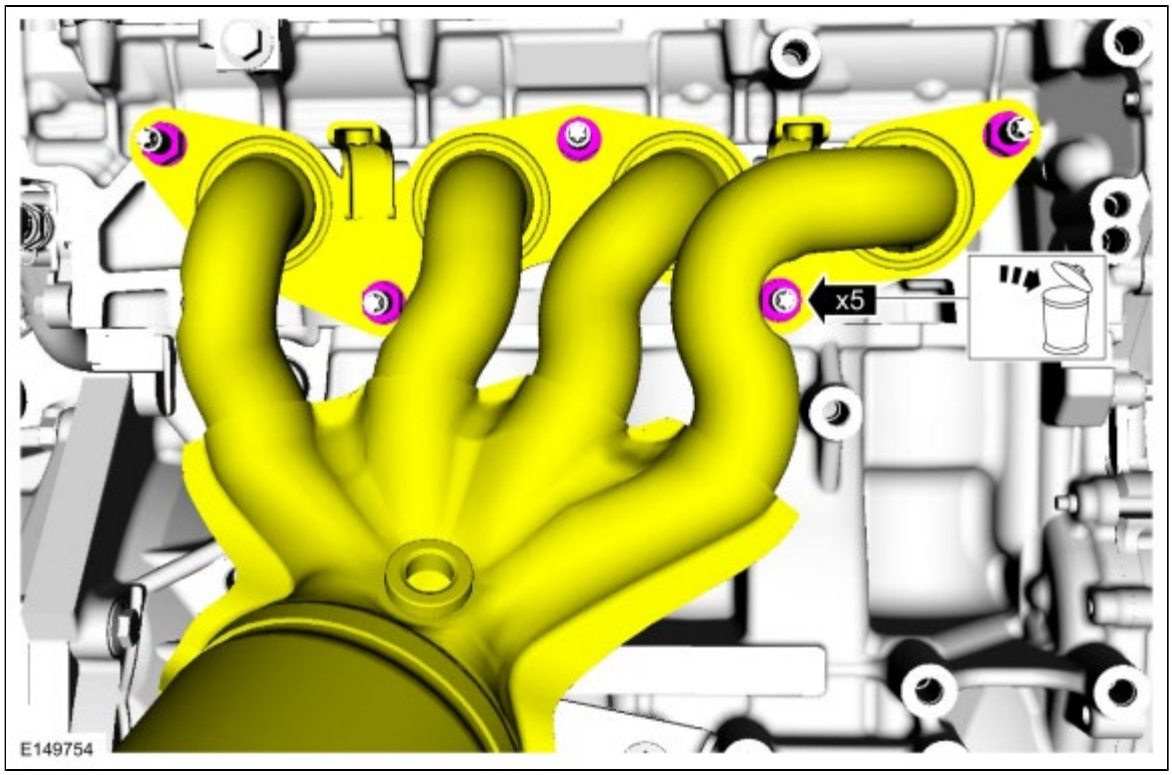

26.

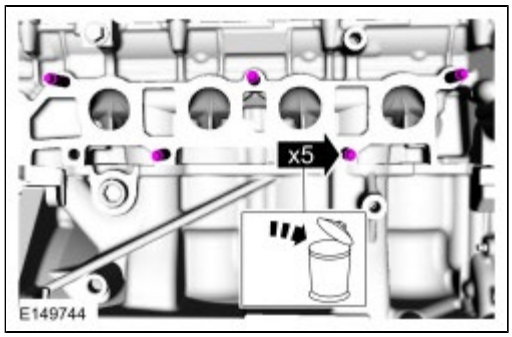

27. Refer to: Quick Release Coupling (310-00A Fuel System - General Information, General Procedures).

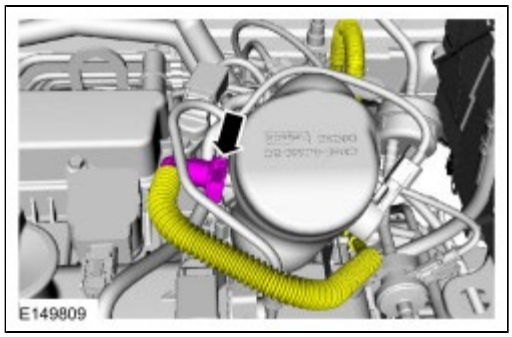

28. Refer to: Quick Release Coupling (310-00A Fuel System - General Information, General Procedures).

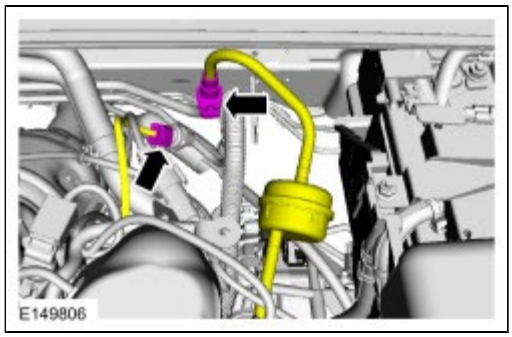

29.

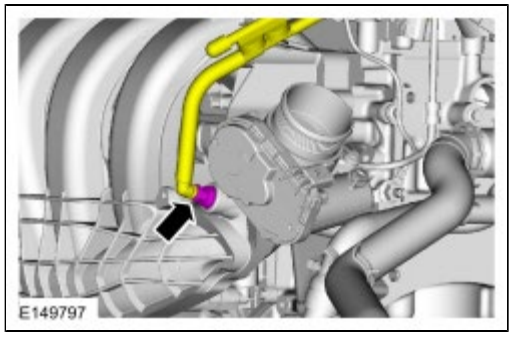

30. If equipped with an automatic transmission.

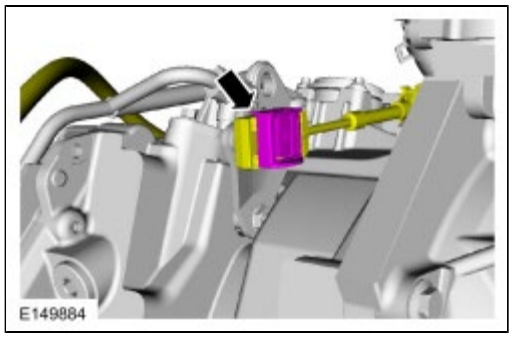

31. If equipped with an automatic transmission.

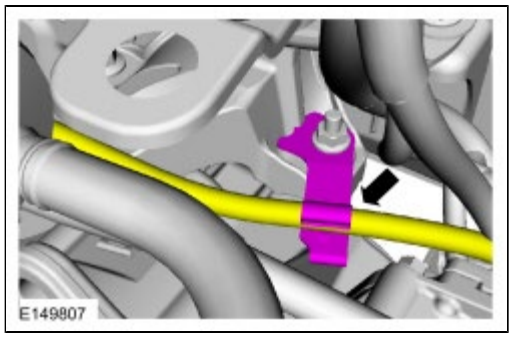

32. If equipped with an automatic transmission.

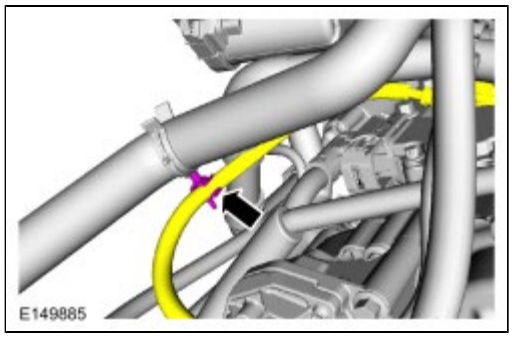

33. If equipped with an automatic transmission.

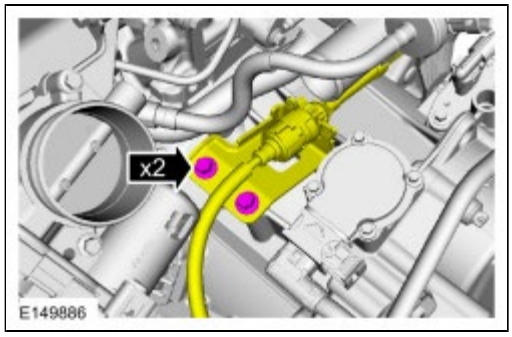

34. **NOTICE: Do not spill brake fluid on painted or plastic surfaces or damage to the surface may occur. If brake fluid is spilled onto a painted or plastic surface, immediately wash the surface with water.**

    If equipped with a manual transmission.

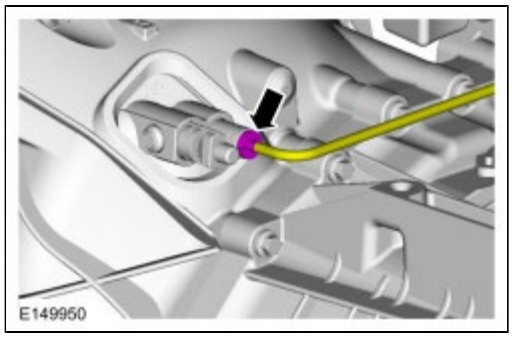

35. If equipped with a manual transmission.

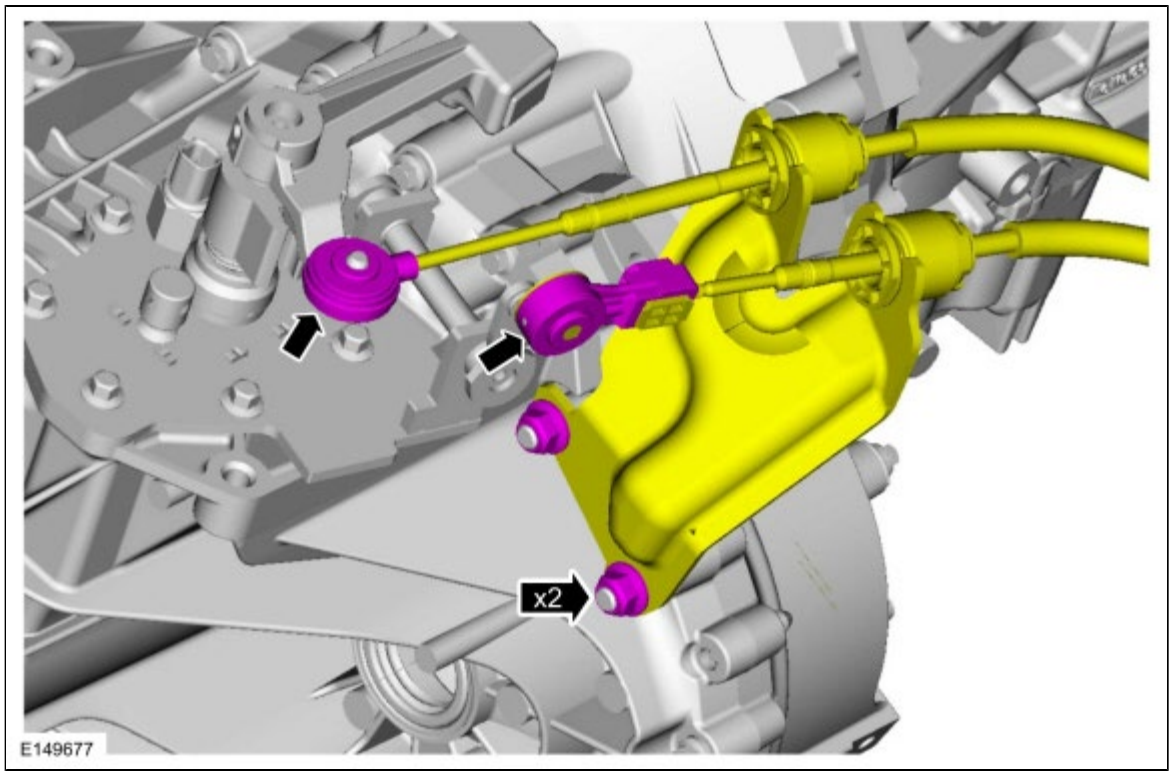

36. Refer to: Front Halfshaft RH (205-04 Front Drive Halfshafts, Removal and Installation).
    Refer to: Front Halfshaft LH (205-04 Front Drive Halfshafts, Removal and Installation).

37.

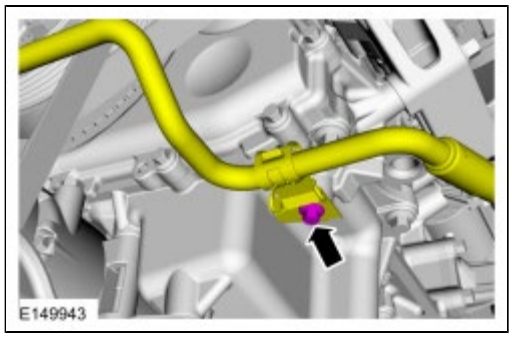

38. **NOTE:** *Discard the O-ring seals.*

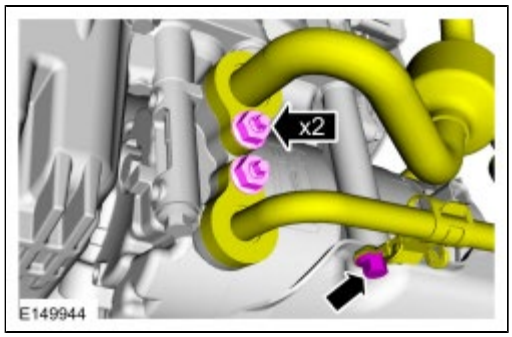

39. *General Equipment* : Hose Clamp Remover/Installer

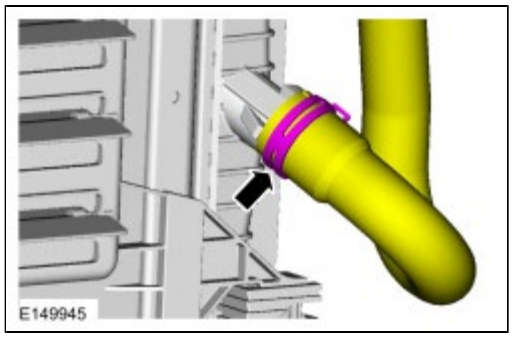

40. Drain and install the drain plug.
    Torque : 27 Nm

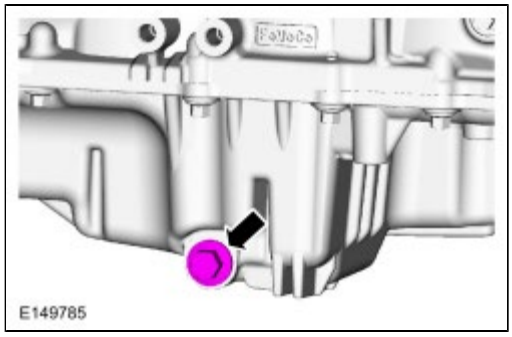

41.

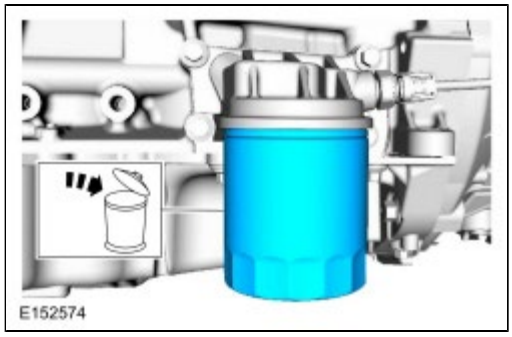

42. Refer to: Cooling Fan Motor and Shroud (303-03A Engine Cooling - 2.0L Duratec-HE (125kW/170PS) - MI4, Removal and Installation).

43. **NOTE:** *Automatic transmission shown, manual transmission similar.*

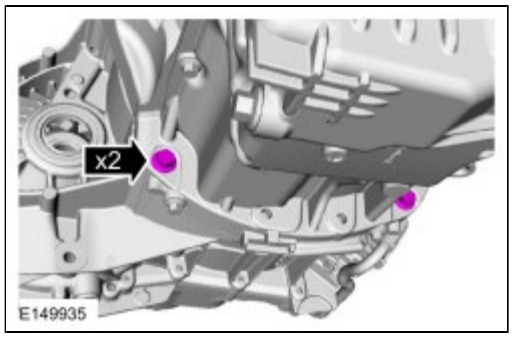

44. **NOTE:** *Automatic transmission shown, manual transmission similar.*

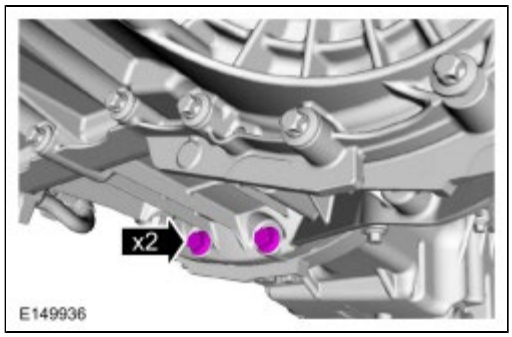

45.

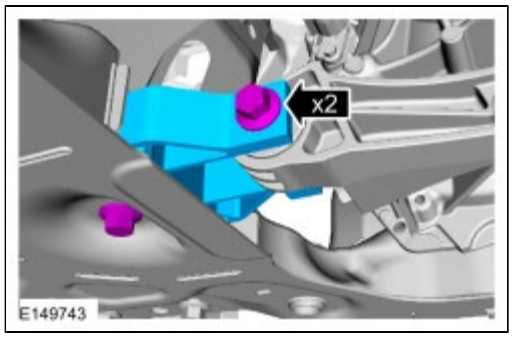

46. **NOTE:** *Position a block of wood under the transmission.*

Special Tool(s) : 300-OTC1585AE Powertrain Lift , 014-00001 ADJUSTABLE GRIP 1735A
General Equipment : Wooden Block

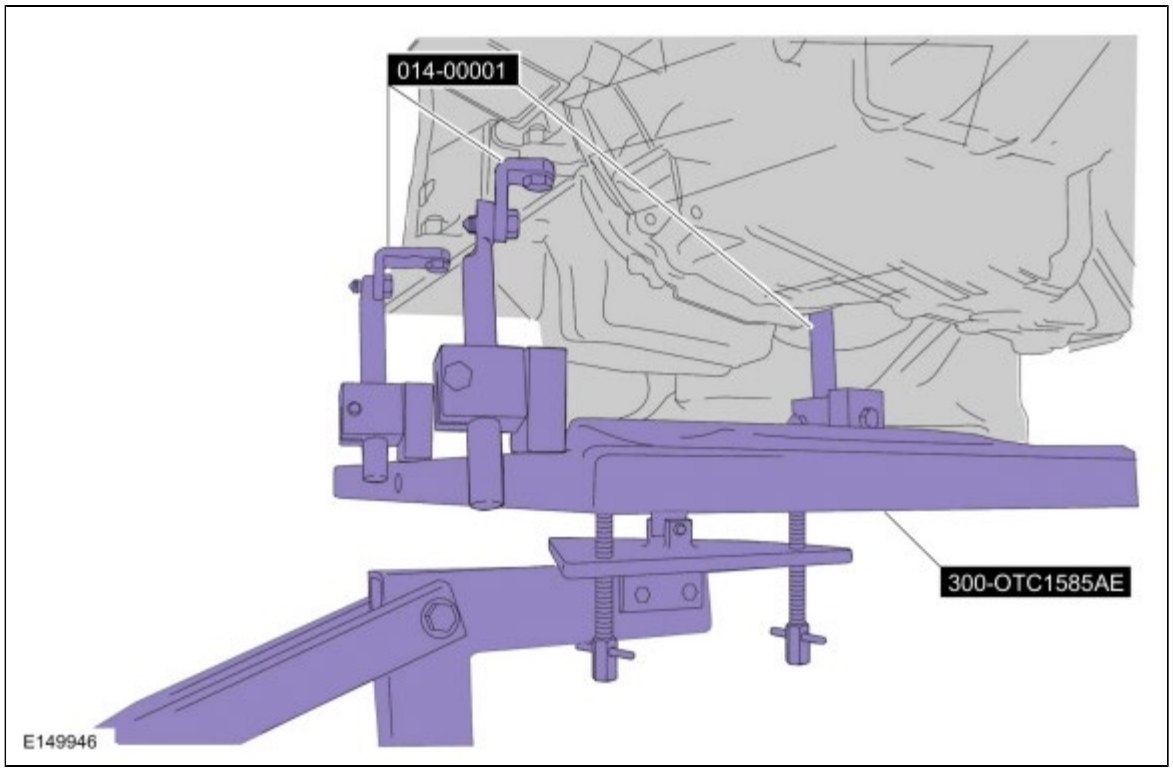

47.

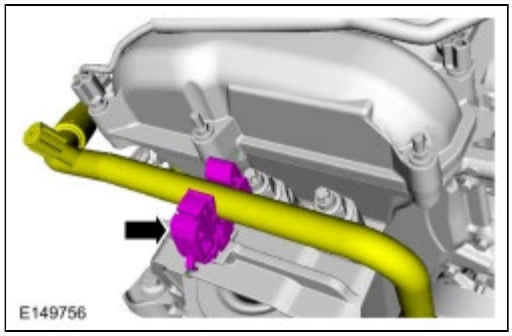

48.

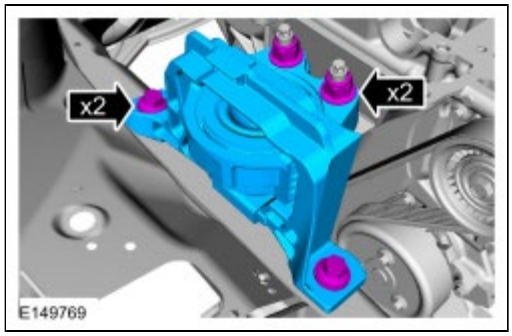

49.

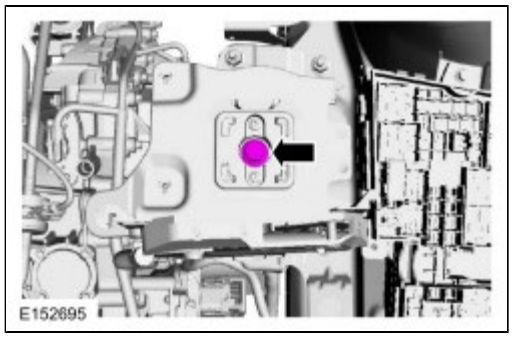

50. Lower the powertrain from the vehicle.

51. Clean and inspect the catalytic converter flange.
    Refer to: Exhaust Manifold Cleaning and Inspection (303-00 Engine System - General Information, General Procedures).

52. If equipped with automatic transmission.

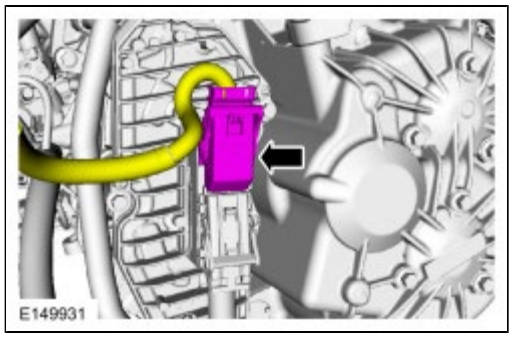

53.

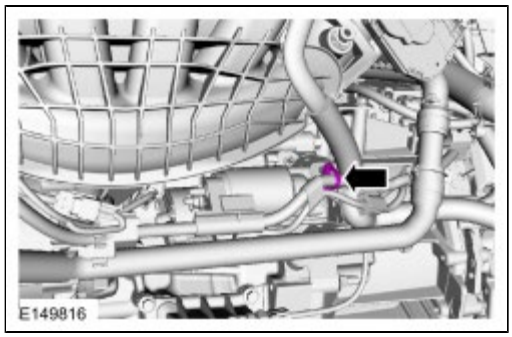

54. Refer to: Starter Motor (303-06A Starting System - 2.0L Duratec-HE (125kW/170PS) - MI4, Removal and Installation).

55.

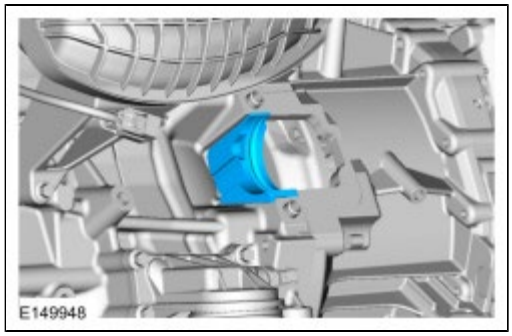

56. **NOTICE: Rotate the engine in a clockwise direction only or engine damage may occur.**

    NOTE: *To prevent the flexplate-to-clutch nuts from falling into the clutch housing and causing damage, use a magnetic socket to install the 6 flexplate-to-clutch nuts.*

NOTE: *Index mark one stud and the clutch for assembly reference.*

NOTE: *Discard the 6 clutch-to-flexplate nuts.*

If equipped with automatic transmission.

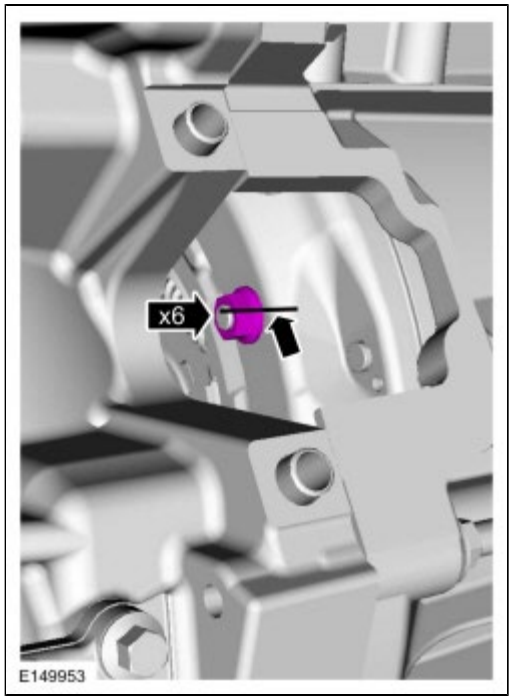

57. *Special Tool(s)* : 300-OTC1819E 2,200# Floor Crane, Fold Away , 303-D089 (D93P-6001-A3) Spreader Bar

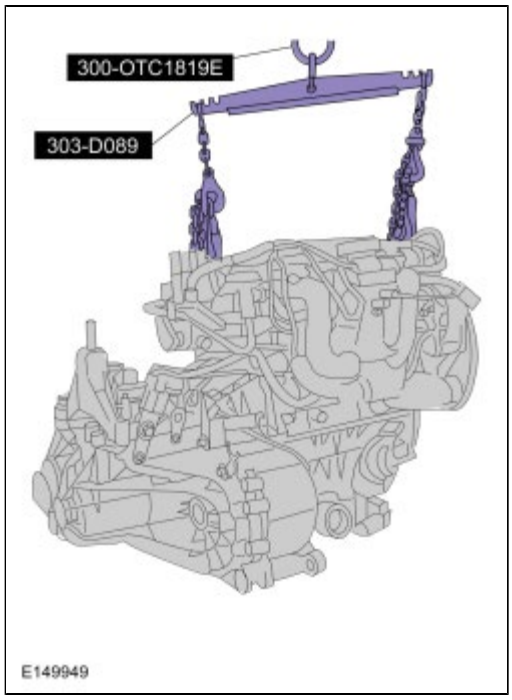

58. **NOTE:** *Automatic transmission shown, manual transmission similar.*

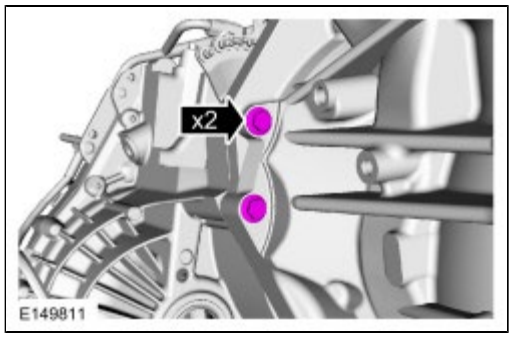

59.

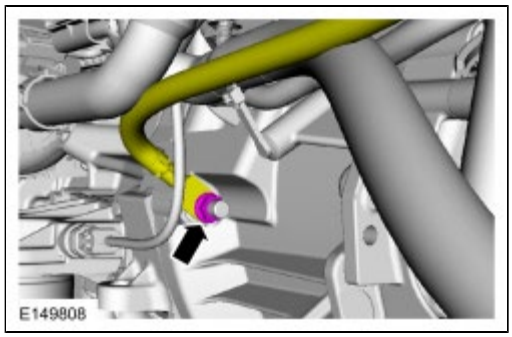

60. **NOTE:** *Automatic transmission shown, manual transmission similar.*

- If equipped with a automatic transmission, remove the 4 bellhousing-to-engine fasteners.
- If equipped with a manual transmission, remove the 5 bellhousing-to-engine fasteners.

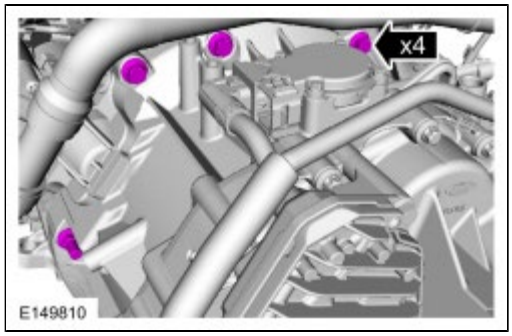

61. Separate the transaxle from the engine.

Copyright © Ford Motor Company

Engine

NOTICE: Do not loosen or remove the crankshaft pulley bolt without first installing the special tools as instructed in this procedure. The crankshaft pulley and the crankshaft timing sprocket are not keyed to the crankshaft. The crankshaft, the crankshaft sprocket and the pulley are fitted together by friction, using diamond washers between the flange faces on each part. For that reason, the crankshaft sprocket is also unfastened if the pulley bolt is loosened. Before any repair requiring loosening or removal of the crankshaft pulley bolt, the crankshaft and camshafts must be locked in place by the special service tools, otherwise severe engine damage can occur.

NOTICE: During engine repair procedures, cleanliness is extremely important. Any foreign material, including any material created while cleaning gasket surfaces that enters the oil passages, coolant passages or the oil pan, can cause engine failure.

NOTICE: Do not use metal scrapers, wire brushes, power abrasive discs or other abrasive means to clean the sealing surfaces. These tools cause scratches and gouges that make leak paths. Use a plastic scraping tool to remove all traces of the head gasket.

NOTICE: Place clean, lint-free shop towels over exposed engine cavities. Carefully remove the towels so foreign material is not dropped into the engine. Any foreign material (including any material created while cleaning gasket surfaces) that enters the oil passages or the oil pan, may cause engine failure.

NOTE: *Early build engines have a 6-rib crankshaft pulley, late build engines have a 4-rib crankshaft pulley.*

NOTE: *Refer to exploded views in Description and Operation.*

1. **WARNING: Do not breathe dust or use compressed air to blow dust from storage containers or friction components. Remove dust using government-approved techniques. Friction component dust may be a cancer and lung disease hazard. Exposure to potentially hazardous components may occur if dusts are created during repair of friction components, such as brake pads and clutch discs. Exposure may also cause irritation to skin, eyes and respiratory tract, and may cause allergic reactions and/or may lead to other chronic health effects. If irritation persists, seek medical attention or advice. Failure to follow these instructions may result in serious personal injury.**

   NOTE: *Loosen the 6 clutch pressure plate-to-flywheel bolts evenly, by 2 turns at a time.*

   If equipped with a manual transmission.

   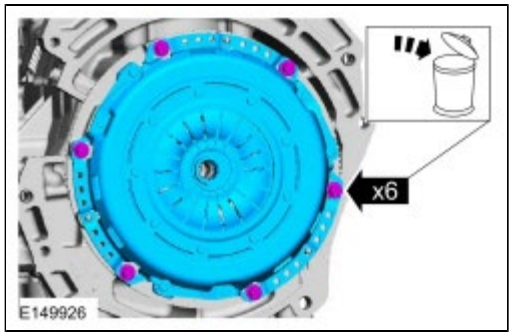

2. If equipped with a manual transmission.
   Special Tool(s) : 303-103 (T74P-6375-A) Holding Tool, Flywheel

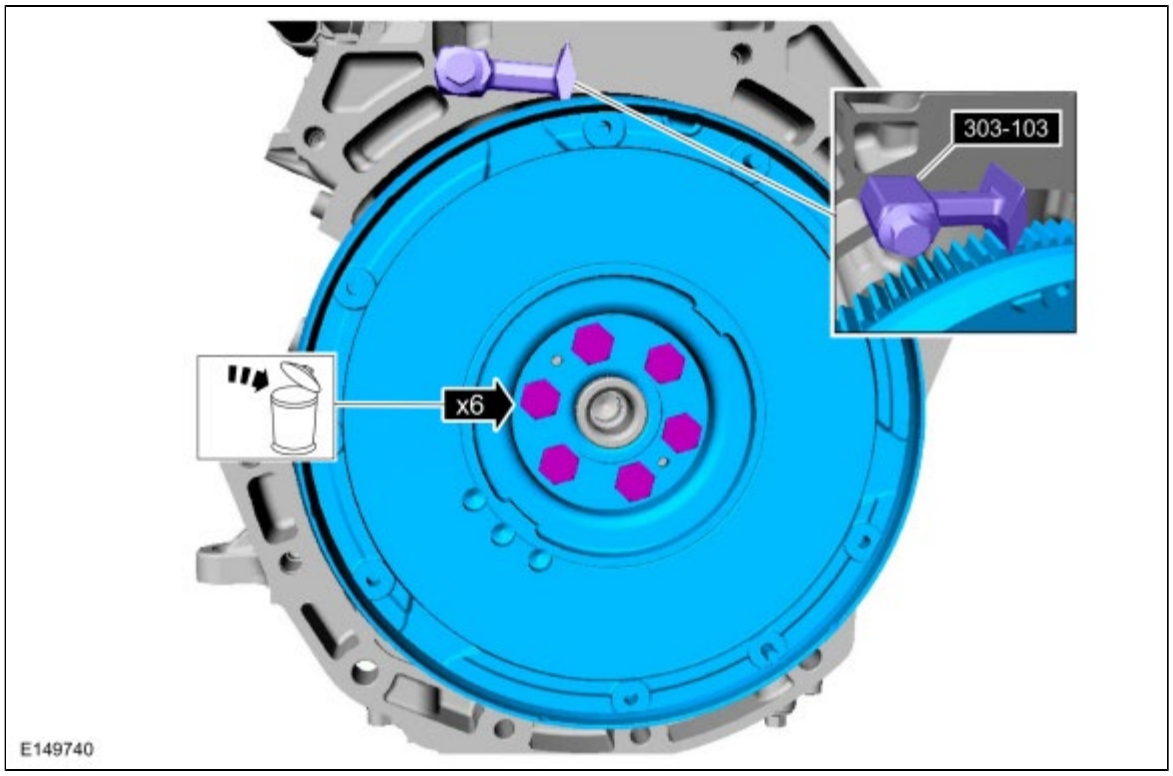

3. If equipped with a automatic transmission.
   Special Tool(s) : 303-103 (T74P-6375-A) Holding Tool, Flywheel

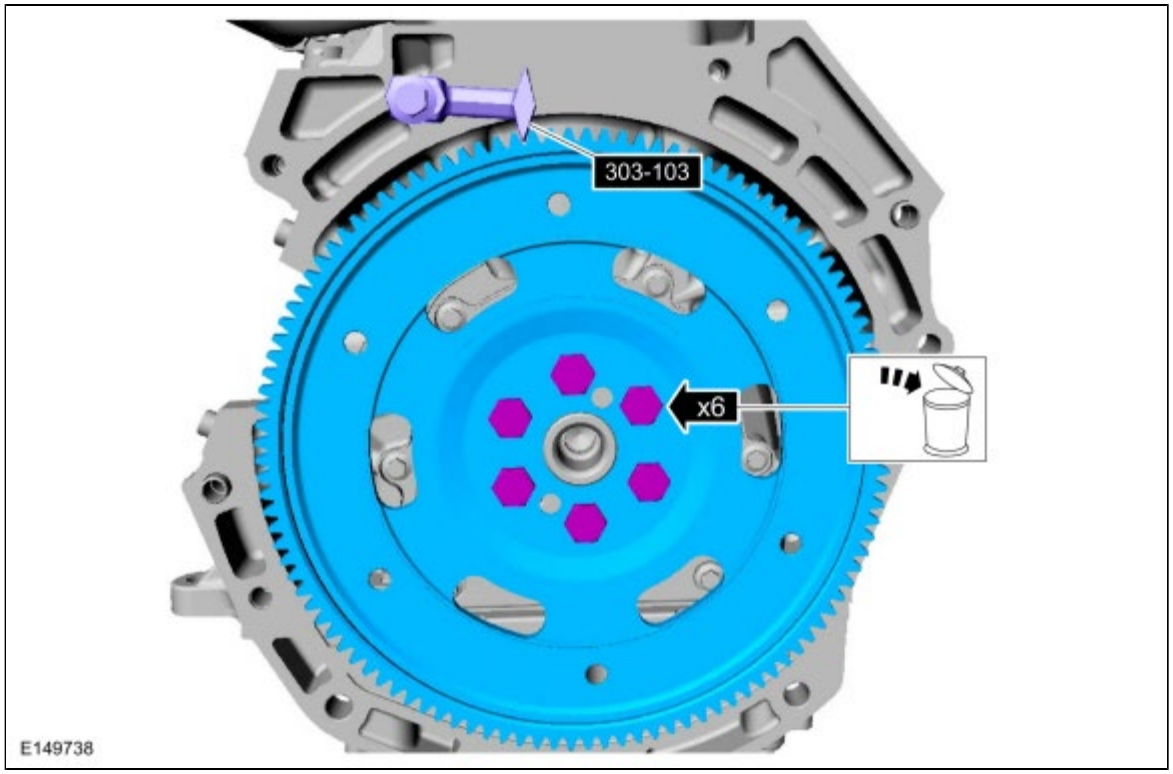

4. Mount the engine on a engine stand.

5. Refer to: Quick Release Coupling (310-00A Fuel System - General Information, General Procedures).

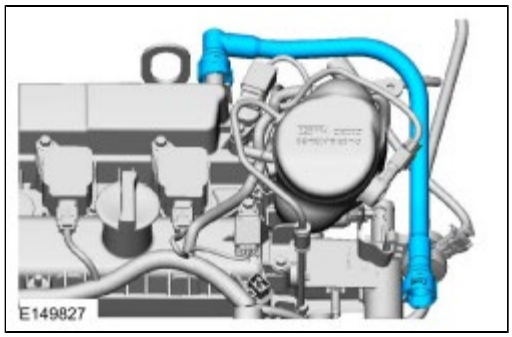

6.

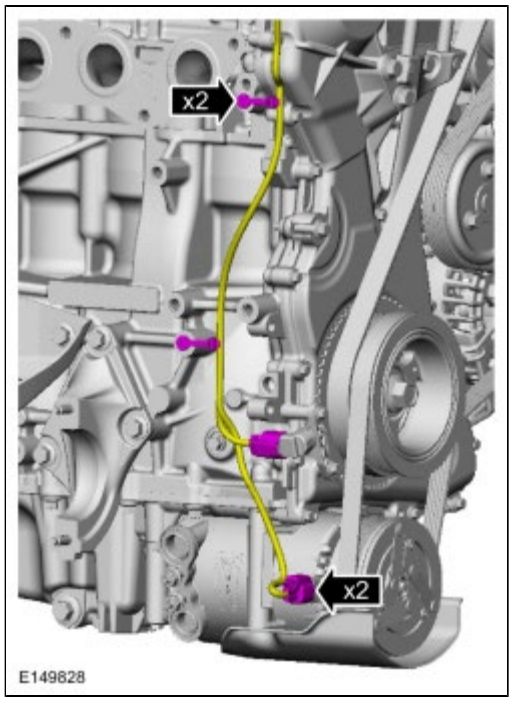

7.

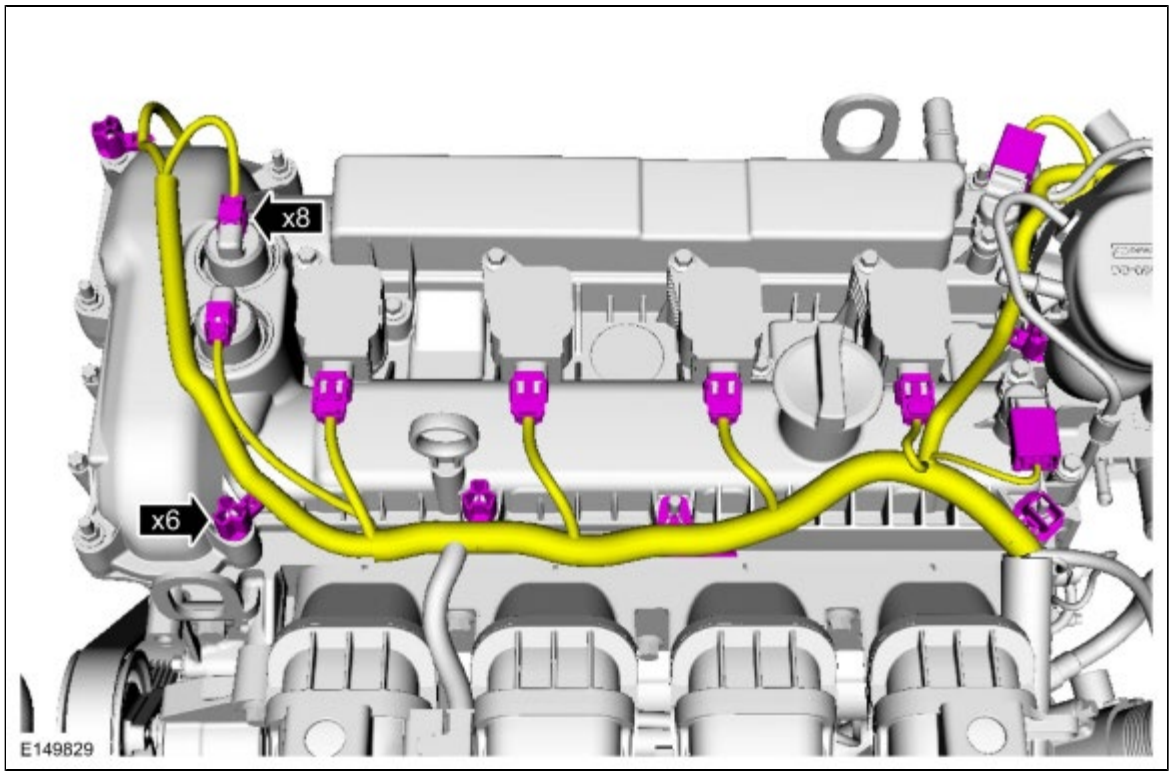

8.

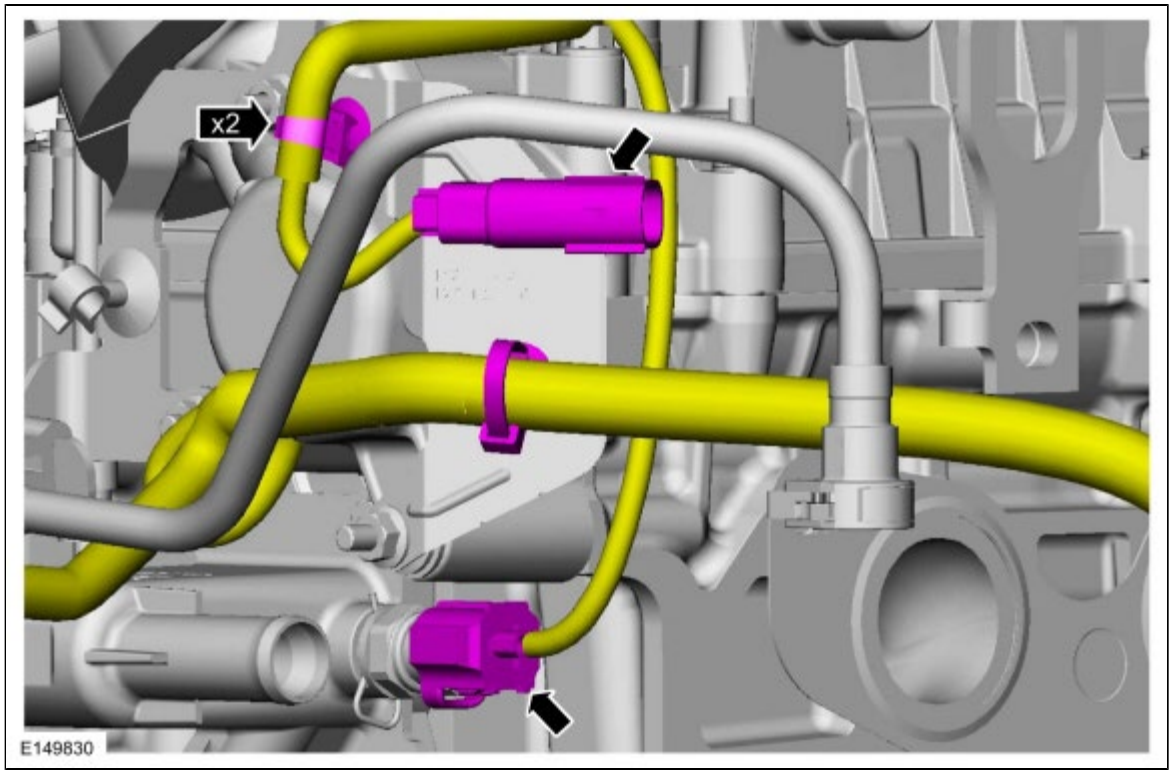

9.

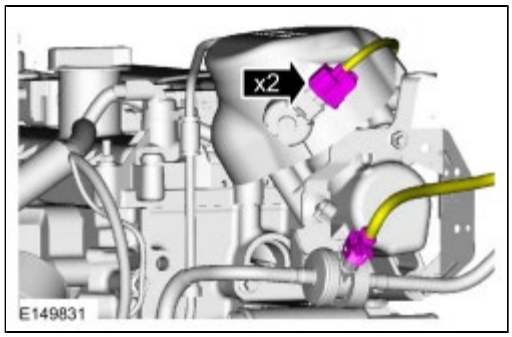

10.

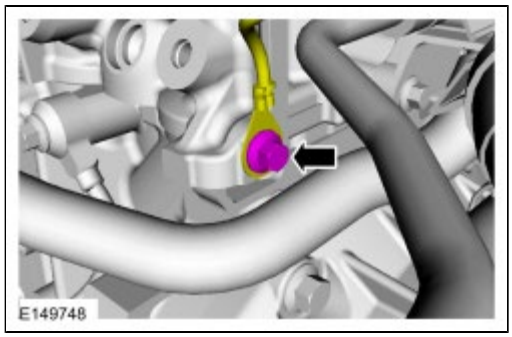

11.

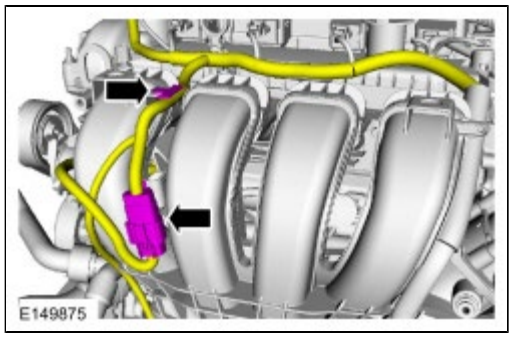

12.

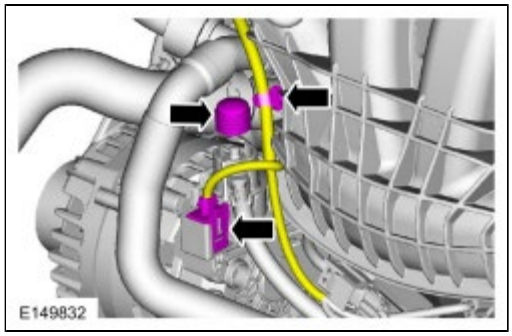

13.

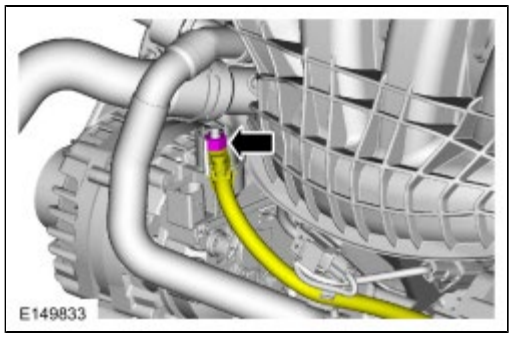

14.

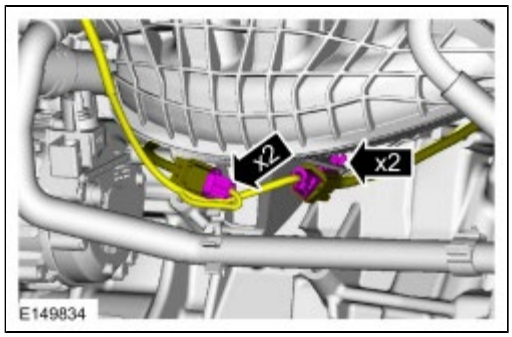

15.

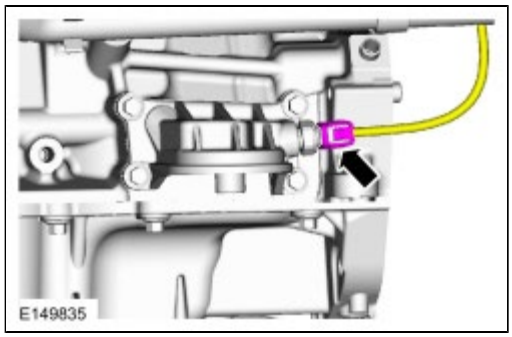

16.

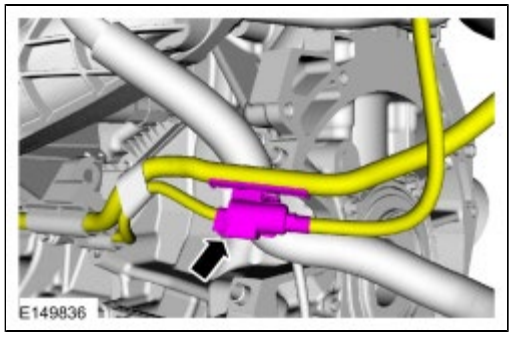

17.

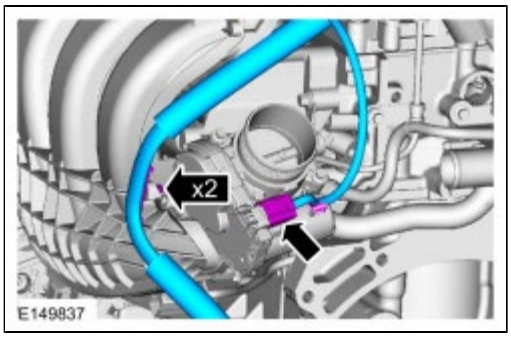

18. Position the special tool between the crankshaft pulley and A/C compressor belt as shown and rotate the crankshaft clockwise.
    Special Tool(s) : 303-1419 Remover, 3.5L / 3.7L Stretchy Belt

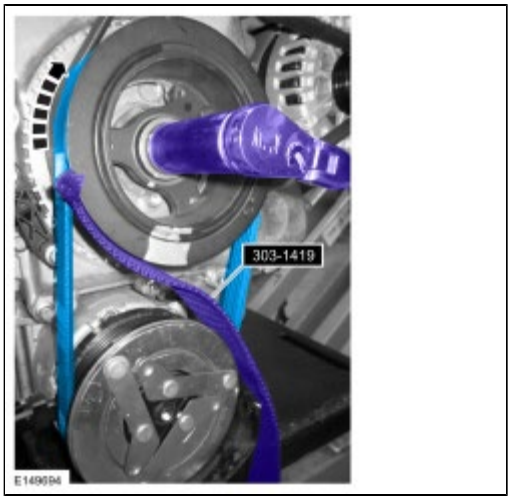

19. Rotate the crankshaft until the special tool is at approximately the 5 o'clock position as shown.
    Special Tool(s) : 303-1419 Remover, 3.5L / 3.7L Stretchy Belt

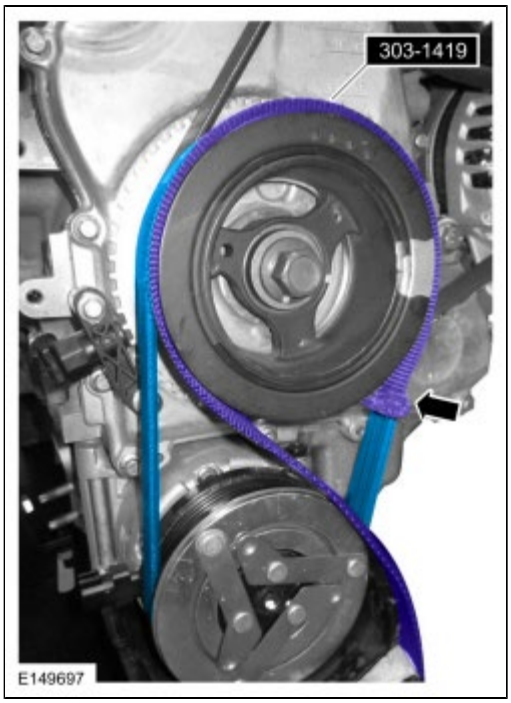

20. Fold the special tool around the inside of the A/C compressor belt as shown.
    Special Tool(s) : 303-1419 Remover, 3.5L / 3.7L Stretchy Belt

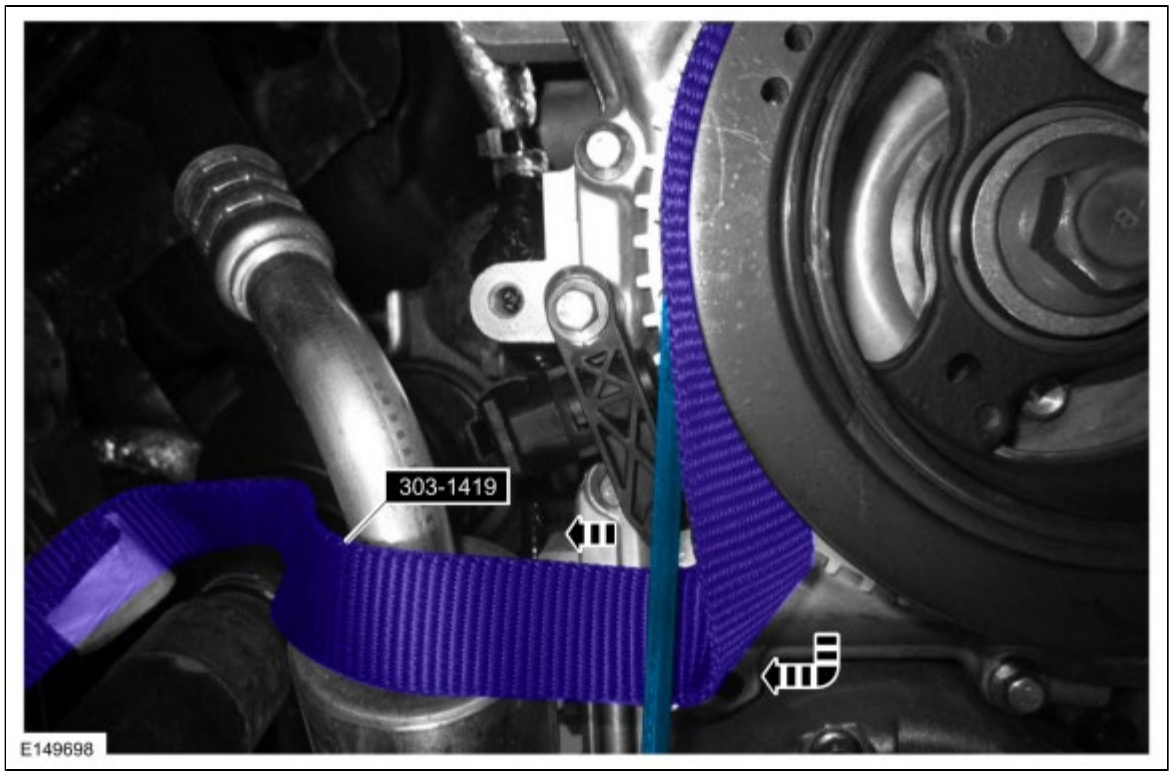

21. In one quick motion, firmly pull the special tool and remove the A/C compressor belt.
    Special Tool(s) : 303-1419 Remover, 3.5L / 3.7L Stretchy Belt

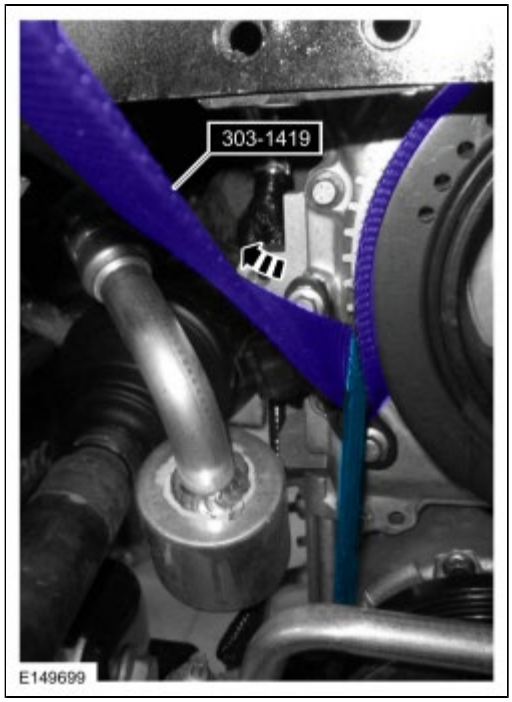

22. Loosen.

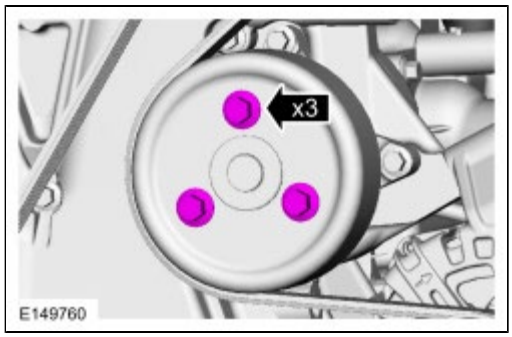

23.

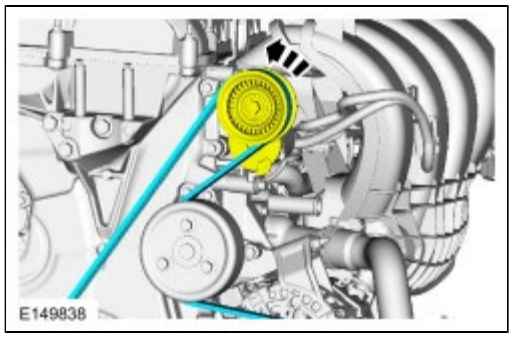

24.

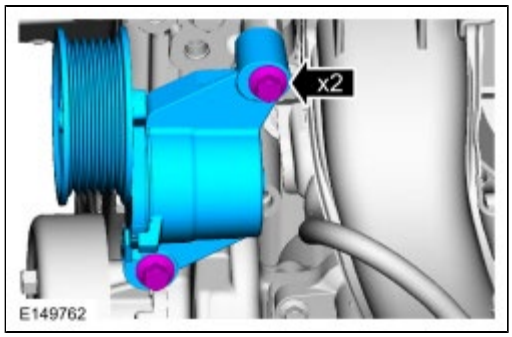

25.

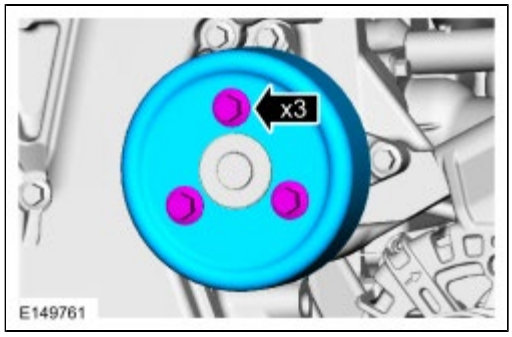

26. **NOTE:** *Discard the O-ring seal.*

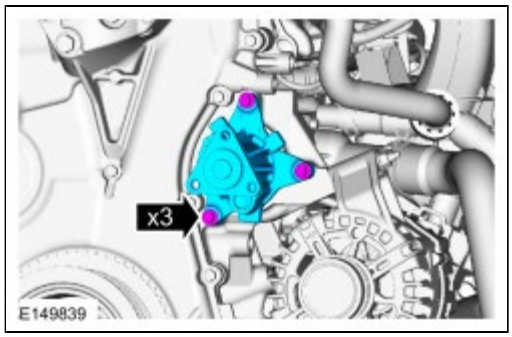

27.

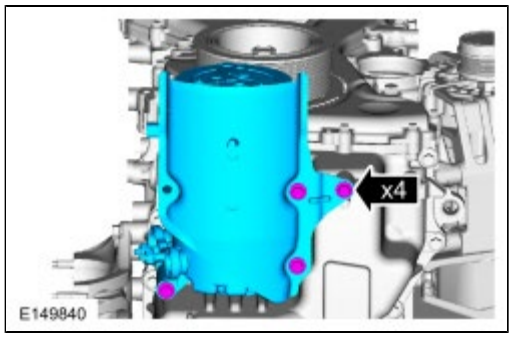

28. *General Equipment* : Hose Clamp Remover/Installer

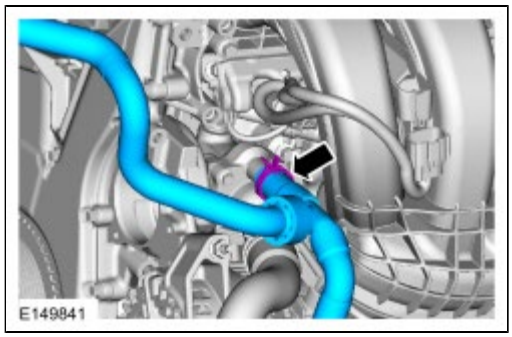

29. **NOTE:** *Remove the generator stud after generator is removed.*

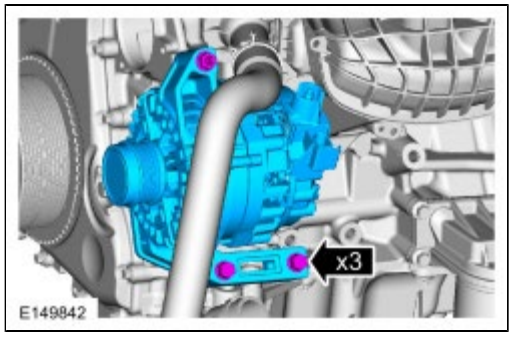

30. **NOTE:** *Discard the thermostat housing gasket.*

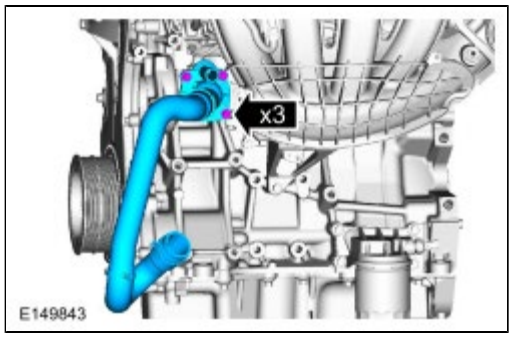

31. Refer to: Quick Release Coupling (310-00A Fuel System - General Information, General Procedures).

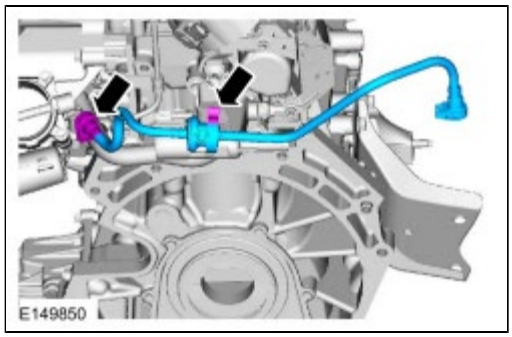

32. **NOTICE: If the engine is repaired or replaced because of upper engine failure, typically including valve or piston damage, check the intake manifold for metal debris. If metal debris is found, install a new intake manifold. Failure to follow these instructions can result in engine damage.**

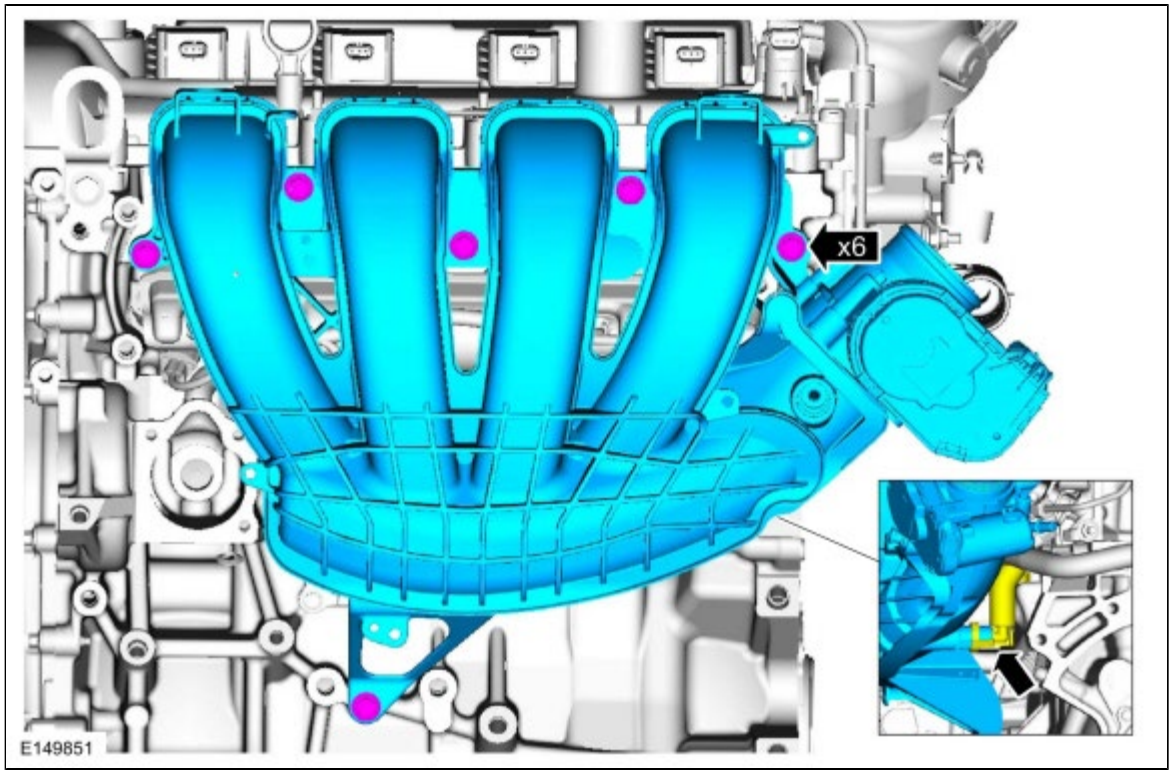

33. *General Equipment* : Hose Clamp Remover/Installer

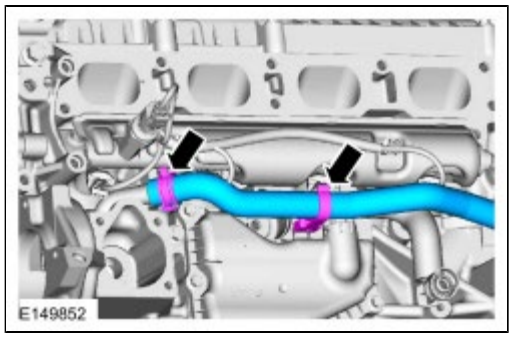

34.

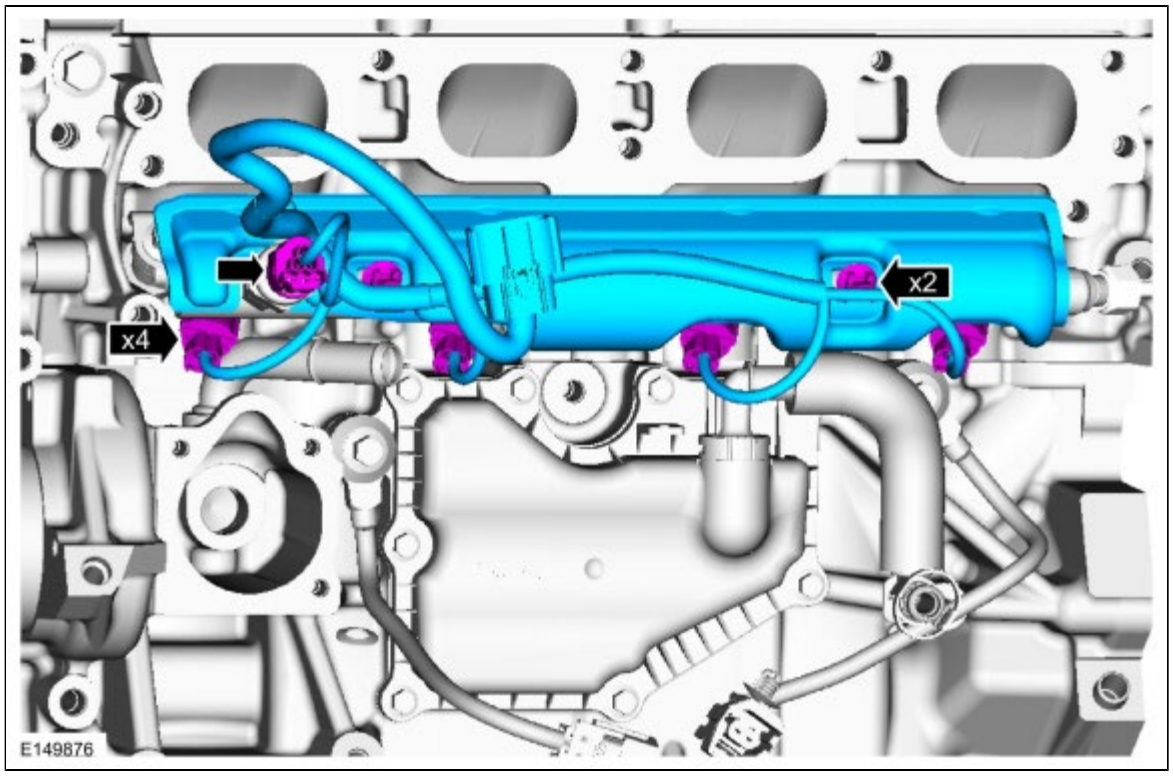

35. **NOTE:** *Use care when removing the fuel injection pump noise insulator. Spreading the openings will aid in removing the fuel injection pump noise insulator and reduce the risk of damage.*

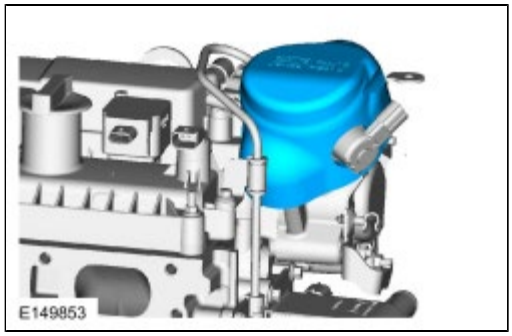

36. **NOTE:** *To release the fuel pressure in the high pressure fuel tube, wrap the fuel injection pump flare nut with a shop towel to absorb any residual fuel pressure during the loosening of fuel injection pump flare nut.*

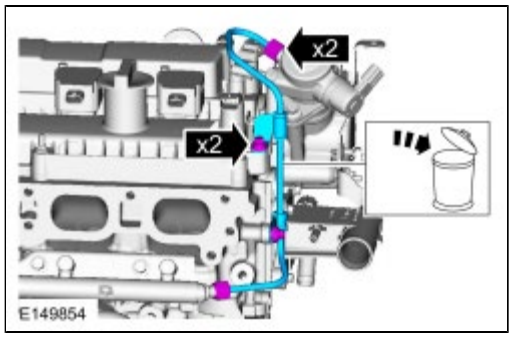

37. **NOTICE: Pull out the fuel rails in the direction of the fuel injector axis or damage may occur to the fuel injectors.**

    NOTE: *Use compressed air and remove any dirt or foreign material from the cylinder head, block and general surrounding area of the fuel rail and injectors.*

    NOTE: *When removing the fuel rails, the fuel injectors may remain in the fuel rails but normally remain in the cylinder heads and require the use of a Fuel Injector Remover tool to extract.*

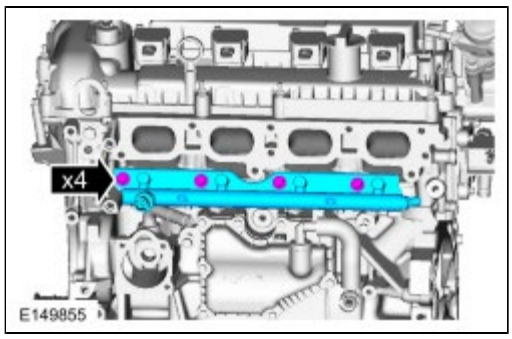

38. Remove any of the fuel injectors that remained in the head.
    Special Tool(s) : 307-005 (T59L-100-B) Slide Hammer , 310-206 Remover, Fuel Injector

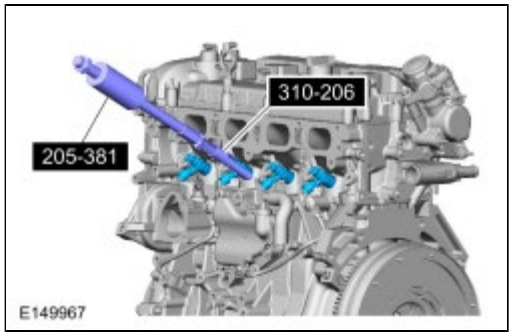

39.

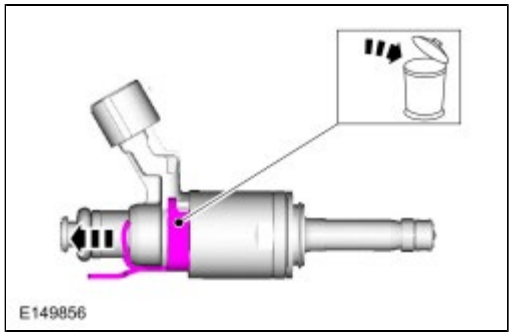

40. Discard the specified component. Follow local disposal regulations.

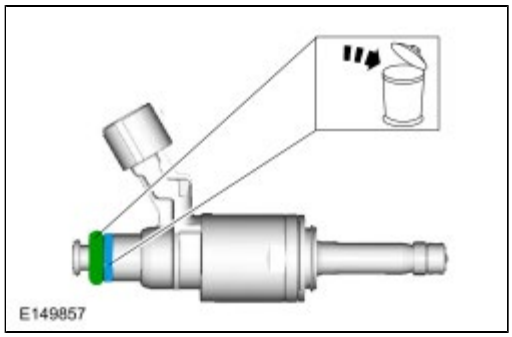

41. **NOTE:** *Make sure to thoroughly clean any residual fuel or foreign material from the cylinder head, block and the general surrounding area of the fuel rails and injectors.*

    NOTE: *Do not use compressed air to clean the tip of the fuel injector.*

    NOTE: *Do not use a brush to clean the tip of the fuel injector.*

    Clean the 4 fuel injector bores in the cylinder head.
    Special Tool(s) : 310-205 Fuel Injector Brush

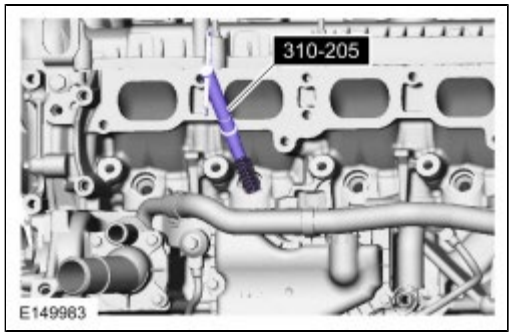

42. **NOTE:** *Remove and discard the gasket.*

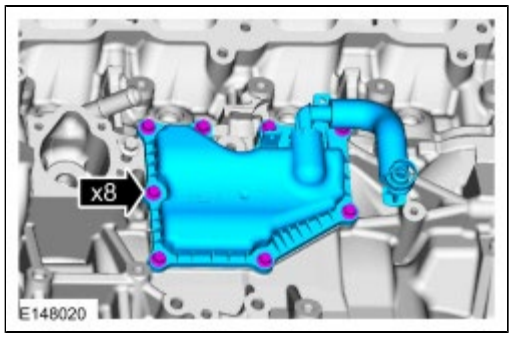

43. **NOTE:** *Remove and discard the gasket.*

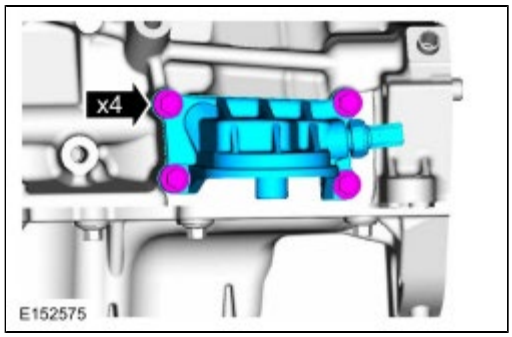

44. **NOTICE: The <u>RH KS</u> must be installed in the 6 o'clock position and the <u>LH KS</u> must be installed in the 4 o'clock position. Failure to follow these instructions may result in damage to the engine.**

NOTE: *Mark the location of the RH and LH KS .*

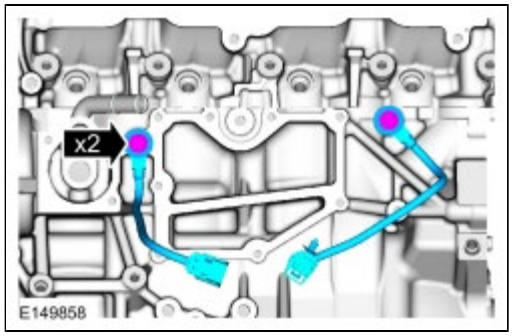

45.

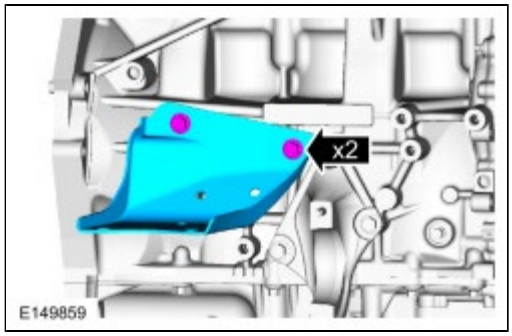

46.

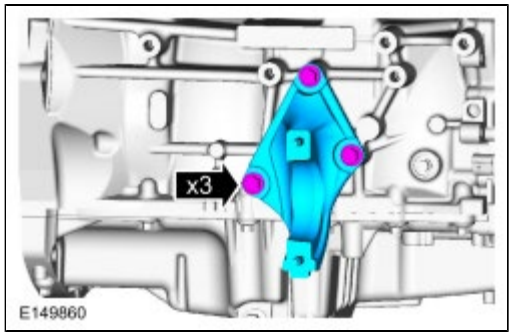

47. **NOTE:** *Alternately loosen the 2 fuel injection pump bolts one complete revolution at a time, remove the 2 bolts and fuel injection pump.*

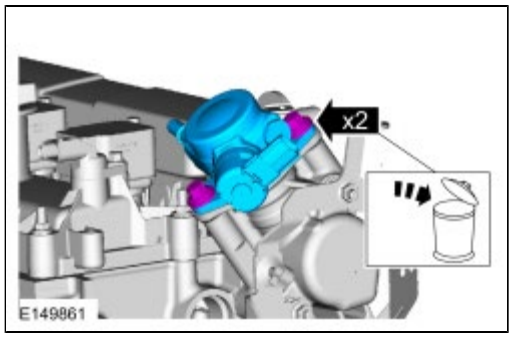

48.

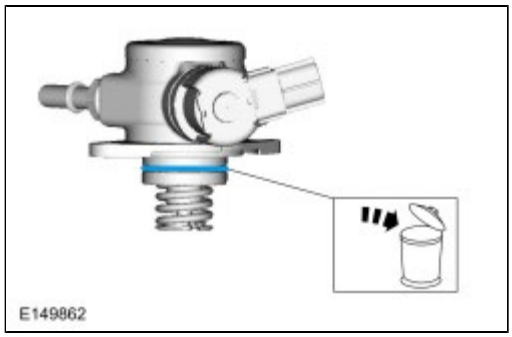

49.

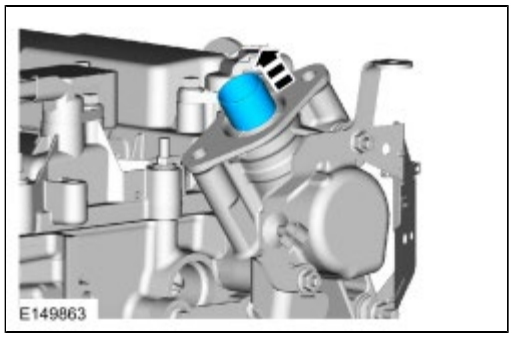

50.

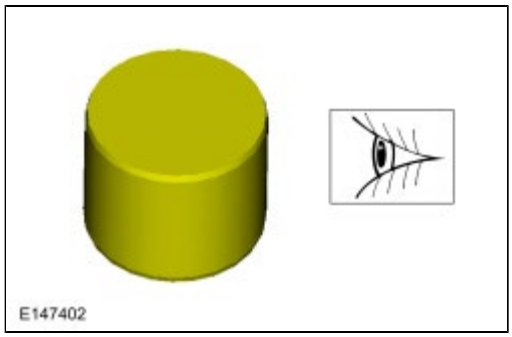

51.

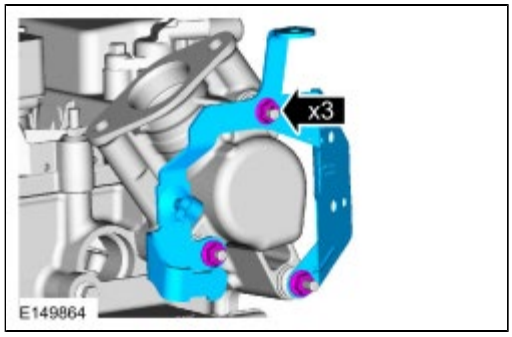

52. **NOTE:** *Inspect and replace the gasket, if necessary.*

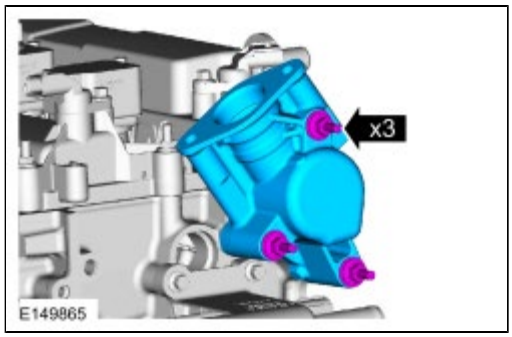

53. **NOTE:** *Inspect and replace the gasket, if necessary.*

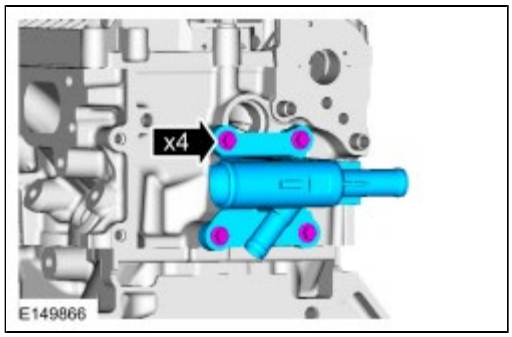

54.

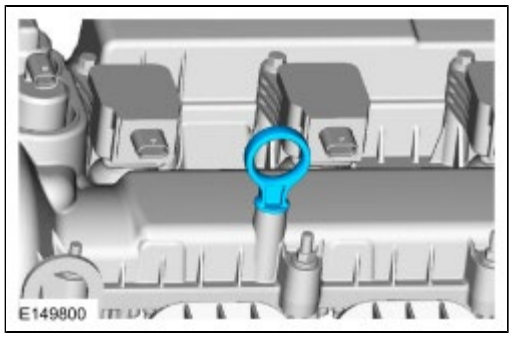

55. **NOTE:** *When removing the ignition coil-on-plugs, a slight twisting motion will break the seal and ease removal.*

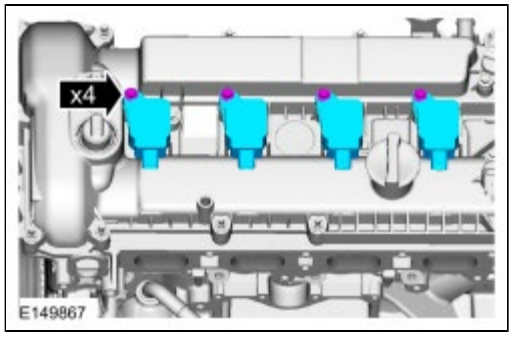

56. If equipped.

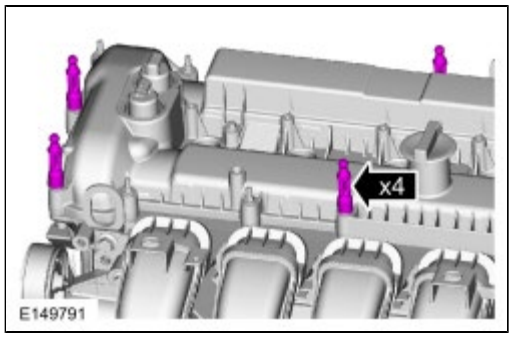

57. **NOTE:** *Discard the valve cover gasket.*

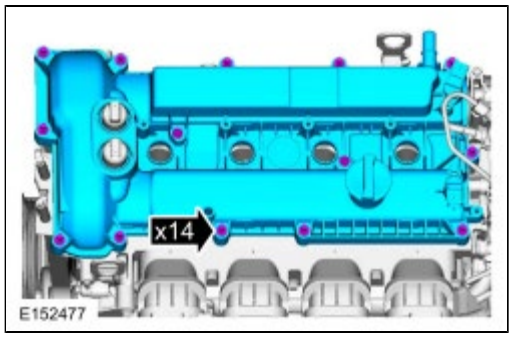

58. **NOTE:** *The Variable Camshaft Timing (VCT) solenoid seals should only be replaced if they are damaged.*

    Special Tool(s) : 205-153 (T80T-4000-W) Handle , 303-1247/1 Remover, VCT Spark Plug Tube Seal

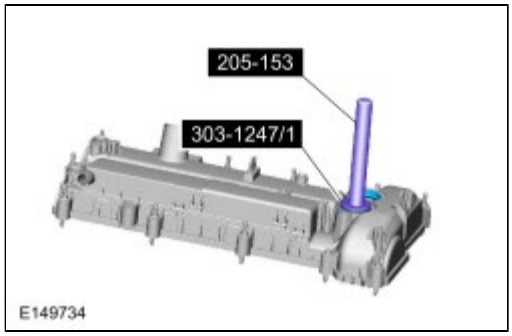

59. Turn the crankshaft until piston no.1 is 45 degrees before TDC by using the guide holes on the engine front cover and the crankshaft pulley.

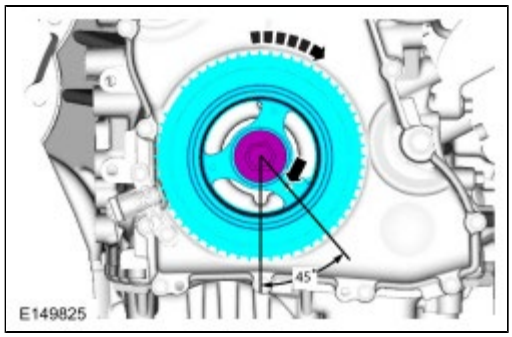

60.

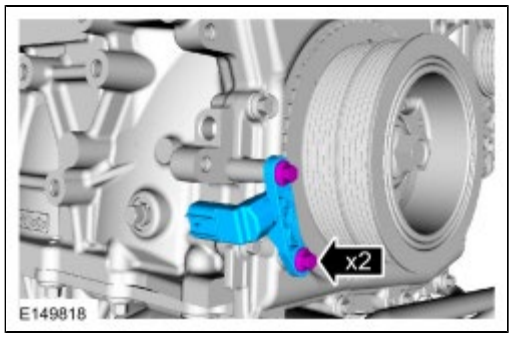

61.

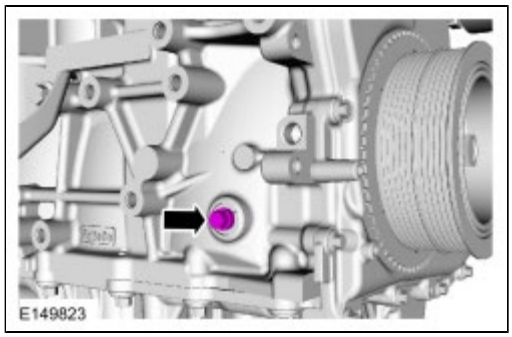

62. **NOTICE: Failure to position the No. 1 piston at TDC can result in damage to the engine. Turn the engine in the normal direction of rotation only.**

    NOTE: *The special tool will contact the crankshaft and prevent it from turning past TDC . However, the crankshaft can still be rotated in the counterclockwise direction. The crankshaft must remain at the TDC position during the crankshaft pulley removal and installation.*

    Install the special tool and using the crankshaft pulley bolt, turn the crankshaft clockwise slowly until contact is made with the special tool.
    Special Tool(s) : 303-507 Timing Peg, Crankshaft TDC , 303-507 Timing Peg, Crankshaft TDC

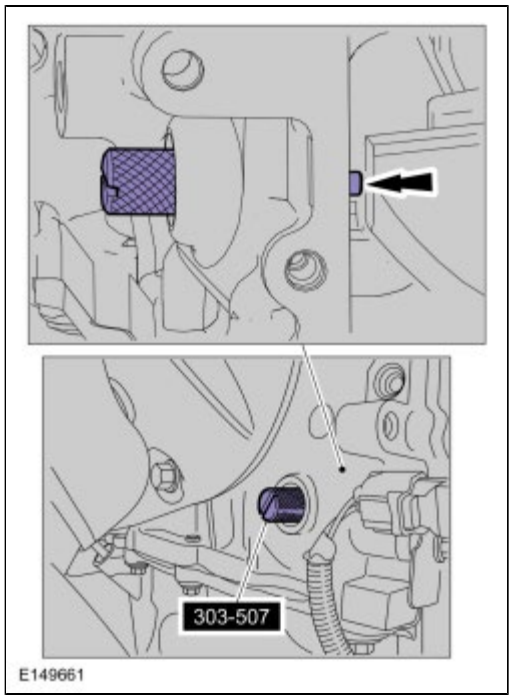

63. **NOTICE: The special tool is for camshaft alignment only. Using this tool to prevent engine rotation can result in engine damage.**

    Install Special Service Tool : 303-1565 Alignment Tool, Camshaft

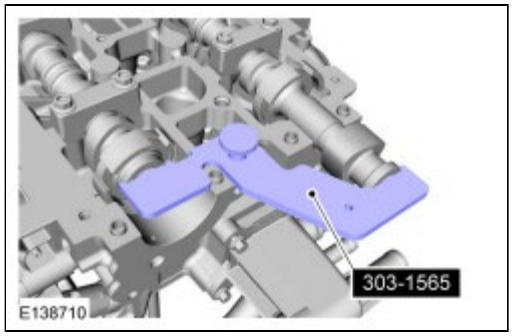

64. **NOTE:** *The crankshaft must remain in the TDC position during removal of the pulley bolt or damage to the engine can occur. Therefore, the crankshaft pulley must be held in place with the special tool , and the crankshaft pulley bolt should be removed using an air impact wrench (1/2-in drive minimum).*

    NOTE: *The crankshaft sprocket diamond washer may come off with the crankshaft pulley.*

    Special Tool(s) : 303-D055 (D85L-6000-A) Strap Wrench

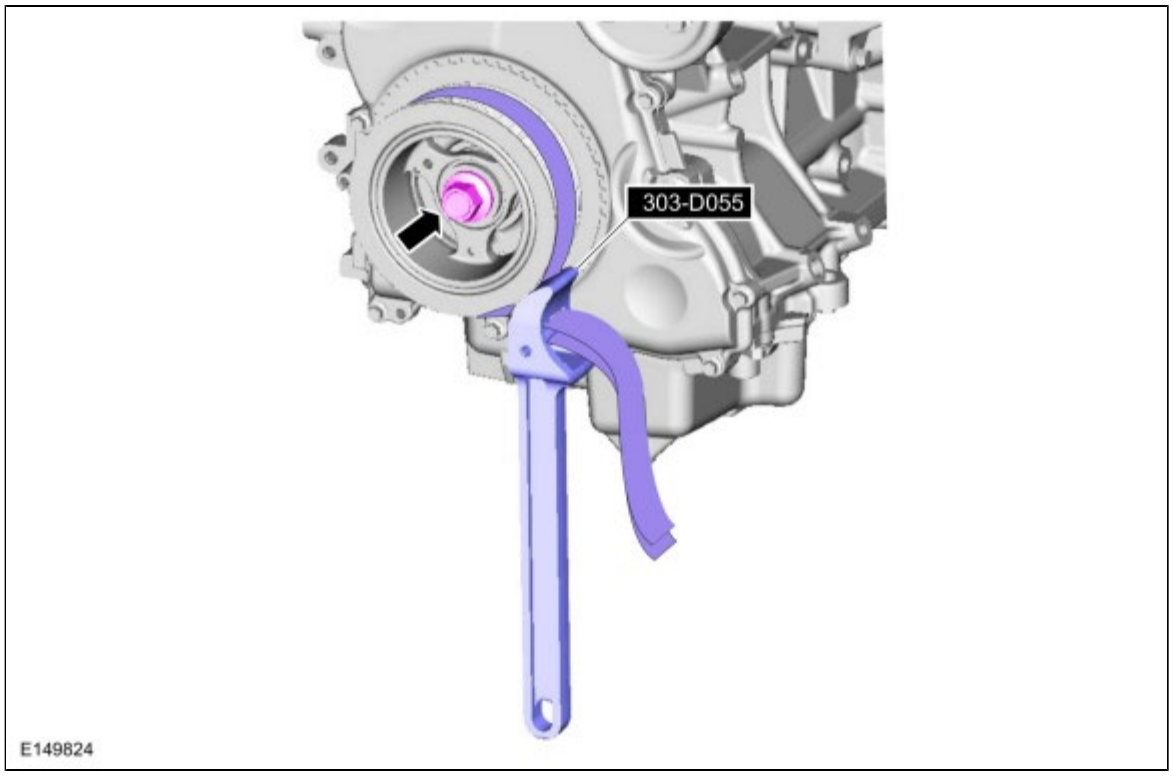

65. **NOTICE: The crankshaft sprocket diamond washer may come off with the crankshaft pulley. The diamond washer should be cleaned and inspected for any damage. If damage is evident, replace the diamond washer. If no damage, the diamond washer is to be reused during installation. If the diamond washer is not installed, engine damage may occur.**

    If the diamnond washer did not come off with the crankshaft pulley, remove the diamond washer.

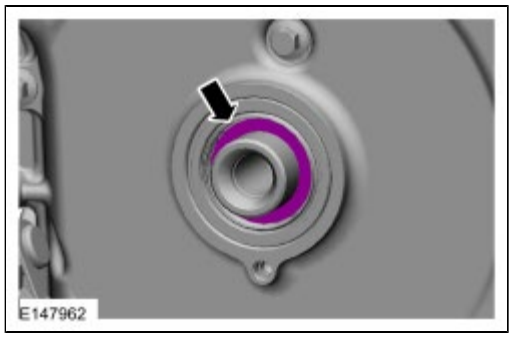

66. **NOTICE: Use care not to damage the engine front cover or the crankshaft when removing the seal.**

Special Tool(s) : 303-409 (T92C-6700-CH) Remover, Crankshaft Seal

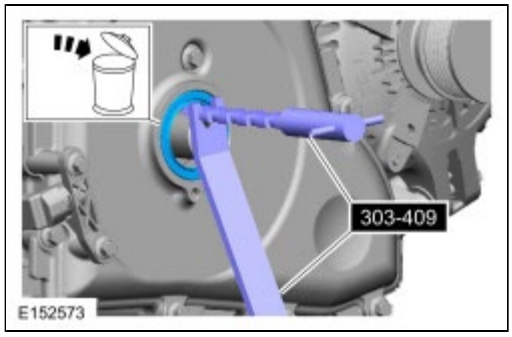

67.

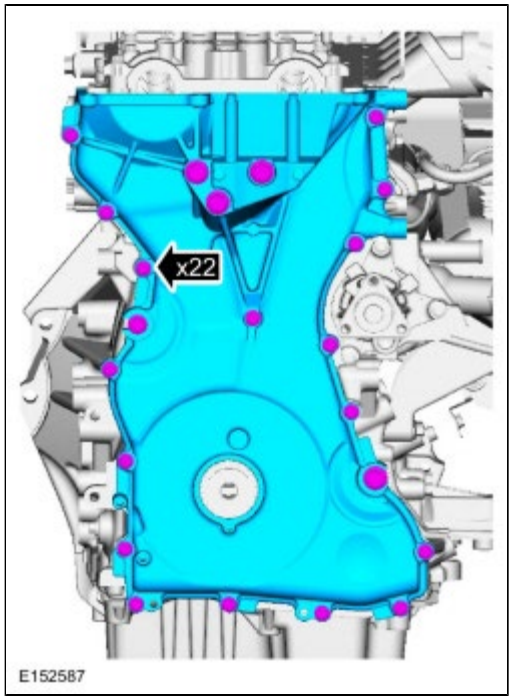

68. **NOTICE: Do not rely on the special tool to prevent camshaft rotation. Damage to the tool or the camshaft can occur.**

Using a wrench on the flats of the exhaust camshaft to prevent camshaft rotation, loosen the exhaust camshaft phaser and sprocket bolt.

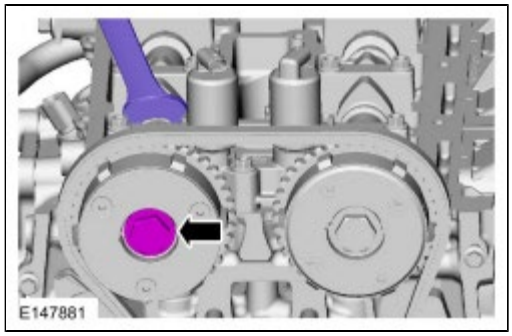

69. **NOTICE: The special tool is for camshaft alignment only. Using this tool to prevent engine rotation can result in engine damage.**

Using a wrench on the flats of the intake camshaft to prevent camshaft rotation, loosen the intake camshaft phaser and sprocket bolt.

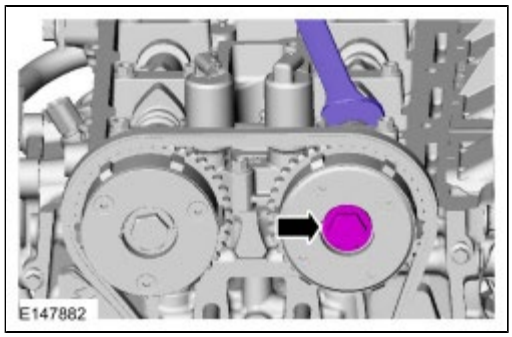

70.

1. Using a small pick, release and hold the ratchet mechanism.
2. While holding the ratchet mechanism in the released position, compress the tensioner by pushing the timing chain arm toward the tensioner.
3. Insert a holding pin into the hole to retain the tensioner.

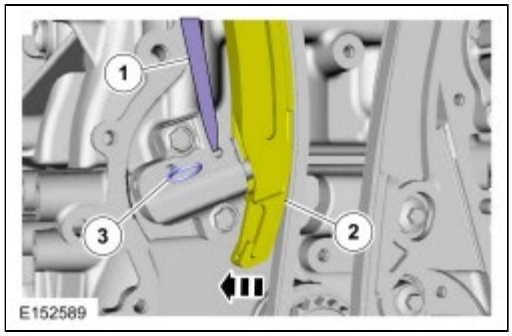

71.

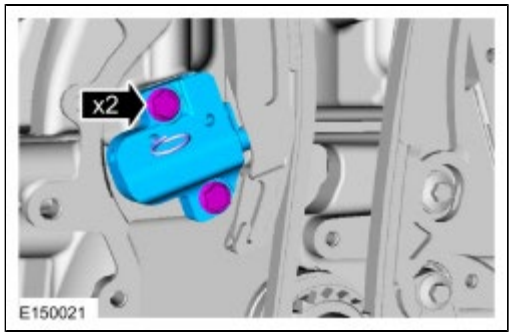

72.

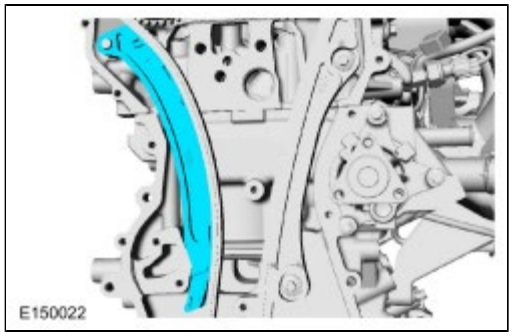

73.

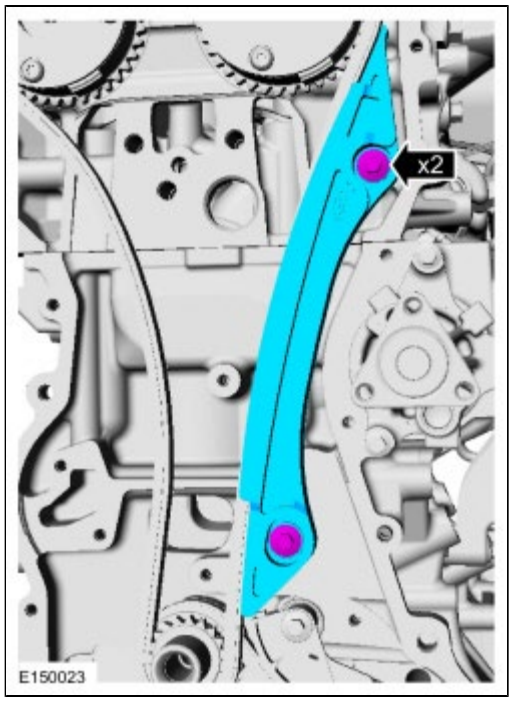

74.

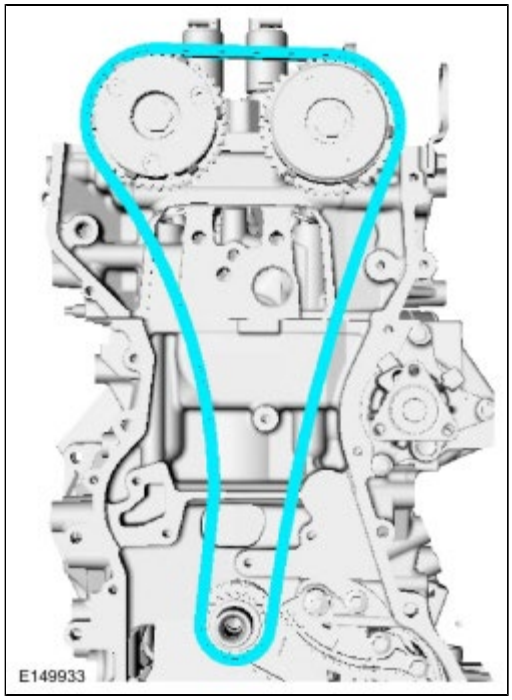

75. **NOTE:** *The phaser and sprocket bolts must be discarded and new installed.*

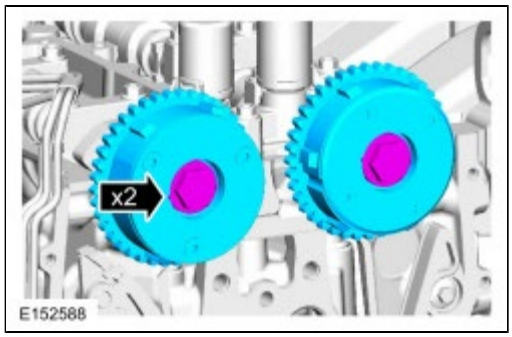

76. **NOTICE: The special tool is for camshaft alignment only. Using this tool to prevent engine rotation can result in**

engine damage.

Remove Special Service Tool : 303-1565 Alignment Tool, Camshaft

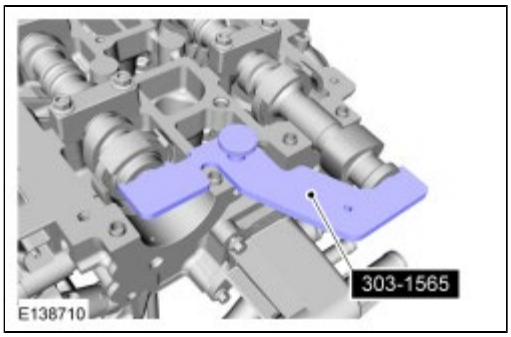

77.

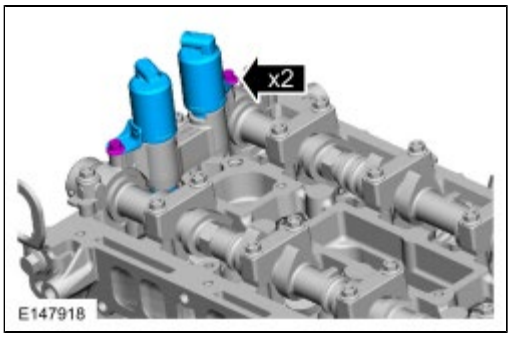

78.

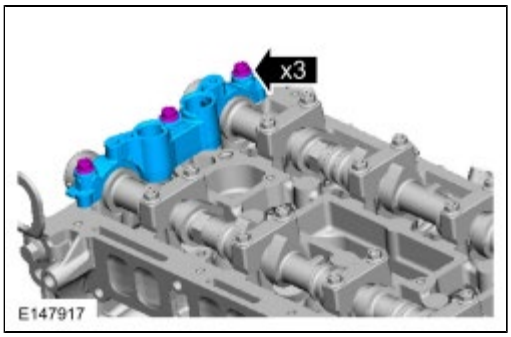

79. **NOTICE: Failure to follow the camshaft loosening procedure can result in damage to the camshafts.**

    NOTICE: Note the position of the camshaft lobes on the No. 1 cylinder for installation reference.

    NOTICE: Mark the location and orientation of each camshaft bearing cap.

    1. Loosen the camshaft bearing caps in sequence 2 turns at a time until all tension is released from the camshaft bearing caps.
    2. Remove the camshaft bearing caps.
    3. Remove the camshafts.

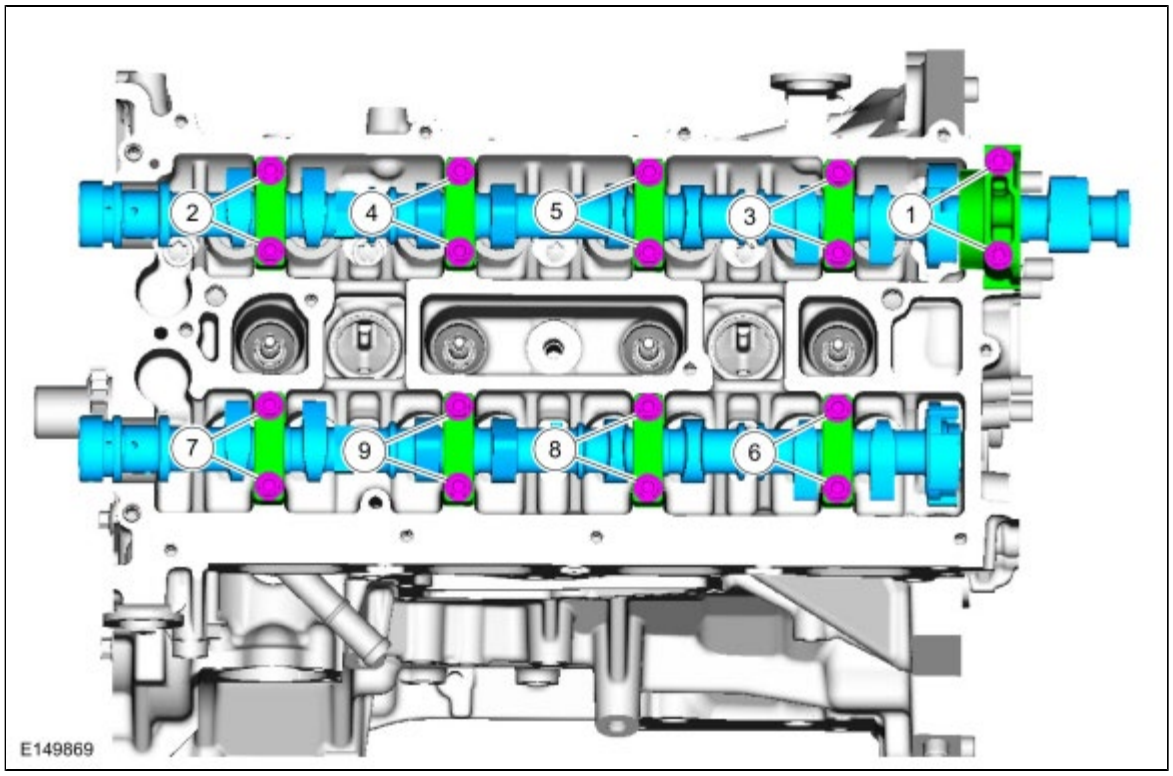

80. **NOTE:** *If the camshafts and valve tappets are to be reused, mark the location of the valve tappets to make sure they are assembled in their original positions.*

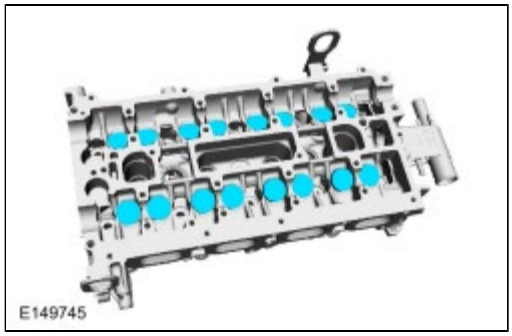

81. **NOTE:** *The number on the valve tappets only reflects the digits that follow the decimal. For example, a tappet with the number 0.650 has the thickness of 3.650 mm.*

    Install new components as necessary.

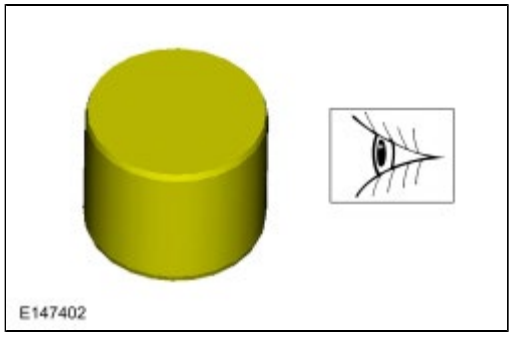

82. **NOTE:** *The cylinder head bolts must be discarded and new bolts must be installed. They are tighten-to-yield designed and cannot be reused.*

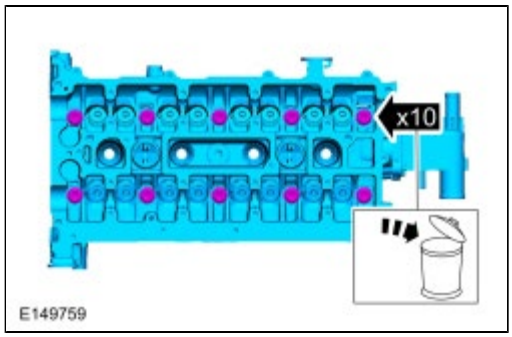

83.

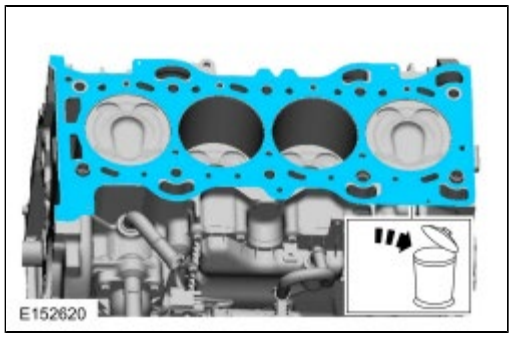

84.

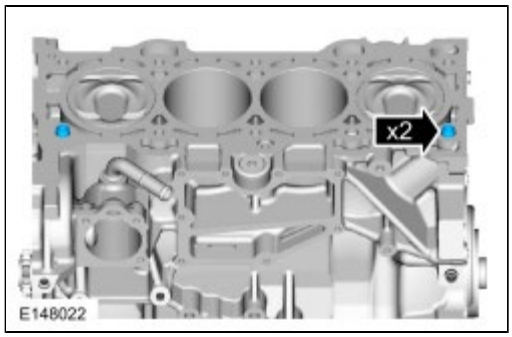

85. **NOTE:** *Observe all warnings or cautions and follow all application directions contained on the packaging of the silicone gasket remover and the metal surface prep.*

    NOTE: *Clean the cylinder head bolt holes in the cylinder block. Make sure all coolant, oil or other foreign material is removed.*

    NOTE: *If there is no residual gasket material present, metal surface prep can be used to clean and prepare the surfaces.*

    1. Remove any large deposits of silicone or gasket material with a plastic scraper.
    2. Apply Motorcraft Silicone Gasket Remover following package directions, and allow to set for several minutes.
       Material : Motorcraft® Silicone Gasket Remover / ZC-30
    3. Remove the Motorcraft Silicone Gasket Remover with a plastic scraper. A second application of Motorcraft Silicone Gasket Remover may be required if residual traces of silicone or gasket material remain.
       Material : Motorcraft® Silicone Gasket Remover / ZC-30
    4. Apply Motorcraft Metal Surface Prep following package directions, to remove any traces of oil or coolant, and to prepare the surfaces to bond with the new gasket. Do not attempt to make the metal shiny. Some staining of the metal surfaces is normal.
       Material : Motorcraft® Metal Surface Prep / ZC-31-A

86. **NOTICE: Aluminum surfaces are soft and can be scratched easily. Never place the cylinder head gasket surface, unprotected, on a bench surface.**

    Support the cylinder head on a bench with the head gasket side up.
    Refer to: Cylinder Head Distortion (303-00 Engine System - General Information, General Procedures).

Refer to: Cylinder Block Distortion (303-00 Engine System - General Information, General Procedures).

87.

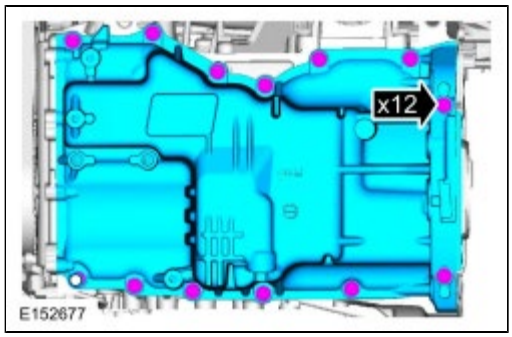

88. **NOTE:** *Discard the gasket.*

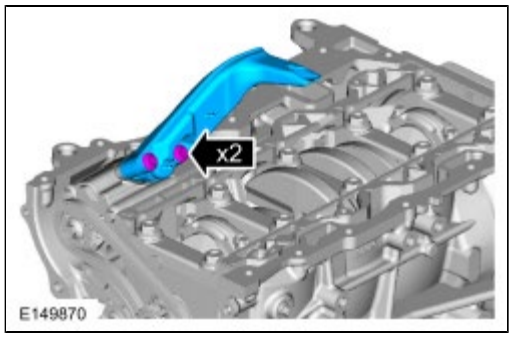

89.

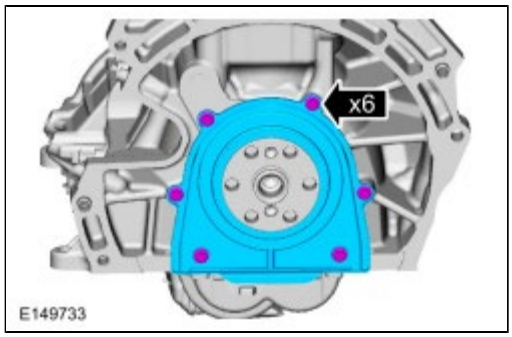

90.

1. Push the tensioner spring down and release the spring from under the shoulder bolt.
2. Remove the 2 shoulder bolts and the tensioner and chain.

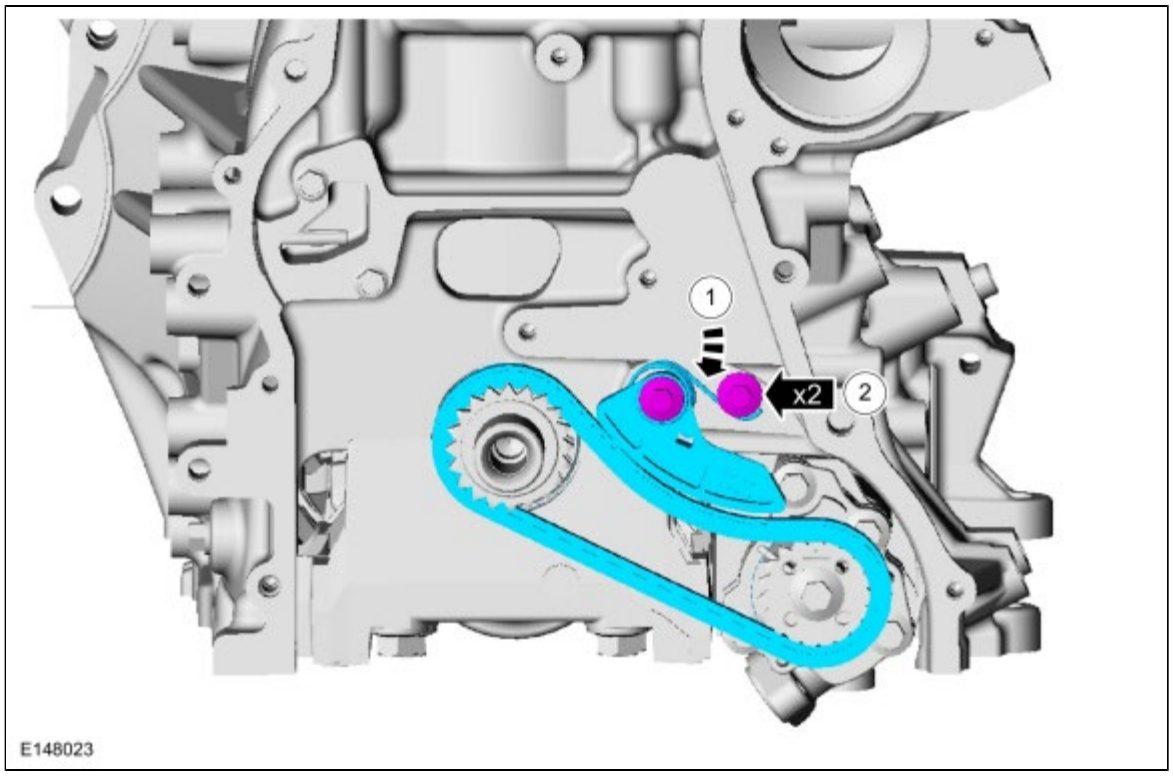

91.

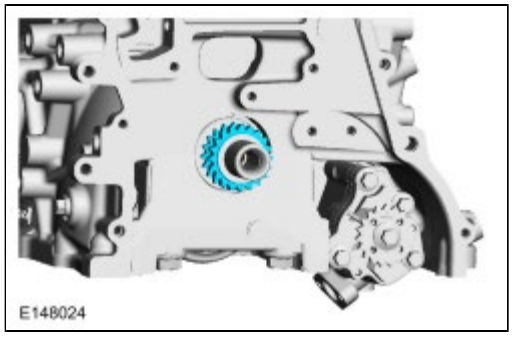

92. **NOTICE: The diamond washer should be cleaned and inspected for any damage. If damage is evident, replace the diamond washer. If no damage, the diamond washer is to be reused during installation. If the diamond washer is not installed, engine damage may occur.**

Remove the diamond washer.

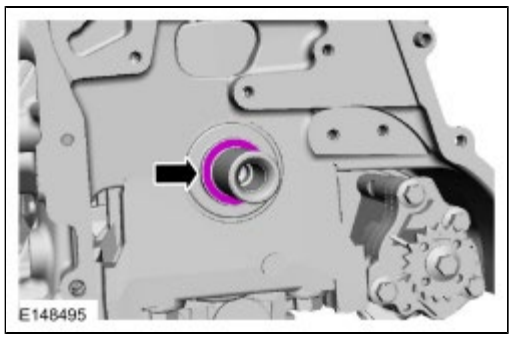

93.

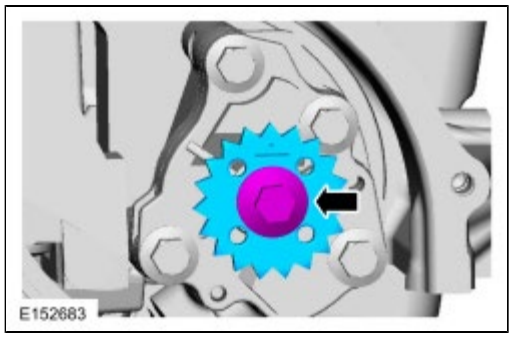

94.

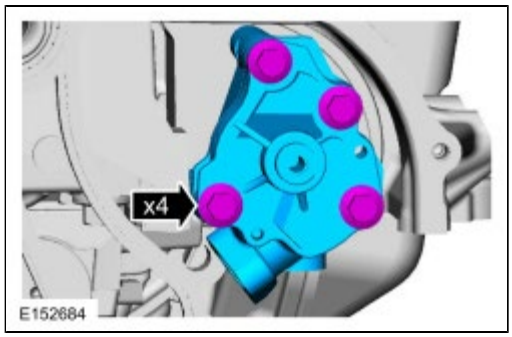

95. *Remove Special Service Tool* : 303-507 Timing Peg, Crankshaft TDC

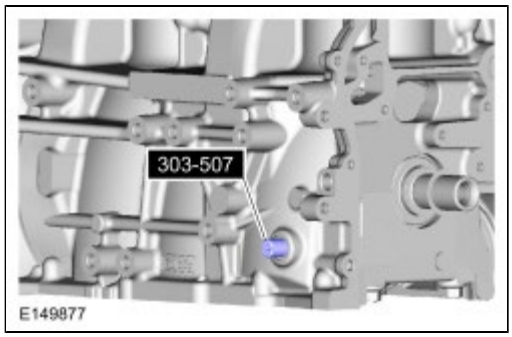

96. Before removing the pistons, inspect the top of the cylinder bores. If necessary, remove the ridge or carbon deposits from each cylinder using an abrasive pad or equivalent, following manufacturer's instructions.

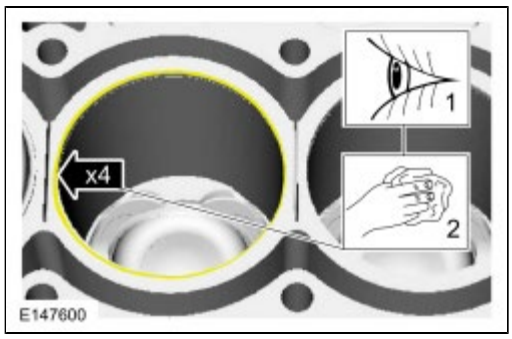

97. **NOTE:** *Clearly mark the connecting rods, connecting rod caps and connecting rod bearings in numerical order for correct orientation for reassembly.*

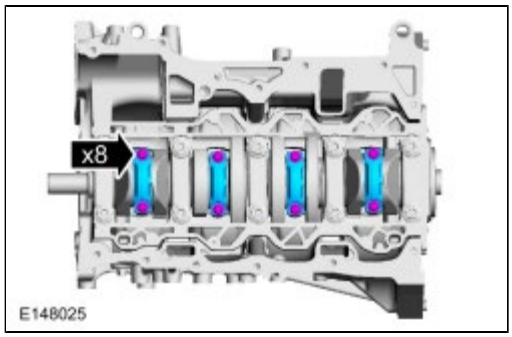

98. **NOTICE: Do not scratch the cylinder walls or crankshaft journals with the connecting rod.**

    NOTE: *Repeat until all the piston/rod assemblies are removed from the engine block.*

    Remove the piston/rod assembly from the engine block.
    Special Tool(s) : 303-462 Installer, Connecting Rod

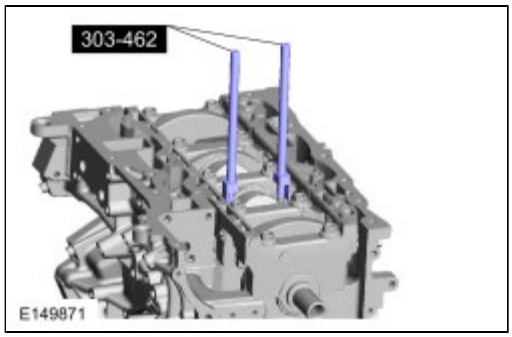

99. Refer to: Piston Inspection (303-00 Engine System - General Information, General Procedures).

100.

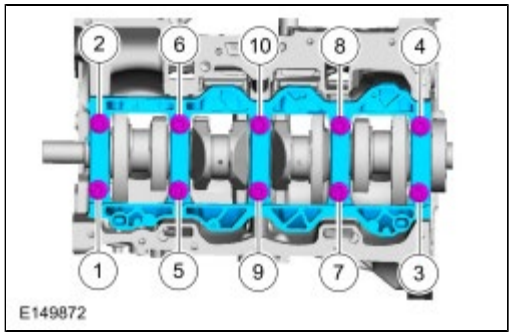

101. **NOTE:** *If the main bearings are being reused, mark them in order for correct orientation and reassembly.*

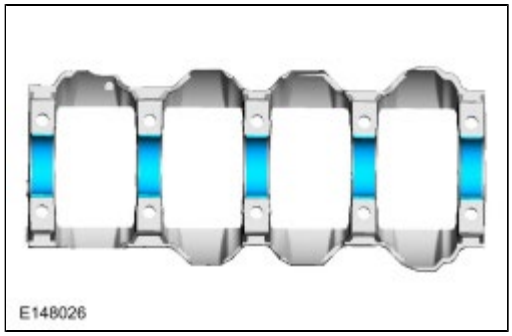

102.

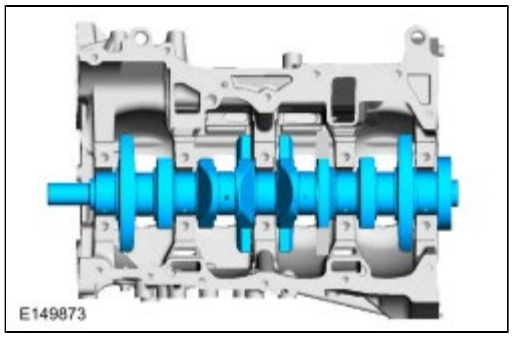

103. **NOTE:** *If the main bearings are being reused, mark them in order for correct orientation and reassembly.*

NOTE: *The center bulkhead has the thrust bearing.*

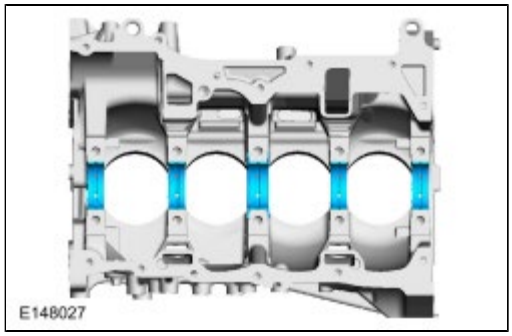

104. **NOTE:** *If the engine piston oil coolers are being reused, mark them in order for correct location during reassembly.*

NOTE: *The front bulkhead does not have an engine piston oil cooler.*

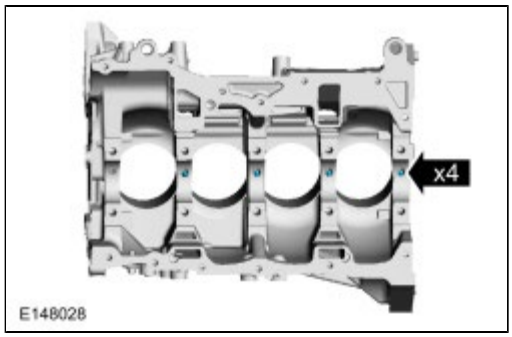

Copyright © Ford Motor Company

Cylinder Head

DISASSEMBLY

1. **NOTE:** *Front side shown, rear similar.*

   Remove the 2 bolts and the LH and RH engine lift eyes.

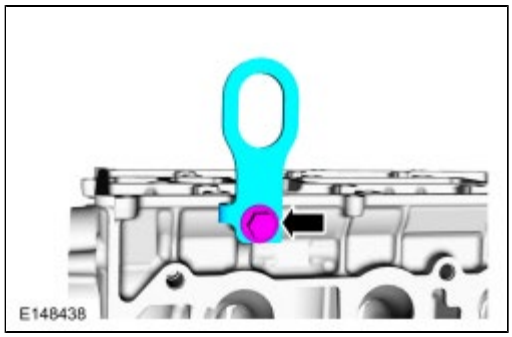

2. Inspect and replace the gasket, if necessary.

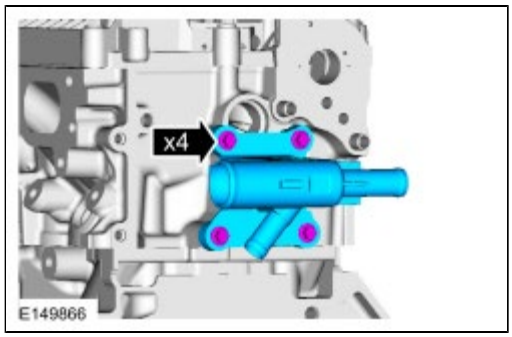

3. **NOTICE: Only use hand tools when removing the spark plugs, or damage can occur to the cylinder head or spark plug.**

   NOTE: *Use compressed air to remove any foreign material in the spark plug well before removing the spark plugs.*

   Remove the 4 spark plugs.

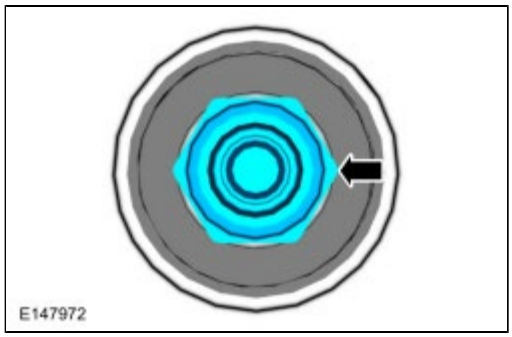

4. **NOTE:** *Place all parts in order to one side.*

   NOTE: *Remove the valve collet, using some multi-purpose grease and a small screwdriver.*

   Apply compressed air to the cylinder and remove the valve spring.
   Special Tool(s) : 303-300 (T87C-6565-A) Set, Valve Spring Compressor , 303-350 (T89P-6565-A) Compressor, Valve

Spring , 303-472 (T94P-6565-AH) Adapter, Valve Spring Compressor , 303-1249 Valve Spring Compressor
Material : Multi-Purpose Grease / Motorcraft® XL-5 (aerosol), CRC® SL3151 (ESB-M1C93-B)

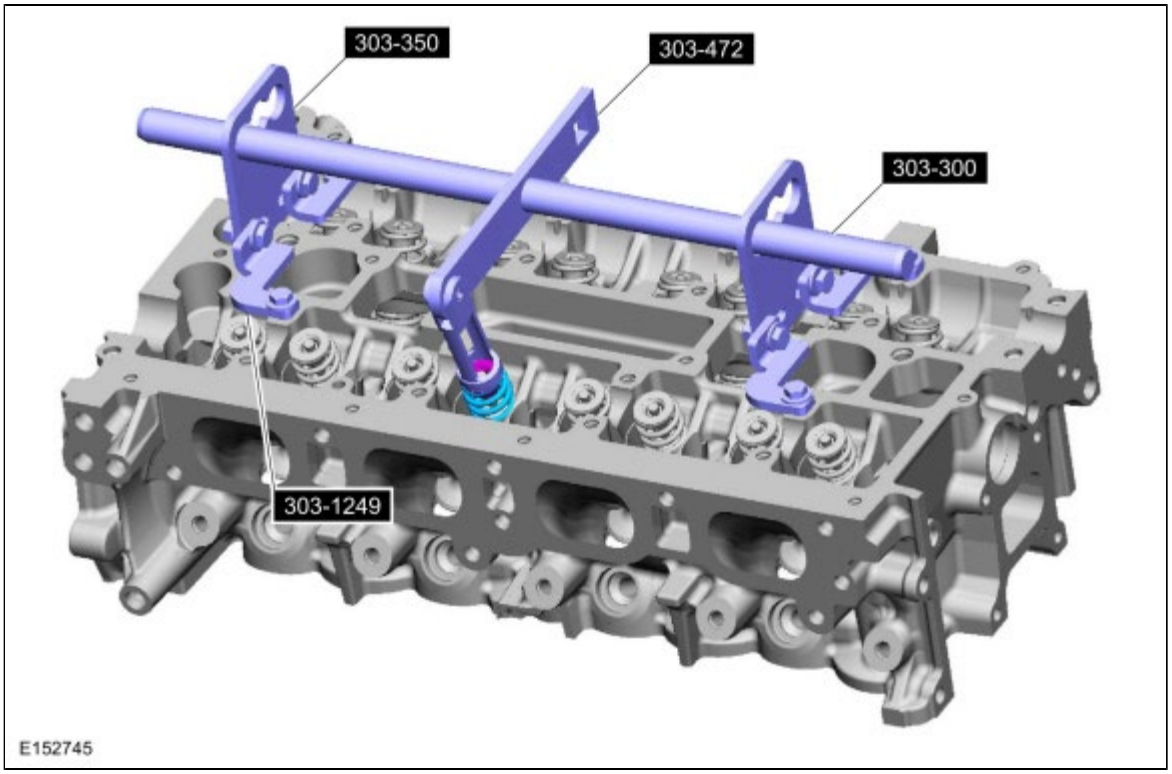

5. Repeat the appropriate removal steps for all of the other cylinders.

6. Install new parts, as necessary.

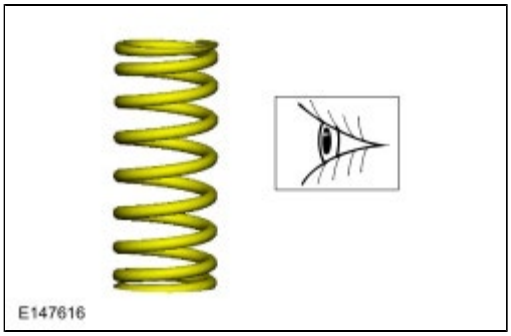

7.
   - Position the Valve Stem Oil Seal Remover and the Slide Hammer over the seal.
     Special Tool(s) : 303-468 (T94P-6510-AH) Remover, Valve Stem Oil Seal , 307-005 (T59L-100-B) Slide Hammer
   - Pull up on the Slide Hammer and remove the seal.

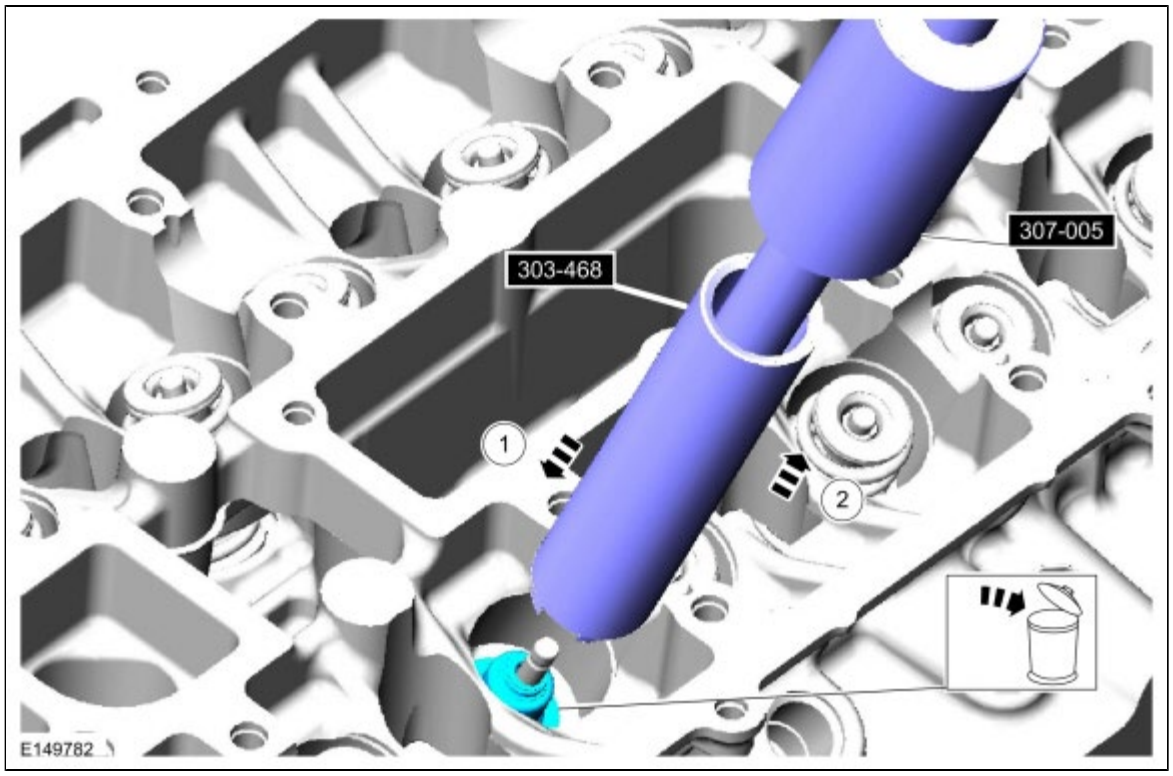

8. **NOTE:** *Mark each valve location if the original valves are to be used.*

   Remove the valves.

9. **NOTE:** *Install new parts, as necessary.*

   1. The end of the stem for grooves or scoring.
   2. The valve face and the edge for pits, grooves or scores.
   3. The valve head for signs of burning, erosion, warpage and cracking.
   4. The valve margin for wear.

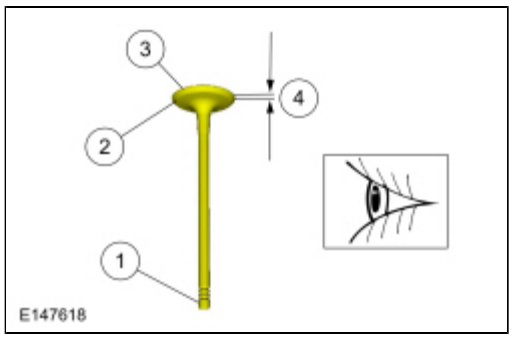

ASSEMBLY

1. **NOTE:** *If installing the original valves, make sure the valves are installed in the same position from which they were removed.*

   Coat the valve stems with clean engine oil and install the valves.
   Material : Motorcraft® SAE 5W-20 Premium Synthetic Blend Motor Oil / XO-5W20-QSP (WSS-M2C945-A)

2. *Special Tool(s)* : 303-470 (T94P-6510-CH) Installer, Valve Stem Oil Seal
   Material : Motorcraft® SAE 5W-20 Premium Synthetic Blend Motor Oil / XO-5W20-QSP (WSS-M2C945-A)

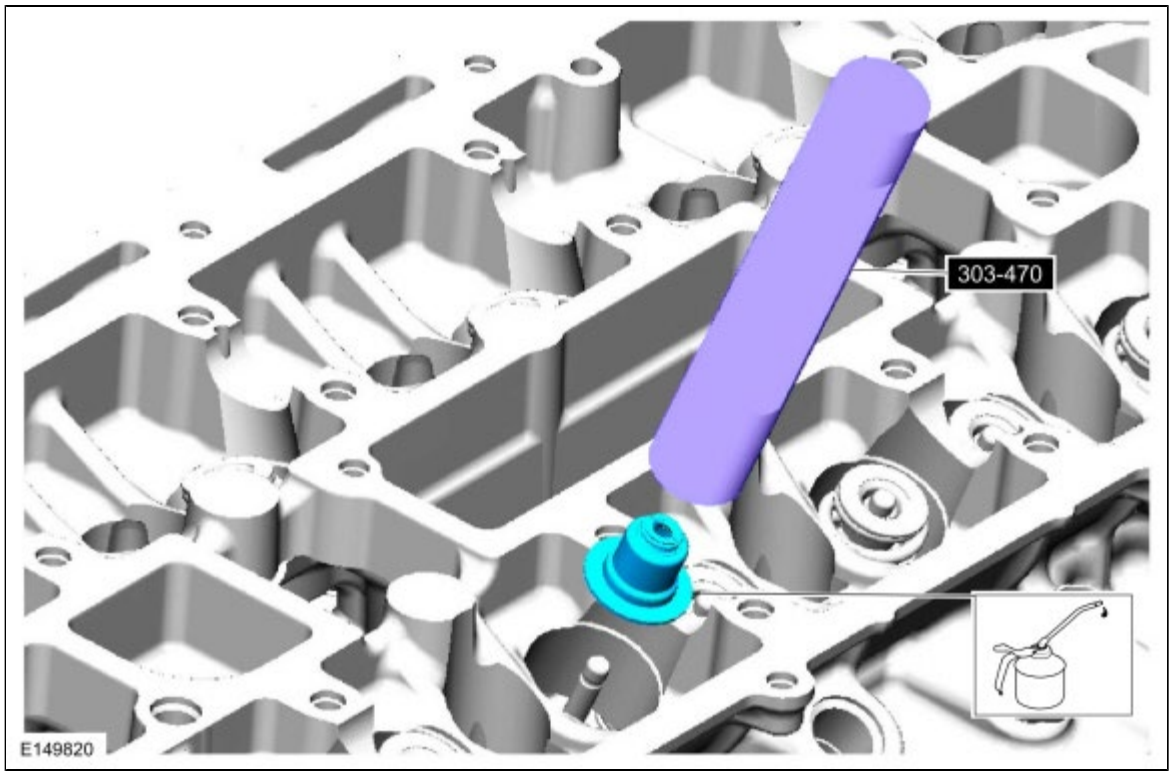

3. **NOTE:** *Install the valve collet, using some multi-purpose grease and a small screwdriver.*

   NOTE: *Check the seating of the valve collet.*

   Special Tool(s) : 303-300 (T87C-6565-A) Set, Valve Spring Compressor , 303-350 (T89P-6565-A) Compressor, Valve Spring , 303-472 (T94P-6565-AH) Adapter, Valve Spring Compressor , 303-1249 Valve Spring Compressor
   Material : Multi-Purpose Grease / Motorcraft® XL-5 (aerosol), CRC® SL3151 (ESB-M1C93-B)

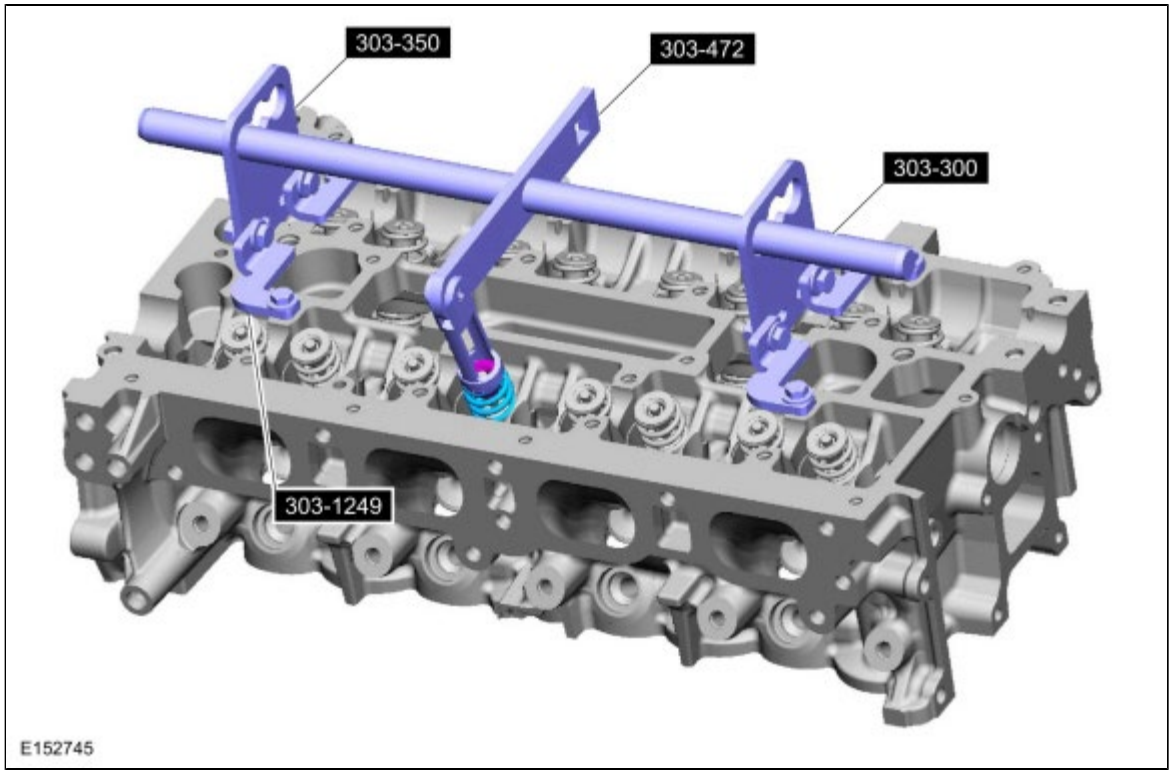

4. **NOTICE: Only use hand tools when installing the spark plugs, or damage can occur to the cylinder head or spark plug.**

   Install the 4 spark plugs.

Torque : 15 Nm

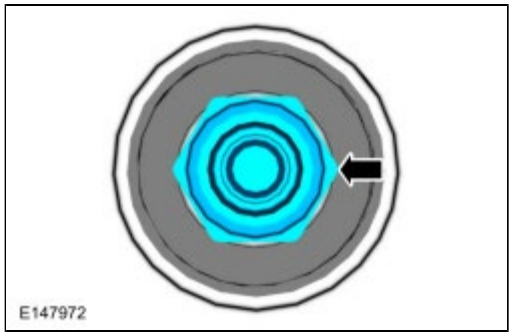

5. **NOTE:** *Install the gasket.*

   Torque : 10 Nm

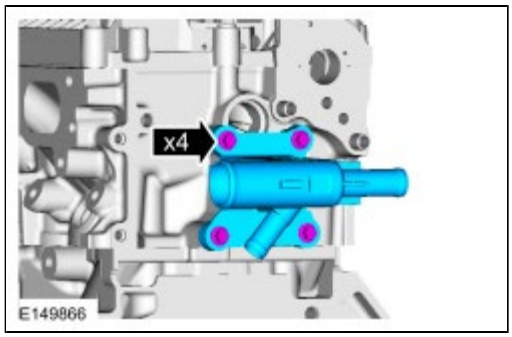

6. **NOTE:** *Front side shown, rear similar.*

   Install the LH and RH engine lift eyes and the 2 bolts.
   Torque : 53 Nm

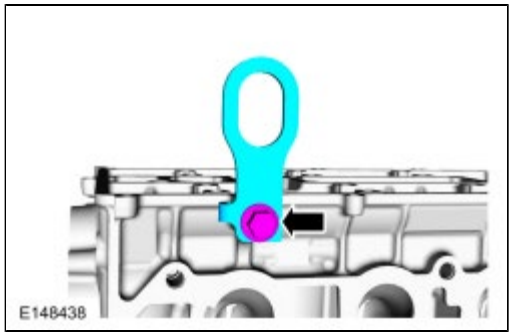

Copyright © Ford Motor Company

Piston

DISASSEMBLY

1.

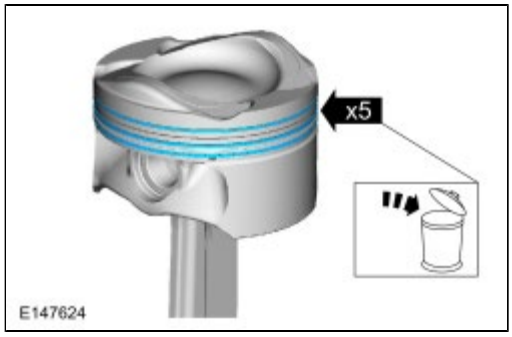

2.

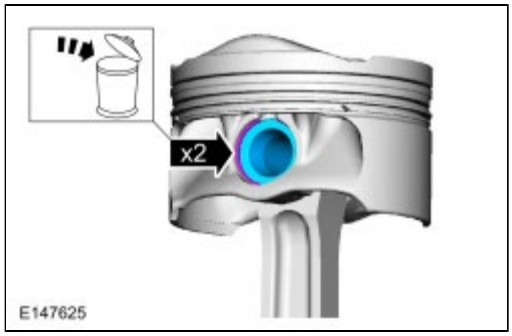

3.

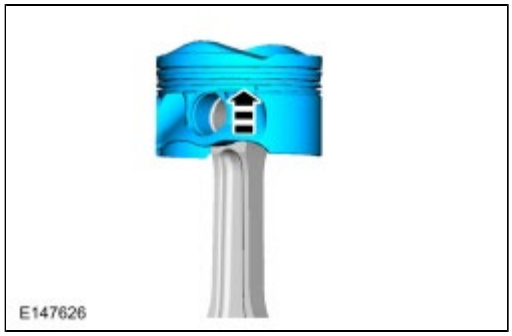

4. Refer to: Piston Inspection (303-00 Engine System - General Information, General Procedures).

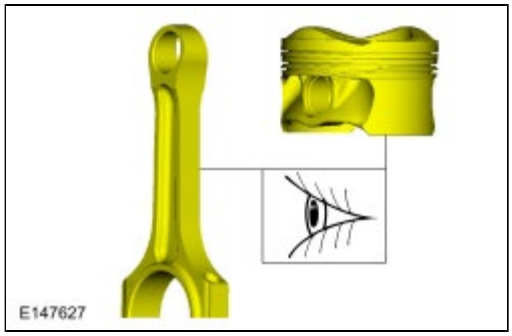

ASSEMBLY

1. Indicates front of engine.

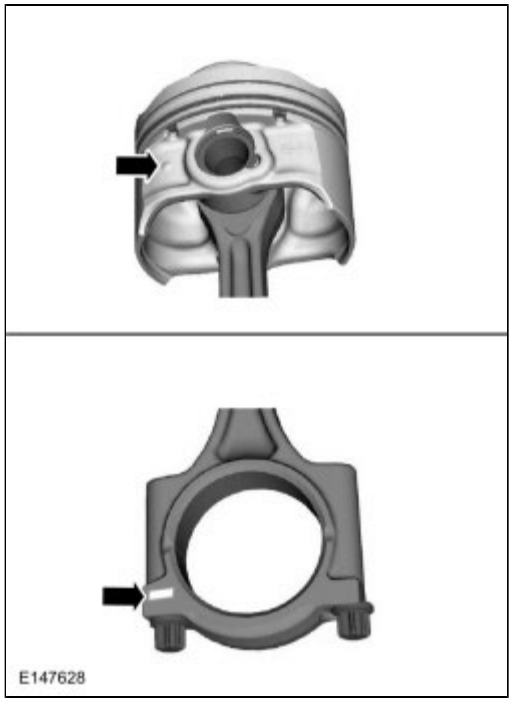

2.

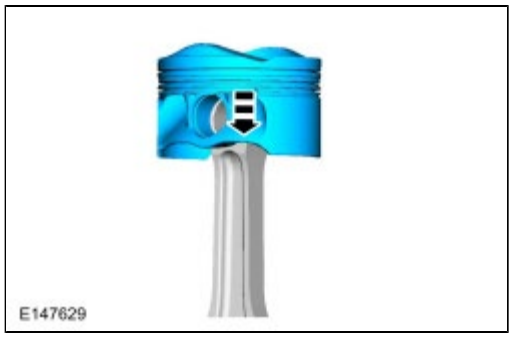

3. *Material* : Motorcraft® SAE 5W-20 Premium Synthetic Blend Motor Oil / XO-5W20-QSP (WSS-M2C945-A)

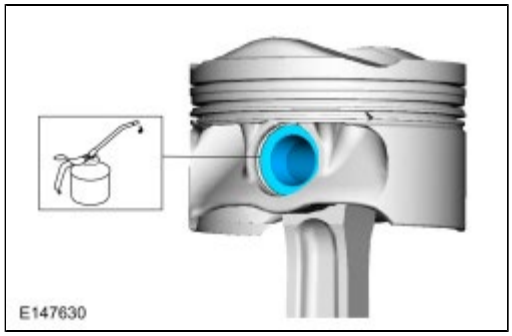

4.

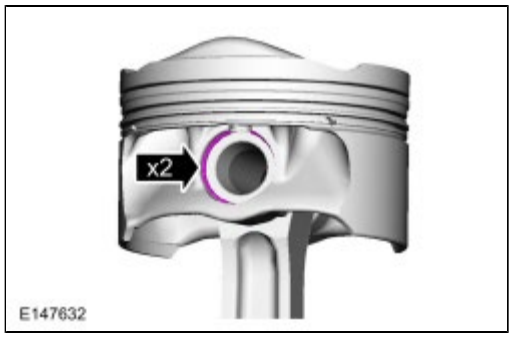

5. *Material* : Motorcraft® SAE 5W-20 Premium Synthetic Blend Motor Oil / XO-5W20-QSP (WSS-M2C945-A)

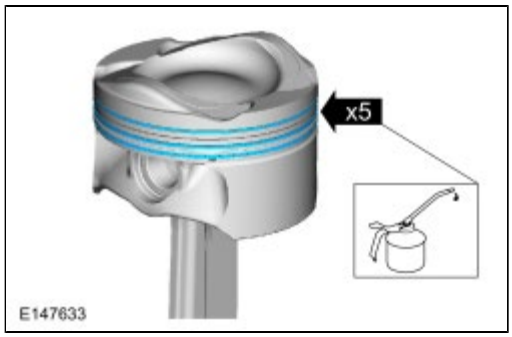

6. **NOTE:** *The upper and lower compression rings are to be fitted with the identification marks on the upper side.*

   NOTE: *Arrows faces the front of the engine.*

   NOTE: *Align the piston rings on the piston.*

   1. Upper compression ring gap location.
   2. Lower compression ring gap location.
   3. Upper oil control segment ring gap location.
   4. Expander ring gap location.
   5. Lower oil control segment ring gap location.

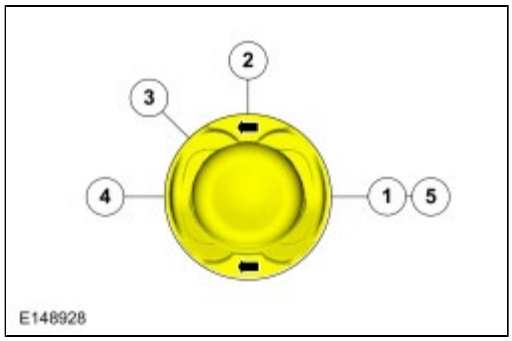

Copyright © Ford Motor Company

Engine

NOTICE: Do not loosen or remove the crankshaft pulley bolt without first installing the special tools as instructed in this procedure. The crankshaft pulley and the crankshaft timing sprocket are not keyed to the crankshaft. The crankshaft, the crankshaft sprocket and the pulley are fitted together by friction, using diamond washers between the flange faces on each part. For that reason, the crankshaft sprocket is also unfastened if the pulley bolt is loosened. Before any repair requiring loosening or removal of the crankshaft pulley bolt, the crankshaft and camshafts must be locked in place by the special service tools, otherwise severe engine damage can occur.

NOTICE: During engine repair procedures, cleanliness is extremely important. Any foreign material, including any material created while cleaning gasket surfaces that enters the oil passages, coolant passages or the oil pan, can cause engine failure.

NOTE: *Assembly of the engine requires various inspections/measurements of the engine components (engine block, crankshaft, connecting rods, pistons and piston rings). These inspections/measurements will aid in determining if the engine components will require replacement.*

NOTE: *Refer to exploded views in Description and Operation.*

1. **NOTE:** *If the oil squirters are being reused, they must be installed in the same location as marked during disassembly.*

   NOTE: *The front bulkhead does not have an engine piston oil cooler.*

   Torque : 4 Nm

   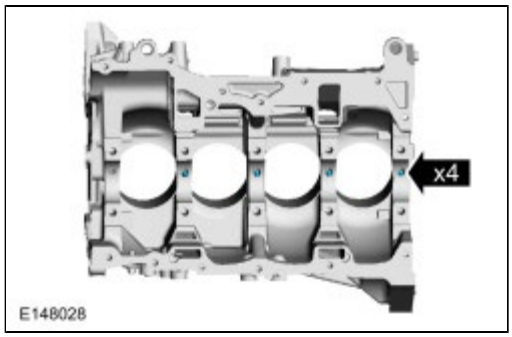

2. Measure each of the crankshaft main bearing journal diameters in at least 2 directions and record the smallest diameter for each journal.

   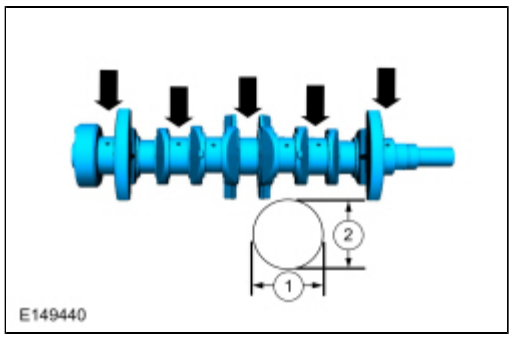

3. Position the main bearing beam in the engine block with the main bearing beam mounted flush with the rear face of the engine block and install the original main bearing beam bolts finger tight.

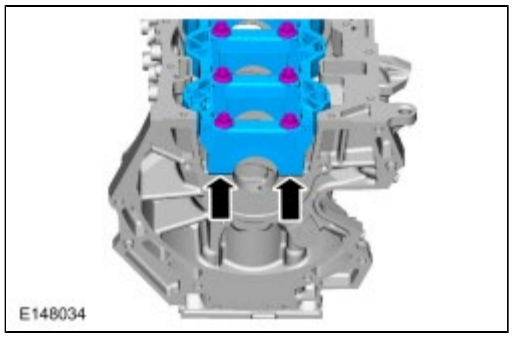

4. *Torque* :
   Stage 1: 5 Nm
   Stage 2: 25 Nm
   Stage 3: Tighten an additional 90°

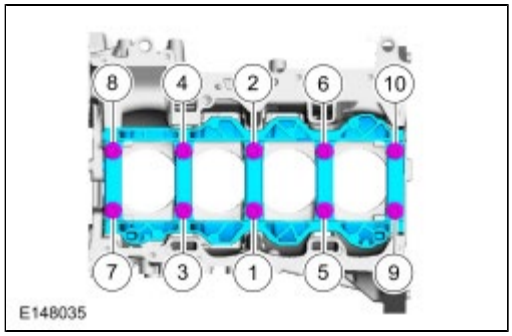

5. Measure each crankshaft block main bearing bore diameter.

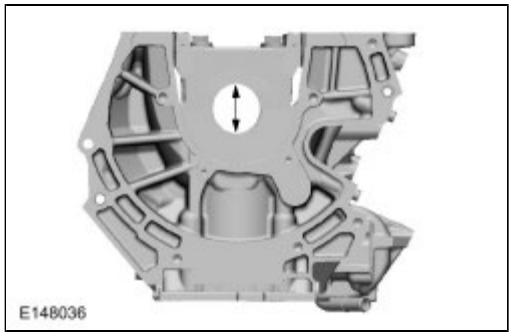

6. Using the chart, select the crankshaft main bearings.

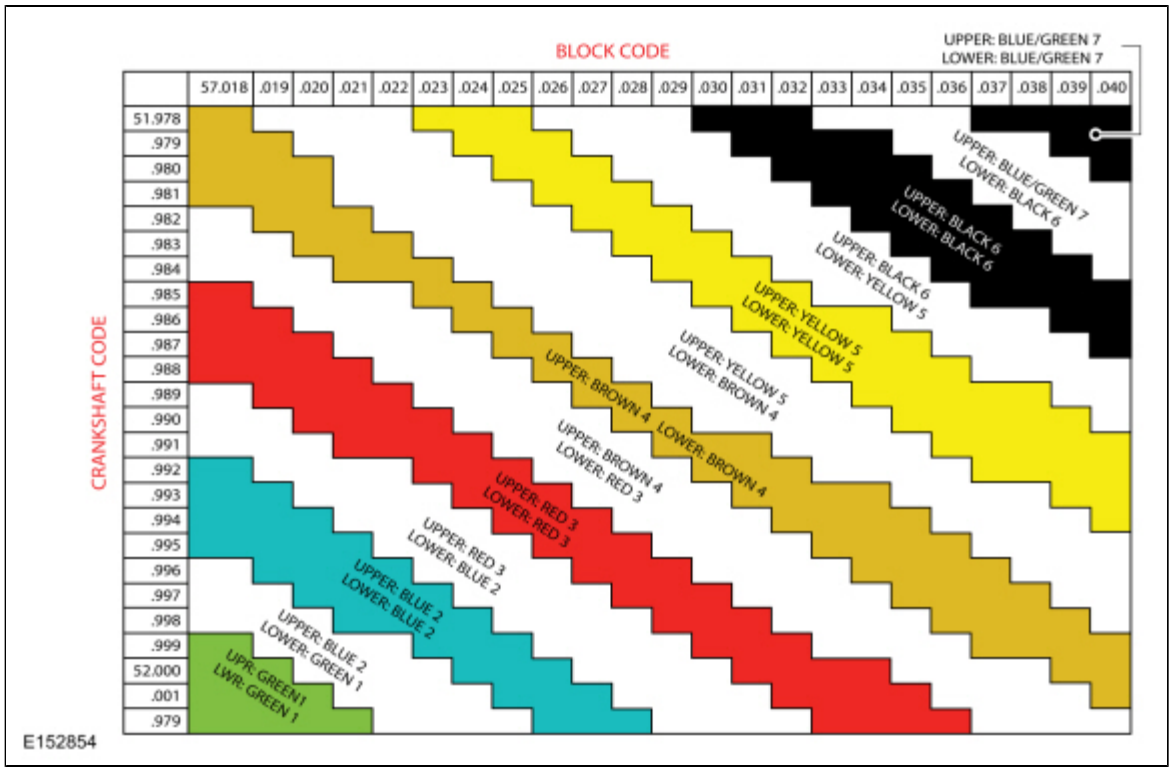

7. Using the original connecting rod cap bolts, install the connecting caps and bolts and tighten the bolts in 2 stages:
   Torque :
   Stage 1: 29 Nm
   Stage 2: Tighten an additional 90°

8.
   - Measure the connecting rod large end bore in 2 directions. Record the smallest measurement for each connecting rod.
   - Remove the bolts and the connecting rod cap.
   - Discard the connecting rod cap bolts.

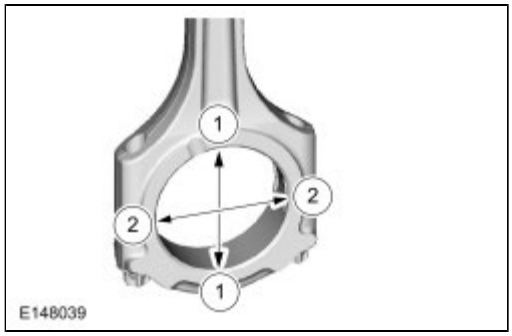

9. Measure each of the crankshaft connecting rod bearing journal diameters in at least 2 directions. Record the smallest measurement for each connecting rod journal.

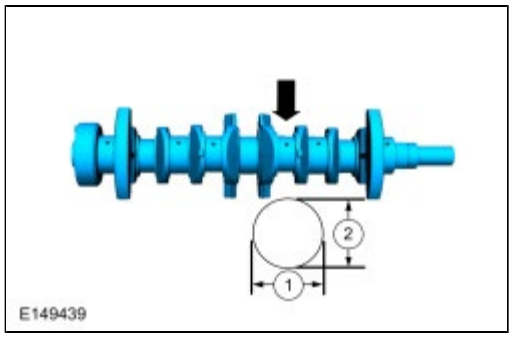

10. Using the chart, select the correct connecting rod bearings for each crankshaft connecting rod journal.

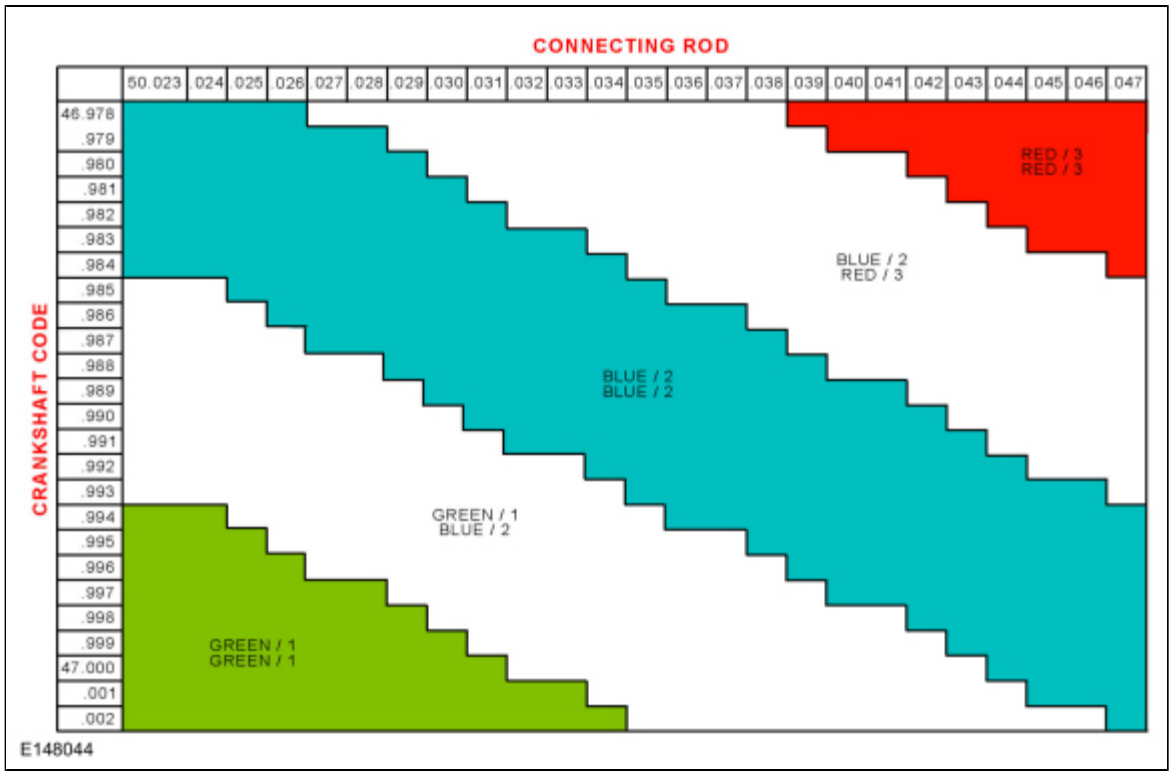

11. **NOTE:** *Discard the main bearing beam bolts.*

    Remove the 10 bolts in the sequence shown and the main bearing beam.

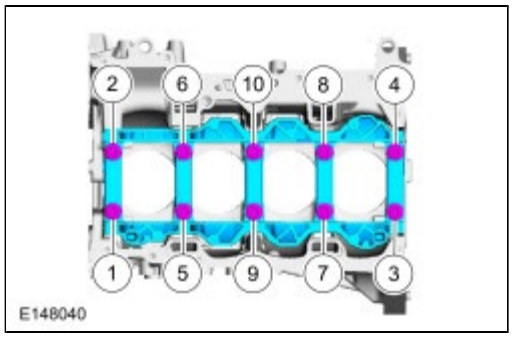

12. **NOTE:** *Before assembling the cylinder block, all sealing surfaces must be free of chips, dirt, paint and foreign material. Also, make sure the coolant and oil passages are clear.*

    NOTE: *If reusing the crankshaft main bearings, install them in their original positions and orientation as noted during disassembly.*

    NOTE: *The center bulkhead is the thrust bearing.*

    Material : Motorcraft® SAE 5W-20 Premium Synthetic Blend Motor Oil / XO-5W20-QSP (WSS-M2C945-A)

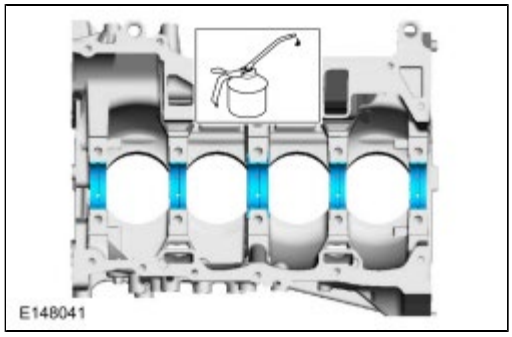

13. **NOTE:** *If reusing the crankshaft main bearings, install them in their original positions and orientation as noted during disassembly.*

    Material : Motorcraft® SAE 5W-20 Premium Synthetic Blend Motor Oil / XO-5W20-QSP (WSS-M2C945-A)

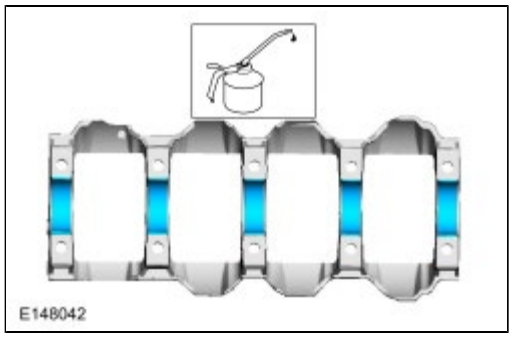

14. *Material* : Motorcraft® SAE 5W-20 Premium Synthetic Blend Motor Oil / XO-5W20-QSP (WSS-M2C945-A)

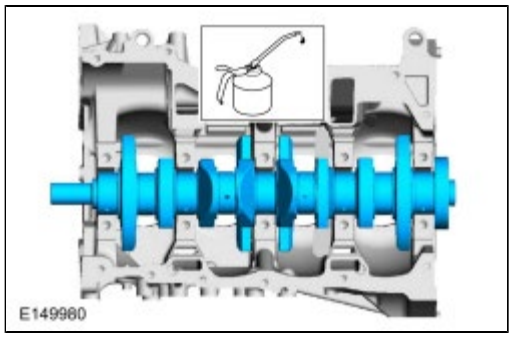

15. *Material* : Motorcraft® SAE 5W-20 Premium Synthetic Blend Motor Oil / XO-5W20-QSP (WSS-M2C945-A)

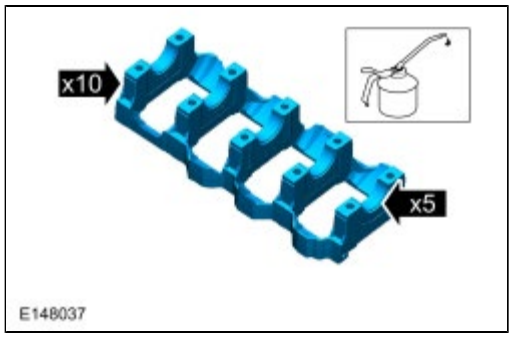

16. Position the main bearing beam in the engine block with the main bearing beam mounted flush with the rear face of the engine block.

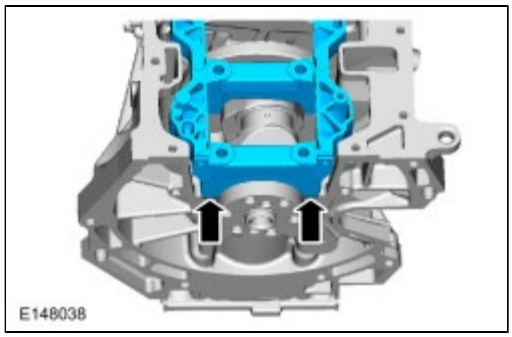

17. **NOTE:** *Lubricate the main bearing beam bolt threads and under the bolt heads with clean engine oil.*

    NOTE: *Position the crankshaft to the rear of the cylinder block, then position the crankshaft to the front of the cylinder block before tightening the main bearing beam bolts.*

    Material : Motorcraft® SAE 5W-20 Premium Synthetic Blend Motor Oil / XO-5W20-QSP (WSS-M2C945-A)
    Torque :
    Stage 1: 5 Nm
    Stage 2: 25 Nm
    Stage 3: Tighten an additional 90°

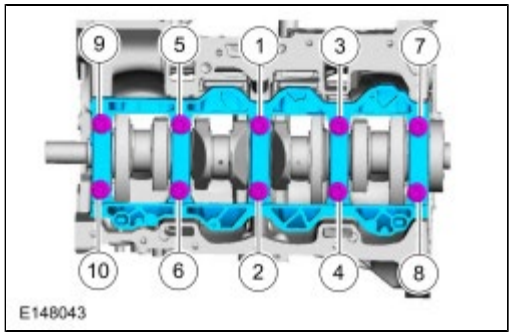

18.
    - Measure crankshaft end play.
      Special Tool(s) : 100-002 (TOOL-4201-C) Holding Fixture with Dial Indicator Gauge
    - Position the crankshaft to the rear of the cylinder block.
    - Zero the Dial Indicator Gauge with Holding Fixture.
    - Move the crankshaft to the front of the cylinder block.
    - Note and record the crankshaft end play.
    - Acceptable crankshaft end play is 0.2-0.43 mm (0.008-0.017 in). If the crankshaft end play exceeds the specified range, install new parts as necessary.

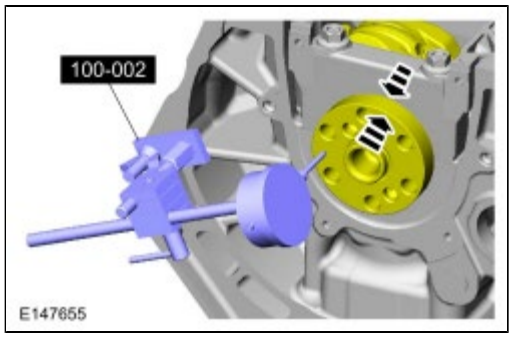

19. Piston to be assembled with the arrow pointing to the front of the engine.

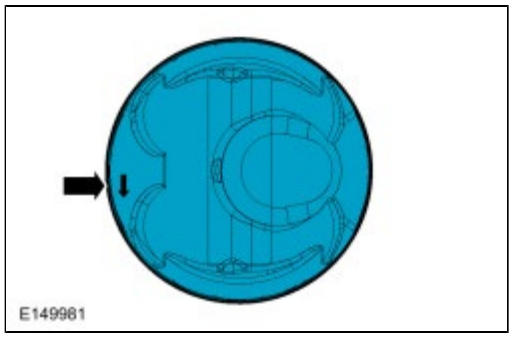

20. Connecting rod to be assembled with the front marks pointing to the front of the engine.

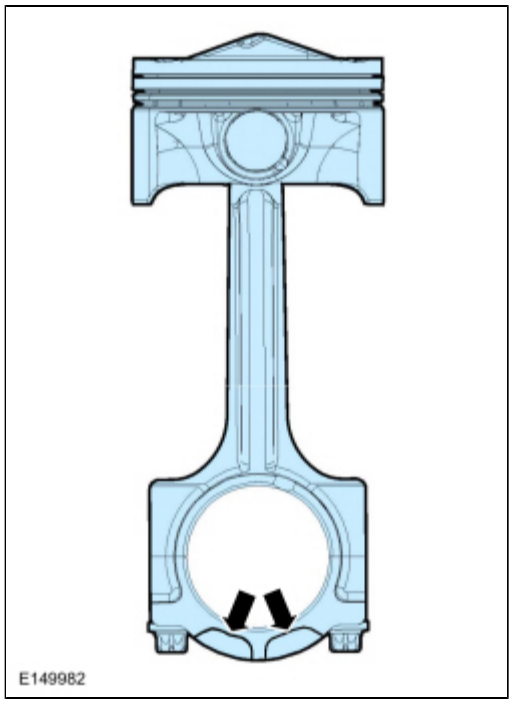

21. **NOTICE: Be sure not to scratch the cylinder wall or crankshaft journal with the connecting rod. Push the piston down until the connecting rod bearing seats on the crankshaft journal.**

    NOTE: *Lubricate the pistons, piston rings, connecting rod bearings and the entire cylinder bores with clean engine oil*

    NOTE: *Make sure the piston arrow on top is facing toward the front of the engine.*

    NOTE: *When installing the pistons and connecting rod assemblies, the oil ring gaps must be positioned 60 degrees apart from each other and a minimum of 90 degrees from the expander gap. The position of the upper and lower compression ring gaps are not controlled for installation.*

    Install the piston and connecting rod assemblies.
    Special Tool(s) : 303-D032 (D81L-6002-C) Compressor, Piston Ring , 303-462 Installer, Connecting Rod
    Material : Motorcraft® SAE 5W-20 Premium Synthetic Blend Motor Oil / XO-5W20-QSP (WSS-M2C945-A)

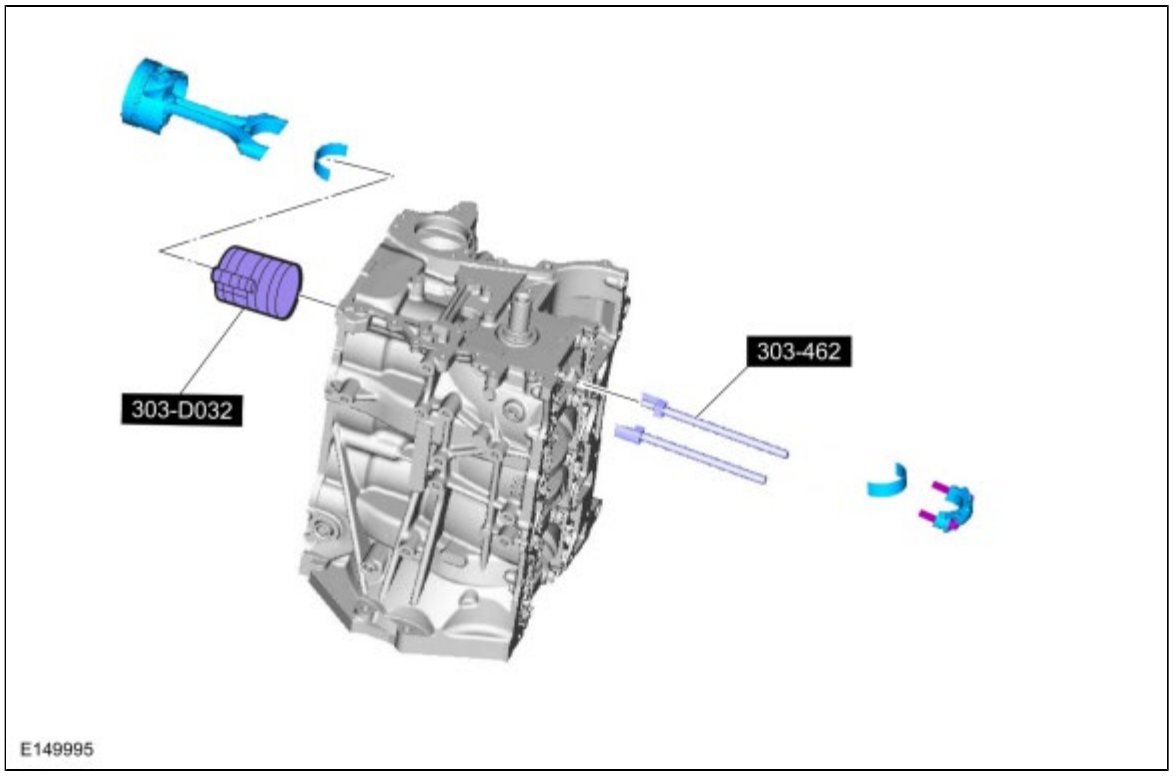

22. **NOTICE: The rod cap installation must keep the same orientation as marked during disassembly or engine damage may occur.**

    NOTE: *Install connecting rod caps and bolts on the connecting rods for cylinders 1 and 4 first and tighten. Then rotate crankshaft 180 degrees and install connecting rod caps and bolts on connecting rods for cylinders 2 and 3 and tighten.*

    NOTE: *After installation of each connecting rod cap, rotate the crankshaft to verify smooth operation.*

    Install the connecting rod caps and the new bolts and tighten the bolts in 2 stages:
    Torque :
    Stage 1: 29 Nm
    Stage 2: Tighten an additional 90°

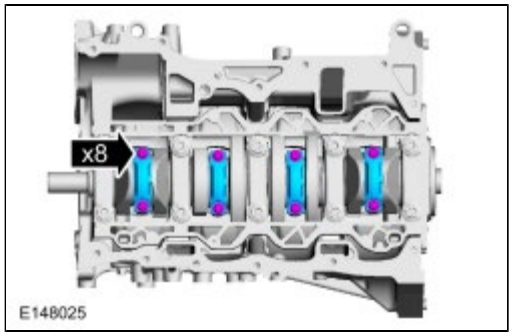

23. Install the special tool and rotate the crankshaft slowly clockwise until the crankshaft balance weight is up against the special tool. The engine is now at TDC .
    Special Tool(s) : 303-507 Timing Peg, Crankshaft TDC

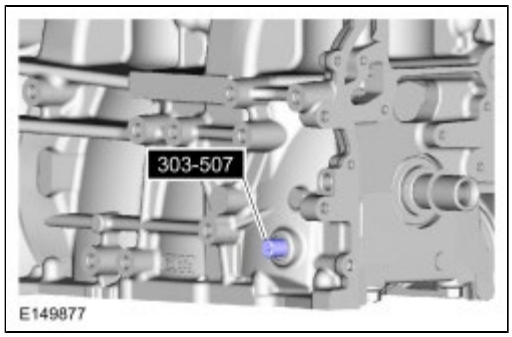

24. **NOTE:** *Clean the oil pump and cylinder block mating surfaces with Motorcraft Metal Surface Prep.*

    Material : Motorcraft® Metal Surface Prep / ZC-31-A
    Torque :
    Stage 1: 10 Nm
    Stage 2: 20 Nm

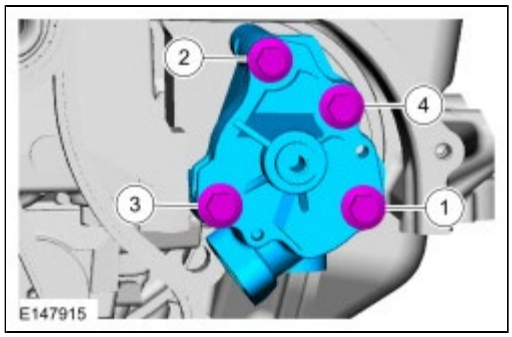

25. *Torque* : 25 Nm

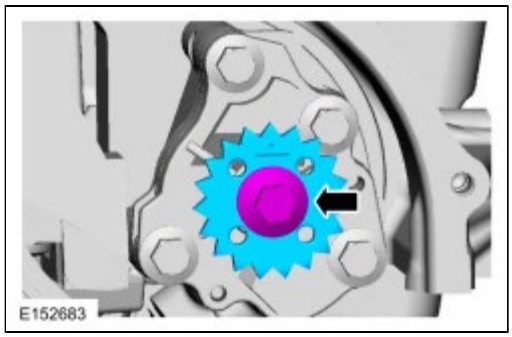

26. **NOTICE: Before installation, clean and inspect the diamond washer for any damage. If damage is evident, replace the diamond washer. If no damage, the diamond washer is to be reused. If the diamond washer is not installed, engine damage may occur.**

    Install the diamond washer.

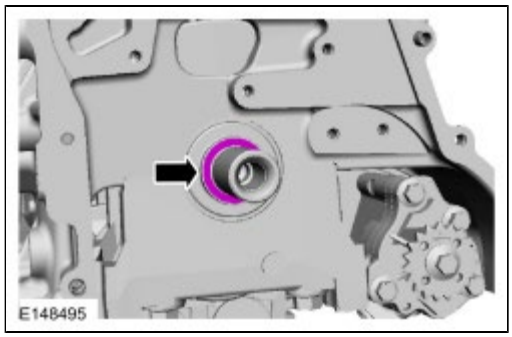

27.

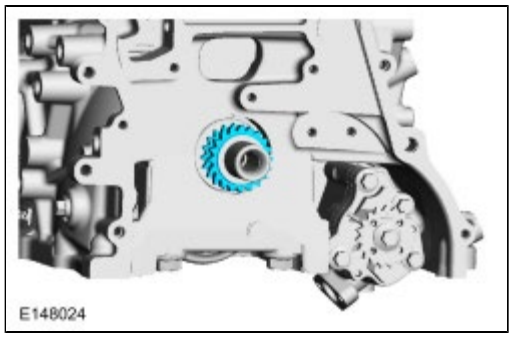

28.

1. Install the chain on the oil pump sprocket and install the tensioner and the 2 shoulder bolts.
   Torque : 10 Nm
2. Push the tensioner spring down and position the spring under the shoulder bolt.

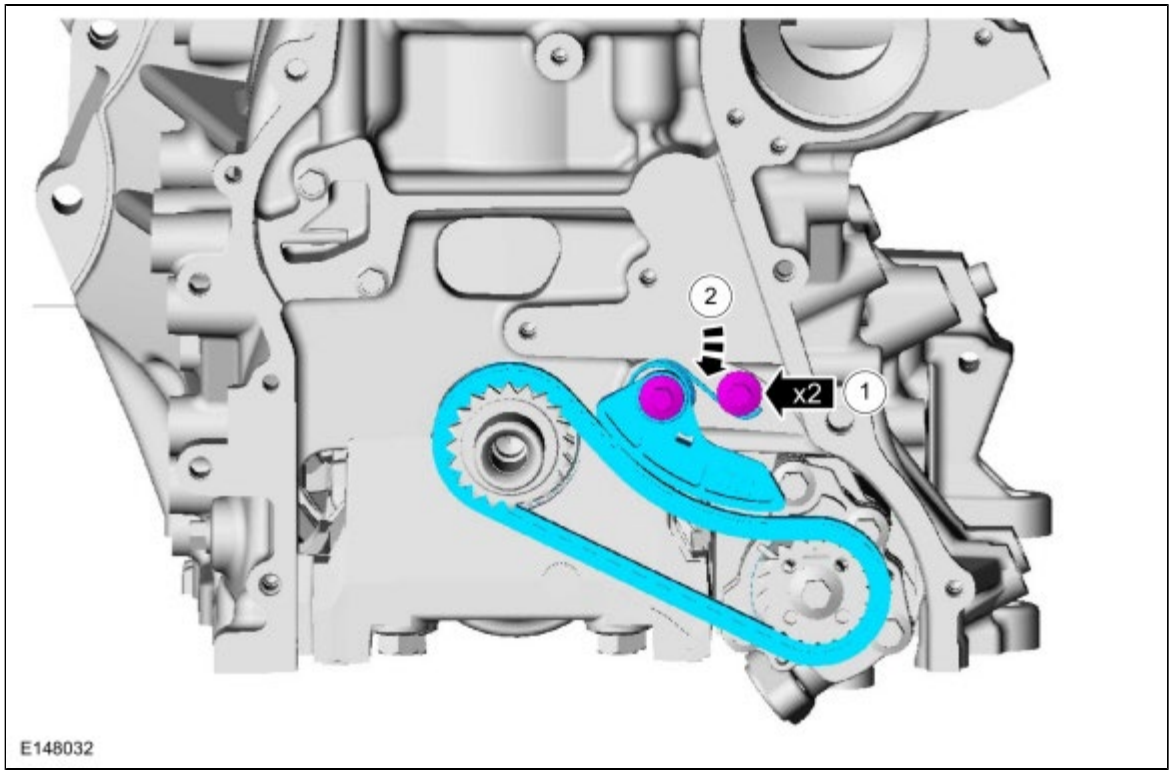

29. Position the crankshaft rear oil seal with retainer plate onto the crankshaft.
    Special Tool(s) : 303-328 (T88P-6701-B1) Replacer, Rear Seal
    Torque : 10 Nm

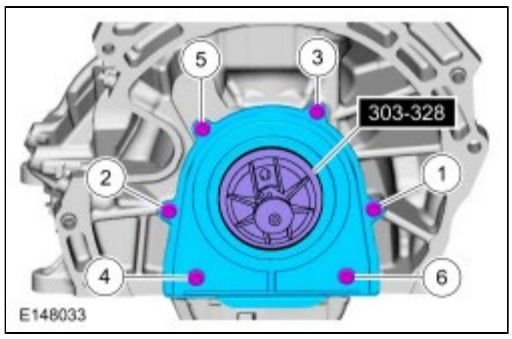

30. **NOTE:** *Install a new gasket.*

    Torque : 10 Nm

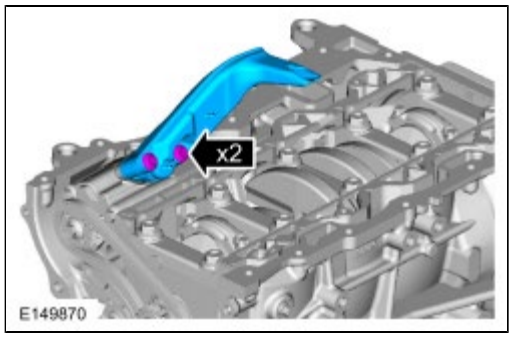

31. **NOTE:** *If the oil pan is not secured within 10 minutes of sealant application, the sealant must be removed and the sealing area cleaned with metal surface prep. Allow to dry until there is no sign of wetness, or 10 minutes, whichever is longer. Failure to follow this procedure can cause future oil leakage.*

    Material : Silicone Gasket and Sealant / TA-30 (WSE-M4G323-A4)

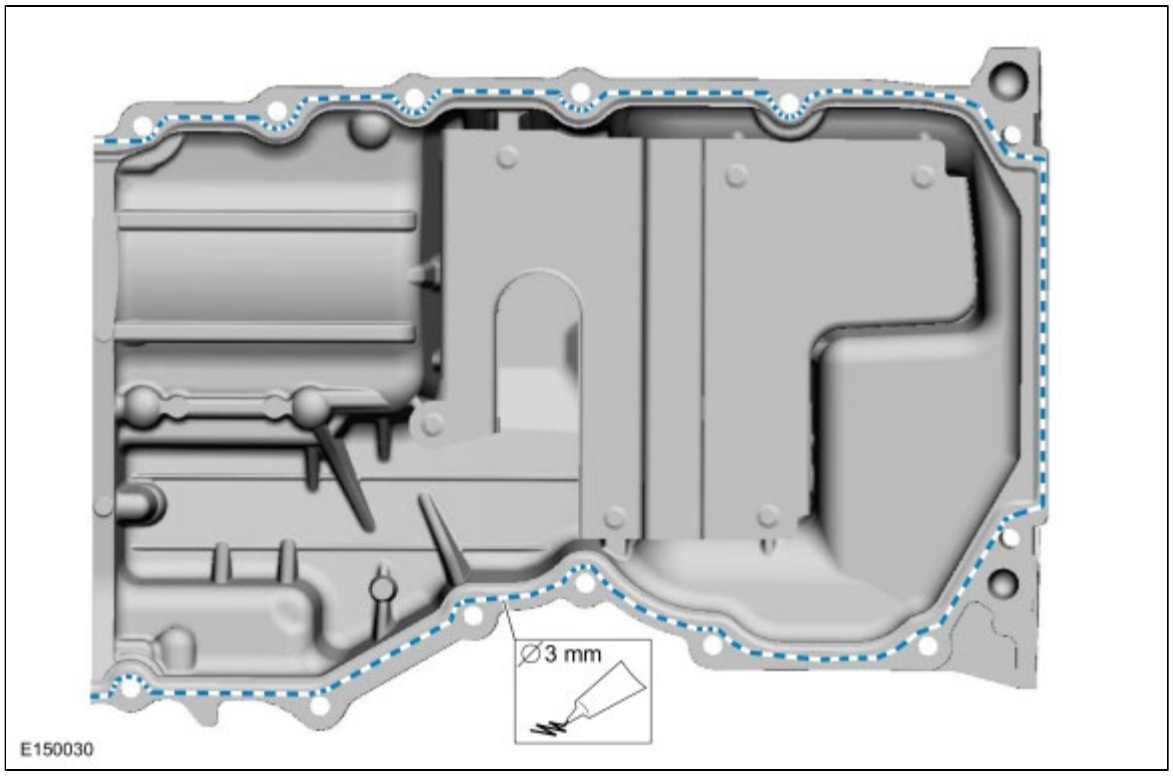

32. Finger-tight.

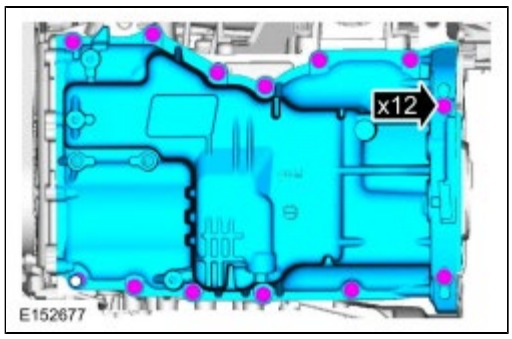

33. Align the front surface of the oil pan flush with the front surface of the engine block.
    General Equipment : Round-Ended Steel Rule

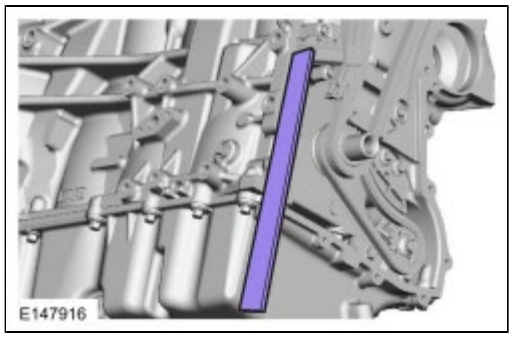

34. *Torque* : 20 Nm

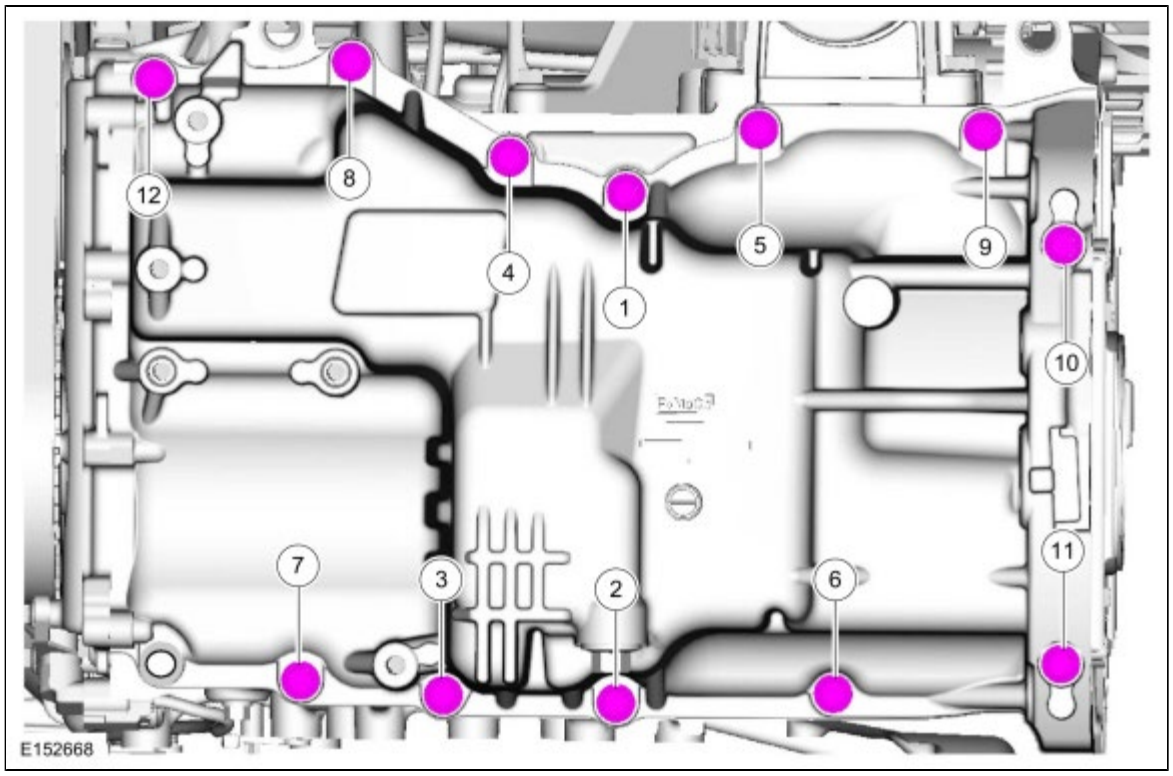

35.

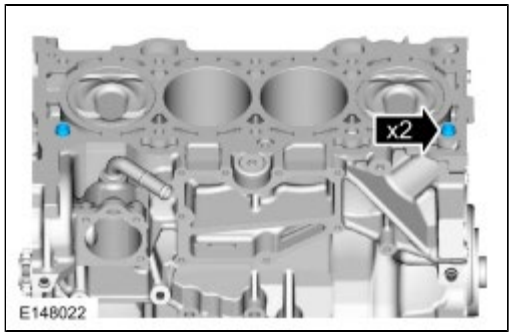

36.

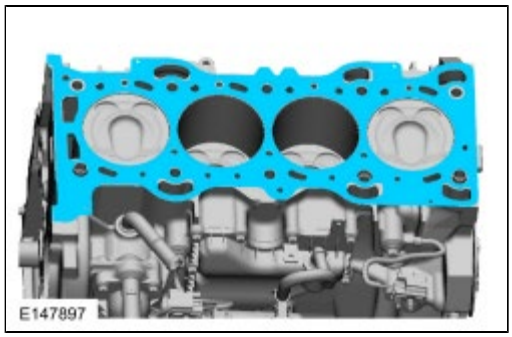

37. **NOTE:** *The cylinder head bolts are torque-to-yield and must not be reused. New cylinder head bolts must be installed.*

    Torque :
    Stage 1: 7 Nm
    Stage 2: 15 Nm
    Stage 3: 45 Nm
    Stage 4: 90°
    Stage 5: Tighten an additional 90°

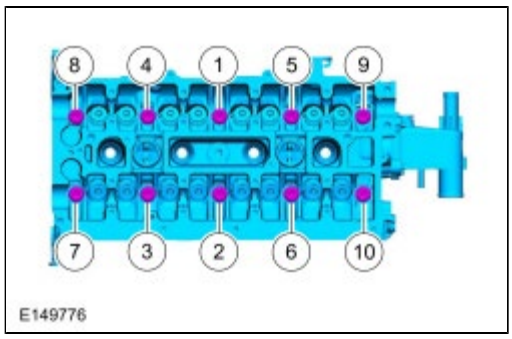

38. **NOTE:** *Install the 16 valve tappets in their original positions.*

    Material : Motorcraft® SAE 5W-20 Premium Synthetic Blend Motor Oil / XO-5W20-QSP (WSS-M2C945-A)

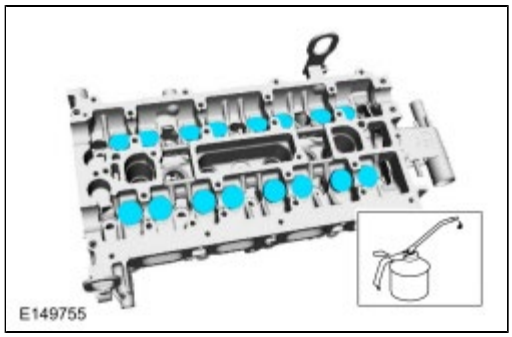

39. **NOTE:** *The exhaust camshaft rear bearing cap must be secured within 10 minutes of Gasket Maker application. If the exhaust camshaft rear bearing cap is not secured within 10 minutes, the sealant must be removed and the sealing area cleaned with Motorcraft Metal Surface Prep.*

    NOTE: *Do not allow Gasket Maker to enter the camshaft bearing journal. If Gasket Maker is applied to the camshaft bearing journal, the journal and sealing area must be cleaned with Motorcraft Metal Surface Prep.*

    Material : Flange Sealant / CU7Z-19B508-A (WSS-M2G348-A11)

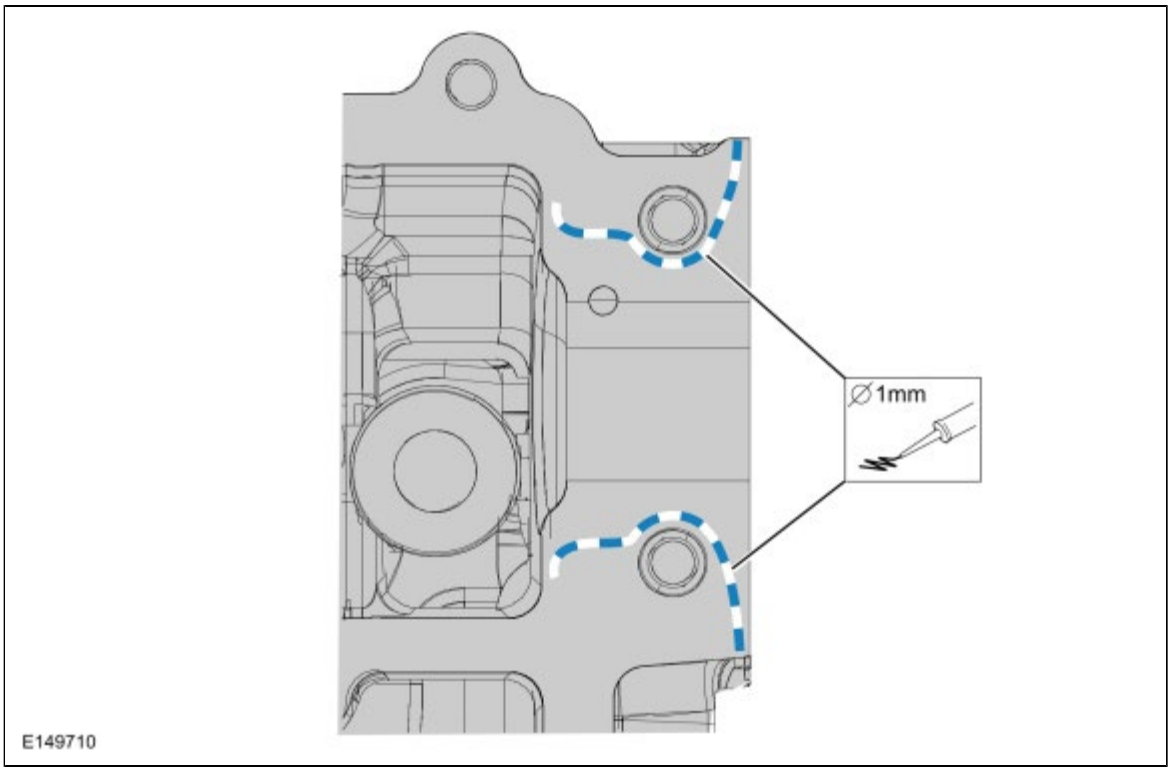

40. **NOTICE: Install the camshafts with the alignment slots in the camshafts lined up so the special tool can be installed without rotating the camshafts. Make sure the lobes on the No. 1 cylinder are in the same position as noted in the removal procedure. Rotating the camshafts when the timing chain is removed, or installing the camshafts 180 degrees out of position can cause severe damage to the valves and pistons.**

    NOTICE: Failure to follow the camshaft bearing cap tightening procedure can result in damage to the camshafts.

    NOTE: *Lubricate the cylinder head and camshaft journals with clean engine oil and position the camshafts onto the cylinder head in their original location and orientation.*

    NOTE: *Lubricate the bearing cap journals with clean engine oil prior to installation.*

    Install the camshaft bearing caps in their original location and orientation and tighten the camshaft bearing cap bolts in pairs in the sequence shown in 2 stages:
    Material : Motorcraft® SAE 5W-20 Premium Synthetic Blend Motor Oil / XO-5W20-QSP (WSS-M2C945-A)
    Torque :
    Stage 1: 7 Nm
    Stage 2: 16 Nm

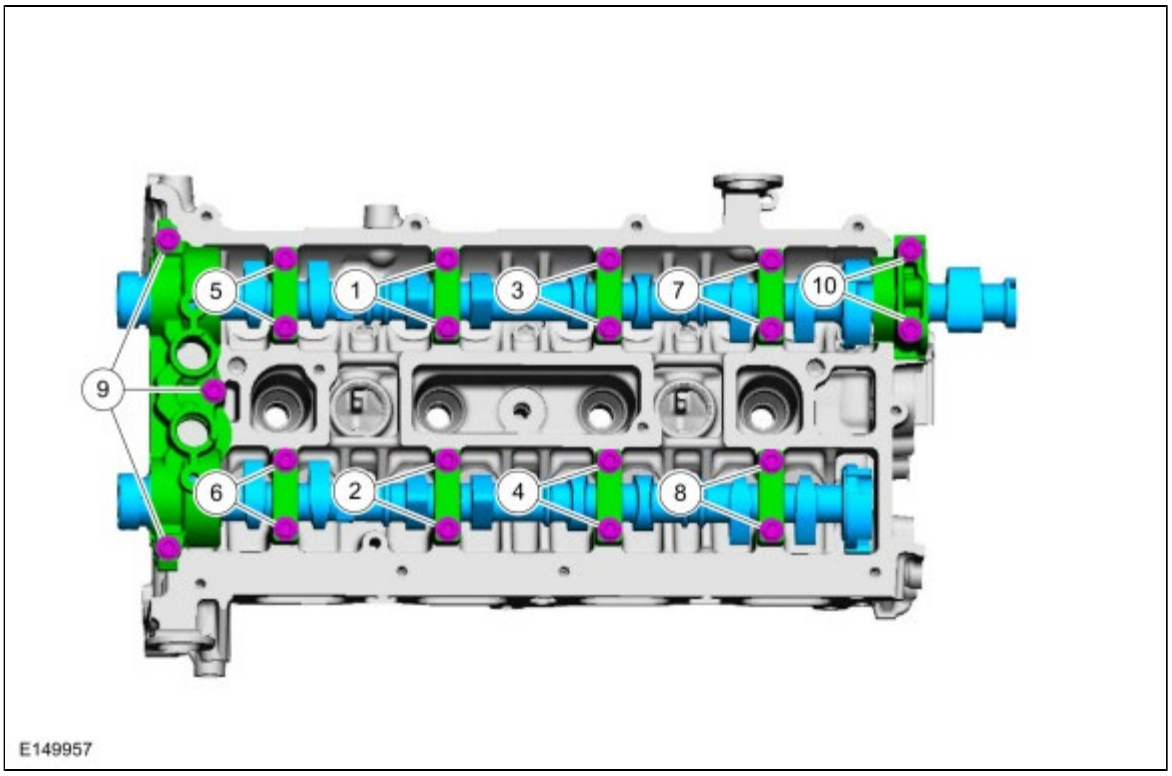

41. If camshafts were replaced, check that the camshaft end play is within specification.

42. If camshafts were replaced, check the valve clearance.
Refer to: Valve Clearance Check (303-01A Engine - 2.0L Duratec-HE (125kW/170PS) - MI4, General Procedures).

43. **NOTICE: The special tool is for camshaft alignment only. Using this tool to prevent engine rotation can result in engine damage.**

Install Special Service Tool : 303-1565 Alignment Tool, Camshaft

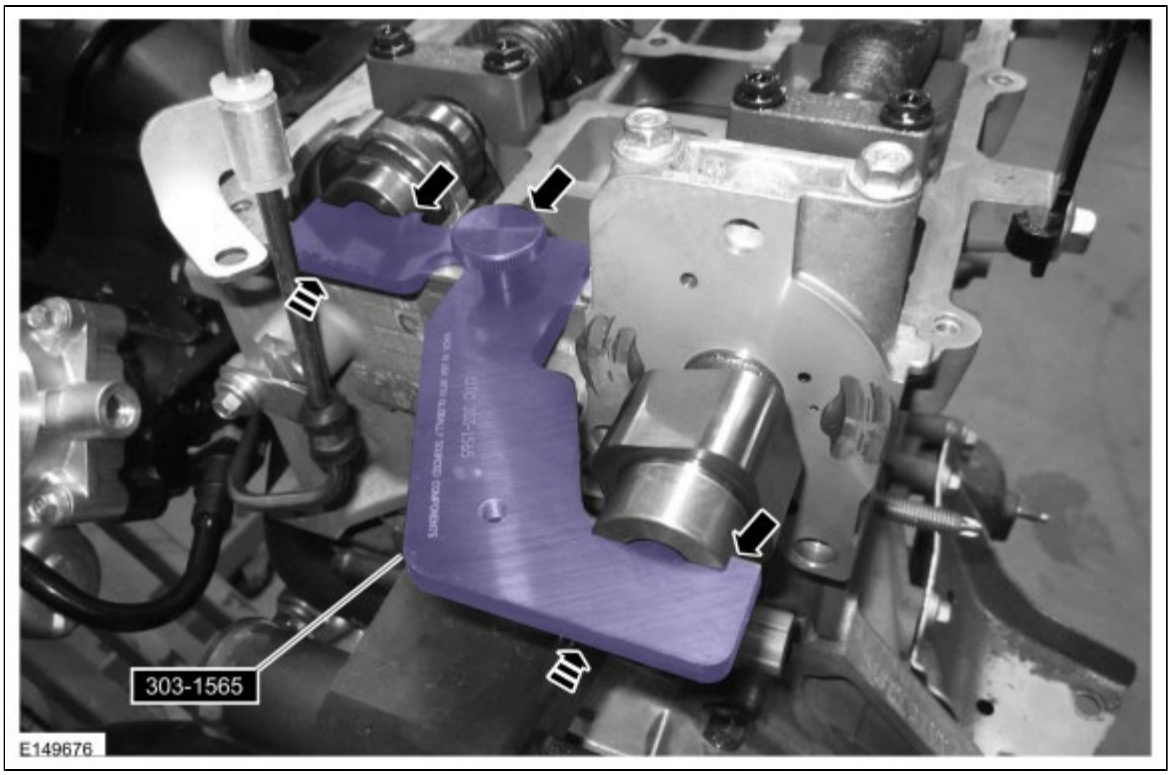

44. **NOTE:** *Lubricate the VCT oil control solenoids with clean engine oil.*

Material : Motorcraft® SAE 5W-20 Premium Synthetic Blend Motor Oil / XO-5W20-QSP (WSS-M2C945-A)
Torque : 10 Nm

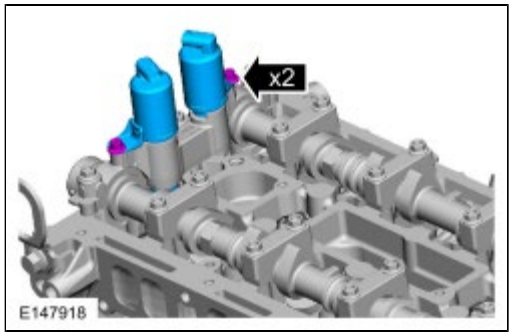

45. **NOTE:** *The VCT unit bolts are final torqued in the timing drive installation.*

    Finger tight.

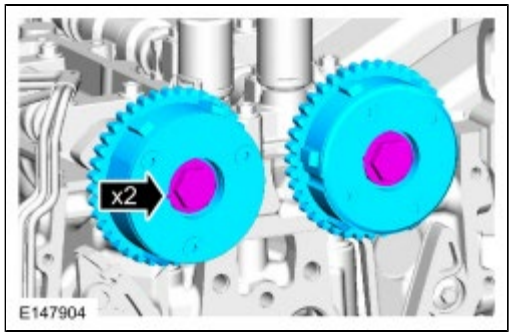

46.

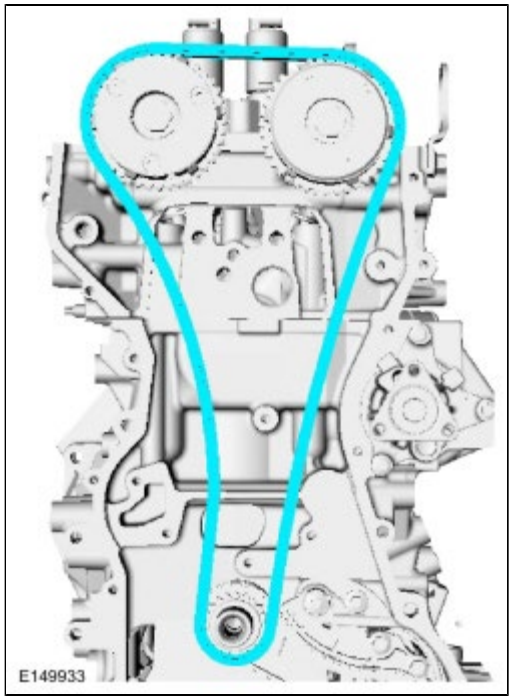

47. *Torque* : 10 Nm

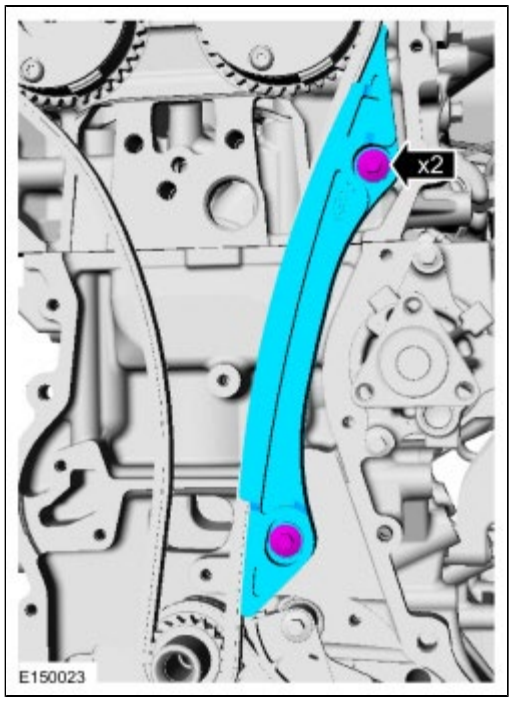

48.

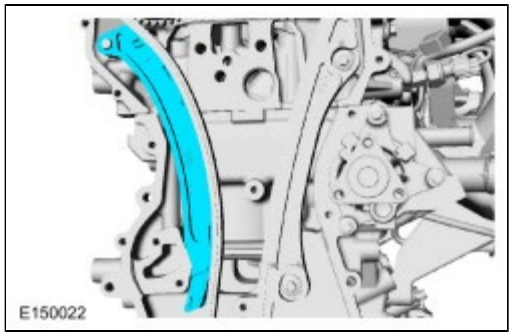

NOTE: *If the timing chain tensioner plunger and ratchet assembly are not pinned in the compressed position, follow the next 4 steps.*

49. **NOTICE: Do not compress the ratchet assembly. This will damage the ratchet assembly.**

    Using the edge of a vise, compress the timing chain tensioner plunger.

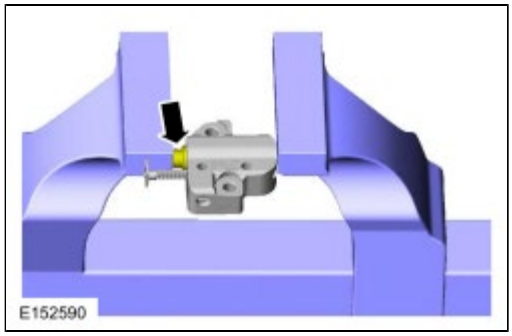

50. Using a small pick, push back and hold the ratchet mechanism.

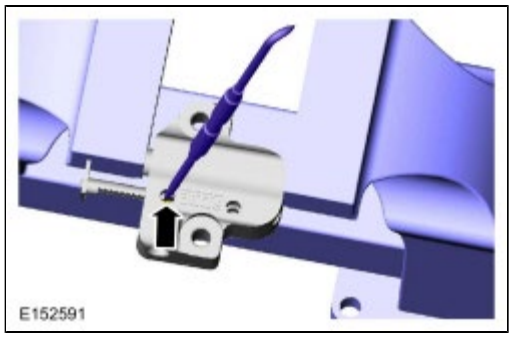

51. While holding the ratchet mechanism, push the ratchet arm back into the tensioner housing.

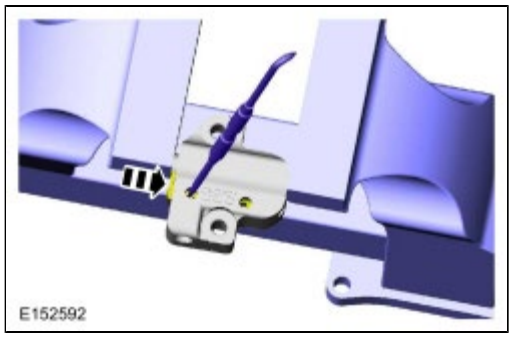

52. Install a holding pin into the hole in the tensioner housing to hold the ratchet assembly and the plunger in during installation.

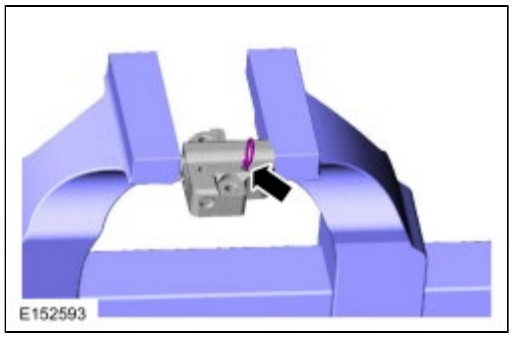

53. Install the timing chain tensioner and the 2 bolts, then remove the holding pin to release the piston.
    Torque : 10 Nm

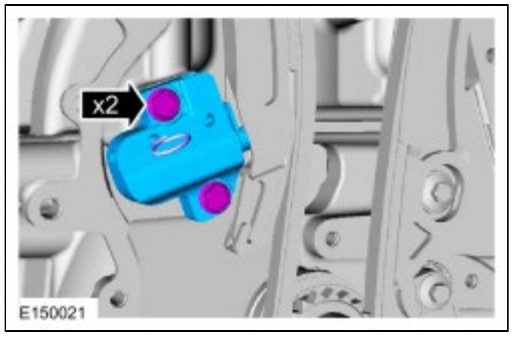

54. **NOTICE: The Camshaft Alignment Tool is for camshaft alignment only. Using this tool to prevent engine rotation can result in engine damage.**

    NOTE: *Using the flats on the camshafts to prevent camshaft rotation.*

    Torque :
    Stage 1: 50 Nm
    Stage 2: Tighten an additional 90°

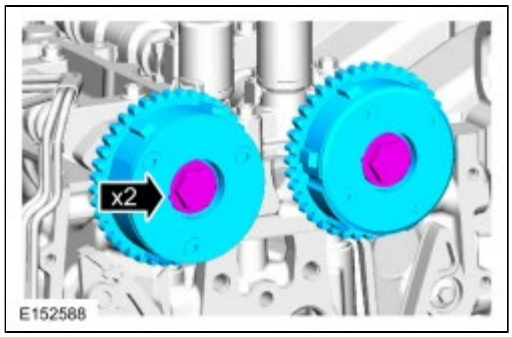

55. **NOTICE: Do not use metal scrapers, wire brushes, power abrasive disks or other abrasive means to clean sealing surfaces. These tools cause scratches and gouges which make leak paths.**

    Clean and inspect the mounting surfaces of the engine and the front cover.
    Material : Motorcraft® Silicone Gasket Remover / ZC-30

56. **NOTE:** *The engine front cover must be secured within 10 minutes of Silicone Gasket and Sealant application. If the engine front cover is not secured within 10 minutes, the sealant must be removed and the sealing area cleaned with Motorcraft Metal Surface Prep.*

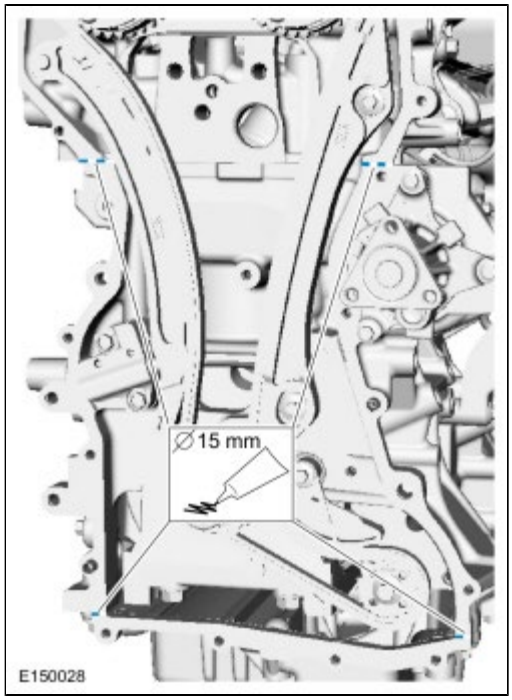

57. **NOTE:** *The engine front cover must be secured within 10 minutes of Silicone Gasket and Sealant application. If the engine front cover is not secured within 10 minutes, the sealant must be removed and the sealing area cleaned with Motorcraft Metal Surface Prep.*

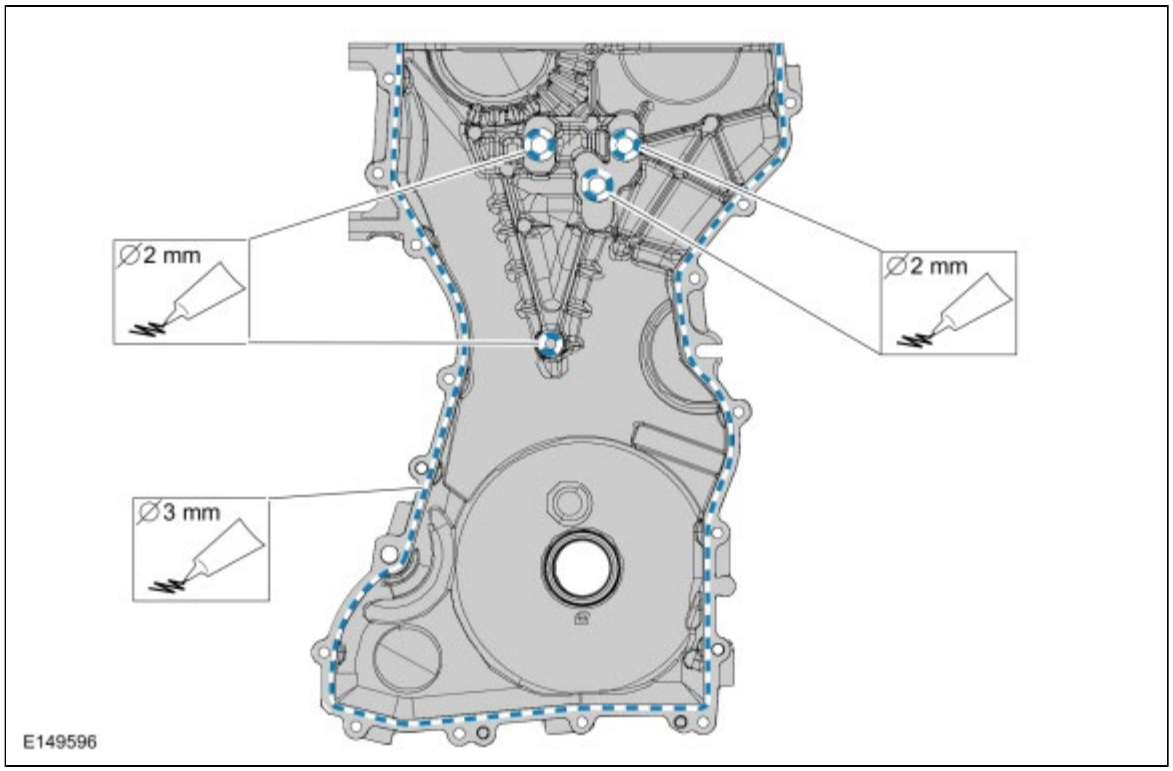

58. Install engine front cover.
    Torque :
    Stage 1: Tighten bolts 1 through 17 to 10 Nm
    Stage 2: Tighten bolts 19 through 21 to 48 Nm
    Stage 3: Tighten bolt 22 to 25 Nm
    Stage 4: Tighten bolt 18 to 48 Nm

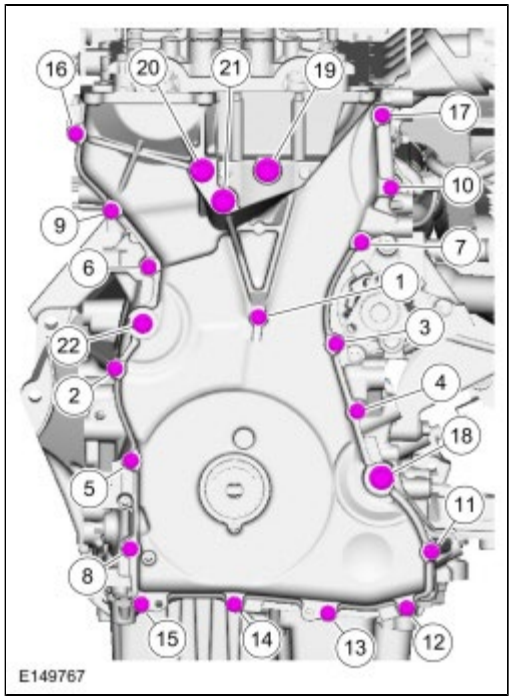

59. **NOTE:** *Remove the through-bolt from the special tool .*

    Special Tool(s) : 303-096 (T74P-6150-A) Installer, Camshaft Front Oil Seal
    Material : Motorcraft® SAE 5W-20 Premium Synthetic Blend Motor Oil / XO-5W20-QSP (WSS-M2C945-A)

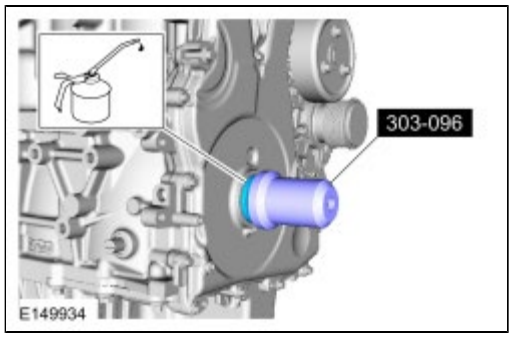

60. **NOTICE: Before installation, clean and inspect the diamond washer for any damage. If damage is evident, replace the diamond washer. If no damage, the diamond washer is to be reused. If the diamond washer is not installed, engine damage may occur.**

    Install the diamond washer.

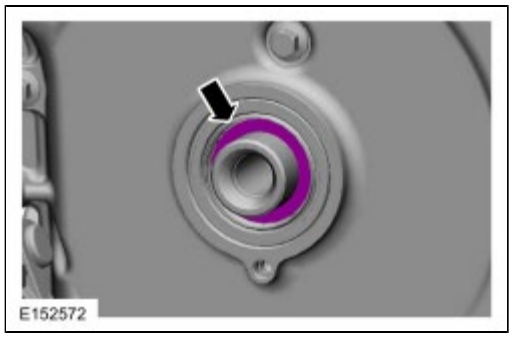

61. **NOTE:** *Do not install the crankshaft pulley bolt at this time.*

    NOTE: *Apply clean engine oil on the seal area before installing.*

    Position the crankshaft pulley onto the crankshaft with the crankshaft pulley TDC guide hole at the 6 o'clock position.
    Material : Motorcraft® SAE 5W-20 Premium Synthetic Blend Motor Oil / XO-5W20-QSP (WSS-M2C945-A)

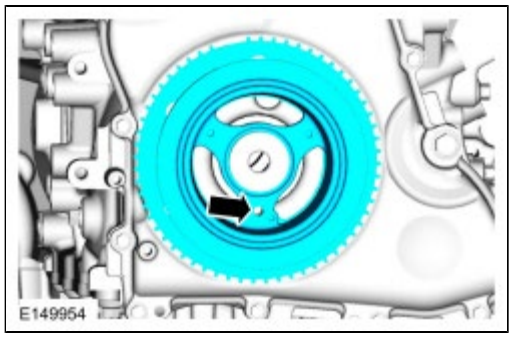

62. **NOTE:** *This step will correctly align the crankshaft pulley to the crankshaft.*

    Install a standard bolt through the crankshaft pulley TDC guide hole and into the engine front cover.

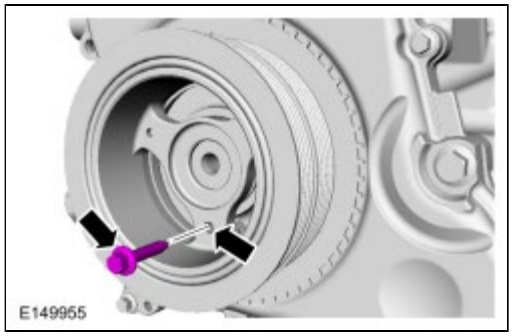

63. **NOTICE: The crankshaft must remain in the TDC position during installation of the pulley bolt or damage to the engine can occur. Therefore, the crankshaft pulley must be held in place with the special tool and a new bolt should be installed using hand tools only.**

NOTE: *Do not reuse the crankshaft pulley bolt. Install a new crankshaft pulley bolt*

Special Tool(s) : 303-D055 (D85L-6000-A) Strap Wrench
Torque :
Stage 1: 100 Nm
Stage 2: Tighten an additional 90°

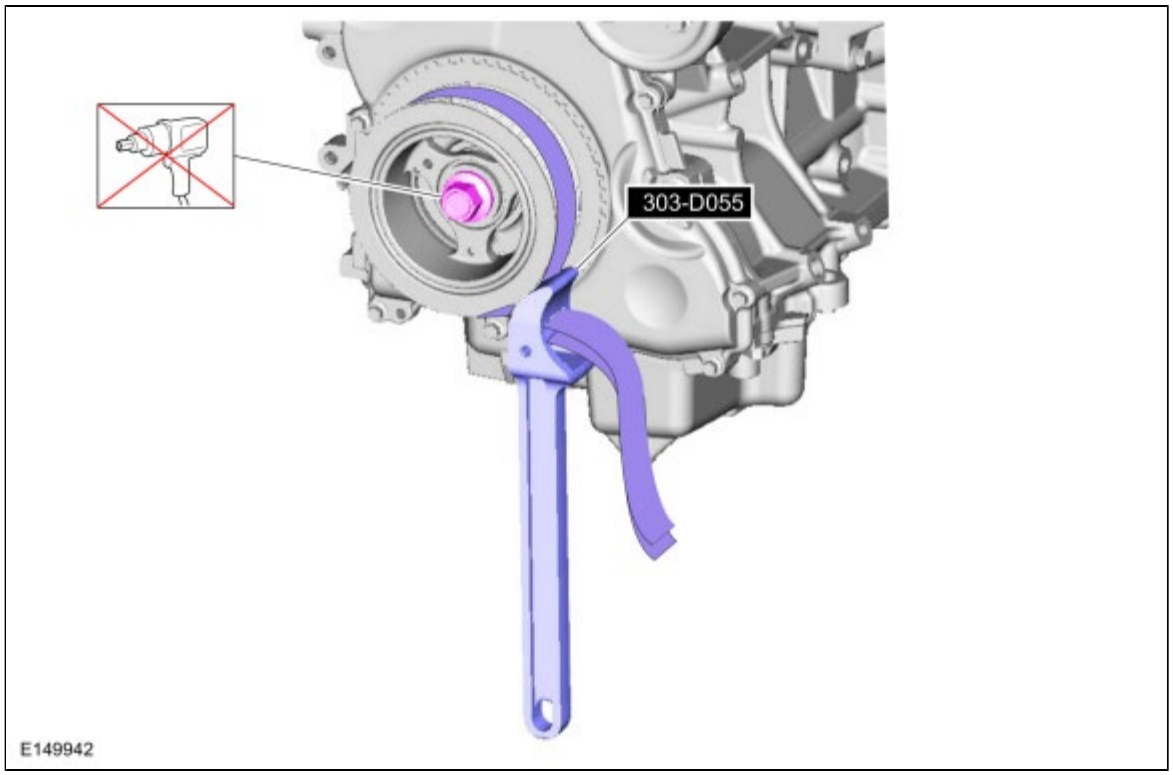

64.

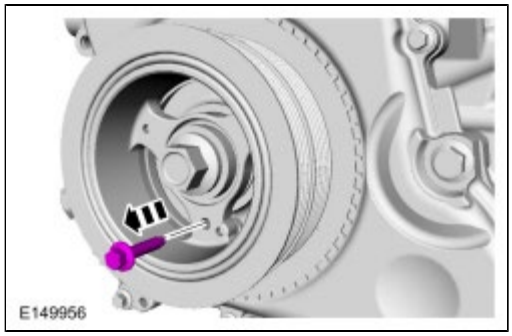

65. Finger tight.

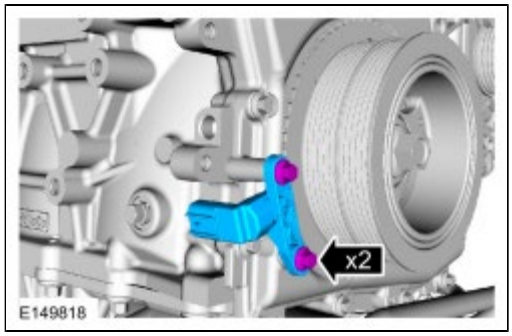

66. Install the special tool to set the CKP sensor position and tighten the 2 bolts.
Special Tool(s) : 303-1521 Alignment Tool, Crankshaft Position Sensor
Torque : 7 Nm

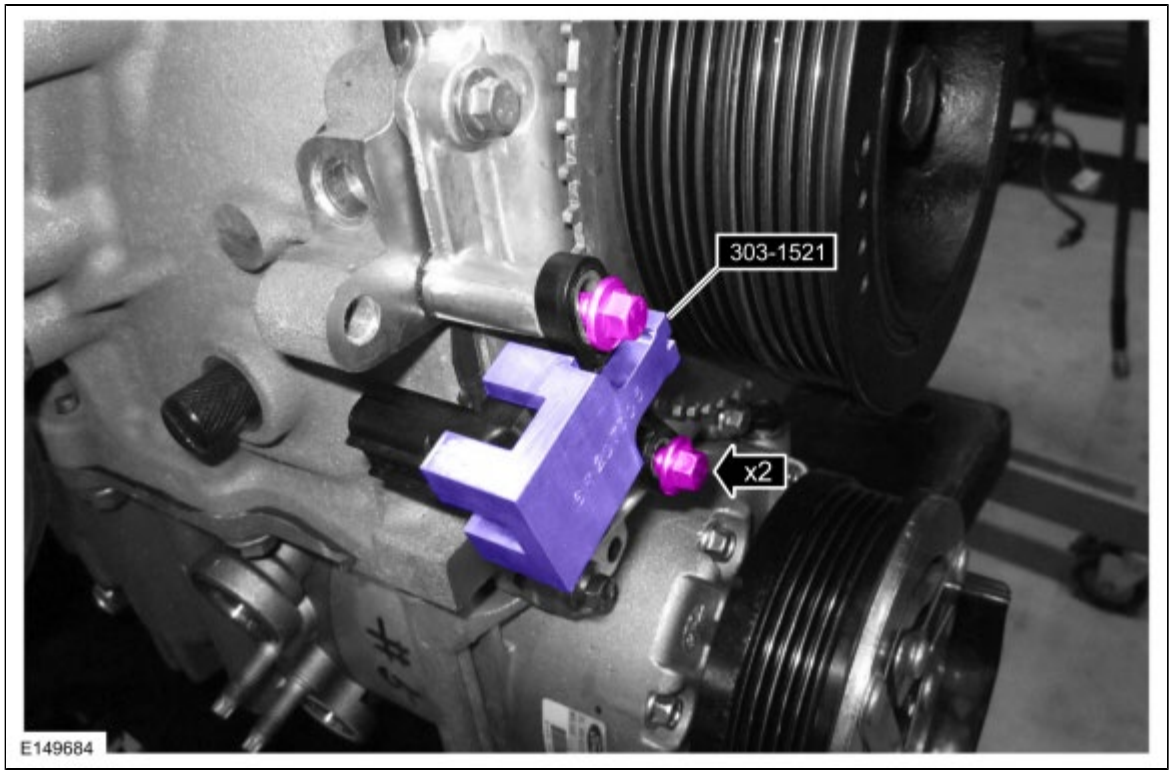

67. **NOTICE: Do not use metal scrapers, wire brushes, power abrasive discs or other abrasive means to clean the sealing surfaces. These tools cause scratches and gouges which make leak paths.**

Clean and inspect the sealing surfaces of the valve cover.

68. **NOTE:** *Installation of new seals is only required if damaged seals were removed during disassembly of the engine.*

Special Tool(s) : 205-153 (T80T-4000-W) Handle , 303-1247/2 Installer, VCT Spark Plug Tube Seal

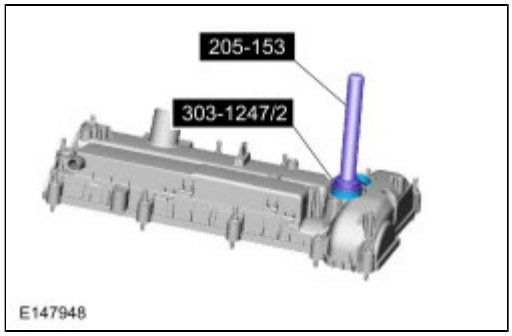

69. **NOTE:** *The valve cover must be secured within 10 minutes of silicone gasket application. If the valve cover is not secured within 10 minutes, the sealant must be removed and the sealing area cleaned with Motorcraft Metal Surface Prep.*

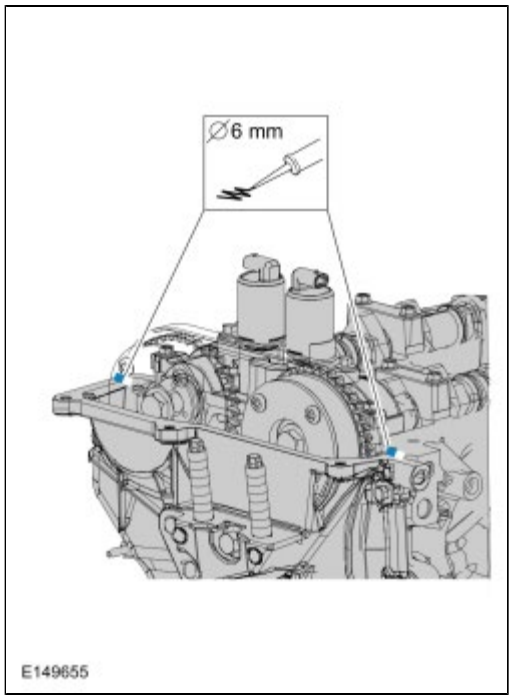

70. **NOTE:** *Install a new valve cover gasket.*

    Torque : 10 Nm

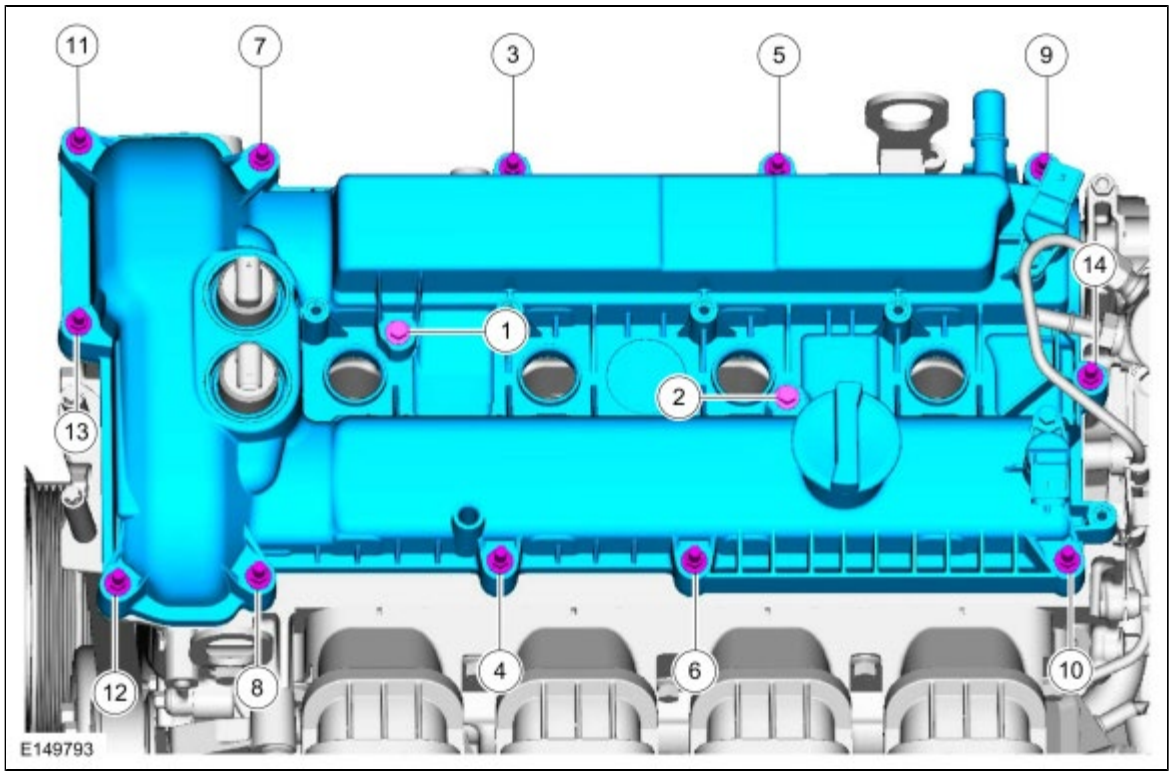

71. If equipped.
    Torque : 3 Nm

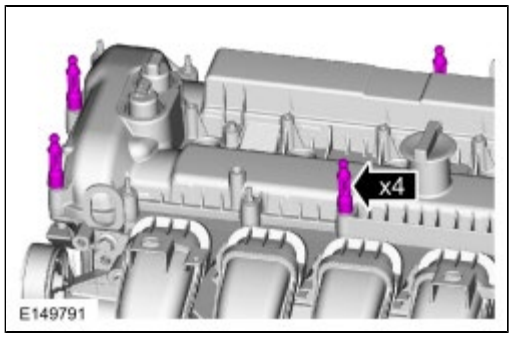

72. **NOTE:** *Inspect the ignition coil boot for rips, nicks or tears. Remove and discard the damaged ignition coil boots.*

73. **NOTE:** *Apply a small amount of silicone brake caliper grease and dielectric compound to the inside of the ignition coil-on-plug boots before installation.*

    Material : Silicone Brake Caliper Grease and Dielectric Compound / XG-3-A (ESE-M1C171-A)
    Torque : 10 Nm

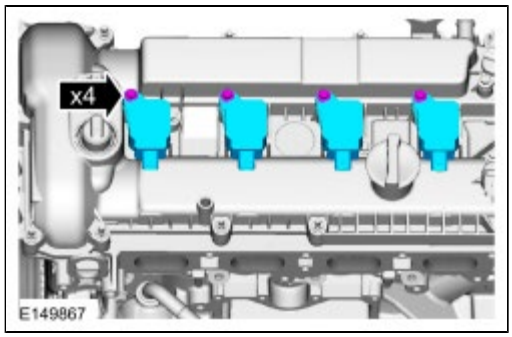

74.

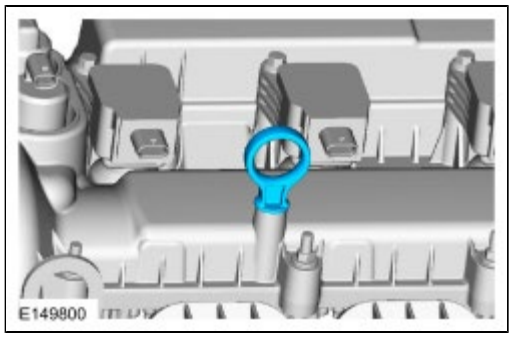

75. *Torque* : 10 Nm

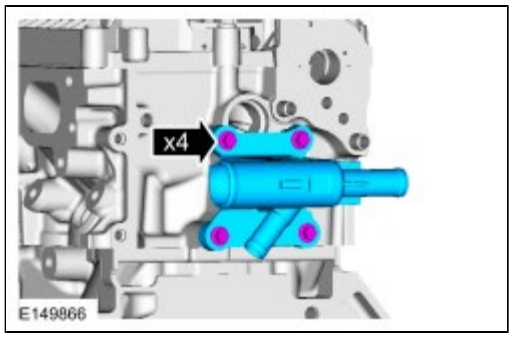

76. *Torque* :
    Stage 1: 8 Nm
    Stage 2: Tighten an additional 60°

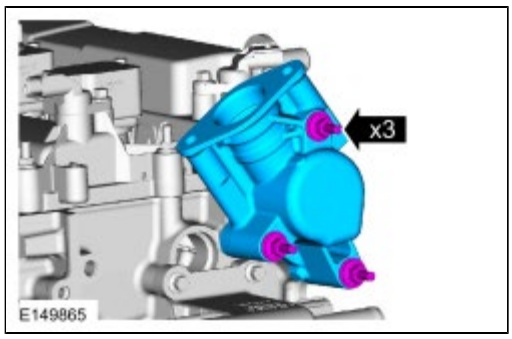

77. *Torque* : 20 Nm

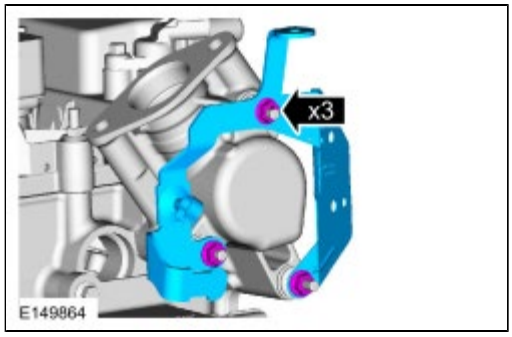

78. **NOTE:** *The cam lobe for the fuel injection pump must be at BDC for the fuel injection pump installation.*

    Material : Motorcraft® SAE 5W-20 Premium Synthetic Blend Motor Oil / XO-5W20-QSP (WSS-M2C945-A)

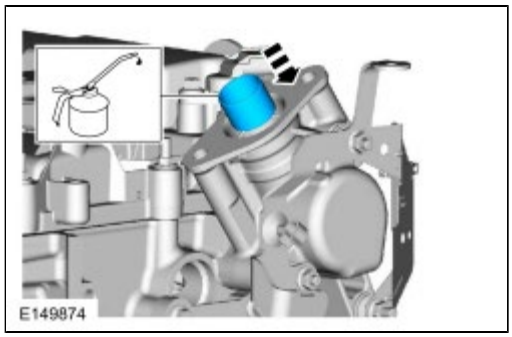

79. *Material* : Motorcraft® SAE 5W-20 Premium Synthetic Blend Motor Oil / XO-5W20-QSP (WSS-M2C945-A)

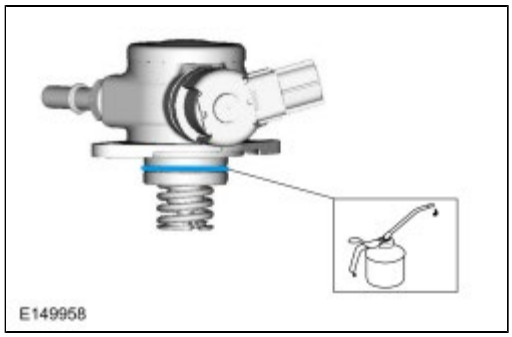

80. **NOTICE: Only rotate the crankshaft clockwise or damage to the engine may occur.**

    Turn the crankshaft clockwise until the fuel injection pump cam lobe is at BDC .

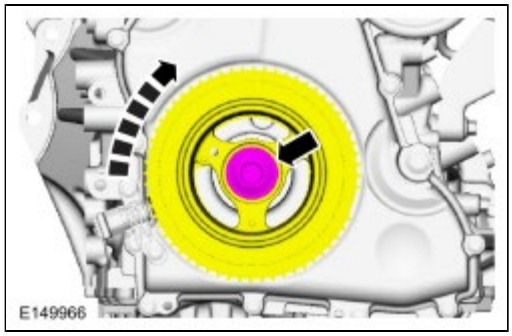

81. Install the fuel injection pump and loosely install 2 new fuel injection pump bolts, alternately tighten each bolt one complete revolution until seated.
    Torque :
    Stage 1: 20 Nm
    Stage 2: Tighten an additional 45°

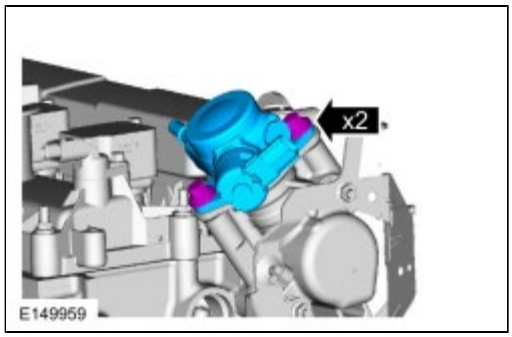

82. *Torque* : 48 Nm

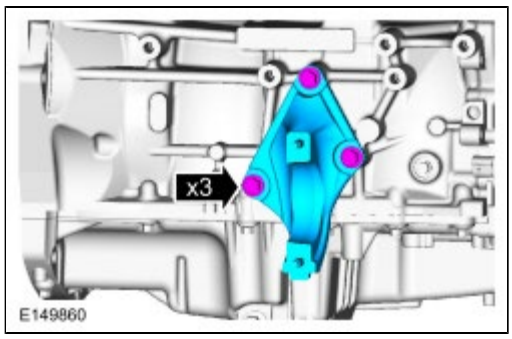

83. *Torque* : 25 Nm

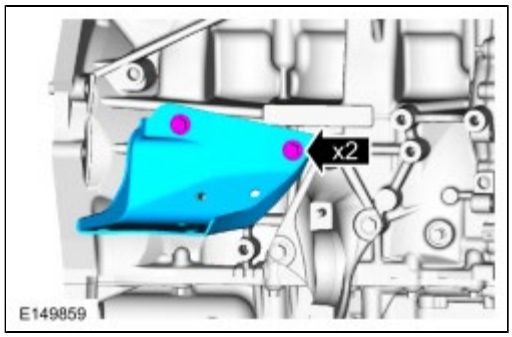

84. **NOTICE: The RH KS must be installed in the 6 o'clock position and the LH KS must be installed in the 4 o'clock position. Failure to follow these instructions may result in damage to the engine.**

    Torque : 20 Nm

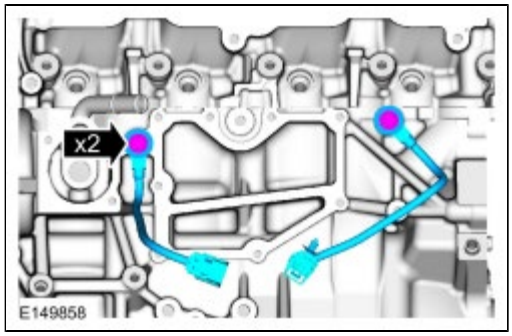

85. **NOTE:** *Install a new gasket.*

    Torque : 25 Nm

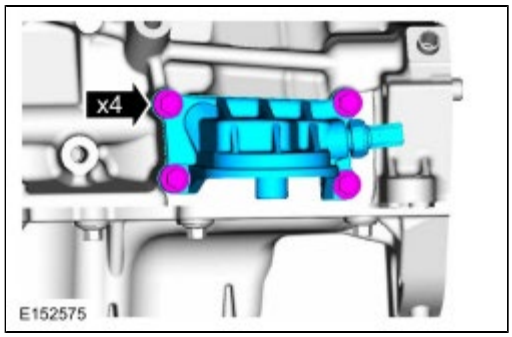

86. **NOTE:** *Install a new gasket.*

    Torque : 10 Nm

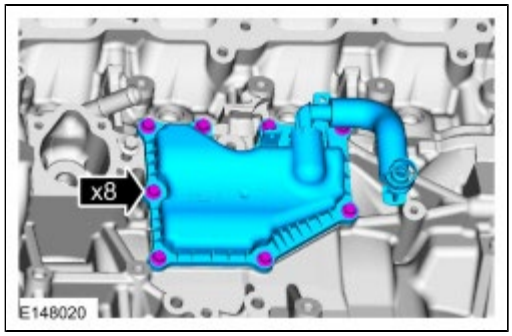

87. **NOTICE: Do not attempt to cut the lower Teflon® seal without first pulling it away from the fuel injector or damage to the injector may occur.**

    NOTE: *Be very careful when removing the lower Teflon® seals, not to scratch, nick or gouge the fuel injectors.*

Pull the lower Teflon® seal away from the injector with narrow tip pliers.

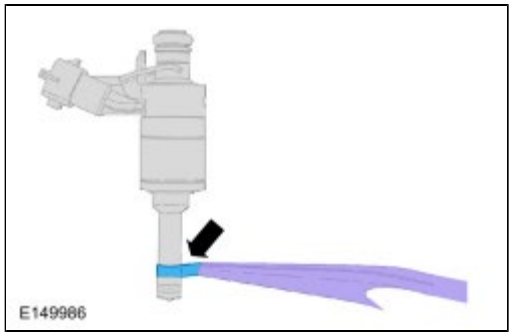

88. Carefully cut and discard the lower fuel injector Teflon® seals.

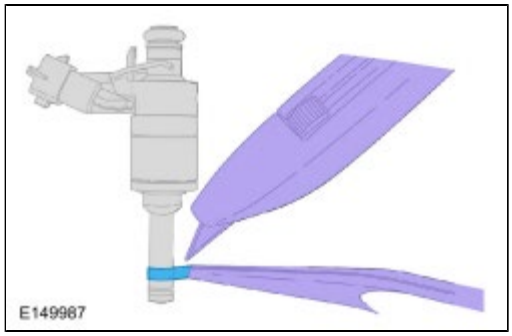

89. Place the special tool , knurled side out, over the fuel injector tip until the fuel injector seal recess is exposed.
Special Tool(s) : 303-1567 Sizer, Teflon Seal

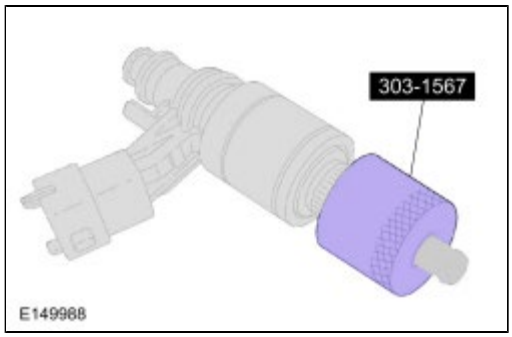

90. **NOTE:** *Do not lubricate the new lower Teflon® fuel injector seals.*

Install the new lower Teflon® seals on the narrow end of the Arbor (part of the special tool), then install the Arbor on the fuel injector tips.
Special Tool(s) : 310-207 Installer, Fuel Injector Seal Assembly , 303-1567 Sizer, Teflon Seal

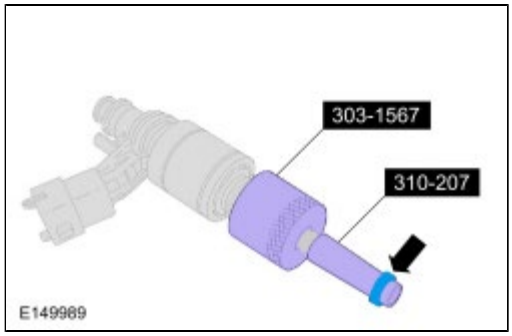

91. **NOTICE: Once the Teflon® seal is installed on the Arbor, it should immediately be installed onto the fuel injector to avoid excessive expansion of the seal.**

Using the Pusher Tool (part of the special tool), slide the Teflon® seals off of the Arbor and into the groove on the fuel

injectors.
Special Tool(s) : 310-207 Installer, Fuel Injector Seal Assembly , 303-1567 Sizer, Teflon Seal

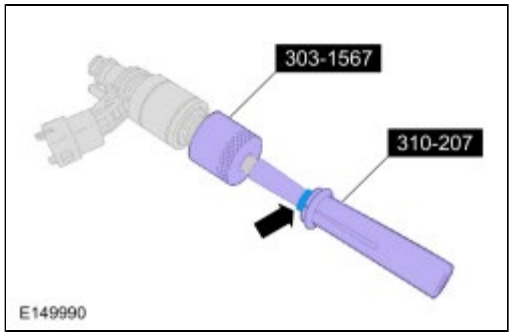

92. **NOTE:** *Make sure the Teflon® seal is fully seated in the groove on the fuel injector before sizing the seal.*

    Slide the special tool off the end of the fuel injector to size the seal.
    Special Tool(s) : 303-1567 Sizer, Teflon Seal

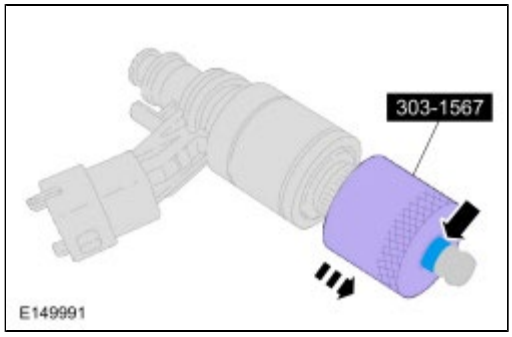

93. **NOTICE: Use fuel injector O-ring seals that are made of special fuel-resistant material. The use of ordinary O-ring seals may cause the fuel system to leak. Do not reuse the O-ring seals.**

    NOTE: *Do not lubricate the new lower Teflon® fuel injector seals.*

    NOTE: *Lubricate the upper fuel injector O-ring seals with clean engine oil.*

    NOTE: *Install the fuel injectors into the cylinder head within 15 minutes due to Teflon® seal expansion.*

    Install the new upper fuel injector O-ring seal support rings and the new upper fuel injector O-ring seals.
    Material : Motorcraft® SAE 5W-20 Premium Synthetic Blend Motor Oil / XO-5W20-QSP (WSS-M2C945-A)

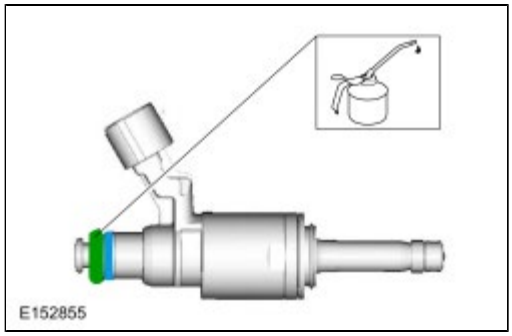

94.

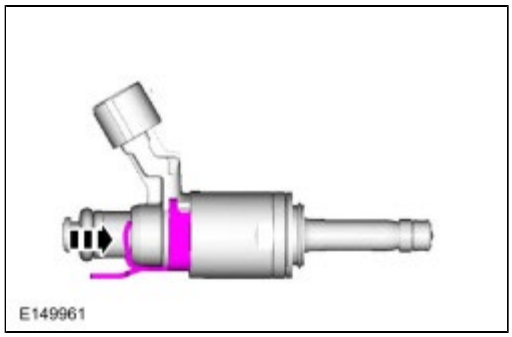

95. **NOTE:** *The anti-rotation finger of the fuel injector clip must slip into the groove of the fuel rail cup.*

    NOTE: *The fuel rail pressure sensor must be replaced if it is removed from the fuel rail.*

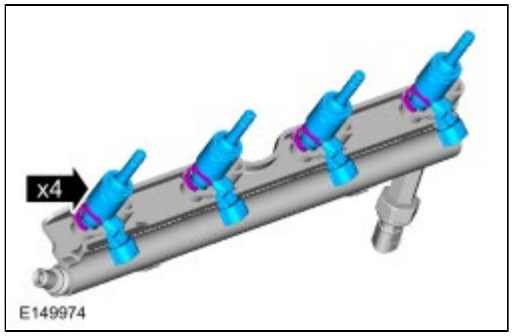

96. **NOTE:** *Do not lubricate the new lower Teflon® fuel injector seals.*

    Install the fuel rail by pushing down on the fuel rail face above the injectors and install the 4 bolts.
    Torque : 25 Nm

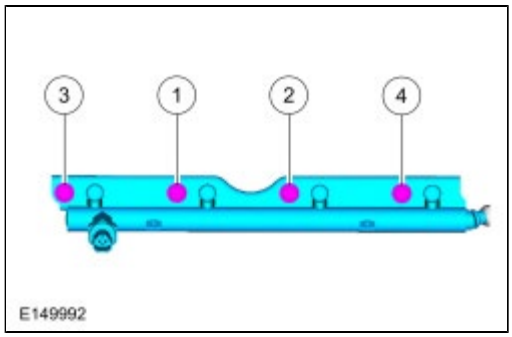

97.
    1. Hand tighten the high pressure fuel tube-to-fuel rail flare nut.
    2. Hand tighten the high pressure fuel tube-to-fuel injection pump flare nut.

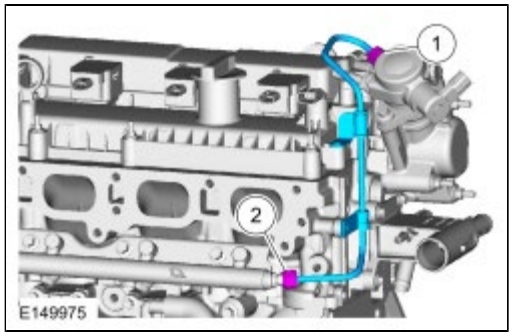

98. Finger tight.

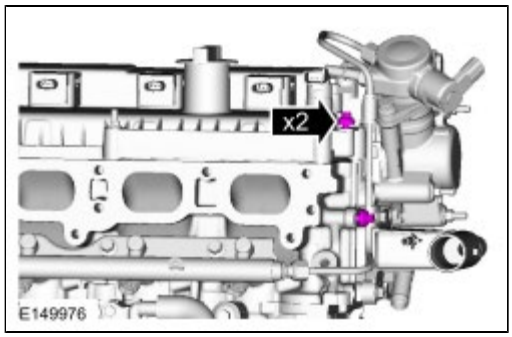

99. **NOTE:** *Calculate the correct torque wrench setting for the following torque. REFER to Torque Wrench Adapter Formulas.*

    Torque :
    Stage 1: 15 Nm
    Stage 2: 45°

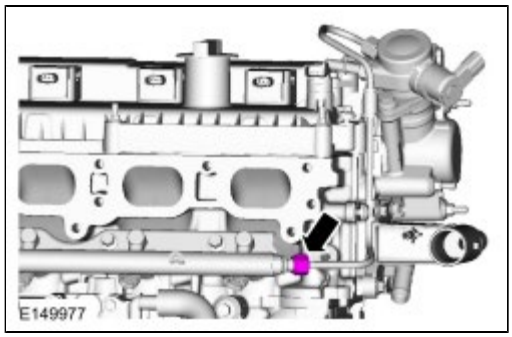

100. **NOTE:** *Calculate the correct torque wrench setting for the following torque. REFER to Torque Wrench Adapter Formulas.*

    Tighten the high pressure fuel tube-to-fuel injection pump flare nut in the following 2 stages:
    Torque :
    Stage 1: 15 Nm
    Stage 2: 45°

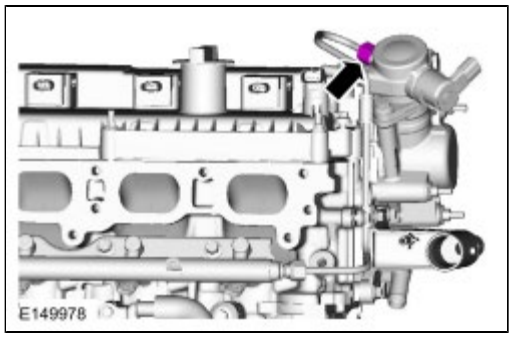

101. *Torque* : 10 Nm

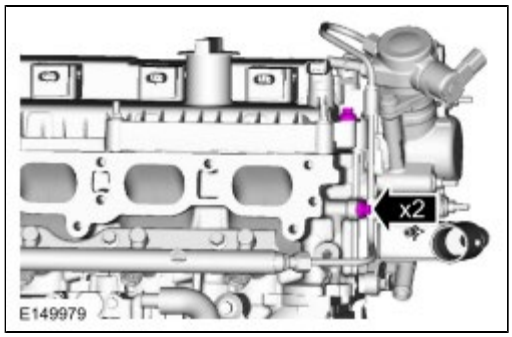

102. **NOTE:** *Use care when installing the fuel injection pump noise insulator. Spreading the openings will aid in installing the fuel injection pump noise insulator and reduce the risk of damage.*

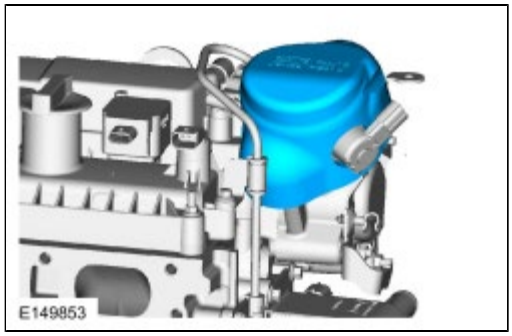

103.

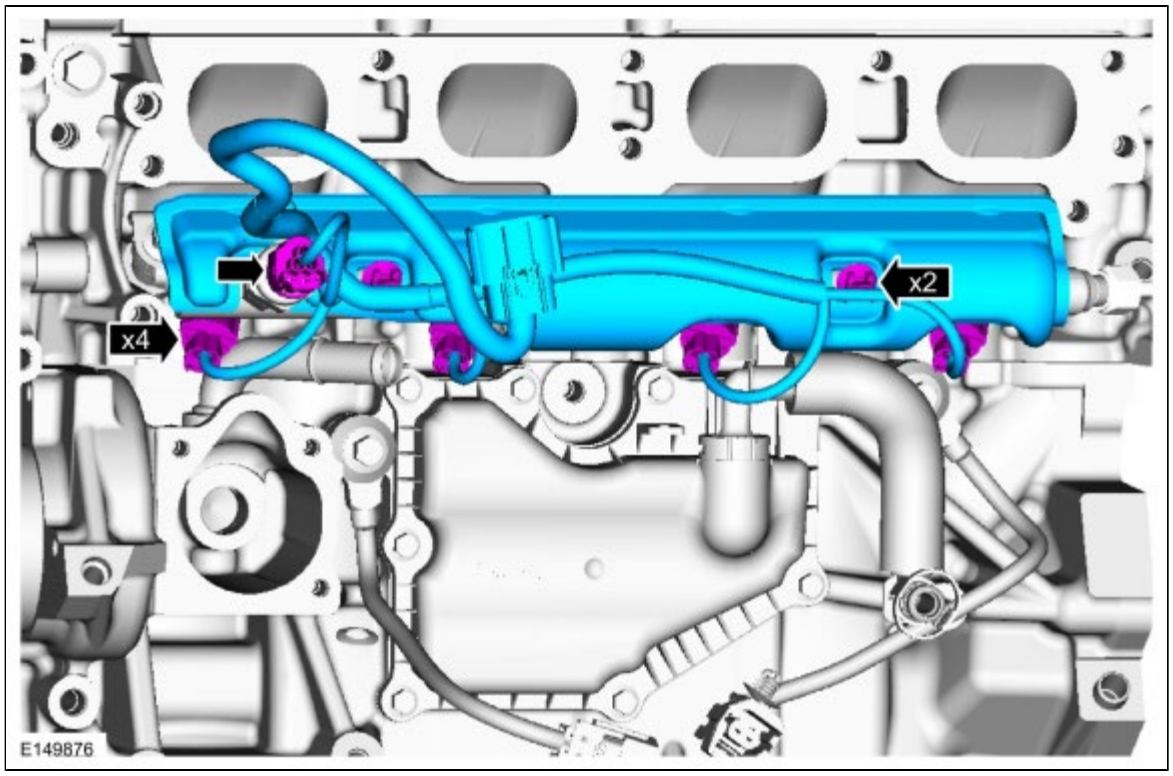

104. *General Equipment* : Hose Clamp Remover/Installer

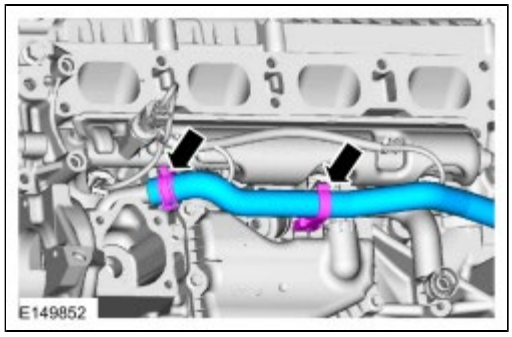

105. **NOTE:** *Inspect and install new intake manifold gaskets if necessary.*

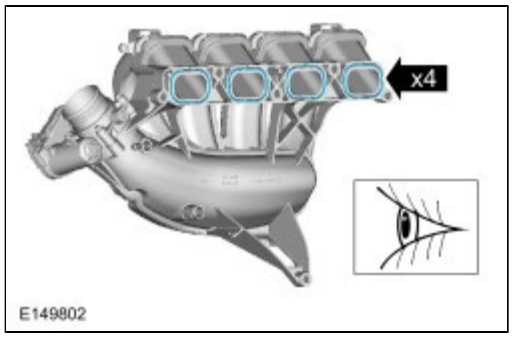

106. **NOTICE: If the engine is repaired or replaced because of upper engine failure, typically including valve or piston damage, check the intake manifold for metal debris. If metal debris is found, install a new intake manifold. Failure to follow these instructions can result in engine damage.**

Finger tight.

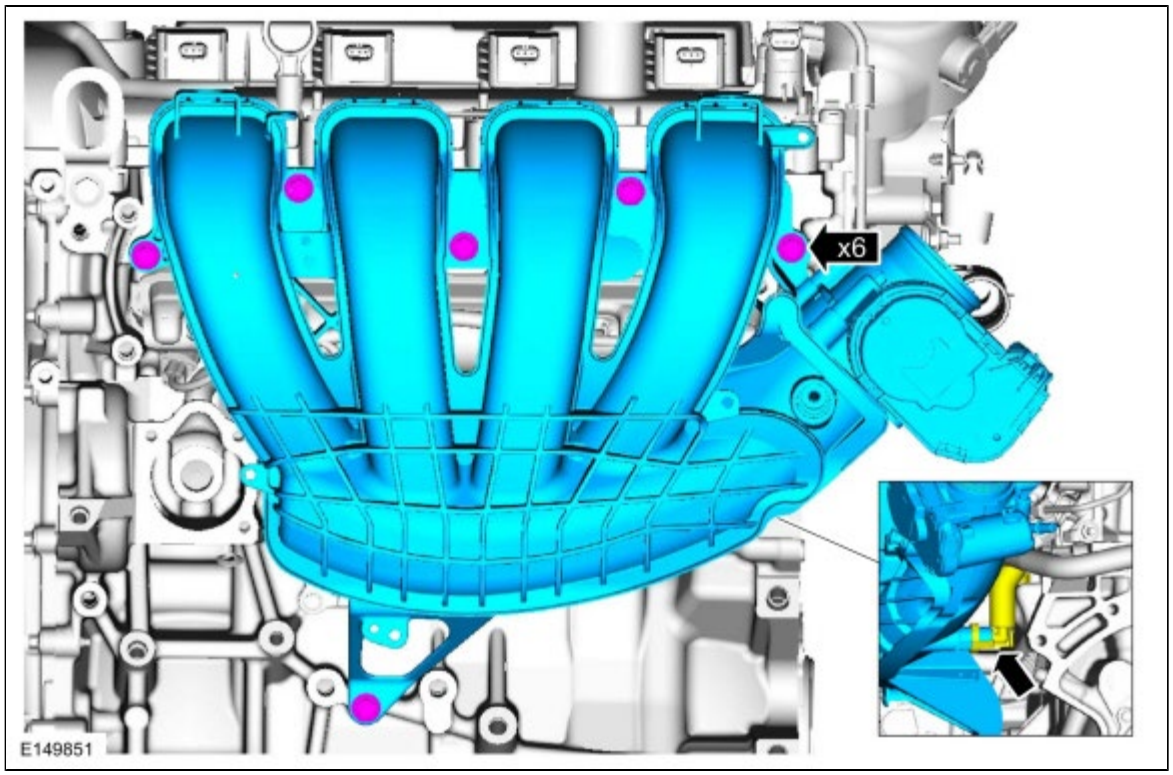

107. *Torque* : 20 Nm

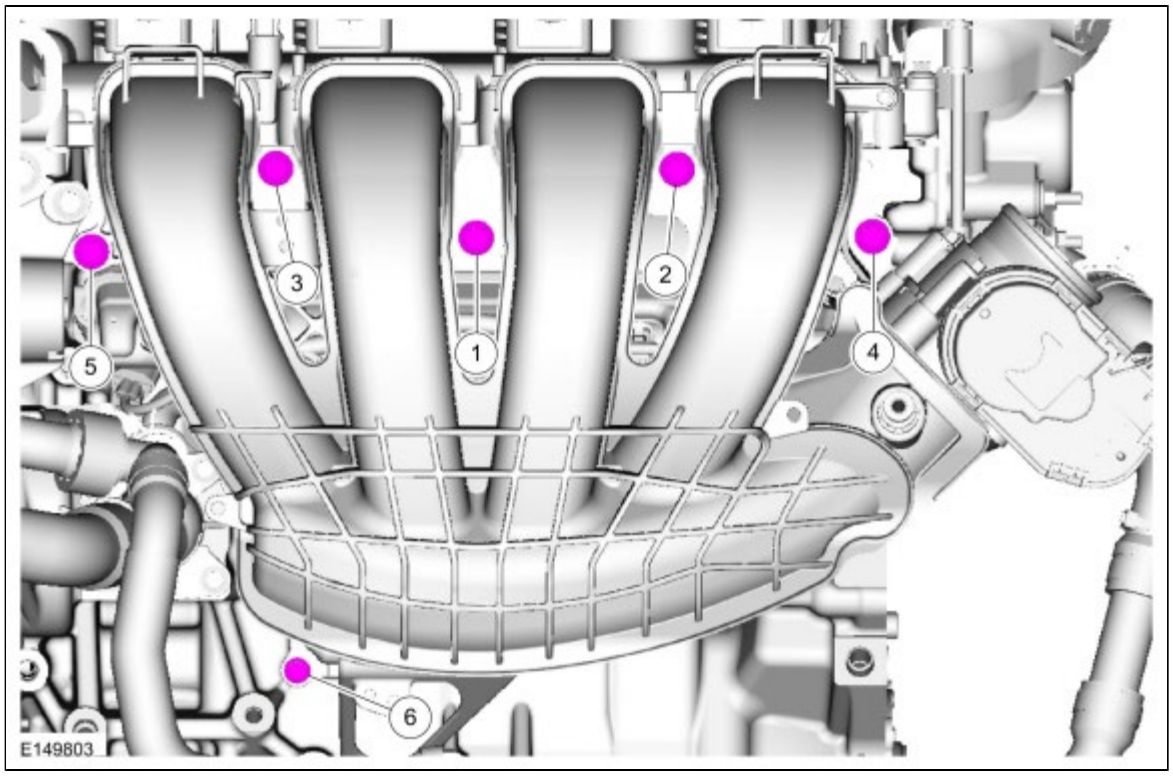

108. Refer to: Quick Release Coupling (310-00A Fuel System - General Information, General Procedures).

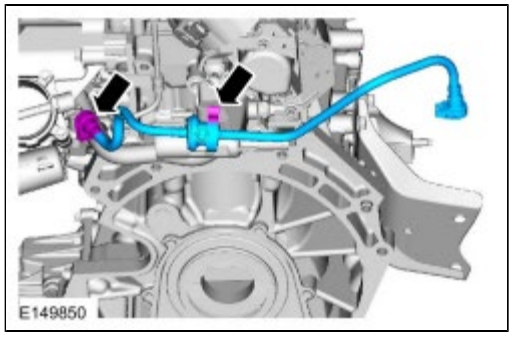

109. **NOTE:** *Install a new gasket.*

Torque : 10 Nm

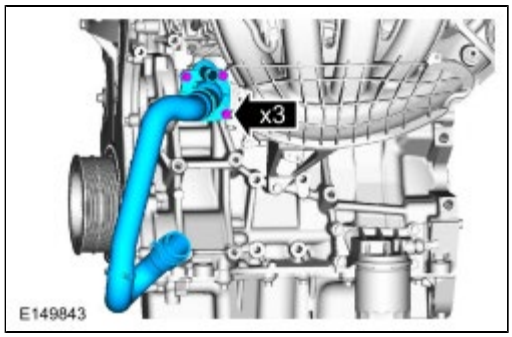

110. **NOTE:** *Install the generator stud before the generator is installed.*

- *Torque* : Tighten the generator stud to 8 Nm
- *Torque* : Tighten the nut and 2 bolts to 25 Nm

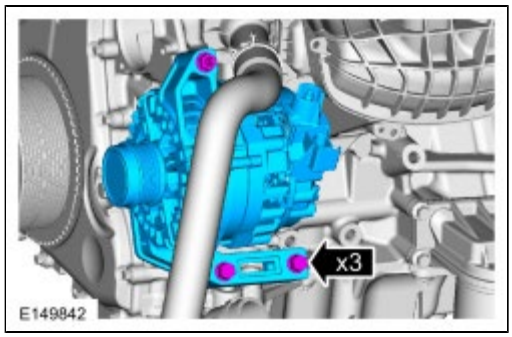

111. *General Equipment* : Hose Clamp Remover/Installer

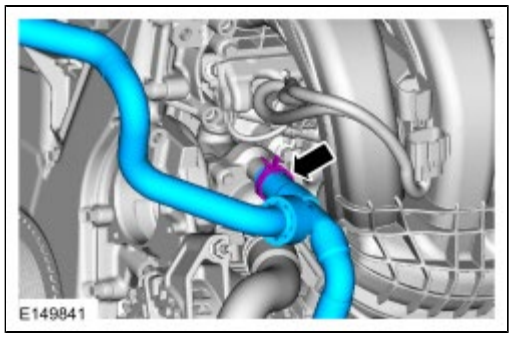

112. *Torque* : 25 Nm

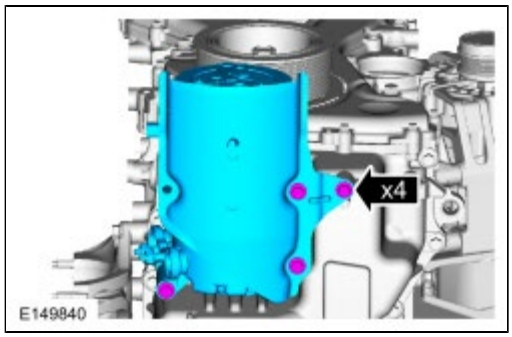

113. **NOTE:** *Install a new O-ring seal.*

Torque : 10 Nm

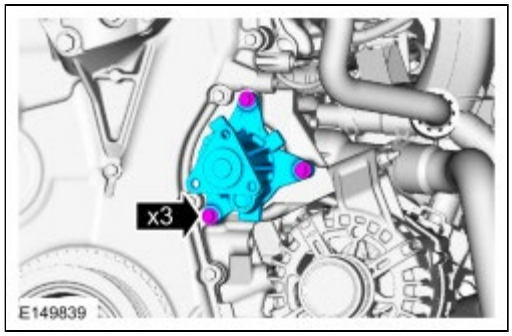

114. Finger tight.

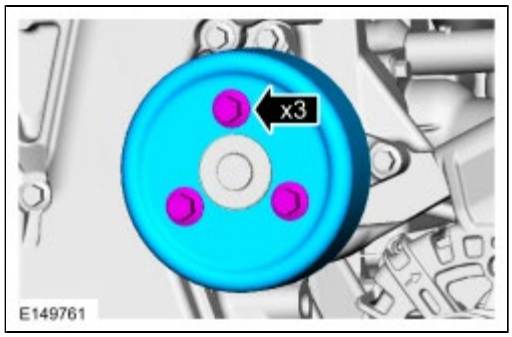

115. *Torque* : 25 Nm

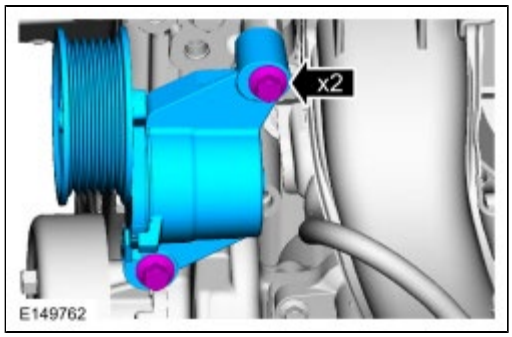

116. **NOTICE: Under no circumstances should the A/C compressor belt, accessory drive belt, tensioner or pulleys be lubricated as potential damage to the belt material and tensioner damping mechanism will occur. Do not apply any fluids or belt dressing to the A/C compressor belt, accessory drive belt or pulleys.**

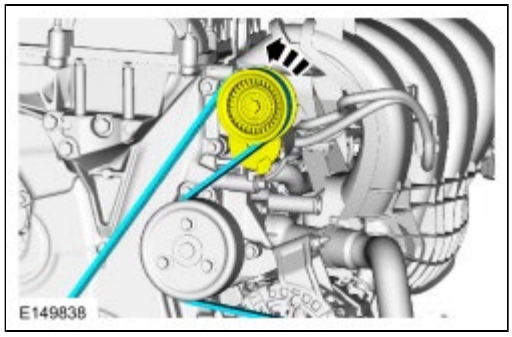

117. Tighten.
Torque : 20 Nm

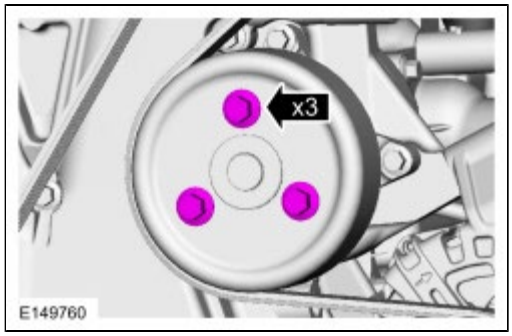

118. **NOTE:** *After installation, make sure the A/C compressor belt is correctly seated on the crankshaft and the A/C compressor pulleys.*

Position the A/C compressor belt onto the A/C compressor pulley and around the special tool on the crankshaft pulley. Make sure that the belt is engaged with the crankshaft pulley and rotate the crankshaft clockwise to install the A/C compressor belt.
Special Tool(s) : 303-1252/2 Tool, Stretchy Belt Installer

119.

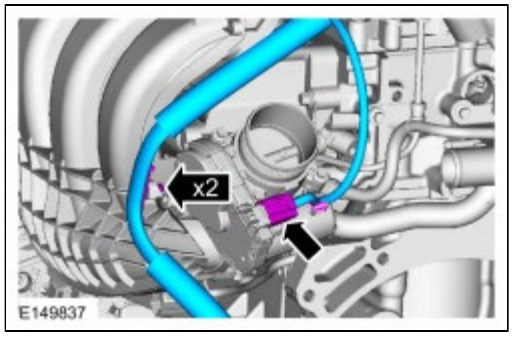

120.

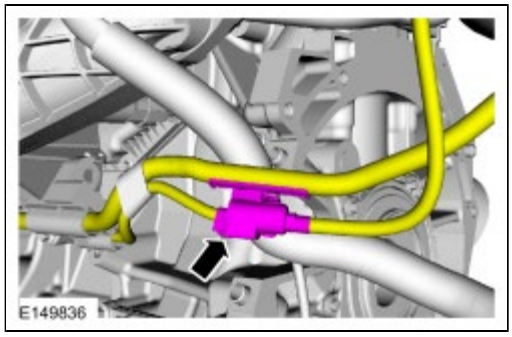

121.

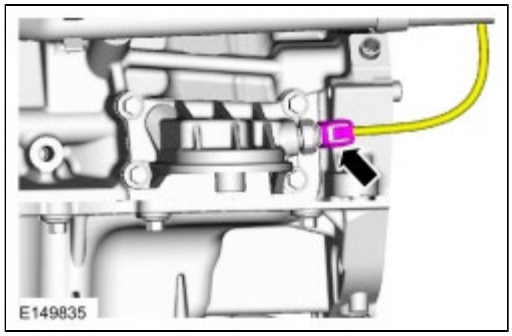

122.

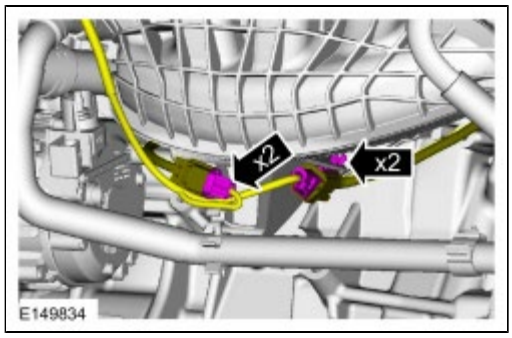

123. *Torque* : 17 Nm

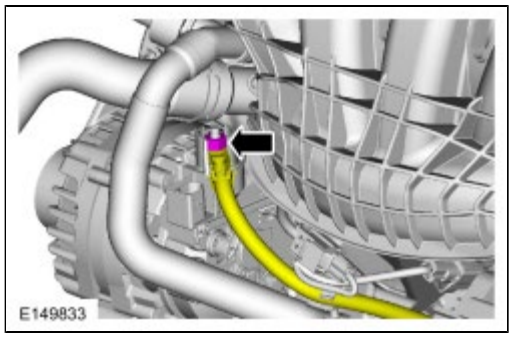

124.

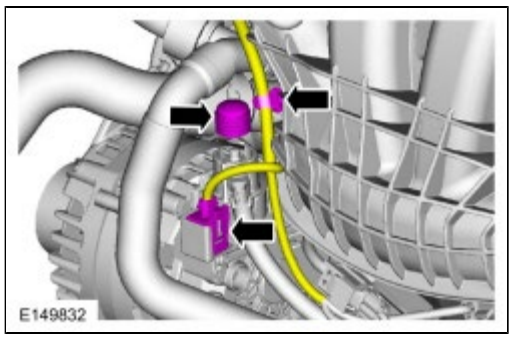

125.

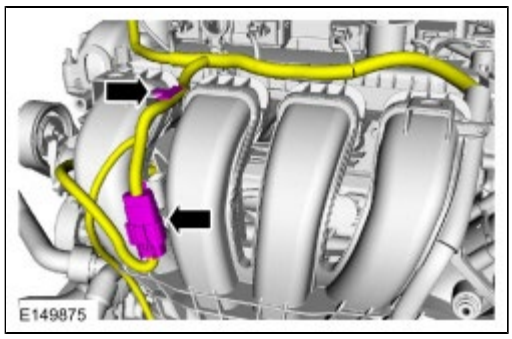

126. *Torque* : 10 Nm

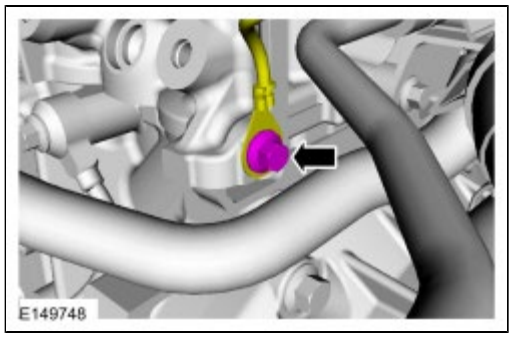

127.

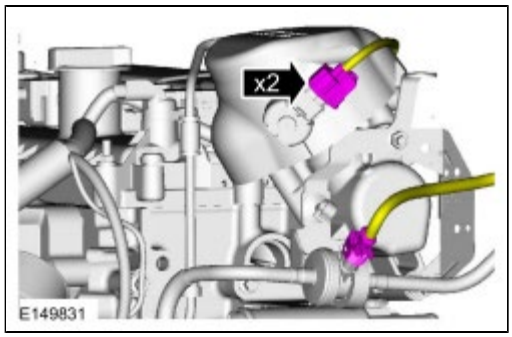

128.

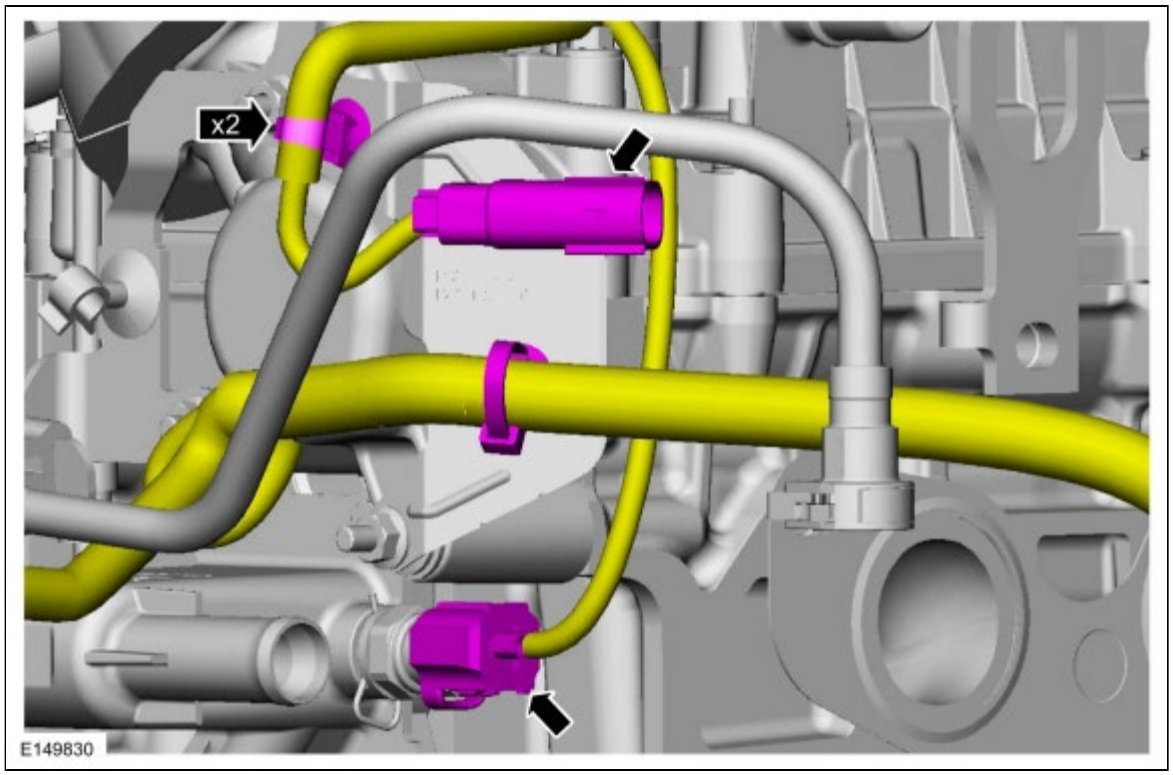

129.

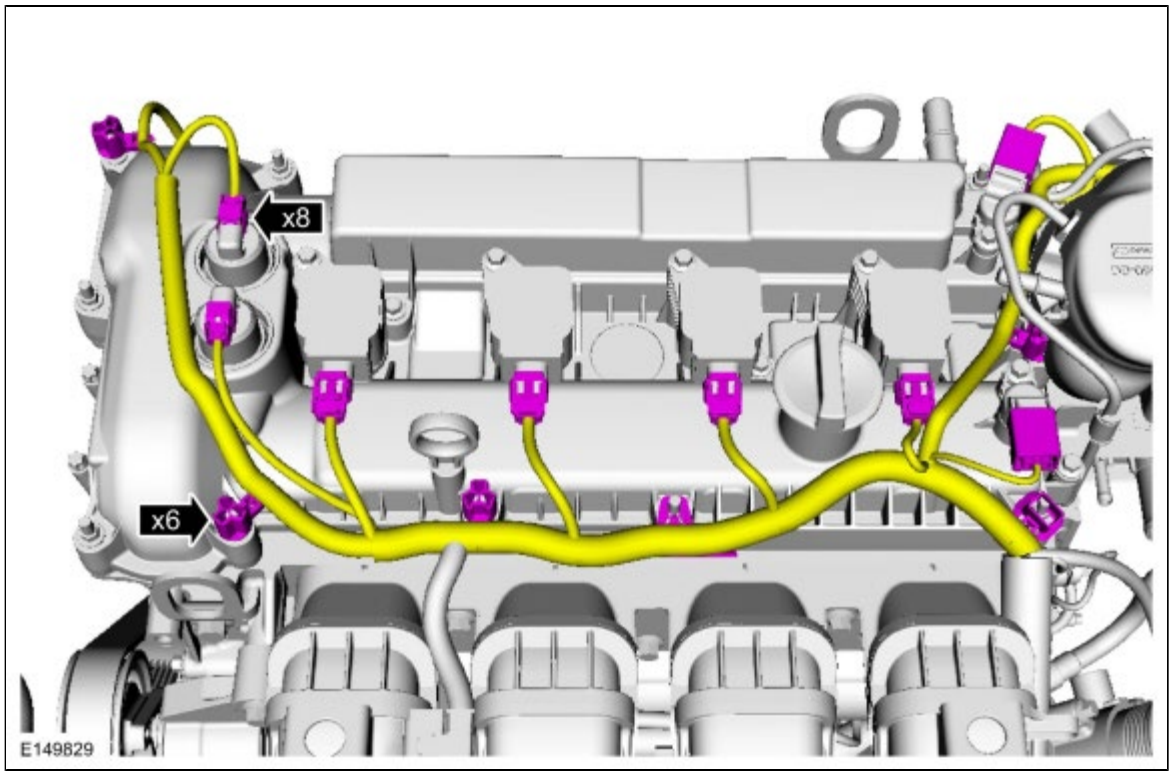

130.

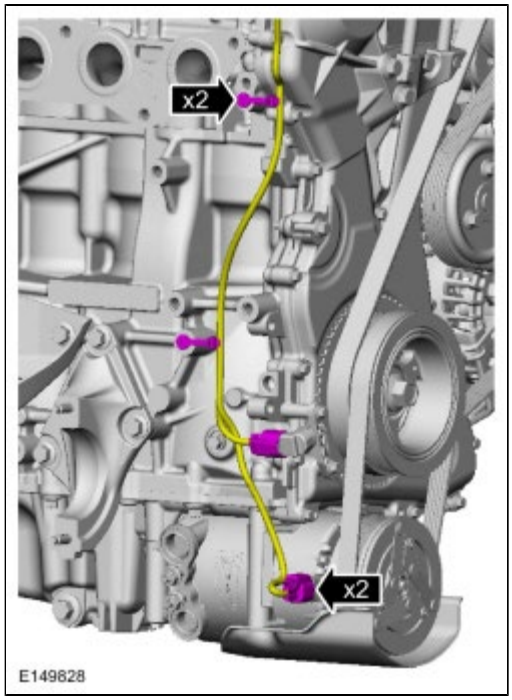

131. Refer to: Quick Release Coupling (310-00A Fuel System - General Information, General Procedures).

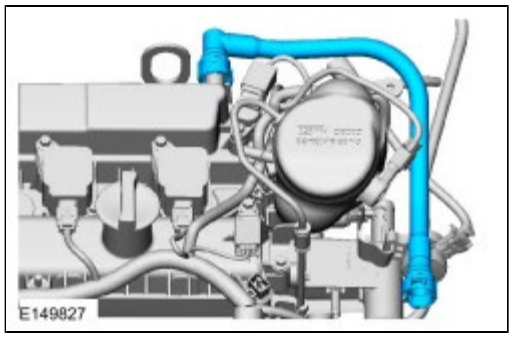

132. Remove the engine from the engine stand.

133. **NOTE:** *Special bolts are used for installation. Do not use standard bolts.*

If equipped with a automatic transmission.
Special Tool(s) : 303-103 (T74P-6375-A) Holding Tool, Flywheel
Torque :
Stage 1: 50 Nm
Stage 2: 80 Nm
Stage 3: 112 Nm

134. **NOTE:** *Special bolts are used for installation. Do not use standard bolts.*

If equipped with a manual transmission.
Special Tool(s) : 303-103 (T74P-6375-A) Holding Tool, Flywheel
Torque :
Stage 1: 50 Nm
Stage 2: 80 Nm
Stage 3: 112 Nm

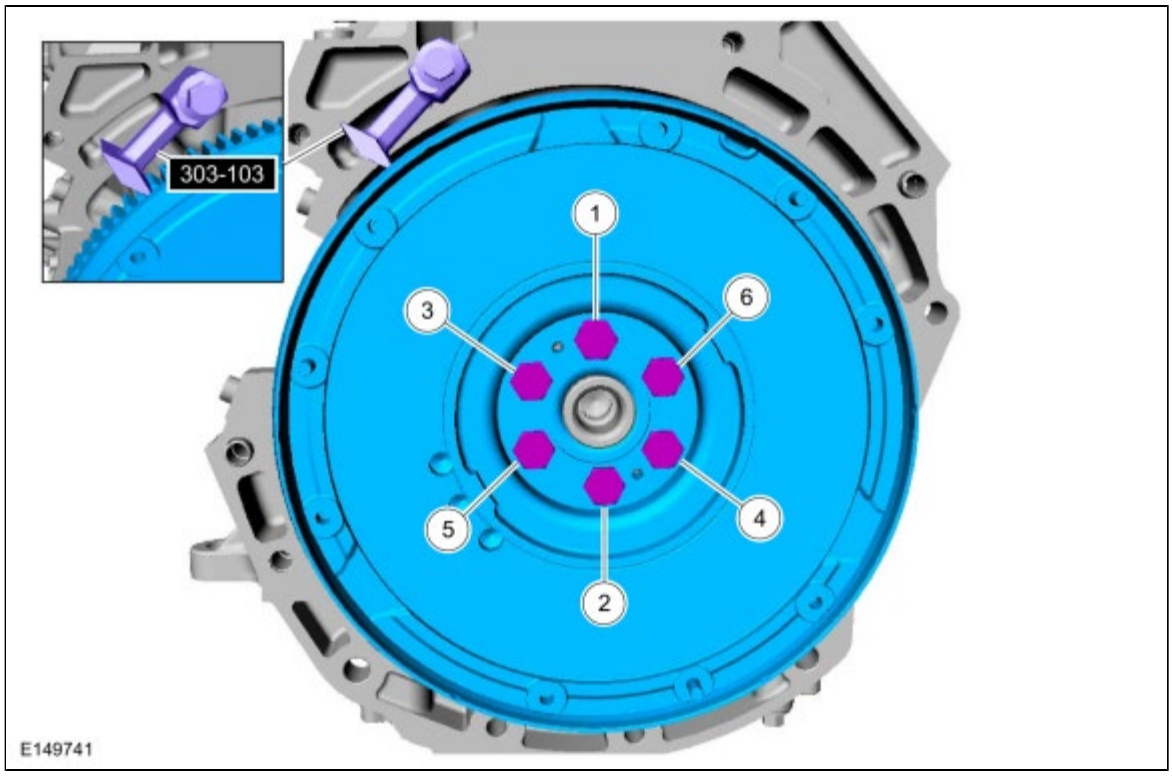

135. **NOTICE: Do not breathe dust or use compressed air to blow dust from storage containers or friction components. Remove dust using government-approved techniques. Friction component dust may be a cancer and lung disease hazard. Exposure to potentially hazardous components may occur if dusts are created during repair of friction components, such as brake pads and clutch discs. Exposure may also cause irritation to skin, eyes and respiratory tract, and may cause allergic reactions and/or may lead to other chronic health effects. If irritation persists, seek medical attention or advice. Failure to follow these instructions may result in serious personal injury.**

    NOTE: *Clean the clutch pressure plate and flywheel with a commercial alcohol-based solvent so surfaces are free from oil film. Do not use cleaners with a petroleum base. Do not immerse the clutch pressure plate in solvent.*

    Position the clutch disc on the clutch pressure plate. Using a clutch aligner, centralize the clutch disc to the clutch pressure plate.

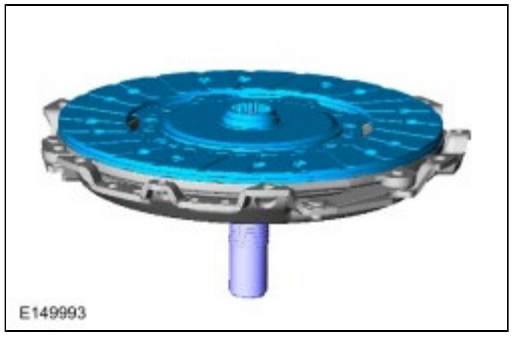

136. **NOTE:** *Install new bolts.*

    Using a clutch aligner, position the clutch disc and clutch pressure plate on the flywheel.
    Torque : 29 Nm

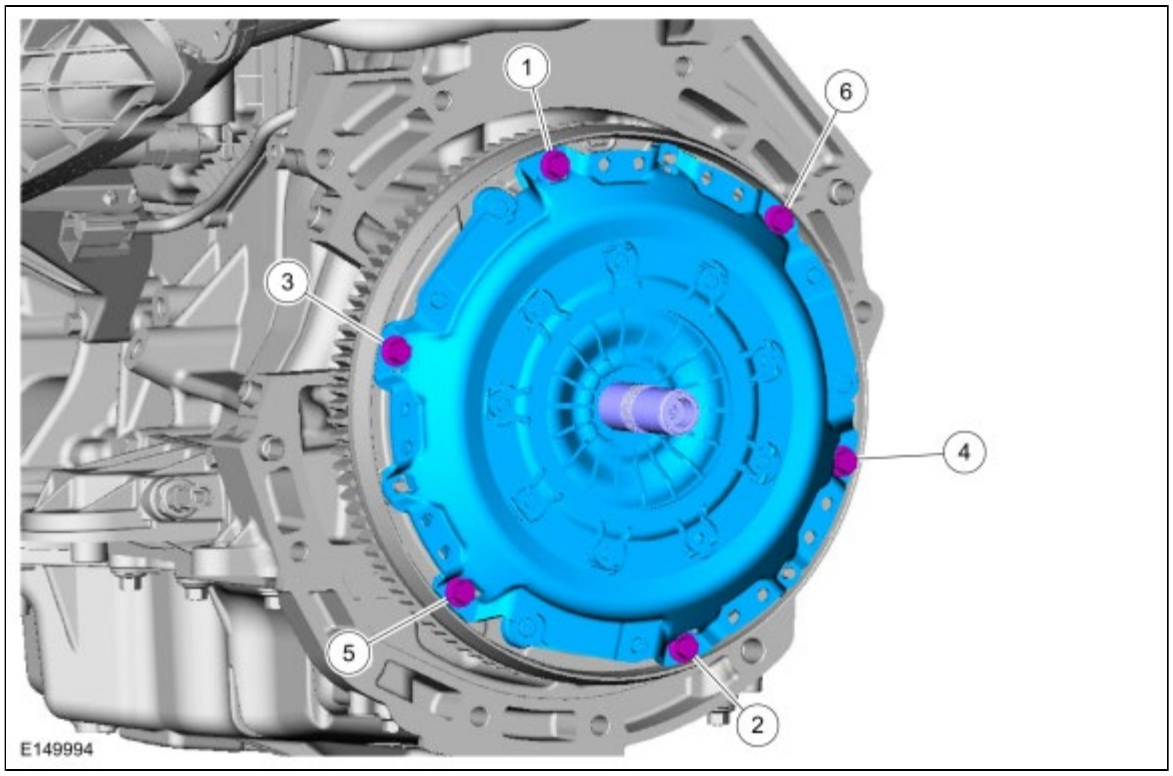

Copyright © Ford Motor Company

Engine

1. If installing a new flexplate or automatic transaxle clutch assembly, make sure the clutch-to-flexplate index marks are aligned.

2. **NOTICE: Use caution not to damage the transaxle wiring harness or sensors.**

   NOTE: *If using the existing automatic transaxle clutch assembly, align the index marks on the flexplate and the clutch stud made during removal.*

   NOTE: *Automatic transaxle shown, manual transaxle similar.*

   Align the transaxle to the engine.

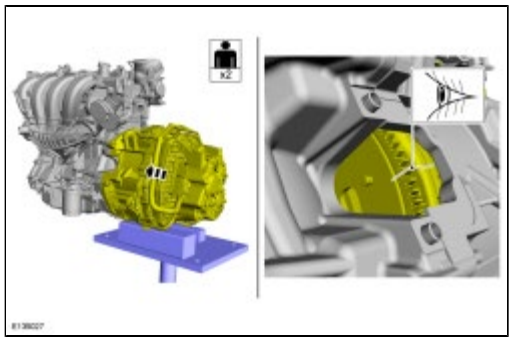

3.
   - If equipped with automatic transaxle, install the 4 bellhousing-to-engine fasteners.
     Torque : 45 Nm
   - If equipped with manual transaxle, install the 5 bellhousing-to-engine fasteners.
     Torque : 45 Nm

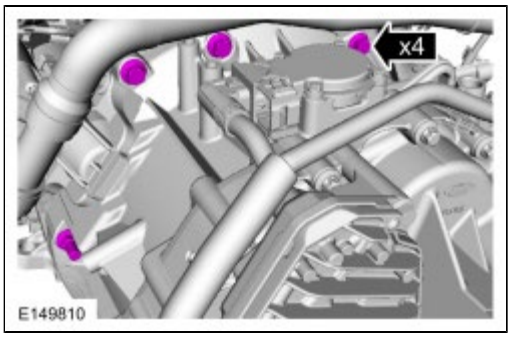

4. *Torque* : 20 Nm

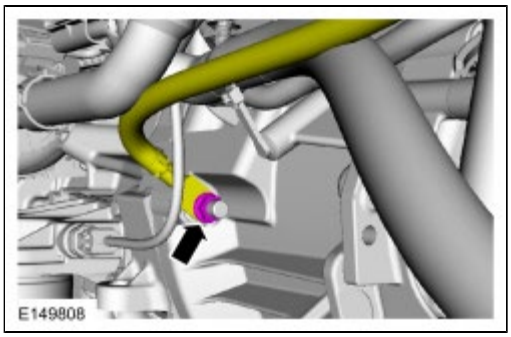

5. **NOTE:** *Automatic transaxle shown, manual transaxle similar.*

   Torque : 45 Nm

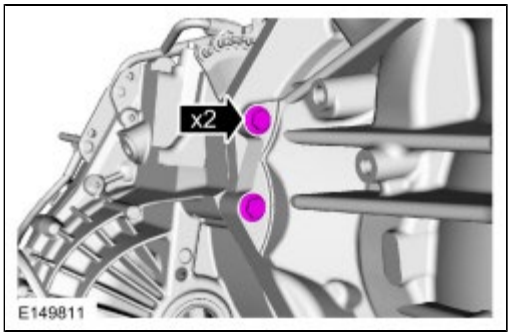

6. Raise the engine and transaxle assembly onto the lift table.
   Special Tool(s) : 300-OTC1819E 2,200# Floor Crane, Fold Away , 303-D089 (D93P-6001-A3) Spreader Bar

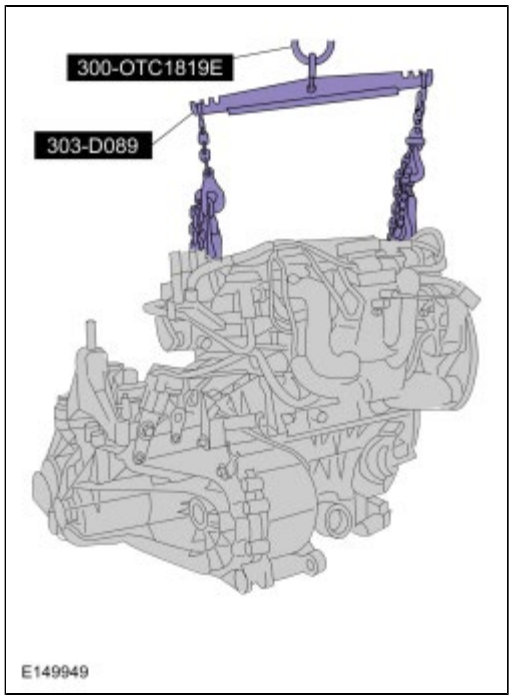

7. **NOTE:** *Position a block of wood under the transaxle.*

   Attach the powertrain to the powertrain lift.
   Special Tool(s) : 014-00001 ADJUSTABLE GRIP 1735A , 300-OTC1585AE Powertrain Lift
   General Equipment : Wooden Block

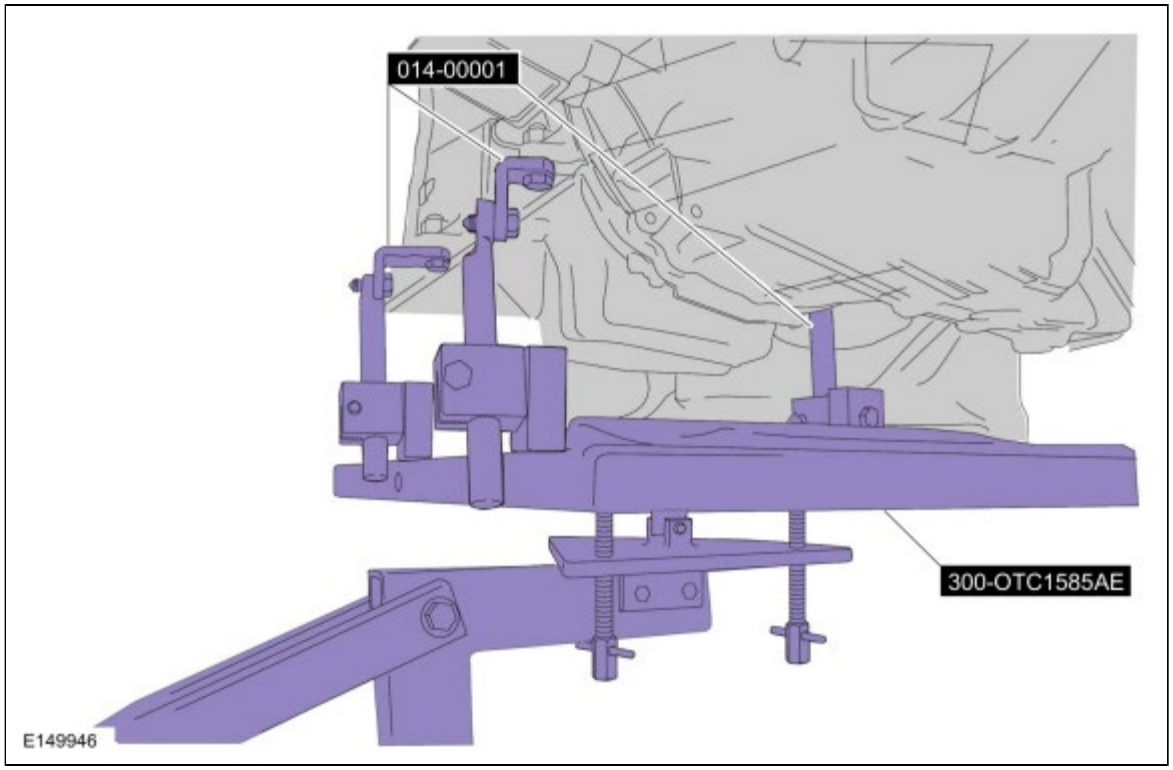

8. **NOTICE: Rotate the engine in a clockwise direction only or engine damage may occur.**

   NOTICE: Tighten the flexplate-to-clutch nuts in a star pattern or transaxle damage can occur.

   NOTE: *To prevent the flexplate-to-clutch nuts from falling into the clutch housing and causing damage, use a magnetic socket to install the 6 flexplate-to-clutch nuts.*

   NOTE: *Install 6 new flexplate-to-clutch nuts.*

If equipped with an automatic transaxle.

9. *Torque* :
   Stage 1: Tighten nuts 1, 5 and 3 to 12 Nm
   Stage 2: Tighten all nuts to 25 Nm

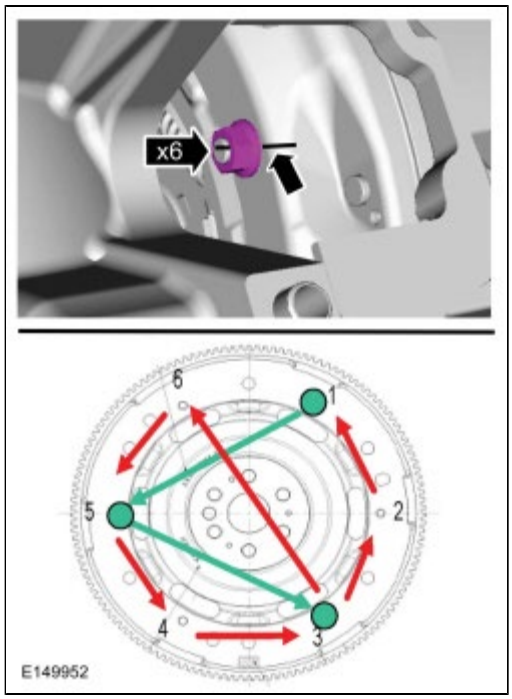

10.

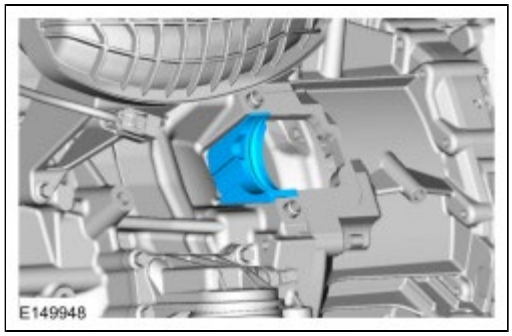

11. Refer to: Starter Motor (303-06A Starting System - 2.0L Duratec-HE (125kW/170PS) - MI4, Removal and Installation).

12.

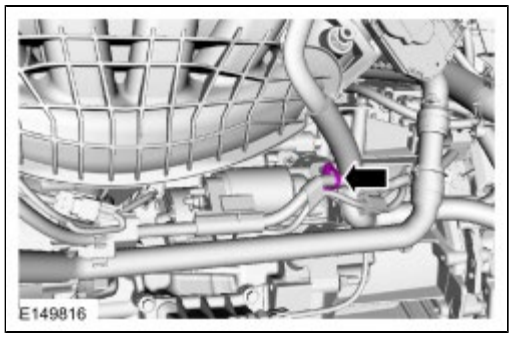

13. If equipped with automatic transaxle.

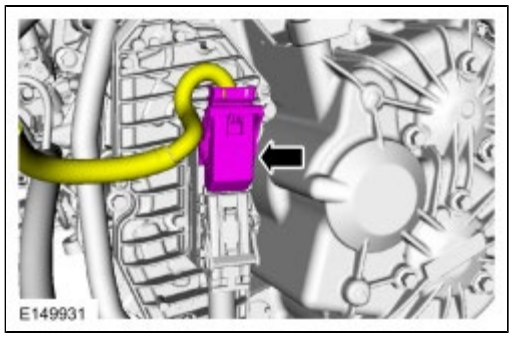

14. Position the powertrain into the vehicle.

15. *Torque* : 150 Nm

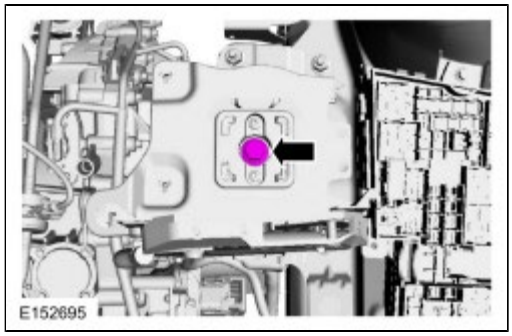

16. *Torque* :
    Stage 1: Tighten the 2 nuts to 80 Nm
    Stage 2: Tighten the 2 bolts to 90 Nm

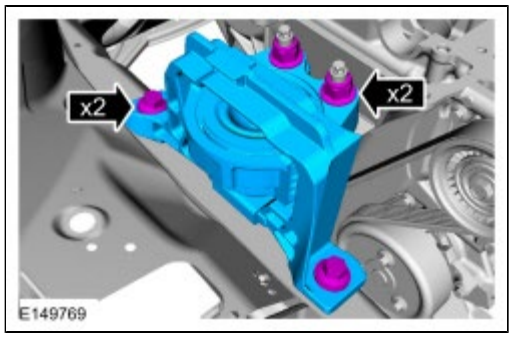

17.

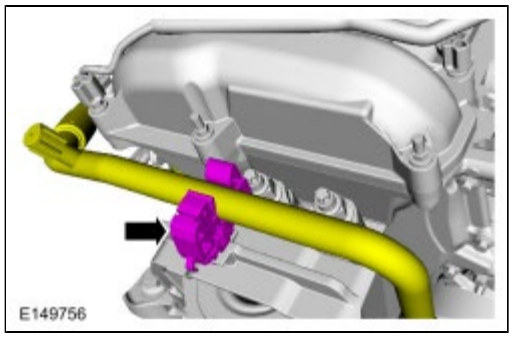

18. *Torque* : 86 Nm

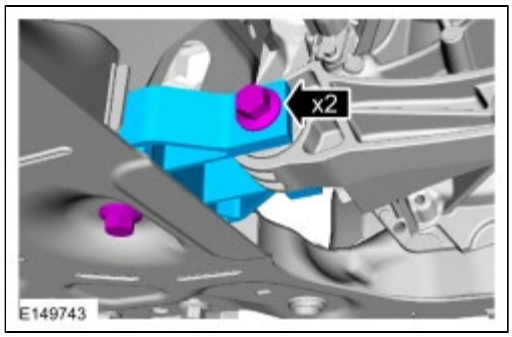

19. **NOTE:** *Automatic transaxle shown, manual transaxle similar.*

    Torque : 48 Nm

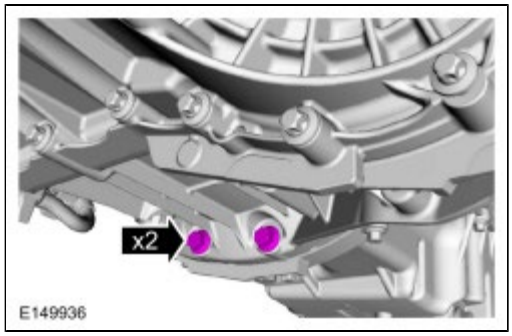

20. **NOTE:** *Automatic transaxle shown, manual transaxle similar.*

    Torque : 48 Nm

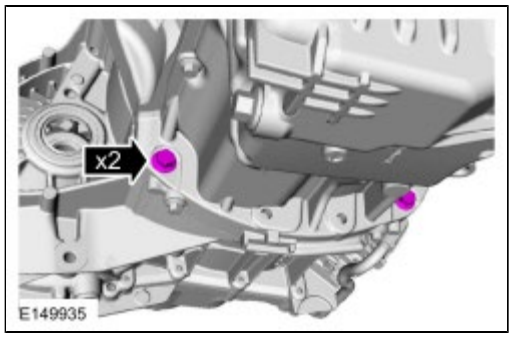

21. Refer to: Cooling Fan Motor and Shroud (303-03A Engine Cooling - 2.0L Duratec-HE (125kW/170PS) - MI4, Removal and Installation).

22. **NOTE:** *Lubricate the engine oil filter gasket with clean engine oil prior to installing the oil filter.*

    Material : Motorcraft® SAE 5W-20 Premium Synthetic Blend Motor Oil / XO-5W20-QSP (WSS-M2C945-A)
    Torque :
    Stage 1: 8 Nm
    Stage 2: 180°

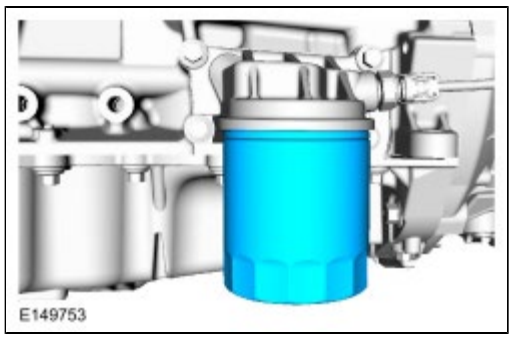

23. *General Equipment* : Hose Clamp Remover/Installer

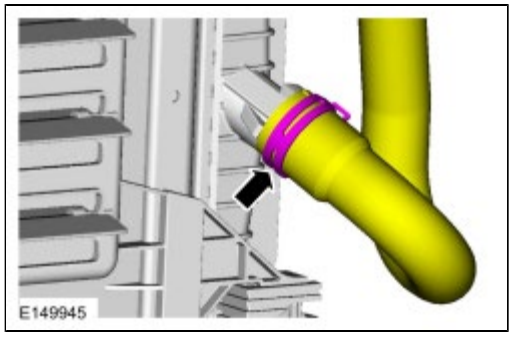

24. **NOTE:** *Install 2 new O-ring seals.*

- *Torque* : Tighten the nuts to 20 Nm
- *Torque* : Tighten the bolt to 25 Nm

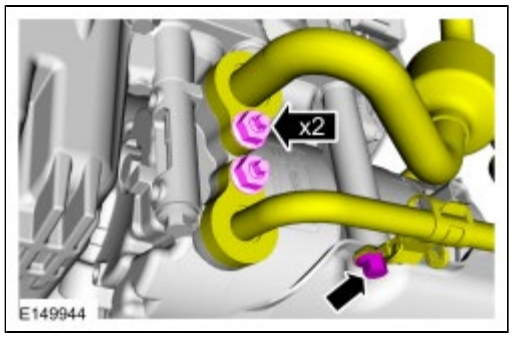

25. *Torque* : 18 Nm

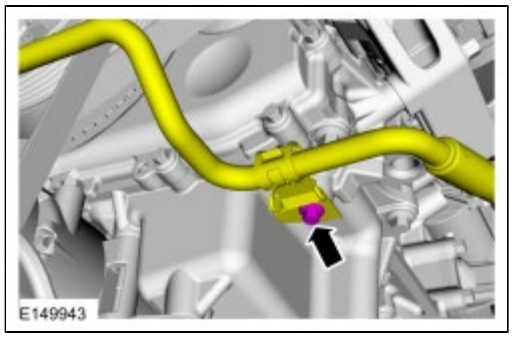

26. Refer to: Front Halfshaft RH (205-04 Front Drive Halfshafts, Removal and Installation).
    Refer to: Front Halfshaft LH (205-04 Front Drive Halfshafts, Removal and Installation).

27. If equipped with a manual transaxle.
    Torque : 48 Nm

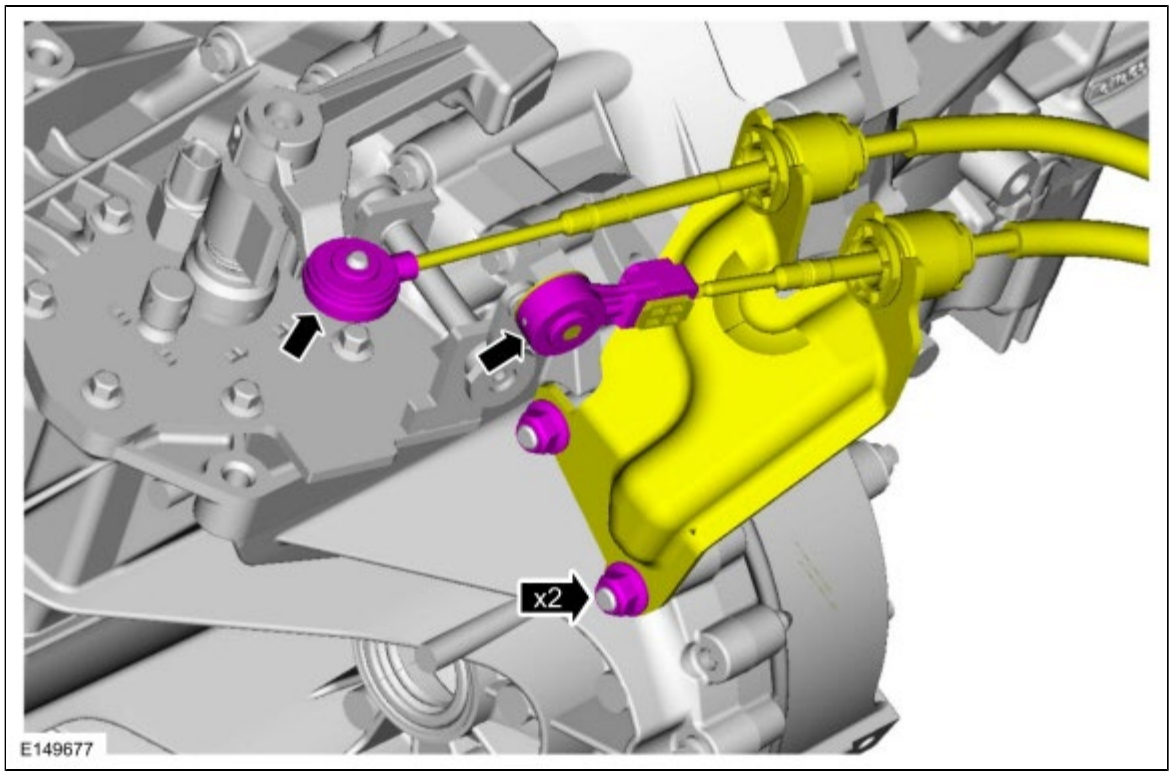

28. **NOTICE: Do not spill brake fluid on painted or plastic surfaces or damage to the surface may occur. If brake fluid is spilled onto a painted or plastic surface, immediately wash the surface with water.**

    If equipped with a manual transaxle.

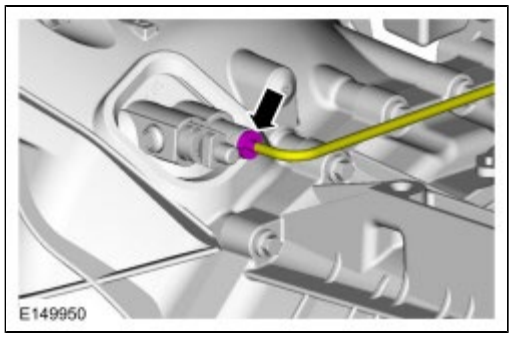

29. If equipped with an automatic transaxle.
    Torque : 10 Nm

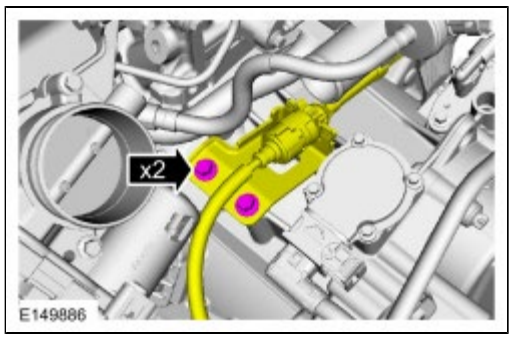

30. If equipped with an automatic transaxle.

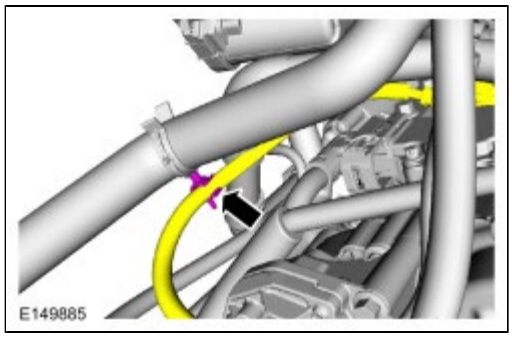

31. If equipped with an automatic transaxle.

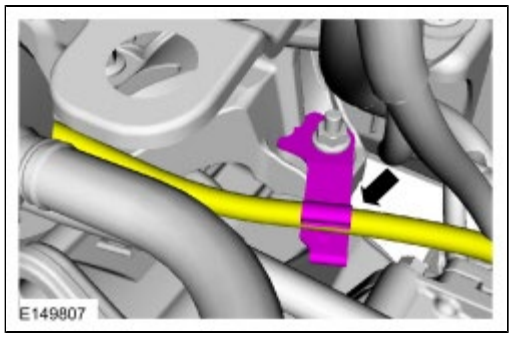

32. If equipped with an automatic transaxle.

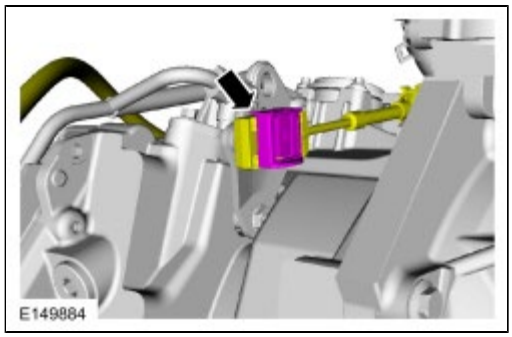

33.

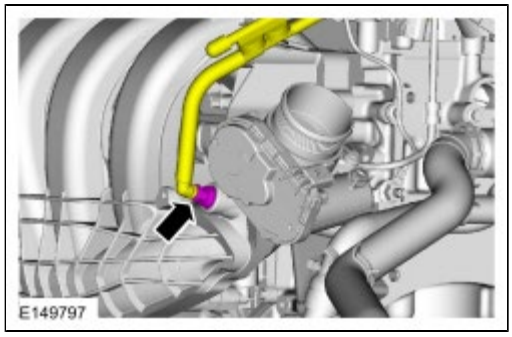

34. Refer to: Quick Release Coupling (310-00A Fuel System - General Information, General Procedures).

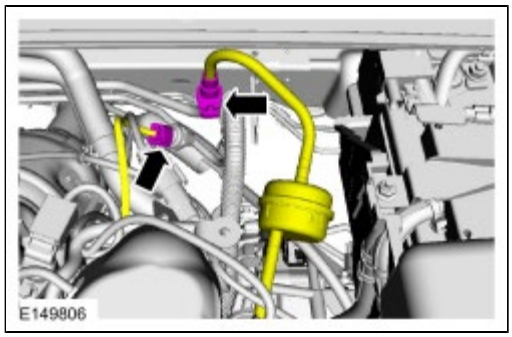

35. Refer to: Quick Release Coupling (310-00A Fuel System - General Information, General Procedures).

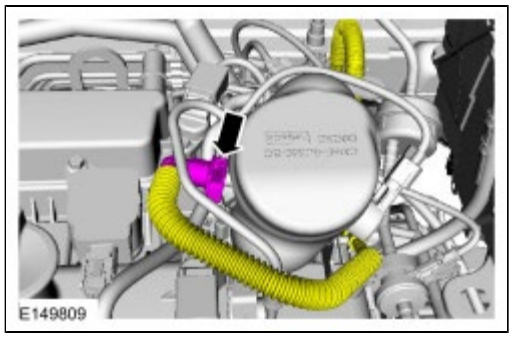

36. **NOTE:** *Install 5 new catalytic converter-to-cylinder head studs.*

    Torque : 17 Nm

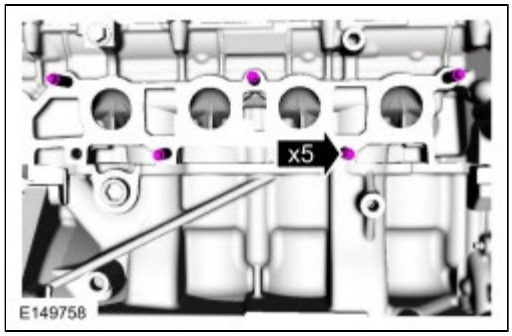

37. **NOTICE: Failure to tighten the catalytic converter manifold nuts to specification a second time may cause the converter to develop an exhaust leak.**

    NOTE: *Always install new fasteners and gaskets as indicated. Clean flange faces prior to new gasket installation to make sure of proper sealing.*

    Using a new gasket, position the catalytic converter and install the 5 new catalytic converter manifold-to-cylinder head nuts and tighten in 2 stages in the sequence shown.
    Torque :
    Stage 1: 55 Nm
    Stage 2: Re-tighten to 55 Nm

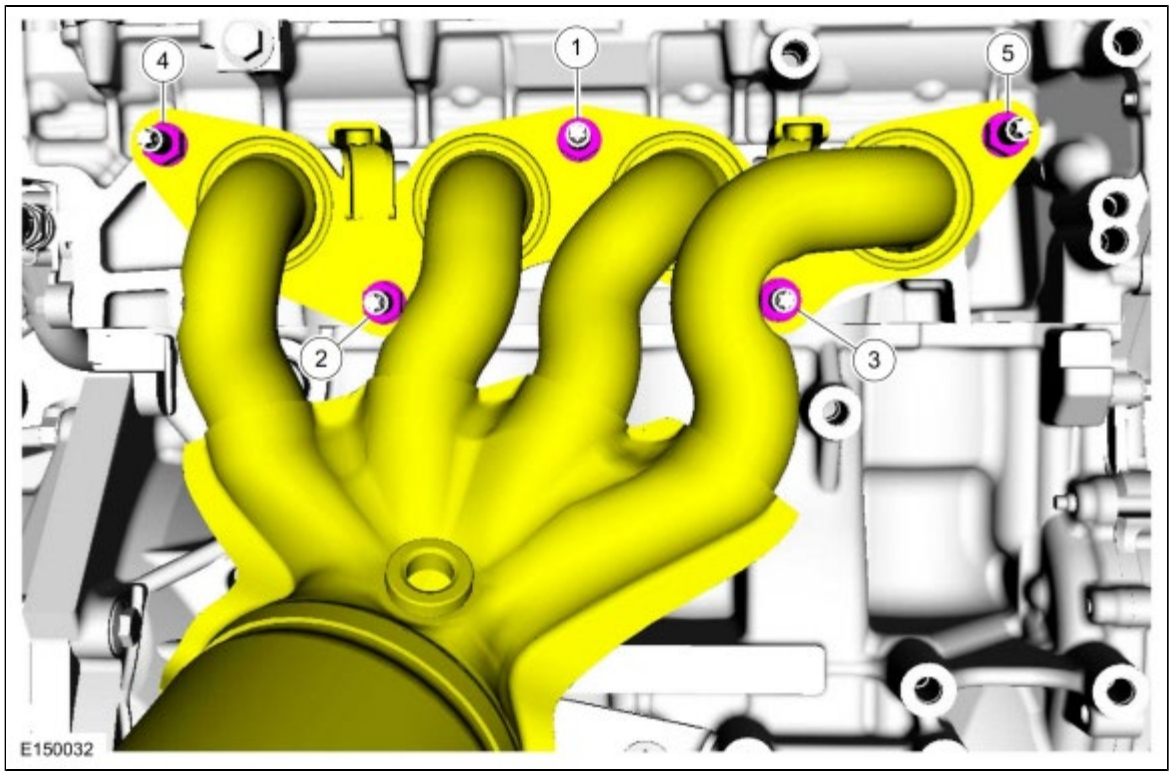

38. *Torque* : 25 Nm

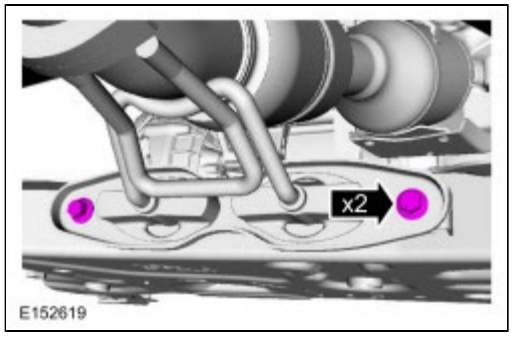

39.

- *Torque* : Tighten the first nut to 48 Nm
- *Torque* : Tighten the second nut to 48 Nm
- *Torque* : Re-tighten the first nut to 48 Nm

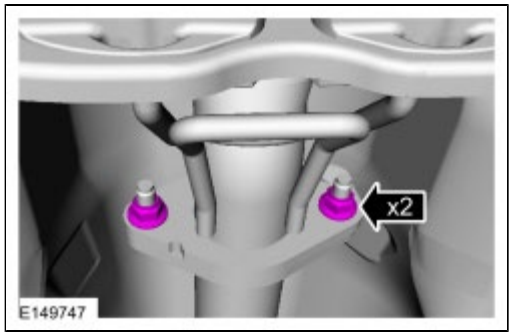

40. *Torque* : 25 Nm

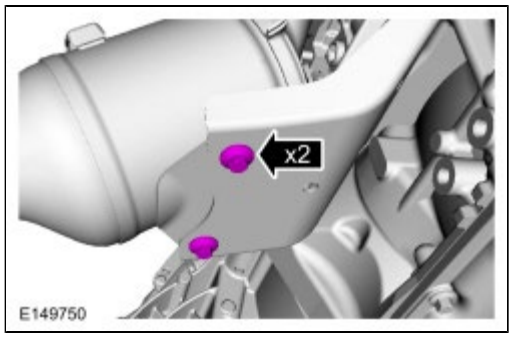

41. *Torque* : 10 Nm

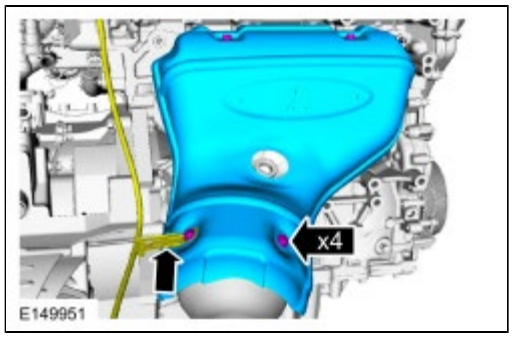

42.

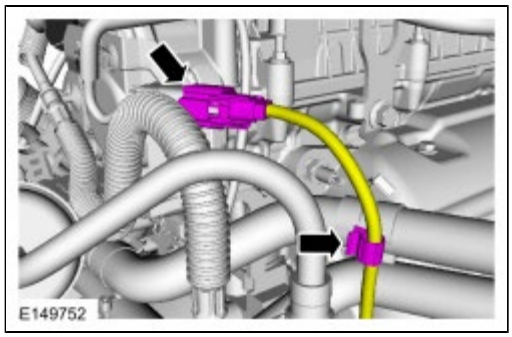

43. Refer to: Heated Oxygen Sensor (HO2S) (303-14A Electronic Engine Controls - 2.0L Duratec-HE (125kW/170PS) - MI4, Removal and Installation).

44. If equipped.

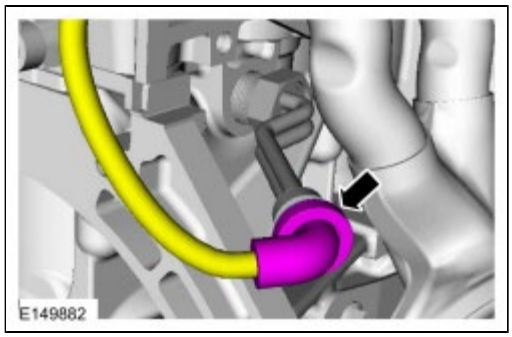

45.

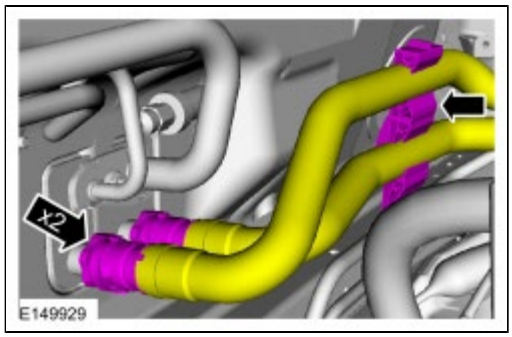

46. *General Equipment* : Hose Clamp Remover/Installer

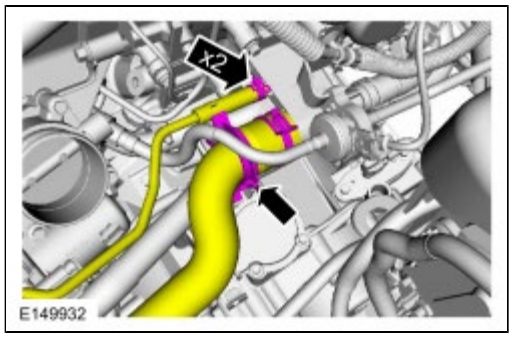

47.

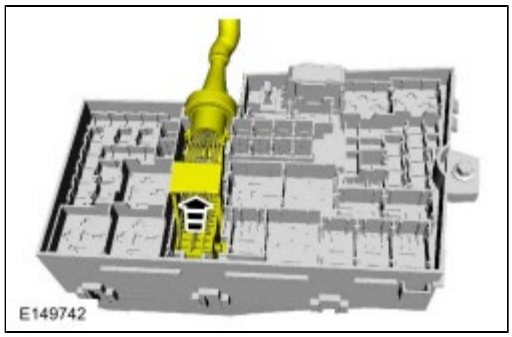

48.

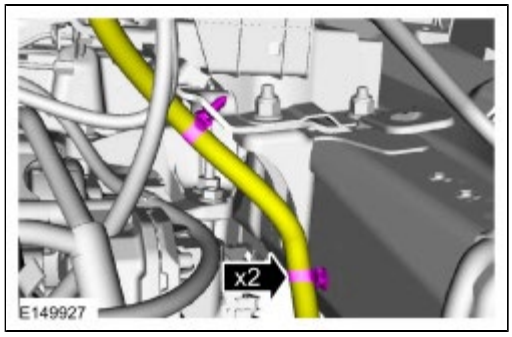

49. *Torque* : 20 Nm

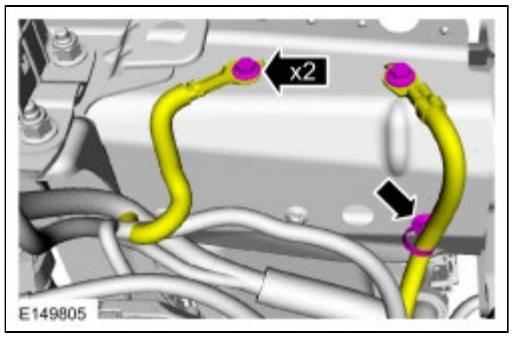

50. **NOTE:** *The electrical connector is located behind the PCM case.*

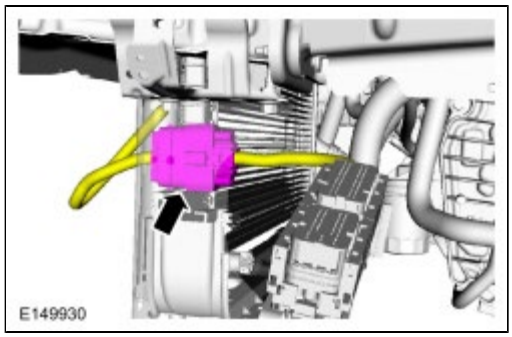

51. Refer to: Powertrain Control Module (PCM) (303-14A Electronic Engine Controls - 2.0L Duratec-HE (125kW/170PS) - MI4, Removal and Installation).

52.

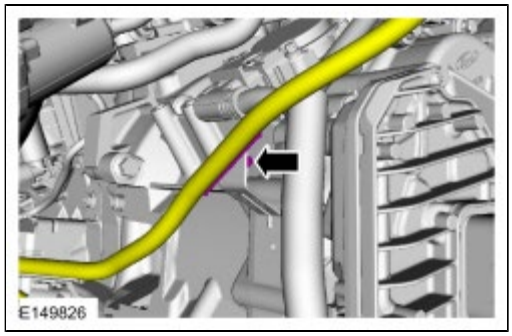

53.

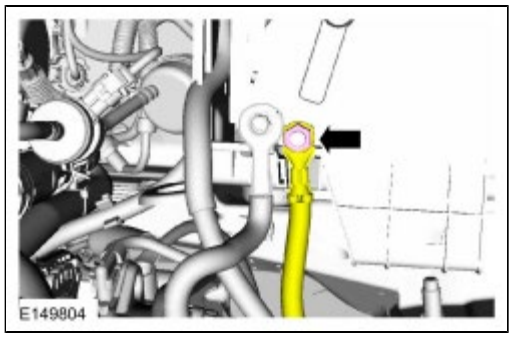

54. If equipped with automatic transmission.

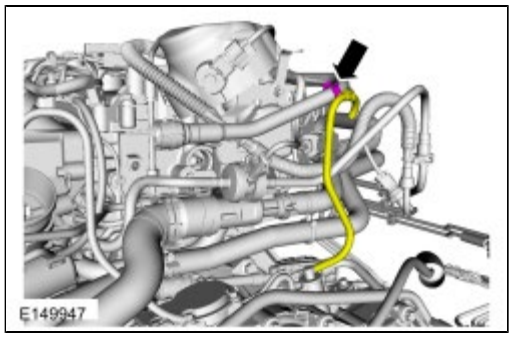

55. Install the following items:
    1. Refer to: Air Cleaner (303-12A Intake Air Distribution and Filtering - 2.0L Duratec-HE (125kW/170PS) - MI4, Removal and Installation).
       Refer to: Air Cleaner Outlet Pipe (303-12A Intake Air Distribution and Filtering - 2.0L Duratec-HE (125kW/170PS) - MI4, Removal and Installation).
    2. Refer to: Battery Tray (414-01 Battery, Mounting and Cables, Removal and Installation).
    3. Refer to: Degas Bottle (303-03A Engine Cooling - 2.0L Duratec-HE (125kW/170PS) - MI4, Removal and Installation).

56. If equipped with manual transaxle, fill and bleed the clutch system.
    Refer to: Clutch System Bleeding (308-00 Manual Transmission and Clutch - General Information) .

57. Refer to: Cooling System Draining and Vacuum Filling (303-03A Engine Cooling - 2.0L Duratec-HE (125kW/170PS) - MI4, General Procedures).
    Refer to: Cooling System Draining, Filling and Bleeding (303-03A Engine Cooling - 2.0L Duratec-HE (125kW/170PS) - MI4, General Procedures).

58.

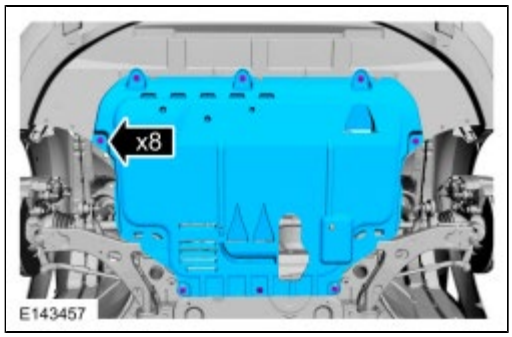

59. Refer to: Air Conditioning (A/C) System Recovery, Evacuation and Charging (412-00 Climate Control System - General Information, General Procedures).

60. Fill the engine with clean engine oil.
    Material : Motorcraft® SAE 5W-20 Premium Synthetic Blend Motor Oil / XO-5W20-QSP (WSS-M2C945-A)

Copyright © Ford Motor Company

Brake Shoe Adjustment

1. Refer to: Brake Drum (206-02 Drum Brake, Removal and Installation).
2. Using the special tool , measure the inside diameter of the brake drum.
   Special Tool(s) : 206-D002 (D81L-1103-A) Gauge, Brake Adjustment

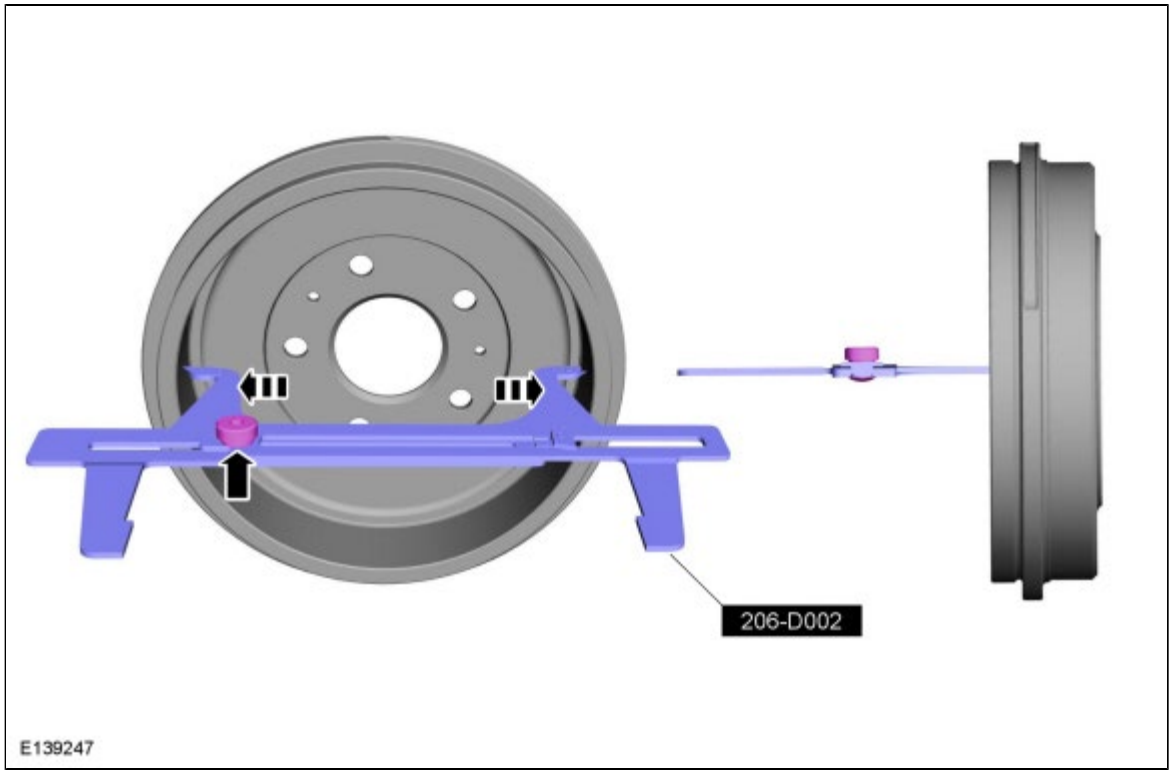

3. Position the special tool on the brake shoes and linings and adjust accordingly.
   Special Tool(s) : 206-D002 (D81L-1103-A) Gauge, Brake Adjustment

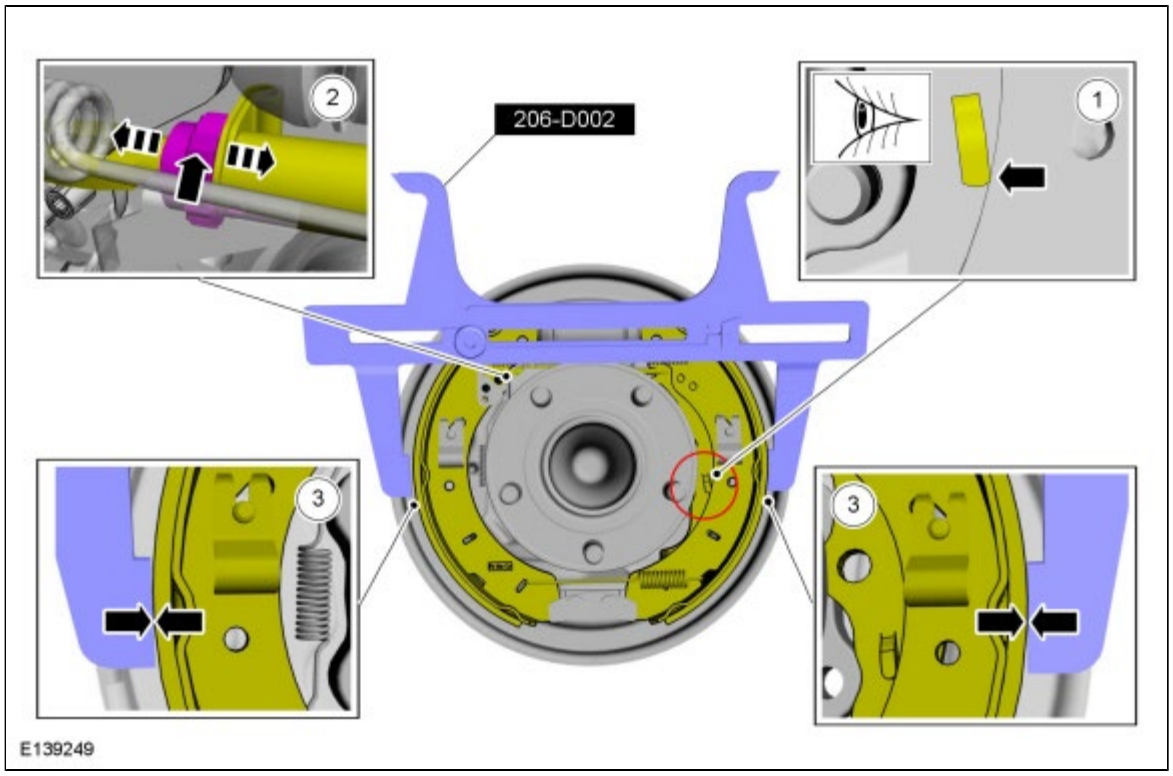

4. Refer to: Brake Drum (206-02 Drum Brake, Removal and Installation).

Copyright © Ford Motor Company

Crankshaft Main Bearing Journal Clearance

NOTE: *Refer to the appropriate Section 303-01 for the specification.*

1. **NOTE:** *Crankshaft main bearing journals must be within specifications before checking journal clearance.*

   Remove the crankshaft main bearing cap and crankshaft main bearing.

2. Position a piece of Plastigage across the crankshaft main bearing surface.

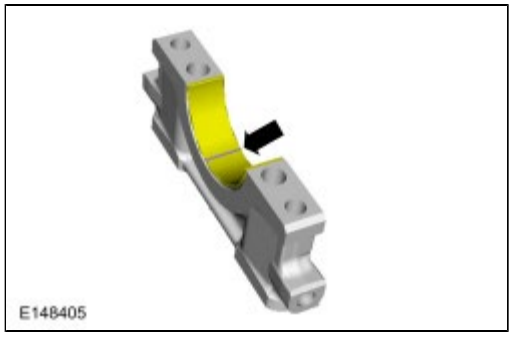

3. **NOTE:** *Do not turn the crankshaft while carrying out this procedure.*

   Install and tighten to specifications, then remove the crankshaft main bearing cap.

4. Measure the Plastigage to get the crankshaft main bearing clearance. The Plastigage should be smooth and flat. A changing width indicates a tapered or damaged crankshaft or crankshaft bearing.

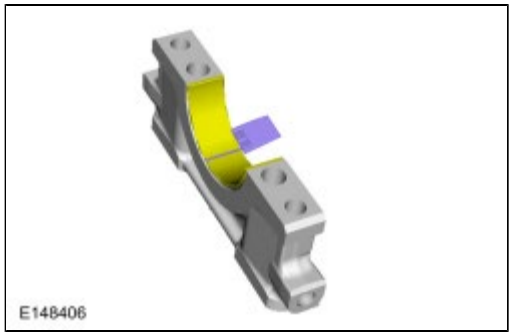

Copyright © Ford Motor Company

Cylinder Block Core Plug Replacement

All core plugs

1. **NOTE:** *Cylinder block core plug shown, cylinder head core plug similar.*

   Using the Slide Hammer and a commercially available body dent puller attachment or commercially available freeze plug puller remove the core plug.
   Special Tool(s) : 100-001 (T50T-100-A) Slide Hammer

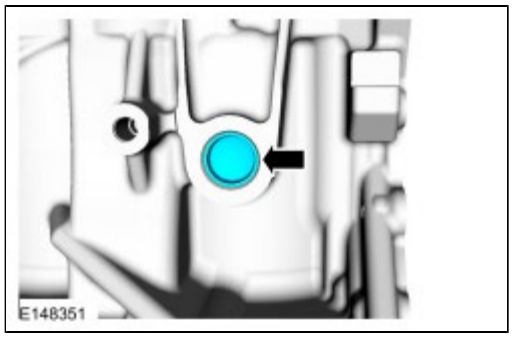

2. **NOTE:** *Oversize plugs are identified by the OS stamped in the flat located on the cup side of the plug.*

   Inspect the core plug bore for any damage that would interfere with the correct sealing of the plug. If the core plug bore is damaged, bore for the next oversize plug.

Cup-type

3. **NOTE:** *Use care during this procedure so as not to disturb or distort the cup sealing surface.*

   NOTE: *When installed, the flanged edge must be below the chamfered edge of the bore to effectively seal the bore.*

   Coat the cup-type core plug and bore lightly with sealant and install the core plug using a freeze plug installer. Remove the excess sealant after installation.
   Material : Threadlock and Sealer / TA-25 (WSK-M2G351-A5)

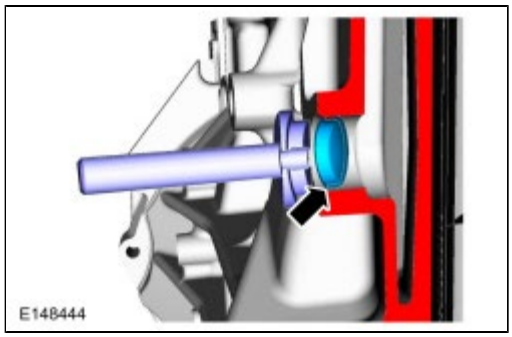

Expansion-type

4. **NOTE:** *Do not contact the crown when installing an expansion-type core plug. This could expand the plug before seating and result in leakage.*

   Coat the expansion-type core plug and bore lightly with sealant and install the core plug using a freeze plug installer. Remove the excess sealant after installation.
   Material : Threadlock and Sealer / TA-25 (WSK-M2G351-A5)

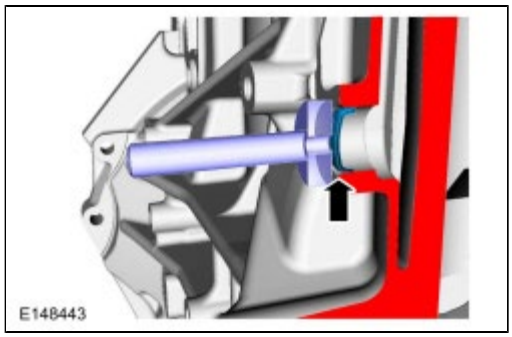

Copyright © Ford Motor Company

Piston Selection

NOTE: *Refer to the appropriate Section 303-01 for the specifications.*

1. **NOTE:** *The cylinder bore must be within the specifications for taper and out-of-round before fitting a piston.*

   - Measure the cylinder bore in 2 directions.
   - Select a piston size based on the cylinder bore.

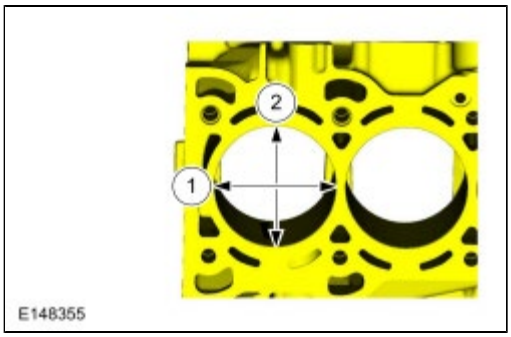

2. **NOTE:** *For precision fit, new pistons are divided into 3 categories within each size range based on their relative position within the range. A paint spot or specific size grade on a new piston indicates the position within the size range.*

   Choose the piston with the correct paint color or specific size grade.

Copyright © Ford Motor Company

Variable Valve Timing (VVT) Unit

Removal

NOTICE: During engine repair procedures, cleanliness is extremely important. Any foreign material, including any material created while cleaning gasket surfaces, that enters the oil passages, coolant passages or the oil pan can cause engine failure.

1. Refer to: Timing Drive Components (303-01A Engine - 2.0L Duratec-HE (125kW/170PS) - MI4, Removal and Installation).
2. **NOTICE: The Camshaft Alignment Tool is for camshaft alignment only. Using this tool to prevent engine rotation can result in engine damage.**

   Using the flats on the exhaust and intake camshaft to prevent camshaft rotation, loosen the exhaust and intake VCT unit bolts.

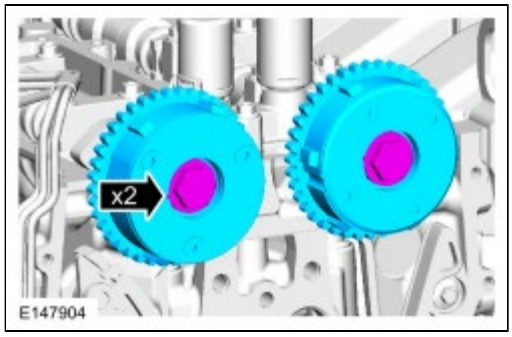

Installation

1. **NOTE:** *The VCT unit bolts are final torqued in the timing drive installation procedure.*

   Position the exhaust and intake VCT unit and install the bolts finger tight.

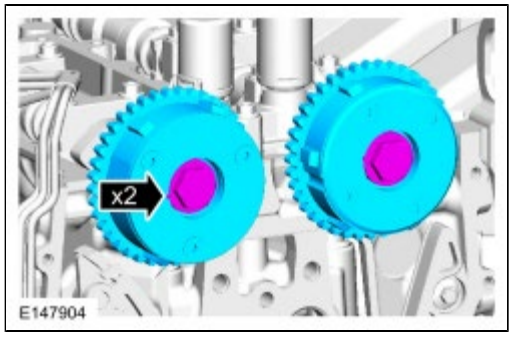

2. Refer to: Timing Drive Components (303-01A Engine - 2.0L Duratec-HE (125kW/170PS) - MI4, Removal and Installation).

Copyright © Ford Motor Company

Valve Stem Seals

Removal

NOTICE: During engine repair procedures, cleanliness is extremely important. Any foreign material, including any material created while cleaning gasket surfaces, that enters the oil passages, coolant passages or the oil pan can cause engine failure.

1. Remove the valve spring from the valve being serviced.
   Refer to: Valve Springs (303-01A Engine - 2.0L Duratec-HE (125kW/170PS) - MI4, Removal and Installation).

2.
   - Position the Valve Stem Oil Seal Remover and the Slide Hammer over the seal.
     Special Tool(s) : 303-468 (T94P-6510-AH) Remover, Valve Stem Oil Seal , 307-005 (T59L-100-B) Slide Hammer
   - Pull up on the Slide Hammer and remove the seal.

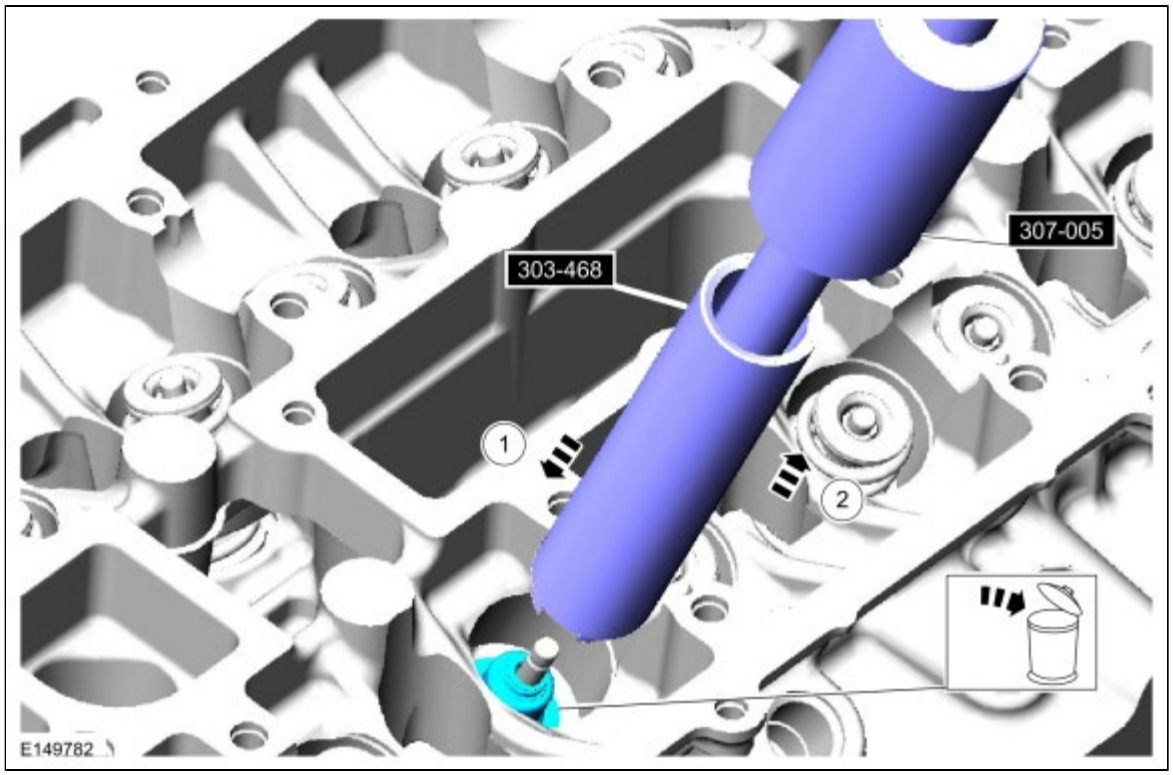

Installation

1. **NOTE:** *Lubricate the valve seal with clean engine oil prior to installing.*

   Special Tool(s) : 303-470 (T94P-6510-CH) Installer, Valve Stem Oil Seal
   Material : Motorcraft® SAE 5W-20 Premium Synthetic Blend Motor Oil / XO-5W20-QSP (WSS-M2C945-A)

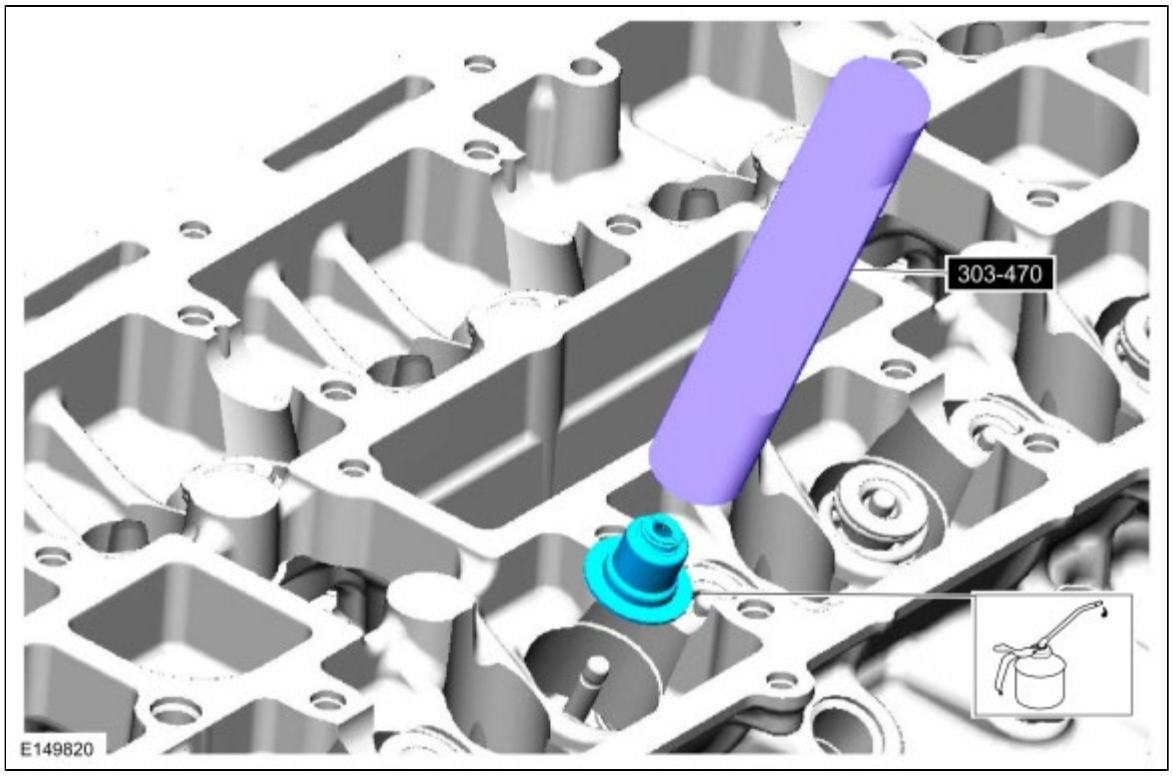

2. Install the valve spring onto the valve being serviced.
   Refer to: Valve Springs (303-01A Engine - 2.0L Duratec-HE (125kW/170PS) - MI4, Removal and Installation).

3. Repeat the appropriate removal and installation steps for all of the other cylinders.

Copyright © Ford Motor Company

Oil Pressure Switch

Removal

NOTE: *Removal steps in this procedure may contain installation details.*

1. Refer to: Jacking and Lifting - Overview (100-02 Jacking and Lifting, Description and Operation).
2. 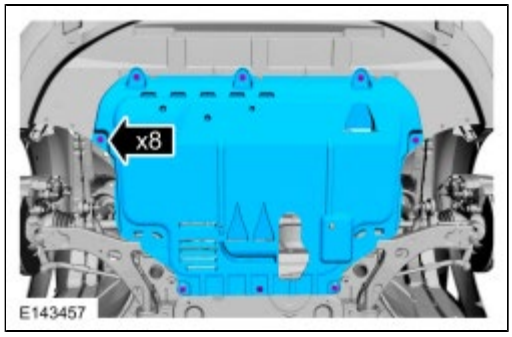

3. 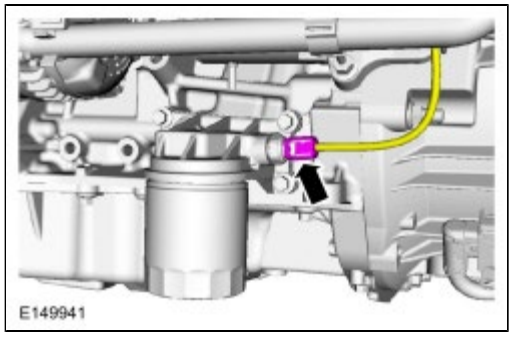

4. **NOTE:** *Apply thread sealant to the oil pressure switch threads.*

   Material : Thread Sealant with PTFE / TA-24 (WSK-M2G350-A2)
   Torque : 12 Nm

   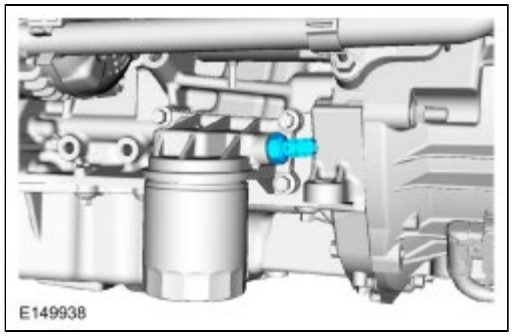

Installation

1. To install, reverse the removal procedure.

Copyright © Ford Motor Company

Cooling System Flushing

1. **WARNING: Before beginning any service procedure in this section, refer to Safety Warnings in section 100-00 General Information. Failure to follow this instruction may result in serious personal injury.**

   Refer to: Engine Cooling System Health and Safety Precautions (100-00 General Information, Description and Operation).

2. Add Motorcraft Premium Cooling System Flush to the cooling system and follow the directions on the package.
   Material : Motorcraft® Premium Cooling System Flush / VC-1 (ESR-M14P7-A)

3. Remove the radiator.
   Refer to: Radiator (303-03A Engine Cooling - 2.0L Duratec-HE (125kW/170PS) - MI4, Removal and Installation).

4. **NOTICE: Radiator internal pressure must not exceed 138 kPa (20 psi), or the radiator may be damaged.**

   Position the radiator with the upper radiator hose connection facing down. Use a high pressure water hose to backflush the radiator through the lower radiator hose connection.

5. Remove the thermostat housing.
   Refer to: Thermostat Housing (303-03A Engine Cooling - 2.0L Duratec-HE (125kW/170PS) - MI4, Removal and Installation).

6. Position a high pressure water hose into the upper radiator hose and backflush the engine.

7. Install the thermostat housing.
   Refer to: Thermostat Housing (303-03A Engine Cooling - 2.0L Duratec-HE (125kW/170PS) - MI4, Removal and Installation).

8. Install the radiator.
   Refer to: Radiator (303-03A Engine Cooling - 2.0L Duratec-HE (125kW/170PS) - MI4, Removal and Installation).

9. Fill and bleed the cooling system.
   Refer to: Cooling System Draining and Vacuum Filling (303-03A Engine Cooling - 2.0L Duratec-HE (125kW/170PS) - MI4, General Procedures).
   Refer to: Cooling System Draining, Filling and Bleeding (303-03A Engine Cooling - 2.0L Duratec-HE (125kW/170PS) - MI4, General Procedures).

Copyright © Ford Motor Company

Degas Bottle

Removal

NOTE: *Removal steps in this procedure may contain installation details.*

1. **WARNING: Before beginning any service procedure in this section, refer to Safety Warnings in section 100-00 General Information. Failure to follow this instruction may result in serious personal injury.**

   Refer to: Engine Cooling System Health and Safety Precautions (100-00 General Information, Description and Operation).

2. Slowly turn the pressure relief cap 1/2 turn and step back while the pressure is released. When all the pressure is released, remove the pressure relief cap.

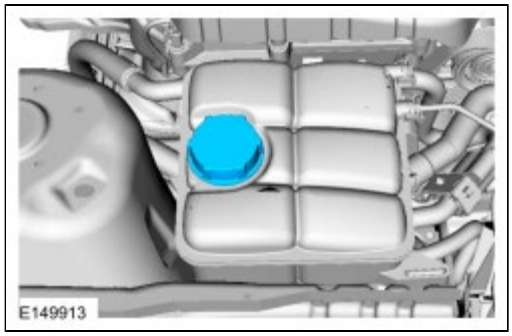

3. *General Equipment* : Hose Clamp(s)

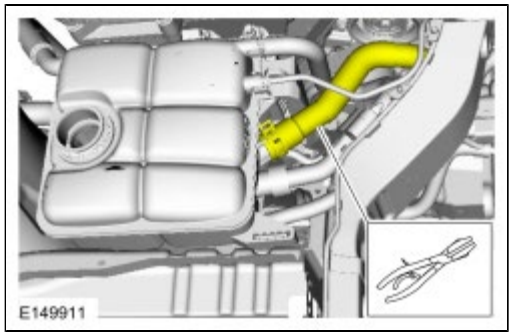

4.

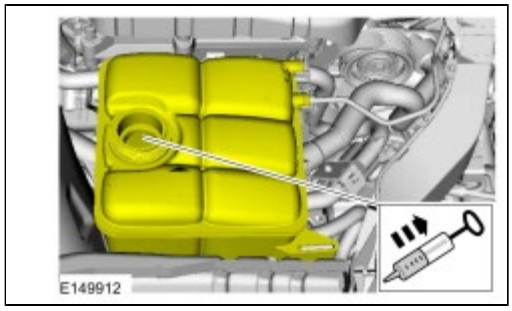

5. *General Equipment* : Hose Clamp Remover/Installer

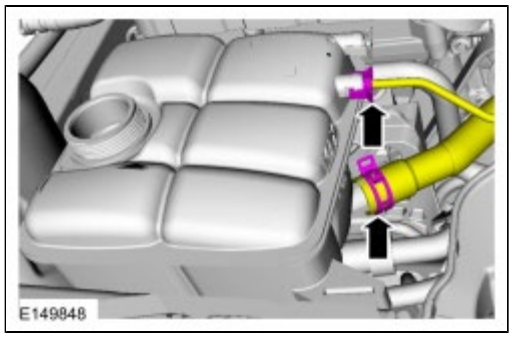

6.

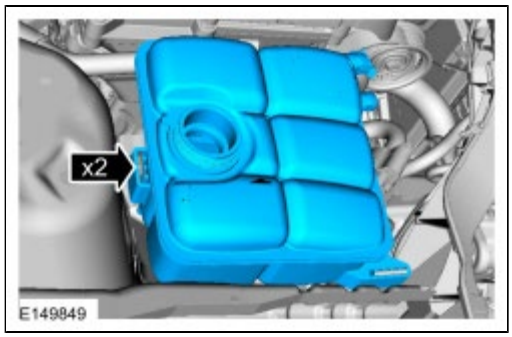

Installation

1. To install, reverse the removal procedure.
2. Fill the degas bottle to the MIN line.
   Material : Motorcraft® Orange Antifreeze/Coolant Prediluted / VC-3DIL-B (WSS-M97B44-D2)
3. Tighten the pressure relief cap until at least one audible click is heard.

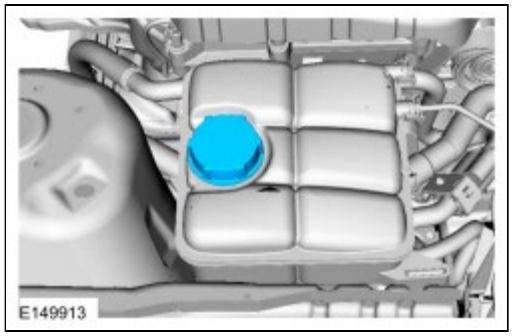

Copyright © Ford Motor Company

Roof Opening Panel Shield

Removal

NOTE: *Removal steps in this procedure may contain installation details.*

1. **WARNING: Before beginning any service procedure in this section, refer to Safety Warnings in section 100-00 General Information. Failure to follow this instruction may result in serious personal injury.**

   Refer to: Health and Safety Precautions (100-00 General Information, Description and Operation).

2. Refer to: Roof Opening Panel Glass (501-17 Roof Opening Panel, Removal and Installation).

3. Refer to: Trough Assembly (501-17 Roof Opening Panel, Removal and Installation).

4. **NOTICE: Pull up on the center of the shade only enough to disengage the foot from the track.**

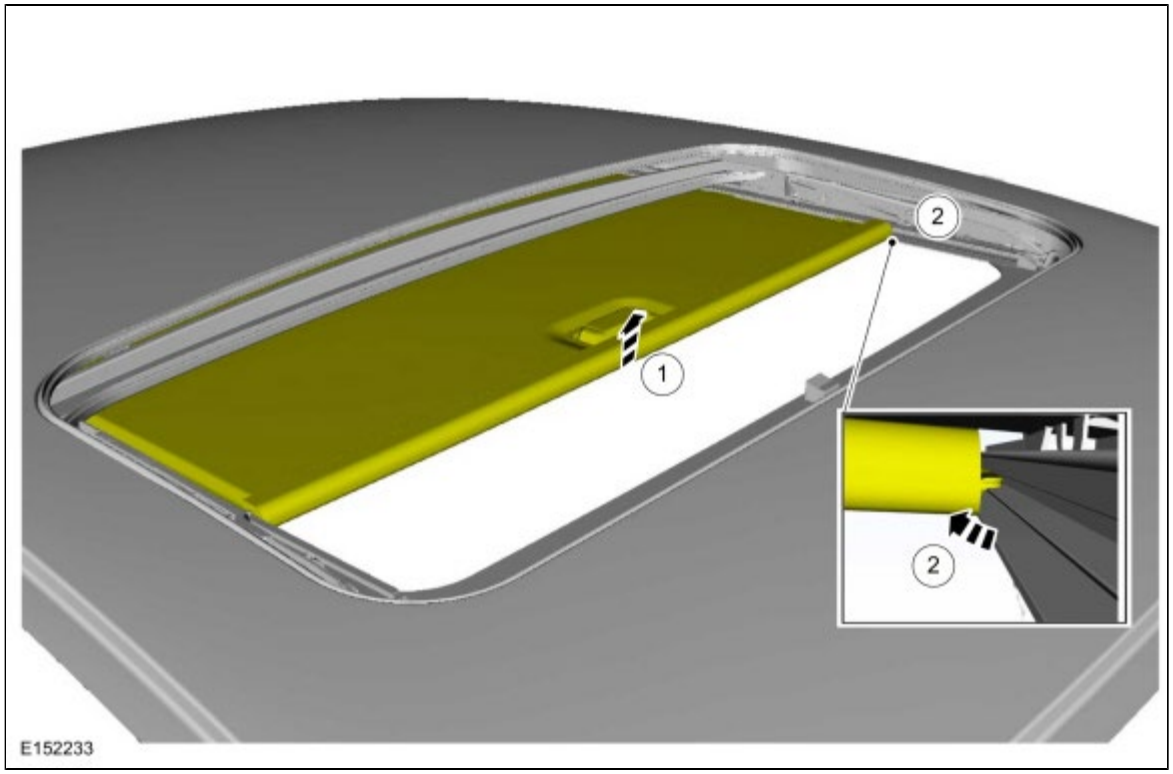

5.

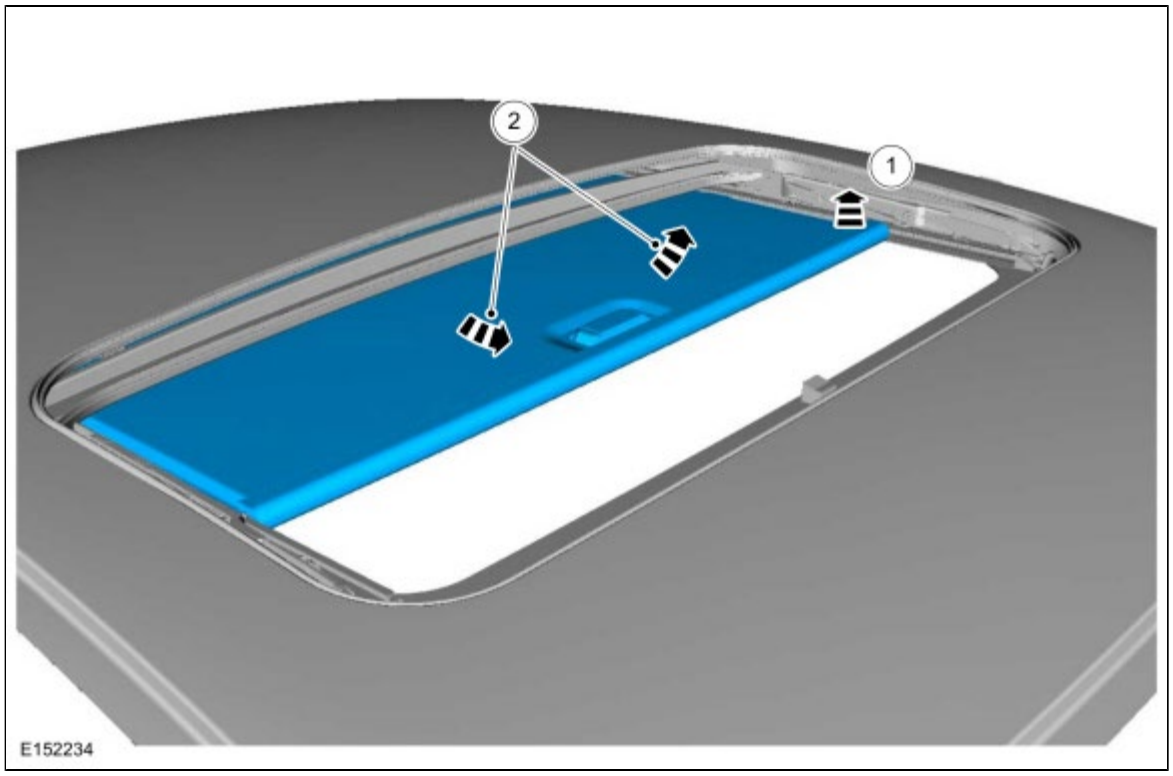

Installation

1. To install, reverse the removal procedure.

Copyright © Ford Motor Company

Anti-Lock Brake System (ABS) and Stability Control - Overview

Overview

The ABS and stability control systems are comprised of the following subsystems which assist the driver in maintaining control of the vehicle:

- ABS
- EBD
- Traction control
- Electronic Stability Control (ESC)
- Hill start assist

The ABS helps maintain steering control by preventing the wheels from locking up during hard braking. The ABS also includes a brake assist function that will provide maximum brake system pressure during a severe braking situation.

The EBD system helps maintain vehicle control by keeping a balanced braking condition between the front and rear wheels.

The traction control system helps prevent loss of traction by reducing drive-wheel spin during acceleration.

The Electronic Stability Control (ESC) system helps prevent skids or lateral slides by modulating brake fluid pressure to individual brake calipers and reducing engine torque.

The hill start assist system prevents vehicle roll back when pulling away while stopped on an incline without the use of the parking brake.

Some noise from the system and pulsations in the brake pedal are normal conditions during most ABS and stability control system activations. Also, longer than normal brake pedal travel may be experienced immediately following an ABS and stability control system activation.

Copyright © Ford Motor Company

Anti-Lock Brake System (ABS) and Stability Control - System Operation and Component Description

System Operation

System Diagram

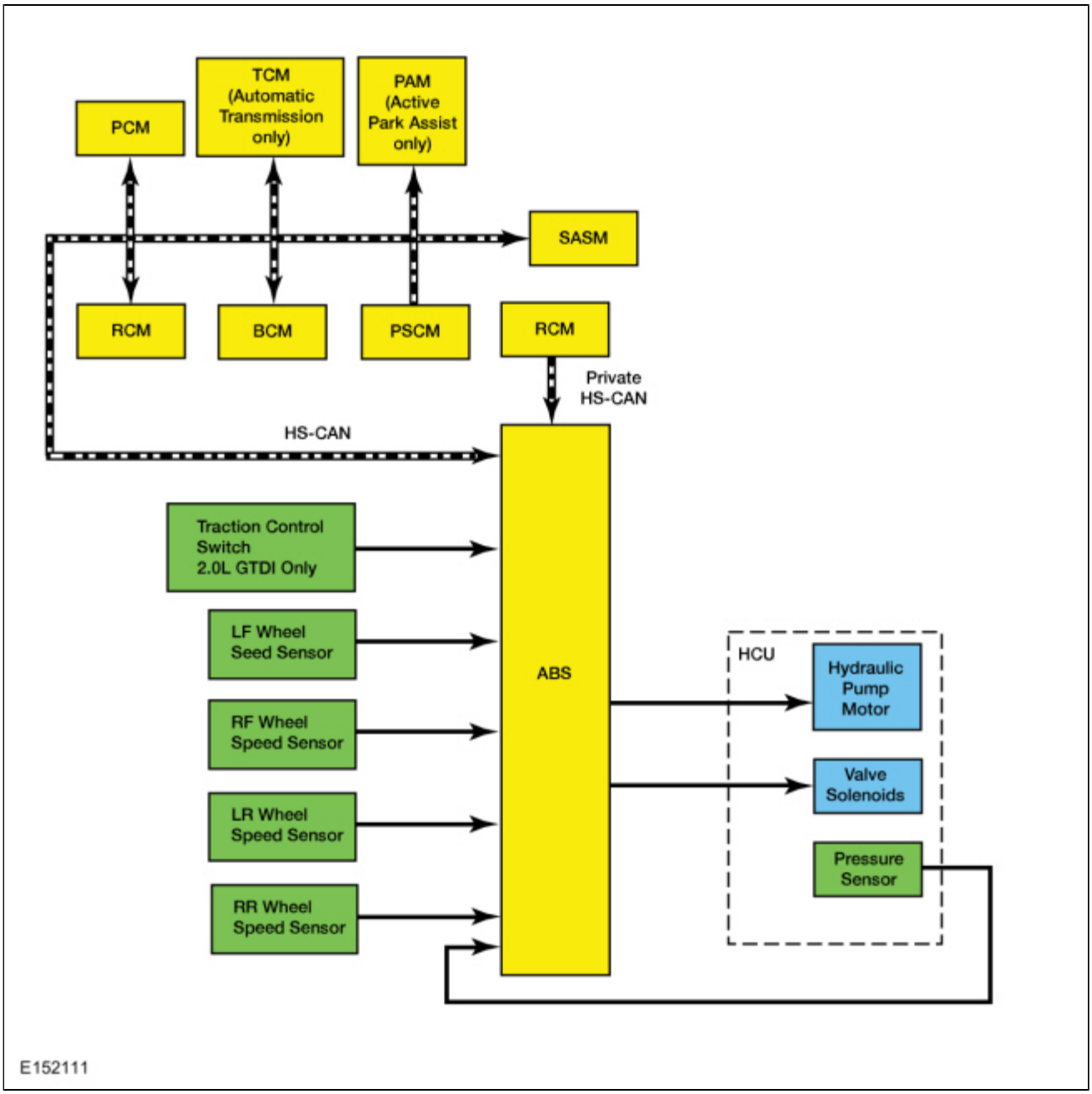

Network Message Chart

Module Network Input Messages - ABS Module

Broadcast Message	Originating Module	Message Purpose

Accelerator pedal position	PCM	The ABS module uses accelerator pedal position information for correct operation of the traction control, Electronic Stability Control (ESC) and hill start assist systems.
Brake on/off switch	PCM	This message informs the ABS module the driver has pressed the brake pedal. This message is also used by the ABS module to check the brake pressure sensor located inside the HCU .
Clutch Pedal Position	PCM	This message informs the ABS module the driver has pressed the clutch pedal. This message is used by the ABS module for the hill start assist system.
Cruise control status	PCM	This message informs the ABS module of the current status of the cruise control system; off, denied, standby or active.
Driver request traction control mode	BCM	This message informs the ABS module the driver has disabled the traction control function.
Power pack status	PCM	This message provides the ABS module with the current engine status; awake, ready, pre-starting, starting in process, running_running, running_standby, running_starting in progress, running_remote started and after run.
RCM serial number	RCM	The ABS module stores the RCM serial number and verifies the serial number when the vehicle is started or the ignition is set to run or accessory. Over time, the ABS module learns the offset of the stability sensors inside the RCM . When a new serial number is found and the IVD Initialization procedure is carried out using a scan tool, the ABS module resets the offset number learned for Electronic Stability Control (ESC).
Reverse gear status	PCM (manual transmission only)	This message informs the ABS module when the transmission is in reverse gear, this is used for the hill start assist system and the Electronic Stability Control (ESC) system. The hill start assist system works in forward and reverse gears. The Electronic Stability Control (ESC) system does not operate when the transmission is in REVERSE.
Selector lever (PRNDL) status	TCM (automatic transmission only)	This message informs the ABS module when the transmission is in reverse gear, this is used for the hill start assist system and the Electronic Stability Control (ESC) system. The hill start assist system works in forward and reverse gears. The Electronic Stability Control (ESC) system does not operate when the transmission is in REVERSE.
Steering angle counter	SASM	The ABS module uses steering angle sensor information for Electronic Stability Control (ESC) system operation. This message provides the ABS module with the current steering wheel angle count.
Steering angle status	SASM	The ABS module uses steering angle sensor information for Electronic Stability Control (ESC) system operation. This message provides the ABS with the current steering angle sensor status; operational with no faults detected, SASM not initialized with no faults detected and fault detected.
Steering wheel direction of travel	SASM	The ABS module uses steering angle sensor information for Electronic Stability Control (ESC) system operation. This message provides the ABS module with the current steering wheel direction of travel.
Torsion bar torque	PSCM	The ABS module uses steering angle sensor information for Electronic Stability Control (ESC) system operation. This message provides the ABS module with the current amount of torque being applied to the steering system.
Vehicle configuration data	BCM	This message provides the ABS module with the current optional and configured items such as tire size, axle ratio, manual or automatic transaxle, keyless entry and VIN .

Module Network Input Messages - SASM Module

Broadcast Message	Originating Module	Message Purpose
Power mode	BCM	This message provides the SASM with the current ignition status; key in, key out, accessory, ignition ON, engine running and engine cranking.

Anti-Lock Brake System (ABS) Function

The ABS module continuously monitors brake pedal input, lateral vehicle motion and the rotational speed of each wheel. The PCM sends the brake pedal switch information to the ABS module over the High Speed Controller Area Network (HS-CAN) while the RCM sends lateral acceleration sensor information to the ABS module over a private High Speed Controller Area Network (HS-CAN). Wheel speed information is retrieved by the ABS module using 4 active wheel speed sensors. When the ABS module detects an impending wheel lock during a braking event, it modulates brake pressure to the appropriate brake caliper(s) or wheel cylinder(s) by opening and closing the appropriate solenoid valves inside the HCU while the hydraulic pump motor is activated. Once the affected wheel(s) return to the desired speed, the ABS module returns the solenoid valves in the HCU to their normal position.

The ABS module has 2 self-test options, one is carried out using the scan tool and the other is carried out when the ignition is set to RUN. During either self-test the ABS module carries out a preliminary electrical check of the system sensors and activates the hydraulic pump motor for approximately one-half second. During this time, a buzzing or humming noise may be heard and a vibration may be felt in the brake pedal and is a normal condition. During the module initialized self-test, the pump motor check is carried out at approximately 10 km/h (6 mph). Any malfunction detected in the system causes the module to set a DTC , disable the ABS function and send a message over the High Speed Controller Area Network (HS-CAN) to the BCM . The BCM then sends a message to the IPC over the Medium Speed Controller Area Network (MS-CAN) to illuminate the ABS warning indicator. The base hydraulic power-assist braking system functions normally.

Electronic Brake Force Distribution (EBD)

On initial application of the brake pedal, full pressure is applied to the rear brakes. The ABS module then uses wheel speed sensor inputs to evaluate rear wheel slip. Once the rear wheel slip exceeds a predetermined threshold, the ABS module commands the HCU to close the appropriate isolation valves to hold the rear brake pressure constant while allowing the front brake pressure to build. This creates a balanced braking condition between the front and rear wheels. If the rear wheel slip continues and exceeds a second predetermined threshold, the ABS module commands the HCU to open the dump valves to decrease the rear brake pressure and allow the rear wheels to recover. A slight bump sensation may be felt in the brake pedal when EBD is active. If the ABS is disabled due to Diagnostic Trouble Codes (DTCs) being present in the ABS module, EBD continues to function unless the Diagnostic Trouble Codes (DTCs) are for wheel speed sensors or the HCU . When EBD is disabled, the ABS warning indicator, the red brake warning indicator and traction control indicator illuminate.

Traction Control

The ABS module continuously monitors and compares the rotational speed of the drive wheels in relation to the non-driven wheels. When the drive wheels begin to spin faster than the non-driven wheels, the ABS module modulates brake pressure to the appropriate brake caliper(s) or wheel cylinder(s) by opening and closing the appropriate solenoid valves inside the HCU while the hydraulic pump motor is activated. At the same time, the ABS module calculates how much engine torque reduction is required to eliminate the wheel slip and sends this torque reduction message to the PCM over the High Speed Controller Area Network (HS-CAN). The ABS module also sends a traction event message to the BCM over the High Speed Controller Area Network (HS-CAN), the BCM relays the traction event message to the IPC over the Medium Speed Controller Area Network (MS-CAN). When the PCM receives the torque reduction message it adjusts engine timing and decreases fuel injector pulses to reduce the engine torque to the requested level. When the IPC receives the traction event message it flashes the stability/traction control indicator (sliding car icon). Once the driven wheel speed returns to the desired speed, the ABS module returns the solenoid valves in the HCU to their normal position, deactivates the hydraulic pump motor and stops sending the traction event and torque reduction messages. The PCM returns engine timing and fuel injectors to normal operation and the IPC extinguishes the sliding car icon. After the vehicle speed exceeds 100 km/h (62 mph), traction control is accomplished only through the PCM torque control.

On vehicles equipped with a 2.0L Gasoline Direct Injection (GDI) engine, a message center and steering wheel switches, the traction control function can be disabled by the driver through the menu in the message center. Refer to the Owner's Literature for instructions on disabling the traction control function. This is independent of the ABS and Electronic Stability Control (ESC) functions, which cannot be disabled by the driver. When the driver disables the traction control function through the message center, the BCM communicates traction control function status to the ABS module via the High Speed Controller Area Network (HS-

CAN). The ABS module takes no further action in regards to traction control until the driver activates the function or until the ignition is cycled from OFF to ON.

On vehicles equipped with a 2.0L Gasoline Turbocharged Direct Injection (GTDI) engine, the traction control function can be disabled by the driver through the Electronic Stability Control (ESC) OFF switch. Pressing the switch once disables the traction control function and reduces the amount of Electronic Stability Control (ESC) intervention. Pressing and holding the switch for 5 seconds disables both traction control and the Electronic Stability Control (ESC). The system remains in the selected state until the driver enables the systems by pressing the Electronic Stability Control (ESC) OFF switch once or until the ignition is cycled from OFF to ON.

The traction control function is disabled if there are any wheel speed sensor or solenoid valve Diagnostic Trouble Codes (DTCs) present in the ABS module. The traction control function is also disabled if there is a communication error between the ABS module and the PCM . When the traction control function is disabled, due to driver selection, Diagnostic Trouble Codes (DTCs) or a loss of communication, the ABS module sends a message to the BCM which relays the message to the IPC over the Medium Speed Controller Area Network (MS-CAN) to illuminate the sliding car OFF icon.

Electronic Stability Control (ESC)

The ABS module continuously monitors the vehicle motion relative to the intended course. This is done by using sensors to compare the steering wheel input and the yaw rate sensor input with the actual vehicle motion. The SASM sends the steering wheel angle and rate of change information to the ABS module over the High Speed Controller Area Network (HS-CAN) while the RCM sends yaw rate sensor information to the ABS module over a private High Speed Controller Area Network (HS-CAN). If the ABS module determines from the inputs that the vehicle is unable to travel in the intended direction, it modulates brake pressure to the appropriate brake caliper(s) or wheel cylinder(s) by opening and closing the appropriate solenoid valves inside the HCU while the hydraulic pump motor is activated. At the same time, the ABS module calculates how much engine torque reduction is required to reduce vehicle speed to help stabilize the vehicle and sends this torque reduction message to the PCM over the High Speed Controller Area Network (HS-CAN). The ABS module also sends a traction event message to the BCM over the High Speed Controller Area Network (HS-CAN), the BCM relays the traction event message to the IPC over the Medium Speed Controller Area Network (MS-CAN). When the PCM receives the torque reduction message it adjusts engine timing and decreases fuel injector pulses to reduce the engine torque to the requested level. When the IPC receives the traction event message it flashes the stability/traction control indicator (sliding car icon). Once the vehicle instability has been corrected, the ABS module returns the solenoid valves in the HCU to their normal position, deactivates the hydraulic pump motor and stops sending the traction event and torque reduction messages. The PCM returns engine timing and fuel injectors to normal operation and the IPC extinguishes the sliding car icon.

On vehicles equipped with a 2.0L Gasoline Turbocharged Direct Injection (GTDI) engine, the Electronic Stability Control (ESC) function can be disabled by the driver through the Electronic Stability Control (ESC) OFF switch. Pressing the switch once disables the traction control function and reduces the amount of Electronic Stability Control (ESC) intervention. Pressing and holding the switch for 5 seconds disables both traction control and the Electronic Stability Control (ESC). The system remains in the selected state until the driver enables the systems with a single press of the Electronic Stability Control (ESC) OFF switch or until the ignition is cycled from OFF to ON.

The Electronic Stability Control (ESC) function does not operate with the transmission in REVERSE. The Electronic Stability Control (ESC) function is disabled if there are any wheel speed sensor, stability sensor or steering angle sensor Diagnostic Trouble Codes (DTCs) present in the ABS module. Also, if there is a communication error between the ABS module and the SASM or the RCM , the Electronic Stability Control (ESC) function is disabled. When the Electronic Stability Control (ESC) function is disabled, due to driver selection, Diagnostic Trouble Codes (DTCs) or a loss of communication, the ABS module sends a message to the BCM which relays the message to the IPC over the Medium Speed Controller Area Network (MS-CAN) to illuminate the sliding car OFF icon.

Hill Start Assist

When the vehicle is stopped on an incline greater than 1.5 degrees (approximately a 3% grade), the ABS module holds the brake pressure for approximately 1.5 seconds while the driver transitions from the brake pedal to the accelerator pedal. This is accomplished by monitoring several High Speed Controller Area Network (HS-CAN) messages and several sensors to determine if the vehicle is stopped and not parked, and if the vehicle is on an appropriate incline. The brake pedal message sent from the PCM over the High Speed Controller Area Network (HS-CAN) and the wheel speed sensor inputs allow the ABS module to determine that the vehicle has come to a complete stop. The transmission selector lever message sent by the TCM (on automatic transmissions) and the clutch pedal position message sent by the PCM (on manual transmissions) inform the ABS module that the vehicle is not parked. The stability sensor messages sent by the RCM over the private High Speed Controller Area Network (HS-CAN) enable the ABS module to determine if the vehicle is on an incline greater than 1.5 degrees (approximately a 3% grade). Once the above conditions have been met, the hill start assist function automatically engages. As the driver releases the brake

pedal, the ABS module commands the HCU to close the isolation valves which maintains the current brake system pressure, preventing the vehicle from rolling down the incline. Once the driver presses the accelerator pedal and the engine Revolutions Per Minute (RPM) increases, the ABS module gradually releases the brake pressure to make sure the vehicle is neither rolling back nor driving off until there is sufficient driving torque to accelerate the vehicle forward (or backward if reversing up the incline).

MyKey® Interaction

Through the MyKey® feature, the traction control function of the vehicle dynamic system can be configured to be always on or to allow the driver to select the traction control function on or off. When the traction control function is configured to be always on and a MyKey® restricted key is in use on vehicle equipped with a 2.0L Gasoline Direct Injection (GDI) engine and a message center, the IPC ignores any requests made by the driver to disable the traction control function and does not send any traction control disable messages to the ABS module. On vehicles equipped with a 2.0L Gasoline Turbocharged Direct Injection (GTDI) engine, the ABS module ignores any driver input through the Electronic Stability Control (ESC) OFF switch. Refer to the Owner's Literature for additional information on the various MyKey® settings.

Stability-Traction Control Indicator (Sliding Car Icon)

Refer to: Instrument Panel Cluster (IPC) - System Operation and Component Description (413-01 Instrumentation, Message Center and Warning Chimes, Description and Operation).

Stability-Traction Control Disabled Indicator (Sliding Car OFF Icon)

Refer to: Instrument Panel Cluster (IPC) - System Operation and Component Description (413-01 Instrumentation, Message Center and Warning Chimes, Description and Operation).

Component Description

Anti-Lock Brake System (ABS) Module

The ABS module is attached directly to the HCU and is the electronic control unit for the ABS and stability control functions. The module monitors all sensor inputs and all High Speed Controller Area Network (HS-CAN) messages that relate to ABS and stability control, and then directly controls the solenoid valves and the hydraulic pump motor in the HCU . The ABS module and HCU are serviced as an assembly. When a new ABS and HCU is installed, the module must be programmed with the vehicle information. Refer to: Module Configuration - System Operation and Component Description (418-01 Module Configuration, Description and Operation).

When an ABS or stability control fault has been corrected or a new component has been installed, the ABS module must be calibrated. The calibration procedure is required for the stability control sensors to learn the zero-position of the vehicle which means the vehicle must be on a level surface and not moving. The calibration procedure (IVD Initialization) is carried out using a diagnostic scan tool.

Hydraulic Control Unit (HCU)

The HCU contains the solenoid valves, the hydraulic pump motor and the pressure sensor used by the ABS for the various vehicle dynamic systems. The ABS module and the HCU are attached directly together and are serviced as an assembly.

Wheel Speed Sensor

On vehicles not equipped with active park assist, all 4 wheel speed sensors are active (magneto resistive) sensors that operate on the Hall-effect principle to generate a square wave signal that is proportional to the rotational speed of the wheel. Because these are active sensors, receiving voltage from the ABS module and then sending a varying voltage back to the ABS module, they are able to detect much lower rotational speeds than passive (magnetic inductive) sensors. Each wheel speed sensor is connected to the ABS module by 2 circuits. One circuit provides voltage for sensor operation and the other circuit provides sensor input to the ABS module.

On vehicles equipped with active park assist, both rear wheel speed sensors are active, bi-directional sensors. Each of the 2 sensors contain 2 sensing elements mounted side-by-side. Because the 2 sensing elements are mounted next to each other the 2 voltage signals are slightly out of phase, which causes one element to generate a voltage signal before the other element. This allows the ABS module to not only determine wheel speed, but also wheel direction for active park assist.

Wheel Speed Sensor Encoders

The wheel speed sensor encoders are several magnets arranged in a circle around one side of the wheel bearing in alternating poles. As the wheel bearing rotates the wheel speed sensor is exposed to alternating north-south magnetic fields. The encoder is part of the wheel bearing and is serviced with the wheel bearing.

Stability Control Sensors

The stability control sensors for the traction control and Electronic Stability Control (ESC) functions consist of the yaw rate sensor, lateral accelerometer and longitudinal accelerometer. The sensors are housed in the RCM which sends sensor information to the ABS module over a private High Speed Controller Area Network (HS-CAN). If any of the sensors are defective, a new RCM must be installed.

- The yaw rate sensor measures the yaw angle which is the difference between the direction the vehicle is pointing when cornering and the direction the vehicle is actually moving.
- The longitudinal accelerometer measures the acceleration and deceleration of the vehicle as it moves forward and backward.
- The lateral accelerometer measures the force created when a vehicle corners that tends to push a vehicle sideways.

Lateral acceleration has 2 forms. The first is the centrifugal acceleration that is generated when the vehicle travels around in a circle. The second is the acceleration due to gravity. On level ground there is no lateral acceleration due to gravity. However, if the vehicle is parked sideways on a bank or incline, the sensor measures some lateral acceleration due to gravity, even though the vehicle is not moving.

Steering Wheel Rotation Sensor

The steering wheel rotation sensor uses 2 optical sensors and a slotted wheel to measure the steering wheel rotation angle, speed and direction of rotation. The sensor is located inside the SASM and is serviced with the module.

Steering Angle Sensor Module (SASM)

The SASM transmits steering wheel position, direction and speed of rotation information on the High Speed Controller Area Network (HS-CAN). The module is self monitoring and capable of setting Diagnostic Trouble Codes (DTCs). The SASM is also self calibrating and learns the straight-ahead position of the vehicle as it is driven. However, when a new SASM is installed, the module must be programmed with the correct vehicle information.
Refer to: Module Configuration - System Operation and Component Description (418-01 Module Configuration, Description and Operation).

Electronic Stability Control (ESC) OFF Switch — 2.0L Gasoline Turbocharged Direct Injection (GTDI) Only

The Electronic Stability Control (ESC) OFF switch (also known as the stability-traction control OFF switch) is a momentary contact, push button switch that is hardwired to the ABS module.

Copyright © Ford Motor Company

Engine - Overview

Engine Information

NOTE: *When repairing engines, all parts must be contamination free. If contamination/foreign material is present when repairing an engine, premature engine failure may occur.*

NOTE: *Specifications show the expected minimum or maximum condition. Refer to the appropriate section in Group 303 for the specifications.*

NOTE: *If a component fails to meet the specifications, it is necessary to refinish it or install a new component. Wear limits are provided as an aid to determine if the component can be refinished. A new component must be installed when any component fails to meet specifications and cannot be refinished.*

NOTE: *This section contains information, steps and procedures that may not be specific to this engine.*

This section covers general procedures and diagnosis and testing of the engine system, except for exhaust emission control devices, which are covered in the PC/ED .

The engine incorporates the following features: Refer to the appropriate section in Group 303 for the procedure.

- Crankcase ventilation or breather system
- Exhaust emission control system
- EVAP control system

Some engines incorporate a fail-safe cooling system. Refer to the appropriate section in Group 303 for the procedure.

The engine, fuel system, ignition system, emissions system and exhaust system all affect exhaust emission levels and must be maintained according to the maintenance schedule. Refer to the Scheduled Maintenance Guide.

Correct engine identification is required to order parts. Refer to the appropriate section in Group 303 for the procedure.

For complete vehicle and engine identification codes,
Refer to: Identification Codes - Vehicles Built From: 11-June-2012 (100-01 Identification Codes, Description and Operation).

Copyright © Ford Motor Company

Fuel Charging and Controls - System Operation and Component Description

System Operation

Refer to Powertrain Control/Emissions Diagnosis (PC/ED) manual. See Section 1 Description and Operation.

Component Description

Refer to Powertrain Control/Emissions Diagnosis (PC/ED) manual. See Section 1 Description and Operation.

Copyright © Ford Motor Company

Starting System - Overview

Starting System - without Push Button Start

The starting system controls the cranking of the engine. The starter motor is enabled by the starter relay when the relay is activated by the PCM . The PCM receives inputs from the ignition switch, TCM (automatic transmission), CPP switch (manual transmission) and the BCM before activating the starter relay to initiate cranking of the engine.

Copyright © Ford Motor Company

Starting System - System Operation and Component Description

System Operation

System Diagram

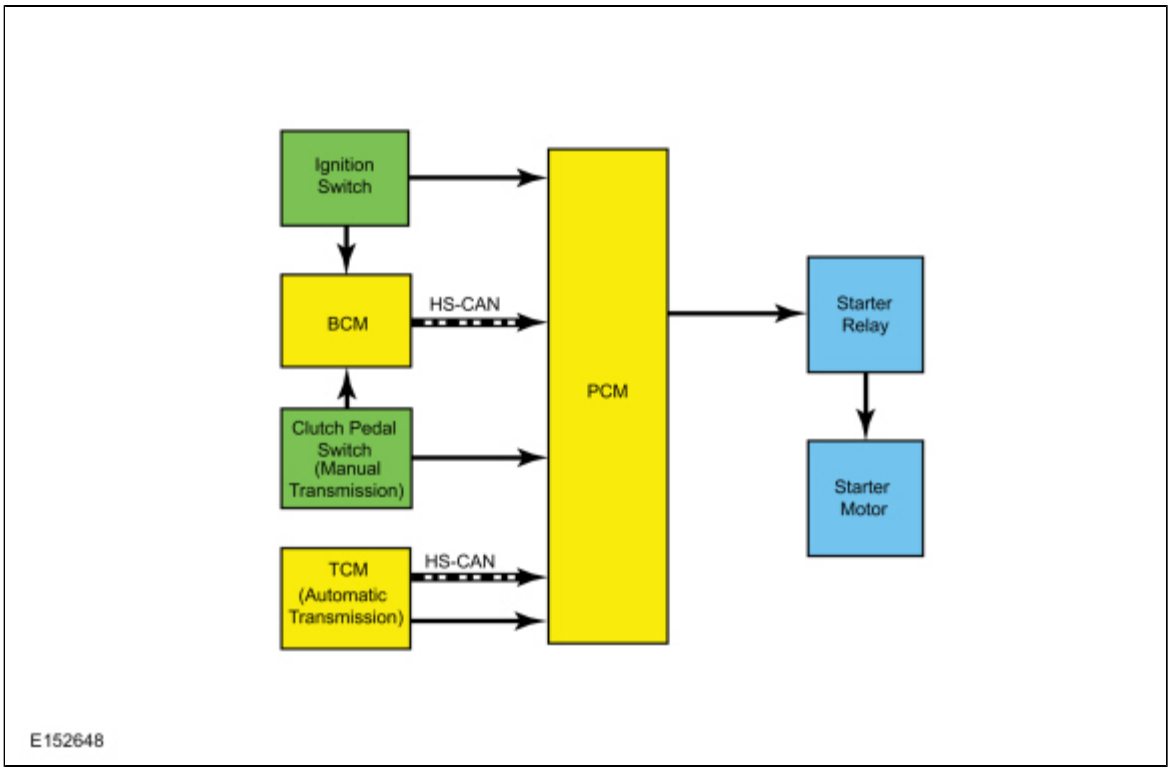

Network Message Chart

Module Network Input Messages Powertrain Control Module (PCM)

Broadcast Message	Originating Module	Message Purpose
Selector lever (PRNDL) status	TCM	Provides the PCM with the selector lever status. The PCM only energizes the starter relay if the selector lever is in PARK or NEUTRAL.
Crank request	BCM	Provides the PCM with indication that the driver has commanded the engine to crank.
Power mode	BCM	Provides the PCM with ignition mode.

Starting System

This vehicle is equipped with a PATS that disables the engine from cranking and starting if an unprogrammed PATS key is used or an invalid PCM ID is received. The PATS is controlled by the BCM . If there is a PATS concern that causes the engine to be disabled, the IPC displays the corresponding message in the message center. For additional information,
Refer to: Passive Anti-Theft System (PATS) - System Operation and Component Description (419-01B Passive Anti-Theft System (PATS), Description and Operation).
.

Under normal operation, when the ignition is turned to START, the PCM receives the inputs:

- Voltage signal on the crank detect circuit from the ignition switch.
- PATS enable message from the BCM .
- Correct transmission park or neutral input from the TCM (automatic transmission).
- Correct bottom of travel input from the CPP switch (manual transmission).

When the PCM receives the correct inputs, voltage and ground is supplied to the starter relay coil. When the starter relay coil is energized, it provides voltage to the starter solenoid, allowing the starter motor to crank and start the engine.

The PCM disengages the starter once an engine Revolutions Per Minute (RPM) threshold is reached, a set crank time is exceeded or the ignition is turned OFF.

Component Description

Integrated Keyhead Transmitter (IKT)

Refer to: Passive Anti-Theft System (PATS) - System Operation and Component Description (419-01B Passive Anti-Theft System (PATS), Description and Operation).

Passive Anti-Theft System (PATS) Transceiver

Refer to: Passive Anti-Theft System (PATS) - System Operation and Component Description (419-01B Passive Anti-Theft System (PATS), Description and Operation).

Ignition Switch

Refer to: Steering Wheel and Column Electrical Components - System Operation and Component Description (211-05 Steering Column Switches, Description and Operation).

Powertrain Control Module (PCM)

The PCM provides power and ground to the starter relay to initiate cranking of the engine.

Copyright © Ford Motor Company

Starting System - Vehicles With: Push Button Start - Overview

Starting System - with Push Button Start

The starting system controls the cranking of the engine. The starter motor is enabled by the starter relay when the relay is activated by the PCM . The PCM receives inputs from the ignition switch - push button start, TCM (automatic transmission), CPP switch (manual transmission) and BCM before activating the starter relay to initiate cranking of the engine.

Copyright © Ford Motor Company

Starting System - Vehicles With: Push Button Start - System Operation and Component Description

System Operation

System Diagram

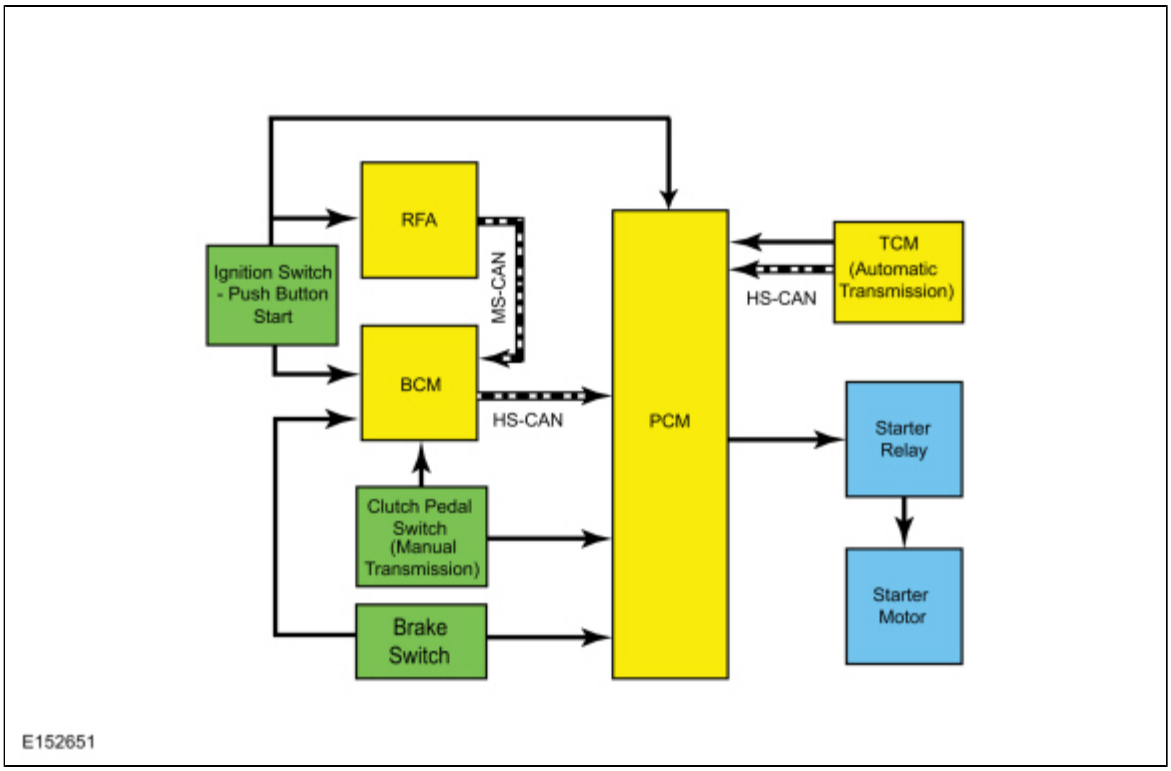

Network Message Chart

Module Network Input Messages Powertrain Control Module (PCM)

Broadcast Message	Originating Module	Message Purpose
Selector lever (PRNDL) status	TCM	Provides the PCM with the selector lever status. The PCM only energizes the starter relay if the selector lever is in PARK or NEUTRAL.
Crank request	BCM	Provides the PCM with indication that the driver has commanded the engine to crank.
Power mode	BCM	Provides the PCM with ignition mode.

Module Network Input Messages Body Control Module (BCM)

Broadcast Message	Originating Module	Message Purpose
Intelligent access	RFA module	The response from the BCM request for the RFA module ID. If the RFA module ID

system status		response is incorrect, then the PATS is disabled.

Push Button Start System

This vehicle is equipped with a PATS that disables the engine from cranking if an unprogrammed PATS key is used or an invalid PCM ID is received. The PATS is controlled by the BCM . If there is a PATS concern that causes the engine to be disabled, the IPC displays the corresponding message in the message center. For additional information,
Refer to: Passive Anti-Theft System (PATS) - System Operation and Component Description (419-01C Passive Anti-Theft System (PATS) - Vehicles With: Push Button Start, Description and Operation).

Ignition modes are controlled by the RFA module and the BCM . For additional information on the ignition switch - push button start modes,
Refer to: Steering Wheel and Column Electrical Components - System Operation and Component Description (211-05 Steering Column Switches, Description and Operation).
.

The ignition switch - push button start is connected to the RFA module and the BCM as a backup in case of a failure. If there is a circuit failure to either module from the ignition switch - push button start, the modules communicate the ignition switch - push button start request to each other over the Medium Speed Controller Area Network (MS-CAN).

During a start event the ignition switch - push button start is pressed in combination with either the brake pedal (automatic transmission) or the clutch pedal (manual transmission) input. The RFA module, the BCM and the PCM receive a request to start the engine. The PCM recognizes the correct inputs and provides voltage and ground to energize the starter relay coil and close the starter relay contacts. The starter relay contacts close, providing voltage to the starter solenoid, allowing the starter motor to crank the engine. The PCM disengages the starter motor once an engine Revolutions Per Minute (RPM) threshold is reached, a set crank time is exceeded or the ignition switch - push button start is pressed indicating an engine shutdown.

Remote Start

The remote start feature allows the operator to remotely start the engine from up to 100 meters (328 feet) away and is activated using the Passive Key. Once started, the engine runs for 10 minutes. The run time can be extended by the operator. Refer to the Owners Guide for more information.

A remote start event is initiated by pressing a sequence of buttons on the Passive key. The factory equipped remote start system does not operate if the ignition is in the RUN/START position or the hood is not closed.

The remote start system allows the operator to start the engine from up to 100 meters (328 feet) away and is activated by pressing the lock button on the Passive key once to make sure the doors are locked, followed by 2 presses of the remote start button. The 3 button presses must occur within 3 seconds of each other. The system acknowledges the start request by flashing the exterior lights twice and displaying a message in the IPC that the vehicle has successfully started. Once started, the engine runs for 10 minutes (default run time is 10 minutes; the time can be programmed by the customer to 5, 10 or 15 minutes) and the parking lights remain illuminated until the cycle is complete. The remote start duration can also be extended by initiating remote start while the first timer is still running or by initiating a completely independent start cycle when the first has completed. No more than 2 remote start sequences can occur within a one hour period, unless the ignition is set to the RUN/START position between the remote start requests. During the remote start cycle the power windows are inhibited and the radio will not turn on automatically but may be turned on manually from inside the vehicle. If the remote start system fails to start the horn will chirp twice. No message will be displayed in the IPC .

To transition from remote start mode to drive mode, use a programmed Passive key to transition to RUN. If a programmed Passive key is not used, the engine shuts off.

To deactivate the remote start system, press the remote start button once. When deactivating the remote start system the parking lights turn off to give a visual indication that the engine and climate control features have turned off. It may be necessary to be closer to the vehicle to deactivate the remote start feature than it was to initiate it due to ground deflections and added noise from the engine running.

For more information on enabling the Remote start system refer to the Owners Literature.

Component Description

Body Control Module (BCM)

Refer to: Passive Anti-Theft System (PATS) - System Operation and Component Description (419-01C Passive Anti-Theft System (PATS) - Vehicles With: Push Button Start, Description and Operation).

Passive Key

Refer to: Passive Anti-Theft System (PATS) - System Operation and Component Description (419-01C Passive Anti-Theft System (PATS) - Vehicles With: Push Button Start, Description and Operation).

Ignition Switch - Push Button Start

The ignition switch - push button start is a momentary contact switch that is hardwired to the BCM , PCM and RFA module. The ignition switch - push button start is used to obtain the OFF, ON or START ignition modes.

Remote Function Actuator (RFA) Module

Refer to: Passive Anti-Theft System (PATS) - System Operation and Component Description (419-01C Passive Anti-Theft System (PATS) - Vehicles With: Push Button Start, Description and Operation).

Powertrain Control Module (PCM)

The PCM provides power and ground to the starter relay to initiate cranking of the engine.

Copyright © Ford Motor Company

Engine Ignition - System Operation and Component Description

System Operation

Refer to Powertrain Control/Emissions Diagnosis (PC/ED) manual. section 1 Description and Operation.

Component Description

Refer to Powertrain Control/Emissions Diagnosis (PC/ED) manual. section 1 Description and Operation.

Copyright © Ford Motor Company

Engine Emission Control - Overview

Overview

NOTE: *Do not permanently remove or render inoperative any part of the vehicle emission control system including related hardware. Failure to comply may violate applicable state and federal laws.*

NOTE: *The vehicle emission routing diagrams are contained in the Description and Operation subsection of the Evaporative Emissions.*

Refer to: Evaporative Emissions - Overview (303-13A Evaporative Emissions - 2.0L Duratec-HE (125kW/170PS) - MI4, Description and Operation).

The PCV system uses intake manifold vacuum to ventilate blow-by vapors and evaporated oil from the crankcase and returns them to the intake manifold for combustion. The PCV valve varies the amount of blow-by vapors and evaporated oil returned to the intake manifold.

Copyright © Ford Motor Company

Engine Emission Control - System Operation and Component Description

System Operation

Refer to Powertrain Control/Emissions Diagnosis (PC/ED) manual. See Section 1 Description and Operation.

Component Description

Refer to Powertrain Control/Emissions Diagnosis (PC/ED) manual. See Section 1 Description and Operation.

Copyright © Ford Motor Company

Electronic Engine Controls - Overview

Overview

The EEC system provides optimum control of the engine through the enhanced capability of the powertrain control module (PCM). The EEC system also has an on board diagnostic (OBD) monitoring system with features and functions to meet federal regulations on exhaust emissions.

The EEC system has two major divisions: hardware and software. The hardware includes the PCM, sensors, switches, actuators, solenoids, and interconnecting terminals. The software in the PCM provides the strategy control for outputs (engine hardware) based on the values of the inputs to the PCM.

The PCM receives information from a variety of sensor and switch inputs. Based on the strategy and calibration stored within the PCM, the PCM generates the appropriate output. The system is designed to minimize emissions and optimize fuel economy and driveability. The software strategy controls the basic operation of the engine, provides the OBD strategy, controls the malfunction indicator lamp (MIL), communicates to the scan tool over the data link connector (DLC), allows for flash electrically erasable programmable read only memory (EEPROM), provides idle air and fuel trim, and controls failure mode effects management (FMEM).

Copyright © Ford Motor Company

Electronic Engine Controls - System Operation and Component Description

System Operation

Refer to the Powertrain Control/Emissions Diagnosis (PC/ED) Manual Section 1 Description and Operation.

Copyright © Ford Motor Company

Charging System - Overview

Overview

The generator is driven by the FEAD belt. When the engine is started, the generator begins to generate AC, which is internally converted to DC. The DC is controlled by the voltage regulator and supplied to the battery. The PCM controls the voltage regulation setpoint, communicating with the generator internal voltage regulator over a dedicated LIN communication circuit.

Copyright © Ford Motor Company

Charging System - System Operation and Component Description

System Operation

System Diagram

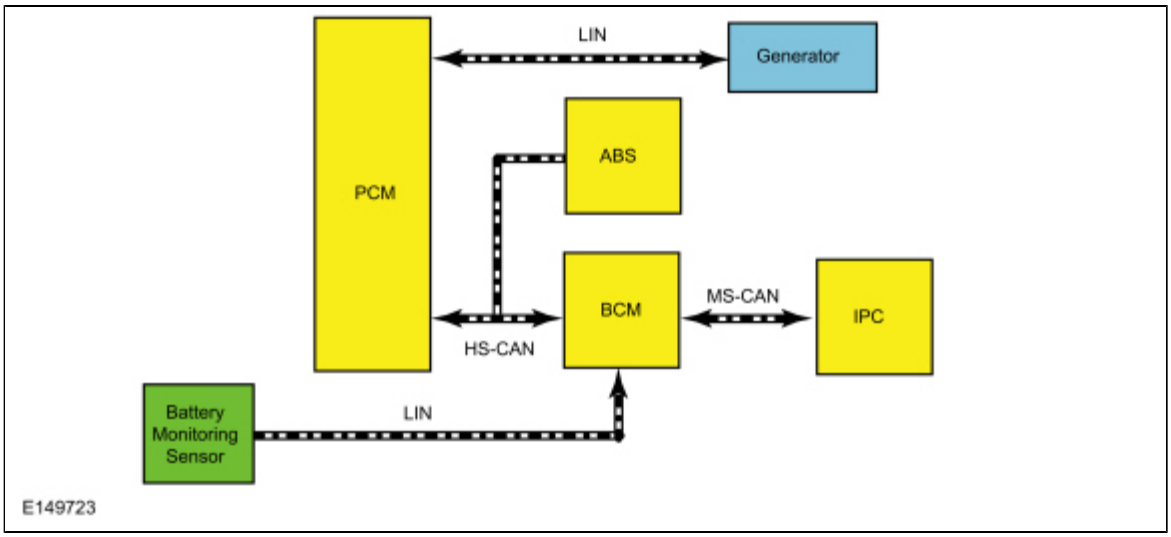

Network Message Chart

Module Network Input Messages — Body Control Module (BCM)

Broadcast Message	Originating Module	Message Purpose
Alternator fault	PCM	The PCM has detected a fault in the generator or generator circuits.

Module Network Input Messages — Instrument Panel Cluster (IPC)

Broadcast Message	Originating Module	Message Purpose
Power system status	BCM	Reports any generator/charging system faults. Used for charging system fault indicator.

Module Network Input Messages — Powertrain Control Module (PCM)

Broadcast Message	Originating Module	Message Purpose
Vehicle speed	ABS module	Vehicle speed is reported via High Speed Controller Area Network (HS-CAN). Used by the P PCM

		during charging system voltage calculation.

Charging System

The PCM -controlled, or Smart Charge charging system determines the optimal voltage setpoint for the charging system and communicates this information to the voltage regulator. The Smart Charge charging system is designed to set 1 of 7 Diagnostic Trouble Codes (DTCs) any time a charging system fault is present. All of the Diagnostic Trouble Codes (DTCs) can set continuous faults, but not all Diagnostic Trouble Codes (DTCs) set as on-demand faults.

Diagnostic Trouble Code (DTC)	Key ON Engine OFF (KOEO)	Key ON Engine Running (KOER)	Continuous
P0562	X	X	X
P0563		X Requires vehicle speed above 8 mph.	X
P065B		X	X
P065C		X	X
P0A3B		X	X
U012D	X	X	X
U042E		X	X

Parameter Identification (PID)	Description	Normal Display
GEN_FAULT_NS	Generator Non-Specific Fault	No Fault
GEN_LOSTCOMM	Lost Communication with Starter/Generator Control Module	No Fault
GENFIL	Generator Fault Indicator Lamp	OFF
GENFDC_MES	Generator Field Duty Cycle - Measured	PERCENTAGE
GENREG_ELEC_F	Generator Regulator Reporting Electrical Fault	No Fault
GENREG_INVCMD	Generator Regulator Receiving Invalid Commands	No Fault
GENREG_MECH_F	Generator Regulator Reporting Mechanical Fault	No Fault
GENREG_NOCMD	Generator Regulator Indicating Missing Commands	No Fault
GENREG_OVRTMP	Generator Regulator Indicating Over Temperature	No Fault
GENVDSD	Generator Voltage Desired	Voltage varies by vehicle needs - May be controlled by an output state control
VPWR	Module Supply Voltage	Within 0.5 volt of battery voltage
RPM	Engine Revolutions Per Minute	Engine Revolutions Per Minute (RPM) - May be controlled by

		an output state control

The smart regenerative charge system primary strategy is stored in the BCM . The BCM receives all of the important information relating to the battery condition from the battery monitoring sensor via the LIN . The BCM calculates and sends the set value needed for the generator charging voltage via the High Speed Controller Area Network (HS-CAN) to the PCM . The PCM then adjusts the value received (if necessary) and sends it to the generator via the LIN . The charging voltage is adjusted depending on various parameters, such as the current level of engine efficiency. The smallest possible set value for the generator voltage is 12.2 volts, while the maximum charging voltage can be anywhere between 14.5 and 14.9 volts. However, when the battery is in a refresh phase, the voltage may occasionally reach up to 15.2 volts. These refresh phases are required when the battery charge status is 80% over long periods of time, which increases the risk of sulfation in the battery cells.

The PCM simultaneously controls and monitors the output of the generator. When the current consumption is high or the battery is discharged, the PCM raises engine speed as needed to increase generator output. The generator charges the battery and at the same time supplies power for all of the electrical loads that are required. The battery is more effectively charged with a higher voltage when the battery is cold and a lower voltage when the battery is warm.

The PCM turns off the generator during cranking to reduce the generator load and improve cranking speed. Once the engine starts, the PCM slowly increases generator output to the desired voltage.

The PCM reports any charging system faults and sends a message through the High Speed Controller Area Network (HS-CAN) to the BCM . The BCM then sends a message over the Medium Speed Controller Area Network (MS-CAN) to the IPC , which controls the charging system warning indicator. The status of the PCM charging system warning indicator message can be confirmed by viewing the PCM Generator Fault Indicator Lamp (GENFIL) Parameter Identification (PID). Any charging system fault detected by the PCM results in 1 or more Diagnostic Trouble Codes (DTCs) being set and the GENFIL Parameter Identification (PID) having a status of ON. If equipped with a charging system warning indicator, the IPC turns the indicator on or off. If equipped with a message center, the IPC displays the corresponding message to notify the driver of the condition.

Under certain circumstances, the charging system may have a concern but still keeps the battery charged while the vehicle is running. The LIN is normally used to initiate charging, but the generator can charge with a fault in this circuit. If the engine operates at more than 2,000 Revolutions Per Minute (RPM) momentarily, the generator self-excites or begins charging on its own. The charging system warning indicator is then illuminated and/or the corresponding message to notify the driver of the condition is displayed and the generator operates in a default mode (approximately 13.5 volts) until the engine is turned off. When the engine is restarted and the engine operates at more than 2,000 Revolutions Per Minute (RPM) momentarily, the generator again self-excites and again the charging system warning indicator is illuminated and/or the corresponding message to notify the driver of the condition is displayed.

Electrical Energy Management

NOTICE: When any vehicle module is being programmed, connect an external battery charger to make sure that the module programming is completed without interruption due to the load shedding feature becoming active. The external battery charger must maintain a system voltage above 13 volts. This may require a charger setting higher than the lowest charge setting. The external battery charger negative connection must be made to an engine or vehicle chassis ground and not the negative battery terminal. If the connection is to the negative battery terminal, load shedding may begin and module programming may be corrupted. After charging has begun, start the engine to clear any load shed states and then turn the engine off and proceed with programming.

This vehicle is equipped with a Electrical Energy Management system which manages battery charging by the generator and monitors the battery state of charge. The Electrical Energy Management system also utilizes a load shed strategy to help control discharge of the battery and prevent, when possible, an excessively low battery state of charge. The BCM monitors the battery state of charge using the battery monitoring sensor attached to the negative battery terminal.

To maintain correct operation of the load shed system, any electrical devices or equipment must be grounded to the chassis ground and not the negative battery terminal. A connection to the negative battery terminal causes an inaccurate measurement of the battery state of charge and incorrect load shed system operation due to the current being used bypassing the battery monitoring sensor.

When the ignition is in ACC or ON mode and the BCM determines the battery voltage or the battery state of charge has dropped below set levels, a low battery warning message is displayed in the message center. Should the battery voltage or the battery state of charge continue to drop, the audio system is powered down to save the remaining battery charge. This load shed state clears once the vehicle is started and battery state of charge is allowed to recover.

When the ignition is in the ON mode and if load shed occurs, the message center displays the corresponding message to notify the driver that battery protection actions are active. The audio system shuts down after the message center displays the warning. Refer to
Refer to: Message Center - System Operation and Component Description (413-01 Instrumentation, Message Center and Warning Chimes, Description and Operation).

If a fault occurs with the battery monitoring sensor or circuit(s), the only engine off load shed strategy that is active is a 45 minute timer. After 45 minutes have elapsed, the audio system turns off. To clear the load shed state, restart the engine.

If the vehicle battery is replaced, carry out the Battery Monitoring System Reset using the scan tool. If the Battery Monitoring System Reset is not carried out, measurement data collected for the old battery is not deleted and future state of charge measurements will be inaccurate. For example, if an old battery has a state of charge of 60% and the new battery has a state of charge of 90%, the BCM will recognize battery state of charge being 30% lower than it actually is. With the battery state of charge being perceived lower than it actually is causes shedding of loads earlier than is necessary. This also impacts the smart regenerative charge system by causing the battery to be maintained at a higher state of charge than perceived by the BCM , reducing fuel economy benefits.

If the vehicle has been jump started, test the battery condition.
Refer to: Battery (414-01 Battery, Mounting and Cables, Diagnosis and Testing).

For charging the vehicle battery,
Refer to: Battery (414-01 Battery, Mounting and Cables, Diagnosis and Testing).

Battery State of Charge

During the drive cycle the Electrical Energy Management software will adjust the initial battery state of charge by monitoring the charge and discharge current and adjusting the state of charge up during charging, and down during discharge. During rest periods (key off with no electrical loads) when the vehicle enters sleep mode, the battery voltage is sampled to recalibrate the State of Charge. The Battery monitoring sensor automatically executes this recalibration anytime the vehicle enters sleep mode and when the total vehicle current draw is below 300mA. It takes 4 to 6 hours in the sleep mode to recalibrate the battery state of charge to high accuracy. If the system draw does not allow the battery state of charge recalibration over the previous 7 to 10 days the State of Charge quality factor will change to flag this and some Electrical Energy Management Functions which rely on the accuracy of the battery state of charge may be temporarily turned off until a recalibration takes place.

NOTE: *Any devices left attached to the power socket that draw in excess of 200mA (or less depending on other battery loads) will prevent a battery monitoring sensor to recalibrate the battery state of charge.*

Engine Off Load Shed

The BCM keeps track of the battery state of charge. When the engine is off and the BCM determines the battery state of charge is below 50%, or 45 minutes have elapsed, a load shed message is sent over the CAN . This message turns off the audio/navigation system to save the remaining battery charge. Under this condition the FCDIM (without touchscreen controls) displays System Off to Save Battery Turn Ignition Off, or the FDIM (with touchscreen controls) displays SYSTEM OFF TO SAVE BATTERY PLEASE TURN IGNITION OFF OR START ENGINE to notify the driver that battery protection actions are active.

Engine off load shedding occurs when the engine is not running and the ignition is in the ACC, RUN or delayed accessory position. This load shed state clears once the vehicle has been started and the battery state of charge recovers. If the engine off load shed occurs, the audio/navigation system turns off.

When the ignition is in the RUN position and if load shed occurs, the IPC message center may display either TURN POWER OFF TO SAVE BATT (base message center) or TURN POWER OFF TO SAVE BATTERY (optional message center). The audio/navigation system shuts down after the message center displays the warning.

If a fault occurs with the battery monitoring sensor or circuit(s), the only engine off load shed strategy that is active is a 45 minute timer. After 45 minutes have elapsed, the audio/navigation system turns off. To clear the load shed state, restart the engine.

When the ignition is in the OFF position or Ignition key removed Infotainment extended play can be enabled. When Infotainment extended play is enabled and a load shed message is received over CAN the extended play will turn off to save the remaining battery charge. Under this condition FCDIM will display SYSTEM OFF TO SAVE BATTERY to notify the driver that battery protections are active. For more information, Refer to:
Refer to: Message Center - System Operation and Component Description (413-01 Instrumentation, Message Center and Warning Chimes, Description and Operation).

Engine Running Load Shed

When the BCM and/or PCM voltage is low, with the engine running, the BCM sends a message to either minimize or shut down the climate controlled seats, rear defrost, heated mirrors and climate control blower motor to improve system voltage. Under this condition, the IPC message center displays LOW BATTERY FEATURES TEMPORARILY TURNED OFF to notify the driver that battery protection actions are active during a Load Shed 2 continuous event.

There are 3 states of engine running load shed:

- Load shed 1
- Load shed 2 transient
- Load shed 2 continuous

Load Shed State	Entry Conditions	Impact to Features	Clear Conditions
Load shed 1	• If vehicle speed is below 16 km/h (10 mph) and voltage to the PCM is less than 11.5 volts. • If vehicle speed is below 16 km/h (10 mph) and PCM measures current draw greater than 0 amps. • If vehicle speed is above 16 km/h (10 mph) and Voltage to the BCM is less than 11.6 volts.	If equipped, the climate controlled seats will switch from HIGH to MED. If they are already at MED, the state will not change.	Voltage to the BCM is greater than 12.7 volts or the generator field duty cycle is less than 88%.
Load shed 2 transient	• Voltage to the PCM is less than 11.0 volts. • PCM measures current draw greater than 20 amps.	• If equipped, climate controlled seats are disabled, but the indicators remain illuminated. • If equipped, rear defrost and heated mirrors are disabled, but the indicator remains illuminated.	Voltage to the BCM is greater than 12.4 volts.
Load shed 2 continuous	Vehicle was in load shed 2 transient state for greater than 20 seconds.	• If equipped, climate controlled seats are disabled and the indicators are off. • If equipped, rear defrost and heated mirrors are disabled and the indicator is off. • If equipped with Dual Automatic Temperature Control (DATC), the blower motor speed is reduced to 50% and the blower speed indicator reflects this. • If equipped, DC/AC inverter (AC powerpoint) is disabled. • The base message center displays LOW BATTERY LESS FEATURES. • The optional message center displays LOW BATTERY FEATURES TEMPORARILY TURNED OFF.	Voltage to the BCM is greater than 12.4 volts for more than 60 seconds.

Charging

When it is required to charge the vehicle battery, connect the positive connection to the battery positive post, and attach the charger negative connection to a body or engine ground. Do not connect the negative cable of the charger to the battery monitoring sensor. Connecting directly to the battery monitoring sensor bypasses the sensor, not allowing the sensor to detect the charge current. As a result the battery state of charge does not reflect the charging. Look for the body ground cable coming off the clamp of the battery monitoring sensor and connect in this location (typically on the shock tower sheet metal). The placement of the battery is such that the battery negative terminal is located under the sheet metal shroud making sheet metal ground the obvious choice for the charger.
Refer to: Battery (414-01 Battery, Mounting and Cables, Diagnosis and Testing).

If the battery is being charged due to a load shedding message, only charging the battery properly assists in clearing this message. The Electrical Energy Management will calibrate the battery state of charge as described above after about 4 to 6 hours if the charger was improperly installed.

NOTICE: If the charger is incorrectly connected to the battery negative terminal, DO NOT reset the battery monitoring sensor using the diagnostic scan tool. This reset is reserved for new battery installation. This reset clears the learned battery data, the battery time in service, and affects the aging parameters, which have been learned since the installation of the battery.

If the battery was charged by connecting to the battery monitoring sensor, force an internal reset by removing the battery monitoring sensor from the battery negative post or disconnecting the battery monitoring sensor connector and reconnecting.

Jump Starting

When it is required to jump start the vehicle, just like battery charging, it is important to connect the cables properly for the battery monitoring sensor to measure the energy input to the system to keep an accurate State of Charge. Connect the positive connection to the battery positive post, and connect the Jump Start negative to the vehicle ground. Do not connect to the battery monitoring sensor. Connecting directly to the battery negative post bypasses the ability of the vehicle to measure the input current with the battery monitoring sensor, and does not adjust the battery state of charge accordingly. For a convenient ground location look for the body ground cable coming off the clamp or the Battery Monitoring Sensor and connect in this location (typically on the shock tower sheet metal). The Electrical Energy Management recalculates the battery state of charge after 4 to 6 hours if the jump start negative cable is improperly installed.

NOTICE: If the charger is incorrectly connected to the battery negative terminal, DO NOT reset the battery monitoring sensor using the diagnostic scan tool. This reset is reserved for new battery installation. This reset clears the learned battery data, the battery time in service, and affects the aging parameters, which have been learned since the installation of the battery.

If the battery was jump started by connecting to the battery monitoring sensor, force an internal reset by removing the battery monitoring sensor from the battery negative post or disconnecting the battery monitoring sensor connector and reconnecting.

Battery Replacement

If the vehicle battery is replaced, it is very important to perform the battery monitoring system reset using the scan tool. If the battery monitoring system reset is not carried out, it holds the old battery parameters and time in service counter in memory. Additionally it tells the system the battery is in an aged state and the may limit the Electrical Energy Management system functions. For more information,
Refer to: Battery and Cables - System Operation and Component Description (414-01 Battery, Mounting and Cables, Description and Operation).

Component Description

Battery Monitoring Sensor

NOTE: *Unless the battery is being replaced, DO NOT reset the battery monitoring sensor using the scan tool. This reset is reserved for new battery installation. This reset clears the learned battery data, the battery time in service, and affects the aging parameters, which have been learned since the installation of the battery.*

The battery monitoring sensor is attached to the negative battery terminal which provides a ground to the sensor. The battery monitoring sensor is integrated with the negative battery terminal clamp and cable assembly and cannot be serviced separately. The battery monitoring sensor measures voltage, current and temperature of the battery and uses these inputs to calculate the

battery condition, transmitting this information through the LIN circuit to the BCM . The battery monitoring sensor has a 2-pin connector providing battery voltage and LIN connections. The battery monitoring sensor has to be calibrated at regular intervals. This occurs during a rest period or when the battery closed-circuit current is less than 100mA. The rest period must last for at least 3 hours. The time-frame in which a calibration must take place is 7 days. If the system has been unable to carry out a calibration within this time then it is impossible to confirm the exact state of charge of the battery. Any devices left attached to the power socket that draw in excess of 100mA (or less depending on other battery loads) will prevent a battery monitoring sensor calibration.

The battery monitoring sensor is an input to the Electrical Energy Management software. If the sensor malfunctions due to wiring issues or failure, a DTC will be set. In most cases the Electrical Energy Management functions will be turned off until the sensor operation is restored

If the battery monitoring sensor is removed from the battery negative post, all internal parameters except battery time in service reset to a standard setting. These parameters will be relearned during normal calibration intervals. If the battery has been charged or jump started by connecting directly to the battery post or to the battery monitoring sensor, force an internal reset by removing the battery monitoring sensor from the battery negative post then reconnecting.

Generator

The generator is equipped with an electronic internal voltage regulator and a serviceable generator clutch pulley.

Generator Clutch

The generator clutch is serviced separately from the generator. The primary function is to separate the generator rotor inertia from the FEAD belt, lowering belt tension at high Revolutions Per Minute (RPM) and reducing Noise, Vibration, or Harshness (NVH).

Powertrain Control Module (PCM)

The PCM monitors and controls the charging system.

Copyright © Ford Motor Company

Roof Opening Panel - System Operation and Component Description

System Operation

Roof Opening Panel

The roof opening panel is an electronically operated glass panel that can be opened, closed or vented by the roof opening panel control switch. The roof opening panel operates by using an integrated motor and module. Pressing the control switch supplies a ground to the motor/module. The control switch has 2 detent positions for opening and closing the roof opening panel. The first detent position allows for “manual” (stops when the switch is released) opening or closing of the panel. The operator determines how far to open or close the panel during this manual operation. The second detent position allows for “one-touch” or “express” opening or closing of the panel. The module determines how far to open or close the panel.

To manually open the roof opening panel, press and hold the rear portion of the control switch to the first detent position. Continue to hold the control switch until the panel reaches the desired position.

To one-touch or express open the roof opening panel, press and release the rear portion of the control switch to the second detent position. The roof opening panel first opens to the COMFORT position. The COMFORT position helps to alleviate any wind generated Noise, Vibration, or Harshness (NVH) concerns which may occur in the vehicle with the panel fully open. Once the roof opening panel has stopped at the COMFORT position, fully press the rear portion of the control switch to the second detent position again and release to fully open the panel. The roof opening panel movement can be stopped at any time by pressing the rear portion of the control switch while the panel is moving.

To manually close the roof opening panel, press and hold the front portion of the control switch to the first detent position. Continue to hold the control switch until the panel reaches the desired position.

To one-touch or express close the roof opening panel, fully press and release the front portion of the control switch to the second detent position. The roof opening panel closes automatically, movement can be stopped at any time by pressing the front portion of the control switch while the panel is moving.

To move the roof opening panel to the VENT position, the panel must first be in the fully CLOSED position. The VENT position can be achieved either manually or by one-touch, however, once in the VENT position, the panel can only be manually closed. To manually VENT the roof opening panel, press and hold the front portion of the control switch to the first detent position until the panel reaches the desired VENT position. To one-touch or express VENT the roof opening panel, press and release the front portion of the control switch to the second detent position. The roof opening panel will move to the VENT position automatically.

To close the roof opening panel from the VENT position, press and hold the rear portion of the control switch in the first or second detent position until the panel reaches the fully CLOSED position.

The roof opening panel has a bounce-back feature. If an obstacle has been detected in the path of the roof opening panel as the sliding glass is closing, the roof opening panel automatically opens and stops at a predetermined position.

To override a bounce-back condition (to overcome the resistance of ice on the roof opening panel seal for example), within 2 seconds of a bounce-back event, press and hold the front portion of the control switch. The closing force of the glass panel will begin to increase each time the roof opening panel is closed for the next 3 closing cycles. The bounce-back feature remains active during these 3 closing cycles.

The shade assembly has no electrical operation, however is designed to be pushed open along with the roof opening panel except when the panel is opened to the VENT position. The shade assembly can be opened and closed manually by using the recessed handle to slide forward or rearward. Regardless of how it was opened the shade assembly can only be closed manually by sliding forward.

Component Description

Roof Opening Panel Control Switch

The roof opening panel control switch is a 2 position, double-detent, rocker-style switch. One position is used for OPEN and the other position is used for CLOSE/VENT. The first detent is for “manual” operation and the second detent is for “one-touch” or “express” operation.

Roof Opening Panel Motor

The roof opening panel motor (motor/module) is a single speed, reversible motor that contains electronics which control and monitor the roof opening panel movement (for obstacle detection and one-touch operating features). The roof opening panel motor does not communicate on the vehicle Controller Area Network (CAN)

The roof opening panel motor must be initialized when repairs are carried out on any part of the roof opening panel system or when the roof opening panel motor, glass, assembly, or air deflector has been removed or replaced for any reason.
Refer to: Power Roof Opening Panel Initialization (501-17 Roof Opening Panel, General Procedures).

4-Door Drain Hose Routing

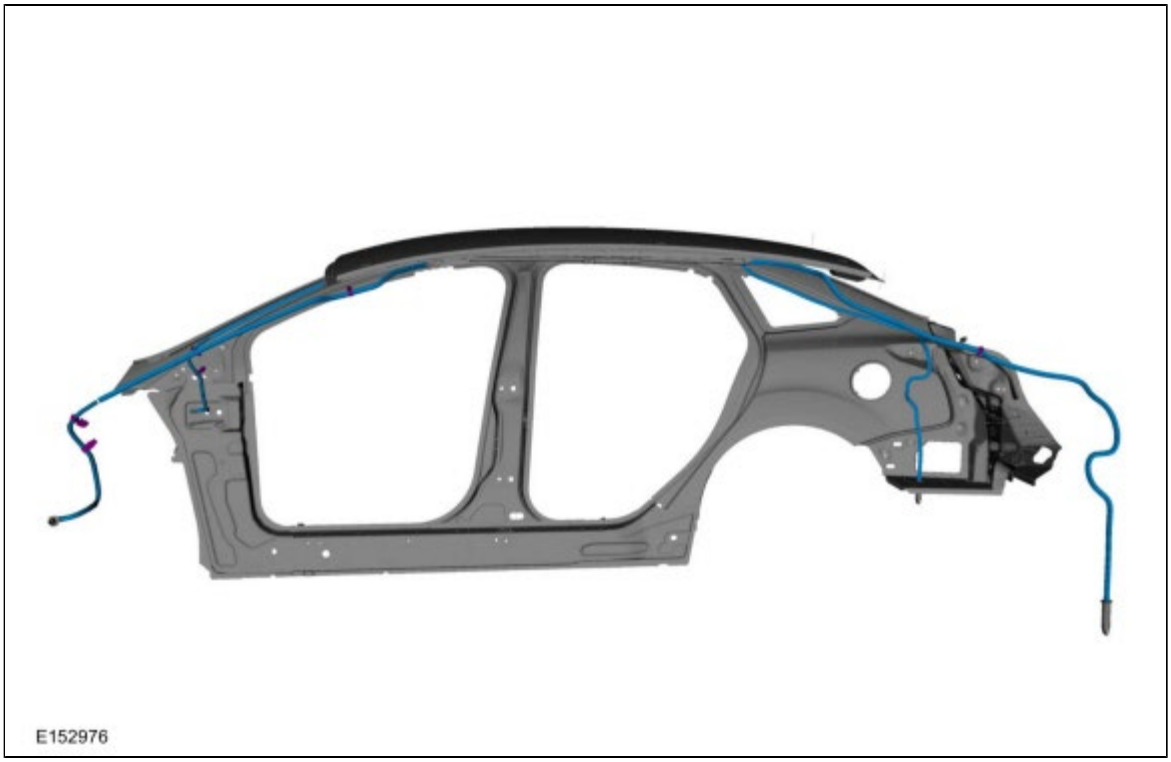

5-Door Drain Hose Routing

Copyright © Ford Motor Company

Instrument Panel

Removal

NOTE: *Removal steps in this procedure may contain installation details.*

1. **WARNING: Before beginning any service procedure in this section, refer to Safety Warnings in section 100-00 General Information. Failure to follow this instruction may result in serious personal injury.**

   Refer to: Health and Safety Precautions (100-00 General Information, Description and Operation).

2. Evacuate and recover the A/C refrigerant.
   Refer to: Air Conditioning (A/C) System Recovery, Evacuation and Charging (412-00 Climate Control System - General Information, General Procedures).

3. Remove the cowl panel grille.
   Refer to: Cowl Panel Grille (501-02 Front End Body Panels, Removal and Installation).

4. 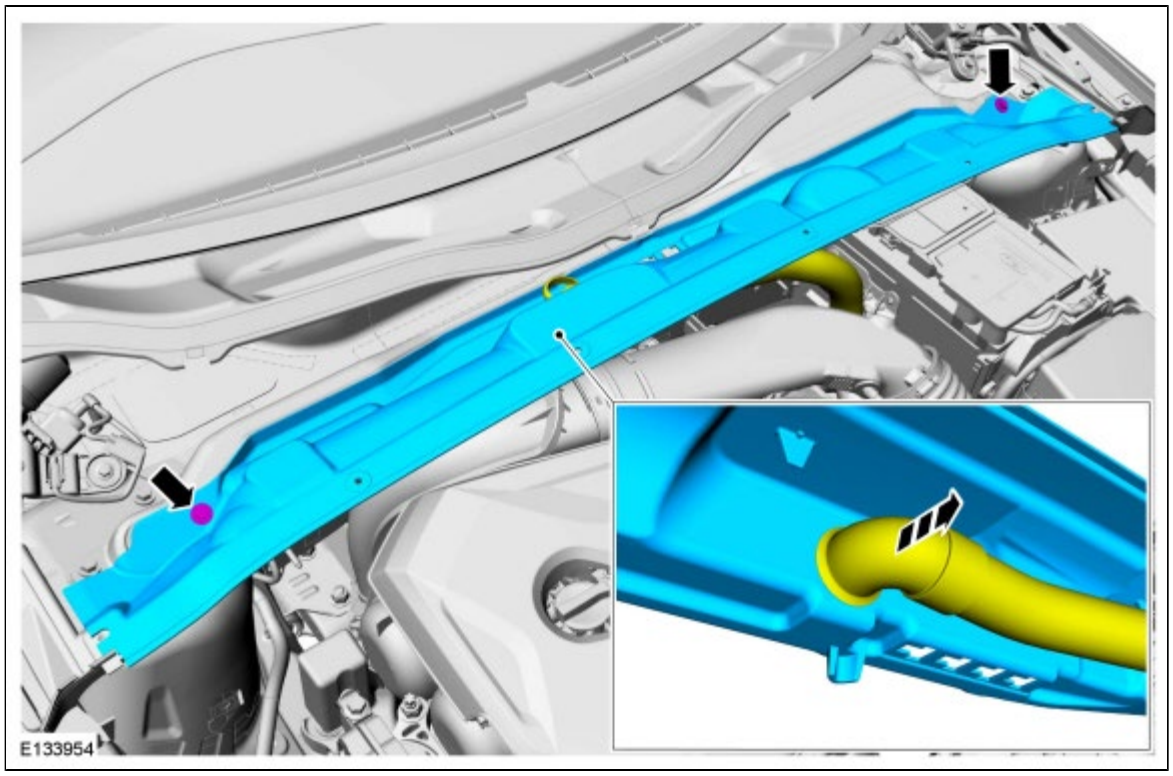

5. *Torque* : 25 Nm

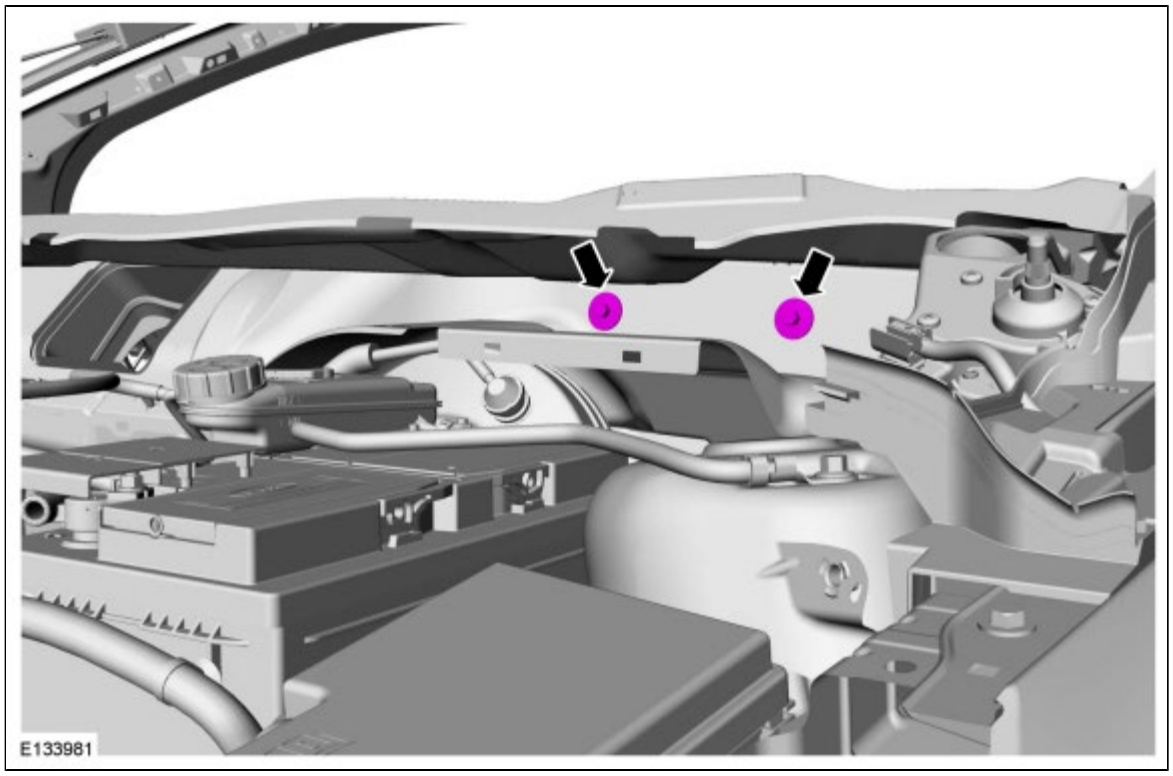

6. **NOTE:** *Make sure all openings are sealed.*

   Torque : 8 Nm

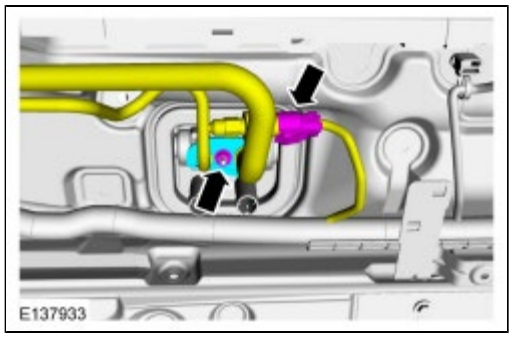

7. **NOTE:** *Make sure all openings are sealed.*

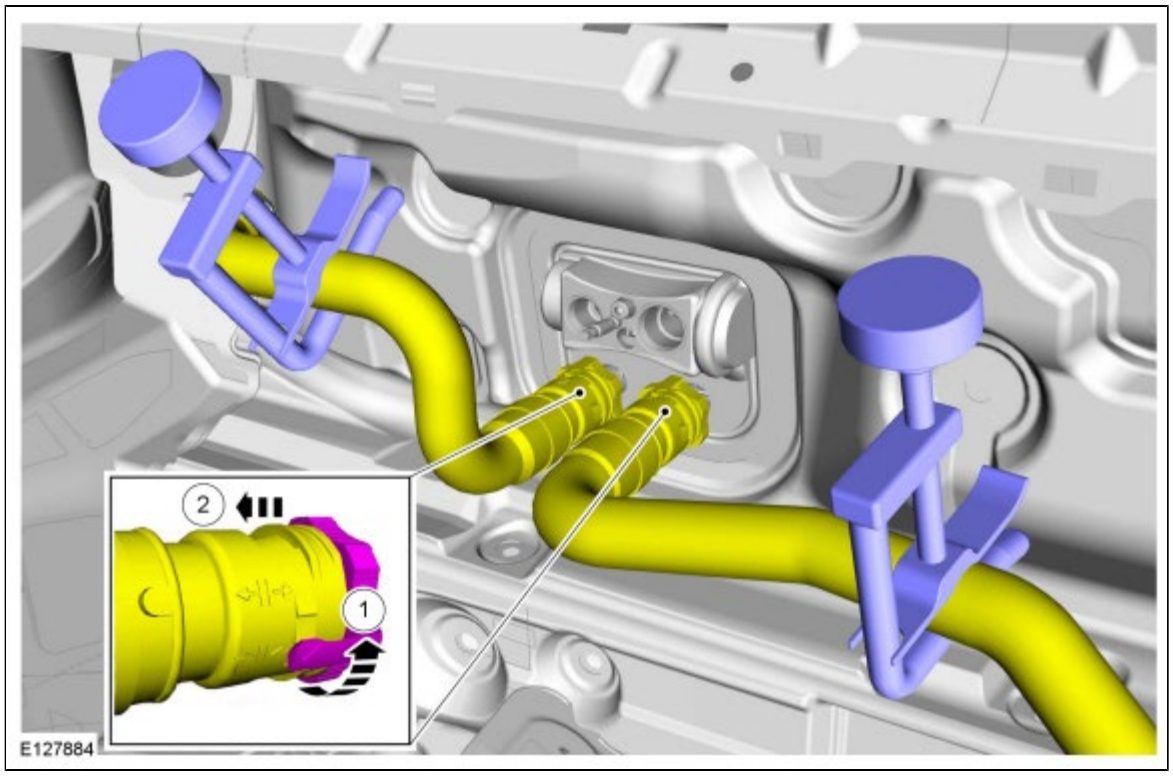

8. Remove both front doors. [Reference 501-03]

9. Remove the floor console.
   Refer to: Floor Console - Vehicles Without: Center Armrest (501-12 Instrument Panel and Console, Removal and Installation).
   Refer to: Floor Console - Vehicles With: Center Armrest (501-12 Instrument Panel and Console, Removal and Installation).

10. Disconnect the battery.
    Refer to: Battery Disconnect and Connect (414-01 Battery, Mounting and Cables, General Procedures).

11. Remove the automatic transmission selector lever or the manual transmission gearshift lever.
    Refer to: External Controls (307-05 Automatic Transmission External Controls, Diagnosis and Testing).
    Refer to: Gearshift Lever - Vehicles With: 5-Speed Manual Transmission - B5/IB5/5-Speed Manual Transmission - MTX75 (308-06 Manual Transmission External Controls, Removal and Installation).
    Refer to: Gearshift Lever - Vehicles With: 6-Speed Manual Transmission - B6/6-Speed Manual Transmission - MMT6 (308-06 Manual Transmission External Controls, Removal and Installation).

12. Position the parking brake control aside.
    Torque : 35 Nm

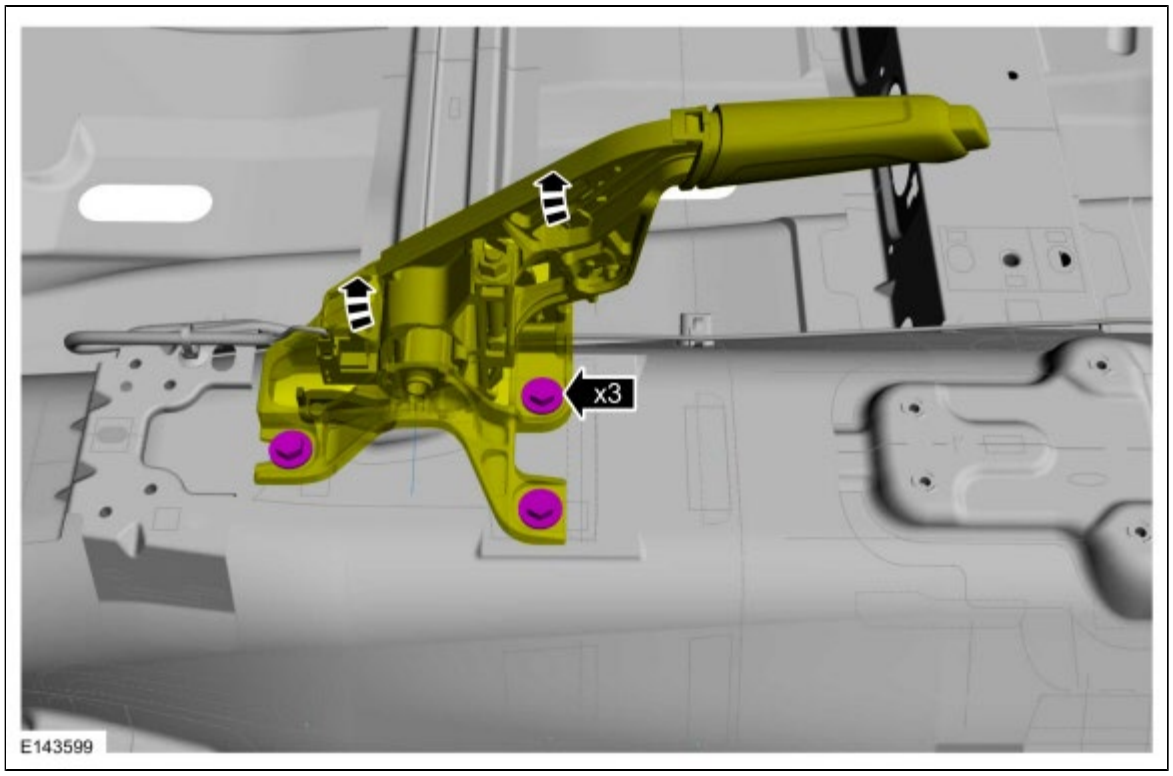

13. Both sides. [Reference to A Pillar Trim 501-01].

14.

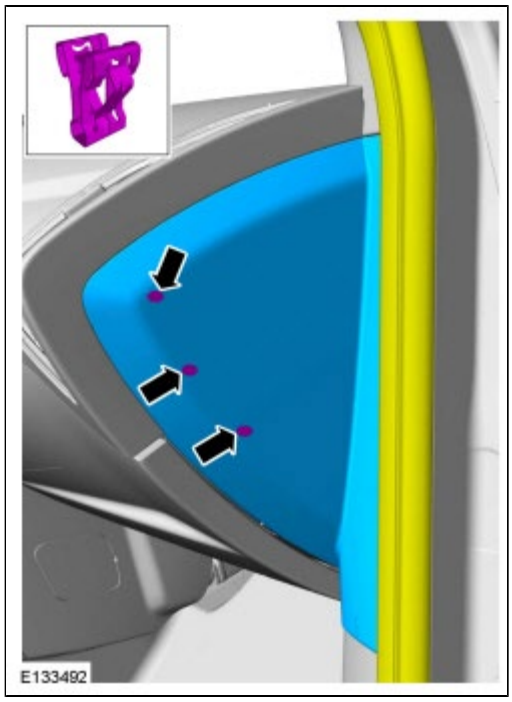

15.

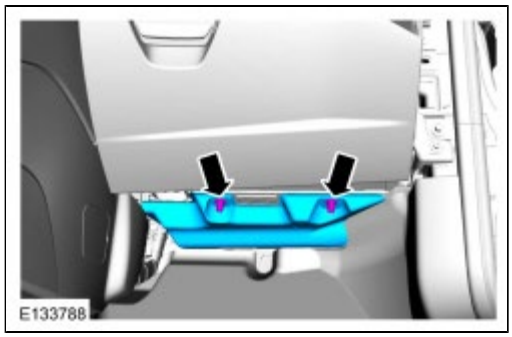

16. Interior trim removal tool.

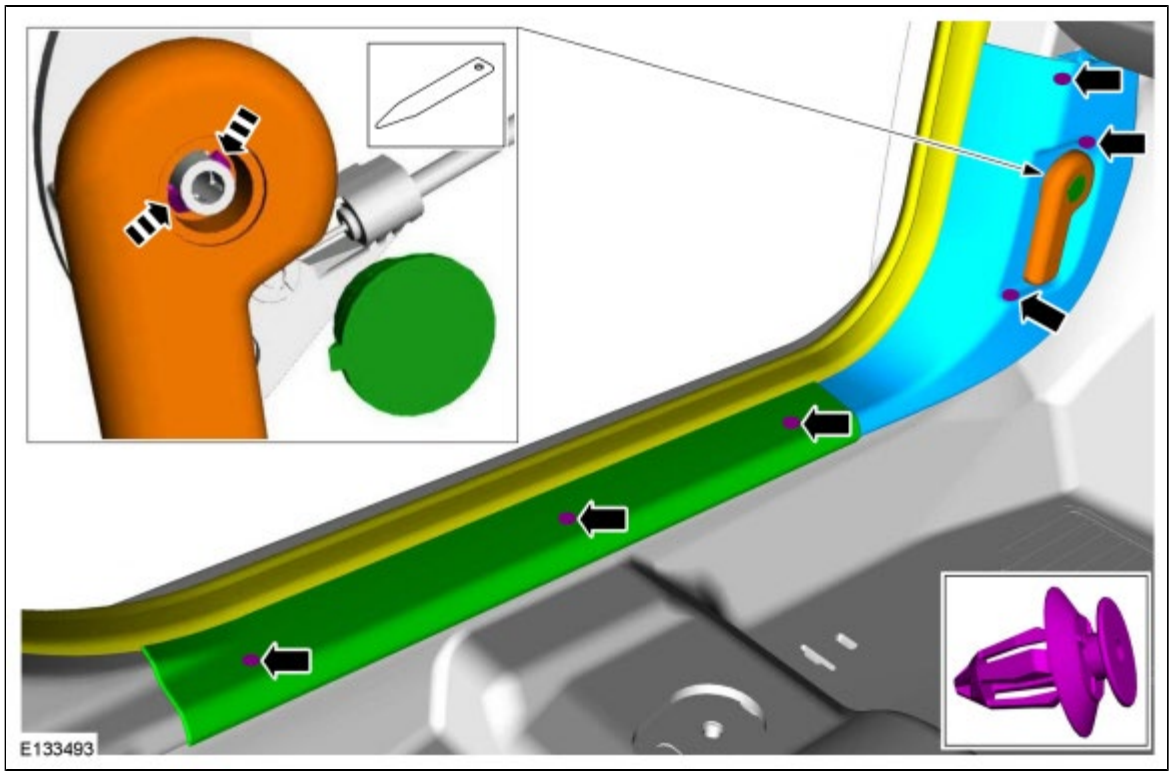

17.

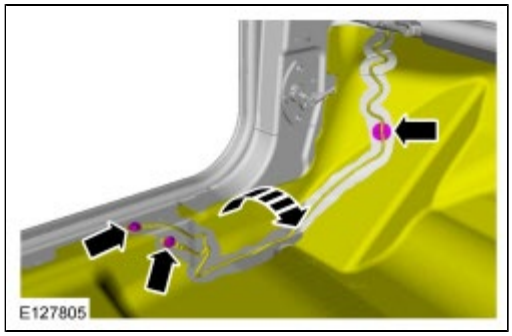

18.

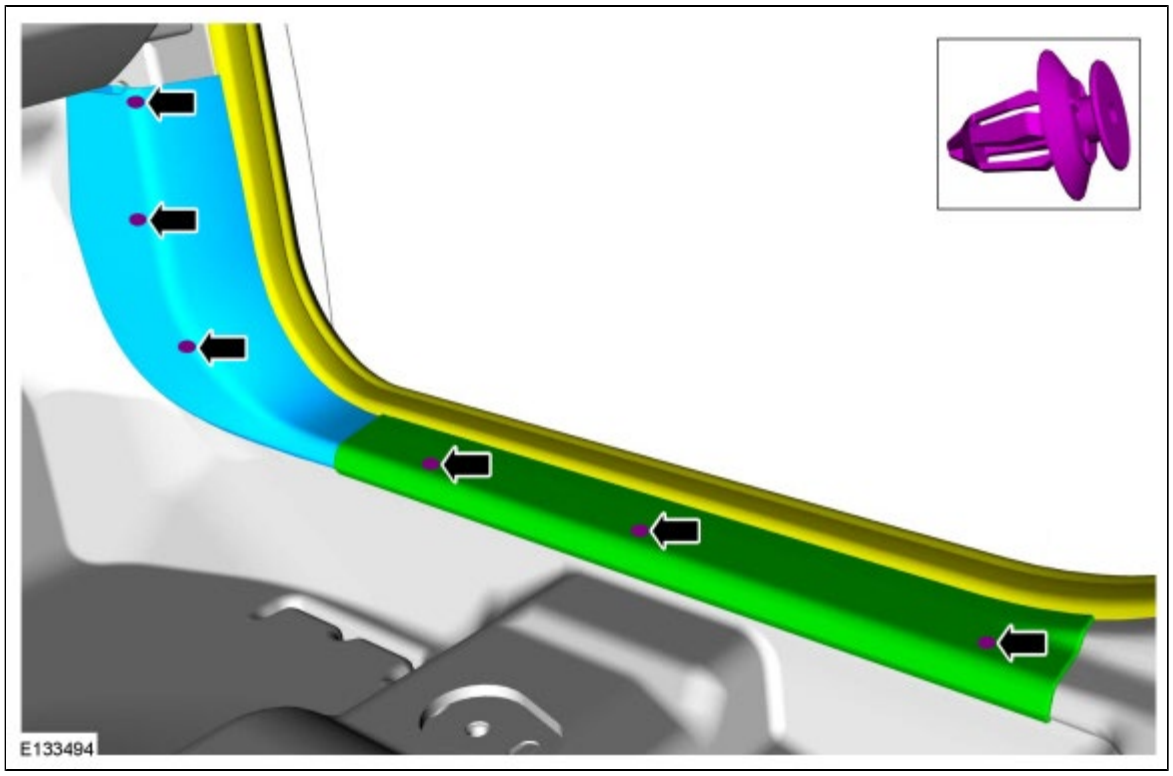

19.

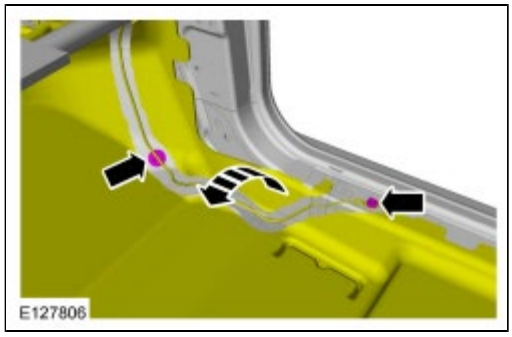

20. **NOTICE: Do not allow the steering wheel to rotate while the steering column shaft is disconnected, or damage to the clockspring may result. If there is evidence that the shaft has rotated, remove and recenter the clockspring. REFER to the clockspring removal and installation procedure in section 501-20B.**

    Remove and discard the steering column shaft-to-steering gear bolt and disconnect the steering column shaft from the steering gear.
    Torque : 28 Nm

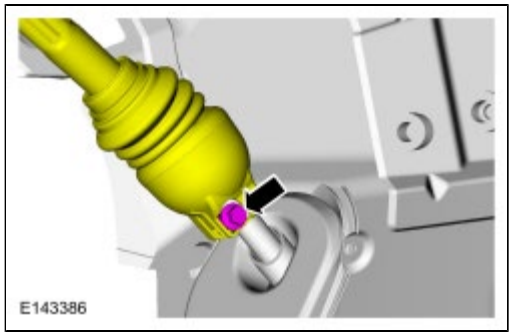

21.

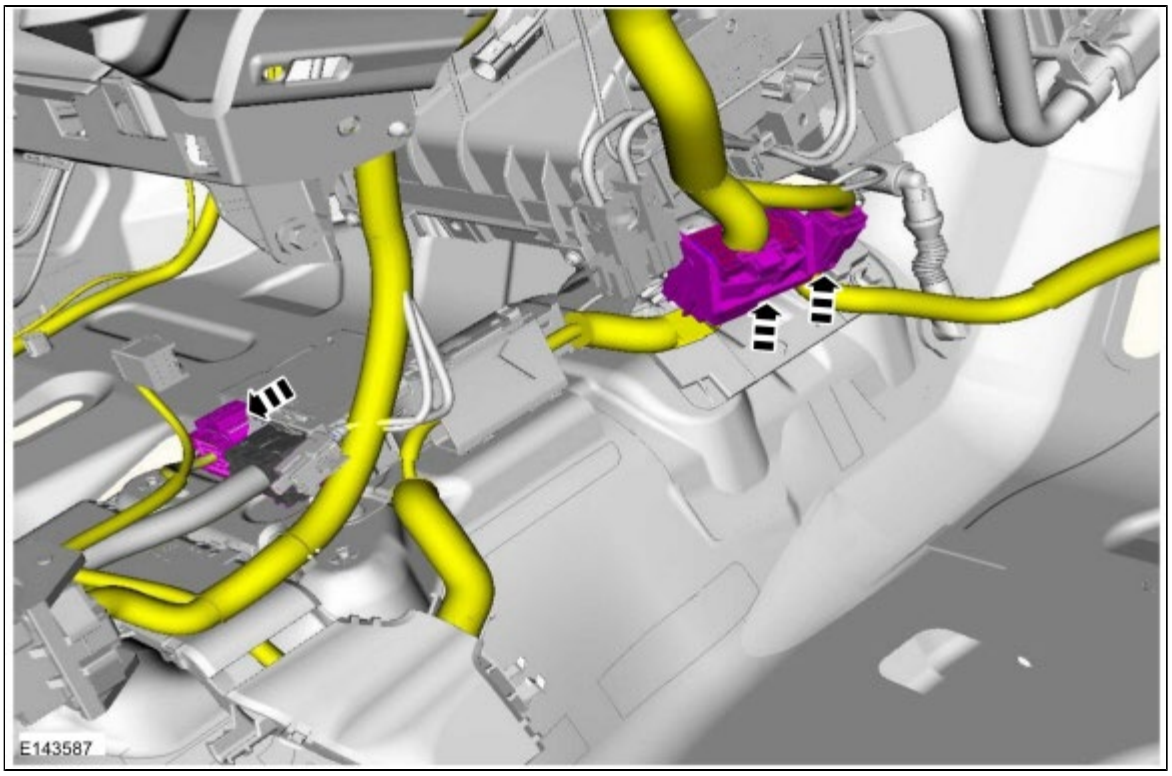

22. **NOTE:** *Base audio shown, Premium and Sony® sound similar.*

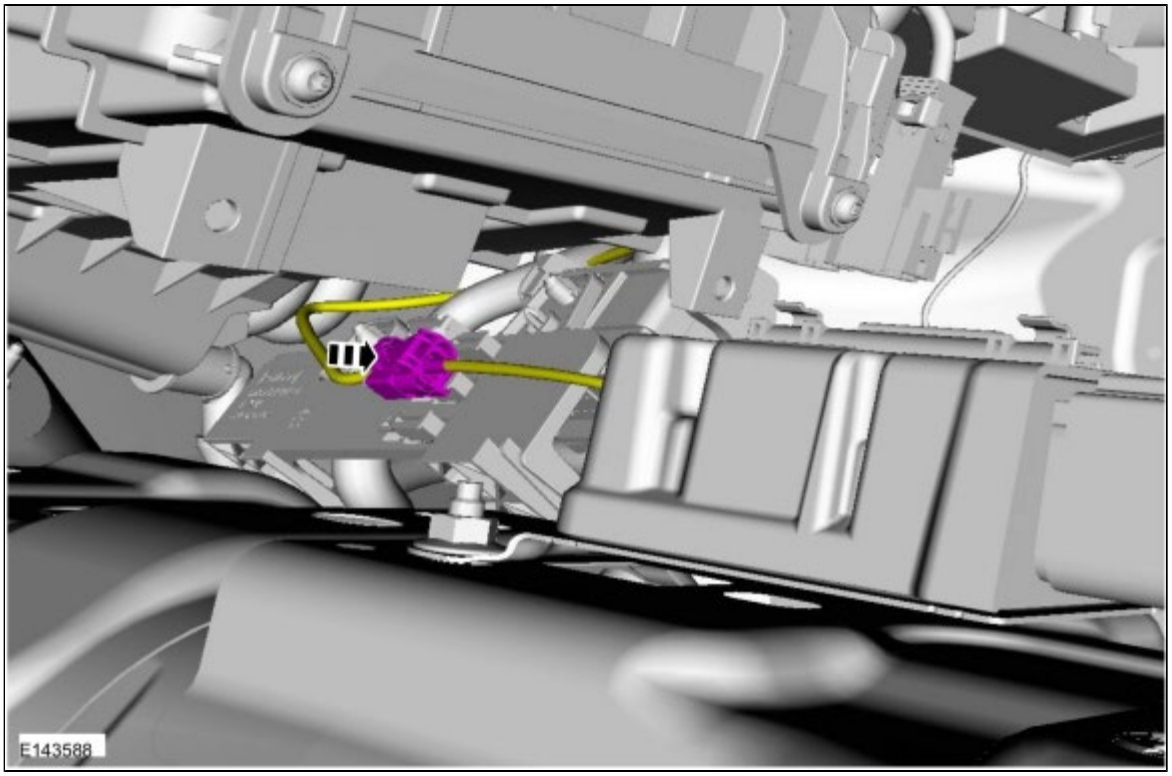

23.

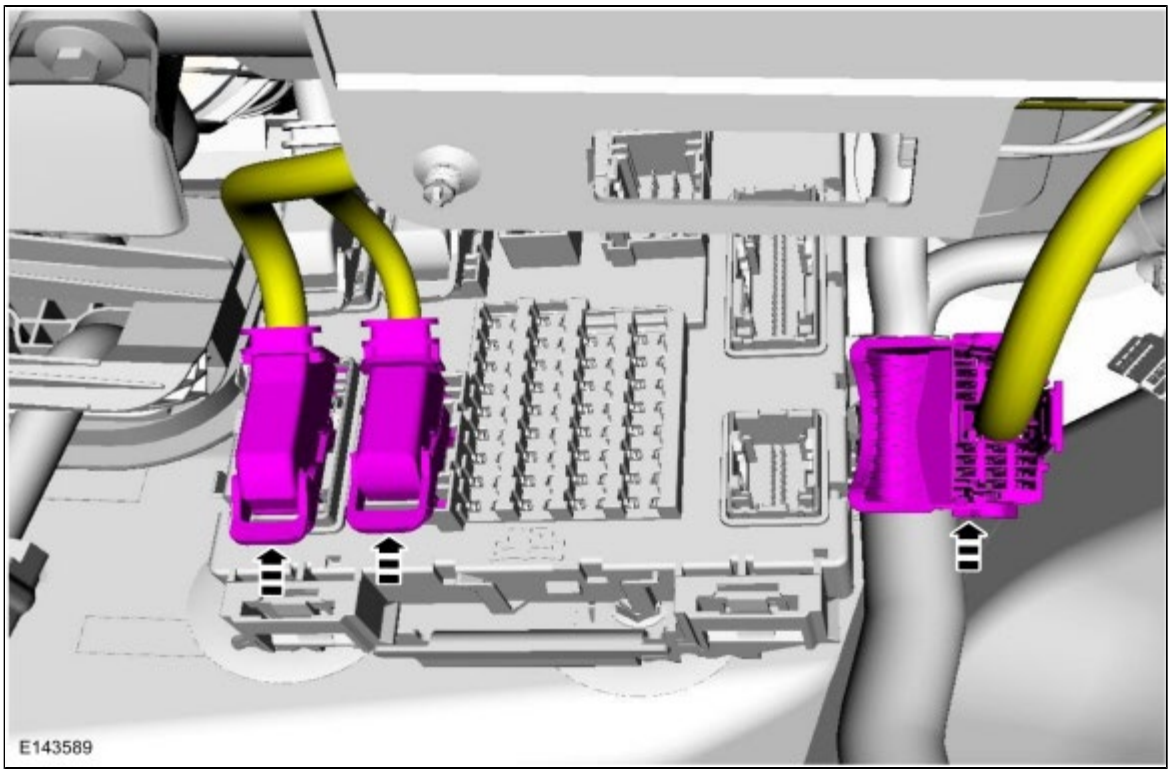

24.

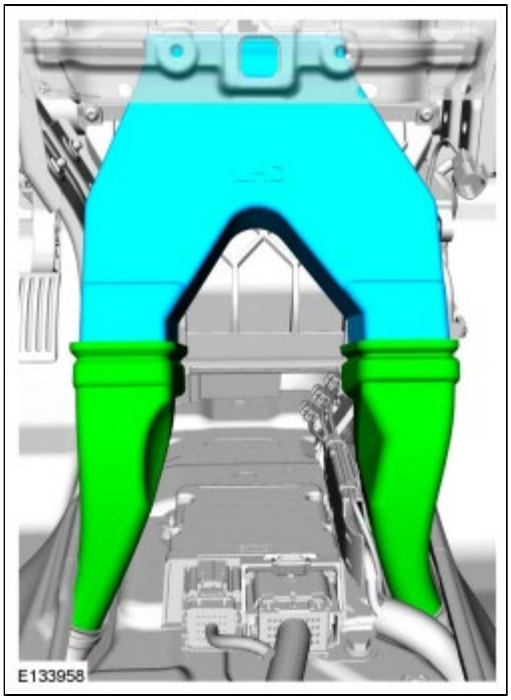

25.

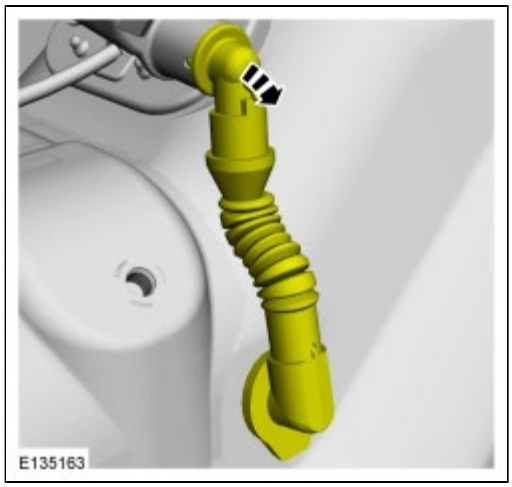

26. *Torque* : 25 Nm

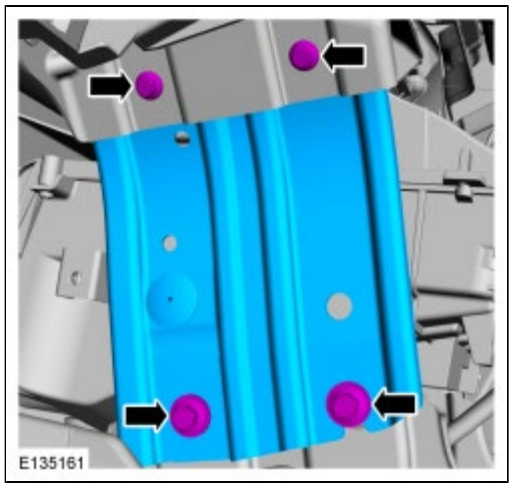

27. *Torque* : 25 Nm

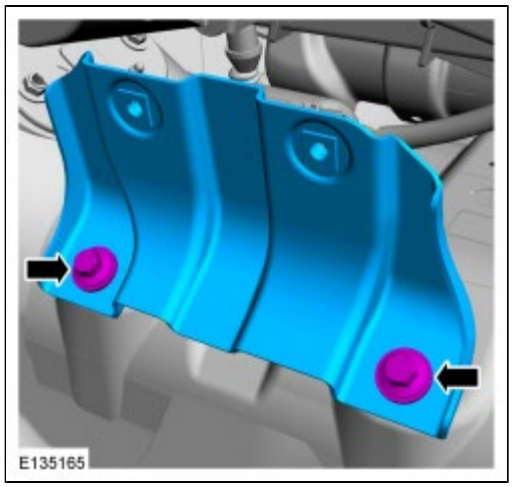

28. Both sides.
    Torque : 40 Nm

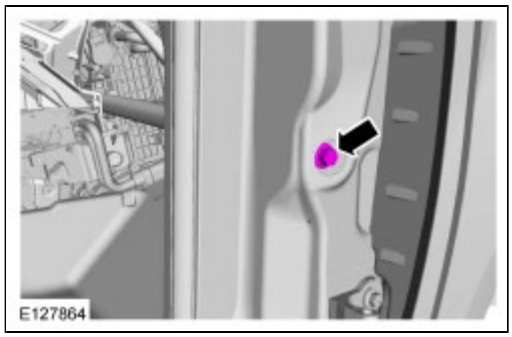

29. **NOTICE: To avoid damaging the instrument panel, an assistant is required when carrying out the following steps.**

    NOTE: *RH side shown, LH side similar.*

    NOTE: *Remove the bolts from one side completely and support the instrument panel before removing the bolts from the opposite side.*

    Torque : 25 Nm

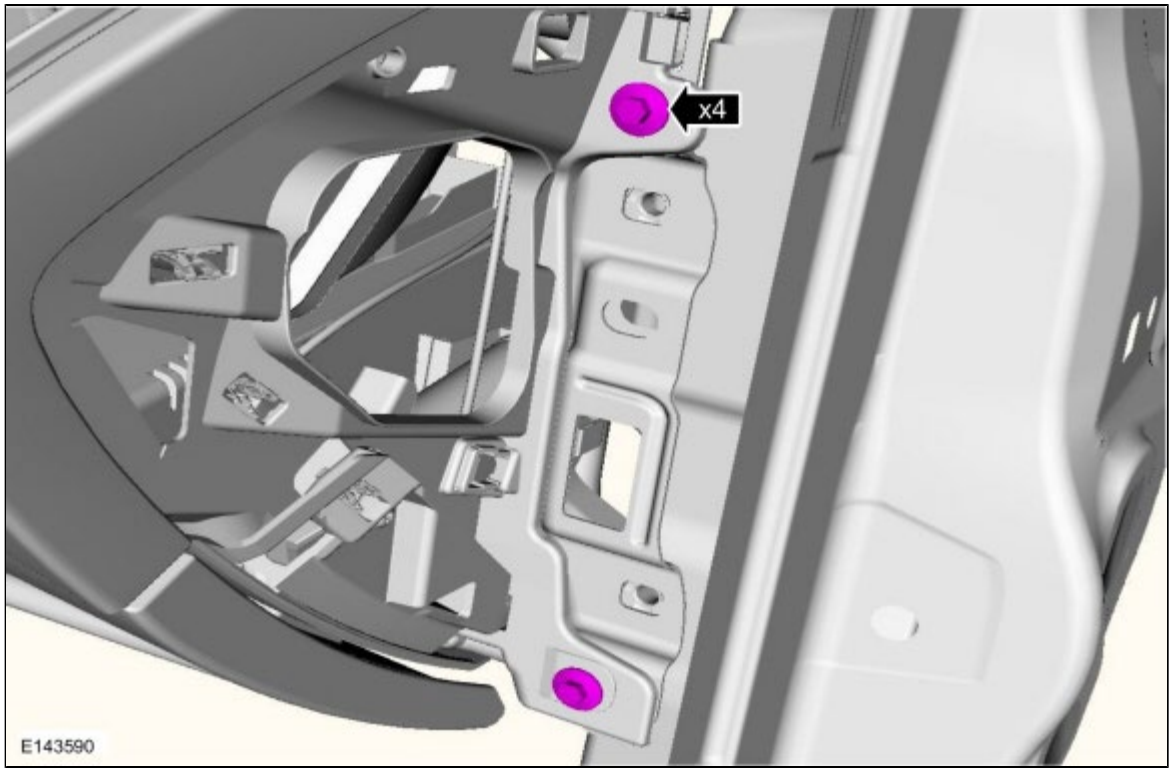

30. **NOTICE: Make sure that all electrical connectors and wiring are not hindered before removing the instrument panel or damage to the components may occur.**

    Remove the instrument panel from the vehicle.

31. Rotate the instrument panel face down and remove through the LH front door opening.

Installation

1. To install, reverse the removal procedure.

Copyright © Ford Motor Company

In-Vehicle Crossbeam

Removal

NOTE: *Removal steps in this procedure may contain installation details.*

1. **WARNING: Before beginning any service procedure in this section, refer to Safety Warnings in section 100-00 General Information. Failure to follow this instruction may result in serious personal injury.**

   Refer to: Health and Safety Precautions (100-00 General Information, Description and Operation).

2. Remove the cowl panel grille.
   Refer to: Cowl Panel Grille (501-02 Front End Body Panels, Removal and Installation).

3. 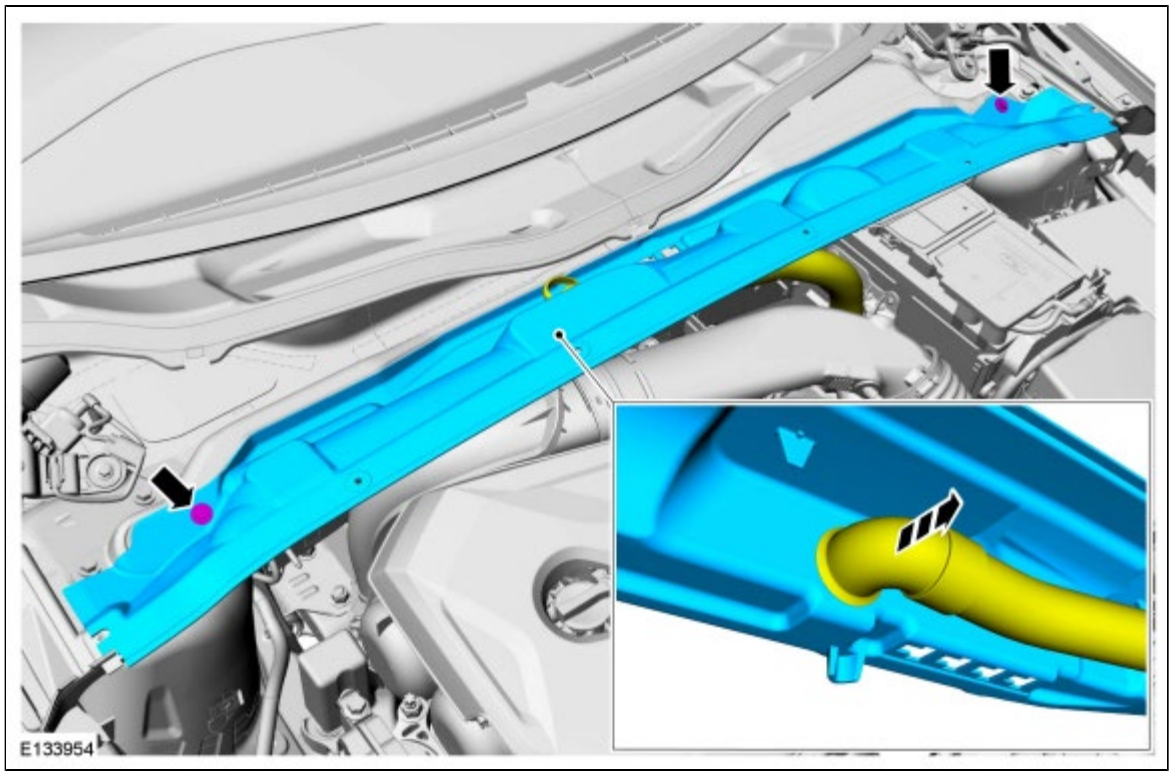

4. *Torque* : 25 Nm

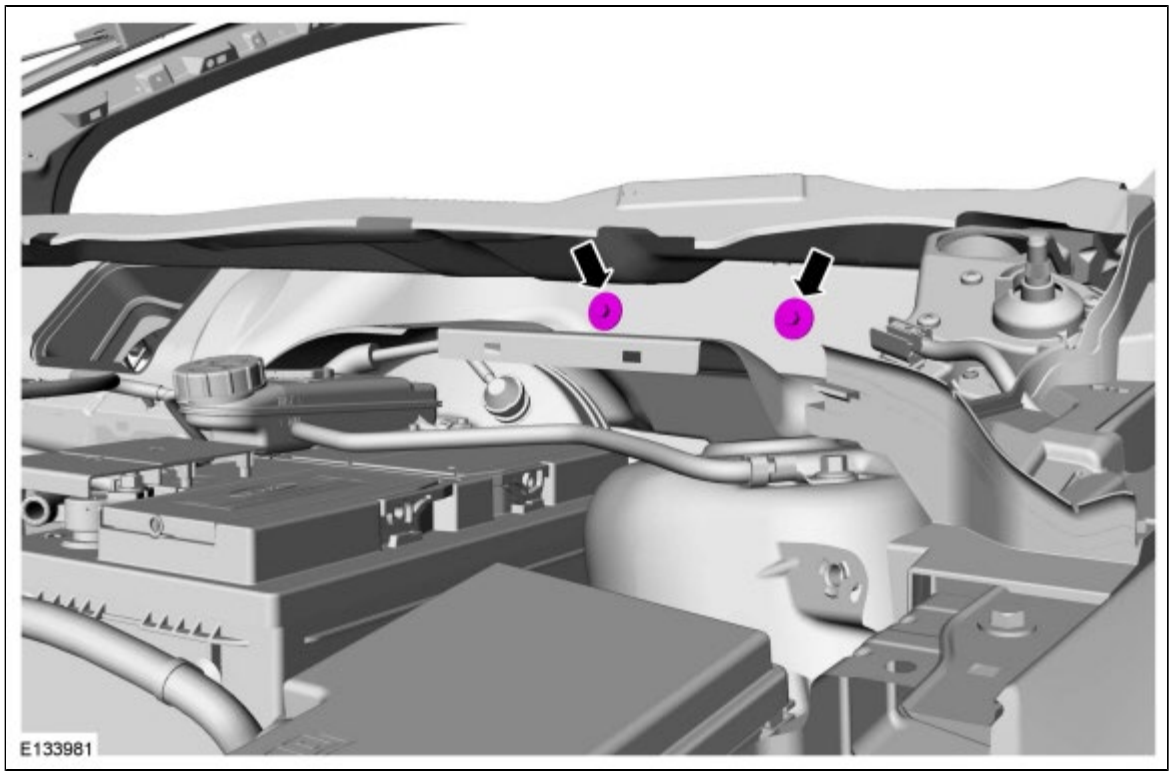

5. Remove the insturment panel upper section.
   Refer to: Instrument Panel Upper Section (501-12 Instrument Panel and Console, Removal and Installation).

6. Remove both front doors.
   Refer to: Front Door (501-03 Body Closures, Removal and Installation).

7. On both sides.
   Torque : 40 Nm

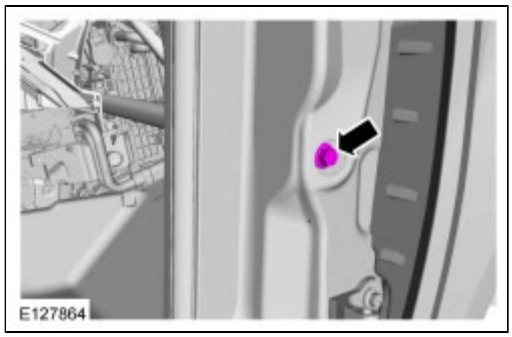

8.

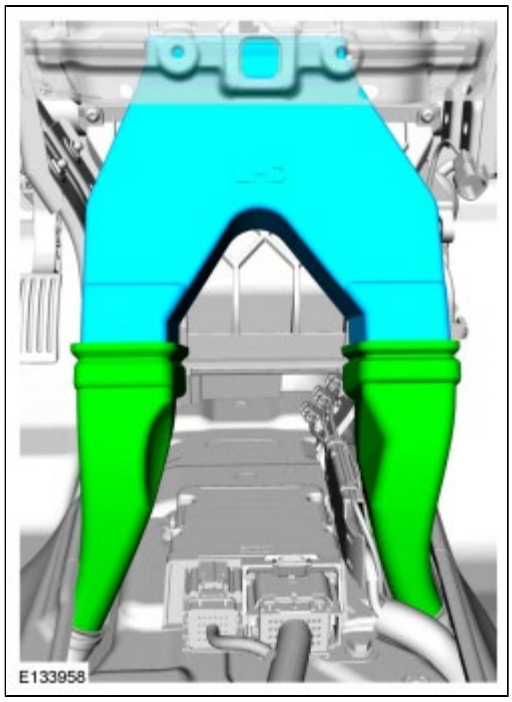

9. *Torque* : 25 Nm

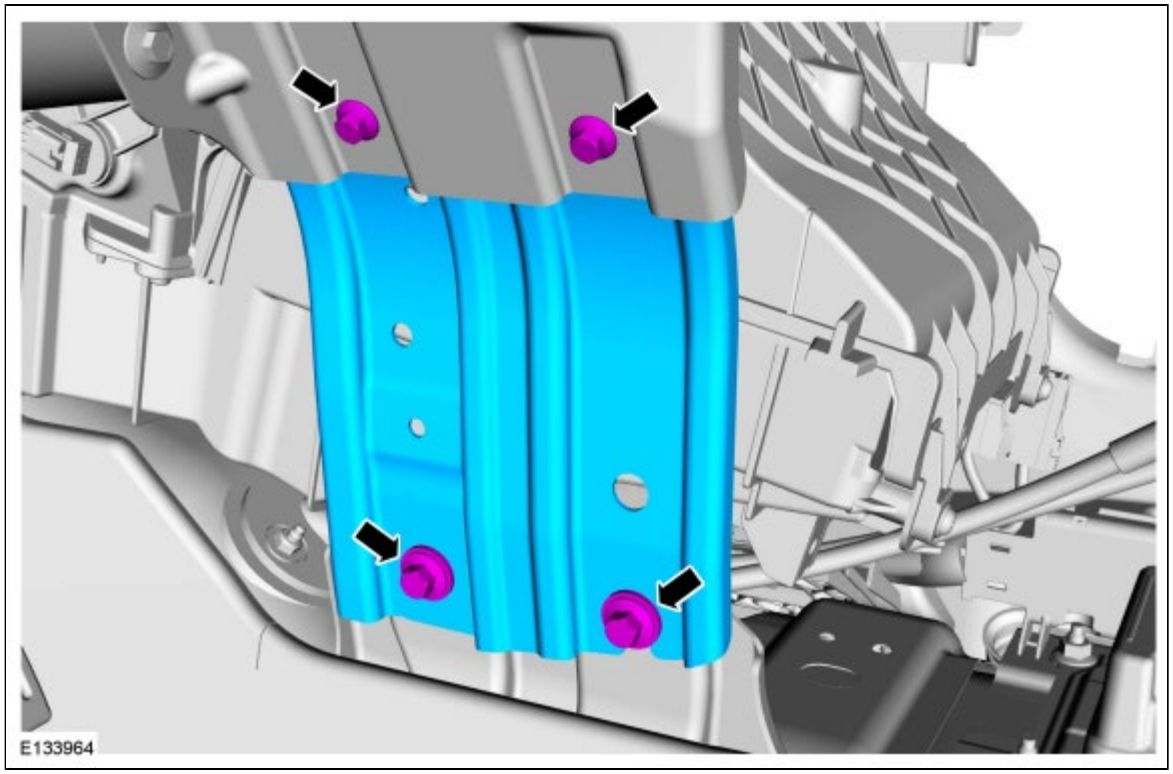

10.

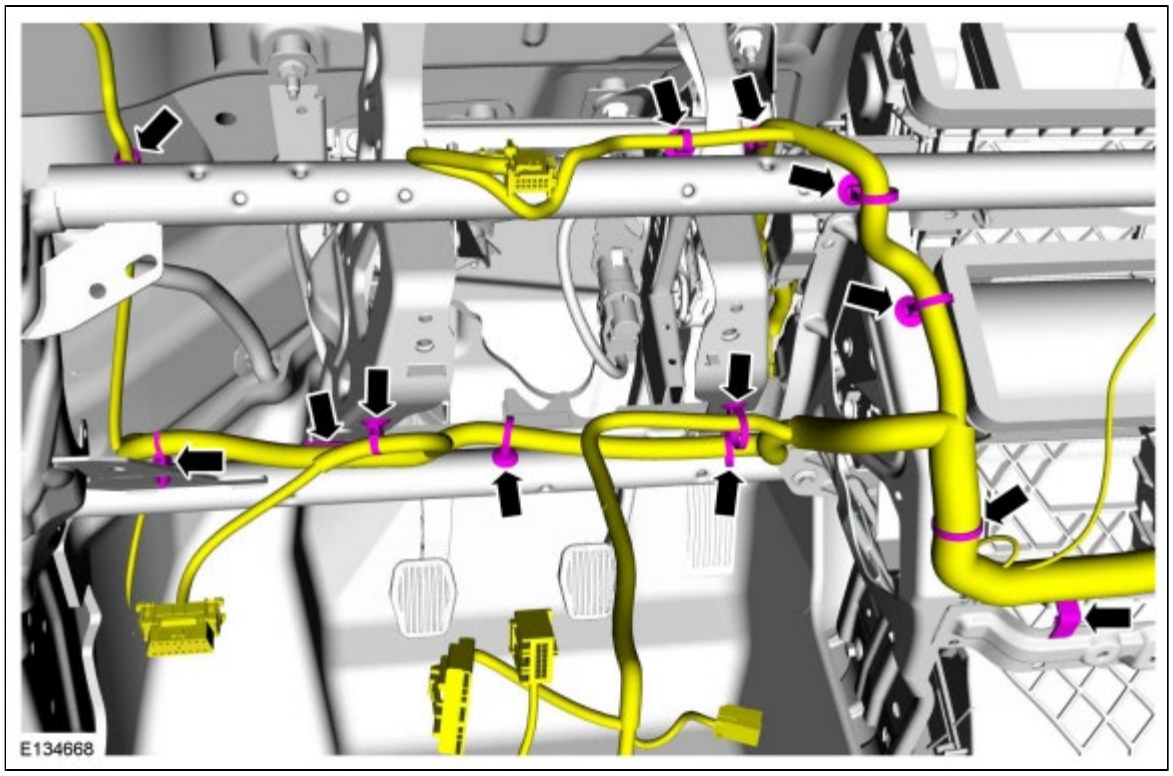

11.

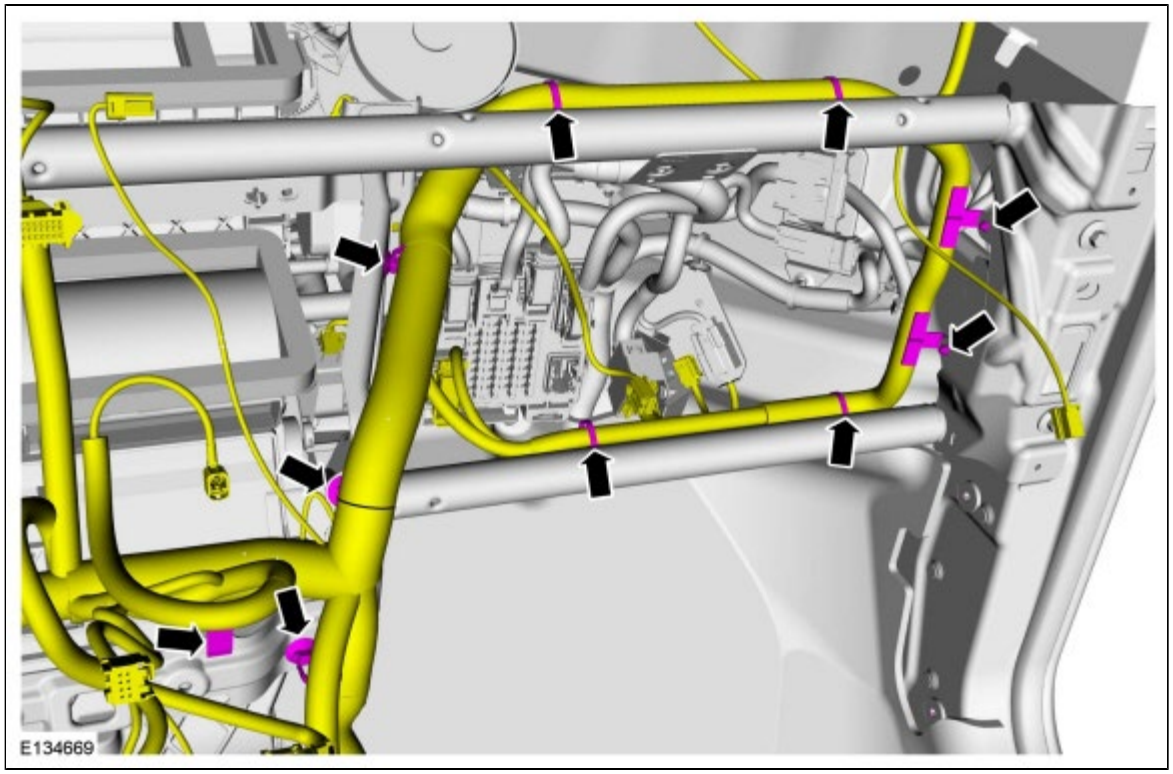

12. *Torque* : 10 Nm

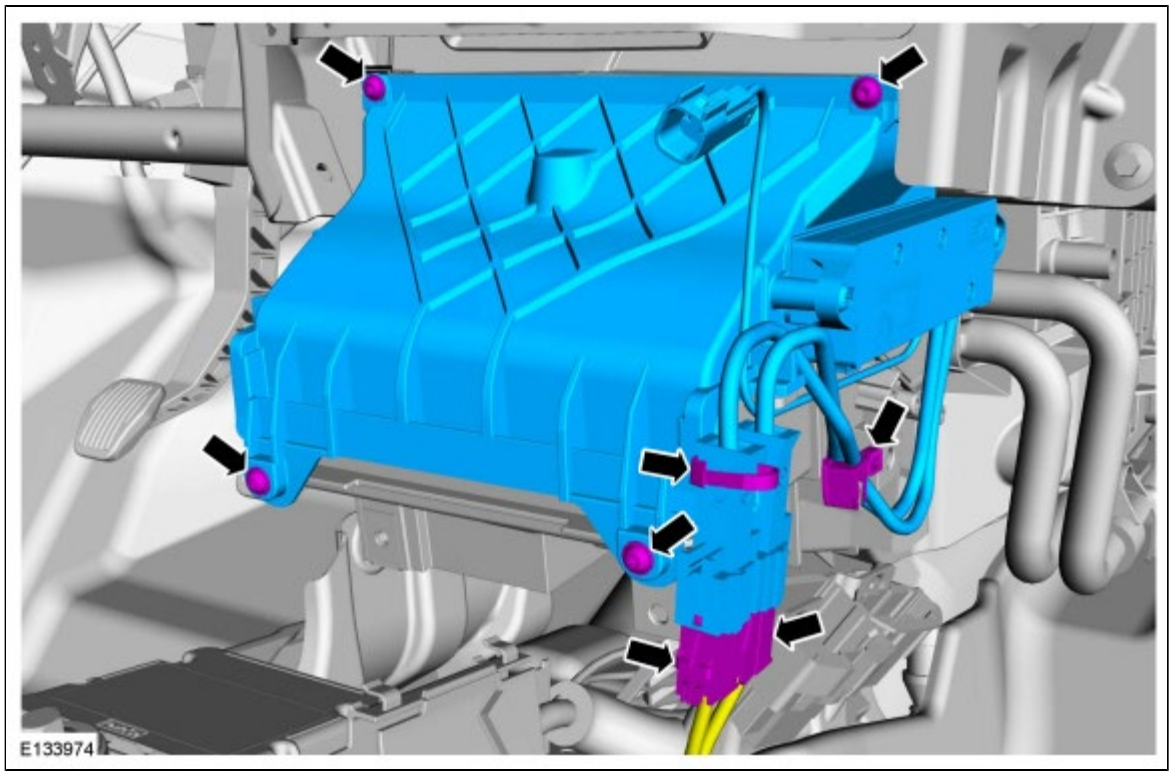

13. *Torque* : 25 Nm

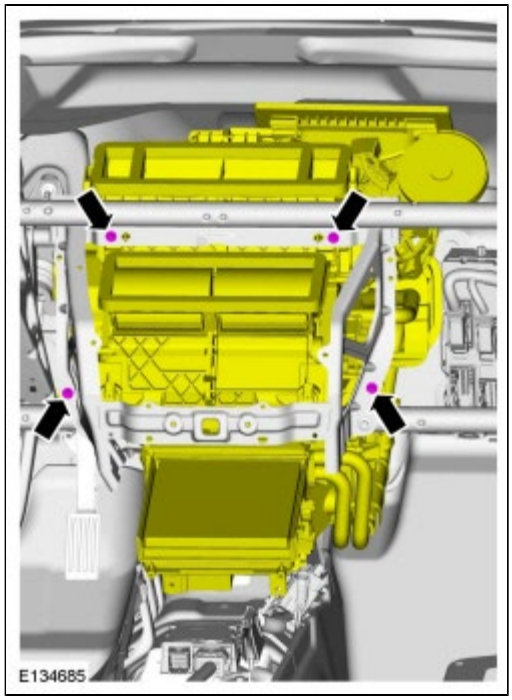

14. **NOTICE: To avoid damaging the in-vehicle cross beam, an assistant is required when carrying out the following steps.**

    NOTICE: Remove the bolts from one side completely and support the in-vehicle cross beam before removing the bolts from the opposite side

    NOTICE: Make sure that all electrical connectors and wiring are not hindered before removing the in-vehicle cross beam or damage to the components may occur.

    Remove the in-vehicle cross beam from the vehicle.
    Torque : 25 Nm

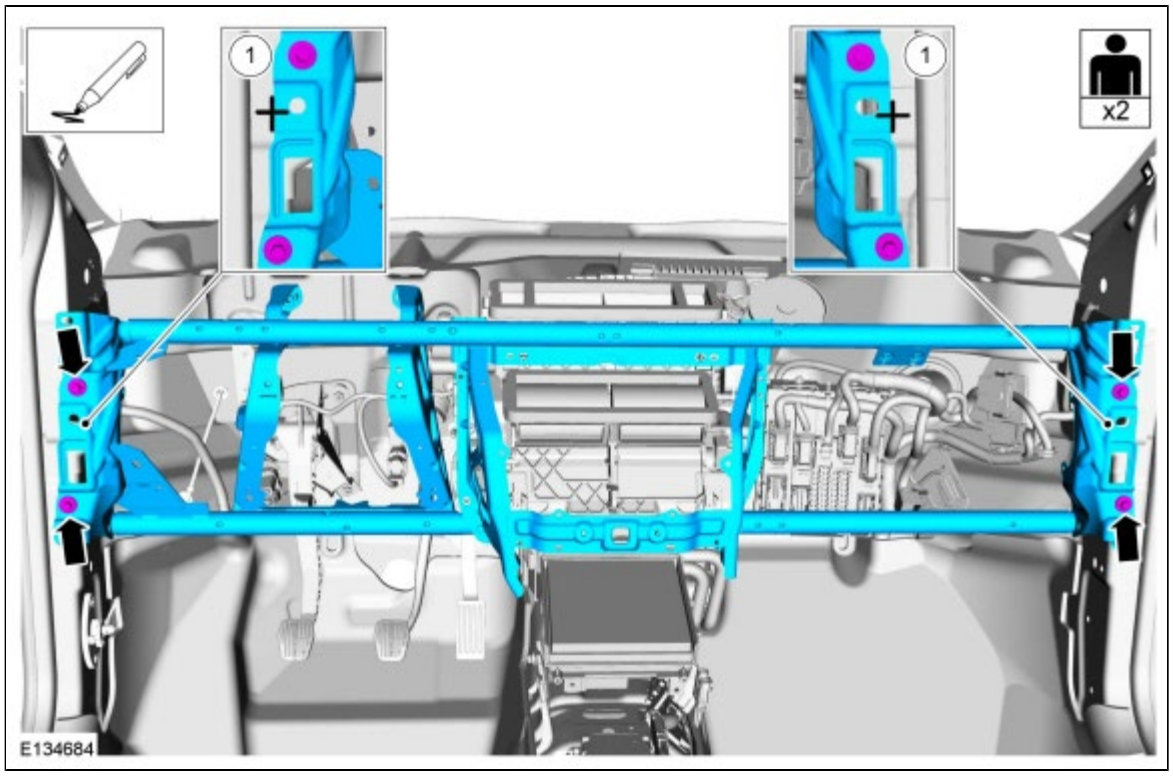

Installation

1. To install, reverse the removal procedure.

Copyright © Ford Motor Company

Floor Console - Vehicles With: Center Armrest

Removal

NOTE: *Removal steps in this procedure may contain installation details.*

1. **WARNING: Before beginning any service procedure in this section, refer to Safety Warnings in section 100-00 General Information. Failure to follow this instruction may result in serious personal injury.**

   Refer to: Health and Safety Precautions (100-00 General Information, Description and Operation).

2. Vehicles with manual transmission.

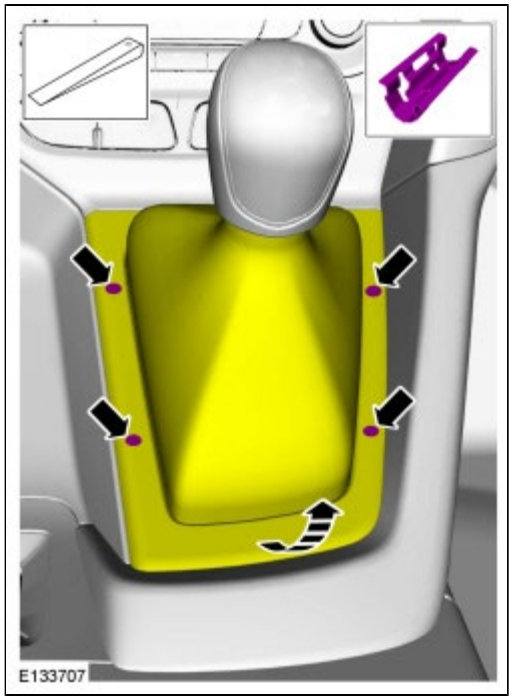

3. Vehicles with automatic transmission.

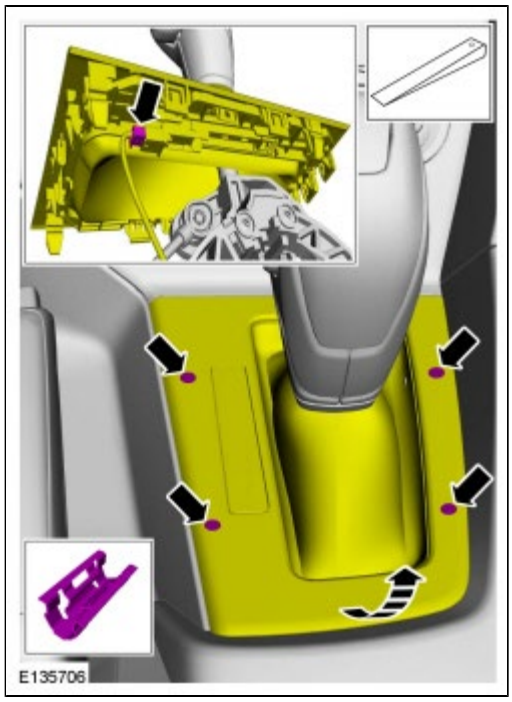

4.

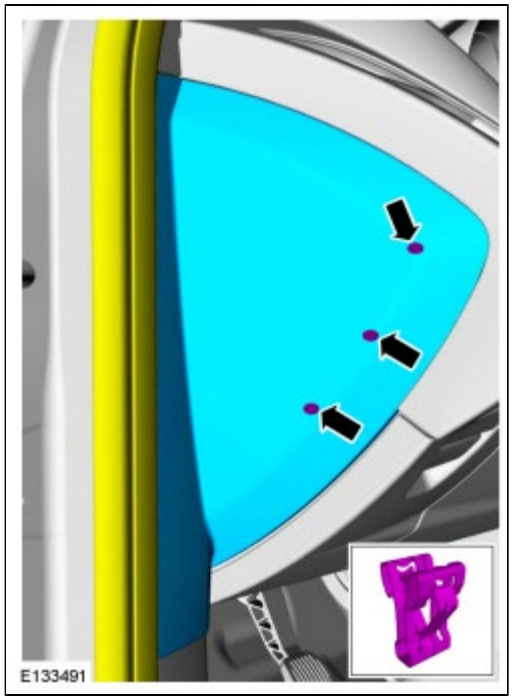

5. *Torque* : 2 Nm

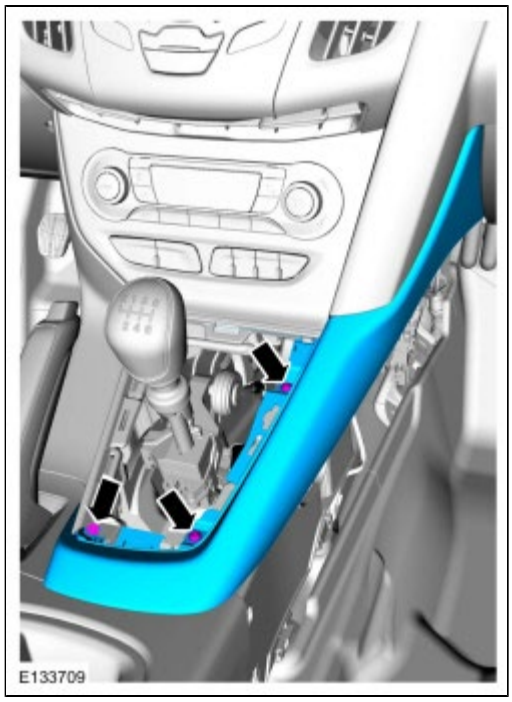

6.

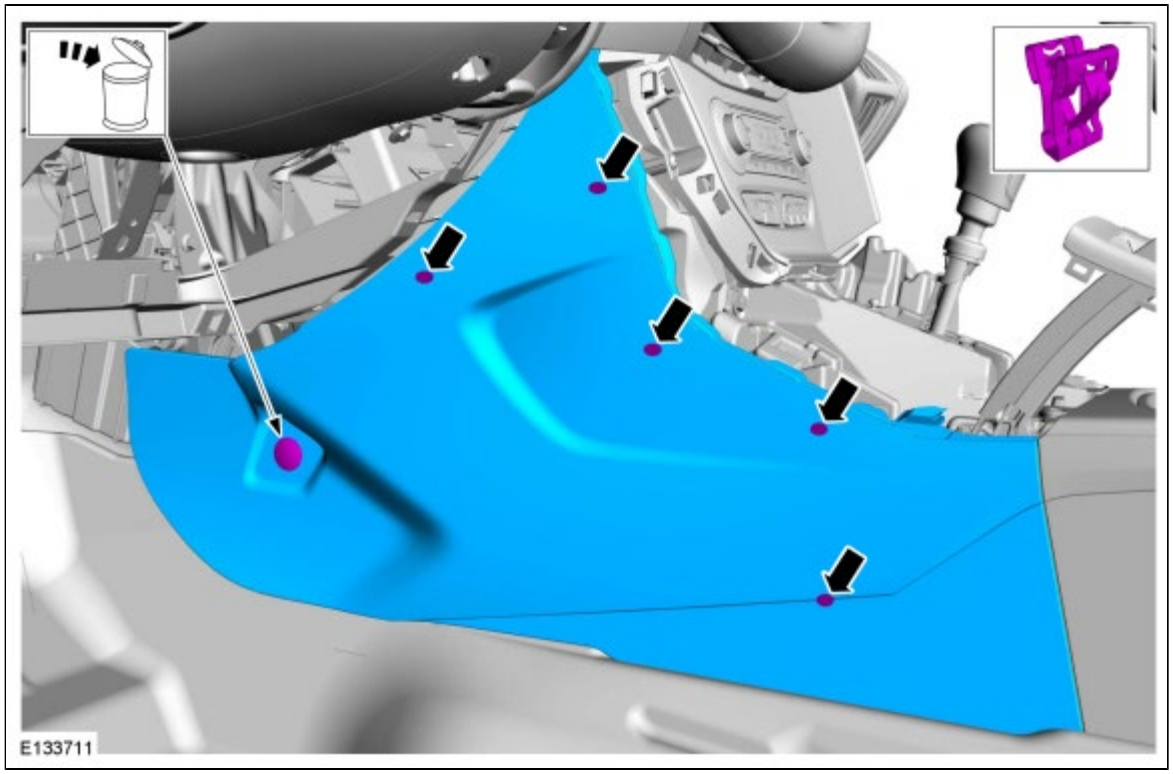

7.

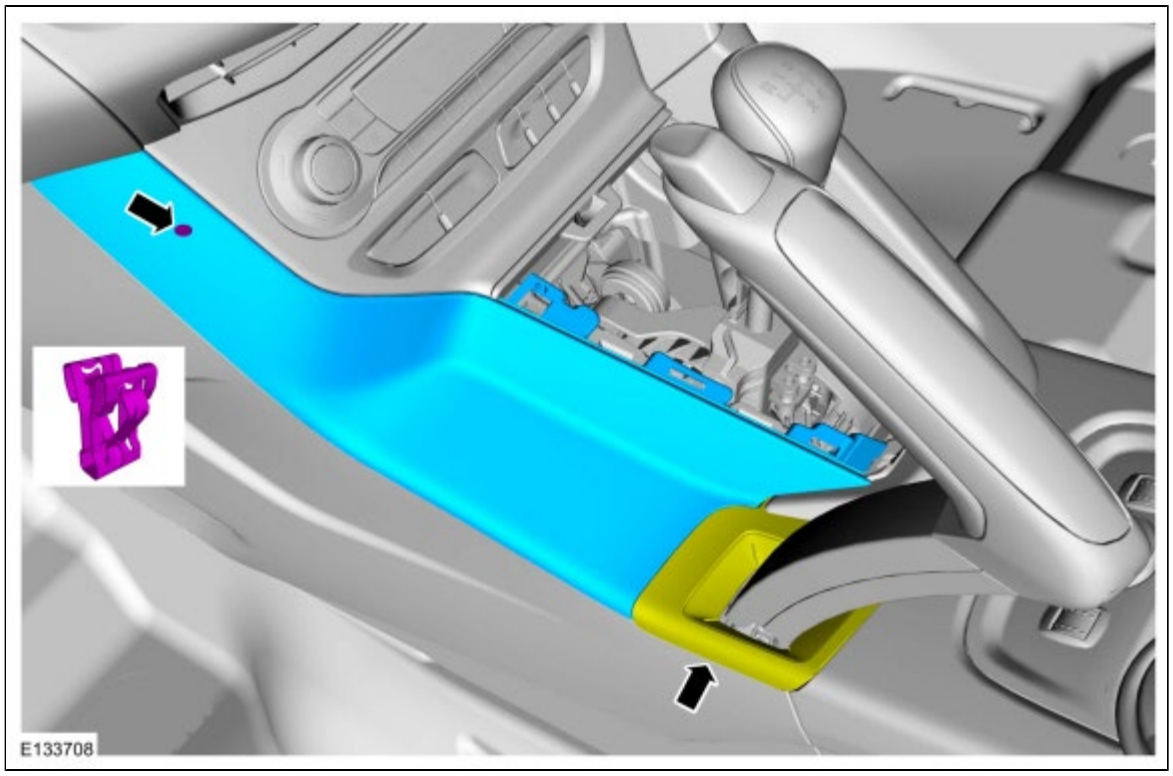

8.

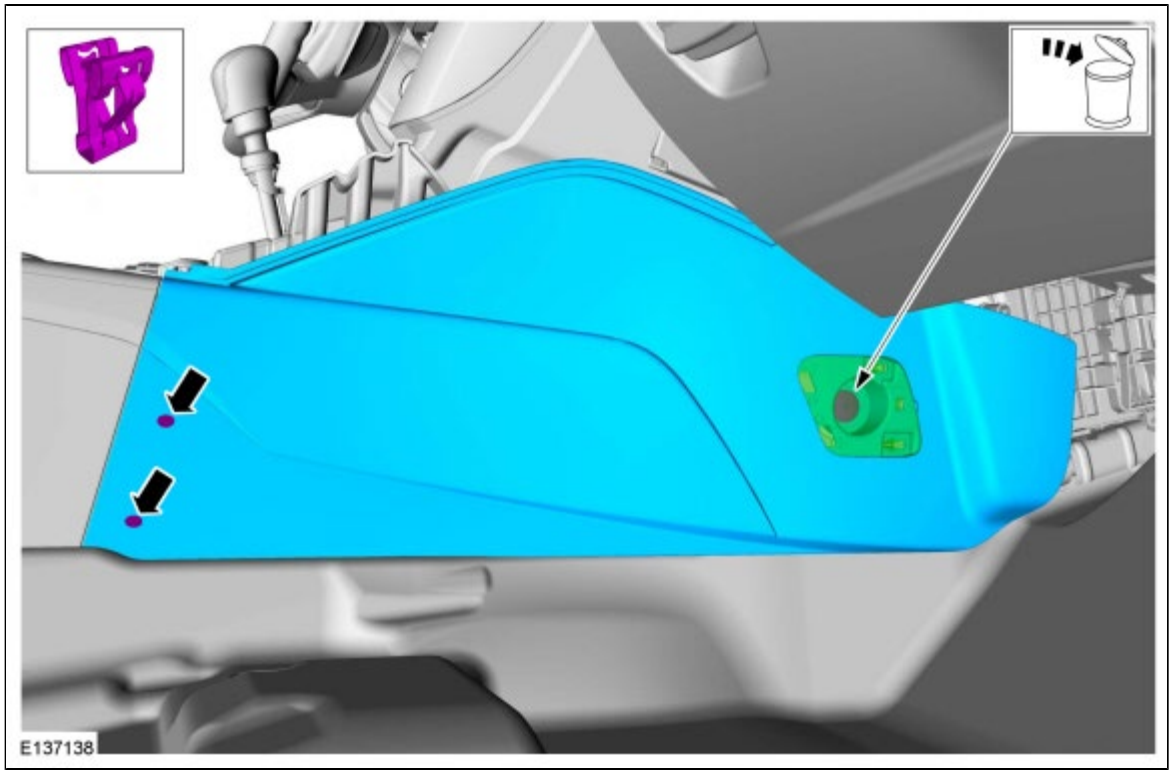

9. *Torque* : 4 Nm

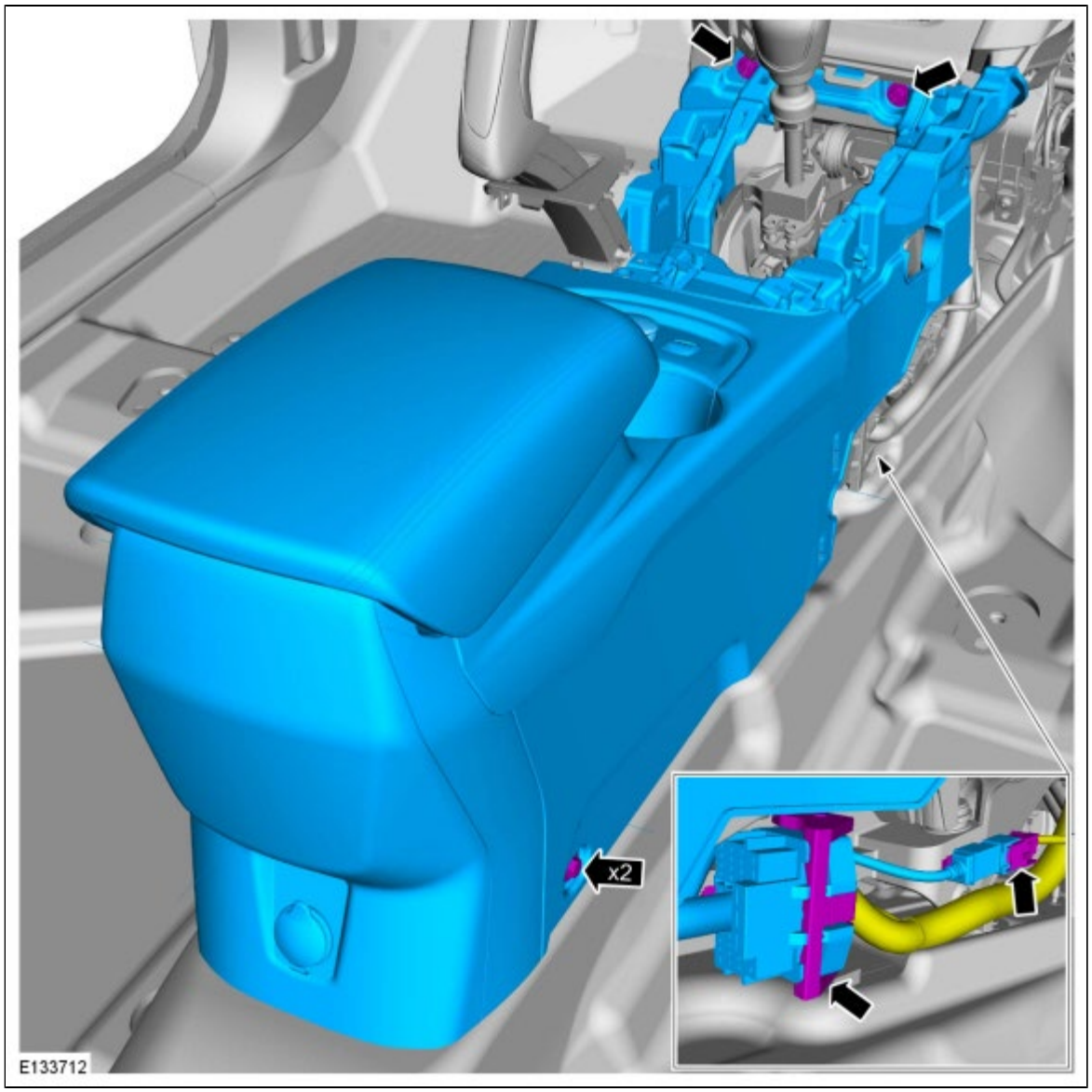

Installation

1. To install, reverse the removal procedure.

Copyright © Ford Motor Company

Floor Console - Vehicles Without: Center Armrest

Removal

NOTE: *Removal steps in this procedure may contain installation details.*

1. **WARNING: Before beginning any service procedure in this section, refer to Safety Warnings in section 100-00 General Information. Failure to follow this instruction may result in serious personal injury.**

   Refer to: Health and Safety Precautions (100-00 General Information, Description and Operation).

2. Vehicles with manual transmission.

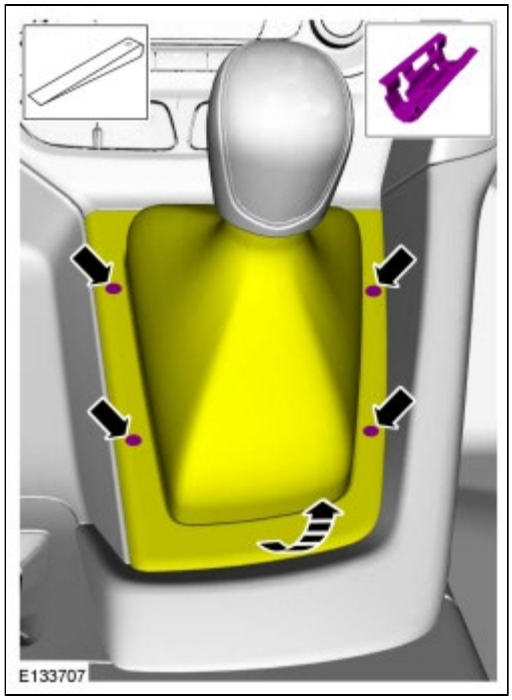

3. Vehicles with automatic transmission.

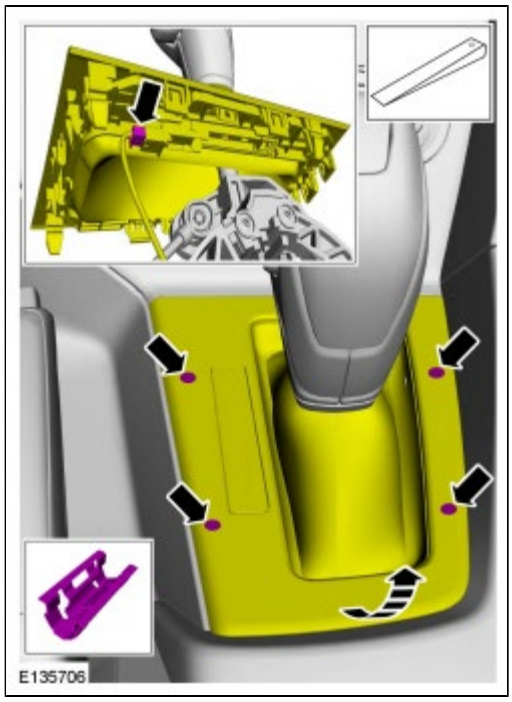

4.

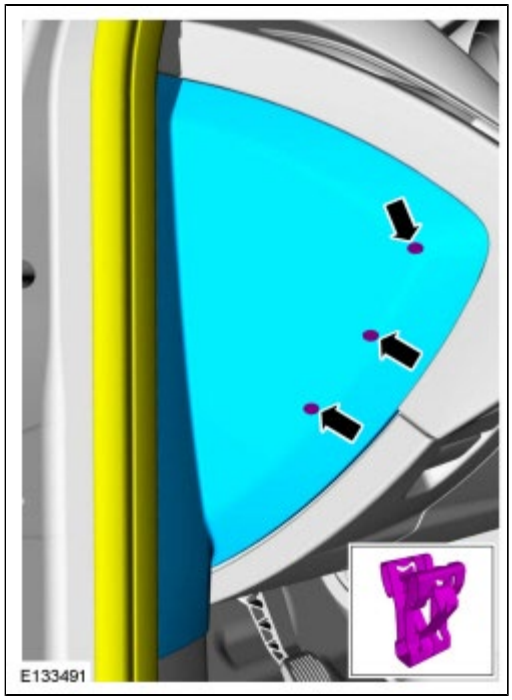

5. Refer to: Driver Lower Airbag - Vehicles Built From: 11-June-2012 (501-20B Supplemental Restraint System, Removal and Installation).

6.

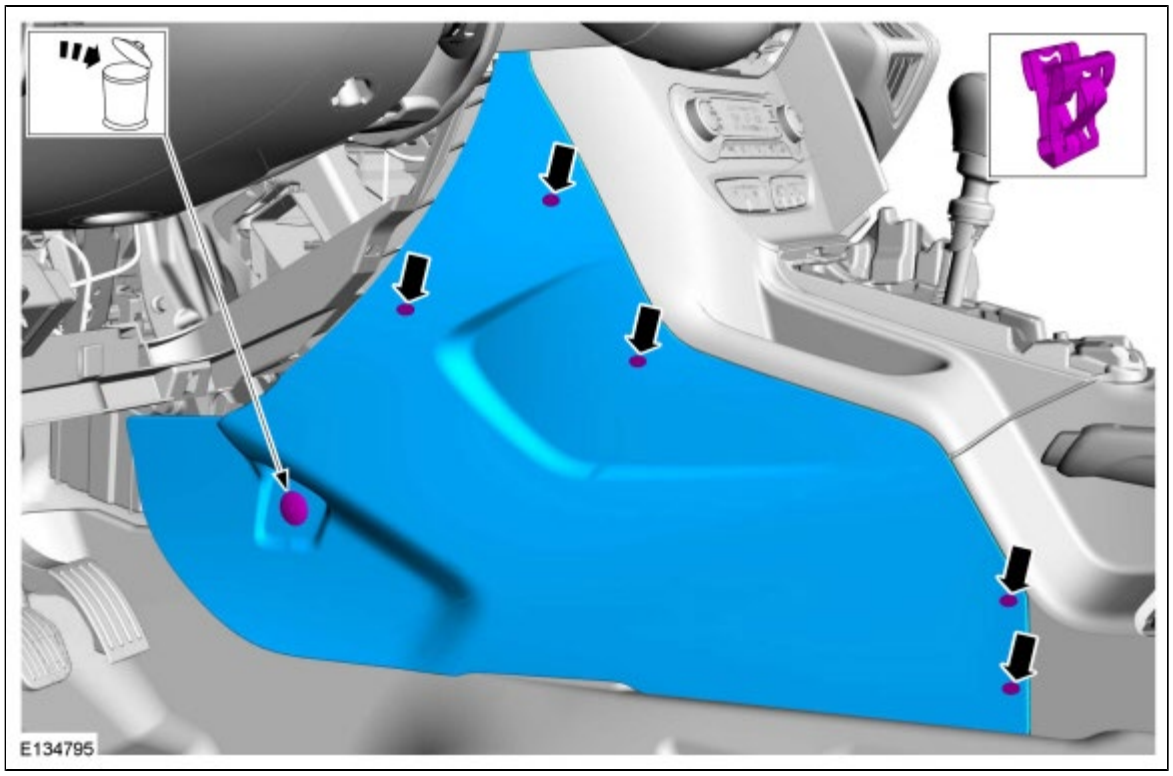

7.

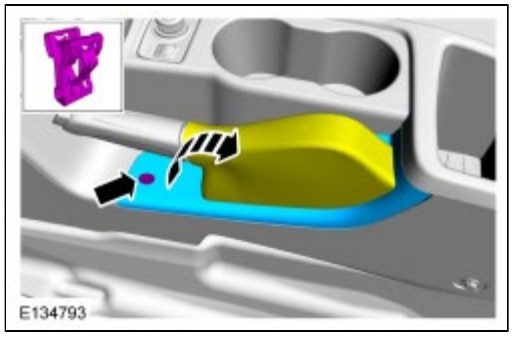

8.

9.

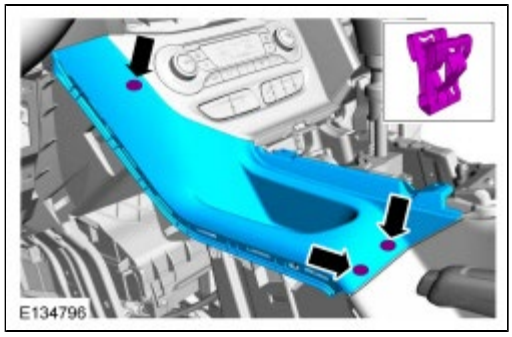

10.

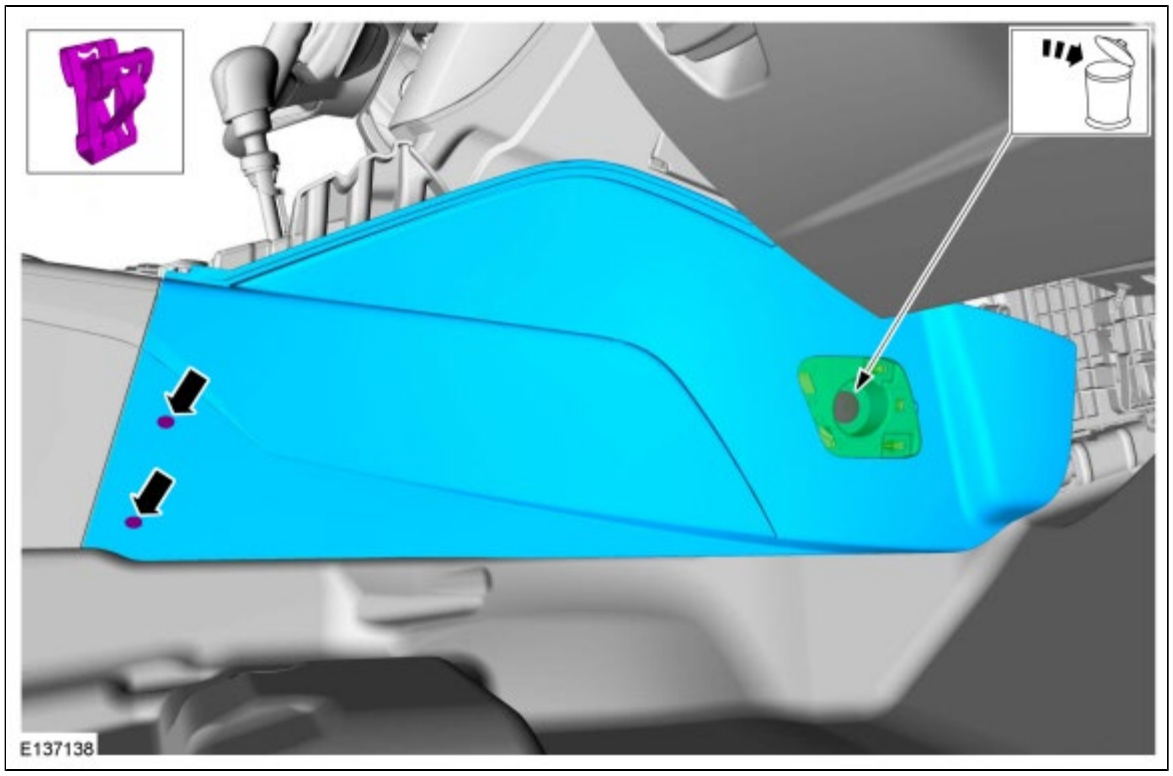

11. *Torque* : 4 Nm

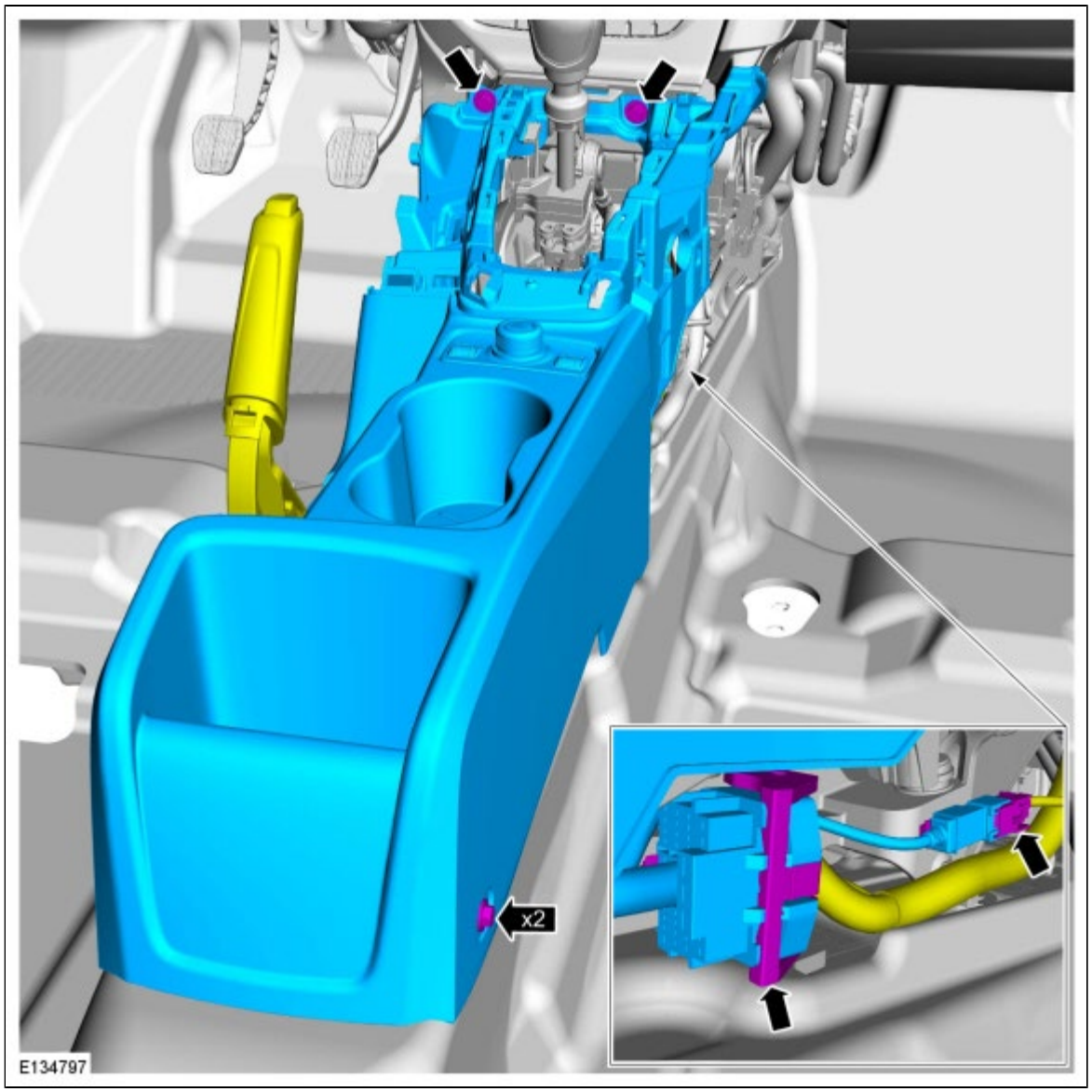

Installation

1. To install, reverse the removal procedure.

Copyright © Ford Motor Company

Instrument Panel Upper Section

Removal

NOTE: *Removal steps in this procedure may contain installation details.*

1. **WARNING: Before beginning any service procedure in this section, refer to Safety Warnings in section 100-00 General Information. Failure to follow this instruction may result in serious personal injury.**

   Refer to: Health and Safety Precautions (100-00 General Information, Description and Operation).

2. Remove both A-pillar trim panels.
   Refer to: A-Pillar Trim Panel (501-05 Interior Trim and Ornamentation, Removal and Installation).

3. 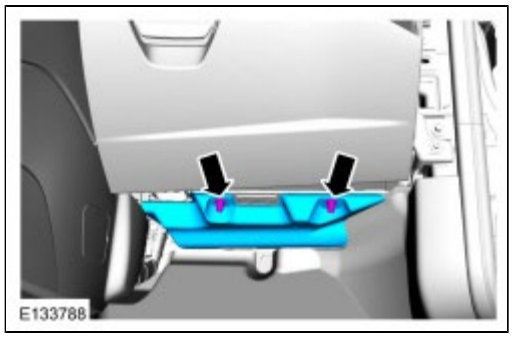

4. Both sides.

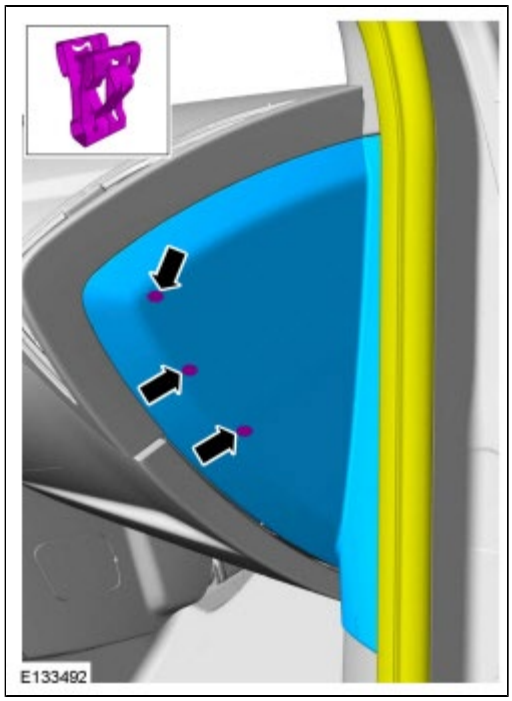

5. *Torque* : 2 Nm

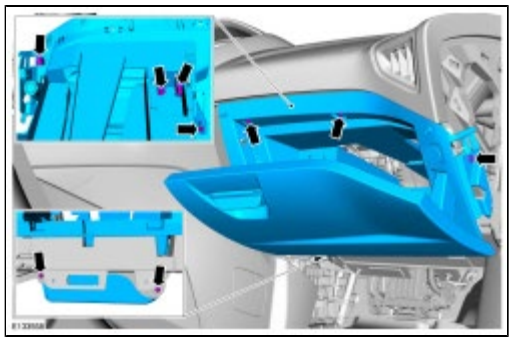

6. Disconnect the battery.
   Refer to: Battery Disconnect and Connect (414-01 Battery, Mounting and Cables, General Procedures).

7. *Torque* : 8 Nm

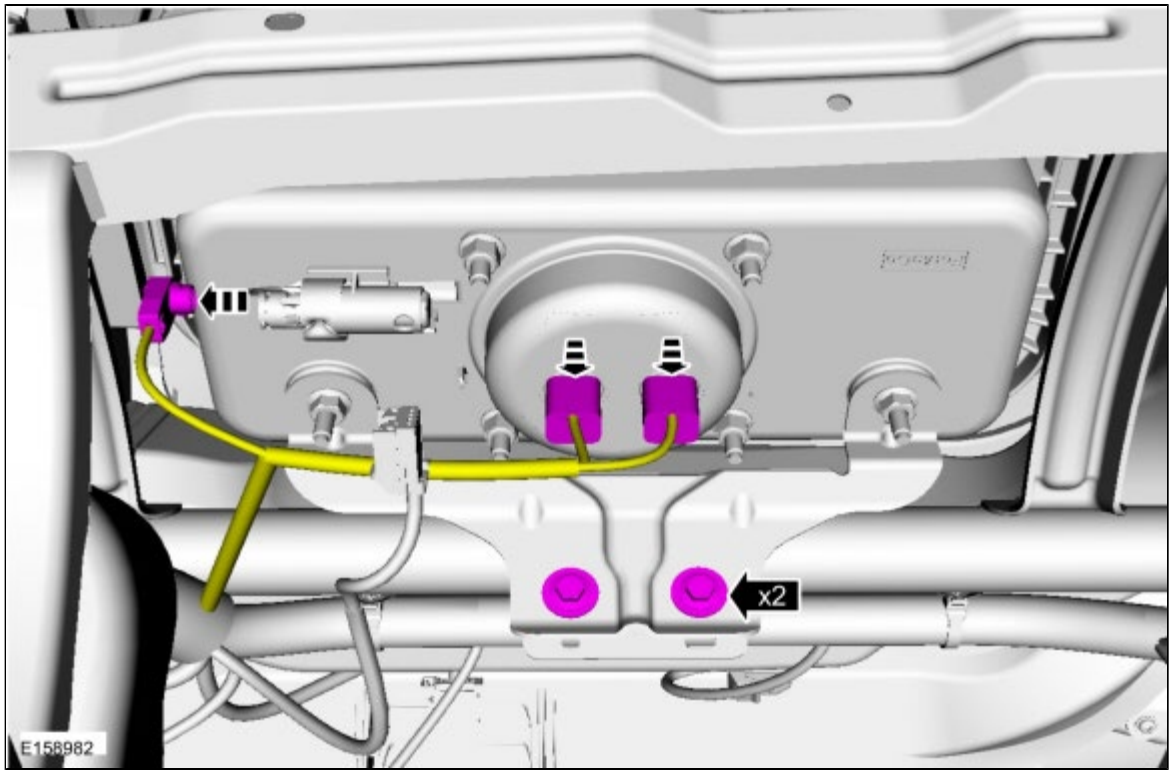

8.

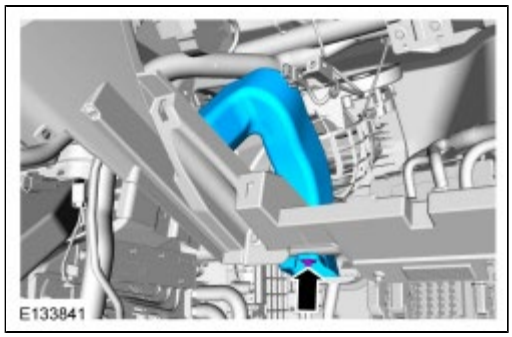

9.

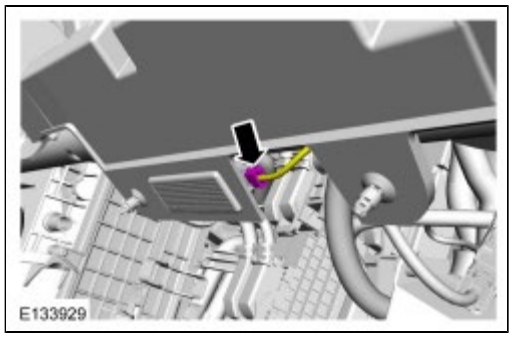

10. Remove the front floor console.
    Refer to: Floor Console - Vehicles Without: Center Armrest (501-12 Instrument Panel and Console, Removal and Installation).
    Refer to: Floor Console - Vehicles With: Center Armrest (501-12 Instrument Panel and Console, Removal and Installation).

11. Depending on vehicle option content, remove the FCDIM or the FDIM .
    Refer to: Front Display Interface Module (FDIM) (415-00C Information and Entertainment System - General Information - Vehicles With: SYNC/Sony AM/FM/CD, Removal and Installation).
    Refer to: Front Control/Display Interface Module (FCDIM) (415-00B Information and Entertainment System - General Information - Vehicles With: AM/FM/CD/SYNC, Removal and Installation).

12.

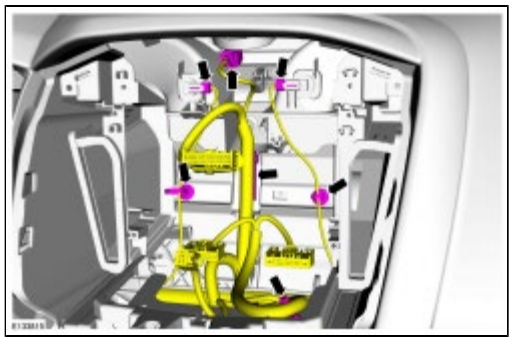

13. *Torque* : 1 Nm

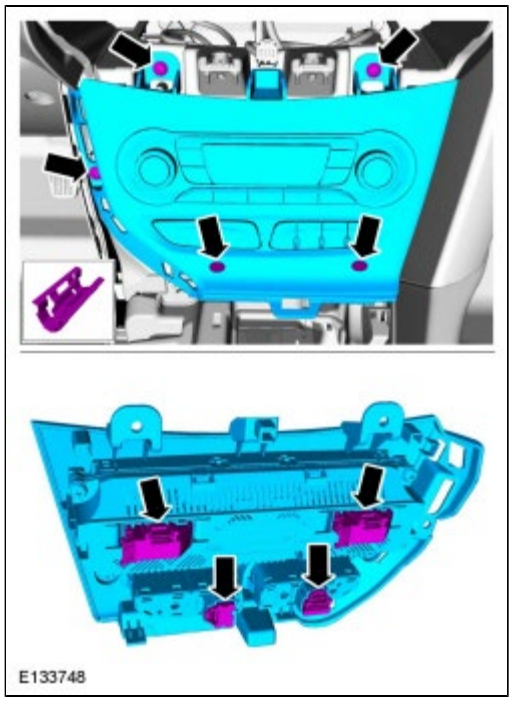

14. Vehicles equipped with the premium audio system remove the APIM .

Refer to: SYNC Module [APIM] (415-00B Information and Entertainment System - General Information - Vehicles With: AM/FM/CD/SYNC, Removal and Installation).

15.

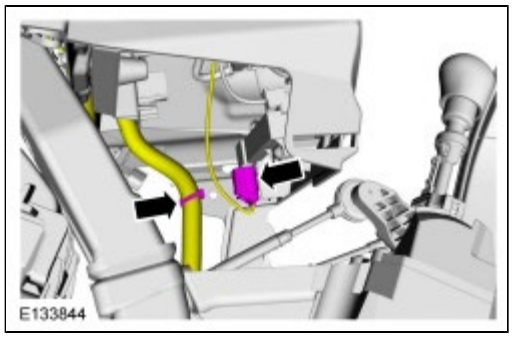

16.

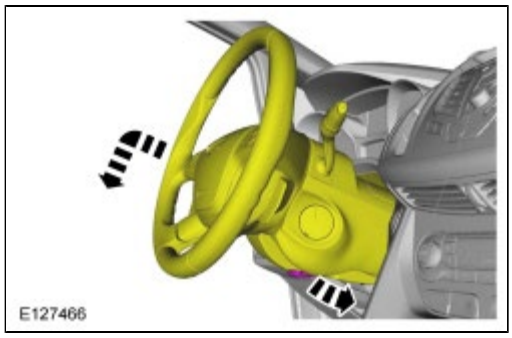

17.

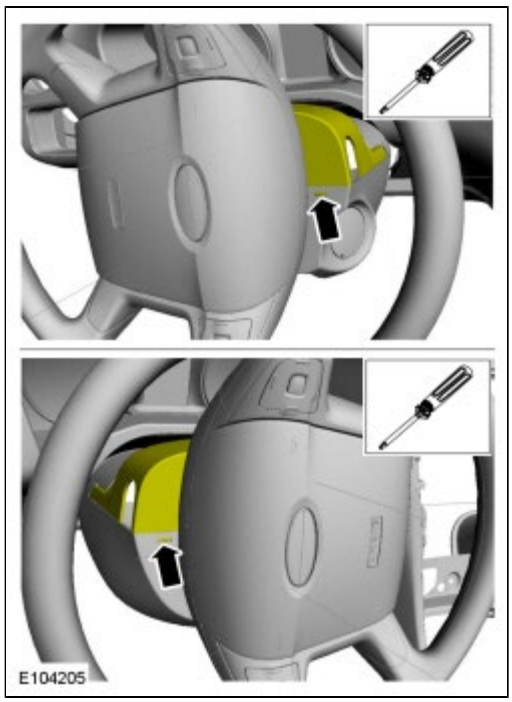

18.

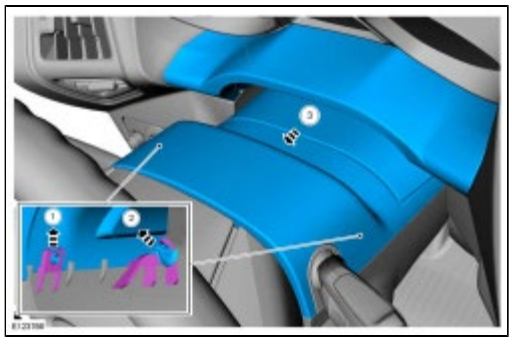

19.

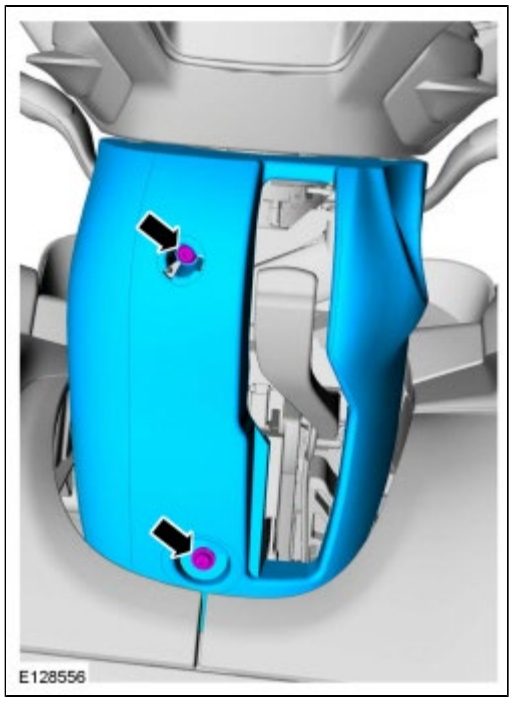

20. Vehicles without intelligent access.

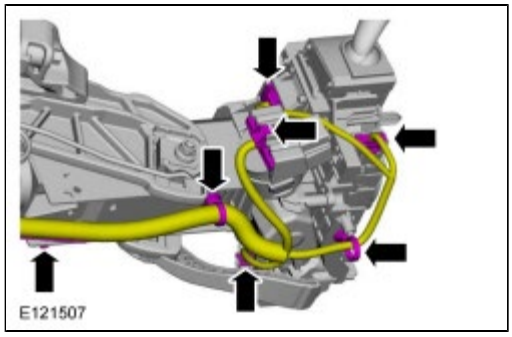

21. Vehicles with intelligent access.

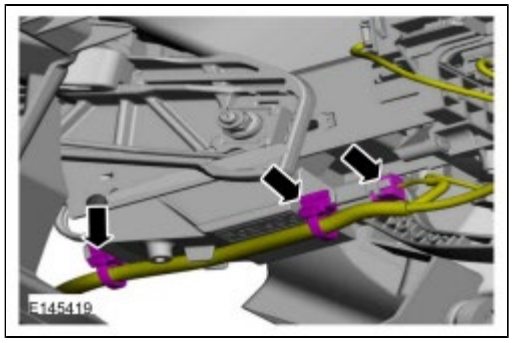

22. Remove and discard the steering column shaft-to-steering gear bolt and disconnect the steering column shaft from the steering gear.
    Torque : 28 Nm

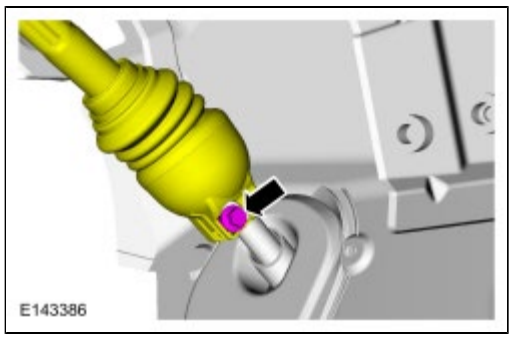

23. Remove and discard the 4 steering column bolts and remove the steering column.
    Torque : 28 Nm

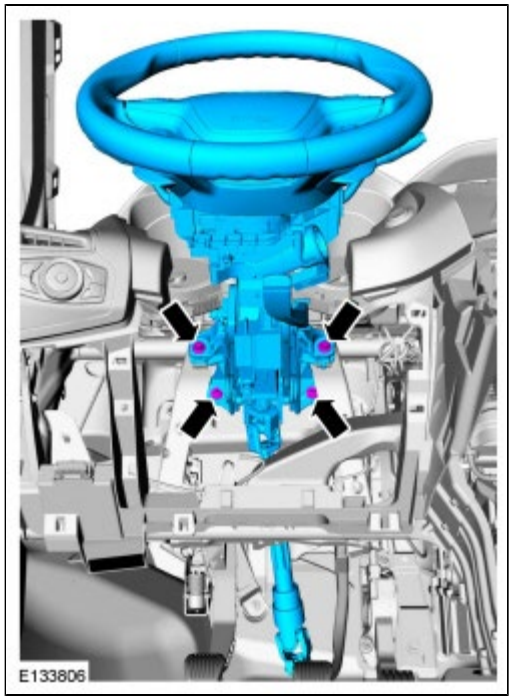

24. *Torque* : 1 Nm

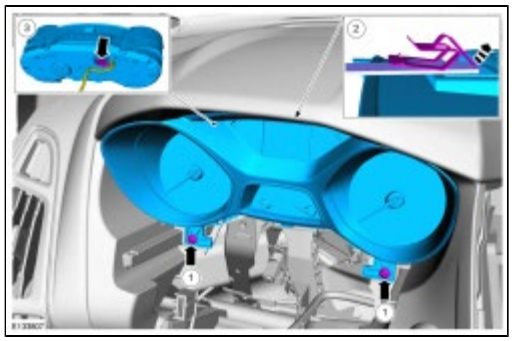

25. If equipped with intelligent access

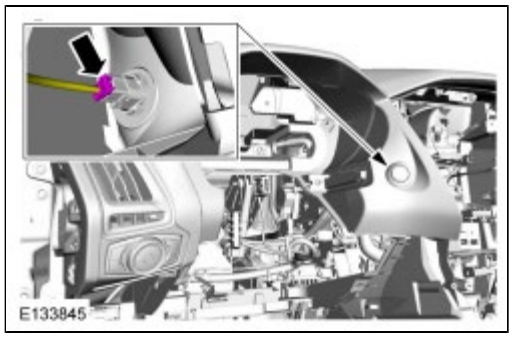

26.

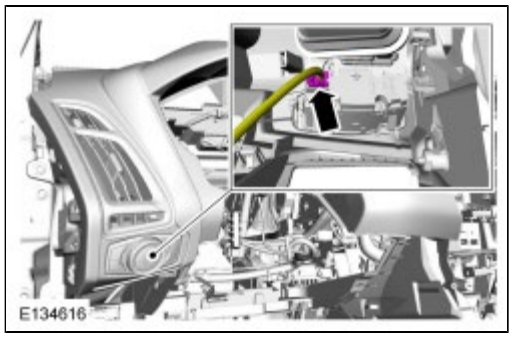

27.

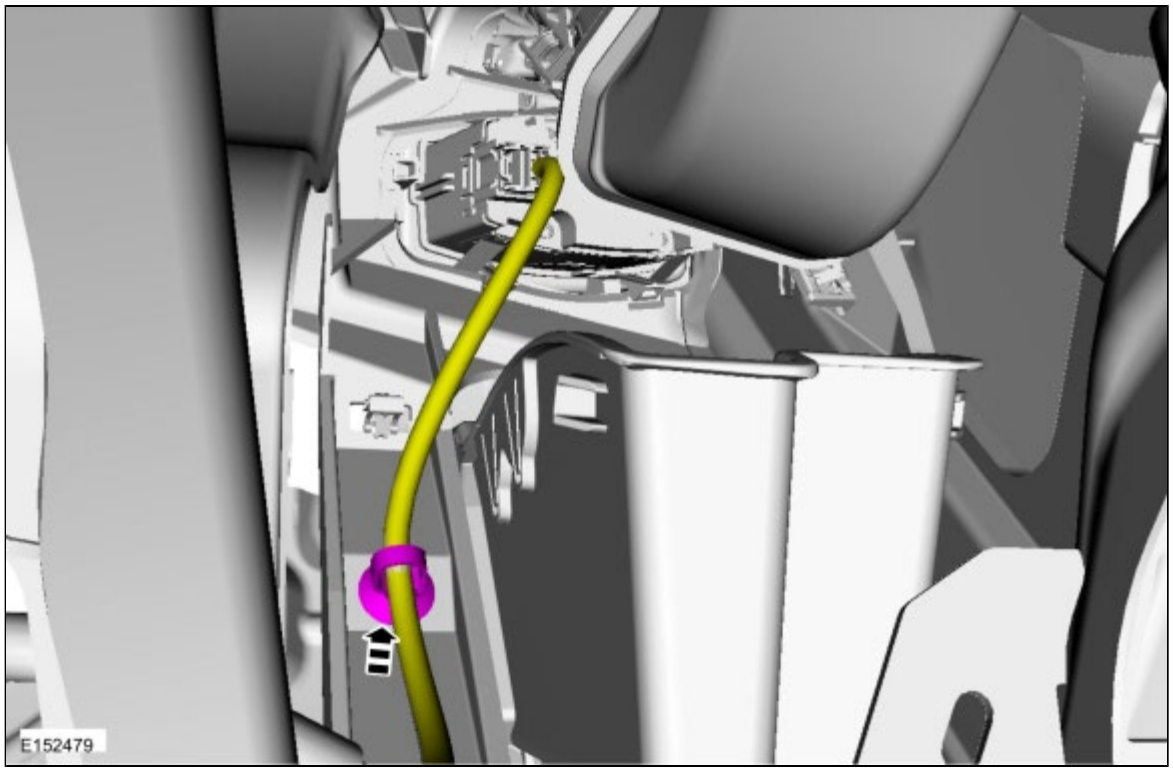

28.

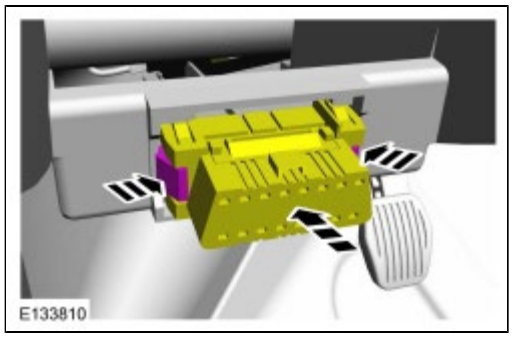

29.

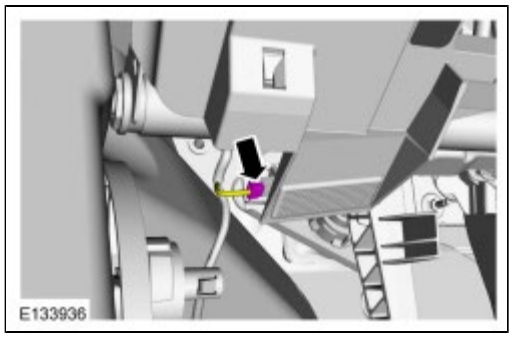

30.

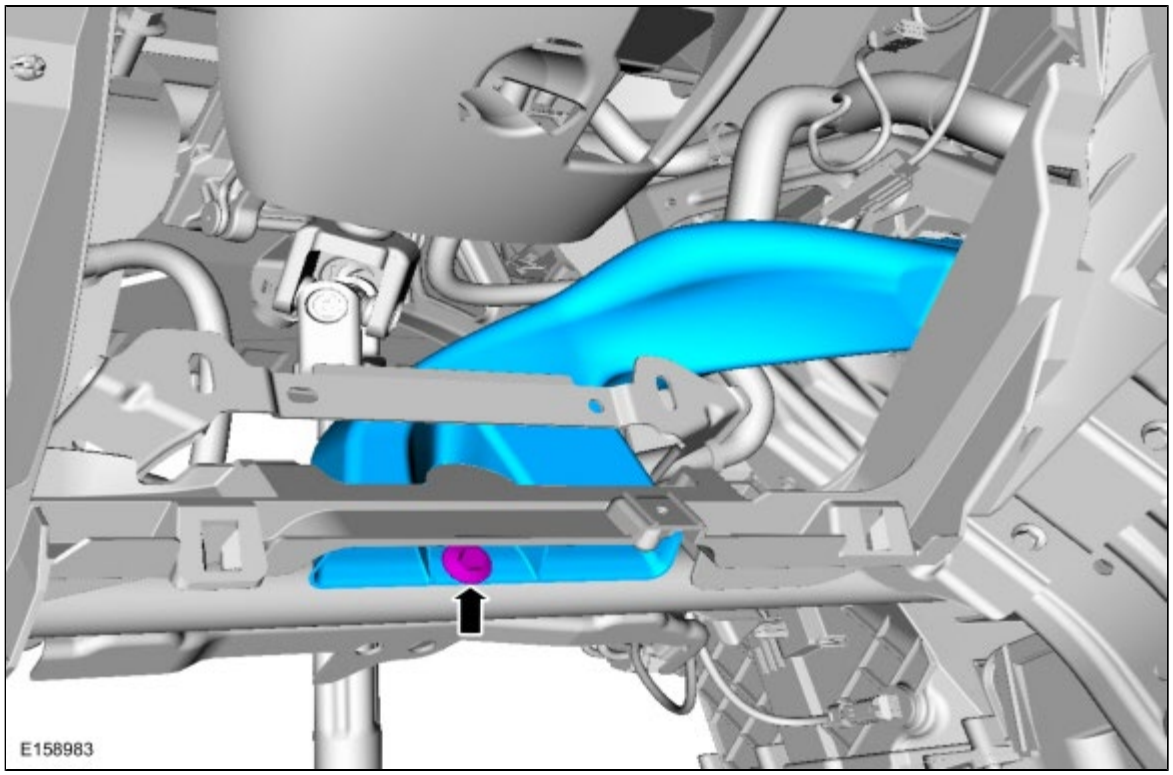

31. **NOTICE: To avoid damaging the upper section, the aid of an assistant is required to carry out this step.**

    NOTICE: Make sure that all electrical connectors and wiring are not hindered before removing the upper section or damage to the components may occur.

    NOTE: *Install all the bolts finger tight before final tightening.*

    Remove the instrument panel upper section.
    Torque : 3 Nm

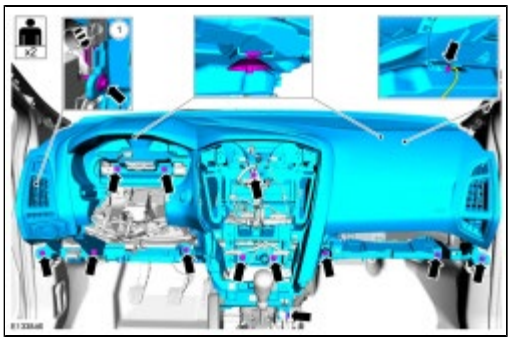

Installation

1. To install, reverse the removal procedure.

Copyright © Ford Motor Company

Overhead Console

Removal

NOTE: *Removal steps in this procedure may contain installation details.*

1. **WARNING: Before beginning any service procedure in this section, refer to Safety Warnings in section 100-00 General Information. Failure to follow this instruction may result in serious personal injury.**

   Refer to: Health and Safety Precautions (100-00 General Information, Description and Operation).

2. 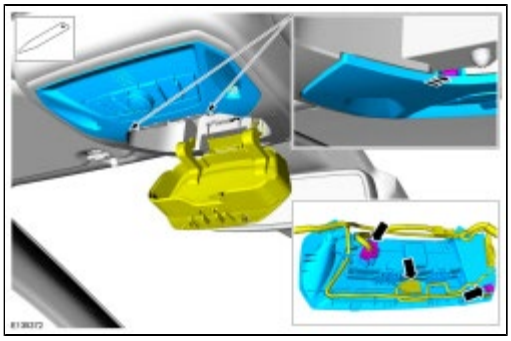

3. 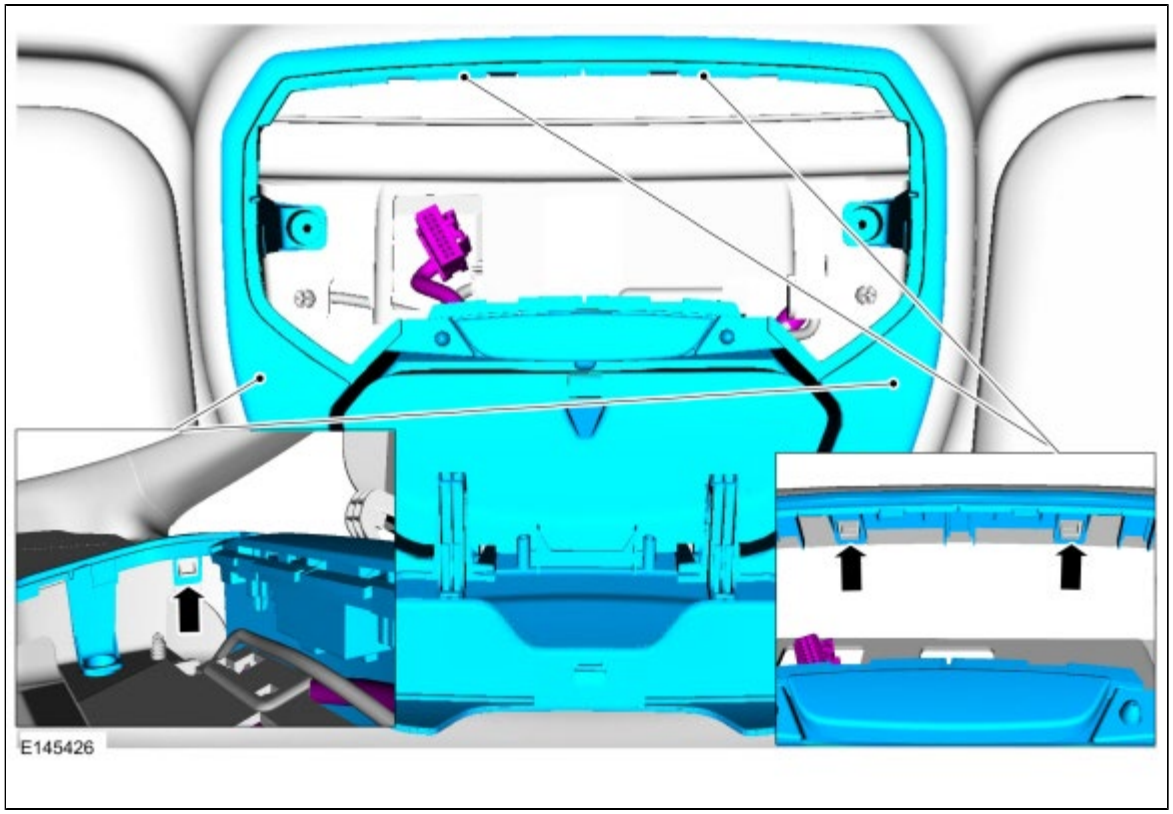

4.

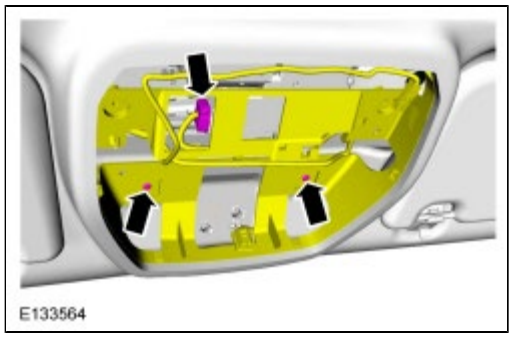

Installation

1. To install, reverse the removal procedure.

Copyright © Ford Motor Company

Auxiliary Power Point

Removal

NOTE: *Removal steps in this procedure may contain installation details.*

1. **WARNING: Before beginning any service procedure in this section, refer to Safety Warnings in section 100-00 General Information. Failure to follow this instruction may result in serious personal injury.**

   Refer to: Health and Safety Precautions (100-00 General Information, Description and Operation).

2. Open the power point cover.

3. *Special Tool(s)* : 501-039 Remover, Power Point Socket

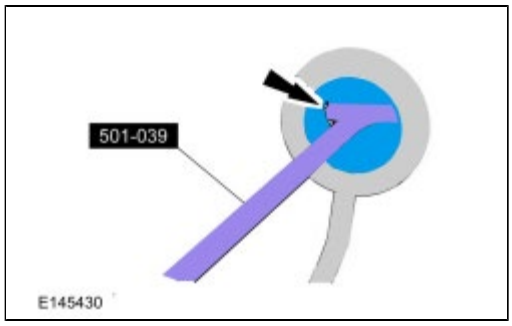

4. *Special Tool(s)* : 501-039 Remover, Power Point Socket

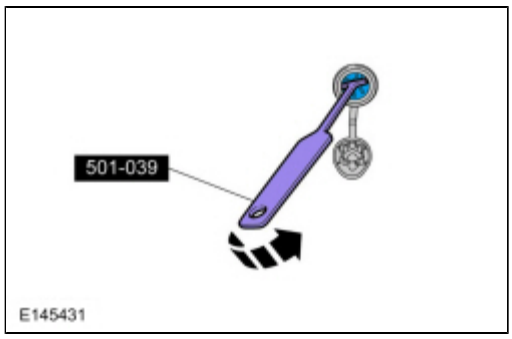

5. *Special Tool(s)* : 501-039 Remover, Power Point Socket

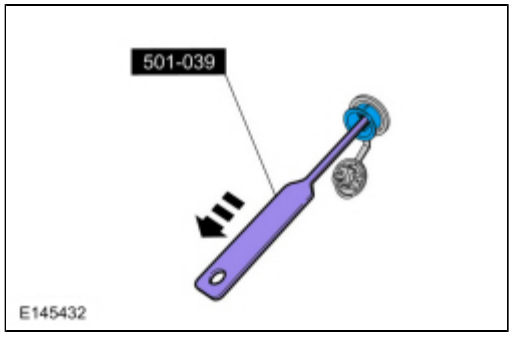

6. Disconnect the electrical connector.

Installation

1. Connect the electrical connector.
2. Slide the power point socket into the retainer.

Copyright © Ford Motor Company

Rear View Mirrors - Overview

Overview - Exterior, Power

Power mirrors allow the LH or RH exterior mirror glass to be positioned electronically. The position of the power mirror glass is controlled by the exterior mirror control switch. Selecting the LH or RH position of the exterior mirror selection switch determines which power mirror glass to control.

Overview Rear View Mirrors - Exterior, Heated

The exterior mirrors are available with heated mirror glass, which heats the mirror glass to remove frost, snow, ice and condensation.

Copyright © Ford Motor Company

Rear View Mirrors - System Operation and Component Description

System Operation

Rear View Mirrors - Exterior, Power

The LH and RH exterior mirror glass movement is controlled by the exterior mirror control switch and the LH and RH exterior mirror motors. The exterior mirror control switch receives voltage from the BJB any time the ignition is on. When the exterior mirror control switch is pressed left, right, up or down, the switch supplies voltage and ground to the appropriate exterior mirror motor.

Rear View Mirrors - Exterior, Heated

The rear window defrost switch controls operation of the heated exterior mirror glass. The heated exterior mirror glass only operates when the rear window defrost system is active. The heated exterior rear view mirror glass deactivates when the rear window defrost deactivates. The heated mirror glass receives voltage from the rear window defrost relay located inside the BJB . The LH and RH heated mirror glass does not share the same ground.

Component Description

Exterior Mirror Control Switch

The exterior mirror control switch is a momentary contact switch that is integral to the master window control switch. The exterior mirror control switch also uses a rocker-type selection switch to allow the driver to determine which exterior mirror will be adjusted.

Exterior Mirror

Each exterior mirror has 2 bi-directional motors that are used to control the up, down, left and right movement of the exterior mirror glass.

The heated exterior mirrors use heating elements that are integral to the exterior mirror glass.

The exterior mirrors use a jumper harness between the vehicle wiring harness and the exterior mirror motors and the heated mirror glass. The exterior mirror jumper harness is integral to the exterior mirror. Before replacing an exterior mirror or motor, inspect the jumper harness for opens, shorted circuits or damaged and pushed-out pins. If a concern with the exterior mirror jumper harness exists, attempt to repair the jumper harness.

Copyright © Ford Motor Company

Rear View Mirrors

Symptom Chart(s)

Diagnostics in this manual assume a certain skill level and knowledge of Ford-specific diagnostic practices.
REFER to: Diagnostic Methods (100-00 General Information, Description and Operation).

Symptom Chart: Rear View Mirrors - Exterior, Power

Condition	Possible Sources	Actions
Mirrors fold inward due to wind pressure	Mirror structural bracket is damaged	INSPECT the mirror for structural damage. If necessary, INSTALL a new mirror. REFER to: Exterior Mirror (501-09A Rear View Mirrors - Vehicles Without: One-Touch Up Door Window, Removal and Installation).
The puddle/approach lamp is inoperative or always on	• Fuse • Wiring, terminals or connectors • Exterior mirror	REFER to: Interior Lighting (417-02 Interior Lighting, Diagnosis and Testing).
The exterior mirror turn indicator is inoperative or always on	• Fuse • Wiring, terminals or connectors • Exterior mirror	REFER to: Turn Signal and Hazard Lamps (417-01 Exterior Lighting, Diagnosis and Testing).
Both exterior mirrors are inoperative	Refer to the Diagnostic Routine	• If the vehicle is equipped with power rear windows, GO to Pinpoint Test B • If the vehicle is not equipped with power rear windows, GO to Pinpoint Test A
A single exterior mirror is inoperative	Refer to the Diagnostic Routine	• If the vehicle is equipped with power rear windows, GO to Pinpoint Test D • If the vehicle is not equipped with power rear windows, GO to Pinpoint Test C
A single exterior mirror does not operate correctly in all directions	Refer to the Diagnostic Routine	• If the vehicle is equipped with power rear windows, GO to Pinpoint Test F • If the vehicle is not equipped with power rear windows, GO to Pinpoint Test E

Symptom Chart: Rear View Mirrors - Exterior, Heated

Condition	Possible Sources	Actions

The heated exterior mirror is inoperative	Refer to the Diagnostic Routine	GO to Pinpoint Test G

Symptom Chart: Rear View Mirrors - Interior

Condition	Possible Sources	Actions
The interior mirror is blemished	Interior mirror glass/housing is dirty	**NOTE:** *Do not clean the housing or glass of any mirror with harsh abrasives, fuel or other petroleum-based cleaning products.* CLEAN the affected interior mirror surface.
	The interior mirror is damaged	INSPECT the interior mirror damage. If needed, INSTALL a new interior rear view mirror. REFER to: Interior Rear View Mirror (501-09A Rear View Mirrors - Vehicles Without: One-Touch Up Door Window, Removal and Installation).

Symptom Chart: Noise, Vibration and Harshness (NVH)

Condition	Possible Sources	Actions
Exterior mirror vibrates/loose	Exterior mirror motor screws loose	REMOVE mirror glass and TIGHTEN the exterior mirror motor screws. REFER to: Exterior Mirror (501-09A Rear View Mirrors - Vehicles Without: One-Touch Up Door Window, Removal and Installation).
	Exterior mirror mounting nuts loose	TIGHTEN the exterior mirror mounting nuts. REFER to: Exterior Mirror (501-09A Rear View Mirrors - Vehicles Without: One-Touch Up Door Window, Removal and Installation).
	Exterior mirror glass loose	PRESS the center of the exterior mirror glass up, down, left and right to make sure that the exterior mirror glass is seated correctly. If the exterior mirror glass is still loose, REMOVE the exterior mirror glass and INSPECT the exterior mirror backing plate for damage. If the exterior mirror backing plate is damaged, INSTALL a new exterior mirror glass. REFER to: Exterior Mirror (501-09A Rear View Mirrors - Vehicles Without: One-Touch Up Door Window, Removal and Installation).
	Aftermarket air deflector/stone shields	If possible, REMOVE aftermarket air deflector/stone shield, then ROAD TEST the vehicle. If concern is no longer present, ADVISE customer that aftermarket components were causing undesired vibration.
Wind noise	Foam gasket between exterior mirror housing and door is misaligned or damaged	VERIFY gasket is in good condition. If necessary, REPOSITION the foam gasket between exterior rear view mirror housing and door frame or REPAIR the foam gasket as needed. The foam gasket is not serviceable and if it cannot be repaired, INSTALL a new exterior mirror. REFER to: Exterior Mirror (501-09A Rear View Mirrors - Vehicles Without: One-Touch Up Door Window, Removal and Installation).
	Exterior mirror is not correctly fitted to the door	VERIFY there are no gaps between the exterior mirror and the door. If necessary, LOOSEN the exterior mirror nuts and REPOSITION the exterior mirror as necessary.
	Exterior mirror cover	VERIFY the exterior mirror cover is not loose or broken. If necessary, INSTALL a new exterior mirror cover. REFER to: Exterior Mirror (501-09A Rear View Mirrors - Vehicles Without: One-Touch Up Door Window, Removal and Installation).
The interior mirror vibrates/loose	Interior mirror mounting loose	If the mirror is still on the windshield, **do not remove** . ATTEMPT to fully seat the mirror first. If the mirror is still loose or vibrates, REMOVE and REINSTALL the mirror. If the condition still exists, INSTALL a new mirror.

		REFER to: Interior Rear View Mirror (501-09A Rear View Mirrors - Vehicles Without: One-Touch Up Door Window, Removal and Installation).

Diagnostic Routine(s)

Both Exterior Mirrors Are Inoperative - Without Power Rear Windows

Refer to Wiring Diagrams Cell 124 for schematic and connector information.

Diagnostics in this manual assume a certain skill level and knowledge of Ford-specific diagnostic practices.
REFER to: Diagnostic Methods (100-00 General Information, Description and Operation).

Normal Operation and Fault Conditions

BJB fuse 25 (10A) supplies voltage to the exterior mirror control switch when the ignition is ON. The exterior mirror control switch supplies voltage and ground to the exterior mirror motors based on switch inputs.

Possible Sources

- Fuse
- Wiring, terminals or connectors
- Exterior mirror control switch

Visual Inspection and Diagnostic Pre-Checks

Inspect BJB fuse 25 (10A).

PINPOINT TEST A : BOTH EXTERIOR MIRRORS ARE INOPERATIVE - WITHOUT POWER REAR WINDOWS

A1 CHECK FOR VOLTAGE TO THE MASTER WINDOW CONTROL SWITCH

- Ignition OFF.
- Disconnect: Master Window Control Switch C566B.
- Ignition ON.
- Measure:

Positive Lead	Measurement / Action	Negative Lead
C566B-1	V	—

Is the voltage greater than 11 volts?

Yes	GO to A2
No	VERIFY that BJB fuse 25 (10A) is OK. If OK, REPAIR the circuit. If not OK, REFER to the Wiring Diagrams Manual to identify the possible causes of the circuit short.

A2 CHECK FOR GROUND AT THE MASTER WINDOW CONTROL SWITCH

- Ignition OFF.
- Disconnect: Master Window Control Switch C566A.
- Measure:

Positive Lead	Measurement / Action	Negative Lead
C566A-1	Ω	—

Is the resistance less than 3 ohms?

Yes	INSTALL a new master window control switch. REFER to: Front Door Window Control Switch (501-11B Glass, Frames and Mechanisms - Vehicles With: One-Touch Up Door Window, Removal and Installation).
No	REPAIR the circuit.

Both Exterior Mirrors Are Inoperative - With Power Rear Windows

Refer to Wiring Diagrams Cell 124 for schematic and connector information.

Diagnostics in this manual assume a certain skill level and knowledge of Ford-specific diagnostic practices.
REFER to: Diagnostic Methods (100-00 General Information, Description and Operation).

Normal Operation and Fault Conditions

BJB fuse 25 (10A) supplies voltage to the exterior mirror control switch when the ignition is ON. The exterior mirror control switch supplies voltage and ground to the exterior mirror motors based on switch inputs.

Possible Sources

- Fuse
- Wiring, terminals or connectors
- Exterior mirror control switch

Visual Inspection and Diagnostic Pre-Checks

Inspect BJB fuse 25 (10A).

PINPOINT TEST B : BOTH EXTERIOR MIRRORS ARE INOPERATIVE - WITH POWER REAR WINDOWS

B1 CHECK FOR VOLTAGE TO THE MASTER WINDOW CONTROL SWITCH

- Ignition OFF.
- Disconnect: Master Window Control Switch C504C.
- Ignition ON.
- Measure:

Positive Lead	Measurement / Action	Negative Lead
C504C-8	V	—

Is the voltage greater than 11 volts?

Yes	GO to B2
No	VERIFY that BJB fuse 25 (10A) is OK. If OK, REPAIR the circuit. If not OK, REFER to the Wiring

	Diagrams Manual to identify the possible causes of the circuit short.

B2 CHECK FOR GROUND AT THE MASTER WINDOW CONTROL SWITCH

- Ignition OFF.
- Disconnect: Master Window Control Switch C504A.
- Measure:

Positive Lead	Measurement / Action	Negative Lead
C504A-2	Ω	—

Is the resistance less than 3 ohms?

Yes	INSTALL a new master window control switch. REFER to: Front Door Window Control Switch (501-11B Glass, Frames and Mechanisms - Vehicles With: One-Touch Up Door Window, Removal and Installation).
No	REPAIR the circuit.

A Single Mirror Inoperative - Without Power Rear Windows

Refer to Wiring Diagrams Cell 124 for schematic and connector information.

Diagnostics in this manual assume a certain skill level and knowledge of Ford-specific diagnostic practices.
REFER to: Diagnostic Methods (100-00 General Information, Description and Operation).

Normal Operation and Fault Conditions

Each exterior mirror shares a common circuit for both up/down and left/right movement.

Possible Sources

- Wiring, terminals or connectors
- Exterior mirror control switch
- Exterior mirror motor
- Exterior mirror

PINPOINT TEST C : A SINGLE MIRROR IS INOPERATIVE - WITHOUT POWER REAR WINDOWS

C1 CHECK THE EXTERIOR MIRROR CONTROL SWITCH

- Ignition OFF.
- Disconnect: Master Window Control Switch C566A.
- Disconnect: Master Window Control Switch C566B.
- Perform the appropriate exterior mirror control switch component test. REFER to Component Tests in this section.

Did the exterior mirror control switch pass the component test?

Yes	If the LH exterior mirror is inoperative, GO to C2 If the RH exterior mirror is inoperative, GO to C3

No	INSTALL a new master window control switch. REFER to: Front Door Window Control Switch (501-11B Glass, Frames and Mechanisms - Vehicles With: One-Touch Up Door Window, Removal and Installation).

C2 CHECK THE LH (LEFT-HAND) EXTERIOR MIRROR MOTOR COMMON CIRCUIT FOR AN OPEN

- Disconnect: LH Exterior Mirror.
- Measure:

Positive Lead	Measurement / Action	Negative Lead
C566B-7	Ω	C521-2

Is the resistance less than 3 ohms?

Yes	CHECK the inoperative exterior mirror jumper harness between the vehicle harness and the exterior mirror motor for open circuits and damaged or pushed-out pins. If the jumper harness is not OK, REPAIR the jumper harness. If the jumper harness cannot be repaired, INSTALL a new exterior mirror. REFER to: Exterior Mirror (501-09A Rear View Mirrors - Vehicles Without: One-Touch Up Door Window, Removal and Installation). If the jumper harness is OK, INSTALL a new exterior mirror motor. REFER to: Exterior Mirror (501-09A Rear View Mirrors - Vehicles Without: One-Touch Up Door Window, Removal and Installation).
No	REPAIR the circuit.

C3 CHECK THE RH (RIGHT-HAND) EXTERIOR MIRROR MOTOR COMMON CIRCUIT FOR AN OPEN

- Disconnect: RH Exterior Mirror.
- Measure:

Positive Lead	Measurement / Action	Negative Lead
C566B-3	Ω	C626-2

Is the resistance less than 3 ohms?

Yes	CHECK the inoperative exterior mirror jumper harness between the vehicle harness and the exterior mirror motor for open circuits and damaged or pushed-out pins. If the jumper harness is not OK, REPAIR the jumper harness. If the jumper harness cannot be repaired, INSTALL a new exterior mirror. REFER to: Exterior Mirror (501-09A Rear View Mirrors - Vehicles Without: One-Touch Up Door Window, Removal and Installation). If the jumper harness is OK, INSTALL a new exterior mirror motor. REFER to: Exterior Mirror (501-09A Rear View Mirrors - Vehicles Without: One-Touch Up Door Window, Removal and Installation).
No	REPAIR the circuit.

A Single Mirror Inoperative - With Power Rear Windows

Refer to Wiring Diagrams Cell 124 for schematic and connector information.

Diagnostics in this manual assume a certain skill level and knowledge of Ford-specific diagnostic practices.
REFER to: Diagnostic Methods (100-00 General Information, Description and Operation).

Normal Operation and Fault Conditions

Each exterior mirror shares a common circuit for both up/down and left/right movement.

Possible Sources

- Wiring, terminals or connectors
- Exterior mirror control switch
- Exterior mirror motor
- Exterior mirror

PINPOINT TEST D : A SINGLE MIRROR IS INOPERATIVE - WITH POWER REAR WINDOWS

D1 CHECK THE EXTERIOR MIRROR CONTROL SWITCH

- Ignition OFF.
- Disconnect: Master Window Control Switch C504A.
- Disconnect: Master Window Control Switch C504B.
- Disconnect: Master Window Control Switch C504C.
- Perform the appropriate exterior mirror control switch component test. REFER to Component Tests in this section.

Did the exterior mirror control switch pass the component test?

Yes	If the LH exterior mirror is inoperative, GO to D2 If the RH exterior mirror is inoperative, GO to D3
No	INSTALL a new master window control switch. REFER to: Front Door Window Control Switch (501-11B Glass, Frames and Mechanisms - Vehicles With: One-Touch Up Door Window, Removal and Installation).

D2 CHECK THE LH (LEFT-HAND) EXTERIOR MIRROR MOTOR COMMON CIRCUIT FOR AN OPEN

- Disconnect: LH Exterior Mirror.
- Measure:

Positive Lead	Measurement / Action	Negative Lead
C504C-3	Ω	C521-2

Is the resistance less than 3 ohms?

Yes	CHECK the inoperative exterior mirror jumper harness between the vehicle harness and the exterior mirror motor for open circuits and damaged or pushed-out pins. If the jumper harness is not OK, REPAIR the jumper harness. If the jumper harness cannot be repaired, INSTALL a new exterior mirror. REFER to: Exterior Mirror (501-09A Rear View Mirrors - Vehicles Without: One-Touch Up Door Window, Removal and Installation). If the jumper harness is OK, INSTALL a new exterior mirror motor. REFER to: Exterior Mirror (501-09A Rear View Mirrors - Vehicles Without: One-Touch Up Door Window, Removal and Installation).
No	REPAIR the circuit.

D3 CHECK THE RH (RIGHT-HAND) EXTERIOR MIRROR MOTOR COMMON CIRCUIT FOR AN OPEN

- Disconnect: RH Exterior Mirror.
- Measure:

Positive Lead	Measurement / Action	Negative Lead
C504C-4	Ω	C626-2

Is the resistance less than 3 ohms?

Yes	CHECK the inoperative exterior mirror jumper harness between the vehicle harness and the exterior mirror motor for open circuits and damaged or pushed-out pins. If the jumper harness is not OK, REPAIR the jumper harness. If the jumper harness cannot be repaired, INSTALL a new exterior mirror. REFER to: Exterior Mirror (501-09A Rear View Mirrors - Vehicles Without: One-Touch Up Door Window, Removal and Installation). If the jumper harness is OK, INSTALL a new exterior mirror motor. REFER to: Exterior Mirror (501-09A Rear View Mirrors - Vehicles Without: One-Touch Up Door Window, Removal and Installation).
No	REPAIR the circuit.

A Single Mirror Does Not Function Correctly In All Directions - Without Power Rear Windows

Refer to Wiring Diagrams Cell 124 for schematic and connector information.

Diagnostics in this manual assume a certain skill level and knowledge of Ford-specific diagnostic practices.
REFER to: Diagnostic Methods (100-00 General Information, Description and Operation).

Normal Operation and Fault Conditions

REFER to: Rear View Mirrors - System Operation and Component Description (501-09A Rear View Mirrors - Vehicles Without: One-Touch Up Door Window, Description and Operation).

Possible Sources

- Wiring, terminals or connectors
- Exterior mirror control switch
- Exterior mirror motor
- Exterior mirror

Visual Inspection and Diagnostic Pre-Checks

Inspect the inoperative exterior mirror for damage.

PINPOINT TEST E : A SINGLE MIRROR DOES NOT FUNCTION CORRECTLY IN ALL DIRECTIONS - WITHOUT POWER REAR WINDOWS

E1 CHECK THE MIRROR MOVEMENT

- Ignition ON.
- Operate the LH exterior mirror in the up, down, left and right directions.
- Operate the RH exterior mirror in the up, down, left and right directions.

Does the LH or RH exterior mirror operate in any direction?

Yes	If the LH mirror does not operate correctly, GO to E2 If the RH mirror does not operate correctly, GO to E5
No	GO to Pinpoint Test C

E2 CHECK THE LH (LEFT-HAND) EXTERIOR MIRROR CIRCUITS FOR A SHORT TO VOLTAGE

- Ignition OFF.
- Disconnect: LH Exterior Mirror.
- Ignition ON.
- Measure:

Positive Lead	Measurement / Action	Negative Lead
C521-1		—
C521-2		—
C521-3		—

Is any voltage present?

Yes	REPAIR the affected circuit.
No	GO to E3

E3 CHECK FOR VOLTAGE TO THE LH (LEFT-HAND) EXTERIOR MIRROR CIRCUITS

- Select the LH exterior mirror with the exterior mirror selection switch.
- While pressing the exterior mirror control switch in the right direction, measure:

Positive Lead	Measurement / Action	Negative Lead
C521-1		C521-2

- Release the exterior mirror control switch.
- While pressing the exterior mirror control switch in the up direction, measure:

Positive Lead	Measurement / Action	Negative Lead
C521-3		C521-2

Are the voltages greater than 11 volts when the switch is pressed in the right and up direction?

Yes	CHECK the inoperative exterior mirror jumper harness between the vehicle harness and the exterior mirror motor for open circuits and damaged or pushed-out pins. If the jumper harness is not OK, REPAIR the jumper harness. If the jumper harness cannot be repaired, INSTALL a new exterior mirror.

	REFER to: Exterior Mirror (501-09A Rear View Mirrors - Vehicles Without: One-Touch Up Door Window, Removal and Installation). If the jumper harness in OK, INSTALL a new exterior mirror motor. REFER to: Rear View Mirrors (501-09A Rear View Mirrors - Vehicles Without: One-Touch Up Door Window, Diagnosis and Testing).
No	GO to E4

E4 CHECK THE LH (LEFT-HAND) EXTERIOR MIRROR CIRCUITS FOR AN OPEN

- Ignition OFF.
- Disconnect: Master Window Control Switch C566B.
- Measure:

Positive Lead	Measurement / Action	Negative Lead
C566B-6	Ω	C521-1
C566B-7	Ω	C521-2
C566B-8	Ω	C521-3

Are the resistances less than 3 ohms?

Yes	INSTALL a new master window control switch. REFER to: Front Door Window Control Switch (501-11B Glass, Frames and Mechanisms - Vehicles With: One-Touch Up Door Window, Removal and Installation).
No	REPAIR the affected circuit.

E5 CHECK THE RH (RIGHT-HAND) EXTERIOR MIRROR CIRCUITS FOR A SHORT TO VOLTAGE

- Ignition OFF.
- Disconnect: RH Exterior Mirror.
- Ignition ON.
- Measure:

Positive Lead	Measurement / Action	Negative Lead
C626-1	V	—
C626-2	V	—
C626-3	V	—

Is any voltage present?

Yes	REPAIR the affected circuit.
No	GO to E6

E6 CHECK FOR VOLTAGE TO THE RH (RIGHT-HAND) EXTERIOR MIRROR CIRCUITS

Select the RH exterior mirror with the exterior mirror selection switch.

- While pressing the exterior mirror control switch in the right direction, measure:

Positive Lead	Measurement / Action	Negative Lead
C626-1	⊕ ▽ ⊖	C626-2

- Release the exterior mirror control switch.
- While pressing the exterior mirror control switch in the up direction, measure:

Positive Lead	Measurement / Action	Negative Lead
C626-3	⊕ ▽ ⊖	C626-2

Are the voltages greater than 11 volts when the switch is pressed in the right and up direction?

Yes	CHECK the inoperative exterior mirror jumper harness between the vehicle harness and the exterior mirror motor for open circuits and damaged or pushed-out pins. If the jumper harness is not OK, REPAIR the jumper harness. If the jumper harness cannot be repaired, INSTALL a new exterior mirror. REFER to: Exterior Mirror (501-09A Rear View Mirrors - Vehicles Without: One-Touch Up Door Window, Removal and Installation). If the jumper harness in OK, INSTALL a new exterior mirror motor. REFER to: Rear View Mirrors (501-09A Rear View Mirrors - Vehicles Without: One-Touch Up Door Window, Diagnosis and Testing).
No	GO to E7

E7 CHECK THE RH (RIGHT-HAND) MIRROR CIRCUITS FOR AN OPEN

- Ignition OFF.
- Disconnect: Master Window Control Switch C566B
- Measure:

Positive Lead	Measurement / Action	Negative Lead
C566B-2	Ω	C626-1
C566B-3	Ω	C626-2
C566B-4	Ω	C626-3

Are the resistances less than 3 ohms?

Yes	INSTALL a new master window control switch. REFER to: Front Door Window Control Switch (501-11B Glass, Frames and Mechanisms - Vehicles With: One-Touch Up Door Window, Removal and Installation).
No	REPAIR the affected circuit.

A Single Mirror Does Not Function Correctly In All Directions - With Power Rear Windows

Refer to Wiring Diagrams Cell 124 for schematic and connector information.

Diagnostics in this manual assume a certain skill level and knowledge of Ford-specific diagnostic practices.
REFER to: Diagnostic Methods (100-00 General Information, Description and Operation).

Normal Operation and Fault Conditions

REFER to: Rear View Mirrors - System Operation and Component Description (501-09A Rear View Mirrors - Vehicles Without: One-Touch Up Door Window, Description and Operation).

Possible Sources

- Wiring, terminals or connectors
- Exterior mirror control switch
- Exterior mirror motor
- Exterior mirror

Visual Inspection and Diagnostic Pre-Checks

Inspect the inoperative exterior mirror for damage.

PINPOINT TEST F : A SINGLE MIRROR DOES NOT FUNCTION CORRECTLY IN ALL DIRECTIONS - WITH POWER REAR WINDOWS

F1 CHECK THE MIRROR MOVEMENT

- Ignition ON.
- Operate the LH exterior mirror in the up, down, left and right directions.
- Operate the RH exterior mirror in the up, down, left and right directions.

Does the LH or RH exterior mirror operate in any direction?

Yes	If the LH mirror does not operate correctly, GO to F2 If the RH mirror does not operate correctly, GO to F5
No	GO to Pinpoint Test D

F2 CHECK THE LH (LEFT-HAND) EXTERIOR MIRROR CIRCUITS FOR A SHORT TO VOLTAGE

- Ignition OFF.
- Disconnect: LH Exterior Mirror.
- Ignition ON.
- Measure:

Positive Lead	Measurement / Action	Negative Lead
C521-1		—
C521-2		—
C521-3		—

Is any voltage present?

Yes	REPAIR the affected circuit.
No	GO to F3

F3 CHECK FOR VOLTAGE TO THE LH (LEFT-HAND) EXTERIOR MIRROR CIRCUITS

- Select the LH exterior mirror with the exterior mirror selection switch.
- While pressing the exterior mirror control switch in the right direction, measure:

Positive Lead	Measurement / Action	Negative Lead
C521-1	V	C521-2

- Release the exterior mirror control switch.
- While pressing the exterior mirror control switch in the up direction, measure:

Positive Lead	Measurement / Action	Negative Lead
C521-3	V	C521-2

Are the voltages greater than 11 volts when the switch is pressed in the right and up direction?

Yes	CHECK the inoperative exterior mirror jumper harness between the vehicle harness and the exterior mirror motor for open circuits and damaged or pushed-out pins. If the jumper harness is not OK, REPAIR the jumper harness. If the jumper harness cannot be repaired, INSTALL a new exterior mirror. REFER to: Exterior Mirror (501-09A Rear View Mirrors - Vehicles Without: One-Touch Up Door Window, Removal and Installation). If the jumper harness in OK, INSTALL a new exterior mirror motor. REFER to: Rear View Mirrors (501-09A Rear View Mirrors - Vehicles Without: One-Touch Up Door Window, Diagnosis and Testing).
No	GO to F4

F4 CHECK THE LH (LEFT-HAND) MIRROR CIRCUITS FOR AN OPEN

- Ignition OFF.
- Disconnect: Master Window Control Switch C504C.
- Measure:

Positive Lead	Measurement / Action	Negative Lead
C504C-5	Ω	C521-1
C504C-3	Ω	C521-2
C504C-12	Ω	C521-3

Are the resistances less than 3 ohms?

Yes	INSTALL a new master window control switch. REFER to: Front Door Window Control Switch (501-11B Glass, Frames and Mechanisms - Vehicles

	With: One-Touch Up Door Window, Removal and Installation).
No	REPAIR the affected circuit.

F5 CHECK THE RH (RIGHT-HAND) EXTERIOR MIRROR CIRCUITS FOR A SHORT TO VOLTAGE

- Ignition OFF.
- Disconnect: RH Exterior Mirror.
- Ignition ON.
- Measure:

Positive Lead	Measurement / Action	Negative Lead
C626-1		—
C626-2		—
C626-3		—

Is any voltage present?

Yes	REPAIR the affected circuit.
No	GO to F6

F6 CHECK FOR VOLTAGE TO THE RH (RIGHT-HAND) EXTERIOR MIRROR CIRCUITS

- Select the RH exterior mirror with the exterior mirror selection switch.
- While pressing the exterior mirror control switch in the right direction, measure:

Positive Lead	Measurement / Action	Negative Lead
C626-1		C626-2

- Release the exterior mirror control switch.
- While pressing the exterior mirror control switch in the up direction, measure:

Positive Lead	Measurement / Action	Negative Lead
C626-3		C626-2

Are the voltages greater than 11 volts when the switch is pressed in the right and up direction?

Yes	CHECK the inoperative exterior mirror jumper harness between the vehicle harness and the exterior mirror motor for open circuits and damaged or pushed-out pins. If the jumper harness is not OK, REPAIR the jumper harness. If the jumper harness cannot be repaired, INSTALL a new exterior mirror. REFER to: Exterior Mirror (501-09A Rear View Mirrors - Vehicles Without: One-Touch Up Door Window, Removal and Installation). If the jumper harness in OK, INSTALL a new exterior mirror motor. REFER to: Rear View Mirrors (501-09A Rear View Mirrors - Vehicles Without: One-Touch Up Door Window, Diagnosis and Testing).

No	GO to F7

F7 CHECK THE RH (RIGHT-HAND) MIRROR CIRCUITS FOR AN OPEN

- Ignition OFF.
- Disconnect: Master Window Control Switch C504C.
- Measure:

Positive Lead	Measurement / Action	Negative Lead
C504C-6	Ω	C626-1
C504C-4	Ω	C626-2
C504C-11	Ω	C626-3

Are the resistances less than 3 ohms?

Yes	INSTALL a new master window control switch. REFER to: Front Door Window Control Switch (501-11B Glass, Frames and Mechanisms - Vehicles With: One-Touch Up Door Window, Removal and Installation).
No	REPAIR the affected circuit.

The Heated Mirror Is Inoperative

Refer to Wiring Diagrams Cell 56 for schematic and connector information.

Refer to Wiring Diagrams Cell 124 for schematic and connector information.

Diagnostics in this manual assume a certain skill level and knowledge of Ford-specific diagnostic practices.
REFER to: Diagnostic Methods (100-00 General Information, Description and Operation).

Normal Operation and Fault Conditions

REFER to: Rear View Mirrors - System Operation and Component Description (501-09A Rear View Mirrors - Vehicles Without: One-Touch Up Door Window, Description and Operation).

Possible Sources

- Fuse
- Wiring, terminals or connectors
- Exterior mirror glass
- Exterior mirror

Visual Inspection and Diagnostic Pre-Checks

Inspect the inoperative exterior mirror housing and glass for damage.

PINPOINT TEST G : THE HEATED MIRROR IS INOPERATIVE

G1 CHECK THE OPERATION OF THE REAR WINDOW DEFROST SYSTEM

- Start the engine.
- With the engine running, activate the rear window defrost.
- Using an infrared temperature gun or equivalent, measure the temperature of the rear window glass for approximately 30 seconds, noting changes in temperature.

Does the temperature of the rear window glass rise?

Yes	GO to G2
No	DIAGNOSE the rear window defrost system. REFER to: Glass, Frames and Mechanisms (501-11A Glass, Frames and Mechanisms - Vehicles Without: One-Touch Up Door Window, Diagnosis and Testing).

G2 CHECK THE OPERATION OF THE HEATED EXTERIOR MIRRORS

- With the rear window defrost ON, using an infrared temperature gun or equivalent, measure the temperature of the LH and RH exterior mirror glass for approximately 30 seconds, noting changes in temperature.
- Using an infrared temperature gun or equivalent, measure the temperature of the rear window glass for approximately 30 seconds noting changes in temperature.

Does at least one heated mirror operate correctly?

Yes	For inoperative LH heated mirror glass, GO to G3 For inoperative RH heated mirror glass, GO to G5
No	VERIFY that BCM fuse 47 (7.5A) is OK. If OK, REPAIR circuit CMP00 (BN/GN). If not OK, REFER to the Wiring Diagrams manual to identify the possible causes of the circuit short.

G3 CHECK THE VOLTAGE TO THE LH (LEFT-HAND) HEATED EXTERIOR MIRROR GLASS

- Ignition OFF.
- Disconnect: LH Exterior Mirror.
- Start the engine.
- With the engine running, activate the rear window defrost.
- Measure:

Positive Lead	Measurement / Action	Negative Lead
C521-5		—

Is the voltage greater than 11 volts?

Yes	GO to G4
No	REPAIR the circuit for an open.

G4 CHECK THE LH (LEFT-HAND) EXTERIOR MIRROR GROUND CIRCUIT FOR AN OPEN

- Ignition OFF.
- Measure:

Positive Lead	Measurement / Action	Negative Lead

C521-6	Ω	—

Is the resistance less than 3 ohms?

Yes	CHECK the LH exterior mirror jumper harness between the vehicle harness and the exterior mirror motors for shorted circuits and damaged or pushed-out pins. If the jumper harness is not OK, REPAIR the jumper harness. If the jumper harness cannot be repaired, INSTALL a new LH exterior mirror. REFER to: Exterior Mirror (501-09A Rear View Mirrors - Vehicles Without: One-Touch Up Door Window, Removal and Installation). If the jumper harness is OK, INSTALL a new exterior mirror glass. REFER to: Exterior Mirror (501-09A Rear View Mirrors - Vehicles Without: One-Touch Up Door Window, Removal and Installation).
No	REPAIR the circuit

G5 CHECK THE VOLTAGE TO THE RH (RIGHT-HAND) HEATED EXTERIOR MIRROR GLASS

- Ignition OFF.
- Disconnect: RH exterior mirror.
- Start the engine.
- With the engine running, activate the rear window defrost.
- Measure:

Positive Lead	Measurement / Action	Negative Lead
C626-5	V	—

Is the voltage greater than 11 volts?

Yes	GO to G6
No	REPAIR the circuit.

G6 CHECK THE RH (RIGHT-HAND) EXTERIOR MIRROR GROUND CIRCUIT FOR AN OPEN

- Ignition OFF.
- Measure:

Positive Lead	Measurement / Action	Negative Lead
C626-6	Ω	—

Is the resistance less than 3 ohms?

Yes	CHECK the RH exterior mirror jumper harness between the vehicle harness and the exterior mirror motors for shorted circuits and damaged or pushed-out pins. If the jumper harness is not OK, REPAIR the jumper harness. If the jumper harness cannot be repaired, INSTALL a new RH exterior mirror. REFER to: Exterior Mirror (501-09A Rear View Mirrors - Vehicles Without: One-Touch Up Door Window, Removal and Installation).

	If the jumper harness is OK, INSTALL a new exterior mirror glass. REFER to: Exterior Mirror (501-09A Rear View Mirrors - Vehicles Without: One-Touch Up Door Window, Removal and Installation).
No	REPAIR the circuit.

Component Tests

For vehicles **not** equipped with power rear windows, check for component-side continuity of the exterior mirror control switch pins while actuating the switch as directed in the chart below.

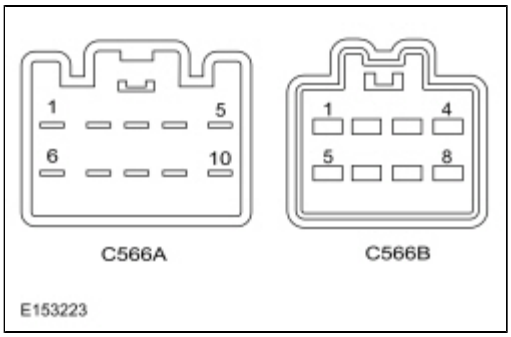

Exterior Mirror Selection Switch Position	Exterior Mirror Control Switch Direction	Continuity Between Component-Side Pins
LH Mirror	Left	C566A-1 and C566B-6
		C566B-1 and C566B-7
LH Mirror	Right	C566A-1 and C566B-7
		C566B-1 and C566B-6
LH Mirror	Up	C566A-1 and C566B-7
		C566B-1 and C566B-8
LH Mirror	Down	C566A-1 and C566B-8
		C566B-1 and C566B-7
RH Mirror	Left	C566A-1 and C566B-2
		C566B-1 and C566B-3
RH Mirror	Right	C566A-1 and C566B-3
		C566B-1 and C566B-2
RH Mirror	Up	C566A-1 and C566B-3
		C566B-1 and C566B-4
RH Mirror	Down	C566A-1 and C566B-4
		C566B-1 and C566B-3

For vehicles equipped with power rear windows, check for component-side continuity of the exterior mirror control switch pins while actuating the switch as directed in the chart below.

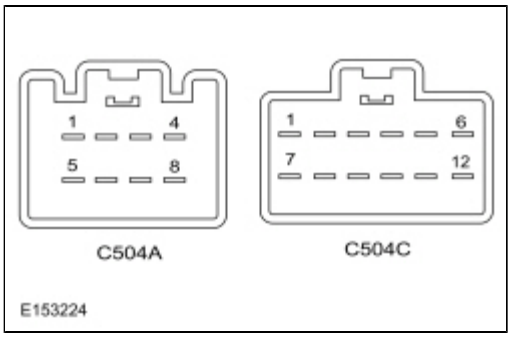

Exterior Mirror Selection Switch Position	Exterior Mirror Control Switch Direction	Continuity Between Component-Side Pins
LH Mirror	Left	C504C-8 and C504C-3
		C504A-2 and C504C-5
LH Mirror	Right	C504C-8 and C504C-5
		C504A-2 and C504C-3
LH Mirror	Up	C504C-8 and C504C-12
		C504A-2 and C504C-3
LH Mirror	Down	C504C-8 and C504C-3
		C504A-2 and C504C-12
RH Mirror	Left	C504C-8 and C504C-4
		C504A-2 and C504C-6
RH Mirror	Right	C504C-8 and C504C-6
		C504A-2 and C504C-4
RH Mirror	Up	C504C-8 and C504C-11
		C504A-2 and C504C-4
RH Mirror	Down	C504C-8 and C504C-4
		C504A-2 and C504C-11

Copyright © Ford Motor Company

Cruise Control - Component Location

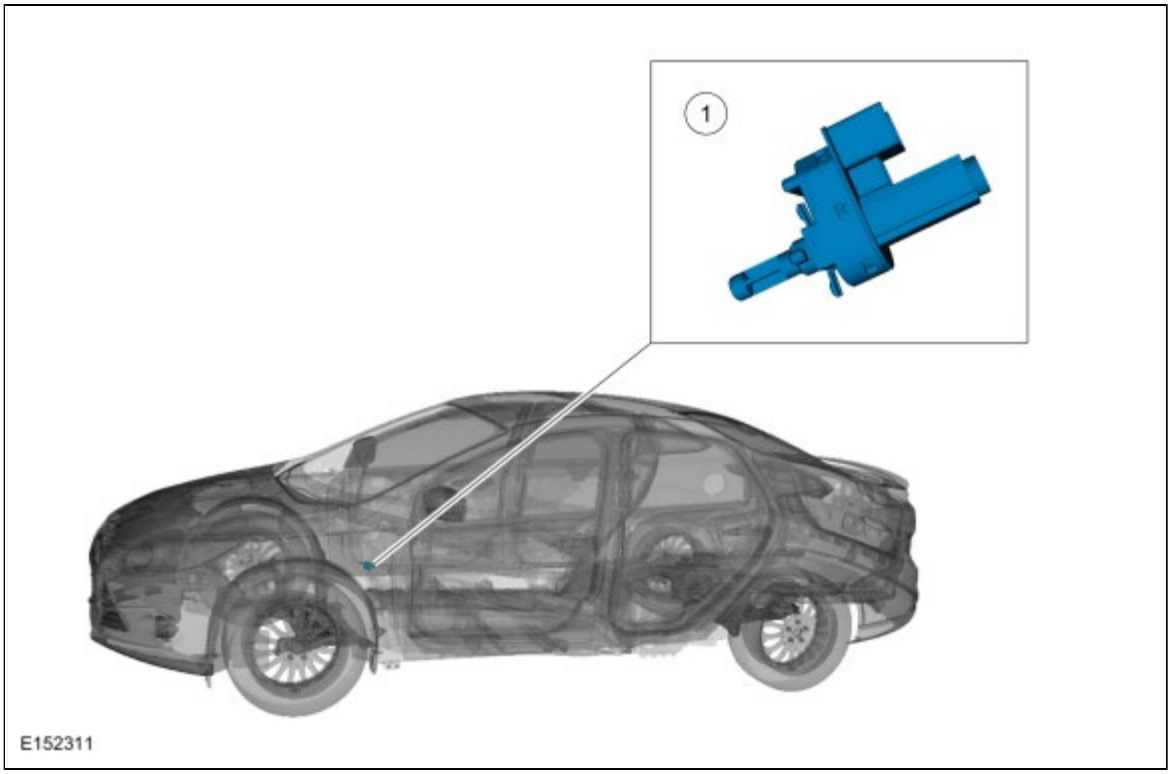

Item	Description
1	Clutch pedal cruise control deactivation switch **Comments:** -

Copyright © Ford Motor Company

Cruise Control - Overview

Overview

The cruise control system is controlled by the PCM .

The cruise control mode is selected from the steering wheel mounted switches (ON/OFF, SET+, SET- and CAN/RES), which are integrated into the LH steering wheel switch.

The cruise control system maintains a selected vehicle speed between 29 kmh (18 mph) and the maximum limited vehicle speed. When a MyKey® restricted key is in use and max speed limiter is turned on, vehicle speed is limited to 129 kmh (80 mph).

During normal driving, the vehicle speed can vary slightly from the set speed due to road conditions. The vehicle speed can fluctuate when driving up and down a steep hill. If the vehicle speed decreases more than 16 kmh (10 mph) below the set speed, the cruise control disengages.

Copyright © Ford Motor Company

Cruise Control - System Operation and Component Description

System Operation

System Diagram

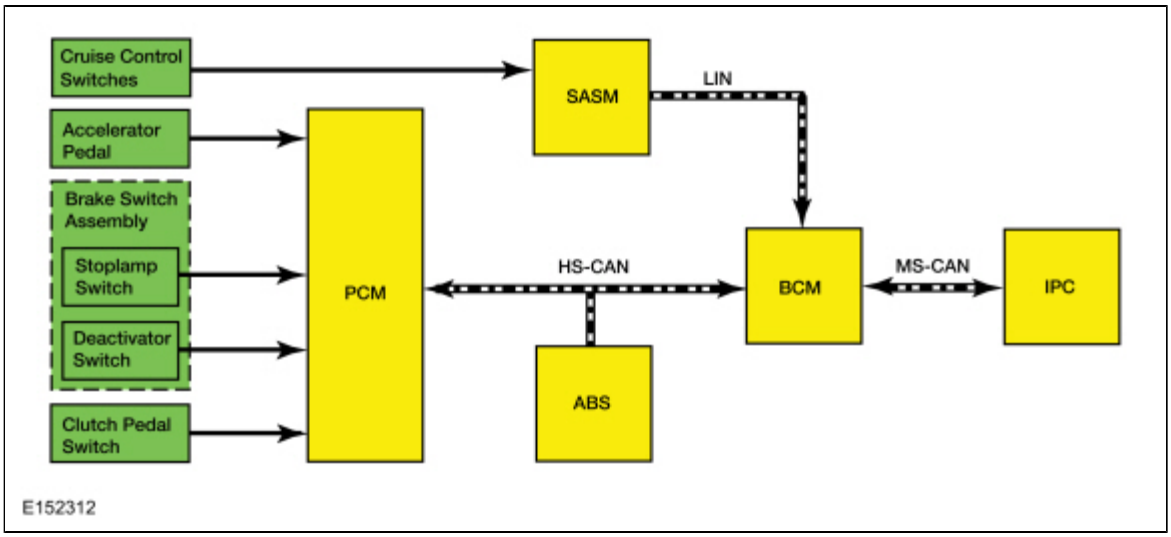

Network Message Chart

Network Input Messages - Instrument Panel Cluster (IPC)

Broadcast Message	Originating Module	Message Purpose
Cruise control status	PCM	Data used for speed control indicator status.

Network Input Messages - Powertrain Control Module (PCM)

Broadcast Message	Originating Module	Message Purpose
Cruise control button status	SASM	Used for cruise control enable/disable and operating mode request.
Stability control event in progress	ABS module	Deactivates speed control when requested.
Traction control event in progress		

Cruise Control Operation

The cruise control functions include:

- turning on the cruise control system.
- setting and maintaining the desired vehicle speed.
- accelerating the vehicle speed.

coasting down to a lower speed.
- resuming the prior vehicle speed.
- turning off the cruise control system.

Hardwired inputs to the PCM are:

- Digital TR sensor
- BPP switch assembly (contains the stoplamp switch and cruise control deactivator switch)
- Clutch pedal cruise control deactivator switch (if equipped)
- APP sensor

Hardwired outputs of the PCM are:

- Electronic Throttle Body (ETB) command

The vehicle speed is controlled by the PCM through the Electronic Throttle Control (ETC) subsystem.

The cruise control system provides self-diagnostics. Cruise control is disabled anytime an error is detected in the system. No IPC indicator or message center messages are displayed when faults occur. Fault codes are logged by the PCM or SASM .

An Electronic Throttle Control (ETC) system fault also causes the cruise control system to be disabled. In this case, an Electronic Throttle Control (ETC) system powertrain malfunction (wrench) warning indicator is displayed.

Additionally, certain conditions cause the cruise control system to deactivate:

- Transmission gear selector is placed into a position other than D or OD
- Cruise control set speed is overridden with the accelerator pedal for a period longer than 5 minutes
- Cruise control switch is pressed or stuck longer than 2 minutes
- Clutch pedal depressed (if equipped)
- ABS fault

Cruise Control Indicator

The cruise control indicator, located in the IPC , illuminates to indicate the cruise control system is active.

Steering Wheel Switch Function

Cruise control switch inputs are received by the SASM and sent to the BCM on a dedicated LIN circuit. The BCM then sends the switch information to the PCM through the gateway module.

Pressing and releasing the ON/OFF switch turns the cruise control system on. Pressing up (SET+) or down (SET-) on the SET switch while the vehicle is traveling at the desired speed activates the cruise control system.

While the cruise control system is active, applying the brake pedal or pressing the CAN/RES switch puts the cruise control system into standby mode. Pressing the CAN/RES switch when the cruise control system is in standby mode causes the vehicle to accelerate to the last set speed. Resume does not function if the ON/OFF switch is pressed, the ignition is cycled OFF, or if the current vehicle speed is below the minimum operational speed.

Pressing the SET switch up or down while in the active mode increases or decreases the maintained vehicle speed by 1.6 kmh (1 mph) per press. If the respective switch is pressed and held, the vehicle speed continues to accelerate or decelerate until the switch is released.

Pressing and releasing the ON/OFF switch while the cruise control is active, or the ignition is cycled OFF, turns the cruise control system off.

Component Description

Steering Wheel Switches

The cruise control steering wheel mounted switches are momentary contact switches. Each steering wheel switch function corresponds to a specific resistance value. The SASM sends out a 5-volt reference voltage to the steering wheel switch and monitors the voltage when a switch is pressed. The voltage varies depending upon the resistance of the specific switch pressed, indicating which switch is pressed.

Brake Switch

When the brake pedal is applied, an electrical signal from the stoplamp circuit to the PCM deactivates the system. Under increased brake pedal effort, the cruise control deactivator switch opens and removes the ground signal from the PCM input circuit releasing the throttle, immediately deactivating the system.

Clutch Switch

Vehicles equipped with a manual transmission have an additional clutch pedal cruise control deactivator switch. The clutch pedal cruise control deactivator switch is a normally open switch with the clutch pedal released. When the clutch pedal is pressed, an electrical signal from the clutch pedal speed control deactivator switch circuit to the PCM deactivates the system.

Copyright © Ford Motor Company

Cruise Control

DTC Chart: PCM

Diagnostics in this manual assume a certain skill level and knowledge of Ford-specific diagnostic practices.
REFER to: Diagnostic Methods (100-00 General Information, Description and Operation).

PCM DTC Chart

DTC	Description	Action
P0504	Brake Switch A / B Correlation	GO to Pinpoint Test B
P0572	Brake Switch A Circuit Low	GO to Pinpoint Test B
P0573	Brake Switch A Circuit High	GO to Pinpoint Test B
P1703	Brake Switch Out Of Self-Test Range	GO to Pinpoint Test B
P0833	Clutch Pedal Switch "B" Circuit	GO to Pinpoint Test D

Symptom Chart(s)

Symptom Chart: Cruise Control

Diagnostics in this manual assume a certain skill level and knowledge of Ford-specific diagnostic practices.
REFER to: Diagnostic Methods (100-00 General Information, Description and Operation).

Symptom Chart

Condition	Possible Sources	Actions
The cruise control is inoperative	Refer to the Pinpoint Test	GO to Pinpoint Test A
The cruise control indicator lamp is never/always on	• Wiring, terminals and connectors • PCM • IPC	REFER to: Instrumentation, Message Center and Warning Chimes (413-01 Instrumentation, Message Center and Warning Chimes, Diagnosis and Testing).
The cruise control switch is inoperative/does not operate correctly	Refer to the Pinpoint Test	GO to Pinpoint Test A
The cruise control does not disengage when the clutch pedal is applied	Refer to the Pinpoint Test	GO to Pinpoint Test C

The cruise control cannot set speed above 129 kmh (80 mph)	A MyKey® restricted key is in use and MyKey® max speed limiter is turned on	VERIFY whether a MyKey® restricted key is in use. With an admin key, VERIFY if MyKey® max speed limiter is turned on. REFER to the Owner's Literature. If necessary, VERIFY cruise control normal operation with an admin key.

Pinpoint Tests

The Cruise Control Is Inoperative

Diagnostic Overview

Diagnostics in this manual assume a certain skill level and knowledge of Ford-specific diagnostic practices.
REFER to: Diagnostic Methods (100-00 General Information, Description and Operation).

Refer to Wiring Diagrams Cell 31 for schematic and connector information.

Normal Operation and Fault Conditions

REFER to: Steering Wheel and Column Electrical Components - System Operation and Component Description (211-05 Steering Column Switches, Description and Operation).

REFER to: Cruise Control - System Operation and Component Description (419-03 Cruise Control, Description and Operation).

Possible Sources

- Cruise control switches
- BPP switch
- Clutch pedal switch (if equipped)
- Digital TR sensor
- Vehicle speed signal
- PCM
- SASM

PINPOINT TEST A : THE CRUISE CONTROL IS INOPERATIVE

A1 CHECK THE STOPLAMP SWITCH (BOO1) AND CRUISE CONTROL DEACTIVATOR SWITCH (BOO2) PARAMETER IDENTIFICATIONS (PIDS)

- Using a scan tool, view PCM Parameter Identifications (PIDs).
- Using the table, monitor the Parameter Identifications (PIDs) BOO1 (stoplamp switch) and BOO2 (cruise control deactivator switch) while applying and releasing the brake pedal.

Brake Pedal Position	BOO1 PID	BOO2 PID
Released	Off	Off
Applied	On	On

Do the Parameter Identification (PID) values agree with the brake pedal position?

Yes	For manual transmission, GO to A2 For automatic transmission, GO to A4
No	GO to Pinpoint Test B

A2 CHECK THE CLUTCH PEDAL CRUISE CONTROL DEACTIVATOR SWITCH (CPP_TOP) PARAMETER IDENTIFICATION (PID)

- Using a scan tool, view PCM Parameter Identifications (PIDs).
- Using the table, monitor the PCM Parameter Identification (PID) CPP_TOP while pressing and releasing the clutch pedal.

Clutch Pedal Position	CPP_TOP PID
Released	No
Pressed	Yes

Does the Parameter Identification (PID) value agree with the clutch pedal position?

Yes	GO to A4
No	If the Parameter Identification (PID) value always reads YES (pressed), GO to A3 If the Parameter Identification (PID) value always reads NO (released), GO to Pinpoint Test D

A3 CHECK THE CLUTCH PEDAL SWITCH (CPP_TOP) PARAMETER IDENTIFICATION (PID) WITH THE CLUTCH PEDAL CRUISE CONTROL DEACTIVATOR SWITCH DISCONNECTED

- Ignition OFF.
- Disconnect: Clutch Pedal Cruise Control Deactivator Switch.
- Ignition ON.
- Using a scan tool, view PCM Parameter Identifications (PIDs).
- Monitor the clutch switch Parameter Identification (PID) CPP_TOP.

Does the Parameter Identification (PID) read NO?

Yes	INSTALL a new clutch pedal cruise control deactivator switch.
No	REPAIR the circuit.

A4 CHECK FOR VOLTAGE TO THE CRUISE CONTROL SWITCHES

WARNING: Turn the ignition OFF and wait one minute to deplete the backup power supply. Failure to follow this instruction may result in serious personal injury or death in the event of an accidental deployment.

- Turn the ignition OFF and wait one minute.
- Remove the driver airbag.
  REFER to: Driver Airbag (501-20B Supplemental Restraint System, Removal and Installation).
- Disconnect: LH Lower Steering Wheel Switch.
- Ignition ON.
- Measure:

Positive Lead	Measurement / Action	Negative Lead
C2366-2	V	C2366-4
C2366-3	V	C2366-4

Are the voltages approximately 2 volts?

Yes	GO to A5
No	GO to A7

A5 CHECK THE CRUISE SIGNAL 1 CIRCUIT ON THE CLOCKSPRING

- Ignition OFF.
- Connect: LH Lower Steering Wheel Switch C2366
- Disconnect: Clockspring C218B
- Ignition ON.
- While pressing the cruise control switches, measure:

Positive Lead	Measurement / Action	Negative Lead
C218B-8	Ω	C218B-15

Resistance Specification

Button	Resistance Range
Switches At Rest	694 - 710 Ohms
ON/OFF Button Pressed	0 - 3 Ohms

Do all of the resistances fall within the specified ranges?

Yes	GO to A6
No	INSTALL a new LH steering wheel switch. REFER to: Steering Wheel Multifunction Switch (211-05 Steering Column Switches, Removal and Installation).

A6 CHECK THE CRUISE SIGNAL 2 CIRCUIT ON THE CLOCKSPRING

- While pressing the cruise control switches, measure:

Positive Lead	Measurement / Action	Negative Lead
C218B-16	Ω	C218B-15

Resistance Specification

Button	Resistance Range
Switches At Rest	694 - 710 Ohms
RES/CAN Button Pressed	0 -3 Ohms
SET (-) Button Pressed	145 - 154 Ohms
SET (+) Button Pressed	358 - 371 Ohms

Do all the resistances fall within the specified range?

Yes	GO to A7
No	GO to A8

A7 CHECK THE STEERING WHEEL SWITCH HARNESS FOR AN OPEN

- Ignition OFF.
- Disconnect: Clockspring C218B.
- Measure:

Positive Lead	Measurement / Action	Negative Lead
C2366-2	Ω	C218B-8
C2366-3	Ω	C218B-16
C2366-4	Ω	C218B-15

Are the resistances less than 3 ohms?

Yes	GO to A8
No	INSTALL a new steering wheel. REFER to: Steering Wheel (211-04 Steering Column, Removal and Installation).

A8 CHECK THE STEERING WHEEL SWITCH CIRCUITS THROUGH THE CLOCKSPRING FOR AN OPEN

NOTE: *Connectors C218C and C218D are not part of a wire harness, and are located behind the clockspring. The clockspring will need to be removed to access them.*

- Remove the clockspring.
  REFER to: Clockspring (501-20B Supplemental Restraint System, Removal and Installation).
- Measure:

Positive Lead	Measurement / Action	Negative Lead
	Ω	

 E145076 C218C-8 (component side)		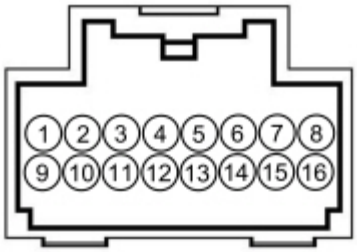 E145077 C218B-8 (component side)

- Measure:

Positive Lead	Measurement / Action	Negative Lead
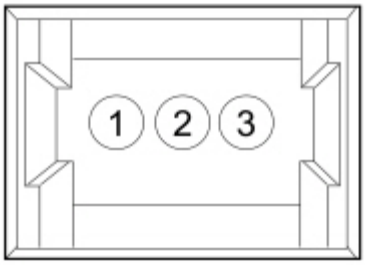 E145075 C218D-1 (component side)	Ω	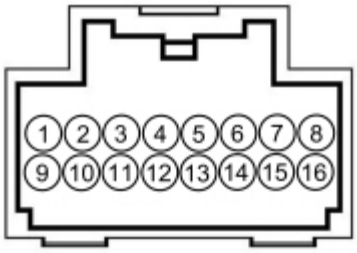 E145077 C218B-15 (component side)
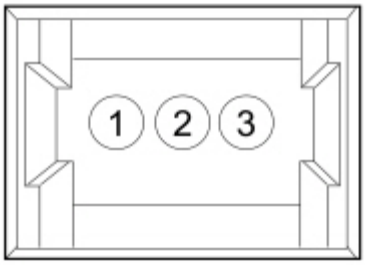 E145075 C218D-2 (component side)	Ω	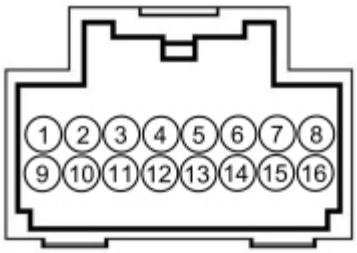 E145077 C218B-16 (component side)

Are the resistances less than 3 ohms?

Yes	GO to A9
No	INSTALL a new clockspring. REFER to: Clockspring (501-20B Supplemental Restraint System, Removal and Installation).

A9 CHECK FOR CORRECT CRUISE CONTROL OPERATION

- Reconnect all connectors and install removed components.
- Perform a road test.

Is the concern still present?

Yes	INSTALL a new steering wheel. REFER to: Steering Wheel (211-04 Steering Column, Removal and Installation). TEST the system for normal operation. If the concern is still present, GO to A10
No	The system is operating correctly at this time. The concern may have been caused by an intermittent condition.

A10 CHECK FOR CORRECT SASM (STEERING ANGLE SENSOR MODULE) OPERATION

- Ignition OFF.
- Disconnect and inspect all the SASM connectors.
- Repair:
  - corrosion (install new connector or terminals - clean module pins)
  - damaged or bent pins - install new terminals/pins
  - pushed-out pins - install new pins as necessary
- Reconnect the SASM connectors. Make sure they seat and latch correctly.
- Operate the system and determine if the concern is still present.

Is the concern still present?

Yes	CHECK OASIS for any applicable Technical Service Bulletins (TSBs). If a TSB exists for this concern, DISCONTINUE this test and FOLLOW TSB instructions. If no Technical Service Bulletins (TSBs) address this concern, INSTALL a new SASM . REFER to: Steering Angle Sensor Module (SASM) (211-05 Steering Column Switches, Removal and Installation). TEST the system for normal operation. If the concern is still present, GO to A11
No	The system is operating correctly at this time. The concern may have been caused by module connections. ADDRESS the root cause of any connector or pin issues.

A11 CHECK FOR CORRECT PCM (POWERTRAIN CONTROL MODULE) OPERATION

- Ignition OFF.
- Disconnect and inspect all PCM connectors.
- Repair:
  - corrosion (install new connector or terminals - clean module pins)
  - damaged or bent pins - install new terminals/pins
  - pushed-out pins - install new pins as necessary
- Reconnect the PCM connectors. Make sure they seat and latch correctly.
- Operate the system and determine if the concern is still present.

Is the concern still present?

Yes	CHECK OASIS for any applicable Technical Service Bulletins (TSBs). If a TSB exists for this concern, DISCONTINUE this test and FOLLOW TSB instructions. If no Technical Service Bulletins (TSBs) address this concern, INSTALL a new PCM . REFER to: Powertrain Control Module (PCM) (303-14A Electronic Engine Controls - 2.0L Duratec-HE (125kW/170PS) - MI4, Removal and Installation).
No	The system is operating correctly at this time. The concern may have been caused by module connections. ADDRESS the root cause of any connector or pin issues.

P0504, P0572, P0573 OR P1703

Diagnostic Overview

Diagnostics in this manual assume a certain skill level and knowledge of Ford-specific diagnostic practices.
REFER to: Diagnostic Methods (100-00 General Information, Description and Operation).

Refer to Wiring Diagrams Cell 31 for schematic and connector information.

Normal Operation and Fault Conditions

REFER to: Cruise Control - System Operation and Component Description (419-03 Cruise Control, Description and Operation).

DTC Fault Trigger Conditions

DTC	Description	Fault Trigger Conditions
P0504	Brake Switch A / B Correlation	A DTC that sets when the PCM does not sense the correct sequence of the brake pedal input signal from both the cruise control deactivator and stoplamp switches when the brake pedal is pressed and released.
P0572	Brake Switch A Circuit Low	A DTC that sets when the PCM detects an open in the stoplamp switch signal. The PCM monitors the vehicle speed, the engine speed, the engine torque and the stoplamp input during start and stop driving cycles. If the stoplamp switch input to the PCM is always off during start and stop driving cycles, this DTC sets in continuous memory.
P0573	Brake Switch A Circuit High	A DTC that sets when the PCM detects a short to voltage on the stoplamp switch signal. The PCM monitors the vehicle speed, the engine speed, the engine torque and the stoplamp switch input during start and stop driving cycles. If the stoplamp lamp switch input to the PCM is always on during start and stop driving cycles, this DTC sets in continuous memory.
P1703	Brake Switch Out Of Self - Test Range	A DTC that sets in the PCM during the self-test when the stoplamp switch input signal is high or does not cycle high and low.

Possible Sources

- Wiring, terminals or connectors
- Stoplamp switch
- PCM

PINPOINT TEST B : P0504, P0572, P0573 OR P1703

NOTICE: Use the correct probe adapter(s) when making measurements. Failure to use the correct probe adapter(s) may damage the connector.

B1 CHECK THE OPERATION OF THE STOPLAMPS

- Ignition ON.
- Operate the stoplamps.

Do the stoplamps and high mounted stoplamp operate correctly?

Yes	GO to B2

No	REFER to: Stoplamps (417-01 Exterior Lighting, Diagnosis and Testing).

B2 CHECK THE STOPLAMP SWITCH (BOO1) AND CRUISE CONTROL DEACTIVATOR SWITCH (BOO2) PARAMETER IDENTIFICATIONS (PIDS)

- Using a scan tool, view PCM Parameter Identifications (PIDs).
- Using the table, monitor the Parameter Identifications (PIDs) BOO1 (stoplamp switch) and BOO2 (cruise control deactivator switch) while applying and releasing the brake pedal.

Brake Pedal Position	BOO1 PID	BOO2 PID
Released	Off	Off
Applied lightly	On	Off
Applied firmly	On	On

Do the Parameter Identification (PID) values agree with the brake pedal position?

Yes	GO to B8
No	For an incorrect BOO1 Parameter Identification (PID) value, GO to B3 For an incorrect BOO2 Parameter Identification (PID) value, GO to B4

B3 CHECK THE STOPLAMP SWITCH CIRCUIT

- Ignition OFF.
- Disconnect PCM C175B.
- Ignition ON.
- While applying the brake pedal, measure:

Positive Lead	Measurement / Action	Negative Lead
C175B-30	V	—

Is the voltage greater than 11 volts?

Yes	GO to B8
No	REPAIR the circuit.

B4 CHECK THE CRUISE CONTROL DEACTIVATOR SWITCH FOR CORRECT OPERATION

- Ignition OFF.
- Disconnect: PCM C175B
- While firmly applying and releasing the brake pedal, measure:

Positive Lead	Measurement / Action	Negative Lead

C175B-16	Ω	—

Is the resistance less than 3 ohms with the brake pedal released, and greater than 10,000 ohms with the brake pedal firmly applied?

Yes	GO to B8
No	GO to B5

B5 CHECK THE CRUISE CONTROL DEACTIVATOR SWITCH GROUND CIRCUIT FOR AN OPEN

- Disconnect: Brake Pedal Position (BPP) Switch.
- Measure:

Positive Lead	Measurement / Action	Negative Lead
C278-2	Ω	—

Is the resistance less than 3 ohms?

Yes	GO to B6
No	REPAIR the circuit.

B6 CHECK THE CRUISE CONTROL DEACTIVATOR SWITCH SIGNAL CIRCUIT FOR A SHORT TO GROUND

- Measure:

Positive Lead	Measurement / Action	Negative Lead
C278-3	Ω	—

Is the resistance greater than 10,000 ohms?

Yes	GO to B7
No	REPAIR the circuit.

B7 CHECK THE CRUISE CONTROL DEACTIVATOR SWITCH SIGNAL CIRCUIT FOR AN OPEN

- Connect a fused jumper wire:

Positive Lead	Measurement / Action	Negative Lead
C278-2	—∿—	C278-3

- Measure:

Positive Lead	Measurement / Action	Negative Lead
C175B-16	Ω	—

Is the resistance less than 3 ohms?

Yes	INSTALL a new Brake Pedal Position (BPP) switch. REFER to: Stoplamp Switch (417-01 Exterior Lighting, Removal and Installation).
No	REPAIR the signal circuit for an open.

B8 CHECK FOR CORRECT PCM (POWERTRAIN CONTROL MODULE) OPERATION

- Ignition OFF.
- Disconnect and inspect all PCM connectors.
- Repair:
  - corrosion (install new connector or terminals - clean module pins)
  - damaged or bent pins - install new terminals/pins
  - pushed-out pins - install new pins as necessary
- Reconnect the PCM connectors. Make sure they seat and latch correctly.
- Operate the system and determine if the concern is still present.

Is the concern still present?

Yes	CHECK OASIS for any applicable Technical Service Bulletins (TSBs). If a TSB exists for this concern, DISCONTINUE this test and FOLLOW TSB instructions. If no Technical Service Bulletins (TSBs) address this concern, INSTALL a new Powertrain Control Module (PCM). REFER to: Powertrain Control Module (PCM) (303-14A Electronic Engine Controls - 2.0L Duratec-HE (125kW/170PS) - MI4, Removal and Installation).
No	The system is operating correctly at this time. The concern may have been caused by module connections. ADDRESS the root cause of any connector or pin issues.

The Cruise Control Does Not Disengage When The Clutch Pedal Is Applied

Diagnostic Overview

Diagnostics in this manual assume a certain skill level and knowledge of Ford-specific diagnostic practices.
REFER to: Diagnostic Methods (100-00 General Information, Description and Operation).

Refer to Wiring Diagrams Cell 31 for schematic and connector information.

Normal Operation and Fault Conditions

REFER to: Cruise Control - System Operation and Component Description (419-03 Cruise Control, Description and Operation).

Possible Sources

- Wiring, terminals and connectors

Clutch pedal cruise control deactivator switch
- PCM

PINPOINT TEST C : THE CRUISE CONTROL DOES NOT DISENGAGE WHEN THE CLUTCH PEDAL IS APPLIED

C1 CHECK THE CLUTCH PEDAL CRUISE CONTROL DEACTIVATOR SWITCH (CPP_TOP) PARAMETER IDENTIFICATION (PID)

- Ignition ON.
- Using a scan tool, view PCM Parameter Identifications (PIDs).
- Monitor the PCM Parameter Identification (PID) CPP_TOP while pressing and releasing the clutch pedal.

Does the Parameter Identification (PID) value read "YES" with the clutch pedal pressed?

Yes	GO to C5
No	GO to C2

C2 CHECK THE CLUTCH PEDAL CRUISE CONTROL DEACTIVATOR SWITCH

- Ignition OFF.
- Disconnect: Clutch Pedal Cruise Control Deactivator Switch.
- Connect a fused jumper wire:

Positive Lead	Measurement / Action	Negative Lead
C277-2		C277-3

- Ignition ON.
- Monitor the PCM Parameter Identification (PID) CPP_TOP.

Does the Parameter Identification (PID) value read YES?

Yes	INSTALL a new clutch pedal cruise control deactivator switch.
No	GO to C3

C3 CHECK THE CLUTCH PEDAL CRUISE CONTROL DEACTIVATOR SWITCH GROUND CIRCUIT FOR AN OPEN

- Ignition OFF.
- Connect a fused jumper wire:

Positive Lead	Measurement / Action	Negative Lead
C277-2		—

- Ignition ON.
- Monitor the PCM Parameter Identification (PID) CPP_TOP.

Does the Parameter Identification (PID) value read YES?

Yes	REPAIR the ground circuit.

No	GO to C4

C4 CHECK THE CLUTCH PEDAL CRUISE CONTROL DEACTIVATOR SWITCH SIGNAL CIRCUIT FOR AN OPEN

- Ignition OFF.
- Disconnect: PCM C175B.
- Measure:

Positive Lead	Measurement / Action	Negative Lead
C277-2	Ω	C175B-43

Is the resistance less than 3 ohms?

Yes	GO to C5
No	REPAIR the circuit.

C5 CHECK FOR CORRECT PCM (POWERTRAIN CONTROL MODULE) OPERATION

- Ignition OFF.
- Disconnect and inspect all PCM connectors.
- Repair:
  - corrosion (install new connector or terminals - clean module pins)
  - damaged or bent pins - install new terminals/pins
  - pushed-out pins - install new pins as necessary
- Reconnect the PCM connectors. Make sure they seat and latch correctly.
- Operate the system and determine if the concern is still present.

Is the concern still present?

Yes	CHECK OASIS for any applicable Technical Service Bulletins (TSBs). If a TSB exists for this concern, DISCONTINUE this test and FOLLOW TSB instructions. If no Technical Service Bulletins (TSBs) address this concern, INSTALL a new PCM . REFER to: Powertrain Control Module (PCM) (303-14A Electronic Engine Controls - 2.0L Duratec-HE (125kW/170PS) - MI4, Removal and Installation).
No	The system is operating correctly at this time. The concern may have been caused by module connections. ADDRESS the root cause of any connector or pin issues.

P0833

Diagnostic Overview

Diagnostics in this manual assume a certain skill level and knowledge of Ford-specific diagnostic practices.
REFER to: Diagnostic Methods (100-00 General Information, Description and Operation).

Refer to Wiring Diagrams Cell 31 for schematic and connector information.

Normal Operation and Fault Conditions

REFER to: Cruise Control - System Operation and Component Description (419-03 Cruise Control, Description and Operation).

NOTE: *Jump (push) starting the engine will cause an engine RPM correlation error when the engine rotates without a starter motor crank command. Incorrectly installed or aftermarket alarm systems may induce this fault, also.*

DTC Fault Trigger Conditions

DTC	Description	Fault Trigger Conditions
P0833	Clutch Pedal Switch B Circuit	A DTC that sets when the PCM receives the vehicle speed input, indicating movement and does not detect the switching input signal from the clutch pedal speed control deactivator switch. This condition disables cruise control.

PINPOINT TEST D : P0833

D1 CHECK THE CLUTCH PEDAL CRUISE CONTROL DEACTIVATOR SWITCH (CPP_TOP) PARAMETER IDENTIFICATION (PID)

- Ignition ON.
- Using a scan tool, view PCM Parameter Identifications (PIDs).
- Monitor the Parameter Identification (PID) CPP_TOP while pressing and releasing the clutch pedal.

Does the Parameter Identification (PID) value read "YES" with the clutch pedal pressed and "NO" with the clutch pedal released?

Yes	GO to D4
No	For Parameter Identification (PID) always reads "NO", GO to Pinpoint Test C For Parameter Identification (PID) always reads "YES", GO to D2

D2 CHECK THE CLUTCH PEDAL CRUISE CONTROL DEACTIVATOR SWITCH SIGNAL CIRCUIT FOR A SHORT TO GROUND

- Ignition OFF.
- Disconnect: PCM C175B.
- Measure:

Positive Lead	Measurement / Action	Negative Lead
C175B-43	Ω	—

Is the resistance greater than 10,000 ohms?

Yes	GO to D4
No	GO to D3

D3 CHECK THE CLUTCH PEDAL CRUISE CONTROL DEACTIVATOR SWITCH SIGNAL CIRCUIT FOR A SHORT TO GROUND WITH THE CLUTCH PEDAL CRUISE CONTROL DEACTIVATOR SWITCH DISCONNECTED

- Disconnect: Clutch Pedal Cruise Control Deactivator Switch.
- Measure:

Positive Lead	Measurement / Action	Negative Lead
C175B-43	Ω	—

Is the resistance greater than 10,000 ohms?

Yes	INSTALL a new clutch pedal cruise control deactivator switch.
No	REPAIR the circuit.

D4 RECHECK THE PCM (POWERTRAIN CONTROL MODULE) DIAGNOSTIC TROUBLE CODES (DTCS)

- Clear the Diagnostic Trouble Codes (DTCs). Repeat the PCM self-test.

Are any PCM Diagnostic Trouble Codes (DTCs) recorded?

Yes	REFER to: Powertrain Control Module (PCM) (303-14A Electronic Engine Controls - 2.0L Duratec-HE (125kW/170PS) - MI4, Removal and Installation).
No	GO to D5

D5 CHECK FOR CORRECT PCM (POWERTRAIN CONTROL MODULE) OPERATION

- Ignition OFF.
- Disconnect and inspect all PCM connectors.
- Repair:
  - corrosion (install new connector or terminals - clean module pins)
  - damaged or bent pins - install new terminals/pins
  - pushed-out pins - install new pins as necessary
- Reconnect the PCM connectors. Make sure they seat and latch correctly.
- Operate the system and determine if the concern is still present.

Is the concern still present?

Yes	CHECK OASIS for any applicable Technical Service Bulletins (TSBs). If a TSB exists for this concern, DISCONTINUE this test and FOLLOW TSB instructions. If no Technical Service Bulletins (TSBs) address this concern, INSTALL a new Powertrain Control Module (PCM). REFER to: Powertrain Control Module (PCM) (303-14A Electronic Engine Controls - 2.0L Duratec-HE (125kW/170PS) - MI4, Removal and Installation).
No	The system is operating correctly at this time. The concern may have been caused by module connections. ADDRESS the root cause of any connector or pin issues.

Copyright © Ford Motor Company

Module Configuration - System Operation and Component Description

System Operation

Programmable Module Installation (PMI)

Programmable Module Installation (PMI) is a scan tool process which configures settings in a new module. Data used for the Programmable Module Installation (PMI) process is automatically downloaded from the original module and stored when a scan tool session is started. If this data cannot be retrieved from the module being replaced, the scan tool may prompt for As-Built data entry or display a list of parameter values that need to be manually selected. Some modules are reprogrammed during Programmable Module Installation (PMI) when a strategy/calibration update is available.

It is important that the scan tool identifies the vehicle and obtains configuration data prior to removing any modules. The new module must be able to communicate with the scan tool in order to carry out Programmable Module Installation (PMI).

Module Programming

Module reprogramming (also referred to as "flashing") is a scan tool process which updates the strategy/calibration in a module. Reprogramming a module with the same level of software does not improve module operation or repair a hardware failure. Module reprogramming is automatically carried out during Programmable Module Installation (PMI) when a later strategy/calibration is available.

Limit module reprogramming to circumstances where a published TSB procedure recommends doing so. (Some modules limit the number of times it can be reprogrammed.)

A module cannot communicate with other modules on the communication network while being reprogrammed. After the reprogramming process, clear any network communication Diagnostic Trouble Codes (DTCs) which may have been set in other modules.

Some modules are reprogrammed in coordination with other modules. Follow the IDS key cycling instructions carefully to avoid reprogramming errors, including failure of programming one or more of the modules.

Programmable Parameters

Programmable parameters are customer preference items that may be modified by the dealer via the scan tool or in some cases, modified by the customer following a procedure listed in the Owner's Literature. While many configuration options may exist for a module, only a few of these options are programmable parameters. (Some parameters must be changed in multiple modules at the same time.)

Car Configuration Parameters

Car configuration parameters affect both the BCM and IPC . The parameters are set in the BCM . The parameters are also set in the IPC as backup data for service, in case online As-Built data is not available.

A scan tool is required to set the car configuration parameters. During a Programmable Module Installation (PMI) of the BCM , As-Built data must be obtained and installed. Any changed customer preference items are returned to the factory settings and must be manually reset.

Adaptive Learning and Calibration

Some modules require a separate learning procedure be carried out if replaced as part of a repair procedure. For adaptive learning and calibration instructions, refer to the specific module removal and installation procedures.

Vehicle Identification (VID) Block

Vehicle identification block commonly stores powertrain configuration items such as VIN , tire size, axle ratio, and whether or not the vehicle is equipped with cruise control.

Transmission Identification Block

Some PCM also contain a memory area called a transmission identification block. The transmission identification block commonly stores solenoid body flow data. If the solenoid body information is not correct, transaxle damage or drivability concerns can occur.

As-Built Data

As-Built data is a VIN -specific module configuration record. During vehicle build, the configuration from all modules is downloaded and stored in the As-Built database. As-Built data does not reflect customer preference items that have been changed from the default state. These items need to be changed using programmable parameters after the module is configured.

It is not necessary to obtain As-Built data unless directed to do so by the scan tool. This data may be accessed from the technician service publication web site.

Module Configuration and Parameter Chart

The charts describe specific module configuration information:

All Modules Except BCM and IPC

Module Name	Programmable Module Installation (PMI) Available	Reprogram/Flash Capable	Requires Adaptive Learning or Calibration	Available Progammable Parameters
APIM Premium Audio	Yes	Yes	No	None
APIM Sony®	Yes	Yes	No	• Surround sound • Navigation repeater format
ABS module	No	No	• IVD initialization	• Tire size
ACM	Yes	Yes	No	• Radio presets
DSP	Yes	Yes	No	None
DDM	No	No	No	None
FCIM	No	No	No	None
FCDIM	Yes	Yes	No	None
GPSM	Yes	Yes	No	None
HVAC module	Yes	Yes	No	None
Information Center Module (ICM) (if equipped)	No	No	No	None
Image Processing Module - B (IPM-B)	Yes	Yes	No	None
OCSM	No	No	• OCS re-zero	None
Parking Aid Module (PAM)	No	No	No	None
PSCM	No	No	No	None
PCM	Yes	Yes	Yes	• Speed control present • VIN

PDM	No	No	No	None
RFA module	No	No	No	None
RCM	Yes	Yes	No	None
SASM	No	No	No	None
TCM	Yes	Yes	Yes	None

Body Control Module (BCM) and Instrument Panel Cluster (IPC)

NOTE: *The Body Control Module (BCM) and IPC have a unique procedure to set Car Configuration Parameters. Configuration changes made will affect both modules. On the scan tool, first select Module Programming > Programmable Parameters > Car Configuration Parameter(s) > Vehicle Configuration > Retrieve the Vehicle Configuration Data. Next select Module Programming > Programmable Parameters > Car Configuration Parameter(s) > Vehicle Configuration > Modify and Reinstate Vehicle Configuration Data. Change parameters as needed.*

Module Name	Programmable Module Installation (PMI) Available	Reprogram/Flash Capable	Requires Adaptive Learning or Calibration	Available Car Configuration Parameters
BCM	Yes (through Car Configuration Parameters. Refer to BCM in Section 419-10.)	Yes	No	**NOTE:** *Do not change car configuration parameters except those listed below.* • Seat belt warning (Belt-Minder®) • English/Metric • Language • Rear reverse gear wipe
IPC	Yes	Yes	No	

Copyright © Ford Motor Company

Communications Network - Overview

Overview

Multiplexing is a method of sending 2 or more signals simultaneously over a single circuit. Multiplexing allows 2 or more electronic modules (nodes) to communicate over a twisted wire pair [data (+) and data (-)] network. The information or messages that can be communicated on these wires consists of commands, status or data. The advantage of using multiplexing is to reduce the weight of the vehicle by reducing the number of redundant components and electrical wiring.

NOTE: *The Infotainment Controller Area Network (I-CAN) goes to the DLC , but the Infotainment Controller Area Network (I-CAN) modules communicate with the scan tool over the Medium Speed Controller Area Network (MS-CAN). The IPC is used as a gateway module for the messages to transfer between the scan tool and the modules on the Infotainment Controller Area Network (I-CAN).*

The vehicle has 3 module communication networks connected to the DLC , located under the instrument panel. The communication networks are:

- High Speed Controller Area Network (HS-CAN)
- Medium Speed Controller Area Network (MS-CAN)
- Infotainment Controller Area Network (I-CAN)

Copyright © Ford Motor Company

Communications Network - System Operation and Component Description

System Operation

System Diagram

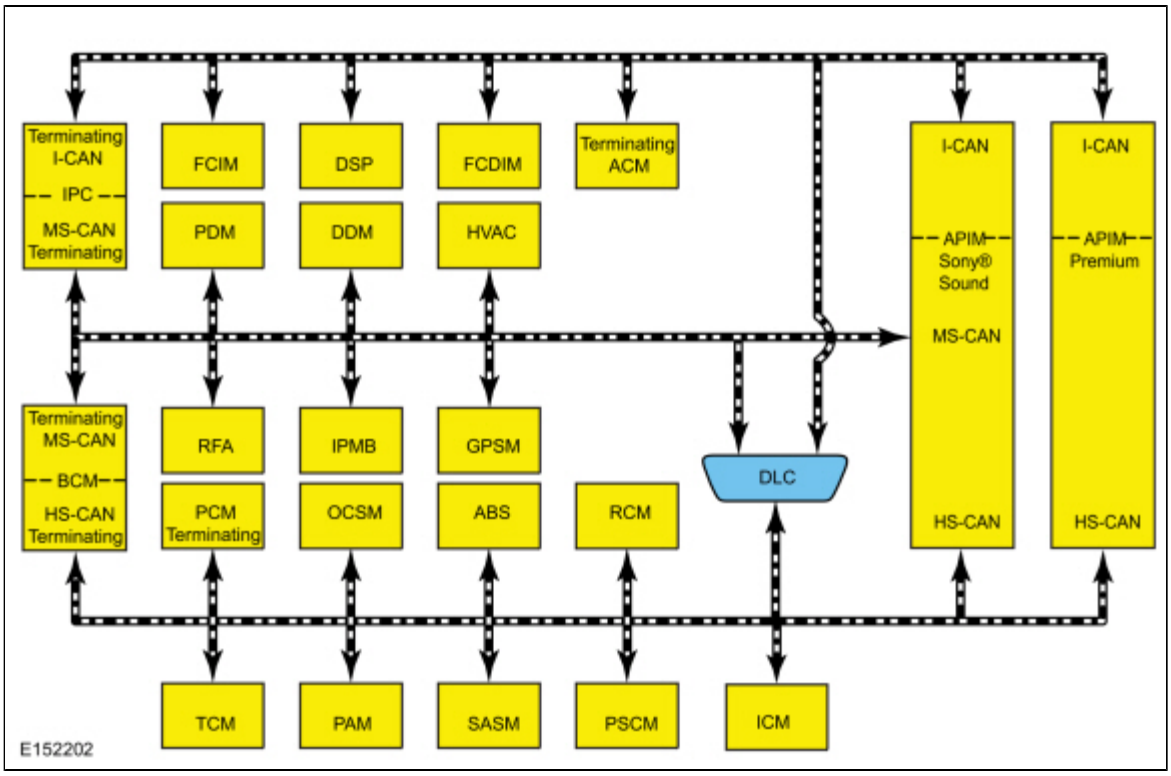

Module Network Chart

Module Name	Network Type
APIM (if equipped)	HS-CAN
	MS-CAN (Sony® Sound Only)
	I-CAN
ABS module	HS-CAN
ACM	I-CAN
DSP (if equipped)	I-CAN
BCM	HS-CAN
	MS-CAN
DDM (if equipped)	MS-CAN
FCIM (if equipped)	I-CAN
FCDIM	I-CAN
GPSM (if equipped)	MS-CAN
HVAC module	MS-CAN

IPC	MS-CAN
	I-CAN
Information Center Module (ICM) (if equipped)	HS-CAN
Image Processing Module - B (IPM-B) (if equipped)	MS-CAN
OCSM	HS-CAN
Parking Aid Module (PAM) (if equipped)	HS-CAN
PSCM	HS-CAN
PCM	HS-CAN
PDM (if equipped)	MS-CAN
RFA module (if equipped)	MS-CAN
RCM	HS-CAN
SASM	HS-CAN
TCM (if equipped)	HS-CAN

Network Termination

The CAN uses network termination to improve communication reliability. Termination modules are located at both ends of the network. As network messages are broadcast in the form of voltage signals, the network voltage signals are stabilized by the termination resistors.

Each termination module has an internal 120 ohm resistor that bridges across the positive and negative bus connection. With two 120 ohm resistors located in a parallel circuit configuration, the total network impedance, or total resistance, is 60 ohms.

Network termination improves bus message reliability by:

- stabilizing bus voltage.
- eliminating electrical interference.

Gateway Module

The IPC and BCM are gateway modules. The IPC translates messages on the Medium Speed Controller Area Network (MS-CAN) to the Infotainment Controller Area Network (I-CAN) and vice versa. The BCM translates messages on the High Speed Controller Area Network (HS-CAN) to the Medium Speed Controller Area Network (MS-CAN) and vice versa. This allows a message to be distributed throughout all 3 networks.

The IPC and the BCM are the only modules on this vehicle that have this ability.

High Speed Controller Area Network (HS-CAN)

The High Speed Controller Area Network (HS-CAN) operates at a maximum data transfer speed of 500 Kbps and is designed for real time powertrain information transfer and control.

Modules on the High Speed Controller Area Network (HS-CAN) communicate using bussed messages. The High Speed Controller Area Network (HS-CAN) uses an unshielded twisted pair cable, data bus (+) and data bus (-) circuits. In addition to scan tool communication, the High Speed Controller Area Network (HS-CAN) allows sharing of information between all modules on the network.

Medium Speed Controller Area Network (MS-CAN)

The Medium Speed Controller Area Network (MS-CAN) operates at a maximum data transfer speed of 125 Kbps and is designed for general information transfer.

Modules on the Medium Speed Controller Area Network (MS-CAN) communicate using bussed messages. The Medium Speed Controller Area Network (MS-CAN) uses an unshielded twisted pair cable, data bus (+) and data bus (-) circuits. In addition to scan

tool communication, the Medium Speed Controller Area Network (MS-CAN) allows sharing of information between all modules on the network.

Infotainment Controller Area Network (I-CAN)

The Infotainment Controller Area Network (I-CAN) operates at a maximum data transfer speed of 500 Kbps and is designed for real time audio and multimedia information transfer and control.

Modules on the Infotainment Controller Area Network (I-CAN) communicate using bussed messages. Infotainment Controller Area Network (I-CAN) uses an unshielded twisted pair cable, data bus (+) and data bus (-) circuits. The Infotainment Controller Area Network (I-CAN) allows sharing of information between all modules on the network.

The Infotainment Controller Area Network (I-CAN) is connected to the DLC , but the Infotainment Controller Area Network (I-CAN) modules communicate with the scan tool over the Medium Speed Controller Area Network (MS-CAN). The IPC is used as a gateway for the messages to transfer between the scan tool and the modules on the Infotainment Controller Area Network (I-CAN).

Controller Area Network (CAN) Fault Tolerance

NOTE: *The oscilloscope traces shown are from the IDS oscilloscope taken using the IDS pre-configured CAN settings. The traces are for both data (+) and data (-) taken simultaneously (2-channel) at a sample rate of 1 mega-sample per second (1MS/s) or greater.*

Fault Tolerance Normal Operation

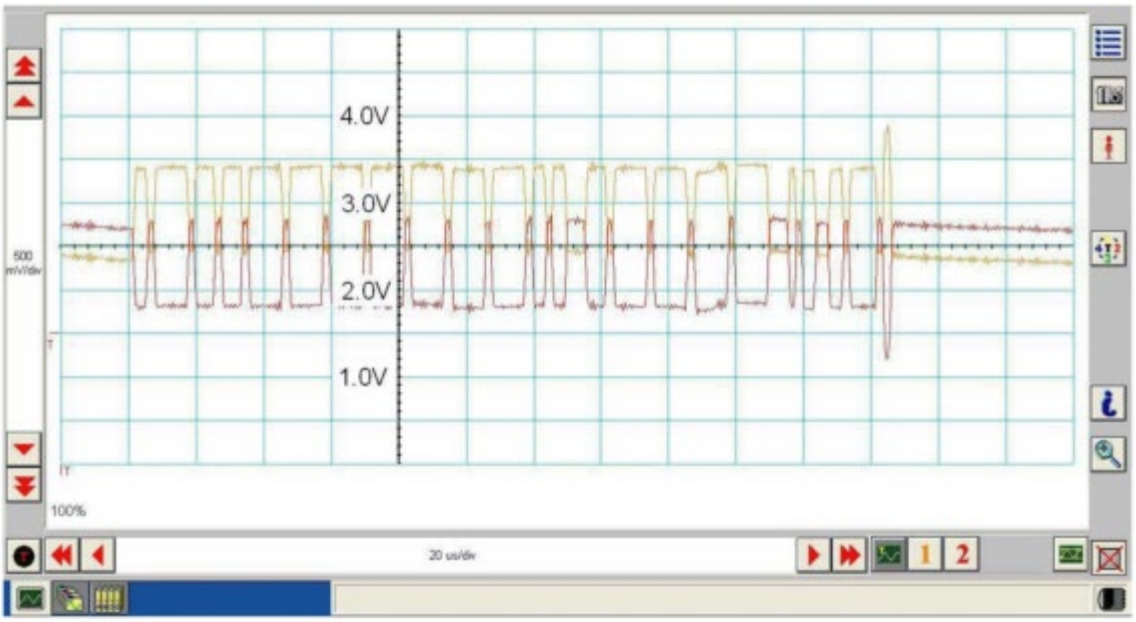

E144677

The data (+) and data (-) circuits are each regulated to approximately 2.5 volts during neutral or rested network traffic. As messages are sent on the data (+) circuit, voltage is increased by approximately 1.0 volt. Inversely, the data (-) circuit is reduced by approximately 1.0 volt when a message is sent.

Successful communication of a message can usually be identified by the slight spike at the end of a message transmission. Any signals that are significantly different than the normal CAN waveform may cause network Diagnostic Trouble Codes (DTCs) (U-codes) to set or may cause a complete network outage.

CAN Circuits Shorted Together

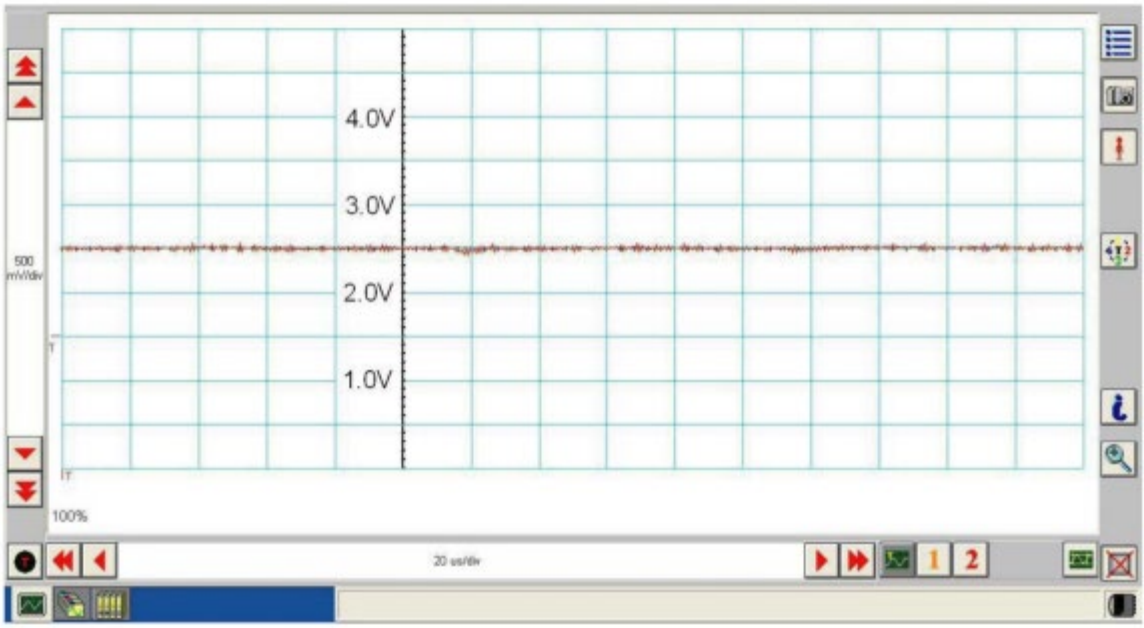

E144678

In the event the data (+) and data (-) circuits become shorted together, the signal stays at base voltage (2.5V) continuously and all communication capabilities are lost.

CAN (+) Circuit Shorted to Ground

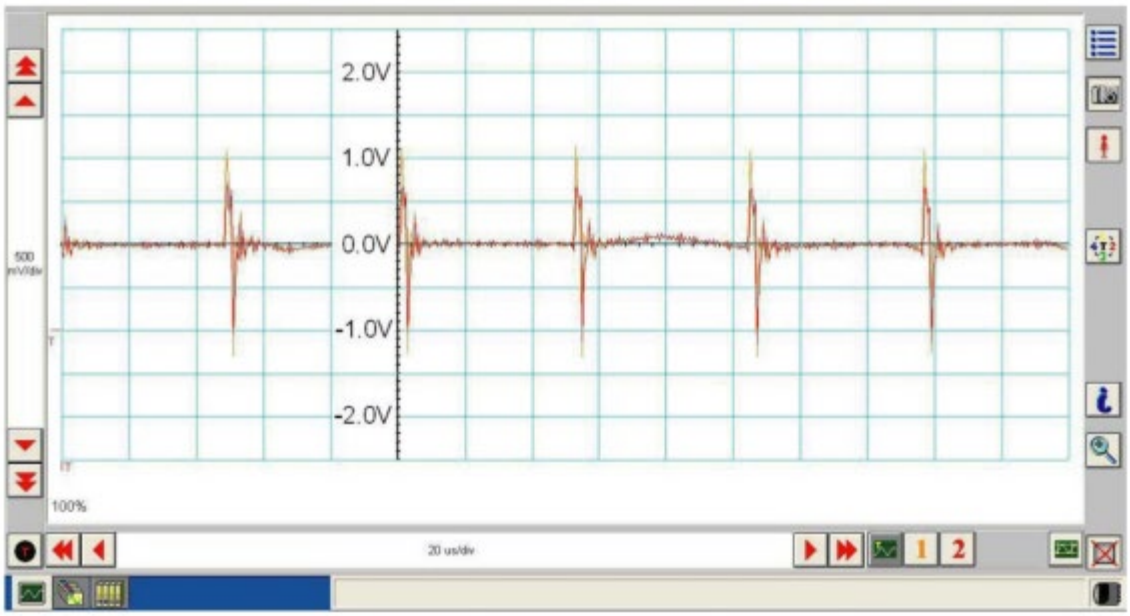

E144679

In the event the data (+) circuit becomes shorted to ground, both the data (+) and data (-) circuits are pulled low (0V) and all communication capabilities are lost.

CAN (-) Circuit Shorted to Ground

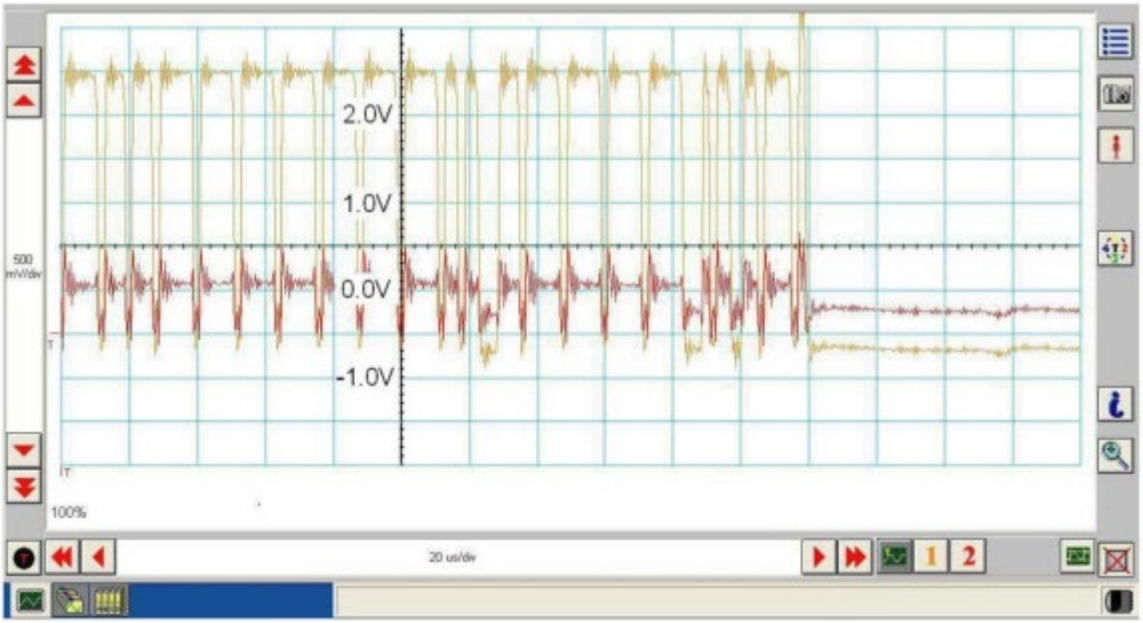

E144680

In the event the data (-) circuit becomes shorted to ground, the data (-) circuit is pulled low (0V) and the data (+) circuit reaches near-normal peak voltage (3.0V) during communication but falls to 0V instead of normal base voltage (2.5V). Communication may continue but at a degraded level.

CAN (+) Circuit Shorted to Battery Voltage

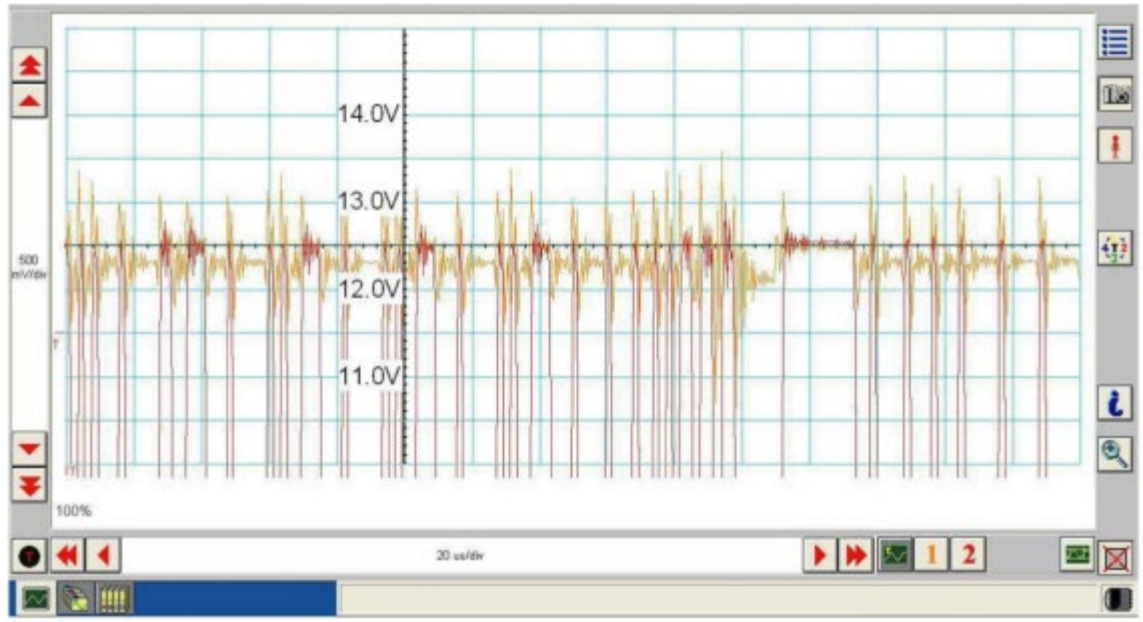

E144681

In the event the data (+) circuit becomes shorted to battery voltage, the data (+) circuit is pulled high (12V) and the data (-) circuit falls to abnormally high voltage (above 5V) during communication and reaches battery voltage (12V) for peak voltage. Communication may continue but at a degraded level.

CAN (-) Circuit Shorted to Battery Voltage

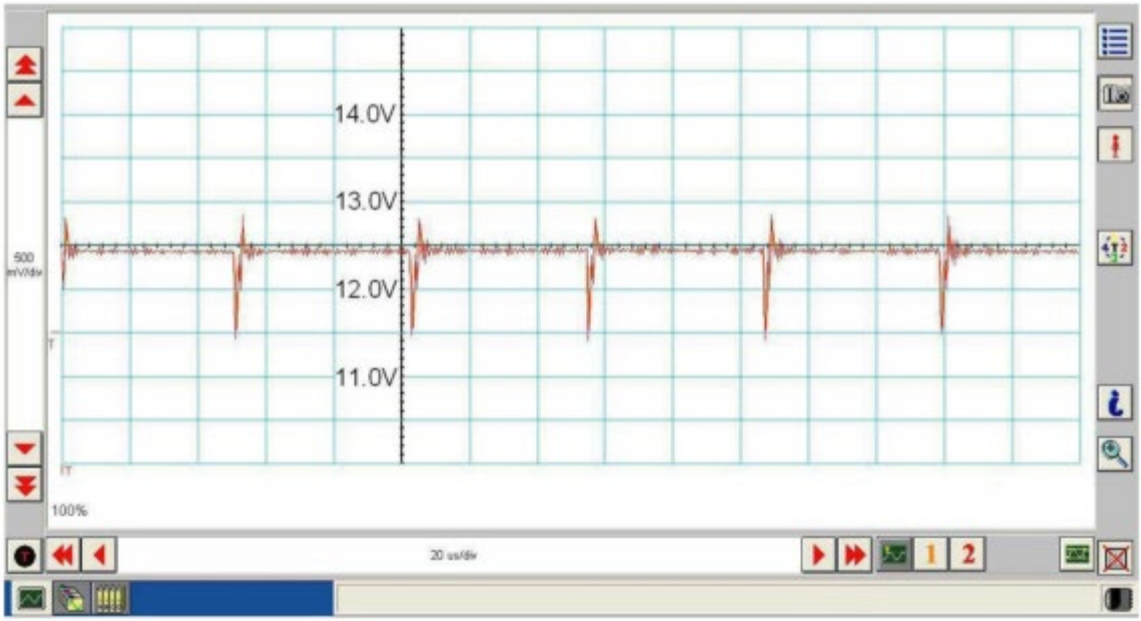

E144682

In the event the data (-) circuit becomes shorted to battery voltage, both the data (+) and data (-) circuits are pulled high (12V) and all communication capabilities are lost.

CAN Circuit Signal Corruption

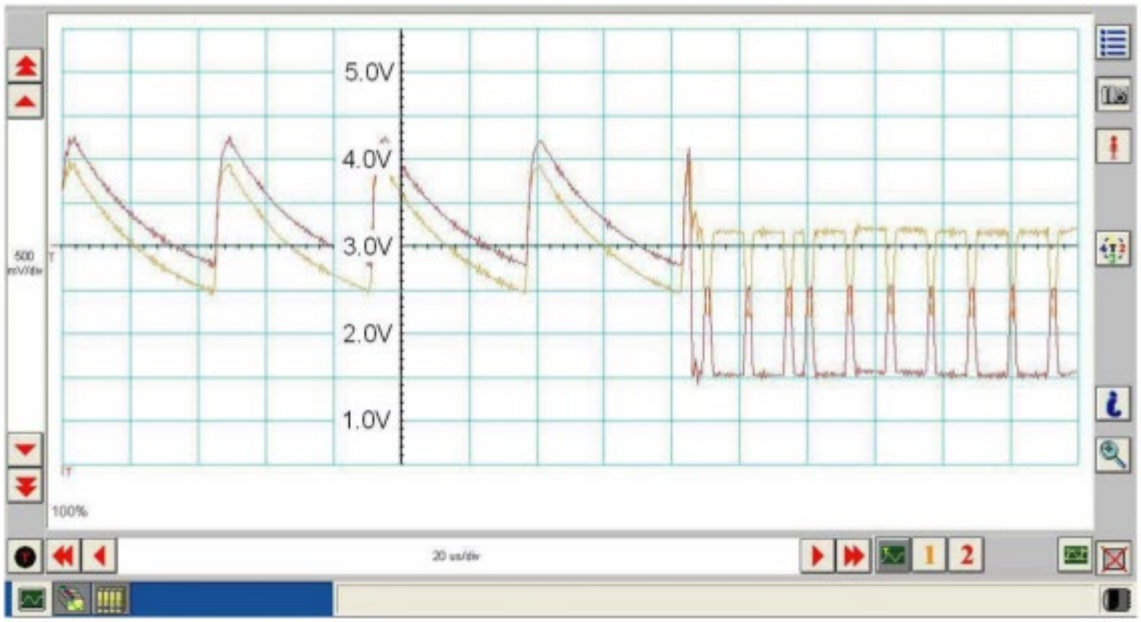

E144683

Rhythmic oscillations, inductive spikes or random interference can corrupt the network communications. The corruption signal source may be outside electrical interference such as motors or solenoids or internal interference generated from a module on the network. In some cases, an open in either the data (+) or data (-) circuit to a network module may cause the module to emit interference on the one circuit which is still connected. The trace shown is an example of a "sawtooth" pattern transmitted from a module with one open network circuit.

Other corruptions may be present when a module is intermittently powered up and down. The module on power up may initiate communication out of sync with other modules on the network causing momentary communication outages.

CAN Multiplex Messages

Message	Originating Module	Network Type	Receiving Module(s)
A/C clutch status	PCM	HS-CAN	• BCM
A/C clutch status (gateway)	BCM	MS-CAN	• HVAC module
A/C request	HVAC module	MS-CAN	• BCM
A/C request (gateway)	BCM	HS-CAN	• PCM
ABS active	ABS module	HS-CAN	• TCM • PSCM • PAM • PCM
ABS warning indicator request	ABS module	HS-CAN	• TCM • RCM • PCM • BCM
ABS warning indicator request (gateway)	BCM	MS-CAN	• IPC
Accelerator pedal position	PCM	HS-CAN	• OCSM • BCM • RCM • ABS module • TCM
Accelerator pedal position	BCM	MS-CAN	• IPC
ACM CD data	ACM	I-CAN	• FCDIM • IPC
ACM configuration	ACM	I-CAN	• IPC • FCDIM
ACM configuration (gateway)	IPC	MS-CAN	• BCM
ACM configuration (gateway)	BCM	HS-CAN	• PAM
ACM radio function	ACM	I-CAN	• FCDIM
ACM status	ACM	I-CAN	• IPC
Actual current	PCM	HS-CAN	• BCM
Air ambient temperature	PCM	HS-CAN	• TCM • BCM

Air ambient temperature actual	PCM	HS-CAN	HVAC module • BCM
Air ambient temperature filtered	PCM	HS-CAN	• BCM
Air ambient temperature filtered (gateway)	BCM	MS-CAN	• IPC
Air bag deployment status	RCM	HS-CAN	• APIM
Air bag indicator request	RCM	HS-CAN	• BCM
Air bag indicator request (gateway)	BCM	MS-CAN	• IPC
Air bag warning indicator status	BCM	HS-CAN	• RCM
Alarm mode	BCM	MS-CAN	• IPC
Alarm/key programming chime request	BCM	MS-CAN	• IPC
Alternator fault	PCM	HS-CAN	• BCM
ASL switch position	BCM	HS-CAN	• PCM
Audio button status	FCDIM	I-CAN	• ACM
Audio display request mode	FCDIM	I-CAN	• ACM
Audio source request	ACM	I-CAN	• IPC • FCDIM
Audio source select	FCDIM	I-CAN	• ACM
Audio volume command	FCIM	I-CAN	• FCDIM • ACM
Audio volume and mode status	ACM	I-CAN	• IPC • FCDIM
Available current	PCM	HS-CAN	• BCM
Beltminder mode	IPC	I-CAN	• ACM • DSP
Bezel test request	FCDIM	I-CAN	• ACM • IPC
Brake (red) warning indicator request	ABS module	HS-CAN	• BCM • RCM
Brake (red) warning indicator request	BCM	HS-CAN	• IPC
Brake On/Off switch	PCM	HS-CAN	• OCSM • RCM • ABS module

Brake pedal applied	PCM	HS-CAN	• TCM • BCM
Brake pedal movement	ABS module	HS-CAN	• PCM
Brake warning request	BCM	HS-CAN	• BCM
Brake warning request (gateway)	BCM	HS-CAN	• IPC
Bulb failure indication	BCM	MS-CAN	• IPC
Call data	FCDIM	I-CAN	• IPC
Camera commands	FCDIM	I-CAN	• IPC
Camera commands (gateway)	IPC	MS-CAN	• IPM-B
Camera status	IPM-B	MS-CAN	• IPC
CD load/eject	ACM	I-CAN	• FCDIM
Central lock status	BCM	MS-CAN	• RFA module
Central locking command	BCM	MS-CAN	• DDM • PDM
Charge mode	BCM	HS-CAN	• PCM
Charge voltage request	BCM	HS-CAN	• PCM
Charging system indicator request	BCM	MS-CAN	• IPC
Child lock command	BCM	MS-CAN	• DDM • PDM
Chime mode	IPC	I-CAN	• ACM
Chime request	IPC	I-CAN	• ACM
Climate control requests	APIM	MS-CAN	• HVAC module
Climate control requests	APIM	I-CAN	• IPC
Climate control requests (gateway)	IPC	MS-CAN	• HVAC module
Climate control status	IPC	I-CAN	• FCDIM
Climate control status	HVAC module	MS-CAN	• IPC
Compass display data	BCM	HS-CAN	• IPC
Compass zone and calibration commands	IPC	HS-CAN	• BCM

Cooling fan request	TCM	HS-CAN	• PCM
Crank request	BCM	HS-CAN	• PCM
Cruise control button status	BCM	HS-CAN	• PCM
Cruise control status	PCM	HS-CAN	• TCM • RCM • OCSM • BCM • ABS module
Cruise control status (gateway)	BCM	MS-CAN	• IPC
Date and time	IPC	I-CAN	• HVAC module • FCDIM
Date and time adjustment request	FCDIM	I-CAN	• IPC
Date and time adjustment request (gateway)	IPC	MS-CAN	• BCM
Defrost request	HVAC module	MS-CAN	• BCM
Display language request	APIM	I-CAN	• IPC
Display set volume request	FCDIM	I-CAN	• ACM
Door ajar status	IPC	I-CAN	• FCDIM
Door lock status	IPC	I-CAN	• FCDIM
Door status	BCM	MS-CAN	• RFA module • PDM • IPC • HVAC module • DDM • IPM-B
Door status	BCM	HS-CAN	• ICM
Driver safety belt status	RCM	HS-CAN	• BCM
Driver temperature units	HVAC module	MS-CAN	• IPC
Drivers door latch status	DDM	MS-CAN	• BCM
Drivers door short drop	BCM	MS-CAN	• DDM
Drivers window position	DDM	MS-CAN	• BCM • HVAC module
eCall confirmation	APIM	HS-CAN	• RCM • BCM

eCall notification	RCM	HS-CAN	• APIM
Econometer data	PCM	HS-CAN	• BCM
Econometer data (gateway)	BCM	MS-CAN	• IPC
Emergeny braking event	ABS module	HS-CAN	• BCM
Engine air inlet temperature	PCM	HS-CAN	• TCM • BCM
Engine coolant temperature	PCM	HS-CAN	• TCM • BCM
Engine coolant temperature (gateway)	BCM	MS-CAN	• IPC • HVAC module
Engine MIL request	PCM	HS-CAN	• BCM
Engine MIL request (gateway)	BCM	MS-CAN	• IPC
Engine oil level warning	PCM	HS-CAN	• BCM • ICM
Engine oil level warning (gateway)	BCM	MS-CAN	• IPC
Engine oil life reset	IPC	MS-CAN	• BCM
Engine oil life reset (gateway)	BCM	HS-CAN	• PCM
Engine oil temperature	PCM	HS-CAN	• ICM
Engine RPM	PCM	HS-CAN	• BCM • ICM
Engine RPM (gateway)	BCM	MS-CAN	• IPC
Engine service indication	PCM	HS-CAN	• BCM • RCM
Engine service indication (gateway)	BCM	MS-CAN	• IPC
Engine state	PCM	HS-CAN	• BCM
EPAS display	BCM	MS-CAN	• IPC
EPAS display (gateway)	PSCM	HS-CAN	• BCM
Evaporator temperature	BCM	HS-CAN	• PCM
Evaporator temperature	BCM	MS-CAN	• HVAC module

FCDIM configuration	FCDIM	I-CAN	• ACM
Flex fuel mixture	PCM	HS-CAN	• BCM
Fog lamp indicator request	BCM	MS-CAN	• IPC
Front fan bar display	HVAC module	MS-CAN	• IPC
Front fog lamp indicator	BCM	MS-CAN	• IPC
Front washer command	BCM	MS-CAN	• IPC • HVAC module
Front washer command	BCM	MS-CAN	• IPC
Fuel level status	BCM	HS-CAN	• PCM
Fuel level status	BCM	MS-CAN	• IPC
Fuel pump cutoff request	RCM	HS-CAN	• BCM
Fuel pump status	BCM	HS-CAN	• PCM
GPS data	GPSM	MS-CAN	• IPC • APIM
High beam indicator request	BCM	HS-CAN	• IPC
Hill start assist chime	ABS module	HS-CAN	• BCM
Hill start assist chime (gateway)	BCM	MS-CAN	• IPC
Hill start assist status	ABS module	HS-CAN	• BCM
Hill start assist status (gateway)	BCM	MS-CAN	• IPC
Home safe light indication request	BCM	MS-CAN	• IPC
HVAC temperature request	IPC	MS-CAN	• HVAC module
Ignition key type	BCM	HS-CAN	• PAM
Ignition key type	BCM	MS-CAN	• RFA module
Ignition status (gateway)	IPC	I-CAN	• APIM
Ignition status	BCM	MS-CAN	• IPC • GPSM • APIM
Illumination dimming level	BCM	HS-CAN	• TCM • PCM

Illumination dimming level	BCM	MS-CAN	• IPC • PDM • DDM • IPM-B
Illumination dimming level (gateway)	IPC	I-CAN	• FCIM • FCDIM
Illumination dimming level	IPC	MS-CAN	• BCM • HVAC module
Intelligent access central lock command	RFA module	MS-CAN	• BCM
Intelligent access indication	BCM	MS-CAN	• IPC
Intelligent access key status	RFA module	MS-CAN	• BCM
Intelligent access key status	RFA module	MS-CAN	• BCM
Intelligent access request target data	BCM	MS-CAN	• RFA module
Intelligent access scan request	BCM	MS-CAN	• RFA module
Intelligent access system status	RFA module	MS-CAN	• BCM • DDM • PDM
IPC configuration	IPC	I-CAN	• FCDIM
Key warning indication	BCM	MS-CAN	• IPC
Left rear window command	DDM	MS-CAN	• PDM
Left rear window position	DDM	MS-CAN	• BCM • HVAC module
Light switch position	BCM	MS-CAN	• IPC
Main light switch position	BCM	MS-CAN	• IPC • PDM
MIL request	PCM	HS-CAN	• IPC
MIL request	BCM	MS-CAN	• IPC
Multimedia system ON/OFF MyKey	IPC	MS-CAN	• BCM
Mykey reset request	BCM	MS-CAN	• IPC
MyKey volume limit mode	IPC	I-CAN	• ACM • DSP
Navigation request	FCDIM	I-CAN	• ACM

OCS calibration data	OCSM	HS-CAN	• RCM
OCS fault status	OCSM	HS-CAN	• RCM
OCS sensor data	OCSM	HS-CAN	• RCM
OCS serial number	OCSM	HS-CAN	• RCM
Odometer master value	BCM	HS-CAN	• PCM • ABS module
Odometer master value	BCM	MS-CAN	• DDM
Oil pressure warning	PCM	HS-CAN	• BCM • ICM
Oil pressure warning (gateway)	BCM	MS-CAN	• IPC
Outer mirror defrost command	BCM	MS-CAN	• DDM • PDM
Outside air temperature status	IPC	HS-CAN	• APIM
Park brake indication	BCM	MS-CAN	• IPC • APIM
Parking aid active	PAM	HS-CAN	• BCM
Parking aid active (gateway)	BCM	MS-CAN	• IPC
Parking aid disable status	PAM	HS-CAN	• IPC
Parking aid disable status	BCM	MS-CAN	• IPC
Parking aid range to object	PAM	HS-CAN	• BCM
Parking aid range to object (gateway)	BCM	MS-CAN	• IPC
Parking brake actual	BCM	HS-CAN	• TCM • PCM • ABS module
Parking brake warning request	BCM	MS-CAN	• IPC
Passenger detect status	BCM	MS-CAN	• IPC
Passenger mirror command	DDM	MS-CAN	• PDM
Passenger temperature units	HVAC module	MS-CAN	• IPC
Passenger window command	DDM	MS-CAN	• PDM
Passenger window position	PDM	MS-CAN	• BCM

			• HVAC module
Passengers door latch status	PDM	MS-CAN	• BCM
Passive key out of vehicle	BCM	MS-CAN	• IPC
Passive key status	BCM	MS-CAN	• IPC
PATS indication	BCM	MS-CAN	• IPC
PATS start request target data	BCM	HS-CAN	• PCM
PATS status enable/disable target data	PCM	HS-CAN	• BCM
Position light Indication	BCM	MS-CAN	• IPC
Power mode	IPC	I-CAN	• FCDIM • ACM
Power mode	BCM	HS-CAN	• TCM • SASM • PSCM • PAM • PCM • ICM
Power mode	BCM	MS-CAN	• RFA module • PDM • IPC • HVAC module • DDM • IPM-B
Power pack status	PCM	HS-CAN	• BCM • ABS module
Power pack status (gateway)	BCM	MS-CAN	• IPC
Power system status	BCM	MS-CAN	• IPC
RCM serial number	RCM	HS-CAN	• ABS module
Rear defrost status	BCM	MS-CAN	• HVAC module
Rear door latch status	DDM	MS-CAN	• BCM
Rear door latch status	PDM	MS-CAN	• BCM
Rear washer command	BCM	HS-CAN	• IPC
Rear window disable command	DDM	MS-CAN	• PDM • BCM
Restraint impact event status	RCM	HS-CAN	• BCM

			• OCSM
Reverse gear	PCM	HS-CAN	• RCM • PAM • OCSM • IPC • ABS module • BCM
Reverse gear (gateway)	BCM	MS-CAN	• PDM • HVAC module • GPSM • DDM • IPM-B
Reverse gear (gateway)	BCM	MS-CAN	• DDM • PDM • IPMB • IPC • GPSM
Right rear window command	PDM	MS-CAN	• BCM
Right rear window position	PDM	MS-CAN	• BCM • HVAC module
RKE data (with intelligent access)	RFA module	MS-CAN	• BCM
Safety belt latch position	RCM	HS-CAN	• APIM
Safety belt status	RCM	HS-CAN	• OCSM • BCM
Safety belt status (gateway)	BCM	MS-CAN	• IPC • HVAC module
Satellite radio status	ACM	I-CAN	• FCDIM
Satillite radio data	ACM	I-CAN	• IPC
Selected display language	FCDIM	I-CAN	• IPC
Selector lever (PRNDL) status	IPC	I-CAN	• ACM • APIM • DSP • FCDIM
Selector lever (PRNDL) status	TCM	HS-CAN	• RCM • PAM • OCSM • PCM • BCM • ABS module
Selector lever (PRNDL) status (gateway)	BCM	MS-CAN	• PDM • IPC

			• DDM • IPM-B
Stability control brake active	ABS module	HS-CAN	• TCM • PSCM • PAM • PCM
Stability/traction control disabled indicator request	ABS module	HS-CAN	• BCM
Stability/traction control disabled indicator request (gateway)	BCM	MS-CAN	• IPC
Stability/traction control indication	ABS module	HS-CAN	• BCM
Stability/traction control indication (gateway)	BCM	MS-CAN	• IPC
Start/stop button indicator	PCM	HS-CAN	• BCM
Start/stop button press	BCM	HS-CAN	• PCM
Start/stop display message	BCM	MS-CAN	• IPC
Steering angle status	SASM	HS-CAN	• TCM • PSCM • PAM • PCM • BCM • ABS module
Steering angle status	BCM	MS-CAN	• IPC • IPM-B
Steering wheel direction of rotation	SASM	HS-CAN	• PSCM • PCM • ABS module • BCM
Steering angle counter	SASM	HS-CAN	• PSCM • PCM • ABS module
Stoplamp request	ABS module	HS-CAN	• BCM
Temperature display units	APIM	I-CAN	• IPC
Tire pressure indication	BCM	MS-CAN	• IPC
Torque converter clutch status	TCM	HS-CAN	• PCM
Torsion bar torque	PSCM	HS-CAN	• PAM • ABS module
Traction control brake active	ABS module	HS-CAN	• TCM • PSCM • PAM

			• PCM
Traction control mode	ABS module	HS-CAN	• TCM • RCM • PSCM • PAM • PCM
Transmission gear display actual	TCM / PCM	HS-CAN	• BCM
Transmission gear display actual (gateway)	BCM	MS-CAN	• IPC
Transmission gear display status	TCM / PCM	HS-CAN	• BCM
Transmission gear display status (gateway)	BCM	MS-CAN	• IPC
Transmission in reverse	PCM	HS-CAN	• BCM • RCM • SASM • OCSM
Transmission message request	TCM	HS-CAN	• BCM
Transmission message request (gateway)	BCM	MS-CAN	• IPC
Transmission mode display actual	TCM	HS-CAN	• BCM
Transmission mode display actual (gateway)	BCM	MS-CAN	• IPC
Transmission oil temperature	TCM	HS-CAN	• PCM
Transmission service required	TCM	HS-CAN	• RCM • BCM
Transmission service required (gateway)	BCM	MS-CAN	• IPC
Transmission shift indicator	PCM	HS-CAN	• BCM
Transmission shift indicator (gateway)	BCM	MS-CAN	• IPC
Transmission shift mode	TCM	HS-CAN	• PCM • BCM
Transmission shift mode (gateway)	BCM	MS-CAN	• IPC
Transmission upshift indication request	BCM	MS-CAN	• IPC
Transport mode	IPC	I-CAN	• ACM • FCDIM
Transport mode	BCM	HS-CAN	• PSCM • PAM • PCM • ABS module

Transport mode	BCM	MS-CAN	• RFA module • PDM • IPM-B • IPC • HVAC module • DDM
Turn indicator command	BCM	MS-CAN	• IPC
USB data	ACM	I-CAN	• IPC • FCDIM
Vehicle configuration data	BCM	HS-CAN	• TCM • APIM • ABS module • PCM
Vehicle configuration data	BCM	MS-CAN	• IPC
Vehicle configuration/Information	IPC	I-CAN	• FCDIM • ACM
Vehicle configuration/Information	BCM	MS-CAN	• RFA module • PDM • IPC • HVAC module • DDM • IPM-B
Vehicle speed	ABS module	HS-CAN	• PSCM • PCM • BCM
Vehicle speed (gateway)	BCM	MS-CAN	• IPC • PDM • DDM • RFA module
Vehicle speed (gateway)	IPC	I-CAN	• ACM
Vehicle trip display units	APIM	I-CAN	• IPC
Vehicle yaw rate	RCM	HS-CAN	• BCM
Vehicle yaw rate (gateway)	BCM	MS-CAN	• GPSM
Washer fluid level low	BCM	MS-CAN	• IPC
Wheel rotation count	ABS module	HS-CAN	• BCM
Wheel rotation count (gateway)	BCM	MS-CAN	• IPC
Wheel rotation count front	ABS module	HS-CAN	• BCM

Wheel rotation count front (gateway)	BCM	MS-CAN	IPC
Wheel rotation direction	ABS module	HS-CAN	• BCM • TCM • PAM • BCM
Wheel rotation direction (gateway)	BCM	MS-CAN	• GPSM
Wheel speed data	ABS module	HS-CAN	• TCM • PSCM • PCM
Wheel speed data (gateway)	IPC	I-CAN	• FCDIM
Wheel speed data (gateway)	BCM	MS-CAN	• GPSM • IPC
Wiper speed information	BCM	MS-CAN	• HVAC module

Copyright © Ford Motor Company

Communications Network

DTC Chart

Diagnostics in this manual assume a certain skill level and knowledge of Ford-specific diagnostic practices.
REFER to: Diagnostic Methods (100-00 General Information, Description and Operation).

DTC Chart - BCM

DTC	Description	Action
U0004	High Speed CAN Communication Bus (+) Low: No Sub Type Information	A High Speed Controller Area Network (HS-CAN) fault was present at a point in time. The fault is not currently present since the module is communicating with the scan tool. CLEAR the DTC . REPEAT the network test with the scan tool. VERIFY the integrity of the connectors and wiring. Refer to Wiring Diagrams Cell 14 for schematic and connector information.
U0005	High Speed CAN Communication Bus (+) High: No Sub Type Information	A High Speed Controller Area Network (HS-CAN) fault is present but the network may still be functional at a degraded level. One or more modules may not communicate and may not be sending or receiving messages. GO to Pinpoint Test W
U0007	High Speed CAN Communication Bus (-) Low: No Sub Type Information	A High Speed Controller Area Network (HS-CAN) fault is present but the network may still be functional at a degraded level. One or more modules may not communicate and may not be sending or receiving messages. GO to Pinpoint Test W
U0008	High Speed CAN Communication Bus (-) High: No Sub Type Information	A High Speed Controller Area Network (HS-CAN) fault was present at a point in time. The fault is not currently present since the module is communicating with the scan tool. CLEAR the DTC . REPEAT the network test with the scan tool. VERIFY the integrity of the connectors and wiring. Refer to Wiring Diagrams Cell 14 for schematic and connector information.
U0009	High Speed CAN Communication Bus (-) Shorted to Bus (+): No Sub Type Information	A High Speed Controller Area Network (HS-CAN) fault was present at a point in time. The fault is not currently present since the module is communicating with the scan tool. CLEAR the DTC . REPEAT the network test with the scan tool. VERIFY the integrity of the connectors and wiring. Refer to Wiring Diagrams Cell 14 for schematic and connector information.
U0013	Medium Speed CAN Communication Bus (+) Low: No Sub Type Information	A Medium Speed Controller Area Network (MS-CAN) fault is either currently present or was present at a point in time. The BCM can report this DTC while a fault is present because the BCM communicates with the scan tool on the High Speed Controller Area Network (HS-CAN). If no Medium Speed Controller Area Network (MS-CAN) modules communicate, GO to Pinpoint Test X If all Medium Speed Controller Area Network (MS-CAN) modules currently communicate, CLEAR the DTC . REPEAT the network test with the scan tool. VERIFY the integrity of the connectors and wiring. Refer to Wiring Diagrams Cell 14 for schematic and connector information.

U0014	Medium Speed CAN Communication Bus (+) High: No Sub Type Information	A Medium Speed Controller Area Network (MS-CAN) fault is present but the network may still be functional at a degraded level. One or more modules may not communicate and may not be sending or receiving messages. GO to Pinpoint Test X
U0016	Medium Speed CAN Communication Bus (-) Low: No Sub Type Information	A Medium Speed Controller Area Network (MS-CAN) fault is present but the network may still be functional at a degraded level. One or more modules may not communicate and may not be sending or receiving messages. GO to Pinpoint Test X
U0017	Medium Speed CAN Communication Bus(-) High: No Sub Type Information	A Medium Speed Controller Area Network (MS-CAN) fault is either currently present or was present at a point in time. The BCM can report this DTC while a fault is present because the BCM communicates with the scan tool on the High Speed Controller Area Network (HS-CAN). If no Medium Speed Controller Area Network (MS-CAN) modules communicate, GO to Pinpoint Test X If all Medium Speed Controller Area Network (MS-CAN) modules currently communicate, CLEAR the DTC . REPEAT the network test with the scan tool. VERIFY the integrity of the connectors and wiring. Refer to Wiring Diagrams Cell 14 for schematic and connector information.
U0018	Medium Speed CAN Communication Bus (-) Shorted to Bus (+): No Sub Type Information	A Medium Speed Controller Area Network (MS-CAN) fault was present at a point in time. The fault is not currently present since the module is communicating with the scan tool. CLEAR the DTC . REPEAT the network test with the scan tool. VERIFY the integrity of the connectors and wiring. Refer to Wiring Diagrams Cell 14 for schematic and connector information.

Symptom Chart(s)

Symptom Chart: Communication Network

Diagnostics in this manual assume a certain skill level and knowledge of Ford-specific diagnostic practices.
REFER to: Diagnostic Methods (100-00 General Information, Description and Operation).

Symptom Chart

Condition	Possible Sources	Actions
The vehicle does not start with the scan tool connected to the DLC and/or multiple malfunction indicators are only on when the scan tool is connected to the DLC	Refer to the Diagnostic Routine	GO to Pinpoint Test Z
The PCM does not respond to the scan tool	Refer to the Diagnostic Routine	GO to Pinpoint Test A
The ABS module does not respond to the scan tool	Refer to the Diagnostic Routine	GO to Pinpoint Test B
The RCM does not respond to the scan tool	Refer to the Diagnostic Routine	GO to Pinpoint Test C
The FCDIM does not respond to the scan tool	Refer to the	GO to Pinpoint Test D

	Diagnostic Routine	
The OCSM does not respond to the scan tool	Refer to the Diagnostic Routine	GO to Pinpoint Test E
The SASM does not respond to the scan tool	Refer to the Diagnostic Routine	GO to Pinpoint Test F
The IPC does not respond to the scan tool	Refer to the Diagnostic Routine	GO to Pinpoint Test G
The Information Center Module (ICM) does not respond to the scan tool	Refer to the Diagnostic Routine	GO to Pinpoint Test H
The BCM does not respond to the scan tool	Refer to the Diagnostic Routine	GO to Pinpoint Test I
The HVAC module does not respond to the scan tool	Refer to the Diagnostic Routine	GO to Pinpoint Test J
The ACM does not respond to the scan tool	Refer to the Diagnostic Routine	GO to Pinpoint Test K
The DSP does not respond to the scan tool	Refer to the Diagnostic Routine	GO to Pinpoint Test L
The DDM does not respond to the scan tool	Refer to the Diagnostic Routine	GO to Pinpoint Test M
The PDM does not respond to the scan tool	Refer to the Diagnostic Routine	GO to Pinpoint Test N
The Image Processing Module - B (IPM-B) does not respond to the scan tool	Refer to the Diagnostic Routine	GO to Pinpoint Test O
The GPSM does not respond to the scan tool	Refer to the Diagnostic Routine	GO to Pinpoint Test P
The Parking Aid Module (PAM) does not respond to the scan tool	Refer to the Diagnostic Routine	GO to Pinpoint Test Q
The APIM does not respond to the scan tool	Refer to the Diagnostic Routine	GO to Pinpoint Test R
The FCIM does not respond to the scan tool	Refer to the Diagnostic Routine	GO to Pinpoint Test S
The RFA module does not respond to the scan tool	Refer to the Diagnostic Routine	GO to Pinpoint Test T
The TCM does not respond to the scan tool	Refer to the Diagnostic	GO to Pinpoint Test U

	Routine	
The PSCM does not respond to the scan tool	Refer to the Diagnostic Routine	GO to Pinpoint Test V
No High Speed Controller Area Network (HS-CAN) communication, all modules are not responding	Refer to the Diagnostic Routine	GO to Pinpoint Test W
No Medium Speed Controller Area Network (MS-CAN) communication, all modules are not responding	Refer to the Diagnostic Routine	GO to Pinpoint Test X
No Infotainment Controller Area Network (I-CAN) communication, all modules are not responding	Refer to the Diagnostic Routine	• If the IPC does not pass a network test, DIAGNOSE the IPC first. GO to Pinpoint Test G • If the IPC does pass a network test, GO to Pinpoint Test Y
No power to the DLC	Refer to the Diagnostic Routine	GO to Pinpoint Test Z

Diagnostic Routines

The Powertrain Control Module (PCM) Does Not Respond To The Scan Tool

Diagnostic Overview

Diagnostics in this manual assume a certain skill level and knowledge of Ford-specific diagnostic practices.
REFER to: Diagnostic Methods (100-00 General Information, Description and Operation).

Refer to Wiring Diagrams Cell 14 for schematic and connector information.

Refer to Wiring Diagrams Cell 23 for schematic and connector information.

Normal Operation and Fault Conditions

The PCM communicates with the scan tool through the High Speed Controller Area Network (HS-CAN). An IDS session cannot be established if the PCM communication fails when attempting to identify the vehicle.

Possible Sources

- Fuse
- Wiring, terminals and connectors
- PCM

PINPOINT TEST A : THE POWERTRAIN CONTROL MODULE (PCM) DOES NOT RESPOND TO THE SCAN TOOL

NOTE: *Failure to disconnect the battery when instructed will result in false resistance readings.*
A1 VERIFY WHETHER OTHER HIGH SPEED CONTROLLER AREA NETWORK (HS-CAN) MODULES PASS THE NETWORK TEST
• Using a scan tool, perform the network test. **Is the text "pass" or a DTC listed next to any of the following modules (if equipped): APIM , ABS module, BCM , OCSM , Parking Aid Module (PAM), PSCM , RCM , SASM or TCM ?**

Yes	If "pass" or a DTC was listed next to the Powertrain Control Module (PCM), a network fault is not currently present. To diagnose an intermittent High Speed Controller Area Network (HS-CAN) fault condition, GO to Pinpoint Test W If "pass" or a DTC was listed next to one or more modules other than the PCM , GO to A2
No	No modules are currently communicating on the High Speed Controller Area Network (HS-CAN). GO to Pinpoint Test W

A2 POWERTRAIN CONTROL/EMISSIONS DIAGNOSIS (PC/ED) MANUAL PINPOINT TEST QA VERIFICATION CHECK

- Verify that Powertrain Control/Emissions Diagnosis (PC/ED) manual pinpoint test QA has been performed.

Has the VREF test been performed?

Yes	GO to A3
No	Refer to Powertrain Control/Emissions Diagnosis (PC/ED) manual.

A3 CHECK THE HIGH SPEED CONTROLLER AREA NETWORK (HS-CAN) TERMINATION RESISTANCE

- Ignition OFF.
- Measure:

Positive Lead	Measurement / Action	Negative Lead
C251-6	Ω	C251-14

Is the resistance between 54 and 66 ohms?

Yes	GO to A5
No	GO to A4

A4 CHECK THE HIGH SPEED CONTROLLER AREA NETWORK (HS-CAN) CIRCUITS BETWEEN THE PCM (POWERTRAIN CONTROL MODULE) AND THE DLC (DATA LINK CONNECTOR) FOR AN OPEN

- Disconnect: PCM C175B.
- Measure:

Positive Lead	Measurement / Action	Negative Lead
C175B-54	Ω	C251-6
C175B-41	Ω	C251-14

Are the resistances less than 3 ohms?

Yes	GO to A5
No	REPAIR the circuit in question.

A5 CHECK FOR CORRECT PCM (POWERTRAIN CONTROL MODULE) OPERATION

- Ignition OFF.
- Disconnect and inspect all the PCM connectors.
- Repair:
  - corrosion (install new connector or terminals – clean module pins)
  - damaged or bent pins – install new terminals/pins
  - pushed-out pins – install new pins as necessary
- Reconnect the PCM connectors. Make sure they seat and latch correctly.
- Operate the system and determine if the concern is still present.

Is the concern still present?

Yes	CHECK OASIS for any applicable Technical Service Bulletins (TSBs). If a TSB exists for this concern, DISCONTINUE this test and FOLLOW TSB instructions. If no Technical Service Bulletins (TSBs) address this concern, INSTALL a new PCM. REFER to: Powertrain Control Module (PCM) (303-14A Electronic Engine Controls - 2.0L Duratec-HE (125kW/170PS) - MI4, Removal and Installation).
No	The system is operating correctly at this time. The concern may have been caused by module connections. ADDRESS the root cause of any connector or pin issues.

The Anti-Lock Brake System (ABS) Module Does Not Respond To The Scan Tool

Diagnostic Overview

Diagnostics in this manual assume a certain skill level and knowledge of Ford-specific diagnostic practices.
REFER to: Diagnostic Methods (100-00 General Information, Description and Operation).

Refer to Wiring Diagrams Cell 14 for schematic and connector information.

Refer to Wiring Diagrams Cell 42 for schematic and connector information.

Normal Operation and Fault Conditions

The ABS module communicates with the scan tool through the High Speed Controller Area Network (HS-CAN).

Possible Sources

- Fuse
- Wiring, terminals and connectors
- ABS module

Visual Inspection and Diagnostic Pre-checks

Verify BJB fuses 7 (40A), 8 (30A) and 19 (5A) are OK.

PINPOINT TEST B : THE ABS (ANTI-LOCK BRAKE SYSTEM) MODULE DOES NOT RESPOND TO THE SCAN TOOL

NOTE: *Failure to disconnect the battery when instructed will result in false resistance readings.*
B1 CHECK THE ABS (ANTI-LOCK BRAKE SYSTEM) MODULE VOLTAGE SUPPLY CIRCUITS FOR AN OPEN

- Ignition OFF.
- Disconnect: ABS Module.

- Ignition ON.
- Measure:

Positive Lead	Measurement / Action	Negative Lead
C135-8	V	—
C135-1	V	—
C135-32	V	—

Are the voltages greater than 11 volts?

Yes	GO to B2
No	VERIFY the BJB fuses 7 (40A), 8 (30A) and 19 (5A) are OK. If OK, REPAIR the circuit in question. If not OK, REFER to the Wiring Diagrams manual to identify the possible causes of the circuit short.

B2 CHECK THE ABS (ANTI-LOCK BRAKE SYSTEM) MODULE GROUND CIRCUIT FOR AN OPEN

- Ignition OFF.
- Measure:

Positive Lead	Measurement / Action	Negative Lead
C135-47	Ω	—

Is the resistance less than 3 ohms?

Yes	GO to B3
No	REPAIR the circuit.

B3 CHECK THE HIGH SPEED CONTROLLER AREA NETWORK (HS-CAN) CIRCUITS BETWEEN THE ABS (ANTI-LOCK BRAKE SYSTEM) MODULE AND THE DLC (DATA LINK CONNECTOR) FOR AN OPEN

- Measure:

Positive Lead	Measurement / Action	Negative Lead
C135-12	Ω	C251-6
C135-13	Ω	C251-14

Are the resistances less than 3 ohms?

Yes	GO to B4
No	REPAIR the circuit in question.

B4 CHECK FOR CORRECT ABS (ANTI-LOCK BRAKE SYSTEM) MODULE OPERATION

- Ignition OFF.
- Disconnect and inspect the ABS module connector.
- Repair:
  - corrosion (install new connector or terminals - clean module pins)
  - damaged or bent pins - install new terminals/pins
  - pushed-out pins - install new pins as necessary
- Reconnect the ABS module connector. Make sure it seats and latches correctly.
- Operate the system and determine if the concern is still present.

Is the concern still present?

Yes	CHECK OASIS for any applicable Technical Service Bulletins (TSBs). If a TSB exists for this concern, DISCONTINUE this test and FOLLOW TSB instructions. If no Technical Service Bulletins (TSBs) address this concern, INSTALL a new ABS module.
No	The system is operating correctly at this time. The concern may have been caused by module connections. ADDRESS the root cause of any connector or pin issues.

The RCM Does Not Respond To The Scan Tool

Diagnostic Overview

Diagnostics in this manual assume a certain skill level and knowledge of Ford-specific diagnostic practices.
REFER to: Diagnostic Methods (100-00 General Information, Description and Operation).

Refer to Wiring Diagrams Cell 14 for schematic and connector information.

Refer to Wiring Diagrams Cell 46 for schematic and connector information.

Normal Operation and Fault Conditions

The RCM communicates with the scan tool through the High Speed Controller Area Network (HS-CAN).

Possible Causes

- Fuse
- Wiring, terminals and connectors
- RCM

Visual Inspection and Diagnostic Pre-checks

Verify BCM fuse 86 (10A) is OK.

PINPOINT TEST C : THE RESTRAINTS CONTROL MODULE (RCM) DOES NOT RESPOND TO THE SCAN TOOL

WARNING: Never probe the electrical connectors on air bag, Safety Canopy® or side air curtain modules. Failure to follow this instruction may result in the accidental deployment of these modules, which increases the risk of serious personal injury or death.

WARNING: Never disassemble or tamper with seat belt deployable components, including pretensioners, load limiters and inflators. Never back probe deployable device electrical connectors. Tampering or back probing may cause an accidental deployment and result in personal injury or death.

NOTE: *Failure to disconnect the battery when instructed will result in false resistance readings.*

NOTE: *The Supplemental Restraint System (SRS) must be fully operational and free of faults before releasing the vehicle to the customer.*

C1 CHECK THE RCM (RESTRAINTS CONTROL MODULE) CONNECTION

- Ignition OFF.
- Depower the SRS . Refer to Depower and Repower procedure in 501-20B.
- Disconnect: RCM C310A.

Are RCM C310A pin 19, 20 and 24 OK?

Yes	GO to C2
No	INSTALL a new wiring harness. REPOWER the SRS . Refer to Depower and Repower procedure in 501-20B.

C2 CHECK THE RCM (RESTRAINTS CONTROL MODULE) VOLTAGE SUPPLY CIRCUIT FOR AN OPEN

- Repower the SRS . Refer to Depower and Repower procedure in 501-20B.
- Ignition ON.
- Measure:

Positive Lead	Measurement / Action	Negative Lead
C310A-24		—

Is the voltage greater than 11 volts?

Yes	GO to C3
No	VERIFY the BCM fuse 86 (10A) is OK. If OK, REPAIR the circuit. If not OK, REFER to the Wiring Diagrams manual to identify the possible causes of the circuit short.

C3 CHECK THE RCM (RESTRAINTS CONTROL MODULE) CASE GROUND

- Ignition OFF.
- Measure the resistance between the RCM case and a good chassis ground.

Is the resistance less than 3 ohms?

Yes	GO to C4
No	REPAIR the RCM case ground as necessary.

C4 CHECK THE HIGH SPEED CONTROLLER AREA NETWORK (HS-CAN) CIRCUITS BETWEEN THE RCM (RESTRAINTS CONTROL MODULE) AND THE DLC (DATA LINK CONNECTOR) FOR AN OPEN

- Depower the SRS . Refer to Depower and Repower procedure in 501-20B.
- Measure:

Positive Lead	Measurement / Action	Negative Lead

C310A-19	Ω	C251-6
C310A-20	Ω	C251-14

Are the resistances less than 3 ohms?

Yes	GO to C5
No	REPAIR the circuit in question.

C5 CHECK FOR CORRECT RCM (RESTRAINTS CONTROL MODULE) OPERATION

- Ignition OFF.
- Disconnect and inspect all the RCM connectors.
- Repair:
  - corrosion (install new connector or terminals - clean module pins)
  - damaged or bent pins - install new terminals/pins
  - pushed-out pins - install new pins as necessary
- Reconnect the RCM connectors. Make sure they seat and latch correctly.
- Repower the SRS . Refer to Depower and Repower procedure in 501-20B.
- Operate the system and determine if the concern is still present.

Is the concern still present?

Yes	CHECK OASIS for any applicable Technical Service Bulletins (TSBs). If a TSB exists for this concern, DISCONTINUE this test and FOLLOW TSB instructions. If no Technical Service Bulletins (TSBs) address this concern, INSTALL a new RCM . GO to RCM PPT.
No	The system is operating correctly at this time. The concern may have been caused by module connections. ADDRESS the root cause of any connector or pin issues.

The FCDIM Does Not Respond To The Scan Tool

Diagnostic Overview

Diagnostics in this manual assume a certain skill level and knowledge of Ford-specific diagnostic practices.
REFER to: Diagnostic Methods (100-00 General Information, Description and Operation).

Refer to Wiring Diagrams Cell 14 for schematic and connector information.

Refer to Wiring Diagrams Cell 130 for schematic and connector information.

Normal Operation and Fault Conditions

The FCDIM communicates with the scan tool through the Medium Speed Controller Area Network (MS-CAN). The IPC is used as the gateway module.

Visual Inspection and Diagnostic Pre-checks

Verify Body Control Module (BCM) fuse 67 (7.5A) is OK.

PINPOINT TEST D : THE FCDIM (FRONT CONTROL/DISPLAY INTERFACE MODULE) DOES NOT RESPOND TO THE

SCAN TOOL

NOTE: *Failure to disconnect the battery when instructed will result in false resistance readings.*

D1 CHECK THE FCDIM (FRONT CONTROL/DISPLAY INTERFACE MODULE) VOLTAGE SUPPLY CIRCUIT FOR AN OPEN

- Ignition OFF.
- Disconnect: FCDIM .
- Ignition ON.
- Measure:

Positive Lead	Measurement / Action	Negative Lead
C2123-1	▼	—

Is the voltage greater than 11 volts?

Yes	GO to D2
No	VERIFY the BCM fuse 67 (7.5A) is OK. If OK, REPAIR the circuit. If not OK, REFER to the Wiring Diagrams manual to identify the possible causes of the circuit short.

D2 CHECK THE FCDIM (FRONT CONTROL/DISPLAY INTERFACE MODULE) GROUND CIRCUIT FOR AN OPEN

- Ignition OFF.
- Measure:

Positive Lead	Measurement / Action	Negative Lead
C2123-9	Ω	—
C2123-11	Ω	—

Are the resistances less than 3 ohms?

Yes	GO to D3
No	REPAIR the circuit in question.

D3 CHECK THE INFOTAINMENT CONTROLLER AREA NETWORK (I-CAN) CIRCUITS BETWEEN THE FCDIM (FRONT CONTROL/DISPLAY INTERFACE MODULE) AND THE IPC (INSTRUMENT PANEL CLUSTER) FOR AN OPEN

- Disconnect: IPC .
- Measure:

Positive Lead	Measurement / Action	Negative Lead
C2123-4	Ω	C220-5
C2123-5	Ω	C220-4

Are the resistances less than 3 ohms?

Yes	GO to D4
No	REPAIR the circuit in question.

D4 CHECK FOR CORRECT FCDIM (FRONT CONTROL/DISPLAY INTERFACE MODULE) OPERATION

- Ignition OFF.
- Disconnect and inspect the FCDIM connector.
- Repair:
  - corrosion (install new connector or terminals - clean module pins)
  - damaged or bent pins - install new terminals/pins
  - pushed-out pins - install new pins as necessary
- Reconnect the FCDIM connector. Make sure it seats and latches correctly.
- Operate the system and determine if the concern is still present.

Is the concern still present?

Yes	CHECK OASIS for any applicable Technical Service Bulletins (TSBs). If a TSB exists for this concern, DISCONTINUE this test and FOLLOW TSB instructions. If no Technical Service Bulletins (TSBs) address this concern, INSTALL a new FCDIM . If equipped with AM/FM/CD, REFER to: Front Control/Display Interface Module (FCDIM) (415-00A Information and Entertainment System - General Information - Vehicles With: AM/FM/CD, Removal and Installation). If equipped with SYNC/AM/FM/CD, REFER to: Front Control/Display Interface Module (FCDIM) (415-00B Information and Entertainment System - General Information - Vehicles With: AM/FM/CD/SYNC, Removal and Installation).
No	The system is operating correctly at this time. The concern may have been caused by module connections. ADDRESS the root cause of any connector or pin issues.

The OCSM Does Not Respond To The Scan Tool

Diagnostic Overview

Diagnostics in this manual assume a certain skill level and knowledge of Ford-specific diagnostic practices.
REFER to: Diagnostic Methods (100-00 General Information, Description and Operation).

Refer to Wiring Diagrams Cell 14 for schematic and connector information.

Refer to Wiring Diagrams Cell 46 for schematic and connector information.

Normal Operation and Fault Conditions

The OCSM communicates with the scan tool through the High Speed Controller Area Network (HS-CAN).

Possible Sources

- Fuse
- Wiring, terminals and connector
- OCSM

Visual Inspection and Diagnostic Pre-checks

Verify BCM fuse 86 (10A) is OK.

PINPOINT TEST E : THE OCSM (OCCUPANT CLASSIFICATION SYSTEM MODULE) DOES NOT RESPOND TO THE SCAN TOOL

NOTE: *Failure to disconnect the battery when instructed will result in false resistance readings.*

E1 CHECK THE OCSM (OCCUPANT CLASSIFICATION SYSTEM MODULE) VOLTAGE SUPPLY CIRCUIT FOR AN OPEN

- Ignition OFF.
- Wait one minute.
- Disconnect: OCSM .
- Ignition ON.
- Measure:

Positive Lead	Measurement / Action	Negative Lead
C3159-1	V	—

Is the voltage greater than 11 volts?

Yes	GO to E2
No	VERIFY the BCM fuse 86 (10A) is OK. If OK, REPAIR the circuit. If not OK, REFER to the Wiring Diagrams manual to identify the possible causes of the circuit short.

E2 CHECK THE OCSM (OCCUPANT CLASSIFICATION SYSTEM MODULE) GROUND CIRCUIT FOR AN OPEN

- Ignition OFF.
- Measure:

Positive Lead	Measurement / Action	Negative Lead
C3159-4	Ω	—

Is the resistance less than 3 ohms?

Yes	GO to E3
No	REPAIR the circuit.

E3 CHECK THE HIGH SPEED CONTROLLER AREA NETWORK (HS-CAN) CIRCUITS BETWEEN THE OCSM (OCCUPANT CLASSIFICATION SYSTEM MODULE) AND THE DLC (DATA LINK CONNECTOR) FOR AN OPEN

- Measure:

Positive Lead	Measurement / Action	Negative Lead
	Ω	

C3159-2		C251-6
C3159-3	Ω	C251-14

Are the resistances less than 3 ohms?

Yes	GO to E4
No	REPAIR the circuit in question.

E4 CHECK FOR CORRECT OCSM (OCCUPANT CLASSIFICATION SYSTEM MODULE) OPERATION

- Ignition OFF.
- Disconnect and inspect the OCSM connector.
- Repair:
  - corrosion (install new connector or terminals - clean module pins)
  - damaged or bent pins - install new terminals/pins
  - pushed-out pins - install new pins as necessary
- Reconnect the OCSM connector. Make sure it seats and latches correctly.
- Operate the system and determine if the concern is still present.

Is the concern still present?

Yes	CHECK OASIS for any applicable Technical Service Bulletins (TSBs). If a TSB exists for this concern, DISCONTINUE this test and FOLLOW TSB instructions. If no Technical Service Bulletins (TSBs) address this concern, INSTALL a new OCSM . Refer to OCSM R&I.
No	The system is operating correctly at this time. The concern may have been caused by module connections. ADDRESS the root cause of any connector or pin issues.

The SASM Does Not Respond To The Scan Tool

Diagnostic Overview

Diagnostics in this manual assume a certain skill level and knowledge of Ford-specific diagnostic practices.
REFER to: Diagnostic Methods (100-00 General Information, Description and Operation).

Refer to Wiring Diagrams Cell 14 for schematic and connector information.

Refer to Wiring Diagrams Cell 31 for schematic and connector information.

Normal Operation and Fault Conditions

The SASM communicates with the scan tool through the High Speed Controller Area Network (HS-CAN).

Possible Causes

- Fuse
- Wiring, terminals and connector
- SASM

Visual Inspection and Diagnostic Pre-checks

Verify BCM fuse 72 (7.5A) is OK.

PINPOINT TEST F : THE SASM (STEERING ANGLE SENSOR MODULE) DOES NOT RESPOND TO THE SCAN TOOL

NOTE: *Failure to disconnect the battery when instructed will result in false resistance readings.*

F1 CHECK THE SASM (STEERING ANGLE SENSOR MODULE) VOLTAGE SUPPLY CIRCUIT FOR AN OPEN

- Ignition OFF.
- Disconnect: SASM C226A
- Ignition ON.
- Measure:

Positive Lead	Measurement / Action	Negative Lead
C226A-1	V	—

Is the voltage greater than 11 volts?

Yes	GO to F2
No	VERIFY the BCM fuse 72 (7.5A) is OK. If OK, REPAIR the circuit. If not OK, REFER to the Wiring Diagrams manual to identify the possible causes of the circuit short.

F2 CHECK THE SASM (STEERING ANGLE SENSOR MODULE) GROUND CIRCUIT FOR AN OPEN

- Ignition OFF.
- Measure:

Positive Lead	Measurement / Action	Negative Lead
C226A-14	Ω	—

Is the resistance less than 3 ohms?

Yes	GO to F3
No	REPAIR the circuit.

F3 CHECK THE HIGH SPEED CONTROLLER AREA NETWORK (HS-CAN) CIRCUITS BETWEEN THE SASM (STEERING ANGLE SENSOR MODULE) AND THE DLC (DATA LINK CONNECTOR) FOR AN OPEN

- Measure:

Positive Lead	Measurement / Action	Negative Lead
C226A-4	Ω	C251-6
C226A-5	Ω	C251-14

Are the resistances less than 3 ohms?

Yes	GO to F4
No	REPAIR the circuit in question.

F4 CHECK FOR CORRECT SASM (STEERING ANGLE SENSOR MODULE) OPERATION

- Ignition OFF.
- Disconnect and inspect all the SASM connectors.
- Repair:
  - corrosion (install new connector or terminals - clean module pins)
  - damaged or bent pins - install new terminals/pins
  - pushed-out pins - install new pins as necessary
- Reconnect the SASM connectors. Make sure they seat and latch correctly.
- Operate the system and determine if the concern is still present.

Is the concern still present?

Yes	CHECK OASIS for any applicable Technical Service Bulletins (TSBs). If a TSB exists for this concern, DISCONTINUE this test and FOLLOW TSB instructions. If no Technical Service Bulletins (TSBs) address this concern, INSTALL a new SASM . Refer to SASM R&I.
No	The system is operating correctly at this time. The concern may have been caused by module connections. ADDRESS the root cause of any connector or pin issues.

The IPC Does Not Respond To The Scan Tool

Diagnostic Overview

Diagnostics in this manual assume a certain skill level and knowledge of Ford-specific diagnostic practices.
REFER to: Diagnostic Methods (100-00 General Information, Description and Operation).

Refer to Wiring Diagrams Cell 14 for schematic and connector information.

Refer to Wiring Diagrams Cell 60 for schematic and connector information.

Normal Operation and Fault Conditions

The IPC communicates with the scan tool through the Medium Speed Controller Area Network (MS-CAN) and communicates with the other modules on the Infotainment Controller Area Network (I-CAN).

Possible Causes

- Fuse
- Wiring, terminals and connector
- IPC

Visual Inspection and Diagnostic Pre-checks

Verify BCM fuse 69 (5A) is OK.

PINPOINT TEST G : THE IPC (INSTRUMENT PANEL CLUSTER) DOES NOT RESPOND TO THE SCAN TOOL

NOTE: *Failure to disconnect the battery when instructed will result in false resistance readings.*

G1 CHECK THE IPC (INSTRUMENT PANEL CLUSTER) VOLTAGE SUPPLY CIRCUIT

- Disconnect: IPC .
- Ignition ON.
- Measure:

Positive Lead	Measurement / Action	Negative Lead
C220-3	V	—

Is the voltage greater than 11 volts?

Yes	GO to G2
No	VERIFY the BCM fuse 69 (5A) is OK. If OK, REPAIR the circuit. If not OK, REFER to the Wiring Diagrams manual to identify the possible causes of the circuit short.

G2 CHECK THE IPC (INSTRUMENT PANEL CLUSTER) GROUND CIRCUIT

- Ignition OFF.
- Measure:

Positive Lead	Measurement / Action	Negative Lead
C220-10	Ω	—

Is the resistance less than 3 ohms?

Yes	GO to G3
No	REPAIR the circuit.

G3 CHECK THE MEDIUM SPEED CONTROLLER AREA NETWORK (MS-CAN) CIRCUITS BETWEEN THE IPC (INSTRUMENT PANEL CLUSTER) AND THE DLC (DATA LINK CONNECTOR) FOR AN OPEN

- Measure:

Positive Lead	Measurement / Action	Negative Lead
C220-2	Ω	C251-3
C220-1	Ω	C251-11

Are the resistances less than 3 ohms?

Yes	GO to G4
No	REPAIR the circuit in question.

G4 CHECK FOR CORRECT IPC (INSTRUMENT PANEL CLUSTER) OPERATION

- Ignition OFF.
- Disconnect and inspect the IPC connector.
- Repair:
  - corrosion (install new connector or terminals - clean module pins)
  - damaged or bent pins - install new terminals/pins
  - pushed-out pins - install new pins as necessary
- Reconnect the IPC connector. Make sure it seats and latches correctly.
- Operate the system and determine if the concern is still present.

Is the concern still present?

Yes	CHECK OASIS for any applicable Technical Service Bulletins (TSBs). If a Technical Service Bulletin (TSB) exists for this concern, DISCONTINUE this test and FOLLOW TSB instructions. If no Technical Service Bulletins (TSBs) address this concern, INSTALL a new IPC . REFER to: Instrument Panel Cluster (IPC) (413-01 Instrumentation, Message Center and Warning Chimes, Removal and Installation).
No	The system is operating correctly at this time. The concern may have been caused by module connections. ADDRESS the root cause of any connector or pin issues.

The Information Center Module (ICM) Does Not Respond To The Scan Tool

Diagnostic Overview

Diagnostics in this manual assume a certain skill level and knowledge of Ford-specific diagnostic practices.
REFER to: Diagnostic Methods (100-00 General Information, Description and Operation).

Refer to Wiring Diagrams Cell 14 for schematic and connector information.

Refer to Wiring Diagrams Cell 60 for schematic and connector information.

Normal Operation and Fault Conditions

The Information Center Module (ICM) communicates with the scan tool through the High Speed Controller Area Network (HS-CAN).

Possible Causes

- Fuse
- Wiring, terminals and connector
- Information Center Module (ICM)

Visual Inspection and Diagnostic Pre-checks

Verify BCM fuse 69 (5A) is OK.

PINPOINT TEST H : THE INFORMATION CENTER MODULE (ICM) DOES NOT RESPOND TO THE SCAN TOOL

NOTE: *Failure to disconnect the battery when instructed will result in false resistance readings.*
H1 CHECK THE INFORMATION CENTER MODULE (ICM) VOLTAGE SUPPLY CIRCUIT

- Disconnect: Information Center Module (ICM).
- Ignition ON.
- Measure:

Positive Lead	Measurement / Action	Negative Lead
C2487-1	⊕ V ⊖	—

Is the voltage greater than 11 volts?

Yes	GO to H2
No	VERIFY the BCM fuse 69 (5A) is OK. If OK, REPAIR the circuit. If not OK, REFER to the Wiring Diagrams manual to identify the possible causes of the circuit short.

H2 CHECK THE INFORMATION CENTER MODULE (ICM) GROUND CIRCUIT

- Ignition OFF.
- Measure:

Positive Lead	Measurement / Action	Negative Lead
C2487-3	Ω	—

Is the resistance less than 3 ohms?

Yes	GO to H3
No	REPAIR the circuit.

H3 CHECK THE MEDIUM SPEED CONTROLLER AREA NETWORK (MS-CAN) CIRCUITS BETWEEN THE INFORMATION CENTER MODULE (ICM) AND THE DLC (DATA LINK CONNECTOR) FOR AN OPEN

- Measure:

Positive Lead	Measurement / Action	Negative Lead
C2487-4	Ω	C251-6
C2487-5	Ω	C251-14

Are the resistances less than 3 ohms?

Yes	GO to H4
No	REPAIR the circuit in question.

H4 CHECK FOR CORRECT INFORMATION CENTER MODULE (ICM) OPERATION

- Ignition OFF.
- Disconnect and inspect the Information Center Module (ICM) connector.

- Repair:
  - corrosion (install new connector or terminals - clean module pins)
  - damaged or bent pins - install new terminals/pins
  - pushed-out pins - install new pins as necessary
- Reconnect the Information Center Module (ICM) connector. Make sure it seats and latches correctly.
- Operate the system and determine if the concern is still present.

Is the concern still present?

Yes	CHECK OASIS for any applicable Technical Service Bulletins (TSBs). If a TSB exists for this concern, DISCONTINUE this test and FOLLOW TSB instructions. If no Technical Service Bulletins (TSBs) address this concern, INSTALL a new Information Center Module (ICM). REFER to: Information Center Module (ICM) (413-01 Instrumentation, Message Center and Warning Chimes, Removal and Installation).
No	The system is operating correctly at this time. The concern may have been caused by module connections. ADDRESS the root cause of any connector or pin issues.

The BCM Does Not Respond To The Scan Tool

Diagnostic Overview

Diagnostics in this manual assume a certain skill level and knowledge of Ford-specific diagnostic practices.
REFER to: Diagnostic Methods (100-00 General Information, Description and Operation).

Refer to Wiring Diagrams Cell 13 for schematic and connector information.

Refer to Wiring Diagrams Cell 14 for schematic and connector information.

Normal Operation and Fault Conditions

The BCM communicates with the scan tool through the High Speed Controller Area Network (HS-CAN) and communicates with the other modules through the Medium Speed Controller Area Network (MS-CAN).

Possible Causes

- Fuse
- Wiring, terminals and connector
- BCM

Visual Inspection and Diagnostic Pre-checks

Verify BJB MEGA fuses 4 (50A) and 9 (50A) are OK.

PINPOINT TEST I : THE BCM (BODY CONTROL MODULE) DOES NOT RESPOND TO THE SCAN TOOL

NOTE: *Failure to disconnect the battery when instructed will result in false resistance readings.*

I1 CHECK THE HIGH SPEED CONTROLLER AREA NETWORK (HS-CAN) TERMINATION RESISTANCE

- Ignition OFF.
- Disconnect the scan tool cable from the DLC .
- Measure:

Positive Lead	Measurement / Action	Negative Lead
	Ω	

C251-6		C251-14

Is the resistance between 54 and 66 ohms?

Yes	GO to I3
No	GO to I2

I2 CHECK THE HIGH SPEED CONTROLLER AREA NETWORK (HS-CAN) CIRCUITS BETWEEN THE BCM (BODY CONTROL MODULE) AND THE DLC (DATA LINK CONNECTOR) FOR AN OPEN

- Disconnect: BCM C2280C.
- Measure:

Positive Lead	Measurement / Action	Negative Lead
C2280C-7	Ω	C251-6
C2280C-8	Ω	C251-14

Are the resistances less than 3 ohms?

Yes	GO to I7
No	REPAIR the circuit in question.

I3 CHECK THE MEDIUM SPEED CONTROLLER AREA NETWORK (MS-CAN) TERMINATION RESISTANCE

- Measure:

Positive Lead	Measurement / Action	Negative Lead
C251-3	Ω	C251-11

Is the resistance between 54 and 66 ohms?

Yes	GO to I5
No	GO to I4

I4 CHECK THE MEDIUM SPEED CONTROLLER AREA NETWORK (MS-CAN) CIRCUITS BETWEEN THE BCM (BODY CONTROL MODULE) AND THE DLC (DATA LINK CONNECTOR) FOR AN OPEN

- Disconnect: BCM C2280A.
- Measure:

Positive Lead	Measurement / Action	Negative Lead

C2280A-41	Ω	C251-3
C2280A-40	Ω	C251-11

Are the resistances less than 3 ohms?

Yes	GO to I7
No	REPAIR the circuit in question.

I5 CHECK THE BCM (BODY CONTROL MODULE) VOLTAGE SUPPLY CIRCUIT FOR AN OPEN

NOTE: *Measurements are taken with the fuse installed and probes placed at the terminals on the back of the fuse blade.*

- Ignition ON.
- Disconnect: BCM C2280G.
- Measure:

Positive Lead	Measurement / Action	Negative Lead
C2280G-2	V	—
C2280G-1	V	—

Are the voltages greater than 11 volts?

Yes	Connect: BCM C2280G. GO to I6
No	VERIFY the BJB MEGA fuses 4 (50A) and 9 (50A) are OK. If OK, repair the circuit in question. If not OK, REFER to the Wiring Diagrams Manual to identify the possible causes of the circuit short.

I6 CHECK THE BCM (BODY CONTROL MODULE) GROUND CIRCUITS FOR AN OPEN

- Measure:

Positive Lead	Measurement / Action	Negative Lead
C2280E-2	Ω	—

- Measure:

Positive Lead	Measurement / Action	Negative Lead
C2280A-3	Ω	—

Are the resistances less than 3 ohms?

Yes	GO to I7

No	REPAIR the circuit in question.

I7 CHECK FOR CORRECT BCM (BODY CONTROL MODULE) OPERATION

- Ignition OFF.
- Disconnect and inspect the BCM connectors.
- Repair:
  - corrosion (install new connector or terminals - clean module pins)
  - damaged or bent pins - install new terminals/pins
  - pushed-out pins - install new pins as necessary
- Reconnect the BCM connectors. Make sure they seat and latch correctly.
- Operate the system and determine if the concern is still present.

Is the concern still present?

Yes	CHECK OASIS for any applicable Technical Service Bulletins (TSBs). If a TSB exists for this concern, DISCONTINUE this test and FOLLOW TSB instructions. If no Technical Service Bulletins (TSBs) address this concern, INSTALL a new BCM . Refer to BCM R&I.
No	The system is operating correctly at this time. The concern may have been caused by module connections. ADDRESS the root cause of any connector or pin issues.

The HVAC Module Does Not Respond To The Scan Tool

Diagnostic Overview

Diagnostics in this manual assume a certain skill level and knowledge of Ford-specific diagnostic practices.
REFER to: Diagnostic Methods (100-00 General Information, Description and Operation).

Refer to Wiring Diagrams Cell 14 for schematic and connector information.

Refer to Wiring Diagrams Cell 55 for schematic and connector information.

Normal Operation and Fault Conditions

The HVAC module communicates with the scan tool through the Medium Speed Controller Area Network (MS-CAN).

Possible Sources

- Fuse
- Wiring, terminals and connector
- HVAC module

Visual Inspection and Diagnostic Pre-checks

Verify BCM fuse 71 (10A) is OK.

PINPOINT TEST J : THE HVAC (HEATING, VENTILATION AND AIR CONDITIONING) MODULE DOES NOT RESPOND TO THE SCAN TOOL

NOTE: *Failure to disconnect the battery when instructed will result in false resistance readings.*

J1 CHECK THE HVAC (HEATING, VENTILATION AND AIR CONDITIONING) MODULE VOLTAGE SUPPLY CIRCUIT FOR AN OPEN

Disconnect: HVAC Module C228B.

- Ignition ON.
- Measure:

Positive Lead	Measurement / Action	Negative Lead
C228B-14	V	—

Is the voltage greater than 11 volts?

Yes	GO to J2
No	VERIFY the BCM fuse 71 (10A) is OK. If OK, REPAIR the circuit. If not OK, REFER to the Wiring Diagrams manual to identify the possible causes of the circuit short.

J2 CHECK THE HVAC (HEATING, VENTILATION AND AIR CONDITIONING) MODULE GROUND CIRCUIT FOR AN OPEN

- Ignition OFF.
- Measure:

Positive Lead	Measurement / Action	Negative Lead
C228B-6	Ω	—

Is the resistance less than 3 ohms?

Yes	GO to J3
No	REPAIR the circuit.

J3 CHECK THE MEDIUM SPEED CONTROLLER AREA NETWORK (MS-CAN) CIRCUITS BETWEEN THE HVAC (HEATING, VENTILATION AND AIR CONDITIONING) MODULE AND THE DLC (DATA LINK CONNECTOR) FOR AN OPEN

- Measure:

Positive Lead	Measurement / Action	Negative Lead
C228B-18	Ω	C251-3
C228B-19	Ω	C251-11

Are the resistances less than 3 ohms?

Yes	GO to J4
No	REPAIR the circuit in question.

J4 CHECK FOR CORRECT HVAC (HEATING, VENTILATION AND AIR CONDITIONING) MODULE OPERATION

• Ignition OFF.
• Disconnect and inspect all the HVAC module connectors.
• Repair:
  • corrosion (install new connector or terminals - clean module pins)
  • damaged or bent pins - install new terminals/pins
  • pushed-out pins - install new pins as necessary
• Reconnect the HVAC module connectors. Make sure they seat and latch correctly.
• Operate the system and determine if the concern is still present.
 	
Is the concern still present?

Yes	CHECK OASIS for any applicable Technical Service Bulletins (TSBs). If a TSB exists for this concern, DISCONTINUE this test and FOLLOW TSB instructions. If no Technical Service Bulletins (TSBs) address this concern, INSTALL a new HVAC module. REFER to: Heating, Ventilation and Air Conditioning (HVAC) Control Module (412-00 Climate Control System - General Information, Removal and Installation).
No	The system is operating correctly at this time. The concern may have been caused by module connections. ADDRESS the root cause of any connector or pin issues.

The ACM Does Not Respond To The Scan Tool

Diagnostic Overview

Diagnostics in this manual assume a certain skill level and knowledge of Ford-specific diagnostic practices.
REFER to: Diagnostic Methods (100-00 General Information, Description and Operation).

Refer to Wiring Diagrams Cell 14 for schematic and connector information.

Refer to Wiring Diagrams Cell 130 for schematic and connector information.

Normal Operation and Fault Conditions

The ACM communicates with the scan tool through the Medium Speed Controller Area Network (MS-CAN). The IPC is used as the gateway module.

Possible Sources

- Fuse
- Wiring, terminals and connector
- ACM

Visual Inspection and Diagnostic Pre-checks

Verify BCM fuse 79 (15A) is OK.

PINPOINT TEST K : THE ACM (AUDIO FRONT CONTROL MODULE) DOES NOT RESPOND TO THE SCAN TOOL

NOTE: *Failure to disconnect the battery when instructed will result in false resistance readings.*
K1 CHECK THE INFOTAINMENT CONTROLLER AREA NETWORK (I-CAN) TERMINATION RESISTANCE
• Ignition OFF. • Measure:

Positive Lead	Measurement / Action	Negative Lead
C251-1	Ω	C251-8

Is the resistance between 54 and 66 ohms?

Yes	GO to K3
No	GO to K2

K2 CHECK THE INFOTAINMENT CONTROLLER AREA NETWORK (I-CAN) CIRCUITS BETWEEN THE ACM (AUDIO FRONT CONTROL MODULE) AND THE INSTRUMENT PANEL CLUSTER (IPC) FOR AN OPEN

- Disconnect: Instrument Panel Cluster (IPC) C220.
- Disconnect: ACM C240A.
- Measure:

Positive Lead	Measurement / Action	Negative Lead
C240A-14	Ω	C220-5
C240A-15	Ω	C220-4

Are the resistances less than 3 ohms?

Yes	GO to K3
No	REPAIR the circuit in question.

K3 CHECK THE ACM (AUDIO FRONT CONTROL MODULE) VOLTAGE SUPPLY CIRCUIT FOR AN OPEN

- Ignition OFF.
- Ignition ON.
- Measure:

Positive Lead	Measurement / Action	Negative Lead
C240A-1	V	—

Is the voltage greater than 11 volts?

Yes	GO to K4
No	VERIFY the BCM fuse 79 (15A) is OK. If OK, REPAIR the circuit. If not OK, REFER to the Wiring Diagrams manual to identify the possible causes of the circuit short.

K4 CHECK THE ACM (AUDIO FRONT CONTROL MODULE) GROUND CIRCUIT FOR AN OPEN

- Ignition OFF.
- Measure:

Positive Lead	Measurement / Action	Negative Lead
C240A-13	Ω	—

Is the resistance less than 3 ohms?

Yes	GO to K5
No	REPAIR the circuit.

K5 CHECK FOR CORRECT ACM (AUDIO FRONT CONTROL MODULE) OPERATION

- Ignition OFF.
- Disconnect and inspect all the ACM connectors.
- Repair:
  - corrosion (install new connector or terminals - clean module pins)
  - damaged or bent pins - install new terminals/pins
  - pushed-out pins - install new pins as necessary
- Reconnect the ACM connectors. Make sure they seat and latch correctly.
- Operate the system and determine if the concern is still present.

Is the concern still present?

Yes	CHECK OASIS for any applicable Technical Service Bulletins (TSBs). If a TSB exists for this concern, DISCONTINUE this test and FOLLOW TSB instructions. If no Technical Service Bulletins (TSBs) address this concern, INSTALL a new ACM . If equipped with AM/FM/CD, REFER to: Audio Front Control Module (ACM) (415-00A Information and Entertainment System - General Information - Vehicles With: AM/FM/CD, Removal and Installation). If equipped with SYNC/AM/FM/CD, REFER to: Audio Front Control Module (ACM) (415-00B Information and Entertainment System - General Information - Vehicles With: AM/FM/CD/SYNC, Removal and Installation). If equipped with Sony AM/FM/CD/SYNC, REFER to: Audio Front Control Module (ACM) (415-00C Information and Entertainment System - General Information - Vehicles With: SYNC/Sony AM/FM/CD, Removal and Installation).
No	The system is operating correctly at this time. The concern may have been caused by module connections. ADDRESS the root cause of any connector or pin issues.

The DSP Does Not Respond To the Scan Tool

Diagnostic Overview

Diagnostics in this manual assume a certain skill level and knowledge of Ford-specific diagnostic practices.
REFER to: Diagnostic Methods (100-00 General Information, Description and Operation).

Refer to Wiring Diagrams Cell 13 for schematic and connector information.

Refer to Wiring Diagrams Cell 130 for schematic and connector information.

Normal Operation and Fault Conditions

The DSP communicates with the scan tool through the Medium Speed Controller Area Network (MS-CAN). The IPC is used as the gateway module.

Possible Sources

- Fuse
- Wiring, terminals and connector
- DSP

Visual Inspection and Diagnostic Pre-checks

Verify RJB fuse 23 (25A) is OK.

PINPOINT TEST L : THE DSP (AUDIO DIGITAL SIGNAL PROCESSING MODULE) DOES NOT RESPOND TO THE SCAN TOOL

NOTE: *Failure to disconnect the battery when instructed will result in false resistance readings.*

L1 CHECK THE DSP (AUDIO DIGITAL SIGNAL PROCESSING MODULE) VOLTAGE SUPPLY CIRCUITS FOR AN OPEN

- Ignition OFF.
- Disconnect: DSP C4326C.
- Ignition ON.
- Measure:

Positive Lead	Measurement / Action	Negative Lead
C4326C-5	V	—
C4326C-6	V	—

Are the voltages greater than 11 volts?

Yes	GO to L2
No	VERIFY the RJB fuse 23 (25A) is OK. If OK, REPAIR the circuit in question. If not OK, REFER to the Wiring Diagrams manual to identify the possible causes of the circuit short.

L2 CHECK THE DSP (AUDIO DIGITAL SIGNAL PROCESSING MODULE) GROUND CIRCUITS FOR AN OPEN

- Ignition OFF.
- Measure:

Positive Lead	Measurement / Action	Negative Lead
C4326C-13	Ω	—
C4326C-14	Ω	—

Are the resistances less than 3 ohms?

Yes	GO to L3
No	REPAIR the circuit in question.

L3 CHECK THE INFOTAINMENT CONTROLLER AREA NETWORK (I-CAN) CIRCUITS BETWEEN THE DSP (AUDIO DIGITAL SIGNAL PROCESSING MODULE) AND THE IPC (INSTRUMENT PANEL CLUSTER) FOR AN OPEN

- Disconnect: IPC .
- Disconnect: DSP C4326A.
- Measure:

Positive Lead	Measurement / Action	Negative Lead
C4326A-1	Ω	C220-5
C4326A-11	Ω	C220-4

Are the resistances less than 3 ohms?

Yes	GO to L4
No	REPAIR the circuit in question.

L4 CHECK FOR CORRECT DSP (AUDIO DIGITAL SIGNAL PROCESSING MODULE) OPERATION

- Ignition OFF.
- Disconnect and inspect all the DSP connectors.
- Repair:
  - corrosion (install new connector or terminals - clean module pins)
  - damaged or bent pins - install new terminals/pins
  - pushed-out pins - install new pins as necessary
- Reconnect the DSP connectors. Make sure they seat and latch correctly.
- Operate the system and determine if the concern is still present.

Is the concern still present?

Yes	CHECK OASIS for any applicable Technical Service Bulletins (TSBs). If a TSB exists for this concern, DISCONTINUE this test and FOLLOW TSB instructions. If no Technical Service Bulletins (TSBs) address this concern, INSTALL a new DSP . REFER to: Audio Digital Signal Processing (DSP) Module (415-00C Information and Entertainment System - General Information - Vehicles With: SYNC/Sony AM/FM/CD, Removal and Installation).
No	The system is operating correctly at this time. The concern may have been caused by module connections. ADDRESS the root cause of any connector or pin issues.

The DDM Does Not Respond To the Scan Tool

Diagnostic Overview

Diagnostics in this manual assume a certain skill level and knowledge of Ford-specific diagnostic practices.
REFER to: Diagnostic Methods (100-00 General Information, Description and Operation).

Refer to Wiring Diagrams Cell 14 for schematic and connector information.

Refer to Wiring Diagrams Cell 100 for schematic and connector information.

Normal Operation and Fault Conditions

The DDM communicates with the scan tool through the Medium Speed Controller Area Network (MS-CAN).

Possible Sources

- Fuse
- Wiring, terminals and connector
- DDM

Visual Inspection and Diagnostic Pre-checks

Verify RJB fuse 4 (25A) is OK.

PINPOINT TEST M : THE DDM (DRIVER DOOR MODULE) DOES NOT RESPOND TO THE SCAN TOOL

NOTE: *Failure to disconnect the battery when instructed will result in false resistance readings.*

M1 CHECK THE DDM (DRIVER DOOR MODULE) VOLTAGE SUPPLY CIRCUIT FOR AN OPEN

- Ignition OFF.
- Disconnect: DDM C501A.
- Ignition ON.
- Measure:

Positive Lead	Measurement / Action	Negative Lead
C501A-2	▼	—

Is the voltage greater than 11 volts?

Yes	GO to M2
No	VERIFY the RJB fuse 4 (25A) is OK. If OK, REPAIR the circuit. If not OK, REFER to the Wiring Diagrams manual to identify the possible causes of the circuit short.

M2 CHECK THE DDM (DRIVER DOOR MODULE) GROUND CIRCUIT FOR AN OPEN

- Ignition OFF.
- Measure:

Positive Lead	Measurement / Action	Negative Lead
C501A-13	Ω	—

Is the resistance less than 3 ohms?

Yes	GO to M3
No	REPAIR the circuit.

M3 CHECK THE HIGH SPEED CONTROLLER AREA NETWORK (HS-CAN) CIRCUITS BETWEEN THE DDM (DRIVER DOOR MODULE) AND THE DLC (DATA LINK CONNECTOR) FOR AN OPEN

- Measure:

Positive Lead	Measurement / Action	Negative Lead
C501B-1	Ω	C251-3
C501B-13	Ω	C251-11

Are the resistances less than 3 ohms?

Yes	GO to M4
No	REPAIR the circuit in question.

M4 CHECK FOR CORRECT DDM (DRIVER DOOR MODULE) OPERATION

- Ignition OFF.
- Disconnect and inspect all the DDM connectors.
- Repair:
  - corrosion (install new connector or terminals - clean module pins)
  - damaged or bent pins - install new terminals/pins
  - pushed-out pins - install new pins as necessary
- Reconnect the DDM connectors. Make sure they seat and latch correctly.
- Operate the system and determine if the concern is still present.

Is the concern still present?

Yes	CHECK OASIS for any applicable Technical Service Bulletins (TSBs). If a TSB exists for this concern, DISCONTINUE this test and FOLLOW TSB instructions. If no Technical Service Bulletins (TSBs) address this concern, INSTALL a new DDM .
No	The system is operating correctly at this time. The concern may have been caused by module connections. ADDRESS the root cause of any connector or pin issues.

The PDM Does Not Respond To The Scan Tool

Diagnostic Overview

Diagnostics in this manual assume a certain skill level and knowledge of Ford-specific diagnostic practices.
REFER to: Diagnostic Methods (100-00 General Information, Description and Operation).

Refer to Wiring Diagrams Cell 14 for schematic and connector information.

Refer to Wiring Diagrams Cell 100 for schematic and connector information.

Normal Operation and Fault Conditions

The PDM communicates with the scan tool through the Medium Speed Controller Area Network (MS-CAN).

Possible Sources

- Fuse
- Wiring, terminals and connector
- PDM

Visual Inspection and Diagnostic Pre-checks

Verify RJB fuse 5 (25A) is OK.

PINPOINT TEST N : THE PDM (PASSENGER DOOR MODULE) DOES NOT RESPOND TO THE SCAN TOOL

NOTE: *Failure to disconnect the battery when instructed will result in false resistance readings.*

N1 CHECK THE PDM (PASSENGER DOOR MODULE) VOLTAGE SUPPLY CIRCUIT FOR AN OPEN

- Ignition OFF.
- Disconnect: PDM C652A.
- Ignition ON.
- Measure:

Positive Lead	Measurement / Action	Negative Lead
C652A-2	V	—

Is the voltage greater than 11 volts?

Yes	GO to N2
No	VERIFY the RJB fuse 5 (25A) is OK. If OK, REPAIR the circuit. If not OK, REFER to the Wiring Diagrams manual to identify the possible causes of the circuit short.

N2 CHECK THE PDM (PASSENGER DOOR MODULE) GROUND CIRCUIT FOR AN OPEN

- Ignition OFF.
- Measure:

Positive Lead	Measurement / Action	Negative Lead
C652A-13	Ω	—

Is the resistance less than 3 ohms?

Yes	GO to N3
No	REPAIR the circuit.

N3 CHECK THE HIGH SPEED CONTROLLER AREA NETWORK (HS-CAN) CIRCUITS BETWEEN THE PDM (PASSENGER DOOR MODULE) AND THE DLC (DATA LINK CONNECTOR) FOR AN OPEN

- Measure:

Positive Lead	Measurement / Action	Negative Lead
C652B-1	Ω	C251-3
C652B-13	Ω	C251-11

Are the resistances less than 3 ohms?

Yes	GO to N4
No	REPAIR the circuit in question.

N4 CHECK FOR CORRECT PDM (PASSENGER DOOR MODULE) OPERATION

- Ignition OFF.
- Disconnect and inspect all the PDM connectors.
- Repair:
  - corrosion (install new connector or terminals - clean module pins)
  - damaged or bent pins - install new terminals/pins
  - pushed-out pins - install new pins as necessary
- Reconnect the PDM connectors. Make sure they seat and latch correctly.
- Operate the system and determine if the concern is still present.

Is the concern still present?

Yes	CHECK OASIS for any applicable Technical Service Bulletins (TSBs). If a TSB exists for this concern, DISCONTINUE this test and FOLLOW TSB instructions. If no Technical Service Bulletins (TSBs) address this concern, INSTALL a new PDM .
No	The system is operating correctly at this time. The concern may have been caused by module connections. ADDRESS the root cause of any connector or pin issues.

The Image Processing Module B (IPM-B) Does Not Respond To The Scan Tool

Diagnostic Overview

Diagnostics in this manual assume a certain skill level and knowledge of Ford-specific diagnostic practices.
REFER to: Diagnostic Methods (100-00 General Information, Description and Operation).

Refer to Wiring Diagrams Cell 14 for schematic and connector information.

Refer to Wiring Diagrams Cell 131 for schematic and connector information.

Normal Operation and Fault Conditions

The Image Processing Module - B (IPM-B) communicates with the scan tool through the Medium Speed Controller Area Network (MS-CAN).

Possible Sources

- Fuse
- Wiring, terminals and connector
- Image Processing Module - B (IPM-B)

Visual Inspection and Diagnostic Pre-checks

Verify RJB fuse 29 (5A) is OK.

PINPOINT TEST O : THE IMAGE PROCESSING MODULE B (IPM-B) DOES NOT RESPOND TO THE SCAN TOOL

NOTE: *Failure to disconnect the battery when instructed will result in false resistance readings.*

O1 CHECK THE IMAGE PROCESSING MODULE - B (IPM-B) VOLTAGE SUPPLY CIRCUIT FOR AN OPEN

- Ignition OFF.
- Disconnect: Image Processing Module - B (IPM-B) C4402
- Ignition ON.
- Measure:

Positive Lead	Measurement / Action	Negative Lead
C4402-4	V	—

Is the voltage greater than 11 volts?

Yes	GO to O2
No	VERIFY the RJB fuse 29 (5A) is OK. If OK, REPAIR the circuit. If not OK, REFER to the Wiring Diagrams manual to identify the possible causes of the circuit short.

O2 CHECK THE IMAGE PROCESSING MODULE - B (IPM-B) GROUND CIRCUIT FOR AN OPEN

- Ignition OFF.
- Measure:

Positive Lead	Measurement / Action	Negative Lead
C4402-1	Ω	—

Is the resistance less than 3 ohms?

Yes	GO to O3
No	REPAIR the circuit.

O3 CHECK THE MEDIUM SPEED CONTROLLER AREA NETWORK (MS-CAN) CIRCUITS BETWEEN THE IMAGE PROCESSING MODULE - B (IPM-B) AND THE DLC (DATA LINK CONNECTOR) FOR AN OPEN

- Measure:

Positive Lead	Measurement / Action	Negative Lead
C4402-2	Ω	C251-3
C4402-3	Ω	C251-11

Are the resistances less than 3 ohms?

Yes	GO to O4
No	REPAIR the circuit in question.

O4 CHECK FOR CORRECT IMAGE PROCESSING MODULE - B (IPM-B) OPERATION

- Ignition OFF.
- Disconnect and inspect the Image Processing Module - B (IPM-B) connector.
- Repair:
  - corrosion (install new connector or terminals - clean module pins)
  - damaged or bent pins - install new terminals/pins
  - pushed-out pins - install new pins as necessary
- Reconnect the Image Processing Module - B (IPM-B) connector. Make sure it seats and latches correctly.
- Operate the system and determine if the concern is still present.

Is the concern still present?

Yes	CHECK OASIS for any applicable Technical Service Bulletins (TSBs). If a TSB exists for this concern, DISCONTINUE this test and FOLLOW TSB instructions. If no Technical Service Bulletins (TSBs) address this concern, INSTALL a new Image Processing Module - B (IPM-B). REFER to: Image Processing Module B (IPMB) - Vehicles With: 4-Door (413-13A Parking Aid, Removal and Installation). REFER to: Image Processing Module B (IPMB) - Vehicles With: 5-Door (413-13A Parking Aid, Removal and Installation).
No	The system is operating correctly at this time. The concern may have been caused by module connections. ADDRESS the root cause of any connector or pin issues.

The GPSM Does Not Respond To The Scan Tool

Diagnostic Overview

Diagnostics in this manual assume a certain skill level and knowledge of Ford-specific diagnostic practices.
REFER to: Diagnostic Methods (100-00 General Information, Description and Operation).

Refer to Wiring Diagrams Cell 14 for schematic and connector information.

Refer to Wiring Diagrams Cell 130 for schematic and connector information.

Normal Operation and Fault Conditions

The GPSM communicates with the scan tool through the Medium Speed Controller Area Network (MS-CAN).

Visual Inspection and Diagnostic Pre-checks

Verify BCM fuse 67 (7.5A) is OK.

PINPOINT TEST P : THE GPSM (GLOBAL POSITIONING SYSTEM MODULE) DOES NOT RESPOND TO THE SCAN TOOL

NOTE: *Failure to disconnect the battery when instructed will result in false resistance readings.*

P1 CHECK THE GPSM (GLOBAL POSITIONING SYSTEM MODULE) VOLTAGE SUPPLY CIRCUIT FOR AN OPEN

- Ignition OFF.
- Disconnect: GPSM .
- Ignition ON.
- Measure:

Positive Lead	Measurement / Action	Negative Lead
C2398-1	V	—

Is the voltage greater than 11 volts?

Yes	GO to P2
No	VERIFY the BCM fuse 67 (7.5A) is OK. If OK, REPAIR the circuit. If not OK, REFER to the Wiring Diagrams manual to identify the possible causes of the circuit short.

P2 CHECK THE GPSM (GLOBAL POSITIONING SYSTEM MODULE) GROUND CIRCUIT FOR AN OPEN

- Ignition OFF.
- Measure:

Positive Lead	Measurement / Action	Negative Lead
C2398-6	Ω	—

Is the resistance less than 3 ohms?

Yes	GO to P3
No	REPAIR the circuit.

P3 CHECK THE MEDIUM SPEED CONTROLLER AREA NETWORK (MS-CAN) CIRCUITS BETWEEN THE GPSM (GLOBAL POSITIONING SYSTEM MODULE) AND THE DLC (DATA LINK CONNECTOR) FOR AN OPEN

- Measure:

Positive Lead	Measurement / Action	Negative Lead
C2398-2	Ω	C251-3
C2398-3	Ω	C251-11

Are the resistances less than 3 ohms?

Yes	GO to P4
No	REPAIR the circuit in question.

P4 CHECK FOR CORRECT GPSM (GLOBAL POSITIONING SYSTEM MODULE) OPERATION

- Ignition OFF.
- Disconnect and inspect the GPSM connector.
- Repair:
  - corrosion (install new connector or terminals - clean module pins)
  - damaged or bent pins - install new terminals/pins
  - pushed-out pins - install new pins as necessary
- Reconnect the GPSM connector. Make sure it seats and latches correctly.
- Operate the system and determine if the concern is still present.

Is the concern still present?

Yes	CHECK OASIS for any applicable Technical Service Bulletins (TSBs). If a TSB exists for this concern, DISCONTINUE this test and FOLLOW TSB instructions. If no Technical Service Bulletins (TSBs) address this concern, INSTALL a new GPSM . If equipped with SYNC/AM/FM/CD, REFER to: Global Positioning System Module (GPSM) (415-00B Information and Entertainment System - General Information - Vehicles With: AM/FM/CD/SYNC, Removal and Installation). If equipped with Sony AM/FM/CD/SYNC, REFER to: Global Positioning System Module (GPSM) (415-00C Information and Entertainment System - General Information - Vehicles With: SYNC/Sony AM/FM/CD, Removal and Installation).
No	The system is operating correctly at this time. The concern may have been caused by module connections. ADDRESS the root cause of any connector or pin issues.

The Parking Aid Module (PAM) Does Not Respond To The Scan Tool

Diagnostic Overview

Diagnostics in this manual assume a certain skill level and knowledge of Ford-specific diagnostic practices.
REFER to: Diagnostic Methods (100-00 General Information, Description and Operation).

Refer to Wiring Diagrams Cell 14 for schematic and connector information.

Refer to Wiring Diagrams Cell 131 for schematic and connector information.

Normal Operation and Fault Conditions

The Parking Aid Module (PAM) communicates with the scan tool through the High Speed Controller Area Network (HS-CAN).

Possible Sources

- Fuse
- Wiring, terminals and connector
- Parking Aid Module (PAM)

Visual Inspection and Diagnostic Pre-checks

Verify RJB fuse 30 (5A) is OK.

PINPOINT TEST Q : THE PARKING AID MODULE (PAM) DOES NOT RESPOND TO THE SCAN TOOL

NOTE: *Failure to disconnect the battery when instructed will result in false resistance readings.*

Q1 CHECK THE PARKING AID MODULE (PAM) VOLTAGE SUPPLY CIRCUIT FOR AN OPEN

- Ignition OFF.
- Disconnect: Parking Aid Module (PAM) C4014A.
- Ignition ON.
- Measure:

Positive Lead	Measurement / Action	Negative Lead
C4014A-1	V	—

Is the voltage greater than 11 volts?

Yes	GO to Q2
No	VERIFY the RJB fuse 30 (5A) is OK. If OK, REPAIR the circuit. If not OK, REFER to the Wiring Diagrams manual to identify the possible causes of the circuit short.

Q2 CHECK THE PARKING AID MODULE (PAM) GROUND CIRCUIT FOR AN OPEN

- Ignition OFF.
- Measure:

Positive Lead	Measurement / Action	Negative Lead
C4014A-8	Ω	—

Is the resistance less than 3 ohms?

Yes	GO to Q3
No	REPAIR the circuit.

Q3 CHECK THE HIGH SPEED CONTROLLER AREA NETWORK (HS-CAN) CIRCUITS BETWEEN THE PARKING AID MODULE (PAM) AND THE DLC (DATA LINK CONNECTOR) FOR AN OPEN

- Measure:

Positive Lead	Measurement / Action	Negative Lead
C4014A-6	Ω	C251-6
C4014A-15	Ω	C251-14

Are the resistances less than 3 ohms?

Yes	GO to Q4
No	REPAIR the circuit in question.

Q4 CHECK FOR CORRECT PARKING AID MODULE (PAM) OPERATION

- Ignition OFF.
- Disconnect and inspect the Parking Aid Module (PAM) connector.
- Repair:
  - corrosion (install new connector or terminals - clean module pins)
  - damaged or bent pins - install new terminals/pins
  - pushed-out pins - install new pins as necessary
- Reconnect the Parking Aid Module (PAM) connector. Make sure it seats and latches correctly.
- Operate the system and determine if the concern is still present.

Is the concern still present?

Yes	CHECK OASIS for any applicable Technical Service Bulletins (TSBs). If a TSB exists for this concern, DISCONTINUE this test and FOLLOW TSB instructions. If no Technical Service Bulletins (TSBs) address this concern, INSTALL a new Parking Aid Module (PAM). REFER to: Parking Assist Control Module (PAM) - Vehicles With: 4-Door (413-13A Parking Aid, Removal and Installation). REFER to: Parking Assist Control Module (PAM) - Vehicles With: 5-Door (413-13A Parking Aid, Removal and Installation).
No	The system is operating correctly at this time. The concern may have been caused by module connections. ADDRESS the root cause of any connector or pin issues.

The APIM Does Not Respond To The Scan Tool

Diagnostic Overview

Diagnostics in this manual assume a certain skill level and knowledge of Ford-specific diagnostic practices.
REFER to: Diagnostic Methods (100-00 General Information, Description and Operation).

Refer to Wiring Diagrams Cell 14 for schematic and connector information.

Refer to Wiring Diagrams Cell 130 for schematic and connector information.

Normal Operation and Fault Conditions

The APIM communicates with the scan tool through the High Speed Controller Area Network (HS-CAN) and communicates with the other modules through the Medium Speed Controller Area Network (MS-CAN) and Infotainment Controller Area Network (I-CAN).

Possible Sources

- Fuse
- Wiring, terminals and connector
- APIM

Visual Inspection and Diagnostic Pre-checks

Verify BCM fuse 67 (7.5A) is OK.

PINPOINT TEST R : THE APIM (SYNC MODULE) DOES NOT RESPOND TO THE SCAN TOOL

NOTE: *Failure to disconnect the battery when instructed will result in false resistance readings.*

R1 CHECK THE APIM (SYNC MODULE) VOLTAGE SUPPLY CIRCUIT FOR AN OPEN

- Ignition OFF.
- Disconnect: APIM .
- Ignition ON.
- Measure:

Positive Lead	Measurement / Action	Negative Lead
C2383-1	⊕ V ⊖	—

Is the voltage greater than 11 volts?

Yes	GO to R2
No	VERIFY the BCM fuse 67 (7.5A) is OK. If OK, REPAIR the circuit. If not OK, REFER to the Wiring Diagrams manual to identify the possible causes of the circuit short.

R2 CHECK THE APIM (SYNC MODULE) GROUND CIRCUITS FOR AN OPEN

- Ignition OFF.
- Measure:

Positive Lead	Measurement / Action	Negative Lead
C2383-37	Ω	—
C2383-38	Ω	—

Are the resistances less than 3 ohms?

Yes	GO to R3
No	REPAIR the circuit in question.

R3 CHECK THE HIGH SPEED CONTROLLER AREA NETWORK (HS-CAN) CIRCUITS BETWEEN THE APIM (SYNC

MODULE) AND THE DLC (DATA LINK CONNECTOR) FOR AN OPEN

- Measure:

Positive Lead	Measurement / Action	Negative Lead
C2383-53	Ω	C251-6
C2383-54	Ω	C251-14

Are the resistances less than 3 ohms?

Yes	GO to R4
No	REPAIR the circuit in question.

R4 CHECK THE INFOTAINMENT CONTROLLER AREA NETWORK (I-CAN) CIRCUITS BETWEEN THE APIM (SYNC MODULE) AND THE DLC (DATA LINK CONNECTOR) FOR AN OPEN

- Measure:

SYNC/AM/FM/CD

Positive Lead	Measurement / Action	Negative Lead
C2383-16	Ω	C251-1
C2383-17	Ω	C251-8

- Measure:

Sony/AM/FM/CD/SYNC

Positive Lead	Measurement / Action	Negative Lead
C2383-19	Ω	C251-1
C2383-20	Ω	C251-8

Are the resistances less than 3 ohms?

Yes	For SYNC/AM/FM/CD only, GO to R6 For Sony AM/FM/CD/SYNC, GO to R5
No	REPAIR the circuit in question.

R5 CHECK THE MEDIUM SPEED CONTROLLER AREA NETWORK (MS-CAN) CIRCUITS BETWEEN THE APIM (SYNC MODULE) AND THE DLC (DATA LINK CONNECTOR) FOR AN OPEN

- Measure:

Positive Lead	Measurement / Action	Negative Lead
C2383-16	Ω	C251-3
C2383-17	Ω	C251-11

Are the resistances less than 3 ohms?

Yes	GO to R6
No	REPAIR the circuit in question.

R6 CHECK FOR CORRECT APIM (SYNC MODULE) OPERATION

- Ignition OFF.
- Disconnect and inspect the APIM connector.
- Repair:
  - corrosion (install new connector or terminals - clean module pins)
  - damaged or bent pins - install new terminals/pins
  - pushed-out pins - install new pins as necessary
- Reconnect the APIM connector. Make sure it seats and latches correctly.
- Operate the system and determine if the concern is still present.

Is the concern still present?

Yes	CHECK OASIS for any applicable Technical Service Bulletins (TSBs). If a TSB exists for this concern, DISCONTINUE this test and FOLLOW TSB instructions. If no Technical Service Bulletins (TSBs) address this concern, INSTALL a new APIM . If equipped with SYNC/AM/FM/CD, REFER to: SYNC Module [APIM] (415-00B Information and Entertainment System - General Information - Vehicles With: AM/FM/CD/SYNC, Removal and Installation). If equipped with Sony AM/FM/CD/SYNC, REFER to: SYNC Module [APIM] (415-00C Information and Entertainment System - General Information - Vehicles With: SYNC/Sony AM/FM/CD, Removal and Installation).
No	The system is operating correctly at this time. The concern may have been caused by module connections. ADDRESS the root cause of any connector or pin issues.

The FCIM Does Not Respond To The Scan Tool

Diagnostic Overview

Diagnostics in this manual assume a certain skill level and knowledge of Ford-specific diagnostic practices.
REFER to: Diagnostic Methods (100-00 General Information, Description and Operation).

Refer to Wiring Diagrams Cell 14 for schematic and connector information.

Refer to Wiring Diagrams Cell 130 for schematic and connector information.

Normal Operation and Fault Conditions

The FCIM communicates with the scan tool through the Medium Speed Controller Area Network (MS-CAN). The IPC is used as the gateway module.

Possible Sources

- Fuse
- Wiring, terminals and connector
- FCIM

Visual Inspection and Diagnostic Pre-checks

Verify BCM fuse 79 (15A) is OK.

PINPOINT TEST S : THE FCIM (FRONT CONTROLS INTERFACE MODULE) DOES NOT RESPOND TO THE SCAN TOOL

NOTE: *Failure to disconnect the battery when instructed will result in false resistance readings.*

S1 CHECK THE FCIM (FRONT CONTROLS INTERFACE MODULE) VOLTAGE SUPPLY CIRCUIT FOR AN OPEN

- Ignition OFF.
- Disconnect: FCIM .
- Ignition ON.
- Measure:

Positive Lead	Measurement / Action	Negative Lead
C2402-8	V	—

Is the voltage greater than 11 volts?

Yes	GO to S2
No	VERIFY the BCM fuse 79 (15A) is OK. If OK, REPAIR the circuit. If not OK, REFER to the Wiring Diagrams manual to identify the possible causes of the circuit short.

S2 CHECK THE FCIM (FRONT CONTROLS INTERFACE MODULE) GROUND CIRCUIT FOR AN OPEN

- Ignition OFF.
- Measure:

Positive Lead	Measurement / Action	Negative Lead
C2402-5	Ω	—

Is the resistance less than 3 ohms?

Yes	GO to S3
No	REPAIR the circuit.

S3 CHECK THE INFOTAINMENT CONTROLLER AREA NETWORK (I-CAN) CIRCUITS BETWEEN THE FCIM (FRONT CONTROLS INTERFACE MODULE) AND THE IPC (INSTRUMENT PANEL CLUSTER) FOR AN OPEN

- Disconnect: IPC .
- Measure:

Positive Lead	Measurement / Action	Negative Lead
C2402-7	Ω	C220-5
C2402-4	Ω	C220-4

Are the resistances less than 3 ohms?

Yes	GO to S4
No	REPAIR the circuit in question.

S4 CHECK FOR CORRECT FCIM (FRONT CONTROLS INTERFACE MODULE) OPERATION

- Ignition OFF.
- Disconnect and inspect the FCIM connector.
- Repair:
  - corrosion (install new connector or terminals - clean module pins)
  - damaged or bent pins - install new terminals/pins
  - pushed-out pins - install new pins as necessary
- Reconnect the FCIM connector. Make sure it seats and latches correctly.
- Operate the system and determine if the concern is still present.

Is the concern still present?

Yes	CHECK OASIS for any applicable Technical Service Bulletins (TSBs). If a TSB exists for this concern, DISCONTINUE this test and FOLLOW TSB instructions. If no Technical Service Bulletins (TSBs) address this concern, INSTALL a new FCIM . If equipped with AM/FM/CD, REFER to: Front Controls Interface Module (FCIM) (415-00A Information and Entertainment System - General Information - Vehicles With: AM/FM/CD, Removal and Installation). If equipped with SYNC/AM/FM/CD, REFER to: Front Controls Interface Module (FCIM) (415-00B Information and Entertainment System - General Information - Vehicles With: AM/FM/CD/SYNC, Removal and Installation). If equipped with Sony AM/FM/CD/SYNC, REFER to: Front Controls Interface Module (FCIM) (415-00C Information and Entertainment System - General Information - Vehicles With: SYNC/Sony AM/FM/CD, Removal and Installation).
No	The system is operating correctly at this time. The concern may have been caused by module connections. ADDRESS the root cause of any connector or pin issues.

The RFA Module Does Not Respond To The Scan Tool

Diagnostic Overview

Diagnostics in this manual assume a certain skill level and knowledge of Ford-specific diagnostic practices.
REFER to: Diagnostic Methods (100-00 General Information, Description and Operation).

Refer to Wiring Diagrams Cell 14 for schematic and connector information.

Refer to Wiring Diagrams Cell 117 for schematic and connector information.

Normal Operation and Fault Conditions

The RFA module communicates with the scan tool through the Medium Speed Controller Area Network (MS-CAN).

Possible Sources

- Fuse
- Wiring, terminals and connector
- RFA module

Visual Inspection and Diagnostic Pre-checks

Verify RJB fuse 2 (10A) is OK.

PINPOINT TEST T : THE RFA (REMOTE FUNCTION ACTUATOR) MODULE DOES NOT RESPOND TO THE SCAN TOOL

NOTE: *Failure to disconnect the battery when instructed will result in false resistance readings.*

T1 CHECK THE RFA (REMOTE FUNCTION ACTUATOR) MODULE VOLTAGE SUPPLY CIRCUIT FOR AN OPEN

- Ignition OFF.
- Disconnect: RFA module C4392C (blue hardshell).
- Ignition ON.
- Measure:

Positive Lead	Measurement / Action	Negative Lead
C4392C-5	V	—

Is the voltage greater than 11 volts?

Yes	GO to T2
No	VERIFY the RJB fuse 2 (10A) is OK. If OK, REPAIR the circuit. If not OK, REFER to the Wiring Diagrams manual to identify the possible causes of the circuit short.

T2 CHECK THE RFA (REMOTE FUNCTION ACTUATOR) MODULE GROUND CIRCUIT FOR AN OPEN

- Ignition OFF.
- Measure:

Positive Lead	Measurement / Action	Negative Lead
C4392C-4	Ω	—

Is the resistance less than 3 ohms?

Yes	GO to T3

No	REPAIR the circuit.

T3 CHECK THE MEDIUM SPEED CONTROLLER AREA NETWORK (MS-CAN) CIRCUITS BETWEEN THE RFA (REMOTE FUNCTION ACTUATOR) MODULE AND THE DLC (DATA LINK CONNECTOR) FOR AN OPEN

- Disconnect: RFA module C4392D (natural hardshell).
- Measure:

Positive Lead	Measurement / Action	Negative Lead
C4392D-3	Ω	C251-3
C4392D-4	Ω	C251-11

Are the resistances less than 3 ohms?

Yes	GO to T4
No	REPAIR the circuit in question.

T4 CHECK FOR CORRECT RFA (REMOTE FUNCTION ACTUATOR) MODULE OPERATION

- Ignition OFF.
- Disconnect and inspect all the RFA module connectors.
- Repair:
  - corrosion (install new connector or terminals - clean module pins)
  - damaged or bent pins - install new terminals/pins
  - pushed-out pins - install new pins as necessary
- Reconnect the RFA module connectors. Make sure they seat and latch correctly.
- Operate the system and determine if the concern is still present.

Is the concern still present?

Yes	CHECK OASIS for any applicable Technical Service Bulletins (TSBs). If a TSB exists for this concern, DISCONTINUE this test and FOLLOW TSB instructions. If no Technical Service Bulletins (TSBs) address this concern, INSTALL a new RFA module.
No	The system is operating correctly at this time. The concern may have been caused by module connections. ADDRESS the root cause of any connector or pin issues.

The TCM Does Not Respond To The Scan Tool

Diagnostic Overview

Diagnostics in this manual assume a certain skill level and knowledge of Ford-specific diagnostic practices.
REFER to: Diagnostic Methods (100-00 General Information, Description and Operation).

Refer to Wiring Diagrams Cell 14 for schematic and connector information.

Refer to Wiring Diagrams Cell 29 for schematic and connector information.

Normal Operation and Fault Conditions

The TCM communicates with the scan tool through the High Speed Controller Area Network (HS-CAN).

Possible Sources

- Fuse
- Wiring, terminals and connector
- TCM

Visual Inspection and Diagnostic Pre-checks

Verify BJB fuse 15 (25A), 26 (15A) and 38 (15A) are OK.

PINPOINT TEST U : THE TCM (TRANSMISSION CONTROL MODULE) DOES NOT RESPOND TO THE SCAN TOOL

NOTE: *Failure to disconnect the battery when instructed will result in false resistance readings.*

U1 CHECK THE TCM (TRANSMISSION CONTROL MODULE) VOLTAGE SUPPLY CIRCUIT FOR AN OPEN

- Ignition OFF.
- Disconnect: TCM C1750A.
- Ignition ON.
- Measure:

Positive Lead	Measurement / Action	Negative Lead
C1750A-1	V	—
C1750A-2	V	—
C1750A-18	V	—
C1750A-31	V	—

Are the voltages greater than 11 volts?

Yes	GO to U2
No	VERIFY the BJB fuse 15 (25A), 26 (15A) and 38 (15A) are OK. If OK, REPAIR the circuit in question. If not OK, REFER to the Wiring Diagrams manual to identify the possible causes of the circuit short.

U2 CHECK THE TCM (TRANSMISSION CONTROL MODULE) GROUND CIRCUIT FOR AN OPEN

- Ignition OFF.
- Measure:

Positive Lead	Measurement / Action	Negative Lead
C1750A-3	Ω	—
C1750A-4	Ω	—
C1750A-5	Ω	—
C1750A-6	Ω	—

Are the resistances less than 3 ohms?

Yes	GO to U3
No	REPAIR the circuit in question.

U3 CHECK THE HIGH SPEED CONTROLLER AREA NETWORK (HS-CAN) CIRCUITS BETWEEN THE TCM (TRANSMISSION CONTROL MODULE) AND THE DLC (DATA LINK CONNECTOR) FOR AN OPEN

- Measure:

Positive Lead	Measurement / Action	Negative Lead
C1750A-34	Ω	C251-6
C1750A-35	Ω	C251-14

Are the resistances less than 3 ohms?

Yes	GO to U4
No	REPAIR the circuit in question.

U4 CHECK FOR CORRECT TCM (TRANSMISSION CONTROL MODULE) OPERATION

- Ignition OFF.
- Disconnect and inspect all the TCM connectors.
- Repair:
  - corrosion (install new connector or terminals - clean module pins)
  - damaged or bent pins - install new terminals/pins
  - pushed-out pins - install new pins as necessary
- Reconnect the TCM connectors. Make sure they seat and latch correctly.
- Operate the system and determine if the concern is still present.

Is the concern still present?

Yes	CHECK OASIS for any applicable Technical Service Bulletins (TSBs). If a TSB exists for this concern, DISCONTINUE this test and FOLLOW TSB instructions. If no Technical Service Bulletins (TSBs) address this concern, INSTALL a new TCM. REFER to: Transmission Control Module (TCM) (307-01 Automatic Transmission - Vehicles With: 6-Speed PowerShift Transmission - DPS6/6DCT250, Removal and Installation).
No	The system is operating correctly at this time. The concern may have been caused by module connections. ADDRESS the root cause of any connector or pin issues.

The PSCM Does Not Respond To The Scan Tool

Diagnostic Overview

Diagnostics in this manual assume a certain skill level and knowledge of Ford-specific diagnostic practices.
REFER to: Diagnostic Methods (100-00 General Information, Description and Operation).

Refer to Wiring Diagrams Cell 14 for schematic and connector information.

Refer to Wiring Diagrams Cell 43 for schematic and connector information.

Normal Operation and Fault Conditions

The PSCM communicates with the scan tool through the High Speed Controller Area Network (HS-CAN).

Possible Sources

- Fuse
- Wiring, terminals and connector
- PSCM

Visual Inspection and Diagnostic Pre-checks

Verify BJB fuse 40 (5A) is OK.

PINPOINT TEST V : THE PSCM (POWER STEERING CONTROL MODULE) DOES NOT RESPOND TO THE SCAN TOOL

NOTE: *Failure to disconnect the battery when instructed will result in false resistance readings.*

V1 CHECK THE PSCM (POWER STEERING CONTROL MODULE) VOLTAGE SUPPLY CIRCUITS FOR AN OPEN

- Ignition OFF.
- Disconnect: PSCM C1463B.
- Ignition ON.
- Measure:

Positive Lead	Measurement / Action	Negative Lead
C1463B-3	V	—

Is the voltage greater than 11 volts?

Yes	GO to V2
No	VERIFY the BJB fuse 40 (5A) is OK. If OK, REPAIR the circuit. If not OK, REFER to the Wiring Diagrams manual to identify the possible causes of the circuit short.

V2 CHECK THE PSCM (POWER STEERING CONTROL MODULE) GROUND CIRCUIT FOR AN OPEN

- Ignition OFF.
- Disconnect: PSCM C1463A.
- Measure:

Positive Lead	Measurement / Action	Negative Lead
C1463A-2	Ω	—

Is the resistance less than 3 ohms?

Yes	GO to V3
No	REPAIR the circuit.

V3 CHECK THE HIGH SPEED CONTROLLER AREA NETWORK (HS-CAN) CIRCUITS BETWEEN THE PSCM (POWER STEERING CONTROL MODULE) AND THE DLC (DATA LINK CONNECTOR) FOR AN OPEN

- Measure:

Positive Lead	Measurement / Action	Negative Lead
C1463B-1	Ω	C251-6
C1463B-2	Ω	C251-14

Are the resistances less than 3 ohms?

Yes	GO to V4
No	REPAIR the circuit in question.

V4 CHECK FOR CORRECT PSCM (POWER STEERING CONTROL MODULE) OPERATION

- Ignition OFF.
- Disconnect and inspect all the PSCM connectors.
- Repair:
  - corrosion (install new connector or terminals - clean module pins)
  - damaged or bent pins - install new terminals/pins
  - pushed-out pins - install new pins as necessary
- Reconnect the PSCM connectors. Make sure they seat and latch correctly.
- Operate the system and determine if the concern is still present.

Is the concern still present?

Yes	CHECK OASIS for any applicable Technical Service Bulletins (TSBs). If a TSB exists for this concern, DISCONTINUE this test and FOLLOW TSB instructions. If no Technical Service Bulletins (TSBs) address this concern, INSTALL a new PSCM . REFER to: Steering Gear (211-02 Power Steering, Removal and Installation).
No	The system is operating correctly at this time. The concern may have been caused by module connections. ADDRESS the root cause of any connector or pin issues.

No High Speed Controller Area Network (HS-CAN) Communication, All Modules Are Not Responding

Diagnostic Overview

Diagnostics in this manual assume a certain skill level and knowledge of Ford-specific diagnostic practices.
REFER to: Diagnostic Methods (100-00 General Information, Description and Operation).

NOTE: *Various modules set network DTCs during this test procedure. Clear DTCs from all modules after completing the diagnostic procedure.*

NOTE: *Failure to disconnect the battery when instructed will result in false resistance readings.*

Refer to Wiring Diagrams Cell 14 for schematic and connector information.

Normal Operation and Fault Conditions

REFER to: Communications Network - System Operation and Component Description (418-00 Module Communications Network, Description and Operation).

Possible Sources

- Fuse
- Wiring, terminals or connectors
- ABS module
- APIM
- BCM
- Information Center Module (ICM) (if equipped)
- OCSM
- Parking Aid Module (PAM)
- PSCM
- PCM
- SASM
- RCM
- TCM

PINPOINT TEST W : NO HIGH SPEED CONTROLLER AREA NETWORK (HS-CAN) COMMUNICATION, ALL MODULES ARE NOT RESPONDING

NOTE: *Various modules set network DTCs during this test procedure. Clear DTCs from all modules after completing the diagnostic procedure.*

NOTE: *Failure to disconnect the battery when instructed will result in false resistance readings.*

W1 CHECK THE DLC (DATA LINK CONNECTOR) PINS FOR DAMAGE

- Ignition OFF.
- Disconnect the scan tool cable from the DLC .
- Inspect the DLC pins 6 and 14 for damage.

Are DLC pins 6 and 14 OK?

Yes	GO to W2
No	REPAIR the DLC as necessary.

W2 CHECK THE HIGH SPEED CONTROLLER AREA NETWORK (HS-CAN) TERMINATION RESISTANCE

- Measure:

Positive Lead	Measurement / Action	Negative Lead
C251-6	Ω	C251-14

Is the resistance between 54 and 66 ohms?

Yes	GO to W3

No	GO to W5

W3 CHECK THE HIGH SPEED CONTROLLER AREA NETWORK (HS-CAN) (+) AND HIGH SPEED CONTROLLER AREA NETWORK (HS-CAN) (-) CIRCUITS FOR A SHORT TO GROUND

- Measure:

Positive Lead	Measurement / Action	Negative Lead
C251-6	Ω	—
C251-14	Ω	—

Are the resistances greater than 10,000 ohms?

Yes	GO to W4
No	GO to W12

W4 CHECK THE HIGH SPEED CONTROLLER AREA NETWORK (HS-CAN) (+) AND HIGH SPEED CONTROLLER AREA NETWORK (HS-CAN) (-) CIRCUITS FOR A SHORT TO VOLTAGE

- Ignition ON.
- Measure:

Positive Lead	Measurement / Action	Negative Lead
C251-6	V	—
C251-14	V	—

Is the voltage greater than 6 volts on either circuit?

Yes	REPAIR the circuit in question.
No	GO to W13

W5 CHECK THE HIGH SPEED CONTROLLER AREA NETWORK (HS-CAN) TERMINATION RESISTOR

- Measure:

Positive Lead	Measurement / Action	Negative Lead
C251-6	Ω	C251-14

Is the resistance between 108 and 132 ohms?

Yes	GO to W6
No	GO to W9

W6 CHECK THE HIGH SPEED CONTROLLER AREA NETWORK (HS-CAN) TERMINATION RESISTOR WITH THE PCM (POWERTRAIN CONTROL MODULE) DISCONNECTED

- Disconnect: PCM C175B.
- Measure:

Positive Lead	Measurement / Action	Negative Lead
C251-6	Ω	C251-14

Is the resistance between 108 and 132 ohms?

Yes	GO to W7
No	GO to W8

W7 CHECK THE HIGH SPEED CONTROLLER AREA NETWORK (HS-CAN) CIRCUITS BETWEEN THE PCM (POWERTRAIN CONTROL MODULE) AND THE DLC (DATA LINK CONNECTOR) FOR AN OPEN

- Measure:

Positive Lead	Measurement / Action	Negative Lead
C175B-54	Ω	C251-6
C175B-41	Ω	C251-14

Are the resistances less than 3 ohms?

Yes	GO to W26
No	REPAIR the circuit in question.

W8 CHECK THE HIGH SPEED CONTROLLER AREA NETWORK (HS-CAN) CIRCUITS BETWEEN THE BCM (BODY CONTROL MODULE) AND THE DLC (DATA LINK CONNECTOR) FOR AN OPEN

- Disconnect: BCM C2280C.
- Measure:

Positive Lead	Measurement / Action	Negative Lead
C2280C-7	Ω	C251-6
C2280C-8	Ω	C251-14

Are the resistances less than 3 ohms?

Yes	GO to W22
No	REPAIR the circuit in question.

W9 CHECK THE HIGH SPEED CONTROLLER AREA NETWORK (HS-CAN) (+) AND HIGH SPEED CONTROLLER AREA NETWORK (HS-CAN) (-) CIRCUITS FOR A SHORT TOGETHER

- Measure:

Positive Lead	Measurement / Action	Negative Lead
C251-6	Ω	C251-14

Is the resistance less than 3 ohms?

Yes	GO to W11
No	GO to W10

W10 CHECK THE HIGH SPEED CONTROLLER AREA NETWORK (HS-CAN) CIRCUITS BETWEEN THE PCM (POWERTRAIN CONTROL MODULE) AND THE DLC (DATA LINK CONNECTOR) FOR AN OPEN

- Measure:

Positive Lead	Measurement / Action	Negative Lead
C251-6	Ω	C251-14

Is the resistance greater than 10,000 ohms?

Yes	REPAIR the DLC or REPAIR the circuit in question.
No	A capacitor internal to a module can still be draining, causing irregular resistance readings. WAIT 5 minutes. REPEAT the pinpoint test.

W11 CHECK THE HIGH SPEED CONTROLLER AREA NETWORK (HS-CAN) (+) AND HIGH SPEED CONTROLLER AREA NETWORK (HS-CAN) (-) CIRCUITS FOR A SHORT TOGETHER WITH MODULES DISCONNECTED

- Measure:

Positive Lead	Measurement / Action	Negative Lead
C251-6	Ω	C251-14

- Disconnect modules one at a time until the resistance is greater than 3 ohms.
  - APIM (if equipped)

- ABS module
- BCM C2280C
- Information Center Module (ICM)
- OCSM
- Parking Aid Module (PAM) C4014A (if equipped)
- PSCM C1463A
- PCM C175B
- RCM C310A
- SASM C226A
- TCM C1750A (if equipped)

Did the resistance change to greater than 3 ohms with one of the modules disconnected?

Yes	For the APIM , GO to W19 For the ABS module, GO to W20 For the BCM , GO to W21 For the Information Center Module (ICM), GO to W29 For the OCSM , GO to W23 For the Parking Aid Module (PAM), GO to W24 For the PSCM , GO to W22 For the PCM , GO to W25 For the RCM , GO to W26 For the SASM , GO to W27 For the TCM , GO to W28
No	REPAIR the circuits.

W12 CHECK THE HIGH SPEED CONTROLLER AREA NETWORK (HS-CAN) (+) AND HIGH SPEED CONTROLLER AREA NETWORK (HS-CAN) (-) CIRCUITS FOR A SHORT TO GROUND WITH MODULES DISCONNECTED

- Measure:

Positive Lead	Measurement / Action	Negative Lead
C251-6	Ω	—
C251-14	Ω	—

- Disconnect modules one at a time until the resistance to ground is greater than 10,000 ohms.
  - APIM (if equipped)
  - ABS module
  - BCM C2280C
  - Information Center Module (ICM)
  - OCSM
  - Parking Aid Module (PAM) C4014A (if equipped)
  - PSCM C1463A
  - PCM C175B
  - RCM C310A
  - SASM C226A
  - TCM C1750A (if equipped)

Did the resistance change to greater than 10,000 ohms with one of the modules disconnected?

Yes	For the APIM , GO to W19 For the ABS module, GO to W20 For the BCM , GO to W21 For the Information Center Module (ICM), GO to W29

	For the OCSM , GO to W23 For the Parking Aid Module (PAM), GO to W24 For the PSCM , GO to W22 For the PCM , GO to W25 For the RCM , GO to W26 For the SASM , GO to W27 For the TCM , GO to W28
No	REPAIR the circuit in question. CONNECT all modules.

W13 CHECK FOR RESTORED COMMUNICATION WITH THE PCM (POWERTRAIN CONTROL MODULE) DISABLED

NOTE: *Establish an IDS session prior to disabling the PCM in this test step. If the PCM has failed communication during multiple attempts to identify the vehicle, first identify the vehicle manually by entering a PCM part number, calibration number or tear tag when prompted by IDS .When a vehicle is manually identified by a PCM part number, calibration number or tear tag, the IDS does not automatically run a network test. Manually select and run the network test. When re-running the network test, close the network test application first or the screen display reverts back to the prior network test results.*

- Disconnect: BJB fuses 38 (15A) and 36 (10A).
- Using a scan tool, perform the network test.

Do all other modules pass the network test?

Yes	INSTALL the removed fuses. GO to Pinpoint Test A
No	INSTALL the removed fuses. GO to W14

W14 CHECK FOR RESTORED NETWORK COMMUNICATION WITH THE ABS (ANTI-LOCK BRAKE SYSTEM) MODULE AND THE TCM (TRANSMISSION CONTROL MODULE) DISABLED

NOTE: *When re-running the network test, close the network test application first or the screen display reverts back to the prior network test results.*

- Disconnect: BJB fuses 7 (40A), 8 (30A) and 19 (5A) to disable the ABS module.
- Using a scan tool, perform the network test.
- Install the removed fuses.
- Disconnect: BJB fuses 15 (25A), 26 (15A) and 38 (15A) to disable the TCM (if equipped).
- Using a scan tool, perform the network test.

Do all other modules pass the network test?

Yes	INSTALL the removed fuses. For restored operation with the ABS module disabled, GO to Pinpoint Test B For restored operation with the TCM disabled, GO to Pinpoint Test U
No	GO to W15

W15 CHECK FOR RESTORED NETWORK COMMUNICATION WITH THE SASM (STEERING ANGLE SENSOR MODULE) , PSCM (POWER STEERING CONTROL MODULE) , APIM (SYNC MODULE) AND THE PARKING AID MODULE (PAM) DISABLED

NOTE: *When re-running the network test, close the network test application first or the screen display reverts back to the prior network test results.*

- Disable module one at a time until other High Speed Controller Area Network (HS-CAN) modules pass the network test. Skip to the end once network operation is restored.
- Disconnect: BCM fuse 72 (7.5A) to disable the SASM .
- Using a scan tool, perform the network test.

- Install the removed fuse.
- Disconnect: BJB fuse 40 (5A) to disable the PSCM .
- Using a scan tool, perform the network test.
- Install the removed fuse.
- Disconnect: BCM fuses 67 (7.5A) to disable the APIM (if equipped).
- Using a scan tool, perform the network test.
- Install the removed fuse.
- Disconnect: RJB fuse 30 (5A) to disable the Parking Aid Module (PAM) (if equipped).
- Using a scan tool, perform the network test.

Do all other High Speed Controller Area Network (HS-CAN) modules pass the network test?

Yes	INSTALL the removed fuse. For restored operation with the SASM disabled, GO to Pinpoint Test F For restored operation with the PSCM disabled, GO to Pinpoint Test V For restored operation with the APIM disabled, GO to Pinpoint Test R For restored operation with the Parking Aid Module (PAM) disabled, GO to Pinpoint Test Q
No	INSTALL the removed fuse. GO to W16

W16 CHECK FOR RESTORED NETWORK COMMUNICATION WITH THE RCM (RESTRAINTS CONTROL MODULE) AND OCSM (OCCUPANT CLASSIFICATION SYSTEM MODULE) DISABLED

NOTE: *When re-running the network test, close the network test application first or the screen display reverts back to the prior network test results.*

- Disconnect: BCM fuses 86 (10A)
- Using a scan tool, perform the network test.

Do all other modules pass the network test?

Yes	INSTALL the removed fuses. GO to W17
No	INSTALL the removed fuse. If equipped with an Information Center Module (ICM), GO to W18 If not equipped with an Information Center Module (ICM), the High Speed Controller Area Network (HS-CAN) tests within specification. VERIFY correct operation of the scan tool on a known good vehicle.

W17 CHECK FOR RESTORED NETWORK COMMUNICATION WITH THE RCM (RESTRAINTS CONTROL MODULE) DISCONNECTED

NOTE: *When re-running the network test, close the network test application first or the screen display reverts back to the prior network test results.*

- Disconnect: RCM C310A.
- Using a scan tool, perform the network test.

Do all other modules pass the network test?

Yes	CONNECT the RCM C310A, GO to Pinpoint Test C
No	CONNECT the RCM C310A. GO to Pinpoint Test E

W18 CHECK FOR RESTORED NETWORK COMMUNICATION WITH THE INFORMATION CENTER MODULE (ICM) DISABLED

NOTE: *When re-running the network test, close the network test application first or the screen display reverts back to the prior network test results.*

- Disconnect: BCM fuse 69 (5A).
- Using a scan tool, perform the network test.

Do all other modules pass the network test?

Yes	INSTALL the removed fuse. GO to Pinpoint Test H
No	The High Speed Controller Area Network (HS-CAN) tests within specification. VERIFY correct operation of the scan tool on a known good vehicle.

W19 CHECK FOR CORRECT APIM (SYNC MODULE) OPERATION

- Ignition OFF.
- Disconnect and inspect the APIM connector.
- Repair:
  - corrosion (install new connector or terminals - clean module pins)
  - damaged or bent pins - install new terminals/pins
  - pushed-out pins - install new pins as necessary
- Reconnect the APIM connector. Make sure it seats and latches correctly.
- Operate the system and determine if the concern is still present.

Is the concern still present?

Yes	CHECK OASIS for any applicable Technical Service Bulletins (TSBs). If a TSB exists for this concern, DISCONTINUE this test and FOLLOW TSB instructions. If no Technical Service Bulletins (TSBs) address this concern, INSTALL a new Accessory Protocol Interface Module (APIM). If equipped with SYNC/AM/FM/CD, REFER to: SYNC Module [APIM] (415-00B Information and Entertainment System - General Information - Vehicles With: AM/FM/CD/SYNC, Removal and Installation). If equipped with Sony AM/FM/CD/SYNC, REFER to: SYNC Module [APIM] (415-00C Information and Entertainment System - General Information - Vehicles With: SYNC/Sony AM/FM/CD, Removal and Installation).
No	The system is operating correctly at this time. The concern may have been caused by module connections. ADDRESS the root cause of any connector or pin issues.

W20 CHECK FOR CORRECT ABS (ANTI-LOCK BRAKE SYSTEM) MODULE OPERATION

- Ignition OFF.
- Disconnect and inspect the ABS module connector.
- Repair:
  - corrosion (install new connector or terminals - clean module pins)
  - damaged or bent pins - install new terminals/pins
  - pushed-out pins - install new pins as necessary
- Reconnect the ABS module connector. Make sure it seats and latches correctly.
- Operate the system and determine if the concern is still present.

Is the concern still present?

Yes	CHECK OASIS for any applicable Technical Service Bulletins (TSBs). If a TSB exists for this concern, DISCONTINUE this test and FOLLOW TSB instructions. If no Technical Service Bulletins (TSBs) address this concern, INSTALL a new ABS module.

No	The system is operating correctly at this time. The concern may have been caused by module connections. ADDRESS the root cause of any connector or pin issues.

W21 CHECK FOR CORRECT BCM (BODY CONTROL MODULE) OPERATION

- Ignition OFF.
- Disconnect and inspect all the BCM connectors.
- Repair:
  - corrosion (install new connector or terminals - clean module pins)
  - damaged or bent pins - install new terminals/pins
  - pushed-out pins - install new pins as necessary
- Reconnect the BCM connectors. Make sure they seat and latch correctly.
- Operate the system and determine if the concern is still present.

Is the concern still present?

Yes	CHECK OASIS for any applicable Technical Service Bulletins (TSBs). If a TSB exists for this concern, DISCONTINUE this test and FOLLOW TSB instructions. If no Technical Service Bulletins (TSBs) address this concern, INSTALL a new BCM .
No	The system is operating correctly at this time. The concern may have been caused by module connections. ADDRESS the root cause of any connector or pin issues.

W22 CHECK FOR CORRECT PSCM (POWER STEERING CONTROL MODULE) OPERATION

- Ignition OFF.
- Disconnect and inspect all the PSCM connectors.
- Repair:
  - corrosion (install new connector or terminals - clean module pins)
  - damaged or bent pins - install new terminals/pins
  - pushed-out pins - install new pins as necessary
- Reconnect the PSCM connectors. Make sure they seat and latch correctly.
- Operate the system and determine if the concern is still present.

Is the concern still present?

Yes	CHECK OASIS for any applicable Technical Service Bulletins (TSBs). If a TSB exists for this concern, DISCONTINUE this test and FOLLOW TSB instructions. If no Technical Service Bulletins (TSBs) address this concern, INSTALL a new Power Steering Control Module (PSCM). REFER to: Steering Gear (211-02 Power Steering, Removal and Installation).
No	The system is operating correctly at this time. The concern may have been caused by module connections. ADDRESS the root cause of any connector or pin issues.

W23 CHECK FOR CORRECT OCSM (OCCUPANT CLASSIFICATION SYSTEM MODULE) OPERATION

- Ignition OFF.
- Disconnect and inspect the OCSM connector.
- Repair:
  - corrosion (install new connector or terminals - clean module pins)
  - damaged or bent pins - install new terminals/pins
  - pushed-out pins - install new pins as necessary
- Reconnect the OCSM connector. Make sure it seats and latches correctly.
- Operate the system and determine if the concern is still present.

Is the concern still present?

Yes	CHECK OASIS for any applicable Technical Service Bulletins (TSBs). If a TSB exists for this concern, DISCONTINUE this test and FOLLOW TSB instructions. If no Technical Service Bulletins (TSBs) address this concern, INSTALL a new OCSM .
No	The system is operating correctly at this time. The concern may have been caused by module connections. ADDRESS the root cause of any connector or pin issues.

W24 CHECK FOR CORRECT PARKING AID MODULE (PAM) OPERATION

- Ignition OFF.
- Disconnect and inspect the Parking Aid Module (PAM) connector.
- Repair:
  - corrosion (install new connector or terminals - clean module pins)
  - damaged or bent pins - install new terminals/pins
  - pushed-out pins - install new pins as necessary
- Reconnect the Parking Aid Module (PAM) connector. Make sure it seats and latches correctly.
- Operate the system and determine if the concern is still present.

Is the concern still present?

Yes	CHECK OASIS for any applicable Technical Service Bulletins (TSBs). If a TSB exists for this concern, DISCONTINUE this test and FOLLOW TSB nstructions. If no Technical Service Bulletins (TSBs) address this concern, INSTALL a new Parking Aid Module (PAM). REFER to: Parking Assist Control Module (PAM) - Vehicles With: 4-Door (413-13A Parking Aid, Removal and Installation). REFER to: Parking Assist Control Module (PAM) - Vehicles With: 5-Door (413-13A Parking Aid, Removal and Installation).
No	The system is operating correctly at this time. The concern may have been caused by module connections. ADDRESS the root cause of any connector or pin issues.

W25 CHECK FOR CORRECT PCM (POWERTRAIN CONTROL MODULE) OPERATION

- Ignition OFF.
- Disconnect and inspect all the PCM connectors.
- Repair:
  - corrosion (install new connector or terminals - clean module pins)
  - damaged or bent pins - install new terminals/pins
  - pushed-out pins - install new pins as necessary
- Reconnect the PCM connectors. Make sure they seat and latch correctly.
- Operate the system and determine if the concern is still present.

Is the concern still present?

Yes	CHECK OASIS for any applicable Technical Service Bulletins (TSBs). If a TSB exists for this concern, DISCONTINUE this test and FOLLOW TSB instructions. If no Technical Service Bulletins (TSBs) address this concern, INSTALL a new PCM . REFER to: Powertrain Control Module (PCM) (303-14A Electronic Engine Controls - 2.0L Duratec-HE (125kW/170PS) - MI4, Removal and Installation).
No	The system is operating correctly at this time. The concern may have been caused by module connections. ADDRESS the root cause of any connector or pin issues.

W26 CHECK FOR CORRECT RCM (RESTRAINTS CONTROL MODULE) OPERATION

- Ignition OFF.
- Disconnect and inspect all the RCM connectors.
- Repair:
  - corrosion (install new connector or terminals - clean module pins)
  - damaged or bent pins - install new terminals/pins
  - pushed-out pins - install new pins as necessary
- Reconnect the RCM connectors. Make sure they seat and latch correctly.
- Operate the system and determine if the concern is still present.

Is the concern still present?

Yes	CHECK OASIS for any applicable Technical Service Bulletins (TSBs). If a TSB exists for this concern, DISCONTINUE this test and FOLLOW TSB instructions. If no Technical Service Bulletins (TSBs) address this concern, INSTALL a new RCM .
No	The system is operating correctly at this time. The concern may have been caused by module connections. ADDRESS the root cause of any connector or pin issues.

W27 CHECK FOR CORRECT SASM (STEERING ANGLE SENSOR MODULE) OPERATION

- Ignition OFF.
- Disconnect and inspect all the SASM connectors.
- Repair:
  - corrosion (install new connector or terminals - clean module pins)
  - damaged or bent pins - install new terminals/pins
  - pushed-out pins - install new pins as necessary
- Reconnect the SASM connectors. Make sure they seat and latch correctly.
- Operate the system and determine if the concern is still present.

Is the concern still present?

Yes	CHECK OASIS for any applicable Technical Service Bulletins (TSBs). If a TSB exists for this concern, DISCONTINUE this test and FOLLOW TSB instructions. If no Technical Service Bulletins (TSBs) address this concern, INSTALL a new SASM .
No	The system is operating correctly at this time. The concern may have been caused by module connections. ADDRESS the root cause of any connector or pin issues.

W28 CHECK FOR CORRECT TCM (TRANSMISSION CONTROL MODULE) OPERATION

- Ignition OFF.
- Disconnect and inspect all the TCM connectors.
- Repair:
  - corrosion (install new connector or terminals - clean module pins)
  - damaged or bent pins - install new terminals/pins
  - pushed-out pins - install new pins as necessary
- Reconnect the TCM connectors. Make sure they seat and latch correctly.
- Operate the system and determine if the concern is still present.

Is the concern still present?

Yes	CHECK OASIS for any applicable Technical Service Bulletins (TSBs). If a TSB exists for this concern, DISCONTINUE this test and FOLLOW TSB instructions. If no Technical Service Bulletins (TSBs) address this concern, INSTALL a new TCM .

	REFER to: Transmission Control Module (TCM) (307-01 Automatic Transmission - Vehicles With: 6-Speed PowerShift Transmission - DPS6/6DCT250, Removal and Installation).
No	The system is operating correctly at this time. The concern may have been caused by module connections. ADDRESS the root cause of any connector or pin issues.

W29 CHECK FOR CORRECT INFORMATION CENTER MODULE (ICM) OPERATION

- Ignition OFF.
- Disconnect and inspect all the Information Center Module (ICM) connectors.
- Repair:
  - corrosion (install new connector or terminals - clean module pins)
  - damaged or bent pins - install new terminals/pins
  - pushed-out pins - install new pins as necessary
- Reconnect the Information Center Module (ICM) connectors. Make sure they seat and latch correctly.
- Operate the system and determine if the concern is still present.

Is the concern still present?

Yes	CHECK OASIS for any applicable Technical Service Bulletins (TSBs). If a TSB exists for this concern, DISCONTINUE this test and FOLLOW TSB instructions. If no Technical Service Bulletins (TSBs) address this concern, INSTALL a new Information Center Module (ICM). REFER to: Information Center Module (ICM) (413-01 Instrumentation, Message Center and Warning Chimes, Removal and Installation).
No	The system is operating correctly at this time. The concern may have been caused by module connections. ADDRESS the root cause of any connector or pin issues.

No Medium Speed Controller Area Network (MS-CAN) Communication, All Modules Are Not Responding

Diagnostic Overview

Diagnostics in this manual assume a certain skill level and knowledge of Ford-specific diagnostic practices.
REFER to: Diagnostic Methods (100-00 General Information, Description and Operation).

Refer to Wiring Diagrams Cell 14 for schematic and connector information.

Normal Operation and Fault Conditions

REFER to: Communications Network - System Operation and Component Description (418-00 Module Communications Network, Description and Operation).

Possible Sources

- Fuse
- Wiring, terminals or connectors
- APIM (if equipped)
- BCM
- DDM
- GPSM
- HVAC Module
- Image Processing Module-B (IPM-B)
- IPC
- PDM
- RFA Module

PINPOINT TEST X : NO MEDIUM SPEED CONTROLLER AREA NETWORK (MS-CAN) COMMUNICATION, ALL MODULES ARE NOT RESPONDING

X1 CHECK THE DLC (DATA LINK CONNECTOR) PINS FOR DAMAGE

- Ignition OFF.
- Disconnect the scan tool cable from the DLC .
- Inspect the DLC pins 3 and 11 for damage.

Are DLC pins 3 and 11 OK?

Yes	GO to X2
No	REPAIR the DLC as necessary.

X2 CHECK THE MEDIUM SPEED CONTROLLER AREA NETWORK (MS-CAN) TERMINATION RESISTANCE

- Measure:

Positive Lead	Measurement / Action	Negative Lead
C251-3	Ω	C251-11

Is the resistance between 54 and 66 ohms?

Yes	GO to X3
No	GO to X5

X3 CHECK THE MEDIUM SPEED CONTROLLER AREA NETWORK (MS-CAN) (+) AND MEDIUM SPEED CONTROLLER AREA NETWORK (MS-CAN) (-) CIRCUITS FOR A SHORT TO GROUND

- Measure:

Positive Lead	Measurement / Action	Negative Lead
C251-3	Ω	—
C251-11	Ω	—

Are the resistances greater than 10,000 ohms?

Yes	GO to X4
No	GO to X12

X4 CHECK THE MEDIUM SPEED CONTROLLER AREA NETWORK (MS-CAN) (+) AND MEDIUM SPEED CONTROLLER AREA NETWORK (MS-CAN) (-) CIRCUITS FOR A SHORT TO VOLTAGE

- Ignition ON.

- Measure:

Positive Lead	Measurement / Action	Negative Lead
C251-3	⊕ V ⊖	—
C251-11	⊕ V ⊖	—

Are the voltages greater than 6 volts?

Yes	REPAIR the circuit in question.
No	GO to X13

X5 CHECK THE MEDIUM SPEED CONTROLLER AREA NETWORK (MS-CAN) TERMINATION RESISTOR

- Measure:

Positive Lead	Measurement / Action	Negative Lead
C251-3	Ω	C251-11

Is the resistance between 108 and 132 ohms?

Yes	GO to X6
No	GO to X9

X6 CHECK THE MEDIUM SPEED CONTROLLER AREA NETWORK (MS-CAN) TERMINATION RESISTOR WITH THE BCM (BODY CONTROL MODULE) DISCONNECTED

- Disconnect: BCM C2280A.
- Measure:

Positive Lead	Measurement / Action	Negative Lead
C251-3	Ω	C251-11

Is the resistance between 108 and 132 ohms?

Yes	GO to X7
No	GO to X8

X7 CHECK THE MEDIUM SPEED CONTROLLER AREA NETWORK (MS-CAN) CIRCUITS BETWEEN THE BCM (BODY CONTROL MODULE) AND THE DLC (DATA LINK CONNECTOR) FOR AN OPEN

- Measure:

Positive Lead	Measurement / Action	Negative Lead
C2280A-41	Ω	C251-3
C2280A-40	Ω	C251-11

Are the resistances less than 3 ohms?

Yes	GO to X18
No	REPAIR the circuit in question.

X8 CHECK THE MEDIUM SPEED CONTROLLER AREA NETWORK (MS-CAN) CIRCUITS BETWEEN THE IPC (INSTRUMENT PANEL CLUSTER) AND THE DLC (DATA LINK CONNECTOR) FOR AN OPEN

- Disconnect: IPC .
- Measure:

Positive Lead	Measurement / Action	Negative Lead
C220-2	Ω	C251-3
C220-1	Ω	C251-11

Are the resistances less than 3 ohms?

Yes	GO to X23
No	REPAIR the circuit in question.

X9 CHECK THE MEDIUM SPEED CONTROLLER AREA NETWORK (MS-CAN) (+) AND MEDIUM SPEED CONTROLLER AREA NETWORK (MS-CAN) (-) CIRCUITS FOR A SHORT TOGETHER

- Measure:

Positive Lead	Measurement / Action	Negative Lead
C251-3	Ω	C251-11

Is the resistance less than 3 ohms?

Yes	GO to X11
No	GO to X10

X10 CHECK THE MEDIUM SPEED CONTROLLER AREA NETWORK (MS-CAN) CIRCUITS BETWEEN THE BCM

(BODY CONTROL MODULE) AND THE DLC (DATA LINK CONNECTOR) FOR AN OPEN

- Measure:

Positive Lead	Measurement / Action	Negative Lead
C251-3	Ω	C251-11

Is the resistance greater than 10,000 ohms?

Yes	REPAIR the DLC or REPAIR the circuit in question.
No	A capacitor internal to a module can still be draining, causing irregular resistance readings. WAIT 5 minutes. REPEAT the pinpoint test.

X11 CHECK THE MEDIUM SPEED CONTROLLER AREA NETWORK (MS-CAN) (+) AND MEDIUM SPEED CONTROLLER AREA NETWORK (MS-CAN) (-) CIRCUITS FOR A SHORT TOGETHER

- Measure:

Positive Lead	Measurement / Action	Negative Lead
C251-3	Ω	C251-11

- Disconnect modules one at a time until the resistance is greater than 5 ohms.
  - APIM (if equipped)
  - BCM C2280A
  - DDM C501B (if equipped)
  - GPSM (if equipped)
  - HVAC module C228B
  - Image Processing Module - B (IPM-B) (if equipped)
  - IPC
  - PDM C652B (if equipped)
  - RFA module C4392D (if equipped)

Did the resistance change to greater than 5 ohms with one of the modules disconnected?

Yes	For the APIM , GO to X21 For the BCM , GO to X22 For the DDM , GO to X23 For the GPSM , GO to X24 For the HVAC module, GO to X25 For the Image Processing Module - B (IPM-B), GO to X26 For the IPC , GO to X27 For the PDM , GO to X28 For the RFA module, GO to X29
No	REPAIR the circuits.

X12 CHECK THE MEDIUM SPEED CONTROLLER AREA NETWORK (MS-CAN) (+) AND MEDIUM SPEED CONTROLLER AREA NETWORK (MS-CAN) (-) CIRCUITS FOR A SHORT TO GROUND WITH THE MODULES DISCONNECTED

- Measure

Positive Lead	Measurement / Action	Negative Lead
C251-3	Ω	—
C251-11	Ω	—

- Disconnect modules one at a time until the resistance to ground is greater than 10,000 ohms.
  - APIM (if equipped)
  - BCM C2280A
  - DDM C501B (if equipped)
  - GPSM (if equipped)
  - HVAC module C228B
  - Image Processing Module - B (IPM-B) (if equipped)
  - IPC
  - PDM C652B (if equipped)
  - RFA module C4392D (if equipped)

Did the resistance change to greater than 10,000 ohms with one of the modules disconnected?

Yes	For the APIM , GO to X21 For the BCM , GO to X22 For the DDM , GO to X23 . For the GPSM , GO to X24 For the HVAC module, GO to X25 For the Image Processing Module - B (IPM-B), GO to X26 For the IPC , GO to X27 For the PDM , GO to X28 For the RFA module, GO to X29
No	REPAIR the circuit in question.

X13 CHECK FOR RESTORED NETWORK COMMUNICATION WITH THE IPC (INSTRUMENT PANEL CLUSTER) , HVAC (HEATING, VENTILATION AND AIR CONDITIONING) MODULE, DDM (DRIVER DOOR MODULE) , AND THE PDM (PASSENGER DOOR MODULE) DISABLED

NOTE: *When re-running the network test, close the network test application first or the screen display reverts back to the prior network test results.*

- Disable modules one at a time until other Medium Speed Controller Area Network (MS-CAN) modules pass the network test. Skip to the end once network operation is restored.
- Disconnect: Body Control Module (BCM) fuse 69 (5A) to disable the IPC .
- Using a scan tool, perform the network test.
- Install the removed fuses.
- Disconnect: Body Control Module (BCM) fuse 73 (5A) to disable the HVAC module (if equipped).
- Using a scan tool, perform the network test.
- Install the removed fuses.
- Disconnect: Body Control Module (BCM) fuses 4 (25A) to disable the DDM (if equipped).
- Using a scan tool, perform the network test.
- Install the removed fuse.
- Disconnect: Body Control Module (BCM) fuse 5 (25A) to disable the PDM (if equipped).
- Using a scan tool, perform the network test.

Do all other Medium Speed Controller Area Network (MS-CAN) modules pass the network test?

Yes	INSTALL the removed fuse.

	If communication was restored with the IPC disabled, GO to Pinpoint Test G If communication was restored with the HVAC module disabled, GO to Pinpoint Test J If communication was restored with the DDM disabled, GO to Pinpoint Test M If communication was restored with the PDM disabled, GO to Pinpoint Test N
No	GO to X14 .

X14 VERIFY VEHICLE EQUIPMENT - APIM (SYNC MODULE) AND GPSM (GLOBAL POSITIONING SYSTEM MODULE)

- Inspect the vehicle for an APIM or GPSM .

Is the vehicle equipped with an APIM or GPSM ?

Yes	GO to X15
No	GO to X17

X15 CHECK FOR RESTORED COMMUNICATION WITH THE GPSM (GLOBAL POSITIONING SYSTEM MODULE) AND THE APIM (SYNC MODULE) DISABLED

NOTE: *When re-running the network test, close the network test application first or the screen display reverts back to the prior network test results.*

- Disconnect: BCM fuse 67 (7.5A) to disable the GPSM and APIM .
- Using a scan tool, perform the network test.

Do all other Medium Speed Controller Area Network (MS-CAN) modules pass the network test?

Yes	INSTALL the removed fuse. GO to X16
No	INSTALL the removed fuse. GO to X17

X16 CHECK FOR RESTORED COMMUNICATION WITH THE GPSM (GLOBAL POSITIONING SYSTEM MODULE) DISCONNECTED

NOTE: *When re-running the network test, close the network test application first or the screen display reverts back to the prior network test results.*

- Disconnect: GPSM (if equipped).
- Using a scan tool, perform the network test.

Do all other Medium Speed Controller Area Network (MS-CAN) modules pass the network test?

Yes	CONNECT the GPSM . GO to Pinpoint Test P
No	CONNECT the GPSM . GO to Pinpoint Test R

X17 VERIFY VEHICLE EQUIPMENT - RFA (REMOTE FUNCTION ACTUATOR) MODULE

- Inspect the vehicle for an RFA module.

Is the vehicle equipped with an RFA module?

Yes	GO to X18

No	GO to X19

X18 CHECK FOR RESTORED NETWORK COMMUNICATION WITH THE RFA (REMOTE FUNCTION ACTUATOR) MODULE DISABLED

NOTE: *When re-running the network test, close the network test application first or the screen display reverts back to the prior network test results.*

- Disconnect: RJB Fuse 2 (10A) to disable the RFA module (if equipped).
- Using a scan tool, perform the network test.

Do all other modules pass the network test?

Yes	INSTALL the removed fuse. GO to Pinpoint Test T
No	GO to X19

X19 VERIFY VEHICLE EQUIPMENT - IMAGE PROCESSING MODULE - B (IPM-B)

- Inspect the vehicle for an Image Processing Module - B (IPM-B).

Is the vehicle equipped with an Image Processing Module - B (IPM-B)?

Yes	GO to X20
No	GO to Pinpoint Test I

X20 CHECK FOR RESTORED NETWORK COMMUNICATION WITH THE IMAGE PROCESSING MODULE - B (IPM-B) DISABLED

NOTE: *When re-running the network test, close the network test application first or the screen display reverts back to the prior network test results.*

- Disconnect: RJB Fuse 29 (5A) to disable the Image Processing Module - B (IPM-B) (if equipped).
- Using a scan tool, perform the network test.

Do all other modules pass the network test?

Yes	INSTALL the removed fuse. GO to Pinpoint Test O
No	GO to Pinpoint Test I

X21 CHECK THE APIM (SYNC MODULE) FOR CORRECT OPERATION

- Ignition OFF.
- Disconnect and inspect the APIM connector.
- Repair:
  - corrosion (install new connector or terminals - clean module pins)
  - damaged or bent pins - install new terminals/pins
  - pushed-out pins - install new pins as necessary
- Reconnect the APIM connector. Make sure it seats and latches correctly.
- Operate the system and determine if the concern is still present.

Is the concern still present?

Yes	CHECK OASIS for any applicable Technical Service Bulletins (TSBs). If a TSB exists for this concern, DISCONTINUE this test and FOLLOW TSB instructions. If no Technical Service Bulletins (TSBs) address this concern, INSTALL a new APIM . If equipped with SYNC/AM/FM/CD, REFER to: SYNC Module [APIM] (415-00B Information and Entertainment System - General Information - Vehicles With: AM/FM/CD/SYNC, Removal and Installation). If equipped with Sony AM/FM/CD/SYNC, REFER to: SYNC Module [APIM] (415-00C Information and Entertainment System - General Information - Vehicles With: SYNC/Sony AM/FM/CD, Removal and Installation).
No	The system is operating correctly at this time. The concern may have been caused by module connections. ADDRESS the root cause of any connector or pin issues.

X22 CHECK THE BCM (BODY CONTROL MODULE) FOR CORRECT OPERATION

- Ignition OFF.
- Disconnect and inspect all the BCM connectors.
- Repair:
  - corrosion (install new connector or terminals - clean module pins)
  - damaged or bent pins - install new terminals/pins
  - pushed-out pins - install new pins as necessary
- Reconnect the BCM connectors. Make sure they seat and latch correctly.
- Operate the system and determine if the concern is still present.

Is the concern still present?

Yes	CHECK OASIS for any applicable Technical Service Bulletins (TSBs). If a TSB exists for this concern, DISCONTINUE this test and FOLLOW TSB instructions. If no Technical Service Bulletins (TSBs) address this concern, INSTALL a new BCM .
No	The system is operating correctly at this time. The concern may have been caused by module connections. ADDRESS the root cause of any connector or pin issues.

X23 CHECK THE DDM (DRIVER DOOR MODULE) FOR CORRECT OPERATION

- Ignition OFF.
- Disconnect and inspect all the DDM connectors.
- Repair:
  - corrosion (install new connector or terminals - clean module pins)
  - damaged or bent pins - install new terminals/pins
  - pushed-out pins - install new pins as necessary
- Reconnect the DDM connectors. Make sure they seat and latch correctly.
- Operate the system and determine if the concern is still present.

Is the concern still present?

Yes	CHECK OASIS for any applicable Technical Service Bulletins (TSBs). If a TSB exists for this concern, DISCONTINUE this test and FOLLOW TSB instructions. If no Technical Service Bulletins (TSBs) address this concern, INSTALL a new DDM .
No	The system is operating correctly at this time. The concern may have been caused by module connections. ADDRESS the root cause of any connector or pin issues.

X24 CHECK THE GPSM (GLOBAL POSITIONING SYSTEM MODULE) FOR CORRECT OPERATION

Ignition OFF.
- Disconnect and inspect the GPSM connector.
- Repair:
  - corrosion (install new connector or terminals - clean module pins)
  - damaged or bent pins - install new terminals/pins
  - pushed-out pins - install new pins as necessary
- Reconnect the GPSM connector. Make sure it seats and latches correctly.
- Operate the system and determine if the concern is still present.

Is the concern still present?

Yes	CHECK OASIS for any applicable Technical Service Bulletins (TSBs). If a TSB exists for this concern, DISCONTINUE this test and FOLLOW TSB instructions. If no Technical Service Bulletins (TSBs) address this concern, INSTALL a new GPSM . If equipped with SYNC/AM/FM/CD, REFER to: Global Positioning System Module (GPSM) (415-00B Information and Entertainment System - General Information - Vehicles With: AM/FM/CD/SYNC, Removal and Installation). If equipped with Sony AM/FM/CD/SYNC, REFER to: Global Positioning System Module (GPSM) (415-00C Information and Entertainment System - General Information - Vehicles With: SYNC/Sony AM/FM/CD, Removal and Installation).
No	The system is operating correctly at this time. The concern may have been caused by module connections. ADDRESS the root cause of any connector or pin issues.

X25 CHECK THE HVAC (HEATING, VENTILATION AND AIR CONDITIONING) MODULE FOR CORRECT OPERATION

- Ignition OFF.
- Disconnect and inspect all the HVAC module connectors.
- Repair:
  - corrosion (install new connector or terminals - clean module pins)
  - damaged or bent pins - install new terminals/pins
  - pushed-out pins - install new pins as necessary
- Reconnect the HVAC module connectors. Make sure they seat and latch correctly.
- Operate the system and determine if the concern is still present.

Is the concern still present?

Yes	CHECK OASIS for any applicable Technical Service Bulletins (TSBs). If a TSB exists for this concern, DISCONTINUE this test and FOLLOW TSB instructions. If no Technical Service Bulletins (TSBs) address this concern, INSTALL a new HVAC module. REFER to: Heating, Ventilation and Air Conditioning (HVAC) Control Module (412-00 Climate Control System - General Information, Removal and Installation).
No	The system is operating correctly at this time. The concern may have been caused by module connections. ADDRESS the root cause of any connector or pin issues.

X26 CHECK THE IMAGE PROCESSING MODULE - B (IPM-B) FOR CORRECT OPERATION

- Ignition OFF.
- Disconnect and inspect the Image Processing Module - B (IPM-B) connector.
- Repair:
  - corrosion (install new connector or terminals - clean module pins)
  - damaged or bent pins - install new terminals/pins
  - pushed-out pins - install new pins as necessary
- Reconnect the Image Processing Module - B (IPM-B) connector. Make sure it seats and latches correctly.
- Operate the system and determine if the concern is still present.

Is the concern still present?

Yes	CHECK OASIS for any applicable Technical Service Bulletins (TSBs). If a TSB exists for this concern, DISCONTINUE this test and FOLLOW TSB instructions. If no Technical Service Bulletins (TSBs) address this concern, INSTALL a new Image Processing Module - B (IPM-B). REFER to: Image Processing Module B (IPMB) - Vehicles With: 4-Door (413-13A Parking Aid, Removal and Installation). REFER to: Image Processing Module B (IPMB) - Vehicles With: 5-Door (413-13A Parking Aid, Removal and Installation).
No	The system is operating correctly at this time. The concern may have been caused by module connections. ADDRESS the root cause of any connector or pin issues.

X27 CHECK THE IPC (INSTRUMENT PANEL CLUSTER) FOR CORRECT OPERATION

- Ignition OFF.
- Disconnect and inspect the IPC connector.
- Repair:
  - corrosion (install new connector or terminals - clean module pins)
  - damaged or bent pins - install new terminals/pins
  - pushed-out pins - install new pins as necessary
- Reconnect the IPC connector. Make sure it seats and latches correctly.
- Operate the system and determine if the concern is still present.

Is the concern still present?

Yes	CHECK OASIS for any applicable Technical Service Bulletins (TSBs). If a TSB exists for this concern, DISCONTINUE this test and FOLLOW TSB instructions. If no Technical Service Bulletins (TSBs) address this concern, INSTALL a new IPC . REFER to: Instrument Panel Cluster (IPC) (413-01 Instrumentation, Message Center and Warning Chimes, Removal and Installation).
No	The system is operating correctly at this time. The concern may have been caused by module connections. ADDRESS the root cause of any connector or pin issues.

X28 CHECK THE PDM (PASSENGER DOOR MODULE) FOR CORRECT OPERATION

- Ignition OFF.
- Disconnect and inspect the PDM connector.
- Repair:
  - corrosion (install new connector or terminals - clean module pins)
  - damaged or bent pins - install new terminals/pins
  - pushed-out pins - install new pins as necessary
- Reconnect the PDM connector. Make sure it seats and latches correctly.
- Operate the system and determine if the concern is still present.

Is the concern still present?

Yes	CHECK OASIS for any applicable Technical Service Bulletins (TSBs). If a TSB exists for this concern, DISCONTINUE this test and FOLLOW TSB instructions. If no Technical Service Bulletins (TSBs) address this concern, INSTALL a new PDM .
No	The system is operating correctly at this time. The concern may have been caused by module connections. ADDRESS the root cause of any connector or pin issues.

X29 CHECK THE RFA (REMOTE FUNCTION ACTUATOR) MODULE FOR CORRECT OPERATION

- Ignition OFF.
- Disconnect and inspect all the RFA module connectors.
- Repair:
  - corrosion (install new connector or terminals - clean module pins)
  - damaged or bent pins - install new terminals/pins
  - pushed-out pins - install new pins as necessary
- Reconnect the RFA module connectors. Make sure they seat and latch correctly.
- Operate the system and determine if the concern is still present.

Is the concern still present?

Yes	CHECK OASIS for any applicable Technical Service Bulletins (TSBs). If a TSB exists for this concern, DISCONTINUE this test and FOLLOW TSB instructions. If no Technical Service Bulletins (TSBs) address this concern, INSTALL a new RFA module.
No	The system is operating correctly at this time. The concern may have been caused by module connections. ADDRESS the root cause of any connector or pin issues.

No Infotainment Controller Area Network (I-CAN) Communication, All Modules Are Not Responding

Diagnostic Overview

Diagnostics in this manual assume a certain skill level and knowledge of Ford-specific diagnostic practices.
REFER to: Diagnostic Methods (100-00 General Information, Description and Operation).

Refer to Wiring Diagrams Cell 14 for schematic and connector information.

Normal Operation and Fault Conditions

REFER to: Communications Network - System Operation and Component Description (418-00 Module Communications Network, Description and Operation).

Possible Sources

- Fuse
- Wiring, terminals or conectors
- ACM
- APIM
- DSP
- IPC
- FCDIM
- FCIM

PINPOINT TEST Y : NO INFOTAINMENT CONTROLLER AREA NETWORK (I-CAN) COMMUNICATION, ALL MODULES ARE NOT RESPONDING

Y1 CHECK THE INFOTAINMENT CONTROLLER AREA NETWORK (I-CAN) TERMINATION RESISTANCE

- Measure:

Positive Lead	Measurement / Action	Negative Lead

C251-1	Ω	C251-8

Is the resistance between 54 and 66 ohms?

Yes	GO to Y2
No	GO to Y4

Y2 CHECK THE INFOTAINMENT CONTROLLER AREA NETWORK (I-CAN) (+) AND INFOTAINMENT CONTROLLER AREA NETWORK (I-CAN) (-) CIRCUITS FOR A SHORT TO GROUND

- Measure:

Positive Lead	Measurement / Action	Negative Lead
C251-1	Ω	—
C251-8	Ω	—

Are the resistances greater than 10,000 ohms?

Yes	GO to Y3
No	GO to Y11

Y3 CHECK THE INFOTAINMENT CONTROLLER AREA NETWORK (I-CAN) (+) AND INFOTAINMENT CONTROLLER AREA NETWORK (I-CAN) (-) CIRCUITS FOR A SHORT TO VOLTAGE

- Ignition ON.
- Measure:

Positive Lead	Measurement / Action	Negative Lead
C251-1	V	—
C251-8	V	—

Are the voltages greater than 6 volts?

Yes	REPAIR the circuit in question.
No	GO to Y12

Y4 CHECK THE INFOTAINMENT CONTROLLER AREA NETWORK (I-CAN) TERMINATION RESISTOR

- Measure:

Positive Lead	Measurement / Action	Negative Lead
C251-1	Ω	C251-8

Is the resistance between 108 and 132 ohms?

Yes	GO to Y5
No	GO to Y8

Y5 CHECK THE INFOTAINMENT CONTROLLER AREA NETWORK (I-CAN) TERMINATION RESISTOR WITH THE IPC (INSTRUMENT PANEL CLUSTER) DISCONNECTED

- Disconnect: IPC .
- Measure:

Positive Lead	Measurement / Action	Negative Lead
C251-1	Ω	C251-8

Is the resistance between 108 and 132 ohms?

Yes	GO to Y6
No	GO to Y7

Y6 CHECK THE INFOTAINMENT CONTROLLER AREA NETWORK (I-CAN) CIRCUITS BETWEEN THE IPC (INSTRUMENT PANEL CLUSTER) AND THE DLC (DATA LINK CONNECTOR) FOR AN OPEN

- Measure:

Positive Lead	Measurement / Action	Negative Lead
C220-5	Ω	C251-1
C220-4	Ω	C251-8

Are the resistances less than 3 ohms?

Yes	GO to Y22
No	REPAIR the circuit in question.

Y7 CHECK THE INFOTAINMENT CONTROLLER AREA NETWORK (I-CAN) CIRCUITS BETWEEN THE ACM (AUDIO FRONT CONTROL MODULE) AND THE DLC (DATA LINK CONNECTOR) FOR AN OPEN

- Disconnect: ACM C240A.
- Measure:

Positive Lead	Measurement / Action	Negative Lead
C240A-14	Ω	C251-1
C240A-15	Ω	C251-8

Are the resistances less than 3 ohms?

Yes	GO to Y19
No	REPAIR the circuit in question.

Y8 CHECK THE INFOTAINMENT CONTROLLER AREA NETWORK (I-CAN) (+) AND INFOTAINMENT CONTROLLER AREA NETWORK (I-CAN) (-) CIRCUITS FOR A SHORT TOGETHER

- Measure:

Positive Lead	Measurement / Action	Negative Lead
C251-1	Ω	C251-8

Is the resistance less than 3 ohms?

Yes	GO to Y10
No	GO to Y9

Y9 CHECK THE INFOTAINMENT CONTROLLER AREA NETWORK (I-CAN) CIRCUITS BETWEEN THE IPC (INSTRUMENT PANEL CLUSTER) AND THE DLC (DATA LINK CONNECTOR) FOR AN OPEN

- Measure:

Positive Lead	Measurement / Action	Negative Lead
C251-1	Ω	C251-8

Is the resistance greater than 10,000 ohms?

Yes	REPAIR the DLC or REPAIR the circuit in question.
No	A capacitor internal to a module can still be draining, causing irregular resistance readings. WAIT 5 minutes. REPEAT the pinpoint test.

Y10 CHECK THE INFOTAINMENT CONTROLLER AREA NETWORK (I-CAN) (+) AND INFOTAINMENT CONTROLLER AREA NETWORK (I-CAN) (-) CIRCUITS FOR A SHORT TOGETHER WITH MODULES DISCONNECTED

- Measure:

Positive Lead	Measurement / Action	Negative Lead
C251-1	Ω	C251-8

- Disconnect modules one at a time until the resistance is greater than 5 ohms.
  - APIM (if equipped)
  - DSP C4326A (if equipped)
  - ACM C240A
  - FCIM (if equipped)
  - FCDIM (if equipped)
  - IPC

Did the resistance change to greater than 5 ohms with one of the modules disconnected?

Yes	For the APIM , GO to Y17 For the DSP , GO to Y18 For the ACM , GO to Y19 For the FCIM , GO to Y20 For the FCDIM , GO to Y21 For the IPC , GO to Y22
No	REPAIR the circuits in question.

Y11 CHECK THE INFOTAINMENT CONTROLLER AREA NETWORK (I-CAN) (+) AND INFOTAINMENT CONTROLLER AREA NETWORK (I-CAN) (-) CIRCUITS FOR A SHORT TO GROUND WITH THE MODULES DISCONNECTED

- Measure:

Positive Lead	Measurement / Action	Negative Lead
C251-1	Ω	—
C251-8	Ω	—

- Disconnect modules, one at a time until the resistance to ground is greater than 10,000 ohms.
  - APIM (if equipped)
  - DSP C4326A (if equipped)
  - ACM C240A
  - FCIM (if equipped)
  - FCDIM (if equipped)
  - IPC

Are the resistances greater than 10,000 ohms?

Yes	For the APIM , GO to Y17 For the DSP , GO to Y18 For the ACM , GO to Y19 For the FCIM , GO to Y20 For the FCDIM , GO to Y21 For the IPC , GO to Y22
No	REPAIR the circuit in question. CONNECT all modules.

Y12 CHECK FOR RESTORED COMMUNICATION WITH THE FCIM (FRONT CONTROLS INTERFACE MODULE) AND

ACM (AUDIO FRONT CONTROL MODULE) DISABLED

NOTE: *When re-running the network test, close the network test application first or the screen display reverts back to the prior network test results.*

- Disconnect: Body Control Module (BCM) fuse 79 (15A).
- Using a scan tool, perform the network test.

Do all other Infotainment Controller Area Network (I-CAN) modules pass the network test?

Yes	CONNECT all modules. If the vehicle is equipped with a FCIM , GO to Y13 If the vehicle is not equipped with a FCIM , GO to Pinpoint Test K
No	If the vehicle is equipped with an DSP , INSTALL the removed fuse. GO to Y14 If the vehicle is not equipped with an DSP , INSTALL the removed fuse. GO to Y15

Y13 CHECK FOR RESTORED COMMUNICATION WITH THE FCIM (FRONT CONTROLS INTERFACE MODULE) DISCONNECTED

NOTE: *When re-running the network test, close the network test application first or the screen display reverts back to the prior network test results.*

- Disconnect: FCIM .
- Using a scan tool, perform the network test.

Do all other Infotainment Controller Area Network (I-CAN) modules pass the network test?

Yes	CONNECT all modules. GO to Pinpoint Test S
No	CONNECT all modules. GO to Pinpoint Test K

Y14 CHECK FOR RESTORED NETWORK COMMUNICATION WITH THE DSP (AUDIO DIGITAL SIGNAL PROCESSING MODULE) DISABLED

NOTE: *When re-running the network test, close the network test application first or the screen display reverts back to the prior network test results.*

- Disconnect: RJB fuse 23 (25A).
- Using a scan tool, perform the network test.

Do all other modules pass the network test?

Yes	INSTALL the removed fuse. GO to Pinpoint Test L
No	If the vehicle is equipped with SYNC® , GO to Y15 If the vehicle is not equipped with SYNC® , INSTALL the removed fuse. The Infotainment Controller Area Network (I-CAN) tests within specification. VERIFY the correct operation of the scan tool on a known good vehicle.

Y15 CHECK FOR RESTORED COMMUNICATION WITH THE APIM (SYNC MODULE) AND THE FCDIM (FRONT CONTROL/DISPLAY INTERFACE MODULE) DISABLED

NOTE: *When re-running the network test, close the network test application first or the screen display reverts back to the prior network test results.*

Disconnect: BCM fuse 67 (7.5A).
- Using a scan tool, perform the network test.

Do all other Infotainment Controller Area Network (I-CAN) modules pass the network test?

Yes	CONNECT all modules. If the vehicle is equipped with a APIM , GO to Y16 If the vehicle is not equipped with an APIM , GO to Pinpoint Test D
No	CONNECT all modules. The Infotainment Controller Area Network (I-CAN) tests within specification. VERIFY the correct operation of the scan tool on a known good vehicle.

Y16 CHECK FOR RESTORED COMMUNICATION WITH THE FCDIM (FRONT CONTROL/DISPLAY INTERFACE MODULE) DISCONNECTED

NOTE: *When re-running the network test, close the network test application first or the screen display reverts back to the prior network test results.*

- Disconnect: FCDIM (if equipped).
- Using a scan tool, perform the network test.

Do all other Infotainment Controller Area Network (I-CAN) modules pass the network test?

Yes	CONNECT all modules. GO to Pinpoint Test D
No	CONNECT all modules. GO to Pinpoint Test R

Y17 CHECK THE APIM (SYNC MODULE) FOR CORRECT OPERATION

- Ignition OFF.
- Disconnect and inspect the APIM connector.
- Repair:
  - corrosion (install new connector or terminals - clean module pins)
  - damaged or bent pins - install new terminals/pins
  - pushed-out pins - install new pins as necessary
- Reconnect the APIM connector. Make sure it seats and latches correctly.
- Operate the system and determine if the concern is still present.

Is the concern still present?

Yes	CHECK OASIS for any applicable Technical Service Bulletins (TSBs). If a TSB exists for this concern, DISCONTINUE this test and FOLLOW TSB instructions. If no Technical Service Bulletins (TSBs) address this concern, INSTALL a new APIM . If equipped with SYNC/AM/FM/CD, REFER to: SYNC Module [APIM] (415-00B Information and Entertainment System - General Information - Vehicles With: AM/FM/CD/SYNC, Removal and Installation). If equipped with Sony AM/FM/CD/SYNC, REFER to: SYNC Module [APIM] (415-00C Information and Entertainment System - General Information - Vehicles With: SYNC/Sony AM/FM/CD, Removal and Installation).
No	The system is operating correctly at this time. The concern may have been caused by module connections. ADDRESS the root cause of any connector or pin issues.

Y18 CHECK THE DSP (AUDIO DIGITAL SIGNAL PROCESSING MODULE) FOR CORRECT OPERATION

- Ignition OFF.
- Disconnect and inspect all the DSP connectors.
- Repair:
  - corrosion (install new connector or terminals - clean module pins)
  - damaged or bent pins - install new terminals/pins
  - pushed-out pins - install new pins as necessary
- Reconnect the DSP connectors. Make sure they seat and latch correctly.
- Operate the system and determine if the concern is still present.

Is the concern still present?

Yes	CHECK OASIS for any applicable Technical Service Bulletins (TSBs). If a TSB exists for this concern, DISCONTINUE this test and FOLLOW TSB instructions. If no Technical Service Bulletins (TSBs) address this concern, INSTALL a new DSP . REFER to: Audio Digital Signal Processing (DSP) Module (415-00C Information and Entertainment System - General Information - Vehicles With: SYNC/Sony AM/FM/CD, Removal and Installation).
No	The system is operating correctly at this time. The concern may have been caused by module connections. ADDRESS the root cause of any connector or pin issues.

Y19 CHECK THE ACM (AUDIO FRONT CONTROL MODULE) FOR CORRECT OPERATION

- Ignition OFF.
- Disconnect and inspect all the ACM connectors.
- Repair:
  - corrosion (install new connector or terminals - clean module pins)
  - damaged or bent pins - install new terminals/pins
  - pushed-out pins - install new pins as necessary
- Reconnect the ACM connectors. Make sure they seat and latch correctly.
- Operate the system and determine if the concern is still present.

Is the concern still present?

Yes	CHECK OASIS for any applicable Technical Service Bulletins (TSBs). If a TSB exists for this concern, DISCONTINUE this test and FOLLOW TSB instructions. If no Technical Service Bulletins (TSBs) address this concern, INSTALL a new ACM . If equipped with AM/FM/CD, REFER to: Audio Front Control Module (ACM) (415-00A Information and Entertainment System - General Information - Vehicles With: AM/FM/CD, Removal and Installation). If equipped with SYNC/AM/FM/CD, REFER to: Audio Front Control Module (ACM) (415-00B Information and Entertainment System - General Information - Vehicles With: AM/FM/CD/SYNC, Removal and Installation). If equipped with Sony AM/FM/CD/SYNC, REFER to: Audio Front Control Module (ACM) (415-00C Information and Entertainment System - General Information - Vehicles With: SYNC/Sony AM/FM/CD, Removal and Installation).
No	The system is operating correctly at this time. The concern may have been caused by module connections. ADDRESS the root cause of any connector or pin issues.

Y20 CHECK THE FCIM (FRONT CONTROLS INTERFACE MODULE) FOR CORRECT OPERATION

- Ignition OFF.
- Disconnect and inspect the FCIM connector.

- Repair:
  - corrosion (install new connector or terminals - clean module pins)
  - damaged or bent pins - install new terminals/pins
  - pushed-out pins - install new pins as necessary
- Reconnect the FCIM connector. Make sure it seats and latches correctly.
- Operate the system and determine if the concern is still present.

Is the concern still present?

Yes	CHECK OASIS for any applicable Technical Service Bulletins (TSBs). If a TSB exists for this concern, DISCONTINUE this test and FOLLOW TSB instructions. If no Technical Service Bulletins (TSBs) address this concern, INSTALL a new FCIM . If equipped with AM/FM/CD, REFER to: Front Controls Interface Module (FCIM) (415-00A Information and Entertainment System - General Information - Vehicles With: AM/FM/CD, Removal and Installation). If equipped with SYNC/AM/FM/CD, REFER to: Front Controls Interface Module (FCIM) (415-00B Information and Entertainment System - General Information - Vehicles With: AM/FM/CD/SYNC, Removal and Installation). If equipped with Sony AM/FM/CD/SYNC, REFER to: Front Controls Interface Module (FCIM) (415-00C Information and Entertainment System - General Information - Vehicles With: SYNC/Sony AM/FM/CD, Removal and Installation).
No	The system is operating correctly at this time. The concern may have been caused by module connections. ADDRESS the root cause of any connector or pin issues.

Y21 CHECK THE FCDIM (FRONT CONTROL/DISPLAY INTERFACE MODULE) FOR CORRECT OPERATION

- Ignition OFF.
- Disconnect and inspect the FCDIM connector.
- Repair:
  - corrosion (install new connector or terminals - clean module pins)
  - damaged or bent pins - install new terminals/pins
  - pushed-out pins - install new pins as necessary
- Reconnect the FCDIM connector. Make sure it seats and latches correctly.
- Operate the system and determine if the concern is still present.

Is the concern still present?

Yes	CHECK OASIS for any applicable Technical Service Bulletins (TSBs). If a TSB exists for this concern, DISCONTINUE this test and FOLLOW TSB instructions. If no Technical Service Bulletins (TSBs) address this concern, INSTALL a new FCDIM . If equipped with AM/FM/CD, REFER to: Front Control/Display Interface Module (FCDIM) (415-00A Information and Entertainment System - General Information - Vehicles With: AM/FM/CD, Removal and Installation). If equipped with SYNC/AM/FM/CD, REFER to: Front Control/Display Interface Module (FCDIM) (415-00B Information and Entertainment System - General Information - Vehicles With: AM/FM/CD/SYNC, Removal and Installation).
No	The system is operating correctly at this time. The concern may have been caused by module connections. ADDRESS the root cause of any connector or pin issues.

Y22 CHECK THE IPC (INSTRUMENT PANEL CLUSTER) FOR CORRECT OPERATION

- Ignition OFF.

Disconnect and inspect the IPC connector.

- Repair:
  - corrosion (install new connector or terminals - clean module pins)
  - damaged or bent pins - install new terminals/pins
  - pushed-out pins - install new pins as necessary
- Reconnect the IPC connector. Make sure it seats and latches correctly.
- Operate the system and determine if the concern is still present.

Is the concern still present?

Yes	CHECK OASIS for any applicable Technical Service Bulletins (TSBs). If a TSB exists for this concern, DISCONTINUE this test and FOLLOW TSB instructions. If no Technical Service Bulletins (TSBs) address this concern, INSTALL a new IPC . REFER to: Instrument Panel Cluster (IPC) (413-01 Instrumentation, Message Center and Warning Chimes, Removal and Installation).
No	The system is operating correctly at this time. The concern may have been caused by module connections. ADDRESS the root cause of any connector or pin issues.

No Power To The DLC

Diagnostic Overview

Diagnostics in this manual assume a certain skill level and knowledge of Ford-specific diagnostic practices.
REFER to: Diagnostic Methods (100-00 General Information, Description and Operation).

Normal Operation and Fault Conditions

The scan tool is connected to the DLC to communicate with the High Speed Controller Area Network (HS-CAN), Medium Speed Controller Area Network (MS-CAN) and the Infotainment Controller Area Network (I-CAN) communication networks. A loss of ground or poor ground at the DLC can result in High Speed Controller Area Network (HS-CAN), Medium Speed Controller Area Network (MS-CAN) or Infotainment Controller Area Network (I-CAN) faults while the scan tool is connected.

Possible Sources

- Fuse
- Wiring, terminals or connector
- DLC
- Scan tool

Visual Inspection and Diagnostic Pre-checks

Verify BCM fuse 73 (5A) is OK.

PINPOINT TEST Z : NO POWER TO THE DLC (DATA LINK CONNECTOR)

Z1 CHECK THE DLC (DATA LINK CONNECTOR) PINS FOR DAMAGE

- Ignition OFF.
- Disconnect the scan tool cable from the DLC .
- Inspect DLC pins 4, 5 and 16 for damage.

Are DLC pins 4, 5 and 16 OK?

Yes	GO to Z2
No	REPAIR the DLC as necessary.

Z2 CHECK THE DLC (DATA LINK CONNECTOR) VOLTAGE SUPPLY FOR AN OPEN

- Measure:

Positive Lead	Measurement / Action	Negative Lead
C251-16	V	—

Is the voltage greater than 11 volts?

Yes	GO to Z3
No	VERIFY the BCM fuse 73 (5A) is OK. If OK, REPAIR the circuit. If not OK, REFER to the Wiring Diagrams manual to identify the possible causes of the circuit short.

Z3 CHECK THE DLC (DATA LINK CONNECTOR) GROUND CIRCUITS FOR AN OPEN

- Measure:

Positive Lead	Measurement / Action	Negative Lead
C251-4	Ω	—
C251-5	Ω	—

Are the resistances less than 3 ohms?

Yes	REPAIR the scan tool.
No	REPAIR the circuit in question.

Copyright © Ford Motor Company

No Communication Between the Integrated Diagnostic System (IDS) and the Vehicle

1. **WARNING: Before beginning any service procedure in this section, REFER to Safety Warnings in section 100-00 General Information. Failure to follow this instruction may result in serious personal injury.**

   Refer to: Health and Safety Precautions (100-00 General Information, Description and Operation).

2. Establish a scan tool session.

3. **NOTE:** *For vehicles with push-button start, refer to Steering Wheel and Column Electrical Components in Section 211-05.*

   NOTE: *If the RFA module has been replaced, it may not be possible to place the ignition in RUN. The RFA module can communicate with a scan tool with the ignition in the OFF state.*

   Turn ignition to RUN.

4. The scan tool first attempts to communicate with the PCM . After establishing communication with the PCM , the scan tool then attempts to communicate with all other modules on the vehicle.

5. If an IDS session cannot be established with the vehicle, IDS may state "No communication can be established with the Powertrain Control Module (PCM)."

6. Choose "NO" when the scan tool prompts whether or not to retry communication.

7. Enter a PCM part number, tear tag or calibration number to identify the vehicle and start a session. The PCM part number and 4-character tear tag number are printed on the PCM label. If the PCM part number cannot be found, a base part number search on the HVBOM application (under the OASIS tab on the technician service publication website) retrieves the PCM part number.

8. If the scan tool cannot communicate with the vehicle after manually entering the PCM part number, diagnose the PCM does not respond to the scan tool.
   Refer to: Communications Network (418-00 Module Communications Network, Diagnosis and Testing).

Copyright © Ford Motor Company

Instrument Panel Cluster (IPC) - Overview

Overview

NOTE: *Base IPC shown. Optional IPC similar.*

NOTE: *The IPC is serviceable as an assembly only. Do not attempt to disassemble or install a new IPC lens or indicators.*

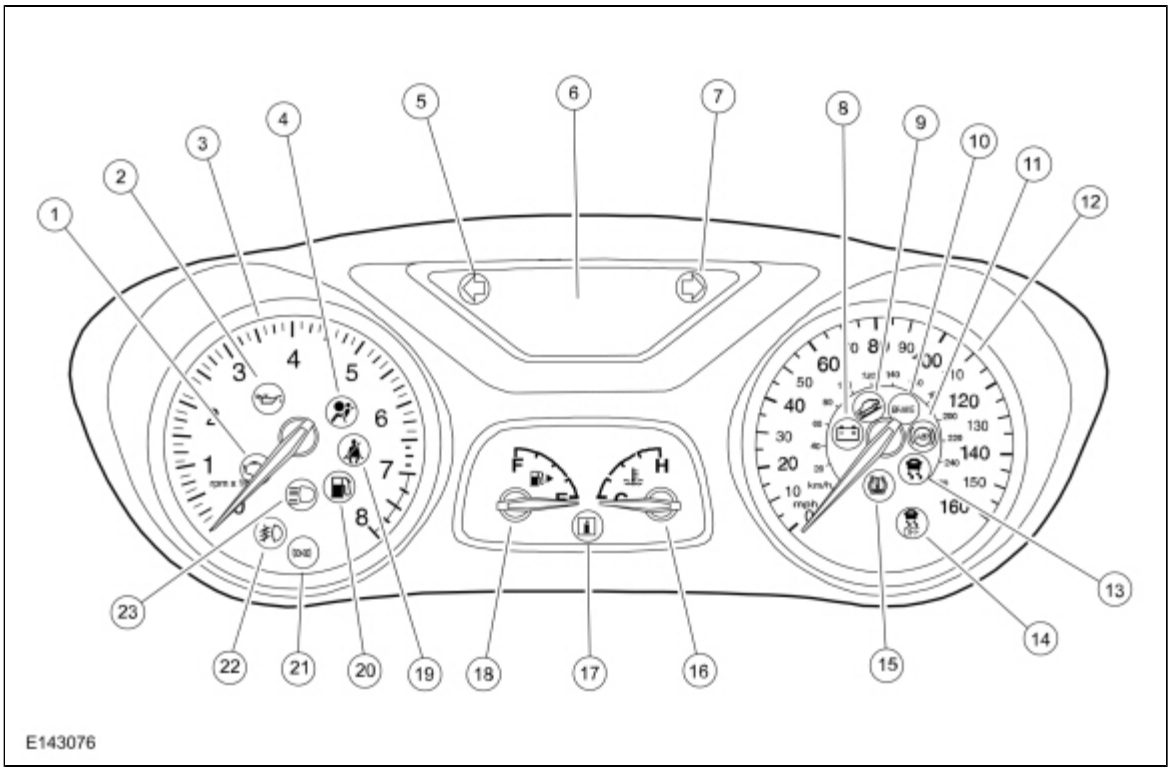

Item	Description
1	MIL
2	Low oil pressure warning indicator
3	Tachometer
4	Airbag warning indicator
5	LH turn indicator
6	Message center display area
7	RH turn indicator
8	Charging system warning indicator
9	Grade assist indicator
10	Brake warning indicator
11	ABS warning indicator
12	Speedometer
13	Stability/traction control indicator (sliding car icon)

14	Stability/traction control disabled indicator (sliding car OFF icon)
15	TPMS warning indicator
16	Temperature gauge
17	Information indicator
18	Fuel gauge
19	Safety belt warning indicator
20	Low fuel indicator
21	Lights on indicator
22	Fog lamp indicator
23	High beam indicator

The base IPC and the optional IPC are almost identical with the exception of the message center display area. Both message center displays utilize a single LCD display screen. The optional IPC message center provides a larger display area with enhanced display capabilities.

The ST uses a separate ICM to display the following 3 gauges.

- Engine oil temperature
- Turbo boost
- Engine oil pressure

Informational indicators provide information to the driver of conditions that exist in the vehicle. Warning indicators provide information to the driver of conditions that could potentially cause personal injury or alter vehicle performance.

Message center indicators illuminate in the message center and replace the typical informational or warning indicator using the same iconic representation. The only message center indicators available are the cruise control and upshift indicators. The cruise control indicator is set in a fixed location in the upper RH side of the message center display.

Module messaging has increased over time and become the standard for sending and receiving information required to operate the IPC . The majority of the inputs required to operate the IPC are received over the CAN .

Hardwired Inputs

The IPC requires hardwired inputs from components that are not on either the High Speed Controller Area Network (HS-CAN) or the Medium Speed Controller Area Network (MS-CAN). These components are required for specific IPC functions or gateway requirements.

The hardwired inputs are provided by components:

- Park detect switch (part of the floor shifter assembly)
- Upper LH (message center) and upper RH (audio control) steering wheel switch

Copyright © Ford Motor Company

Instrument Panel Cluster (IPC) - System Operation and Component Description

System Operation

System Diagram - Gauges

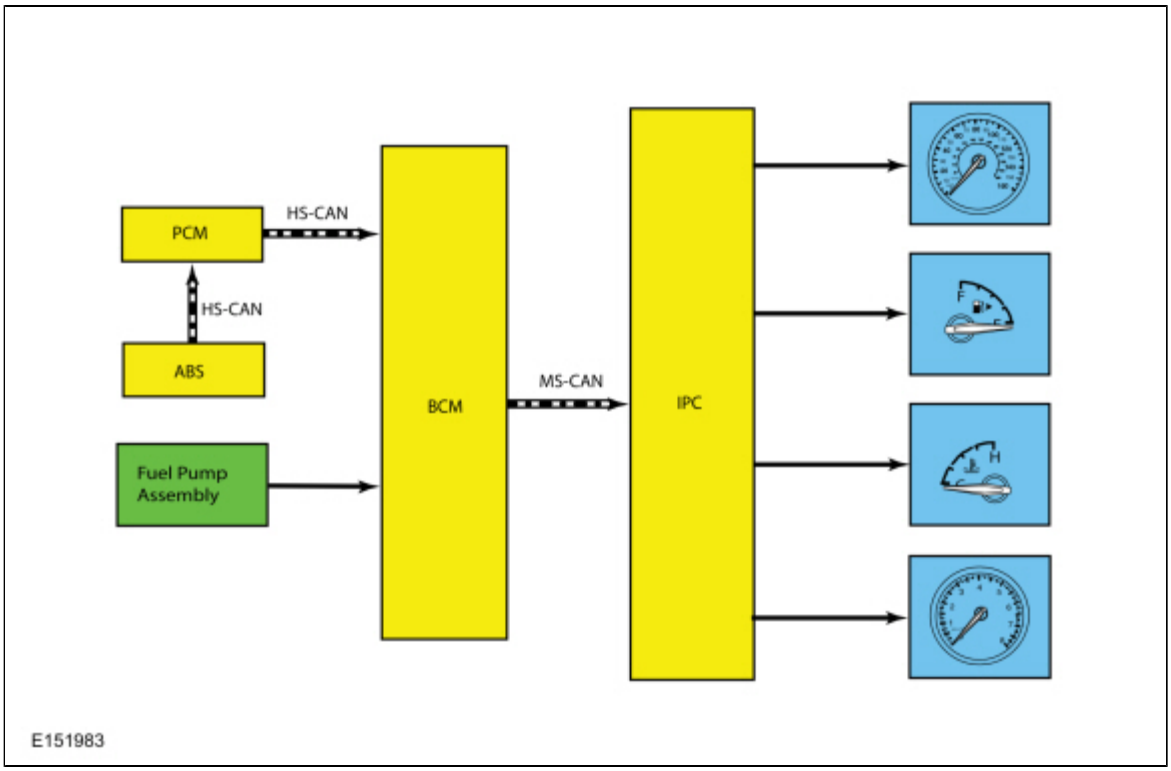

Network Message Chart - Gauges

Module Network Input Messages - IPC

Broadcast Message	Originating Module	Message Purpose
Wheel rotation count	ABS module	Input used for calculating the rolling odometer count.
Engine coolant temperature	PCM	Engine temperature data used for temperature gauge indication.
Engine rpm	PCM	Engine speed data used for tachometer indication.
Fuel level status	BCM	Input used for fuel gauge indication.
Ignition status	BCM	Ignition RUN, START and accessory states required for the IPC operating modes and fault reporting.
Vehicle speed	ABS module	Vehicle speed data used for speedometer indication.

System Diagram - ICM Gauges

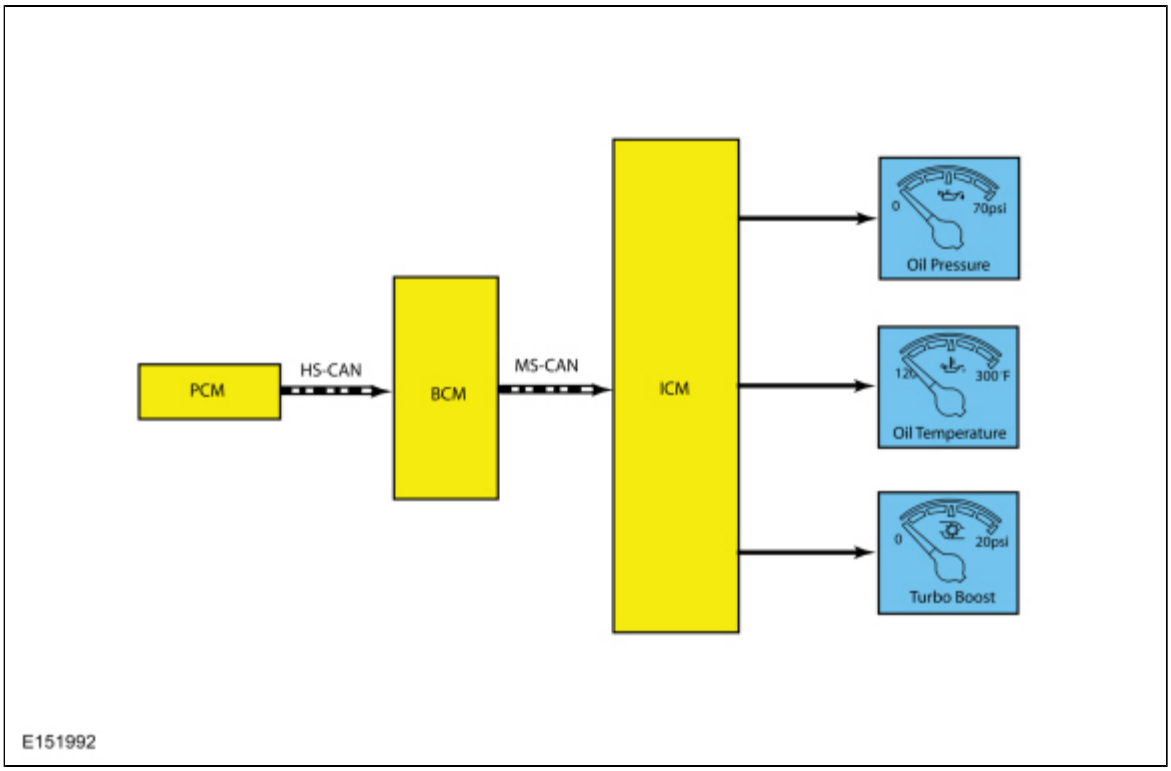

Network Message Chart - ICM Gauges

Module Network Input Messages - IPC

Broadcast Message	Originating Module	Message Purpose
Engine oil temperature	PCM	Input used for the engine oil temperature gauge.
Oil pressure warning	PCM	Input used for the engine oil pressure gauge.
Power mode	PCM	Input used for turbo boost gauge.

System Diagram - Indicators

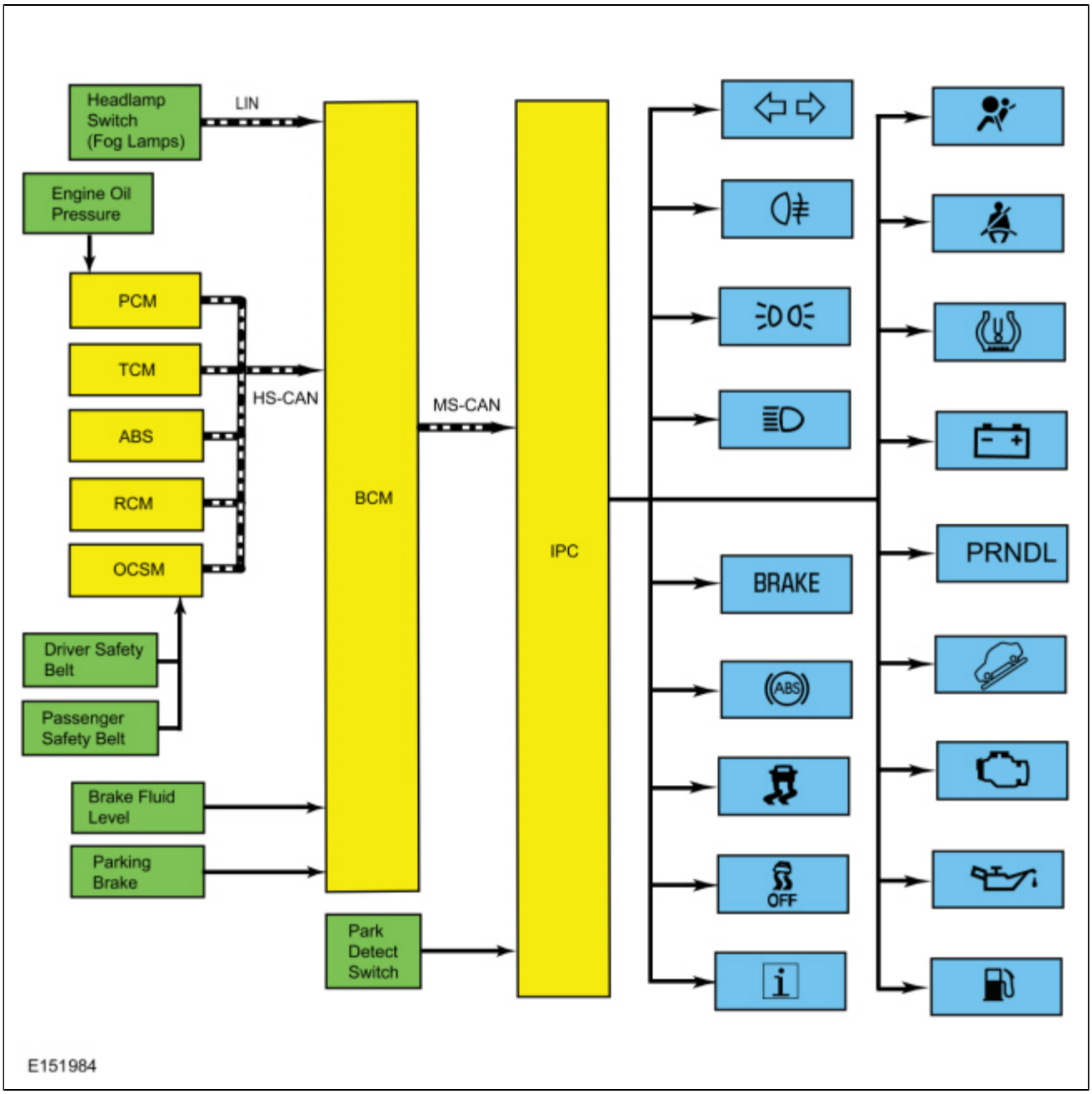

Network Message Chart - Indicators

Module Network Input Messages - IPC

Broadcast Message	Originating Module	Message Purpose
ABS warning indicator request	ABS module	Input used to control the ABS warning indicator.
Airbag indicator request	RCM	Input used to control the airbag warning indicator.
Alarm mode	BCM	Input used to control the information indicator based on the PATS and perimeter alarm status.
Brake fluid level low	BCM	Input used to control the brake warning indicator for the brake fluid level input.
Brake warning request	ABS module	Input used to control the brake warning indicator for the ABS input.
Charging system indicator request	BCM	Input used to control the flashing of the charging system warning indicator.
Fog lamp indicator request	BCM	Input used to control the fog lamp indicator.

High beam indicator request	BCM	Input used to control the high beam indicator.
Ignition status	BCM	Ignition RUN, START and accessory states required for the IPC operating modes and fault reporting.
MIL request	PCM	Input used to control the MIL .
Oil pressure warning	PCM	Input used to control the low oil pressure warning indicator.
Parking brake warning request	BCM	Input used to control the brake warning indicator for the parking brake input.
Passenger detect status	OCSM	Input used to control the safety belt warning indicator.
Position light indication	BCM	Input used to control the lights on indicator.
Power system status	BCM	Input used to control the charging system warning indicator.
Safety belt status	RCM	Input used to control the safety belt warning indicator.
Stability/traction control indication	ABS module	Input used to control the stability/traction control indicator (sliding car icon).
Stability/traction control disabled indicator request	ABS module	Input used to control the stability/traction control disabled indicator (sliding car OFF icon).
Tire pressure indication	BCM	Input used to control the TPMS indicator
Transmission mode display actual	TCM	Input used to control the select shift segment of the PRNDL display.
Transmission shift mode	TCM	Input used to control the PRNDL display.
Turn indicator command	BCM	Input used to control the RH / LH turn or hazard indicators.

Gateway Function

The IPC acts as a gateway module by receiving information in one format and transmitting it to the audio and multimedia modules using another format. This enables network communication between modules that do not communicate using the same network (Infotainment Controller Area Network (I-CAN) or Medium Speed Controller Area Network (MS-CAN)).

Networked Input Messages and Default States

NOTE: *Whenever a network message is suspected as missing and confirmed by a missing message DTC (U-code), it is important to look for other symptoms that can also be present in the IPC and throughout the vehicle. Once a DTC sets in the IPC , it can be helpful to review the complete message list to determine which other modules also rely on the same message and run the self-test for those modules. If the message is missing from other modules, the same DTC can also be set in those modules. Confirmation of missing messages common to multiple modules can indicate that the originating module is the source of the concern or the communication network may be faulted.*

The IPC uses input messages from other modules to control the gauges, informational indicators, warning indicators and message center message displays over the communication networks. The majority of messaged inputs to the IPC are received from the BCM . The BCM only acts as a gateway to convert the message from one network to another network recognized by the IPC . Network messages can drop out or be missing for a variety of reasons, such as high network traffic on the bus. The IPC incorporates a defined strategy for handling missing network messages based on time. The required time for a network message to be missing differs between the various gauges, indicators and message center displays. The strategy is basically the same for all indication but differs in the length of time required for the network message to be missing. If a required network message is missing or invalid for less than the preset time criteria, the gauge, indicator or message center display that requires the network message remains at the last commanded state based upon the last network message received. The example describes how the stability/traction control indicator (sliding car icon) functions using a time criteria of 5 seconds.

If the stability/traction control network message is missing for less than 5 seconds and the stability/traction control indicator (sliding car icon) was on, the indicator remains in the on state until the next network message is received. Again, using the time criteria example, if the network message remains missing or invalid for more than 5 seconds, the IPC sets a U-code DTC and the IPC output becomes a default action for the indicator or gauge. The indicator may default on/off or the gauge may default to the rest position.

Each indicator or gauge utilizes a different default strategy depending on the nature of the indication. Refer to the diagnostic

overview descriptions located before each individual pinpoint test for further description of the default action specific to each indicator or gauge. If the missing messaged input to the IPC returns at any time, the normal function of the gauge, indicator or message center display resumes.

It is very important to understand:

- where the input originates.
- all the information necessary in order for a feature to operate.
- which module(s) receive(s) the input or command message.
- which module controls the output of the feature.
- whether the module that receives the input controls the output of the feature, or whether it outputs a message over the communication network to another module.

Transport Mode

The vehicle is placed in a transport mode at the completion of production to reduce the drain on the battery. Transport mode is controlled by the BCM . When the vehicle is in transport mode, the BCM sends the IPC the transport mode network message to display TRANSPORT MODE in the message center. To take the vehicle out of transport mode and place into normal operation mode, REFER TO SECTION 419-10-DISABLING TRANSPORT MODE.

Startup-Shutdown

The IPC provides a startup/shutdown sequence also known as a welcome/farewell strategy. When the BCM receives a RKE request or a door ajar (open) message, the IPC illuminates the RH and LH turn indicators briefly then illuminates the message center display (base IPC) or displays the message center splash screen (optional IPC). When the ignition is placed in the RUN or START mode, the message center proves out and defaults to normal operation. The IPC illuminates all Light-emitting Diode (LED) indicators for a predetermined time (prove-out).

MyKey®

The MyKey® feature allows the customer to program a restricted driving mode that is tied to one or more keys known as a MyKey® key. When a MyKey® key is in use, the IPC provides:

- At the beginning of vehicle start up, as part of the welcome strategy, the message center greets the MyKey® driver with MYKEY ACTIVE DRIVE SAFELY displayed in the message center. If the MyKey® speed limiter feature is turned on, the message center also displays SPEED LIMITED TO 130 KM/H (80 MPH).
- The IPC continuously provides a periodic Belt-Minder® warning chime until the driver and passenger safety belts are buckled. When the Belt-Minder® is issued, the ACM is muted and the message center displays BUCKLE UP TO UNMUTE AUDIO. The IPC continuously provides a periodic warning chime until the driver and passenger safety belts are buckled.
- If the MyKey® speed limiter feature is turned on and the vehicle speed approaches 130 km/h (80 mph), the message center displays VEHICLE NEAR TOP SPEED, along with a chime.
- If the MyKey® speed limiter feature is turned on and the vehicle speed reaches 130 km/h (80 mph), the message center displays VEHICLE AT TOP SPEED, along with a chime.
- If the speed warning is selected at one of the preset values (75, 90, 105 km/h [45, 55, 65 mph]) and the vehicle approaches the preset speed, the message center displays CHECK SPEED DRIVE SAFELY, along with a chime.
- If the traction control always on feature is turned on and the MyKey® driver attempts to disable the traction control, the message center displays ADVANTRAK CANNOT BE DEACTIVATED.
- At 1/8 tank of remaining fuel, the IPC illuminates the low fuel indicator and the message center displays the appropriate DTE , along with a chime.
- MyKey® miles driven by the MyKey® user can be found in the information display.
- The number of MyKey® programmed and administrator keys can be found in the information display.

MyKey® information can be accessed by an administrator key or a MyKey® key.

When an administrator key is in use, the IPC provides:

- MyKey® mileage driven by the MyKey® user can be found in the information tab of the message center.
- The number of MyKey® programmed keys and administrator keys can be found in the system check function of the message center.

Configuration

The IPC contains items that are configurable. Configurable items often include customer preference items, which can also be set

with a scan tool. The remaining configurable items can only be set through the car configuration parameters. REFER TO SECTION 418-01 CONFIGURATION.

Prove-Out

Indicator	Indicator Type	Prove-Out Duration
ABS	Warning	3 seconds
Airbag	Warning	8 seconds
Brake	Warning	3 seconds
Charge	Warning	Engine startup
Fog lamp	Informational	None
Grade assist	Informational	None
High beam	Informational	None
Information	Informational	None
Lights on	Informational	None
Low fuel	Warning	3 seconds
Low oil pressure	Informational	Engine startup
MIL	Warning	Engine startup
Stability/traction control (sliding car icon)	Warning	3 seconds
Stability/traction control disabled (sliding car OFF icon)	Informational	3 seconds
TPMS	Warning	3 seconds
RH / LH turn	Informational	None

The IPC and other modules carry out a display prove-out to verify all module controlled warning/indicator lamps and monitored systems are functioning correctly within the IPC . The IPC and other modules, such as the RCM , provide a timed prove-out of some indicators while other indicators illuminate upon engine start up. When the ignition is cycled to on with the engine off, the indicators illuminate to prove-out according to the following table:

Dealer Test Mode

NOTE: *Some of the displays listed in the table use xxx's to represent a numeric or alpha-numeric value. The value can display the same amount of characters represented by the xxx's, or there can be more/less depending on the type of display. For example: Speedo gauge xxx.x mph may display Speedo gauge 22.5 mph. Note that there were 4 x's in the display description but only 3 digits in the actual display.*

NOTE: *The table lists the displays as they appear when navigating using the down arrow button.*

IPC Display	Description
Test	Initial entry display into the self-test mode.
Gauge Sweep	Carries out the gauge sweep of analog gauge(s), then displays the present gauge value(s).
Telltale and color test	Illuminates all the microprocessor controlled indicators and carries out a test of the color bands in the LCD display area.
LED test	Illuminates the display screen to test the color and pixel displays.

• ECOmode • Gear Shift/Anticipation/Speed/cold engine • x.xx/x.xx/x.xx xxx	Displays the current values for optimum fuel economy.
Chime Test	Provides a single chime tone to test the chime sounder.
• HW • xxxx-xxxxxx- • xxxxx	Provides the current hardware level of the IPC .
• App • xxxx-xxxxxx- • xxxxx	Provides the NVM target ROM level.
• NVM • EEPROM • xx.xx	Provides the NVM EEPROM level.
• Manufacture • xx/xx/xxxx	Displays hexadecimal coding of the final manufacturing test date.
• DTC #xx • xxxx (NO DTC if none are present)	Displays Diagnostic Trouble Codes (DTCs), in hexadecimal format, detected in continuous operation not during self-test.
• Speedo gauge • xxx.x mph • xxx.x km/h	Displays the filtered English and metric speed value being input in tenths of mph or km/h to the IPC .
• Tacho gauge • Tacho xx • Eng (rpm) xxxx	Displays the hexadecimal of the tachometer and the engine rpm value being input.
• Odometer • xxxxxx km • Roll cnt xx	Displays the current input and the hexadecimal rolling count value for the odometer display.
• Fuel % xx • gauge xx • A/D in xx	Displays the hexadecimal fuel level percent, the hexadecimal value for gauge indication and the analog to digital value.
• Fuel flow • xxxx	Displays the fuel used during operation as determined by the IPC .
• Engine temp • gauge xx • Eng T xxx C	Displays the hexadecimal value of the temperature gauge input value and the temperature display in degrees Celsius.
• Battery • xx.x	Displays the current battery voltage as measured on the hot at all times (B+) voltage input.
• Dist to empty • xx km	Displays the DTE .
• AFE	Displays the Average Fuel Economy (AFE).

• xxx km	
• RAFE • xxx km	Displays the rolling Average Fuel Economy (AFE).
• A/D Input xx • xx	Displays the analog to digital inputs.
• Port A • xx	Displays the digital port inputs.
Test	Repeats the test display cycle.

To enter the IPC self-diagnostic mode, begin with the ignition in the OFF mode. Press and hold the LH steering wheel switch OK button. Place the ignition in the ON mode and hold the button until the display indicates Test or Gauge Sweep, usually within 3-5 seconds. Press the up or down arrow buttons to navigate through each of the display windows. To exit the IPC self-test mode, press and hold the OK button for 3-5 seconds or place the ignition in the OFF mode. Each button press advances the viewing window to the next set of items.

Fuel Gauge

The fuel gauge is an analog type gauge. The BCM sends a reference voltage to the fuel level sender. As the fuel level changes, a float actuates the variable resistor on the fuel level sender, raising or lowering the fuel level signal voltage. The BCM monitors the change in voltage and sends the IPC the fuel level status message. The IPC changes the fuel gauge indication with a corresponding movement of the pointer.

The fuel gauge indicates fuel changes quickly while the vehicle is stopped with the engine running. The fuel gauge does not change fuel level indication between key cycles if the vehicle is parked on a slope. The fuel gauge does not change fuel indication by more than 1/8 tank when vehicle ascends or descends a hill.

Tachometer

The tachometer is an analog type gauge. The IPC receives the engine rpm message from the BCM . The BCM receives the engine rpm message from the PCM , which is hardwired to the CKP sensor.

Temperature Gauge

The temperature gauge is an analog type gauge. The IPC receives the engine coolant temperature message from the BCM . The BCM receives the engine coolant temperature message from the PCM , which is hardwired to the ECT sensor.

Speedometer

The BCM receives the vehicle speed message from the ABS module. The ABS module uses tire size stored in the vehicle configuration file along with wheel speed inputs to generate a vehicle speed signal. The BCM provides the vehicle speed message to the IPC .

The IPC provides a tolerance that allows the speed indication to display between 3% below and 7% above the actual vehicle speed. This means that with an actual vehicle speed of 96.6 km/h (60 mph), the speedometer can indicate between 93.7-103.3 km/h (58.2-64.2 mph). Incorrect tire size or tire size configuration could potentially affect the speedometer accuracy.

Odometer

The IPC receives the wheel rotation count message from the BCM . The BCM receives the wheel rotation count from the ABS module. The IPC monitors the wheel count input from the BCM and commands the odometer with a digital display in the message center.

Airbag Warning Indicator

The IPC receives the airbag warning indicator request from the BCM . The BCM receives the airbag indicator request from the

RCM . If a SRS concern is detected, the RCM sets a DTC and the IPC illuminates the airbag warning indicator.

ABS Warning Indicator

The IPC receives the ABS warning indicator request message from the BCM . The BCM receives the ABS warning indicator request message from the ABS module. If a fault condition exists in the ABS , the ABS module sends the ABS warning indicator request message to either flash or illuminate the ABS warning indicator.

Brake Warning Indicator

The IPC uses 3 basic messaged inputs to control the brake warning indicator. The first 2 messages are the parking brake position switch and the brake fluid level switch sent from the BCM . The third is the brake warning indicator request message sent from the ABS module through the BCM .

The parking brake position switch and the brake fluid level switches are hardwired to the BCM through a single signal circuit while using a separate ground to control the input.

The BCM provides reference voltage to both the parking brake position switch and the brake fluid level switch. When the parking brake is applied, the parking brake position switch closes to ground, pulling the parking brake signal circuit low. When a low brake fluid level condition exists, the brake fluid level switch closes, sending the signal circuit low. If the brake fluid level switch is disconnected, the BCM reference voltage sent to the brake fluid level switch remains high and the brake fluid input is interpreted as low by the BCM . When the BCM detects the brake fluid level signal low, the BCM sends the brake fluid level low request to the IPC . When the BCM detects the parking brake signal low, the BCM sends the parking brake warning request to the IPC .

When the ABS module detects a base brake system concern or other ABS -related concerns that affect the EBD function, the ABS module sends the brake warning request to the BCM . The BCM in turn sends the brake warning indicator request to the IPC to illuminate the brake warning indicator.

If the brake fluid level drops and closes the brake fluid level switch, the BCM waits approximately 30 seconds before sending the IPC) the brake fluid level low message to illuminate the brake warning indicator.

Charging System Warning Indicator

The IPC receives the charging system indicator request from the BCM . When a fault is detected in the charging system, the BCM sends the IPC the charging system indicator request to illuminate the charging system warning indicator.

Fog Lamp Indicator

When the fog lamps are turned on, the BCM sends a fog lamp indicator request to the IPC to illuminate the fog lamp indicator.

Grade Assist Indicator

The IPC receives the transmission shift mode message from the BCM . The BCM receives the transmission shift mode message from the TCM . When the grade assist function is selected on, the IPC illuminates the grade assist indicator.

High Beam Indicator

When the high beams are turned on, the BCM sends a headlamp high beam indicator request to the IPC to illuminate the high beam indicator.

ICM Gauges

The ICM gauges (oil temperature, oil pressure and turbo boost) are used on the ST model. The ICM receives the engine oil temperature, oil pressure warning and the power mode messages from the PCM through the BCM over the Medium Speed Controller Area Network (MS-CAN).

Information Indicator

The information indicator illuminates when the IPC displays messages in the message center. Two different colors (red and amber) are used to indicate the nature of the message. If the message is an informational message, the indicator is displayed in amber. If the message is a warning, the indicator is displayed in red. The information indicator is also used in conjunction with the perimeter alarm system as a theft deterrent. When the perimeter alarm is armed, the IPC receives the alarm mode message from the BCM to flash the information indicator.

LH-RH Turn Signal Indicator

When the multifunction switch is in the LH or RH turn position or if the hazard switch is on, a turn indicator command message is sent to the IPC from the BCM . Upon receipt of the applicable turn signal on/off request, the IPC flashes the turn signal indicator on and off.

Lights On Indicator

When the parking lamps are turned on, the BCM sends the position light indication message to the IPC to illuminate the lights on indicator.

Low Fuel Indicator

The IPC uses the fuel level status message sent from the BCM to control the low fuel indicator. When the fuel level is 1/16 tank (approximately 6 L [2 gal]) or less the low fuel indicator illuminates. When the fuel level is above 1/16 tank (approximately 6 L [2 gal]), the low fuel indicator turns off. When a MyKey® programmed key is used, the low fuel indicator illuminates when the fuel level is 1/8 tank (approximately 9 L [2 gal]) or less.

Low Oil Pressure Warning Indicator

The engine oil pressure switch is hardwired to the PCM . The IPC receives the oil pressure warning message from the BCM . The BCM receives the oil pressure warning message from the PCM .

The PCM provides a reference voltage to the engine oil pressure switch when the ignition key is in the RUN position.

With the engine running and low or no oil pressure, the engine oil pressure switch closes. The PCM detects the low reference voltage and the IPC illuminates the low oil pressure warning indicator.

With the engine running and sufficient oil pressure, the engine oil pressure switch opens, sending the reference voltage high. The PCM detects the high reference voltage and the IPC turns off the low oil pressure warning indicator.

MIL

The IPC receives the MIL request message from the BCM . The BCM receives the MIL quest from the PCM .

PRNDL Indicator

The IPC receives the transmission mode display actual and transmission shift mode message from the BCM . The BCM receives the transmission mode display actual and transmission shift mode message from the TCM . The IPC also uses a park position detect switch (part of the selector lever) input to signal the IPC that the shift lever is fully seated in the PARK (P) position. The IPC compares the park position detect switch input with the transmission mode display message sent from the TCM .

The IPC provides a reference voltage to the park position detect switch. When the gearshift is in PARK (P), the brake shift indicator opens the circuit to ground and the IPC detects the high reference voltage. When the selector lever is moved out of PARK (P), the park position detect switch closes to ground, pulling the reference voltage low to the IPC .

The select shift display indicates to the driver which gear is currently selected when the transmission is in the select shift mode. When the transmission is in select shift manual mode, the gear number is displayed in the select shift display area next to the PRNDL display. The IPC receives the transmission gear display actual message from the BCM . The BCM receives the transmission gear display actual message from the TCM .

Safety Belt Warning Indicator

The RCM monitors the safety belt position through the safety belt buckle switch. The RCM provides a safety belt status message to the BCM . The BCM provides the safety belt status message to the IPC to either turn on or turn off the safety belt warning indicator.

Stability-Traction Control Indicator (Sliding Car Icon)

The IPC receives the stability/traction control indication message from the BCM . The BCM receives the stability/traction control indication message from the ABS module. The stability-traction control indicator (sliding car icon) flashes when the vehicle stability-traction control is in active mode, and illuminates continuously if a fault condition exists in the stability-traction control system. The IPC monitors the stability/traction control indication message from the BCM module and either flashes the stability-traction control indicator (sliding car icon) or illuminates it steady depending on the condition.

Stability-Traction Control Disabled Indicator (Sliding Car OFF Icon)

The stability-traction control is configured on/off through the message center on the base Focus. On the Focus ST, the stability-traction control is configured on/off through a separate hardwired switch to the ABS module. When the driver enables or disables the stability-traction control system, the ABS module sends the stability/traction control disabled indicator request message to the BCM . The BCM sends the stability/traction control disabled indicator request message to the IPC to illuminate or turn off the stability-traction control disabled indicator (sliding car OFF icon) based upon the system state.

When a MyKey® administrator has set the AdvanceTrac® On feature to always on and a MyKey® programmed key is in use, the stability-traction control system cannot be disabled. The menu selection in the message center used to disable the stability-traction control system does not display when a MyKey® is in use but remains active for the MyKey® administrator to select the AdvanceTrac always on feature off. The stability-traction control indicator still functions normally to indicate a stability-traction control system fault and a stability-traction control active event.

TPMS Warning Indicator

The IPC receives the TPMS data from the BCM . If the BCM determines that the tire pressure has exceeded the low tire pressure limits, the tire pressure indication message is sent to the IPC to illuminate the TPMS warning indicator. If a TPMS fault condition exists, the BCM sends the tire pressure indication message to the IPC to flash the TPMS warning indicator.

Component Description

Brake Fluid Level Switch

The brake fluid level switch is a reed type switch that is mounted in the master cylinder reservoir. The brake fluid level switch is hardwired to the BCM through a signal circuit and grounded through a separate body ground circuit. The BCM provides a reference voltage to the brake fluid level switch. When the brake fluid level is low, the float drops, allowing the reed switch to open, sending the reference voltage high. When the brake fluid level is high, the float lifts, closing the switch contacts, providing a ground and pulling the reference voltage low on the signal circuit to the BCM .

Fuel Level Sender

The fuel level sender is mounted to the fuel pump assembly. As the fuel level changes, the float rises or falls with the fuel level moving the sweep arm across the resistor wires. This movement either increases or decreases the resistance through the unit. The fuel level sensor resistance ranges between 464 ohms ± 4 ohms at empty (E) and 51 ohms ± 2 ohms at full (F). When the fuel level is low, the fuel level sensor resistance is high. When the fuel level is high, the fuel level resistance is low.

The fuel pump assembly is hardwired to the BCM through separate signal and return circuits. The fuel level return circuits are grounded internally in the BCM . The BCM provides a reference voltage on the fuel level signal circuit. As the fuel level changes, the change in resistance raises or lowers the fuel level signal voltage depending on the resistance of the fuel level sender.

IPC

The IPC provides the driver with a system status and alerts the driver when certain conditions exist in the vehicle. The IPC requires Programmable Module Installation (PMI) when the IPC is replaced.

Low Washer Fluid Level Sensor

The low washer fluid level sensor is hardwired to the BCM through a single signal circuit and hardwired to ground through a separate ground circuit. The BCM provides a reference voltage to the low washer fluid level sensor. When the washer fluid level is low, the low washer fluid level sensor closes to ground, pulling the reference voltage low. When the washer fluid level is high, the low washer fluid level sensor opens to ground, sending the reference voltage high.

Park Position Detect Switch

The park position detect switch is hardwired to the IPC through a single signal circuit. The park position detect switch is hardwired to a separate ground circuit through the selector lever. The IPC provides a reference voltage to the park position detect switch. When the selector lever is in PARK (P), the park position detect switch opens to ground, sending the reference voltage high. When the selector lever is moved out of PARK (P), the park position detect switch routes the reference voltage to ground, pulling the circuit low to the IPC .

Parking Brake Position Switch

The parking brake position switch is hardwired to the BCM through a signal and ground circuit. The BCM provides a reference voltage on the signal circuit. The parking brake position switch is grounded externally through a separate circuit. When the parking brake is not applied, the parking brake position switch is open. When the parking brake is applied, the parking brake position switch closes, pulling the reference voltage low.

Safety Belt Buckle Sensor

The safety belt buckles contain integrated sensors that are Hall-effect switches. The safety belt buckle sensors are serviced as one component with the safety belt buckle.

Copyright © Ford Motor Company

Message Center - Overview

Overview

The message center is an integral part of the IPC that receives and acts upon much of the same information that is input and used to operate the IPC gauges, informational indicators, and warning indicators. The message center uses both hardwired and the network based inputs to receive information. The message center functionality is controlled through the message center switch (part of the LH steering wheel switch).

Whenever conditions are present that require a warning message, the message center replaces the last selected display with the new warning display. Once the message is reset or cleared, the message center returns to the last selected display. If multiple warnings are present, the message center cycles through the warnings and displays each warning for approximately 4 seconds. Warning messages are also generally associated with other observable outputs of the IPC (gauges, informational indicators and message center indicators). For example, when the BCM detects a low brake fluid condition, the BCM sends the IPC a request to illuminate the brake warning indicator and a request to display the LOW BRAKE FLUID message in the message center. This allows the message center to be a more informative supplement to the IPC gauges and indicators.

The system warning messages alert the operator to possible concerns or malfunctions in the vehicle operating systems. System warning messages can be stand-alone messages, but are often associated with another form of indication, such as a gauge or an indicator. The message center displays the last selected feature if there are no additional warning messages. Once a warning message has been displayed, the message must be acknowledged to allow full functionality of the message center by pressing the OK button to acknowledge and clear the warning message. For a complete list of warning messages displayed, refer to the message center section of the Owner's Literature.

Copyright © Ford Motor Company

Message Center - System Operation and Component Description

System Operation

System Diagram

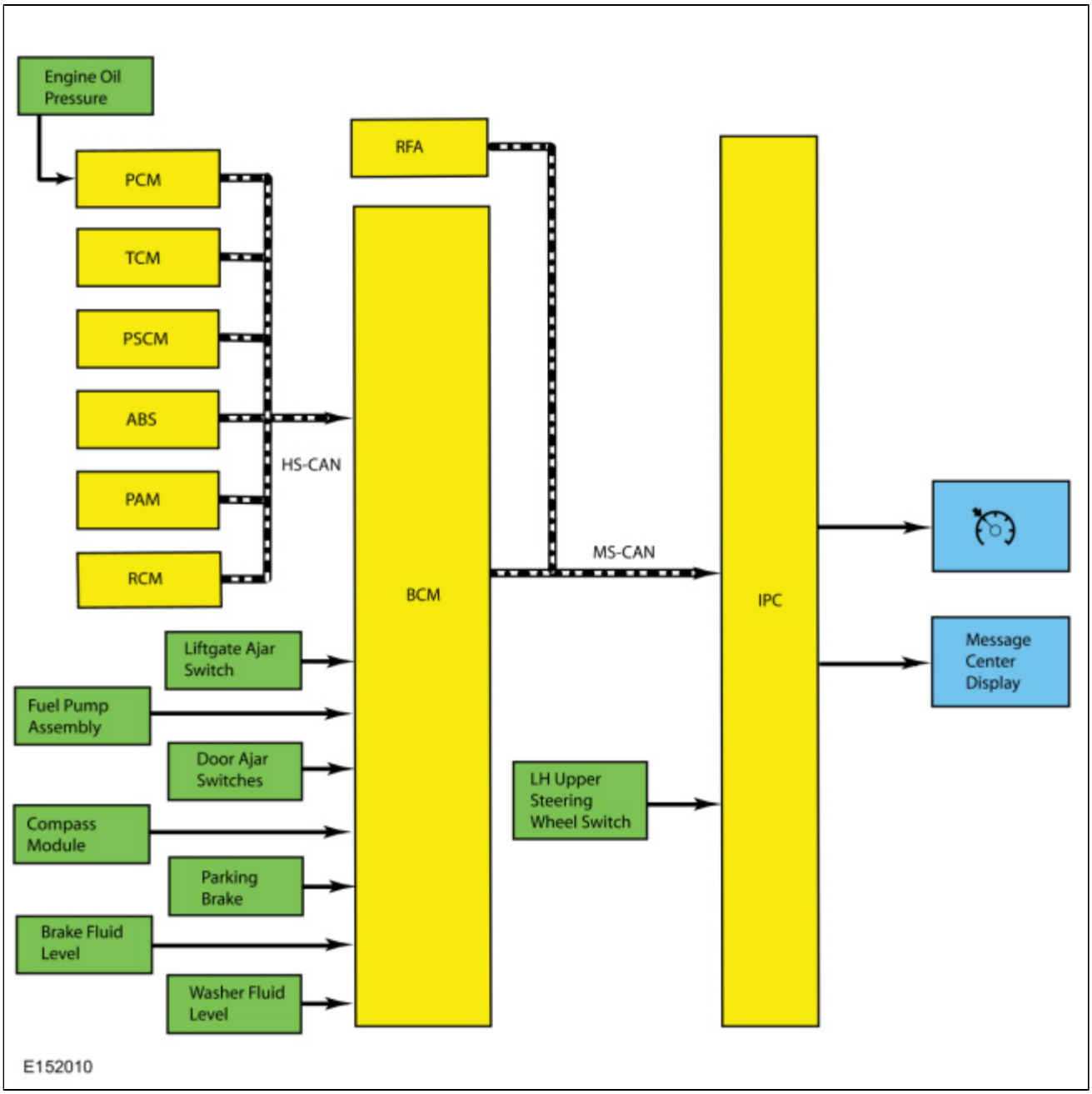

Network Message Chart

Module Network Input Messages - IPC

Broadcast Message	Originating Module	Message Purpose

Air ambient temperature filtered actual	PCM	Input used to provide the outside air temperature display.
Brake fluid level low	BCM	Input used to display the low brake fluid level warning message.
Brake warning request	BCM	Input used to display the brake system malfunction warning message.
Bulb failure indication	BCM	Input used to display a bulb failure message.
Compass display data	Compass module	Input used to provide the compass display.
Cruise control status	PCM	Input used to control the cruise control message center indicator.
Door status	BCM	Input used to display the individual door ajar warning messages.
Econometer	PCM	Input used for the calculation of the instantaneous fuel economy and the Average Fuel Economy (AFE) displays.
EPAS display	PSCM	Input used to display the service power steering message.
Engine coolant temperature	PCM	Input used to display the engine over-temperature message.
Engine MIL request	PCM	Input used to display the engine malfunction message.
Engine service indication	PCM	Input used to provide the change oil service message display.
Hill start assist status	ABS module	Input used to provide the hill start assist message display.
Ignition status	BCM	Ignition RUN, START and accessory states required for the IPC operating modes and fault reporting.
Intelligent access indication	BCM	Input used to display the press brake to start message Intelligent Access (IA) only).
Key warning indication	BCM	Used to display the key not inside vehicle message (Intelligent Access (IA) only).
Parking aid active	Parking Aid Module (PAM)	Input used to display the parking aid malfunction and service required messages.
Parking aid disable status	Parking Aid Module (PAM)	Input used to display the parking aid cannot be disabled message for MyKey®.
Parking brake warning request	BCM	Input used to display the parking brake applied message.
PATS indication	BCM	Input used to display the immobilizer active message for the PATS .
Passive key status	RFA module	Used to display the passive key left inside vehicle message and the key not in vehicle message (Intelligent Access (IA) only).
Power system status	BCM	Input used to display the charging system warning messages.
Tire pressure indication	BCM	Input used to display the TPMS malfunction warning messages and the TPMS tire sensor training messages.
Transport mode	BCM	Input used to provide the vehicle in transport mode display.
Transmission gear display actual	TCM	Input used to display the turn ignition off message (Intelligent Access (IA) only).
Transmission message request	RFA	Input used to display transmission related messages and the transmission not in park message (Intelligent Access (IA) only).
Transmission service required	TCM	Input used to display the transmission malfunction messages.
Transmission upshift indication request	PCM	Input used to control the upshift message center indicator.
Washer fluid level low	BCM	Input used to display the low washer fluid message.
Wheel rotation count front	ABS module	Input used for the calculation of the instantaneous fuel economy and the Average Fuel Economy (AFE) displays.

Oil Change Minder

The message center provides an oil change minder to inform the driver that an oil change is required. The duration of the interval between oil changes is calculated in the PCM and varies due to driving conditions. The PCM stores the oil life data in non-volatile RAM. If the battery is dead, the PCM is disconnected, reflashed or the Keep Alive Memory (KAM) is reset, the oil life settings remain in the PCM and display the remaining oil life once the vehicle is restored to normal operation. The PCM assumes a base mileage of 16,090 km (10,000 mi) or 1 year for normal driving. However, this number is adjusted down for conditions such as high engine temperature, high engine rpm, use of flex fuel and possibly low oil level. The PCM calculates and provides an engine service indication message to the BCM. The BCM then provides the engine service indication message to the IPC.

Compass Display

The vehicle heading is displayed in the message center as a 1 or 2 character display that indicates the current direction of the vehicle (N, NE, E, SE, S, SW, W, or NW). The compass continuously re-calibrates due to changes in the earth's magnetic field and remains accurate during most driving conditions.

The compass signal originates with the compass module. Compass data is transmitted to the BCM through a LIN line.

Outside Air Temperature Display

The ambient air temperature sensor is hardwired to the PCM through separate input and return circuits. The PCM provides a reference voltage to the ambient air temperature sensor and monitors the change in voltage resulting from changes in resistance as determined by outside air temperature. The PCM filters the ambient air temperature input and sends the BCM the air ambient temperature filtered message. The BCM sends the air ambient temperature filtered message to the IPC.

The PCM is programmed to update the messaged outside temperature data at different rates depending on several criteria to prevent false temperature displays due to a condition known as heat soaking. Heat soaking is where the outside air temperature is hotter in the location of the ambient air temperature sensor than the actual outside air temperature.

When the sensed outside temperature rises, the display updates slowly at varying rates based on vehicle speed. When the sensed outside temperature drops, the display updates more quickly basically following the drop experienced by the ambient air temperature sensor.

Cruise Control Message Center Indicator

The IPC receives the cruise control status message from the BCM. The BCM receives the cruise control status message from the PCM.

Shift To Park Message Display

The IPC displays a shift to park message when the vehicle is turned off with the shifter out of the PARK (P) position on vehicles with Intelligent Access (IA). The IPC monitors the park position detect switch input through the park detect signal, or input circuit. The IPC provides the transmission park status to the BCM. When the selector lever is out of the PARK (P) position, the park detect switch closes to ground and the IPC detects the reference voltage pulled low. The IPC sends a park status message to the BCM, indicating that the selector lever is not in PARK (P). The IPC monitors the ignition state and when the ignition is OFF with the selector lever out of PARK (P), the IPC displays the shift to park message.

Upshift Message Center Indicator

The upshift indicator informs the driver of shift points that provide the highest fuel economy. The upshift indicator is controlled by the IPC based upon an upshift indicator request sent from the PCM through the BCM.

Alarm System Displays

The IPC provides displays that indicate a PATS key read failure or PATS failure. The IPC receives the PATS indication message from the BCM.

Brake System Displays

The IPC provides brake system displays for low brake fluid level, parking brake applied and ABS concerns that display along with the brake warning indicator operation.

When the parking brake is applied, the BCM sends the parking brake warning request message to the IPC to illuminate the brake warning indicator and turn on the parking brake applied message in the message center.

When a low brake fluid level condition exists, the BCM sends the brake fluid level low message to the IPC to illuminate the brake warning indicator and turn on the brake fluid level low message in the message center.

When an ABS concern exists, the ABS module sends the brake warning request message to the BCM . The BCM in turn sends the brake warning request message to the IPC to illuminate the ABS warning indictor, brake warning indicator and to turn on the traction control off message in the message center.

Stability-Traction Control System Displays

The IPC provides a stability-traction control system message center message to indicate that the traction control is disabled. When certain conditions exist such as wheel speed sensor failure, control valve failures, communication failures or low battery voltage in the ABS , the ABS module sends the brake warning request message to the BCM . The BCM in turn sends the brake warning request message to the IPC to illuminate the ABS warning indictor, brake warning indicator, stability/traction control indicator (sliding car icon), stability/traction control disabled (sliding car OFF icon) and turns on the traction control off message in the message center.

Charging System Displays

The IPC provides message center displays indicating the status of the charging system. The IPC receives the power system status message from the BCM to display the over-voltage and low battery voltage message center warnings.

Engine Over-Temperature Displays

The IPC provides a message center display to indicate the engine is over-temperature. The IPC receives the engine coolant temperature message from the BCM to move the temperature gauge to full hot and display the engine over-temperature message center warning. The BCM receives the engine coolant temperature message from the PCM .

Electronic Throttle Control (ETC) or Engine Malfunction Displays

The IPC provides a message center display to indicate there is an engine concern. The IPC receives the engine Malfunction Indicator Lamp (MIL) request message from the BCM to illuminate the Malfunction Indicator Lamp (MIL) and display the engine malfunction message center warning. The BCM receives the engine Malfunction Indicator Lamp (MIL) request message from the PCM .

Oil Service Displays

The IPC provides a message center display to indicate an engine oil change is due. The IPC receives the engine service indication message from the BCM . The BCM receives the engine service indication message from the PCM to display the engine oil change due message.

Electronic Power Assist Steering (EPAS) System Displays

The IPC provides a message center display to indicate there is an Electronic Power Assist Steering (EPAS) system concern. The IPC receives the Electronic Power Assist Steering (EPAS) display message from the BCM to display the steering malfunction message center warning. The BCM receives the Electronic Power Assist Steering (EPAS) display message from the Electronic Power Assist Steering (EPAS) module.

Hill Start Assist System Displays

The IPC provides a message center display to indicate the status of the hill start assist system. The IPC receives the hill start assist status message from the BCM . The BCM receives the hill start assist status message from the ABS module.

Intelligent Access (IA) System Displays

The IPC provides message center displays to indicate the status of the Intelligent Access (IA) system. The BCM receives the passive key status message from the RFA module. The BCM receives the transmission gear display actual message and the transmission message request (transmission not in park) from the TCM . The IPC receives the passive key status, key warning indication, transmission gear display actual and intelligent access indication messages from the BCM .

Exterior Lighting Bulb Failure Displays

The IPC provides message center displays to indicate the status of exterior lighting bulbs. The BCM monitors the status of the exterior lighting bulbs and sends a bulb failure message to the IPC .

Door Ajar Indication Displays

The IPC provides message center displays to indicate the status of the doors, liftgate/luggage compartment lid and hood. The BCM monitors each of the ajar inputs and sends a door status message to the IPC to display the specific ajar status.

Parking Aid System Displays

The IPC provides message center displays indicating the status of the parking aid system. The IPC receives the parking aid active message from the BCM . The BCM receives the parking aid active message from the Parking Aid Module (PAM).

Restraints Indication Displays

The IPC provides a display to indicate an internal air bag indication failure. If the IPC detects a failure in the air bag warning indicator after receiving the air bag indicator request from the Restraints Control Module (RCM) through the BCM , the message center displays the air bag malfunction warning message.

TPMS Displays

The IPC provides message center displays to indicate the TPMS sensor training status or a malfunction in the TPMS . The IPC receives the tire pressure indication message from the BCM .

Transmission Malfunction Displays

The IPC provides message center displays to indicate transmission malfunctions. The IPC receives the transmission message request from the BCM . The BCM receives the transmission message request from the TCM .

MyKey® Function Displays

The IPC provides message center displays for the MyKey® feature.

Low Washer Fluid Level Displays

The IPC displays a message indicating the washer fluid level is low. The low washer fluid level sensor is hardwired to the BCM . The IPC receives the washer fluid level low message from the BCM .

Component Description

Steering Wheel Switch - Message Center

The message center switch is the upper Left Hand (LH) steering wheel switch and is comprised of 5 buttons. The message center switch uses different resistance values associated with each specific button. The IPC sends out a reference voltage to the upper Left Hand (LH) steering wheel switch on the input circuit and monitors the voltage drops. The voltage drop varies depending upon the resistance of the specific button pressed, providing indication to the IPC which switch is pressed.

Low Washer Fluid Level Sensor

The low washer fluid sensor is hardwired to the BCM through a single signal wire and is grounded to a body ground through a separate circuit. The BCM provides a battery reference voltage to the low washer fluid level sensor. When the washer fluid level is low, the sensor opens to ground sending the reference voltage high. When the washer fluid level is high, the sensor increases resistance on the circuit to the BCM sending the reference voltage low.

Compass Module

The compass module operates by monitoring the vehicle position relative to the earth's magnetic north. The magnetic fields generated by the earth's north and south poles are divided into zones that differ from each other with respect to how the magnetic fields appear. Most geographic areas (zones) have a magnetic north compass point that varies slightly from the northerly direction on maps. The compass module utilizes a voltage supply circuit, ground circuit and a communication circuit to provide the compass heading data for display.

Factors within the vehicle can affect the ability of the compass module to accurately read the magnetic north. Calibrating the compass allows the compass module to compensate for these factors. Driving near power lines, or driving in the area of large iron

or steel structures can temporarily change the compass heading. If the compass remains inaccurate after driving near such objects, calibrate the compass. Variations are generally 4 degrees between adjacent zones, and becomes noticeable as the vehicle crosses multiple zones. A correct zone setting eliminates the error.

Copyright © Ford Motor Company

Warning Chimes - Overview

Overview

The warning chimes provide the driver with audible warnings that act as reminders and supplemental alerts to visual IPC indications (gauges, indicators and message center warnings). The IPC controls all warning chimes based on messages received from external modules.

The warning chimes are an integral part of the IPC that receives and acts upon much of the same information that is used to operate the IPC gauges, informational indicators, warning indicators and message center warnings. The IPC prioritizes the chimes according to a preset hierarchy programmed into the IPC software. When more than one chime request is received by the IPC , the most important chime sounds. If a lower priority chime is currently sounding, the higher priority request takes over and replaces the lower priority chime.

Copyright © Ford Motor Company

Warning Chimes - System Operation and Component Description

System Operation

System Diagram

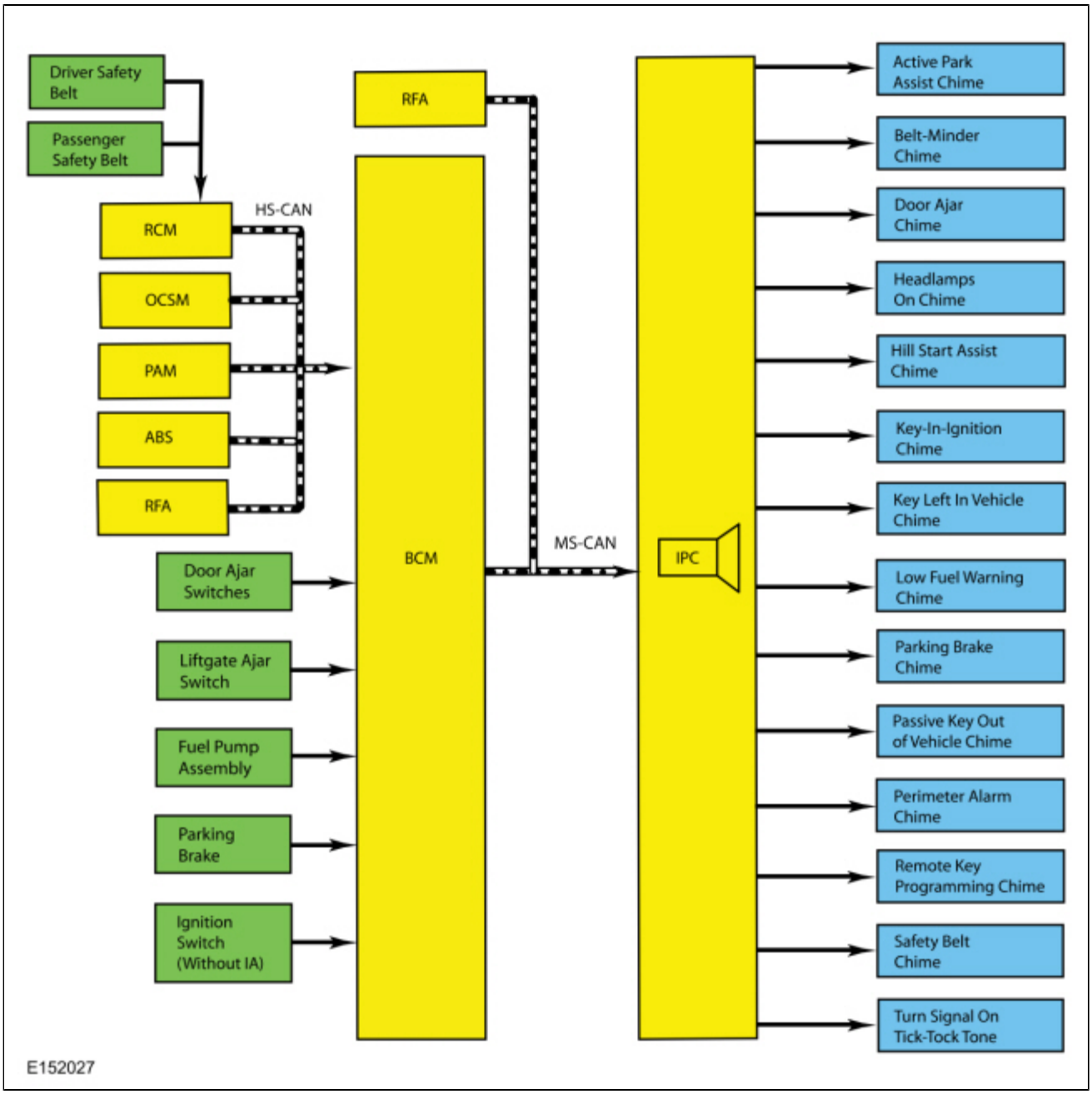

Network Message Chart

Module Network Input Messages - Instrument Panel Cluster (IPC)

Broadcast Message	Originating Module	Message Purpose

Alarm/key programming chime request	BCM	Input used for the keyless key programming chime.
Alarm mode	BCM	Input used for the perimeter alarm chime.
Hill start assist chime	ABS module	Input used for the hill start assist chime.
Ignition status	BCM	Ignition RUN, START and accessory states required for the IPC operating modes and fault reporting.
Parking brake warning request	BCM	Input used for the parking brake warning chime.
Parking aid active	Parking Aid Module (PAM)	Input used for the parking aid chime.
Passenger detect status	OCSM	Input used for the Belt-Minder® chime.
Passive key status	BCM	Input used for the key left in vehicle chime.
Passive key out of vehicle	BCM	Input used for the passive key not inside of the vehicle chime.
Position light indication	BCM	Input used for the headlamps on chime.
Power mode	BCM	Input used for the key-in-ignition warning chime.
Safety belt status	RCM	Input used for the safety belt component of the Belt-Minder® chime.
Turn indicator command	BCM	Input used for the turn signals on chime tone (tick-tock).
Vehicle speed	ABS module	Input used for the vehicle speed component of the Belt-Minder® chime, the passive key out of the vehicle chime and the door ajar chime.

Warning Chime Characteristics

The warning chimes use volume, chime frequency, length of time the chime sounds, decay of the chime tone and the number of chime tones to identify which chime is sounding. Most warning chimes have unique characteristics, however, there are chimes that do sound the same. The chime characteristics are defined by the different chime types:

- Information
- Soft-warning
- Hard-warning
- Tick-tock (on-off)

Active Park Assist Warning Chime

The park assist warning chime is used to inform the driver that a parking spot is found. The IPC allows the driver to enable or disable the active park assist warning chime through the message center menu.

Belt-Minder® Feature

NOTE: *Whenever the vehicle is operated using MyKey®, the IPC enables the Belt-Minder®.*

The Belt-Minder® is configurable.
Refer to: Safety Belt Minder Deactivating/Activating (413-01 Instrumentation, Message Center and Warning Chimes, General Procedures).

The Belt-Minder® feature supplements the current safety belt warning function and is enabled after the current safety belt warning is complete by reminding the driver that the driver or front passenger safety belt is unbuckled. The Belt-Minder® intermittently sounding a chime and simultaneously illuminates the safety belt warning indicator in the IPC . The Belt-Minder® begins once the current safety belt warning has ended and the vehicle speed has exceeded 9.7 kmh (6 mph) with the driver or passenger front safety belt unbuckled. While activated, the Belt-Minder® chime provides a series of 6 chimes/safety belt warning indicator flash sequences, which consist of a 1 second chime tone and safety belt warning indicator on/off state.

If the vehicle speed drops below 4.8 kmh (3 mph) once the Belt-Minder® chime has activated, the chime turns off and the safety belt warning indicator remains on. When the vehicle speed exceeds 9.7 kmh (6 mph) again, the Belt-Minder® chime resumes.

The IPC controls the Belt-Minder® and receives the vehicle speed and safety belt status messages from the BCM. The BCM receives the vehicle speed message from the ABS module and the safety belt status message from the RCM.

When MyKey® is in use, the driver cannot configure the Belt-Minder® off. Once the Belt-Minder® is activated, the Belt-Minder® continues to chime periodically (does not time out after 5 minutes) and the audio system is muted until the driver and passenger safety belts are fastened.

Door Ajar Warning Chime

The door ajar warning chime warns that a door is ajar. The IPC receives the driver door, passenger door, driver rear door, passenger rear door ajar, liftgate/luggage compartment and hood ajar status from the BCM. When a door, liftgate/luggage compartment or hood becomes ajar while the ignition is in RUN with vehicle speed greater than 3 kmh (1.9 mph), the IPC turns on the appropriate door ajar warning message and sounds a repetitive chime until the door, liftgate/luggage compartment or hood is closed.

Headlamps On Warning Chime

The headlamps on warning chime warns that the headlamps are on when the driver door is ajar and the key is removed from the ignition lock cylinder (without Intelligent Access (IA)) or when the ignition is OFF (with Intelligent Access (IA)). The IPC receives the position light indication message from the BCM. The headlamps on warning chime sounds if the driver door is ajar, the headlamp switch is in the PARK or HEADLAMP position and the ignition is OFF (key out without Intelligent Access (IA)). The headlamps on chime sounds a repetitive chime tone.

Key-In-Ignition Warning Chime

The key-in-ignition warning chime warns that the key is still in the ignition lock cylinder when the driver door is ajar (without Intelligent Access (IA)) or that the ignition is in the RUN mode with the engine off (Intelligent Access (IA) only). The IPC receives the power mode status message from the BCM. The key-in-ignition warning chime sounds when the driver door is ajar, the key is in the ignition lock cylinder and in the off/lock or accessory position (without Intelligent Access (IA)) or when the ignition is in the RUN mode with the engine off (Intelligent Access (IA) only).

Perimeter Alarm Warning Chime

The perimeter alarm warning chime alerts the driver that the perimeter alarm is armed when the driver door is unlocked before disarming the alarm. The warning chime sounds for 12 seconds when the driver door is opened, and turns off when the perimeter alarm is disarmed (either by using the key fob or turning the key to the ON position). After the 12 second warning chime duration, the warning chime stops sounding and the perimeter alarm activates, sounding the horn and flashing the turn signal lamps. The IPC receives the alarm mode message from the BCM.

Safety Belt Warning Chime

The safety belt warning chime warns that the safety belt is not fastened. The safety belt warning chime sounds a repetitive chime tone for 6 seconds when the driver safety belt is not fastened and the ignition is transitioned from OFF or ACC to ON or START. The safety belt warning chime stops sounding when the safety belt is fastened, when the ignition is transitioned from ON or START to OFF or accessory, or when the chime has sounded for 6 seconds. The IPC receives the safety belt status messages from the BCM.

Turn Signal On Chime Tone

The IPC provides a repetitive tick-tock along with visual RH / LH turn indicator to inform the driver the turn signal or hazard lamp function is on. The IPC receives the turn indicator command from the BCM.

Parking Brake Warning Chime

The parking brake warning chime warns that the parking brake is engaged when the vehicle is in motion. The parking brake warning chime sounds if the ignition is in RUN, the parking brake is engaged, and the vehicle speed is greater than 10 kmh (6.2 mph). The parking brake warning chime stops sounding and resets if the parking brake is released, the ignition is not in the RUN mode, the vehicle speed is less than 10 kmh (6.2 mph), or after 90 seconds from the time the chime is activated. The IPC receives the parking brake warning request from the BCM.

Remote Key Programming Confirmation Chime

The perimeter alarm programming confirmation chime sounds to inform the driver that the remote key programming mode has been entered successfully. The IPC receives the alarm/key programming chime request from the BCM .

Key Left In Vehicle Chime - with Intelligent Access (IA)

The key left in vehicle chime is used to indicate to the driver that the passive key is in the luggage compartment. The IPC receives the passive key status message from the BCM .

Passive Key Out Of Vehicle Chime - with Intelligent Access (IA)

The passive key out of the vehicle chime warns that the passive key transponder is not inside the vehicle. The IPC requires 2 messages to control the passive key out of vehicle chime. The IPC receives the passive key status message from the RFA module and the vehicle speed message from the BCM . When the IPC receives the passive key status message indicating that the passive key is out of the vehicle, the IPC sounds a chime tone and displays a message in the message center.

Hill Start Assist Chime

The hill start assist chime provides a chime to draw the driver to the message center to view the status of the hill start assist system. The IPC receives the hill start assist chime message from the BCM . The BCM receives the hill start assist chime message from the ABS module.

Headlamp Exit Delay Chime

The headlamp exit delay chime is a confirmation chime that informs the driver that the headlamp exit delay (home safe lighting) feature has been enabled. The IPC receives the home safe light indication request from the BCM .

Low Fuel Warning Chime

The low fuel warning chime sounds to draw the driver's attention to the low fuel warning indicator operation and inform the driver of a low fuel condition. The chime sounds when the low fuel warning indicator illuminates.

Copyright © Ford Motor Company

Instrumentation, Message Center and Warning Chimes

DTC Chart: IPC

Diagnostics in this manual assume a certain skill level and knowledge of Ford-specific diagnostic practices.
REFER to: Diagnostic Methods (100-00 General Information, Description and Operation).

DTC Chart - IPC

DTC	Description	Action
B1A14:11	RCM Warning Lamp: Circuit Short To Ground	INSTALL a new IPC . REFER to: Instrument Panel Cluster (IPC) (413-01 Instrumentation, Message Center and Warning Chimes, Removal and Installation). DIAGNOSE all RCM Diagnostic Trouble Codes (DTCs). REFER to: Airbag Supplemental Restraint System (SRS) - Vehicles Built From: 11-June-2012 (501-20B Supplemental Restraint System, Diagnosis and Testing).
B1A14:13	RCM Warning Lamp: Circuit Open	INSTALL a new IPC . REFER to: Instrument Panel Cluster (IPC) (413-01 Instrumentation, Message Center and Warning Chimes, Removal and Installation). DIAGNOSE all RCM Diagnostic Trouble Codes (DTCs). REFER to: Airbag Supplemental Restraint System (SRS) - Vehicles Built From: 11-June-2012 (501-20B Supplemental Restraint System, Diagnosis and Testing).
B1A84:41	Car Configuration Data: General Checksum Failure	This DTC may set after replacement of the IPC . To CLEAR this DTC CARRY OUT the car configuration procedure listed for BCM replacement. REFER to the Professional Technician Society (PTS) website, run OASIS for any Focus vehicle, select the Service Tips Tab and use the link under the job aids heading labeled " BCM programming.
B1A84:51	Car Configuration Data: Not Programmed	This DTC may set after replacement of the IPC . To CLEAR this DTC CARRY OUT the car configuration procedure listed for BCM replacement. REFER to the Professional Technician Society (PTS) website, run OASIS for any Focus vehicle, select the Service Tips Tab and use the link under the job aids heading labeled " BCM programming.
C1D22:11	Steering Wheel Switch Right Module: Circuit Short To Ground	REFER to: Information and Entertainment System (415-00A Information and Entertainment System - General Information - Vehicles With: AM/FM/CD, Diagnosis and Testing). REFER to: Information and Entertainment System (415-00B Information and Entertainment System - General Information - Vehicles With: AM/FM/CD/SYNC, Diagnosis and Testing). REFER to: Information and Entertainment System (415-00C Information and Entertainment System - General Information - Vehicles With: SYNC/Sony AM/FM/CD, Diagnosis and Testing).
C1D22:23	Steering Wheel Switch Right Module: Circuit Open	REFER to: Information and Entertainment System (415-00A Information and Entertainment System - General Information - Vehicles With: AM/FM/CD, Diagnosis and Testing). REFER to: Information and Entertainment System (415-00B Information and Entertainment System - General Information - Vehicles With: AM/FM/CD/SYNC, Diagnosis and Testing). REFER to: Information and Entertainment System (415-00C Information and Entertainment System - General Information - Vehicles With: SYNC/Sony AM/FM/CD,

		Diagnosis and Testing).
C2003:11	Steering Wheel Switch Left Module: Circuit Short To Ground	GO to Pinpoint Test U
C2003:23	Steering Wheel Switch Left Module: Circuit Open	GO to Pinpoint Test U
P0850:62	Park/Neutral Switch Input Circuit: Signal Compare Failure	GO to Pinpoint Test AW
P1607:81	MIL Output Circuit: Invalid Serial Data Received	This DTC sets when the IPC receives an invalid MIL request message for more than 5 seconds. CLEAR the DTC . REPEAT the self-test. If DTC P1607:81 returns, INSTALL a new PCM . REFER to: Powertrain Control Module (PCM) (303-14A Electronic Engine Controls - 2.0L Duratec-HE (125kW/170PS) - MI4, Removal and Installation).
P1607:82	MIL Output Circuit: Alive/Sequence Counter Incorrect/Not Updated	• This DTC sets when the IPC does not receive an updated MIL request message for more than 5 seconds. CLEAR the DTC . REPEAT the self-test. • If DTC U0100:00 is also present, GO to Pinpoint Test AC • If DTC P1607:82 returns without DTC U0100:00, INSTALL a new PCM . REFER to: Powertrain Control Module (PCM) (303-14A Electronic Engine Controls - 2.0L Duratec-HE (125kW/170PS) - MI4, Removal and Installation).
P1607:87	MIL Output Circuit: Missing Message	• This DTC sets when the IPC does not receive updated MIL request message for more than 5 seconds. CLEAR the DTC . REPEAT the self-test. • If DTC U0100:00 is also present, GO to Pinpoint Test AC • If DTC P1607:87 returns without DTC U0100:00, INSTALL a new PCM . REFER to: Powertrain Control Module (PCM) (303-14A Electronic Engine Controls - 2.0L Duratec-HE (125kW/170PS) - MI4, Removal and Installation).
P1933:64	Fuel Level Signal: Signal Plausibility Failure	GO to Pinpoint Test B
U0073:88	Control Module Communication Bus "A" Off: Bus Off	REFER to: Communications Network (418-00 Module Communications Network, Diagnosis and Testing).
U0074:88	Control Module Communication Bus "B" Off: Bus Off	REFER to: Communications Network (418-00 Module Communications Network, Diagnosis and Testing).
U0100:00	Lost Communication With ECM/PCM "A": No Sub Type Information	GO to Pinpoint Test AC
U0101:00	Lost Communication With TCM: No Sub Type Information	GO to Pinpoint Test AD
U0121:00	Lost Communication With Anti-Lock Brake System (ABS) Control Module: No Sub Type Information	GO to Pinpoint Test AE
U0131:00	Lost Communication With Power Steering Control Module: No Sub Type Information	GO to Pinpoint Test AS
U0140:00	Lost Communication With Body Control Module: No Sub Type Information	GO to Pinpoint Test AF

U0151:00	Lost Communication With Restraints Control Module: No Sub Type Information	GO to Pinpoint Test AG
U0159:00	Lost Communication With Parking Assist Control Module "A": No Sub Type Information	GO to Pinpoint Test AH
U0164:00	Lost Communication With HVAC Control Module: No Sub Type Information	GO to Pinpoint Test AQ
U0184:00	Lost Communication With Radio: No Sub Type Information	GO to Pinpoint Test AU
U0199:00	Lost Communication With "Door Control Module A": No Sub Type Information	GO to Pinpoint Test AP
U0200:00	Lost Communication With "Door Control Module B": No Sub Type Information	GO to Pinpoint Test AR
U0214:00	Lost Communication With Remote Function Actuator: No Sub Type Information	GO to Pinpoint Test AT
U0257:00	Lost Communication With Front Controls/Display Interface Module: No Sub Type Information	GO to Pinpoint Test AV
U0264:00	Lost Communication With Camera Module-Rear: No Sub Type Information	GO to Pinpoint Test AO
U0401:64	Invalid Data Received From ECM/PCM A: Signal Plausibility Failure	• This DTC sets when a message is temporarily undefined for more than 2 seconds from the PCM for the ambient temperature, fuel economy, engine coolant temperature or engine rpm data. • CLEAR the DTC . REPEAT the self-test. • If DTC U0401:64 returns, RETRIEVE and REPAIR all Diagnostic Trouble Codes (DTCs) set in the PCM . REFER to: Electronic Engine Controls (303-14A Electronic Engine Controls - 2.0L Duratec-HE (125kW/170PS) - MI4, Diagnosis and Testing).
U0415:64	Invalid Data Received From Anti-Lock Brake System (ABS) Control Module: Signal Plausibility Failure	• This DTC sets when the wheel rotation count message is temporarily undefined for more than 2 seconds from the ABS module for the odometer. • CLEAR the DTC . REPEAT the self-test. • If DTC U0415:64 returns, RETRIEVE and REPAIR all Diagnostic Trouble Codes (DTCs) set in the ABS module. REFER to: Anti-Lock Brake System (ABS) and Stability Control (206-09 Anti-Lock Brake System (ABS) and Stability Control, Diagnosis and Testing).
U0422:64	Invalid Data Received From Body Control Module: Signal Plausibility Failure	• This DTC sets when the fuel level, power mode or vehicle speed message are temporarily undefined for more than 2 seconds or if the TPMS status message is missing for more than 1,250 milliseconds from the BCM . • CLEAR the DTC . REPEAT the self-test. • If DTC U0422:64 returns, RETRIEVE and REPAIR all Diagnostic Trouble Codes (DTCs) set in the BCM . REFER to: Body Control Module (BCM) (419-10 Multifunction Electronic Modules,

		Diagnosis and Testing).
U0424:64	Invalid Data Received From HVAC Control Module: Signal Plausibility Failure	• This DTC sets when the temperature range data is invalid for more than 2 seconds from the HVAC module through the BCM. • CLEAR the DTC. REPEAT the self-test. • If DTC U0424:64 returns, RETRIEVE and REPAIR all Diagnostic Trouble Codes (DTCs) set in the HVAC module. REFER to: Climate Control System - Vehicles With: Electronic Manual Temperature Control (EMTC) (412-00 Climate Control System - General Information, Diagnosis and Testing). REFER to: Climate Control System - Vehicles With: Dual Automatic Temperature Control (DATC) (412-00 Climate Control System - General Information, Diagnosis and Testing).
U049A:64	Invalid Data Received From "Door Control Module A": Signal Plausibility Failure	• This DTC sets when the odometer backup data is invalid for more than 2 seconds from the DDM. • CLEAR the DTC. REPEAT the self-test. • If DTC U049A:64 returns, RETRIEVE and REPAIR all Diagnostic Trouble Codes (DTCs) set in the DDM. REFER to: Door Module (419-10 Multifunction Electronic Modules, Removal and Installation).
U0501:64	Invalid Data Received From "Door Control Module B": Signal Plausibility Failure	• This DTC sets when the odometer backup data is invalid for more than 2 seconds from the PDM. • CLEAR the DTC. REPEAT the self-test. • If DTC U0501:64 returns, RETRIEVE and REPAIR all Diagnostic Trouble Codes (DTCs) set in the PDM. REFER to: Door Module (419-10 Multifunction Electronic Modules, Removal and Installation).
U0558:64	Invalid Data Received From Front Controls/Display Interface Module: Signal Plausibility Failure	• This DTC sets when data is invalid from the FCDIM for more than 2 seconds. • CLEAR the DTC. REPEAT the self-test. • If DTC U0558:64 returns, RETRIEVE and REPAIR all Diagnostic Trouble Codes (DTCs) set in the FCIM. REFER to: Information and Entertainment System (415-00A Information and Entertainment System - General Information - Vehicles With: AM/FM/CD, Diagnosis and Testing). REFER to: Information and Entertainment System (415-00B Information and Entertainment System - General Information - Vehicles With: AM/FM/CD/SYNC, Diagnosis and Testing).
U0564:64	Invalid Data Received From Speech Recognition Module: Signal Plausibility Failure	• This DTC sets when data is invalid from the APIM for more than 2 seconds. • CLEAR the DTC. REPEAT the self-test. • If DTC U0564:64 returns, RETRIEVE and REPAIR all Diagnostic Trouble Codes (DTCs) set in the APIM. REFER to: Information and Entertainment System (415-00B Information and Entertainment System - General Information - Vehicles With: AM/FM/CD/SYNC, Diagnosis and Testing). REFER to: Information and Entertainment System (415-00C Information and Entertainment System - General Information - Vehicles With: SYNC/Sony AM/FM/CD, Diagnosis and Testing).
U2100:00	Initial Configuration Not Complete: No Sub Type Information	CHECK the vehicle service history for recent service actions related to this module. This DTC sets due to incomplete or incorrect Programmable Module Installation (PMI) procedures. If there have been recent service actions with this module, REPEAT the Programmable Module Installation (PMI) procedure as directed by the scan tool. REFER to: Module Configuration - System Operation and Component Description (418-01 Module Configuration, Description and Operation). If there have been no recent service actions, INSTALL a new module to correct the failure

		to retain configuration data.
U2101:00	Control Module Configuration Incompatible: No Sub Type Information	CHECK the vehicle service history for recent service actions related to this module. This DTC sets due to incomplete or incorrect Programmable Module Installation (PMI) procedures. If there have been recent service actions with this module, REPEAT the Programmable Module Installation (PMI) procedure as directed by the scan tool. REFER to: Module Configuration - System Operation and Component Description (418-01 Module Configuration, Description and Operation). If there have been no recent service actions, INSTALL a new module to correct the failure to retain configuration data.
U3000:00	Control Module: No Sub Type Information	• CLEAR the DTC . REPEAT the self-test. • If DTC U3000:00 returns, INSTALL a new IPC . REFER to: Instrument Panel Cluster (IPC) (413-01 Instrumentation, Message Center and Warning Chimes, Removal and Installation).
U3006:16	Control Module Input Power "A": Circuit Voltage Below Threshold	GO to Pinpoint Test AM
U3006:17	Control Module Input Power "A": Circuit Voltage Above Threshold	GO to Pinpoint Test AN

DTC Chart: ICM

Diagnostics in this manual assume a certain skill level and knowledge of Ford-specific diagnostic practices.
REFER to: Diagnostic Methods (100-00 General Information, Description and Operation).

DTC Chart - ICM

DTC	Description	Action
P0195:00	Engine Oil Temperature Sensor "A" Circuit: No Sub Type Information	GO to Pinpoint Test BM
P0520:00	Engine Oil Pressure Sensor/Switch "A" Circuit: No Sub Type Information	GO to Pinpoint Test BM
P1248:00	Turbocharger Boost Pressure Not Detected: No Sub Type Information	GO to Pinpoint Test BM
U0100:87	Lost Communication With ECM/PCM "A": Missing Message	GO to Pinpoint Test BN
U0140:87	Lost Communication With Body Control Module: Missing Message	GO to Pinpoint Test BO
U3000:45	Control Module: Program Memory Failure	• CLEAR the DTC . REPEAT the self-test. • If DTC U3000:45 returns, INSTALL a new ICM . REFER to: Information Center Module (ICM) (413-01 Instrumentation, Message Center and Warning Chimes, Removal and Installation).
U3006:16	Control Module Input Power "A": Circuit Voltage Below Threshold	GO to Pinpoint Test BP
U3006:17	Control Module Input Power "A": Circuit Voltage Above Threshold	GO to Pinpoint Test BQ

DTC Chart: BCM

Diagnostics in this manual assume a certain skill level and knowledge of Ford-specific diagnostic practices.
REFER to: Diagnostic Methods (100-00 General Information, Description and Operation).

BCM DTC Chart

DTC	Description	Action
B1048:13	Brake Fluid Level Switch: Circuit Open	GO to Pinpoint Test K
B10F1:13	Key In Switch: Circuit Open	• If the chime is always on, GO to Pinpoint Test W • If the chime is inoperative, GO to Pinpoint Test X
B1177:13	Screenwash Level Switch: Circuit Open	GO to Pinpoint Test BI
B1306:13	Liftgate Ajar Switch: Circuit Open	GO to Pinpoint Test BL
C1D00:23	Park Brake Apply Switch: Signal Stuck Low	GO to Pinpoint Test K
P0460:21	Fuel Level Sensor A Circuit: Signal Amplitude < Minimum	GO to Pinpoint Test B
P0460:22	Fuel Level Sensor A Circuit: Signal Amplitude > Maximum	GO to Pinpoint Test B
P0460:2F	Fuel Level Sensor A Circuit: Signal Erratic	GO to Pinpoint Test B

DTC Chart: PCM

Diagnostics in this manual assume a certain skill level and knowledge of Ford-specific diagnostic practices.
REFER to: Diagnostic Methods (100-00 General Information, Description and Operation).

PCM DTC Chart

DTC	Description	Action
P0460	Fuel Level Sensor "A" Circuit	Refer to Powertrain Control/Emissions Diagnosis (PC/ED) manual. If sent here from PC/ED , GO to Pinpoint Test B
P0461	Fuel Level Sensor "A" Circuit Range/Performance	Refer to Powertrain Control/Emissions Diagnosis (PC/ED) manual. If sent here from PC/ED , GO to Pinpoint Test B
P0462	Fuel Level Sensor "A" Circuit Low	Refer to Powertrain Control/Emissions Diagnosis (PC/ED) manual. If sent here from PC/ED , GO to Pinpoint Test B
P0463	Fuel Level Sensor "A" Circuit High	Refer to Powertrain Control/Emissions Diagnosis (PC/ED) manual. If sent here from PC/ED , GO to Pinpoint Test B

Symptom Chart(s)

Symptom Chart: IPC

Diagnostics in this manual assume a certain skill level and knowledge of Ford-specific diagnostic practices.
REFER to: Diagnostic Methods (100-00 General Information, Description and Operation).

Symptom Chart

Condition	Possible Sources	Actions
A module does not respond to the scan tool	• Fuse • Wiring, terminals or connectors • Communication concern • Module	REFER to: Communications Network (418-00 Module Communications Network, Diagnosis and Testing).
The IPC is inoperative	Refer to the Pinpoint Test	GO to Pinpoint Test A
An ICM gauge is inoperative or incorrect	Refer to the Pinpoint Test	GO to Pinpoint Test BM
Incorrect fuel gauge indication	Refer to the Pinpoint Test	GO to Pinpoint Test B
The temperature gauge is inoperative	Refer to the Pinpoint Test	GO to Pinpoint Test C
Incorrect temperature gauge indication	Refer to the Pinpoint Test	GO to Pinpoint Test D
The tachometer is inoperative	Refer to the Pinpoint Test	GO to Pinpoint Test E
Incorrect tachometer indication	Refer to the Pinpoint Test	GO to Pinpoint Test F
The speedometer is inoperative	Refer to the Pinpoint Test	GO to Pinpoint Test G
Incorrect speedometer indication	Refer to the Pinpoint Test	GO to Pinpoint Test H
The odometer is inoperative	Refer to the Pinpoint Test	GO to Pinpoint Test I
The low fuel indicator is never or always on	Refer to the Pinpoint Test	GO to Pinpoint Test AK
The brake warning indicator is never on	Refer to the Pinpoint Test	GO to Pinpoint Test J
The brake warning indicator is always on	Refer to the Pinpoint Test	GO to Pinpoint Test K
The ABS warning indicator is never or always on	Refer to the Pinpoint Test	GO to Pinpoint Test L
The stability-traction control indicator (sliding car icon) is never or always on	Refer to the Pinpoint Test	GO to Pinpoint Test M
The stability-traction control disabled indicator (sliding car OFF icon) is never or always on	Refer to the Pinpoint Test	GO to Pinpoint Test N

The grade assist indicator is never or always on	Refer to the Pinpoint Test	GO to Pinpoint Test AZ
The LH - RH turn signal, high beam or fog lamp indicator is never or always on	Refer to the Pinpoint Test	GO to Pinpoint Test O
The lights on indicator is never or always on	Refer to the Pinpoint Test	GO to Pinpoint Test AJ
The TPMS warning indicator is never or always on	Refer to the Pinpoint Test	GO to Pinpoint Test P
The charging system warning indicator is never or always on	Refer to the Pinpoint Test	GO to Pinpoint Test AL
The airbag warning indicator is never or always on	Refer to the Pinpoint Test	GO to Pinpoint Test Q
The safety belt warning indicator is never or always on	Refer to the Pinpoint Test	GO to Pinpoint Test R
The MIL is never or always on	Refer to the Pinpoint Test	GO to Pinpoint Test S
The PRNDL indicator is never on or never displays P	Refer to the Pinpoint Test	GO to Pinpoint Test AW
The select shift indicator is does not display the selected range	Refer to the Pinpoint Test	GO to Pinpoint Test AW
The low oil pressure warning indicator is never or always on	Refer to the Pinpoint Test	GO to Pinpoint Test AI
The information indicator is never on	IPC	ENTER the dealer test mode and scroll to the Telltale Test while observing the information indicator. If the information indicator alternately displays from red to amber, the system is functioning correctly at this time. If the information indicator does not alternately displays red to amber, INSTALL a new IPC . REFER to: Instrument Panel Cluster (IPC) (413-01 Instrumentation, Message Center and Warning Chimes, Removal and Installation).

Symptom Chart: Message Center

Diagnostics in this manual assume a certain skill level and knowledge of Ford-specific diagnostic practices.
REFER to: Diagnostic Methods (100-00 General Information, Description and Operation).

Symptom Chart

Condition	Possible Sources	Actions
The message center is not operating correctly	Refer to the Pinpoint Test	GO to Pinpoint Test U

The message center display is blank	Refer to the Pinpoint Test	GO to Pinpoint Test A
The compass display is inoperative	Refer to the Pinpoint Test	GO to Pinpoint Test AX
The compass display is inaccurate	Refer to the Pinpoint Test	GO to Pinpoint Test AY
The outside air temperature display is inoperative or incorrect	Refer to the Pinpoint Test	GO to Pinpoint Test V
The cruise control message center indicator is never or always on	Refer to the Pinpoint Test	GO to Pinpoint Test T
The upshift message center indicator is never or always on	Refer to the Pinpoint Test	GO to Pinpoint Test BJ
The hill start assist display is never on	Refer to the Pinpoint Test	GO to Pinpoint Test BB
The shift to park display is never or always on	Refer to the Pinpoint Test	GO to Pinpoint Test BH
A passive key status (no key detected, key inside vehicle, key not inside vehicle or place key in keyholder) message is inoperative or always on (Intelligent Access (IA) only)	• Message center concern • Intelligent Access (IA) concern	OPEN then CLOSE the driver door and VERIFY the driver door ajar message displays correctly with the door open and closed. If the driver door ajar message does not function correctly, GO to Pinpoint Test BL If the driver door ajar message functions correctly, REFER to: Locks, Latches and Entry Systems (501-14A Handles, Locks, Latches and Entry Systems - Vehicles Without: One-Touch Up Door Window, Diagnosis and Testing). REFER to: Locks, Latches and Entry Systems (501-14B Handles, Locks, Latches and Entry Systems - Vehicles With: One-Touch Up Door Window, Diagnosis and Testing).
A vehicle starting/ignition status (press brake to start or switch ignition off press power) message is inoperative or always on (Intelligent Access (IA) only)	• Message center concern • Intelligent Access (IA) concern	OPEN then CLOSE the driver door and VERIFY the driver door ajar message displays correctly with the door open and closed and the vehicle functions in all ignition modes. If the driver door ajar message does not function correctly, GO to Pinpoint Test BL If the driver door ajar message functions correctly, diagnose the ignition modes. REFER to: Steering Wheel and Column Electrical Components (211-05 Steering Column Switches, Diagnosis and Testing).
A door ajar display is never or always on	Refer to the Pinpoint Test	GO to Pinpoint Test BL
A transmission malfunction display is always on	Refer to the Pinpoint Test	GO to Pinpoint Test BK
A low washer fluid level display is never or always on	Refer to the Pinpoint Test	GO to Pinpoint Test BI
The reverse parking aid menu/display is not available (parking aid cannot be disabled)	A MyKey® is in use	The system is operating correctly. To display the reverse parking aid menu, an administrator key must be used.
A brake warning (brake fluid level low, parking brake applied or brake system malfunction) message is never or always on	• Message center concern • Brake warning indication concern • IPC	OPEN then CLOSE the driver door and VERIFY the driver door ajar message displays correctly with the door open and closed. If the driver door ajar message does not function correctly, GO to Pinpoint Test BL If the driver door ajar message functions correctly, GO to Pinpoint Test J or GO to Pinpoint Test K

An exterior lighting bulb outage message is always on	• Message center concern • Exterior lighting concern	OPEN then CLOSE the driver door and VERIFY the driver door ajar message displays correctly with the door open and closed. If the driver door ajar message does not function correctly, GO to Pinpoint Test BL If the driver door ajar message functions correctly, REFER to: Parking, Rear and License Plate Lamps (417-01 Exterior Lighting, Diagnosis and Testing).
A charging system warning is never or always on	• Message center concern • Charging system warning indication concern	OPEN then CLOSE the driver door and VERIFY the driver door ajar message displays correctly with the door open and closed. If the driver door ajar message does not function correctly, GO to Pinpoint Test BL If the driver door ajar message functions correctly, GO to Pinpoint Test AL
The engine over-temperature warning is always on	• Message center concern • Temperature gauge indication concern	OPEN then CLOSE the driver door and VERIFY the driver door ajar message displays correctly with the door open and closed. If the driver door ajar message does not function correctly, GO to Pinpoint Test BL If the driver door ajar message functions correctly, GO to Pinpoint Test C or GO to Pinpoint Test D
The engine oil change due message is never on	• Message center concern • The PCM has not reached the programmed mileage based on the criteria required to display the message.	OPEN then CLOSE the driver door and VERIFY the driver door ajar message displays correctly with the door open and closed. If the driver door ajar message does not function correctly, GO to Pinpoint Test BL If the driver door ajar message functions correctly, the vehicle has not met the criteria required to display the message since the last oil life reset. EXPLAIN the oil minder function to the customer. REFER to: Message Center - System Operation and Component Description (413-01 Instrumentation, Message Center and Warning Chimes, Description and Operation).
The engine oil change due message is always on	The oil life needs reset	CARRY OUT the oil life reset procedure.
The parking aid malfunction message is always on	Parking aid system concern	REFER to: Parking Aid (413-13A Parking Aid, Diagnosis and Testing).
The stablity-traction control malfunction warning is never or always on	• Message center concern • Stability-traction control indication concern	OPEN then CLOSE the driver door and VERIFY the driver door ajar message displays correctly with the door open and closed. If the driver door ajar message does not function correctly, GO to Pinpoint Test BL If the driver door ajar message functions correctly, GO to Pinpoint Test M
The stablity-traction control disabled warning is never on	• Message center concern • Stability-traction control	OPEN then CLOSE the driver door and VERIFY the driver door ajar message displays correctly with the door open and closed. If the driver door ajar message does not function correctly, GO to Pinpoint Test BL If the driver door ajar message functions correctly, GO to Pinpoint Test N

	disable indication concern	
A TPMS malfunction message is never or always on	• Message center concern • TPMS warning indication concern	OPEN then CLOSE the driver door and VERIFY the driver door ajar message displays correctly with the door open and closed. If the driver door ajar message does not function correctly, GO to Pinpoint Test BL If the driver door ajar message functions correctly, GO to Pinpoint Test P
A tire training message (train left front, right front, left rear or right rear tire) message is never on	• TPMS warning indicator concern • TPMS sensor training concern	**NOTE:** *These messages only appear during the TPMS sensor training procedure.* VERIFY the TPMS warning indicator functions. If the TPMS warning indicator does not operate, GO to Pinpoint Test P If the TPMS warning indicator operates, CARRY OUT the TPMS sensor training. REFER to: Tire Pressure Monitoring System (TPMS) Sensor Location Calibration (204-04B Tire Pressure Monitoring System (TPMS), General Procedures).
The training complete message is never on	TPMS sensor training incomplete	**NOTE:** *This message only appears during the TPMS sensor training procedure.* CARRY OUT the TPMS sensor training. REFER to: Tire Pressure Monitoring System (TPMS) Sensor Location Calibration (204-04B Tire Pressure Monitoring System (TPMS), General Procedures).
The tires not trained message is always on	TPMS sensor training concern	**NOTE:** *This message only appears during the TPMS sensor training procedure.* CARRY OUT the TPMS sensor training. REFER to: Tire Pressure Monitoring System (TPMS) Sensor Location Calibration (204-04B Tire Pressure Monitoring System (TPMS), General Procedures).
A steering malfunction message is always on	• Message center concern • EPAS system concern	OPEN then CLOSE the driver door and VERIFY the driver door ajar message displays correctly with the door open and closed. If the driver door ajar message does not function correctly, GO to Pinpoint Test BA If the driver door ajar message functions correctly, REFER to: Power Steering (211-02 Power Steering, Diagnosis and Testing).
The transport mode message is always on	Vehicle still in transport mode	CARRY OUT the procedure to disable the transport mode and PLACE the vehicle in normal operation mode. REFER to: Transport Mode Deactivation (419-10 Multifunction Electronic Modules) .

Symptom Chart: Warning Chimes

Diagnostics in this manual assume a certain skill level and knowledge of Ford-specific diagnostic practices.
REFER to: Diagnostic Methods (100-00 General Information, Description and Operation).

Symptom Chart

Condition	Possible Sources	Actions
All the chimes are inoperative	IPC	• ENTER the dealer test mode and scroll to the chime test screen. REFER to Dealer Test Mode. • If the chime does not operate in the dealer test mode, INSTALL a new IPC . REFER to: Instrument Panel Cluster (IPC) (413-01 Instrumentation, Message Center and Warning Chimes, Removal and Installation). • If the chime operates in the dealer test mode, DIAGNOSE and REPAIR any individual chimes that are inoperative.
The chime sounds when the driver door is ajar (no key in ignition and headlamps off)	Refer to the Pinpoint Test	GO to Pinpoint Test W
The key-in-ignition warning chime is inoperative (without Intelligent Access [IA])	Refer to the Pinpoint Test	GO to Pinpoint Test X
The headlamps on warning chime is inoperative	Refer to the Pinpoint Test	GO to Pinpoint Test Y
The hill start assist chime is inoperative	Refer to the Pinpoint Test	GO to Pinpoint Test BB
The key left in vehicle chime is inoperative-with Intelligent Access (IA)	Refer to the Pinpoint Test	GO to Pinpoint Test BC
The passive key out of vehicle chime is inoperative-with Intelligent Access (IA)	Refer to the Pinpoint Test	GO to Pinpoint Test BC
The low fuel warning chime is inoperative or always sounds	Refer to the Pinpoint Test	GO to Pinpoint Test BD
The remote key programming chime is inoperative	Refer to the Pinpoint Test	GO to Pinpoint Test BF
The safety belt warning chime is inoperative	Refer to the Pinpoint Test	GO to Pinpoint Test AA
The Belt-Minder® chime is inoperative	Refer to the Pinpoint Test	GO to Pinpoint Test AA
The Belt-Minder® cannot be deactivated	A MyKey® is in the ignition	The system is operating correctly. To disable the Belt-Minder®, an administrator key must be used.
The door ajar warning chime is inoperative or always sounds	Refer to the Pinpoint Test	GO to Pinpoint Test BA
The parking brake warning chime is inoperative	Refer to the Pinpoint Test	GO to Pinpoint Test AB
The perimeter alarm chime is inoperative	Refer to the Pinpoint Test	GO to Pinpoint Test BE
The turn signal on warning chime is inoperative	Refer to the Pinpoint Test	GO to Pinpoint Test Z
The active park assist chime is inoperative	• Active park assist	With the ignition in OFF mode, the driver door closed and the driver safety belt unbuckeled, place the ignition in the ON mode and check the safety belt warning chime. If the safety belt warning chime sounds, diagnose the active park assist

	system concern • IPC	system. REFER to: Parking Aid (413-13A Parking Aid, Diagnosis and Testing). If the safety belt warning indicator is inoperative, GO to Pinpoint Test R

Pinpoint Tests

The IPC Is Inoperative

Diagnostic Overview

Diagnostics in this manual assume a certain skill level and knowledge of Ford-specific diagnostic practices.
REFER to: Diagnostic Methods (100-00 General Information, Description and Operation).

Normal Operation and Fault Conditions

The IPC receives a hot at all times voltage from the BCM . The IPC receives the ignition status message from the BCM over the High Speed Controller Area Network (HS-CAN).

Possible Sources

- Fuse
- Wiring, terminals or connectors
- IPC

Visual Inspection and Diagnostic Pre-checks

Inspect the BCM fuse 69 (5A).

PINPOINT TEST A : THE IPC (INSTRUMENT PANEL CLUSTER) IS INOPERATIVE

A1 VERIFY THE IPC (INSTRUMENT PANEL CLUSTER) PASSES THE NETWORK TEST

- Ignition ON.
- Using a scan tool, perform a network test.
- Verify whether the IPC passed the network test.

Did the IPC pass the network test?

Yes	GO to A2
No	REFER to: Communications Network (418-00 Module Communications Network, Diagnosis and Testing).

A2 CARRY OUT THE IPC (INSTRUMENT PANEL CLUSTER) SELF-TEST

- Using a scan tool, perform the IPC self-test.
- Check for recorded Diagnostic Trouble Codes (DTCs) from the IPC self-test.

Are any Diagnostic Trouble Codes (DTCs) recorded?

Yes	For DTC U0140:00, GO to Pinpoint Test AF For all other Diagnostic Trouble Codes (DTCs), REFER to DTC Chart: IPC in this section.
No	GO to A3

A3 CHECK FOR CORRECT IPC (INSTRUMENT PANEL CLUSTER) OPERATION

- Ignition OFF.
- Disconnect and inspect the IPC connector.
- Repair:
  - corrosion (install new connector or terminals - clean module pins)
  - damaged or bent pins - install new terminals/pins
  - pushed-out pins - install new pins as necessary
- Reconnect the IPC connector. Make sure it seats and latches correctly.
- Operate the system and determine if the concern is still present.

Is the concern still present?

Yes	CHECK On-Line Automotive Service Information System (OASIS) for any applicable Technical Service Bulletins (TSBs). If a TSB exists for this concern, DISCONTINUE this test and FOLLOW TSB instructions. If no Technical Service Bulletins (TSBs) address this concern, INSTALL a new IPC . REFER to: Instrument Panel Cluster (IPC) (413-01 Instrumentation, Message Center and Warning Chimes, Removal and Installation).
No	The system is operating correctly at this time. The concern may have been caused by module connections. ADDRESS the root cause of any connector or pin issues.

Incorrect Fuel Gauge Indication

Diagnostic Overview

Diagnostics in this manual assume a certain skill level and knowledge of Ford-specific diagnostic practices.
REFER to: Diagnostic Methods (100-00 General Information, Description and Operation).

Refer to Wiring Diagrams Cell 60 for schematic and connector information.

Normal Operation and Fault Conditions

The fuel gauge uses inputs from the fuel pump assembly and the fuel level sender to provide the fuel level indication. See Fuel Gauge and Fuel Level Sender.
REFER to: Instrument Panel Cluster (IPC) - System Operation and Component Description (413-01 Instrumentation, Message Center and Warning Chimes, Description and Operation).

IPC DTC Fault Trigger Conditions

DTC	Description	Fault Trigger Conditions
P1933:64	Fuel Level Signal: Signal Plausibility Failure	A continuous DTC that sets in the IPC if the fuel level status message from the BCM indicates an open or if the data is undefined for more than 33 seconds. The IPC defaults the fuel gauge to empty (E).

BCM DTC Fault Trigger Conditions

DTC	Description	Fault Trigger Conditions

P0460:21	Fuel Level Sensor A Circuit: Signal Amplitude < Minimum	A continuous DTC that sets in the BCM if the fuel level input is pulled low out of range (below 17 ohms) on the fuel level input circuit indicating a short to ground for approximately 2.2 seconds or longer. The IPC defaults the fuel gauge to empty (E).
P0460:22	Fuel Level Sensor A Circuit: Signal Amplitude > Maximum	A continuous DTC that sets in the BCM if the fuel level input is sent high out of range on the fuel level input circuit indicating an open or short to voltage for approximately 2.2 seconds or longer. The IPC defaults the fuel gauge to empty (E).
P0460:2F	Fuel Level Sensor A Circuit: Signal Erratic	• A continuous and on-demand DTC that sets in the BCM if the fuel level input is out of range (low or high) with an open (above 2,500 ohms), short to voltage or short to ground (below 17 ohms) for approximately 2.2 seconds or longer. The IPC defaults the fuel gauge to empty (E). • Follow the diagnostics for BCM DTC P0460:21 or P0460:22.

PCM DTC Fault Trigger Conditions

DTC	Description	Fault Trigger Conditions
P0460	Fuel Level Sensor A Circuit	• Sets when the PCM determines the value of the fuel level input signal is stuck, that the fuel level input signal does not change or does not correspond with the calculated fuel usage. • Follow the pinpoint test using the Diagnostic Trouble Codes (DTCs) set in the BCM .
P0461	Fuel Level Sensor A Circuit Range/Performance	• Sets when the PCM determines the fuel level input signal repeatedly moves in and out of range, exceeding the minimum or maximum allowable calibrated parameters for a specified fuel fill percentage in the fuel tank. • Follow the pinpoint test using the Diagnostic Trouble Codes (DTCs) set in the BCM .
P0462	Fuel Level Sensor A Circuit Low	• Sets in the PCM when the PCM detects a short to ground on the fuel pump assembly signal circuit based on the messaged input received from the BCM . • Follow the pinpoint test using the Diagnostic Trouble Codes (DTCs) set in the BCM .
P0463	Fuel Level Sensor A Circuit High	• Sets in the PCM when the PCM detects an open or a short to voltage on the fuel pump assembly signal circuit based on the messaged input received from the IPC . • Follow the pinpoint test using the Diagnostic Trouble Codes (DTCs) set in the BCM .

Possible Sources

- Wiring, terminals or connectors
- Fuel pump assembly
- Fuel level sender (float and card)
- Fuel tank transfer tube
- Fuel tank
- BCM
- IPC

Visual Inspection and Diagnostic Pre-checks

Inspect the fuel tank for signs of damage that can affect the float operation inside the tank. Inspect the fuel gauge needle in the IPC for signs of binding or damage.

PINPOINT TEST B : INCORRECT FUEL GAUGE INDICATION

B1 CARRY OUT THE IPC (INSTRUMENT PANEL CLUSTER) SELF-TEST

- Using a scan tool, perform the IPC self-test.
- Check for recorded Diagnostic Trouble Codes (DTCs) from the IPC self-test.

Is DTC U0140:00 recorded?

Yes	GO to Pinpoint Test AF
No	GO to B2

B2 CARRY OUT THE BCM (BODY CONTROL MODULE) SELF-TEST

- Using a scan tool, perform the BCM self-test.
- Check for recorded Diagnostic Trouble Codes (DTCs) from the BCM self-test.

Are any Diagnostic Trouble Codes (DTCs) recorded?

Yes	For DTC P0460:21, GO to B3 For DTC P0460:22, GO to B6 For DTC P0460:2F, follow the diagnostics for DTC P0460:21 or DTC P0460:22.
No	GO to B10

B3 CHECK THE FUEL INPUT FOR A SHORT TO GROUND

- Disconnect: Fuel Pump Assembly.
- Ignition ON.
- Wait one minute.
- Using a scan tool, repeat the BCM on-demand self-test.

Is DTC P0460:22 retrieved?

Yes	GO to B14
No	GO to B4

B4 CHECK THE FUEL PUMP ASSEMBLY AND FUEL LEVEL SENSOR SIGNAL CIRCUIT FOR A SHORT TO GROUND

- Ignition OFF.
- Disconnect: BCM C2280B.
- Measure:

Positive Lead	Measurement / Action	Negative Lead
C2280B-53	Ω	—

Is the resistance greater than 10,000 ohms?

Yes	GO to B5

No	REPAIR the circuit.

B5 CHECK THE FUEL PUMP ASSEMBLY SIGNAL AND RETURN CIRCUITS FOR A SHORT TOGETHER

- Measure:

Positive Lead	Measurement / Action	Negative Lead
C2280B-53	Ω	C2280B-29

Is the resistance greater than 10,000 ohms?

Yes	GO to B17
No	REPAIR the circuits.

B6 CHECK THE FUEL PUMP ASSEMBLY FOR AN OPEN

- Ignition OFF.
- Disconnect: Fuel Pump Assembly.
- Connect a fused jumper wire:

Lead 1	Measurement / Action	Lead 2
C3127-1		C3127-2

- Ignition ON.
- Wait one minute.
- Using a scan tool, repeat the BCM self-test.
- Retrieve the BCM continuous Diagnostic Trouble Codes (DTCs).

Is DTC P0460:22 retrieved?

Yes	REMOVE the jumper wire. GO to B7
No	REMOVE the jumper wire. GO to B14

B7 CHECK THE FUEL LEVEL SIGNAL CIRCUIT FOR A SHORT TO VOLTAGE

- Ignition OFF.
- Disconnect: BCM C2280B.
- Ignition ON.
- Measure:

Positive Lead	Measurement / Action	Negative Lead
C2280B-53	V	—

Is any voltage present?

Yes	REPAIR the circuit.
No	GO to B8

B8 CHECK THE FUEL LEVEL SIGNAL CIRCUIT FOR AN OPEN

- Ignition OFF.
- Measure:

Positive Lead	Measurement / Action	Negative Lead
C2280B-53	Ω	C3127-2

Is the resistance less than 3 ohms?

Yes	GO to B9
No	REPAIR the circuit.

B9 CHECK THE FUEL LEVEL RETURN CIRCUIT FOR AN OPEN

- Measure:

Positive Lead	Measurement / Action	Negative Lead
C2280B-29	Ω	C3127-1

Is the resistance less than 3 ohms?

Yes	GO to B17
No	REPAIR the circuit.

B10 CHECK THE FUEL GAUGE OPERATION USING THE DEALER TEST MODE

- Ignition ON.
- Monitor the fuel gauge.
- Ignition OFF.
- Enter the Dealer Test Mode.
  REFER to: Instrument Panel Cluster (IPC) - System Operation and Component Description (413-01 Instrumentation, Message Center and Warning Chimes, Description and Operation).
- Scroll to gauge sweep.
- Monitor the fuel gauge when the gauge sweep initiates.

Does the fuel gauge begin at empty (E), sweep to full (F) then return to empty (E)?

Yes	GO to B11

No	INSTALL a new IPC . REFER to: Instrument Panel Cluster (IPC) (413-01 Instrumentation, Message Center and Warning Chimes, Removal and Installation).

B11 CHECK THE FUEL PUMP ASSEMBLY SIGNAL AND RETURN CIRCUITS FOR HIGH RESISTANCE

- Ignition OFF.
- Disconnect: BCM C2280B.
- Disconnect: Fuel Pump Assembly.
- Connect a fused jumper wire:

Lead 1	Measurement / Action	Lead 2
C3127-1		C3127-2

- Measure:

Positive Lead	Measurement / Action	Negative Lead
C2280B-53	Ω	C2280B-29

Is the resistance less than 3 ohms?

Yes	REMOVE the jumper wire. GO to B12
No	REMOVE the jumper wire. REPAIR the circuits.

B12 INSPECT THE FUEL TANK

- Visually inspect the fuel tank for any damage or deformation.

Is the fuel tank OK?

Yes	GO to B13
No	INSTALL a new fuel tank. REFER to: Fuel Tank (310-01A Fuel Tank and Lines, Removal and Installation). REFER to: Fuel Tank (310-01B Fuel Tank and Lines, Removal and Installation).

B13 INSPECT THE FUEL TANK AND FUEL LEVEL SENDER

- Remove the fuel pump assembly.
  REFER to: Fuel Pump (310-01A Fuel Tank and Lines, Removal and Installation).
  REFER to: Fuel Pump (310-01B Fuel Tank and Lines, Removal and Installation).
- Inspect the fuel pump assembly and the fuel level sender for any damage or deformation.

Are the fuel pump assembly and the fuel level sender OK?

Yes	GO to B15
No	INSTALL a new fuel pump assembly or fuel level sender as necessary. Refer to the appropriate section

	in Group 310 for the procedure.

B14 CHECK THE FUEL PUMP ASSEMBLY AND THE FUEL LEVEL SENSOR FOR CORRECT OPERATION

- Measure:

Positive Lead	Measurement / Action	Negative Lead
E155138 Fuel Pump Assembly (Component Side) - Pin 1	Ω	E155138 Fuel Pump Assembly (Component Side) - Pin 2

Is the resistance between 464 ohms 51 ohms?

Yes	The concern may have been caused by an intermittent input to the BCM , most likely caused by corrosion on the fuel level sender (float and card).
No	GO to B15

B15 CHECK THE FUEL PUMP ASSEMBLY

- Remove the fuel pump assembly.
  REFER to: Fuel Pump (310-01A Fuel Tank and Lines, Removal and Installation).
  REFER to: Fuel Pump (310-01B Fuel Tank and Lines, Removal and Installation).
- While moving the float from the bottom to the top, measure:

Positive Lead	Measurement / Action	Negative Lead
E155138 Fuel Pump Assembly (Component Side) - Pin 1	Ω	E155138 Fuel Pump Assembly (Component Side) - Pin 2

Does the resistance start at approximately 464 ohms with the float at the bottom of travel and slowly decrease to approximately 51 ohms at the top of travel?

Yes	CHECK the fuel pump module or fuel level sensor connector for corrosion, damaged or pushed out pins and REPAIR as necessary.
No	GO to B16

B16 CHECK THE FUEL LEVEL SENDER

- Disconnect the fuel level sender input wire from the fuel pump assembly.
- Measure the resistance while slowly moving the float arm between the lower and upper stop position.

Positive Lead	Measurement / Action	Negative Lead
E155139 Fuel Level Sensor - Pin 1	Ω	E155139 Fuel Level Sensor - Pin 2

Does the resistance slowly decrease from approximately 464 ohms to 51 ohms?

Yes	INSTALL a new fuel pump assembly. REFER to: Fuel Pump (310-01A Fuel Tank and Lines, Removal and Installation).
No	INSTALL a new fuel level sender (float and card). REFER to: Fuel Level Sender (310-01A Fuel Tank and Lines, Removal and Installation).

B17 CHECK FOR CORRECT BCM (BODY CONTROL MODULE) OPERATION

- Ignition ON.
- Disconnect and inspect all BCM connectors.
- Repair:
  - corrosion (install new connector or terminals - clean module pins)
  - damaged or bent pins - install new terminals/pins
  - pushed-out pins - install new pins as necessary
- Reconnect the BCM connectors. Make sure they seat and latch correctly.
- Operate the system and determine if the concern is still present.

Is the concern still present?

Yes	CHECK On-Line Automotive Service Information System (OASIS) for any applicable Technical Service Bulletins (TSBs). If a TSB exists for this concern, DISCONTINUE this test and FOLLOW TSB instructions. If no Technical Service Bulletins (TSBs) address this concern, INSTALL a new BCM. REFER to: Body Control Module (BCM) (419-10 Multifunction Electronic Modules, Removal and Installation).

No	The system is operating correctly at this time. The concern may have been caused by module connections. ADDRESS the root cause of any connector or pin issues.

The Temperature Gauge Is Inoperative

Diagnostic Overview

Diagnostics in this manual assume a certain skill level and knowledge of Ford-specific diagnostic practices.
REFER to: Diagnostic Methods (100-00 General Information, Description and Operation).

Normal Operation and Fault Conditions

See Temperature Gauge.
REFER to: Instrument Panel Cluster (IPC) - System Operation and Component Description (413-01 Instrumentation, Message Center and Warning Chimes, Description and Operation).

NOTE: *If DTC U0100:00 sets in the IPC , other observable symptoms can be an inoperative tachometer, speedometer or odometer.*

If the BCM does not receive the engine coolant temperature message from the PCM for more than 5 seconds, the BCM and IPC set DTC U0100:00.

If the IPC does not receive the engine coolant temperature message from the BCM for more than 5 seconds, the IPC defaults the temperature gauge to cold (C).

Possible Sources

- PCM
- IPC

PINPOINT TEST C : THE TEMPERATURE GAUGE IS INOPERATIVE

C1 RETRIEVE THE RECORDED DIAGNOSTIC TROUBLE CODES (DTCS) FROM THE IPC (INSTRUMENT PANEL CLUSTER) SELF-TEST

- Using a scan tool, perform the IPC self-test.

Are any Diagnostic Trouble Codes (DTCs) recorded?

Yes	For DTC U0100:00, GO to Pinpoint Test AC For DTC U0140:00, GO to Pinpoint Test AF For all other Diagnostic Trouble Codes (DTCs), REFER to DTC Chart: IPC in this section.
No	GO to C2

C2 RETRIEVE THE RECORDED DIAGNOSTIC TROUBLE CODES (DTCS) FROM THE PCM (POWERTRAIN CONTROL MODULE) KOEO (KEY ON, ENGINE OFF) SELF-TEST

- Using a scan tool, perform the PCM KOEO self-test.

Are any Diagnostic Trouble Codes (DTCs) recorded?

Yes	Refer to Powertrain Control/Emissions Diagnosis (PC/ED) manual.
No	GO to C3

C3 RETRIEVE THE RECORDED DIAGNOSTIC TROUBLE CODES (DTCS) FROM THE BCM (BODY CONTROL MODULE) SELF-TEST

- Using a scan tool, perform the BCM self-test.

Are any Diagnostic Trouble Codes (DTCs) recorded?

Yes	REFER to: Body Control Module (BCM) (419-10 Multifunction Electronic Modules, Diagnosis and Testing).
No	GO to C4

C4 CHECK THE TEMPERATURE GAUGE OPERATION USING THE DEALER TEST MODE

- Ignition ON.
- Monitor the temperature gauge.
- Ignition OFF.
- Enter the Dealer Test Mode.
  REFER to: Instrument Panel Cluster (IPC) - System Operation and Component Description (413-01 Instrumentation, Message Center and Warning Chimes, Description and Operation).
- Scroll to gauge sweep.
- Monitor the temperature gauge when the gauge sweep initiates.

Does the temperature gauge start at cold (C), move to full hot (H) and return to cold (C)?

Yes	INSTALL a new PCM. REFER to: Powertrain Control Module (PCM) (303-14A Electronic Engine Controls - 2.0L Duratec-HE (125kW/170PS) - MI4, Removal and Installation).
No	INSTALL a new IPC. REFER to: Instrument Panel Cluster (IPC) (413-01 Instrumentation, Message Center and Warning Chimes, Removal and Installation).

Incorrect Temperature Gauge Indication

Diagnostic Overview

Diagnostics in this manual assume a certain skill level and knowledge of Ford-specific diagnostic practices.
REFER to: Diagnostic Methods (100-00 General Information, Description and Operation).

Normal Operation and Fault Conditions

See Temperature Gauge.
REFER to: Instrument Panel Cluster (IPC) - System Operation and Component Description (413-01 Instrumentation, Message Center and Warning Chimes, Description and Operation).

If the engine coolant temperature message is missing or invalid for 5 seconds or less, the IPC defaults the temperature gauge to the last setting, based upon the last known good temperature status message.

Possible Sources

- Engine cooling system concern
- PCM input concern
- IPC

PINPOINT TEST D : INCORRECT TEMPERATURE GAUGE INDICATION

D1 CHECK FOR CORRECT OPERATION OF THE COOLING SYSTEM

- Verify the engine cooling system and thermostat are functioning correctly.
  REFER to: Engine Cooling - System Operation and Component Description (303-03A Engine Cooling - 2.0L Duratec-HE (125kW/170PS) - MI4, Description and Operation).

Does the engine cooling system and thermostat operate correctly?

Yes	GO to D2
No	REFER to: Engine Cooling (303-03A Engine Cooling - 2.0L Duratec-HE (125kW/170PS) - MI4, Diagnosis and Testing).

D2 RETRIEVE THE RECORDED DIAGNOSTIC TROUBLE CODES (DTCS) FROM THE IPC (INSTRUMENT PANEL CLUSTER) SELF-TEST

- Using a scan tool, perform the IPC self-test.

Are any Diagnostic Trouble Codes (DTCs) recorded?

Yes	For DTC U0100:00, GO to Pinpoint Test AC For DTC U0140:00, GO to Pinpoint Test AF For all other Diagnostic Trouble Codes (DTCs), REFER to DTC Chart: IPC in this section.
No	GO to D3

D3 RETRIEVE THE RECORDED DIAGNOSTIC TROUBLE CODES (DTCS) FROM THE PCM (POWERTRAIN CONTROL MODULE) KOEO (KEY ON, ENGINE OFF) SELF-TEST

- Using a scan tool, perform a PCM KOEO self-test.

Are any Diagnostic Trouble Codes (DTCs) recorded?

Yes	Refer to Powertrain Control/Emissions Diagnosis (PC/ED) manual.
No	GO to D4

D4 CHECK THE TEMPERATURE GAUGE OPERATION USING THE DEALER TEST MODE

- Ignition ON.
- Monitor the temperature gauge.
- Ignition OFF.
- Enter the Dealer Test Mode. Enter the Dealer Test Mode.
  REFER to: Instrument Panel Cluster (IPC) - System Operation and Component Description (413-01 Instrumentation, Message Center and Warning Chimes, Description and Operation).
- Scroll to gauge sweep.
- Monitor the temperature gauge when the gauge sweep initiates.

Does the temperature gauge start at cold (C), move to full hot (H) and return to cold (C)?

Yes	GO to D5
No	INSTALL a new IPC . REFER to: Instrument Panel Cluster (IPC) (413-01 Instrumentation, Message Center and Warning

	Chimes, Removal and Installation).

D5 CHECK THE PCM (POWERTRAIN CONTROL MODULE) TEMPERATURE PARAMETER IDENTIFICATION (PID)

- Using a scan tool, view the PCM Parameter Identifications (PIDs).
- Start the engine.
- Monitor the PCM temperature Parameter Identification (PID) (ECT).

Does the PCM Parameter Identification (PID) agree with the position of the temperature gauge indication?

Yes	The temperature gauge is operating correctly at this time.
No	INSTALL a new IPC . REFER to: Instrument Panel Cluster (IPC) (413-01 Instrumentation, Message Center and Warning Chimes, Removal and Installation).

The Tachometer Is Inoperative

Diagnostic Overview

Diagnostics in this manual assume a certain skill level and knowledge of Ford-specific diagnostic practices.
REFER to: Diagnostic Methods (100-00 General Information, Description and Operation).

Normal Operation and Fault Conditions

See Tachometer.
REFER to: Instrument Panel Cluster (IPC) - System Operation and Component Description (413-01 Instrumentation, Message Center and Warning Chimes, Description and Operation).

NOTE: *If DTC U0100:00 sets in the IPC , other observable symptoms can be an inoperative speedometer, temperature gauge or odometer.*

If the BCM does not receive the engine rpm data from the PCM for more than 1 second, the BCM and IPC set DTC U0100:00.

If the IPC does not receive the engine rpm data for more than 1 second, the IPC defaults the tachometer to 0 rpm.

Possible Sources

- PCM
- IPC

PINPOINT TEST E : THE TACHOMETER IS INOPERATIVE

E1 RETRIEVE THE RECORDED DIAGNOSTIC TROUBLE CODES (DTCS) FROM THE IPC (INSTRUMENT PANEL CLUSTER) SELF-TEST

- Using a scan tool, perform the IPC self-test.

Are any Diagnostic Trouble Codes (DTCs) recorded?

Yes	For DTC U0100:00, GO to Pinpoint Test AC For DTC U0140:00, GO to Pinpoint Test AF For all other Diagnostic Trouble Codes (DTCs), REFER to DTC Chart: IPC in this section.
No	GO to E2

E2 RETRIEVE THE RECORDED DIAGNOSTIC TROUBLE CODES (DTCS) FROM THE PCM (POWERTRAIN CONTROL MODULE) KOEO (KEY ON, ENGINE OFF) SELF-TEST

- Using a scan tool, perform the PCM KOEO self-test.

Are any Diagnostic Trouble Codes (DTCs) recorded?

Yes	Refer to Powertrain Control/Emissions Diagnosis (PC/ED) manual.
No	GO to E3

E3 RETRIEVE THE RECORDED DIAGNOSTIC TROUBLE CODES (DTCS) FROM THE BCM (BODY CONTROL MODULE) SELF-TEST

- Using a scan tool, perform the BCM self-test.

Are any Diagnostic Trouble Codes (DTCs) recorded?

Yes	REFER to: Body Control Module (BCM) (419-10 Multifunction Electronic Modules, Diagnosis and Testing).
No	GO to E4

E4 CHECK THE TACHOMETER OPERATION USING THE DEALER TEST MODE

- Ignition ON.
- Monitor the tachometer.
- Ignition OFF.
- Enter the Dealer Test Mode. Enter the Dealer Test Mode.
  REFER to: Instrument Panel Cluster (IPC) - System Operation and Component Description (413-01 Instrumentation, Message Center and Warning Chimes, Description and Operation).
- Scroll to gauge sweep.
- Monitor the tachometer when the gauge sweep initiates.

Does the tachometer start at 0 rpm, move to 8,000 rpm and return to 0 rpm?

Yes	INSTALL a new PCM . REFER to: Powertrain Control Module (PCM) (303-14A Electronic Engine Controls - 2.0L Duratec-HE (125kW/170PS) - MI4, Removal and Installation).
No	INSTALL a new IPC . REFER to: Instrument Panel Cluster (IPC) (413-01 Instrumentation, Message Center and Warning Chimes, Removal and Installation).

Incorrect Tachometer Indication

Diagnostic Overview

Diagnostics in this manual assume a certain skill level and knowledge of Ford-specific diagnostic practices.
REFER to: Diagnostic Methods (100-00 General Information, Description and Operation).

Normal Operation and Fault Conditions

See Tachometer.

REFER to: Instrument Panel Cluster (IPC) - System Operation and Component Description (413-01 Instrumentation, Message Center and Warning Chimes, Description and Operation).

If the engine rpm message is missing or invalid for 1 second or less, the IPC defaults the tachometer to the last setting, based upon the last good message received, and the gauge can appear to freeze or become erratic.

Possible Sources

- PCM input concern
- IPC

PINPOINT TEST F : INCORRECT TACHOMETER INDICATION

F1 RETRIEVE THE RECORDED DIAGNOSTIC TROUBLE CODES (DTCS) FROM THE IPC (INSTRUMENT PANEL CLUSTER) SELF-TEST

- Using a scan tool, perform the IPC self-test.

Are any Diagnostic Trouble Codes (DTCs) recorded?

Yes	For DTC U0100:00, GO to Pinpoint Test AC For DTC U0140:00, GO to Pinpoint Test AF For all other Diagnostic Trouble Codes (DTCs), REFER to DTC Chart: IPC in this section.
No	GO to F2

F2 RETRIEVE THE RECORDED DIAGNOSTIC TROUBLE CODES (DTCS) FROM THE PCM (POWERTRAIN CONTROL MODULE) KOEO (KEY ON, ENGINE OFF) SELF-TEST

- Using a scan tool, perform the PCM KOEO self-test.

Are any Diagnostic Trouble Codes (DTCs) recorded?

Yes	Refer to Powertrain Control/Emissions Diagnosis (PC/ED) manual.
No	GO to F3

F3 CHECK THE TACHOMETER OPERATION USING THE DEALER TEST MODE

- Ignition ON.
- Monitor the tachometer.
- Ignition OFF.
- Enter the Dealer Test Mode. Enter the Dealer Test Mode.
  REFER to: Instrument Panel Cluster (IPC) - System Operation and Component Description (413-01 Instrumentation, Message Center and Warning Chimes, Description and Operation).
- Scroll to gauge sweep.
- Monitor the tachometer when the gauge sweep initiates.

Does the tachometer start at 0 rpm, move to 8,000 rpm and return to 0 rpm?

Yes	GO to F4
No	INSTALL a new IPC. REFER to: Instrument Panel Cluster (IPC) (413-01 Instrumentation, Message Center and Warning Chimes, Removal and Installation).

F4 CHECK THE PCM (POWERTRAIN CONTROL MODULE) RPM PARAMETER IDENTIFICATION (PID)
• Using a scan tool, view the PCM engine rpm Parameter Identifications (PIDs). • Monitor the tachometer while operating the engine at 1,000, 1,500, 2,000 and 2,500 rpm using the PCM active command Parameter Identification (PID) (RPM) to set the vehicle speed. **Does the tachometer indication range between 980-1,020 at 1,000 rpm, 1,470-1,580 rpm at 1,500 rpm, 1,940-2,040 rpm at 2,000 rpm and 2,450-2,550 rpm at 2,500 rpm?** **Yes** — The tachometer is operating correctly at this time. **No** — INSTALL a new IPC . REFER to: Instrument Panel Cluster (IPC) (413-01 Instrumentation, Message Center and Warning Chimes, Removal and Installation).

The Speedometer Is Inoperative

Diagnostic Overview

Diagnostics in this manual assume a certain skill level and knowledge of Ford-specific diagnostic practices.
REFER to: Diagnostic Methods (100-00 General Information, Description and Operation).

Normal Operation and Fault Conditions

See Speedometer.
REFER to: Instrument Panel Cluster (IPC) - System Operation and Component Description (413-01 Instrumentation, Message Center and Warning Chimes, Description and Operation).

If the BCM does not receive the vehicle speed message from the ABS module for more than 2 seconds, the BCM and IPC set DTC U0121:00.

If the IPC does not receive the vehicle speed message or if the data is deemed invalid for more than 2 seconds, the IPC defaults the speedometer to .

Possible Sources

- ABS module
- IPC

PINPOINT TEST G : THE SPEEDOMETER IS INOPERATIVE

G1 RETRIEVE THE RECORDED DIAGNOSTIC TROUBLE CODES (DTCS) FROM THE IPC (INSTRUMENT PANEL CLUSTER) SELF-TEST
• Using a scan tool, perform the IPC self-test. **Are any Diagnostic Trouble Codes (DTCs) recorded?** **Yes** — For DTC U0121:00, GO to Pinpoint Test AE For DTC U0140:00, GO to Pinpoint Test AF For all other Diagnostic Trouble Codes (DTCs), REFER to DTC Chart: IPC in this section. **No** — GO to G2
G2 RETRIEVE THE RECORDED DIAGNOSTIC TROUBLE CODES (DTCS) FROM THE ABS (ANTI-LOCK BRAKE SYSTEM) MODULE SELF-TEST
• Using a scan tool, perform the ABS module self-test.

Are any Diagnostic Trouble Codes (DTCs) recorded?

Yes	REFER to: Anti-Lock Brake System (ABS) and Stability Control (206-09 Anti-Lock Brake System (ABS) and Stability Control, Diagnosis and Testing).
No	GO to G3

G3 RETRIEVE THE RECORDED DIAGNOSTIC TROUBLE CODES (DTCS) FROM THE BCM (BODY CONTROL MODULE) SELF-TEST

- Using a scan tool, perform the BCM self-test.

Are any Diagnostic Trouble Codes (DTCs) recorded?

Yes	REFER to: Body Control Module (BCM) (419-10 Multifunction Electronic Modules, Diagnosis and Testing).
No	GO to G4

G4 CHECK THE SPEEDOMETER OPERATION USING THE DEALER TEST MODE

- Ignition ON.
- Monitor the speedometer.
- Ignition OFF.
- Enter the Dealer Test Mode. Enter the Dealer Test Mode.
  REFER to: Instrument Panel Cluster (IPC) - System Operation and Component Description (413-01 Instrumentation, Message Center and Warning Chimes, Description and Operation).
- Scroll to gauge sweep.
- Monitor the speedometer when the gauge sweep initiates.

Does the speedometer begin at 0 km/h (0 mph), move to 258 km/h (160 mph) and return to 0 km/h (0 mph)?

Yes	INSTALL a new Hydraulic Control Unit (HCU). REFER to: Hydraulic Control Unit (HCU) (206-09 Anti-Lock Brake System (ABS) and Stability Control, Removal and Installation).
No	INSTALL a new IPC . REFER to: Instrument Panel Cluster (IPC) (413-01 Instrumentation, Message Center and Warning Chimes, Removal and Installation).

Incorrect Speedometer Indication

Diagnostic Overview

Diagnostics in this manual assume a certain skill level and knowledge of Ford-specific diagnostic practices.
REFER to: Diagnostic Methods (100-00 General Information, Description and Operation).

Normal Operation and Fault Conditions

See Speedometer.
REFER to: Instrument Panel Cluster (IPC) - System Operation and Component Description (413-01 Instrumentation, Message Center and Warning Chimes, Description and Operation).

If the vehicle speed message is missing or invalid for 2 seconds or less, the IPC defaults the speedometer to the last speed indication based upon the last known good message received.

Visual Inspection and Diagnostic Pre-checks

Verify that the tire size on the vehicle matches the tire size listed on the Vehicle Certification (VC) label on the LH B-pillar.

Possible Sources

- Tire size configuration
- ABS module
- IPC

PINPOINT TEST H : INCORRECT SPEEDOMETER INDICATION

H1 CHECK THE TIRE SIZE CONFIGURATION

- Using the scan tool, view Module Programming for the programmed tire size.
- Verify that the size of the tires installed on the vehicle matches the Vehicle Certification (VC) label.
- Verify that the tire size configuration matches the Vehicle Certification (VC) label.

Is the tire size correct and is tire size correctly configured?

Yes	GO to H2
No	INSTALL the correct size tires or CONFIGURE the correct tire size as required.

H2 RETRIEVE THE RECORDED DIAGNOSTIC TROUBLE CODES (DTCS) FROM THE IPC (INSTRUMENT PANEL CLUSTER) SELF-TEST

- Using a scan tool, perform the IPC self-test.

Are any Diagnostic Trouble Codes (DTCs) recorded?

Yes	For DTC U0121:00, GO to Pinpoint Test AE For DTC U0140:00, GO to Pinpoint Test AF For all other Diagnostic Trouble Codes (DTCs), REFER to DTC Chart: IPC in this section.
No	GO to H3

H3 RETRIEVE THE RECORDED DIAGNOSTIC TROUBLE CODES (DTCS) FROM THE ABS (ANTI-LOCK BRAKE SYSTEM) MODULE SELF-TEST

- Using a scan tool, perform the ABS module self-test.

Are any Diagnostic Trouble Codes (DTCs) recorded?

Yes	REFER to: Anti-Lock Brake System (ABS) and Stability Control (206-09 Anti-Lock Brake System (ABS) and Stability Control, Diagnosis and Testing).
No	GO to H4

H4 CHECK THE SPEEDOMETER OPERATION USING THE DEALER TEST MODE

- Ignition ON.

Monitor the speedometer.
- Ignition OFF.
- Enter the Dealer Test Mode. Enter the Dealer Test Mode.
  REFER to: Instrument Panel Cluster (IPC) - System Operation and Component Description (413-01 Instrumentation, Message Center and Warning Chimes, Description and Operation).
- Scroll to gauge sweep.
- Monitor the speedometer when the gauge sweep initiates.

Does the speedometer begin at 0 km/h (0 mph), move to 258 km/h (160 mph) and return to 0 km/h (0 mph)?

Yes	GO to H5
No	INSTALL a new IPC . REFER to: Instrument Panel Cluster (IPC) (413-01 Instrumentation, Message Center and Warning Chimes, Removal and Installation).

H5 CHECK THE PCM (POWERTRAIN CONTROL MODULE) VEHICLE SPEED PARAMETER IDENTIFICATION (PID)

- Using a scan tool, view the PCM vehicle speed Parameter Identifications (PIDs).
- Monitor the PID (VSS) with the vehicle speedometer indicating 32.2 kmh (20 mph), 64.4 kmh (40 mph) and 96.6 kmh (60 mph).

Does the speedometer indicate between 32.2 kmh (20 mph)-35.4 kmh (22 mph), 64.4 kmh (40 mph)-70.8 kmh (44 mph) and 96.6 kmh (60 mph)-106.2 kmh (66 mph) at the 3 PCM Parameter Identification (PID) values?

Yes	GO to H6
No	INSTALL a new IPC . REFER to: Instrument Panel Cluster (IPC) (413-01 Instrumentation, Message Center and Warning Chimes, Removal and Installation).

H6 OBSERVE THE SPEEDOMETER OPERATION

- Ignition ON.
- Observe the speedometer with the vehicle at various wheel speeds and stopping frequently.

Does the speedometer begin at and fully return to the position when the wheels are stopped?

Yes	The speedometer is operating correctly at this time.
No	INSTALL a new IPC . REFER to: Instrument Panel Cluster (IPC) (413-01 Instrumentation, Message Center and Warning Chimes, Removal and Installation).

The Odometer Is Inoperative

Diagnostic Overview

Diagnostics in this manual assume a certain skill level and knowledge of Ford-specific diagnostic practices.
REFER to: Diagnostic Methods (100-00 General Information, Description and Operation).

Normal Operation and Fault Conditions

See Odometer.
REFER to: Instrument Panel Cluster (IPC) - System Operation and Component Description (413-01 Instrumentation, Message

Center and Warning Chimes, Description and Operation).

NOTE: *If DTC U0100:00 sets in the IPC , other observable symptoms can be an inoperative speedometer, tachometer or temperature gauge.*

If the wheel rotation count message is missing for 2 seconds or less, the IPC defaults the odometer to the last display, based upon the last known good odometer rolling count message.

If the BCM does not receive the wheel rotation count message from the ABS module for more than 2 seconds, the BCM and the IPC set DTC U0121:00 and the IPC defaults the odometer display to all dashes (-----).

If the odometer count message is deemed invalid by the IPC , the IPC defaults the odometer display to all dashes (-----). If a Non-Volatile Memory (NVM) becomes corrupted or if any Non-Volatile Memory (NVM) failure occurs, the message ERROR displays in the odometer display area.

Possible Sources

- ABS module
- IPC

PINPOINT TEST I : THE ODOMETER IS INOPERATIVE

I1 RETRIEVE THE RECORDED DIAGNOSTIC TROUBLE CODES (DTCS) FROM THE ABS (ANTI-LOCK BRAKE SYSTEM) MODULE SELF-TEST

- Using a scan tool, perform the ABS module self-test.

Are any Diagnostic Trouble Codes (DTCs) recorded?

Yes	REFER to: Anti-Lock Brake System (ABS) and Stability Control (206-09 Anti-Lock Brake System (ABS) and Stability Control, Diagnosis and Testing).
No	GO to I2

I2 CHECK FOR CORRUPTED NON-VOLATILE MEMORY (NVM)

- Ignition ON.
- Observe the message center display area.

Does the odometer display ERROR?

Yes	INSTALL a new IPC . REFER to: Instrument Panel Cluster (IPC) (413-01 Instrumentation, Message Center and Warning Chimes, Removal and Installation).
No	GO to I3

I3 RETRIEVE THE RECORDED DIAGNOSTIC TROUBLE CODES (DTCS) FROM THE IPC (INSTRUMENT PANEL CLUSTER) SELF-TEST

- Using a scan tool, perform the IPC self-test.

Are any Diagnostic Trouble Codes (DTCs) recorded?

Yes	For DTC U0121:00, GO to Pinpoint Test AE For DTC U0140:00, GO to Pinpoint Test AF For all other Diagnostic Trouble Codes (DTCs), REFER to DTC Chart: IPC in this section.

No	GO to I4

I4 RETRIEVE THE RECORDED DIAGNOSTIC TROUBLE CODES (DTCS) FROM THE BCM (BODY CONTROL MODULE) SELF-TEST

- Using a scan tool, perform the BCM self-test.

Are any Diagnostic Trouble Codes (DTCs) recorded?

Yes	REFER to: Body Control Module (BCM) (419-10 Multifunction Electronic Modules, Diagnosis and Testing).
No	INSTALL a new Hydraulic Control Unit (HCU). REFER to: Hydraulic Control Unit (HCU) (206-09 Anti-Lock Brake System (ABS) and Stability Control, Removal and Installation).

The Brake Warning Indicator is Never On

Refer to Wiring Diagrams Cell 60 for schematic and connector information.

Diagnostic Overview

Diagnostics in this manual assume a certain skill level and knowledge of Ford-specific diagnostic practices.
REFER to: Diagnostic Methods (100-00 General Information, Description and Operation).

Normal Operation and Fault Conditions

See Brake Warning Indicator, Park Position Detect Switch and Brake Fluid Level Switch.
REFER to: Instrument Panel Cluster (IPC) - System Operation and Component Description (413-01 Instrumentation, Message Center and Warning Chimes, Description and Operation).

Possible Sources

- Wiring, terminals or connectors
- Parking brake position switch
- Brake fluid level switch
- BCM
- IPC

Visual Inspection and Diagnostic Pre-checks

Inspect the brake fluid level switch for signs of any external damage. Inspect the brake fluid level switch wiring for signs of a pinched harness causing the an open circuit.

PINPOINT TEST J : THE BRAKE WARNING INDICATOR IS NEVER ON

J1 CHECK THE BRAKE WARNING INDICATOR USING THE DEALER TEST MODE

- Ignition OFF.
- Enter the Dealer Test Mode. Enter the Dealer Test Mode.
  REFER to: Instrument Panel Cluster (IPC) - System Operation and Component Description (413-01 Instrumentation, Message Center and Warning Chimes, Description and Operation).
- Scroll to LED test.
- Monitor the brake warning indicator.

Does the brake warning indicator illuminate?

Yes	GO to J2
No	INSTALL a new IPC . REFER to: Instrument Panel Cluster (IPC) (413-01 Instrumentation, Message Center and Warning Chimes, Removal and Installation).

J2 DETERMINE IF THE BRAKE WARNING INDICATOR OPERATES WITH THE PARKING BRAKE APPLIED

- Ignition ON.
- Apply the parking brake while monitoring the brake warning indicator.

Does the brake warning indicator illuminate with the parking brake applied?

Yes	GO to J6
No	GO to J3

J3 CHECK THE PARKING BRAKE WARNING INDICATOR SWITCH

- Ignition OFF.
- Disconnect: Parking Brake Position Switch.
- Connect a fused jumper wire:

Lead 1	Measurement / Action	Lead 2
C2015-1		C2015-2

- Ignition ON.

Does the brake warning indicator illuminate?

Yes	REMOVE the jumper wire. INSTALL a new parking brake position switch.
No	REMOVE the jumper wire. GO to J4

J4 CHECK THE PARKING BRAKE WARNING INDICATOR SWITCH GROUND CIRCUIT FOR AN OPEN

- Ignition OFF.
- Measure:

Positive Lead	Measurement / Action	Negative Lead
C2015-2	Ω	—

Is the resistance less than 3 ohms?

Yes	GO to J5
No	REPAIR the circuit.

J5 CHECK THE PARKING BRAKE WARNING INDICATOR SIGNAL CIRCUIT FOR AN OPEN

- Disconnect: BCM C2280C.
- Measure:

Positive Lead	Measurement / Action	Negative Lead
C2015-1	Ω	C2280C-25

Is the resistance less than 3 ohms?

Yes	GO to J8
No	REPAIR the circuit.

J6 CHECK THE BRAKE FLUID LEVEL SWITCH OPERATION

- Ignition OFF.
- Disconnect: Brake Fluid Level Switch.
- Ignition ON.
- Wait 1 minute.

Does the brake warning indicator illuminate?

Yes	INSTALL a new brake fluid reservoir. REFER to: Brake Fluid Reservoir (206-06 Hydraulic Brake Actuation, Removal and Installation).
No	GO to J7

J7 CHECK THE BRAKE FLUID LEVEL SIGNAL CIRCUIT FOR A SHORT TO GROUND

- Ignition OFF.
- Disconnect: BCM C2280A.
- Measure:

Positive Lead	Measurement / Action	Negative Lead
C124-2	Ω	—

Is the resistance greater than 10,000 ohms?

Yes	GO to J8
No	REPAIR the circuit.

J8 CHECK FOR CORRECT BCM (BODY CONTROL MODULE) OPERATION

- Ignition OFF.

- Disconnect and inspect all BCM connectors.
- Repair:
  - corrosion (install new connector or terminals - clean module pins)
  - damaged or bent pins - install new terminals/pins
  - pushed-out pins - install new pins as necessary
- Reconnect the BCM connectors. Make sure they seat and latch correctly.
- Operate the system and determine if the concern is still present.

Is the concern still present?

Yes	CHECK On-Line Automotive Service Information System (OASIS) for any applicable Technical Service Bulletins (TSBs). If a TSB exists for this concern, DISCONTINUE this test and FOLLOW TSB instructions. If no Technical Service Bulletins (TSBs) address this concern, INSTALL a new BCM. REFER to: Body Control Module (BCM) (419-10 Multifunction Electronic Modules, Removal and Installation).
No	The system is operating correctly at this time. The concern may have been caused by module connections. ADDRESS the root cause of any connector or pin issues.

The Brake Warning Indicator is Always On

Refer to Wiring Diagrams Cell 60 for schematic and connector information.

Diagnostic Overview

Diagnostics in this manual assume a certain skill level and knowledge of Ford-specific diagnostic practices.
REFER to: Diagnostic Methods (100-00 General Information, Description and Operation).

Normal Operation and Fault Conditions

See Brake Warning Indicator, Park Position Detect Switch and Brake Fluid Level Switch.
REFER to: Instrument Panel Cluster (IPC) - System Operation and Component Description (413-01 Instrumentation, Message Center and Warning Chimes, Description and Operation).

NOTE: *The ABS warning indicator, stability-traction control indicator (sliding car icon), stability-traction control disabled (sliding car OFF icon) and the brake warning indicator illuminate if the input to illuminate the brake warning indicator is sent by the ABS module.*

If the brake warning request message is missing from the BCM for more than a programmed length of time, the BCM and the IPC set DTC U0121:00 and defaults the brake warning indicator on.

If the parking brake warning request or brake fluid level low message are missing from the BCM for more than the programmed preset time, the IPC sets DTC U0140:00 and defaults the brake warning indicator on.

BCM DTC Fault Trigger Conditions

DTC	Description	Fault Trigger Conditions
B1048:13	Brake Fluid Level Switch: Circuit Open	An on-demand DTC that sets in the BCM when the BCM detects an open on the brake fluid level switch input.
C1D00:23	Park Brake Apply Switch: Signal Stuck Low	An on-demand DTC that sets in the BCM if the BCM detects a short to ground on the parking brake input circuit.

Possible Sources

- Wiring, terminals or connectors
- Parking brake position switch
- Brake fluid level switch
- ABS module
- BCM
- IPC

Visual Inspection and Diagnostic Pre-checks

Inspect the base brake system and the parking brake system for correct operation. Check for signs of connector terminal damage, corrosion, bent or damaged pins. Inspect the brake fluid level switch for signs of any external damage. Verify the parking brake is fully released and the brake fluid is not low prior to carrying out the diagnostics.

PINPOINT TEST K : THE BRAKE WARNING INDICATOR IS ALWAYS ON

K1 RETRIEVE THE RECORDED DIAGNOSTIC TROUBLE CODES (DTCS) FROM THE IPC (INSTRUMENT PANEL CLUSTER) SELF-TEST

- Ignition ON.
- Using a scan tool, perform the IPC self-test.

Are any Diagnostic Trouble Codes (DTCs) recorded?

Yes	For DTC U0121:00, GO to Pinpoint Test AE For DTC U0140:00, GO to Pinpoint Test AF For all other Diagnostic Trouble Codes (DTCs), REFER to DTC Chart: IPC in this section.
No	GO to K2

K2 RETRIEVE THE RECORDED DIAGNOSTIC TROUBLE CODES (DTCS) FROM THE BCM (BODY CONTROL MODULE) SELF-TEST

- Using a scan tool, perform the BCM self-test.

Are any Diagnostic Trouble Codes (DTCs) recorded?

Yes	For DTC C1D00:23, GO to K4 For DTC B1048:13, GO to K7 For all other Diagnostic Trouble Codes (DTCs), REFER to: Body Control Module (BCM) (419-10 Multifunction Electronic Modules, Diagnosis and Testing).
No	GO to K3

K3 RETRIEVE THE RECORDED DIAGNOSTIC TROUBLE CODES (DTCS) FROM THE ABS (ANTI-LOCK BRAKE SYSTEM) MODULE SELF-TEST

- Using a scan tool, perform the ABS module self-test.

Are any Diagnostic Trouble Codes (DTCs) recorded?

Yes	REFER to: Anti-Lock Brake System (ABS) and Stability Control (206-09 Anti-Lock Brake System (ABS) and Stability Control, Diagnosis and Testing).

No	INSTALL a new IPC . REFER to: Instrument Panel Cluster (IPC) (413-01 Instrumentation, Message Center and Warning Chimes, Removal and Installation).

K4 CHECK THE PARKING BRAKE WARNING INDICATOR SWITCH PARAMETER IDENTIFICATION (PID)

- Using a scan tool, view the BCM parking brake position switchParameter Identifications (PIDs).
- Monitor the parking brake Parameter Identification (PID) (PARK_BRK_SW) with the parking brake released.

Does the Parameter Identification (PID) agree with the parking brake position?

Yes	GO to K10
No	GO to K5

K5 CHECK THE PARKING BRAKE WARNING INDICATOR SWITCH

- Ignition OFF.
- Disconnect: Parking Brake Switch.
- Ignition ON.
- Using a scan tool, view the BCM parking brake position switch Parameter Identifications (PIDs).
- Monitor the parking brake Parameter Identification (PID) (PARK_BRK_SW) with the parking brake released.

Does the Parameter Identification (PID) indicate the parking brake is released?

Yes	INSTALL a new parking brake position switch.
No	GO to K6

K6 CHECK THE PARKING BRAKE WARNING INDICATOR SWITCH INPUT CIRCUIT FOR A SHORT TO GROUND

- Ignition OFF.
- Disconnect: BCM C2280C.
- Measure:

Positive Lead	Measurement / Action	Negative Lead
C2280C-25	Ω	—

Is the resistance greater than 10,000 ohms?

Yes	GO to K10
No	REPAIR the circuit.

K7 CHECK THE BRAKE WARNING INDICATOR USING THE BRAKE FLUID LEVEL SWITCH

- Ignition OFF.
- Disconnect: Brake Fluid Level Switch.
- Connect a fused jumper wire:

Lead 1	Measurement / Action	Lead 2
C124-1		C124-2

- Ignition ON.
- Wait 1 minute.

Does the brake warning indicator turn off?

Yes	REMOVE the jumper wire. INSTALL a new brake fluid reservoir. REFER to: Brake Fluid Reservoir (206-06 Hydraulic Brake Actuation, Removal and Installation).
No	REMOVE the jumper wire. GO to K8

K8 CHECK THE BRAKE FLUID LEVEL SWITCH GROUND CIRCUIT FOR AN OPEN

- Ignition OFF.
- Measure:

Positive Lead	Measurement / Action	Negative Lead
C124-1	Ω	—

Is the resistance less than 3 ohms?

Yes	GO to K9
No	REPAIR the circuit.

K9 CHECK THE BRAKE FLUID LEVEL SWITCH INPUT CIRCUIT FOR AN OPEN

- Disconnect: BCM C2280A.
- Measure:

Positive Lead	Measurement / Action	Negative Lead
C2280A-17	Ω	C124-2

Is the resistance less than 3 ohms?

Yes	GO to K10
No	REPAIR the circuit.

K10 CHECK FOR CORRECT BCM (BODY CONTROL MODULE) OPERATION

- Ignition OFF.
- Disconnect and inspect all BCM connectors.
- Repair:

- corrosion (install new connector or terminals - clean module pins)
- damaged or bent pins - install new terminals/pins
- pushed-out pins - install new pins as necessary

- Reconnect the BCM connectors. Make sure they seat and latch correctly.
- Operate the system and determine if the concern is still present.

Is the concern still present?

Yes	CHECK On-Line Automotive Service Information System (OASIS) for any applicable Technical Service Bulletins (TSBs). If a TSB exists for this concern, DISCONTINUE this test and FOLLOW TSB instructions. If no Technical Service Bulletins (TSBs) address this concern, INSTALL a new BCM. REFER to: Body Control Module (BCM) (419-10 Multifunction Electronic Modules, Removal and Installation).
No	The system is operating correctly at this time. The concern may have been caused by module connections. ADDRESS the root cause of any connector or pin issues.

The ABS Warning Indicator Is Never Or Always On

Diagnostic Overview

Diagnostics in this manual assume a certain skill level and knowledge of Ford-specific diagnostic practices.
REFER to: Diagnostic Methods (100-00 General Information, Description and Operation).

Normal Operation and Fault Conditions

See ABS Warning Indicator.
REFER to: Instrument Panel Cluster (IPC) - System Operation and Component Description (413-01 Instrumentation, Message Center and Warning Chimes, Description and Operation).

If the BCM is missing the ABS warning indicator request message for less than the programmed length of time, the IPC defaults the ABS warning indicator to its last state (on or off) based upon the last known good message received.

If the ABS warning indicator request message is missing for the programmed length of time or longer, the BCM and the IPC set DTC U0121:00 and the IPC defaults the ABS warning indicator on.

Possible Sources

- ABS module
- IPC

PINPOINT TEST L : THE ABS (ANTI-LOCK BRAKE SYSTEM) WARNING INDICATOR IS NEVER OR ALWAYS ON

L1 RETRIEVE THE RECORDED DIAGNOSTIC TROUBLE CODES (DTCS) FROM THE IPC (INSTRUMENT PANEL CLUSTER) SELF-TEST

- Using a scan tool, perform the IPC self-test.

Are any Diagnostic Trouble Codes (DTCs) recorded?

Yes	For DTC U0121:00, GO to Pinpoint Test AE For DTC U0140:00, GO to Pinpoint Test AF For all other Diagnostic Trouble Codes (DTCs), REFER to DTC Chart: IPC in this section.
No	GO to L2

L2 RETRIEVE THE RECORDED DIAGNOSTIC TROUBLE CODES (DTCS) FROM THE ABS (ANTI-LOCK BRAKE

SYSTEM) MODULE SELF-TEST
• Using a scan tool, perform the ABS module self-test. **Are any Diagnostic Trouble Codes (DTCs) recorded?**

Yes	REFER to: Anti-Lock Brake System (ABS) and Stability Control (206-09 Anti-Lock Brake System (ABS) and Stability Control, Diagnosis and Testing).
No	GO to L3

L3 RETRIEVE THE RECORDED DIAGNOSTIC TROUBLE CODES (DTCS) FROM THE BCM (BODY CONTROL MODULE) SELF-TEST
• Using a scan tool, perform the BCM self-test. **Are any Diagnostic Trouble Codes (DTCs) recorded?**

Yes	REFER to: Body Control Module (BCM) (419-10 Multifunction Electronic Modules, Diagnosis and Testing).
No	INSTALL a new IPC . REFER to: Instrument Panel Cluster (IPC) (413-01 Instrumentation, Message Center and Warning Chimes, Removal and Installation).

The Stability-Traction Control Indicator (Sliding Car Icon) Is Never Or Always On

Diagnostic Overview

Diagnostics in this manual assume a certain skill level and knowledge of Ford-specific diagnostic practices.
REFER to: Diagnostic Methods (100-00 General Information, Description and Operation).

Normal Operation and Fault Conditions

See Stability-Traction Control Indicator (Sliding Car Icon).
REFER to: Instrument Panel Cluster (IPC) - System Operation and Component Description (413-01 Instrumentation, Message Center and Warning Chimes, Description and Operation).

If the BCM does not receive the stability-traction control indication message from the ABS module for the programmed length of time or longer, the BCM and the IPC set DTC U0121:00. If the IPC does not receive the stability-traction control indication message, the IPC defaults the stability-traction control indicator (sliding car icon) on.

If the stability-traction control indication message is missing or invalid for less than the programmed length of time, the IPC defaults the stability-traction control indicator (sliding car icon) to the last indication mode (on/off) based upon the last known good message.

Possible Sources

- Stability-traction control concern
- ABS module
- IPC

PINPOINT TEST M : THE STABILITY-TRACTION CONTROL INDICATOR (SLIDING CAR ICON) IS NEVER OR ALWAYS ON

M1 RETRIEVE THE RECORDED DIAGNOSTIC TROUBLE CODES (DTCS) FROM THE IPC (INSTRUMENT PANEL

CLUSTER) SELF-TEST

- Using a scan tool, perform the IPC self-test.

Are any Diagnostic Trouble Codes (DTCs) recorded?

Yes	For DTC U0121:00, GO to Pinpoint Test AE For DTC U0140:00, GO to Pinpoint Test AF For all other Diagnostic Trouble Codes (DTCs), REFER to DTC Chart: IPC in this section.
No	GO to M2

M2 RETRIEVE THE RECORDED DIAGNOSTIC TROUBLE CODES (DTCS) FROM THE ABS (ANTI-LOCK BRAKE SYSTEM) MODULE SELF-TEST

- Using a scan tool, perform the ABS module self-test.

Are any Diagnostic Trouble Codes (DTCs) recorded?

Yes	REFER to: Anti-Lock Brake System (ABS) and Stability Control (206-09 Anti-Lock Brake System (ABS) and Stability Control, Diagnosis and Testing).
No	GO to M3

M3 RETRIEVE THE RECORDED DIAGNOSTIC TROUBLE CODES (DTCS) FROM THE BCM (BODY CONTROL MODULE) SELF-TEST

- Using a scan tool, perform the BCM self-test.

Are any Diagnostic Trouble Codes (DTCs) recorded?

Yes	REFER to: Body Control Module (BCM) (419-10 Multifunction Electronic Modules, Diagnosis and Testing).
No	INSTALL a new IPC . REFER to: Instrument Panel Cluster (IPC) (413-01 Instrumentation, Message Center and Warning Chimes, Removal and Installation).

The Stability-Traction Control Disabled Indicator (Sliding Car OFF Icon) Is Never Or Always On

Diagnostic Overview

Diagnostics in this manual assume a certain skill level and knowledge of Ford-specific diagnostic practices.
REFER to: Diagnostic Methods (100-00 General Information, Description and Operation).

Normal Operation and Fault Conditions

See Stability-Traction Control Disabled Indicator (Sliding Car OFF Icon).
REFER to: Instrument Panel Cluster (IPC) - System Operation and Component Description (413-01 Instrumentation, Message Center and Warning Chimes, Description and Operation).

If the stability-traction control disabled indicator message is missing or invalid for less than the programmed length of time, the IPC defaults the stability-traction control disabled indicator (sliding car OFF icon) to the last indication mode (on/off) based upon the last known good message.

If the BCM does not receive the stability-traction control disabled indicator message from the ABS module for the programmed length of time or longer, the BCM and the IPC set DTC U0121:00. If the IPC does not receive the stability/traction control disabled indicator message, the IPC defaults the stability-traction control disabled indicator (sliding car OFF icon) off.

Possible Sources

- A MyKey® key is in use
- ABS module
- IPC

PINPOINT TEST N : THE STABILITY-TRACTION CONTROL DISABLED INDICATOR (SLIDING CAR OFF ICON) IS NEVER OR ALWAYS ON

N1 RETRIEVE THE RECORDED DIAGNOSTIC TROUBLE CODES (DTCS) FROM THE IPC (INSTRUMENT PANEL CLUSTER) SELF-TEST

- Using a scan tool, perform the IPC self-test.

Are any Diagnostic Trouble Codes (DTCs) recorded?

Yes	For DTC U0121:00, GO to Pinpoint Test AE For DTC U0140:00, GO to Pinpoint Test AF For all other Diagnostic Trouble Codes (DTCs), REFER to DTC Chart: IPC in this section.
No	GO to N2

N2 RETRIEVE THE RECORDED DIAGNOSTIC TROUBLE CODES (DTCS) FROM THE ABS (ANTI-LOCK BRAKE SYSTEM) MODULE SELF-TEST

- Using a scan tool, perform the ABS module self-test.

Are any Diagnostic Trouble Codes (DTCs) recorded?

Yes	REFER to: Anti-Lock Brake System (ABS) and Stability Control (206-09 Anti-Lock Brake System (ABS) and Stability Control, Diagnosis and Testing).
No	GO to N3

N3 RETRIEVE THE RECORDED DIAGNOSTIC TROUBLE CODES (DTCS) FROM THE BCM (BODY CONTROL MODULE) SELF-TEST

- Using a scan tool, perform the BCM self-test.

Are any Diagnostic Trouble Codes (DTCs) recorded?

Yes	REFER to: Body Control Module (BCM) (419-10 Multifunction Electronic Modules, Diagnosis and Testing).
No	GO to N4

N4 CHECK FOR THE KEY TYPE

- Check if the key is a MyKey® programmed key or an administrator key. Refer to the Owners Literature.

Is the key an administrator key?

Yes	GO to N5
No	If the MyKey® AdvanceTrac on feature is configured always on, the system is normal. The stability-traction control system cannot be disabled when the AdvanceTrac® on feature is configured always on. If the MyKey® AdvanceTrac on feature is not configured always on, GO to N5

N5 CHECK THE STABILITY-TRACTION CONTROL DISABLED INDICATOR (SLIDING CAR OFF ICON) USING THE DEALER TEST MODE

- Ignition OFF.
- Enter the Dealer Test Mode. Enter the Dealer Test Mode.
  REFER to: Instrument Panel Cluster (IPC) - System Operation and Component Description (413-01 Instrumentation, Message Center and Warning Chimes, Description and Operation).
- Scroll to LED test.
- Monitor the stability-traction control disabled indicator (sliding car OFF icon).

Does the stability-traction control disabled indicator (sliding car OFF icon) illuminate?

Yes	On the base Focus, GO to N6 On the Focus ST, GO to N7
No	INSTALL a new IPC. REFER to: Instrument Panel Cluster (IPC) (413-01 Instrumentation, Message Center and Warning Chimes, Removal and Installation).

N6 CHECK THE TRACTION CONTROL SETTING THROUGH THE MESSAGE CENTER

- Using the LH steering wheel switch, navigate to the traction control setting menu and observe the traction control setting.
- Configure the stability-traction control on then off again.

Does the traction control selection change when the feature is configured on and off?

Yes	The system is operating correctly at this time.
No	INSTALL a new IPC. REFER to: Instrument Panel Cluster (IPC) (413-01 Instrumentation, Message Center and Warning Chimes, Removal and Installation).

N7 CHECK THE TRACTION CONTROL DISABLE SYSTEM

- Using the traction control disable switch, turn the stabilty-traction control system off then on.

Does the traction control system disable when turned off and enable when turned on?

Yes	The system is operating correctly at this time.
No	DIAGNOSE the traction control system cannot be disabled. REFER to: Anti-Lock Brake System (ABS) and Stability Control (206-09 Anti-Lock Brake System (ABS) and Stability Control, Diagnosis and Testing).

The LH-RH Turn Signal, High Beam Or Fog Lamp Indicator Is Never Or Always On

Diagnostic Overview

Diagnostics in this manual assume a certain skill level and knowledge of Ford-specific diagnostic practices.
REFER to: Diagnostic Methods (100-00 General Information, Description and Operation).

Normal Operation and Fault Conditions

See LH-RH Turn Signal Indicator, High Beam Indicator and Fog Lamp Indicator.
REFER to: Instrument Panel Cluster (IPC) - System Operation and Component Description (413-01 Instrumentation, Message Center and Warning Chimes, Description and Operation).

If the turn indicator command, headlamp high beam indicator request or fog lamp indicator request message is missing for less than 2 seconds, the IPC defaults the turn signals, high beam or fog lamp indicator to its last state (on or off) based upon the last known good message received.

If the turn indicator command, headlamp high beam indicator request or fog lamp indicator request message is missing for 2 seconds or longer, the IPC sets DTC U0140:00 in continuous memory and defaults the turn signals, high beam or fog lamp indicator off.

Possible Sources

- Turn signal concern
- High beam concern
- Fog lamp concern
- BCM
- IPC

PINPOINT TEST O : THE LH-RH TURN SIGNAL, HIGH BEAM OR FOG LAMP INDICATOR IS NEVER OR ALWAYS ON

O1 DETERMINE THE FAULT CONDITION

- Ignition ON.
- Check the operation of the high beams, turn signal or fog lamps.

Do the high beam, turn signal and fog lamps operate correctly?

Yes	GO to O2
No	Refer to the appropriate section in Group 417 for the procedure.

O2 RETRIEVE THE RECORDED DIAGNOSTIC TROUBLE CODES (DTCS) FROM THE IPC (INSTRUMENT PANEL CLUSTER) SELF-TEST

- Using a scan tool, perform the IPC self-test.

Is DTC U0140:00 recorded?

Yes	GO to Pinpoint Test AF
No	GO to O3

O3 RETRIEVE THE RECORDED DIAGNOSTIC TROUBLE CODES (DTCS) FROM THE BCM (BODY CONTROL MODULE) SELF-TEST

- Using a scan tool, perform the BCM self-test.

Are any Diagnostic Trouble Codes (DTCs) recorded?

Yes	REFER to: Body Control Module (BCM) (419-10 Multifunction Electronic Modules, Diagnosis and Testing).
No	GO to O4

O4 CHECK THE HIGH BEAM, TURN OR FOG LAMP INDICATORS USING THE DEALER TEST MODE

- Ignition OFF.
- Enter the Dealer Test Mode. Enter the Dealer Test Mode.
  REFER to: Instrument Panel Cluster (IPC) - System Operation and Component Description (413-01 Instrumentation, Message Center and Warning Chimes, Description and Operation).
- Scroll to LED test.
- Monitor the high beam, turn or fog lamp indicator.

Does the high beam, turn or fog lamp indicator illuminate?

Yes	INSTALL a new BCM . REFER to: Body Control Module (BCM) (419-10 Multifunction Electronic Modules, Removal and Installation). TEST the system for normal operation. If the high beam, turn or fog lamp indicator is still never or always on, INSTALL a new IPC . REFER to: Instrument Panel Cluster (IPC) (413-01 Instrumentation, Message Center and Warning Chimes, Removal and Installation).
No	INSTALL a new IPC . REFER to: Instrument Panel Cluster (IPC) (413-01 Instrumentation, Message Center and Warning Chimes, Removal and Installation).

The TPMS Warning Indicator Is Never Or Always On

Diagnostic Overview

Diagnostics in this manual assume a certain skill level and knowledge of Ford-specific diagnostic practices.
REFER to: Diagnostic Methods (100-00 General Information, Description and Operation).

Normal Operation and Fault Conditions

See TPMS Warning Indicator.
REFER to: Instrument Panel Cluster (IPC) - System Operation and Component Description (413-01 Instrumentation, Message Center and Warning Chimes, Description and Operation).

If the tire pressure status message is missing for 5 seconds or less, the TPMS warning indicator remains in its last indication state (on or off) based on the last known good message received.

If the tire pressure status message is missing for more than 5 seconds, the IPC sets DTC U0140:00 and flashes the TPMS warning indicator for approximately 75 seconds then illuminates the TPMS warning indicator.

Possible Sources

- Tire pressure
- TPMS concern
- BCM
- IPC

PINPOINT TEST P : THE TPMS (TIRE PRESSURE MONITORING SYSTEM) WARNING INDICATOR IS NEVER OR

ALWAYS ON

P1 CHECK THE TIRE PRESSURE

- Verify the tire pressure in all tires meets the recommended tire pressures on the Vehicle Certification (VC) label. See the Vehicle Certification (VC) on driver door jamb.

Do all the tires meet the recommended tire pressures?

Yes	GO to P2
No	CORRECT the tire pressures.

P2 RETRIEVE THE RECORDED DIAGNOSTIC TROUBLE CODES (DTCS) FROM IPC (INSTRUMENT PANEL CLUSTER) SELF-TEST

- Using a scan tool, perform the IPC self-test.

Are any Diagnostic Trouble Codes (DTCs) recorded?

Yes	For DTC U0140:00, GO to Pinpoint Test AF For all other Diagnostic Trouble Codes (DTCs), REFER to DTC Chart: IPC in this section.
No	GO to P3

P3 RETRIEVE THE RECORDED DIAGNOSTIC TROUBLE CODES (DTCS) FROM THE BCM (BODY CONTROL MODULE) SELF-TEST

- Using a scan tool, perform the BCM self-test.

Are any Diagnostic Trouble Codes (DTCs) recorded?

Yes	REFER to: Body Control Module (BCM) (419-10 Multifunction Electronic Modules, Diagnosis and Testing).
No	GO to P4

P4 CHECK THE TPMS (TIRE PRESSURE MONITORING SYSTEM) WARNING INDICATOR USING THE DEALER TEST MODE

- Ignition OFF.
- Enter the Dealer Test Mode. Enter the Dealer Test Mode.
  REFER to: Instrument Panel Cluster (IPC) - System Operation and Component Description (413-01 Instrumentation, Message Center and Warning Chimes, Description and Operation).
- Scroll to LED test.
- Monitor the TPMS warning indicator.

Does the TPMS warning indicator illuminate?

Yes	INSTALL a new BCM . REFER to: Body Control Module (BCM) (419-10 Multifunction Electronic Modules, Removal and Installation). TEST the system for normal operation. If the TPMS warning indicator remains on, INSTALL a new IPC . REFER to: Instrument Panel Cluster (IPC) (413-01 Instrumentation, Message Center and Warning Chimes, Removal and Installation).

No	INSTALL a new IPC . REFER to: Instrument Panel Cluster (IPC) (413-01 Instrumentation, Message Center and Warning Chimes, Removal and Installation).

The Airbag Warning Indicator Is Never Or Always On

Diagnostic Overview

Diagnostics in this manual assume a certain skill level and knowledge of Ford-specific diagnostic practices.
REFER to: Diagnostic Methods (100-00 General Information, Description and Operation).

Normal Operation and Fault Conditions

See Airbag Warning Indicator.
REFER to: Instrument Panel Cluster (IPC) - System Operation and Component Description (413-01 Instrumentation, Message Center and Warning Chimes, Description and Operation).

If the airbag indicator lamp request message is missing for less than 2 seconds, the IPC defaults the airbag warning indicator to its last state (on or off) based upon the last known good message received.

If the airbag indicator lamp request message is missing or is deemed invalid for 2 seconds or longer, the BCM and the IPC set DTC U0151:00. If the airbag indicator lamp request message is missing, the IPC defaults the airbag warning indicator on.

Possible Sources

- SRS concern
- RCM
- IPC

PINPOINT TEST Q : THE AIRBAG WARNING INDICATOR IS NEVER OR ALWAYS ON

Q1 RETRIEVE THE RECORDED DIAGNOSTIC TROUBLE CODES (DTCS) FROM THE IPC (INSTRUMENT PANEL CLUSTER) SELF-TEST

- Using a scan tool, perform the IPC self-test.

Are any Diagnostic Trouble Codes (DTCs) recorded?

Yes	For DTC U0140:00, GO to Pinpoint Test AF For DTC U0151:00, GO to Pinpoint Test AG For all other Diagnostic Trouble Codes (DTCs), REFER to DTC Chart: IPC in this section.
No	GO to Q2

Q2 RETRIEVE THE RECORDED DIAGNOSTIC TROUBLE CODES (DTCS) FROM THE RCM (RESTRAINTS CONTROL MODULE) SELF-TEST

- Using a scan tool, perform the RCM self-test.

Are any Diagnostic Trouble Codes (DTCs) recorded?

Yes	REFER to: Airbag Supplemental Restraint System (SRS) - Vehicles Built From: 11-June-2012 (501-20B Supplemental Restraint System, Diagnosis and Testing).
No	GO to Q3

Q3 RETRIEVE THE RECORDED DIAGNOSTIC TROUBLE CODES (DTCS) FROM THE BCM (BODY CONTROL MODULE) SELF-TEST

- Using a scan tool, perform the BCM self-test.

Are any Diagnostic Trouble Codes (DTCs) recorded?

Yes	REFER to: Body Control Module (BCM) (419-10 Multifunction Electronic Modules, Diagnosis and Testing).
No	GO to Q4

Q4 CHECK THE AIRBAG WARNING INDICATOR USING THE DEALER TEST MODE

- Ignition OFF.
- Enter the Dealer Test Mode. Enter the Dealer Test Mode.
  REFER to: Instrument Panel Cluster (IPC) - System Operation and Component Description (413-01 Instrumentation, Message Center and Warning Chimes, Description and Operation).
- Scroll to LED test.
- Monitor the airbag warning indicator.

Does the airbag warning indicator illuminate?

Yes	INSTALL a new RCM . REFER to: Restraints Control Module (RCM) (501-20 Supplemental Restraint System) . TEST the system for normal operation. If the airbag warning indicator remains on, INSTALL a new IPC . REFER to: Instrument Panel Cluster (IPC) (413-01 Instrumentation, Message Center and Warning Chimes, Removal and Installation).
No	INSTALL a new IPC . REFER to: Instrument Panel Cluster (IPC) (413-01 Instrumentation, Message Center and Warning Chimes, Removal and Installation).

The Safety Belt Warning Indicator Is Never Or Always On

Diagnostic Overview

Diagnostics in this manual assume a certain skill level and knowledge of Ford-specific diagnostic practices.
REFER to: Diagnostic Methods (100-00 General Information, Description and Operation).

Normal Operation and Fault Conditions

See Safety Belt Warning Indicator.
REFER to: Instrument Panel Cluster (IPC) - System Operation and Component Description (413-01 Instrumentation, Message Center and Warning Chimes, Description and Operation).

If the safety belt status message is missing or is deemed invalid, the BCM and the IPC set DTC U0151:00. If the safety belt status message is missing, the IPC defaults the safety belt warning indicator off.

Possible Sources

- Safety belt buckle concern
- RCM
- IPC

PINPOINT TEST R : THE SAFETY BELT WARNING INDICATOR IS NEVER OR ALWAYS ON

R1 RETRIEVE THE RECORDED DIAGNOSTIC TROUBLE CODES (DTCS) FROM THE IPC (INSTRUMENT PANEL CLUSTER) SELF-TEST

- Using a scan tool, perform the IPC self-test.

Are any Diagnostic Trouble Codes (DTCs) recorded?

Yes	For DTC U0140:00, GO to Pinpoint Test AF For DTC U0151:00, GO to Pinpoint Test AG For all other Diagnostic Trouble Codes (DTCs), REFER to DTC Chart: IPC in this section.
No	GO to R2

R2 RETRIEVE THE RECORDED DIAGNOSTIC TROUBLE CODES (DTCS) FROM THE RCM (RESTRAINTS CONTROL MODULE) SELF-TEST

- Using a scan tool, perform the RCM self-test.

Are any Diagnostic Trouble Codes (DTCs) recorded?

Yes	REFER to: Body Control Module (BCM) (419-10 Multifunction Electronic Modules, Diagnosis and Testing).
No	GO to R3

R3 CHECK THE DRIVER SAFETY BELT BUCKLE SWITCH

- Ignition ON.
- Using a scan tool, monitor the RCM driver safety belt buckle Parameter Identification (PID) (SBELT_D_ST) while buckling and unbuckling the driver safety belt.

Does the Parameter Identification (PID) display BUCKLED with the safety belt buckled and UNBUCKLED with the safety belt unbuckled?

Yes	GO to R4
No	INSTALL a new safety belt buckle. REFER to: Front Safety Belt Buckle (501-20A Safety Belt System, Removal and Installation). If the safety belt warning indicator is still inoperative or always on, INSTALL a new RCM . REFER to: Restraints Control Module (RCM) (501-20 Supplemental Restraint System) .

R4 RETRIEVE THE RECORDED DIAGNOSTIC TROUBLE CODES (DTCS) FROM THE BCM (BODY CONTROL MODULE) SELF-TEST

- Using a scan tool, perform the BCM self-test.

Are any Diagnostic Trouble Codes (DTCs) recorded?

Yes	REFER to: Body Control Module (BCM) (419-10 Multifunction Electronic Modules, Diagnosis and Testing).
No	GO to R5

R5 CHECK THE SAFETY BELT WARNING INDICATOR USING THE DEALER TEST MODE
• Ignition OFF. • Enter the Dealer Test Mode. Enter the Dealer Test Mode. REFER to: Instrument Panel Cluster (IPC) - System Operation and Component Description (413-01 Instrumentation, Message Center and Warning Chimes, Description and Operation). • Scroll to LED test. • Monitor the safety belt warning indicator. **Does the safety belt warning indicator illuminate?**

Yes	INSTALL a new RCM . REFER to: Restraints Control Module (RCM) (501-20 Supplemental Restraint System) . TEST the system for normal operation. If the safety belt warning indicator is still never or always on, INSTALL a new IPC . REFER to: Instrument Panel Cluster (IPC) (413-01 Instrumentation, Message Center and Warning Chimes, Removal and Installation).
No	INSTALL a new IPC . REFER to: Instrument Panel Cluster (IPC) (413-01 Instrumentation, Message Center and Warning Chimes, Removal and Installation).

The MIL Is Never Or Always On

Diagnostic Overview

Diagnostics in this manual assume a certain skill level and knowledge of Ford-specific diagnostic practices.
REFER to: Diagnostic Methods (100-00 General Information, Description and Operation).

Normal Operation and Fault Conditions

See MIL .
REFER to: Instrument Panel Cluster (IPC) - System Operation and Component Description (413-01 Instrumentation, Message Center and Warning Chimes, Description and Operation).

NOTE: *If DTC U0100:00 sets in the IPC , other observable symptoms can be an inoperative speedometer, tachometer or odometer.*

If the engine MIL request message is missing or invalid for less than 5 seconds, the IPC defaults the MIL to its last state (on or off) based upon the last known good message received.

If the engine MIL request message is missing for 5 seconds or longer, the BCM and the IPC set DTC U0100:00. If the engine MIL request message is missing, the IPC defaults the MIL on.

Possible Sources

- PCM
- IPC

PINPOINT TEST S : THE MIL (MALFUNCTION INDICATOR LAMP) IS NEVER OR ALWAYS ON

S1 RETRIEVE THE RECORDED DIAGNOSTIC TROUBLE CODES (DTCS) FROM THE IPC (INSTRUMENT PANEL CLUSTER) SELF-TEST
• Using a scan tool, perform the IPC self-test. **Are any DTC recorded?**

Yes	For DTC U0100:00, GO to Pinpoint Test AC For DTC U0140:00, GO to Pinpoint Test AF For all other Diagnostic Trouble Codes (DTCs), REFER to DTC Chart: IPC in this section.
No	GO to S2

S2 RETRIEVE THE RECORDED DIAGNOSTIC TROUBLE CODES (DTCS) FROM THE PCM (POWERTRAIN CONTROL MODULE) KOEO (KEY ON, ENGINE OFF) SELF-TEST

- Using a scan tool, perform the PCM KOEO self-test.

Are any PCM Diagnostic Trouble Codes (DTCs) recorded?

Yes	Refer to Powertrain Control/Emissions Diagnosis (PC/ED) manual.
No	GO to S3

S3 RETRIEVE THE RECORDED DIAGNOSTIC TROUBLE CODES (DTCS) FROM THE BCM (BODY CONTROL MODULE) SELF-TEST

- Using a scan tool, perform the BCM self-test.

Are any Diagnostic Trouble Codes (DTCs) recorded?

Yes	REFER to: Body Control Module (BCM) (419-10 Multifunction Electronic Modules, Diagnosis and Testing).
No	GO to S4

S4 CHECK THE MIL (MALFUNCTION INDICATOR LAMP) USING THE DEALER TEST MODE

- Ignition OFF.
- Enter the Dealer Test Mode. Enter the Dealer Test Mode.
  REFER to: Instrument Panel Cluster (IPC) - System Operation and Component Description (413-01 Instrumentation, Message Center and Warning Chimes, Description and Operation).
- Scroll to LED test.
- Monitor the MIL indicator.

Does the MIL illuminate?

Yes	INSTALL a new PCM . REFER to: Powertrain Control Module (PCM) (303-14A Electronic Engine Controls - 2.0L Duratec-HE (125kW/170PS) - MI4, Removal and Installation). TEST the system for normal operation. If the MIL remains on, INSTALL a new IPC . REFER to: Instrument Panel Cluster (IPC) (413-01 Instrumentation, Message Center and Warning Chimes, Removal and Installation).
No	INSTALL a new IPC . REFER to: Instrument Panel Cluster (IPC) (413-01 Instrumentation, Message Center and Warning Chimes, Removal and Installation).

The Cruise Control Message Center Indicator Is Never Or Always On

Diagnostic Overview

Diagnostics in this manual assume a certain skill level and knowledge of Ford-specific diagnostic practices.
REFER to: Diagnostic Methods (100-00 General Information, Description and Operation).

Normal Operation and Fault Conditions

See Cruise Control Message Center Indicator.
REFER to: Message Center - System Operation and Component Description (413-01 Instrumentation, Message Center and Warning Chimes, Description and Operation).

NOTE: *If DTC U0100:00 sets in the IPC, other observable symptoms can be an inoperative speedometer, tachometer or odometer.*

If the cruise control status message is missing or invalid for 400 milliseconds, the BCM and the IPC set DTC U0100:00. If the cruise control status message is missing, the IPC defaults the cruise control indicator on until a valid message is received.

Possible Sources

- Cruise control concern
- IPC

PINPOINT TEST T : THE CRUISE CONTROL MESSAGE CENTER INDICATOR IS NEVER OR ALWAYS ON

T1 CHECK THE CRUISE CONTROL OPERATION

- Operate the cruise control.

Does the cruise control operate correctly?

Yes	GO to T2
No	REFER to: Cruise Control (419-03 Cruise Control, Diagnosis and Testing).

T2 RETRIEVE THE RECORDED DIAGNOSTIC TROUBLE CODES (DTCS) FROM THE IPC (INSTRUMENT PANEL CLUSTER) SELF-TEST

- Using a scan tool, perform the IPC self-test.

Are any Diagnostic Trouble Codes (DTCs) recorded?

Yes	For DTC U0100:00, GO to Pinpoint Test AC For DTC U0140:00, GO to Pinpoint Test AF For all other Diagnostic Trouble Codes (DTCs), REFER to DTC Chart: IPC in this section.
No	GO to T3

T3 RETRIEVE THE RECORDED DIAGNOSTIC TROUBLE CODES (DTCS) FROM THE BCM (BODY CONTROL MODULE) SELF-TEST

- Using a scan tool, perform the BCM self-test.

Are any Diagnostic Trouble Codes (DTCs) recorded?

Yes	REFER to: Body Control Module (BCM) (419-10 Multifunction Electronic Modules, Diagnosis and

	Testing).
No	GO to T4

T4 RETRIEVE AND RECORD THE DIAGNOSTIC TROUBLE CODES (DTCS) FROM THE PCM (POWERTRAIN CONTROL MODULE) KOEO (KEY ON, ENGINE OFF) SELF-TEST

- Using a scan tool, perform the PCM KOEO self-test.

Are any PCM Diagnostic Trouble Codes (DTCs) recorded?

Yes	Refer to Powertrain Control/Emissions Diagnosis (PC/ED) manual.
No	GO to T5

T5 VERIFY THE CRUISE CONTROL IS ENABLED IN THE CAR CONFIGURATION

- Using a scan tool, view the car configuration parameters through the module progamming menu. See the module configuration and parameter chart.
  REFER to: Module Configuration - System Operation and Component Description (418-01 Module Configuration, Description and Operation).

Is the cruise control parameter enabled?

Yes	INSTALL a new IPC . REFER to: Instrument Panel Cluster (IPC) (413-01 Instrumentation, Message Center and Warning Chimes, Removal and Installation).
No	CONFIGURE the car configuration parameters. Refer to the scan tool directions. REFER to: Module Configuration - System Operation and Component Description (418-01 Module Configuration, Description and Operation).

The Message Center Is Not Operating Correctly

Refer to Wiring Diagrams Cell 60 for schematic and connector information.

Diagnostic Overview

Diagnostics in this manual assume a certain skill level and knowledge of Ford-specific diagnostic practices.
REFER to: Diagnostic Methods (100-00 General Information, Description and Operation).

Normal Operation and Fault Conditions

See Overview and Steering Wheel Switch - Message Center.
REFER to: Message Center - System Operation and Component Description (413-01 Instrumentation, Message Center and Warning Chimes, Description and Operation).

IPC DTC Fault Trigger Conditions

DTC	Description	Fault Trigger Conditions
C2003:11	Steering Wheel Switch Left Module:	A continuous and on-demand DTC that sets in the IPC when the IPC detects a

	Circuit Short To Ground	short to ground on the message center switch input.
C2003:23	Steering Wheel Switch Left Module: Signal Stuck Low	A continuous memory DTC that sets in the IPC when the IPC detects a stuck message center switch.

Possible Sources

- Wiring, terminals or connectors
- Message center switch (part of the LH) upper steering wheel switch)
- Clockspring
- Airbag
- Steering wheel
- SASM
- IPC

PINPOINT TEST U : THE MESSAGE CENTER IS NOT OPERATING CORRECTLY

U1 RETRIEVE THE RECORDED DIAGNOSTIC TROUBLE CODES (DTCS) FROM THE IPC (INSTRUMENT PANEL CLUSTER) SELF-TEST

- Using a scan tool, perform the IPC self-test.

Are any Diagnostic Trouble Codes (DTCs) recorded?

Yes	For DTC C2003:11, GO to U14 For DTC C2003:23, GO to U3 For all other Diagnostic Trouble Codes (DTCs), REFER to DTC Chart: IPC in this section.
No	GO to U2

U2 CHECK THE MESSAGE CENTER INPUT TO THE IPC (INSTRUMENT PANEL CLUSTER)

- Using a scan tool, view the IPC Parameter Identifications (PIDs).
- Select the IPC message center switch (BTN_L_DOWN, BTN_L_UP, BTN_L_LEFT, BTN_L_RIGHT and BTN_L_SET) Parameter Identifications (PIDs)
- Monitor the IPC Parameter Identifications (PIDs) while moving the message center switch up, down, left, right and pressing OK

Do the IPC Parameter Identifications (PIDs) match the message center switch position?

Yes	INSTALL a new IPC . REFER to: Instrument Panel Cluster (IPC) (413-01 Instrumentation, Message Center and Warning Chimes, Removal and Installation).
No	INSTALL a new LH upper steering wheel switch.

U3 CHECK THE IPC (INSTRUMENT PANEL CLUSTER) OUTPUT AT THE LH (LEFT-HAND) UPPER STEERING WHEEL SWITCH

- Ignition OFF.
- Remove the driver airbag.
  REFER to: Driver Airbag (501-20B Supplemental Restraint System, Removal and Installation).
- While pressing each of the LH upper steering wheel switch buttons, measure:

Positive Lead	Measurement / Action	Negative Lead

C260-4 (Steering Wheel Harness Side)	Ω	C260-5 (Steering Wheel Harness Side)

- Review the chart

Switch Position	Resistance
OK	67-75 ohms
Up	187-197 ohms
Down	367-381 ohms
Left	665-685 ohms
Right	1,171-1,201 ohms

Does the resistance match the specifications in the chart?

Yes	GO to U6
No	GO to U4

U4 CHECK THE MESSAGE CENTER SWITCH SIGNAL CIRCUIT BETWEEN THE LH (LEFT-HAND) STEERING WHEEL SWITCH AND THE STEERING WHEEL TO AIRBAG INLINE FOR AN OPEN

- Ignition OFF.
- Remove the driver airbag.
  REFER to: Driver Airbag (501-20B Supplemental Restraint System, Removal and Installation).
- Measure:

Positive Lead	Measurement / Action	Negative Lead
C2998-2	Ω	C260-5 (Airbag Harness Side)

Is the resistance less than 3 ohms?

Yes	GO to U5
No	INSTALL a new driver airbag. REFER to: Driver Airbag (501-20B Supplemental Restraint System, Removal and Installation).

U5 CHECK THE MESSAGE CENTER SWITCH RETURN CIRCUIT BETWEEN THE LH (LEFT-HAND) STEERING WHEEL SWITCH AND THE STEERING WHEEL TO AIRBAG INLINE FOR AN OPEN

- Measure:

Positive Lead	Measurement / Action	Negative Lead
C2998-3	Ω	C260-4 (Airbag Harness Side)

Is the resistance less than 3 ohms?

Yes	INSTALL a new LH upper steering wheel switch.
No	INSTALL a new driver airbag. REFER to: Driver Airbag (501-20B Supplemental Restraint System, Removal and Installation).

U6 CHECK THE MESSAGE CENTER SWITCH SIGNAL CIRCUIT BETWEEN THE STEERING WHEEL TO AIRBAG INLINE AND THE UPPER CLOCKSPRING FOR AN OPEN

- Disconnect: Upper Clockspring C218B.
- Measure:

Positive Lead	Measurement / Action	Negative Lead
C260-5 (Steering Wheel Harness Side)	Ω	C218B-1 (Steering Wheel Harness Side)

Is the resistance less than 3 ohms?

Yes	GO to U7
No	INSTALL a new steering wheel. REFER to: Steering Wheel (211-04 Steering Column, Removal and Installation).

U7 CHECK THE MESSAGE CENTER SWITCH RETURN CIRCUIT BETWEEN THE STEERING WHEEL TO AIRBAG INLINE AND THE UPPER CLOCKSPRING FOR AN OPEN

- Measure:

Positive Lead	Measurement / Action	Negative Lead
C260-4 (Steering Wheel Harness Side)	Ω	C218B-3 (Steering Wheel Harness Side)

Is the resistance less than 3 ohms?

Yes	GO to U8
No	INSTALL a new steering wheel. REFER to: Steering Wheel (211-04 Steering Column, Removal and Installation).

U8 CHECK THE MESSAGE CENTER SWITCH SIGNAL CIRCUIT THROUGH THE CLOCKSPRING

- Remove the clockspring.
  REFER to: Clockspring (501-20B Supplemental Restraint System, Removal and Installation).
- Measure:

Positive Lead	Measurement / Action	Negative Lead
	Ω	

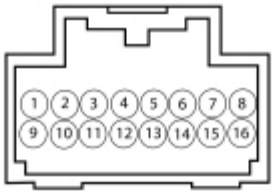 E155137 Upper Clockspring (Component Side) - Pin 1		 E155141 Lower Clockspring (Component Side) - Pin 1

Is the resistance less than 3 ohms?

Yes	GO to U9
No	INSTALL a new clockspring. REFER to: Clockspring (501-20B Supplemental Restraint System, Removal and Installation).

U9 CHECK THE MESSAGE CENTER SWITCH SIGNAL CIRCUIT THROUGH THE CLOCKSPRING

- Measure:

Positive Lead	Measurement / Action	Negative Lead
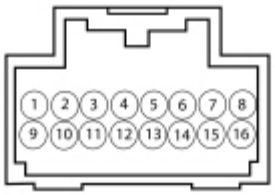 E155137 Upper Clockspring (Component Side) - Pin 3	Ω	 E155141 Lower Clockspring (Component Side) - Pin 3

Is the resistance less than 3 ohms?

Yes	GO to U10
No	INSTALL a new clockspring. REFER to: Clockspring (501-20B Supplemental Restraint System, Removal and Installation).

U10 CHECK THE MESSAGE CENTER SWITCH SIGNAL CIRCUIT THROUGH THE SASM (STEERING ANGLE SENSOR MODULE)

- Disconnect: SASM C226B.
- Measure:

Positive Lead	Measurement / Action	Negative Lead
E155142 SASM (Component Side) - Pin 1	Ω	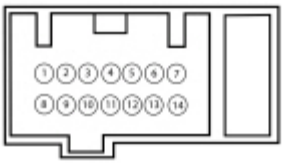 E155136 C226A-6 SASM (Component Side) - Pin 6

Is the resistance less than 3 ohms?

Yes	GO to U11
No	INSTALL a new SASM . REFER to: Steering Angle Sensor Module (SASM) (211-05 Steering Column Switches, Removal and Installation).

U11 CHECK THE MESSAGE CENTER SWITCH RETURN CIRCUIT THROUGH THE SASM (STEERING ANGLE SENSOR MODULE)

- Measure:

Positive Lead	Measurement / Action	Negative Lead
E155142 SASM (Component Side) - Pin 3	Ω	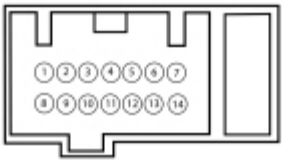 E155136 C226A-6 SASM (Component Side) - Pin 8

Is the resistance less than 3 ohms?

Yes	GO to U12
No	INSTALL a new SASM . REFER to: Steering Angle Sensor Module (SASM) (211-05 Steering Column Switches, Removal and Installation).

U12 CHECK THE MESSAGE CENTER SWITCH SIGNAL CIRCUIT BETWEEN THE SASM (STEERING ANGLE SENSOR MODULE) AND THE IPC (INSTRUMENT PANEL CLUSTER) FOR AN OPEN

- Disconnect: IPC .
- Measure:

Positive Lead	Measurement / Action	Negative Lead
C226A-6	Ω	C220-7

Is the resistance less than 3 ohms?

Yes	GO to U13
No	REPAIR the circuit.

U13 CHECK THE MESSAGE CENTER SWITCH RETURN CIRCUIT BETWEEN THE SASM (STEERING ANGLE SENSOR MODULE) AND THE IPC (INSTRUMENT PANEL CLUSTER) FOR AN OPEN

- Measure:

Positive Lead	Measurement / Action	Negative Lead
C226A-8	Ω	C220-6

Is the resistance less than 3 ohms?

Yes	GO to U21
No	REPAIR the circuit.

U14 CHECK THE MESSAGE CENTER SIGNAL AND RETURN CIRCUITS FOR A SHORT TOGETHER

- Disconnect: IPC .
- Measure:

Positive Lead	Measurement / Action	Negative Lead
C220-7	Ω	C220-6

Is the resistance greater than 10,000 ohms?

Yes	GO to U18
No	GO to U15

U15 CHECK THE MESSAGE CENTER SIGNAL AND RETURN CIRCUITS FOR A SHORT TOGETHER WITH THE SASM (STEERING ANGLE SENSOR MODULE) DISCONNECTED

- Disconnect: SASM C226A.

- Measure:

Positive Lead	Measurement / Action	Negative Lead
C220-7	Ω	C220-6

Is the resistance greater than 10,000 ohms?

Yes	GO to U16
No	REPAIR the circuits.

U16 CHECK THE MESSAGE CENTER SIGNAL AND RETURN CIRCUITS FOR A SHORT TOGETHER WITH THE CLOCKSPRING DISCONNECTED

- Remove the driver airbag.
  REFER to: Driver Airbag (501-20B Supplemental Restraint System, Removal and Installation).
- Disconnect: Clockspring C218B.
- Disconnect: Steering Wheel to Airbag Inline.
- Measure:

Positive Lead	Measurement / Action	Negative Lead
C218B-1	Ω	C218B-3

Is the resistance greater than 10,000 ohms?

Yes	GO to U17
No	INSTALL a new steering wheel. REFER to: Steering Wheel (211-04 Steering Column, Removal and Installation).

U17 CHECK THE MESSAGE CENTER SIGNAL AND RETURN CIRCUITS FOR A SHORT TOGETHER WITH THE LH (LEFT-HAND) UPPER STEERING WHEEL SWITCH DISCONNECTED

- Disconnect: LH Upper Steering Wheel Switch.
- Measure:

Positive Lead	Measurement / Action	Negative Lead
C2998-2	Ω	C2998-3

Is the resistance greater than 10,000 ohms?

Yes	INSTALL a new LH upper steering wheel switch.
No	INSTALL a new driver airbag. REFER to: Driver Airbag (501-20B Supplemental Restraint System, Removal and Installation).

U18 CHECK THE MESSAGE CENTER SIGNAL CIRCUIT FOR A SHORT TO GROUND

- Measure:

Positive Lead	Measurement / Action	Negative Lead
C220-7	Ω	—

Is the resistance greater than 10,000 ohms?

Yes	GO to U21
No	GO to U19

U19 CHECK THE MESSAGE CENTER SIGNAL CIRCUIT FOR A SHORT TO GROUND WITH THE SASM (STEERING ANGLE SENSOR MODULE) DISCONNECTED

- Disconnect: SASM C226A.
- Measure:

Positive Lead	Measurement / Action	Negative Lead
C220-7	Ω	—

Is the resistance greater than 10,000 ohms?

Yes	GO to U20
No	REPAIR the circuit.

U20 CHECK THE MESSAGE CENTER SIGNAL CIRCUIT FOR A SHORT TO GROUND WITH THE AIRBAG REMOVED

- Remove the driver airbag.
  REFER to: Driver Airbag (501-20B Supplemental Restraint System, Removal and Installation).
- Measure:

Positive Lead	Measurement / Action	Negative Lead
C260-1 (Airbag Harness Side)	Ω	—

Is the resistance greater than 10,000 ohms?

Yes	INSTALL a new steering wheel. REFER to: Steering Wheel (211-04 Steering Column, Removal and Installation).
No	INSTALL a new driver airbag. REFER to: Driver Airbag (501-20B Supplemental Restraint System, Removal and Installation).

U21 CHECK FOR CORRECT IPC (INSTRUMENT PANEL CLUSTER) OPERATION

- Ignition OFF.
- Disconnect and inspect the IPC connector.
- Repair:
  - corrosion (install new connector or terminals - clean module pins)
  - damaged or bent pins - install new terminals/pins
  - pushed-out pins - install new pins as necessary
- Reconnect the IPC connector. Make sure it seats and latches correctly.
- Operate the system and determine if the concern is still present.

Is the concern still present?

Yes	CHECK On-Line Automotive Service Information System (OASIS) for any applicable Technical Service Bulletins (TSBs). If a TSB exists for this concern, DISCONTINUE this test and FOLLOW TSB instructions. If no Technical Service Bulletins (TSBs) address this concern, INSTALL a new IPC. REFER to: Instrument Panel Cluster (IPC) (413-01 Instrumentation, Message Center and Warning Chimes, Removal and Installation).
No	The system is operating correctly at this time. The concern may have been caused by module connections. ADDRESS the root cause of any connector or pin issues.

The Outside Air Temperature Display Is Inoperative Or Incorrect

Diagnostic Overview

Diagnostics in this manual assume a certain skill level and knowledge of Ford-specific diagnostic practices.
REFER to: Diagnostic Methods (100-00 General Information, Description and Operation).

Normal Operation and Fault Conditions

See Outside Air Temperature Display.
REFER to: Message Center - System Operation and Component Description (413-01 Instrumentation, Message Center and Warning Chimes, Description and Operation).

If the air ambient temperature filtered message is missing from the PCM, the BCM and the IPC set DTC U0100:00. If the IPC is missing or invalid, the air ambient temperature filtered message, the message center displays all dashes (- - - -) in the outside air temperature display area.

Possible Sources

- Communication concern
- Wiring, terminals or connectors
- Ambient air temperature sensor

PINPOINT TEST V : THE OUTSIDE AIR TEMPERATURE DISPLAY IS INOPERATIVE OR INCORRECT

V1 RETRIEVE THE RECORDED DIAGNOSTIC TROUBLE CODES (DTCS) FROM THE IPC (INSTRUMENT PANEL CLUSTER) SELF-TEST

- Using a scan tool, perform the IPC self-test.

Are any Diagnostic Trouble Codes (DTCs) recorded?

Yes	For DTC U0100:00, GO to Pinpoint Test AC

	For DTC U0140:00, GO to Pinpoint Test AF For all other Diagnostic Trouble Codes (DTCs), REFER to DTC Chart: IPC in this section.
No	GO to V2

V2 RETRIEVE THE RECORDED DIAGNOSTIC TROUBLE CODES (DTCS) FROM THE BCM (BODY CONTROL MODULE) SELF-TEST

- Using a scan tool, perform the BCM self-test.

Are any Diagnostic Trouble Codes (DTCs) recorded?

Yes	REFER to: Body Control Module (BCM) (419-10 Multifunction Electronic Modules, Diagnosis and Testing).
No	GO to V3

V3 RETRIEVE THE RECORDED DIAGNOSTIC TROUBLE CODES (DTCS) FROM THE PCM (POWERTRAIN CONTROL MODULE) KOEO (KEY ON, ENGINE OFF) SELF-TEST

- Using a scan tool, perform the PCM KOEO self-test.

Are any ambient temperature sensor Diagnostic Trouble Codes (DTCs) recorded?

Yes	Refer to Powertrain Control/Emissions Diagnosis (PC/ED) manual.
No	The system is operating correctly at this time. The condition may have been caused by a heat soak concern.

The Chime Sounds When The Driver Door Is Ajar (No Key In Ignition And Headlamps Off)

Refer to Wiring Diagrams Cell 60 for schematic and connector information.

Diagnostic Overview

Diagnostics in this manual assume a certain skill level and knowledge of Ford-specific diagnostic practices.
REFER to: Diagnostic Methods (100-00 General Information, Description and Operation).

Normal Operation and Fault Conditions

See Key-In-Ignition Warning Chime and Headlamps On Warning Chime.
REFER to: Warning Chimes - System Operation and Component Description (413-01 Instrumentation, Message Center and Warning Chimes, Description and Operation).

BCM DTC Fault Trigger Conditions

DTC	Description	Fault Trigger Conditions
B10F1:13	Key In Switch: Circuit Open	An on-demand DTC that sets if the BCM detects an open on the key-in-ignition switch input circuit or if the BCM detects ignition start, run/start or run/acc inputs without the key-in-ignition input.

Possible Sources

- Exterior lighting concern
- Interior lighting concern
- Wiring, terminals or connectors
- Key-in-ignition warning switch (part of the ignition switch) (without Intelligent Access (IA))
- BCM

PINPOINT TEST W : THE CHIME SOUNDS WHEN THE DRIVER DOOR IS AJAR (NO KEY IN IGNITION AND HEADLAMPS OFF)

W1 CHECK THE EXTERIOR LIGHTING

- Ignition ON.
- Place the headlamp switch in the OFF position.
- Close all doors.
- Wait one minute.
- Observe the exterior lights.

Are the headlamps off?

Yes	GO to W2
No	REFER to: Headlamps (417-01 Exterior Lighting, Diagnosis and Testing).

W2 RETRIEVE THE RECORDED DIAGNOSTIC TROUBLE CODES (DTCS) FROM THE BCM (BODY CONTROL MODULE) SELF-TEST

- Using a scan tool, perform the BCM self-test.

Are any Diagnostic Trouble Codes (DTCs) present?

Yes	For DTC B10F1:13, GO to W3 For all other Diagnostic Trouble Codes (DTCs), REFER to: Body Control Module (BCM) (419-10 Multifunction Electronic Modules, Diagnosis and Testing).
No	GO to W5

W3 CHECK THE KEY-IN-IGNITION INPUT CIRCUIT FOR VOLTAGE

- Ignition OFF.
- Remove the key from the ignition cylinder.
- Disconnect: BCM C2280C.
- Measure:

Positive Lead	Measurement / Action	Negative Lead
C2280C-46		—

Is any voltage present?

Yes	GO to W4
No	GO to W5

W4 CHECK KEY-IN-IGNITION INPUT CIRCUIT FOR A SHORT TO VOLTAGE

- Disconnect: Ignition Switch.
- Measure:

Positive Lead	Measurement / Action	Negative Lead
C2280C-46		—

Is any voltage present?

Yes	REPAIR the circuit.
No	INSTALL a new ignition switch. REFER to: Ignition Switch (211-05 Steering Column Switches, Removal and Installation).

W5 CHECK FOR CORRECT BCM (BODY CONTROL MODULE) OPERATION

- Ignition OFF.
- Disconnect and inspect all BCM connectors.
- Repair:
  - corrosion (install new connector or terminals - clean module pins)
  - damaged or bent pins - install new terminals/pins
  - pushed-out pins - install new pins as necessary
- Reconnect the BCM connectors. Make sure they seat and latch correctly.
- Operate the system and determine if the concern is still present

Is the concern still present?

Yes	CHECK On-Line Automotive Service Information System (OASIS) for any applicable Technical Service Bulletins (TSBs). If a TSB exists for this concern, DISCONTINUE this test and FOLLOW TSB instructions. If no Technical Service Bulletins (TSBs) address this concern, INSTALL a new BCM . REFER to: Body Control Module (BCM) (419-10 Multifunction Electronic Modules, Removal and Installation).
No	The system is operating correctly at this time. The concern may have been caused by module connections. ADDRESS the root cause of any connector or pin issues.

The Key-In-Ignition Warning Chime Is Inoperative (Without Intelligent Access [IA])

Refer to Wiring Diagrams Cell 13 for schematic and connector information.

Diagnostic Overview

Diagnostics in this manual assume a certain skill level and knowledge of Ford-specific diagnostic practices.
REFER to: Diagnostic Methods (100-00 General Information, Description and Operation).

Normal Operation and Fault Conditions

See Key-In-Ignition Warning Chime.
REFER to: Warning Chimes - System Operation and Component Description (413-01 Instrumentation, Message Center and Warning Chimes, Description and Operation).

BCM DTC Fault Trigger Conditions

DTC	Description	Fault Trigger Conditions
B10F1:13	Key In Switch: Circuit Open	An on-demand DTC that sets if the BCM detects an open on the key-in-ignition switch input circuit or if the BCM detects ignition start, run/start or run/acessory inputs without the key-in-ignition input.

Possible Sources

- Interior lighting concern
- Wiring, terminals or connectors
- Key-in-ignition warning switch (part of the ignition switch) (without Intelligent Access (IA))
- BCM
- IPC

PINPOINT TEST X : THE KEY-IN-IGNITION WARNING CHIME IS INOPERATIVE (WITHOUT INTELLIGENT ACCESS [IA])

X1 CHECK THE SAFETY BELT WARNING CHIME OPERATION

- Ignition OFF.
- Ignition ON.
- Monitor the safety belt warning chime when the ignition switch is transitioned from OFF to RUN for 6 seconds.

Does the safety belt warning chime operate for approximately 6 seconds?

Yes	GO to X2
No	GO to Pinpoint Test A

X2 CHECK THE INTERIOR LAMPS OPERATION

- Open and close the driver door.
- Observe the interior lamps.

Do the interior lamps operate correctly from the driver door?

Yes	GO to X3
No	REFER to: Interior Lighting (417-02 Interior Lighting, Diagnosis and Testing).

X3 RETRIEVE THE RECORDED DIAGNOSTIC TROUBLE CODES (DTCS) FROM THE BCM (BODY CONTROL MODULE) SELF-TEST

- Using a scan tool, perform the BCM self-test.

Is DTC B10F1:13 present?

Yes	GO to X4
No	GO to X6

X4 CHECK THE KEY-IN-IGNITION INPUT CIRCUIT FOR VOLTAGE

- Ignition OFF.
- Insert the key into the ignition cylinder.
- Disconnect: BCM C2280C.
- Measure:

Positive Lead	Measurement / Action	Negative Lead
C2280C-46		—

Is the voltage greater than 11 volts?

Yes	GO to X6
No	GO to X5

X5 CHECK THE IGNITION SWITCH

- Ignition OFF.
- Disconnect: Ignition Switch.
- Carry out the ignition switch component test.

Is the ignition switch OK?

Yes	REPAIR the key-in-ignition input circuit.
No	INSTALL a new ignition switch. REFER to: Ignition Switch (211-05 Steering Column Switches, Removal and Installation).

X6 CHECK FOR CORRECT BCM (BODY CONTROL MODULE) OPERATION

- Ignition OFF.
- Disconnect and inspect all BCM connectors.
- Repair:
  - corrosion (install new connector or terminals - clean module pins)
  - damaged or bent pins - install new terminals/pins
  - pushed-out pins - install new pins as necessary
- Reconnect the BCM connectors. Make sure they seat and latch correctly.
- Operate the system and verify the concern is still present

Is the concern still present?

Yes	CHECK On-Line Automotive Service Information System (OASIS) for any applicable Technical Service

	Bulletins (TSBs). If a TSB exists for this concern, DISCONTINUE this test and FOLLOW TSB instructions. If no Technical Service Bulletins (TSBs) address this concern, INSTALL a new BCM . REFER to: Body Control Module (BCM) (419-10 Multifunction Electronic Modules, Diagnosis and Testing).
No	The system is operating correctly at this time. The concern may have been caused by module connections. ADDRESS the root cause of any connector or pin issues.

The Headlamps On Warning Chime Is Inoperative

Diagnostic Overview

Diagnostics in this manual assume a certain skill level and knowledge of Ford-specific diagnostic practices.
REFER to: Diagnostic Methods (100-00 General Information, Description and Operation).

Normal Operation and Fault Conditions

See Headlamps On Warning Chime.
REFER to: Warning Chimes - System Operation and Component Description (413-01 Instrumentation, Message Center and Warning Chimes, Description and Operation).

Possible Sources

- Interior lighting concern
- BCM
- IPC

PINPOINT TEST Y : THE HEADLAMPS ON WARNING CHIME IS INOPERATIVE

Y1 CHECK THE SAFETY BELT WARNING CHIME OPERATION

- Ignition OFF.
- Ignition ON.
- Monitor the safety belt warning chime when the ignition switch is transitioned from OFF to RUN for 6 seconds.

Does the safety belt warning chime operate for approximately 6 seconds?

Yes	GO to Y2
No	GO to Pinpoint Test A

Y2 CHECK THE INTERIOR LAMPS OPERATION

- Open and close the driver door.
- Observe the interior lamps.

Do the interior lamps operate correctly from the driver door?

Yes	GO to Y3
No	REFER to: Interior Lighting (417-02 Interior Lighting, Diagnosis and Testing).

Y3 RETRIEVE THE RECORDED DIAGNOSTIC TROUBLE CODES (DTCS) FROM THE IPC (INSTRUMENT PANEL CLUSTER) SELF-TEST

- Using a scan tool, perform the IPC self-test.

Are any Diagnostic Trouble Codes (DTCs) recorded?

Yes	For DTC U0140:00, GO to Pinpoint Test AF For DTC U0151:00, GO to Pinpoint Test AG For all other Diagnostic Trouble Codes (DTCs), REFER to DTC Chart: IPC in this section.
No	GO to Y4

Y4 RETRIEVE THE RECORDED DIAGNOSTIC TROUBLE CODES (DTCS) FROM THE BCM (BODY CONTROL MODULE) SELF-TEST

- Using a scan tool, perform the BCM self-test.

Are any Diagnostic Trouble Codes (DTCs) recorded?

Yes	REFER to: Body Control Module (BCM) (419-10 Multifunction Electronic Modules, Diagnosis and Testing).
No	INSTALL a new BCM . REFER to: Body Control Module (BCM) (419-10 Multifunction Electronic Modules, Removal and Installation).

The Turn Signal On Warning Chime Is Inoperative

Diagnostic Overview

Diagnostics in this manual assume a certain skill level and knowledge of Ford-specific diagnostic practices.
REFER to: Diagnostic Methods (100-00 General Information, Description and Operation).

Normal Operation and Fault Conditions

See Turn Signal On Chime Tone.
REFER to: Warning Chimes - System Operation and Component Description (413-01 Instrumentation, Message Center and Warning Chimes, Description and Operation).

Possible Sources

- Turn signal indication concern
- BCM
- IPC

PINPOINT TEST Z : THE TURN SIGNAL ON WARNING CHIME IS INOPERATIVE

Z1 CHECK THE SAFETY BELT WARNING CHIME OPERATION

- Ignition OFF.
- Ignition ON.
- Monitor the safety belt warning chime when the ignition switch is transitioned from OFF to RUN for 6 seconds.

Does the safety belt warning chime operate for approximately 6 seconds?

Yes	GO to Z2
No	GO to Pinpoint Test A

Z2 CHECK THE TURN SIGNAL INDICATOR OPERATION

- Place the turn signal in the LH or RH turn position and monitor the turn indicator operation.

Do the turn indicators operate correctly?

Yes	GO to Z3
No	GO to Pinpoint Test O

Z3 RETRIEVE THE RECORDED DIAGNOSTIC TROUBLE CODES (DTCS) FROM THE IPC (INSTRUMENT PANEL CLUSTER) SELF-TEST

- Using a scan tool, perform the IPC self-test.

Are any Diagnostic Trouble Codes (DTCs) recorded?

Yes	For DTC U0140:00, GO to Pinpoint Test AF For all other Diagnostic Trouble Codes (DTCs), REFER to DTC Chart: IPC in this section.
No	INSTALL a new BCM. REFER to: Body Control Module (BCM) (419-10 Multifunction Electronic Modules, Removal and Installation).

The Safety Belt Warning Or Belt-Minder® Chime Is Inoperative

Diagnostic Overview

Diagnostics in this manual assume a certain skill level and knowledge of Ford-specific diagnostic practices.
REFER to: Diagnostic Methods (100-00 General Information, Description and Operation).

Normal Operation and Fault Conditions

See Safety Belt Warning Chime and Belt-Minder® Feature.
REFER to: Warning Chimes - System Operation and Component Description (413-01 Instrumentation, Message Center and Warning Chimes, Description and Operation).

Possible Sources

- Belt-Minder® deactivated
- Speedometer concern
- Safety belt warning indication concern
- BCM
- IPC

PINPOINT TEST AA : THE SAFETY BELT WARNING OR BELT-MINDER® CHIME IS INOPERATIVE

AA1 CHECK THE WARNING CHIME OPERATION

- Ignition ON.
- Operate the hazard function.

Does the hazard tick-tock tone sound?

Yes	GO to AA2
No	GO to Pinpoint Test A

AA2 RETRIEVE THE RECORDED DIAGNOSTIC TROUBLE CODES (DTCS) FROM THE IPC (INSTRUMENT PANEL CLUSTER) SELF-TEST

- Using a scan tool, perform the IPC self test.

Are any Diagnostic Trouble Codes (DTCs) recorded?

Yes	For DTC U0140:00, GO to Pinpoint Test AF For DTC U0151:00, GO to Pinpoint Test AG For all other Diagnostic Trouble Codes (DTCs), REFER to DTC Chart: IPC in this section.
No	GO to AA3

AA3 RETRIEVE THE RECORDED DIAGNOSTIC TROUBLE CODES (DTCS) FROM THE BCM (BODY CONTROL MODULE) SELF-TEST

- Using a scan tool, perform the BCM self-test.

Are any Diagnostic Trouble Codes (DTCs) recorded?

Yes	REFER to: Body Control Module (BCM) (419-10 Multifunction Electronic Modules, Diagnosis and Testing).
No	GO to AA4

AA4 RETRIEVE THE RECORDED DIAGNOSTIC TROUBLE CODES (DTCS) FROM THE RCM (RESTRAINTS CONTROL MODULE) SELF-TEST

- Using a scan tool, perform the RCM self-test.

Are any Diagnostic Trouble Codes (DTCs) recorded?

Yes	REFER to: Airbag Supplemental Restraint System (SRS) - Vehicles Built From: 11-June-2012 (501-20B Supplemental Restraint System, Diagnosis and Testing).
No	GO to AA5

AA5 CHECK THE DRIVER SAFETY BELT BUCKLE SWITCH

- Ignition ON.
- Using a scan tool, monitor the RCM driver safety belt buckle Parameter Identification (PID) (SBELT_D_ST) while buckling and unbuckling the driver safety belt.

Does the Parameter Identification (PID) display BUCKLED with the safety belt buckled and UNBUCKLED with the safety belt unbuckled?

Yes	GO to AA6
No	INSTALL a new safety belt buckle.

	REFER to: Front Safety Belt Buckle (501-20A Safety Belt System, Removal and Installation). If the safety belt warning chime is still inoperative, INSTALL a new RCM . REFER to: Driver Airbag (501-20B Supplemental Restraint System, Removal and Installation).

AA6 CHECK THE SAFETY BELT WARNING INDICATOR FOR CORRECT OPERATION

- Ignition OFF.
- Ignition ON.
- Within one minute, buckle then unbuckle, the driver front safety belt while monitoring the safety belt warning indicator.

Does the safety belt warning indicator turn on when the safety belt is unbuckled and turn off when buckled?

Yes	GO to AA7
No	GO to Pinpoint Test R

AA7 CHECK THE SPEEDOMETER OPERATION

- Verify the speedometer operates.

Does the speedometer operate?

Yes	GO to AA8
No	GO to Pinpoint Test G

AA8 CHECK THE BELT-MINDER® CONFIGURATION

- Verify the Belt-Minder® is activated or configured on for the seating position in question. To configure without a scan tool, REFER to: Safety Belt Minder Deactivating/Activating (413-01 Instrumentation, Message Center and Warning Chimes, General Procedures).

Is the Belt-Minder® activated for the seating position in question?

Yes	If the Belt-Minder® is always on above with the safety belt unfastened, the system is operating normally. If the Belt-Minder® is always on with the safety belt fastened or never on with the safety belt unfastened above , INSTALL a new IPC . REFER to: Instrument Panel Cluster (IPC) (413-01 Instrumentation, Message Center and Warning Chimes, Removal and Installation).
No	ACTIVATE the Belt-Minder® for the seating position in question. REFER to: Safety Belt Minder Deactivating/Activating (413-01 Instrumentation, Message Center and Warning Chimes, General Procedures).

The Parking Brake Warning Chime Is Inoperative

Diagnostic Overview

Diagnostics in this manual assume a certain skill level and knowledge of Ford-specific diagnostic practices.
REFER to: Diagnostic Methods (100-00 General Information, Description and Operation).

Normal Operation and Fault Conditions

See Parking Brake Warning Chime.
REFER to: Warning Chimes - System Operation and Component Description (413-01 Instrumentation, Message Center and Warning Chimes, Description and Operation).

Possible Sources

- Brake warning indication concern
- BCM
- IPC

Visual Inspection and Diagnostic Pre-checks

Make sure that the parking brake warning chime operation is verified with the vehicle moving at least with the parking brake slightly applied (just enough to turn the brake warning indicator on without damaging the rear brakes).

PINPOINT TEST AB : THE PARKING BRAKE WARNING CHIME IS INOPERATIVE

AB1 CHECK THE SAFETY BELT WARNING CHIME OPERATION

- Ignition OFF.
- Ignition ON.
- Monitor the safety belt warning chime when the ignition switch is transitioned from OFF to RUN.

Does the safety belt warning chime operate?

Yes	GO to AB2
No	GO to Pinpoint Test A

AB2 CHECK THE BRAKE WARNING INDICATOR OPERATION

- Apply the parking brake.
- Observe the brake warning indicator.

Does the brake warning indicator illuminate?

Yes	GO to AB3
No	GO to Pinpoint Test J

AB3 RETRIEVE THE RECORDED DIAGNOSTIC TROUBLE CODES (DTCS) FROM THE IPC (INSTRUMENT PANEL CLUSTER) SELF-TEST

- Using a scan tool, perform the IPC self-test.

Are any IPC Diagnostic Trouble Codes (DTCs) recorded?

Yes	For DTC U0140:00, GO to Pinpoint Test AF For all other Diagnostic Trouble Codes (DTCs), REFER to DTC Chart: IPC in this section.
No	GO to AB4

AB4 RETRIEVE THE RECORDED DIAGNOSTIC TROUBLE CODES (DTCS) FROM THE BCM (BODY CONTROL MODULE) SELF-TEST

- Using a scan tool, perform the BCM self-test.

Are any Diagnostic Trouble Codes (DTCs) recorded?

Yes	REFER to: Body Control Module (BCM) (419-10 Multifunction Electronic Modules, Diagnosis and Testing).
No	INSTALL a new BCM . REFER to: Body Control Module (BCM) (419-10 Multifunction Electronic Modules, Removal and Installation).

U0100:00

Diagnostic Overview

Diagnostics in this manual assume a certain skill level and knowledge of Ford-specific diagnostic practices.
REFER to: Diagnostic Methods (100-00 General Information, Description and Operation).

Normal Operation and Fault Conditions

Once the IPC sets DTC U0100:00, multiple gauges or indicators are likely to be inoperative in the IPC . Other modules that require data from the IPC all set communication Diagnostic Trouble Codes (DTCs) and may also exhibit system function concerns.

DTC Fault Trigger Conditions

DTC	Description	Fault Trigger Conditions
U0100:00	Lost Communication With ECM/PCM "A": No Sub-Type Information	Sets in continuous memory and on-demand in the IPC if powertrain data messages received from the PCM through the BCM over the Medium Speed Controller Area Network (MS-CAN) are missing for 1 second or longer.

Possible Sources

- Communication concern
- Battery voltage concern
- PCM
- IPC

PINPOINT TEST AC : U0100:00

AC1 VERIFY THE SCAN TOOL COMMUNICATES WITH THE PCM (POWERTRAIN CONTROL MODULE)

- Connect the scan tool.
- Check that a vehicle session can be established using the scan tool.

Can a vehicle session be established?

Yes	GO to AC2
No	REFER to: Communications Network (418-00 Module Communications Network, Diagnosis and Testing).

AC2 CHECK THE IPC (INSTRUMENT PANEL CLUSTER) CONTINUOUS MEMORY DIAGNOSTIC TROUBLE CODES (DTCS)

- Ignition ON.
- Using a scan tool, perform the IPC self-test.
- Clear the Diagnostic Trouble Codes (DTCs).
- Wait 10 seconds.
- Repeat the IPC self-test.

Is DTC U0100:00 retrieved again?

Yes	GO to AC3
No	The system is operating correctly at this time. The DTC may have been set due to high network traffic or an intermittent fault condition.

AC3 RETRIEVE THE RECORDED DIAGNOSTIC TROUBLE CODES (DTCS) FROM THE PCM (POWERTRAIN CONTROL MODULE) KOEO (KEY ON, ENGINE OFF) SELF-TEST

- Using a scan tool, perform the PCM KOEO self-test.

Are any charging system DTC recorded?

Yes	REFER to: Charging System - 2.0L Duratec-HE (125kW/170PS) - MI4 (414-00 Charging System - General Information, Diagnosis and Testing).
No	GO to AC4

AC4 RETRIEVE THE RECORDED DIAGNOSTIC TROUBLE CODES (DTCS) FROM THE IPC (INSTRUMENT PANEL CLUSTER) SELF-TEST

- Using a scan tool, perform the IPC self-test.

Is DTC U0140:00 set?

Yes	GO to Pinpoint Test AF
No	GO to AC5

AC5 RETRIEVE THE RECORDED DIAGNOSTIC TROUBLE CODES (DTCS) FROM THE BCM (BODY CONTROL MODULE) SELF-TEST

- Using a scan tool, perform the BCM self-test.

Are any Diagnostic Trouble Codes (DTCs) recorded?

Yes	REFER to: Body Control Module (BCM) (419-10 Multifunction Electronic Modules, Diagnosis and Testing).
No	INSTALL a new BCM . REFER to: Body Control Module (BCM) (419-10 Multifunction Electronic Modules, Diagnosis and Testing).

U0101:00

Diagnostic Overview

Diagnostics in this manual assume a certain skill level and knowledge of Ford-specific diagnostic practices.
REFER to: Diagnostic Methods (100-00 General Information, Description and Operation).

Normal Operation and Fault Conditions

IPC DTC Fault Trigger Conditions

DTC	Description	Fault Trigger Conditions
U0101:00	Lost Communication With TCM: No Sub-Type Information	Sets in continuous memory and on-demand in the IPC if transmission data messages received from the TCM through the BCM over the Medium Speed Controller Area Network (MS-CAN) are missing for 1 second or longer.

Possible Sources

- Communication concern
- Battery voltage concern
- TCM
- IPC

PINPOINT TEST AD : U0101:00

AD1 VERIFY THE CUSTOMER CONCERN

- Ignition ON.
- Verify there is an observable symptom present.

Is an observable symptom present?

Yes	GO to AD2
No	The system is operating normally at this time. The DTC may have been set due to high network traffic or an intermittent fault condition.

AD2 CHECK THE COMMUNICATION NETWORK

- Ignition ON.
- Using a scan tool, perform a network test.

Does the TCM pass the network test?

Yes	GO to AD3
No	REFER to: Communications Network (418-00 Module Communications Network, Diagnosis and Testing).

AD3 RETRIEVE THE RECORDED DIAGNOSTIC TROUBLE CODES (DTCS) FROM THE BCM (BODY CONTROL MODULE) SELF-TEST

- Using a scan tool, perform the BCM self-test.

Is DTC U0101:00 recorded?

Yes	REFER to: Body Control Module (BCM) (419-10 Multifunction Electronic Modules, Diagnosis and Testing).
No	GO to AD4

AD4 RETRIEVE THE RECORDED DIAGNOSTIC TROUBLE CODES (DTCS) FROM THE IPC (INSTRUMENT PANEL CLUSTER) SELF-TEST

- Using a scan tool, perform the IPC self-test.

Is DTC U3006:16 or DTC U3006:17 recorded?

Yes	For DTC U3006:16, GO to Pinpoint Test AM For DTC U3006:17, GO to Pinpoint Test AN
No	GO to AD5

AD5 RECHECK THE IPC (INSTRUMENT PANEL CLUSTER) DIAGNOSTIC TROUBLE CODES (DTCS)

NOTE: *If new modules were installed prior to the DTC being set, the module configuration can be incorrectly set during the Programmable Module Installation (PMI) or the Programmable Module Installation (PMI) may not have been carried out.*

- Clear the Diagnostic Trouble Codes (DTCs).
- Wait 10 seconds.
- Using a scan tool, perform the IPC self-test.

Is DTC U0101:00 still present?

Yes	INSTALL a new BCM . REFER to: Body Control Module (BCM) (419-10 Multifunction Electronic Modules, Diagnosis and Testing).
No	The system is operating correctly at this time. The DTC may have been set due to high network traffic or an intermittent fault condition.

U0121:00

Diagnostic Overview

Diagnostics in this manual assume a certain skill level and knowledge of Ford-specific diagnostic practices.
REFER to: Diagnostic Methods (100-00 General Information, Description and Operation).

Normal Operation and Fault Conditions

IPC DTC Fault Trigger Conditions

DTC	Description	Fault Trigger Conditions
U0121:00	Lost Communication With Anti-Lock Brake System (ABS) Control Module: No Sub-Type Information	Sets in continuous memory and on-demand in the IPC if transmission data messages received from the ABS module through the BCM over the Medium Speed Controller Area Network (MS-CAN) are missing for 1 second or longer.

Possible Sources

- Communication concern
- Battery voltage concern
- ABS module
- IPC

PINPOINT TEST AE : U0121:00

AE1 VERIFY THE CUSTOMER CONCERN

- Ignition ON.
- Verify there is an observable symptom present.

Is an observable symptom present?

Yes	GO to AE2
No	The system is operating normally at this time. The DTC may have been set due to high network traffic or an intermittent fault condition.

AE2 CHECK THE COMMUNICATION NETWORK

- Ignition ON.
- Using a scan tool, perform a network test.

Does the ABS module pass the network test?

Yes	GO to AE3
No	REFER to: Communications Network (418-00 Module Communications Network, Diagnosis and Testing).

AE3 RETRIEVE THE RECORDED DIAGNOSTIC TROUBLE CODES (DTCS) FROM THE BCM (BODY CONTROL MODULE) SELF-TEST

- Using a scan tool, perform the BCM self-test.

Is DTC U0121:00 recorded?

Yes	REFER to: Body Control Module (BCM) (419-10 Multifunction Electronic Modules, Diagnosis and Testing).
No	GO to AE4

AE4 RETRIEVE THE RECORDED DIAGNOSTIC TROUBLE CODES (DTCS) FROM THE IPC (INSTRUMENT PANEL CLUSTER) SELF-TEST
• Using a scan tool, perform the IPC self-test. **Is DTC U3006:16 or DTC U3006:17 recorded?** **Yes** — For DTC U3006:16, GO to Pinpoint Test AM For DTC U3006:17, GO to Pinpoint Test AN **No** — GO to AE4

AE5 RECHECK THE IPC (INSTRUMENT PANEL CLUSTER) DIAGNOSTIC TROUBLE CODES (DTCS)
NOTE: *If new modules were installed prior to the DTC being set, the module configuration can be incorrectly set during the Programmable Module Installation (PMI) or the Programmable Module Installation (PMI) may not have been carried out.* • Clear the Diagnostic Trouble Codes (DTCs). • Wait 10 seconds. • Using a scan tool, perform the IPC self-test. **Is DTC U0121:00 still present?** **Yes** — INSTALL a new BCM module. REFER to: Body Control Module (BCM) (419-10 Multifunction Electronic Modules, Diagnosis and Testing). **No** — The system is operating correctly at this time. The DTC may have been set due to high network traffic or an intermittent fault condition.

U0140:00

Diagnostic Overview

Diagnostics in this manual assume a certain skill level and knowledge of Ford-specific diagnostic practices.
REFER to: Diagnostic Methods (100-00 General Information, Description and Operation).

Normal Operation and Fault Conditions

IPC DTC Fault Trigger Conditions

DTC	Description	Fault Trigger Conditions
U0140:00	Lost Communication With Body Control Module: No Sub-Type Information	Sets on-demand and in continuous memory in the IPC if data messages received from the BCM over the Medium Speed Controller Area Network (MS-CAN) are missing for 5 seconds or longer.

Possible Sources

- Communication concern
- Battery voltage concern
- BCM

- IPC

PINPOINT TEST AF : U0140:00

AF1 VERIFY THE CUSTOMER CONCERN

- Ignition ON.
- Verify there is an observable symptom present.

Is an observable symptom present?

Yes	GO to AF2
No	The system is operating normally at this time. The DTC may have been set due to high network traffic or an intermittent fault condition.

AF2 CHECK THE COMMUNICATION NETWORK

- Ignition ON.
- Using a scan tool, perform a Network Test.

Does the BCM pass the network test?

Yes	GO to AF3
No	REFER to: Communications Network (418-00 Module Communications Network, Diagnosis and Testing).

AF3 RETRIEVE THE RECORDED DIAGNOSTIC TROUBLE CODES (DTCS) FROM THE BCM (BODY CONTROL MODULE) SELF-TEST

- Using a scan tool, perform the BCM module self-test.

Are any Diagnostic Trouble Codes (DTCs) recorded?

Yes	REFER to: Body Control Module (BCM) (419-10 Multifunction Electronic Modules, Diagnosis and Testing).
No	GO to AF4

AF4 RETRIEVE THE RECORDED DIAGNOSTIC TROUBLE CODES (DTCS) FROM THE IPC (INSTRUMENT PANEL CLUSTER) SELF-TEST

- Using a scan tool, perform the IPC self-test.

Is DTC U3006:16 or DTC U3006:17 recorded?

Yes	For DTC U3006:16, GO to Pinpoint Test AM For DTC U3006:17, GO to Pinpoint Test AN
No	GO to AF5

AF5 RECHECK THE IPC (INSTRUMENT PANEL CLUSTER) DIAGNOSTIC TROUBLE CODES (DTCS)

NOTE: *If new modules were installed prior to the DTC being set, the module configuration can be incorrectly set during the Programmable Module Installation (PMI) or the Programmable Module Installation (PMI) may not have been carried out.*

- Clear the Diagnostic Trouble Codes (DTCs).
- Wait 10 seconds.
- Using a scan tool, perform the IPC self-test.

Is DTC U0140:00 still present?

Yes	INSTALL a new BCM . REFER to: Body Control Module (BCM) (419-10 Multifunction Electronic Modules, Diagnosis and Testing). CLEAR the Diagnostic Trouble Codes (DTCs). REPEAT the self-test. If DTC U0140 is still present, INSTALL a new IPC . REFER to: Instrument Panel Cluster (IPC) (413-01 Instrumentation, Message Center and Warning Chimes, Removal and Installation).
No	The system is operating correctly at this time. The DTC may have been set due to high network traffic or an intermittent fault condition.

U0151:00

Diagnostic Overview

Diagnostics in this manual assume a certain skill level and knowledge of Ford-specific diagnostic practices.
REFER to: Diagnostic Methods (100-00 General Information, Description and Operation).

Normal Operation and Fault Conditions

IPC DTC Fault Trigger Conditions

DTC	Description	Fault Trigger Conditions
U0151:00	Lost Communication With Restraints Control Module: No Sub-Type Information	Sets in continuous memory and on-demand in the IPC if SRS data messages received from the RCM module through the BCM over the Medium Speed Controller Area Network (MS-CAN) are missing for 1 second or longer.

Possible Sources

- Communication concern
- Battery voltage concern
- RCM
- IPC

PINPOINT TEST AG : U0151:00

AG1 VERIFY THE CUSTOMER CONCERN

- Ignition ON.
- Verify there is an observable symptom present.

Is an observable symptom present?

Yes	GO to AG2
No	The system is operating normally at this time. The DTC may have been set due to high network traffic or an intermittent fault condition.

AG2 CHECK THE COMMUNICATION NETWORK

- Ignition ON.
- Using a scan tool, perform a network test.

Does the RCM pass the network test?

Yes	GO to AG3
No	REFER to: Communications Network (418-00 Module Communications Network, Diagnosis and Testing).

AG3 RETRIEVE THE RECORDED DIAGNOSTIC TROUBLE CODES (DTCS) FROM THE BCM (BODY CONTROL MODULE) SELF-TEST

- Using a scan tool, perform the BCM self-test.

Is DTC U0151:00 recorded?

Yes	REFER to: Body Control Module (BCM) (419-10 Multifunction Electronic Modules, Diagnosis and Testing).
No	GO to AG4

AG4 RETRIEVE THE RECORDED DIAGNOSTIC TROUBLE CODES (DTCS) FROM THE IPC (INSTRUMENT PANEL CLUSTER) SELF-TEST

- Using a scan tool, perform the IPC self-test.

Is DTC U3006:16 or DTC U3006:17 recorded?

Yes	For DTC U3006:16, GO to Pinpoint Test AM For DTC U3006:17, GO to Pinpoint Test AN
No	GO to AG5

AG5 RECHECK THE IPC (INSTRUMENT PANEL CLUSTER) DIAGNOSTIC TROUBLE CODES (DTCS)

NOTE: *If new modules were installed prior to the DTC being set, the module configuration can be incorrectly set during the Programmable Module Installation (PMI) or the Programmable Module Installation (PMI) may not have been carried out.*

- Clear the Diagnostic Trouble Codes (DTCs).
- Wait 10 seconds.
- Using a scan tool, perform the IPC self-test.

Is DTC U0151:00 still present?

Yes	INSTALL a new BCM .

	REFER to: Body Control Module (BCM) (419-10 Multifunction Electronic Modules, Diagnosis and Testing).
No	The system is operating correctly at this time. The DTC may have been set due to high network traffic or an intermittent fault condition.

U0159:00

Diagnostic Overview

Diagnostics in this manual assume a certain skill level and knowledge of Ford-specific diagnostic practices.
REFER to: Diagnostic Methods (100-00 General Information, Description and Operation).

Normal Operation and Fault Conditions

IPC DTC Fault Trigger Conditions

DTC	Description	Fault Trigger Conditions
U0159:00	Lost Communication With Parking Assist Control Module "A": No Sub-Type Information	Sets on-demand and in continuous memory in the IPC if data messages received from the Parking Aid Module (PAM) through the BCM over the Medium Speed Controller Area Network (MS-CAN) are missing for 1 second or longer.

Possible Sources

- Communication concern
- Battery voltage concern
- Parking Aid Module (PAM)
- IPC

PINPOINT TEST AH : U0159:00

AH1 VERIFY THE CUSTOMER CONCERN

- Ignition ON.
- Verify there is an observable symptom present.

Is an observable symptom present?

Yes	GO to AH2
No	The system is operating normally at this time. The DTC may have been set due to high network traffic or an intermittent fault condition.

AH2 CHECK THE COMMUNICATION NETWORK

- Ignition ON.
- Using a scan tool, perform a network test.

Does the Parking Aid Module (PAM) pass the network test?

Yes	GO to AH3
No	REFER to: Communications Network (418-00 Module Communications Network, Diagnosis and Testing).

AH3 RETRIEVE THE RECORDED DIAGNOSTIC TROUBLE CODES (DTCS) FROM THE IPC (INSTRUMENT PANEL CLUSTER) SELF-TEST

- Using a scan tool, perform the IPC self-test.

Is DTC U0140:00, DTC U3006:16 or DTC U3006:17 recorded?

Yes	For DTC U0140:00, GO to Pinpoint Test AF For DTC U3006:16, GO to Pinpoint Test AM For DTC U3006:17, GO to Pinpoint Test AN
No	GO to AH4

AH4 RETRIEVE THE RECORDED DIAGNOSTIC TROUBLE CODES (DTCS) FROM THE PARKING AID MODULE (PAM) SELF-TEST

- Using a scan tool, perform the Parking Aid Module (PAM) module self-test.

Is DTC U3003:62 recorded?

Yes	REFER to: Parking Aid (413-13A Parking Aid, Diagnosis and Testing).
No	GO to AH5

AH5 RECHECK THE IPC (INSTRUMENT PANEL CLUSTER) DIAGNOSTIC TROUBLE CODES (DTCS)

NOTE: *If new modules were installed prior to the DTC being set, the module configuration can be incorrectly set during the Programmable Module Installation (PMI) or the Programmable Module Installation (PMI) may not have been carried out.*

- Clear the Diagnostic Trouble Codes (DTCs).
- Wait 10 seconds.
- Using a scan tool, perform the IPC self-test.

Is DTC U0159:00 still present?

Yes	INSTALL a new Parking Aid Module (PAM). REFER to: Parking Assist Control Module (PAM) - Vehicles With: 4-Door (413-13A Parking Aid, Removal and Installation). CLEAR the Diagnostic Trouble Codes (DTCs). REPEAT the self-test. If DTC U0159:00 is still present, INSTALL a new IPC . REFER to: Instrument Panel Cluster (IPC) (413-01 Instrumentation, Message Center and Warning Chimes, Removal and Installation).
No	The system is operating correctly at this time. The DTC may have been set due to high network traffic or an intermittent fault condition.

The Low Oil Pressure Warning Indicator Is Never Or Always On

Refer to Wiring Diagrams Cell 60 for schematic and connector information.

Diagnostic Overview

Diagnostics in this manual assume a certain skill level and knowledge of Ford-specific diagnostic practices.
REFER to: Diagnostic Methods (100-00 General Information, Description and Operation).

Normal Operation and Fault Conditions

See Low Oil Pressure Warning Indicator.
REFER to: Instrument Panel Cluster (IPC) - System Operation and Component Description (413-01 Instrumentation, Message Center and Warning Chimes, Description and Operation).

NOTE: *If DTC U0100:00 sets in the IPC , other observable symptoms can be an inoperative speedometer, tachometer, temperature gauge or odometer.*

If the IPC fails to receive the oil pressure warning message from the BCM for less than 2 seconds, the IPC defaults the low oil pressure warning indicator to the last state (on or off), based upon the last known good oil pressure status message.

If the BCM fails to receive the oil pressure warning message from the PCM for 2 seconds or longer, the BCM and the IPC sets DTC U0100:00 and the IPC defaults the low oil pressure warning indicator on.

Possible Sources

- Wiring, terminals or connectors
- Engine oil pressure switch
- Base engine oil pressure concern
- PCM
- IPC

Visual Inspection and Diagnostic Pre-checks

Inspect the engine for noise that can indicate a base engine or low engine oil pressure concern. Inspect the engine oil pressure switch for signs of external damage. Inspect the engine oil pressure switch connector for signs of corrosion and inspect the harness for damage indicating an open or short to ground.

PINPOINT TEST AI : THE LOW OIL PRESSURE WARNING INDICATOR IS NEVER OR ALWAYS ON

AI1 CHECK THE LOW OIL PRESSURE WARNING INDICATOR USING THE DEALER TEST MODE

- Ignition OFF.
- Enter the Dealer Test Mode. Enter the Dealer Test Mode.
  REFER to: Instrument Panel Cluster (IPC) - System Operation and Component Description (413-01 Instrumentation, Message Center and Warning Chimes, Description and Operation).
- Scroll to LED test.
- Monitor the low oil pressure warning indicator.

Does the low oil pressure warning indicator illuminate?

Yes	If the low oil pressure warning indicator is always on, GO to AI2 If the low oil pressure warning indicator is never on, GO to AI7
No	INSTALL a new IPC . REFER to: Instrument Panel Cluster (IPC) (413-01 Instrumentation, Message Center and Warning Chimes, Removal and Installation).

AI2 RETRIEVE THE RECORDED DIAGNOSTIC TROUBLE CODES (DTCS) FROM THE IPC (INSTRUMENT PANEL CLUSTER) SELF-TEST

- Using a scan tool, perform a IPC self-test.

Is DTC U0100:00 recorded?

Yes	GO to Pinpoint Test AC
No	GO to AI3

AI3 CHECK FOR A STUCK CLOSED ENGINE OIL PRESSURE SWITCH

- Ignition OFF.
- Disconnect: Engine Oil Pressure Switch.
- Ignition ON.
- Observe the low oil pressure warning indicator.

Does the low oil pressure warning indicator turn off?

Yes	GO to AI6
No	GO to AI4

AI4 CHECK THE OIL PRESSURE INPUT CIRCUIT FOR A SHORT TO GROUND

- Ignition OFF.
- Disconnect: PCM C175E.
- Measure:

Positive Lead	Measurement / Action	Negative Lead
C175E-54	Ω	—

Is the resistance greater than 10,000 ohms?

Yes	GO to AI5
No	REPAIR the circuit.

AI5 RETRIEVE THE RECORDED DIAGNOSTIC TROUBLE CODES (DTCS) FROM THE PCM (POWERTRAIN CONTROL MODULE) KOEO (KEY ON, ENGINE OFF) SELF-TEST

- Using a scan tool, perform a PCM KOEO self-test.

Are any Diagnostic Trouble Codes (DTCs) recorded?

Yes	REFER to the Powertrain Control/Emissions Diagnosis (PC/ED) manual.
No	GO to AI9

AI6 CHECK THE OIL PRESSURE

- Test the engine for low oil pressure.

Was a low oil pressure concern detected?

Yes	REPAIR the low oil pressure concern.
No	INSTALL a new engine oil pressure switch.

AI7 CHECK FOR A STUCK OPEN ENGINE OIL PRESSURE SWITCH

- Ignition OFF.
- Disconnect: Engine Oil Pressure Switch.
- Connect a fused jumper wire:

Lead 1	Measurement / Action	Lead 2
C103-1		—

- Ignition ON.
- Observe the low oil pressure warning indicator.

Does the low oil pressure indicator turn on?

Yes	REMOVE the jumper wire. INSTALL a new engine oil pressure switch.
No	LEAVE the jumper wire connected. GO to AI8

AI8 CHECK THE ENGINE OIL PRESSURE INPUT CIRCUIT FOR AN OPEN

- Ignition OFF.
- Disconnect: PCM C175E.
- Measure:

Positive Lead	Measurement / Action	Negative Lead
C175E-54	Ω	—

Is the resistance less than 3 ohms?

Yes	REMOVE the jumper wire. GO to AI9
No	REMOVE the jumper wire. REPAIR the circuit.

AI9 CHECK FOR CORRECT PCM (POWERTRAIN CONTROL MODULE) OPERATION

- Ignition OFF.
- Disconnect and inspect all PCM connectors.
- Repair:
  - corrosion (install new connector or terminals - clean module pins)
  - damaged or bent pins - install new terminals/pins
  - pushed-out pins - install new pins as necessary
- Reconnect the PCM connectors. Make sure they seat and latch correctly.

Operate the system and determine if the concern is still present

Is the concern still present?

Yes	CHECK On-Line Automotive Service Information System (OASIS) for any applicable Technical Service Bulletins (TSBs). If a TSB exists for this concern, DISCONTINUE this test and FOLLOW TSB instructions. If no Technical Service Bulletins (TSBs) address this concern, INSTALL a new PCM. REFER to: Powertrain Control Module (PCM) (303-14A Electronic Engine Controls - 2.0L Duratec-HE (125kW/170PS) - MI4, Removal and Installation).
No	The system is operating correctly at this time. The concern may have been caused by module connections. ADDRESS the root cause of any connector or pin issues.

The Lights On Indicator Is Never Or Always On

Diagnostic Overview

Diagnostics in this manual assume a certain skill level and knowledge of Ford-specific diagnostic practices.
REFER to: Diagnostic Methods (100-00 General Information, Description and Operation).

Normal Operation and Fault Conditions

See Lights On Indicator.
REFER to: Instrument Panel Cluster (IPC) - System Operation and Component Description (413-01 Instrumentation, Message Center and Warning Chimes, Description and Operation).

If the position light indication message is missing for less than 2 seconds, the IPC defaults the lights on indicator to its last state (on or off) based upon the last known good message received.

If the position light indication message is missing for 2 seconds or longer, the IPC sets DTC U0140:00 in continuous memory and defaults the lights on indicator off.

Possible Sources

- Exterior lighting concern
- BCM
- IPC

PINPOINT TEST AJ : THE LIGHTS ON INDICATOR IS NEVER OR ALWAYS ON

AJ1 CHECK THE PARKING LAMPS OPERATION

- Place the headlamp switch in the PARKLAMP position.
- Ignition ON.
- Observe the parking lamps.

Do the parking lights operate correctly?

Yes	GO to AJ2
No	REFER to: Parking, Rear and License Plate Lamps (417-01 Exterior Lighting, Diagnosis and Testing).

AJ2 RETRIEVE THE RECORDED DIAGNOSTIC TROUBLE CODES (DTCS) FROM THE IPC (INSTRUMENT PANEL CLUSTER) SELF-TEST

- Using a scan tool, perform the IPC self-test.

Are any DTC U0140:00 recorded?

Yes	GO to Pinpoint Test AF
No	GO to AJ3

AJ3 RETRIEVE THE RECORDED DIAGNOSTIC TROUBLE CODES (DTCS) FROM THE BCM (BODY CONTROL MODULE) SELF-TEST

- Using a scan tool, perform the BCM self-test.

Are any Diagnostic Trouble Codes (DTCs) recorded?

Yes	REFER to: Body Control Module (BCM) (419-10 Multifunction Electronic Modules, Diagnosis and Testing).
No	GO to AJ4

AJ4 CHECK THE LIGHTS ON INDICATOR USING THE DEALER TEST MODE

- Ignition OFF.
- Enter the Dealer Test Mode. Enter the Dealer Test Mode.
  REFER to: Instrument Panel Cluster (IPC) - System Operation and Component Description (413-01 Instrumentation, Message Center and Warning Chimes, Description and Operation).
- Scroll to LED test.
- Monitor the lights on indicator.

Does the lights on indicator illuminate?

Yes	INSTALL a new BCM. REFER to: Body Control Module (BCM) (419-10 Multifunction Electronic Modules, Diagnosis and Testing). TEST the system for normal operation. If the lights on indicator is still on, INSTALL a new IPC. REFER to: Instrument Panel Cluster (IPC) (413-01 Instrumentation, Message Center and Warning Chimes, Removal and Installation).
No	INSTALL a new IPC. REFER to: Instrument Panel Cluster (IPC) (413-01 Instrumentation, Message Center and Warning Chimes, Removal and Installation).

The Low Fuel Indicator Is Never Or Always On

Diagnostic Overview

Diagnostics in this manual assume a certain skill level and knowledge of Ford-specific diagnostic practices.
REFER to: Diagnostic Methods (100-00 General Information, Description and Operation).

Normal Operation and Fault Conditions

See Low Fuel Indicator.
REFER to: Instrument Panel Cluster (IPC) - System Operation and Component Description (413-01 Instrumentation, Message Center and Warning Chimes, Description and Operation).

If the fuel level status message is missing for less than 33 seconds, the IPC defaults the low fuel indicator to its last state (on or off) based upon the last known good message received.

If the fuel level status message is missing for 33 seconds or longer, the IPC sets DTC U0140:00 in continuous memory, defaults fuel gauge to empty (E) and the low fuel indicator on.

Visual Inspection and Diagnostic Prechecks

If the low fuel indicator is never on, verify the fuel level is less than before beginning diagnostics. If the low fuel indicator is always on, verify the fuel level is above before beginning diagnostics.

Possible Sources

- Fuel gauge indication concern
- IPC

PINPOINT TEST AK : THE LOW FUEL INDICATOR IS NEVER OR ALWAYS ON

AK1 CHECK THE FUEL GAUGE OPERATION

- Ignition ON.
- Monitor the fuel gauge operation.

Does the fuel gauge operate correctly?

Yes	GO to AK2
No	GO to Pinpoint Test B

AK2 CARRY OUT THE IPC (INSTRUMENT PANEL CLUSTER) INDICATOR LAMP CONTROL ACTIVE COMMAND USING A SCAN TOOL

- Using a scan tool, view the IPC PID.
- SELECT the IPC low fuel indicator (LOFUEL) PID.
- Command the low fuel indicator on and off while observing the low fuel indicator.

Does the low fuel indicator illuminate when commanded on and turn off when commanded off?

Yes	The system is operating correctly. The fuel level may not have been at the level required to turn on or off the low fuel indicator.
No	INSTALL a new IPC . REFER to: Instrument Panel Cluster (IPC) (413-01 Instrumentation, Message Center and Warning Chimes, Removal and Installation).

The Charging System Warning Indicator Is Never Or Always On

Diagnostic Overview

Diagnostics in this manual assume a certain skill level and knowledge of Ford-specific diagnostic practices.
REFER to: Diagnostic Methods (100-00 General Information, Description and Operation).

Normal Operation and Fault Conditions

See Charging System Warning Indicator.
REFER to: Instrument Panel Cluster (IPC) - System Operation and Component Description (413-01 Instrumentation, Message Center and Warning Chimes, Description and Operation).

If the power system status message is missing for less than 2 seconds, the IPC defaults the charging system warning indicator to its last state (on or off) based upon the last known good message received.

If the power system status message is missing for 2 seconds or longer, the IPC sets DTC U0140:00 in continuous memory and defaults the charging system warning indicator on.

Possible Sources

- Charging system concern
- BCM
- IPC

PINPOINT TEST AL : THE CHARGING SYSTEM WARNING INDICATOR IS NEVER OR ALWAYS ON

AL1 RETRIEVE THE RECORDED DIAGNOSTIC TROUBLE CODES (DTCS) FROM THE IPC (INSTRUMENT PANEL CLUSTER) SELF-TEST

- Using a scan tool, perform the IPC self-test.

Are any Diagnostic Trouble Codes (DTCs) recorded?

Yes	For DTC U0140:00, GO to Pinpoint Test AF For all other codes, REFER to DTC Chart: IPC in this section.
No	GO to AL2

AL2 RETRIEVE THE RECORDED DIAGNOSTIC TROUBLE CODES (DTCS) FROM THE BCM (BODY CONTROL MODULE) SELF-TEST

- Using a scan tool, perform the BCM self-test.

Are any Diagnostic Trouble Codes (DTCs) recorded?

Yes	REFER to: Body Control Module (BCM) (419-10 Multifunction Electronic Modules, Diagnosis and Testing).
No	GO to AL3

AL3 CHECK THE CHARGING SYSTEM OPERATION

- Check the charging system operation.
  REFER to: Charging System - System Operation and Component Description (414-00 Charging System - General Information, Description and Operation).

Does the charging system operate correctly?

Yes	GO to AL4
No	REFER to: Charging System - 2.0L Duratec-HE (125kW/170PS) - MI4 (414-00 Charging System - General Information, Diagnosis and Testing).

AL4 CHECK THE CHARGING SYSTEM WARNING INDICATOR USING THE DEALER TEST MODE

- Ignition OFF.
- Enter the Dealer Test Mode. Enter the Dealer Test Mode.

REFER to: Instrument Panel Cluster (IPC) - System Operation and Component Description (413-01 Instrumentation, Message Center and Warning Chimes, Description and Operation).
- Scroll to LED test.
- Montor the charging system warning indicator.

Does the charging system warning indicator illuminate?

Yes	INSTALL a new BCM. REFER to: Body Control Module (BCM) (419-10 Multifunction Electronic Modules, Diagnosis and Testing). TEST the system for normal operation. If the charging system warning indicator is still on, INSTALL a new IPC. REFER to: Instrument Panel Cluster (IPC) (413-01 Instrumentation, Message Center and Warning Chimes, Removal and Installation).
No	INSTALL a new IPC. REFER to: Instrument Panel Cluster (IPC) (413-01 Instrumentation, Message Center and Warning Chimes, Removal and Installation).

U3006:16

Refer to Wiring Diagrams Cell 60 for schematic and connector information.

Diagnostic Overview

Diagnostics in this manual assume a certain skill level and knowledge of Ford-specific diagnostic practices.
REFER to: Diagnostic Methods (100-00 General Information, Description and Operation).

Normal Operation and Fault Conditions

IPC DTC Fault Trigger Conditions

DTC	Description	Fault Trigger Conditions
U3006:16	Control Module Input Power "A": Circuit Voltage Below Threshold	Sets in continuous memory and on-demand in the IPC if the IPC detects battery voltage below 9 volts on the voltage supply circuit for longer than 5 seconds if the engine is not running or longer than 1 second if the engine is running.

Possible Sources

- Wiring, terminals or connectors
- High circuit resistance
- Charging system concern
- IPC

PINPOINT TEST AM : U3006:16

AM1 CARRY OUT THE IPC (INSTRUMENT PANEL CLUSTER) SELF-TEST
• Ignition ON. • Using a scan tool, clear the Diagnostic Trouble Codes (DTCs).

Wait 10 seconds.
- Using a scan tool, perform the IPC self-test.

Is DTC U3006:16 still present?

Yes	GO to AM2
No	The system is operating correctly at this time. The DTC may have been set due to a previous low battery voltage condition.

AM2 CHECK FOR CHARGING SYSTEM DIAGNOSTIC TROUBLE CODES (DTCS) IN THE BCM (BODY CONTROL MODULE)

- Using a scan tool, perform the BCM on-demand self-test.

Are any charging system Diagnostic Trouble Codes (DTCs) recorded?

Yes	REFER to: Body Control Module (BCM) (419-10 Multifunction Electronic Modules, Diagnosis and Testing).
No	GO to AM3

AM3 CHECK THE BATTERY CONDITION AND STATE OF CHARGE

- Check the battery condition and verify the battery is fully charged.
  REFER to: Battery (414-01 Battery, Mounting and Cables, Diagnosis and Testing).

Is the battery OK and fully charged?

Yes	GO to AM4
No	CHARGE or INSTALL a new battery. REFER to: Battery (414-01 Battery, Mounting and Cables, Removal and Installation).

AM4 CHECK THE IPC (INSTRUMENT PANEL CLUSTER) VOLTAGE SUPPLY

- Ignition OFF.
- Disconnect: IPC
- Ignition ON.
- Measure:

Positive Lead	Measurement / Action	Negative Lead
C220-3	V	—

Is the voltage greater than 11 volts?

Yes	GO to AM5
No	REPAIR the circuit.

AM5 CHECK THE IPC (INSTRUMENT PANEL CLUSTER) GROUND

- Mesure:

Positive Lead	Measurement / Action	Negative Lead
C220-3		C220-10

Is the voltage greater than 11 volts?

Yes	GO to AM6
No	REPAIR the circuit.

AM6 CHECK FOR CORRECT IPC (INSTRUMENT PANEL CLUSTER) OPERATION

- Ignition OFF.
- Disconnect and inspect the IPC connector.
- Repair:
  - corrosion (install new connector or terminals - clean module pins)
  - damaged or bent pins - install new terminals/pins
  - pushed-out pins - install new pins as necessary
- Reconnect the IPC connector. Make sure it seats and latches correctly.
- Operate the system and determine if the concern is still present.

Is the concern still present?

Yes	CHECK On-Line Automotive Service Information System (OASIS) for any applicable Technical Service Bulletins (TSBs). If a TSB exists for this concern, DISCONTINUE this test and FOLLOW TSB instructions. If no Technical Service Bulletins (TSBs) address this concern, INSTALL a new IPC . REFER to: Instrument Panel Cluster (IPC) (413-01 Instrumentation, Message Center and Warning Chimes, Removal and Installation).
No	The system is operating correctly at this time. The concern may have been caused by module connections. ADDRESS the root cause of any connector or pin issues.

U3006:17

Diagnostic Overview

Diagnostics in this manual assume a certain skill level and knowledge of Ford-specific diagnostic practices.
REFER to: Diagnostic Methods (100-00 General Information, Description and Operation).

Normal Operation and Fault Conditions

IPC DTC Fault Trigger Conditions

DTC	Description	Fault Trigger Conditions
U3006:17	Control Module Input Power "A":	Sets in continuous memory and on-demand in the IPC if the IPC detects battery

	Circuit Voltage Above Threshold	voltage above 16 volts on the voltage supply circuit for longer than 1 second.

Possible Sources

- Charging system concern
- IPC

PINPOINT TEST AN : U3006:17

AN1 CHECK FOR DTC (DIAGNOSTIC TROUBLE CODE) B1317, B1676, P0563 (PCM (POWERTRAIN CONTROL MODULE)) OR U3003:17 SET IN OTHER MODULES

- Ignition ON.
- Using a scan tool, perform the self-test.
- Retrieve the continuous memory Diagnostic Trouble Codes (DTCs) from all modules.

Is DTC B1317, B1676, P0563 (PCM or U3003:17 set in more than one module?

Yes	REFER to: Charging System - 2.0L Duratec-HE (125kW/170PS) - MI4 (414-00 Charging System - General Information, Diagnosis and Testing).
No	GO to AN2

AN2 CHECK THE BATTERY VOLTAGE

- Turn off all interior/exterior lights and accessories.
- Start and run the engine at approximately 2,000 rpm for 3 minutes while monitoring the battery voltage.

Does the battery voltage rise to 15.5 volts or higher?

Yes	REFER to: Charging System - 2.0L Duratec-HE (125kW/170PS) - MI4 (414-00 Charging System - General Information, Diagnosis and Testing).
No	GO to AN3

AN3 RECHECK FOR DTC (DIAGNOSTIC TROUBLE CODE) U3006:17

- Turn the engine off.
- Ignition ON.
- Using a scan tool, clear the continuous memory Diagnostic Trouble Codes (DTCs).
- Carry out the IPC self-test.

Is DTC U3006:17 present?

Yes	INSTALL a new IPC . REFER to: Instrument Panel Cluster (IPC) (413-01 Instrumentation, Message Center and Warning Chimes, Removal and Installation).
No	The system is operating normally at this time. The DTC may have been set previously during battery charging or while jump starting the vehicle.

U0264:00

Diagnostic Overview

Diagnostics in this manual assume a certain skill level and knowledge of Ford-specific diagnostic practices.
REFER to: Diagnostic Methods (100-00 General Information, Description and Operation).

Normal Operation and Fault Conditions

IPC DTC Fault Trigger Conditions

DTC	Description	Fault Trigger Conditions
U0264:00	Lost Communication With Camera Module-Rear: No Sub-Type Information	Sets an-demand and in continuous memory in the IPC if data messages received from the Image Processing Module-B (IPMB) over the Medium Speed Controller Area Network (MS-CAN) are missing for 1 second or longer.

Possible Sources

- Communication concern
- Battery voltage concern
- Image Processing Module A (IPM-A)
- IPC

PINPOINT TEST AO : U0264:00

AO1 VERIFY THE CUSTOMER CONCERN

- Ignition ON.
- Verify there is an observable symptom present.

Is an observable symptom present?

Yes	GO to AO2
No	The system is operating normally at this time. The DTC may have been set due to high network traffic or an intermittent fault condition.

AO2 CHECK THE COMMUNICATION NETWORK

- Ignition ON.
- Using a scan tool, perform the network test.

Does the Image Processing Module - B (IPM-B) pass the network test?

Yes	GO to AO3
No	REFER to: Communications Network (418-00 Module Communications Network, Diagnosis and Testing).

AO3 RETRIEVE THE RECORDED DIAGNOSTIC TROUBLE CODES (DTCS) FROM THE IMAGE PROCESSING

MODULE - B (IPM-B) SELF-TEST

- Using a scan tool, retrieve the continuous memory Diagnostic Trouble Codes (DTCs) from the Image Processing Module - B (IPM-B).

Is DTC U3003:62 recorded?

Yes	REFER to: Rear View Mirrors (501-09A Rear View Mirrors - Vehicles Without: One-Touch Up Door Window, Diagnosis and Testing).
No	GO to AO4

AO4 RETRIEVE THE RECORDED DIAGNOSTIC TROUBLE CODES (DTCS) FROM THE IPC (INSTRUMENT PANEL CLUSTER) SELF-TEST

- Using a scan tool, perform the IPC self-test.

Are any DTC recorded?

Yes	For DTC U3006:16, GO to Pinpoint Test AM For DTC U3006:17, GO to Pinpoint Test AN
No	GO to AO5

AO5 RECHECK THE IPC (INSTRUMENT PANEL CLUSTER) DIAGNOSTIC TROUBLE CODES (DTCS)

- Clear the Diagnostic Trouble Codes (DTCs).
- Wait 10 seconds.
- Repeat the IPC self-test.

Is DTC U0264:00 still present?

Yes	INSTALL a new Image Processing Module - B (IPM-B). REFER to: Interior Rear View Mirror (501-09A Rear View Mirrors - Vehicles Without: One-Touch Up Door Window, Removal and Installation). REFER to: Interior Rear View Mirror (501-09B Rear View Mirrors - Vehicles With: One-Touch Up Door Window, Removal and Installation). CLEAR the Diagnostic Trouble Codes (DTCs). REPEAT the self-test. If DTC U0264:00 is still present, INSTALL a new IPC . REFER to: Instrument Panel Cluster (IPC) (413-01 Instrumentation, Message Center and Warning Chimes, Removal and Installation).
No	The system is operating correctly at this time. The DTC may have been set due to high network traffic or an intermittent fault condition.

U0199:00

Diagnostic Overview

Diagnostics in this manual assume a certain skill level and knowledge of Ford-specific diagnostic practices.
REFER to: Diagnostic Methods (100-00 General Information, Description and Operation).

Normal Operation and Fault Conditions

IPC DTC Fault Trigger Conditions

DTC	Description	Fault Trigger Conditions
U0199:00	Lost Communication With "Door Control Module A": No Sub-Type Information	Sets on-demand and in continuous memory in the IPC if data messages received from the DDM over the Medium Speed Controller Area Network (MS-CAN) are missing for 3.15 seconds or longer.

Possible Sources

- Communication concern
- Battery voltage concern
- DDM
- IPC

PINPOINT TEST AP : U0199:00

AP1 VERIFY THE CUSTOMER CONCERN

- Ignition ON.
- Verify there is an observable symptom present.

Is an observable symptom present?

Yes	GO to AP2
No	The system is operating normally at this time. The DTC may have been set due to high network traffic or an intermittent fault condition.

AP2 CHECK THE COMMUNICATION NETWORK

- Ignition ON.
- Using a scan tool, perform the network test.

Does the DDM pass the network test?

Yes	GO to AP3
No	REFER to: Communications Network (418-00 Module Communications Network, Diagnosis and Testing).

AP3 RETRIEVE THE RECORDED DIAGNOSTIC TROUBLE CODES (DTCS) FROM THE DDM (DRIVER DOOR MODULE) SELF-TEST

- Using a scan tool, retrieve the continuous memory Diagnostic Trouble Codes (DTCs) from the DDM .

Is DTC U3003:62 recorded?

Yes	REFER to: Locks, Latches and Entry Systems (501-14B Handles, Locks, Latches and Entry Systems - Vehicles With: One-Touch Up Door Window, Diagnosis and Testing).

No	GO to AP4

AP4 RETRIEVE THE RECORDED DIAGNOSTIC TROUBLE CODES (DTCS) FROM THE IPC (INSTRUMENT PANEL CLUSTER) SELF-TEST

- Using a scan tool, perform the IPC self-test.

Are any DTC recorded?

Yes	For DTC U3006:16, GO to Pinpoint Test AM For DTC U3006:17, GO to Pinpoint Test AN
No	GO to AP5

AP5 RECHECK THE IPC (INSTRUMENT PANEL CLUSTER) DIAGNOSTIC TROUBLE CODES (DTCS)

NOTE: *If new modules were installed prior to the DTC being set, the module configuration can be incorrectly set during the Programmable Module Installation (PMI) or the Programmable Module Installation (PMI) may not have been carried out.*

- Clear the Diagnostic Trouble Codes (DTCs).
- Wait 10 seconds.
- Using a scan tool, perform the IPC self-test.

Is DTC U0199:00 still present?

Yes	GO to AP6
No	The system is operating correctly at this time. The DTC may have been set due to high network traffic or an intermittent fault condition.

AP6 CHECK FOR DTC (DIAGNOSTIC TROUBLE CODE) U0199:00 SET IN OTHER MODULES

- Clear all Diagnostic Trouble Codes (DTCs).
- Ignition OFF.
- Ignition ON.
- Wait 10 seconds.
- Using a scan tool, retrieve all continuous memory Diagnostic Trouble Codes (DTCs).

Is DTC U0199:00 set in the BCM ?

Yes	INSTALL a new DDM . REFER to: Door Module (419-10 Multifunction Electronic Modules, Removal and Installation).
No	INSTALL a new IPC . REFER to: Instrument Panel Cluster (IPC) (413-01 Instrumentation, Message Center and Warning Chimes, Removal and Installation).

U0164:00

Diagnostic Overview

Diagnostics in this manual assume a certain skill level and knowledge of Ford-specific diagnostic practices.
REFER to: Diagnostic Methods (100-00 General Information, Description and Operation).

Normal Operation and Fault Conditions

IPC DTC Fault Trigger Conditions

DTC	Description	Fault Trigger Conditions
U0164:00	Lost Communication With HVAC Control Module: No Sub-Type Information	Sets on-demand and in continuous memory in the IPC if data messages received from the HVAC module over the Medium Speed Controller Area Network (MS-CAN) are missing for 1 second or longer.

Possible Sources

- Communication concern
- Battery voltage concern
- HVAC module
- IPC

PINPOINT TEST AQ : U0164:00

AQ1 VERIFY THE CUSTOMER CONCERN

- Ignition ON.
- Verify there is an observable symptom present.

Is an observable symptom present?

Yes	GO to AQ2
No	The system is operating normally at this time. The DTC may have been set due to high network traffic or an intermittent fault condition.

AQ2 CHECK THE COMMUNICATION NETWORK

- Ignition ON.
- Using a scan tool, perform the network test.

Does the HVAC module pass the network test?

Yes	GO to AQ3
No	REFER to: Communications Network (418-00 Module Communications Network, Diagnosis and Testing).

AQ3 RETRIEVE THE RECORDED DIAGNOSTIC TROUBLE CODES (DTCS) FROM THE HVAC (HEATING, VENTILATION AND AIR CONDITIONING) MODULE SELF-TEST

- Using a scan tool, retrieve the continuous memory Diagnostic Trouble Codes (DTCs) from the HVAC module.

Is DTC U3006:16 or U3006:17 recorded?

Yes	

	REFER to: Climate Control System - Vehicles With: Electronic Manual Temperature Control (EMTC) (412-00 Climate Control System - General Information, Diagnosis and Testing). REFER to: Climate Control System - Vehicles With: Dual Automatic Temperature Control (DATC) (412-00 Climate Control System - General Information, Diagnosis and Testing).
No	GO to AQ4

AQ4 RETRIEVE THE RECORDED DIAGNOSTIC TROUBLE CODES (DTCS) FROM THE IPC (INSTRUMENT PANEL CLUSTER) SELF-TEST

- Using a scan tool, perform the IPC self-test.

Are any DTC recorded?

Yes	For DTC U3006:16, GO to Pinpoint Test AM For DTC U3006:17, GO to Pinpoint Test AN
No	GO to AQ5

AQ5 RECHECK THE IPC (INSTRUMENT PANEL CLUSTER) DIAGNOSTIC TROUBLE CODES (DTCS)

- Clear the Diagnostic Trouble Codes (DTCs).
- Wait 10 seconds.
- Repeat the IPC self-test.

Is DTC U0164:00 still present?

Yes	INSTALL a new HVAC module. REFER to: Heating, Ventilation and Air Conditioning (HVAC) Control Module (412-00 Climate Control System - General Information, Removal and Installation). CLEAR the Diagnostic Trouble Codes (DTCs). REPEAT the self-test. If DTC U0164:00 is still present, INSTALL a new IPC . REFER to: Instrument Panel Cluster (IPC) (413-01 Instrumentation, Message Center and Warning Chimes, Removal and Installation).
No	The system is operating correctly at this time. The DTC may have been set due to high network traffic or an intermittent fault condition.

U0200:00

Diagnostic Overview

Diagnostics in this manual assume a certain skill level and knowledge of Ford-specific diagnostic practices.
REFER to: Diagnostic Methods (100-00 General Information, Description and Operation).

Normal Operation and Fault Conditions

IPC DTC Fault Trigger Conditions

DTC	Description	Fault Trigger Conditions
U0200:00	Lost Communication With "Door	Sets on-demand and in continuous memory in the IPC if data messages received

	Control Module B": No Sub-Type Information	from the PDM over the Medium Speed Controller Area Network (MS-CAN) are missing for 1 second or longer.

Possible Sources

- Communication concern
- Battery voltage concern
- PDM
- IPC

PINPOINT TEST AR : U0200:00

AR1 VERIFY THE CUSTOMER CONCERN

- Ignition ON.
- Verify there is an observable symptom present.

Is an observable symptom present?

Yes	GO to AR2
No	The system is operating normally at this time. The DTC may have been set due to high network traffic or an intermittent fault condition.

AR2 CHECK THE COMMUNICATION NETWORK

- Ignition ON.
- Using a scan tool, perform the network test.

Does the PDM pass the network test?

Yes	GO to AR3
No	REFER to: Communications Network (418-00 Module Communications Network, Diagnosis and Testing).

AR3 RETRIEVE THE RECORDED DIAGNOSTIC TROUBLE CODES (DTCS) FROM THE PDM (PASSENGER DOOR MODULE) SELF-TEST

- Using a scan tool, retrieve the continuous memory Diagnostic Trouble Codes (DTCs) from the PDM .

Is DTC U3003:62 recorded?

Yes	REFER to: Locks, Latches and Entry Systems (501-14B Handles, Locks, Latches and Entry Systems - Vehicles With: One-Touch Up Door Window, Diagnosis and Testing).
No	GO to AR4

AR4 RETRIEVE THE RECORDED DIAGNOSTIC TROUBLE CODES (DTCS) FROM THE IPC (INSTRUMENT PANEL CLUSTER) SELF-TEST

- Using a scan tool, perform the IPC self-test.

Are any DTC recorded?

Yes	For DTC U3006:16, GO to Pinpoint Test AM For DTC U3006:17, GO to Pinpoint Test AN
No	GO to AR5

AR5 RECHECK THE IPC (INSTRUMENT PANEL CLUSTER) DIAGNOSTIC TROUBLE CODES (DTCS)

NOTE: *If new modules were installed prior to the DTC being set, the module configuration can be incorrectly set during the Programmable Module Installation (PMI) or the Programmable Module Installation (PMI) may not have been carried out.*

- Clear the Diagnostic Trouble Codes (DTCs).
- Wait 10 seconds.
- Using a scan tool, perform the IPC self-test.

Is DTC U0200:00 still present?

Yes	GO to AR6
No	The system is operating correctly at this time. The DTC may have been set due to high network traffic or an intermittent fault condition.

AR6 CHECK FOR DTC (DIAGNOSTIC TROUBLE CODE) U0200:00 SET IN OTHER MODULES

- Clear all Diagnostic Trouble Codes (DTCs).
- Ignition OFF.
- Ignition ON.
- Wait 10 seconds.
- Using a scan tool, retrieve all continuous memory Diagnostic Trouble Codes (DTCs).

Is DTC U0200:00 set in the BCM ?

Yes	INSTALL a new PDM . REFER to: Door Module (419-10 Multifunction Electronic Modules, Removal and Installation).
No	INSTALL a new IPC . REFER to: Instrument Panel Cluster (IPC) (413-01 Instrumentation, Message Center and Warning Chimes, Removal and Installation).

U0131:00

Diagnostic Overview

Diagnostics in this manual assume a certain skill level and knowledge of Ford-specific diagnostic practices.
REFER to: Diagnostic Methods (100-00 General Information, Description and Operation).

Normal Operation and Fault Conditions

IPC DTC Fault Trigger Conditions

DTC	Description	Fault Trigger Conditions
U0131:00	Lost Communication With Power Steering Module: No Sub-Type Information	• Sets on-demand and in continuous memory in the IPC if data messages received from the PSCM are missing for 1 second or longer. • The PSCM transmits to the BCM on the High Speed Controller Area Network (HS-CAN) and the BCM transmits to the IPC on the Medium Speed Controller Area Network (MS-CAN).

Possible Sources

- Communication concern
- Battery voltage concern
- PSCM
- IPC

PINPOINT TEST AS : U0131:00

AS1 VERIFY THE CUSTOMER CONCERN

- Ignition ON.
- Verify there is an observable symptom present.

Is an observable symptom present?

Yes	GO to AS2
No	The system is operating normally at this time. The DTC may have been set due to high network traffic or an intermittent fault condition.

AS2 CHECK THE COMMUNICATION NETWORK

- Ignition ON.
- Using a scan tool, perform the network test.

Does the PSCM pass the network test?

Yes	GO to AS3
No	REFER to: Communications Network (418-00 Module Communications Network, Diagnosis and Testing).

AS3 RETRIEVE THE RECORDED DIAGNOSTIC TROUBLE CODES (DTCS) FROM THE IPC (INSTRUMENT PANEL CLUSTER) SELF-TEST

- Using a scan tool, retrieve the continuous memory Diagnostic Trouble Codes (DTCs) from the IPC .

Are any Diagnostic Trouble Codes (DTCs) recorded?

Yes	For DTC U3006:16, GO to Pinpoint Test AM For DTC U3006:17, GO to Pinpoint Test AN
No	GO to AS4

AS4 RETRIEVE THE RECORDED DIAGNOSTIC TROUBLE CODES (DTCS) FROM THE PSCM (POWER STEERING CONTROL MODULE) SELF-TEST

- Using a scan tool, retrieve the continuous memory Diagnostic Trouble Codes (DTCs) from the PSCM .

Is DTC U3003:16 or U3003:17 recorded?

Yes	REFER to: Power Steering (211-02 Power Steering, Diagnosis and Testing).
No	GO to AS5

AS5 RECHECK THE IPC (INSTRUMENT PANEL CLUSTER) DIAGNOSTIC TROUBLE CODES (DTCS)

NOTE: *If new modules were installed prior to the DTC being set, the module configuration can be incorrectly set during the Programmable Module Installation (PMI) or the Programmable Module Installation (PMI) may not have been carried out.*

- Clear the Diagnostic Trouble Codes (DTCs).
- Wait 10 seconds.
- Using a scan tool, perform the IPC self-test.

Is DTC U0131:00 still present?

Yes	GO to AS6
No	The system is operating correctly at this time. The DTC may have been set due to high network traffic or an intermittent fault condition.

AS6 CHECK FOR DTC (DIAGNOSTIC TROUBLE CODE) U0131:00 SET IN OTHER MODULES

- Clear all Diagnostic Trouble Codes (DTCs).
- Ignition OFF.
- Ignition ON.
- Wait 10 seconds.
- Using a scan tool, retrieve all continuous memory Diagnostic Trouble Codes (DTCs).

Is DTC U0131:00 set in the BCM ?

Yes	INSTALL a new PSCM . REFER to: Steering Gear (211-02 Power Steering, Removal and Installation).
No	INSTALL a new IPC . REFER to: Instrument Panel Cluster (IPC) (413-01 Instrumentation, Message Center and Warning Chimes, Removal and Installation).

U0214:00

Diagnostic Overview

Diagnostics in this manual assume a certain skill level and knowledge of Ford-specific diagnostic practices.
REFER to: Diagnostic Methods (100-00 General Information, Description and Operation).

Normal Operation and Fault Conditions

IPC DTC Fault Trigger Conditions

DTC	Description	Fault Trigger Conditions
U0214:00	Lost Communication With Remote Function Actuator: No Sub-Type Information	Sets on-demand and in continuous memory in the IPC if data messages received from the RFA module over the Medium Speed Controller Area Network (MS-CAN) are missing for 1 second or longer.

Possible Sources

- Communication concern
- Battery voltage concern
- RFA module
- IPC

PINPOINT TEST AT : U0214:00

AT1 VERIFY THE CUSTOMER CONCERN

- Ignition ON.
- Verify there is an observable symptom present.

Is an observable symptom present?

Yes	GO to AT2
No	The system is operating normally at this time. The DTC may have been set due to high network traffic or an intermittent fault condition.

AT2 CHECK THE COMMUNICATION NETWORK

- Ignition ON.
- Using a scan tool, perform the network test.

Does the RFA module pass the network test?

Yes	GO to AT3
No	REFER to: Communications Network (418-00 Module Communications Network, Diagnosis and Testing).

AT3 RETRIEVE THE RECORDED DIAGNOSTIC TROUBLE CODES (DTCS) FROM THE RFA (REMOTE FUNCTION ACTUATOR) MODULE SELF-TEST

- Using a scan tool, retrieve the continuous memory Diagnostic Trouble Codes (DTCs) from the RFA module.

Is DTC U3003:62 recorded?

Yes	REFER to: Remote Function Actuator (RFA) Module (419-10 Multifunction Electronic Modules, Diagnosis and Testing).
No	GO to AT4

AT4 RETRIEVE THE RECORDED DIAGNOSTIC TROUBLE CODES (DTCS) FROM THE IPC (INSTRUMENT PANEL CLUSTER) SELF-TEST

- Using a scan tool, perform the IPC self-test.

Are any DTC recorded?

Yes	For DTC U3006:16, GO to Pinpoint Test AM For DTC U3006:17, GO to Pinpoint Test AN
No	GO to AT5

AT5 RECHECK THE IPC (INSTRUMENT PANEL CLUSTER) DIAGNOSTIC TROUBLE CODES (DTCS)

- Clear the Diagnostic Trouble Codes (DTCs).
- Wait 10 seconds.
- Repeat the IPC self-test.

Is DTC U0214:00 still present?

Yes	INSTALL a new RFA module. REFER to: Remote Function Actuator (RFA) Module (419-10 Multifunction Electronic Modules, Removal and Installation). CLEAR the Diagnostic Trouble Codes (DTCs). REPEAT the self-test. If DTC U0214:00 is still present, INSTALL a new IPC . REFER to: Instrument Panel Cluster (IPC) (413-01 Instrumentation, Message Center and Warning Chimes, Removal and Installation).
No	The system is operating correctly at this time. The DTC may have been set due to high network traffic or an intermittent fault condition.

U0184:00

Diagnostic Overview

Diagnostics in this manual assume a certain skill level and knowledge of Ford-specific diagnostic practices.
REFER to: Diagnostic Methods (100-00 General Information, Description and Operation).

Normal Operation and Fault Conditions

IPC DTC Fault Trigger Conditions

DTC	Description	Fault Trigger Conditions
U0184:00	Lost Communication With Radio: No Sub-Type Information	Sets on-demand and in continuous memory in the IPC if data messages received from the ACM over the Medium Speed Controller Area Network (MS-CAN) are missing for 10 seconds or longer.

Possible Sources

- Communication concern
- Battery voltage concern
- ACM
- IPC

PINPOINT TEST AU : U0184:00

AU1 VERIFY THE CUSTOMER CONCERN

- Ignition ON.
- Verify there is an observable symptom present.

Is an observable symptom present?

Yes	GO to AU2
No	The system is operating normally at this time. The DTC may have been set due to high network traffic or an intermittent fault condition.

AU2 CHECK THE COMMUNICATION NETWORK

- Ignition ON.
- Using a scan tool, perform the network test.

Does the ACM pass the network test?

Yes	GO to AU3
No	REFER to: Communications Network (418-00 Module Communications Network, Diagnosis and Testing).

AU3 RETRIEVE THE RECORDED DIAGNOSTIC TROUBLE CODES (DTCS) FROM THE ACM (AUDIO FRONT CONTROL MODULE) SELF-TEST

- Using a scan tool, retrieve the continuous memory Diagnostic Trouble Codes (DTCs) from the ACM .

Is DTC U3003:16 or U3003:17 recorded?

Yes	For base audio, REFER to: Information and Entertainment System (415-00A Information and Entertainment System - General Information - Vehicles With: AM/FM/CD, Diagnosis and Testing). For premium audio, REFER to: Information and Entertainment System (415-00B Information and Entertainment System - General Information - Vehicles With: AM/FM/CD/SYNC, Diagnosis and Testing). For Sony sound, REFER to: Information and Entertainment System (415-00C Information and Entertainment System - General Information - Vehicles With: SYNC/Sony AM/FM/CD, Diagnosis and Testing).
No	GO to AU4

AU4 RETRIEVE THE RECORDED DIAGNOSTIC TROUBLE CODES (DTCS) FROM THE IPC (INSTRUMENT PANEL CLUSTER) SELF-TEST

- Using a scan tool, perform the IPC self-test.

Are any DTC recorded?

Yes	For DTC U3006:16, GO to Pinpoint Test AM For DTC U3006:17, GO to Pinpoint Test AN
No	GO to AU5

AU5 RECHECK THE IPC (INSTRUMENT PANEL CLUSTER) DIAGNOSTIC TROUBLE CODES (DTCS)

- Clear the Diagnostic Trouble Codes (DTCs).
- Wait 10 seconds.
- Repeat the IPC self-test.

Is DTC U0184:00 still present?

Yes	INSTALL a new ACM . For base audio, REFER to: Information and Entertainment System (415-00A Information and Entertainment System - General Information - Vehicles With: AM/FM/CD, Diagnosis and Testing). For premium audio, REFER to: Information and Entertainment System (415-00B Information and Entertainment System - General Information - Vehicles With: AM/FM/CD/SYNC, Diagnosis and Testing). For Sony sound, REFER to: Information and Entertainment System (415-00C Information and Entertainment System - General Information - Vehicles With: SYNC/Sony AM/FM/CD, Diagnosis and Testing). CLEAR the Diagnostic Trouble Codes (DTCs). REPEAT the self-test. If DTC U0184:00 is still present, INSTALL a new IPC . REFER to: Instrument Panel Cluster (IPC) - Overview (413-01 Instrumentation, Message Center and Warning Chimes, Description and Operation).
No	The system is operating correctly at this time. The DTC may have been set due to high network traffic or an intermittent fault condition.

U0257:00

Diagnostic Overview

Diagnostics in this manual assume a certain skill level and knowledge of Ford-specific diagnostic practices.
REFER to: Diagnostic Methods (100-00 General Information, Description and Operation).

Normal Operation and Fault Conditions

IPC DTC Fault Trigger Conditions

DTC	Description	Fault Trigger Conditions
U0257:00	Lost Communication With Front Controls/Display Interface Module:	Sets on-demand and in continuous memory in the IPC if data messages received from the FCDIM over the Medium Speed Controller Area Network

	No Sub-Type Information	(MS-CAN) are missing for 10 seconds or longer.

Possible Sources

- Communication concern
- Battery voltage concern
- FCDIM
- IPC

PINPOINT TEST AV : U0257:00

AV1 VERIFY THE CUSTOMER CONCERN

- Ignition ON.
- Verify there is an observable symptom present.

Is an observable symptom present?

Yes	GO to AV2
No	The system is operating normally at this time. The DTC may have been set due to high network traffic or an intermittent fault condition.

AV2 CHECK THE COMMUNICATION NETWORK

- Ignition ON.
- Using a scan tool, perform the network test.

Does the FCDIM pass the network test?

Yes	GO to AV3
No	REFER to: Communications Network (418-00 Module Communications Network, Diagnosis and Testing).

AV3 RETRIEVE THE RECORDED DIAGNOSTIC TROUBLE CODES (DTCS) FROM THE FCDIM (FRONT CONTROL/DISPLAY INTERFACE MODULE) SELF-TEST

- Using a scan tool, retrieve the continuous memory Diagnostic Trouble Codes (DTCs) from the FCDIM .

Is DTC U3003:16 or U3003:17 recorded?

Yes	For base audio, REFER to: Information and Entertainment System (415-00A Information and Entertainment System - General Information - Vehicles With: AM/FM/CD, Diagnosis and Testing). For premium audio, REFER to: Information and Entertainment System (415-00B Information and Entertainment System - General Information - Vehicles With: AM/FM/CD/SYNC, Diagnosis and Testing). For Sony sound, REFER to: Information and Entertainment System (415-00C Information and Entertainment System - General Information - Vehicles With: SYNC/Sony AM/FM/CD, Diagnosis and Testing).
No	GO to AV4

AV4 RETRIEVE THE RECORDED DIAGNOSTIC TROUBLE CODES (DTCS) FROM THE IPC (INSTRUMENT PANEL CLUSTER) SELF-TEST

- Using a scan tool, perform the IPC self-test.

Are any DTC recorded?

Yes	For DTC U3006:16, GO to Pinpoint Test AM For DTC U3006:17, GO to Pinpoint Test AN
No	GO to AV5

AV5 RECHECK THE IPC (INSTRUMENT PANEL CLUSTER) DIAGNOSTIC TROUBLE CODES (DTCS)

- Clear the Diagnostic Trouble Codes (DTCs).
- Wait 10 seconds.
- Repeat the IPC self-test.

Is DTC U0257:00 still present?

Yes	INSTALL a new FCDIM module. REFER to: Front Control/Display Interface Module (FCDIM) (415-00A Information and Entertainment System - General Information - Vehicles With: AM/FM/CD, Removal and Installation). REFER to: Front Control/Display Interface Module (FCDIM) (415-00B Information and Entertainment System - General Information - Vehicles With: AM/FM/CD/SYNC, Removal and Installation). CLEAR the Diagnostic Trouble Codes (DTCs). REPEAT the self-test. If DTC U0257:00 is still present, INSTALL a new IPC . REFER to: Instrument Panel Cluster (IPC) (413-01 Instrumentation, Message Center and Warning Chimes, Removal and Installation).
No	The system is operating correctly at this time. The DTC may have been set due to high network traffic or an intermittent fault condition.

The PRNDL Indicator Is Never On Or Never Displays P

Refer to Wiring Diagrams Cell 60 for schematic and connector information.

Diagnostic Overview

Diagnostics in this manual assume a certain skill level and knowledge of Ford-specific diagnostic practices.
REFER to: Diagnostic Methods (100-00 General Information, Description and Operation).

Normal Operation and Fault Conditions

See PRNDL Indicator.
REFER to: Instrument Panel Cluster (IPC) - System Operation and Component Description (413-01 Instrumentation, Message Center and Warning Chimes, Description and Operation).

If the transmission mode display actual input or transmission gear display actual message is missing from the BCM for less than the programmed length of time, the PRNDL display remains in the last indication mode.

If the BCM does not receive the transmission mode display actual input or transmission gear display actual message is missing from the TCM for longer than the programmed length of time, the BCM and the IPC sets DTC U0101:00.

If the transmission mode display actual input or transmission gear display actual message is missing from the BCM , the IPC defaults the PRNDL display to blank.

IPC DTC Fault Trigger Conditions

DTC	Description	Fault Trigger Conditions
P0850:62	Park/Neutral Switch Input Circuit: Signal Compare Failure	A continuous and on-demand DTC that sets if the IPC detects a discrepancy between the hardwired park detect input and the messaged transmission mode display actual input.

Possible Sources

- Vehicle in transport mode
- Wiring, terminals or connectors
- Floor shifter
- Transmission concern
- IPC

Visual Inspection and Diagnostic Pre-checks

Verify the vehicle is not in transport mode.

PINPOINT TEST AW : THE PRNDL INDICATOR IS NEVER ON OR NEVER DISPLAYS P

AW1 RETRIEVE THE RECORDED DIAGNOSTIC TROUBLE CODES (DTCS) FROM THE TCM (TRANSMISSION CONTROL MODULE) SELF-TEST

- Ignition ON.
- Using a scan tool, perform the TCM self-test.

Are any Diagnostic Trouble Codes (DTCs) recorded?

Yes	REFER to: Automatic Transmission (307-01 Automatic Transmission - Vehicles With: 6-Speed PowerShift Transmission - DPS6/6DCT250, Diagnosis and Testing).
No	GO to AW2

AW2 RETRIEVE THE RECORDED DIAGNOSTIC TROUBLE CODES (DTCS) FROM THE BCM (BODY CONTROL MODULE) SELF-TEST

- Using a scan tool, perform the BCM self-test.

Are any Diagnostic Trouble Codes (DTCs) recorded?

Yes	REFER to: Body Control Module (BCM) (419-10 Multifunction Electronic Modules, Diagnosis and Testing).
No	GO to AW3

AW3 RETRIEVE THE RECORD DIAGNOSTIC TROUBLE CODES (DTCS) FROM THE IPC (INSTRUMENT PANEL

CLUSTER) SELF-TEST

- Using a scan tool, perform the IPC self-test.

Is DTC U0140:00 recorded?

Yes	GO to Pinpoint Test AF
No	GO to AW4

AW4 CHECK THE PARK DETECT INPUT TO THE IPC (INSTRUMENT PANEL CLUSTER)

- Ignition OFF.
- Disconnect: Selector Lever.
- Connect a fused jumper wire:

Lead 1	Measurement / Action	Lead 2
C3245-1	—∿—	—

- Ignition ON.
- Monitor the PRNDL indicator with the jumper wire installed and with the jumper wire removed.

Does the PRNDL display P with the jumper wire removed and blank with the jumper wire connected?

Yes	REMOVE the jumper wire. INSTALL a new selector lever. REFER to: Selector Lever Assembly (307-05 Automatic Transmission External Controls, Removal and Installation).
No	REMOVE the jumper wire. GO to AW5

AW5 CHECK THE SELECTOR LEVER INPUT CIRCUIT FOR A SHORT TO GROUND

- Ignition OFF.
- Disconnect: IPC .
- Measure:

Positive Lead	Measurement / Action	Negative Lead
C220-9	Ω	—

Is the resistance greater than 10,000 ohms?

Yes	GO to AW6
No	REPAIR the circuit.

AW6 CHECK THE SELECTOR LEVER INPUT CIRCUIT FOR AN OPEN

- Measure:

Positive Lead	Measurement / Action	Negative Lead
C220-9	Ω	C3245-1

Is the resistance less than 3 ohms?

Yes	GO to AW7
No	REPAIR the circuit.

AW7 CHECK FOR CORRECT IPC (INSTRUMENT PANEL CLUSTER) OPERATION

- Ignition OFF.
- Disconnect and inspect the IPC connector.
- Repair:
  - corrosion (install new connector or terminals - clean module pins)
  - damaged or bent pins - install new terminals/pins
  - pushed-out pins - install new pins as necessary
- Reconnect the IPC connector. Make sure it seats and latches correctly.
- Operate the system and determine if the concern is still present.

Is the concern still present?

Yes	CHECK On-Line Automotive Service Information System (OASIS) for any applicable Technical Service Bulletins (TSBs). If a TSB exists for this concern, DISCONTINUE this test and FOLLOW TSB instructions. If no Technical Service Bulletins (TSBs) address this concern, INSTALL a new IPC. REFER to: Instrument Panel Cluster (IPC) (413-01 Instrumentation, Message Center and Warning Chimes, Removal and Installation).
No	The system is operating correctly at this time. The concern may have been caused by module connections. ADDRESS the root cause of any connector or pin issues.

The Compass Display Is Inoperative

Refer to Wiring Diagrams Cell 60 for schematic and connector information.

Diagnostic Overview

Diagnostics in this manual assume a certain skill level and knowledge of Ford-specific diagnostic practices.
REFER to: Diagnostic Methods (100-00 General Information, Description and Operation).

Normal Operation and Fault Conditions

See Compass Display.
REFER to: Message Center - System Operation and Component Description (413-01 Instrumentation, Message Center and Warning Chimes, Description and Operation).

If the compass display data messages are missing or invalid for 5 seconds or less, the compass displays the last vehicle direction based upon the last known good compass display message received.

If the compass display data messages are invalid or missing for more than 5 seconds, the IPC sets DTC U0140:00 and defaults the display to all dashes (---).

Visual Inspection and Diagnostic Pre-checks

Verify the compass display is enabled through the message center. Refer to the Owner's Literature.

DTC Fault Trigger Conditions

DTC	Description	Fault Trigger Conditions
U0161:00	Lost Communication With Compass Module: No Sub Type Information	Sets if the BCM does not receive the compass data from the compass module for 400 milliseconds.

Possible Sources

- Fuse
- Wiring, terminals or connectors
- Compass module
- BCM

PINPOINT TEST AX : THE COMPASS DISPLAY IS INOPERATIVE

AX1 CHECK FOR COMPASS ZONE AND CALIBRATION SETTINGS THROUGH THE MESSAGE CENTER

- Ignition ON.
- Enter the vehicle settings in the message center and verify whether the compass zone and calibration setting menu is present.

Is the compass zone and calibration setting menu present?

Yes	GO to AX4
No	GO to AX2

AX2 RETRIEVE THE RECORD DIAGNOSTIC TROUBLE CODES (DTCS) FROM THE GPSM (GLOBAL POSITIONING SYSTEM MODULE) SELF-TEST

- Using a scan tool, perform the GPSM self-test.

Are any Diagnostic Trouble Codes (DTCs) recorded?

Yes	For base audio, REFER to: Information and Entertainment System (415-00A Information and Entertainment System - General Information - Vehicles With: AM/FM/CD, Diagnosis and Testing). For premium audio, REFER to: Information and Entertainment System (415-00B Information and Entertainment System - General Information - Vehicles With: AM/FM/CD/SYNC, Diagnosis and Testing). For Sony sound, REFER to: Information and Entertainment System (415-00C Information and Entertainment System - General Information - Vehicles With: SYNC/Sony AM/FM/CD, Diagnosis and Testing).
No	GO to AX3

AX3 RETRIEVE THE RECORD DIAGNOSTIC TROUBLE CODES (DTCS) FROM THE APIM (SYNC MODULE) SELF-TEST

- Using a scan tool, perform the IPC self-test.

Are any Diagnostic Trouble Codes (DTCs) recorded?

Yes	For base audio, REFER to: Information and Entertainment System (415-00A Information and Entertainment System - General Information - Vehicles With: AM/FM/CD, Diagnosis and Testing). For premium audio, REFER to: Information and Entertainment System (415-00B Information and Entertainment System - General Information - Vehicles With: AM/FM/CD/SYNC, Diagnosis and Testing). For Sony sound, REFER to: Information and Entertainment System (415-00C Information and Entertainment System - General Information - Vehicles With: SYNC/Sony AM/FM/CD, Diagnosis and Testing).
No	GO to AX4

AX4 RETRIEVE THE RECORD DIAGNOSTIC TROUBLE CODES (DTCS) FROM THE IPC (INSTRUMENT PANEL CLUSTER) SELF-TEST

- Using a scan tool, perform the IPC self-test.

Are any Diagnostic Trouble Codes (DTCs) recorded?

Yes	For DTC U0140:00, GO to Pinpoint Test AF For all other Diagnostic Trouble Codes (DTCs), REFER to DTC Chart: IPC in this section.
No	For vehicles without the compass zone and calibration setting menu in the message center, INSTALL a new GPSM . REFER to: Global Positioning System Module (GPSM) (415-00B Information and Entertainment System - General Information - Vehicles With: AM/FM/CD/SYNC, Removal and Installation). REFER to: Global Positioning System Module (GPSM) (415-00C Information and Entertainment System - General Information - Vehicles With: SYNC/Sony AM/FM/CD, Removal and Installation). For vehicles equipped with the compass zone and calibration setting menu in the message center, GO to AX5

AX5 RETRIEVE THE RECORDED DIAGNOSTIC TROUBLE CODES (DTCS) FROM THE BCM (BODY CONTROL MODULE) SELF-TEST

- Using a scan tool, perform the BCM self-test.

Are any Diagnostic Trouble Codes (DTCs) recorded?

Yes	REFER to: Body Control Module (BCM) (419-10 Multifunction Electronic Modules, Diagnosis and Testing).
No	INSTALL a new compass module. REFER to: Compass Module (413-01 Instrumentation, Message Center and Warning Chimes, Removal and Installation). SET the compass zone and CALIBRATE the compass. REFER to the Owner's Literature TEST the system for normal operation. If the compass is still inoperative, GO to AX11

AX6 CHECK THE COMPASS MODULE VOLTAGE SUPPLY

- Ignition OFF.
- Disconnect: Compass Module.
- Ignition ON.
- Measure:

Positive Lead	Measurement / Action	Negative Lead
C909-1		—

Is the voltage greater than 11 volts?

Yes	GO to AX7
No	VERIFY the BCM fuse 67 (7.5A). If OK, REPAIR the circuit. If not OK, REFER to the Wiring Diagrams manual to identify the possible causes of the circuit short.

AX7 CHECK THE COMPASS MODULE GROUND CIRCUIT FOR AN OPEN

- Measure:

Positive Lead	Measurement / Action	Negative Lead
C909-1		C909-2

Is the voltage greater than 11 volts?

Yes	GO to AX8
No	REPAIR the circuit.

AX8 CHECK THE COMPASS COMMUNICATION BUS FOR A SHORT TO VOLTAGE

- Ignition OFF.
- Disconnect: BCM C2280H.
- Ignition ON.
- Measure:

Positive Lead	Measurement / Action	Negative Lead
C909-3		—

Is any voltage present?

Yes	REPAIR the circuit.

No	GO to AX9

AX9 CHECK THE COMPASS COMMUNICATION BUS FOR A SHORT TO GROUND

- Ignition OFF.
- Measure:

Positive Lead	Measurement / Action	Negative Lead
C909-3	Ω	—

Is the resistance greater than 10,000 ohms?

Yes	GO to AX10
No	REPAIR the circuit.

AX10 CHECK THE COMPASS COMMUNICATION BUS FOR AN OPEN

- Measure:

Positive Lead	Measurement / Action	Negative Lead
C909-3	Ω	C2280H-12

Is the resistance less than 3 ohms?

Yes	INSTALL a new compass module. REFER to: Compass Module (413-01 Instrumentation, Message Center and Warning Chimes, Removal and Installation). SET the compass zone and CALIBRATE the compass. TEST the system for normal operation. If the compass is still inoperative, GO to AX11
No	REPAIR the circuit.

AX11 CHECK FOR CORRECT BCM (BODY CONTROL MODULE) OPERATION

- Ignition ON.
- Disconnect and inspect all BCM connectors.
- Repair:
  - corrosion (install new connector or terminals - clean module pins)
  - damaged or bent pins - install new terminals/pins
  - pushed-out pins - install new pins as necessary
- Reconnect the BCM connectors. Make sure they seat and latch correctly.
- Operate the system and determine if the concern is still present.

Is the concern still present?

Yes	CHECK On-Line Automotive Service Information System (OASIS) for any applicable Technical Service Bulletins (TSBs). If a TSB exists for this concern, DISCONTINUE this test and FOLLOW TSB

	instructions. If no Technical Service Bulletins (TSBs) address this concern, INSTALL a new BCM . REFER to: Body Control Module (BCM) (419-10 Multifunction Electronic Modules, Diagnosis and Testing).
No	The system is operating correctly at this time. The concern may have been caused by module connections. ADDRESS the root cause of any connector or pin issues.

The Compass Display Is Inaccurate

Diagnostic Overview

Diagnostics in this manual assume a certain skill level and knowledge of Ford-specific diagnostic practices.
REFER to: Diagnostic Methods (100-00 General Information, Description and Operation).

Normal Operation and Fault Conditions

See Compass Display.
REFER to: Message Center - System Operation and Component Description (413-01 Instrumentation, Message Center and Warning Chimes, Description and Operation).

Possible Sources

- Zone setting
- Compass calibration
- Compass module

PINPOINT TEST AY : THE COMPASS DISPLAY IS INACCURATE

AY1 CHECK THE COMPASS ACCURACY

- Position the vehicle and observe the compass display:

Direction	Compass Display
North	N
Northeast	NE
East	E
Southeast	SE
South	S
Southwest	SW
West	W
Northwest	NW

Does the compass display as indicated?

Yes	The compass is operating correctly at this time. The concern could have been caused by external magnetic interference. INFORM the customer of the compass operation. REFER to: Message Center - System Operation and Component Description (413-01 Instrumentation, Message Center and Warning Chimes, Description and Operation).
No	GO to AY2

AY2 CHECK FOR STUCK COMPASS DISPLAY
• Verify whether the compass display changes direction with the vehicle. **Does the compass display change direction?**

Yes	GO to Pinpoint Test AX
No	GO to AY3

AY3 CHECK THE COMPASS ZONE SETTING AND CALIBRATION
• Calibrate the compass and set the zone. Refer to the Owner's Literature. **Does the compass calibrate correctly?**

Yes	The compass is OK. The concern may have been cause by an incorrect zone setting or calibration concern.
No	INSTALL a new compass module. REFER to: Compass Module (413-01 Instrumentation, Message Center and Warning Chimes, Removal and Installation). SET the zone and CALIBRATE the compass. REFER to the Owner's Literature.

The Grade Assist Indicator Is Never Or Always On

Diagnostic Overview

Diagnostics in this manual assume a certain skill level and knowledge of Ford-specific diagnostic practices.
REFER to: Diagnostic Methods (100-00 General Information, Description and Operation).

Normal Operation and Fault Conditions

See Grade Assist Indicator.
REFER to: Instrument Panel Cluster (IPC) - System Operation and Component Description (413-01 Instrumentation, Message Center and Warning Chimes, Description and Operation).

Possible Sources

- Grade assist function concern
- TCM
- IPC

PINPOINT TEST AZ : THE GRADE ASSIST INDICATOR IS NEVER OR ALWAYS ON

AZ1 VERIFY THE OPERATION OF THE GRADE ASSIST FUNCTION
• Verify the grade assist function operates when engaged and turns off when disengaged. **Does the grade assist function operate correctly?**

Yes	GO to AZ2
No	REFER to: Automatic Transmission (307-01 Automatic Transmission - Vehicles With: 6-Speed PowerShift Transmission - DPS6/6DCT250, Diagnosis and Testing).

AZ2 RETRIEVE THE RECORDED DIAGNOSTIC TROUBLE CODES (DTCS) FROM THE BCM (BODY CONTROL MODULE) SELF-TEST

- Using a scan tool, perform the BCM self-test.

Are any Diagnostic Trouble Codes (DTCs) recorded?

Yes	REFER to: Body Control Module (BCM) (419-10 Multifunction Electronic Modules, Diagnosis and Testing).
No	GO to AZ3

AZ3 RETRIEVE THE RECORDED DIAGNOSTIC TROUBLE CODES (DTCS) FROM THE IPC (INSTRUMENT PANEL CLUSTER) SELF-TEST

- Using a scan tool, perform the IPC self-test.

Are any Diagnostic Trouble Codes (DTCs) recorded?

Yes	For DTC U0101:00, GO to Pinpoint Test AD For DTC U0140:00, GO to Pinpoint Test AF For all other Diagnostic Trouble Codes (DTCs), REFER to DTC Chart: IPC in this section.
No	GO to AZ4

AZ4 RETRIEVE THE RECORDED DIAGNOSTIC TROUBLE CODES (DTCS) FROM THE TCM (TRANSMISSION CONTROL MODULE) MODULE SELF-TEST

- Using a scan tool, perform the TCM module self-test.

Are any Diagnostic Trouble Codes (DTCs) recorded?

Yes	REFER to: Automatic Transmission (307-01 Automatic Transmission - Vehicles With: 6-Speed PowerShift Transmission - DPS6/6DCT250, Diagnosis and Testing).
No	GO to AZ5

AZ5 CHECK THE GRADE ASSIST INDICATOR USING THE DEALER TEST MODE

- Ignition OFF.
- Enter the Dealer Test Mode. Enter the Dealer Test Mode.
  REFER to: Instrument Panel Cluster (IPC) - System Operation and Component Description (413-01 Instrumentation, Message Center and Warning Chimes, Description and Operation).
- Scroll to LED test.
- Monitor the grade assist indicator.

Does the grade assist indicator illuminate?

Yes	INSTALL a new TCM . REFER to: Transmission Control Module (TCM) (307-01 Automatic Transmission - Vehicles With: 6-Speed PowerShift Transmission - DPS6/6DCT250, Removal and Installation). TEST the system for normal operation. If the grade assist indicator remains always on, INSTALL a new

	IPC . REFER to: Instrument Panel Cluster (IPC) (413-01 Instrumentation, Message Center and Warning Chimes, Removal and Installation).
No	INSTALL a new IPC . REFER to: Instrument Panel Cluster (IPC) (413-01 Instrumentation, Message Center and Warning Chimes, Removal and Installation).

The Door Ajar Warning Chime Is Inoperative Or Always Sounds

Diagnostic Overview

Diagnostics in this manual assume a certain skill level and knowledge of Ford-specific diagnostic practices.
REFER to: Diagnostic Methods (100-00 General Information, Description and Operation).

Normal Operation and Fault Conditions

See Door Ajar Warning Chime.
REFER to: Warning Chimes - System Operation and Component Description (413-01 Instrumentation, Message Center and Warning Chimes, Description and Operation).

Possible Sources

- Wiring, terminals or connectors
- BCM
- IPC

PINPOINT TEST BA : THE DOOR AJAR WARNING CHIME IS INOPERATIVE OR ALWAYS SOUNDS

BA1 CHECK THE SAFETY BELT WARNING CHIME OPERATION

- Ignition OFF.
- Ignition ON.
- Monitor the safety belt warning chime when the ignition switch is transitioned from OFF to RUN for 6 seconds.

Does the safety belt warning chime operate for approximately 6 seconds?

Yes	GO to BA2
No	GO to Pinpoint Test BJ

BA2 CHECK THE INTERIOR LIGHTING OPERATION

- Open and close each door while monitoring the interior lamps.

Do the interior lamps operate correctly with each door?

Yes	GO to BA3
No	REFER to: Interior Lighting (417-02 Interior Lighting, Diagnosis and Testing).

BA3 RETRIEVE THE RECORDED DIAGNOSTIC TROUBLE CODES (DTCS) FROM THE IPC (INSTRUMENT PANEL CLUSTER) SELF-TEST

- Check for recorded IPC Diagnostic Trouble Codes (DTCs) from the continuous self-test.

Are any Diagnostic Trouble Codes (DTCs) recorded?

Yes	For DTC U0140:00, GO to Pinpoint Test AF For all other Diagnostic Trouble Codes (DTCs), REFER to DTC Chart: IPC in this section.
No	GO to BA4

BA4 RETRIEVE THE RECORDED DIAGNOSTIC TROUBLE CODES (DTCS) FROM THE BCM (BODY CONTROL MODULE) SELF-TEST

- Check for recorded BCM Diagnostic Trouble Codes (DTCs) from the self-test.

Are any Diagnostic Trouble Codes (DTCs) recorded?

Yes	REFER to: Body Control Module (BCM) (419-10 Multifunction Electronic Modules, Diagnosis and Testing).
No	INSTALL a new BCM . REFER to: Body Control Module (BCM) (419-10 Multifunction Electronic Modules, Diagnosis and Testing).

The Hill Start Assist Chime Is Inoperative

Diagnostic Overview

Diagnostics in this manual assume a certain skill level and knowledge of Ford-specific diagnostic practices.
REFER to: Diagnostic Methods (100-00 General Information, Description and Operation).

Normal Operation and Fault Conditions

See Hill Start Assist Chime.
REFER to: Warning Chimes - System Operation and Component Description (413-01 Instrumentation, Message Center and Warning Chimes, Description and Operation).

Possible Sources

- Hill start assist system concern
- ABS module
- BCM

PINPOINT TEST BB : THE HILL START ASSIST CHIME IS INOPERATIVE

BB1 CHECK THE SAFETY BELT WARNING CHIME OPERATION

- Ignition OFF.
- Ignition ON.
- Monitor the safety belt warning chime when the ignition switch is transitioned from OFF to RUN for 6 seconds.

Does the safety belt warning chime operate for approximately 6 seconds?

Yes	GO to BB2
No	GO to Pinpoint Test BJ

BB2 CHECK THE OPERATION HILL START ASSIST FUNCTION

- Verify that the hill start assist function operates correctly.

Does the hill start assist function operate correctly?

Yes	GO to BB3
No	REFER to: Anti-Lock Brake System (ABS) and Stability Control (206-09 Anti-Lock Brake System (ABS) and Stability Control, Diagnosis and Testing).

BB3 RETRIEVE THE RECORDED DIAGNOSTIC TROUBLE CODES (DTCS) FROM THE IPC (INSTRUMENT PANEL CLUSTER) SELF-TEST

- Check for recorded IPC Diagnostic Trouble Codes (DTCs) from the continuous self-test.

Are any Diagnostic Trouble Codes (DTCs) recorded?

Yes	For DTC U0121:00, GO to Pinpoint Test AE For DTC U0140:00, GO to Pinpoint Test AF For all other DTC , REFER to DTC Chart: IPC in this section.
No	GO to BB4

BB4 RETRIEVE THE RECORDED DIAGNOSTIC TROUBLE CODES (DTCS) FROM THE ABS (ANTI-LOCK BRAKE SYSTEM) MODULE SELF-TEST

- Using a scan tool, perform the ABS module self-test.

Are any Diagnostic Trouble Codes (DTCs) recorded?

Yes	REFER to: Anti-Lock Brake System (ABS) and Stability Control (206-09 Anti-Lock Brake System (ABS) and Stability Control, Diagnosis and Testing).
No	GO to BB5

BB5 RETRIEVE THE RECORDED DIAGNOSTIC TROUBLE CODES (DTCS) FROM THE BCM (BODY CONTROL MODULE) SELF-TEST

- Check for recorded BCM Diagnostic Trouble Codes (DTCs) from the self-test.

Are any Diagnostic Trouble Codes (DTCs) recorded?

Yes	REFER to: Body Control Module (BCM) (419-10 Multifunction Electronic Modules, Diagnosis and Testing).
No	INSTALL a new Hydraulic Control Unit (HCU). REFER to: Hydraulic Control Unit (HCU) (206-09 Anti-Lock Brake System (ABS) and Stability Control, Removal and Installation).

The Key Left In Vehicle Or Passive Key Out Of Vehicle Chime Is Inoperative - with Intelligent Access (IA)

Diagnostic Overview

Diagnostics in this manual assume a certain skill level and knowledge of Ford-specific diagnostic practices.
REFER to: Diagnostic Methods (100-00 General Information, Description and Operation).

Normal Operation and Fault Conditions

See Passive Key Out Of Vehicle Chime - with Intelligent Access (IA).
REFER to: Warning Chimes - System Operation and Component Description (413-01 Instrumentation, Message Center and Warning Chimes, Description and Operation).

Possible Sources

- Intelligent Access (IA) concern
- BCM
- IPC

PINPOINT TEST BC : THE KEY LEFT IN VEHICLE OR PASSIVE KEY OUT OF VEHICLE CHIME IS INOPERATIVE - WITH INTELLIGENT ACCESS (IA)

BC1 CHECK THE SAFETY BELT WARNING CHIME OPERATION

- Ignition OFF.
- Ignition ON.
- Monitor the safety belt warning chime when the ignition switch is transitioned from OFF to RUN for 6 seconds.

Does the safety belt warning chime operate for approximately 6 seconds?

Yes	GO to BC2
No	GO to Pinpoint Test BJ

BC2 CHECK THE SMART UNLOCK FUNCTION

- Verify that the smart unlock function operates correctly.
  REFER to: Handles, Locks, Latches and Entry Systems - System Operation and Component Description (501-14A Handles, Locks, Latches and Entry Systems - Vehicles Without: One-Touch Up Door Window, Description and Operation).
  REFER to: Handles, Locks, Latches and Entry Systems - System Operation and Component Description (501-14B Handles, Locks, Latches and Entry Systems - Vehicles With: One-Touch Up Door Window, Description and Operation).

Does the smart unlock function operate correctly?

Yes	GO to BC3
No	

BC3 RETRIEVE THE RECORDED DIAGNOSTIC TROUBLE CODES (DTCS) FROM THE IPC (INSTRUMENT PANEL CLUSTER) SELF-TEST

- Using a scan tool, perform the IPC self-test.

Is DTC U0140:00 recorded?

Yes	GO to Pinpoint Test AF
No	GO to BC4

BC4 RETRIEVE THE RECORDED DIAGNOSTIC TROUBLE CODES (DTCS) FROM THE BCM (BODY CONTROL MODULE) SELF-TEST

- Using a scan tool, perform a BCM self-test.

Are any Diagnostic Trouble Codes (DTCs) recorded?

Yes	REFER to: Body Control Module (BCM) (419-10 Multifunction Electronic Modules, Diagnosis and Testing).
No	INSTALL a new BCM . REFER to: Body Control Module (BCM) (419-10 Multifunction Electronic Modules, Diagnosis and Testing).

The Low Fuel Warning Chime Is Inoperative Or Always Sounds

Diagnostic Overview

Diagnostics in this manual assume a certain skill level and knowledge of Ford-specific diagnostic practices.
REFER to: Diagnostic Methods (100-00 General Information, Description and Operation).

Normal Operation and Fault Conditions

See Low Fuel Warning Chime.
REFER to: Warning Chimes - System Operation and Component Description (413-01 Instrumentation, Message Center and Warning Chimes, Description and Operation).

Possible Sources

- Fuel indication concern
- IPC

PINPOINT TEST BD : THE LOW FUEL WARNING CHIME IS INOPERATIVE OR ALWAYS SOUNDS

BD1 CHECK THE SAFETY BELT WARNING CHIME OPERATION

- Ignition OFF.
- Ignition ON.
- Monitor the safety belt warning chime when the ignition switch is transitioned from OFF to RUN for 6 seconds.

Does the safety belt warning chime operate for approximately 6 seconds?

Yes	GO to BD2
No	GO to Pinpoint Test BJ

BD2 CHECK THE LOW FUEL INDICATOR

- Verify that the low fuel indicator is operating correctly.

Does the low fuel indicator operate correctly?

Yes	INSTALL a new IPC .

	REFER to: Instrument Panel Cluster (IPC) (413-01 Instrumentation, Message Center and Warning Chimes, Removal and Installation).
No	GO to Pinpoint Test AK

The Perimeter Alarm Chime Is Inoperative

Diagnostic Overview

Diagnostics in this manual assume a certain skill level and knowledge of Ford-specific diagnostic practices.
REFER to: Diagnostic Methods (100-00 General Information, Description and Operation).

Normal Operation and Fault Conditions

See Perimeter Alarm Warning Chime.
REFER to: Warning Chimes - System Operation and Component Description (413-01 Instrumentation, Message Center and Warning Chimes, Description and Operation).

Possible Sources

- Perimeter alarm concern
- BCM
- IPC

PINPOINT TEST BE : THE PERIMETER ALARM CHIME IS INOPERATIVE

BE1 CHECK THE SAFETY BELT WARNING CHIME OPERATION

- Ignition OFF.
- Ignition ON.
- Monitor the safety belt warning chime when the ignition switch is transitioned from OFF to RUN for 6 seconds.

Does the safety belt warning chime operate for approximately 6 seconds?

Yes	GO to BE2
No	GO to Pinpoint Test BJ

BE2 CHECK THE OPERATION OF THE PERIMETER ALARM

- Arm the perimeter alarm using the remote key locking function (key FOB).
- Wait approximately 15 seconds for the system to arm.
- Open the driver door using the interior door handle.

Does the perimeter alarm sound after 12 seconds?

Yes	GO to BE3
No	REFER to: Perimeter Anti-Theft Alarm (419-01A Perimeter Anti-Theft Alarm, Diagnosis and Testing).

BE3 RETRIEVE THE RECORDED DIAGNOSTIC TROUBLE CODES (DTCS) FROM THE IPC (INSTRUMENT PANEL CLUSTER) SELF-TEST

- Using a scan tool, perform the IPC self-test.

Is DTC U0140:00 recorded?

Yes	GO to Pinpoint Test AF
No	GO to BE4

BE4 RETRIEVE THE RECORDED DIAGNOSTIC TROUBLE CODES (DTCS) FROM THE BCM (BODY CONTROL MODULE) SELF-TEST

- Using a scan tool, perform the BCM self-test.

Are any Diagnostic Trouble Codes (DTCs) recorded?

Yes	REFER to: Body Control Module (BCM) (419-10 Multifunction Electronic Modules, Diagnosis and Testing).
No	INSTALL a new BCM . REFER to: Body Control Module (BCM) (419-10 Multifunction Electronic Modules, Diagnosis and Testing).

The Remote Key Programming Chime Is Inoperative

Diagnostic Overview

Diagnostics in this manual assume a certain skill level and knowledge of Ford-specific diagnostic practices.
REFER to: Diagnostic Methods (100-00 General Information, Description and Operation).

Normal Operation and Fault Conditions

See Remote Key Programming Confirmation Chime.
REFER to: Warning Chimes - System Operation and Component Description (413-01 Instrumentation, Message Center and Warning Chimes, Description and Operation).

Possible Sources

- Key programming concern
- BCM
- IPC

PINPOINT TEST BF : THE REMOTE KEY PROGRAMMING CHIME IS INOPERATIVE

BF1 CHECK THE SAFETY BELT WARNING CHIME OPERATION

- Ignition OFF.
- Ignition ON.
- Monitor the safety belt warning chime when the ignition switch is transitioned from OFF to RUN for 6 seconds.

Does the safety belt warning chime operate for approximately 6 seconds?

Yes	GO to BF2
No	GO to Pinpoint Test BJ

BF2 VERIFY REMOTE KEY PROGRAMMING

- Verify that the key programming can be successfully carried out.

Can the keys be programmed successfully?

Yes	GO to BF3
No	If not equipped with Intelligent Access (IA), REFER to: Erase All Keys and Key Programming (419-01B Passive Anti-Theft System (PATS), General Procedures). REFER to: Key Programming Using Diagnostic Equipment (419-01B Passive Anti-Theft System (PATS), General Procedures). REFER to: Key Programming Using Two Programmed Keys (419-01B Passive Anti-Theft System (PATS), General Procedures). If equipped with Intelligent Access (IA), REFER to: Erase All Keys and Key Programming (419-01C Passive Anti-Theft System (PATS) - Vehicles With: Push Button Start, General Procedures). REFER to: Key Programming Using Diagnostic Equipment (419-01C Passive Anti-Theft System (PATS) - Vehicles With: Push Button Start, General Procedures).

BF3 RETRIEVE THE RECORDED DIAGNOSTIC TROUBLE CODES (DTCS) FROM THE IPC (INSTRUMENT PANEL CLUSTER) SELF-TEST

- Using a scan tool, perform the IPC self-test.

Is DTC U0140:00 recorded?

Yes	GO to Pinpoint Test AF
No	GO to BF4

BF4 RETRIEVE THE RECORDED DIAGNOSTIC TROUBLE CODES (DTCS) FROM THE BCM (BODY CONTROL MODULE) SELF-TEST

- Using a scan tool, perform a BCM self-test.

Are any Diagnostic Trouble Codes (DTCs) recorded?

Yes	REFER to: Body Control Module (BCM) (419-10 Multifunction Electronic Modules, Diagnosis and Testing).
No	INSTALL a new BCM. REFER to: Body Control Module (BCM) (419-10 Multifunction Electronic Modules, Diagnosis and Testing).

An Electronic Throttle Control (ETC) Or Engine Malfunction Display Is Always On

Diagnostic Overview

Diagnostics in this manual assume a certain skill level and knowledge of Ford-specific diagnostic practices.
REFER to: Diagnostic Methods (100-00 General Information, Description and Operation).

Normal Operation and Fault Conditions

See Electronic Throttle Control (ETC) or Engine Malfunction Displays.
REFER to: Message Center - System Operation and Component Description (413-01 Instrumentation, Message Center and Warning Chimes, Description and Operation).

If the engine MIL request message is missing for less than 2 seconds, the IPC defaults the engine malfunction message center display to its last state (on or off) based upon the last known good message received.

If the BCM does not receive the engine MIL request message for 2 seconds or longer, the BCM and the IPC set DTC U0100:00.

If the engine MIL request message is missing, the IPC defaults the engine malfunction display on.

PINPOINT TEST BG : AN ELECTRONIC THROTTLE CONTROL (ETC) OR ENGINE MALFUNCTION DISPLAY IS ALWAYS ON

BG1 RETRIEVE THE RECORDED DIAGNOSTIC TROUBLE CODES (DTCS) FROM THE PCM (POWERTRAIN CONTROL MODULE) KOEO (KEY ON, ENGINE OFF) SELF-TEST

- Using a scan tool, perform the PCM KOEO self-test.

Are any PCM Diagnostic Trouble Codes (DTCs) recorded?

Yes	Refer to Powertrain Control/Emissions Diagnosis (PC/ED) manual.
No	GO to BG2

BG2 RETRIEVE THE RECORDED DIAGNOSTIC TROUBLE CODES (DTCS) FROM THE BCM (BODY CONTROL MODULE) SELF-TEST

- Using a scan tool, perform the BCM self-test.

Are any Diagnostic Trouble Codes (DTCs) recorded?

Yes	REFER to: Body Control Module (BCM) (419-10 Multifunction Electronic Modules, Diagnosis and Testing).
No	GO to BG3

BG3 RETRIEVE THE RECORDED DIAGNOSTIC TROUBLE CODES (DTCS) FROM THE IPC (INSTRUMENT PANEL CLUSTER) SELF-TEST

- Using a scan tool, perform the IPC self-test.

Are any DTC recorded?

Yes	For DTC U0100:00, GO to Pinpoint Test AC For DTC U0140:00, GO to Pinpoint Test AF For all other Diagnostic Trouble Codes (DTCs), REFER to DTC Chart: IPC in this section.
No	GO to BG4

BG4 CHECK THE MESSAGE CENTER OPERATION

- Close all doors.
- Ignition ON.
- Open the driver front door and observe the message center operation.

Does the message center display the driver door ajar message?

Yes	If the engine malfunction display is always on, INSTALL a new PCM . REFER to: Powertrain Control Module (PCM) (303-14A Electronic Engine Controls - 2.0L Duratec-HE (125kW/170PS) - MI4, Removal and Installation). TEST the system for normal operation. If the engine malfunction display remains on, INSTALL a new IPC . REFER to: Instrument Panel Cluster (IPC) (413-01 Instrumentation, Message Center and Warning Chimes, Removal and Installation).
No	INSTALL a new IPC . REFER to: Instrument Panel Cluster (IPC) (413-01 Instrumentation, Message Center and Warning Chimes, Removal and Installation). If the engine malfunction display is never on, the system is operating correctly at this time.

The Shift To Park Display Is Never Or Always On

Diagnostic Overview

Diagnostics in this manual assume a certain skill level and knowledge of Ford-specific diagnostic practices.
REFER to: Diagnostic Methods (100-00 General Information, Description and Operation).

Normal Operation and Fault Conditions

See Shift To Park Message Display.
REFER to: Message Center - System Operation and Component Description (413-01 Instrumentation, Message Center and Warning Chimes, Description and Operation).

Possible Sources

- Wiring, terminals or connectors
- TCM concern
- BCM

PINPOINT TEST BH : THE SHIFT TO PARK DISPLAY IS NEVER OR ALWAYS ON

BH1 CHECK THE MESSAGE CENTER OPERATION

- Close all doors.
- Ignition ON.
- Open the driver front door and observe the message center operation.

Does the message center display the driver door ajar message?

Yes	GO to BH2
No	GO to Pinpoint Test BL

BH2 CHECK THE PRNDL OPERATION

- Move the floor shifter from PARK (P) to REVERSE while observing the PRNDL operation.

Does the PRNDL display PARK (P) when the floor shifter is in park and turn off when out if park?

Yes	GO to BH3

No	GO to Pinpoint Test AW

BH3 RETRIEVE THE RECORDED DIAGNOSTIC TROUBLE CODES (DTCS) FROM THE IPC (INSTRUMENT PANEL CLUSTER) SELF-TEST

- Using a scan tool, perform the IPC self-test.

Are any DTC recorded?

Yes	For DTC U0101:00, GO to Pinpoint Test AD For DTC U0140:00, GO to Pinpoint Test AF For all other Diagnostic Trouble Codes (DTCs), REFER to DTC Chart: IPC in this section.
No	GO to BH4

BH4 RETRIEVE THE RECORDED DIAGNOSTIC TROUBLE CODES (DTCS) FROM THE TCM (TRANSMISSION CONTROL MODULE) SELF-TEST

- Using a scan tool, perform the TCM self-test.

Are any TCM Diagnostic Trouble Codes (DTCs) recorded?

Yes	REFER to: Automatic Transmission (307-01 Automatic Transmission - Vehicles With: 6-Speed PowerShift Transmission - DPS6/6DCT250, Diagnosis and Testing).
No	INSTALL a new TCM . REFER to: Transmission Control Module (TCM) (307-01 Automatic Transmission - Vehicles With: 6-Speed PowerShift Transmission - DPS6/6DCT250, Removal and Installation). TEST the system for normal operation. If the shift to park display remains on, INSTALL a new IPC . REFER to: Instrument Panel Cluster (IPC) (413-01 Instrumentation, Message Center and Warning Chimes, Removal and Installation).

A Low Washer Fluid Level Display Is Never Or Always On

Refer to Wiring Diagrams Cell 60 for schematic and connector information.

Diagnostic Overview

Diagnostics in this manual assume a certain skill level and knowledge of Ford-specific diagnostic practices.
REFER to: Diagnostic Methods (100-00 General Information, Description and Operation).

Normal Operation and Fault Conditions

See Low Washer Fluid Level Displays.
REFER to: Message Center - System Operation and Component Description (413-01 Instrumentation, Message Center and Warning Chimes, Description and Operation).

If the washer fuel level low message is missing for less than 2 seconds, the IPC defaults the washer fluid level low message center display to its last state (on or off) based upon the last known good message received.

If the washer fuel level low message is missing for 2 seconds or longer, the IPC sets DTC U0140:00 in continuous memory and defaults the washer fuel level low message center display on.

IPC DTC Fault Trigger Conditions

DTC	Description	Fault Trigger Conditions
B1177:13	Screenwash Level Switch: Circuit Open	An on-demand DTC that sets in the BCM if the washer fluid level input circuit is open.

Possible Sources

- Wiring, terminals or connectors
- Washer fluid level sensor
- BCM

Visual Inspection and Diagnostic Pre-checks

Verify the washer fluid level is low for a never on display or full with an always on display.

PINPOINT TEST BI : A LOW WASHER FLUID LEVEL DISPLAY IS NEVER OR ALWAYS ON

BI1 CHECK THE MESSAGE CENTER OPERATION

- Close all doors.
- Ignition ON.
- Open the driver front door and observe the message center operation.

Does the message center display the driver door ajar message?

Yes	GO to BI2
No	GO to Pinpoint Test A

BI2 RETRIEVE THE RECORDED DTCS FROM THE IPC (INSTRUMENT PANEL CLUSTER) SELF-TEST

- Using a scan tool, perform the IPC self-test.

Are any DTC recorded?

Yes	For DTC U0140:00, GO to Pinpoint Test AF For all other DTCs, REFER to DTC Chart: IPC in this section.
No	GO to BI3

BI3 RETRIEVE THE RECORDED DTCS FROM THE BCM (BODY CONTROL MODULE) SELF-TEST

- Using a scan tool, perform the BCM self-test.

Are any DTCs recorded?

Yes	For DTC B1177:13, GO to BI4 For all other DTCs, REFER to: Body Control Module (BCM) (419-10 Multifunction Electronic Modules, Diagnosis and Testing).
No	GO to BI7

BI4 CHECK THE LOW WASHER FLUID INDICATOR OPERATION

- Ignition OFF.
- Disconnect: Washer Fluid Level Sensor.
- Connect a fused jumper wire:

Lead 1	Measurement / Action	Lead 2
C138-2		—

- Ignition ON.
- Wait one minute.
- Observe the message center low washer fluid display.

Does the low washer fluid message turn off?

Yes	REMOVE the jumper wire. GO to BI5
No	REMOVE the jumper wire. GO to BI6

BI5 CHECK THE WASHER FLUID LEVEL SENSOR GROUND CIRCUIT FOR AN OPEN

- Ignition OFF.
- Measure:

Positive Lead	Measurement / Action	Negative Lead
C138-1	Ω	—

Is the resistance less than 3 ohms?

Yes	INSTALL a new washer fluid level sensor or reservoir as necessary.
No	REPAIR the circuit.

BI6 CHECK THE WASHER FLUID LEVEL INPUT CIRCUIT FOR AN OPEN

- Ignition OFF.
- Disconnect: Washer Fluid Level Sensor.
- Disconnect: BCM C2280A.
- Measure:

Positive Lead	Measurement / Action	Negative Lead
C138-2	Ω	C2280A-13

Is the resistance less than 3 ohms?

Yes	GO to BI9
No	REPAIR the circuit.

BI7 CHECK THE WASHER FLUID SWITCH

- Igntion OFF.
- Ignition ON.
- Wait one minute.
- Observe the message center low washer fluid display.

Does the message center turn off the low washer fluid message?

Yes	INSTALL a new washer fluid level sensor or reservoir as necessary. REFER to: Windshield Washer Reservoir (501-16 Wipers and Washers, Removal and Installation).
No	GO to BI8

BI8 CHECK THE WASHER FLUID INPUT CIRCUIT FOR A SHORT TO GROUND

- Ignition OFF.
- Disconnect: BCM C2280A.
- Measure:

Positive Lead	Measurement / Action	Negative Lead
C138-2	Ω	—

Is the resistance greater than 10,000 ohms?

Yes	GO to BI9
No	REPAIR the circuit.

BI9 CHECK FOR CORRECT BCM (BODY CONTROL MODULE) OPERATION

- Ignition OFF.
- Disconnect and inspect all BCM connectors.
- Repair:
  - corrosion (install new connector or terminals - clean module pins)
  - damaged or bent pins - install new terminals/pins
  - pushed-out pins - install new pins as necessary
- Reconnect the BCM connectors. Make sure they seat and latch correctly.
- Operate the system and determine if the concern is still present

Is the concern still present?

Yes	CHECK On-Line Automotive Service Information System (OASIS) for any applicable Technical Service Bulletins (TSBs). If a TSB exists for this concern, DISCONTINUE this test and FOLLOW TSB instructions. If no Technical Service Bulletins (TSBs) address this concern, INSTALL a new BCM . REFER to: Body Control Module (BCM) (419-10 Multifunction Electronic Modules, Diagnosis and Testing).

No	The system is operating correctly at this time. The concern may have been caused by module connections. ADDRESS the root cause of any connector or pin issues.

The Upshift Message Center Indicator Is Never Or Always On

Diagnostic Overview

Diagnostics in this manual assume a certain skill level and knowledge of Ford-specific diagnostic practices.
REFER to: Diagnostic Methods (100-00 General Information, Description and Operation).

Normal Operation and Fault Conditions

See Upshift Message Center Indicator.
REFER to: Message Center - System Operation and Component Description (413-01 Instrumentation, Message Center and Warning Chimes, Description and Operation).

If the transmission upshift indication request message is missing for less than 1 second, the IPC defaults the upshift message center indicator to its last state (on or off) based upon the last known good message received.

If the transmission upshift indication request message is missing for 1 second or longer, the BCM and IPC set DTC U0100:00. If the transmission upshift indication request message is missing, the IPC defaults the upshift message center indicator off.

Possible Sources

- Powertrain concern
- IPC

PINPOINT TEST BJ : THE UPSHIFT MESSAGE CENTER INDICATOR IS NEVER OR ALWAYS ON

BJ1 RETRIEVE THE RECORDED DTCS FROM THE IPC (INSTRUMENT PANEL CLUSTER) SELF-TEST

- Using a scan tool, perform the IPC self-test.

Are any DTCs recorded?

Yes	For DTC U0100:00, GO to Pinpoint Test AC For DTC U0140:00, GO to Pinpoint Test AF For all other DTCs, REFER to DTC Chart: IPC in this section.
No	GO to BJ2

BJ2 RETRIEVE THE RECORDED DTCS FROM THE BCM (BODY CONTROL MODULE) SELF-TEST

- Using a scan tool, perform the BCM self-test.

Are any DTCs recorded?

Yes	REFER to: Body Control Module (BCM) (419-10 Multifunction Electronic Modules, Diagnosis and Testing).
No	GO to BJ3

BJ3 RETRIEVE AND RECORD THE DTCS FROM THE PCM (POWERTRAIN CONTROL MODULE) KOEO (KEY ON, ENGINE OFF) SELF-TEST

- Using a scan tool, perform the PCM KOEO self-test.

Are any PCM DTCs recorded?

Yes	Refer to Powertrain Control/Emissions Diagnosis (PC/ED) manual.
No	GO to BJ4

BJ4 VERIFY THE CRUISE CONTROL IS ENABLED IN THE CAR CONFIGURATION

- Using a scan tool, view the car configuration parameters through the module progamming menu.
  REFER to: Module Configuration - System Operation and Component Description (418-01 Module Configuration, Description and Operation).

Are the gearbox, gearbox type and shift indicator parameters enabled for a manual transmission?

Yes	INSTALL a new IPC . REFER to: Instrument Panel Cluster (IPC) (413-01 Instrumentation, Message Center and Warning Chimes, Removal and Installation).
No	CONFIGURE the car configuration parameters. REFER to: Module Configuration - System Operation and Component Description (418-01 Module Configuration, Description and Operation).

A Transmission Malfunction Display Is Never Or Always On

Diagnostic Overview

Diagnostics in this manual assume a certain skill level and knowledge of Ford-specific diagnostic practices.
REFER to: Diagnostic Methods (100-00 General Information, Description and Operation).

Normal Operation and Fault Conditions

See Transmission Malfunction Displays.
REFER to: Message Center - System Operation and Component Description (413-01 Instrumentation, Message Center and Warning Chimes, Description and Operation).

Possible Sources

- TCM
- BCM

PINPOINT TEST BK : A TRANSMISSION MALFUNCTION DISPLAY IS NEVER OR ALWAYS ON

BK1 CHECK THE MESSAGE CENTER OPERATION

- Close all doors.
- Ignition ON.
- Open the driver front door and observe the message center operation.

Does the message center display the driver door ajar message?

Yes	GO to BK2
No	GO to Pinpoint Test A

BK2 RETRIEVE THE RECORDED DIAGNOSTIC TROUBLE CODES (DTCS) FROM THE IPC (INSTRUMENT PANEL CLUSTER) SELF-TEST

- Using a scan tool, perform the IPC self-test.

Are any DTC recorded?

Yes	For DTC U0100:00, GO to Pinpoint Test AC For DTC U0140:00, GO to Pinpoint Test AF For all other DTCs, REFER to DTC Chart: IPC in this section.
No	GO to BK3

BK3 RETRIEVE THE RECORDED DTCS FROM THE TCM (TRANSMISSION CONTROL MODULE) SELF-TEST

- Using a scan tool, perform the TCM self-test.

Are any TCM DTCs recorded?

Yes	REFER to: Automatic Transmission (307-01 Automatic Transmission - Vehicles With: 6-Speed PowerShift Transmission - DPS6/6DCT250, Diagnosis and Testing).
No	GO to BK4

BK4 RETRIEVE THE RECORDED DTCS FROM THE BCM (BODY CONTROL MODULE) SELF-TEST

- Using a scan tool, perform the BCM self-test.

Are any DTCs recorded?

Yes	REFER to: Body Control Module (BCM) (419-10 Multifunction Electronic Modules, Diagnosis and Testing).
No	If the transmission malfunction display is never on, the system is operating correctly at this time. If the transmission malfunction display is always on, INSTALL a new TCM . REFER to: Transmission Control Module (TCM) (307-01 Automatic Transmission - Vehicles With: 6-Speed PowerShift Transmission - DPS6/6DCT250, Removal and Installation). TEST the system for normal operation. If the transmission malfunction display remains on, INSTALL a new IPC . REFER to: Instrument Panel Cluster (IPC) (413-01 Instrumentation, Message Center and Warning Chimes, Removal and Installation).

A Door Ajar Display Is Never or Always On

Refer to Wiring Diagrams Cell 113 for schematic and connector information.

Diagnostic Overview

Diagnostics in this manual assume a certain skill level and knowledge of Ford-specific diagnostic practices.
REFER to: Diagnostic Methods (100-00 General Information, Description and Operation).

Normal Operation and Fault Conditions

See Door Ajar Indication Displays.
REFER to: Message Center - System Operation and Component Description (413-01 Instrumentation, Message Center and Warning Chimes, Description and Operation).

If the door status message is missing for the programmed length of time or longer, the IPC sets DTC U0140:00 in continuous memory and defaults all door ajar message center displays off until the IPC receives a valid message indicating a door ajar.

BCM DTC Fault Trigger Conditions

DTC	Description	Fault Trigger Conditions
B1306:13	Liftgate Ajar Switch: Circuit Open	An on-demand DTC that sets in the BCM if the luggage compartment lid or liftgate ajar input is open.

Possible Sources

- Interior lighting concern
- BCM
- IPC

PINPOINT TEST BL : A DOOR AJAR DISPLAY IS NEVER OR ALWAYS ON

BL1 CHECK THE MESSAGE CENTER OPERATION

- Ignition OFF.
- Disconnect: Brake Fluid Level Switch.
- Ignition ON.
- Wait 1 minute.
- Observe the message center operation.

Does the message center display the low brake fluid level message?

Yes	GO to BL2
No	GO to Pinpoint Test A

BL2 VERIFY THE CONDITION

- Verify whether the concern is a luggage compartment ajar or hood ajar message center display concern.

Is the concern a luggage compartment ajar or hood ajar message center display concern?

Yes	GO to BL5
No	GO to BL3

BL3 CHECK THE INTERIOR LIGHTING OPERATION

- Open and close each door while monitoring the interior lamps

Do the interior lamps operate correctly with each door?

Yes	GO to BL4
No	REFER to: Interior Lighting (417-02 Interior Lighting, Diagnosis and Testing).

BL4 RETRIEVE THE RECORDED DIAGNOSTIC TROUBLE CODES (DTCS) FROM THE IPC (INSTRUMENT PANEL CLUSTER) SELF-TEST

- Using a scan tool, perform the IPC self-test.

Are any DTC recorded?

Yes	For DTC U0140:00, GO to Pinpoint Test AF For all other Diagnostic Trouble Codes (DTCs), REFER to DTC Chart: IPC in this section.
No	GO to BL5

BL5 RETRIEVE THE RECORDED DIAGNOSTIC TROUBLE CODES (DTCS) FROM THE BCM (BODY CONTROL MODULE) SELF-TEST

- Using a scan tool, perform the BCM self-test.

Are any Diagnostic Trouble Codes (DTCs) recorded?

Yes	For DTC B1306:13, GO to BL6 For all other DTCs, REFER to: Body Control Module (BCM) (419-10 Multifunction Electronic Modules, Diagnosis and Testing).
No	For a door ajar message center indicator, INSTALL a new BCM. REFER to: Body Control Module (BCM) (419-10 Multifunction Electronic Modules, Diagnosis and Testing). For a hood ajar message center indication concern, REFER to: Perimeter Anti-Theft Alarm (419-01A Perimeter Anti-Theft Alarm, Diagnosis and Testing). For a luggage compartment or liftgate ajar message center indication concern, GO to BL9

BL6 CHECK THE LIFTGATE AJAR INPUT FOR GROUND THROUGH THE LUGGAGE COMPARTMENT OR LIFTGATE LATCH

NOTE: *Make sure the liftgate is fully closed before proceeding with this test step.*

- Ignition OFF.
- Disconnect: BCM C2280B.
- Measure:

Positive Lead	Measurement / Action	Negative Lead
C2280B-47	Ω	—

Is the resistance less than 3 ohms?

Yes	GO to BL11
No	GO to BL7

BL7 CHECK THE LUGGAGE COMPARTMENT OR LIFTGATE AJAR SWITCH GROUND

- Disconnect: Luggage Compartment or Liftgate Latch.
- Measure:

Positive Lead	Measurement / Action	Negative Lead
C4223-2	Ω	—

Is the resistance less than 3 ohms?

Yes	GO to BL8
No	REPAIR the circuit.

BL8 BYPASS THE LUGGAGE COMPARTMENT OR LIFTGATE AJAR SWITCH AND CHECK THE LUGGAGE COMPARTMENT LID OR LIFTGATE AJAR INPUT FOR GROUND

- Connect: BCM C2280B.
- Connect a fused jumper wire:

Lead 1	Measurement / Action	Lead 2
C4223-3	—∿—	C4223-2

- Ignition ON.
- Using a scan tool, perform the IPC self-test.

Is DTC B1306:13 present?

Yes	REMOVE the jumper wire. REPAIR the luggage compartment or liftgate ajar input circuit.
No	REMOVE the jumper wire. INSTALL a new luggage compartment or liftgate latch. REFER 501-14 R&I

BL9 CHECK THE LUGGAGE COMPARTMENT LID OR LIFTGATE AJAR INPUT FOR A SHORT TO GROUND

- Ignition OFF.
- Disconnect: BCM C2280B.
- Measure:

Positive Lead	Measurement / Action	Negative Lead
C2280B-47	Ω	—

Is the resistance greater than 10,000 ohms?

Yes	GO to BL11
No	GO to BL10

BL10 CHECK THE LUGGAGE COMPARTMENT LID OR LIFTGATE SWITCH

- Disconnect: Luggage Compartment or Liftgate Latch.
- Measure:

Positive Lead	Measurement / Action	Negative Lead
C2280B-47	Ω	—

Is the resistance greater than 10,000 ohms?

Yes	INSTALL a new luggage compartment lid or liftgate latch. REFER to 501-14 R&I
No	REPAIR the luggage compartment or liftgate latch input circuit.

BL11 CHECK FOR CORRECT BCM (BODY CONTROL MODULE) OPERATION

- Ignition OFF.
- Disconnect and inspect all BCM connectors.
- Repair:
  - corrosion (install new connector or terminals - clean module pins)
  - damaged or bent pins - install new terminals/pins
  - pushed-out pins - install new pins as necessary
- Reconnect the BCM connectors. Make sure they seat and latch correctly.
- Operate the system and determine if the concern is still present.

Is the concern still present?

Yes	CHECK OASIS for any applicable Technical Service Bulletins (TSBs). If a TSB exists for this concern, DISCONTINUE this test and FOLLOW TSB instructions. If no Technical Service Bulletins (TSBs) address this concern, INSTALL a new BCM . REFER to: Body Control Module (BCM) (419-10 Multifunction Electronic Modules, Diagnosis and Testing).
No	The system is operating correctly at this time. The concern may have been caused by module connections. ADDRESS the root cause of any connector or pin issues.

An ICM Gauge Is Inoperative Or Incorrect

Diagnostic Overview

Diagnostics in this manual assume a certain skill level and knowledge of Ford-specific diagnostic practices.
REFER to: Diagnostic Methods (100-00 General Information, Description and Operation).

Normal Operation and Fault Conditions

The ICM receives a hot at all times voltage from the BCM . The ICM receives the ignition status message from the BCM over the High Speed Controller Area Network (HS-CAN).

ICM DTC Fault Trigger Conditions

DTC	Description	Fault Trigger Conditions
P0195:00	Engine Oil Temperature Sensor "A" Circuit: No Sub Type Information	Sets in continuous memory in the ICM when the engine oil temperature data is missing or invalid for 5 seconds or longer from the PCM .
P0520:00	Engine Oil Pressure Sensor/Switch "A" Circuit: No Sub Type Information	Sets in continuous memory in the ICM when the engine oil pressure data is missing or invalid for 5 seconds or longer from the PCM .
P1248:00	Turbocharger Boost Pressure Not Detected: No Sub Type Information	Sets in continuous memory in the ICM when the turbo boost data is missing or invalid for 5 seconds or longer from the PCM .

Possible Sources

- Wiring, terminals or connectors
- Fuse
- PCM concern

Visual Inspection and Diagnostic Pre-checks

Inspect the BCM fuse 69 (5A).

PINPOINT TEST BM : AN ICM (INFORMATION CENTER MODULE) GAUGE IS INOPERATIVE OR INCORRECT

BM1 CARRY OUT THE GAUGE ACTIVE COMMAND USING A SCAN TOOL

- Ignition ON.
- Using a scan tool, view the ICM Parameter Identifications (PIDs).
- Select the inoperative ICM gauge Parameter Identification (PID) (EOT_GAUGE_PP), (OIL_PRESS) or (TURBO_GAUGE).
- Command the inoperative gauge to 20%, 50%, 80% and 100% while monitoring the gauge.

Does the gauge start at 0, move to just under 25% of gauge travel, 50% of gauge travel (straight up), just above 75% of gauge travel and then full stop?

Yes	GO to BM2
No	INSTALL a new ICM . REFER to: Information Center Module (ICM) (413-01 Instrumentation, Message Center and Warning Chimes, Removal and Installation).

BM2 CARRY OUT THEICM (INFORMATION CENTER MODULE) SELF-TEST

- Using a scan tool, perform the ICM self-test.
- Check for recorded Diagnostic Trouble Codes (DTCs) from the ICM self-test.

Are any Diagnostic Trouble Codes (DTCs) present?

Yes	For DTC U0100:87, GO to Pinpoint Test BN For DTC U0140:87, GO to Pinpoint Test BO For DTC U3006:16, GO to Pinpoint Test BP

	For DTC U3006:17, GO to Pinpoint Test BQ
No	INSTALL a new ICM . REFER to: Information Center Module (ICM) (413-01 Instrumentation, Message Center and Warning Chimes, Removal and Installation).

U0100:87

Diagnostic Overview

Diagnostics in this manual assume a certain skill level and knowledge of Ford-specific diagnostic practices.
REFER to: Diagnostic Methods (100-00 General Information, Description and Operation).

Normal Operation and Fault Conditions

ICM DTC Fault Trigger Conditions

DTC	Description	Fault Trigger Conditions
U0100:87	Lost Communication With ECM/PCM "A" Module: Missing Message	Sets in continuous memory in the ICM if data messages received from the PCM through the BCM over the Medium Speed Controller Area Network (MS-CAN) are missing for 5 seconds or longer.

Possible Sources

- Communication concern
- Battery voltage concern
- PCM
- IPC

PINPOINT TEST BN : U0100:87

BN1 VERIFY THE SCAN TOOL COMMUNICATES WITH THE PCM (POWERTRAIN CONTROL MODULE)

- Connect the scan tool.
- Check that a vehicle session can be established using the scan tool.

Can a vehicle session be established?

Yes	GO to BN2
No	REFER to: Communications Network (418-00 Module Communications Network, Diagnosis and Testing).

BN2 CHECK THE ICM (INFORMATION CENTER MODULE) CONTINUOUS MEMORY DIAGNOSTIC TROUBLE CODES (DTCS)

- Ignition ON.
- Using a scan tool, perform the IPC self-test.
- Clear the Diagnostic Trouble Codes (DTCs).

- Wait 10 seconds.
- Repeat the IPC self-test.

Is DTC U0100:87 retrieved again?

Yes	GO to BN3
No	The system is operating correctly at this time. The DTC may have been set due to high network traffic or an intermittent fault condition.

BN3 RETRIEVE THE RECORDED DIAGNOSTIC TROUBLE CODES (DTCS) FROM THE PCM (POWERTRAIN CONTROL MODULE) KOEO (KEY ON, ENGINE OFF) SELF-TEST

- Using a scan tool, perform the PCM KOEO self-test.

Are any charging system DTC recorded?

Yes	REFER to: Charging System - 2.0L Duratec-HE (125kW/170PS) - MI4 (414-00 Charging System - General Information, Diagnosis and Testing).
No	GO to BN4

BN4 RETRIEVE THE RECORDED DIAGNOSTIC TROUBLE CODES (DTCS) FROM THE ICM (INFORMATION CENTER MODULE) SELF-TEST

- Using a scan tool, perform the ICM self-test.

Is DTC U0140:87 set?

Yes	GO to Pinpoint Test BO
No	GO to BN5

BN5 CHECK FOR DTC U0100:00 SET IN OTHER MODULES

- Using a scan tool, perform a self-test.
- Retrieve the continuous memory Diagnostic Trouble Codes (DTCs) from all modules.

Is DTC U0100:00 set in the ABS module and RCM ?

Yes	INSTALL a new PCM . REFER to: Powertrain Control Module (PCM) (303-14A Electronic Engine Controls - 2.0L Duratec-HE (125kW/170PS) - MI4, Removal and Installation).
No	INSTALL a new ICM . REFER to: Information Center Module (ICM) (413-01 Instrumentation, Message Center and Warning Chimes, Removal and Installation).

U0140:87

Diagnostic Overview

Diagnostics in this manual assume a certain skill level and knowledge of Ford-specific diagnostic practices.
REFER to: Diagnostic Methods (100-00 General Information, Description and Operation).

Normal Operation and Fault Conditions

ICM DTC Fault Trigger Conditions

DTC	Description	Fault Trigger Conditions
U0140:87	Lost Communication With Body Control Module: Missing Message	Sets in continuous memory in the ICM if data messages received from the BCM over the Medium Speed Controller Area Network (MS-CAN) are missing for 5 seconds or longer.

Possible Sources

- Communication concern
- Battery voltage concern
- BCM
- IPC

PINPOINT TEST BO : U0140:87

BO1 VERIFY THE CUSTOMER CONCERN

- Ignition ON.
- Verify there is an observable symptom present.

Is an observable symptom present?

Yes	GO to BO2
No	The system is operating normally at this time. The DTC may have been set due to high network traffic or an intermittent fault condition.

BO2 CHECK THE COMMUNICATION NETWORK

- Ignition ON.
- Using a scan tool, perform a Network Test.

Does the BCM pass the network test?

Yes	GO to BO3
No	REFER to: Communications Network (418-00 Module Communications Network, Diagnosis and Testing).

BO3 RETRIEVE THE RECORDED DIAGNOSTIC TROUBLE CODES (DTCS) FROM THE BCM (BODY CONTROL MODULE) SELF-TEST

- Using a scan tool, perform the BCM module self-test.

Are any Diagnostic Trouble Codes (DTCs) recorded?

Yes	REFER to: Body Control Module (BCM) (419-10 Multifunction Electronic Modules, Diagnosis and Testing).
No	GO to BO4

BO4 RETRIEVE THE RECORDED DIAGNOSTIC TROUBLE CODES (DTCS) FROM THE ICM (INFORMATION CENTER MODULE) SELF-TEST

- Using a scan tool, perform the ICM self-test.

Is DTC U3006:16 or DTC U3006:17 recorded?

Yes	For DTC U3006:16, GO to Pinpoint Test BP For DTC U3006:17, GO to Pinpoint Test BQ
No	GO to BO5

BO5 RECHECK THE ICM (INFORMATION CENTER MODULE) DIAGNOSTIC TROUBLE CODES (DTCS)

NOTE: *If new modules were installed prior to the DTC being set, the module configuration can be incorrectly set during the Programmable Module Installation (PMI) or the Programmable Module Installation (PMI) may not have been carried out.*

- Clear the Diagnostic Trouble Codes (DTCs).
- Wait 10 seconds.
- Using a scan tool, perform the ICM self-test.

Is DTC U0140:00 still present?

Yes	GO to BO6
No	The system is operating correctly at this time. The DTC may have been set due to high network traffic or an intermittent fault condition.

BO6 CHECK FOR DTC U0140 SET IN OTHER MODULES

- Clear all Diagnostic Trouble Codes (DTCs).
- Ignition OFF.
- Ignition ON.
- Wait 10 seconds.
- Using a scan tool, perform a self-test.
- Retrieve the continuous memory Diagnostic Trouble Codes (DTCs) from all modules.

Is DTC U0140:00 set in the IPC ?

Yes	INSTALL a new BCM . REFER to: Body Control Module (BCM) (419-10 Multifunction Electronic Modules, Diagnosis and Testing).
No	INSTALL a new ICM . REFER to: Information Center Module (ICM) (413-01 Instrumentation, Message Center and Warning Chimes, Removal and Installation).

U3006:16

Refer to Wiring Diagrams Cell 60 for schematic and connector information.

Diagnostic Overview

Diagnostics in this manual assume a certain skill level and knowledge of Ford-specific diagnostic practices.
REFER to: Diagnostic Methods (100-00 General Information, Description and Operation).

Normal Operation and Fault Conditions

ICM DTC Fault Trigger Conditions

DTC	Description	Fault Trigger Conditions
U3006:16	Control Module Input Power "A": Circuit Voltage Below Threshold	Sets in continuous memory and on-demand in the ICM if the ICM detects battery voltage below 8.2 volts on the voltage supply circuit for longer than 5 seconds if the engine is not running or longer than 250 milliseconds.

Possible Sources

- Wiring, terminals or connectors
- High circuit resistance
- Charging system concern
- IPC

PINPOINT TEST BP : U3006:16

BP1 CARRY OUT THE ICM (INFORMATION CENTER MODULE) SELF-TEST

- Ignition ON.
- Using a scan tool, clear the Diagnostic Trouble Codes (DTCs).
- Wait 10 seconds.
- Using a scan tool, perform the ICM self-test.

Is DTC U3006:16 still present?

Yes	GO to BP2
No	The system is operating correctly at this time. The DTC may have been set due to a previous low battery voltage condition.

BP2 CHECK FOR CHARGING SYSTEM DIAGNOSTIC TROUBLE CODES (DTCS) IN THE BCM (BODY CONTROL MODULE)

- Using a scan tool, perform the BCM on-demand self-test.

Are any charging system Diagnostic Trouble Codes (DTCs) recorded?

Yes	REFER to: Body Control Module (BCM) (419-10 Multifunction Electronic Modules, Diagnosis and Testing).

No	GO to BP3

BP3 CHECK THE BATTERY CONDITION AND STATE OF CHARGE

- Check the battery condition and verify the battery is fully charged.
  REFER to: Battery (414-01 Battery, Mounting and Cables, Diagnosis and Testing).

Is the battery OK and fully charged?

Yes	GO to BP4
No	CHARGE or INSTALL a new battery. REFER to: Battery (414-01 Battery, Mounting and Cables, Removal and Installation).

BP4 CHECK THE ICM (INFORMATION CENTER MODULE) VOLTAGE SUPPLY

- Ignition OFF.
- Disconnect: ICM
- Ignition ON.
- Measure:

Positive Lead	Measurement / Action	Negative Lead
C2487-1		—

Is the voltage greater than 11 volts?

Yes	GO to BP5
No	REPAIR the circuit.

BP5 CHECK THE ICM (INFORMATION CENTER MODULE) GROUND

- Mesure:

Positive Lead	Measurement / Action	Negative Lead
C2487-1		C2487-3

Is the voltage greater than 11 volts?

Yes	GO to BP6
No	REPAIR the circuit.

BP6 CHECK FOR CORRECT ICM (INFORMATION CENTER MODULE) OPERATION

- Ignition OFF.
- Disconnect and inspect the ICM connector.

- Repair:
  - corrosion (install new connector or terminals - clean module pins)
  - damaged or bent pins - install new terminals/pins
  - pushed-out pins - install new pins as necessary
- Reconnect the ICM connector. Make sure it seats and latches correctly.
- Operate the system and determine if the concern is still present.

Is the concern still present?

Yes	CHECK On-Line Automotive Service Information System (OASIS) for any applicable Technical Service Bulletins (TSBs). If a TSB exists for this concern, DISCONTINUE this test and FOLLOW TSB instructions. If no Technical Service Bulletins (TSBs) address this concern, INSTALL a new ICM . REFER to: Information Center Module (ICM) (413-01 Instrumentation, Message Center and Warning Chimes, Removal and Installation).
No	The system is operating correctly at this time. The concern may have been caused by module connections. ADDRESS the root cause of any connector or pin issues.

U3006:17

Diagnostic Overview

Diagnostics in this manual assume a certain skill level and knowledge of Ford-specific diagnostic practices.
REFER to: Diagnostic Methods (100-00 General Information, Description and Operation).

Normal Operation and Fault Conditions

ICM DTC Fault Trigger Conditions

DTC	Description	Fault Trigger Conditions
U3006:17	Control Module Input Power "A": Circuit Voltage Above Threshold	Sets in continuous memory and on-demand in the ICM if the ICM detects battery voltage above 18.2 volts on the voltage supply circuit for longer than 5 seconds if the engine is not running or longer than 250 milliseconds.

Possible Sources

- Charging system concern
- IPC

PINPOINT TEST BQ : U3006:17

BQ1 CHECK FOR DTC (DIAGNOSTIC TROUBLE CODE) B1317, B1676, P0563 (PCM (POWERTRAIN CONTROL MODULE)) OR U3003:17 SET IN OTHER MODULES

- Ignition ON.
- Using a scan tool, perform the self-test.
- Retrieve the continuous memory Diagnostic Trouble Codes (DTCs) from all modules.

Is DTC B1317, B1676, P0563 (PCM or U3003:17 set in more than one module?

Yes	

	REFER to: Charging System - 2.0L Duratec-HE (125kW/170PS) - MI4 (414-00 Charging System - General Information, Diagnosis and Testing). REFER to: Charging System - 2.0L EcoBoost (184kW/250PS) - MI4 (414-00 Charging System - General Information, Diagnosis and Testing).
No	GO to BQ2

BQ2 CHECK THE BATTERY VOLTAGE

- Turn off all interior/exterior lights and accessories.
- Start and run the engine at approximately 2,000 rpm for 3 minutes while monitoring the battery voltage.

Does the battery voltage rise to 15.5 volts or higher?

Yes	REFER to: Charging System - 2.0L Duratec-HE (125kW/170PS) - MI4 (414-00 Charging System - General Information, Diagnosis and Testing). REFER to: Charging System - 2.0L EcoBoost (184kW/250PS) - MI4 (414-00 Charging System - General Information, Diagnosis and Testing).
No	GO to BQ3

BQ3 RECHECK FOR DTC (DIAGNOSTIC TROUBLE CODE) U3006:17

- Turn the engine off.
- Ignition ON.
- Using a scan tool, clear the continuous memory Diagnostic Trouble Codes (DTCs).
- Carry out the ICM self-test.

Is DTC U3006:17 present?

Yes	INSTALL a new ICM . REFER to: Information Center Module (ICM) (413-01 Instrumentation, Message Center and Warning Chimes, Removal and Installation).
No	The system is operating normally at this time. The DTC may have been set previously during battery charging or while jump starting the vehicle.

Copyright © Ford Motor Company

Instrument Panel Cluster (IPC)

Removal

NOTE: *Removal steps in this procedure may contain installation details.*

1. **WARNING: Before beginning any service procedure in this section, refer to Safety Warnings in section 100-00 General Information. Failure to follow this instruction may result in serious personal injury.**

   Refer to: Health and Safety Precautions (100-00 General Information, Description and Operation).

2. **NOTE:** *If installing a new IPC, it is necessary to upload the module configuration information to the scan tool prior to removing the IPC. This information must be downloaded into the new IPC after installation.*

   Upload the module configuration information from the IPC into the scan tool by following the scan tool on screen instructions. Record the odometer value from the original IPC. If the odometer value cannot be obtained from the IPC (display failure), perform the diagnostic routine. If the value cannot be obtained after the diagnostic routine, the customer should supply the approximate odometer value.

3. 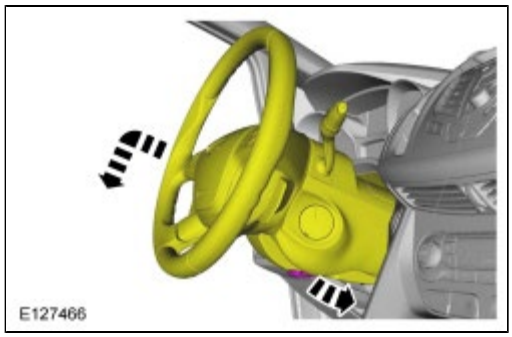

4. **NOTE:** *Turn the steering wheel 90° to access the slots.*

   Screwdriver.

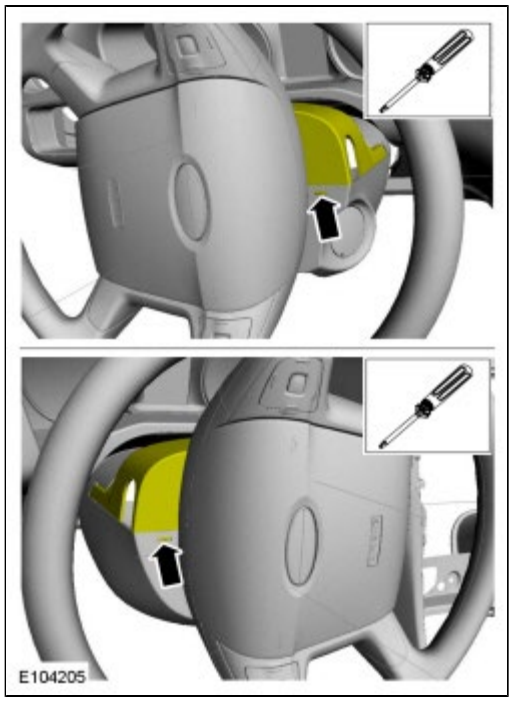

5.

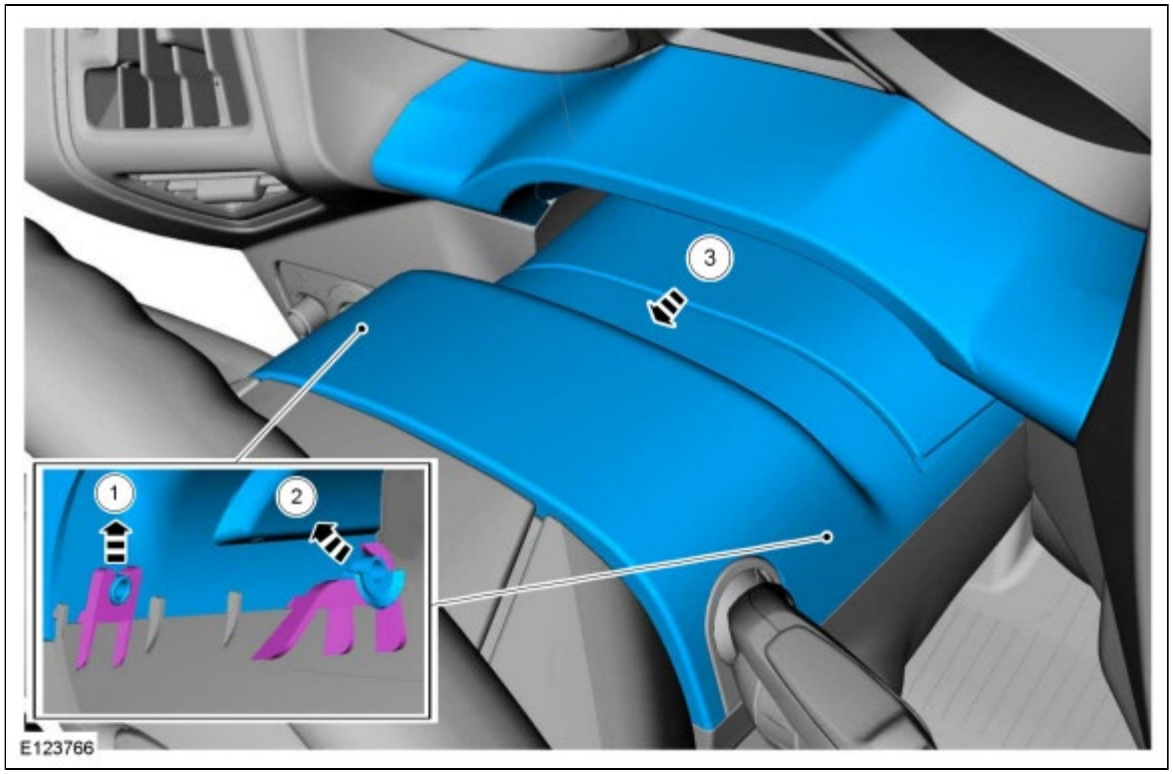

6. • 1 Nm (9 lb-in)

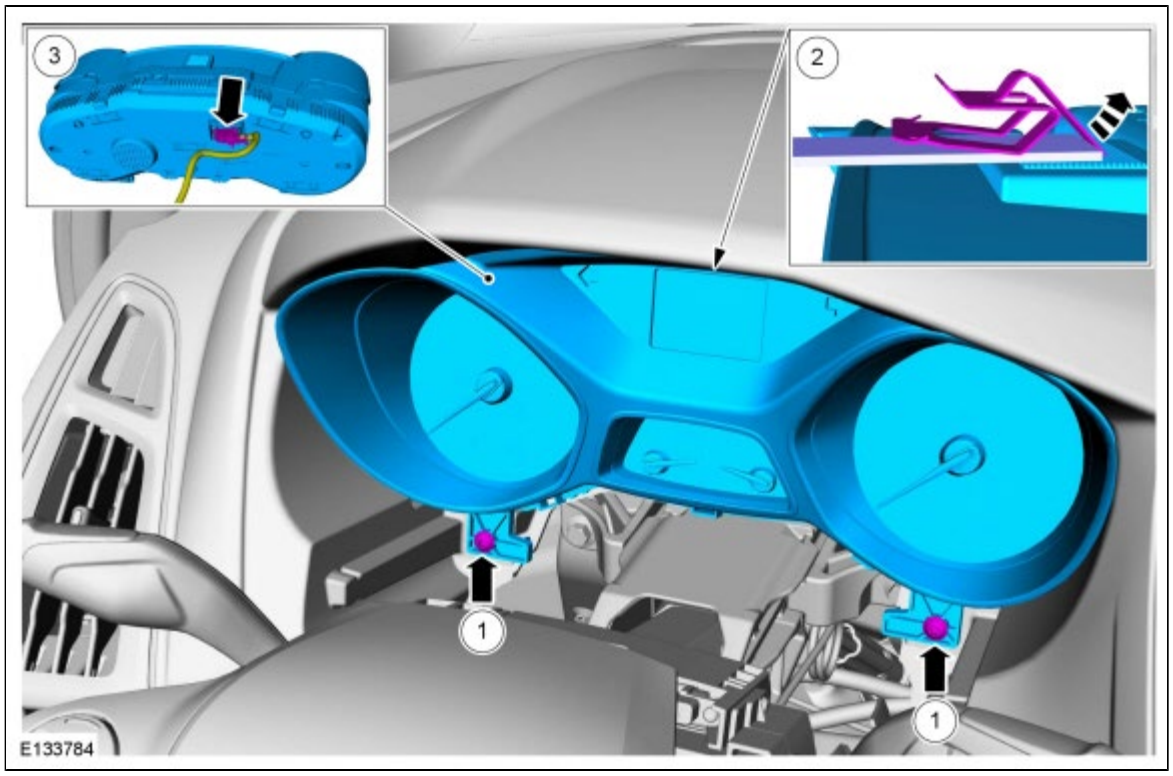

Installation

1. To install, reverse the removal procedure.
2. If a new module has been installed, download the IPC configuration information from the scan tool to the new IPC by following the scan tool on screen instructions.
3. If a new module has been installed, using the scan tool, select Tool Box/Module Programming/Programmable Parameters/Car Configuration Parameter(s)/Vehicle Configuration/Retrieve Professional Technician Society (PTS) Derived As-built Data. Follow the on-screen instructions to install the as-built data into the IPC .

Copyright © Ford Motor Company

Information Center Module (ICM)

Removal

NOTE: *Removal steps in this procedure may contain installation details.*

1. **WARNING: Before beginning any service procedure in this section, refer to Safety Warnings in section 100-00 General Information. Failure to follow this instruction may result in serious personal injury.**

   Refer to: Health and Safety Precautions (100-00 General Information, Description and Operation).

2. 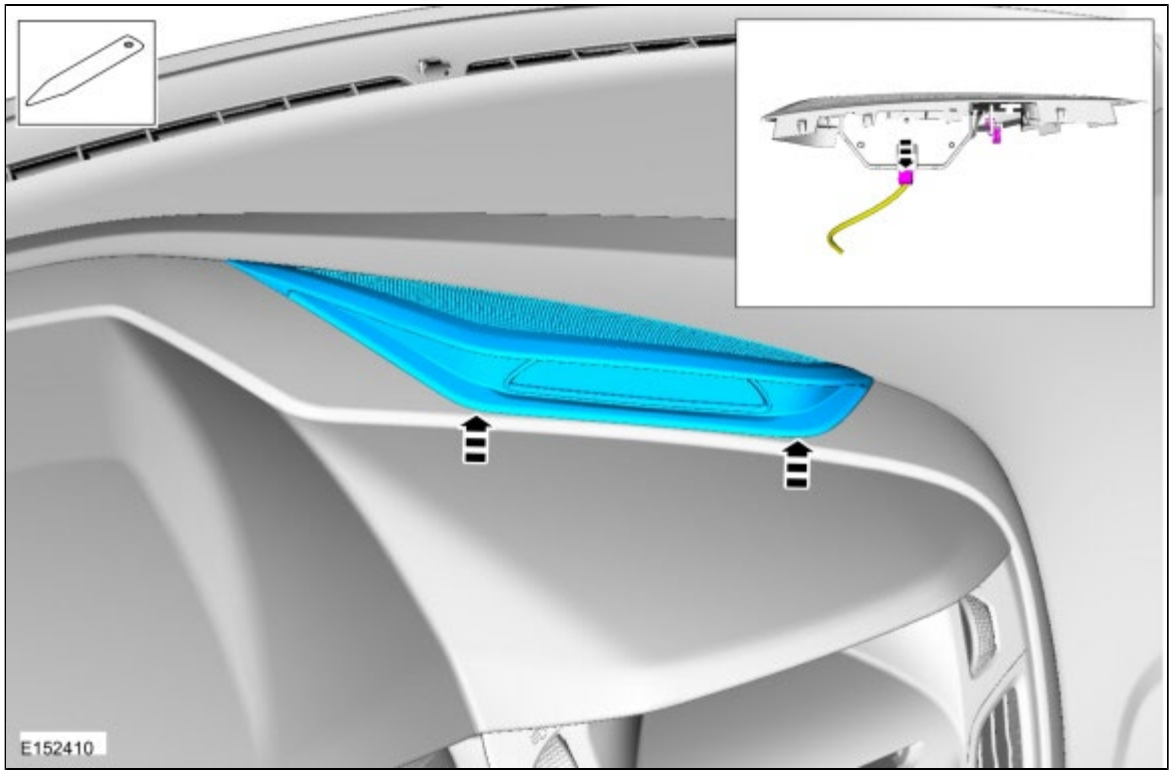

3. *Torque* : 1.6 Nm

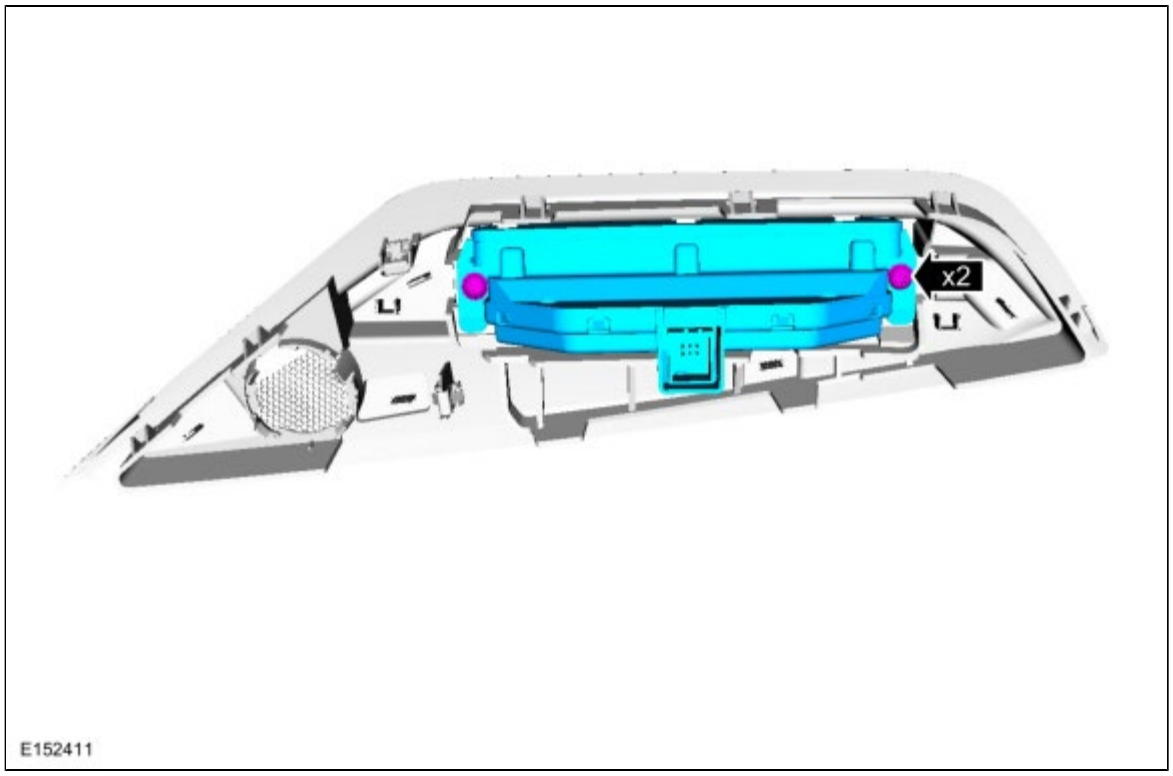

Installation

1. To install, reverse the removal procedure.

Copyright © Ford Motor Company

Specifications

Material

Name	Specification	Capacity
Motorcraft® Dual Clutch Transmission Fluid XT-11-QDC	WSS-M2C200-D2	1.85 qt (1.75 L) (0- 5 mm below the lower edge of the fill plug hole)

Shim thickness calculations

Type	1st – 4th gear output shaft	5th, 6th and reverse gear output shaft	Differential assembly
Measuring shims (mm)	-	-	+1.10
Measured end float (example) (mm)	+1.56	+1.51	+0.36
Addition value (mm) to obtain correct bearing pre-load	+0.17	+0.15	+0.20
Required shim thickness (example) (mm)	= 1.73	= 1.66	= 1.66
Available shims (mm)	1.44 -2.16 (in 0.02 mm steps)	1.44 -2.16 (in 0.02 mm steps)	1.44 - 2.28 (in 0.02 mm steps)

* If the thickness of the required shim is odd, select the shim with the next higher thickness value.

Transmission Ratios

2.0L GTDI (Gasoline Turbocharged Direct Injection) engine	Internal Gearbox Ratio(s)	Final Drive Ratio(s)	Overall Ratio(s)
1st gear	3.231	4.063	13.128
2nd gear	1.952	4.063	7.931
3rd gear	1.241	4.063	5.367
4th gear	0.868	4.063	4.101
5th gear	0.943	2.955	3.336
6th gear	0.789	2.955	2.786
Reverse gear	1.423	2.955	* (1.423 x 3.231 x 2.955) = 13.560

* The overall ratio for reverse gear is calculated by multiplying the internal gearbox ratio for reverse gear, 1st gear and the final drive ratio of the 5th/6th and reverse gear output shaft.

Copyright © Ford Motor Company

Manual Transmission - Overview

Overview

The MMT6 manual transmission features the following:

- Two-part aluminum housing
- All gear wheels are helical toothed and are constantly engaged
- 1st, 2nd, 3rd and 4th gear are triple synchronized.
- 5th, 6th and reverse gear have double synchronization
- By optimizing the friction in the transmission and using a lower viscosity transmission fluid, it has been possible to achieve fuel savings and thereby reduce CO2 emissions. Information on the specification can be found in FordEtis
- An externally mounted gearshift mechanism
- All driving gears of the transmission are located on the input shaft
- The input shaft is designed as a solid shaft and runs on one ball bearing and one roller bearing with no pre-load
- The gears for 1st and 2nd gear are an integral part of the input shaft. The gears for 3rd and 5th gears and the gear for 4th/6th gear are pressed on. Because of the high force used to press on the components, the gears cannot be pressed off in service. A faulty input shaft can only be replaced as a complete unit
- Defective bearings can be pressed off and changed
- The output pinion of the 1st/4th gear output shaft is an integral part of the shaft
- The synchronizers of the 1st/2nd and the 3rd/4th gears are located on the output shaft
- The 1st/4th gear output shaft is a hollow shaft. The fluid is directed into the inner diameter of the hollow shaft for lubrication of the needle bearings and the synchronizer units. Both output shafts run on taper roller bearings which are pre-loaded with the aid of adjusting shims in the clutch housing
- The output pinion is an integral part of the shaft
- The 5th/6th and reverse gear synchronizer assemblies are located on the shaft
- The 5th/6th/reverse gear output shaft is a hollow shaft. The fluid is directed into the inner diameter of the hollow shaft for lubrication of the needle bearings and the synchronizer units. Both output shafts run on taper roller bearings which are pre-loaded with the aid of adjusting shims in the clutch housing
- The differential runs on taper roller bearings and is pre-loaded with the aid of an adjusting shim in the clutch housing

Location of components

Overview of external components

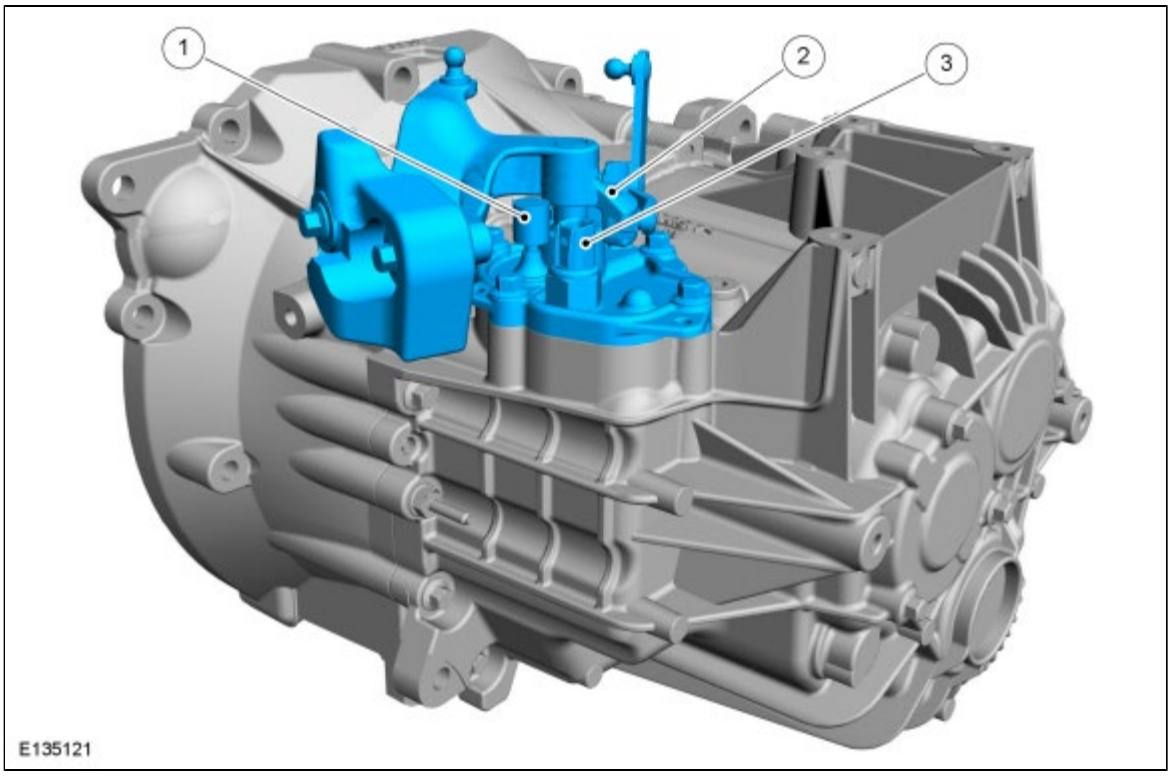

Item	Description
1	Vent assembly
2	Gearshift mechanism
3	Reverse gear switch

Overview of inner components

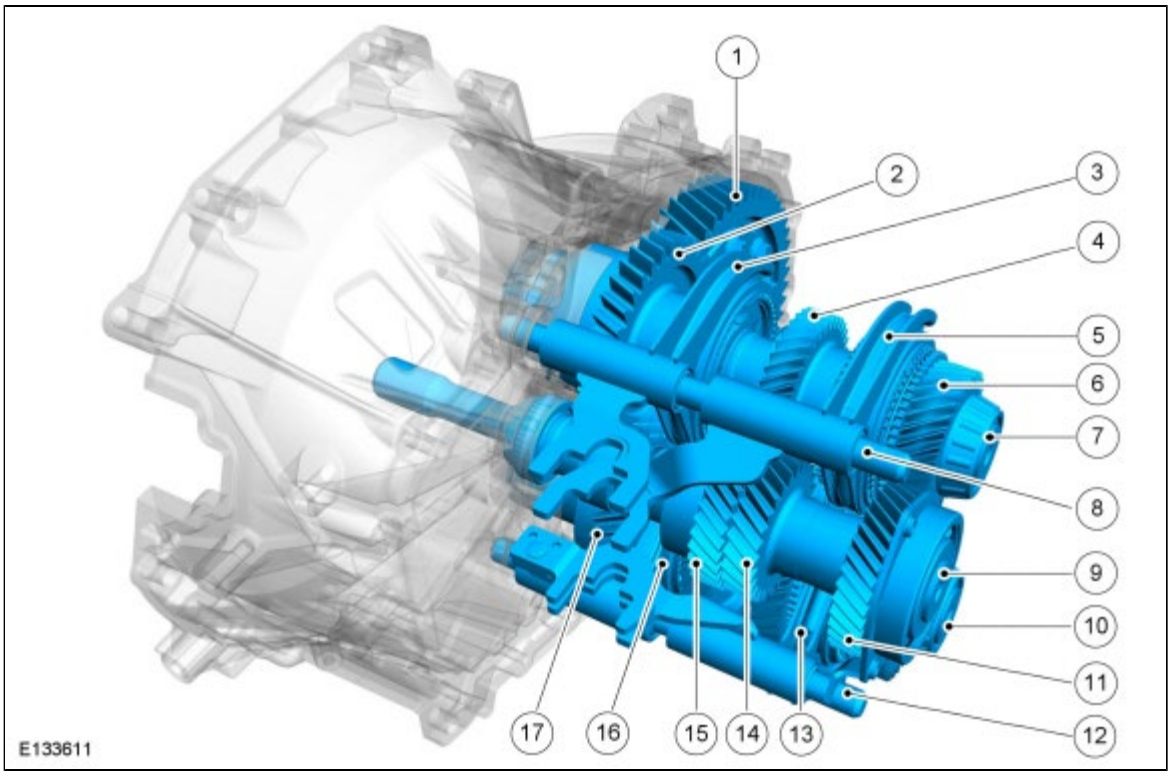

Item	Description

1	Differential
2	Reverse gear idler
3	Selector fork - reverse gear
4	5th gear idler
5	5th/6th gear selector fork
6	6th gear idler
7	5th/6th/Reverse Gear Output Shaft
8	Selector rod - 5th/6th/reverse gear
9	Input shaft
10	1st - 4th gear output shaft
11	4th/6th gear fixed
12	Selector rod - 1st/4th gear
13	Selector fork - 3rd/4th gear
14	3rd gear fixed
15	5th gear fixed
16	Selector fork - 1st/2nd gear
17	1st gear fixed

Input shaft

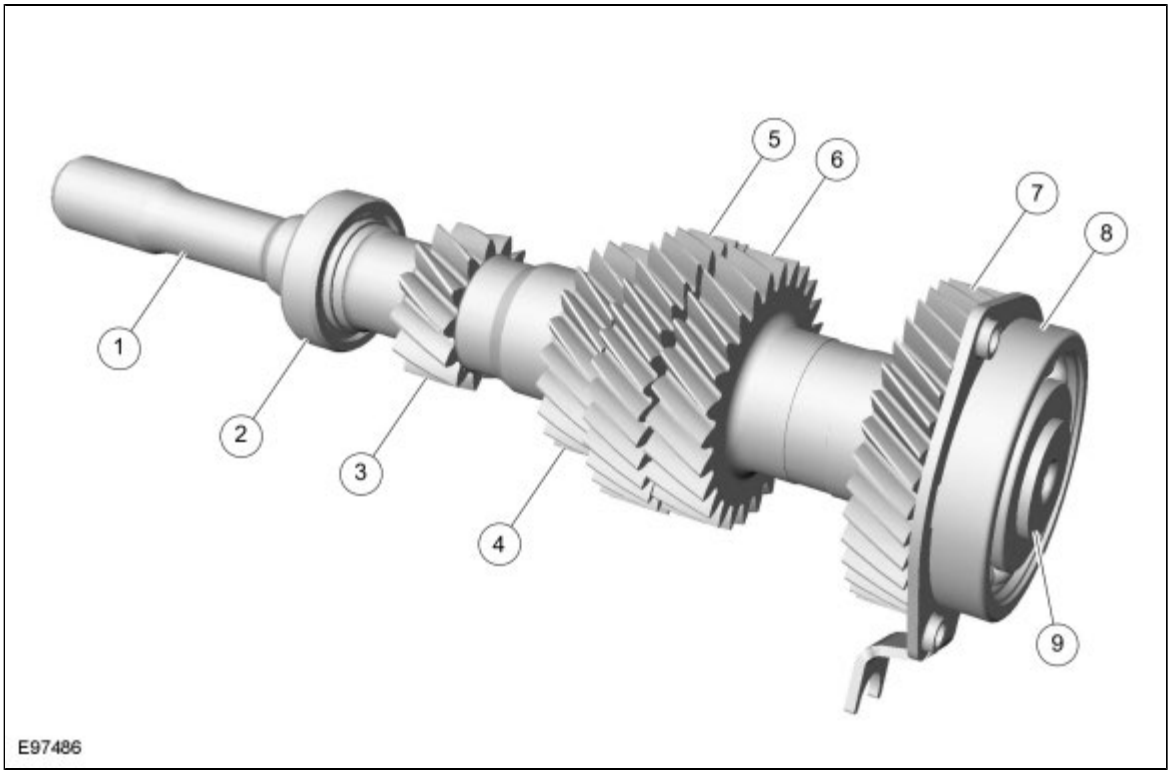

Item	Description
1	Input shaft
2	Input shaft bearing
3	1st gear
4	2nd gear

5	5th gear
6	3rd gear
7	4th/6th gear
8	Input shaft ball bearing
9	Bearing retaining bolt

Output shaft 1st/4th gear

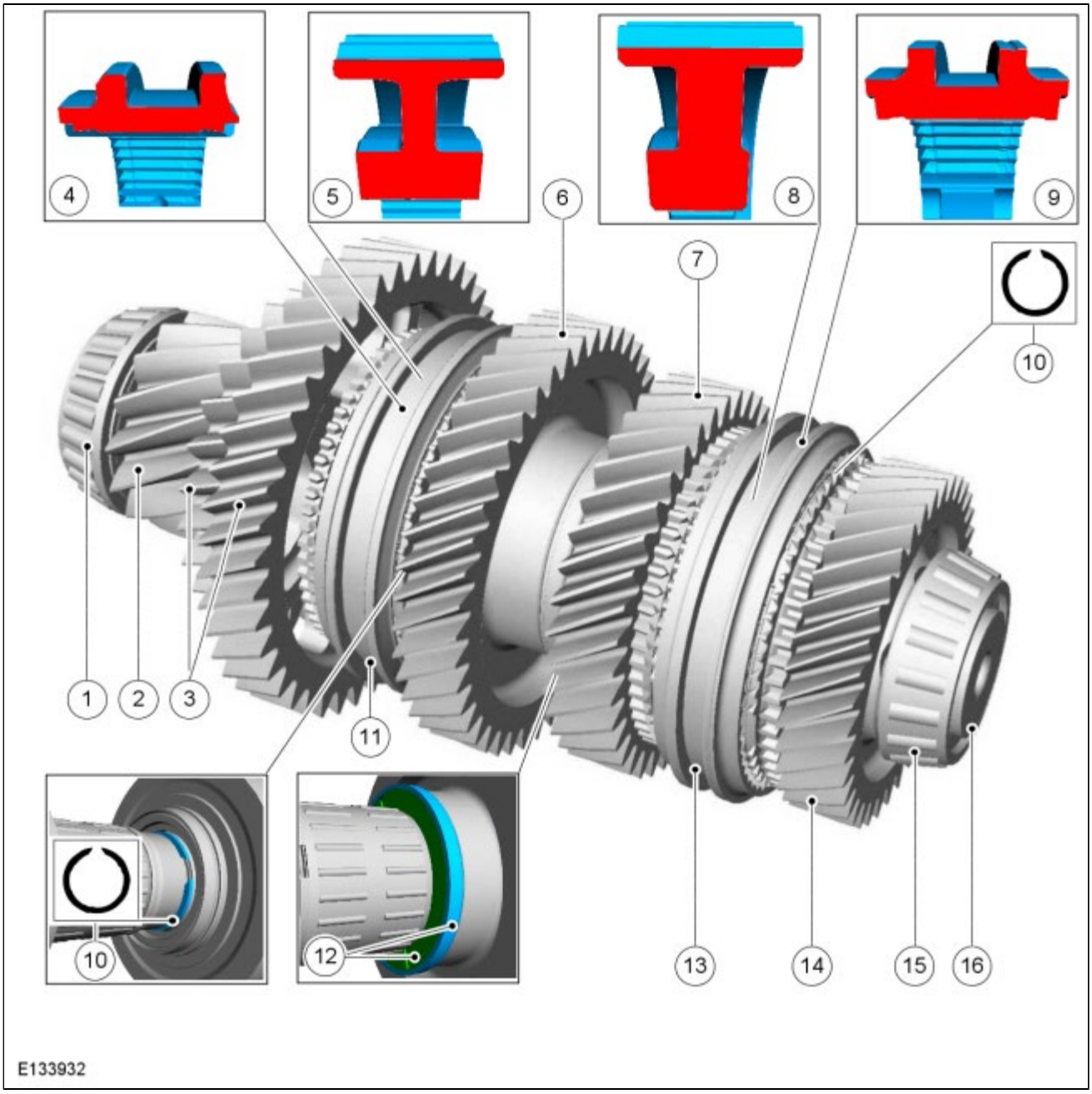

Item	Description
1	Clutch housing taper roller bearing
2	1st/4th gear
3	1st gear and reverse gear idler gear

4	1st/2nd gear sliding collar
5	1st/2nd gear synchroniszer hub
6	2nd gear
7	3rd gear
8	3rd/4th gear synchronizer hub
9	3rd/4th gear sliding collar
10	Snap ring
11	1st/2nd gear synchronizer
12	Stop disc unit
13	3rd/4th gear synchronizer
14	4th gear
15	Transmission housing taper roller bearing
16	Bearing retaining bolt (left-hand thread)

5th/6th/Reverse Gear Output Shaft

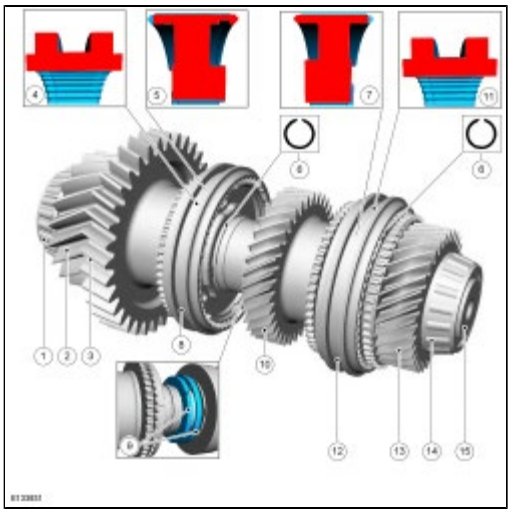

Item	Description
1	Clutch housing taper roller bearing
2	5th/6th/reverse gear output gear
3	Reverse gear
4	Reverse gear sliding sleeve
5	Reverse gear synchronizer hub
6	Snap ring
7	5th/6th gear synchronizer hub
8	Reverse gear synchronizer
9	Stop disc unit
10	5th gear
11	5th/6th gear sliding collar

12	5th/6th gear synchronizer
13	6th gear
14	Taper roller bearing, transmission housing
15	Bearing retaining bolt (left-hand thread)

Differential

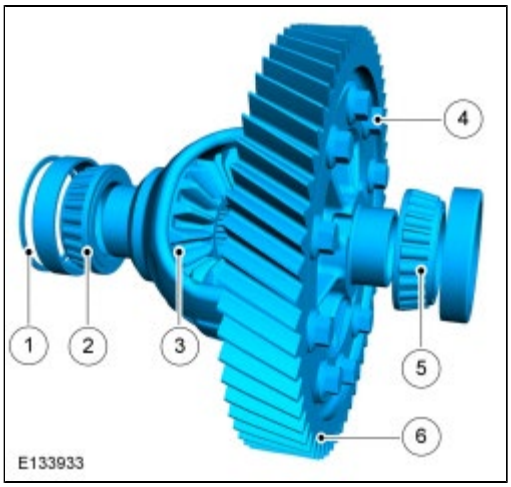

Item	Description
1	Shim
2	Clutch housing taper roller bearing
3	Differential
4	Ring gear bolts
5	Transmission housing taper roller bearing
6	Ring gear

Copyright © Ford Motor Company

Manual Transmission - System Operation and Component Description

System Diagram

Power transmission route in 1st gear

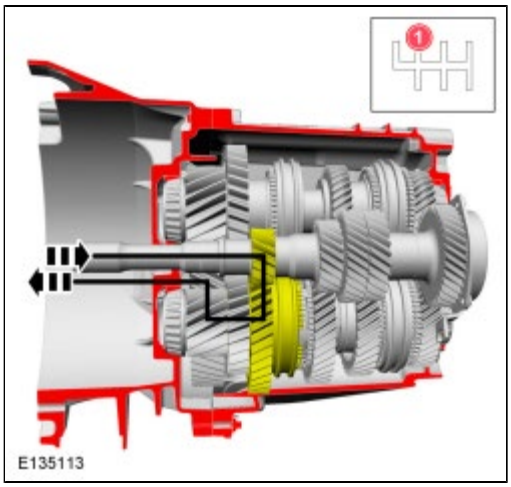

Power transmission route in 2nd gear

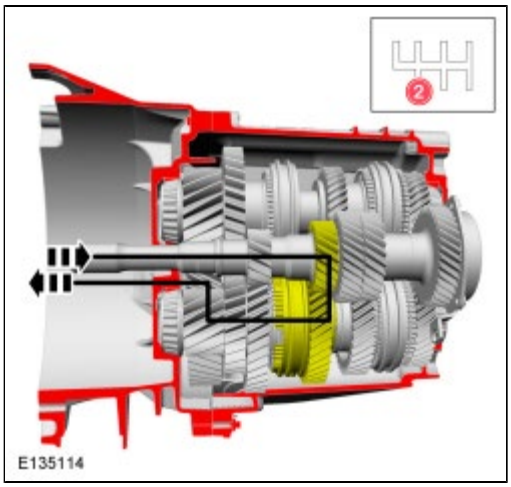

Power transmission route in 3rd gear

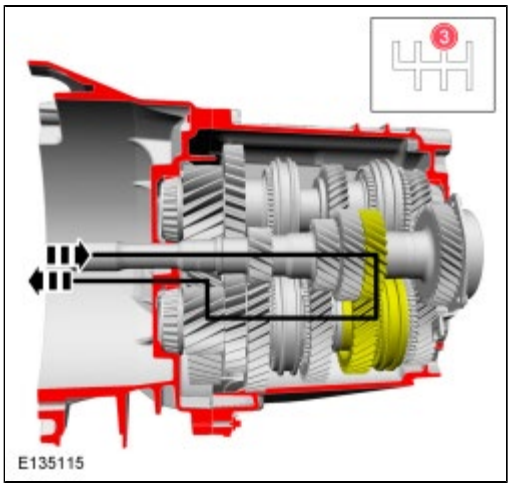

Power transmission route in 4th gear

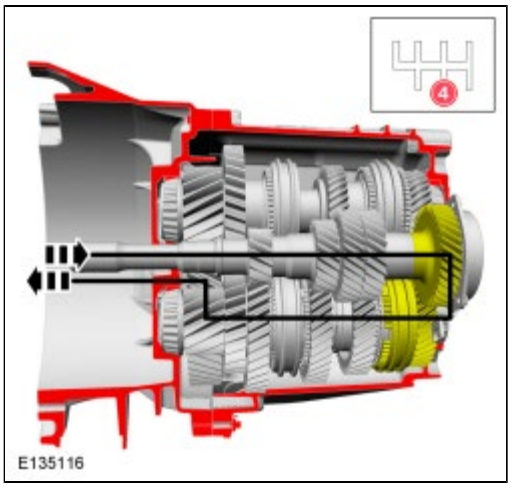

Power transmission route in 5th gear

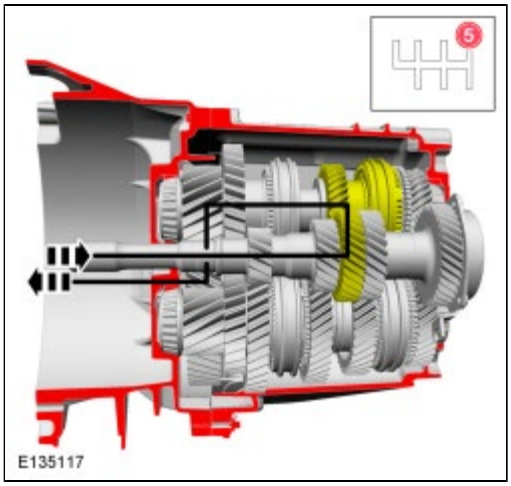

Power transmission route in 6th gear

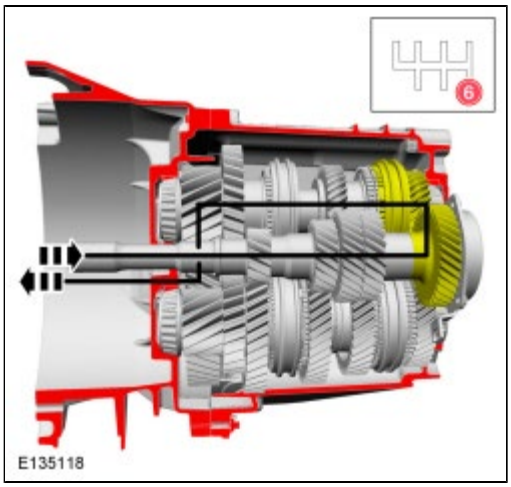

Power transmission route in reverse gear

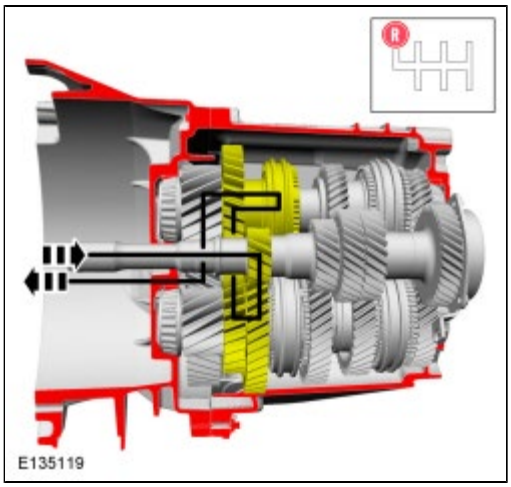

System Operation

Power transmission route in 1st gear

The 1st gear is positively connected to the 1st to 4th gear output shaft by the 1st/2nd gear synchronizer assembly.

Power transmission route in 2nd gear

The 2nd gear is positively connected to the 1st to 4th gear output shaft by the 1st/2nd gear synchronizer assembly.

Power transmission route in 3rd gear

The 3rd gear is positively connected to the 1st to 4th gear output shaft by the 3rd/4th gear synchronizer assembly.

Power transmission route in 4th gear

The 4th gear is positively connected to the 1st to 4th gear output shaft by the 3rd/4th gear synchronizer assembly.

Power transmission route in 5th gear

The 5th gear is positively connected to the 5th/6th/reverse gear output shaft by the 5th/6th gear synchronizer assembly.

Power transmission route in 6th gear

The 6th gear is positively connected to the 5th/6th/reverse gear output shaft by the 5th/6th gear synchronizer assembly.

Power transmission route in reverse gear

The reverse gear idler is welded to the 1st gear. It is constantly engaged with the reverse gear wheel.

The reverse gear wheel is positively connected to the 5th/6th/reverse gear output shaft by the reverse gear synchronizer assembly.

Component Description

Synchronizers

Synchroniser ring for triple synchronisation in 1st/2nd gear

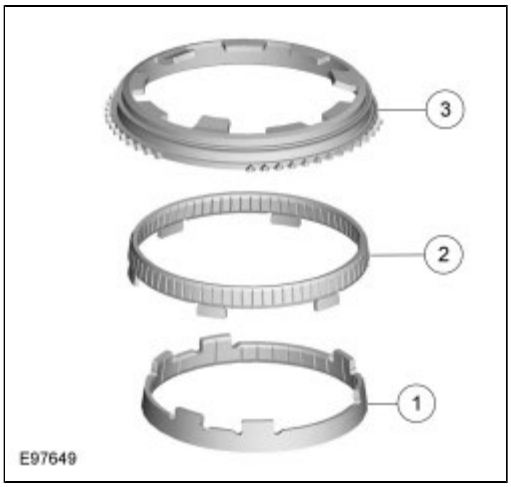

Item	Description
1	Inner synchronizer ring with friction material on the inside
2	Synchronizer cone with friction material on the inside and outside
3	Outer synchronizer ring

Synchronizer rings for 3rd/4th gear double synchronization

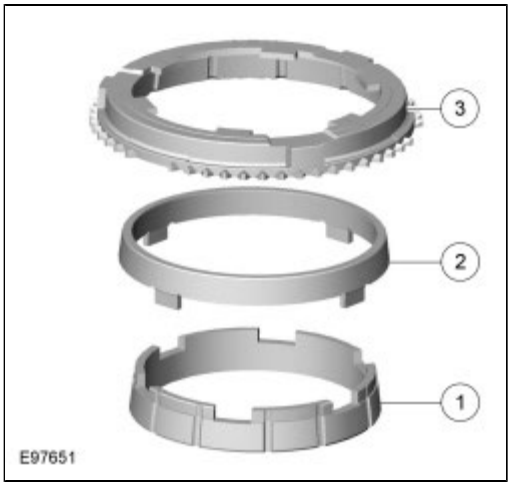

Item	Description
1	Inner synchronizer ring with friction material on the outside
2	Synchronizer cone
3	Outer synchronizer ring with friction material on the inside

Synchronizer rings for single synchronization in 5th/6th/reverse gear

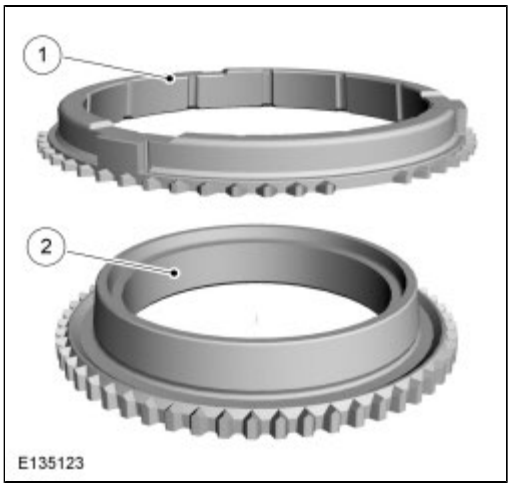

Item	Description
1	Synchronizer ring
2	Synchronizer cone

Internal gearshift mechanism

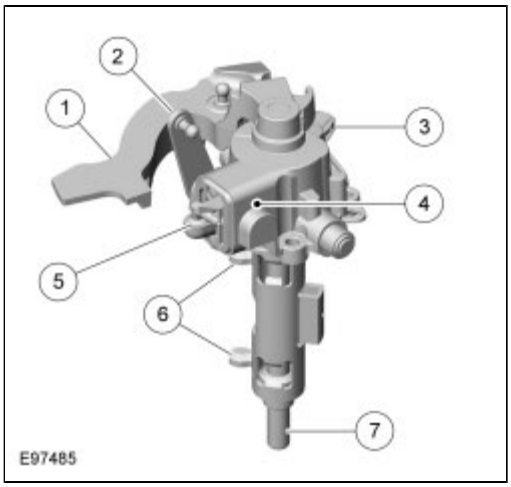

Item	Description
1	Shift arm with integrated shift weight
2	Selector arm
3	Reverse gear switch
4	Gear shift mechanism housing
5	Vent assembly
6	Selector finger
7	Selector shaft

The internal shift mechanism contains the shift gate, a counter balance and reverse gear switch. The reverse gear switch can be serviced. The counter balance and shift gate can only be changed as a complete unit in service.

The shift gate is built into the gear shift mechanism housing.

The reverse gear switch is located on the housing cover of the internal shift mechanism.

The counterbalance built into the shift arm improves the smoothness of the gear shifting. The inertia of the shift weight (counterbalance) reduces the tangible shift resistances of the synchronization during gearshifts. The gearshift process becomes smoother.

Copyright © Ford Motor Company

Halfshaft Seal RH

Removal

1. **WARNING: Before beginning any service procedure in this section, refer to Safety Warnings in section 100-00 General Information. Failure to follow this instruction may result in serious personal injury.**

   Refer to: Health and Safety Precautions (100-00 General Information, Description and Operation).
   Refer to: Jacking and Lifting - Overview (100-02 Jacking and Lifting, Description and Operation).

2.
   1. If equipped.

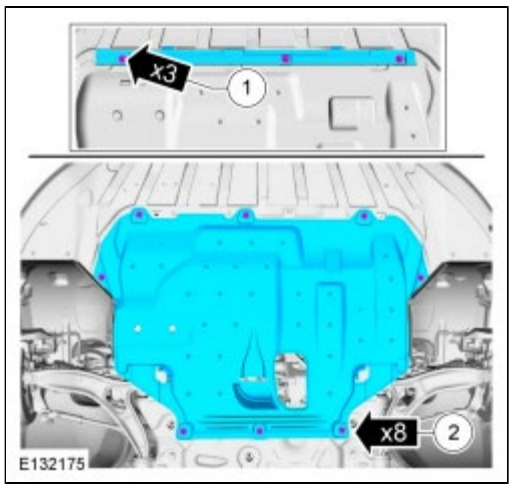

3.

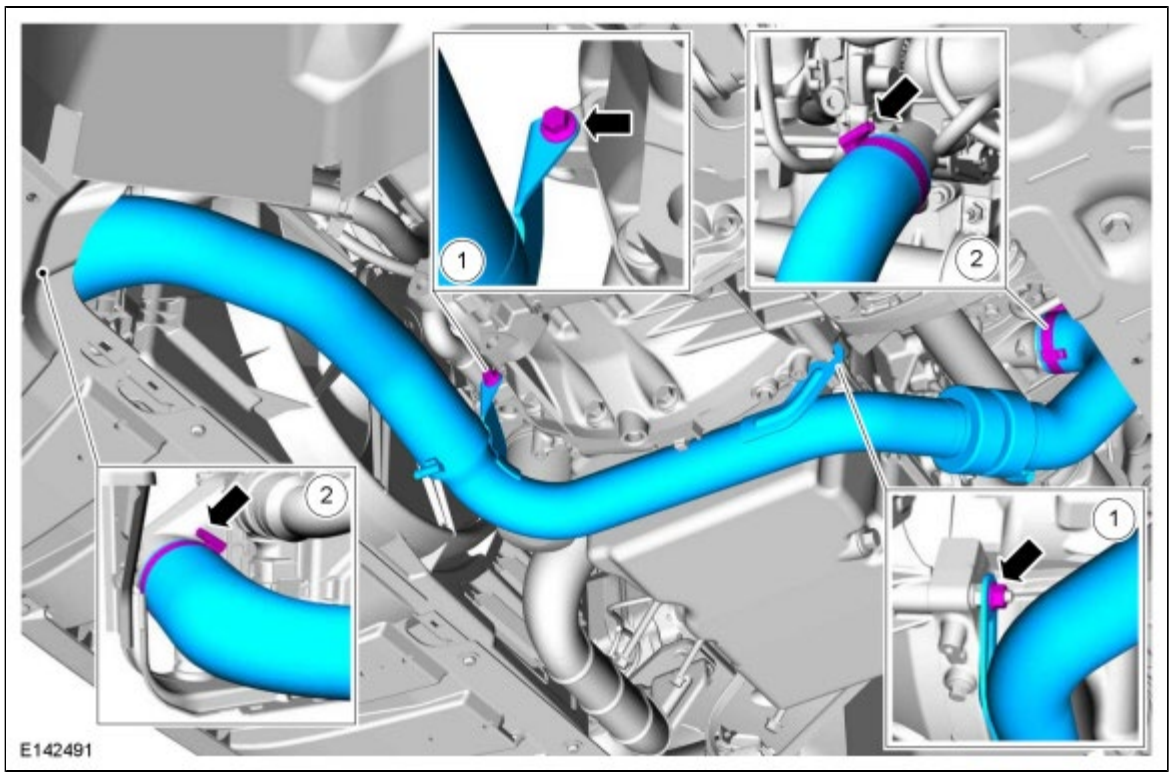

4.

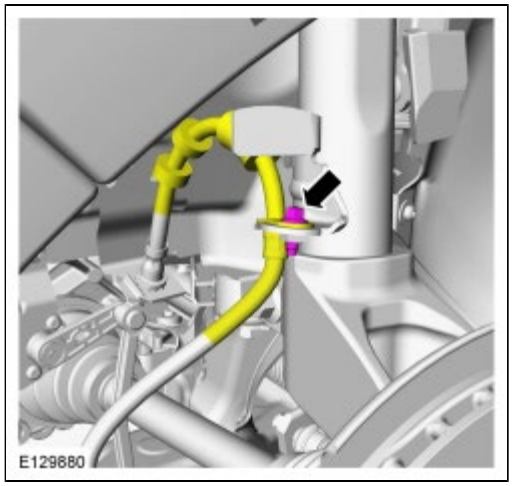

5. **NOTICE: Do not use a prying device or separator fork between the ball joint and the wheel knuckle. Damage to the ball joint or ball joint seal may result. Only use the pry bar by inserting it into the lower arm body opening.**

   NOTICE: Use care when releasing the lower arm and wheel knuckle into the resting position or damage to the ball joint seal may occur.

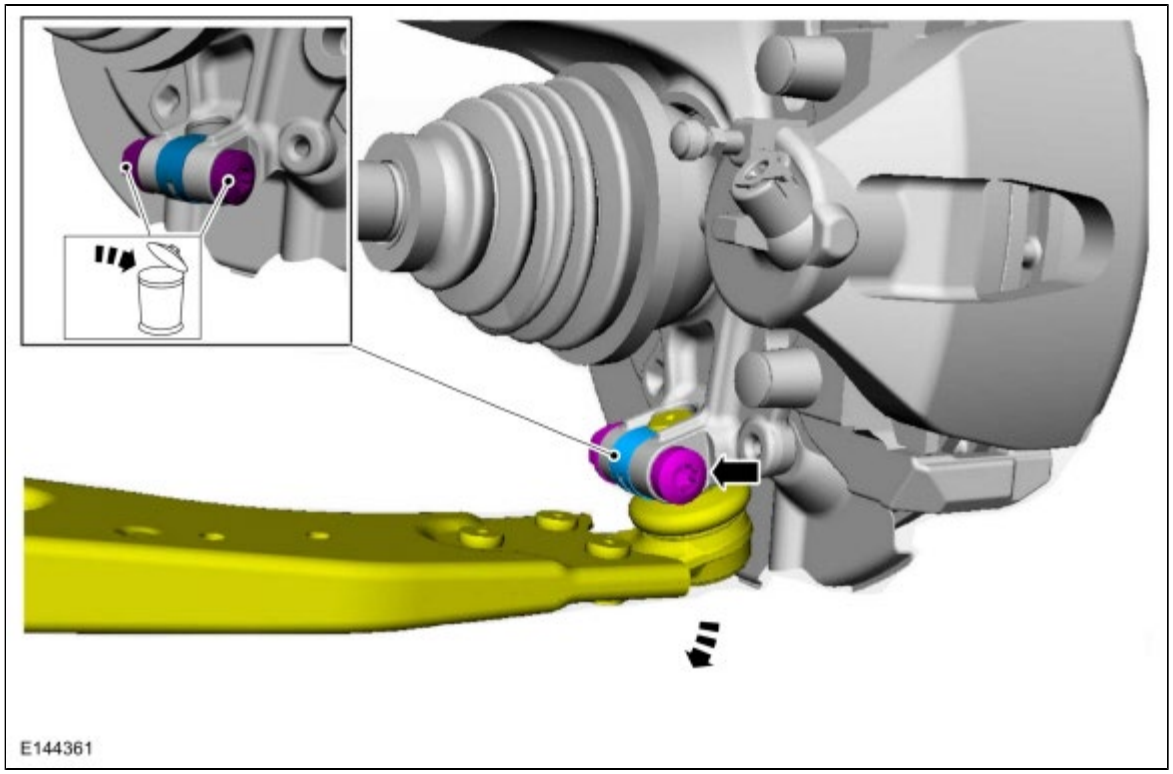

6.

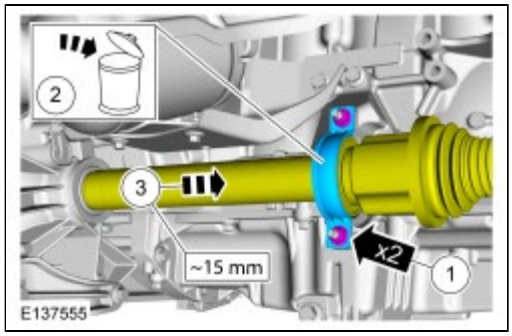

7.

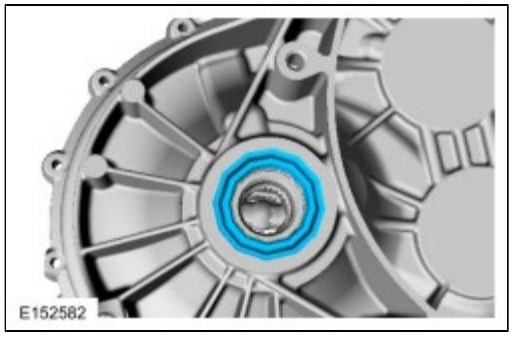

Installation

1. **NOTE:** *Make sure new component is installed.*

   Special Tool(s) : 205-115 Installer, Drive Pinion Seal

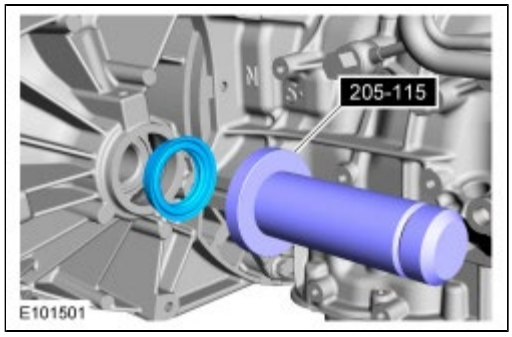

2. **NOTE:** *Do not fully install the halfshaft at this time.*

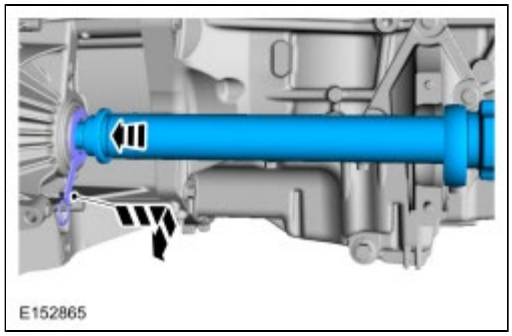

3. **NOTE:** *Insert the intermediate shaft until the intermediate shaft bearing is centered in the concave groove of the intermediate shaft bearing bracket.*

   Connect the following items:
   1.
   2. *Torque* : 5 Nm
   3. *Torque* : 5 Nm
   4. *Torque* : 25 Nm
   5. *Torque* : 25 Nm

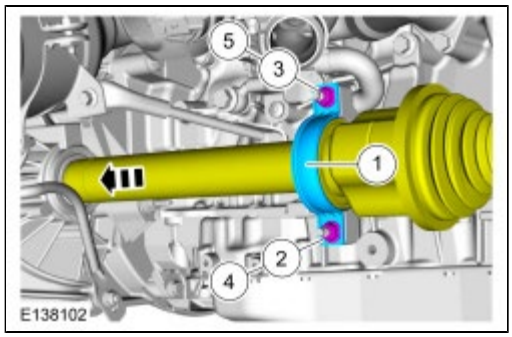

4.

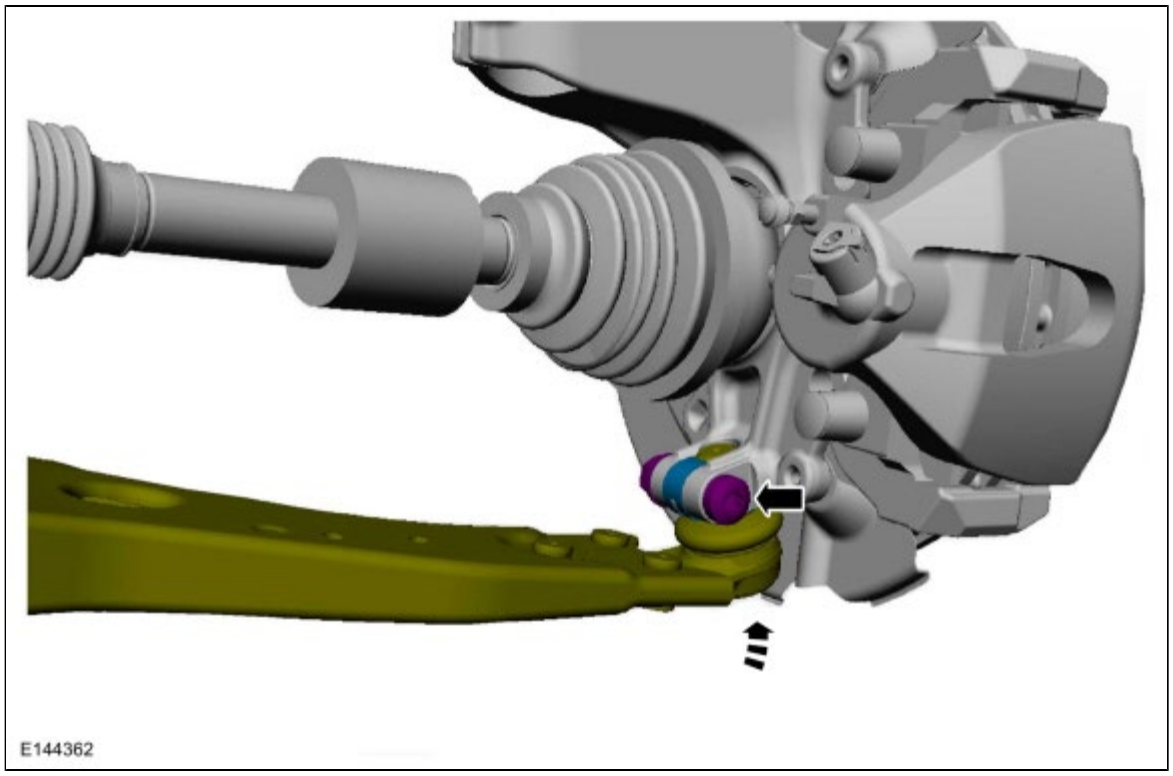

5.

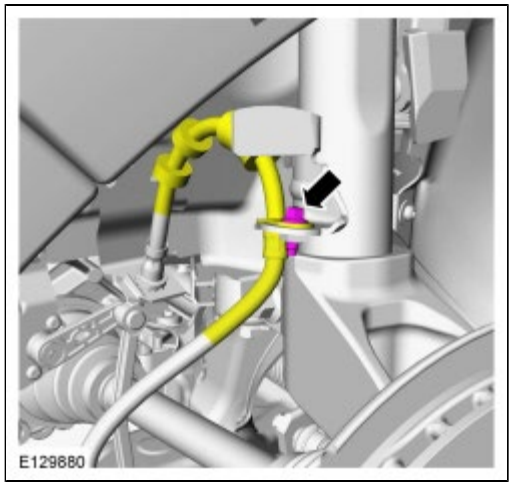

6.

7. Refer to: Transmission Fluid Level Check (308-03B Manual Transmission - Vehicles With: 6-Speed Manual Transmission - MMT6, General Procedures).

8. *Torque* : 10 Nm

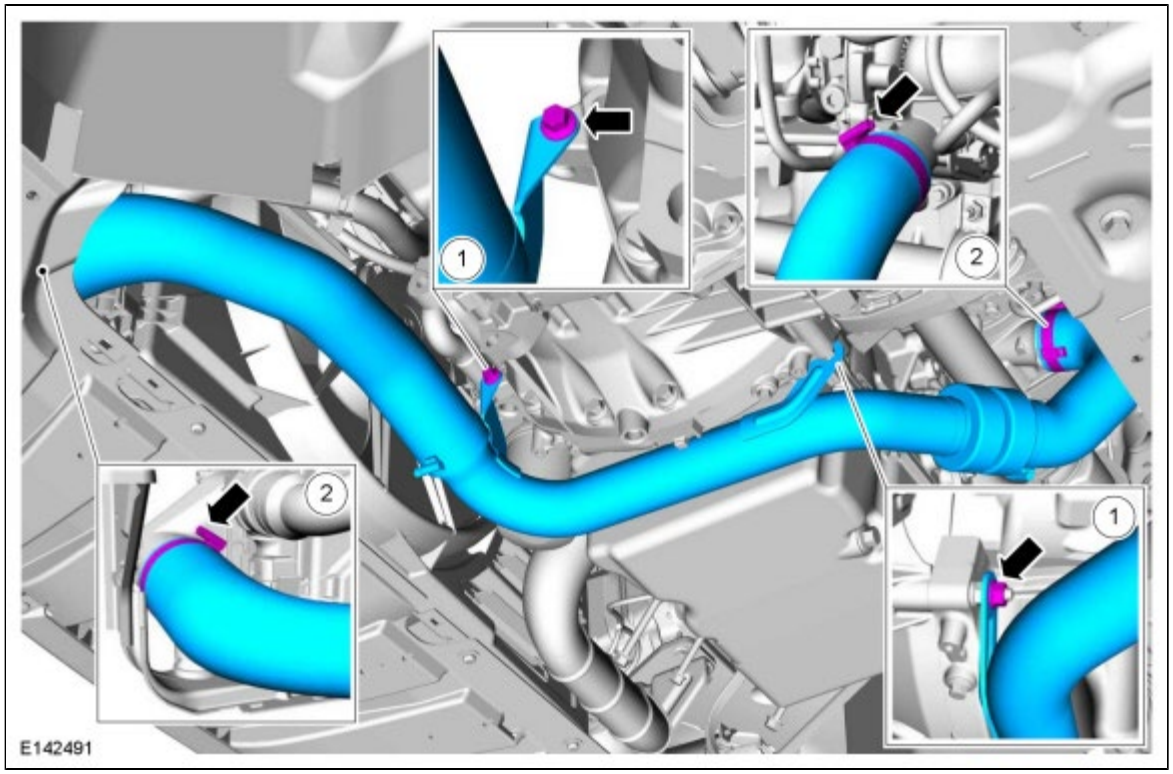

9.

2. If equipped.

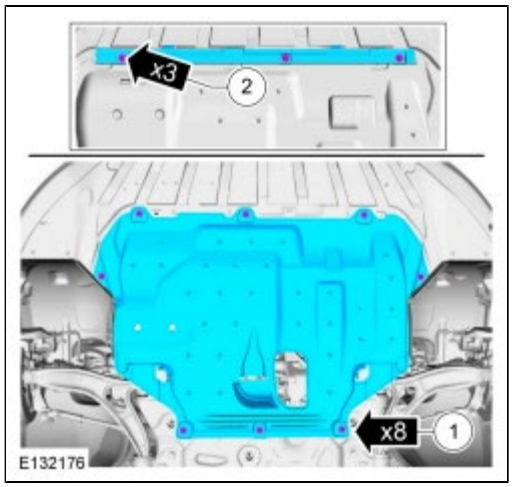

Copyright © Ford Motor Company

Halfshaft Seal LH

Removal

1. Refer to: Health and Safety Precautions (100-00 General Information, Description and Operation).
   Refer to: Jacking and Lifting - Overview (100-02 Jacking and Lifting, Description and Operation).

2.
   1. If equipped.

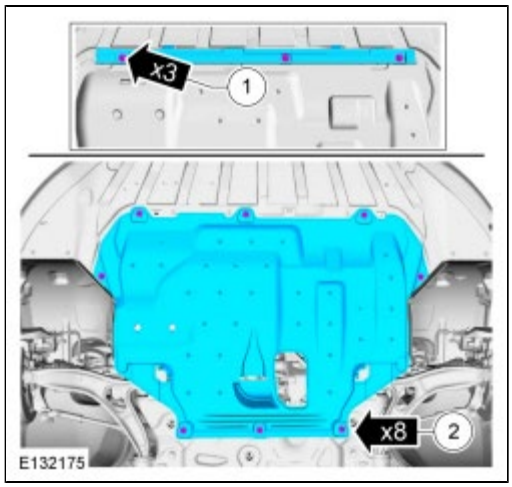

3. Remove the LH halfshaft.
   Refer to: Front Halfshaft LH (205-04 Front Drive Halfshafts, Removal and Installation).

4.

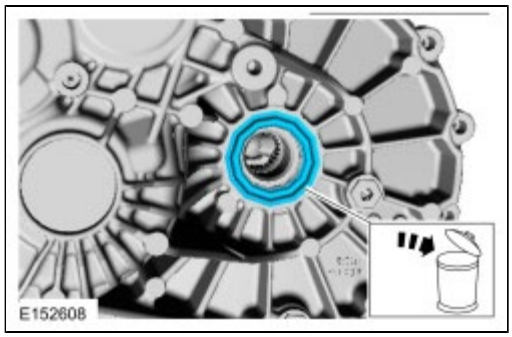

Installation

1. *Special Tool(s)* : 205-115 Installer, Drive Pinion Seal

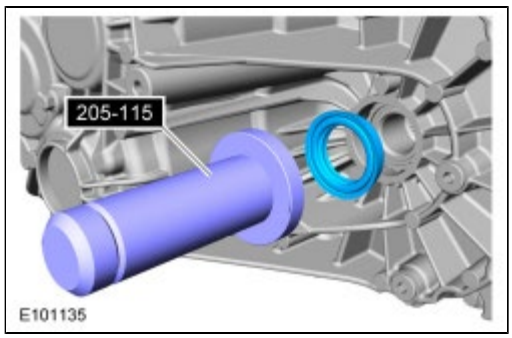

2. Install the LH halfshaft.
   Refer to: Front Halfshaft LH (205-04 Front Drive Halfshafts, Removal and Installation).
   Refer to: Transmission Fluid Level Check (308-03B Manual Transmission - Vehicles With: 6-Speed Manual Transmission - MMT6, General Procedures).

3.
   2. If equipped.

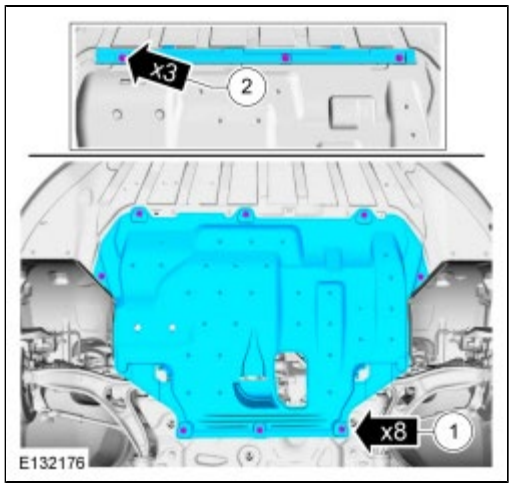

4. Lower the Vehicle.

Copyright © Ford Motor Company

Selector Mechanism

Removal

WARNING: Before beginning any service procedure in this section, refer to Safety Warnings in section 100-00 General Information. Failure to follow this instruction may result in serious personal injury.

1. Refer to: Health and Safety Precautions (100-00 General Information, Description and Operation).
   Refer to: Battery Disconnect and Connect (414-01 Battery, Mounting and Cables, General Procedures).

2.

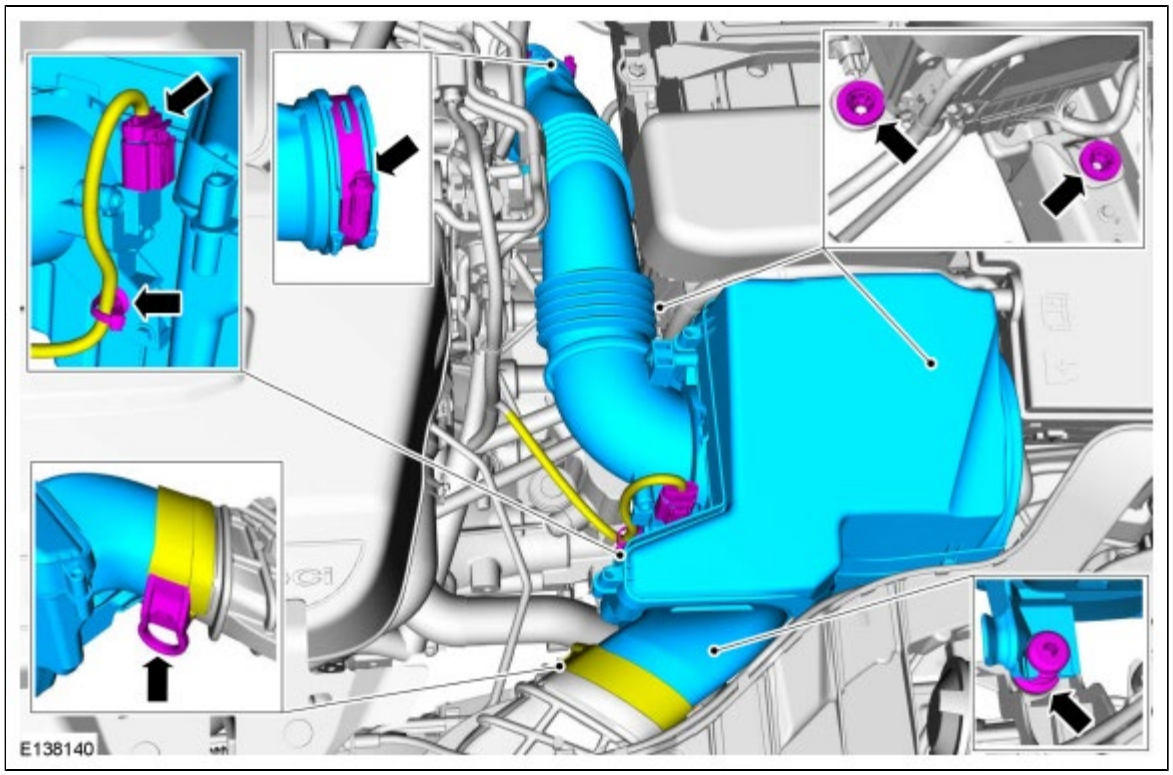

3.

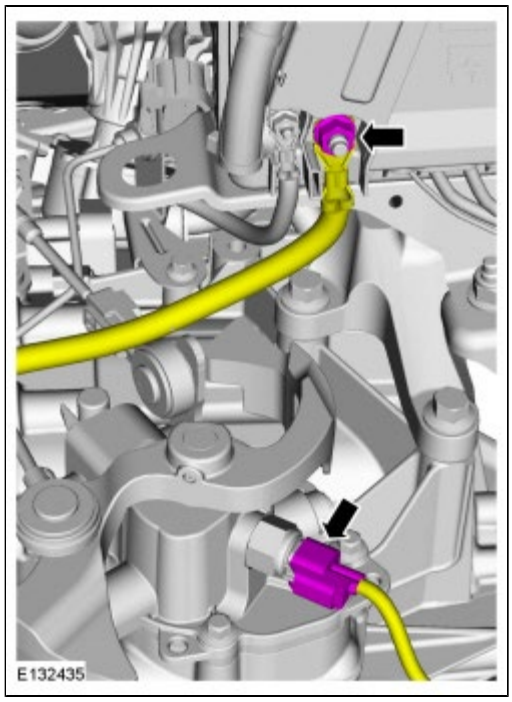

4.

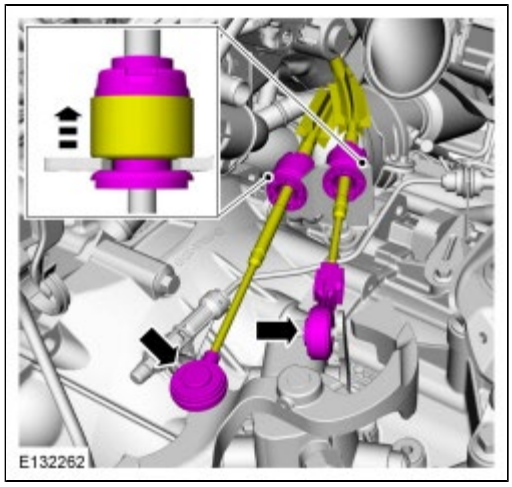

5. Set the manual shift lever in the neutral (N) position.

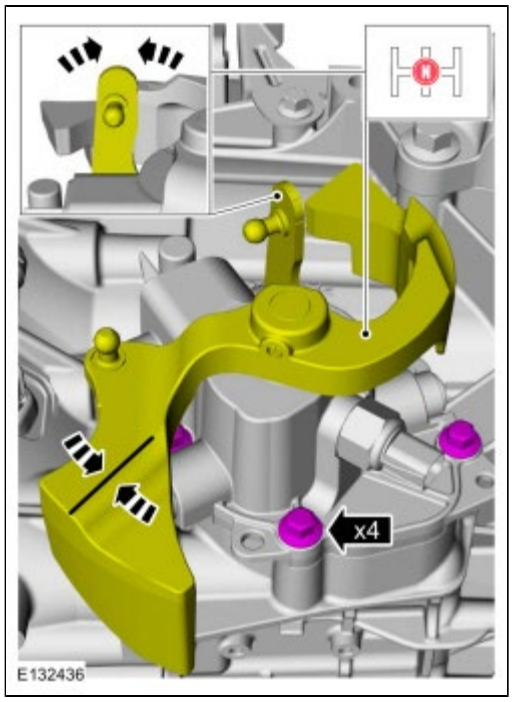

6. Set the manual shift lever in the neutral (N) position.

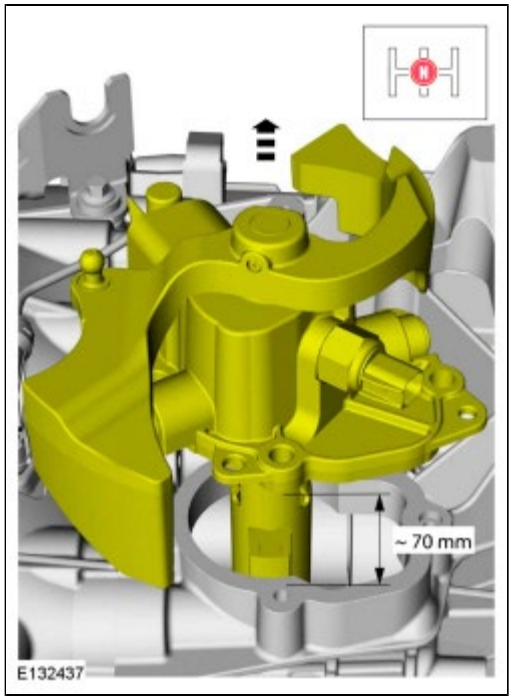

7.
    1. Set the manual shift lever in the neutral (N) position. Turn the component CW through 90 degrees.
    2. **NOTE:** *Make sure that no components catch.*

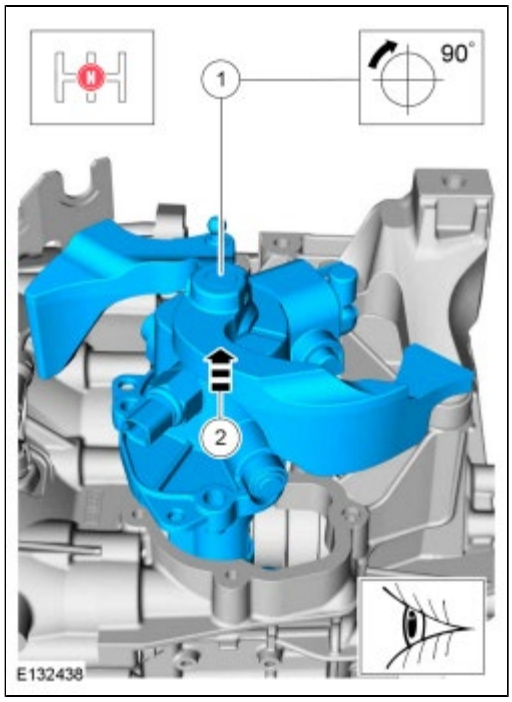

Installation

1. *Material* : Gasket Maker / TA-16 (WSK-M2G348-A5)

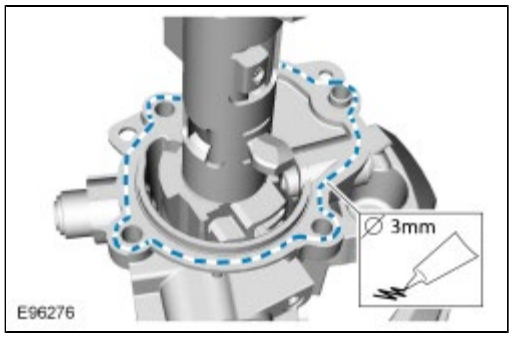

2.

    1. **NOTE:** *Make sure that no components catch.*

       Set the manual shift lever to the neutral (N) position. Visual check.

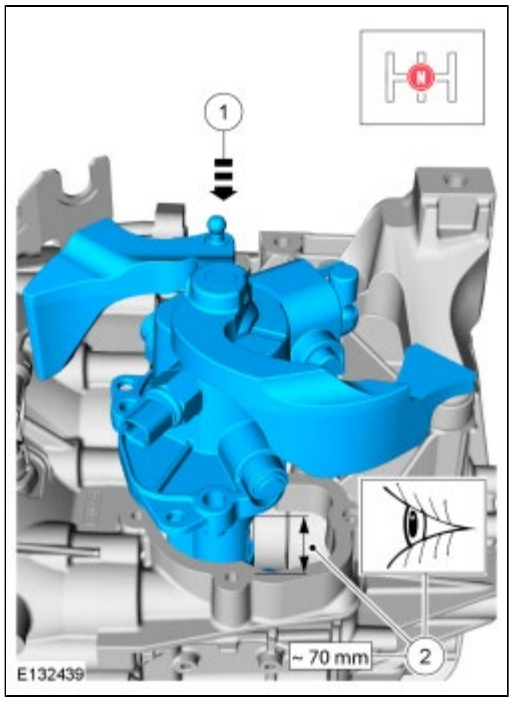

3.
    1. Set the manual shift lever to the neutral (N) position. Turn the componenet CCW through 90 degrees.
    2. **NOTE:** *Make sure that no components catch.*

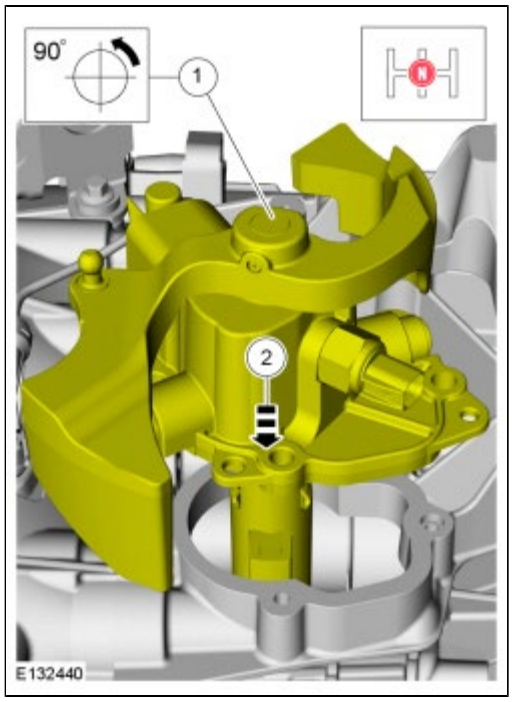

4. *Torque* : 26 Nm

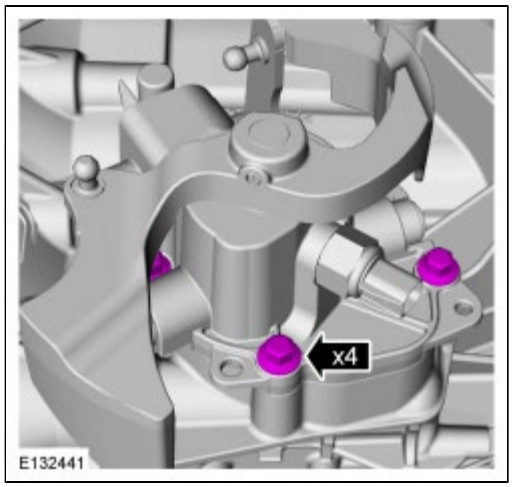

5. Refer to: Gearshift Cable Adjustment - Vehicles With: 6-Speed Manual Transmission - MMT6 (308-06 Manual Transmission External Controls, General Procedures).

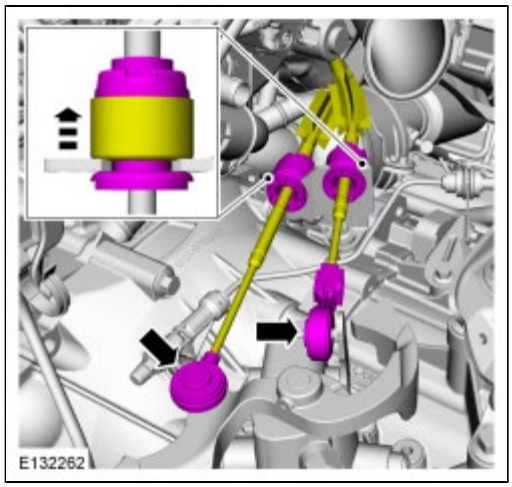

6. *Torque* : 24 Nm

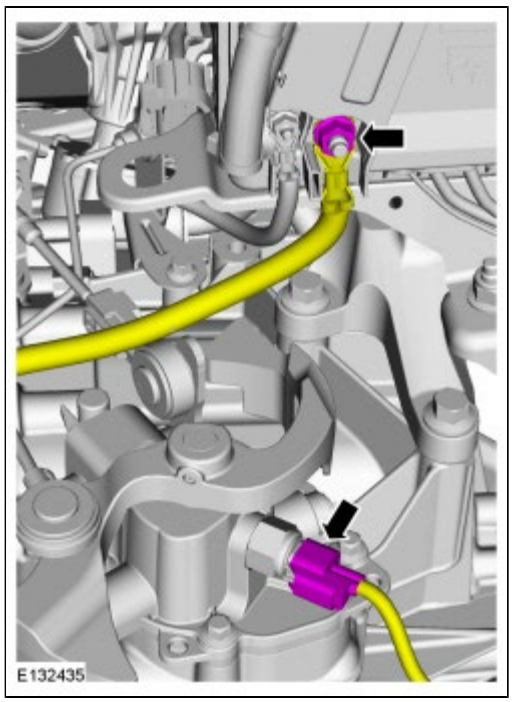

7.

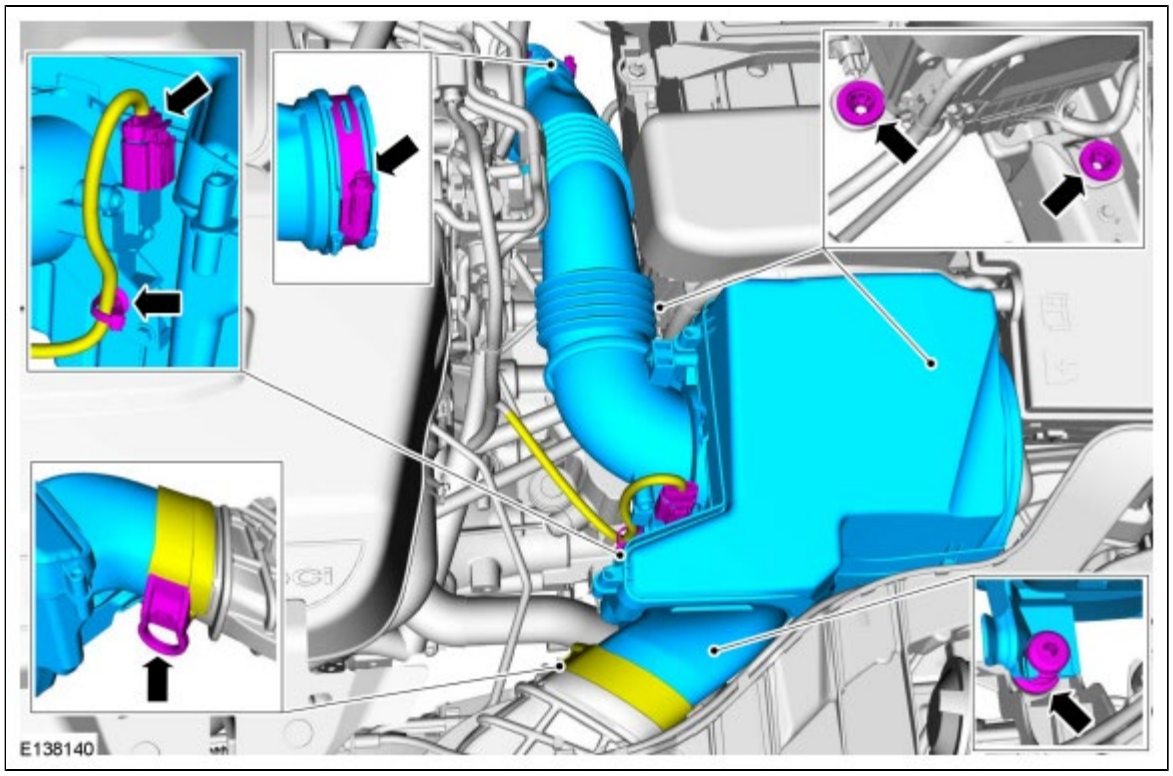

8. Refer to: Battery Disconnect and Connect (414-01 Battery, Mounting and Cables, General Procedures).

Copyright © Ford Motor Company

Input Shaft Seal

Removal

1. **WARNING: Before beginning any service procedure in this section, refer to Safety Warnings in section 100-00 General Information. Failure to follow this instruction may result in serious personal injury.**

   Refer to: Health and Safety Precautions (100-00 General Information, Description and Operation).

2. Refer to: Transmission - 2.0L EcoBoost (184kW/250PS) - MI4 (308-03B Manual Transmission - Vehicles With: 6-Speed Manual Transmission - MMT6, Removal).

3. 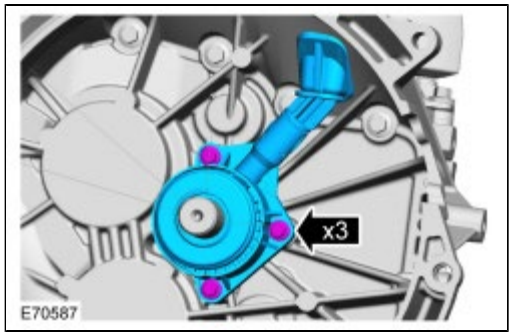

4. **NOTICE: Take extra care not to damage the bearing.**

   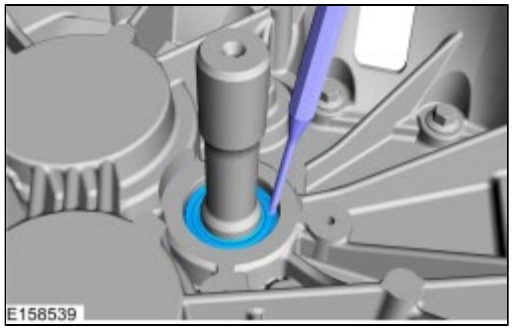

5.
   1. 2.5 x 15 mm self-tapping screw. Screwdriver. Turn the component CW through 2 complete turns.
   2. Combination pliers.

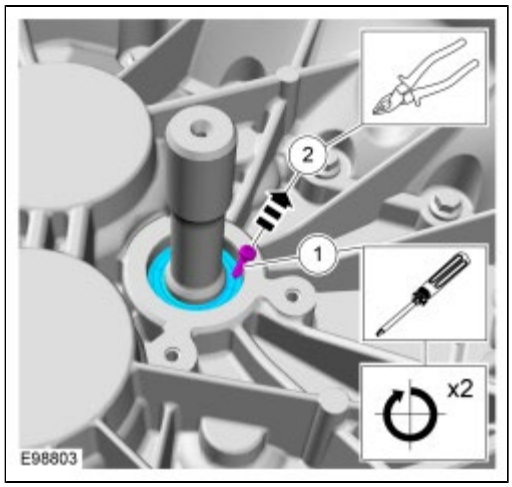

Installation

1.

    1. **NOTICE: Use adhesive tape to cover the input shaft splines to prevent damage to the input shaft seal.**

       Apply tape to specified component or area.
       General Equipment : Adhesive Tape

    2. **NOTE:** *Make sure that a new component is installed.*

    3. *Special Tool(s)* : 308-112 Installer, Output Drive Flange Seal
    4. Discard the specified component. Follow local disposal regulations.

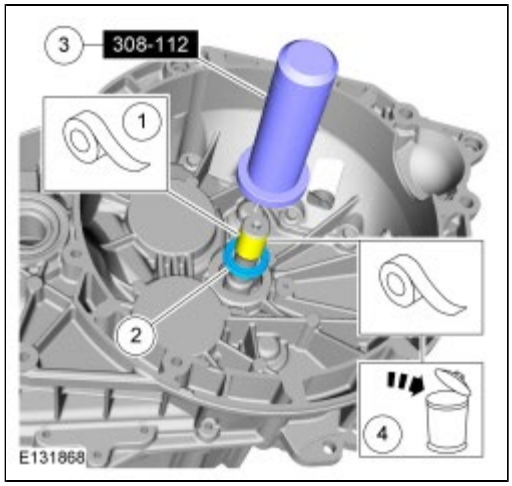

2. *Torque* : 11 Nm

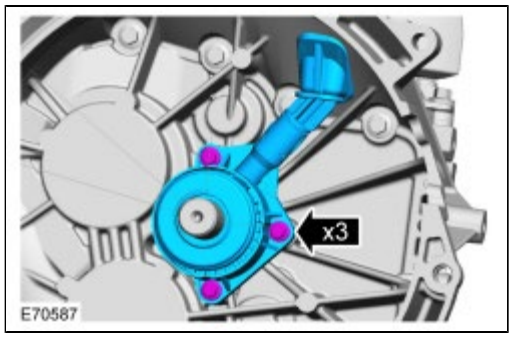

Copyright © Ford Motor Company

Specifications

Capacities

	Liters
Transmission fluid (0- 5 mm below the lower edge of the inspection hole)	1.9

Transmission ratios

	2.0L engine
1st gear	3.667
2nd gear	2.136
3rd gear	1.448
4th gear	1.028
5th gear	0.805
Reverse gear	3.727
Final drive	3.824

Shim thickness required

Description	Input shaft	Output shaft	Differential assembly
Measuring shims (mm)	1.00	1.00	1.10
Measured end float (example) (mm)	+ 0.22	+ 0.32	+ 0.36
Preload figure (mm)	–	+ 0.13	+ 0.33
End float (mm)	– 0.07	–	–
Required shim thickness (example) (mm)	= 1.15	= 1.45	= 1.79
Shims available (mm)	1.15 – 1.71 (in steps of 0.01 mm)	1.31 – 1.91 (in steps of 0,02 mm)	1.40 – 2.20 (in steps of 0.05 mm)

Copyright © Ford Motor Company

Halfshaft Seal LH

Removal

WARNING: Before beginning any service procedure in this section, refer to Safety Warnings in section 100-00 General Information. Failure to follow this instruction may result in serious personal injury.

1. Refer to: Health and Safety Precautions (100-00 General Information, Description and Operation).
   Refer to: Jacking and Lifting - Overview (100-02 Jacking and Lifting, Description and Operation).

2.
   1. If equipped.

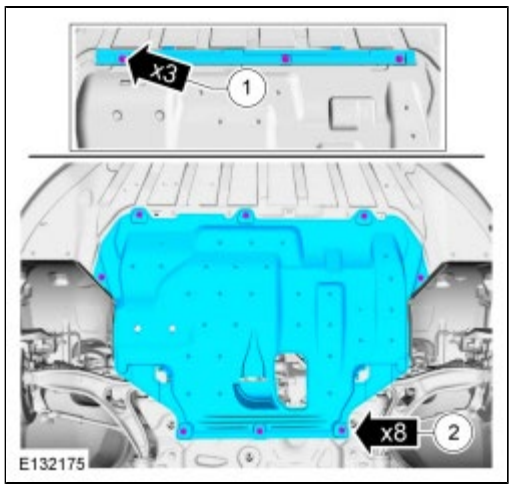

3. Refer to: Front Halfshaft LH (205-04 Front Drive Halfshafts, Removal and Installation).

4. *Special Tool(s)* : 308-208 Remover, Halfshaft Seal

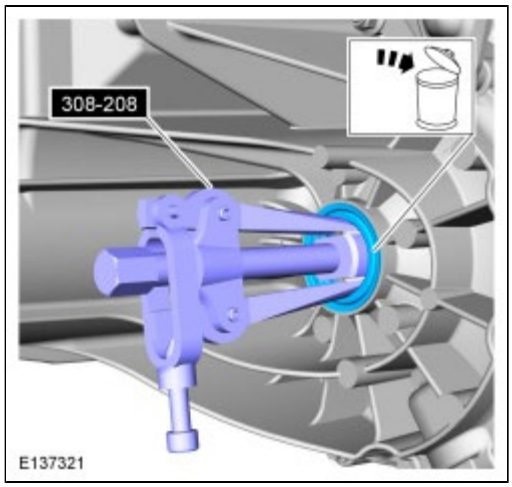

Installation

1. *Special Tool(s)* : 205-115 Installer, Drive Pinion Seal

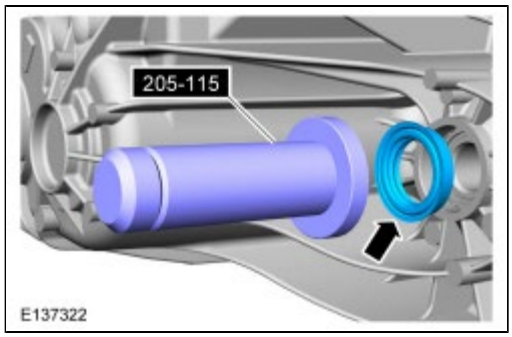

2. Refer to: Front Halfshaft LH (205-04 Front Drive Halfshafts, Removal and Installation).
   Refer to: Transmission Fluid Level Check (308-03A Manual Transmission - Vehicles With: 5-Speed Manual Transmission - MTX75, General Procedures).

3.
   2. If equipped.

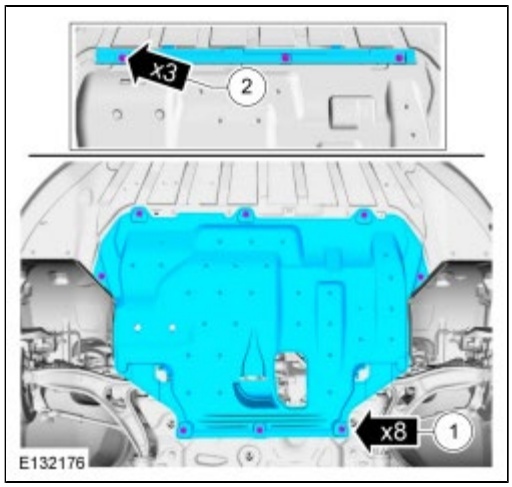

4. Lower the Vehicle.

Copyright © Ford Motor Company

Halfshaft Seal RH

Removal

WARNING: Before beginning any service procedure in this section, refer to Safety Warnings in section 100-00 General Information. Failure to follow this instruction may result in serious personal injury.

1. Refer to: Health and Safety Precautions (100-00 General Information, Description and Operation).
   Refer to: Jacking and Lifting - Overview (100-02 Jacking and Lifting, Description and Operation).

2.
   1. If equipped.

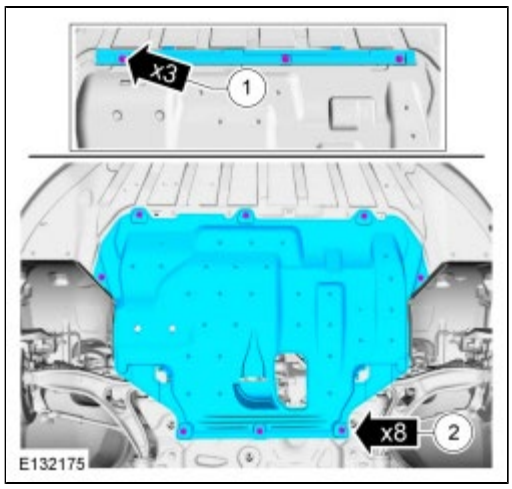

3. Refer to: Front Halfshaft RH (205-04 Front Drive Halfshafts, Removal and Installation).

4. *Special Tool(s)* : 308-208 Remover, Halfshaft Seal

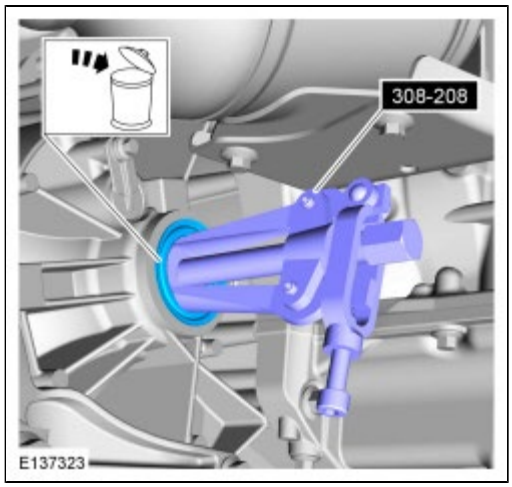

Installation

1. *Special Tool(s)* : 205-115 Installer, Drive Pinion Seal

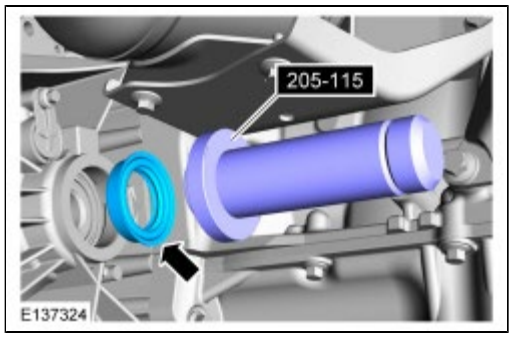

2. Refer to: Front Halfshaft RH (205-04 Front Drive Halfshafts, Removal and Installation).
   Refer to: Transmission Fluid Level Check (308-03A Manual Transmission - Vehicles With: 5-Speed Manual Transmission - MTX75, General Procedures).

3.
   2. If equipped.

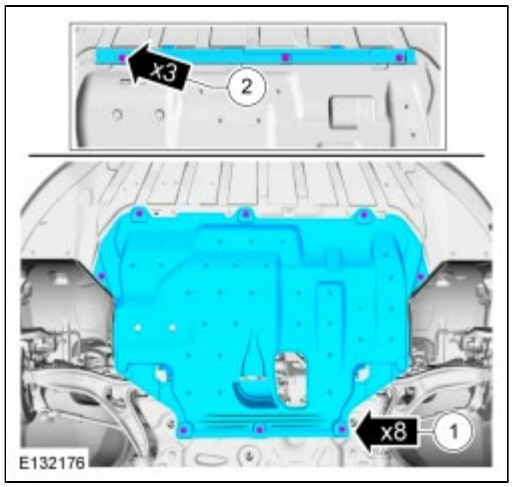

4. Lower the Vehicle.

Copyright © Ford Motor Company

Selector Mechanism

Removal

WARNING: Before beginning any service procedure in this section, refer to Safety Warnings in section 100-00 General Information. Failure to follow this instruction may result in serious personal injury.

1. Refer to: Health and Safety Precautions (100-00 General Information, Description and Operation).
2. Refer to: Jacking and Lifting - Overview (100-02 Jacking and Lifting, Description and Operation).
3.
    1. If equipped.
    2. If equipped.

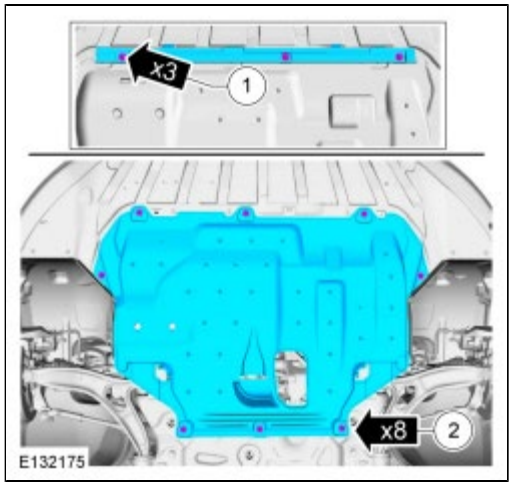

4. Lower the Vehicle.
5. Install the following items:
    - *General Equipment* : Trolley Jack
    - *General Equipment* : Wooden Block

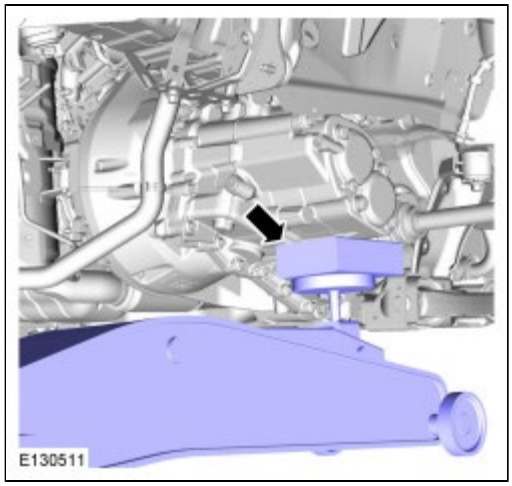

6. Refer to: Air Cleaner (303-12A Intake Air Distribution and Filtering - 2.0L Duratec-HE (125kW/170PS) - MI4, Removal and Installation).
   Refer to: Battery Tray (414-01 Battery, Mounting and Cables, Removal and Installation).

7.

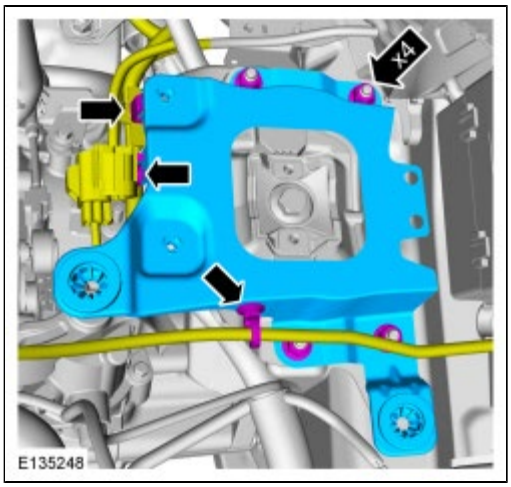

8.

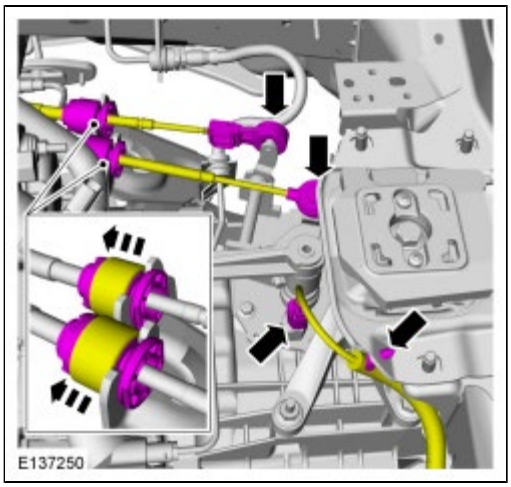

9.

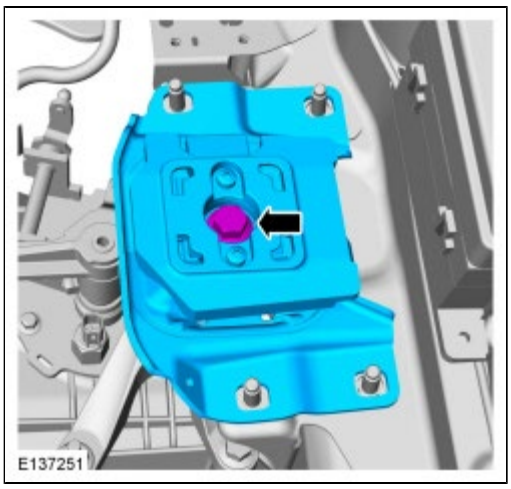

10.

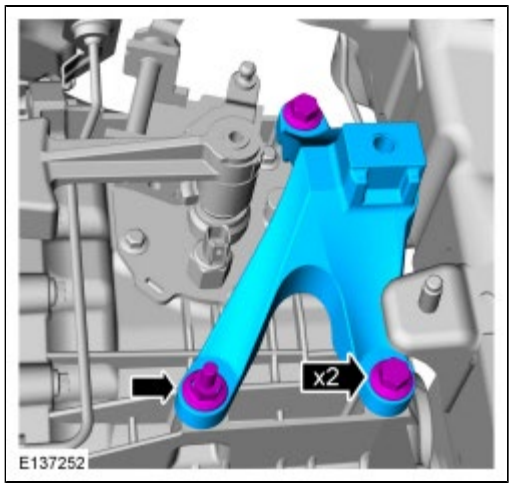

11.

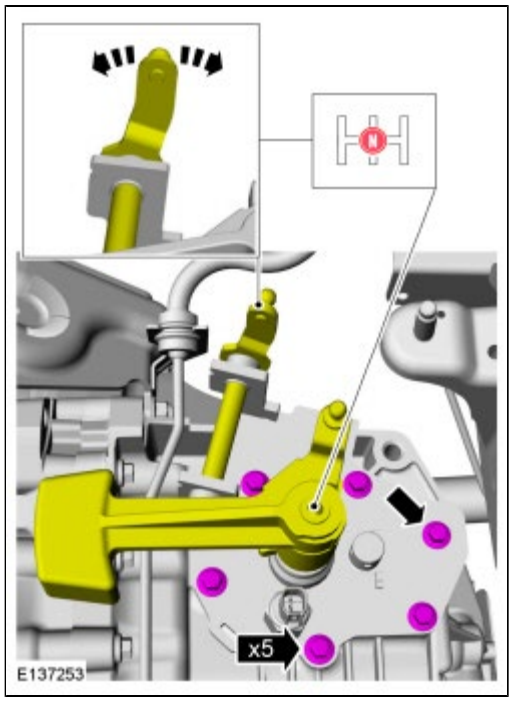

12. **NOTICE: Make sure that the wiring harness does not catch.**

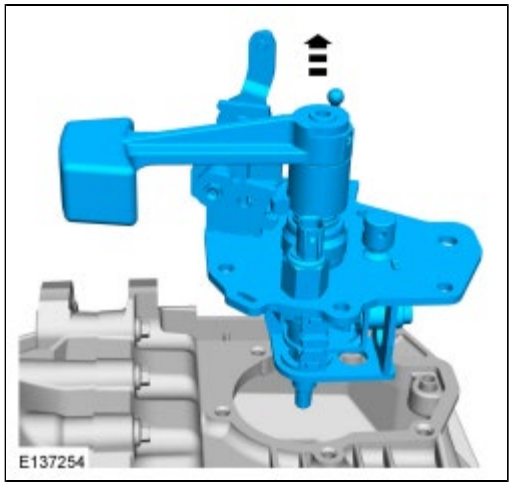

Installation

1.

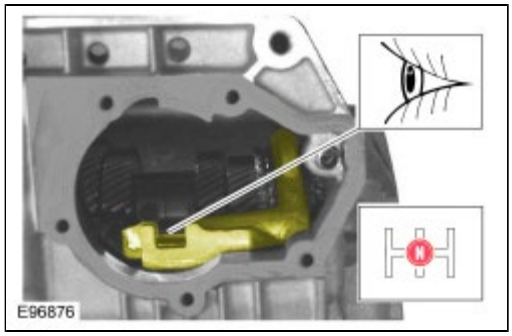

2. **NOTE:** *Make sure that the mating faces are clean and free of foreign material.*

   Material : Gasket Maker / TA-16 (WSK-M2G348-A5)

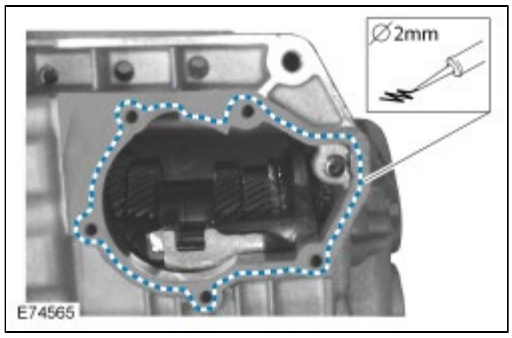

3. **NOTICE: Make sure that the wiring harness does not catch.**

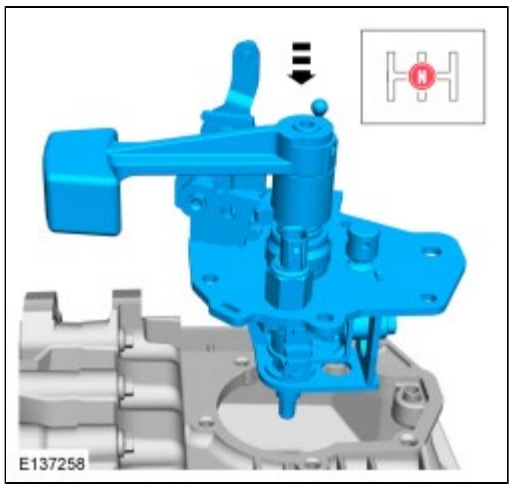

4. **NOTE:** *Note the different lengths of the bolts.*

   1. *Torque* : 26 Nm
   2. *Torque* : 26 Nm

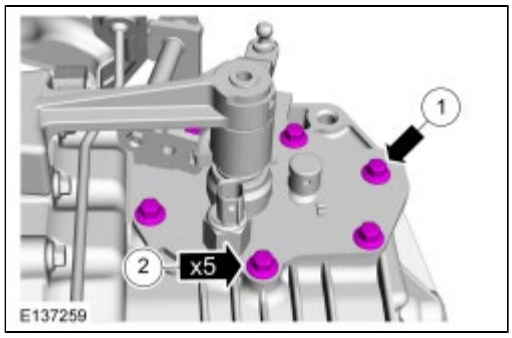

5. *Torque* : 80 Nm

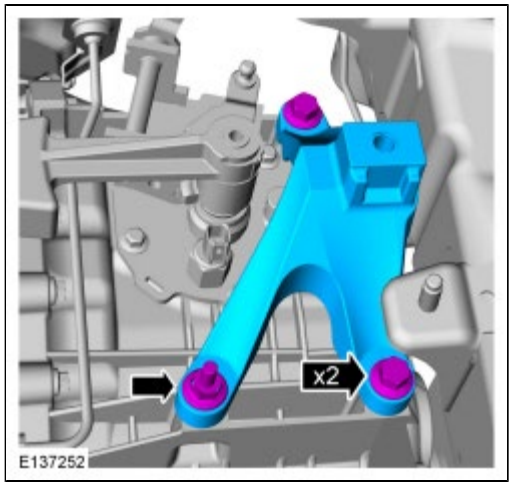

6.

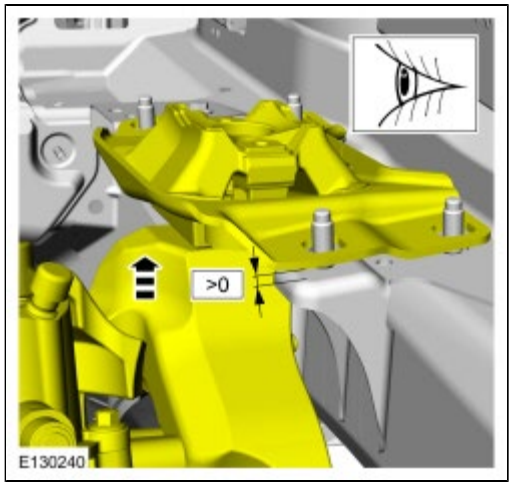

7. **WARNING: Make sure that a new bolt is installed.**

   Torque : 148 Nm

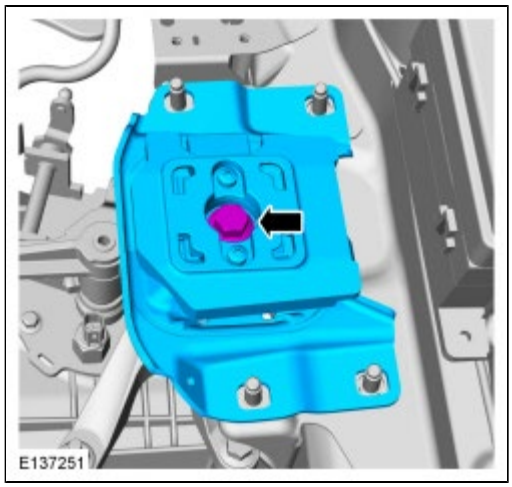

8. Refer to: Gearshift Cable Adjustment - Vehicles With: 5-Speed Manual Transmission - MTX75 (308-06 Manual Transmission External Controls, General Procedures).

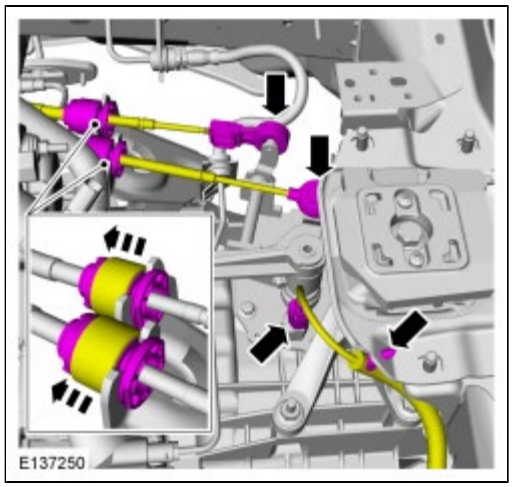

9. *Torque* : 48 Nm

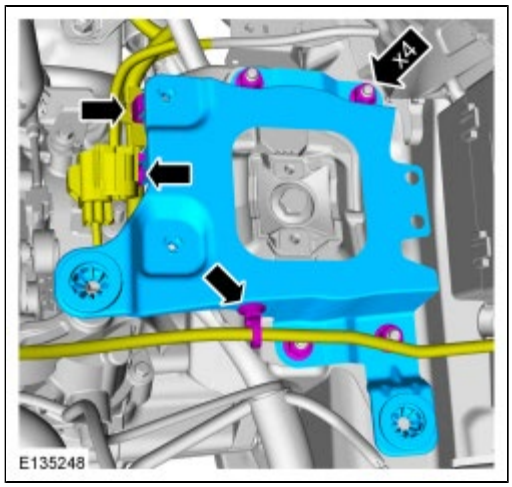

10. Refer to: Battery Tray (414-01 Battery, Mounting and Cables, Removal and Installation).
    Refer to: Battery (414-01 Battery, Mounting and Cables, Removal and Installation).
    Refer to: Air Cleaner (303-12A Intake Air Distribution and Filtering - 2.0L Duratec-HE (125kW/170PS) - MI4, Removal and Installation).

11. Remove the following items:
    - *General Equipment* : Wooden Block
    - *General Equipment* : Trolley Jack

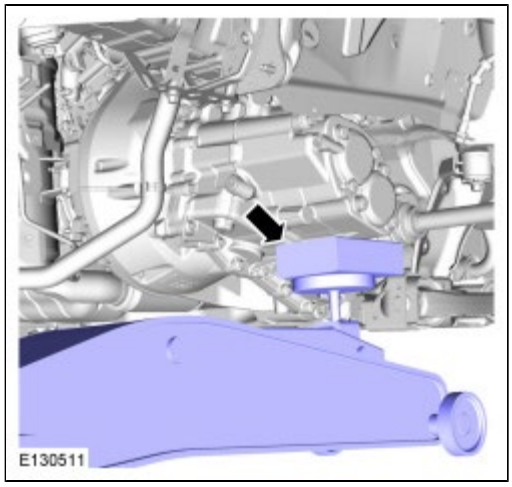

12. Refer to: Jacking and Lifting - Overview (100-02 Jacking and Lifting, Description and Operation).

13.

1. If equipped.
2. If equipped.

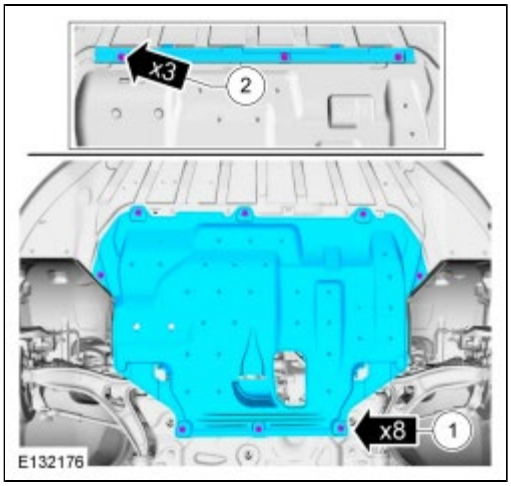

14. Lower the Vehicle.

Copyright © Ford Motor Company

3rd-4th Gear Synchronizer

Removal

WARNING: Before beginning any service procedure in this section, refer to Safety Warnings in section 100-00 General Information. Failure to follow this instruction may result in serious personal injury.

1. Refer to: Health and Safety Precautions (100-00 General Information, Description and Operation).
2.
   1. *Install Special Service Tool* : 205-329 Mounting Bracket, Engine/Differential , 303-435 Mounting Stand , 303-435-06 Mounting Bracket for 303-435
   3. Set the manual shift lever to the neutral (N) position.
   4. **NOTE:** *Note the different lengths of the bolts.*
   5. **WARNING: Be prepared to collect escaping fluid.**

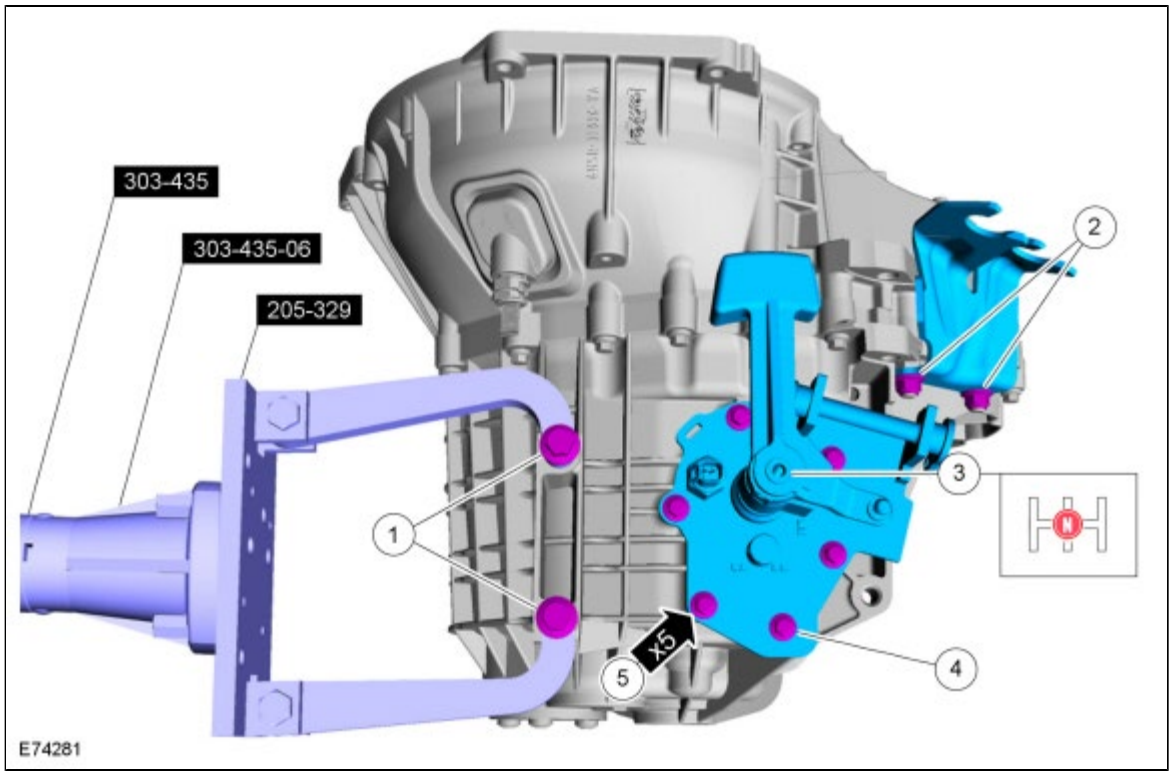

3. Discard the specified component. Follow local disposal regulations.
   Special Tool(s) : 308-208 Remover, Halfshaft Seal

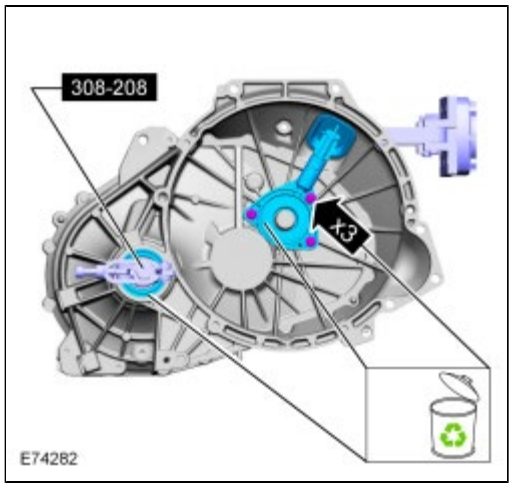

4. Discard the specified component. Follow local disposal regulations.
   Special Tool(s) : 308-208 Remover, Halfshaft Seal

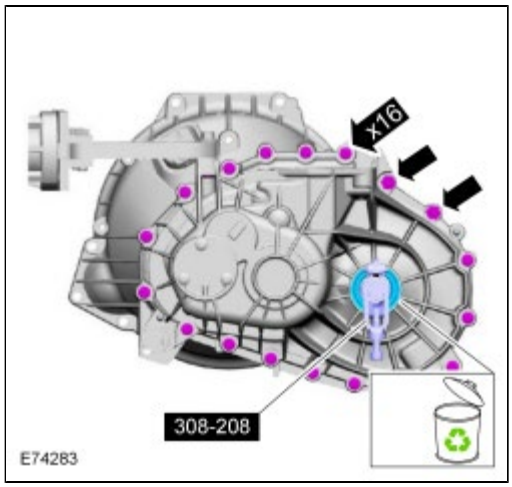

5.

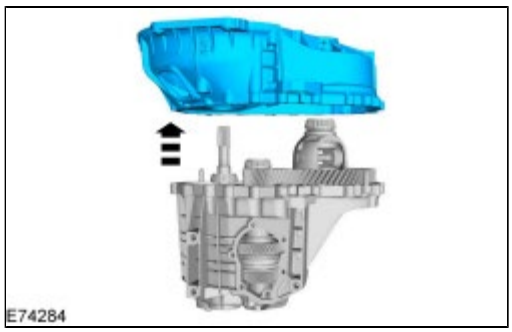

6.

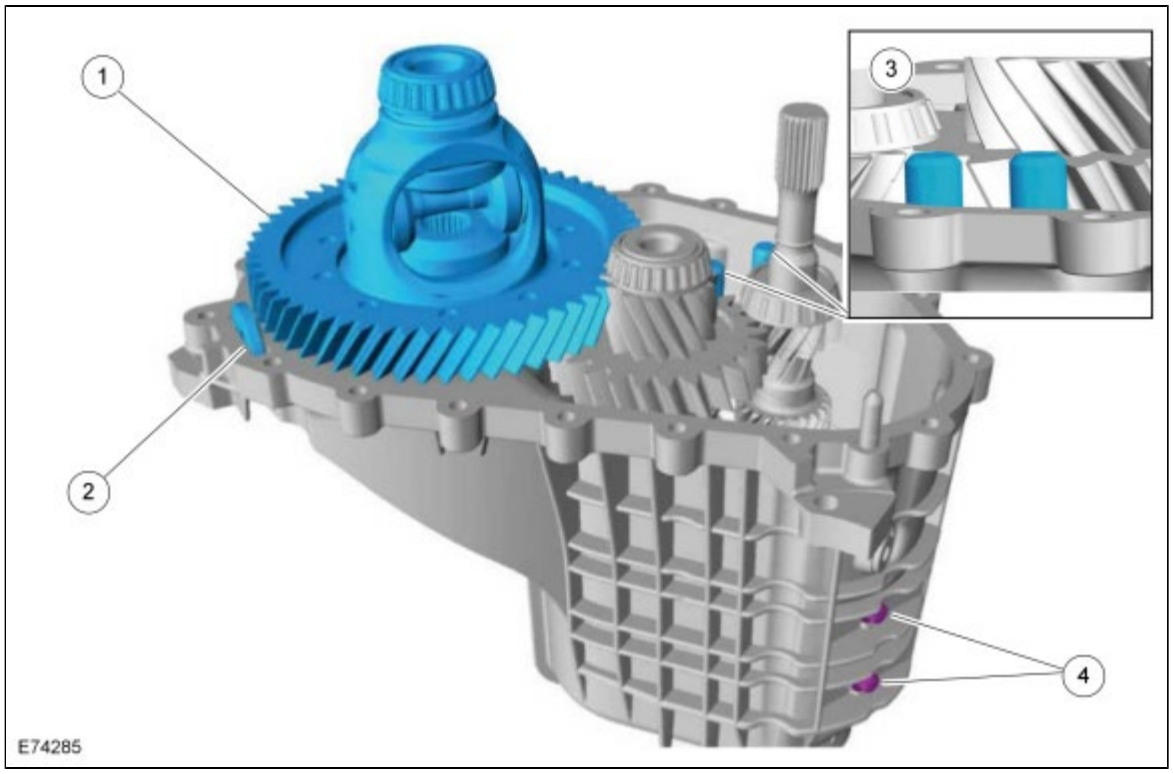

7. **NOTE:** *Note the position of the components before removal.*

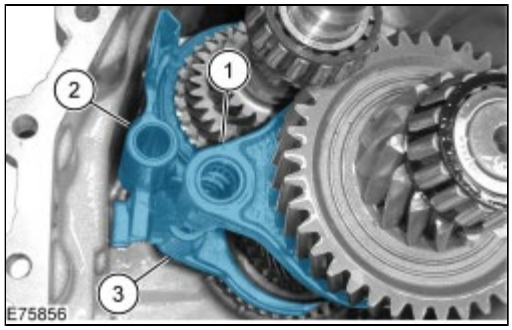

8.

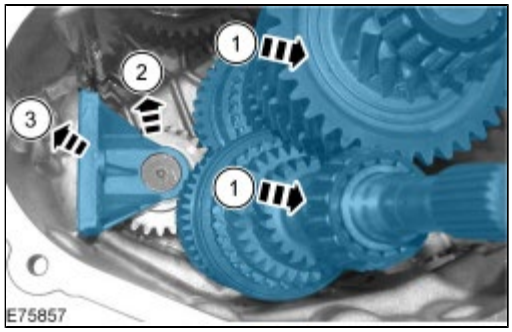

9.

10. **NOTE:** *Note the position of the components before removal.*

    General Equipment : Vise Jaw Protectors

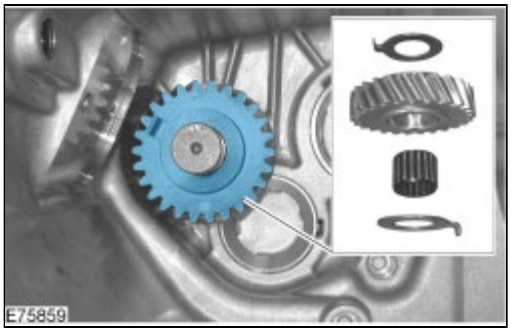

NOTICE: Use vise jaw protectors.

11. Remove the following items:
    1. Roller bearing. Discard the specified component. Follow local disposal regulations.
       Special Tool(s) : 205-295 Remover, Bearing (Main Tool) , 308-195 Collet for 205-295

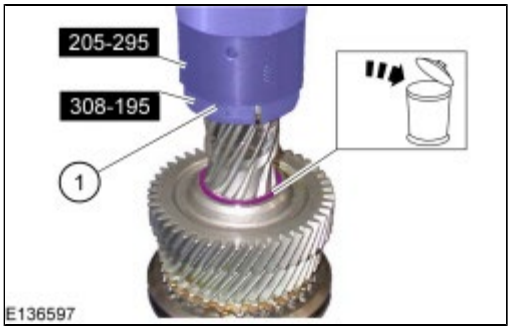

12. *Special Tool(s)* : 308-230 Support Plate, Gear Removal (Dia 85.1 mm)
    General Equipment : Hydraulic Press

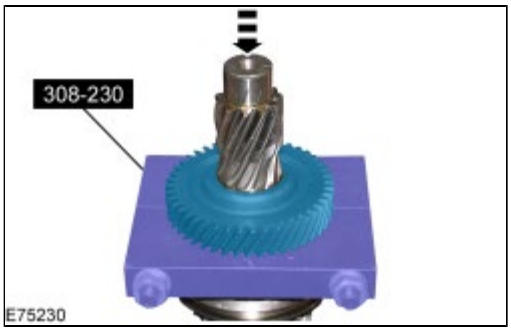

13. Discard the specified component. Follow local disposal regulations.

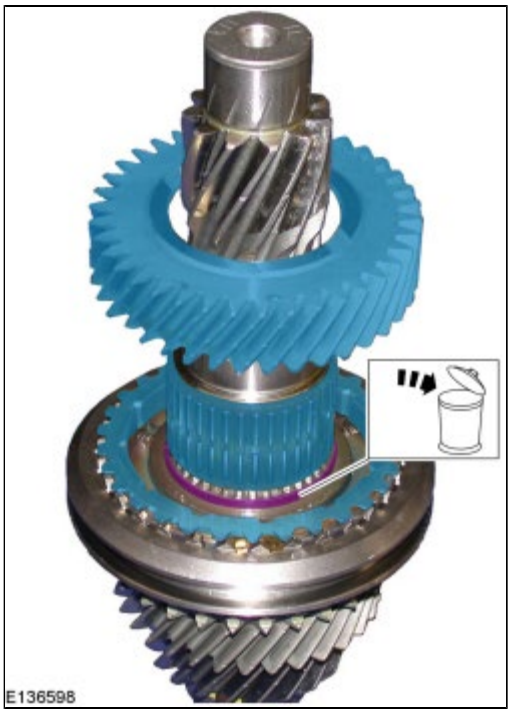

14.

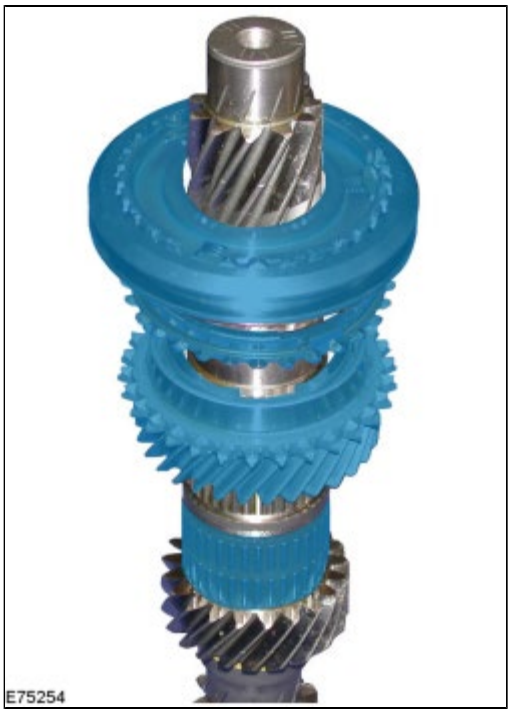

15. **NOTE:** *Note the position of the components before removal.*

Disassemble the following items:

1.
2.
3.
4.
5.

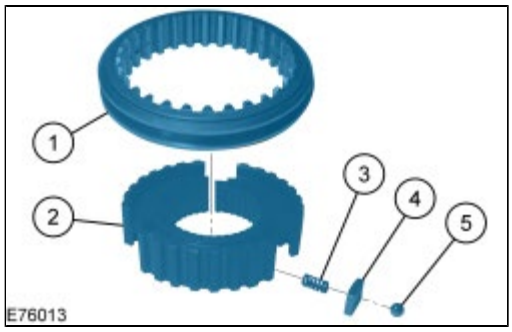

Installation

NOTICE: Use vise jaws protectors.

1. **NOTE:** *Make sure that the components are installed to the position noted before removal.*

   Lubricate the synchronizer rings with manual transmission fluid before assembly.
   Material : Motorcraft® Dual Clutch Transmission Fluid / XT-11-QDC (WSS-M2C200-D2)

2. Assemble the following items:
   1.
   2.
   3.

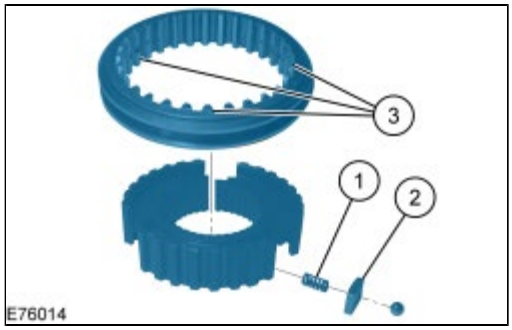

3.

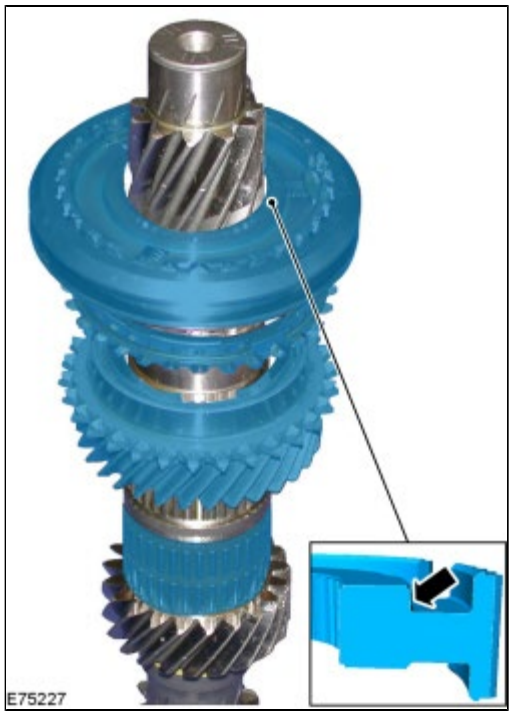

4. **NOTE:** *Make sure that a new component is installed.*

5. *Special Tool(s)* : 205-068 Installer, Drive Pinion Bearing
   General Equipment : Hydraulic Press

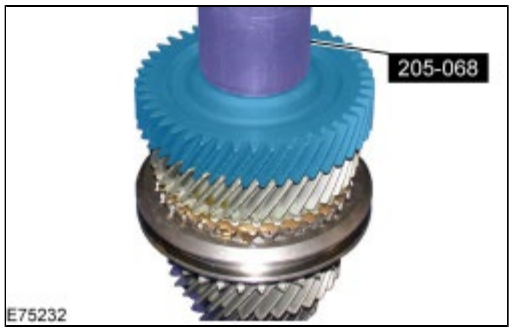

6. Install the following items:

   1. **NOTE:** *Make sure that a new component is installed.*

   2. *Special Tool(s)* : 308-044 Installer, Transmission Extension Housing Bushing/Seal

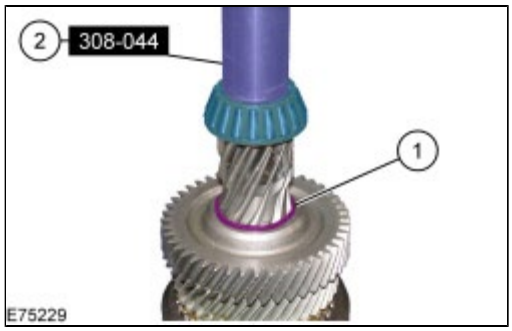

7. **NOTE:** *Make sure that the components are installed to the position noted before removal.*

8. Keep the reverse gear idler shaft bearing block raised while installing the shaft.
   Special Tool(s) : 308-214 Remover, Hydraulic Line Spring Clip

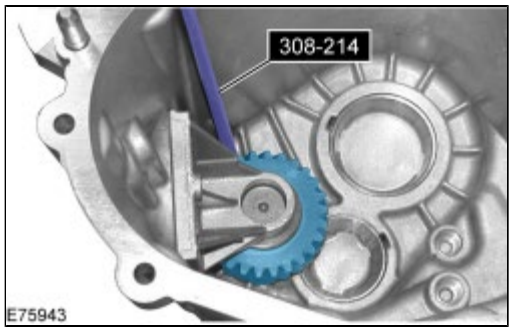

9. Set the manual shift lever to the neutral (N) position.

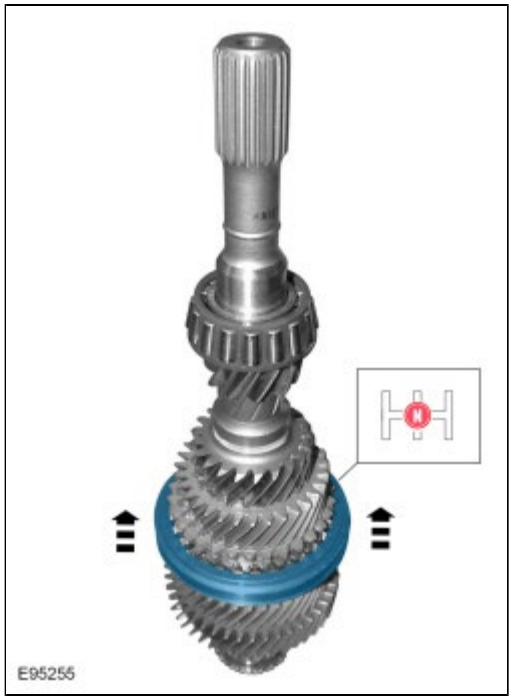

10. *Material* : Motorcraft® Dual Clutch Transmission Fluid / XT-11-QDC (WSS-M2C200-D2)

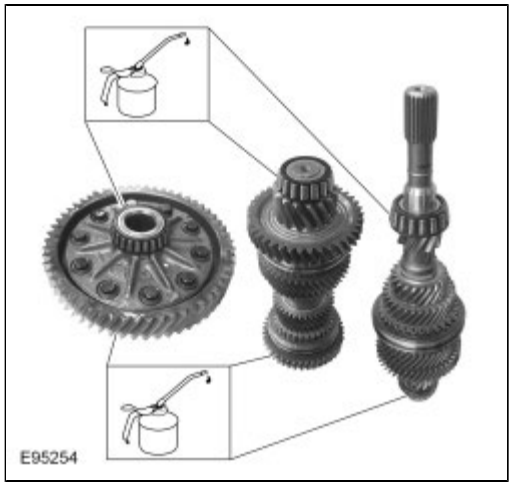

11.
    1. Install the input and output shafts together.
    2. Move the input and output shafts to one side.
    3. *Remove Special Service Tool* : 308-214 Remover, Hydraulic Line Spring Clip

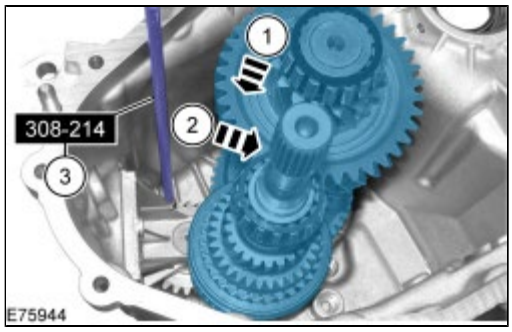

12. **NOTE:** *Make sure that the components are installed to the position noted before removal.*

    Install the following items:
    1.
    2.
    3.

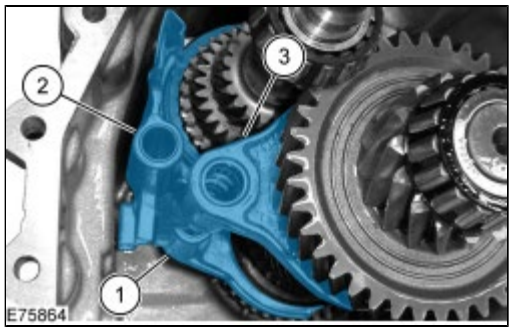

13. Install the following items:
    1. *Material* : Gasket Maker / TA-16 (WSK-M2G348-A5)
       Torque : 34 Nm
    2.
    3.
    4.

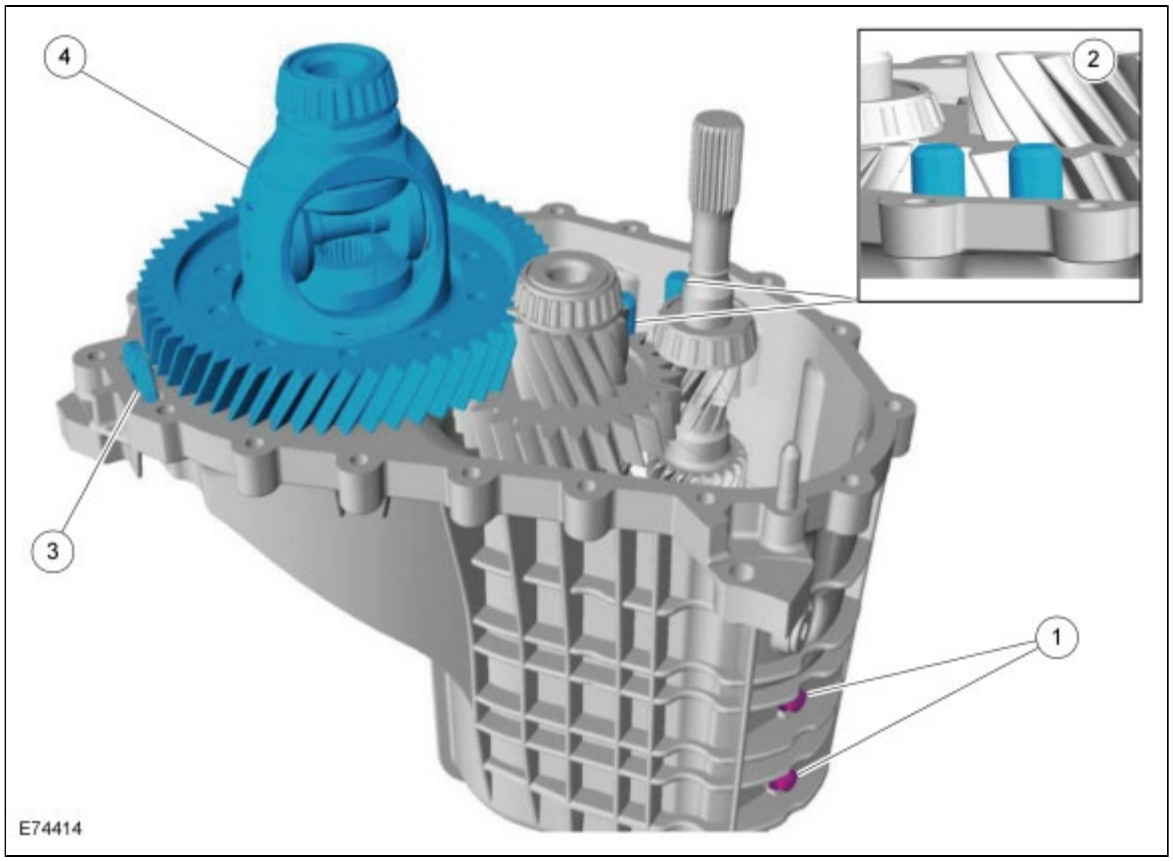

14. *Material* : Gasket Maker / TA-16 (WSK-M2G348-A5)

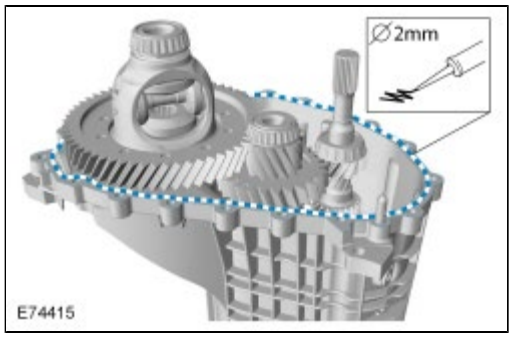

15. **NOTICE: The guide pins must remain installed in the gearbox housing.**

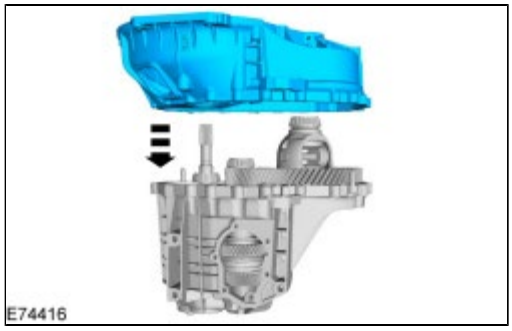

16. Tighten the bolts in a crisscross sequence.
    Torque : 40 Nm

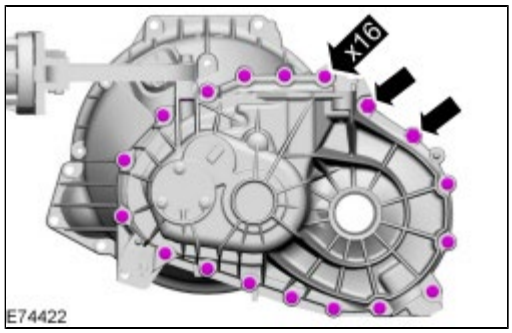

17. **NOTE:** *Make sure that a new component is installed.*

    Special Tool(s) : 205-115 Installer, Drive Pinion Seal

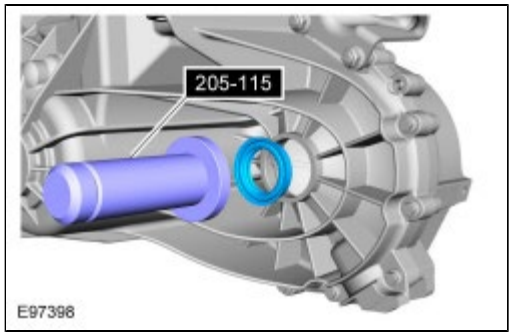

18. **NOTE:** *Make sure that a new component is installed.*

    Material : Gasket Maker / TA-16 (WSK-M2G348-A5)

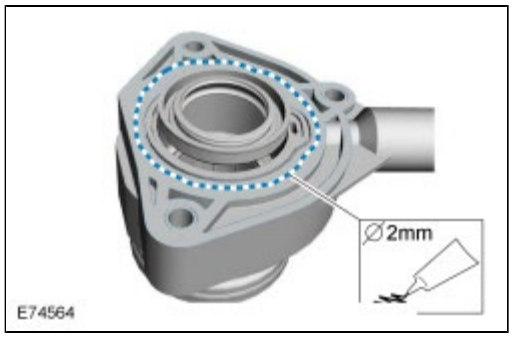

19. Install the following items:

    1. **NOTE:** *Make sure that a new component is installed.*

       Special Tool(s) : 205-115 Installer, Drive Pinion Seal

    2. **NOTICE: Use adhesive tape to cover the input shaft splines to prevent damage to the input shaft seal.**

       NOTE: *Make sure that a new component is installed.*

    3. **NOTE:** *Make sure that new components are installed.*

       Torque : 11 Nm

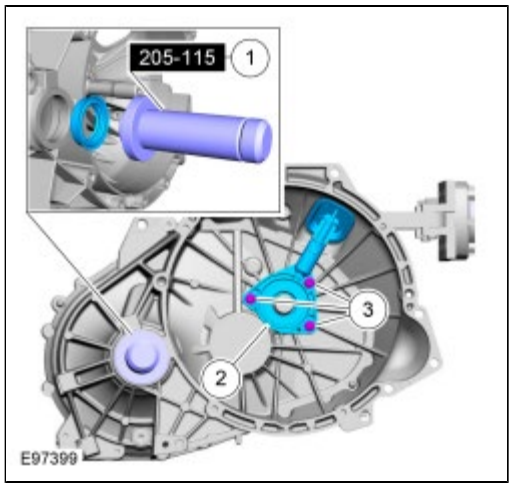

20. Remove the adhesive tape from the input shaft splines.

21.

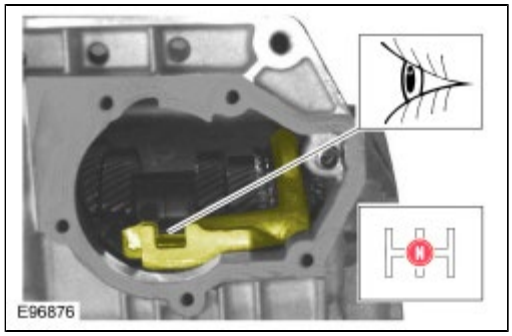

22. *Material* : Gasket Maker / TA-16 (WSK-M2G348-A5)

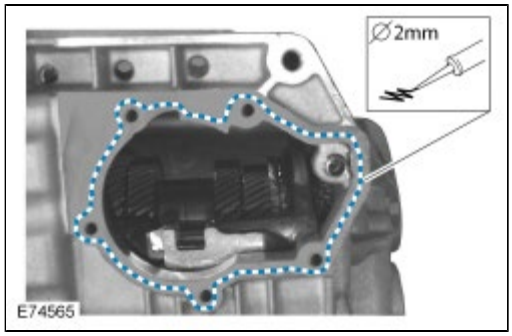

23.

2. **NOTE:** *Note the different lengths of the bolts.*

   Torque : 26 Nm
3. *Torque* : 26 Nm
4. *Torque* : 40 Nm
5. *Remove Special Service Tool* : 205-329 Mounting Bracket, Engine/Differential , 303-435-06 Mounting Bracket for 303-435 , 303-435 Mounting Stand

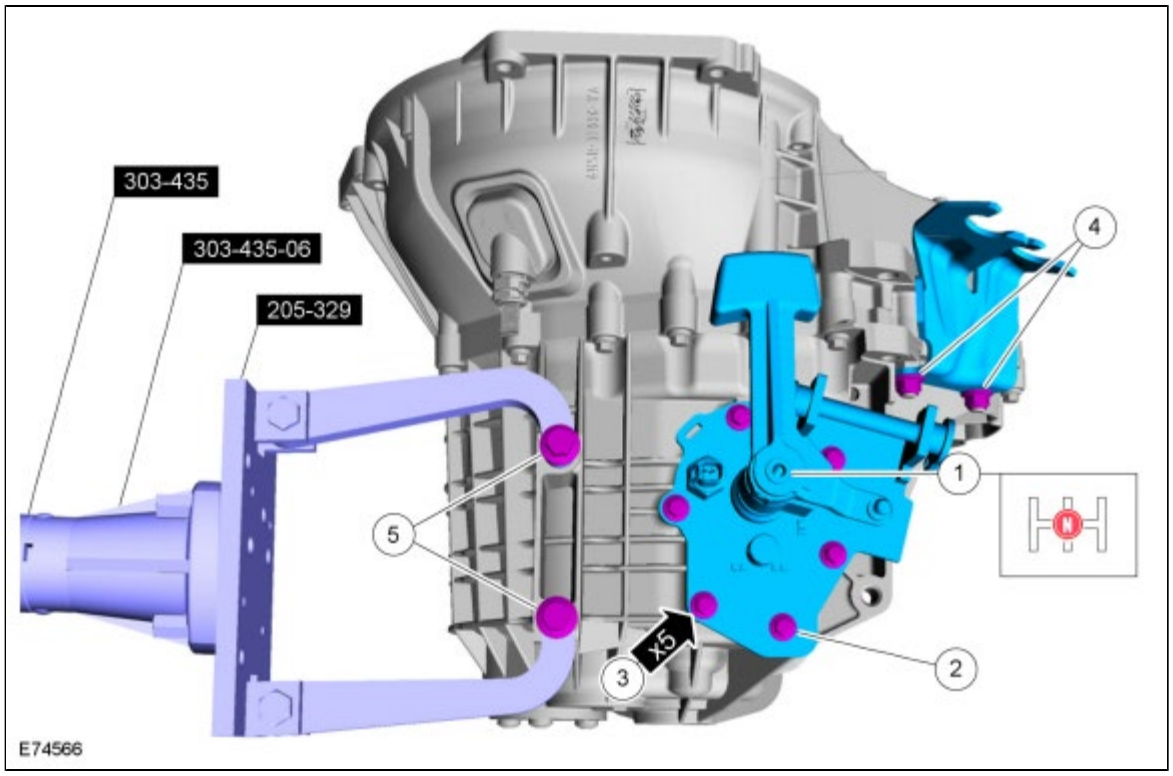

Copyright © Ford Motor Company

Transmission

1.
    1. *Install Special Service Tool* : 205-329 Mounting Bracket, Engine/Differential , 303-435 Mounting Stand , 303-435-06 Mounting Bracket for 303-435
    2. Items to be removed.
    3. Set the manual shift lever to the neutral (N) position.
    4. **NOTE:** *Marking the components makes installation easier.*
    5. Items to be removed.

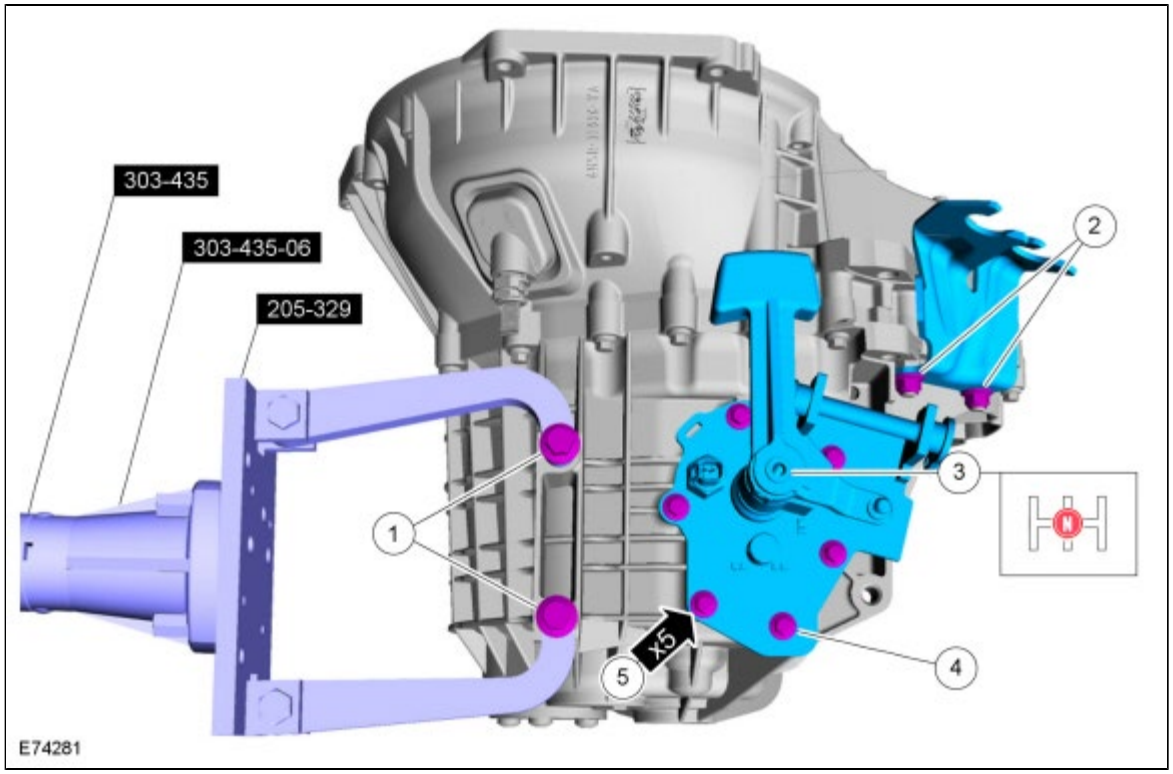

2. *Special Tool(s)* : 308-208 Remover, Halfshaft Seal

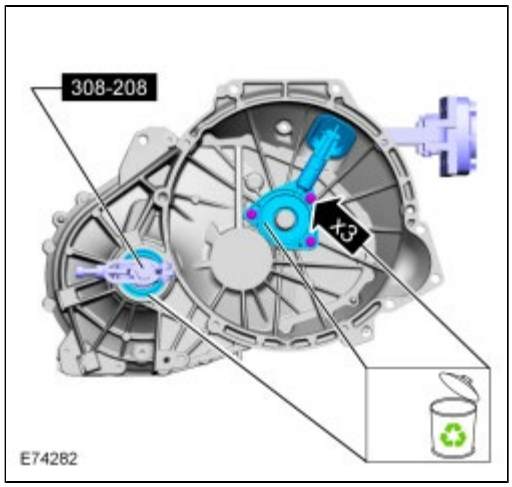

3. *Special Tool(s)* : 308-208 Remover, Halfshaft Seal

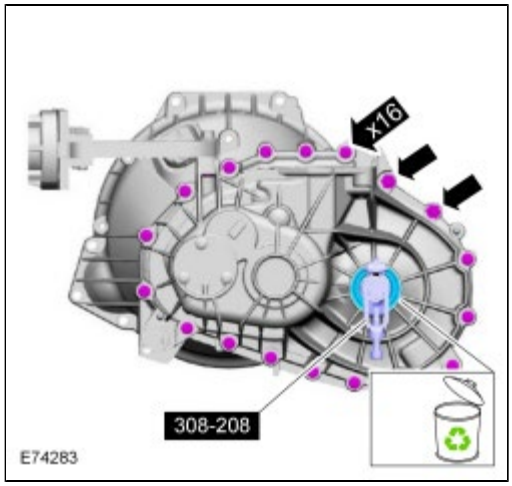

4.

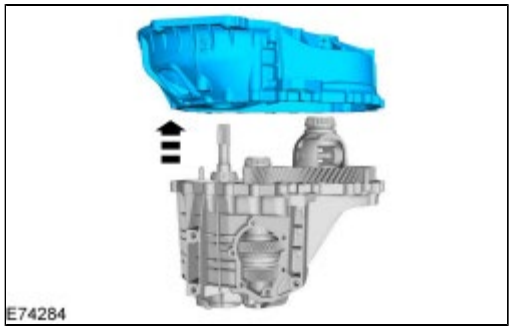

5.

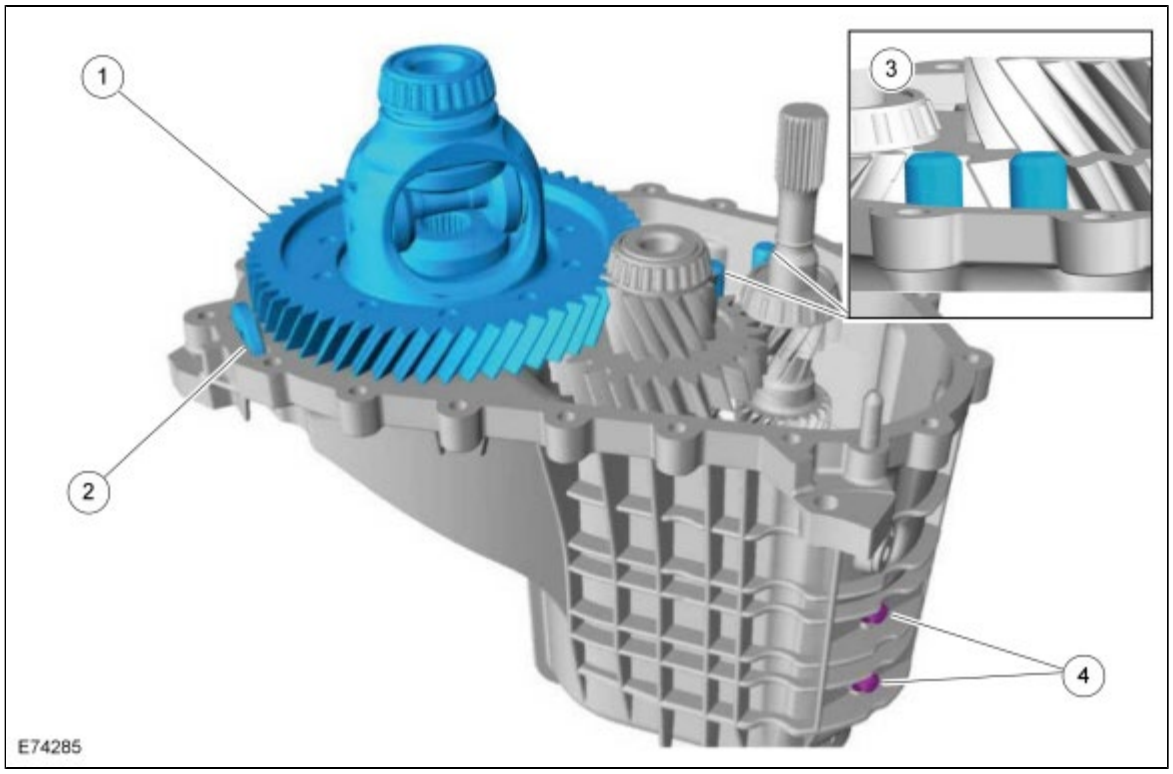

6. **NOTE:** *Marking the components makes installation easier.*

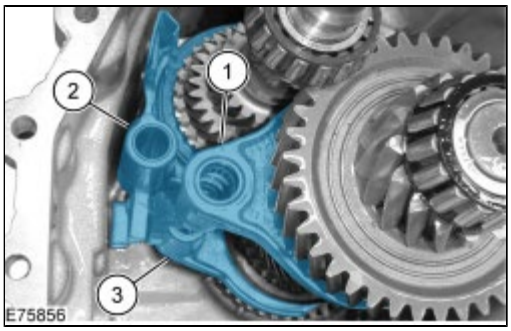

7.

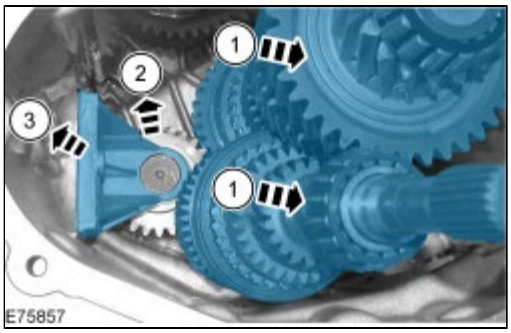

8.

9. **NOTE:** *Marking the components makes installation easier.*

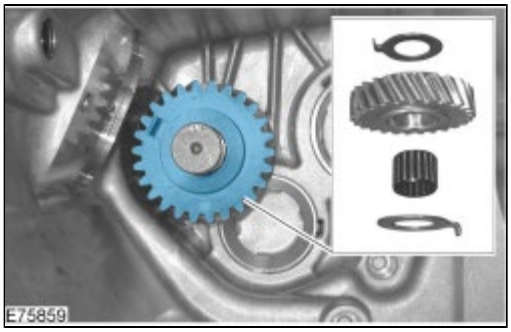

10. *Special Tool(s)* : 205-176 Remover, Differential Bearing Cone

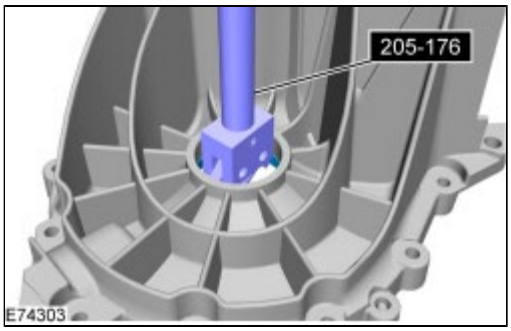

11. *Special Tool(s)* : 205-078 Remover, Drive Pinion Seal , 205-078-01 Adapter for 205-078 (Thrust Pad)

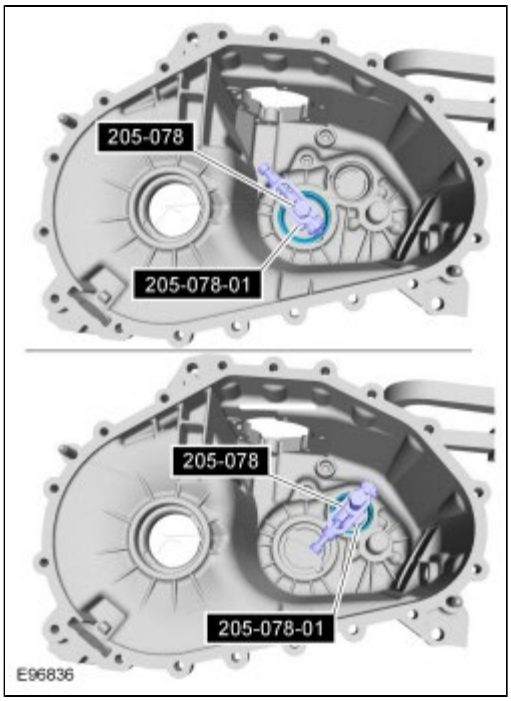

12. *Special Tool(s)* : 205-176 Remover, Differential Bearing Cone

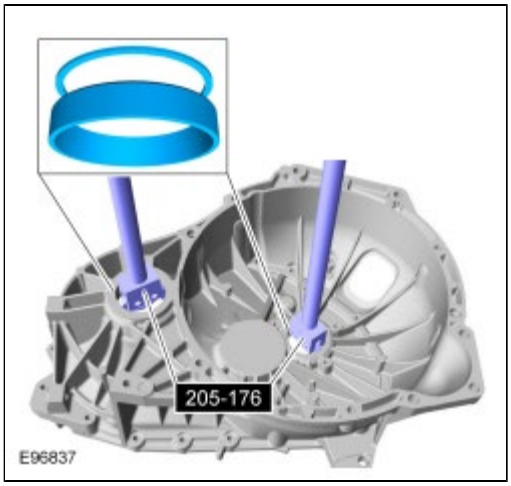

13. *Special Tool(s)* : 205-078 Remover, Drive Pinion Seal , 205-078-01 Adapter for 205-078 (Thrust Pad)

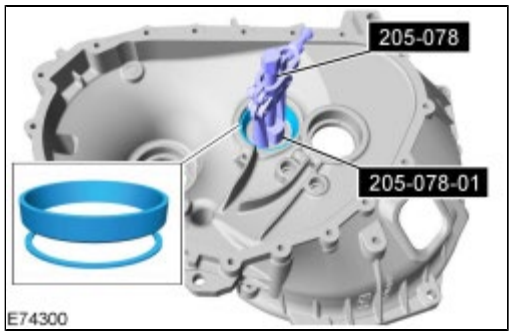

14. The following two steps should only be performed if the reverse gear idler shaft is damaged.

15.

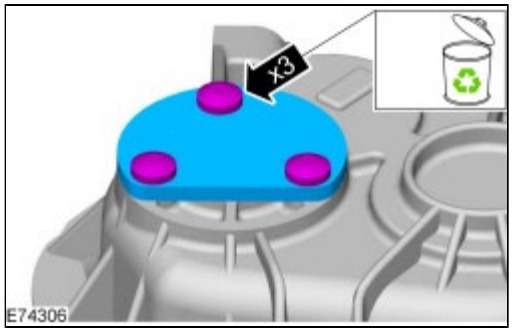

16.

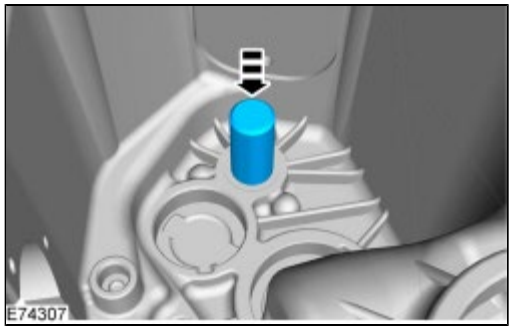

Copyright © Ford Motor Company

Output Shaft

DISASSEMBLY

NOTICE: Use vise jaw protectors.

1. Clamp the output shaft in a vise.
2. Only remove the bearing if it is to be renewed.
   General Equipment : Puller

3. *Special Tool(s)* : 205-310 Remover, Bearing/Gear
   General Equipment : Hydraulic Press

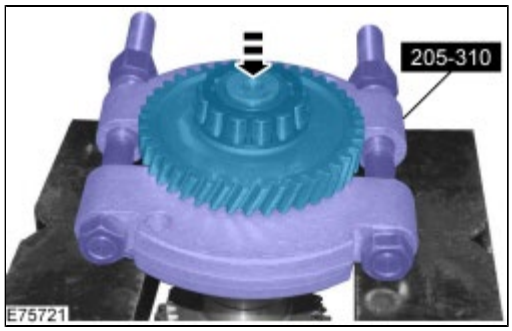

4. Discard the snap ring.

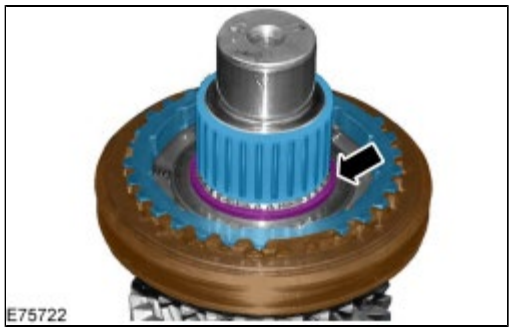

5. **NOTICE: The detent balls are spring-loaded. Take care when removing the selector ring from the synchronizer hub.**

   NOTE: *Note the position of each component before removal.*

   Disassemble the following items:
   1. Selector ring
   2. Synchronizer body
   3. Compression springs

4. Blocker bars
5. Detent balls

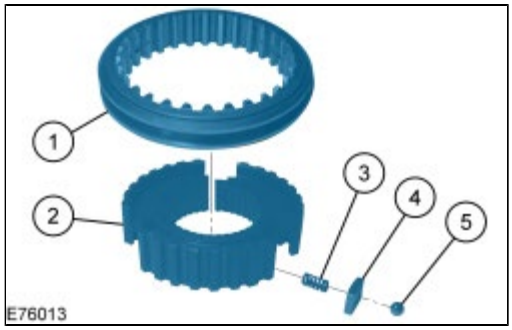

6. Discard the snap ring.

7. *Special Tool(s)* : 205-310 Remover, Bearing/Gear
   General Equipment : Hydraulic Press

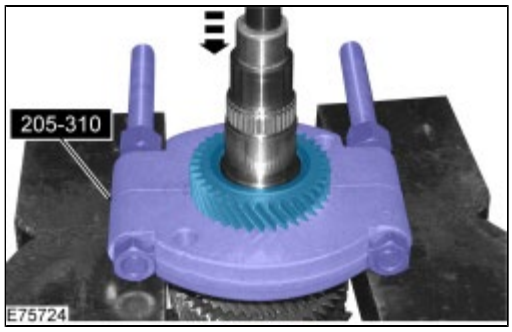

8. Hot air gun. The allowable temperature range for the specified task
   General Equipment : Hydraulic Press
   General Equipment : Puller

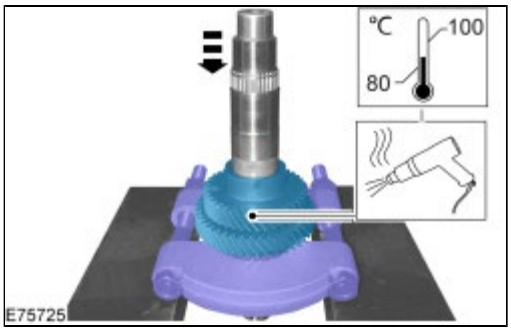

9. Discard the snap ring.

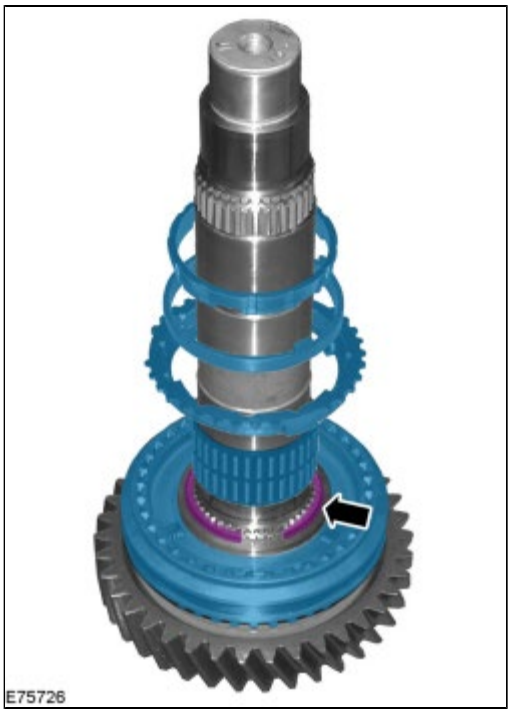

10. **NOTICE: The detent balls are spring-loaded. Take care when removing the selector ring from the synchronizer hub.**

    NOTE: *Note the position of each component before removal.*

    Disassemble the following items:
    1. Selector ring
    2. Synchronizer body
    3. Compression springs
    4. Blocker bars
    5. Detent balls

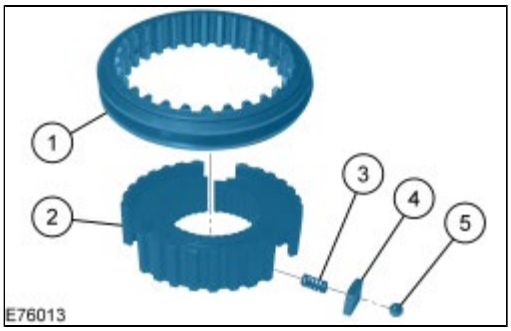

11.

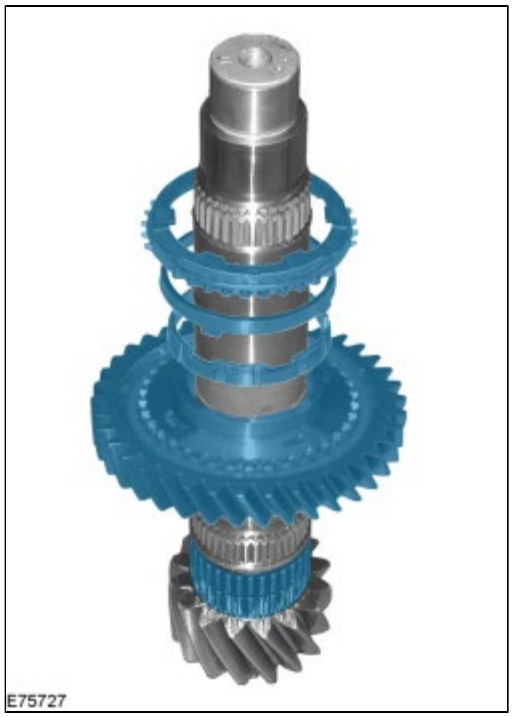

ASSEMBLY

NOTICE: Use vise jaw protectors.

1. Clamp the output shaft in a vise.
2. Lubricate the synchronizer rings with manual transmission fluid before assembly.
   Material : Motorcraft® Dual Clutch Transmission Fluid / XT-11-QDC (WSS-M2C200-D2)
3.

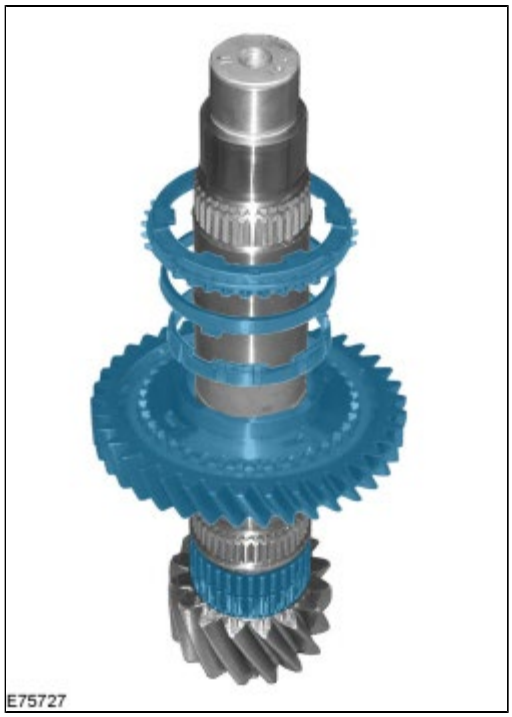

4. Assemble the following items:
   1. Compression springs
   2. Blocker bars and detent balls
   3. Selector ring

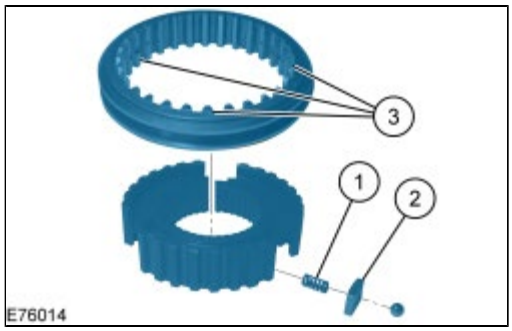

5. **WARNING: Only use moderate force**

   Install a new snap ring.

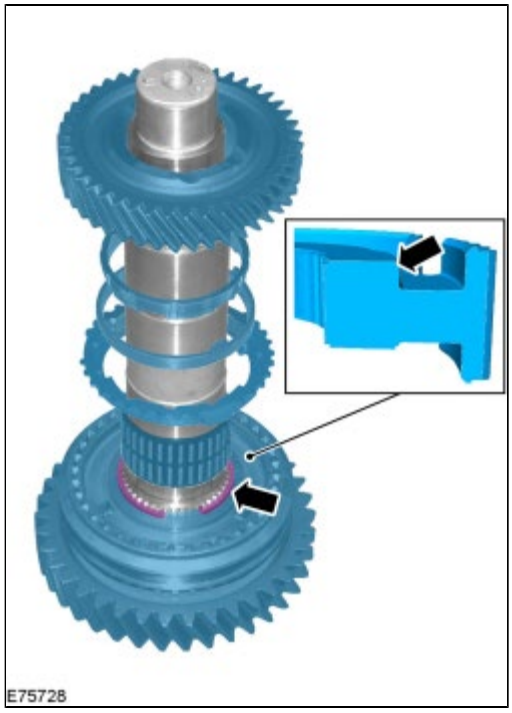

6. *Special Tool(s)* : 308-605 Installer, Input Shaft Seal
   General Equipment : Hydraulic Press

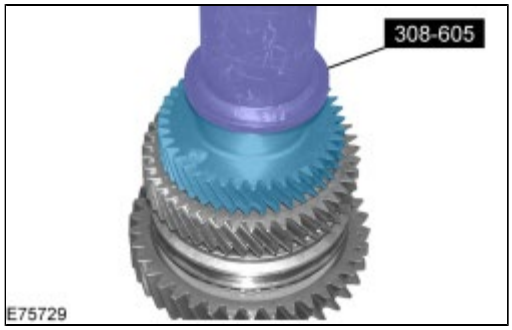

7.
   1. *Special Tool(s)* : 308-605 Installer, Input Shaft Seal
      General Equipment : Hydraulic Press
   2. Install a new snap ring.

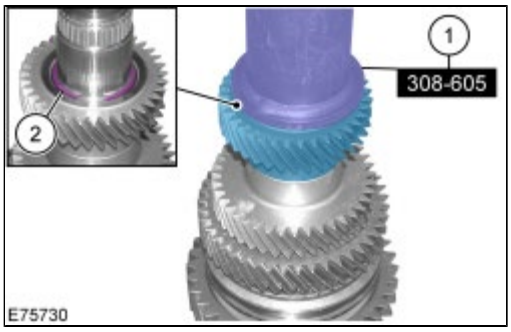

8. Assemble the following items:
    1. Compression springs
    2. Blocker bars and detent balls
    3. Selector ring

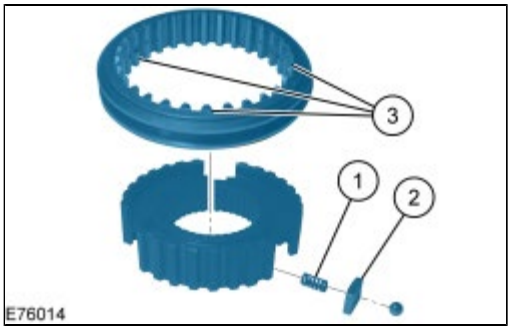

9. Install a new snap ring.

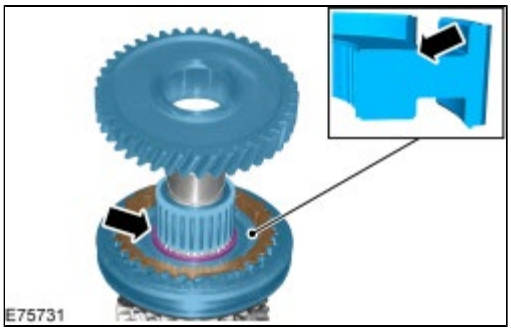

10. The roller bearing must not be lubricated.
    Special Tool(s) : 308-046 Installer, Transmission Extension Housing Bushing/Seal

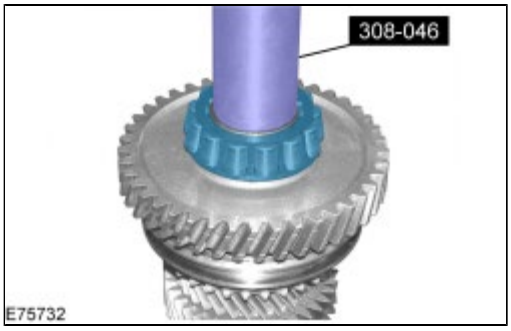

11. The roller bearing must not be lubricated.
    Special Tool(s) : 308-046 Installer, Transmission Extension Housing Bushing/Seal

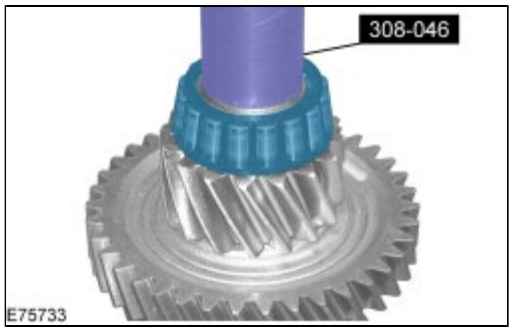

Copyright © Ford Motor Company

Input Shaft

DISASSEMBLY

NOTICE: Use vise jaw protectors.

1. Clamp the input shaft in a vise.
2. *Special Tool(s)* : 205-295 Remover, Bearing (Main Tool) , 308-196 Collet for 205-295

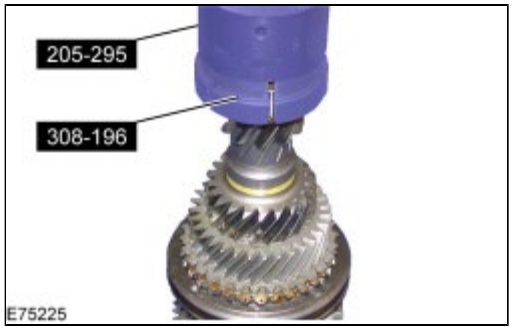

3. Remove the following items:
   1. Roller bearing
      Special Tool(s) : 205-295 Remover, Bearing (Main Tool) , 308-195 Collet for 205-295
   2. Discard the snap ring.

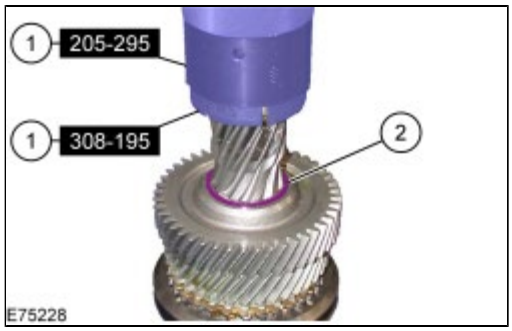

4. *Special Tool(s)* : 308-230 Support Plate, Gear Removal (Dia 85.1 mm)
   General Equipment : Hydraulic Press

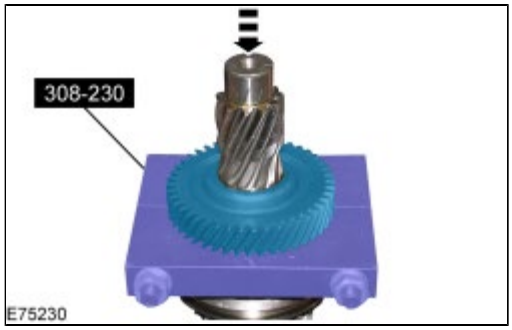

5. Discard the snap ring.

6.

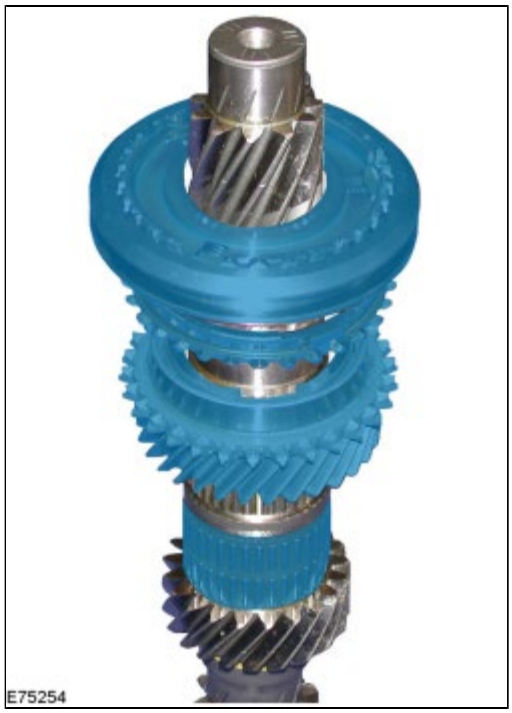

7. **NOTICE: The detent balls are spring-loaded. Take care when removing the selector ring from the synchronizer hub.**

   NOTE: *Note the position of each component before removal.*

   Disassemble the following items:
   1. Selector ring
   2. Synchronizer body
   3. Compression springs
   4. Blocker bars
   5. Detent balls

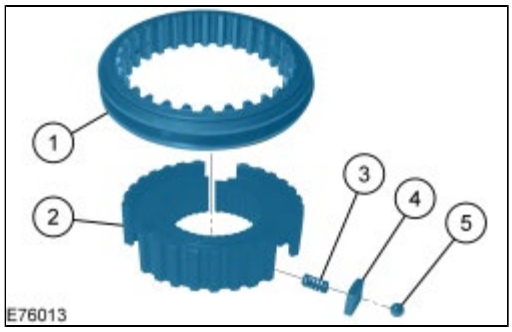

ASSEMBLY

NOTICE: Use vise jaws protectors.

1. Clamp the input shaft in a vise.

2. Lubricate the synchronizer rings with manual transmission fluid before assembly.
   Material : Motorcraft® Dual Clutch Transmission Fluid / XT-11-QDC (WSS-M2C200-D2)

3. Assemble the following items:
   1. Compression springs
   2. Blocker bars and detent balls
   3. Selector ring

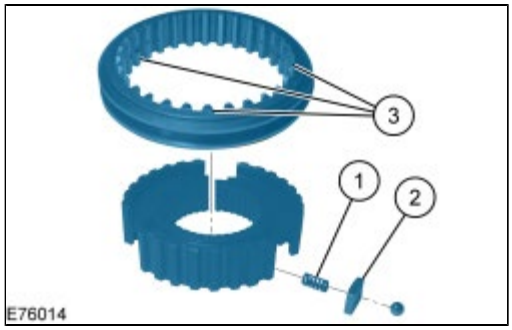

4.

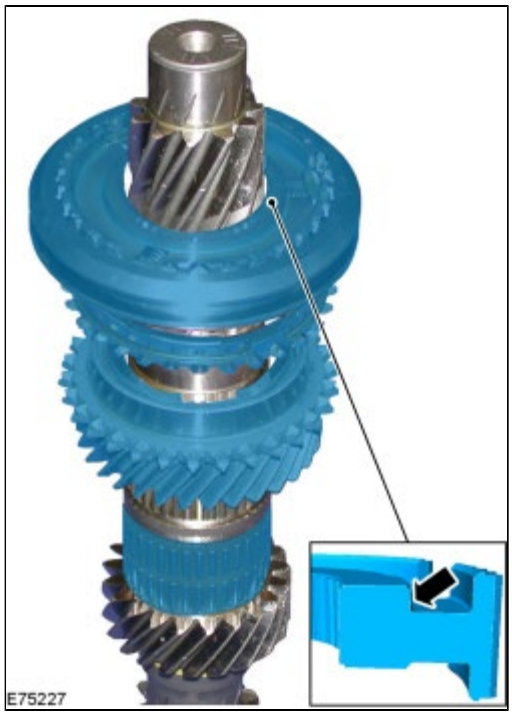

5. Install a new snap ring.

6. *Special Tool(s)* : 205-068 Installer, Drive Pinion Bearing
   General Equipment : Hydraulic Press

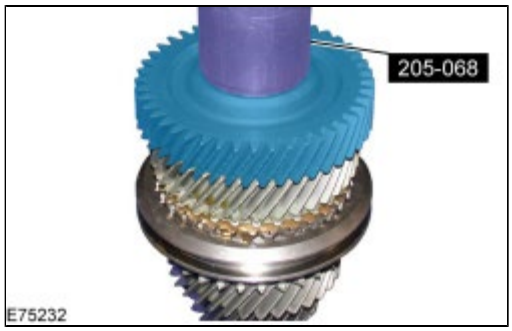

7. Install the following items:
   1. Install a new snap ring.
   2. The roller bearing must not be lubricated.
      Special Tool(s) : 308-044 Installer, Transmission Extension Housing Bushing/Seal

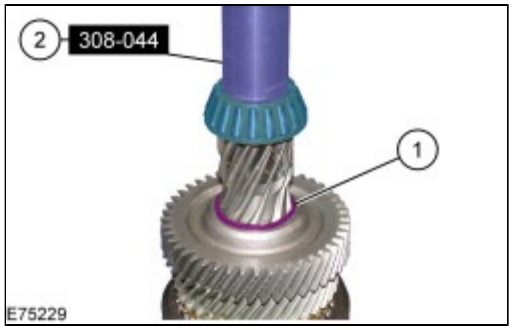

8. The roller bearing must not be lubricated.
   Special Tool(s) : 308-046 Installer, Transmission Extension Housing Bushing/Seal

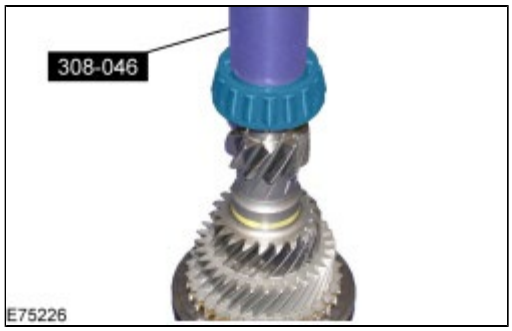

Copyright © Ford Motor Company

Differential

DISASSEMBLY

NOTICE: Use vise jaws protectors.

1. Clamp the differential in a vise.
2. *Special Tool(s)* : 205-071-01 Adapter for 205-071 (Thrust Pad) , 205-295 Remover, Bearing (Main Tool) , 308-197 Collet for 205-295

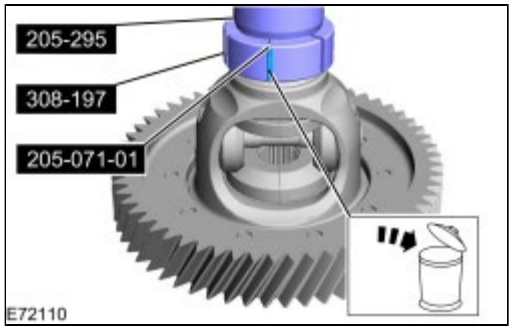

3. *Special Tool(s)* : 205-071-01 Adapter for 205-071 (Thrust Pad) , 205-295 Remover, Bearing (Main Tool) , 308-197 Collet for 205-295

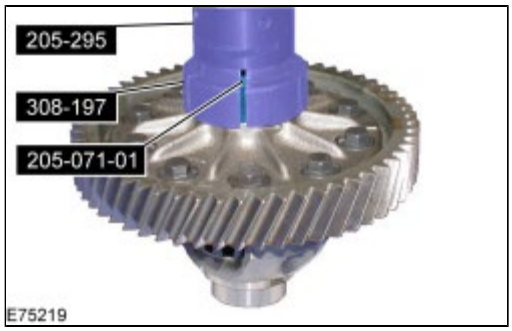

4. Remove the following items:
    1. *Loosen* : Four turn(s)
    2. Discard the specified componenet. Follow local disposal regulations.
    3. Save three bolts for reassembly the ring gear.

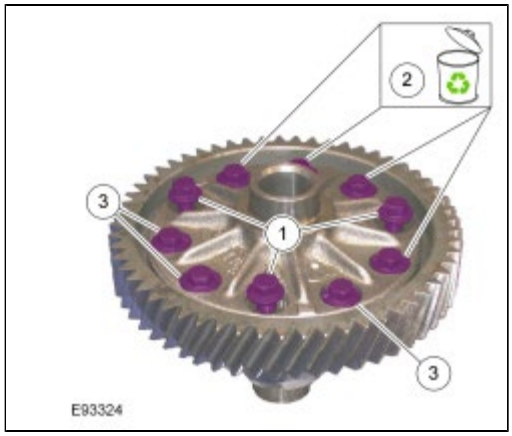

5. Hammer. Discard the specified componenet. Follow local disposal regulations.

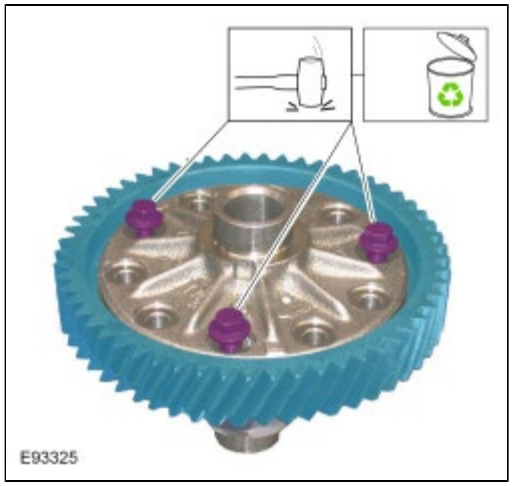

ASSEMBLY

NOTICE: Use vise jaws protectors.

1. Clamp the differential in a vise.
2. Carefully clean and check all parts and coat with manual transmission fluid before assembly.
   Material : Motorcraft® Dual Clutch Transmission Fluid / XT-11-QDC (WSS-M2C200-D2)
3. Install the three bolts saved during disassembly.
   Torque : 83 Nm

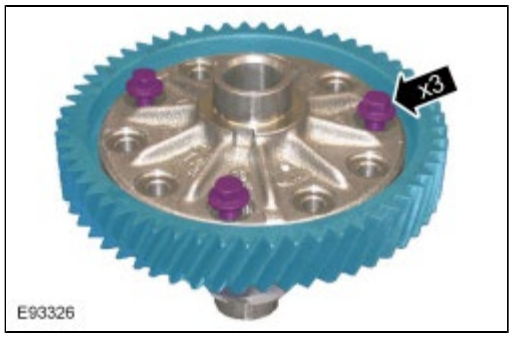

4. Discard the specified componenet. Follow local disposal regulations.

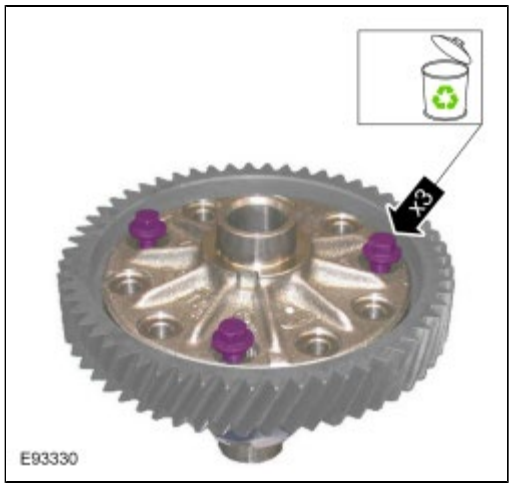

5. **NOTICE: Make sure that new bolts are installed.**

   Torque : 83 Nm

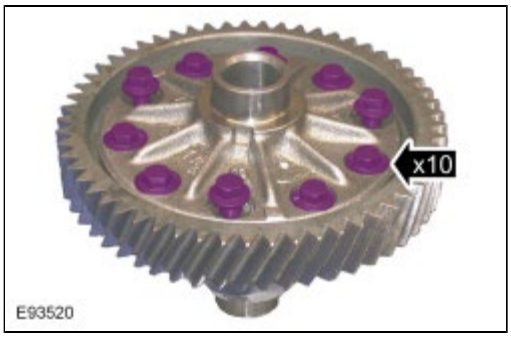

6. The roller bearing must not be lubricated.
   Special Tool(s) : 205-081 Installer, Differential Bearing

7. The roller bearing must not be lubricated.
   Special Tool(s) : 205-081 Installer, Differential Bearing

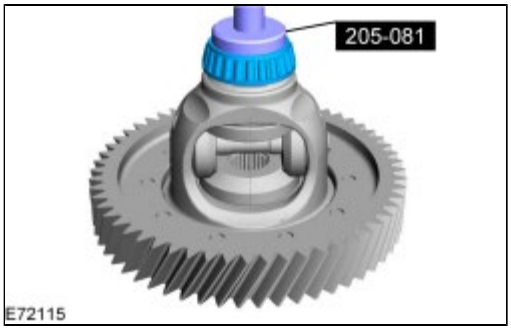

Copyright © Ford Motor Company

Gearshift Lever - Vehicles With: 6-Speed Manual Transmission - B6/6-Speed Manual Transmission - MMT6

Removal

NOTE: *Removal steps in this procedure may contain installation details.*

1. Refer to: Floor Console - Vehicles With: Center Armrest (501-12 Instrument Panel and Console, Removal and Installation).
   Refer to: Floor Console - Vehicles Without: Center Armrest (501-12 Instrument Panel and Console, Removal and Installation).

2. *Torque* : 9 Nm

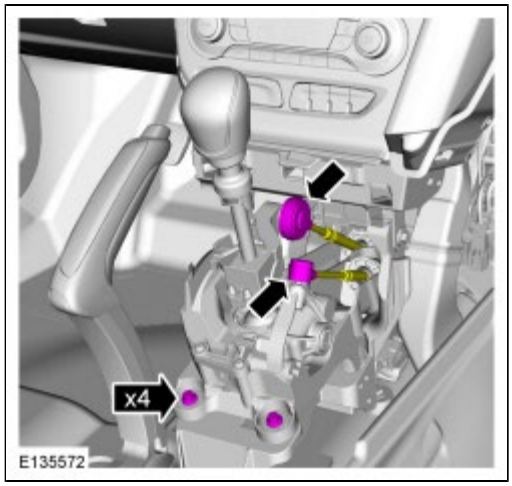

3.

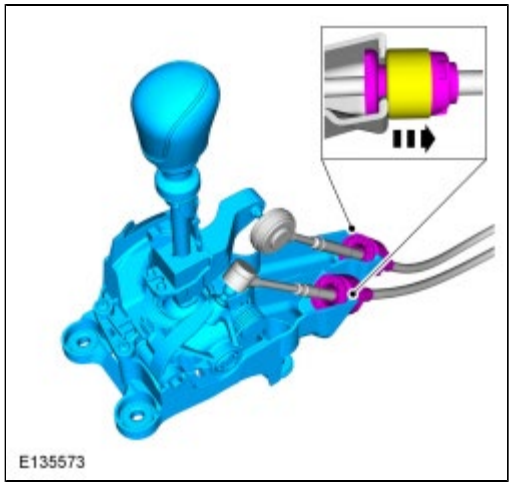

Installation

1. To install, reverse the removal procedure.

2. Adjust the selector lever cable when a new selector lever is installed.
   Refer to: Gearshift Cable Adjustment - Vehicles With: 6-Speed Manual Transmission - MMT6 (308-00 Manual Transmission and Clutch - General Information) .

Copyright © Ford Motor Company

Gearshift Lever - Vehicles With: 5-Speed Manual Transmission - B5/IB5/5-Speed Manual Transmission - MTX75

Removal

NOTE: *Removal steps in this procedure may contain installation details.*

1. Refer to: Floor Console - Vehicles With: Center Armrest (501-12 Instrument Panel and Console, Removal and Installation).
   Refer to: Floor Console - Vehicles Without: Center Armrest (501-12 Instrument Panel and Console, Removal and Installation).

2. *Torque* : 9 Nm

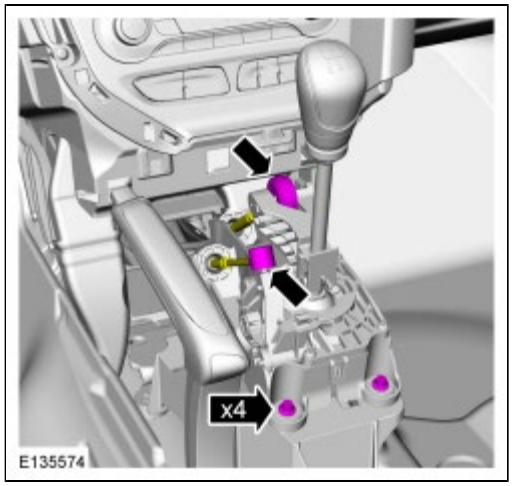

3.

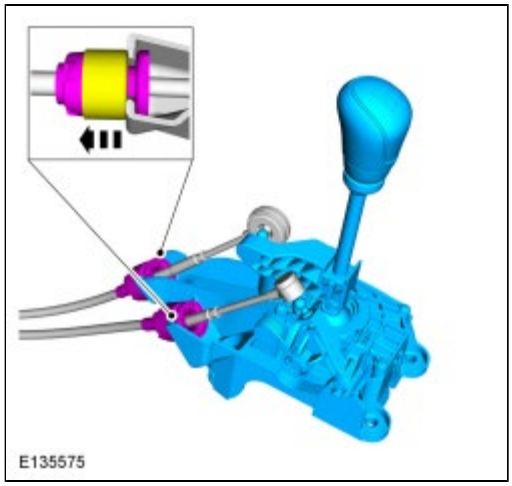

Installation

1. To install, reverse the removal procedure.

2. Adjust the selector lever cable when a new selector lever is installed.
   Refer to: Gearshift Cable Adjustment - Vehicles With: 5-Speed Manual Transmission - MTX75 (308-00 Manual Transmission and Clutch - General Information) .

Copyright © Ford Motor Company

Gearshift Cables - Vehicles With: 6-Speed Manual Transmission - MMT6

Removal

1. Refer to: Battery Tray (414-01 Battery, Mounting and Cables, Removal and Installation).
2. 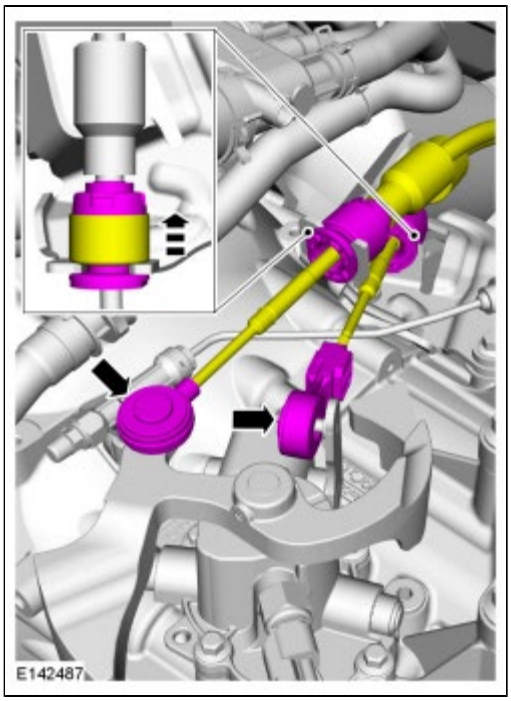

3. Refer to: Jacking and Lifting - Overview (100-02 Jacking and Lifting, Description and Operation).
4. 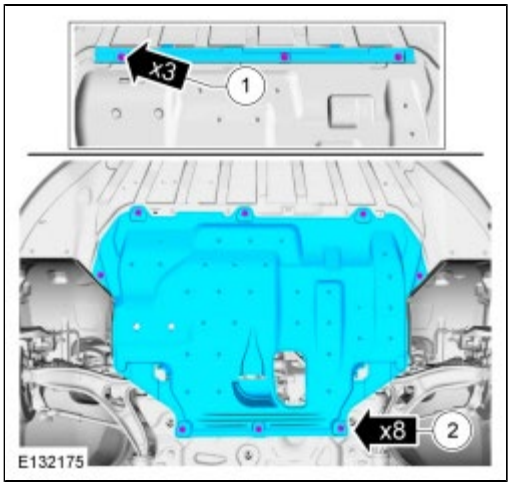

5.

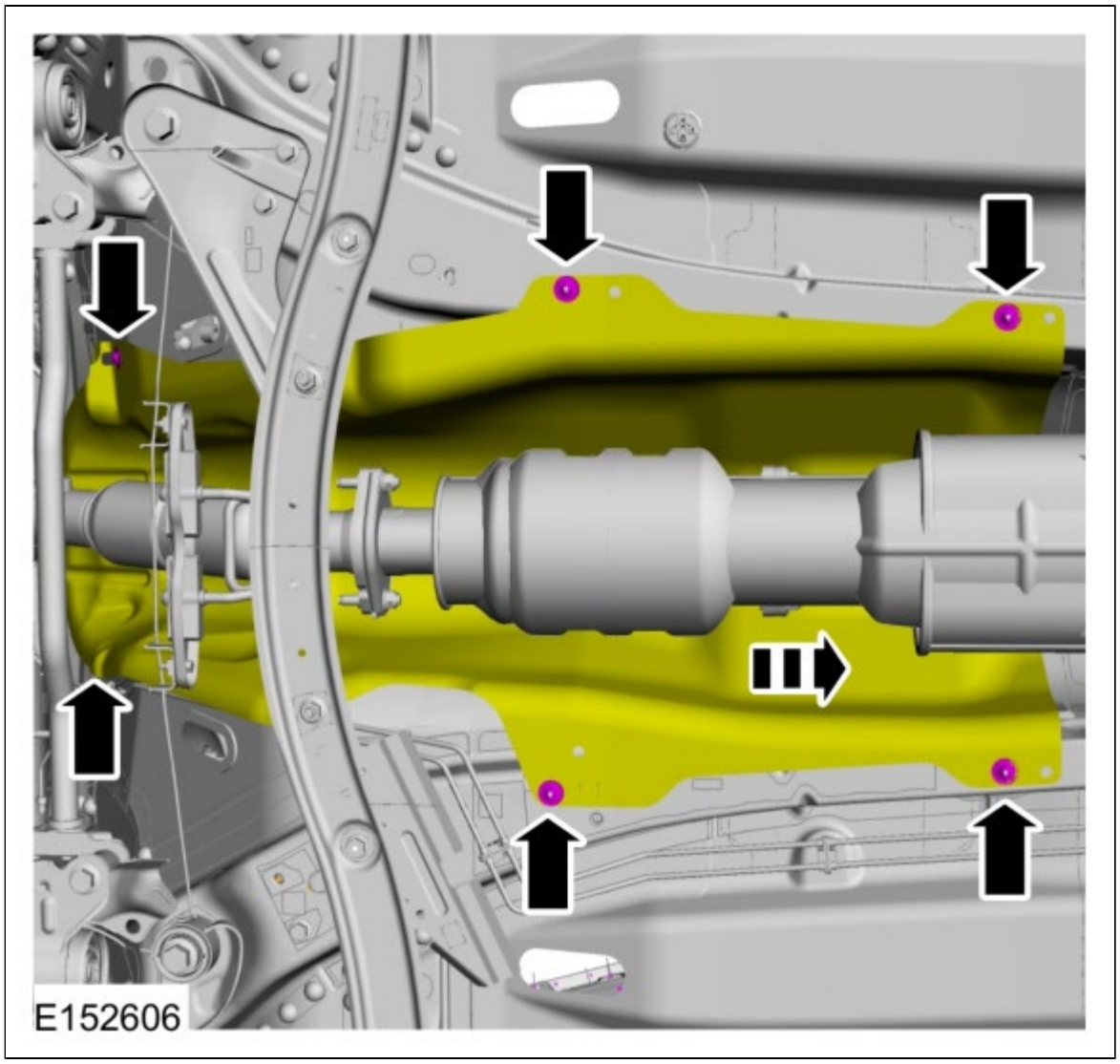

6.

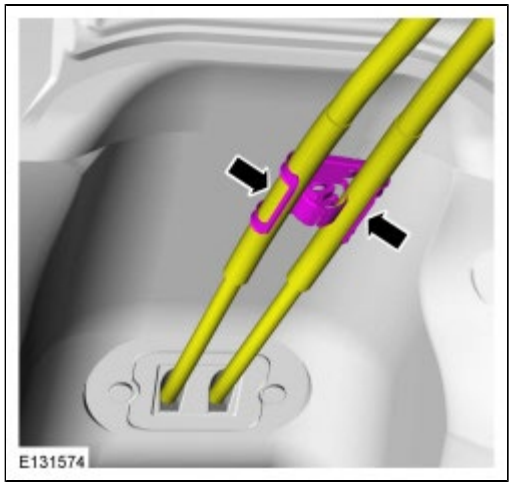

7.

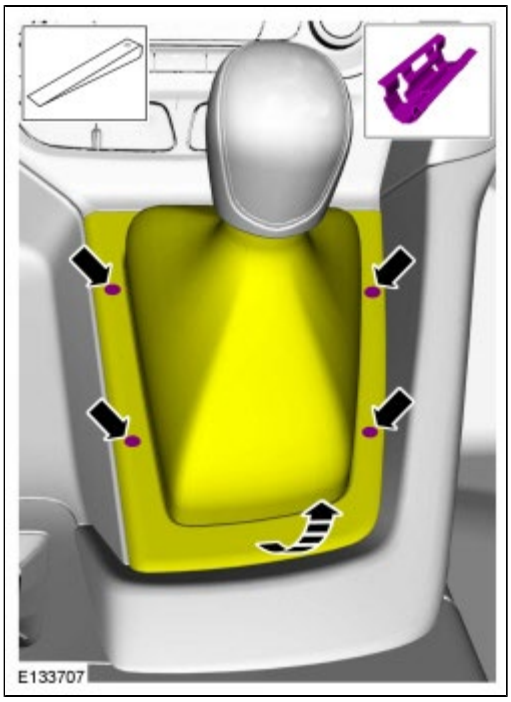

8.

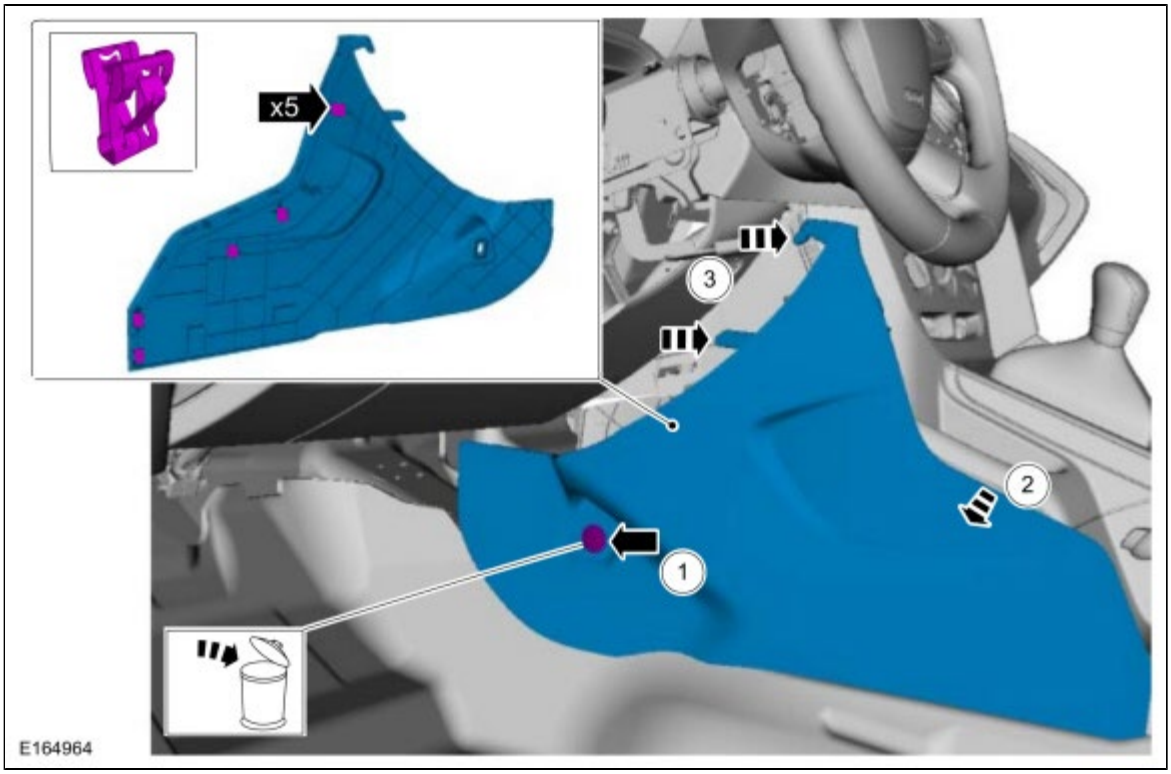

9.

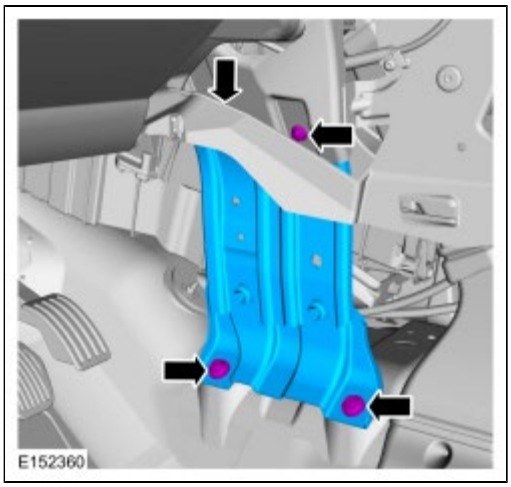

10.

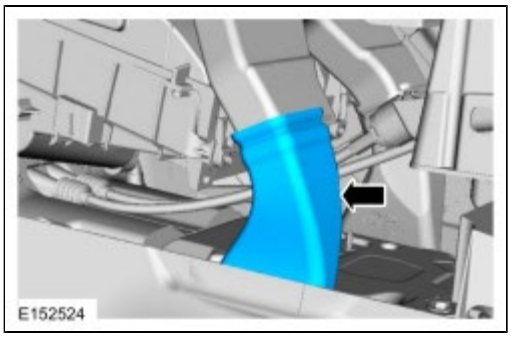

11.

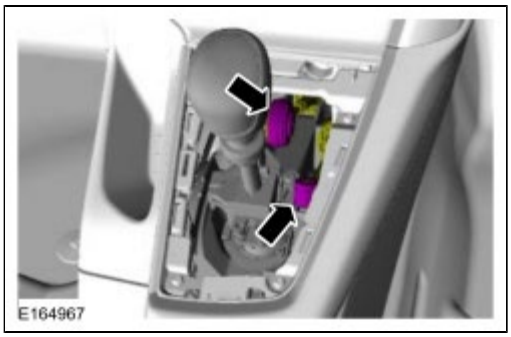

12.

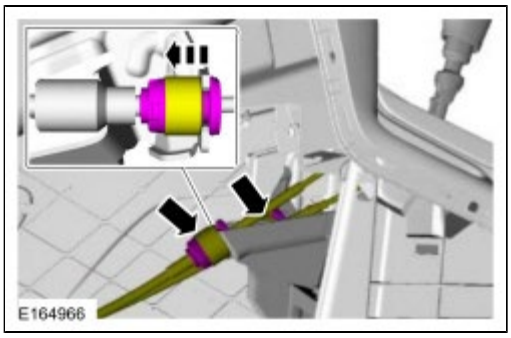

13.

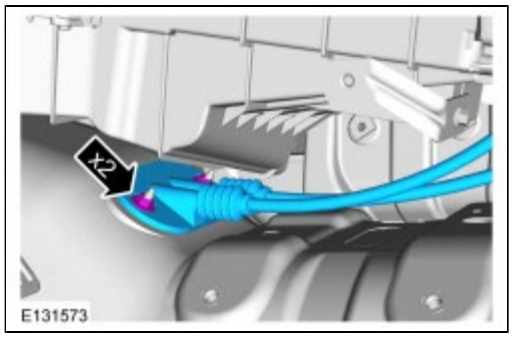

Installation

1. *Torque* : 9 Nm

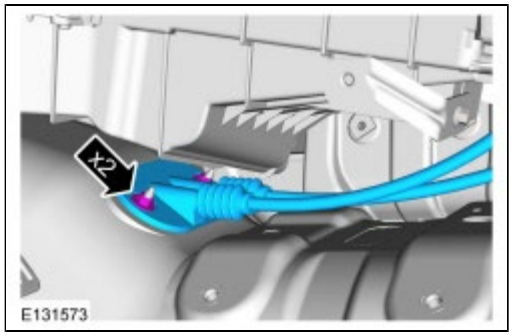

2.

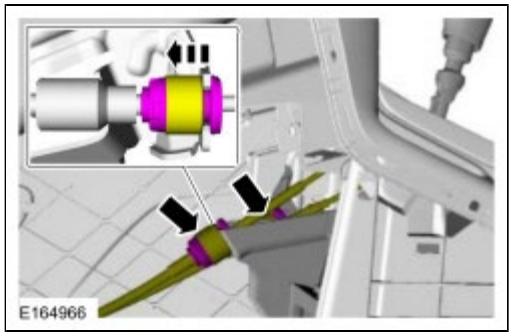

3.

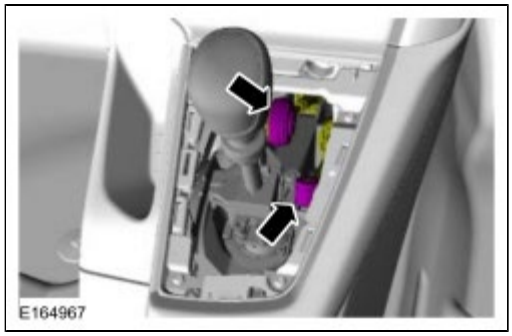

4.

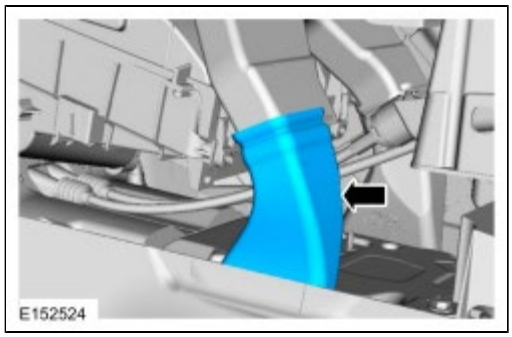

5.

1. *Torque* : 10 Nm
2. *Torque* : 25 Nm

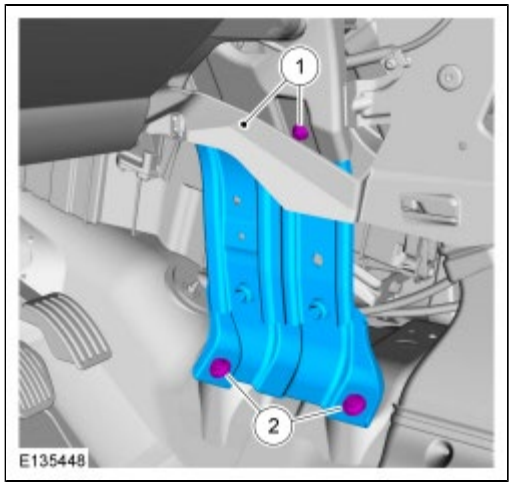

6.

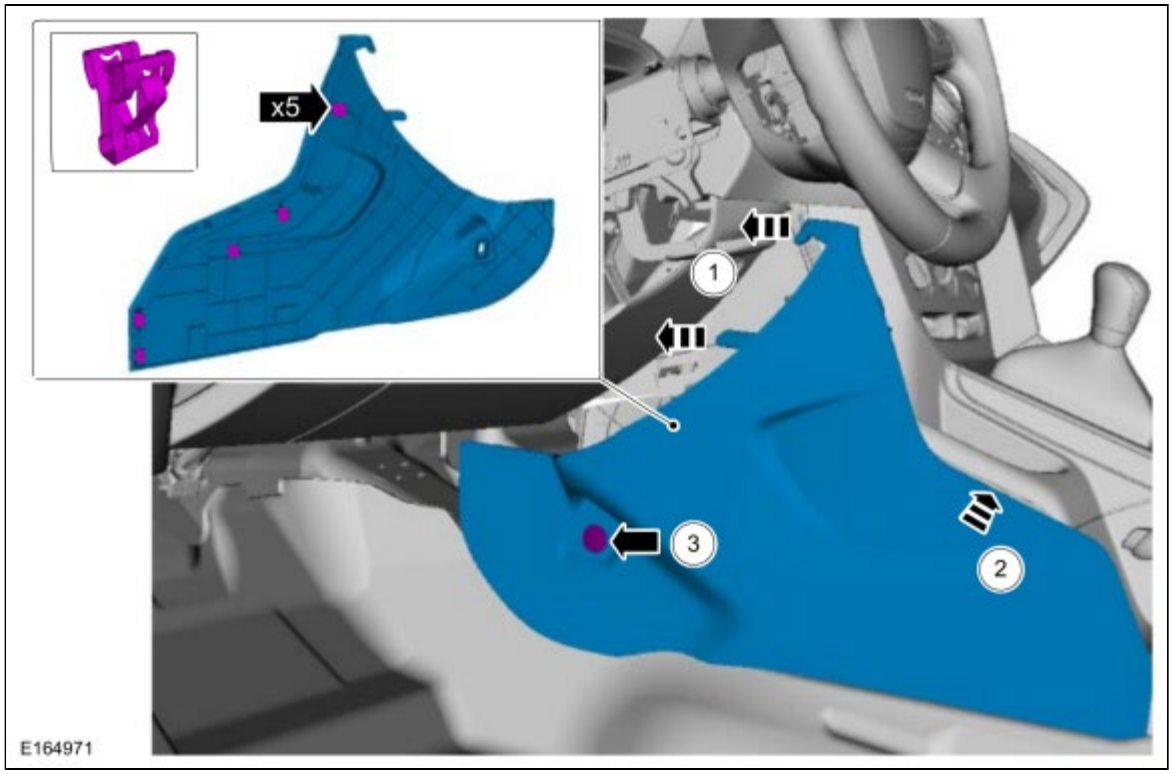

7.

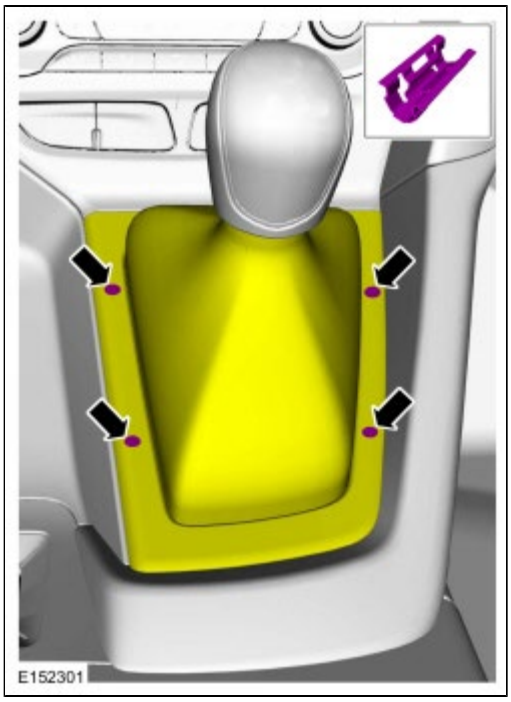

8.

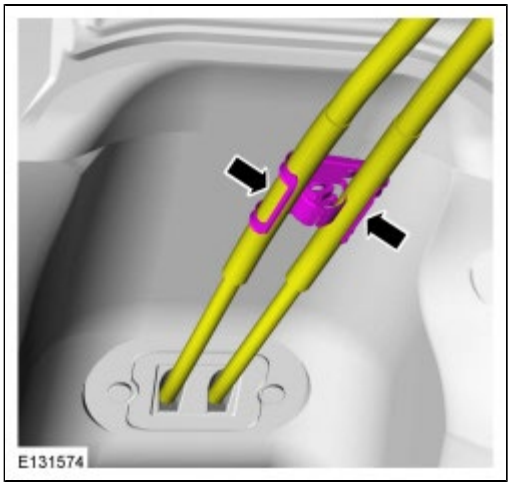

9.

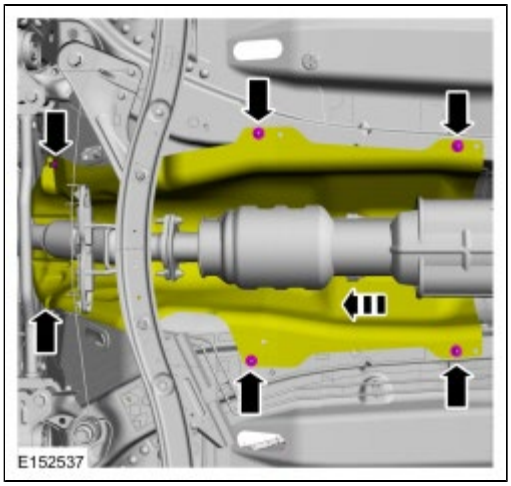

10.

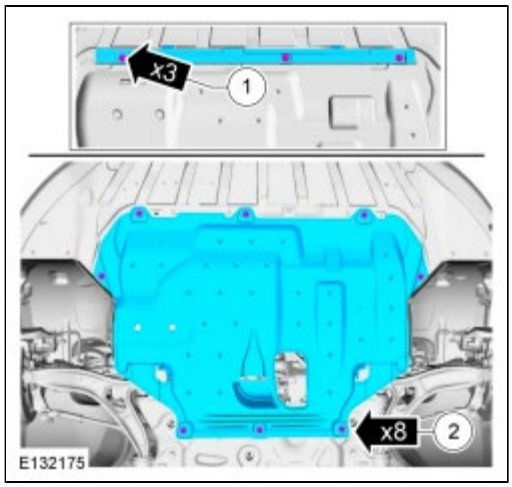

11. Refer to: Battery Tray (414-01 Battery, Mounting and Cables, Removal and Installation).

12. Refer to: Gearshift Cable Adjustment - Vehicles With: 6-Speed Manual Transmission - MMT6 (308-00 Manual Transmission and Clutch - General Information) .

Copyright © Ford Motor Company

Gearshift Cables - Vehicles With: 5-Speed Manual Transmission - MTX75

Removal

1. Refer to: Air Cleaner Outlet Pipe (303-12A Intake Air Distribution and Filtering - 2.0L Duratec-HE (125kW/170PS) - MI4, Removal and Installation).

2.

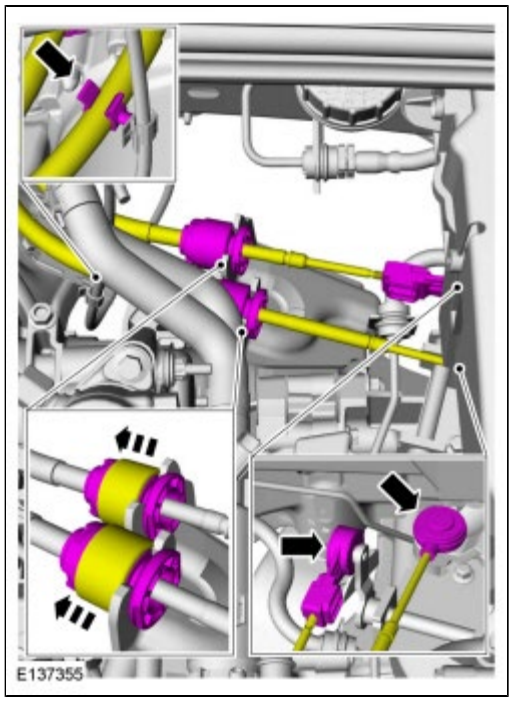

3. Refer to: Jacking and Lifting - Overview (100-02 Jacking and Lifting, Description and Operation).

4.

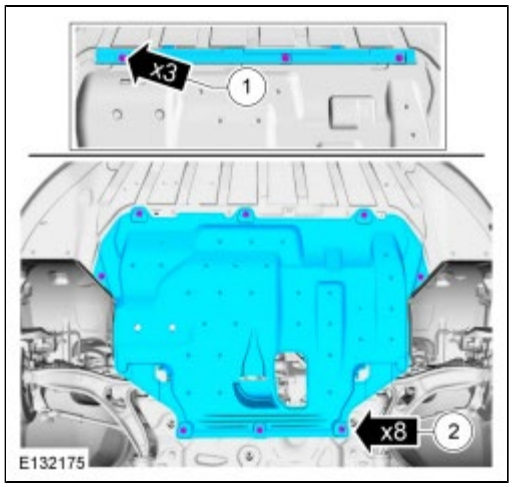

5.

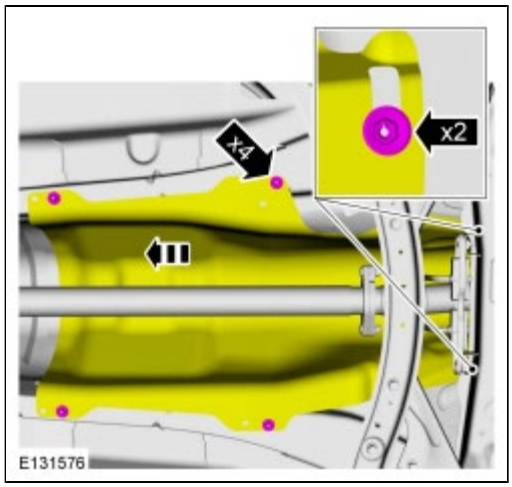

6.

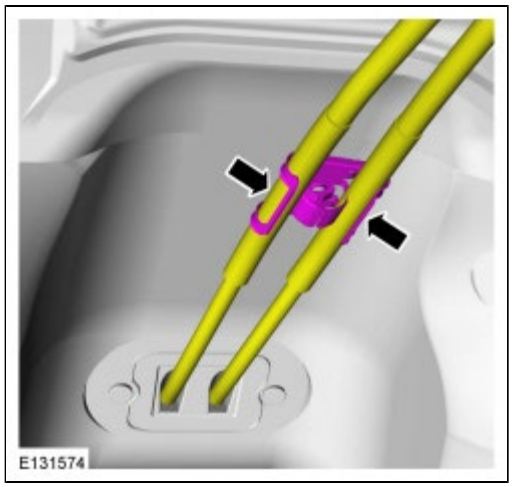

7.

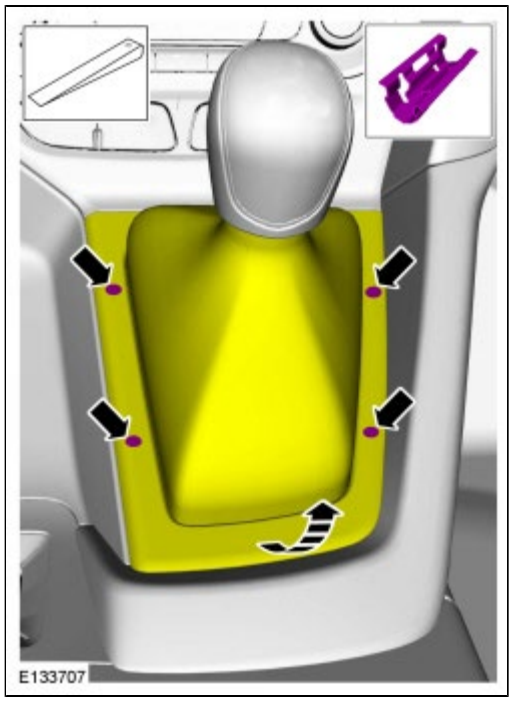

8.

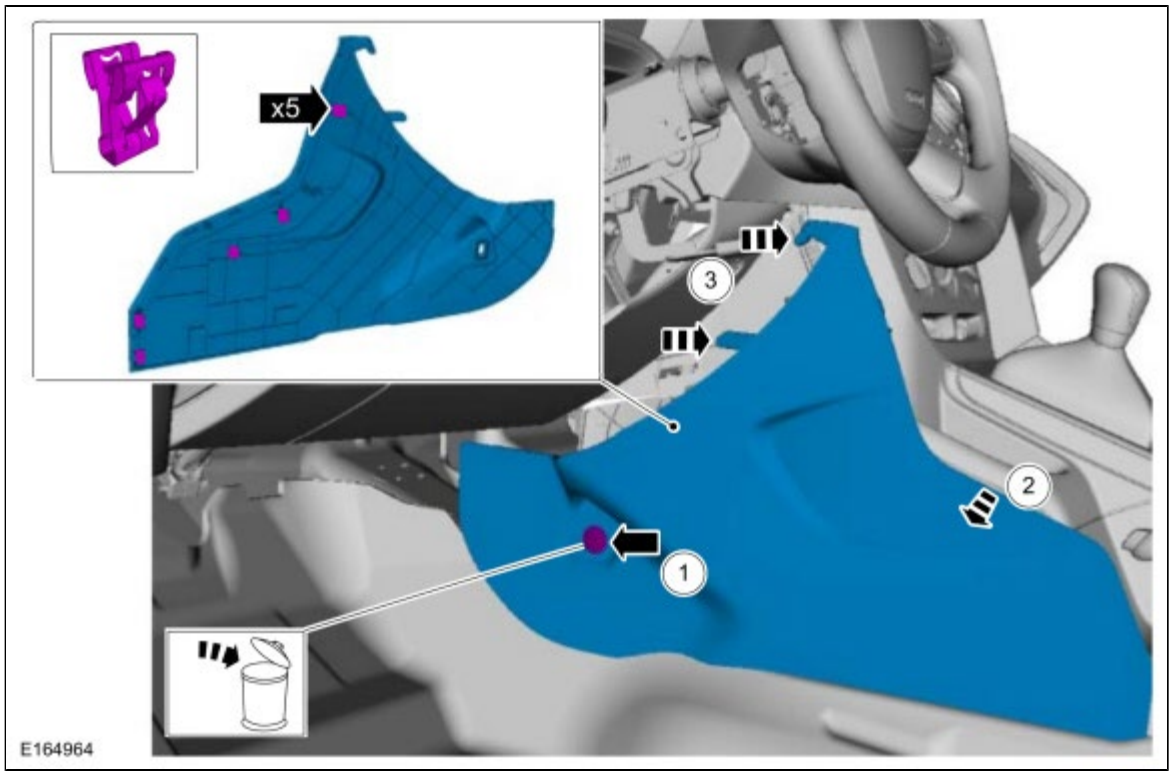

9.

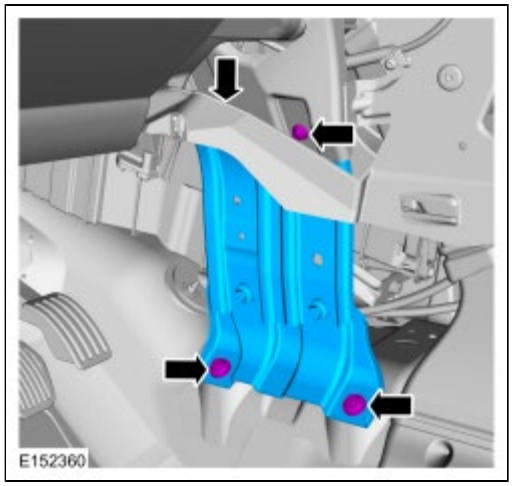

10.

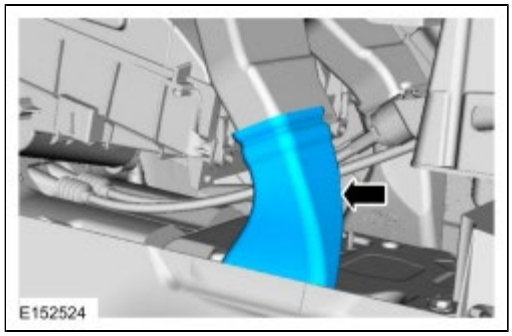

11.

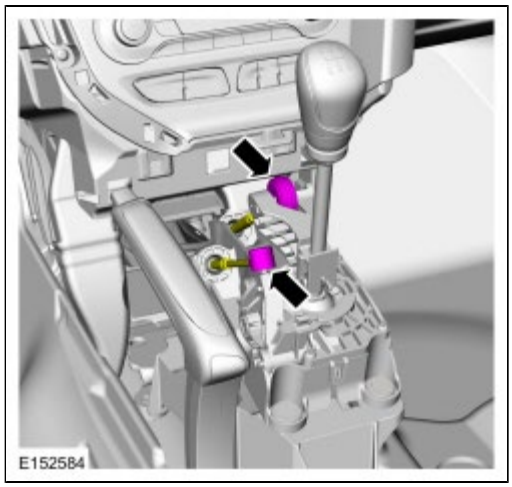

12.

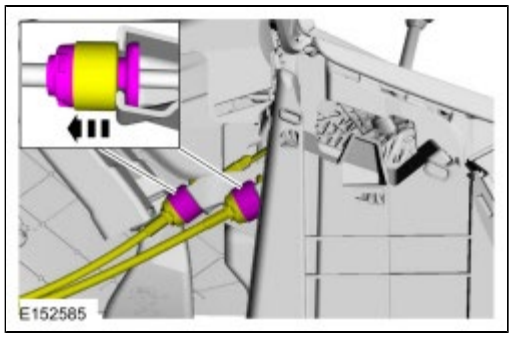

13.

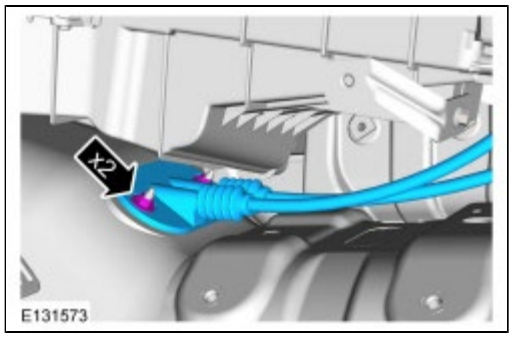

Installation

1. *Torque* : 9 Nm

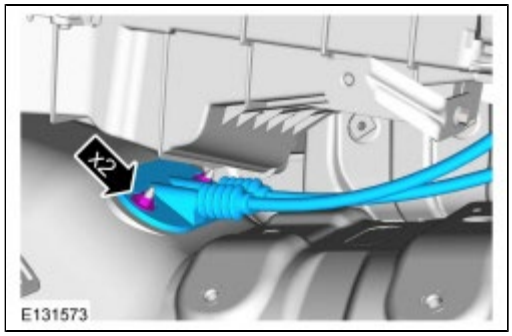

2.

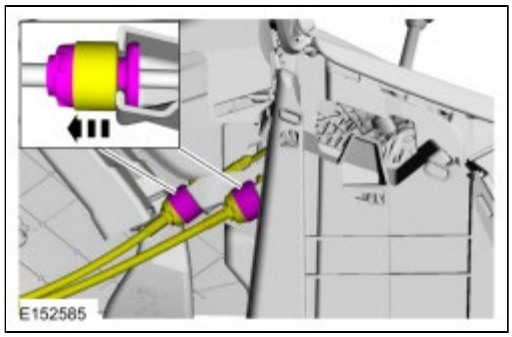

3.

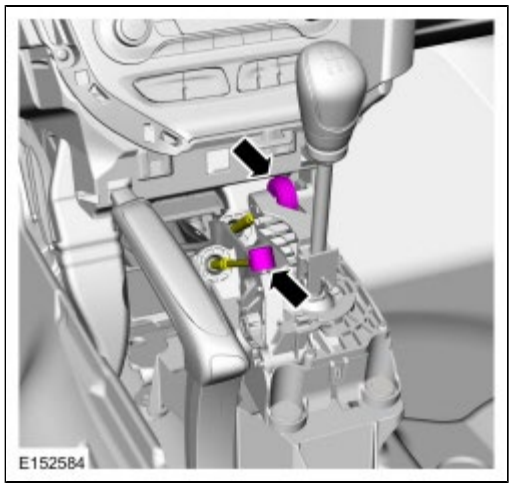

4.

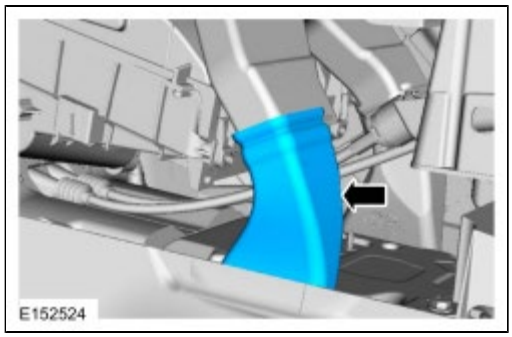

5.

- *Torque* : 10 Nm
- *Torque* : 25 Nm

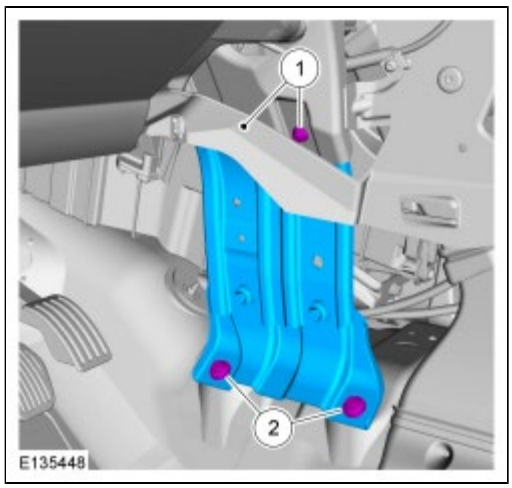

6.

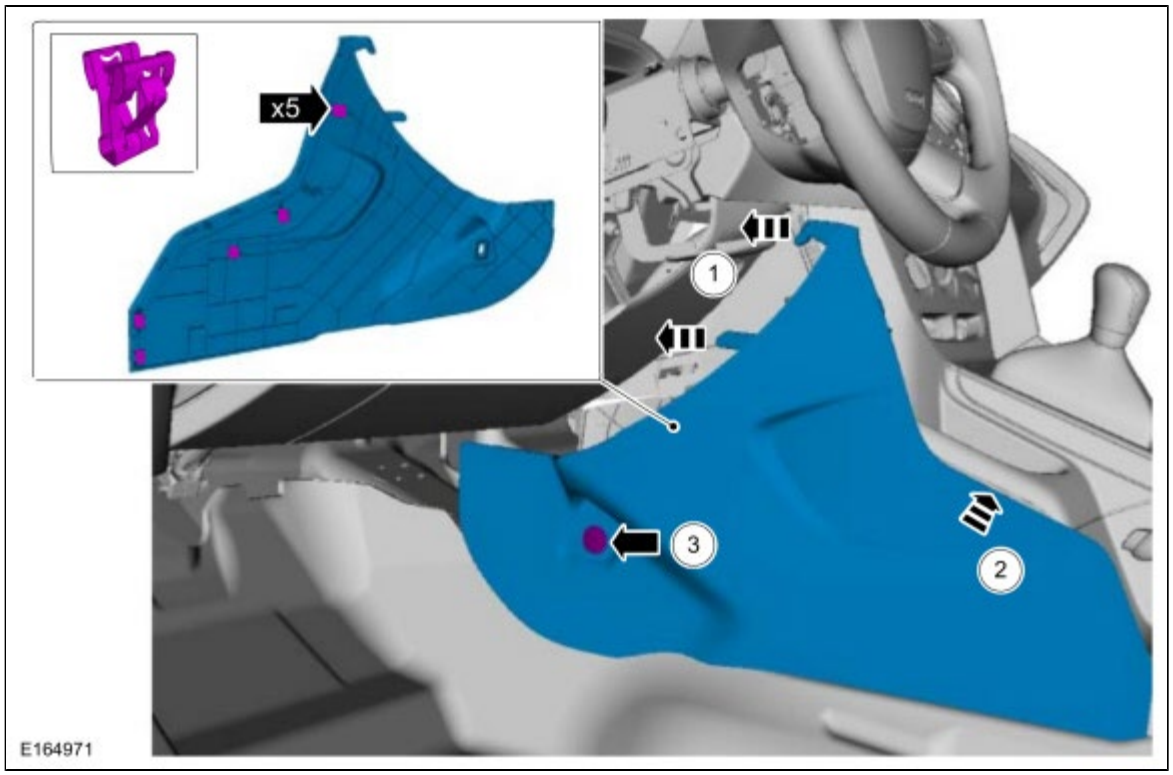

7.

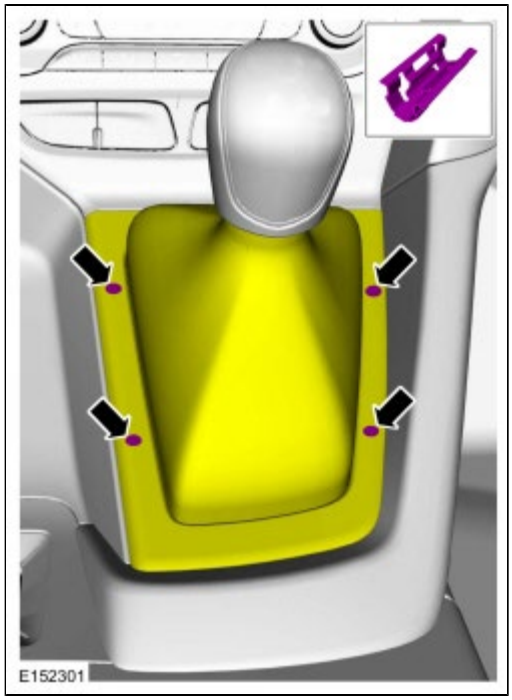

8.

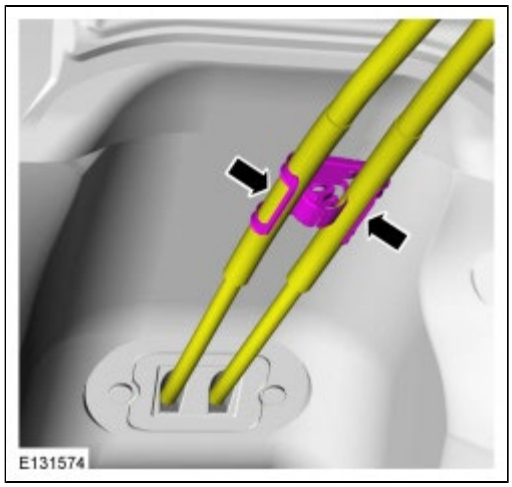

9.

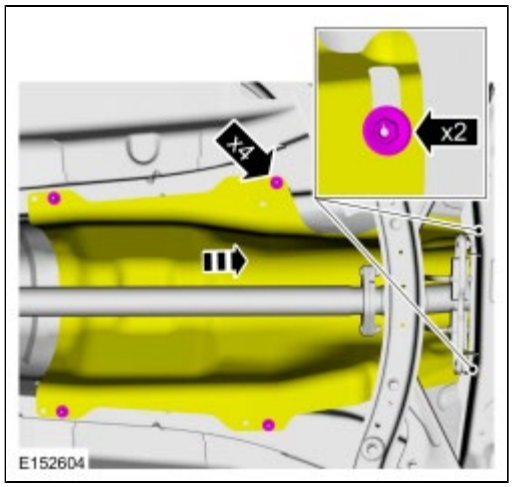

10.

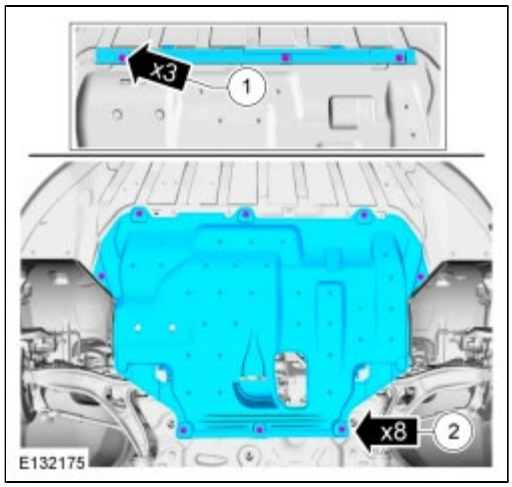

11.

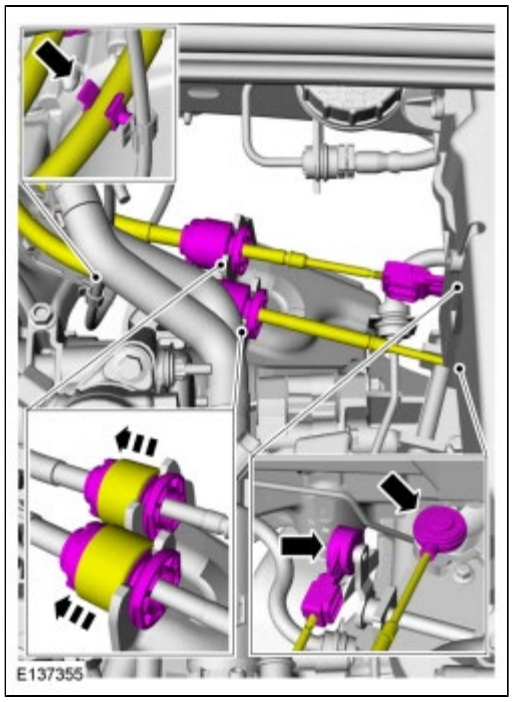

12. Refer to: Air Cleaner Outlet Pipe (303-12A Intake Air Distribution and Filtering - 2.0L Duratec-HE (125kW/170PS) - MI4, Removal and Installation).

13. Refer to: Gearshift Cable Adjustment - Vehicles With: 5-Speed Manual Transmission - MTX75 (308-00 Manual Transmission and Clutch - General Information) .

Copyright © Ford Motor Company

Transmission - 2.0L EcoBoost (184kW/250PS) - MI4

1.

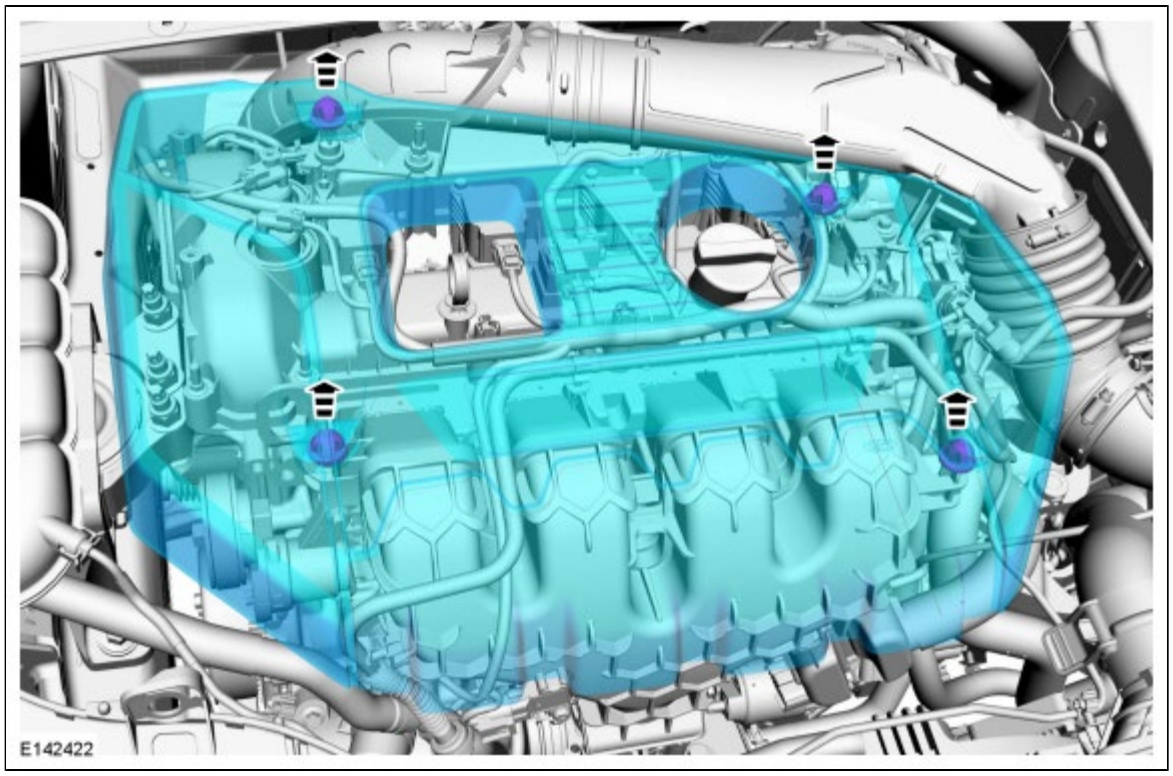

2. Refer to: Battery Tray (414-01 Battery, Mounting and Cables, Removal and Installation).

3.

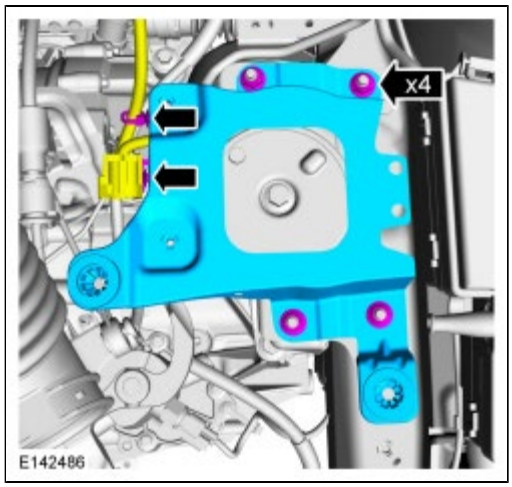

4.

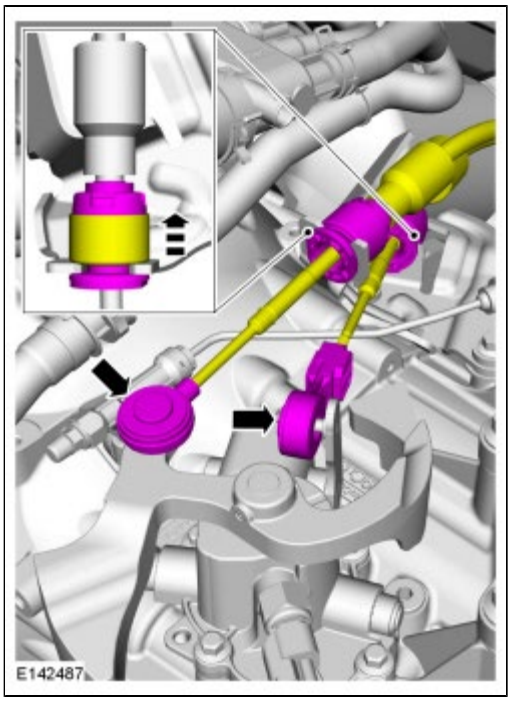

5.

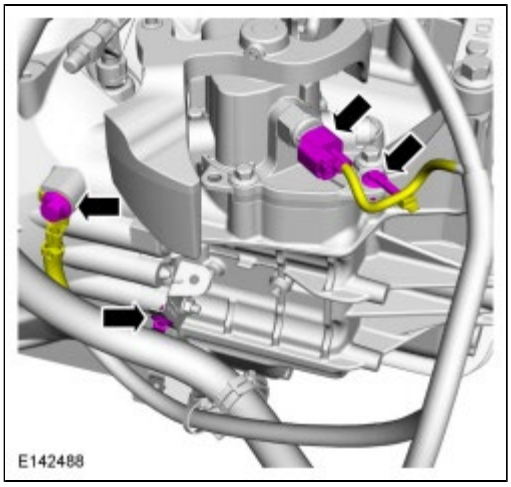

6.

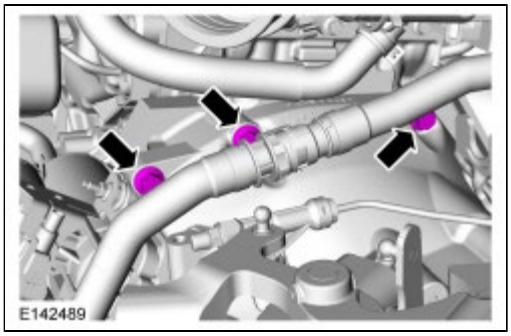

7.

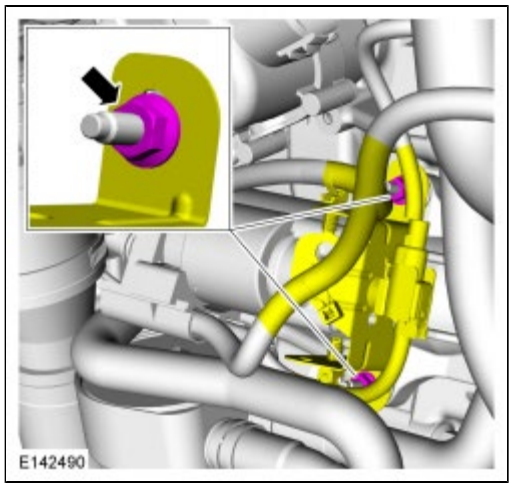

8.

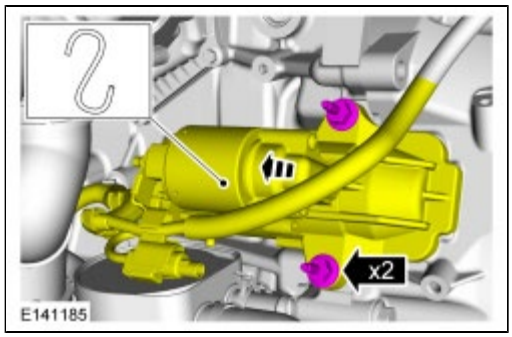

9. Refer to: Jacking and Lifting - Overview (100-02 Jacking and Lifting, Description and Operation).

10. If equipped.

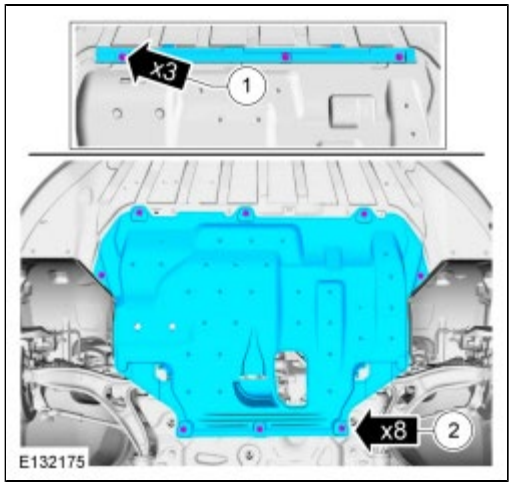

11.

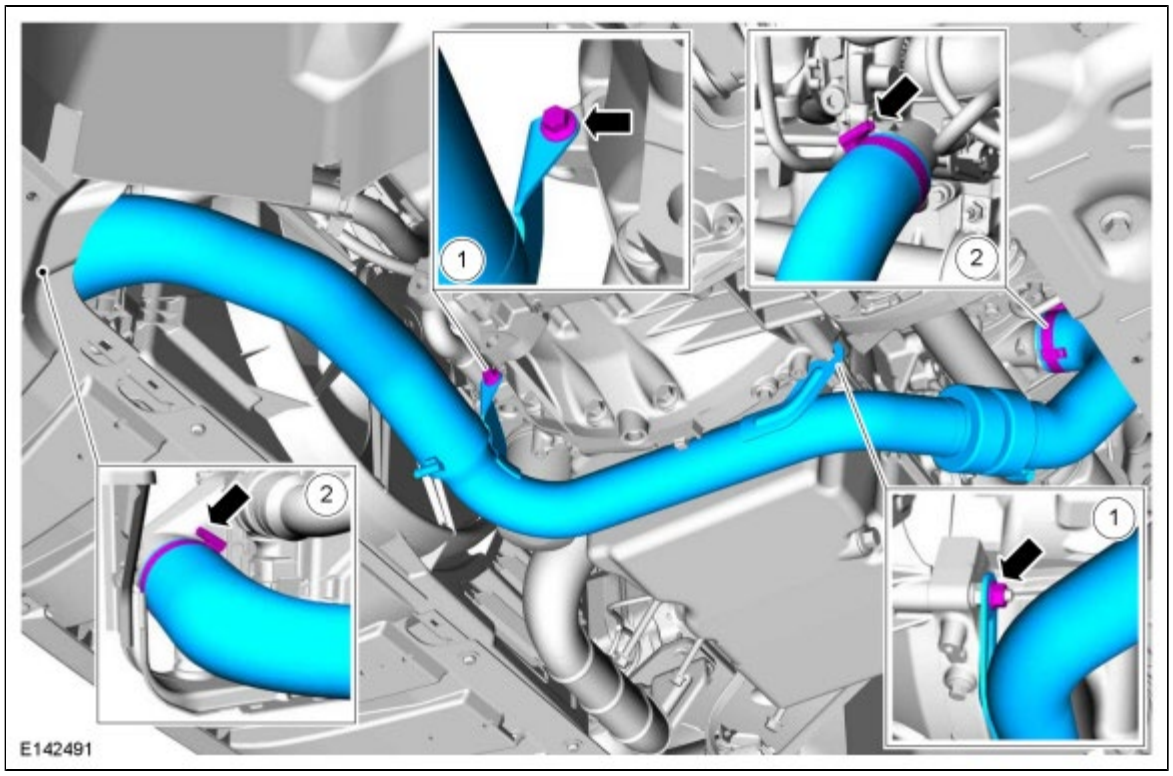

12.

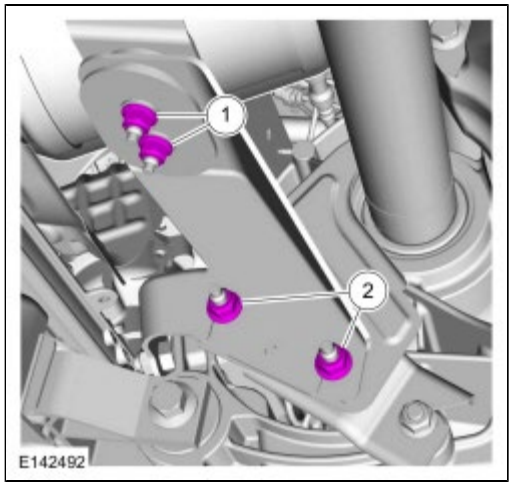

13.

3. If equipped.

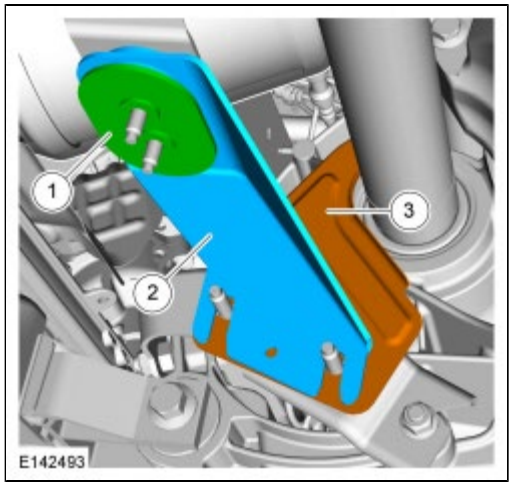

14.

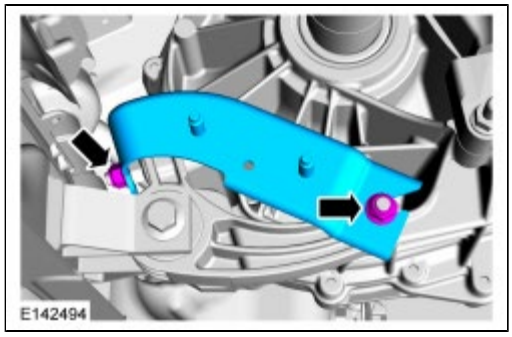

15.

2. *Loosen* : 2 turn(s)

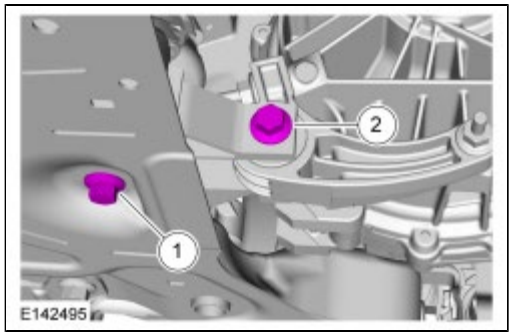

16.

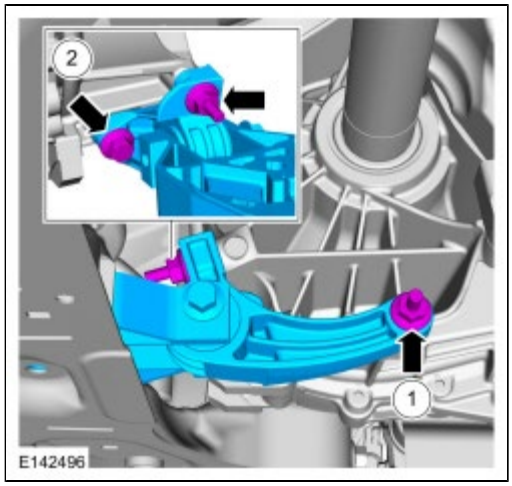

17. Remove the LH fender splash shield.
    Refer to: Fender Splash Shield (501-02 Front End Body Panels, Removal and Installation).

18. Refer to: Front Halfshaft LH (205-04 Front Drive Halfshafts, Removal and Installation).

19. Refer to: Wheel and Tire (204-04A Wheels and Tires, Removal and Installation).

20. **NOTICE: Do not use a prying device or separator fork between the ball joint and the wheel knuckle. Damage to the ball joint or ball joint seal may result. Only use the pry bar by inserting it into the lower arm body opening.**

    NOTICE: Use care when releasing the lower arm and wheel knuckle into the resting position or damage to the ball joint seal may occur.

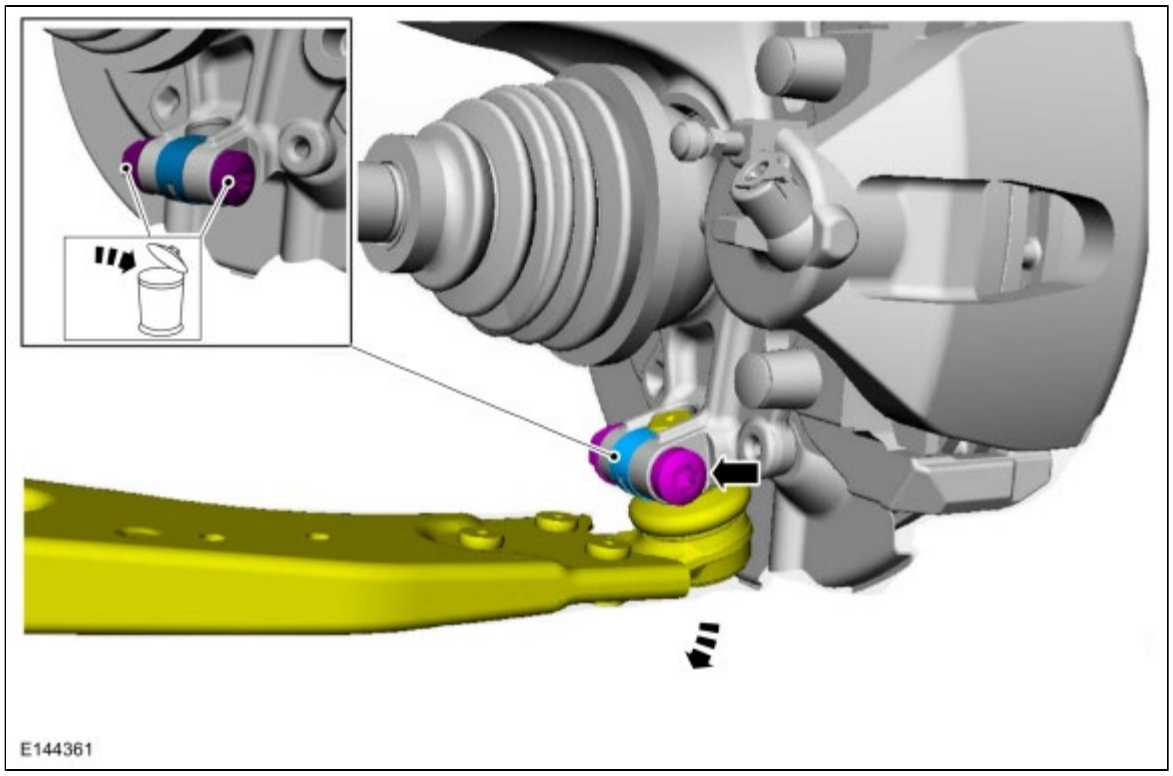

21. **WARNING: Be prepared to collect escaping fluid.**

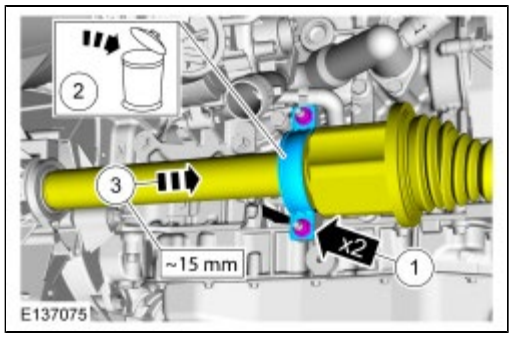

22.
    1. Using part: 97ZT-7M181-A Seal Protector.

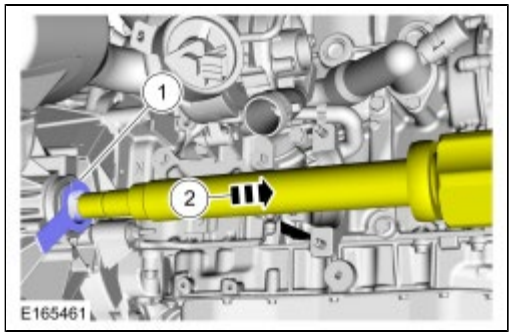

23. **NOTICE: The inner constant velocity (CV) joint must not be bent more than 18°.**

    NOTICE: The outer constant velocity (CV) joint must not be bent more than 45°.

    .

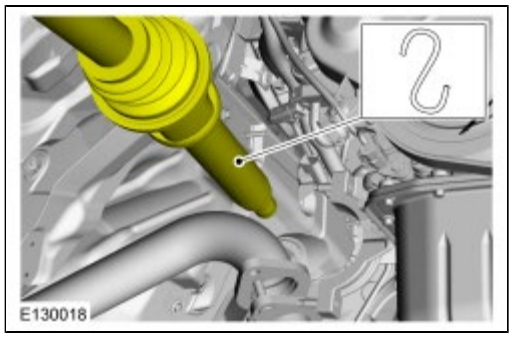

24.

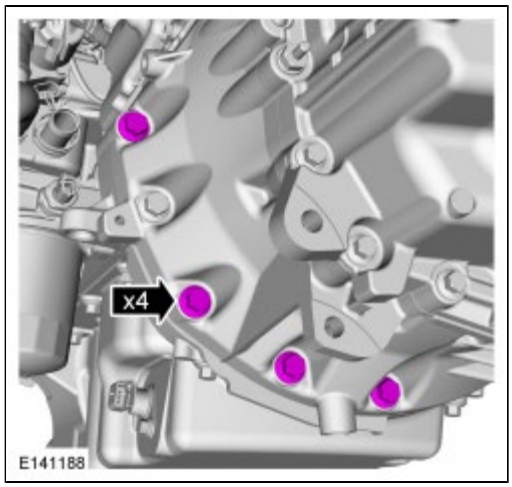

25.

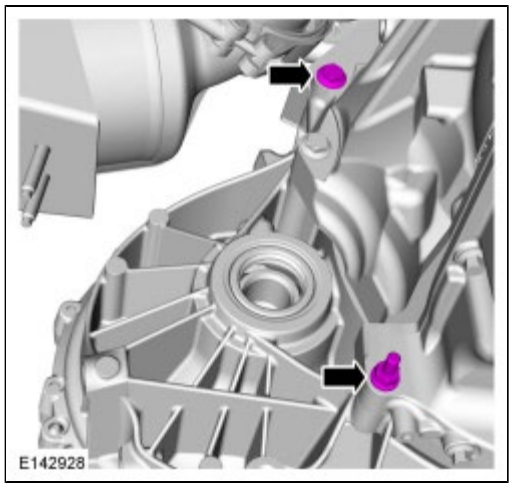

26. Refer to: Cowl Panel Grille (501-02 Front End Body Panels, Removal and Installation).

27. *Special Tool(s)* : 303-F072 Support Bar, Engine

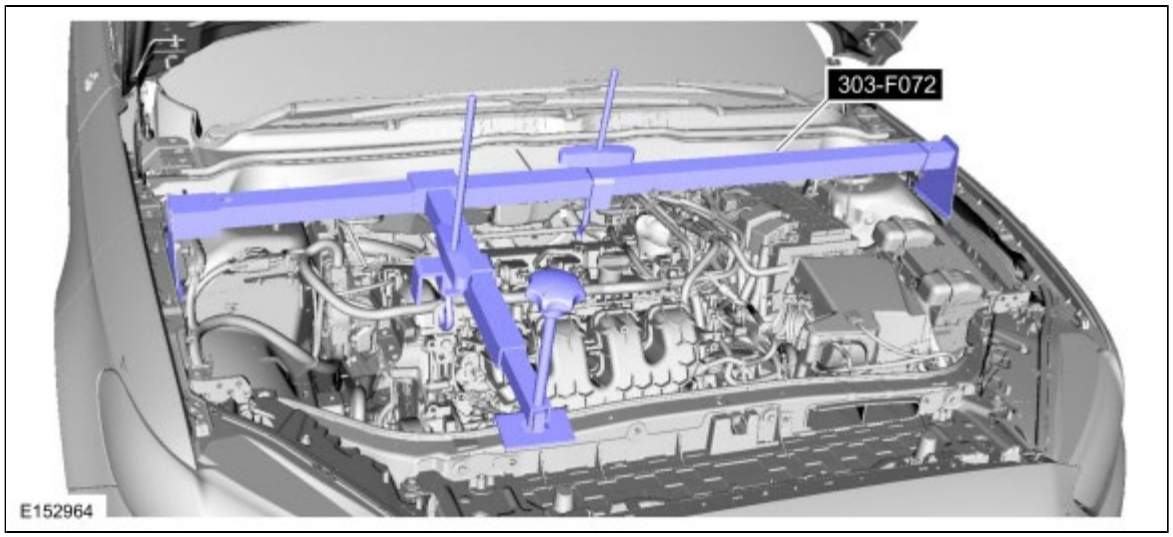

28.

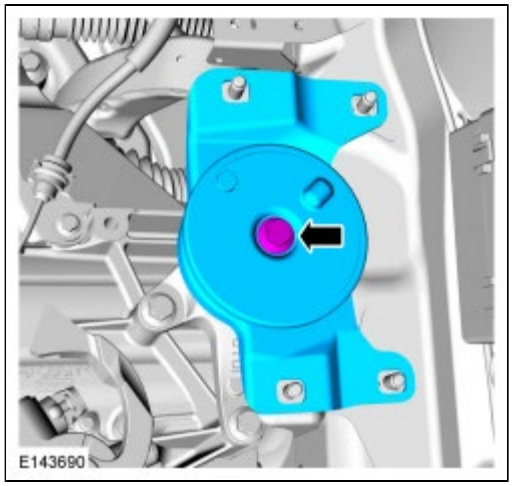

29.

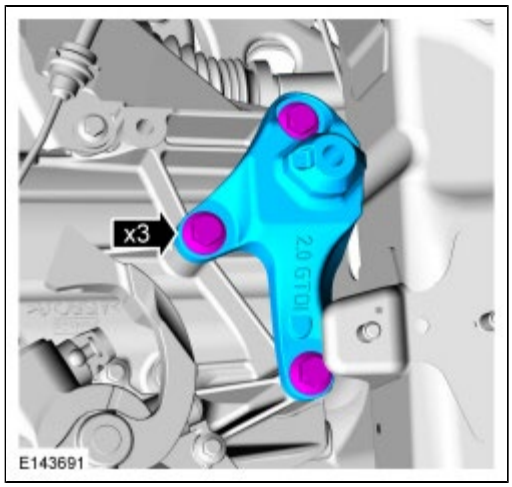

30. **NOTICE: Make sure that all openings are sealed.**

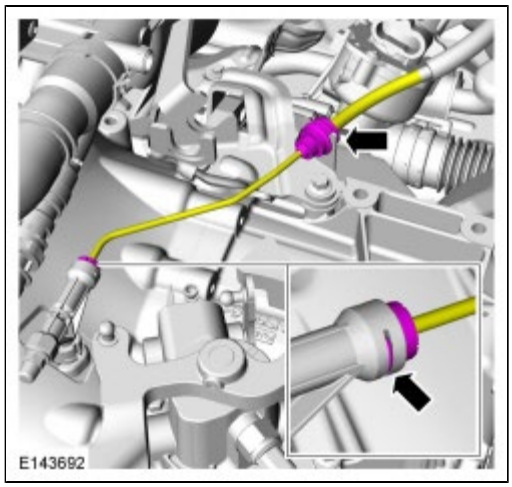

31. Refer to: Jacking and Lifting - Overview (100-02 Jacking and Lifting, Description and Operation).

32. *General Equipment* : Wooden Block
    General Equipment : Retaining Strap
    General Equipment : Transmission Jack

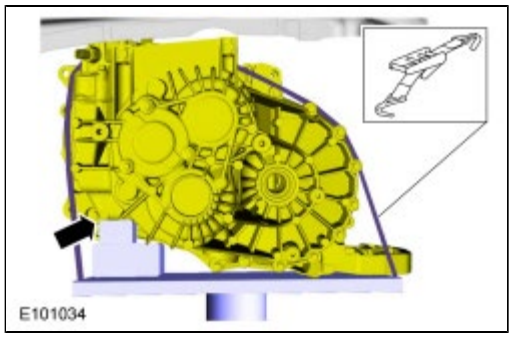

33.

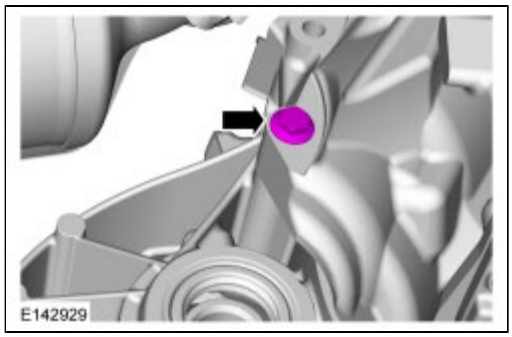

34.

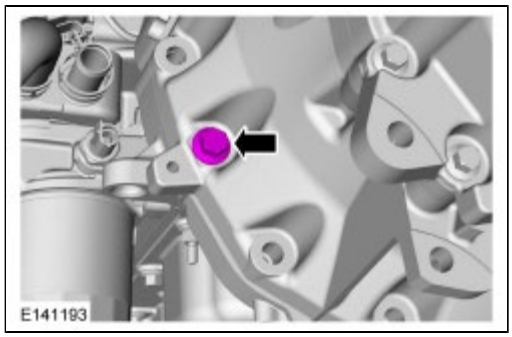

35.

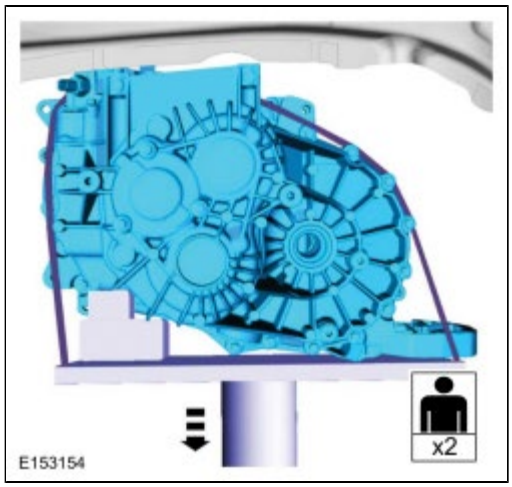

Copyright © Ford Motor Company

Transmission - 2.0L EcoBoost (184kW/250PS) - MI4

1. *Material* : Grease - High Temperature (ESD-M1C220-A)

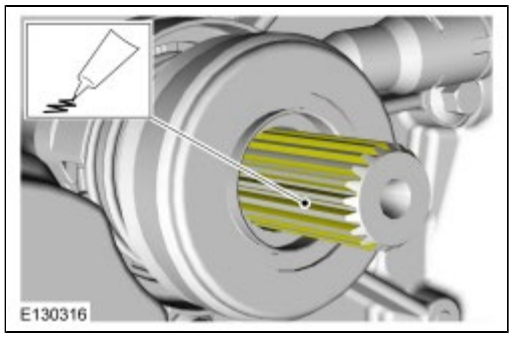

2.

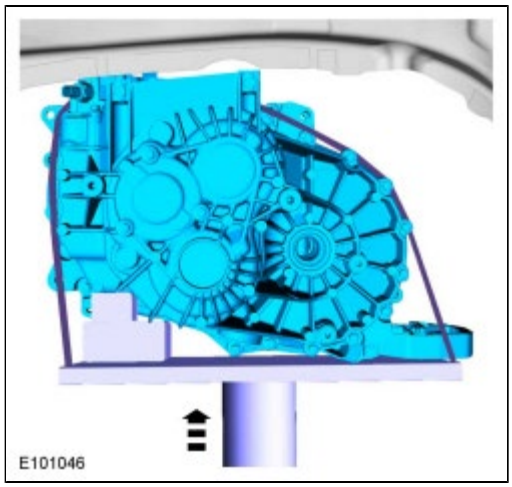

3. Tighten on both sides simultaneously.
   Torque : 48 Nm

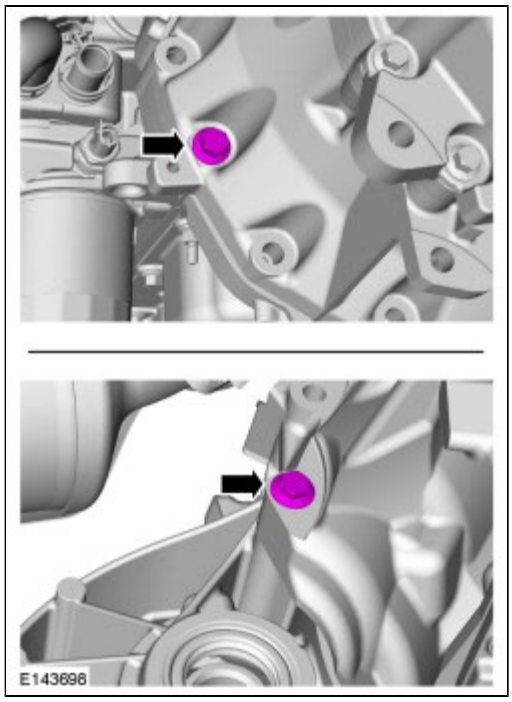

4. Remove the following items:
    - *General Equipment* : Wooden Block
    - *General Equipment* : Retaining Strap
    - *General Equipment* : Transmission Jack

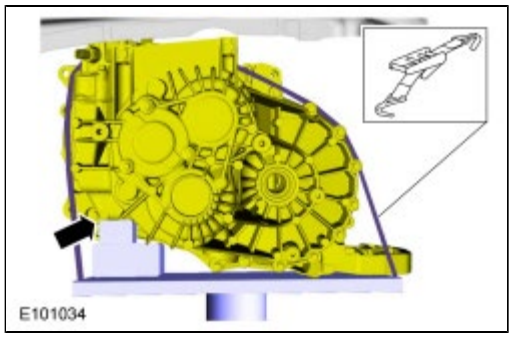

5. Refer to: Jacking and Lifting - Overview (100-02 Jacking and Lifting, Description and Operation).

6. *Torque* : 80 Nm

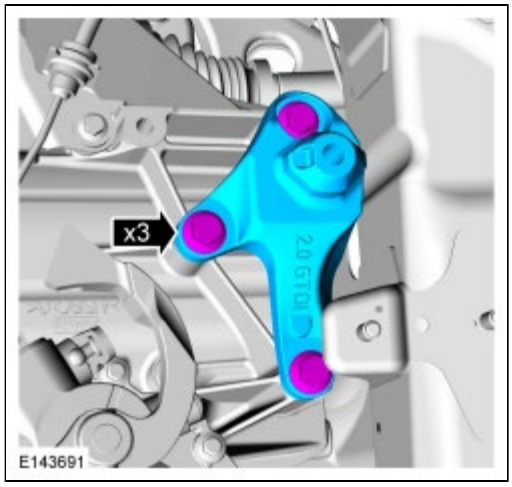

7. **WARNING: Make sure that a new bolt is installed.**

Torque : 148 Nm

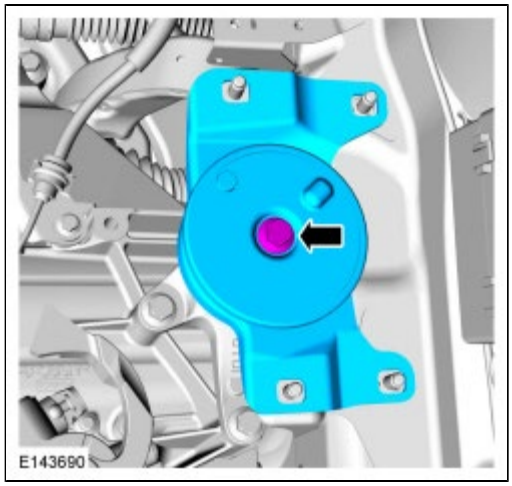

8. Remove special tool.
   Special Tool(s) : 303-F072 Support Bar, Engine

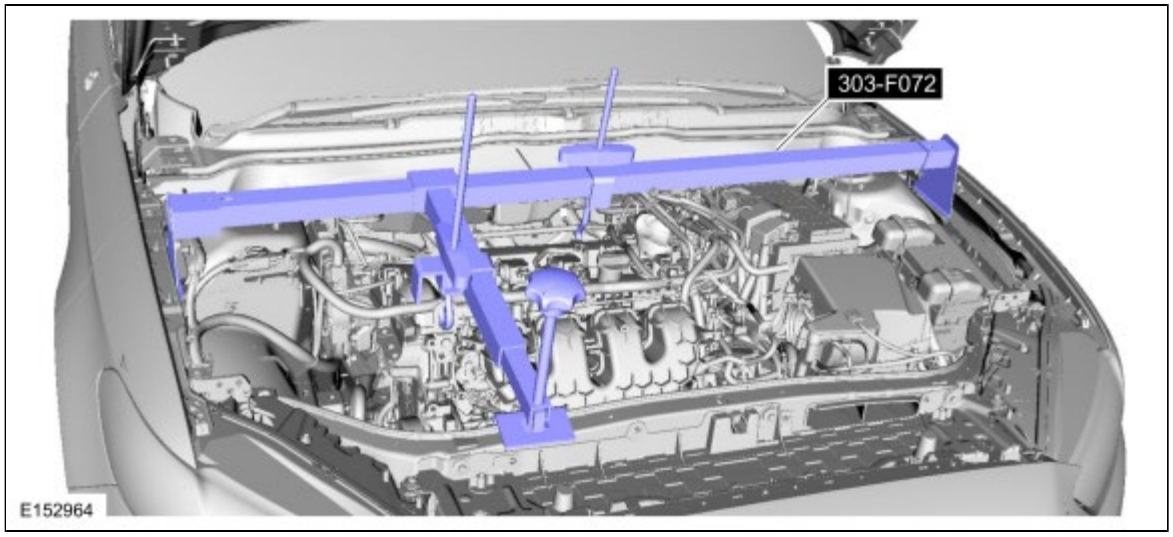

9.

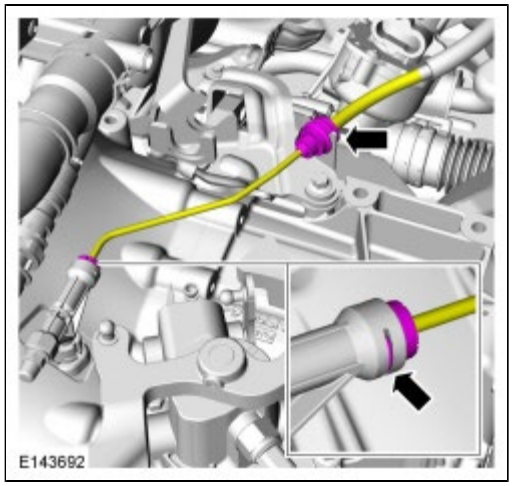

10. Refer to: Jacking and Lifting - Overview (100-02 Jacking and Lifting, Description and Operation).

11. *Torque* : 48 Nm

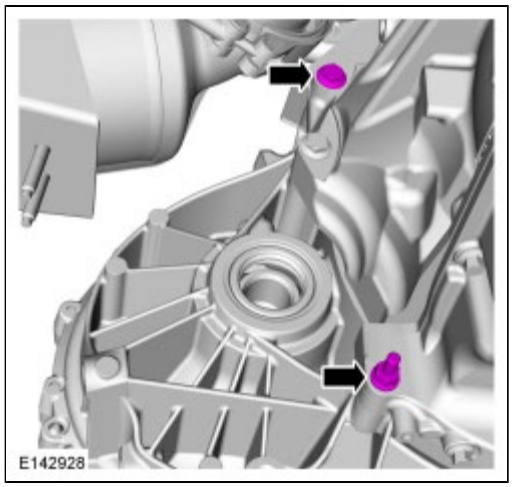

12. *Torque* : 48 Nm

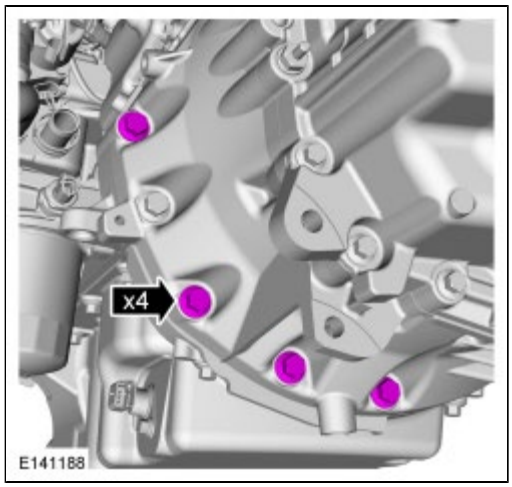

13. Refer to: Front Halfshaft LH (205-04 Front Drive Halfshafts, Removal and Installation).
14. Refer to: Fender Splash Shield (501-02 Front End Body Panels, Removal and Installation).
15. **NOTE:** *Do not fully install the halfshaft at this time.*

    Using part: 97ZT-7M181-A Seal Protector.

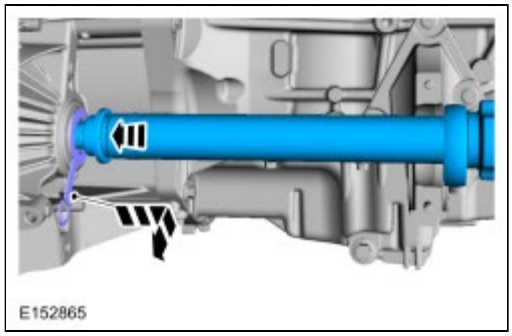

16.

    1. **NOTE:** *Make sure that a new component is installed.*
    2. **NOTE:** *Make sure that a new component is installed.*

       Torque : 6 Nm
    3. **NOTE:** *Make sure that a new component is installed.*

Torque : 6 Nm
4. *Torque* : 25 Nm
5. *Torque* : 25 Nm

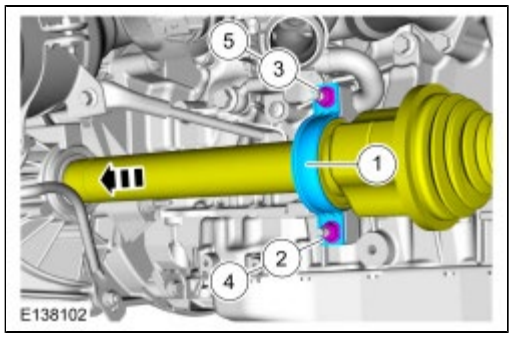

17. *Torque* : 83 Nm

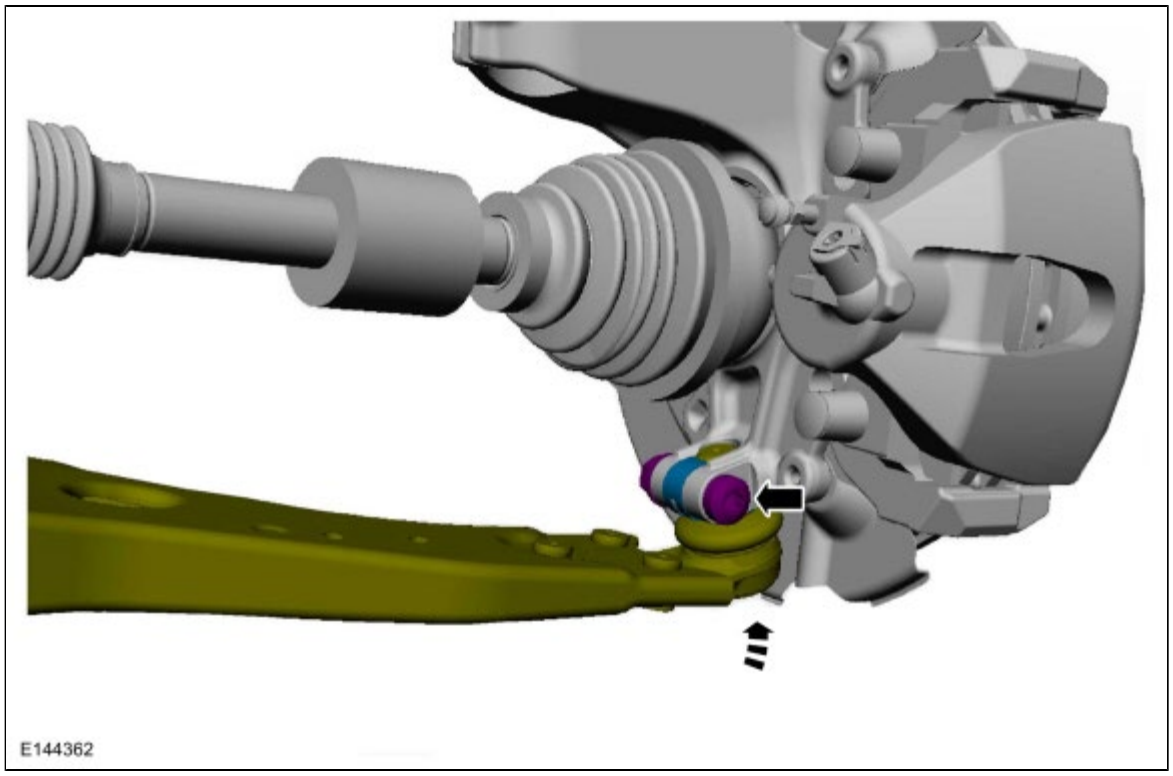

18. *Torque* : 10 Nm

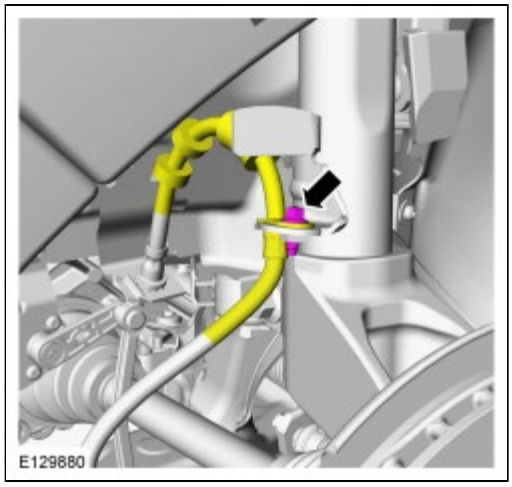

19. Refer to: Wheel and Tire (204-04A Wheels and Tires, Removal and Installation).

20.

1. *Torque* : 85 Nm
2. *Torque* : 48 Nm

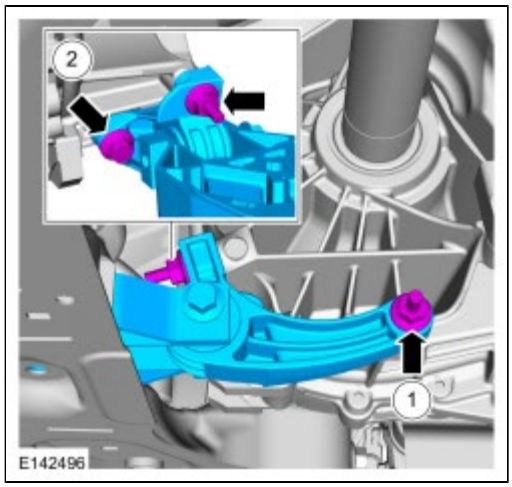

21.

1. *Torque* :
   Stage 1: 30 Nm
   Stage 2: 270°
2. *Torque* : 85 Nm

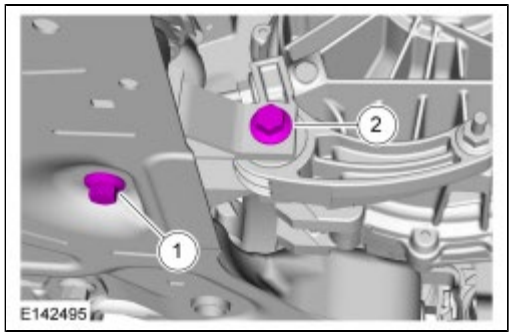

22. *Torque* : 25 Nm

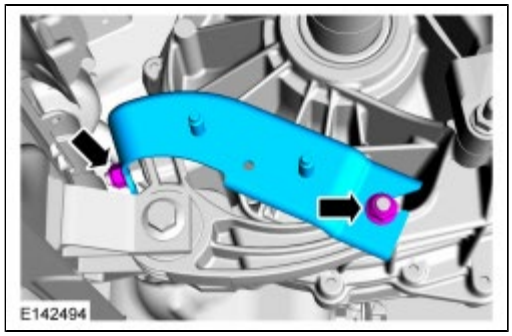

23.

1. If equipped.

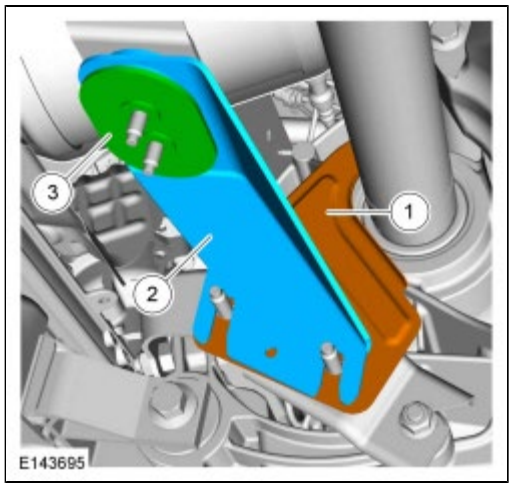

24.

1. *Torque* : 25 Nm
2. *Torque* : 24 Nm

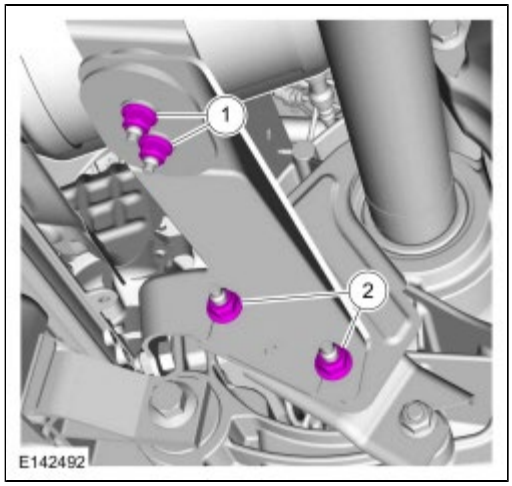

25.

1. *Torque* : 10 Nm
2. *Torque* : 5 Nm

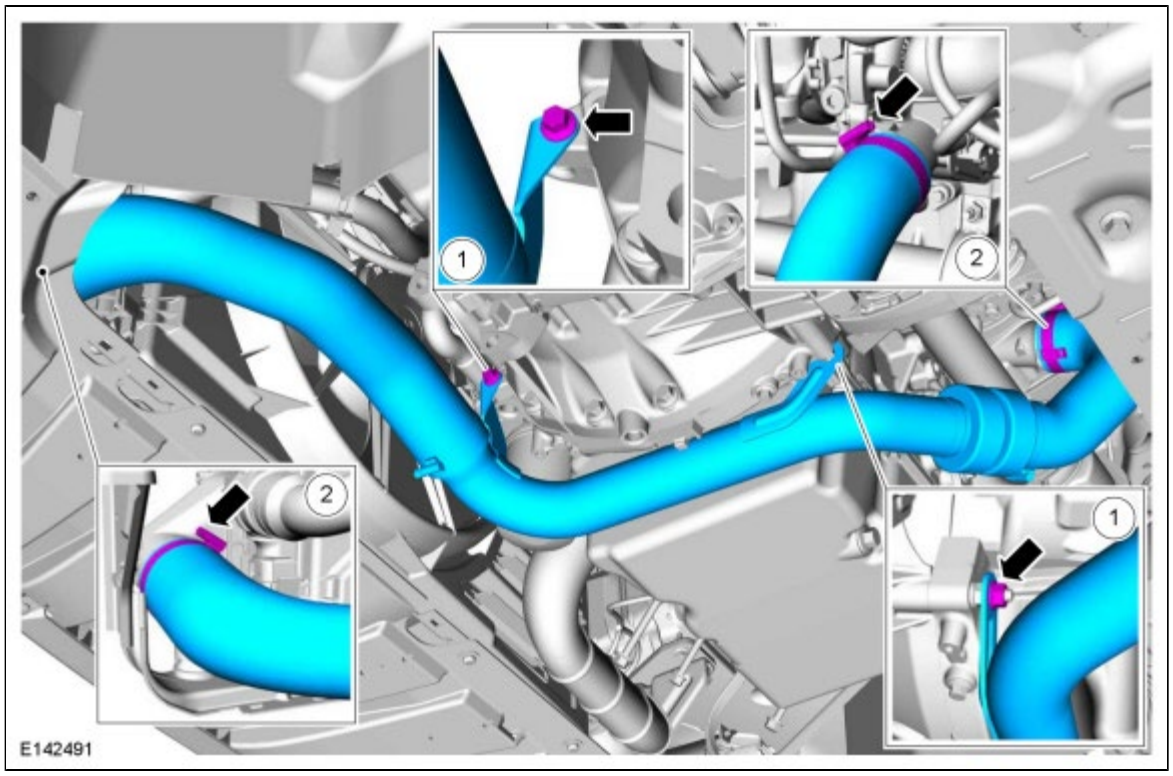

26. Refer to: Jacking and Lifting - Overview (100-02 Jacking and Lifting, Description and Operation).

27. *Torque* : 40 Nm

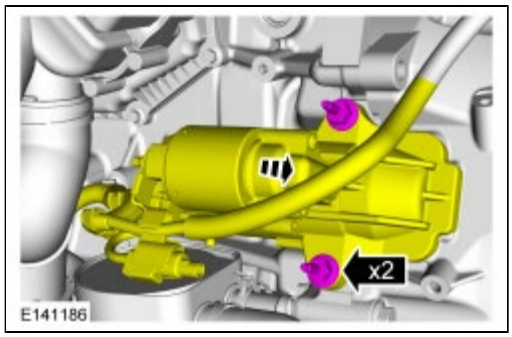

28. *Torque* : 25 Nm

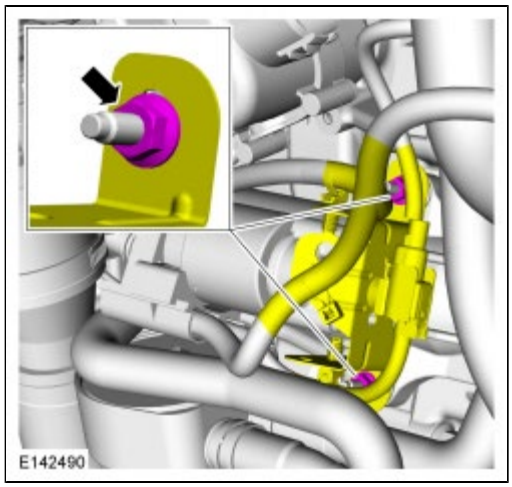

29. *Torque* : 48 Nm

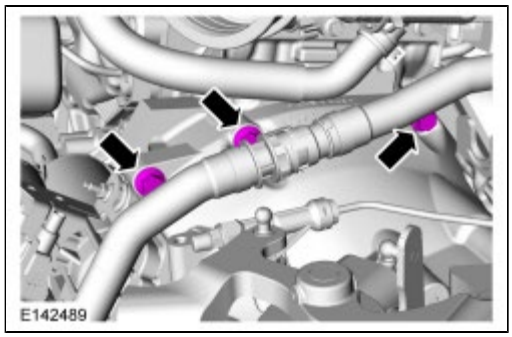

30. *Torque* : 25 Nm

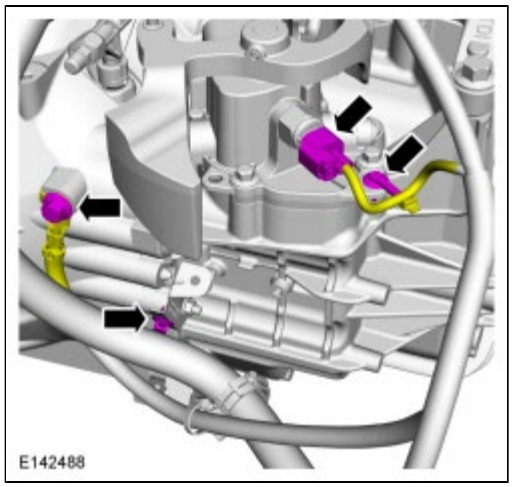

31.

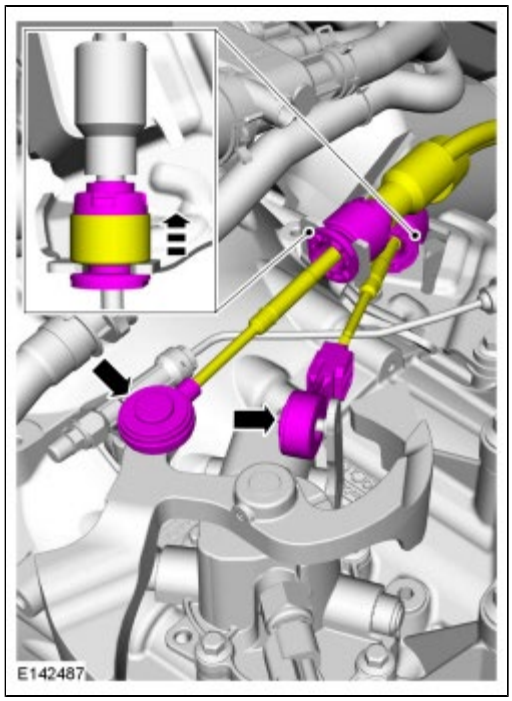

32. Refer to: Gearshift Cables - Vehicles With: 6-Speed Manual Transmission - MMT6 (308-06 Manual Transmission External Controls, Removal and Installation).

33. *Torque* : 48 Nm

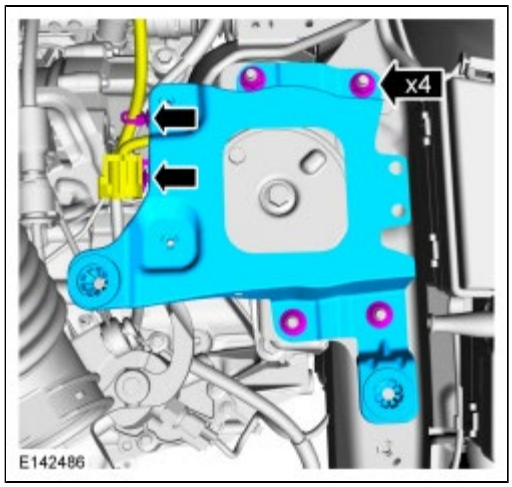

34. Refer to: Battery Tray (414-01 Battery, Mounting and Cables, Removal and Installation).

35. Refer to: Battery (414-01 Battery, Mounting and Cables, Removal and Installation).

36. Refer to: Air Cleaner (303-12B Intake Air Distribution and Filtering - 2.0L EcoBoost (184kW/250PS) - MI4, Removal and Installation).

37. Refer to: Cowl Panel Grille (501-02 Front End Body Panels, Removal and Installation).

38. Refer to: Windshield Wiper Pivot Arm (501-16 Wipers and Washers, Removal and Installation).

39. Refer to: Transmission Fluid Level Check (308-03B Manual Transmission - Vehicles With: 6-Speed Manual Transmission - MMT6, General Procedures).

40. If equipped.

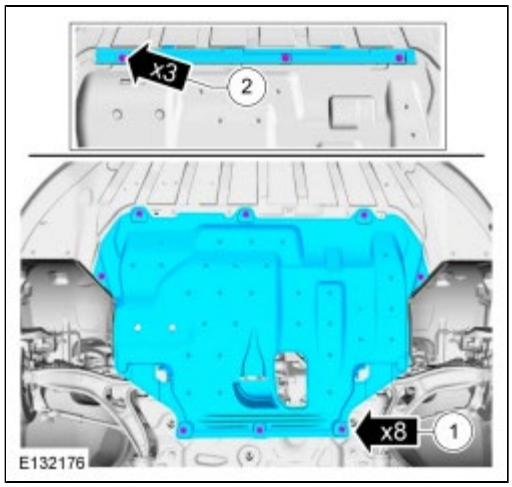

41. Refer to: Clutch System Bleeding (308-00 Manual Transmission and Clutch - General Information) .

42.

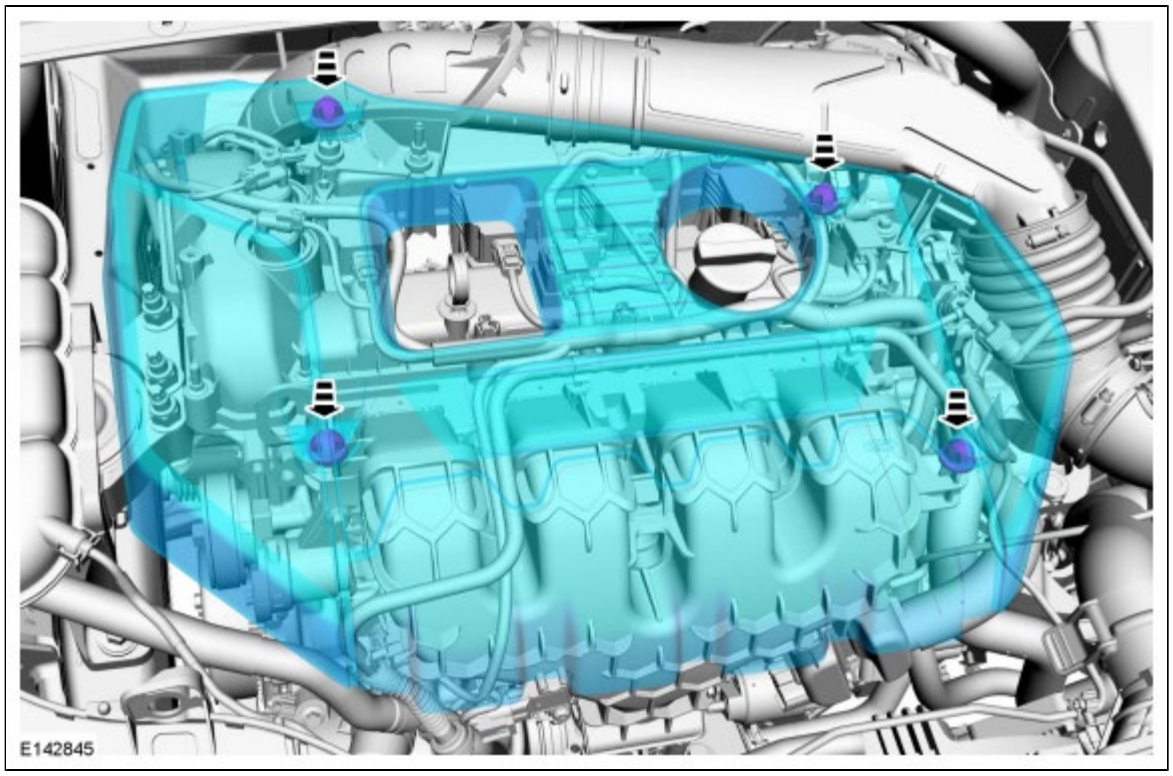

Copyright © Ford Motor Company

Manual Transmission - Overview

Componenet Location

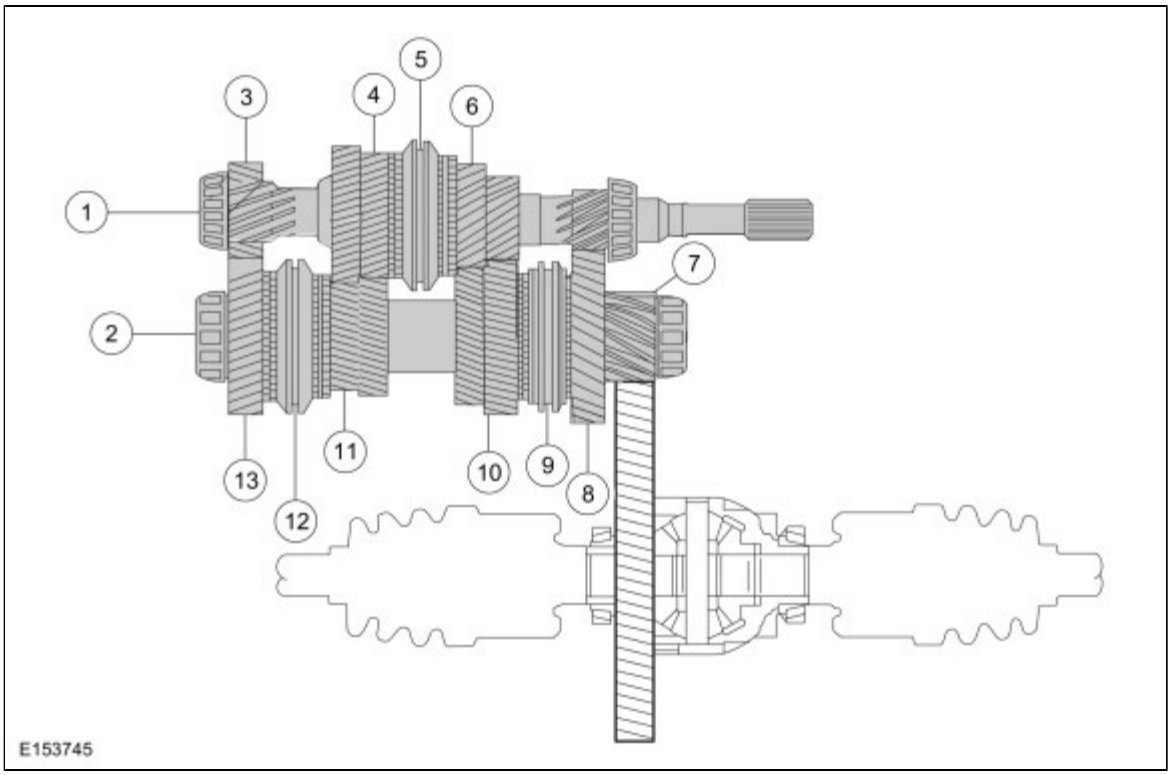

Item	Service Part Number	Description
1	7017	Input shaft
2	7061	Output shaft
3	7141	Reverse gear idler
4	7112	4th gear
5	7124	3rd and 4th gear synchronizer
6	7B340	3rd gear
7	-	Output drive pinion
8	7100	1st gear
9	7124	1st and 2nd gear synchronizer
10	7102	2nd gear
11	7K316	5th gear
12	7124	5th and reverse gear synchronizer
13	7141	Reverse gear

Overview

The MTX-75 manual transmission features the following:

- Two-part aluminum housing
- The input shaft has 2 tapered roller bearings. Input shaft end play is controlled by a selective shim located under the bearing cup
- The output shaft has 2 tapered roller bearings. Output shaft end play is controlled by a selective shim located under the bearing cup
- The differential has 2 tapered roller bearings. Differential end play is controlled by a selective shim located under the bearing cup
- All gears are bevel cut
- All gears, including reverse, turn on needle bearings
- Synchronized in all gears
- 1st and 2nd gear are dual synchronized
- Single piece brass shift forks

The input shaft, output shaft and the differential assembly are assembled under preload. If the transmission is disassembled, a preload measurement must be taken.

The transmission's function is to move the vehicle from a rest position to motion. This is done by transferring the engine torque, through the transaxle, to the vehicle's front wheels. The transmission uses gears to adapt the torque to the demands of load and road conditions. It matches engine power to vehicle needs.

This power is delivered from the engine's flywheel, to the transaxle. The power is transmitted through a driver-operated clutch, which allows for engagement and disengagement of the engine to the transaxle.

Copyright © Ford Motor Company

Manual Transmission - System Operation and Component Description

System Operation

Neutral

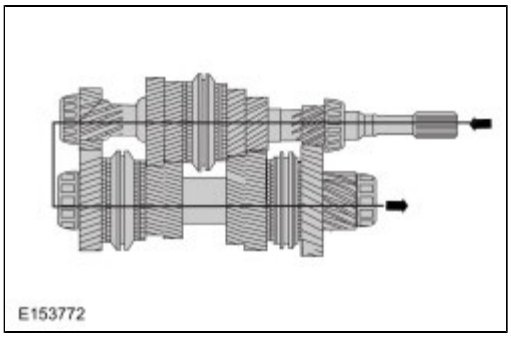

In NEUTRAL there is no powerflow through the transmission. The vehicle will stay stationary.

1st Gear

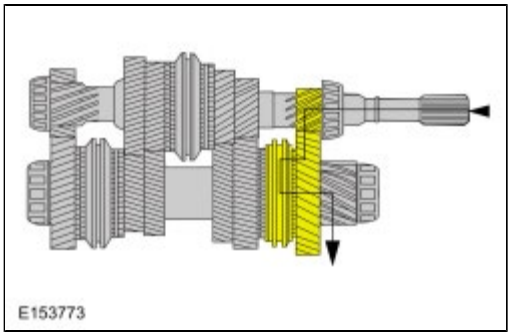

- The input shaft drives the output shaft.
- The 1st gear on the input shaft drives 1st gear on the output shaft.
- The 1st/2nd gear synchronizer is splined to the output shaft.
- When the 1-2 synchronizer sleeve is shifted forward, 1st gear is locked to the output shaft.
- The output shaft drives the differential ring gear.
- The power flows through the side and pinion gears to the halfshafts.

2nd Gear

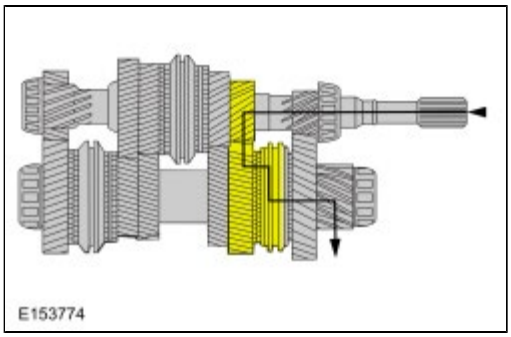

- The input shaft drives the output shaft.
- The 2nd gear on the input shaft drives 2nd gear on the output shaft.
- The 1st/2nd gear synchronizer is splined to the output shaft.

- When the 1-2 synchronizer sleeve is shifted rearward, 2nd gear is locked to the output shaft.
- The output shaft drives the differential ring gear.
- The power flows through the side and pinion gears to the halfshafts.

3rd Gear

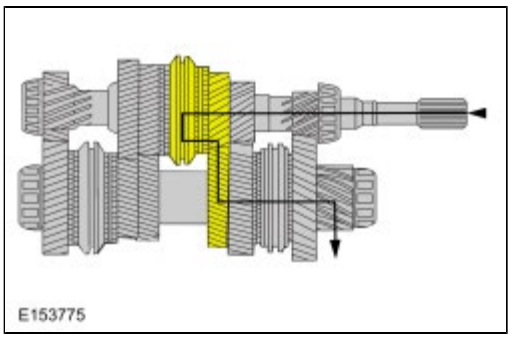

- The input shaft drives the output shaft.
- The 3rd gear on the input shaft drives 3rd gear on the output shaft.
- The 3rd/4th gear synchronizer is splined to the input shaft.
- When the 3-4 synchronizer sleeve is shifted forward, 3rd gear is locked to the input shaft.
- The output shaft drives the differential ring gear.
- The power flows through the side and pinion gears to the halfshafts.

4th Gear

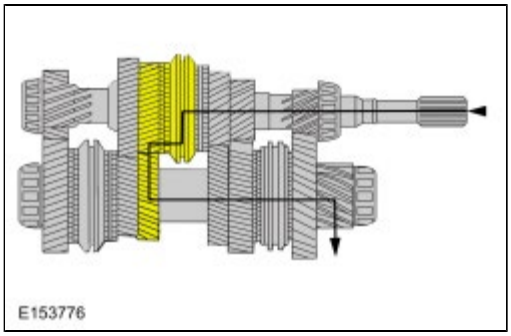

- The input shaft drives the output shaft.
- The 4th gear on the input shaft drives 4th gear on the output shaft.
- The 3rd/4th gear synchronizer is splined to the input shaft.
- When the 3-4 synchronizer sleeve is shifted rearward, 4th gear is locked to the input shaft.
- The output shaft drives the differential ring gear.
- The power flows through the side and pinion gears to the halfshafts.

5th Gear

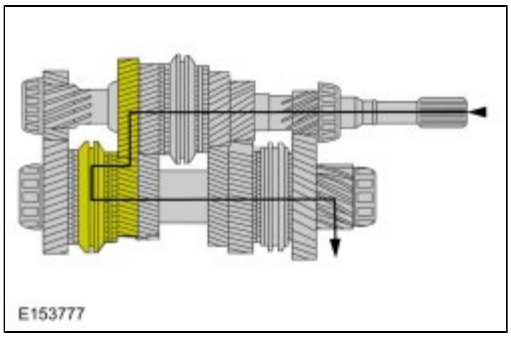

- The input shaft drives the output shaft.
- The 5th gear on the input shaft drives 5th gear on the output shaft.
- The 5th/reverse gear synchronizer is splined to the output shaft.
- When the 5th/reverse gear synchronizer sleeve is shifted forward, 5th gear is locked to the output shaft.

The output shaft drives the differential ring gear.
- The power flows through the side and pinion gears to the halfshafts.

Reverse

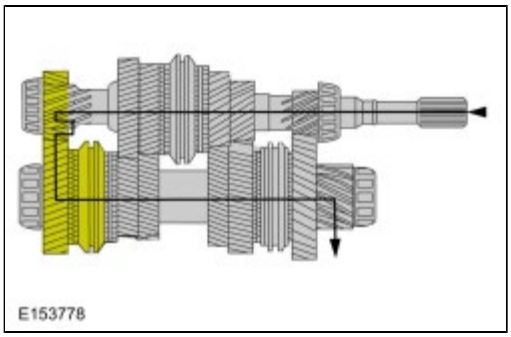

- The input shaft drives the reverse idler gear.
- The reverse gear on the input shaft drives reverse gear on the output shaft.
- The reverse gear synchronizer is splined to the output shaft.
- When the reverse gear synchronizer sleeve is shifted rearward, reverse gear is locked to the output shaft. The reverse idler gear drives reverse gear on the input shaft, in a reverse direction.
- The output shaft drives the differential ring gear.
- The power flows through the side and pinion gears to the halfshafts.

Component Description

Selector Mechanism

The selector mechanism is the link between the transmission shift cables and the transmission.

It is externally mounted on the transmission and consists of levers and rods which control the shift forks inside the transmission.

The shift and selector cables connect to levers on the outside.

The selector mechanism is replaced as an assembly.

Input Shaft

The input shaft is the main shaft splined to the clutch disc and turns the gears in the transmission.

The gears on the input shaft mesh with the output shaft gears and provide torque from the engine to the differential.

The input shaft has two tapered roller bearings. Input shaft end play is controlled by a selective shim located under the bearing cup.

Output Shaft

The output shaft transfers torque to the ring gear, pinion gears, and differential.

The output shaft has a gear for each drive gear, including reverse. 1st, 2nd, 5th and reverse gears are free to spin around the output shaft. 3rd and 4th gears are free to spin on the input shaft. The synchronizers engage the gears locking them to the output shaft.

The output shaft has two tapered roller bearings. Output shaft end play is controlled by a selective shim located under the bearing cup.

Differential

The ends of the differential are supported on tapered roller differential bearings. The cups for these differential bearings are seated in the transmission case and the flywheel housing. Differential bearing preload is set using a selective differential bearing shim that is installed under the differential bearing cup in the transmission case.

The differential includes the differential side gears and the shaft mounted differential pinion gears. Direct contact between the gears and the differential case is prevented by the differential side gear thrust washers installed under the gears. The differential pinion

shaft is held in position by a differential pinion shaft lock pin that extends through the end of the differential pinion shaft and the differential case.

The differential has two tapered roller bearings. Differential end play is controlled by a selective shim located under the bearing cup.

Synchronizer

The synchronizers are designed to act as the torque carrying interfaces between each speed gear and corresponding output shaft. The synchronizer design and function are similar to manual transmission operations.

Gear pre-selection is made by sliding the synchronizer sleeve towards a speed gear. This causes the internal splines of the synchronizer sleeve to bridge a gap between the output hub and the external spline feature of the speed gear, thus transmitting speed and torque between the gear and output shaft. Synchronizers are small cone wet friction clutches mounted to the transmission output shaft and input shaft. They are used to bring the rotation speed of the engaging speed gear in sync with the output shaft speed. After synchronous speed has been attained the final power flow connection is made possible and the synchronizer sleeve is permitted to pass by and engage the external spline teeth on the speed gear.

Copyright © Ford Motor Company

Transmission

WARNING: Before beginning any service procedure in this section, refer to Safety Warnings in section 100-00 General Information. Failure to follow this instruction may result in serious personal injury.

1. Refer to: Health and Safety Precautions (100-00 General Information, Description and Operation).
   Refer to: Air Cleaner (303-12A Intake Air Distribution and Filtering - 2.0L Duratec-HE (125kW/170PS) - MI4, Removal and Installation).
   Refer to: Battery Tray (414-01 Battery, Mounting and Cables, Removal and Installation).

2.

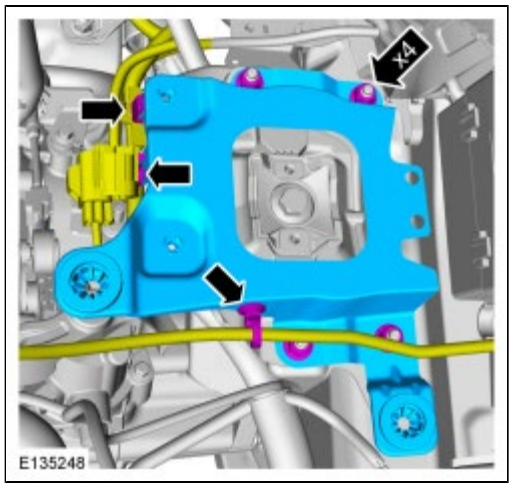

3.

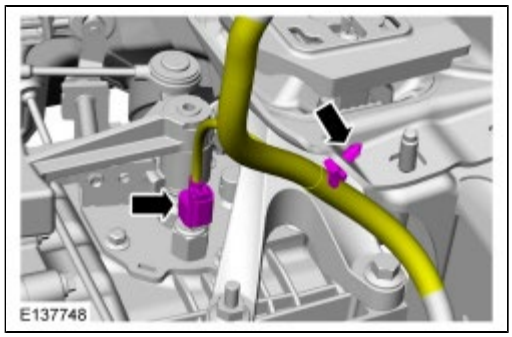

4.

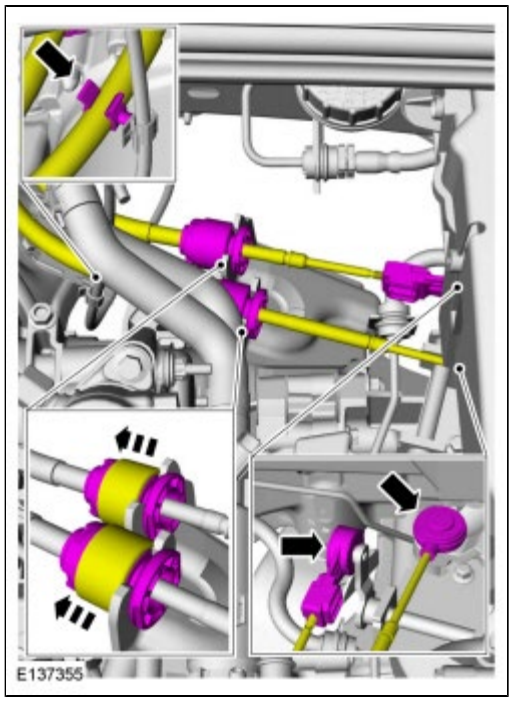

5.

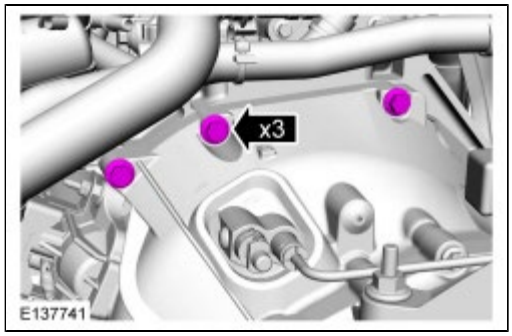

6. Refer to: Jacking and Lifting - Overview (100-02 Jacking and Lifting, Description and Operation).

7.
   1. If equipped.
   2. If equipped.

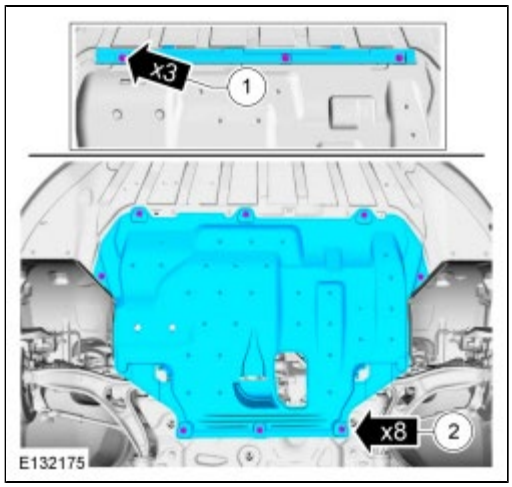

8.

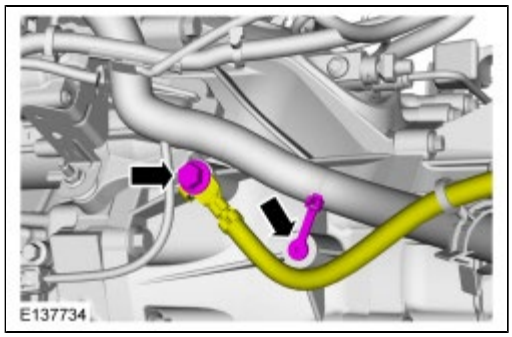

9.

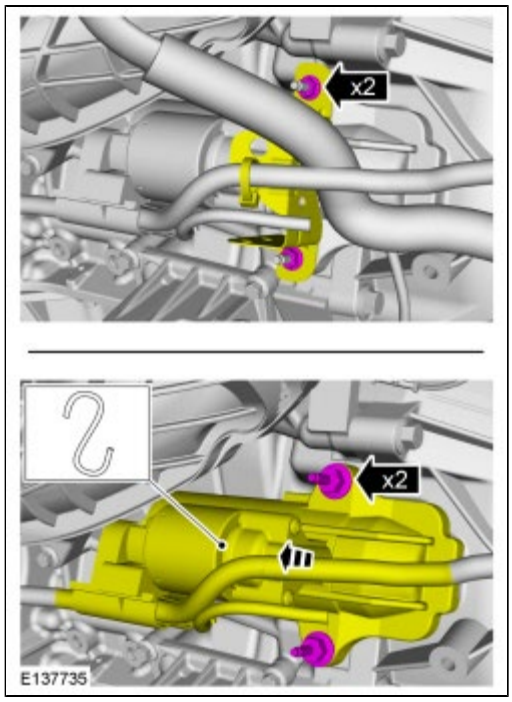

10. Drain the transmission fluid.
    Torque : 35 Nm

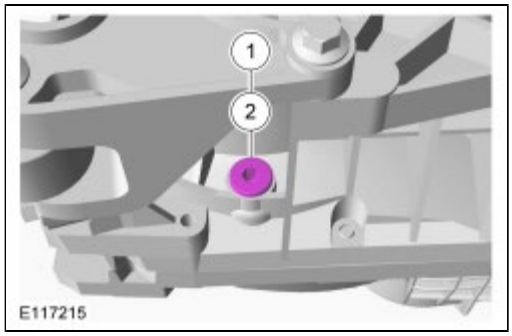

11. Remove the following items:
    - Refer to: Front Halfshaft LH (205-04 Front Drive Halfshafts, Removal and Installation).

12. If equipped.

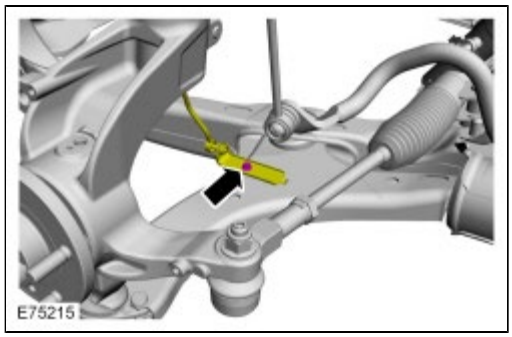

13.

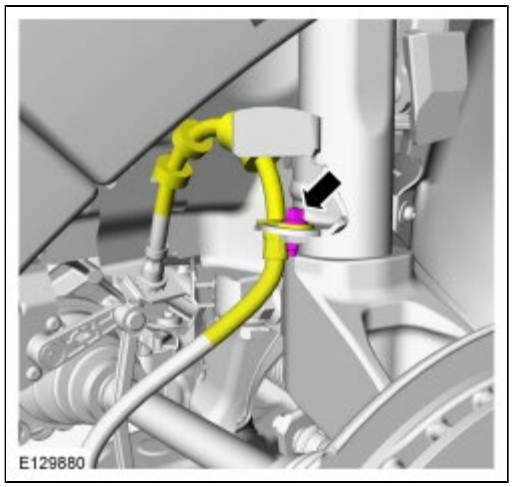

14.

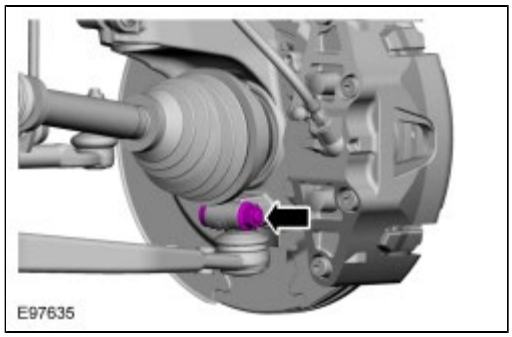

15.

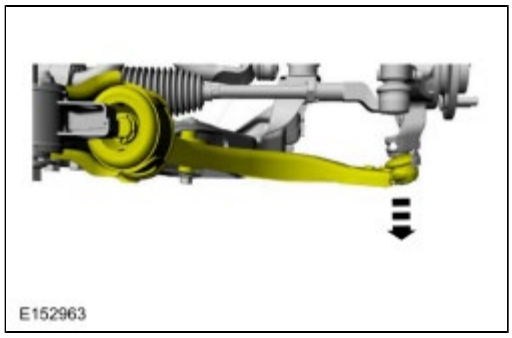

16.

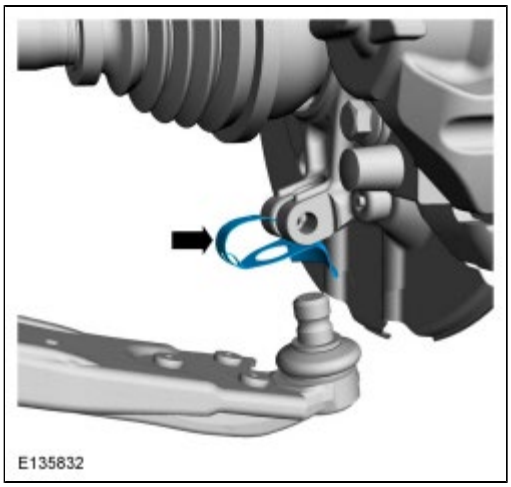

17.

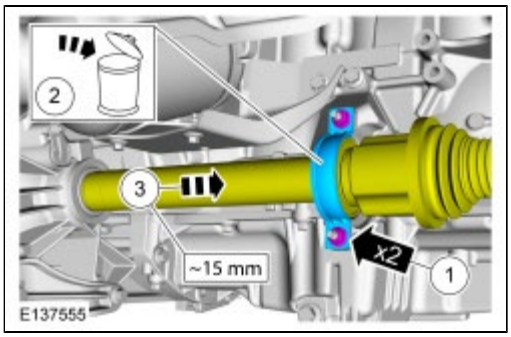

18. *Special Tool(s)* : 205-775 Protector, Halfshaft Seal

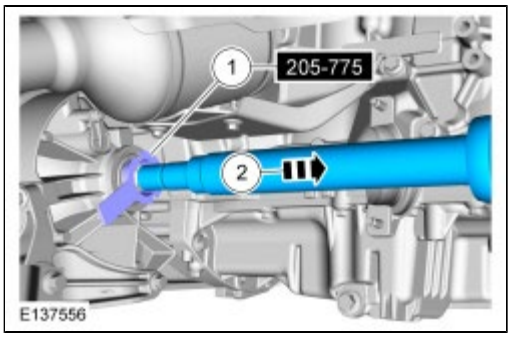

19.

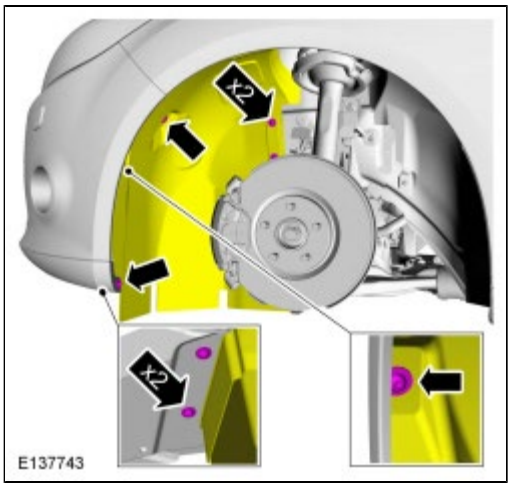

20.

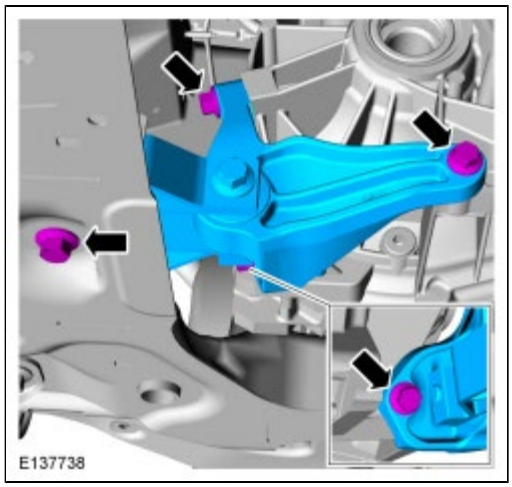

21.

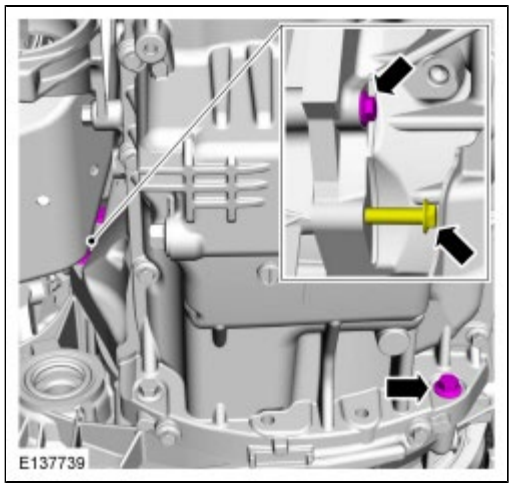

22.

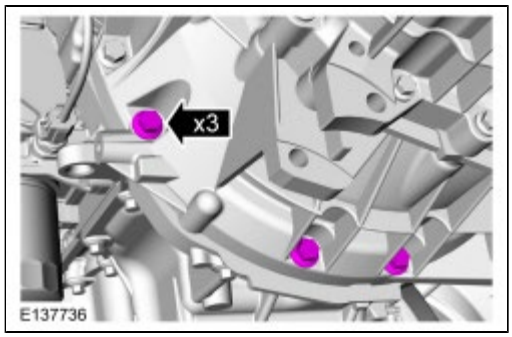

23. Lower the Vehicle.

24. Support the engine.
    Special Tool(s) : 303-F072 Support Bar, Engine

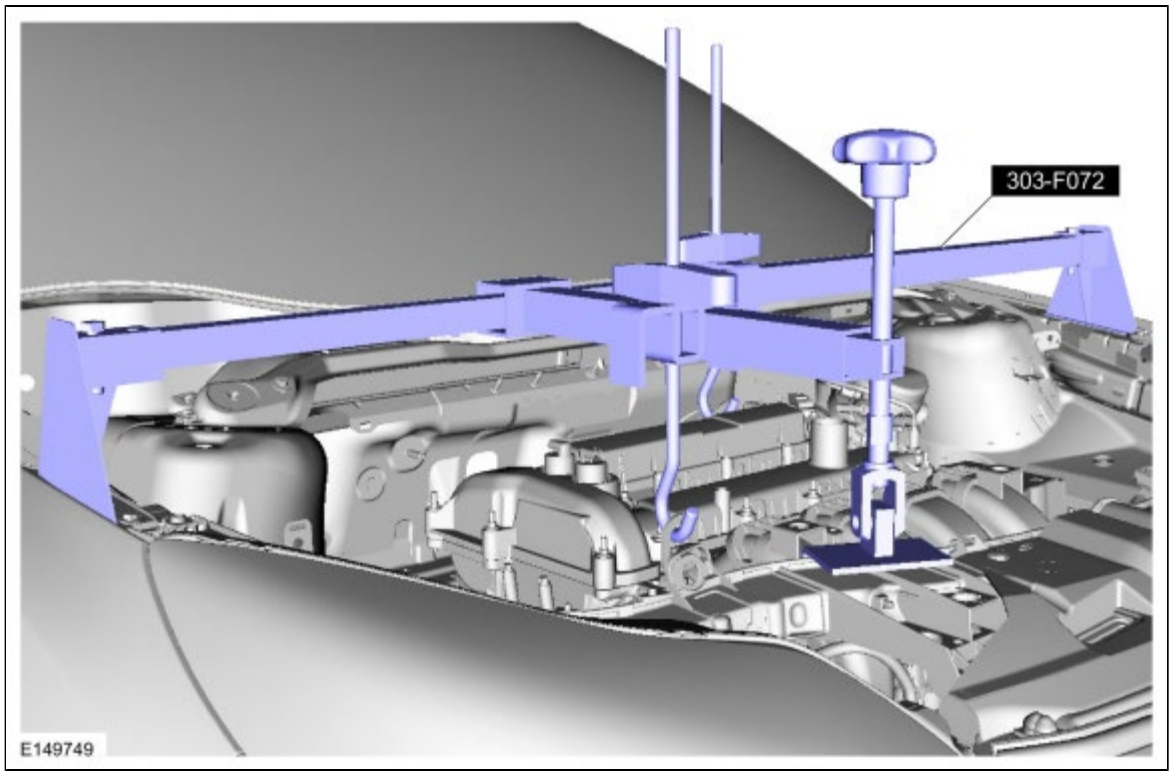

25.

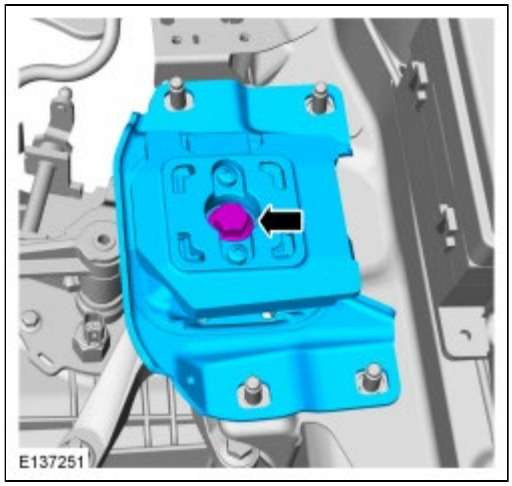

26.

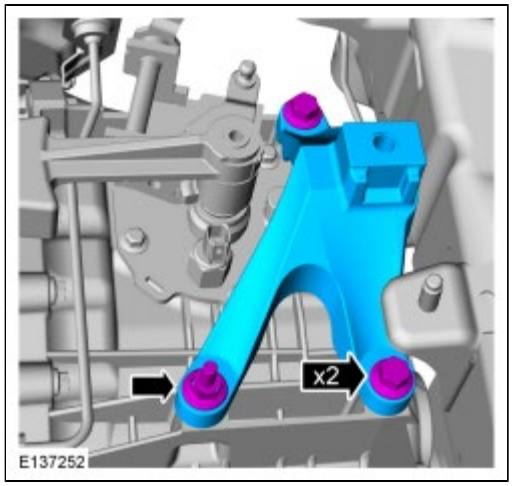

27. **NOTICE: Make sure that all openings are sealed.**

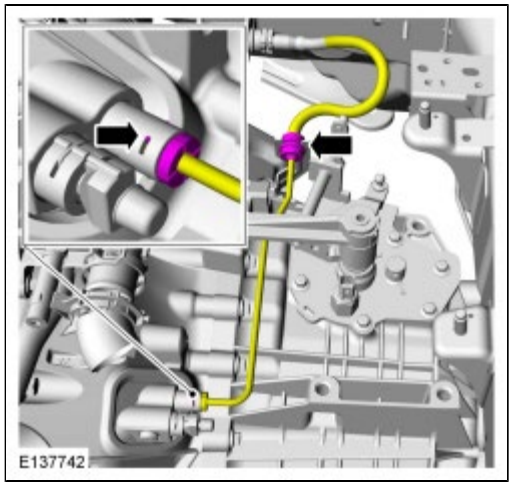

28. Refer to: Jacking and Lifting - Overview (100-02 Jacking and Lifting, Description and Operation).

29. Install the following items:
    - *General Equipment* : Transmission Jack
    - *General Equipment* : Wooden Block
    - *General Equipment* : Retaining Strap

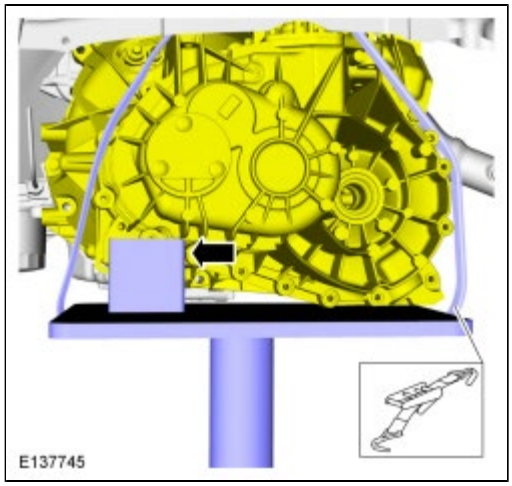

30.

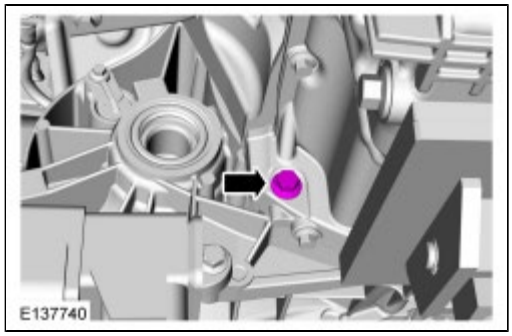

31.

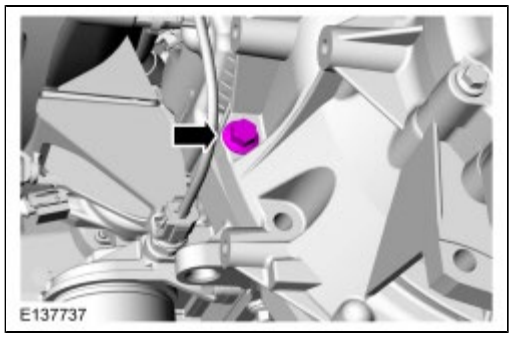

32.

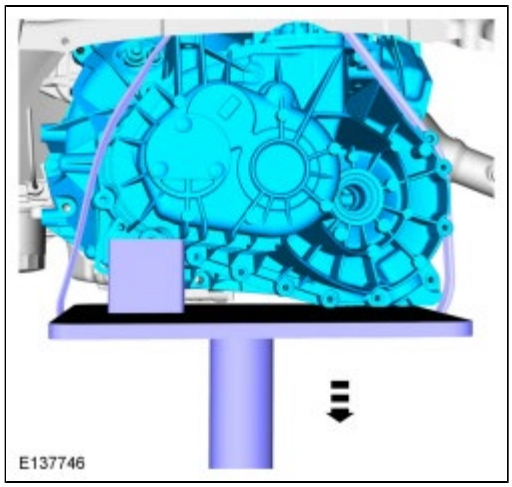

Copyright © Ford Motor Company

Transmission

1.
   1. *Material* : Gasket Maker / TA-16 (WSK-M2G348-A5)
   2. Fit the temporary bolt.

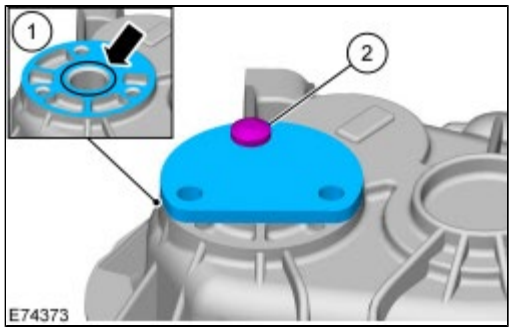

2.
   1. Remove the temporary bolt.
   2. **NOTE:** *Make sure that new bolts are installed.*

      Torque : 24 Nm

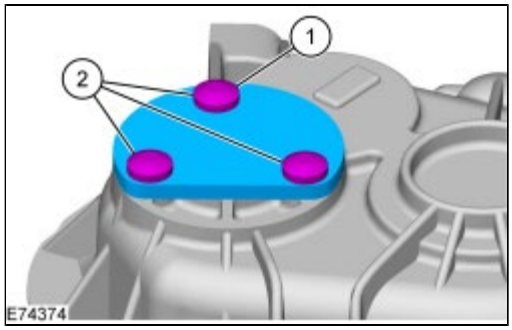

3.
   1. *General Equipment* : Hot Air Gun
   2. Insert bearing outer rings manually.

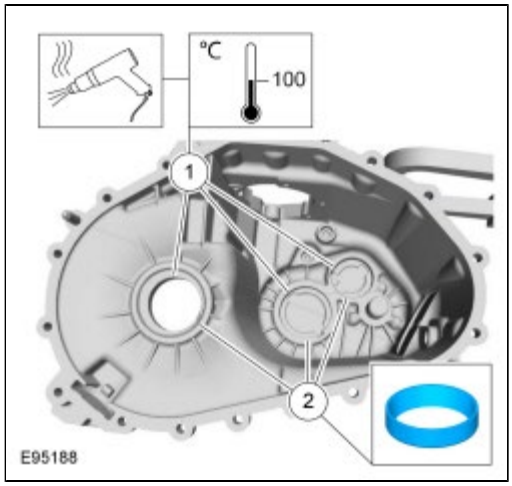

4. *Special Tool(s)* : 204-050 Installer, Front Wheel Hub Bearing Cup/Seal , 205-075 Installer, Rear Wheel Hub Seal , 307-

210 Installer, Input Shaft Seal

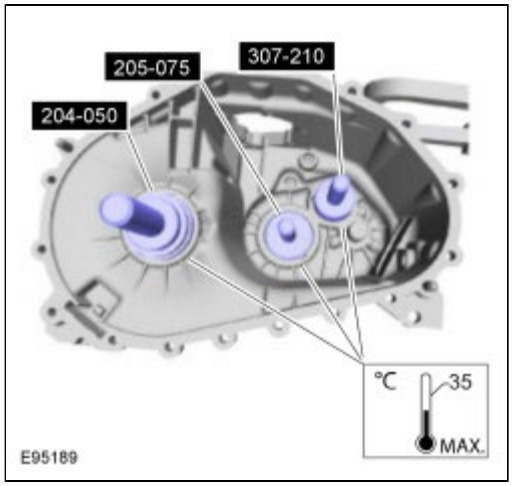

5.
    1. *General Equipment* : Hot Air Gun
    2. Install a 1.10 mm measuring shim.
    3. Install 1.00 mm measuring shims.
    4. Insert bearing outer rings manually.

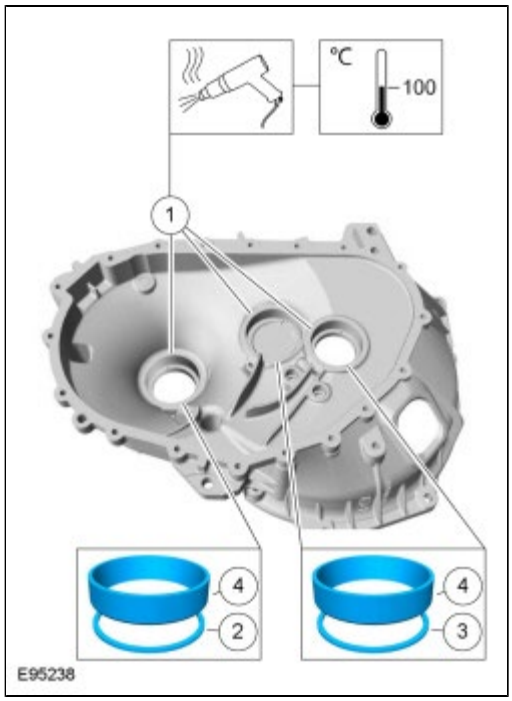

6. *Special Tool(s)* : 204-017 Installer, Wheel Hub Bearing Cup , 204-050 Installer, Front Wheel Hub Bearing Cup/Seal , 205-075 Installer, Rear Wheel Hub Seal

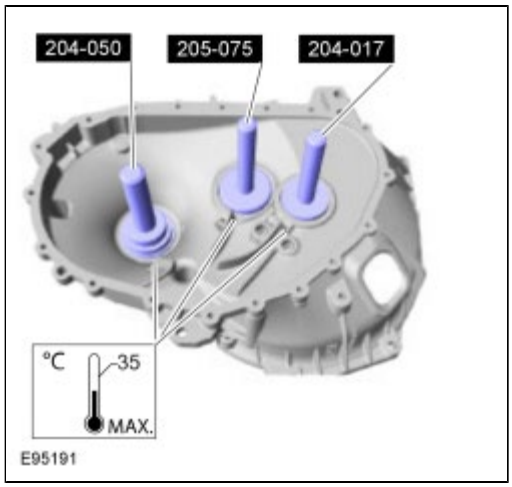

7.

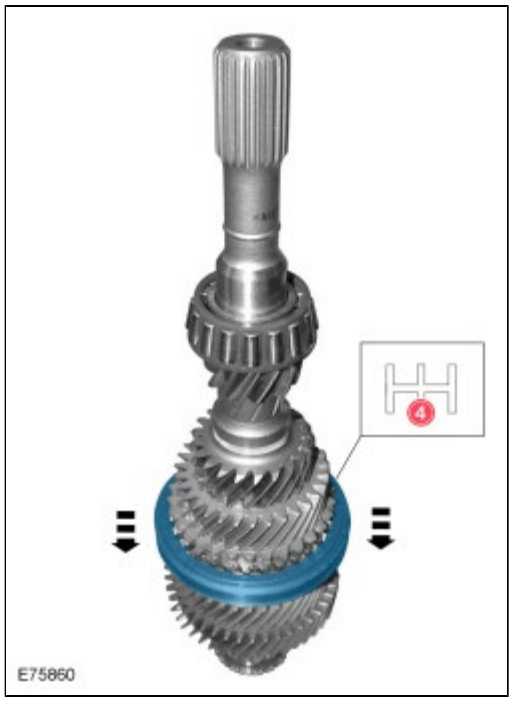

8. **NOTE:** *Do not oil the taper roller bearing.*

   Install the following items:
   1.
   2.
   3.

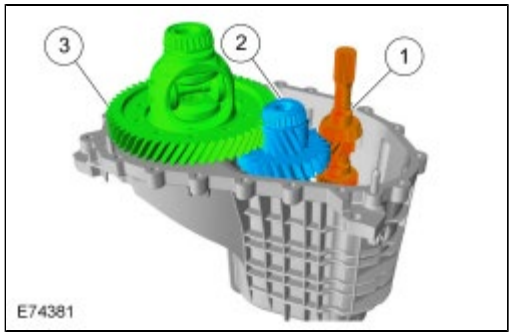

9. **NOTICE: The guide pins must remain installed in the gearbox housing.**

   NOTE: *The mounting faces of the component must be clean and free from foreign bodies and lubricant.*

Tighten the bolts in a crisscross sequence.
Torque : 40 Nm

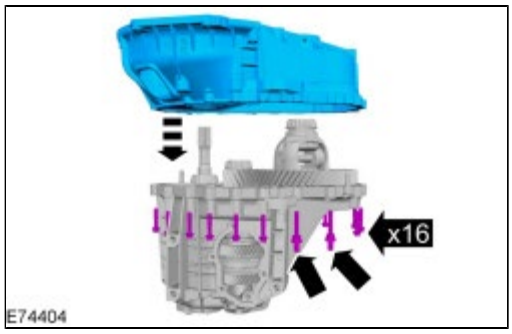

10. *Special Tool(s)* : 308-194B Holding Fixture, Dial Indicator Gauge (Output Shaft End Play)

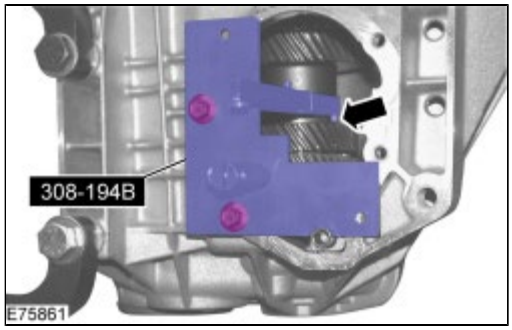

11. *Install Special Service Tool* : 205-069 Dial Indicator Gauge (Metric) , 205-070 Holding Fixture, Dial Indicator Gauge , 307-300 Gauge Bar, Shim Selection

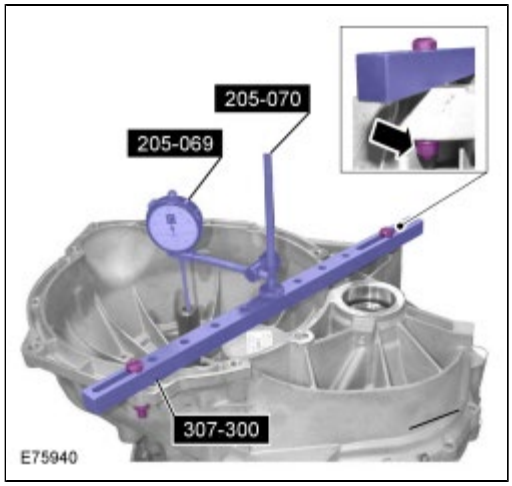

12. Input shaft measurement: Perform the following two steps three times and calculate the average of the measurements. (Example: (0.22 mm + 0.23 mm + 0.21 mm) / 3 = 0.22 mm)

13. *Special Tool(s)* : 205-175 Socket, Drive Pinion Nut

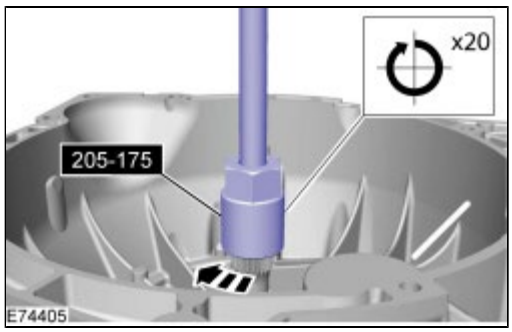

14.
    1. Pre-load the dial gauge to 1 mm and zero it.
    2. Lift the input shaft with a suitable lever and note the resulting measurement.

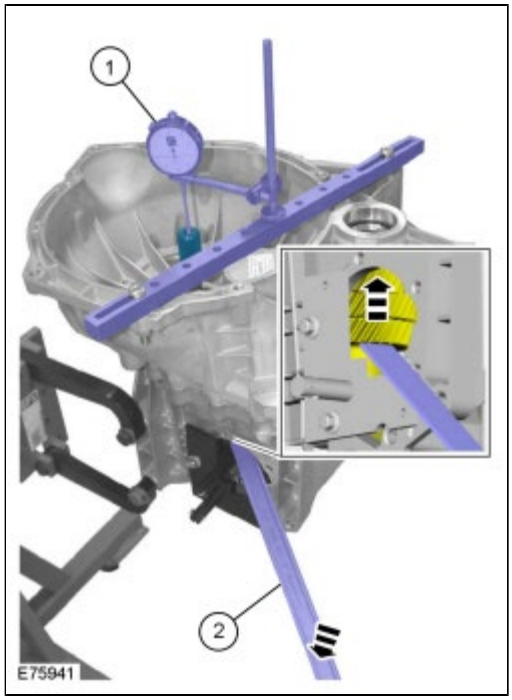

15. Output shaft measurement: Perform the following three steps three times and calculate the average of the measurements. (Example: (0.32 mm + 0.33 mm + 0.31 mm) / 3 = 0.32 mm)

16. *Special Tool(s)* : 205-175 Socket, Drive Pinion Nut

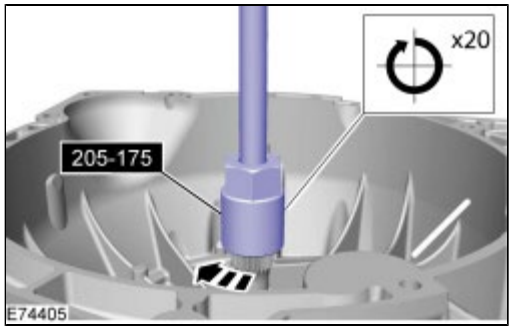

17. Attach the dial gauge, pre-load it to 1 mm and zero it.
    Special Tool(s) : 205-069 Dial Indicator Gauge (Metric)

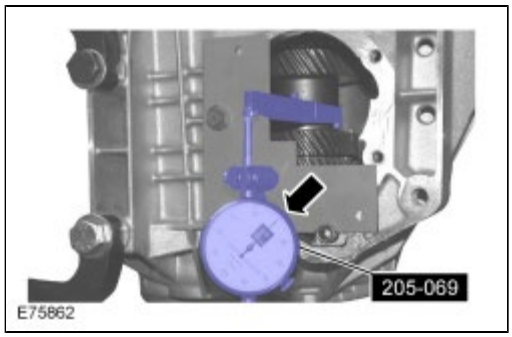

18. Lift the output shaft with a suitable lever and note the resulting measurement.

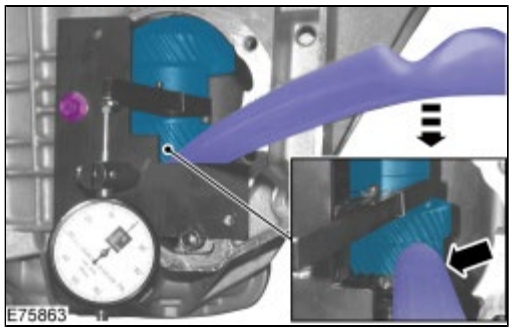

19. *Install Special Service Tool* : 303-060 Compressor, Valve Spring , 303-060-02 Adapter for 303-060 , 303-060-07 Adapter for 303-060

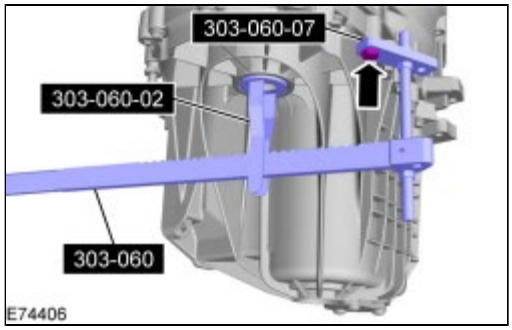

20. Differential measurement: Perform the following two steps three times and calculate the average of the measurements. (Example: (0.34 mm + 0.36 mm + 0.38 mm) / 3 = 0.36 mm)

21.
    1. Press down the differential during rotation.
       Special Tool(s) : 205-175 Socket, Drive Pinion Nut
    2. Pre-load the dial gauge to 1 mm and zero it.
       Special Tool(s) : 205-069 Dial Indicator Gauge (Metric)

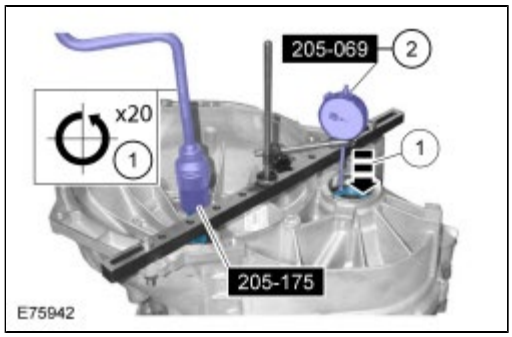

22. Lift the differential with the special tool and note the resulting measurement.
    Special Tool(s) : 303-060 Compressor, Valve Spring , 303-060-02 Adapter for 303-060

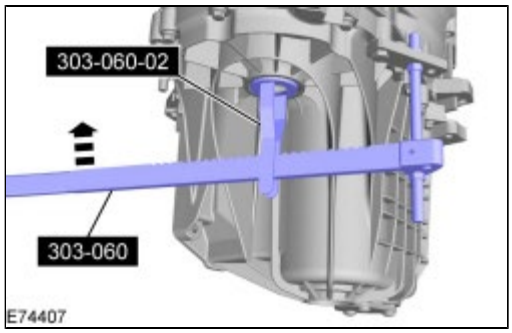

23.
    - Calculate the required adjusting shim thickness for the input shaft:

Installed measuring shim thickness: 1.00 mm.
- Calculated average input shaft end float e. g. 0.22 mm.
- End float constant: -0.07 mm.
- Shim thickness required: 1.00 mm +0.22 mm -0.07 mm = 1.15 mm

24.
- Calculate the required adjusting shim thickness for the output shaft:
- Installed measurement shim thickness: 1.00 mm.
- Calculated average output shaft end float, e.g.: 0.32 mm.
- Pre-load constant 0.13 mm.
- Shim thickness required: 1.00 mm +0.32 mm +0.13 mm = 1.45 mm.

25.
- Calculate the required adjusting shim thickness for the differential:
- Installed measurement shim thickness: 1.10 mm.
- Calculated average differential end float e. g. 0.36 mm.
- Pre-load constant 0.33 mm.
- Shim thickness required: 1.10 mm + 0.36 mm +0.33 mm = 1.79 mm.

26. *Remove Special Service Tool* : 205-069 Dial Indicator Gauge (Metric) , 205-070 Holding Fixture, Dial Indicator Gauge , 303-060 Compressor, Valve Spring , 303-060-02 Adapter for 303-060 , 303-060-07 Adapter for 303-060 , 307-300 Gauge Bar, Shim Selection , 308-194B Holding Fixture, Dial Indicator Gauge (Output Shaft End Play)

27.

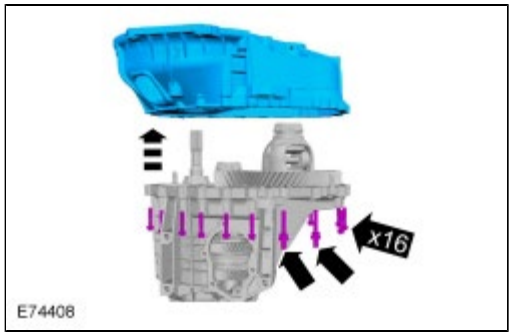

28.

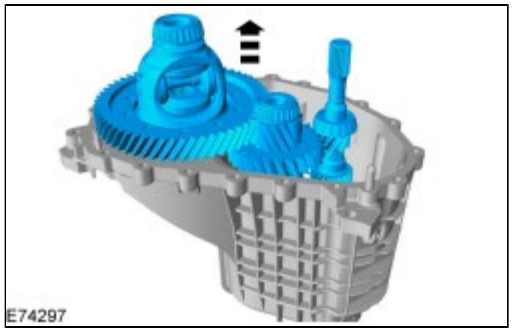

29. *Special Tool(s)* : 205-176 Remover, Differential Bearing Cone

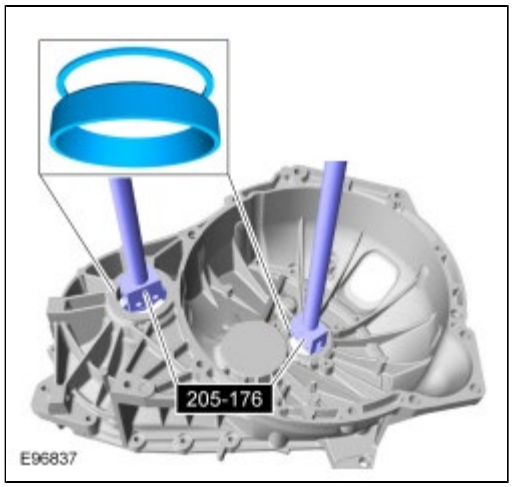

30. *Special Tool(s)* : 205-078 Remover, Drive Pinion Seal , 205-078-01 Adapter for 205-078 (Thrust Pad)

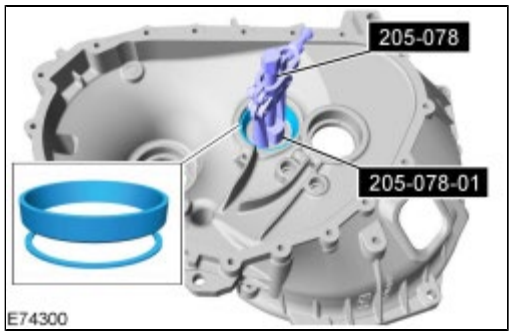

31.
    1. *General Equipment* : Hot Air Gun
    2. Install the measured adjusting shim.
    3. Install the measured adjusting shim.
    4. Install the measured adjusting shim.
    5. Insert bearing outer rings manually.

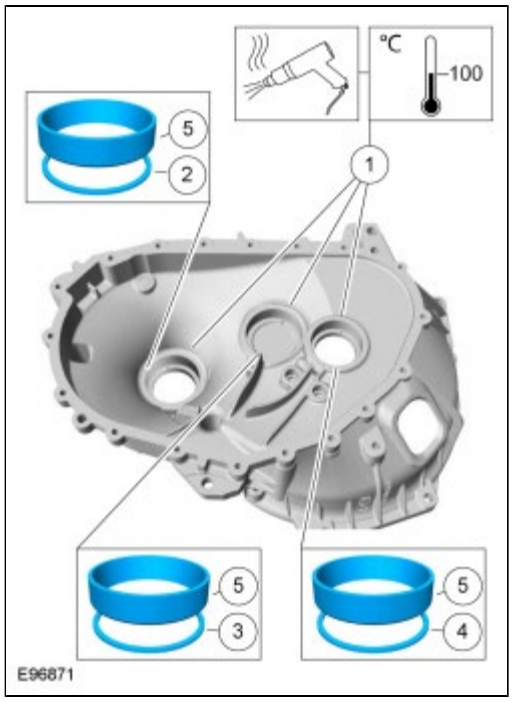

32. *Special Tool(s)* : 204-017 Installer, Wheel Hub Bearing Cup , 204-050 Installer, Front Wheel Hub Bearing Cup/Seal , 205-075 Installer, Rear Wheel Hub Seal

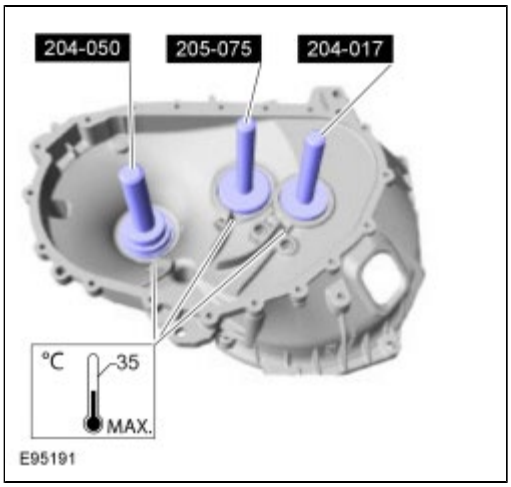

33. **NOTE:** *Make sure that these components are installed to the noted removal position.*

34. Keep the reverse gear idler shaft bearing block raised while installing the shaft.
    Special Tool(s) : 308-214 Remover, Hydraulic Line Spring Clip

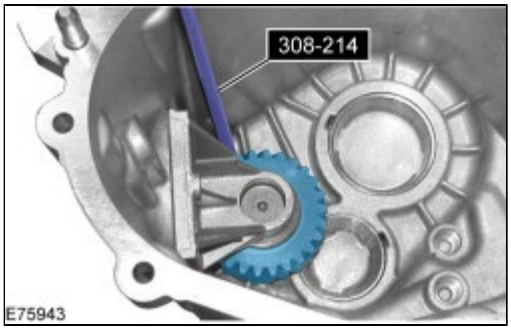

35.

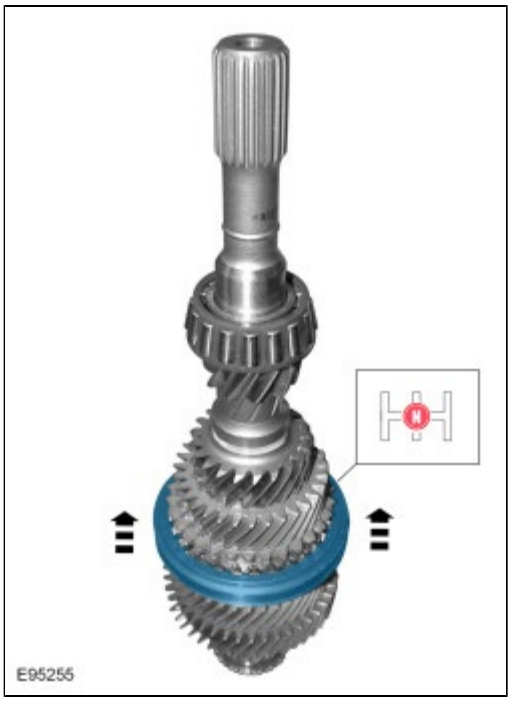

36. *Material* : Motorcraft® Dual Clutch Transmission Fluid / XT-11-QDC (WSS-M2C200-D2)

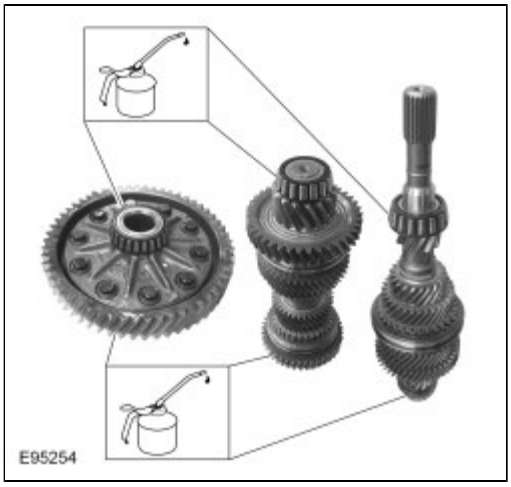

37.
    1. Install the input and output shafts together.
    2. Move the input and output shafts to one side.
    3. *Remove Special Service Tool* : 308-214 Remover, Hydraulic Line Spring Clip

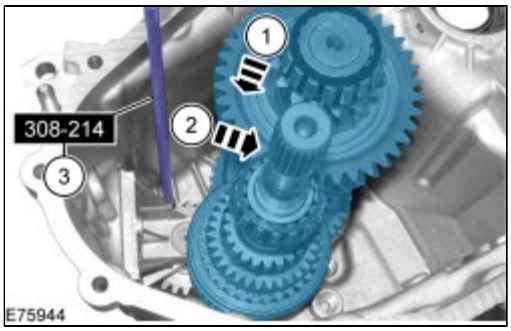

38. **NOTE:** *Make sure that these components are installed to the noted removal position.*

    Install the following items:
    1.
    2.

3.

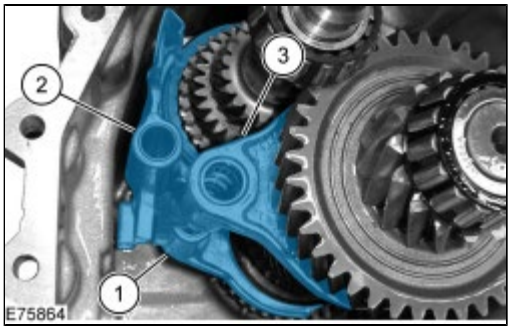

39. Install the following items:
    1. *Material* : Gasket Maker / TA-16 (WSK-M2G348-A5)
       Torque : 34 Nm
    2.
    3.
    4.

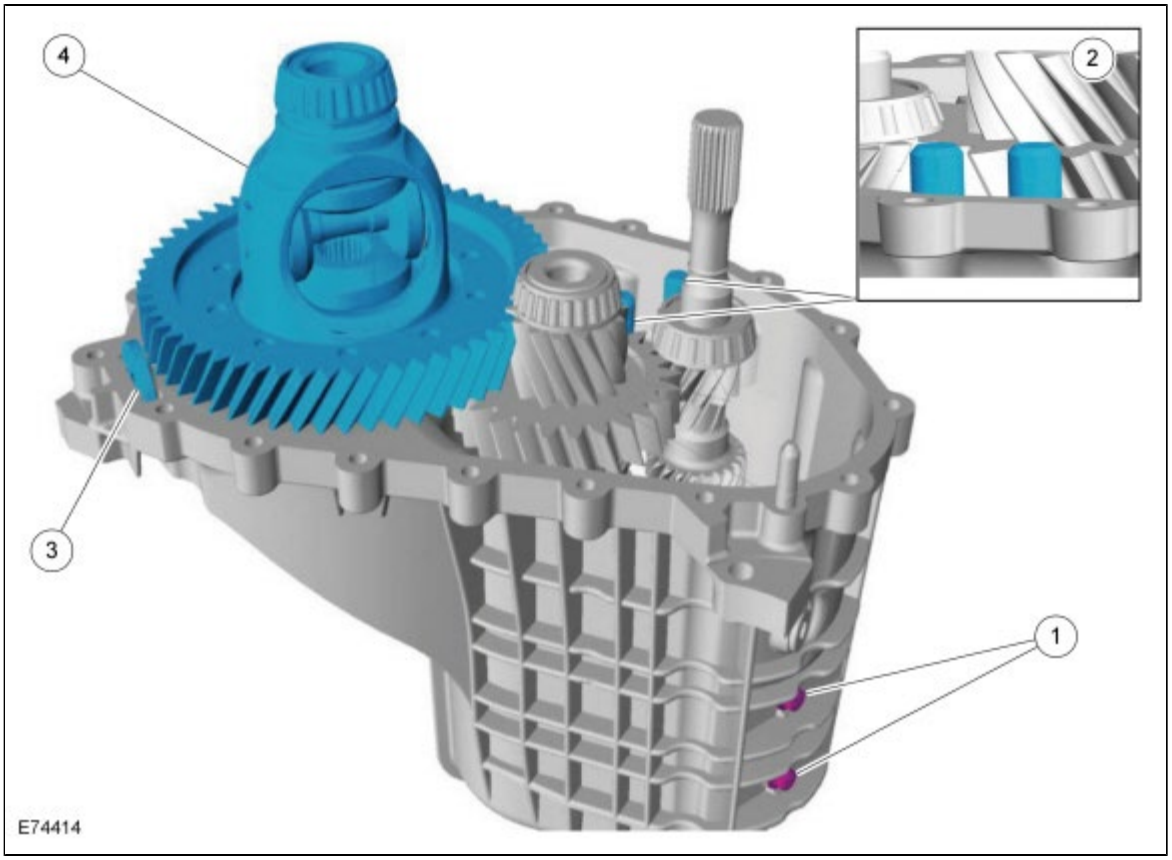

40. *Material* : Gasket Maker / TA-16 (WSK-M2G348-A5)

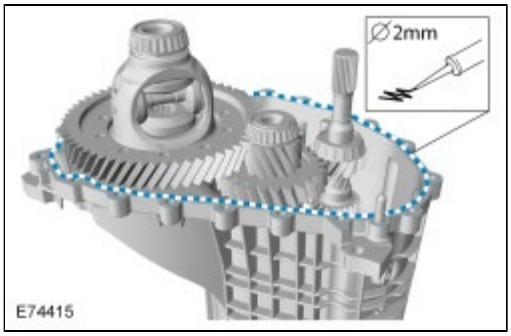

41. **NOTICE: The guide pins must remain installed in the gearbox housing.**

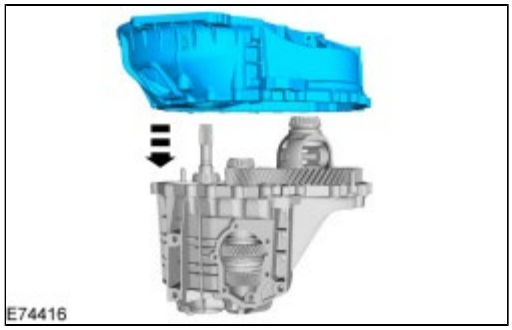

42. Tighten the bolts in a crisscross sequence.
    Torque : 40 Nm

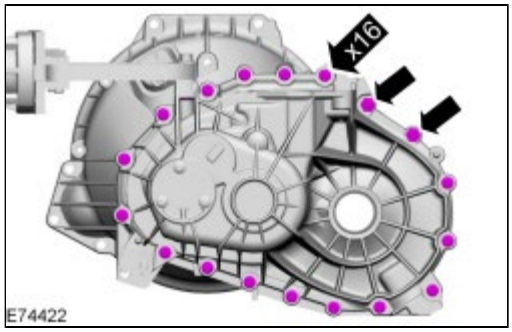

43.
    - If the starting torque is too high, all the measurements must be repeated.
    - Engage fourth gear.
      Special Tool(s) : 205-067 Preload Gauge , 205-175 Socket, Drive Pinion Nut
    - Starting torque 1 Nm.

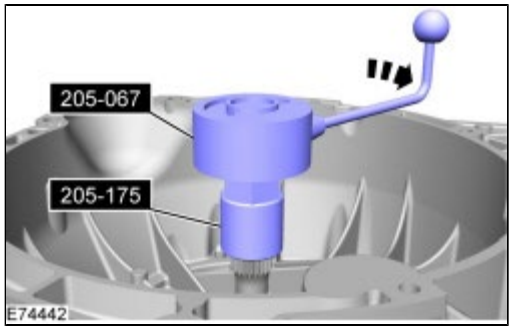

44. *Special Tool(s)* : 205-115 Installer, Drive Pinion Seal

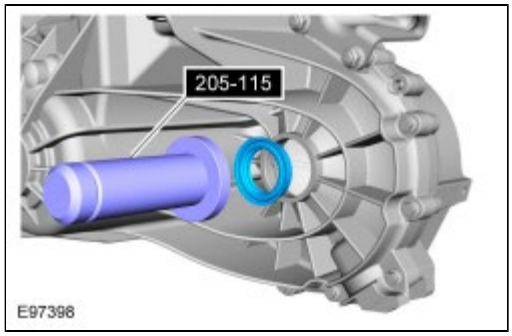

45. **NOTE:** *Make sure that a new component is installed.*

    Material : Gasket Maker / TA-16 (WSK-M2G348-A5)

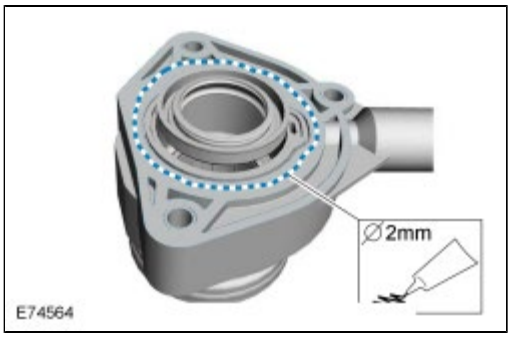

46. Install the following items:
    1. *Special Tool(s)* : 205-115 Installer, Drive Pinion Seal
    2. **NOTICE: Cover the input shaft splines with adhesive tape to avoid damaging the input shaft oil seal.**

       NOTE: *Make sure that a new component is installed.*
    3. **NOTE:** *Make sure that new bolts are installed.*

       Torque : 11 Nm

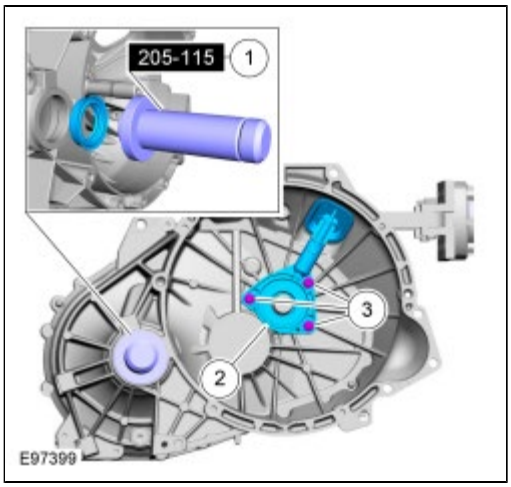

47. Remove the adhesive tape from the input shaft splines.
48.

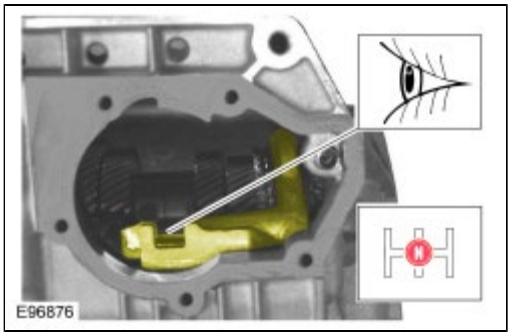

49. *Material* : Gasket Maker / TA-16 (WSK-M2G348-A5)

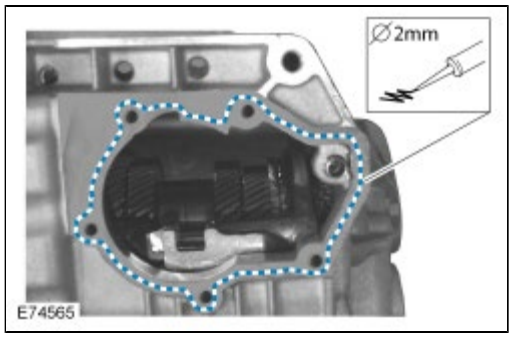

50.

1.
2. *Torque* : 26 Nm
3. *Torque* : 26 Nm
4. *Torque* : 40 Nm
5. *Remove Special Service Tool* : 205-329 Mounting Bracket, Engine/Differential , 303-435-06 Mounting Bracket for 303-435 , 303-435 Mounting Stand

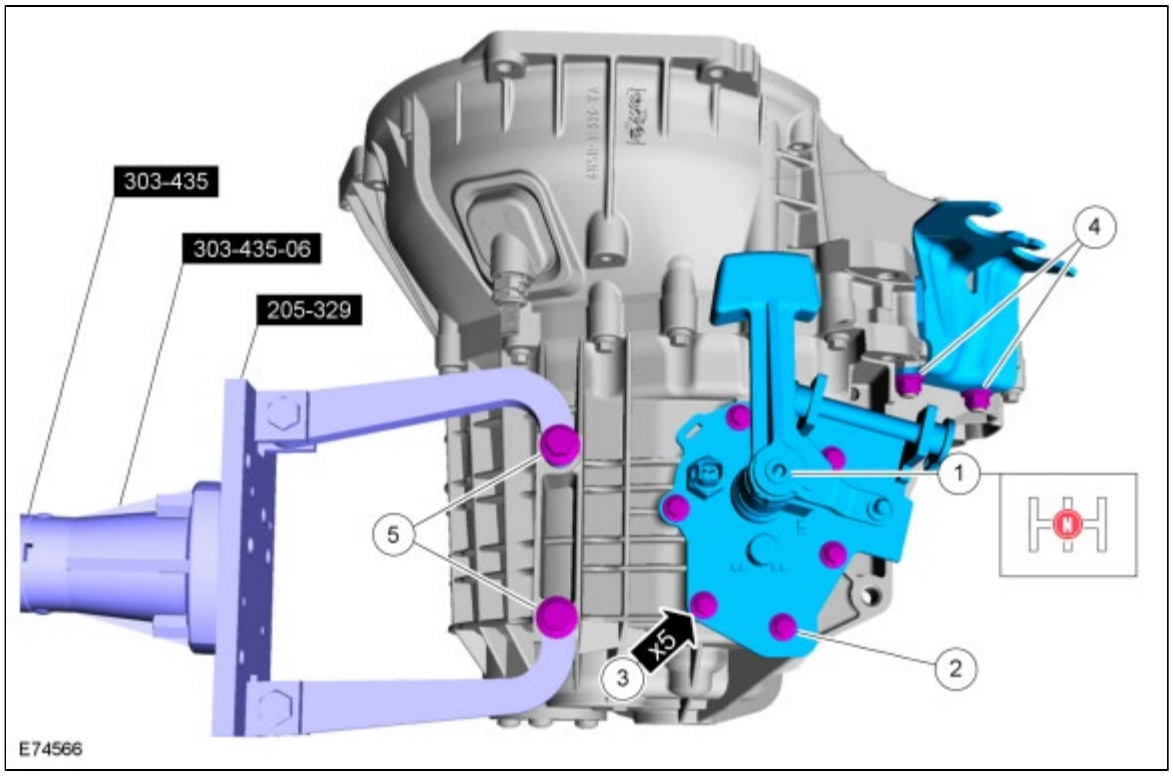

Copyright © Ford Motor Company

Transmission

WARNING: Before beginning any service procedure in this section, refer to Safety Warnings in section 100-00 General Information. Failure to follow this instruction may result in serious personal injury.

1. Refer to: Health and Safety Precautions (100-00 General Information, Description and Operation).

2. Apply a thin coating.
   Material : High Temperature 4x4 Front Axle and Wheel Bearing Grease / XG-11 (WSS-M1C267-A1)

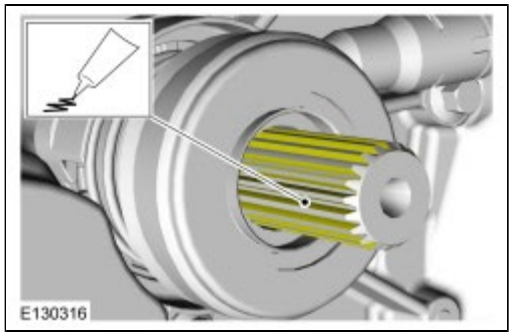

3.

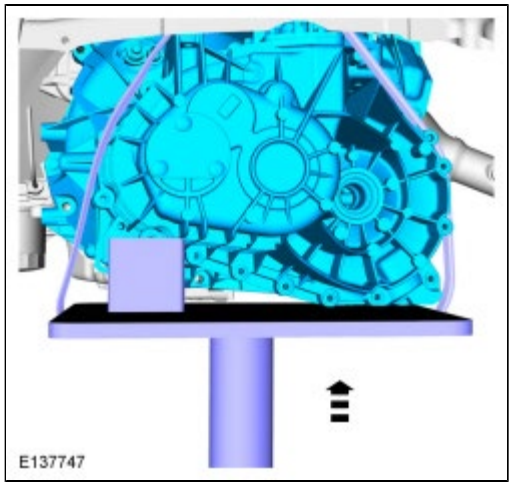

4. Tighten on both sides simultaneously.
   Torque : 48 Nm

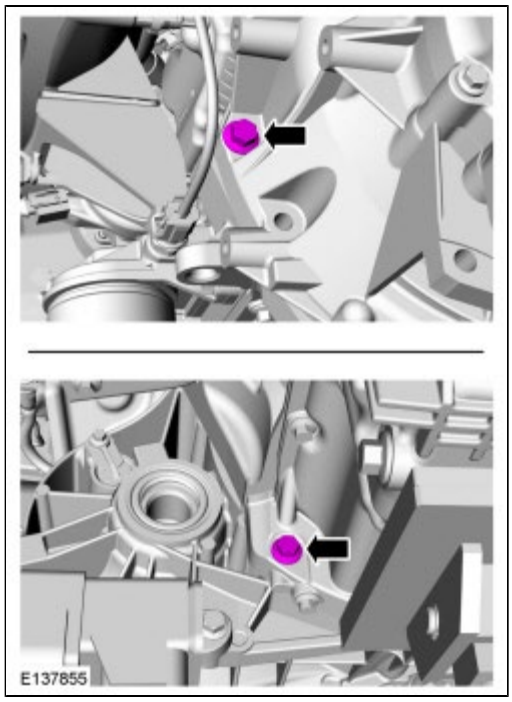

5. Remove the following items:
    - *General Equipment* : Transmission Jack
    - *General Equipment* : Wooden Block
    - *General Equipment* : Retaining Strap

6. Lower the Vehicle.

7. Refer to: Clutch System Bleeding (308-00 Manual Transmission and Clutch - General Information) .

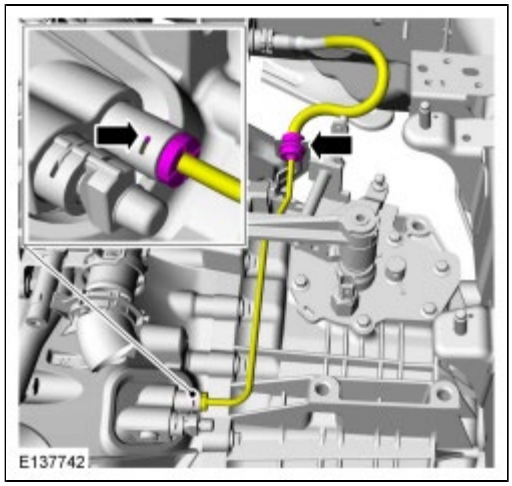

8. *Torque* : 80 Nm

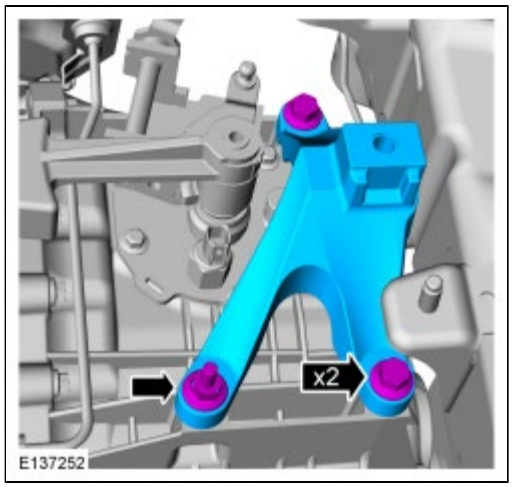

9.

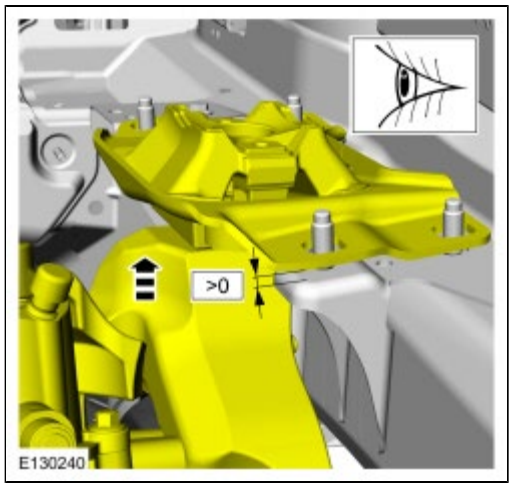

10. **WARNING: Make sure that a new bolt is installed.**

    Torque : 148 Nm

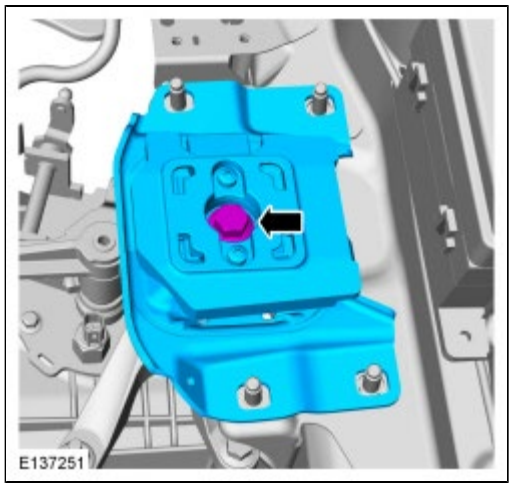

11. Refer to: Jacking and Lifting - Overview (100-02 Jacking and Lifting, Description and Operation).
12. *Remove Special Service Tool* : 303-F072 Support Bar, Engine
13. *Torque* : 48 Nm

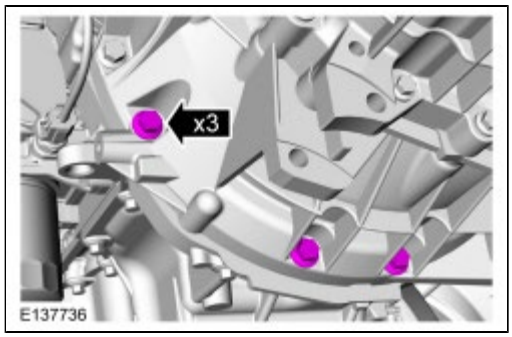

14. *Torque* : 48 Nm

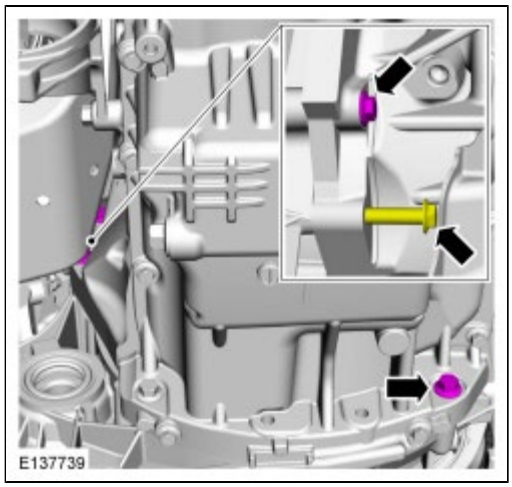

15.
    1. *Torque* : 48 Nm
    2. *Torque* :
       Stage 1: 30 Nm
       Stage 2: 270°

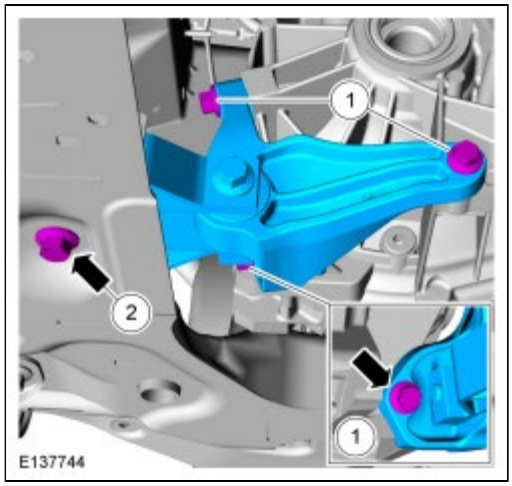

16.

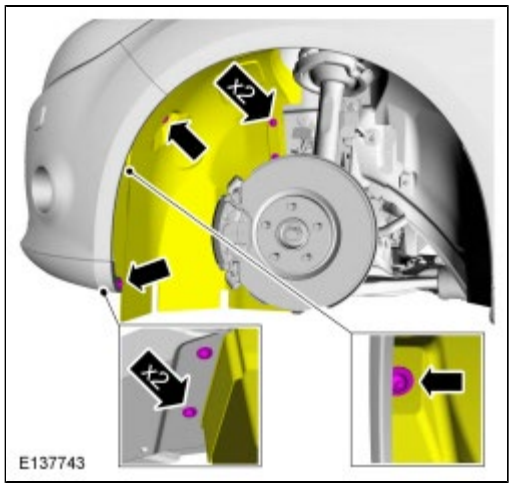

17. Install the following items:
    - Refer to: Front Halfshaft LH (205-04 Front Drive Halfshafts, Removal and Installation).

18. **NOTE:** *Remove the special tool before completely installing the halfshaft.*

    Special Tool(s) : 205-775 Protector, Halfshaft Seal

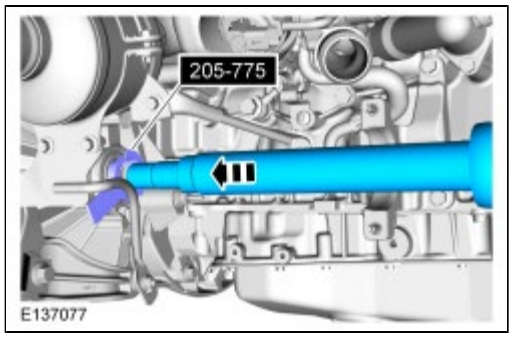

19. Install the following items:

    1. **NOTE:** *Make sure that a new component is installed.*

    2. **NOTE:** *Make sure that a new component is installed.*

       Torque : 6 Nm

    3. **NOTE:** *Make sure that a new component is installed.*

       Torque : 6 Nm
    4. *Torque* : 25 Nm
    5. *Torque* : 25 Nm

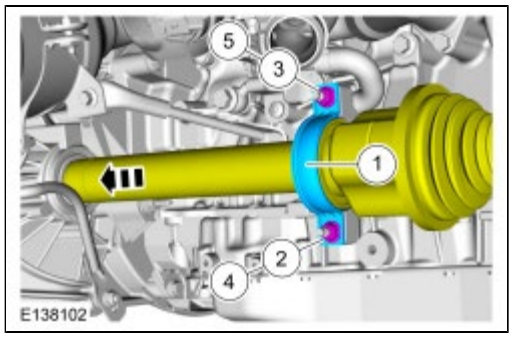

20.

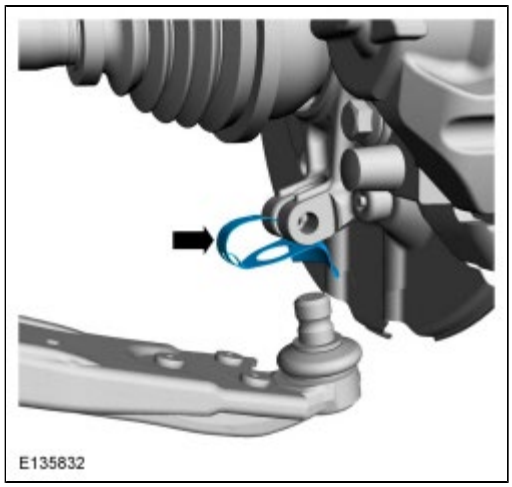

21.

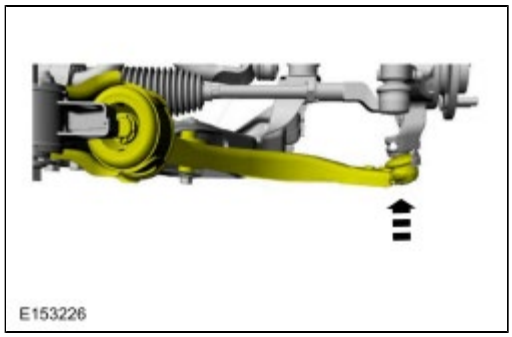

22. *Torque* : 83 Nm

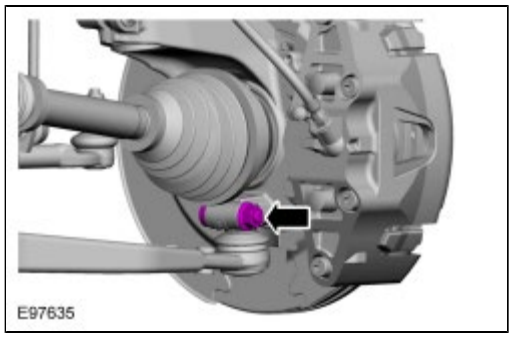

23. Refer to: Transmission Fluid Level Check (308-03A Manual Transmission - Vehicles With: 5-Speed Manual Transmission - MTX75, General Procedures).

24. **NOTICE: Make sure that the wiring harness does not catch.**

    1. *Torque* : 35 Nm
    2. *Torque* : 10 Nm

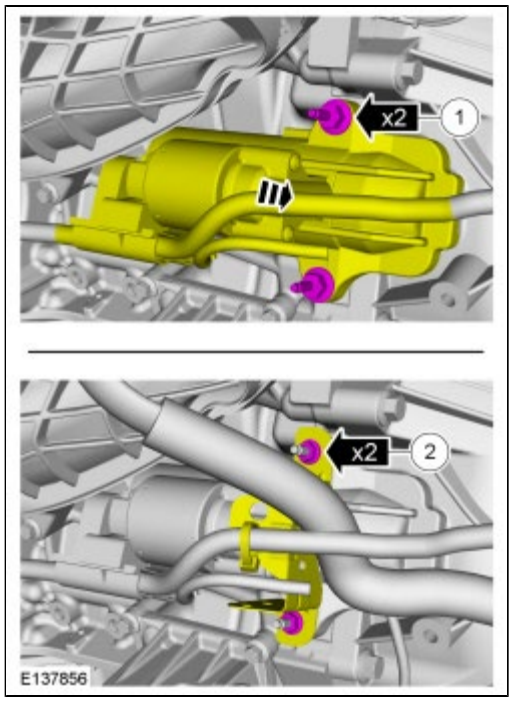

25. *Torque* : 25 Nm

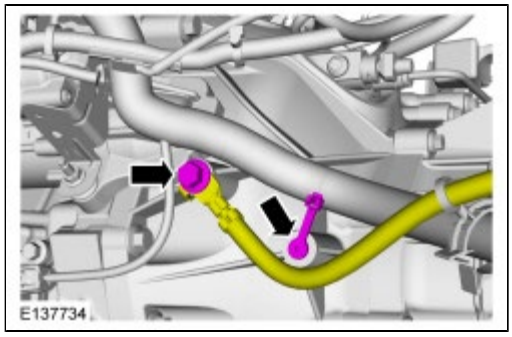

26.
    1. If equipped.
    2. If equipped.

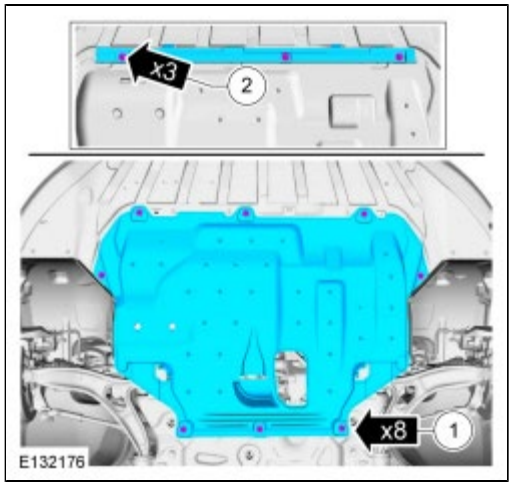

27. Lower the Vehicle.

28. *Torque* : 48 Nm

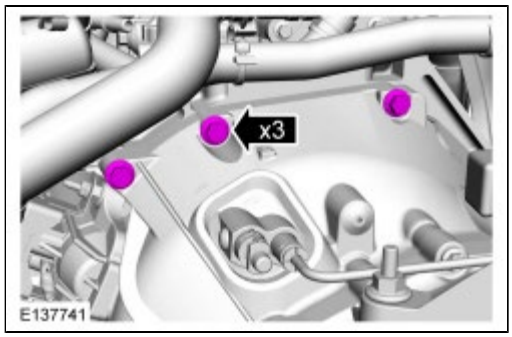

29.

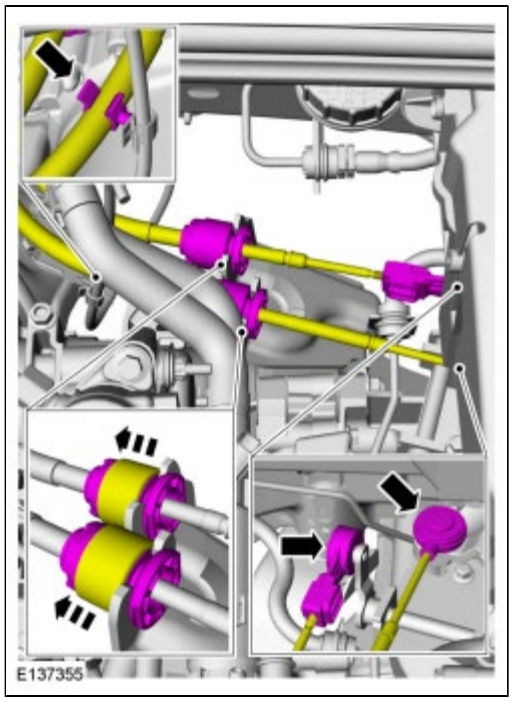

30. Refer to: Gearshift Cable Adjustment - Vehicles With: 5-Speed Manual Transmission - MTX75 (308-06 Manual Transmission External Controls, General Procedures).

31.

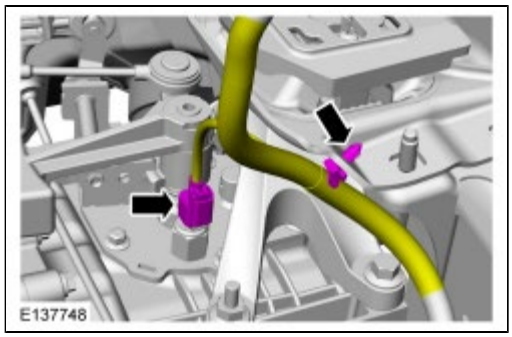

32. *Torque* : 48 Nm

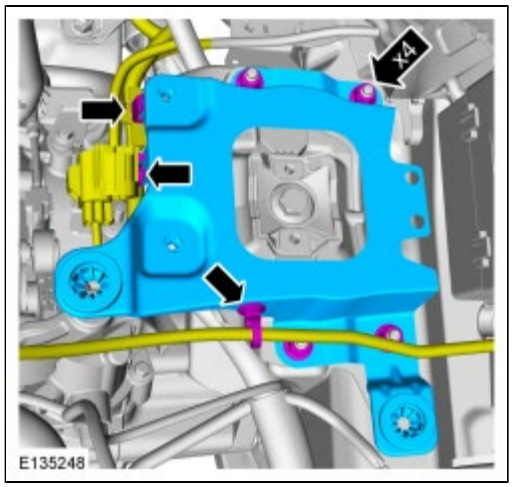

33. Refer to: Battery Tray (414-01 Battery, Mounting and Cables, Removal and Installation).
    Refer to: Battery (414-01 Battery, Mounting and Cables, Removal and Installation).
    Refer to: Air Cleaner (303-12A Intake Air Distribution and Filtering - 2.0L Duratec-HE (125kW/170PS) - MI4, Removal and Installation).

Copyright © Ford Motor Company

Clutch Disc and Pressure Plate - Vehicles With: 5-Speed Manual Transmission - MTX75

Removal

1. Refer to: Transmission (308-03A Manual Transmission - Vehicles With: 5-Speed Manual Transmission - MTX75, Removal).
2. Loosen each bolt 2 turns at a time until all bolts are removed.

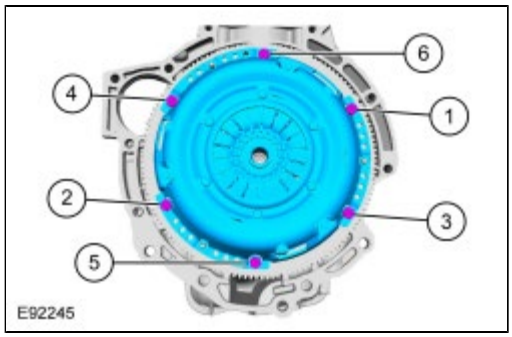

Installation

1. Special Tool(s): Universal clutch alignment tool.

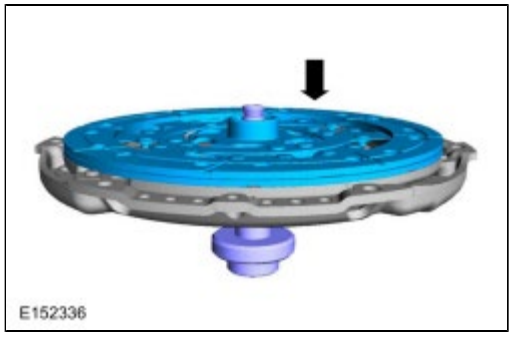

2. Tighten each bolt 2 turns at a time.
   Torque : 29 Nm

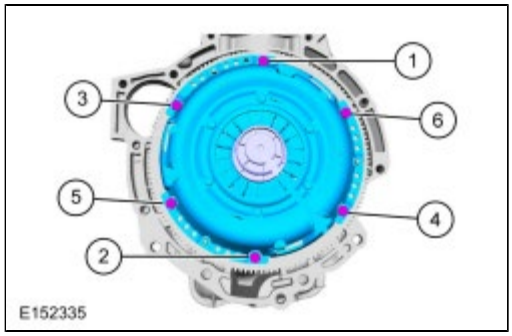

3. Refer to: Transmission (308-03A Manual Transmission - Vehicles With: 5-Speed Manual Transmission - MTX75, Installation).

Copyright © Ford Motor Company

Clutch - Overview

Components of a clutch

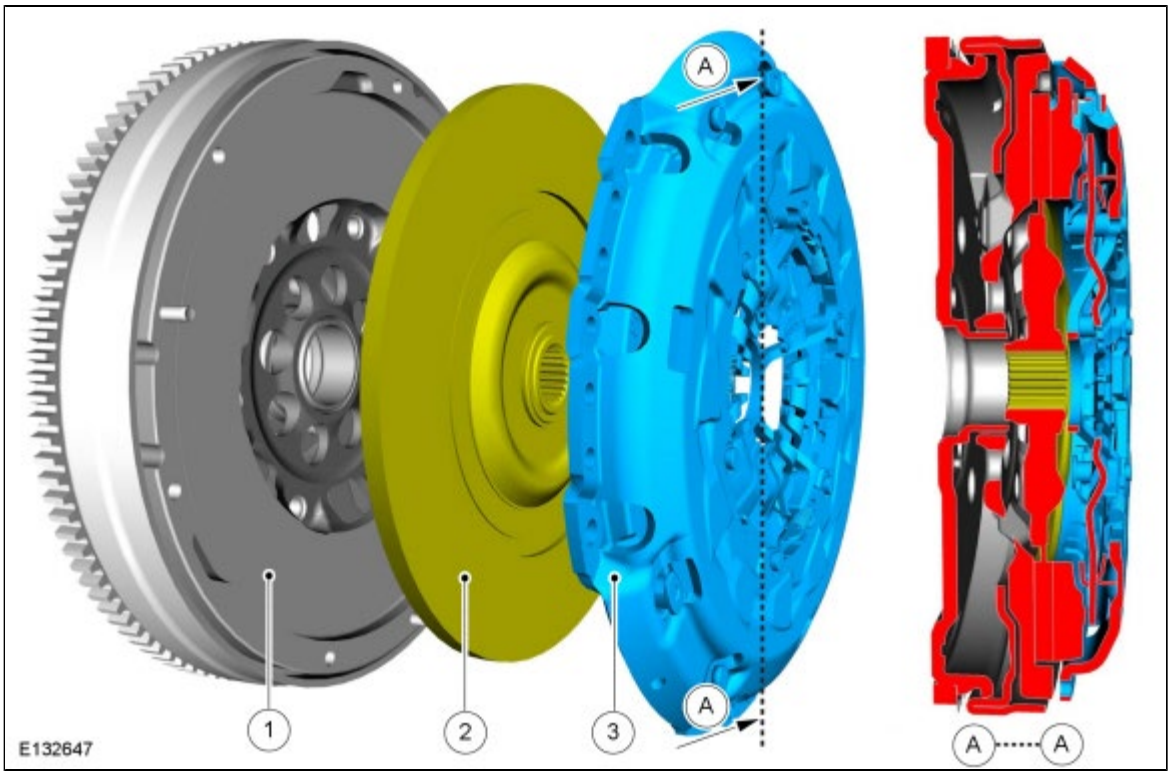

Item	Description
1	Flywheel
2	Clutch disc with friction lining
3	Cover assembly
A	Sectional plane A

The clutch consists of:

- Flywheel
- Clutch disc
- Cover assembly

When the clutch pedal is depressed, the clutch slave cylinder moves the release bearing which presses the center of the diaphragm spring on to the compression ring towards the flywheel. The diaphragm spring fingers rest on diaphragm spring rings and lift the compression ring from the clutch disc. The compression spring is relieved, allowing the flow of force to the transmission to be interrupted for gear-changing.

If the clutch pedal is not depressed, force flows to the transmission due to the compressive force of the diaphragm spring on the compression ring.

Self-adjusting clutches

The clutch size has also been increased with the introduction of more powerful engines. The self-adjusting clutch eliminates the increase in operating force which occurs as wear increases.

The advantages of the self-adjusting clutch are as follows:

- Constant operating force throughout the whole service life of the clutch.
- Increased service life of the clutch friction disc.
- Shorter release bearing travel.

Self-adjusting clutches cannot be reset after the clutch friction disk has been renewed and must also be renewed.

Copyright © Ford Motor Company

Clutch - System Operation and Component Description

System Operation

How the clutch works

Cross-sectional view of a single-disc dry clutch

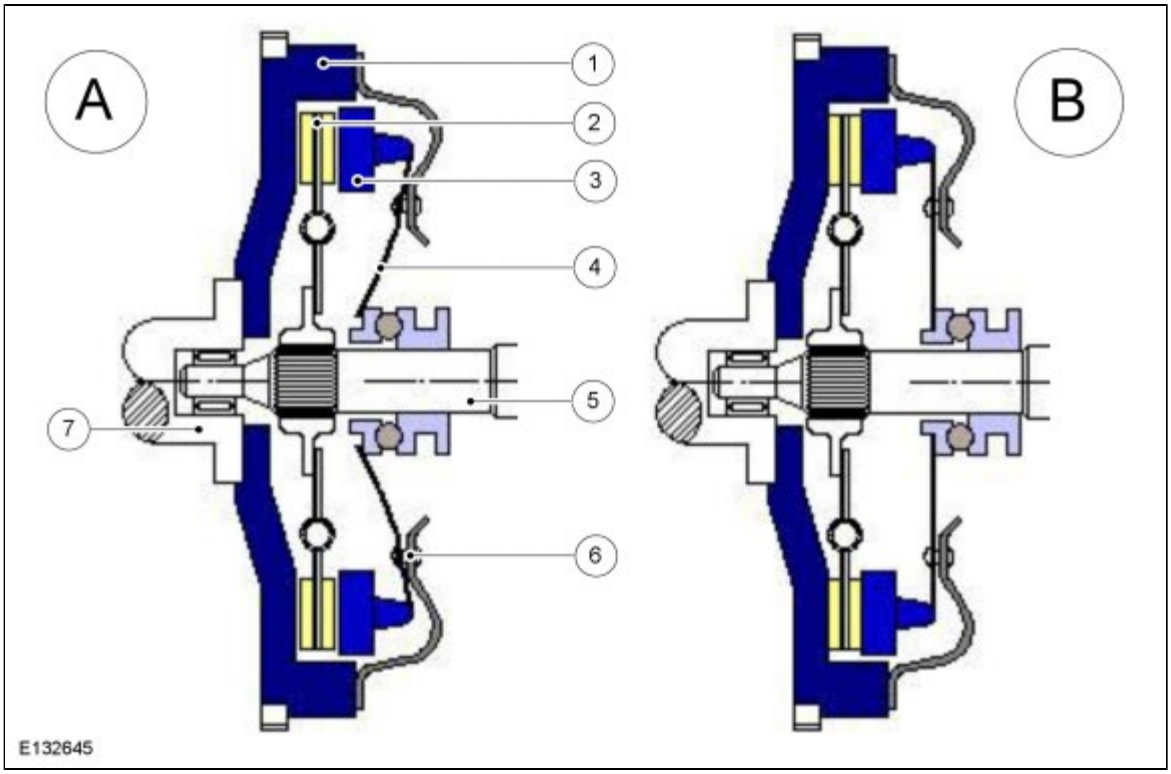

Item	Description
A	Clutch disengaged
B	Clutch engaged
1	Flywheel
2	Clutch disc with friction lining
3	Pressing ring
4	Diaphragm spring
5	Transmission input shaft
6	Clutch cover
7	Crankshaft Dimensions

The clutch transmits the torque from the engine to the transaxle; when the clutch pedal is depressed the power transmission from the engine to the transaxle is interrupted.

When the clutch pedal is not depressed the clutch is engaged. Pressing down the pedal disengages the clutch.

A dry clutch usually only has one clutch disc, the coatings of which are specially designed for dry friction with a higher coefficient of

friction. The torque which can be transmitted also depends on the size and number of friction surfaces and the pressing force.

The flywheel and pressing ring are connected to the crankshaft in a rotationally fixed way and transmit the torque via the friction linings of the clutch disc to the input shaft of the transaxle. The clutch disc is clamped between the flywheel and the pressing ring. The force from the diaphragm spring provides the necessary contact pressure.

The clutch cover, pressing ring and diaphragm spring are also referred to jointly as the **cover assembly** .

The wear on the clutch disc is greatest at the pressure point during engagement of the clutch. If the pressing ring is moved away from the flywheel then there is no longer any friction to the clutch disc, and the connection is disengaged.

The most frequent damage observed on the clutch is too low friction (sliding) between the clutch disc and the pressing ring or flywheel. This can be caused by oil leaks, friction lining wear or a weakening diaphragm spring.

Copyright © Ford Motor Company

Clutch Controls - Overview

Componenet Location

Item	Description
1	Clutch slave cylinder bolts
2	Clutch slave cylinder
3	Slave cylinder hydraulic tube
4	Lower clutch hydraulic tube
5	Clutch master cylinder

6	Upper clutch hydraulic tube
7	Brake master cylinder
8	Brake master cylinder nuts
9	Brake and clutch master cylinder reservoir
10	Filler cap

Overview

The clutch control system disengages the clutch when the clutch pedal is pressed and engages the clutch when the clutch pedal is released. When the clutch pedal is pressed, pressure builds up in the clutch master cylinder and the integral release bearing in the clutch slave cylinder is actuated.

Component Description

Brake Master Cylinder Reservoir

The brake fluid reservoir supplies brake fluid to the hydraulic clutch system and the brake system. The hydraulic clutch system and brake system are arranged separately inside the brake fluid reservoir. If leaks occur in the hydraulic clutch system, the brake system continues to operate unrestricted.

Clutch Master Cylinder

The clutch master cylinder generates the system pressure required to actuate the clutch. When the clutch pedal is pressed, the piston rod moves the clutch master cylinder piston. The hydraulic fluid in the clutch master cylinder is forced through the high-pressure tube to the clutch slave cylinder.

Clutch Slave Cylinder

The hydraulic fluid forced from the piston in the clutch master cylinder thru the clutch hydraulic tubes moves the piston in the clutch slave cylinder which, in turn, moves the release bearing in an axial direction. The release bearing inner ring presses onto the diaphragm spring. The non-positive connection between the clutch disc and the flywheel is interrupted.

Clutch Slave Cylinder Hydraulic Tubes

The clutch slave cylinder hydraulic tubes provide hydraulic fluid to the slave cylinder. The upper hydraulic tube pulls hydralic fluid from the brake master cylinder reservoir and distributes it to the lower hydraulic tube after the clutch master cylinder pulls it through. The hydraulic fluid in the clutch master cylinder is forced through the high-pressure tube to the clutch slave cylinder.

Copyright © Ford Motor Company

Clutch Slave Cylinder - Vehicles With: 6-Speed Manual Transmission - MMT6

Removal

NOTE: *Removal steps in this procedure may contain installation details.*

1. **WARNING: Before beginning any service procedure in this section, refer to Safety Warnings in section 100-00 General Information. Failure to follow this instruction may result in serious personal injury.**

   Refer to: Health and Safety Precautions (100-00 General Information, Description and Operation).

2. *Torque* : 11 Nm

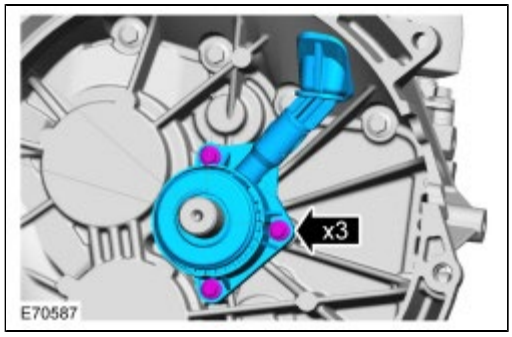

Installation

1. To install, reverse the removal procedure.
2. Refer to: Clutch System Bleeding (308-00 Manual Transmission and Clutch - General Information) .

Copyright © Ford Motor Company

Clutch Slave Cylinder - Vehicles With: 5-Speed Manual Transmission - MTX75

Removal

NOTE: *Removal steps in this procedure may contain installation details.*

1. **WARNING: Before beginning any service procedure in this section, refer to Safety Warnings in section 100-00 General Information. Failure to follow this instruction may result in serious personal injury.**

   Refer to: Health and Safety Precautions (100-00 General Information, Description and Operation).

2. Discard the specified component. Follow local disposal regulations.

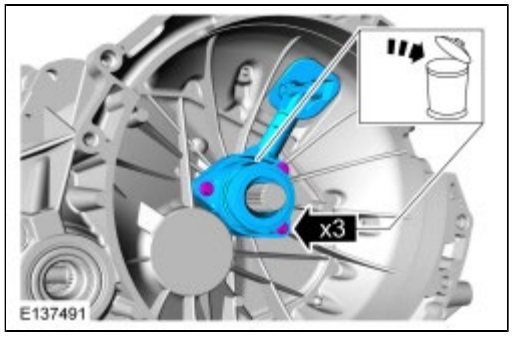

Installation

1. **NOTE:** *Make sure that a new component is installed.*

   Apply a continuous bead of the specified diameter from the specified tube.
   Material : Gasket Maker / TA-16 (WSK-M2G348-A5)

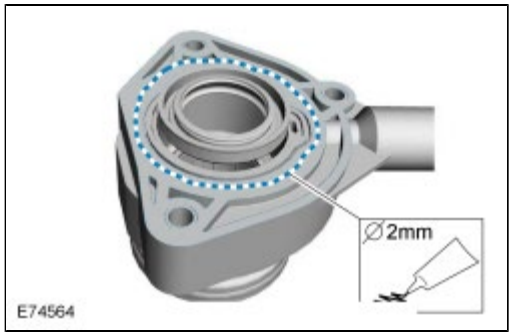

2.

   1. **NOTICE: Use adhesive tape to cover the input shaft splines to prevent damage to the input shaft seal.**

      Apply tape to specified component or area.

   3. **NOTE:** *Make sure that new components are installed.*

      Torque : 11 Nm
   4. Discard the specified component. Follow local disposal regulations.

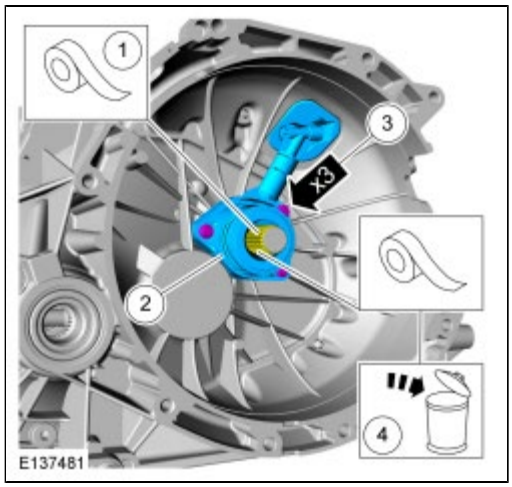

Copyright © Ford Motor Company

Instrument Panel Cluster (IPC) and Panel Illumination - Overview

Overview

Dimmable Backlighting

Dimmable illumination provides backlighting to switches and control components when the headlamps or parking lamps are on. The level of intensity is adjusted by pressing the instrument panel dimmer switch up to increase intensity or down to decrease intensity.

Non-dimmable Backlighting

Non-dimmable illumination provides backlighting to the window switches and to the outside rear view mirrors switch (for vehicles without door modules) with the ignition ON or OFF while the ignition relay is energized.

Copyright © Ford Motor Company

Instrument Panel Cluster (IPC) and Panel Illumination - System Operation and Component Description

System Operation

System Diagram

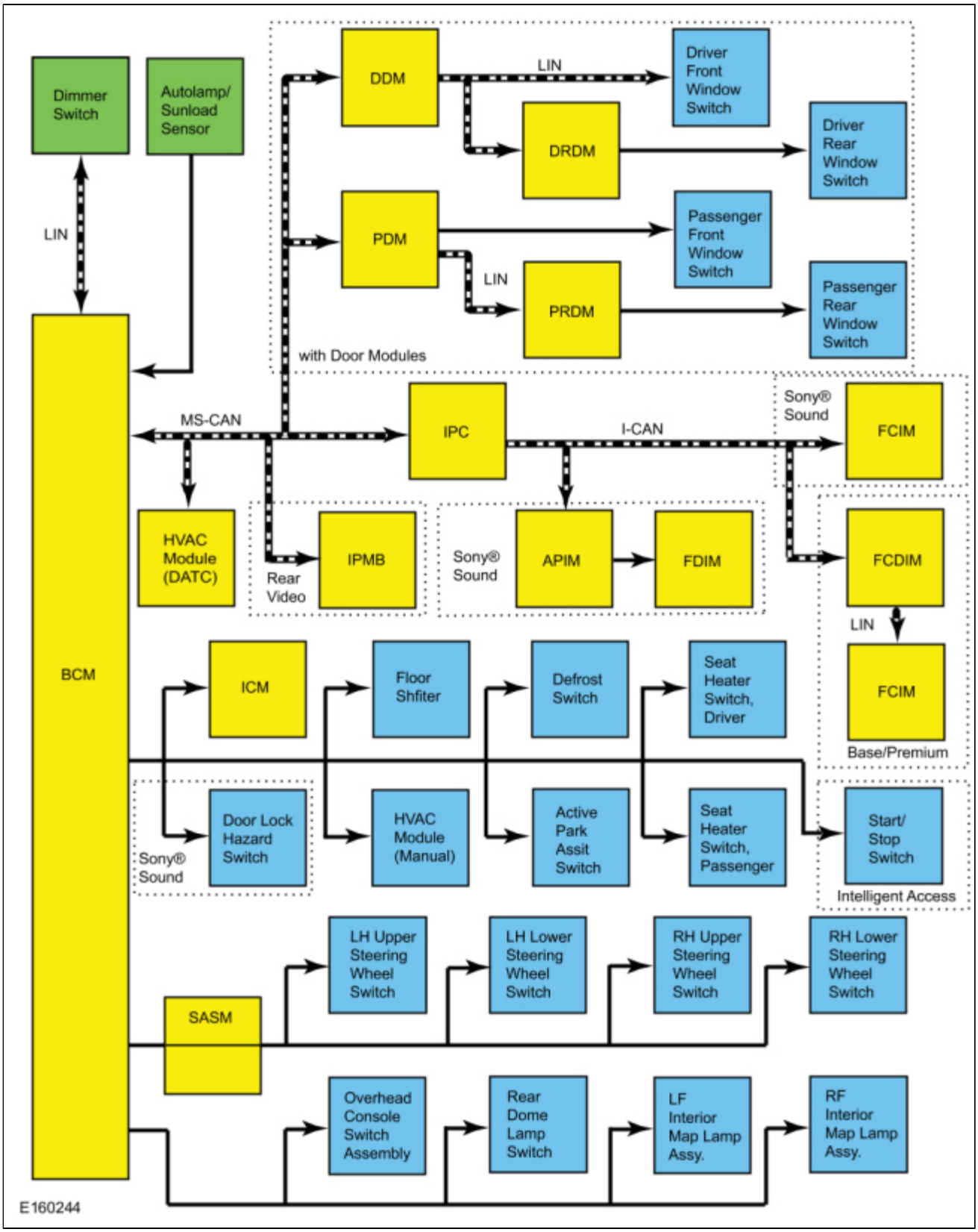

Network Message Chart

Instrument Panel Cluster (IPC) Network Input Messages

Broadcast Message	Originating Module	Message Purpose
Illumination dimmer	BCM	Used to communicate the desired illumination level based on input from the dimmer switch.

position		
Ambient light level	BCM	Generated from autolamp/sunload sensor input. Used to determine illumination strategy (night, day, or day with lights on).

Accessory Protocol Interface Module (APIM), Front Controls Interface Module (FCIM) and Front Control/Display Interface Module (FCDIM) Network Input Messages

Broadcast Message	Originating Module	Message Purpose
Illumination dimming level	IPC	Used to command illumination level of the Infotainment Controller Area Network (I-CAN) modules.

Body Control Module (BCM) Network Input Messages

Broadcast Message	Originating Module	Message Purpose
Illumination dimming level	IPC	Used to command hard-wired illumination sources. Also a gateway message to Medium Speed Controller Area Network (MS-CAN) modules.

Driver Door Module (DDM), Passenger Door Module (PDM) and Image Processing Module - B (IPM-B)

Broadcast Message	Originating Module	Message Purpose
Illumination dimming level	BCM	Used to command illumination level of the Medium Speed Controller Area Network (MS-CAN) modules.

Heating, Ventilation, and Air Conditioning (HVAC) Module, (Dual Automatic Temperature Control [DATC]) Network Input Messages

Broadcast Message	Originating Module	Message Purpose
Illumination dimming level	IPC	Used to command the illumination level of the HVAC module.

Dimmable Backlighting

The dimmable switches and components are illuminated when the parking lamps are on. The instrument panel dimmer switch,

which is integral to the headlamp switch, controls all dimmable interior illuminated components.

On vehicles equipped with autolamps, if the exterior lamps are activated during the daytime, the message center illumination remains at full intensity and does not dim from the instrument panel dimmer switch during this condition. If the vehicle travels under a bridge or through a tunnel, the low level of ambient light causes the illumination level of the message center to change to the level set by the instrument panel dimmer switch. The message center illumination changes back to full intensity when the intense ambient light is restored.

If the IPC does not receive the input signals of dimming level or ambient light level for up to 5 seconds, the last valid received state of these signals is assumed. If the IPC receives invalid or no signals for more than 5 seconds, it assumes full night illumination level.

Based on the ambient light level and illumination dimmer position messages received from the BCM , the IPC calculates the correct dimming level. The IPC then sends the illumination dimming level message to the BCM , HVAC (Dual Automatic Temperature Control [DATC]), DDM , PDM and to the Image Processing Module - B (IPM-B) on the MS-CAN and also to the APIM , FCIM (Sony® sound only) and FCDIM on the Infotaiment Controller Area Network (I-CAN).

On vehicles not equipped with Sony® sound, the FCDIM forwards the illumination message to the FCIM via the LIN circuit.

The IPC sends the illumination dimming level message over the network. The receiving modules use the illumination dimming level message to determine the backlighting intensity of integral illumination sources. The BCM sends a pulse-width modulated voltage to hardwired dimmable components on 3 circuits based on the illumination dimming level message from the IPC . If a module does not receive the illumination dimming level message or the data received is deemed invalid, the module sets a DTC in continuous memory and defaults to full night time intensity.

On vehicles equipped with the base AM/FM/CD audio system, if the the sun load sensor detects day light conditions the FCIM illumination turns off five seconds after the key is turned on. When the sun load sensor detects night time conditions and the parking lamps or head lamps are on, only the volume button and the hazard/door lock switch are illuminated until the audio unit is turn on.

Field-Effect Transistor (FET) Protection

Field-Effect Transistor (FET) protection is used to protect the BCM output drivers from damage in the event that an excessive current draw is detected on a BCM output. Each illumination circuit connected to the BCM is separately protected. Refer to the System Diagram in this section to view the different groups of BCM hardwired illumination outputs. For a full description of Field-Effect Transistor (FET) protection,
Refer to: Module Controlled Functions - System Operation and Component Description (419-10 Multifunction Electronic Modules, Description and Operation).

Component Description

Dimmer Switch

The dimmer switch is a momentary contact switch that is integral to the headlamp switch. When the dimmer switch is pressed, the requested illumination level is sent to the BCM over a LIN circuit.

Copyright © Ford Motor Company

Instrument Panel Cluster (IPC) and Panel Illumination

DTC Chart: Body Control Module (BCM)

Diagnostics in this manual assume a certain skill level and knowledge of Ford-specific diagnostic practices. For information about these practices,
REFER to: Diagnostic Methods (100-00 General Information, Description and Operation).

Body Control Module (BCM) DTC Chart

DTC	Description	Action
B1249:12	Start Button Illumination: Circuit Short To Battery	GO to Pinpoint Test F
B1249:14	Start Button Illumination: Circuit Short To Ground or Open	GO to Pinpoint Test F

U1000:00	Solid State Driver Protection Activated - Driver Disabled: No Sub Type Information	The BCM has temporarily disabled an output because an excessive current draw exists (such as a short to ground). When this DTC is stored in the BCM, the output driver is disabled until the cause of the excessive current draw has been corrected and a successful self-test has been performed. ADDRESS all other BCM Diagnostic Trouble Codes (DTCs) first. After the cause of the concern has been corrected, CLEAR the DTC and PERFORM the BCM self-test.
U2010:11	Switch Illumination: Circuit Short to Ground	GO to Pinpoint Test A
U2010:15	Switch Illumination: Circuit Short to Battery or Open	If the non-networked dimmable illumination sources are inoperative, GO to Pinpoint Test A If the non-networked dimmable illumination sources are always on, GO to Pinpoint Test B
U3000:49	Control Module: Internal Electronic Failure	The BCM has permanently disabled an output because an excessive current draw exists (such as a short to ground) that has exceeded the limits of what the BCM can withstand. ADDRESS all other BCM Diagnostic Trouble Codes (DTCs) first. After the cause of the concern has been corrected, INSTALL a new BCM. REFER to: Body Control Module (BCM) (419-10 Multifunction Electronic Modules, Removal and Installation).

DTC Chart: Driver Door Module (DDM)

Diagnostics in this manual assume a certain skill level and knowledge of Ford-specific diagnostic practices. For information about these practices,
REFER to: Diagnostic Methods (100-00 General Information, Description and Operation).

Driver Door Module (DDM) DTC Chart

DTC	Description	Action
B12FF:11	Rear Door Switch Illumination: Circuit Short To Ground	GO to Pinpoint Test E
B12FF:15	Rear Door Switch Illumination: Circuit Short To Battery Or Open	GO to Pinpoint Test E

DTC Chart: Passenger Door Module (PDM)

Diagnostics in this manual assume a certain skill level and knowledge of Ford-specific diagnostic practices. For information about these practices,
REFER to: Diagnostic Methods (100-00 General Information, Description and Operation).

Passenger Door Module (PDM) DTC Chart

DTC	Description	Action
B12FF:11	Rear Door Switch Illumination: Circuit Short To Ground	GO to Pinpoint Test E
B12FF:15	Rear Door Switch Illumination: Circuit Short To Battery Or Open	GO to Pinpoint Test E
U2010:11	Switch Illumination: Circuit Short To Ground	GO to Pinpoint Test E
U2010:15	Switch Illumination: Circuit Short To Battery Or Open	GO to Pinpoint Test E

DTC Chart: Front Control/Display Interface Module (FCDIM)

Diagnostics in this manual assume a certain skill level and knowledge of Ford-specific diagnostic practices. For information about these practices,
REFER to: Diagnostic Methods (100-00 General Information, Description and Operation).

FCDIM DTC Chart

DTC	Description	Action
U1A00:00	Private Communication Network - LIN	GO to Pinpoint Test I

Symptom Chart(s)

Symptom Chart: Instrument Cluster and Panel Illumination

Diagnostics in this manual assume a certain skill level and knowledge of Ford-specific diagnostic practices. For information about these practices,
REFER to: Diagnostic Methods (100-00 General Information, Description and Operation).

Symptom Chart

Condition	Possible Sources	Actions
A module does not respond to the scan tool	• Fuse • Wiring, terminals or connectors • Module	REFER to: Communications Network - System Operation and Component Description (418-00 Module Communications Network, Description and Operation).
All dimmable illumination (networked and non-networked sources) does not dim or increase brightness	REFER to Pinpoint Tests	GO to Pinpoint Test G
The start/stop switch illumination is inoperative or always on (vehicles with Intelligent Access [IA])	REFER to Pinpoint Tests	GO to Pinpoint Test F
The window control switch illumination is inoperative or always on - without door modules (without window one-touch up)	• Wiring, terminals or connectors • Window control switch	• VERIFY the operation of the power windows. • If the power windows operate correctly, INSTALL a new window control switch. REFER to: Front Door Window Control Switch (501-11A Glass, Frames and Mechanisms - Vehicles Without: One-Touch Up Door Window, Removal and Installation). or REFER to: Rear Door Window Control Switch (501-11A Glass, Frames and Mechanisms - Vehicles Without: One-Touch Up Door Window, Removal and Installation). • If the power windows do not operate correctly, REFER to: Glass, Frames and Mechanisms (501-11A Glass, Frames and Mechanisms - Vehicles Without: One-Touch Up Door Window, Diagnosis and Testing).
The LH front window control switch illumination is inoperative or always on - with door modules (with window one-touch up)	Window control switch	• VERIFY the operation of the power windows. • If the power windows operate correctly, INSTALL a new window control switch. REFER to: Front Door Window Control Switch (501-11B Glass, Frames and Mechanisms - Vehicles With: One-Touch Up Door Window, Removal and Installation). • If the power windows do not operate correctly, REFER to: Glass, Frames and Mechanisms (501-11B Glass, Frames and Mechanisms - Vehicles With: One-Touch Up Door Window, Diagnosis and Testing).
The RH front, RH rear or LH rear window control switch illumination is inoperative or always on - with door modules (with window one-touch up)	REFER to Pinpoint Tests	GO to Pinpoint Test E
All dimmable non-networked illumination is inoperative (networked illumination functions correctly)	REFER to Pinpoint Tests	GO to Pinpoint Test A
One Or More Switch Or Component Illumination Is Inoperative	REFER to Pinpoint Tests	GO to Pinpoint Test D
The steering wheel switch(es) illumination is inoperative	REFER to Pinpoint Tests	GO to Pinpoint Test C
All dimmable non-networked illumination is always on (networked illumination functions	REFER to Pinpoint Tests	GO to Pinpoint Test B

correctly)		
The IPC illumination is inoperative/does not dim	IPC	• PERFORM a network test. • If the scan tool responds with no communication with the IPC, REFER to: Communications Network - System Operation and Component Description (418-00 Module Communications Network, Description and Operation). • If the scan tool communicates with the IPC , INSTALL a new IPC . REFER to: Instrument Panel Cluster (IPC) (413-01 Instrumentation, Message Center and Warning Chimes, Removal and Installation).
The ICM illumination is inoperative or always on	REFER to Pinpoint Tests	GO to Pinpoint Test H
The FCIM illumination is inoperative/does not dim (base/premium)	REFER to Pinpoint Tests	GO to Pinpoint Test I
The FCIM illumination is inoperative/does not dim (Sony® sound)	FCIM	• CHECK for normal operation of the audio system. • If the audio system operates correctly, INSTALL a new FCIM . REFER to: Front Controls Interface Module (FCIM) (415-00C Information and Entertainment System - General Information - Vehicles With: SYNC/Sony AM/FM/CD, Removal and Installation). • If the audio system does not operate correctly, REFER to: Information and Entertainment System (415-00C Information and Entertainment System - General Information - Vehicles With: SYNC/Sony AM/FM/CD, Diagnosis and Testing).
The FCDIM illumination is inoperative/does not dim	FCDIM	• CHECK for normal operation of the audio system. • If the audio system operates correctly, INSTALL a new FCDIM . • If the audio system does not operate correctly, REFER to: Information and Entertainment System (415-00A Information and Entertainment System - General Information - Vehicles With: AM/FM/CD, Diagnosis and Testing). or REFER to: Information and Entertainment System (415-00B Information and Entertainment System - General Information - Vehicles With: AM/FM/CD/SYNC, Diagnosis and Testing).
The FDIM illumination is inoperative/does not dim	APIM	• CHECK for normal operation of the audio system. • If the audio system operates correctly, INSTALL a new APIM . REFER to: SYNC Module [APIM] (415-00C Information and Entertainment System - General Information - Vehicles With: SYNC/Sony AM/FM/CD, Removal and Installation). • If the audio system does not operate correctly, REFER to: Information and Entertainment System (415-00C Information and Entertainment System - General Information - Vehicles With: SYNC/Sony AM/FM/CD, Diagnosis and Testing).
The HVAC (with Dual Automatic Temperature	HVAC module	• PERFORM a network test.

Control [DATC]) illumination is inoperative/does not dim		• If the scan tool communicate with the HVAC module, INSTALL a new HVAC module. REFER to: Heating, Ventilation and Air Conditioning (HVAC) Control Module (412-00 Climate Control System - General Information, Removal and Installation). • If the scan tool does not communicate with the HVAC module, REFER to: Communications Network (418-00 Module Communications Network, Diagnosis and Testing).

Pinpoint Tests

All Dimmable Non-Networked Illumination Is Inoperative (Networked Illumination Functions Correctly)

Diagnostic Overview

Diagnostics in this manual assume a certain skill level and knowledge of Ford-specific diagnostic practices. For information about these practices,
REFER to: Diagnostic Methods (100-00 General Information, Description and Operation).

Refer to Wiring Diagrams Cell 71 for schematic and connector information.

Normal Operation and Fault Conditions

REFER to: Instrument Panel Cluster (IPC) and Panel Illumination - System Operation and Component Description (413-00 Instrument Panel Cluster (IPC) and Panel Illumination, Description and Operation).

DTC Fault Trigger Conditions

DTC	Description	Fault Trigger Conditions
U2010:11	Switch Illumination: Circuit Short To Ground	A continuous and on-demand DTC that sets when the BCM detects a short to ground from a backlighting output circuit.
U2010:15	Switch Illumination: Circuit Short To Battery Or Open	A continuous and on-demand DTC that sets when the BCM detects an open from a backlighting output circuit
U1000:00	Solid State Driver Protection Activated - Driver Disabled: No Sub Type Information	A continuous DTC that sets when the BCM has temporarily shut down an output driver because an excessive current draw exists (such as a short to ground). The BCM cannot enable the backlighting output until the cause of the short is corrected, the Diagnostic Trouble Codes (DTCs) have been cleared and a successful BCM self-test is run.
U3000:49	Control Module: Internal Electrical Failure	A continuous DTC that sets when the BCM has permanently shut down an output driver because an excessive current draw fault (such as a short to ground) has occurred more times than the BCM can withstand. The cause of the excessive current draw MUST be corrected before a new BCM is installed.

Possible Sources

- Wiring, terminals or connectors

- BCM

PINPOINT TEST A : ALL DIMMABLE NON-NETWORKED ILLUMINATION IS INOPERATIVE (NETWORKED ILLUMINATION FUNCTIONS CORRECTLY)

A1 VERIFY ALL ILLUMINATION IS INOPERATIVE

- Ignition ON.
- Place the headlamp switch in the PARKING LAMPS ON position.
- Press the instrument panel dimmer switch up and down.

Is the illumination for all hardwired switches and components inoperative?

Yes	GO to A2
No	GO to Pinpoint Test D

A2 CHECK FOR ILLUMINATION FUNCTION WITH CIRCUIT JUMPERED

- Place the headlamp switch in the PARKING LAMPS OFF position.
- Ignition OFF.
- Disconnect: BCM C2280C.
- Disconnect: BCM C2280H.
- **NOTE:** *If the jumper wire fuse fails during this step, refer to the Wiring Diagrams manual to identify the possible causes of the circuit short.*

  Connect a fused jumper wire:

Lead 1	Measurement / Action	Lead 2
Positive Battery Terminal		C2280C-14

- Connect a fused jumper wire:

Lead 1	Measurement / Action	Lead 2
Positive Battery Terminal		C2280H-20

Do the hardwired switches and components illuminate?

Yes	REMOVE the jumper wire. CONNECT BCM C2280C and C2280H. GO to A3
No	REMOVE the jumper wire. REPAIR the circuit in question.

A3 CHECK VEHICLE DIAGNOSTIC TROUBLE CODE HISTORY

- Using a scan tool, perform the BCM self-test and review the retrieved DTCs (diagnostic trouble codes).

Is BCM DTC U1000:00 or U2010:11 currently set or has DTC U1000:00 set in the past?

Yes	REPAIR the circuit in question for a short to ground or CHECK for an intermittent short to ground. Component or module replacement will not correct this intermittent fault condition.

No	GO to A4

A4 CHECK FOR CORRECT BODY CONTROL MODULE OPERATION

- Ignition OFF.
- Disconnect and inspect all the BCM connectors.
- Repair:
  - corrosion (install new connector or terminals – clean module pins)
  - damaged or bent pins - install new terminals/pins
  - pushed-out pins – install new pins as necessary
- Reconnect the BCM connectors. Make sure they seat and latch correctly.
- Operate the system and determine if the concern is still present.

Is the concern still present?

Yes	CHECK OASIS for any applicable Technical Service Bulletins (TSBs). If a TSB exists for this concern, DISCONTINUE this test and FOLLOW the TSB instructions. If no TSBs address this concern, INSTALL a new BCM . REFER to: Body Control Module (BCM) (419-10 Multifunction Electronic Modules, Removal and Installation).
No	The system is operating correctly at this time. The concern may have been caused by module connections. ADDRESS the root cause of any connector or pin issues.

All Dimmable Non-Networked Illumination Is Always On (Networked Illumination Functions Correctly)

Diagnostic Overview

Diagnostics in this manual assume a certain skill level and knowledge of Ford-specific diagnostic practices. For information about these practices,
REFER to: Diagnostic Methods (100-00 General Information, Description and Operation).

Refer to Wiring Diagrams Cell 71 for schematic and connector information.

Normal Operation and Fault Conditions

REFER to: Instrument Panel Cluster (IPC) and Panel Illumination - System Operation and Component Description (413-00 Instrument Panel Cluster (IPC) and Panel Illumination, Description and Operation).

DTC Fault Trigger Conditions

DTC	Description	Fault Trigger Conditions
U2010:15	Switch Illumination General Electrical Failures Circuit Short To Battery Or Open	A continuous and on-demand DTC that sets when the BCM detects a short battery voltage or a circuit open from the backlighting output circuit.

Possible Sources

- Wiring, terminals or connectors

- BCM

PINPOINT TEST B : ALL DIMMABLE NON-NETWORKED ILLUMINATION IS ALWAYS ON (NETWORKED ILLUMINATION FUNCTIONS CORRECTLY)

B1 CHECK THE EXTERIOR LIGHTING

- Ignition ON.
- Place the headlamp switch in the OFF position.
- Observe the parking lights.

Are the parking lights illuminated?

Yes	REFER to: Parking, Rear and License Plate Lamps (417-01 Exterior Lighting, Diagnosis and Testing).
No	GO to B2

B2 CHECK FOR BODY CONTROL MODULE DIAGNOSTIC TROUBLE CODE (DTC) U2010:15

- Review the retrieved DTCs (diagnostic trouble codes).

Is BCM DTC U2010:15 present?

Yes	GO to B3
No	GO to Pinpoint Test G

B3 CHECK THE BODY CONTROL MODULE (BCM) INSTRUMENT PANEL SWITCH ILLUMINATION OUTPUT CIRCUITS FOR A SHORT TO VOLTAGE

- Ignition OFF.
- Disconnect: BCM C2280C.
- Disconnect: BCM C2280H.
- Using the Terminal Release Kit, release and temporarily remove BCM C2280C pin 14.
- Using the Terminal Release Kit, release and temporarily remove BCM C2280H pin 20.
- Connect: BCM C2280C.
- Connect: BCM C2280H.
- Ignition ON.

Do any dimmable backlighted components continue to illuminate?

Yes	REPAIR the circuit in question.
No	GO to B4

B4 CHECK FOR CORRECT BODY CONTROL MODULE (BCM) OPERATION

- Ignition OFF.
- Disconnect and inspect all the BCM connectors.
- Repair:
  - corrosion (install new connector or terminals – clean module pins)
  - damaged or bent pins - install new terminals/pins
  - pushed-out pins – install new pins as necessary
- Reconnect the BCM connectors. Make sure they seat and latch correctly.
- Operate the system and determine if the concern is still present.

Is the concern still present?

Yes	CHECK OASIS for any applicable Technical Service Bulletins (TSBs). If a TSB exists for this concern, DISCONTINUE this test and FOLLOW the TSB instructions. If no TSB addresses this concern, INSTALL a new BCM . REFER to: Body Control Module (BCM) (419-10 Multifunction Electronic Modules, Removal and Installation).
No	The system is operating correctly at this time. The concern may have been caused by module connections. ADDRESS the root cause of any connector or pin issues.

The Steering Wheel Switch(es) Illumination Is Inoperative

Diagnostic Overview

Diagnostics in this manual assume a certain skill level and knowledge of Ford-specific diagnostic practices. For information about these practices,
REFER to: Diagnostic Methods (100-00 General Information, Description and Operation).

Refer to Wiring Diagrams Cell 71 for schematic and connector information.

Normal Operation and Fault Conditions

REFER to: Instrument Panel Cluster (IPC) and Panel Illumination - System Operation and Component Description (413-00 Instrument Panel Cluster (IPC) and Panel Illumination, Description and Operation).

Possible Sources

- Wiring, terminals or connectors
- Steering wheel switch(es)
- Clockspring
- Steering wheel
- SASM
- Driver airbag

PINPOINT TEST C : THE STEERING WHEEL SWITCH(ES) ILLUMINATION IS INOPERATIVE

C1 CHECK THE OTHER DIMMABLE LIGHTING SWITCHES

- Ignition ON.
- Place the headlamp switch in the PARKING LAMPS ON position.
- Place a shop light above the instrument panel ambient light sensor to make sure that the BCM outputs maximum illumination voltage.
- Press and hold the instrument panel dimmer switch up to the full illumination position.

Are all the dimmable steering wheel switches inoperative?

Yes	GO to C2
No	For the LH lower switch, GO to C6 For the RH lower switch, GO to C7 For the LH and/or RH upper switch, GO to C8

C2 CHECK FOR VOLTAGE TO THE STEERING WHEEL SWITCHES

- Place the headlamp switch in the OFF position.
- Disconnect: SASM C226A.
- Disconnect: Clockspring C218A.
- Ignition ON.
- Place the headlamp switch in the PARKING LAMPS ON position.
- Press and hold the instrument panel dimmer switch up to the full illumination position.
- Measure:

Positive Lead	Measurement / Action	Negative Lead
C226A-12		C218A-4

Is the voltage greater than 11 volts?

Yes	GO to C4
No	GO to C3

C3 CHECK FOR VOLTAGE TO THE STEERING ANGLE SENSOR MODULE (SASM)

- Measure:

Positive Lead	Measurement / Action	Negative Lead
C226A-12		—

Is the voltage greater than 11 volts?

Yes	REPAIR the ground circuit.
No	REPAIR the illumination circuit.

C4 CHECK FOR VOLTAGE TO THE STEERING WHEEL HARNESS

- Ignition OFF.
- Connect: SASM C226A.
- Connect: Clockspring C218A.
- **WARNING: Turn the ignition OFF and wait one minute to deplete the backup power supply. Failure to follow this instruction may result in serious personal injury or death in the event of an accidental deployment.**

  Ignition OFF and wait one minute.
- Remove the driver airbag.
  REFER to: Driver Airbag (501-20B Supplemental Restraint System, Removal and Installation).
- Disconnect: Clockspring C218B.
- Ignition ON.
- Measure:

Positive Lead	Measurement / Action	Negative Lead

C218B-7 (component side)		C218B-10 (component side)

Is the voltage greater than 11 volts?

Yes	CONNECT Clockspring C218B. For vehicles equipped with a LH lower switch only, GO to C6 For vehicles with multiple steering wheel switches, INSTALL a new steering wheel. REFER to: Steering Wheel (211-04 Steering Column, Removal and Installation).
No	GO to C5

C5 CHECK THE CLOCKSPRING FOR AN OPEN

- Ignition OFF.
- Remove the clockspring.
  REFER to: Clockspring (501-20B Supplemental Restraint System, Removal and Installation).
- Ignition ON.
- Measure:

Positive Lead	Measurement / Action	Negative Lead
C218B-10 (component side)	Ω	C218A-4 (component side)

- Measure:

Positive Lead	Measurement / Action	Negative Lead
C218B-7 (component side)	Ω	C218C-7 (component side)

Are the resistances less than 3 ohms?

Yes	INSTALL a new SASM. REFER to: Steering Angle Sensor Module (SASM) (211-05 Steering Column Switches, Removal and Installation).
No	INSTALL a new clockspring. REFER to: Clockspring (501-20B Supplemental Restraint System, Removal and Installation).

C6 CHECK THE LEFT HAND (LH) LOWER STEERING WHEEL SWITCH

- Ignition OFF.
- Disconnect: LH Lower Steering Wheel Switch.
- Ignition ON.
- Measure:

Positive Lead	Measurement / Action	Negative Lead
C2366-1		C2366-5

Is the voltage greater than 11 volts?

Yes	INSTALL a new steering wheel switch. REFER to: Steering Wheel Multifunction Switch (211-05 Steering Column Switches, Removal and Installation).
No	INSTALL a new steering wheel. REFER to: Steering Wheel (211-04 Steering Column, Removal and Installation).

C7 CHECK THE RIGHT HAND (RH) LOWER STEERING WHEEL SWITCH

- Ignition OFF.
- Disconnect: RH Lower Steering Wheel Switch.
- Ignition ON.
- Measure:

Positive Lead	Measurement / Action	Negative Lead
C2367-1 (without Sony sound)		C2367-4 (without Sony sound)
C3127-2 (with Sony sound)		C3127-3 (with Sony sound)

Is the voltage greater than 11 volts?

Yes	INSTALL a new steering wheel switch. REFER to: Steering Wheel Multifunction Switch (211-05 Steering Column Switches, Removal and Installation).
No	INSTALL a new steering wheel. REFER to: Steering Wheel (211-04 Steering Column, Removal and Installation).

C8 CHECK FOR VOLTAGE TO THE UPPER (AIRBAG) HARNESS

- Ignition OFF.
- **WARNING: Turn the ignition OFF and wait one minute to deplete the backup power supply. Failure to follow this instruction may result in serious personal injury or death in the event of an accidental deployment.**
  Ignition OFF and wait one minute.
- Remove the driver airbag.
  REFER to: Driver Airbag (501-20B Supplemental Restraint System, Removal and Installation).
- Disconnect: Inline C260.
- Ignition ON.
- Measure:

Positive Lead	Measurement / Action	Negative Lead
C260-3 (male)		C260-2 (male)

Is the voltage greater than 11 volts?

Yes	For the LH upper switch, GO to C9 For the RH upper switch, GO to C10
No	INSTALL a new steering wheel. REFER to: Steering Wheel (211-04 Steering Column, Removal and Installation).

C9 CHECK THE LEFT HAND (LH) UPPER STEERING WHEEL SWITCH

- Ignition OFF.
- Connect: Inline C260.
- Disconnect: LH Upper Steering Wheel Switch.
- Ignition ON.
- Measure:

Positive Lead	Measurement / Action	Negative Lead
C2998-1		C2998-4

Is the voltage greater than 11 volts?

Yes	INSTALL a new steering wheel switch. REFER to: Steering Wheel Multifunction Switch (211-05 Steering Column Switches, Removal and Installation).
No	INSTALL a new driver airbag. REFER to: Driver Airbag (501-20B Supplemental Restraint System, Removal and Installation).

C10 CHECK THE RIGHT HAND (RH) UPPER STEERING WHEEL SWITCH

- Ignition OFF.
- Connect: Inline C260.
- Disconnect: RH Upper Steering Wheel Switch.
- Ignition ON.
- Measure:

Positive Lead	Measurement / Action	Negative Lead
C2999-2		C2999-3

Is the voltage greater than 11 volts?

Yes	INSTALL a new steering wheel switch. REFER to: Steering Wheel Multifunction Switch (211-05 Steering Column Switches, Removal and Installation).
No	INSTALL a new driver airbag. REFER to: Driver Airbag (501-20B Supplemental Restraint System, Removal and Installation).

One Or More Dimmable Non-Networked Illumination Source Is Inoperative

Diagnostic Overview

Diagnostics in this manual assume a certain skill level and knowledge of Ford-specific diagnostic practices. For information about these practices,
REFER to: Diagnostic Methods (100-00 General Information, Description and Operation).

Refer to Wiring Diagrams Cell 71 for schematic and connector information.

Normal Operation and Fault Conditions

REFER to: Instrument Panel Cluster (IPC) and Panel Illumination - System Operation and Component Description (413-00 Instrument Panel Cluster (IPC) and Panel Illumination, Description and Operation).

Possible Sources

- Wiring, terminals or connectors
- Illuminated switch
- Illuminated component

PINPOINT TEST D : ONE OR MORE SWITCH OR COMPONENT ILLUMINATION IS INOPERATIVE

D1 CHECK THE VOLTAGE TO THE INDIVIDUAL ILLUMINATION SOURCE

- Ignition OFF.
- Disconnect: Inoperative Illumination Source.
- Ignition ON.
- Press the dimmer switch up until the instrument panel illumination reaches full brightness.
- Measure:

Positive Lead	Measurement / Action	Negative Lead
C241-6	V	—

Positive Lead	Measurement / Action	Negative Lead
C320-1	V	—

Positive Lead	Measurement / Action	Negative Lead
C321-1	V	—

Positive Lead	Measurement / Action	Negative Lead

C901-3		—

Positive Lead	Measurement / Action	Negative Lead
C931-3 (without roof opening panel)		—

Positive Lead	Measurement / Action	Negative Lead
C908-3 (with roof opening panel)		—

Positive Lead	Measurement / Action	Negative Lead
C903-3 (with roof opening panel)		—

Positive Lead	Measurement / Action	Negative Lead
C912-7		—

Positive Lead	Measurement / Action	Negative Lead
C2440-5		—

Positive Lead	Measurement / Action	Negative Lead
C3617-3		—

Positive Lead	Measurement / Action	Negative Lead
C2035-6		—

Positive Lead	Measurement / Action	Negative Lead
C2357A-1		—

Is the voltage greater than 11 volts?

Yes	GO to D2
No	REPAIR the circuit in question.

D2 CHECK THE VOLTAGE TO THE INDIVIDUAL ILLUMINATION SOURCE USING THE CONNECTOR GROUND

- Measure:

Positive Lead	Measurement / Action	Negative Lead
C241-6		C241-12

Positive Lead	Measurement / Action	Negative Lead
C320-1		C320-2

Positive Lead	Measurement / Action	Negative Lead
C321-1		C321-2

Positive Lead	Measurement / Action	Negative Lead
C901-3		C901-5

Positive Lead	Measurement / Action	Negative Lead
C931-3 (without roof opening panel)		C931-5

Positive Lead	Measurement / Action	Negative Lead
C908-3 (with roof opening panel)		C908-5

Positive Lead	Measurement / Action	Negative Lead
C903-3 (with roof opening panel)		C903-5

Positive Lead	Measurement / Action	Negative Lead
C912-7		C912-5

Positive Lead	Measurement / Action	Negative Lead
C2440-5		C2440-3

Positive Lead	Measurement / Action	Negative Lead
C3617-3		C3617-2

Positive Lead	Measurement / Action	Negative Lead
C2035-6		C2035-12

Positive Lead	Measurement / Action	Negative Lead
C2357A-1		C2357A-5

Is the voltage greater than 11 volts?

Yes	INSTALL a new component in question.
No	REPAIR the circuit in question.

The RH (right-hand) Front, RH (right-hand) Rear Or LH (left-hand) Rear Window Control Switch Illumination Is Inoperative Or Always On - With Door Modules (With Window One-Touch Up)

Diagnostic Overview

Diagnostics in this manual assume a certain skill level and knowledge of Ford-specific diagnostic practices. For information about these practices,
REFER to: Diagnostic Methods (100-00 General Information, Description and Operation).

Refer to Wiring Diagrams Cell 100 for schematic and connector information.

Normal Operation and Fault Conditions

REFER to: Instrument Panel Cluster (IPC) and Panel Illumination - System Operation and Component Description (413-00 Instrument Panel Cluster (IPC) and Panel Illumination, Description and Operation).

DTC Fault Trigger Conditions

DTC	Description	Fault Trigger Conditions
B12FF:11	Rear Door Switch Illumination: Circuit Short To Ground	A continuous and on-demand DTC that sets in the DDM or PDM when the Driver Rear Door Module (DRDM) or Passenger Rear Door Module (PRDM) detects a short to ground on the rear door switch illumination output circuit.
B12FF:15	Rear Door Switch Illumination: Circuit Short To Battery Or Open	A continuous and on-demand DTC that sets in the DDM or PDM when the Driver Rear Door Module (DRDM) or Passenger Rear Door Module (PRDM) detects a short battery voltage or a circuit open on the rear door switch illumination output circuit.
U2010:11	Switch Illumination: Circuit Short To Ground	A continuous and on-demand DTC that sets when the PDM detects a short to ground on the passenger front window switch illumination output circuit.
U2010:15	Switch Illumination: Circuit Short To Battery Or Open	A continuous and on-demand DTC that sets when the PDM detects a short battery voltage or a circuit open on the passenger front window switch illumination output circuit.

Possible Sources

- Wiring, terminals or connectors
- Window control switch
- PDM
- Driver Rear Door Module (DRDM)
- Passenger Rear Door Module (PRDM)

PINPOINT TEST E : THE RH (RIGHT-HAND) FRONT, RH (RIGHT-HAND) REAR OR LH (LEFT-HAND) REAR WINDOW CONTROL SWITCH ILLUMINATION IS INOPERATIVE OR ALWAYS ON - WITH DOOR MODULES (WITH WINDOW ONE-TOUCH UP)

E1 VERIFY THE POWER WINDOW FUNCTIONALITY

Operate the power window from the suspect switch **and** the LH front window control switch.

Does the power window function correctly from the suspect switch AND the LH front master window control switch?

Yes	For the RH front window control switch, GO to E2 For the LH rear window control switch, GO to E9 For the RH rear window control switch, GO to E16
No	REFER to: Glass, Frames and Mechanisms (501-11A Glass, Frames and Mechanisms - Vehicles Without: One-Touch Up Door Window, Diagnosis and Testing).

E2 CHECK THE PDM (PASSENGER DOOR MODULE) DIAGNOSTIC TROUBLE CODES (DTC'S)

- Using a scan tool, clear the PDM Diagnostic Trouble Codes (DTCs).
- Perform the PDM self-test.

is DTC U2010:11 stored?

Yes	GO to E6
No	GO to E3

E3 CHECK THE ILLUMINATION CIRCUIT FOR A SHORT TO VOLTAGE AT THE RIGHT HAND (RH) FRONT WINDOW CONTROL SWITCH

- Ignition OFF.
- Disconnect: RH Front Window Control Switch.
- Disconnect PDM C652B.
- Ignition ON.
- Measure:

Positive Lead	Measurement / Action	Negative Lead
C604-1	V	—

Is any voltage present?

Yes	REPAIR the circuit.
No	GO to E4

E4 CHECK THE ILLUMINATION CIRCUIT FOR AN OPEN BETWEEN THE PASSENGER DOOR MODULE (PDM) AND THE RIGHT HAND (RH) FRONT WINDOW CONTROL SWITCH

- Ignition OFF.
- Measure:

Positive Lead	Measurement / Action	Negative Lead
C604-1	Ω	C652B-4

Is the resistance less than 3 ohms?

Yes	GO to E5
No	REPAIR the circuit.

E5 CHECK THE PASSENGER DOOR MODULE (PDM) ILLUMINATION OUTPUT VOLTAGE AT THE WINDOW CONTROL SWITCH

- Connect: PDM C652B.
- Ignition ON.
- Press the dimmer switch up until the instrument panel illumination reaches full brightness.
- Measure:

Positive Lead	Measurement / Action	Negative Lead
C604-1	V	—

Is the voltage greater than 11 volts?

Yes	INSTALL a new window control switch. REFER to: Front Door Window Control Switch (501-11B Glass, Frames and Mechanisms - Vehicles With: One-Touch Up Door Window, Removal and Installation).
No	REPAIR the circuit.

E6 RECHECK THE PASSENGER DOOR MODULE (PDM) DTCS WITH THE RIGHT HAND (RH) FRONT WINDOW CONTROL SWITCH DISCONNECTED

- Ignition OFF.
- Disconnect: RH Front Window Control Switch.
- Ignition ON.
- Using a scan tool, clear the PDM Diagnostic Trouble Codes (DTCs).
- Perform the PDM self-test

Is DTC U2010:11 returned?

Yes	GO to E7
No	INSTALL a new window control switch. REFER to: Front Door Window Control Switch (501-11B Glass, Frames and Mechanisms - Vehicles With: One-Touch Up Door Window, Removal and Installation).

E7 CHECK THE ILLUMINATION CIRCUIT FOR A SHORT TO GROUND AT THE RIGHT HAND (RH) FRONT WINDOW CONTROL SWITCH

- Ignition OFF.
- Disconnect: PDM C652B
- Measure:

Positive Lead	Measurement / Action	Negative Lead
C604-1	Ω	—

Is the resistance greater than 10,000 ohms?

Yes	GO to E8
No	REPAIR the circuit. **After the repair:** CLEAR the PDM Diagnostic Trouble Codes (DTCs) and REPEAT the self-test to enable the illumination output driver.

E8 CHECK FOR CORRECT PASSENGER DOOR MODULE (PDM) OPERATION

- Disconnect and inspect all PDM connectors.
- Repair:
  - Corrosion (install new connector or terminals - clean module pins)
  - Damaged or bent pins - install new terminals / pins
  - Pushed-out pins - install new pins as necessary
- Reconnect the PDM connectors and all previously disconnected power window system connectors. Make sure all connectors seat and latch correctly.
- Operate the system to determine if the concern is still present.

Is the concern still present?

Yes	Check OASIS for any applicable Technical Service Bulletins (TSBs). If a TSB exists for this concern, DISCONTINUE this test and FOLLOW the TSB instructions. If no TSB addresses this concern, INSTALL a new PDM . REFER to: Door Module (419-10 Multifunction Electronic Modules, Removal and Installation).
No	The system is operating correctly at this time. The concern may have been caused by component connections. ADDRESS the root cause of any connector or pin issues.

E9 CHECK THE PASSENGER DOOR MODULE (PDM) DIAGNOSTIC TROUBLE CODES (DTCS)

- Using a scan tool, clear the PDM Diagnostic Trouble Codes (DTCs).
- Perform the PDM self-test.

Is DTC B12FF:11 stored?

Yes	GO to E13
No	GO to E10

E10 CHECK THE ILLUMINATION CIRCUIT FOR A SHORT TO VOLTAGE AT THE RIGHT HAND (RH) REAR WINDOW CONTROL SWITCH

- Ignition OFF.
- Disconnect: Passenger Rear Door Module (PRDM).
- Disconnect: RH Rear Window Control Switch.
- Ignition ON.
- Measure

Positive Lead	Measurement / Action	Negative Lead
C801-1	V	—

Is any voltage present?

Yes	REPAIR the circuit.
No	GO to E11

E11 CHECK THE ILLUMINATION CIRCUIT FOR AN OPEN BETWEEN THE PASSENGER REAR DOOR MODULE (PRDM) AND THE RIGHT HAND (RH) REAR WINDOW CONTROL SWITCH

- Ignition OFF.
- Measure:

Positive Lead	Measurement / Action	Negative Lead
C801-1	Ω	C832-7

Is the resistance less than 3 ohms?

Yes	GO to E12
No	REPAIR the circuit.

E12 CHECK THE PASSENGER REAR DOOR MODULE (PRDM) ILLUMINATION OUTPUT VOLTAGE AT THE WINDOW CONTROL SWITCH

- Connect: Passenger Rear Door Module (PRDM).
- Ignition ON.
- Press the dimmer switch up until the instrument panel illumination reaches full brightness.
- Measure:

Positive Lead	Measurement / Action	Negative Lead
C801-1	V	—

Is the voltage greater than 11 volts?

Yes	INSTALL a new window control switch. REFER to: Rear Door Window Control Switch (501-11B Glass, Frames and Mechanisms - Vehicles With: One-Touch Up Door Window, Removal and Installation).
No	GO to E15

E13 RECHECK THE PASSENGER DOOR MODULE (PDM) DIAGNOSTIC TROUBLE CODES (DTCS) WITH THE

RIGHT HAND (RH) REAR WINDOW CONTROL SWITCH DISCONNECTED

- Ignition OFF.
- Disconnect: RH Rear Window Control Switch.
- Ignition ON.
- Using a scan tool, clear the PDM Diagnostic Trouble Codes (DTCs).
- Perform the PDM self-test.

Is DTC B12FF:11 returned?

Yes	GO to E14
No	INSTALL a new window control switch. REFER to: Rear Door Window Control Switch (501-11B Glass, Frames and Mechanisms - Vehicles With: One-Touch Up Door Window, Removal and Installation).

E14 CHECK THE ILLUMINATION CIRCUIT FOR A SHORT TO GROUND AT THE RIGHT HAND (RH) REAR WINDOW CONTROL SWITCH

- Ignition OFF.
- Disconnect: Passenger Rear Door Module (PRDM).
- Measure:

Positive Lead	Measurement / Action	Negative Lead
C801-1	Ω	—

Is the resistance greater than 10,000 ohms?

Yes	GO to E15
No	REPAIR the circuit. **After the repair:** CLEAR the PDM Diagnostic Trouble Codes (DTCs) and REPEAT the self-test to enable the illumination output driver.

E15 CHECK FOR CORRECT PASSENGER REAR DOOR MODULE (PRDM) OPERATION

- Disconnect and inspect all Passenger Rear Door Module (PRDM) connectors.
- Repair:
  - Corrosion (install new connector or terminals - clean module pins)
  - Damaged or bent pins - install new terminals / pins
  - Pushed-out pins - install new pins as necessary
- Reconnect the Passenger Rear Door Module (PRDM) connectors and all previously disconnected power window system connectors. Make sure all connectors seat and latch correctly.
- Operate the system to determine if the concern is still present.

Is the concern still present?

Yes	Check OASIS for any applicable Technical Service Bulletins (TSBs). If a TSB exists for this concern, DISCONTINUE this test and FOLLOW the TSB instructions. If no TSB addresses this concern, INSTALL a new Passenger Rear Door Module (PRDM). REFER to: Door Module (419-10 Multifunction Electronic Modules, Removal and Installation).
No	The system is operating correctly at this time. The concern may have been caused by component connections. ADDRESS the root cause of any connector or pin issues.

E16 CHECK THE DRIVER DOOR MODULE (DDM) DIAGNOSTIC TROUBLE CODES (DTCS)

- Using a scan tool, clear the DDM Diagnostic Trouble Codes (DTCs).
- Perform the DDM self-test.

Is DTC B12FF:11 stored?

Yes	GO to E20
No	GO to E17

E17 CHECK THE ILLUMINATION CIRCUIT FOR A SHORT TO VOLTAGE AT THE LEFT HAND (LH) REAR WINDOW CONTROL SWITCH

- Ignition OFF.
- Disconnect: Driver Rear Door Module (DRDM).
- Disconnect: LH Rear Window Control Switch.
- Ignition ON.
- Measure:

Positive Lead	Measurement / Action	Negative Lead
C701-1	V	—

Is any voltage present?

Yes	REPAIR the circuit.
No	GO to E18

E18 CHECK THE ILLUMINATION CIRCUIT FOR AN OPEN BETWEEN THE DRIVER REAR DOOR MODULE (DRDM) AND THE WINDOW CONTROL SWITCH

- Ignition OFF.
- Measure:

Positive Lead	Measurement / Action	Negative Lead
C701-1	Ω	C728-7

Is the resistance less than 3 ohms?

Yes	GO to E19
No	REPAIR the circuit.

E19 CHECK THE DRIVER REAR DOOR MODULE (DRDM) ILLUMINATION OUTPUT VOLTAGE AT THE WINDOW

CONTROL SWITCH

- Connect: Driver Rear Door Module (DRDM).
- Ignition ON.
- Press the dimmer switch up until the instrument panel illumination reaches full brightness.
- Measure:

Positive Lead	Measurement / Action	Negative Lead
C701-1	⊕ V ⊖	—

Is the voltage greater than 11 volts?

Yes	INSTALL a new window control switch. REFER to: Rear Door Window Control Switch (501-11B Glass, Frames and Mechanisms - Vehicles With: One-Touch Up Door Window, Removal and Installation).
No	GO to E22

E20 CHECK THE DRIVER DOOR MODULE (DDM) DIAGNOSTIC TROUBLE CODES (DTCS) WITH THE LEFT HAND (LH) REAR WINDOW CONTROL SWITCH DISCONNECTED

- Ignition OFF.
- Disconnect: LH Rear Window Control Switch.
- Ignition ON.
- Using a scan tool, clear the DDM Diagnostic Trouble Codes (DTCs).
- Perform the DDM self-test.

Is DTC B12FF:11 stored?

Yes	GO to E21
No	INSTALL a new window control switch. REFER to: Rear Door Window Control Switch (501-11B Glass, Frames and Mechanisms - Vehicles With: One-Touch Up Door Window, Removal and Installation).

E21 CHECK THE ILLUMINATION CIRCUIT FOR A SHORT TO GROUND AT THE LEFT HAND (LH) REAR WINDOW CONTROL SWITCH

- Ignition OFF.
- Disconnect: Driver Rear Door Module (DRDM).
- Measure:

Positive Lead	Measurement / Action	Negative Lead
C701-1	Ω	—

Is the resistance greater than 10,000 ohms?

Yes	GO to E22

No	REPAIR the circuit. **After the repair:** CLEAR the DDM Diagnostic Trouble Codes (DTCs) and REPEAT the self-test to enable the illumination output driver.

E22 CHECK FOR CORRECT DRIVER REAR DOOR MODULE (DRDM) OPERATION

- Disconnect and inspect all Driver Rear Door Module (DRDM) connectors.
- Repair:
  - Corrosion (install new connector or terminals - clean module pins)
  - Damaged or bent pins - install new terminals / pins
  - Pushed-out pins - install new pins as necessary
- Reconnect the Driver Rear Door Module (DRDM) connectors and all previously disconnected power window system connectors. Make sure all connectors seat and latch correctly.
- Operate the system to determine if the concern is still present.

Is the concern still present?

Yes	Check OASIS for any applicable Technical Service Bulletins (TSBs). If a TSB exists for this concern, DISCONTINUE this test and FOLLOW the TSB instructions. If no TSB addresses this concern, INSTALL a new Driver Rear Door Module (DRDM). REFER to: Door Module (419-10 Multifunction Electronic Modules, Removal and Installation).
No	The system is operating correctly at this time. The concern may have been caused by component connections. ADDRESS the root cause of any connector or pin issues.

The Start-Stop Switch Illumination Is Inoperative or Always On (Vehicles With Intelligent Access [IA])

Diagnostic Overview

Diagnostics in this manual assume a certain skill level and knowledge of Ford-specific diagnostic practices. For information about these practices,
REFER to: Diagnostic Methods (100-00 General Information, Description and Operation).

Refer to Wiring Diagrams Cell 20 for schematic and connector information.

Normal Operation and Fault Conditions

The start/stop switch illumination is ground side controlled by the BCM .

DTC Fault Trigger Conditions

DTC	Description	Fault Trigger Conditions
B1249:12	Start Button Illumination General Electrical Failures: Circuit Short To Battery	A continuous and on-demand DTC that sets when the BCM detects a short to voltage on the start/stop switch illumination circuit.
B1249:14	Start Button Illumination General Electrical Failures: Circuit Short To	A continuous and on-demand DTC that sets when the BCM detects a short to ground or open from the start/stop switch illumination circuit.

	Ground Or Open	
U1000:00	Solid State Driver Protection Activated - Driver Disabled: No Sub Type Information	Sets in continuous memory when the BCM has temporarily disabled an output driver because an excessive current draw exists. The BCM cannot enable the output until the cause of the excessive current draw is corrected, the BCM Diagnostic Trouble Codes (DTCs) have been cleared and a successful BCM self-test is run.
U3000:49	Control Module: Internal Electronic Failure	Sets in continuous memory when the BCM has permanently disabled an output driver because an excessive current draw has occurred more times than the BCM output driver can withstand. ADDRESS all other BCM Diagnostic Trouble Codes (DTCs). After the cause of the excessive current draw is corrected, INSTALL a new BCM .

Possible Sources

- Start/stop switch
- BCM
- Wiring, terminals or connectors

PINPOINT TEST F : THE START-STOP SWITCH ILLUMINATION IS INOPERATIVE OR ALWAYS ON (VEHICLES WITH INTELLIGENT ACCESS [IA])

F1 VERIFY THE ILLUMINATION OPERATION

- Monitor the start/stop switch illumination and the steering wheel switch illumination.
- Ignition ON.
- Press the dimmer switch up and down to change the level of the instrument panel illumination
- Ignition OFF.

Is the steering wheel switch AND the start/stop switch illumination inoperative or always on?

Yes	If the illumination is inoperative, GO to Pinpoint Test A If the illumination is always on, GO to Pinpoint Test B
No	If the start/stop switch illumination is inoperative, GO to F2 If the start/stop switch illumination is always on, GO to F6

F2 CHECK FOR ILLUMINATION GROUND AT THE STOP/START SWITCH

- Ignition OFF.
- Disconnect: Start/Stop Switch.
- Using the Terminal Release Kit, release and temporarily remove the start/stop switch connector pin 1, circuit CLN17 (BN).
- Connect: Start/Stop Switch.
- Ignition ON.
- Press the dimmer switch up until the instrument panel illumination reaches full brightness.
- Measure:

Positive Lead	Measurement / Action	Negative Lead
Positive Battery Terminal		C2195-1

Is the voltage greater than 11 volts?

Yes	INSTALL pin 1 into the start/stop switch connector. INSTALL a new start/stop switch. REFER to: Ignition Switch - Vehicles With: Push Button Start (211-05 Steering Column Switches,

	Removal and Installation).
No	GO to F3

F3 CHECK THE BODY CONTROL MODULE (BCM) DIAGNOSTIC TROUBLE CODES (DTCS)

- Using a scan tool, clear the BCM Diagnostic Trouble Codes (DTCs).
- Wait 10 seconds.
- Perform the BCM self-test.

Is DTC B1249:12 present?

Yes	GO to F4
No	GO to F5

F4 CHECK THE START/STOP SWITCH ILLUMINATION CIRCUIT FOR A SHORT TO VOLTAGE

- Measure:

Positive Lead	Measurement / Action	Negative Lead
C2195-1		—

Is any voltage present?

Yes	INSTALL pin 1 into the start/stop switch connector. REPAIR the circuit. **After the repair:** If DTC U1000:00 is present in the BCM , CLEAR the Diagnostic Trouble Codes (DTCs) and REPEAT the self-test (required to enable the output driver when DTC U1000:00 is stored in the BCM). If DTC U3000:49 is present in the BCM , INSTALL a new BCM after all other Diagnostic Trouble Codes (DTCs) have been addressed. REFER to: Body Control Module (BCM) (419-10 Multifunction Electronic Modules, Removal and Installation).
No	GO to F7

F5 CHECK THE ILLUMINATION CIRCUIT FOR AN OPEN BETWEEN THE START/STOP SWITCH AND THE BODY CONTROL MODULE (BCM)

- Ignition OFF.
- Disconnect: Start/Stop Switch.
- Disconnect: BCM C2280C.
- Measure:

Positive Lead	Measurement / Action	Negative Lead
C2195-1	Ω	C2280C-12

Is the resistance less than 3 ohms?

Yes	INSTALL pin 1 into the start/stop switch connector. GO to F7
No	INSTALL pin 1 into the start/stop switch connector. REPAIR the circuit.

F6 CHECK THE START/STOP SWITCH ILLUMINATION CIRCUIT FOR A SHORT TO GROUND AT THE START/STOP SWITCH

- Ignition OFF.
- Disconnect: Start/Stop Switch.
- Disconnect: BCM C2280C.
- Measure:

Positive Lead	Measurement / Action	Negative Lead
C2195-1	Ω	—

Is the resistance greater than 10,000 ohms?

Yes	GO to F7
No	REPAIR the circuit.

F7 CHECK FOR CORRECT BODY CONTROL MODULE (BCM) OPERATION

- Ignition OFF.
- Disconnect and inspect all the BCM connectors.
- Repair:
  - corrosion (install new connector or terminals – clean module pins)
  - damaged or bent pins - install new terminals/pins
  - pushed-out pins – install new pins as necessary
- Reconnect the BCM connectors. Make sure they seat and latch correctly.
- Operate the system and determine if the concern is still present.

Is the concern still present?

Yes	CHECK OASIS for any applicable Technical Service Bulletins (TSBs). If a TSB exists for this concern, DISCONTINUE this test and FOLLOW the TSB instructions. If no Technical Service Bulletins (TSBs) address this concern, INSTALL a new BCM . REFER to: Body Control Module (BCM) (419-10 Multifunction Electronic Modules, Removal and Installation).
No	The system is operating correctly at this time. The concern may have been caused by module connections. ADDRESS the root cause of any connector or pin issues.

All Dimmable Illumination (Networked And Non-Networked Sources) Does Not Dim Or Increase Brightness

Diagnostic Overview

Diagnostics in this manual assume a certain skill level and knowledge of Ford-specific diagnostic practices. For information about these practices,
REFER to: Diagnostic Methods (100-00 General Information, Description and Operation).

Refer to Wiring Diagrams Cell 71 for schematic and connector information.

Normal Operation and Fault Conditions

REFER to: Instrument Panel Cluster (IPC) and Panel Illumination - System Operation and Component Description (413-00 Instrument Panel Cluster (IPC) and Panel Illumination, Description and Operation).

Possible Sources

- Dimmer switch (part of headlamp switch)
- BCM

PINPOINT TEST G : ALL DIMMABLE ILLUMINATION (NETWORKED AND NON-NETWORKED SOURCES) DOES NOT DIM OR INCREASE BRIGHTNESS

G1 VERIFY THE OPERATION OF THE HEADLAMPS

- Ignition ON.
- Place the headlamp switch in the HEADLAMPS ON possition.

Do the headlamps operate correctly?

Yes	If the headlamps operate correctly GO to G2
No	If the headlamps do not operate correctly REFER to: Headlamps (417-01 Exterior Lighting, Diagnosis and Testing).

G2 COMPARE OPERATION OF NETWORKED AND NON-NETWORKED ILLUMINATION SOURCES

- Place the headlamp switch in the PARKING LAMPS ON position.
- Monitor the illumination level of a networked illumination source such as the HVAC module.
- Monitor the illumination level of a non-networked (hardwired) illumination source such as the steering wheel switches.
- Press the instrument panel dimmer switch up and down.

Do both networked and non-networked illumination sources fail to increase and decrease in brightness?

Yes	INSTALL a new headlamp switch. REFER to: Headlamp Switch (417-01 Exterior Lighting, Removal and Installation).
No	GO to G3

G3 CHECK THE INSTRUMENT PANEL CLUSTER (IPC) DIAGNOSTIC TROUBLE CODES (DTCS)

- Using a scan tool, check the IPC Diagnostic Trouble Codes (DTCs).

Are any IPC Diagnostic Trouble Codes (DTCs) present?

Yes	REFER to: Instrumentation, Message Center and Warning Chimes (413-01 Instrumentation, Message Center and Warning Chimes, Diagnosis and Testing).
No	GO to G4

G4 CHECK FOR CORRECT BODY CONTROL MODULE (BCM) OPERATION

- Ignition OFF.
- Disconnect and inspect all the BCM connectors.
- Repair:
  - corrosion (install new connector or terminals – clean module pins)
  - damaged or bent pins - install new terminals/pins
  - pushed-out pins – install new pins as necessary
- Reconnect the BCM connectors. Make sure they seat and latch correctly.
- Operate the system and determine if the concern is still present.

Is the concern still present?

Yes	CHECK OASIS for any applicable Technical Service Bulletins (TSBs). If a TSB exists for this concern, DISCONTINUE this test and FOLLOW the TSB instructions. If no Technical Service Bulletins (TSBs) address this concern, INSTALL a new BCM . REFER to: Body Control Module (BCM) (419-10 Multifunction Electronic Modules, Removal and Installation).
No	The system is operating correctly at this time. The concern may have been caused by module connections. ADDRESS the root cause of any connector or pin issues.

The ICM (Information Center Module) Illumination Is Inoperative Or Always On

Diagnostic Overview

Diagnostics in this manual assume a certain skill level and knowledge of Ford-specific diagnostic practices. For information about these practices,
REFER to: Diagnostic Methods (100-00 General Information, Description and Operation).

Refer to Wiring Diagrams Cell 71 for schematic and connector information.

Normal Operation and Fault Conditions

REFER to: Instrument Panel Cluster (IPC) and Panel Illumination - System Operation and Component Description (413-00 Instrument Panel Cluster (IPC) and Panel Illumination, Description and Operation).

DTC Fault Trigger Conditions

DTC	Description	Fault Trigger Conditions
U1000:00	Solid State Driver Protection Activated - Driver Disabled: No Sub Type Information	A continuous DTC that sets when the BCM has temporarily shut down an output driver because an excessive current draw exists (such as a short to ground). The BCM cannot enable the backlighting output until the cause of the short is corrected, the Diagnostic Trouble Codes (DTCs) have been cleared and a successful BCM self-test is run.
U3000:49	Control Module: Internal Electrical Failure	A continuous DTC that sets when the BCM has permanently shut down an output driver because an excessive current draw fault (such as a short to ground) has occurred more times than the BCM can withstand. The cause of the excessive current draw MUST be corrected before a new BCM is installed.

Possible Sources

- Wiring, terminals or connectors
- ICM

PINPOINT TEST H : THE ICM (INFORMATION CENTER MODULE) ILLUMINATION IS INOPERATIVE OR ALWAYS ON

H1 VERIFY ILLUMINATION OPERATION

- Ignition ON.
- Monitor the illumination level of the ICM and other non-networked (hard-wired) illumination source.
- Place the headlamp switch in the OFF position while monitoring the illumination level of the ICM and other non-networked (hard-wired) illumination source.

Does the illumination for the ICM and other non-networked (hard-wired) illumination source operate incorrectly?

Yes	If the illumination is always on, GO to Pinpoint Test B If the illumination is inoperative, GO to Pinpoint Test A
No	If the ICM illumination inoperative, GO to H2 If the ICM illumination is always on and all other non-network illumination sources operate correctly, INSTALL a new ICM . REFER to: Information Center Module (ICM) (413-01 Instrumentation, Message Center and Warning Chimes, Removal and Installation).

H2 CHECK THE VOLTAGE TO THE INFORNATION CENTER MODULE (ICM)

- Ignition OFF.
- Disconnect: ICM .
- Ignition ON.
- Press the dimmer switch up until all non-networked (hard-wired) illumination sources reach full brightness.
- Mesure:

Positive Lead	Measurement / Action	Negative Lead
C2487-2		—

Is the voltage greater than 11 volts?

Yes	GO to H3
No	REPAIR the circuit.

H3 CHECK THE VOLTAGE TO THE ICM (INFORMATION CENTER MODULE) ILLUMINATION SOURCE USING THE CONNECTOR GROUND

- Mesure:

Positive Lead	Measurement / Action	Negative Lead
C2487-2		C2487-3

Is the voltage greater than 11 volts?

Yes	INSTALL a new ICM . REFER to: Information Center Module (ICM) (413-01 Instrumentation, Message Center and Warning Chimes, Removal and Installation).
No	REPAIR the ground circuit.

The FCIM Illumination Is Inoperative/Does Not Dim (Base/Premium)

Diagnostic Overview

Diagnostics in this manual assume a certain skill level and knowledge of Ford-specific diagnostic practices. For information about these practices,
REFER to: Diagnostic Methods (100-00 General Information, Description and Operation).

Refer to Wiring Diagrams Cell 71 for schematic and connector information.

Normal Operation and Fault Conditions

REFER to: Instrument Panel Cluster (IPC) and Panel Illumination - System Operation and Component Description (413-00 Instrument Panel Cluster (IPC) and Panel Illumination, Description and Operation).

DTC Fault Trigger Conditions

DTC	Description	Fault Trigger Conditions
U1A00:00	Private Communication Network - LIN	A continuous and on-demand DTC that sets if the FCDIM does not receive a LIN message from FCIM for 10 seconds or more.

Possible Sources

- Wiring, terminals or connectors
- LIN
- FCIM
- FCDIM concern

PINPOINT TEST I : THE FCIM (FRONT CONTROLS INTERFACE MODULE) ILLUMINATION IS INOPERATIVE/DOES NOT DIM (BASE/PREMIUM)

I1 PERFORM A NETWORK TEST

- Ignition ON.
- Using a diagnostic scan tool, perform a network test.

Does the FCDIM pass the network test.

Yes	GO to I2
No	REFER to: Communications Network (418-00 Module Communications Network, Diagnosis and Testing).

I2 CHECK THE FCDIM (FRONT CONTROL/DISPLAY INTERFACE MODULE) CONTINUOUS MEMORY DIAGNOSTIC TROUBLE CODES (CMDTC'S)

- Using a diagnostic scan tool, check the FCDIM Continuous Memory Diagnostic Trouble Codes (CMDTC'S).

Are any Diagnostic Trouble Codes (DTC's) present?

Yes	If equipped with Sync® REFER to: Information and Entertainment System (415-00B Information and Entertainment System - General Information - Vehicles With: AM/FM/CD/SYNC, Diagnosis and Testing). If not equipped with Sync® REFER to: Information and Entertainment System (415-00A Information and Entertainment System - General Information - Vehicles With: AM/FM/CD, Diagnosis and Testing).
No	GO to I3

I3 CHECK THE VOLTAGE TO THE FCIM (FRONT CONTROLS INTERFACE MODULE)

- Ignition OFF.
- Disconnect: FCIM C2402.
- Ignition ON.
- Measure:

Positive Lead	Measurement / Action	Negative Lead
C2402-8	V	—

Is the voltage greater then 11 volts?

Yes	GO to I4
No	CHECK BCM fuse 79 (15A). If the fuse is OK, REPAIR the circuit for an open. If the fuse is not OK, REFER to the Wiring Diagram manual to identify the possible cause of the circuit short.

I4 CHECK FOR GROUND TO THE FCIM (FRONT CONTROLS INTERFACE MODULE)

- Measure:

Positive Lead	Measurement / Action	Negative Lead
C2402-8	V	C2402-5

Is the voltage greater then 11 volts?

Yes	GO to I5
No	REPAIR circuit GD133.

I5 CHECK THE LIN (LOCAL INTERCONNECT NETWORK) CIRCUIT FOR A SHORT TO VOLTAGE

- Ignition OFF.
- Disconnect: FCDIM C2123.
- Ignition ON.
- Measure:

Positive Lead	Measurement / Action	Negative Lead
C2402-7	⊕ V ⊖	—

Is any voltage present?

Yes	REPAIR the circuit.
No	GO to I6

I6 CHECK THE LIN (LOCAL INTERCONNECT NETWORK) FOR A SHORT TO GROUND

- Ignition OFF.
- Measure:

Positive Lead	Measurement / Action	Negative Lead
C2402-7	Ω	—

Is the resistance greater than 10,000 ohms?

Yes	GO to I7
No	REPAIR the circuit.

I7 CHECK THE LIN (LOCAL INTERCONNECT NETWORK) FOR AN OPEN

- Measure:

Positive Lead	Measurement / Action	Negative Lead
C2402-7	Ω	C2123-8

Is the resistance less than 3 ohms?

Yes	GO to I8
No	REPAIR the circuit.

I8 CHECK FOR CORRECT FCIM (FRONT CONTROLS INTERFACE MODULE) OPERATION

- Ignition OFF.
- Disconnect and inspect all the FCIM connectors.
- Repair:
  - corrosion (install new connector or terminals – clean module pins)
  - damaged or bent pins - install new terminals/pins
  - pushed-out pins – install new pins as necessary
- Reconnect the FCIM connectors. Make sure they seat and latch correctly.
- Operate the system and determine if the concern is still present.

Is the concern still present?

Yes	CHECK OASIS for any applicable Technical Service Bulletins (TSBs). If a TSB exists for this concern, DISCONTINUE this test and FOLLOW the TSB instructions. If no Technical Service Bulletins (TSBs) address this concern, INSTALL a new FCIM . For vehicle equipped with Sync® REFER to: Front Controls Interface Module (FCIM) (415-00B Information and Entertainment System - General Information - Vehicles With: AM/FM/CD/SYNC, Removal and Installation). For vehicle not equipped with Sync® REFER to: Front Controls Interface Module (FCIM) (415-00A Information and Entertainment System - General Information - Vehicles With: AM/FM/CD, Removal and Installation).
No	The system is operating correctly at this time. The concern may have been caused by module connections. ADDRESS the root cause of any connector or pin issues.

Copyright © Ford Motor Company

Specifications

General Specifications

Item	Specification
Active park assist sensor azimuth system check object position 1 (P1) distance from sensor	508 mm (20 in) ± 101.6 mm (4 in)
Active park assist sensor azimuth system check object position 2 (P2) and position 3 (P3), distance from sensor	3,911.6 mm (154 in) ± 203.2 mm (8 in)
Front park assist sensor azimuth system check object position 1 (P1) and position 4 (P4), distance from sensor	610 mm (24 in)
Front park assist sensor azimuth system check object position 2 (P2) and position 3 (P3), distance from sensor	711 mm (28 in)
Rear park assist sensor azimuth system check object position 1 (P1) and position 3 (P3), distance from sensor	610 mm (24 in)
Rear park assist sensor azimuth system check object position 2 (P2), distance from sensor 1,829 mm	(72 in)

Copyright © Ford Motor Company

Parking Aid - Component Location

Audible Parking Aid - Component Location

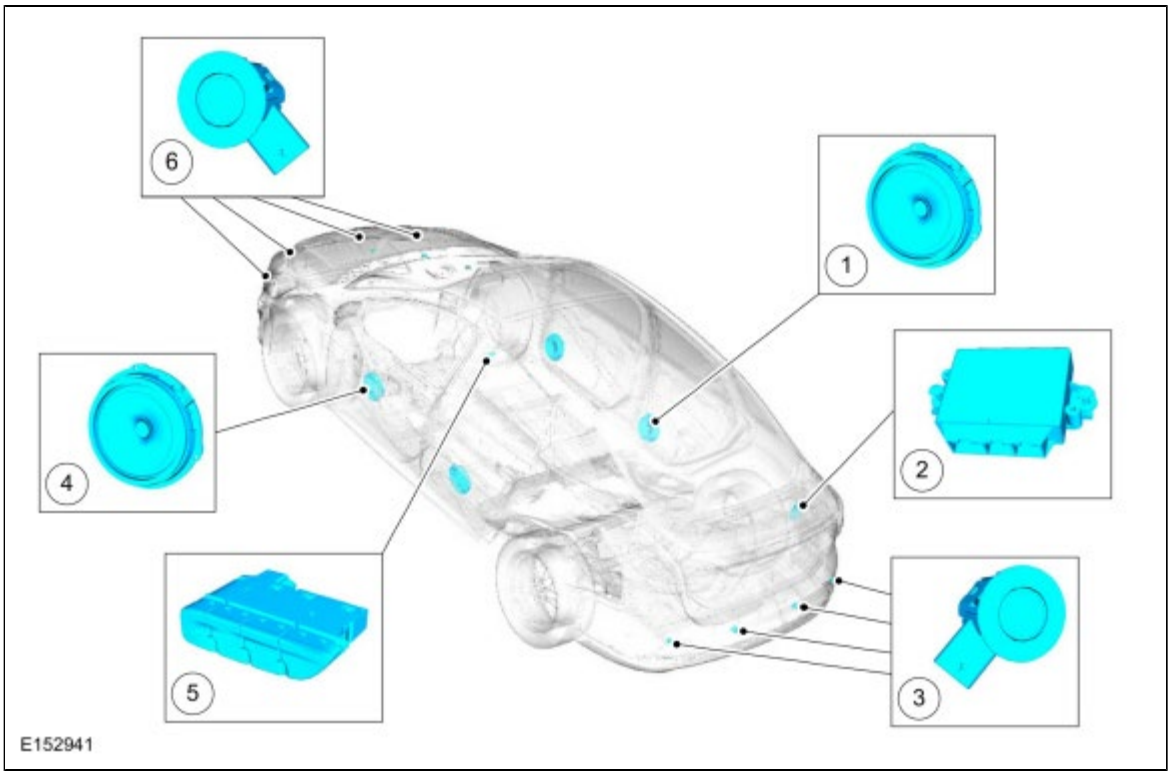

Item	Description
1	Speaker, rear door (part of audio system)
2	Parking Aid Module (PAM)
3	Parking aid sensors, rear
4	Speaker, front door (park of audio system)
5	Parking aid disable switch (if equipped)
6	Parking aid sensors, front (if equipped)

Visual Parking Aid - Component Location

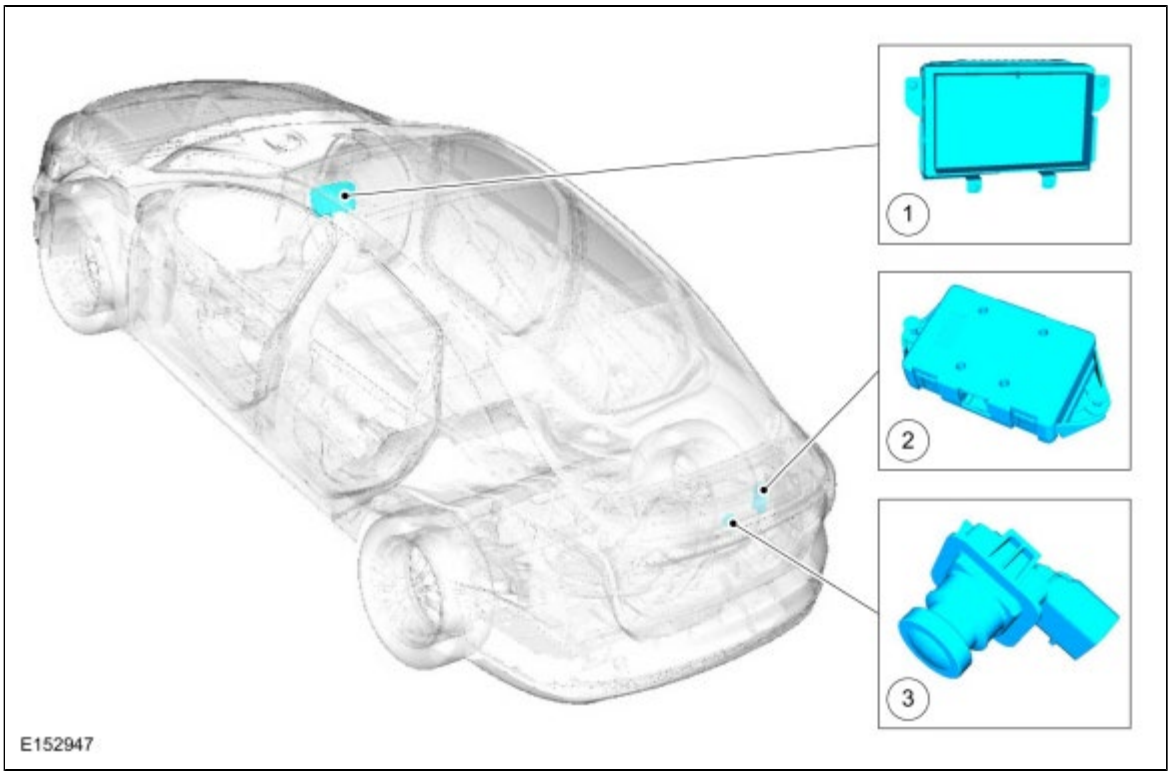

Item	Description
1	FDIM
2	Image Processing Module - B (IPM-B)
3	Video camera

Copyright © Ford Motor Company

Parking Aid - Overview

Parking Aid - Audible

The rear parking aid system sounds a warning through the rear audio speakers (low pitched tone) to alert the driver of stationary objects near the rear bumper when REVERSE is selected. The parking aid system assists the driver in detecting certain objects while the vehicle moves slowly in REVERSE at speeds of less than 4.8 kmh (3 mph). The parking aid system may not detect moving objects.

The front parking aid system sounds a warning through the front audio speakers (high pitched tone) to alert the driver of stationary objects near the front bumper in all transmission positions except PARK or NEUTRAL. The parking aid system assists the driver in detecting certain objects while the vehicle moves at speeds of less than 4.8 kmh (3 mph). The parking aid system may not detect moving objects.

The parking aid system is disabled if a fault is detected in a parking aid sensor, the communications network or the Parking Aid Module (PAM). This is indicated by a parking aid disabled warning message in the message center.

The parking aid system is enabled and disabled through the message center, located in the IPC . Disabling lasts one key cycle.

If a MyKey® restricted key is in use, the parking aid menu is not available in the message center and cannot be deactivated.

Parking Aid - Video

The video camera system visually aids the driver while reversing or reverse parking the vehicle. This feature provides fixed and active guideline overlays on the video image to assist the driver in parking the vehicle. The visual parking aid also includes a visual alert function that works with the rear audible parking aid system to visually highlight a zone in the video image where an object has been detected. The video camera system is controlled though the FDIM . Refer to the Owner's Literature for information on how to operate the video camera system features.

Copyright © Ford Motor Company

Parking Aid - System Operation and Component Description

System Operation

Parking Aid - Audible

System Diagram

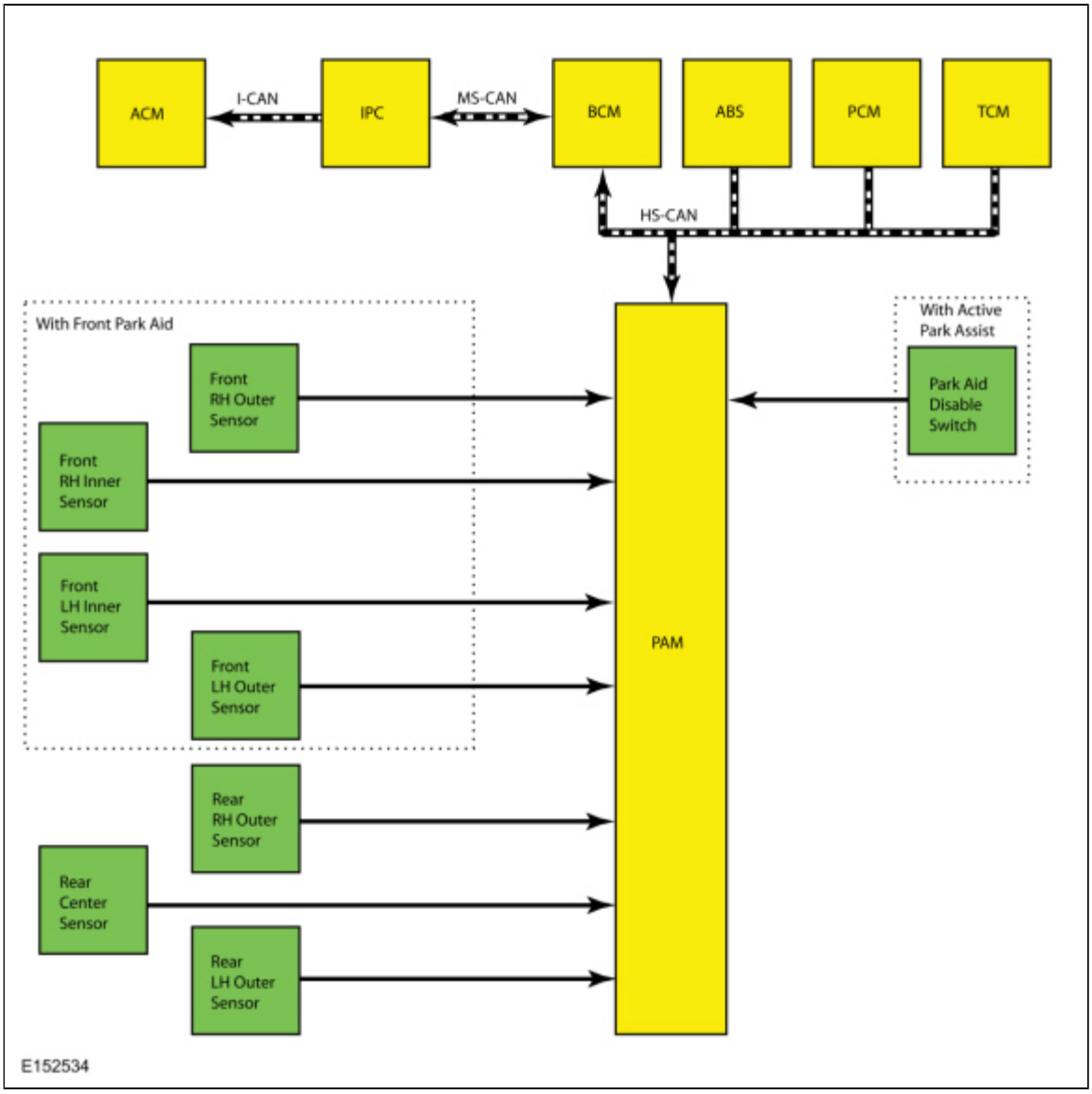

Network Message Chart

Parking Aid Module (PAM) Network Input Messages

Broadcast Message	Originating Module	Message Purpose
Power mode	BCM	Used to command ignition position.
Parking aid enable status	IPC	Used to enable or disable the rear parking aid.

Reverse gear (manual transmission)	PCM	Used to enable the parking aid when the transmission is in REVERSE (manual transmission vehicles).
Selector lever (PRNDL) status (automatic transmission)	TCM	Used to enable the parking aid when the transmission selector is in REVERSE (automatic transmission vehicles).
Vehicle speed	ABS module	Used to disable the parking aid if the vehicle speed exceeds a preset threshold.

Audio Control Module (ACM) Network Input Messages

Broadcast Message	Originating Module	Message Purpose
Tone request	Parking Aid Module (PAM)	Used to command parking aid sounder tones through the front and/or rear speakers.

Parking Aid System - Audible

When the front and/or rear audible parking aid system is active, the Parking Aid Module (PAM) calculates the distance to an object within a 170 degree semicircular area (azimuth) around the front or rear of the vehicle. A varible-rate warning tone is generated through the audio speakers in proportion to the distance that the object is from the front and/or rear of the vehicle.

The rear parking aid system calculates the distance to an object around the rear of the vehicle using 3 ultrasonic sensors. The rear parking aid sensors detect objects approximately 1,524 mm (60 in) from the rear of the vehicle, 508 mm (20 in) from the rear side of the vehicle, and 304.8 mm (12 in) above the ground. To detect objects behind the vehicle, the Parking Aid Module (PAM) supplies voltage and ground to the rear ultrasonic sensors while monitoring a signal return circuit from each sensor. The 3 rear sensors share common voltage and ground circuits.

The front parking aid system calculates the distance to an object around the front of the vehicle using 4 ultrasonic sensors. The front parking aid sensors detect objects approximately 685.8 mm (27 in) from the front of the vehicle, 457.2 mm (18 in) from the front side of the vehicle, 304.8 mm (12 in) above the ground. To detect objects in front of the vehicle, the Parking Aid Module (PAM) supplies voltage and ground to the front ultrasonic sensors while monitoring a signal return circuit from each sensor. The 4 front sensors share common voltage and ground circuits.

Only objects that reflect a sufficient amount of sound waves will be detected by the front or rear parking aid sensors. The surface properties, size and composition an object can affect the ability of the parking aid system to detect the object. Incorrect sensor alignment or installation, dirt or ice covered sensors, heavy rain and snow can also cause objects not to be detected.

Parking Aid Audible Alert

The audio speaker volume is reduced when the park aid warning tone sounds. The audio speaker increases its warning tone rate as the vehicle gets closer to an obstacle. When an object is detected within 304.8 mm (12 in) of the sensors, the warning tone becomes continuous. Objects to the rear side will generate continuous tone only for 3 seconds if the object is stationary or receding from the vehicle. The tone is prioritized to the system (front or rear) which has detected an object closest to the bumper. Tone alternates between front and rear audio speakers if an object is closer than 254 mm (10 in) front and rear.

Parking Aid - Video

System Diagram

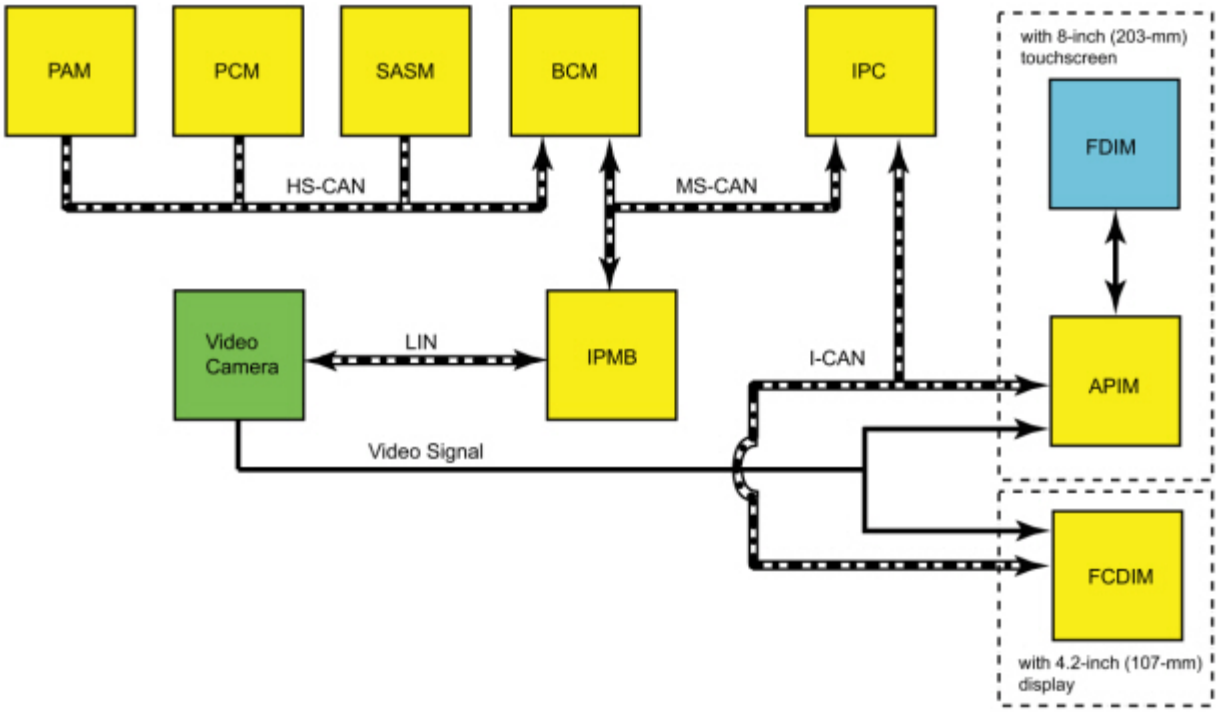

Network Message Chart

Image Processing Module B (IPM-B) Network Input Messages

Broadcast Message	Originating Module	Message Purpose
Camera commands	APIM	Used to command the static and active guidelines status, zoom level and object distance
Parking aid range to object	Parking Aid Module (PAM)	Used to highlight the zone where an object is detected.
Power mode	BCM	Used to command ignition position.
Reverse gear	PCM	Used to enable the video display.
Selector lever (PRNDL) status	IPC	Used to enable the video display.
Steering angle status	SASM	Used to create the vehicle intended path on video display.

Accessory Protocol Interface Module (APIM) and Front Control Display Interface Module (FCDIM) Network Input Messages

Broadcast Message	Originating Module	Message Purpose
Backup camera status	Image Processing Module B (IPM-B)	Used to display the video status for static and active guidelines, zoom level and object distance.

Image Display

The liftgate must remain closed for correct operation of the video camera system.

All of the video camera features are enabled and disabled within the FDIM menu screen. The video camera system has 5 video features:

- Fixed guidelines — this feature assists the driver with aligning the vehicle with an object.
- Active guidelines — this feature projects the intended path of the vehicle based upon steering wheel input.
- Visual park aid alert — this feature assists the driver to visually see the object causing the parking aid system to sound.
- Manual zoom — this feature assists the driver with connecting or towing a trailer allowing the driver to manually zoom closer to an object behind the vehicle.
- Video camera delay — this feature allows the driver to see the image behind the vehicle after the vehicle is shifted out of REVERSE. The image will not be displayed if the vehicle is shifted into PARK.

For each one of these system features except the camera delay feature, the driver generated backup camera commands are sent from the FDIM to the APIM (vehicles equipped with 8-inch (203-mm) touchscreen) or the FCDIM (vehicles equipped with 4.2-inch (107-mm) display) to the Image Processing Module - B (IPM-B). The Image Processing Module B (IPM-B) then sends the command to the video camera. For vehicles equipped with 8-inch (203-mm) touchscreen, the video camera outputs the video signal to the APIM which in turn displays the video on the FDIM . For vehicles equipped with 4.2-inch (107-mm) display, the video camera outputs the video signal directly to the FCDIM .

The video camera delay feature is controlled within the APIM .

The Image Processing Module B (IPM-B) and the video camera communicate on a LIN which is a dedicated single wire communication network.

The messages sent from the Image Processing Module B (IPM-B) to the video camera are:

- transmission selector (PRNDL) status
- liftgate ajar status
- camera configuration data
- display manual zoom request
- parking aid audible warning status
- parking aid sensor distance to object data

The messages sent from the video camera to the Image Processing Module - B (IPM-B) are:

- camera status
- display zoom status
- camera part number data
- visual park aid alert status
- fixed guideline status

Visual Park Aid

The visual park alert feature displays guidelines on top of the video image to assist the driver with maneuvering a vehicle into a

space. Active guidelines are not shown when the steering wheel is straight.

The visual park aid alert feature utilizes the 3 parking aid sensor inputs from the Parking Aid Module (PAM) and the video camera image. When the transmission selector is in REVERSE and an object is detected in the path of the parking aid sensor, parking aid range to object data is sent from the Parking Aid Module (PAM) through the Image Processing Module B (IPM-B) to the video camera.

The visual alerts are red, yellow or green and appear as highlights on top of the displayed image to indicate in which zone the object is detected. The highlighted visual alerts are still operational if the parking aid system is disabled within the FDIM and the visual alert feature is enabled.

Fixed Guidelines

NOTE: *The color-coded lines cannot indicate accurate or consistent distances between objects located behind the vehicle and at the rear of the vehicle. This normal condition is due to variances in vehicle ride height, including, but not limited to, vehicle loading.*

The video camera fixed guidelines feature displays guidelines on top of the video image to assist the driver with alignment of the vehicle. A dashed line on the displayed image represents the center of the vehicle and 3 color-coded lines (red, yellow, green) identify different zones between the rear of the vehicle and objects.

Active Guidelines

The video camera active guidelines feature displays guidelines on top of the video image to assist the driver with maneuvering a vehicle into a space. Active guidelines are not shown when the steering wheel is straight.

Manual Zoom

The manual zoom feature is controlled by the video camera. The manual zoom feature has 3 zoom levels that are only active when the vehicle is in REVERSE. If the manual zoom feature is enabled and the vehicle is shifted out of REVERSE the manual zoom feature is disabled. The manual zoom feature must be re-enabled the next time the vehicle is shifted into REVERSE.

Video Delay

When the video delay is turned on, the video image remains displayed after the transmission is shifted out of REVERSE until the vehicle reaches 8 kmh (5 mph). With the delay off (default), the image displays until the transmission is shifted out of REVERSE.

Component Description

Parking Aid Sensors

The parking aid sensors are wide beam ultrasonic sensors. The sensors continuously send out ultrasonic signals to detect objects and communicate the information back to the Parking Aid Module (PAM).

Only objects which reflect enough sound waves are detected by the sensors. This varies due to the shape, surface properties and size of objects being detected. Incorrect sensor alignment, dirt covered sensors, heavy rain and snow can cause objects not to be recognized.

Parking Aid Switch

On vehicles equipped with the active park assist system, a parking aid disable switch to allows the driver to temporarily disable the front and rear audible parking aid. The switch is integral to the active park assist switch and is a normally open, momentary contact switch that proves a ground to the Parking Aid Module (PAM) when pressed. This switch is disabled when a MyKey® is in use.

Parking Aid Module (PAM)

The PAM calculates and reports the distance between the rear of the vehicle (and front of the vehicle, if equipped) and an object. The PAM is capable of setting and storing Diagnostic Trouble Codes (DTCs) for the parking aid when a concern exists.

Video Camera

The rear video camera system is active with the ignition in RUN and the transmission selector in REVERSE. The video camera receives commands and sends status over a dedicated LIN to the Image Processing Module - B (IPM-B). The video signal is hardwired from the camera to the APIM which is directly connected to the FDIM . The video camera is configured by the Image Processing Module - B (IPM-B) and does not require Programmable Module Installation (PMI).

Video Display

The video display is the FDIM touchscreen or the FCDIM . Refer to the appropriate section in Group 415 for the procedure.

Image Processing Module B (IPM-B)

The Image Processing Module B (IPM-B) serves as the gateway module between the video camera and modules on the Medium Speed Controller Area Network (MS-CAN). The Image Processing Module B (IPM-B) is configurable and requires Programmable Module Installation (PMI).

Copyright © Ford Motor Company

Parking Aid

DTC Chart: Parking Aid Module (PAM)

Diagnostics in this manual assume a certain skill level and knowledge of Ford-specific diagnostic practices.
REFER to: Diagnostic Methods (100-00 General Information, Description and Operation).

Parking Aid Module (PAM) DTC Chart

DTC	Description	Action
B129C:12	Left Front Side Sensor: Circuit Short To Battery	REFER to: Parking Aid (413-13B Parking Aid - Vehicles With: Active Park Assist, Diagnosis and Testing).
B129C:14	Left Front Side Sensor: Circuit Short To Ground Or Open	REFER to: Parking Aid (413-13B Parking Aid - Vehicles With: Active Park Assist, Diagnosis and Testing).
B129C:96	Left Front Side Sensor: Component Internal Failure	REFER to: Parking Aid (413-13B Parking Aid - Vehicles With: Active Park Assist, Diagnosis and Testing).
B129D:12	Right Front Side Sensor: Circuit Short To Battery	REFER to: Parking Aid (413-13B Parking Aid - Vehicles With: Active Park Assist, Diagnosis and Testing).
B129D:14	Right Front Side Sensor: Circuit Short To Ground Or Open	REFER to: Parking Aid (413-13B Parking Aid - Vehicles With: Active Park Assist, Diagnosis and Testing).
B129D:96	Right Front Side Sensor: Component Internal Failure	REFER to: Parking Aid (413-13B Parking Aid - Vehicles With: Active Park Assist, Diagnosis and Testing).
B129E:73	Enable/Disable Switch - Semi-Automatic Advanced Parallel Park: Actuator Stuck Closed	REFER to: Parking Aid (413-13B Parking Aid - Vehicles With: Active Park Assist, Diagnosis and Testing).
B129F:11	Function LED - Semi-Automatic Advanced Parallel Park: Circuit Short To Ground	REFER to: Parking Aid (413-13B Parking Aid - Vehicles With: Active Park Assist, Diagnosis and Testing).
B129F:12	Function LED - Semi-Automatic Parallel Park: Circuit Short To	REFER to: Parking Aid (413-13B Parking Aid - Vehicles With: Active Park Assist, Diagnosis and Testing).

	Battery	
B13B5:12	Rear Center Sensor: Circuit Short To Battery	GO to Pinpoint Test E
B13B5:14	Rear Center Sensor: Circuit Short To Ground Or Open	GO to Pinpoint Test D
B13B5:96	Rear Center Sensor: Component Internal Failure	GO to Pinpoint Test F
B1B36:12	Right Front Outer Sensor: Circuit Short To Battery	GO to Pinpoint Test G
B1B36:14	Right Front Outer Sensor: Circuit Short To Ground Or Open	GO to Pinpoint Test H
B1B36:96	Right Front Outer Sensor: Component Internal Failure	GO to Pinpoint Test I
B1B38:12	Right Front Inner Sensor: Circuit Short To Battery	GO to Pinpoint Test G
B1B38:14	Right Front Inner Sensor: Circuit Short To Ground Or Open	GO to Pinpoint Test H
B1B38:96	Right Front Inner Sensor: Component Internal Failure	GO to Pinpoint Test I
B1B40:12	Left Front Outer Sensor: Circuit Short To Battery	GO to Pinpoint Test G
B1B40:14	Left Front Outer Sensor: Circuit Short To Ground Or Open	GO to Pinpoint Test H
B1B40:96	Left Front Outer Sensor: Component Internal Failure	GO to Pinpoint Test I
B1B42:12	Left Front Inner Sensor: Circuit Short To Battery	GO to Pinpoint Test G
B1B42:14	Left Front Inner Sensor: Circuit Short To Ground Or Open	GO to Pinpoint Test H
B1B42:96	Left Front Inner	GO to Pinpoint Test I

	Sensor: Component Internal Failure	
B1B44:12	Right Rear Outer Sensor: Circuit Short To Battery	GO to Pinpoint Test E
B1B44:14	Right Rear Outer Sensor: Circuit Short To Ground Or Open	GO to Pinpoint Test D
B1B44:96	Right Rear Outer Sensor: Component Internal Failure	GO to Pinpoint Test F
B1B48:12	Left Rear Outer Sensor: Circuit Short To Battery	GO to Pinpoint Test E
B1B48:14	Left Rear Outer Sensor: Circuit Short To Ground Or Open	GO to Pinpoint Test D
B1B48:96	Left Rear Outer Sensor: Component Internal Failure	GO to Pinpoint Test F
B1B54:11	Function LED - Park Aid: Circuit Short To Ground	GO to Pinpoint Test J
B1B54:12	Function LED - Park Aid: Circuit Short To Battery	GO to Pinpoint Test J
B1B57:11	Front Sensor Power Circuit: Circuit Short To Ground	GO to Pinpoint Test B
B1B58:11	Rear Sensors Power Circuit: Circuit Short To Ground	GO to Pinpoint Test C
B1C30:73	Disable Switch - Park Aid: Actuator Stuck Closed	GO to Pinpoint Test K
U0001:88	High Speed Can Communication Bus: Bus Off	The module could not communicate on the network at a point in time. The fault is not currently present (the module had to communicate with the scan tool to report this DTC). CLEAR the DTC . REPEAT the Network Test with the scan tool. If the DTC returns, DIAGNOSE the High Speed Controller Area Network (HS-CAN). REFER to: Communications Network (418-00 Module Communications Network, Diagnosis and Testing).
U0100:87	Lost Communication With ECM/PCM "A": Missing Message	GO to Pinpoint Test L

U0101:87	Lost Communication With TCM: Missing Message	GO to Pinpoint Test M
U0121:87	Lost Communication With Anti-Lock Brake System (ABS) Control Module: Missing Message	GO to Pinpoint Test N
U0126:87	Lost Communication With Steering Angle Sensor Module: Missing Message	GO to Pinpoint Test O
U0131:87	Lost Communication With Power Steering Control Module: Missing Message	GO to Pinpoint Test P
U0140:87	Lost Communication With Body Control Module: Missing Message	GO to Pinpoint Test Q
U0300:00	Internal Control Module Software Incompatibility: No Sub Type Information	CHECK the vehicle service history for recent service actions related to this module. This DTC sets due to incomplete or incorrect Programmable Module Installation (PMI) procedures. If there have been recent service actions with this module, REPEAT the Programmable Module Installation (PMI) procedure as directed by the scan tool. If there have been no recent service actions, INSTALL a new module to correct the failure to retain configuration data. For the 4-door, REFER to: Parking Assist Control Module (PAM) - Vehicles With: 4-Door (413-13A Parking Aid, Removal and Installation). For the 5-door, REFER to: Parking Assist Control Module (PAM) - Vehicles With: 5-Door (413-13A Parking Aid, Removal and Installation).
U0401:86	Invalid Data Received From ECM/PCM A: Signal Invalid	This DTC sets when the Parking Aid Module (PAM) receives invalid network data from the PCM with a faulted signal data input. RETRIEVE and REPAIR all non-network Diagnostic Trouble Codes (DTCs) in the other modules on the network.
U0402:86	Invalid Data Recieved From TCM: Signal Invalid	This DTC sets when the Parking Aid Module (PAM) receives invalid network data from the TCM module with a faulted signal data input. RETRIEVE and REPAIR all non-network Diagnostic Trouble Codes (DTCs) in the other modules on the network.
U0415:86	Invalid Data Received From ABS Control Module: Signal Invalid	This DTC sets when the Parking Aid Module (PAM) receives invalid network data from the ABS module with a faulted signal data input. RETRIEVE and REPAIR all non-network Diagnostic Trouble Codes (DTCs) in the other modules on the network.
U0420:86	Invalid Data Received From Power Steering Control Module: Signal Invalid	This DTC sets when the Parking Aid Module (PAM) receives invalid network data from the PSCM with a faulted signal data input. RETRIEVE and REPAIR all non-network Diagnostic Trouble Codes (DTCs) in the other modules on the network.

U0422:86	Invalid Data Received From Body Control Module: Signal Invalid	This DTC sets when the Parking Aid Module (PAM) receives invalid network data from the BCM with a faulted signal data input. RETRIEVE and REPAIR all non-network Diagnostic Trouble Codes (DTCs) in the other modules on the network.
U0428:86	Invalid Data Received From Steering Angle Sensor Module: Signal Invalid	This DTC sets when the Parking Aid Module (PAM) receives invalid network data from the SASM with a faulted signal data input. RETRIEVE and REPAIR all non-network Diagnostic Trouble Codes (DTCs) in the other modules on the network.
U100B:67	Semi-Automatic Parallel Parking System: Signal Incorrect After Event	This DTC sets when the Parking Aid Module (PAM) detects a fault after an active park assist event. RETRIEVE and REPAIR all other Parking Aid Module (PAM) Diagnostic Trouble Codes (DTCs).
U2100:00	Initial Configuration Not Complete: No Sub Type Information	CHECK the vehicle service history for recent service actions related to this module. This DTC sets due to incomplete or incorrect Programmable Module Installation (PMI) procedures. If there have been recent service actions with this module, REPEAT the Programmable Module Installation (PMI) procedure as directed by the scan tool. If there have been no recent service actions, INSTALL a new module to correct the failure to retain configuration data. For the 4-door, REFER to: Parking Assist Control Module (PAM) - Vehicles With: 4-Door (413-13A Parking Aid, Removal and Installation). For the 5-door, REFER to: Parking Assist Control Module (PAM) - Vehicles With: 5-Door (413-13A Parking Aid, Removal and Installation).
U2101:00	Control Module Configuration Incompatible: No Sub Type Information	CHECK the vehicle service history for recent service actions related to this module. This DTC sets due to incomplete or incorrect Programmable Module Installation (PMI) procedures. If there have been recent service actions with this module, REPEAT the Programmable Module Installation (PMI) procedure as directed by the scan tool. If there have been no recent service actions, INSTALL a new module to correct the failure to retain configuration data. For the 4-door, REFER to: Parking Assist Control Module (PAM) - Vehicles With: 4-Door (413-13A Parking Aid, Removal and Installation). For the 5-door, REFER to: Parking Assist Control Module (PAM) - Vehicles With: 5-Door (413-13A Parking Aid, Removal and Installation).
U3000:47	Control Module: Watchdog / Safety Microcontroller Failure	CLEAR the DTC . REPEAT the self-test. If DTC U3000:47 returns, INSTALL a new Parking Aid Module (PAM). For the 4-door, REFER to: Parking Assist Control Module (PAM) - Vehicles With: 4-Door (413-13A Parking Aid, Removal and Installation). For the 5-door, REFER to: Parking Assist Control Module (PAM) - Vehicles With: 5-Door (413-13A Parking Aid, Removal and Installation).
U3000:49	Control Module: Internal Electronic Failure	CLEAR the DTC . REPEAT the self-test. If DTC U3000:49 returns, INSTALL a new Parking Aid Module (PAM). For the 4-door, REFER to: Parking Assist Control Module (PAM) - Vehicles With: 4-Door (413-13A Parking Aid, Removal and Installation). For the 5-door, REFER to: Parking Assist Control Module (PAM) - Vehicles With: 5-Door (413-13A Parking Aid, Removal and Installation).
U3003:62	Battery Voltage: Signal Compare Failure	GO to Pinpoint Test R

Image Processing Module - B (IPM-B) DTC Chart

DTC	Description	Action

B115E:08	Camera Module: Bus Signal / Message Failure	GO to Pinpoint Test S
B115E:49	Camera Module: Internal Electronic Failure	CLEAR the DTC . REPEAT the self-test. If DTC B115E:49 returns, INSTALL a new video camera. For the 4-door, REFER to: Parking Aid Camera - Vehicles With: 4-Door (413-13A Parking Aid, Removal and Installation). For the 5-door, REFER to: Parking Aid Camera - Vehicles With: 5-Door (413-13A Parking Aid, Removal and Installation).
B115E:54	Camera Module: Missing Calibration	DTC B115E:54 sets in the Image Processing Module - B (IPM-B) when the video camera is not calibrated. Turn the ignition ON for 5 minutes to allow the Image Processing Module - B (IPM-B)/camera flash operation to complete.
B115E:55	Camera Module: Not Configured	DTC B115E:55 sets in the Image Processing Module - B (IPM-B) when the video camera is not configured. Turn the ignition ON for 5 minutes to allow the Image Processing Module - B (IPM-B)/camera flash operation to complete.
C115E:51	Camera Module Flashing Active: Not Programmed	DTC B115E:55 sets in the Image Processing Module - B (IPM-B) when the video camera is not programmed. Turn the ignition ON for 5 minutes to allow the Image Processing Module - B (IPM-B)/camera flash operation to complete.
U0010:88	Medium Speed CAN Communication Bus: Bus off	The Image Processing Module - B (IPM-B) has detected a network fault. To diagnose the communication network, REFER to: Communications Network (418-00 Module Communications Network, Diagnosis and Testing).
U0140:87	Lost Communication With Body Control Module: Missing Message	GO to Pinpoint Test Z
U0155:87	Lost Communication With Instrument Panel Cluster (IPC) Control Module: Missing Message	GO to Pinpoint Test W
U2100:55	Initial Configuration Not Complete: Not Configured	CHECK the vehicle service history for recent service actions related to this module. This DTC sets due to incomplete or incorrect Programmable Module Installation (PMI) procedures. If there have been recent service actions with this module, REPEAT the Programmable Module Installation (PMI) procedure as directed by the scan tool. REFER to Programmable Module Installation (PMI). REFER to: Module Configuration - System Operation and Component Description (418-01 Module Configuration, Description and Operation). If there have been no recent service actions, INSTALL a new Image Processing Module - B (IPM-B) to correct the failure to retain configuration data. For the 4-door, REFER to: Image Processing Module B (IPMB) - Vehicles With: 4-Door (413-13A Parking Aid, Removal and Installation). For the 5-door, REFER to: Image Processing Module B (IPMB) - Vehicles With: 5-Door (413-13A Parking Aid, Removal and Installation).
U3006:16	Control Module Input Power "A": Circuit Voltage Below Threshold	GO to Pinpoint Test X
U3006:17	Control Module Input Power "A": Circuit Voltage Above Threshold	GO to Pinpoint Test Y

Accessory Protocol Interface Module (APIM) DTC Chart

DTC	Description	Action
C1001:01	Vision System Camera: General Electrical Failure	GO to Pinpoint Test S
All other Diagnostic Trouble Codes (DTCs)	—	Refer to the appropriate section in Group 415 for the procedure.

Front Control Display Interface Module (FCDIM) DTC Chart

DTC	Description	Action
C1001:01	Vision System Camera: General Electrical Failure	GO to Pinpoint Test S
All other Diagnostic Trouble Codes (DTCs)	—	Refer to the appropriate section in Group 415 for the procedure.

Symptom Chart(s)

Diagnostics in this manual assume a certain skill level and knowledge of Ford-specific diagnostic practices.
REFER to: Diagnostic Methods (100-00 General Information, Description and Operation).

Symptom Chart: Parking Aid - Audible

Condition	Possible Sources	Action
A module does not communicate with the scan tool	• Fuse • Wiring, terminals or connectors • Parking Aid Module (PAM)	REFER to: Communications Network (418-00 Module Communications Network, Diagnosis and Testing).
The audible parking aid is inoperative	Refer to the Diagnostic Routine	GO to Pinpoint Test A
Continuous or intermittent tone when no obstacles or fault codes are present	• Dirty or iced over parking aid sensor(s)	CLEAN the rear bumper and sensors with high-pressure water.
	• Ice between parking aid sensor(s) and bezel(s)	ALLOW time for the ice between the parking aid sensor(s) and bezel(s) to melt.
	• Parking aid sensor(s) locked into the rear bumper incorrectly	INSTALL the parking aid sensor(s) into the parking aid sensor bezel(s) correctly.
	• Parking aid sensors are not aligned correctly	CARRY OUT the azimuth system check. REFER to: Azimuth System Check (413-13A Parking

		Aid, General Procedures).
The parking aid audio tones are inoperative	• Wiring, Terminals or connectors • ACM • Audio DSP (if equipped)	To diagnose the audio system, Refer to the appropriate section in Group 415 for the procedure.
The parking aid menu is not available in the message center and cannot be deactivated	A MyKey® restricted key is in use	The parking aid disable feature is not available when a MyKey® restricted key is in use. This is normal operation.

Diagnostics in this manual assume a certain skill level and knowledge of Ford-specific diagnostic practices.
REFER to: Diagnostic Methods (100-00 General Information, Description and Operation).

Symptom Chart: Parking Aid - Visual

Condition	Possible Sources	Action
The rear video is inoperative	Refer to the Diagnostic Routine	GO to Pinpoint Test S
The FDIM displays “Rear Video Camera is Unavailable Please Contact Your Dealership” and a black screen/no image	Refer to the Diagnostic Routine	GO to Pinpoint Test S
Static/flashing/blinking/flickering/scrolling or rolling image/screen/scrolling horizontal lines	Refer to the Diagnostic Routine	GO to Pinpoint Test T
Poor image quality (foggy/cloudy/fuzzy/blurry/hazy image or moisture/water in lens or black spots)	Refer to the Diagnostic Routine	GO to Pinpoint Test T
Manual zoom function is inoperative	Refer to the Diagnostic Routine	GO to Pinpoint Test AA
Visual park aid alert is inoperative	Refer to the Diagnostic Routine	GO to Pinpoint Test U
Fixed guidelines are not displayed on the video image	Refer to the Diagnostic Routine	GO to Pinpoint Test V
Active guidelines are not displayed on the video image	Refer to the Diagnostic Routine	GO to Pinpoint Test V
	Steering wheel is in straight-ahead position	Normal condition. Active guidelines are not shown unless steering wheel is rotated.
Video camera delay feature is inoperative	Video camera delay feature is disabled	ENABLE the video camera delay feature within the APIM from the FDIM touchscreen display.
Video image is upside down	Video camera is not configured	Turn the ignition ON for 5 minutes to allow the Image Processing Module - B (IPM-B)/camera flash operation

		to complete.
All other image concerns	Refer to the Diagnostic Routine	GO to Pinpoint Test S

Diagnostic Routines

The Audible Parking Aid Is Inoperative

Diagnostics in this manual assume a certain skill level and knowledge of Ford-specific diagnostic practices.
REFER to: Diagnostic Methods (100-00 General Information, Description and Operation).

Refer to Wiring Diagrams Cell 131 for schematic and connector information.

Normal Operation and Fault Conditions

REFER to: Parking Aid - System Operation and Component Description (413-13B Parking Aid - Vehicles With: Active Park Assist, Description and Operation).

NOTE: *If a MyKey® restricted key is in use, the parking aid menu is not available in the message center and cannot be deactivated.*

Possible Sources

- Parking Aid Module (PAM)
- TR sensor concern (automatic transmission)
- Reversing lamp switch concern (manual transmission)

Visual Inspection and Diagnostic Pre-Checks

Inspect RJB fuse 30 (5A).

PINPOINT TEST A : THE AUDIBLE PARKING AID IS INOPERATIVE

A1 PERFORM A NETWORK TEST

- Ignition ON.
- Using a scan tool, perform a network test.

Do all modules pass the network test?

Yes	GO to A2
No	DIAGNOSE any communication concerns. REFER to: Communications Network (418-00 Module Communications Network, Diagnosis and Testing).

A2 CHECK THE PARKING AID MODULE (PAM) DIAGNOSTIC TROUBLE CODES (DTCS)

- Using a scan tool, check the Parking Aid Module (PAM) Diagnostic Trouble Codes (DTCs).

Are any Parking Aid Module (PAM) Diagnostic Trouble Codes (DTCs) present?

Yes	REFER to the Parking Aid Module (PAM) DTC Chart in this section.
No	GO to A3

A3 CEHCK THE DIAGNOSTIC TROUBLE CODES (DTCS) FROM THE IPC (INSTRUMENT PANEL CLUSTER) SELF-TEST

- Using a scan tool perform the IPC self-test.

Are any IPC Diagnostic Trouble Codes (DTCs) recorded?

Yes	DIAGNOSE any IPC Diagnostic Trouble Codes (DTCs). REFER to: Communications Network (418-00 Module Communications Network, Diagnosis and Testing).
No	GO to A4

A4 VERIFY THAT THE PARKING AID IS ENABLED

- VERIFY that the rear park aid and front park aid (if equipped) is enabled in the IPC message center.

Is the parking aid system enabled?

Yes	GO to A5
No	ENABLE the parking aid system.

A5 VERIFY THE OPERATION OF THE REVERSING LAMPS

- Apply the parking brake.
- Ignition ON.
- Select REVERSE.
- Inspect the reversing lamps.

Do the lamps operate correctly?

Yes	GO to A6
No	REFER to: Reversing Lamps (417-01 Exterior Lighting, Diagnosis and Testing).

A6 CHECK FOR CORRECT PARKING AID MODULE (PAM) OPERATION

- Ignition OFF.
- Disconnect and inspect all Parking Aid Module (PAM) connectors.
- Repair:
  - corrosion (install new connector or terminals – clean module pins)
  - damaged or bent pins – install new terminals/pins
  - pushed-out pins – install new pins as necessary
- Reconnect the Parking Aid Module (PAM) connectors. Make sure they seat and latch correctly.
- Operate the system and determine if the concern is still present.

Is the concern still present?

Yes	CHECK OASIS for any applicable Technical Service Bulletins (TSBs). If a TSB exists for this concern, DISCONTINUE this test and FOLLOW TSB instructions. If no Technical Service Bulletins (TSBs) address this concern, INSTALL a new Parking Aid Module (PAM). For the 4-door, REFER to: Parking Assist Control Module (PAM) - Vehicles With: 4-Door (413-13A Parking Aid, Removal and Installation).

	For the 5-door, REFER to: Parking Assist Control Module (PAM) - Vehicles With: 5-Door (413-13A Parking Aid, Removal and Installation).
No	The system is operating correctly at this time. Concern may have been caused by a loose or corroded connector. ADDRESS the root cause of any connector or pin issues.

B1B57:11

Diagnostics in this manual assume a certain skill level and knowledge of Ford-specific diagnostic practices.
REFER to: Diagnostic Methods (100-00 General Information, Description and Operation).

Refer to Wiring Diagrams Cell 131 for schematic and connector information.

Normal Operation and Fault Conditions

The Parking Aid Module (PAM) supplies voltage to the front parking aid sensors and active park assist sensors via a common circuit.

DTC Fault Trigger Conditions

DTC	Description	Fault Trigger Conditions
B1B57:11	Front Sensors Power Circuit: Circuit Short To Ground	A continuous and on-demand DTC that sets when the front sensor voltage supply circuit is shorted to ground or to the signal return circuit.

Possible Sources

- Wiring, terminals or connectors
- Front Parking aid sensor
- Active park assist sensor
- Parking Aid Module (PAM)

PINPOINT TEST B : B1B57:11

B1 CHECK THE BUMPER WIRING HARNESS

- Inspect the bumper wiring harness for opens, shorts, grounds, or corrosion.

Is the bumper wiring harness OK?

Yes	GO to B2
No	REPAIR or INSTALL a new bumper wiring harness.

B2 CHECK THE LEFT HAND (LH) FRONT OUTER PARKING AID SENSOR FOR AN INTERNAL SHORT

- Ignition OFF.
- Disconnect: LH Front Outer Parking Aid Sensor.
- Ignition ON.
- Using a scan tool, clear the Diagnostic Trouble Codes (DTCs) and repeat the self-test.

Is DTC B1B57:11 still present?

Yes	GO to B3
No	INSTALL a new LH front outer parking aid sensor. REFER to: Front Parking Aid Sensor (413-13A Parking Aid, Removal and Installation).

B3 CHECK THE LEFT HAND (LH) FRONT INNER PARKING AID SENSOR FOR AN INTERNAL SHORT

- Ignition OFF.
- Disconnect: LH Front Inner Parking Aid Sensor.
- Ignition ON.
- Using a scan tool, clear the Diagnostic Trouble Codes (DTCs) and repeat the self-test.

Is DTC B1B57:11 still present?

Yes	If the vehicle is equipped with active park assist, GO to B4 If the vehicle is NOT equipped with active park assist, GO to B6
No	INSTALL a new LH front inner parking aid sensor. REFER to: Front Parking Aid Sensor (413-13A Parking Aid, Removal and Installation).

B4 CHECK THE LEFT HAND (LH) FRONT ACTIVE PARK ASSIST SENSOR FOR AN INTERNAL SHORT

- Ignition OFF.
- Disconnect: LH Front Active Park Assist Sensor.
- Ignition ON.
- Using a scan tool, clear the Diagnostic Trouble Codes (DTCs) and repeat the self-test.

Is DTC B1B57:11 still present?

Yes	GO to B5
No	INSTALL a new LH front active park assist sensor. REFER to: Front Active Park Assist Sensors (413-13B Parking Aid - Vehicles With: Active Park Assist, Removal and Installation).

B5 CHECK THE RIGHT HAND (RH) FRONT ACTIVE PARK ASSIST SENSOR FOR AN INTERNAL SHORT

-
- Ignition OFF.
- Disconnect: RH Front Active Park Assist Sensor.
- Ignition ON.
- Using a scan tool, clear the Diagnostic Trouble Codes (DTCs) and repeat the self-test.

Is DTC B1B57:11 still present?

Yes	GO to B6
No	INSTALL a new RH front active park assist sensor. REFER to: Front Active Park Assist Sensors (413-13B Parking Aid - Vehicles With: Active Park Assist, Removal and Installation).

B6 CHECK THE RIGHT HAND (RH) FRONT OUTER PARKING AID SENSOR FOR AN INTERNAL SHORT

- Ignition OFF.
- Disconnect: RH Front Outer Parking Aid Sensor.
- Ignition ON.
- Using a scan tool, clear the Diagnostic Trouble Codes (DTCs) and repeat the self-test.

Is DTC B1B57:11 still present?

Yes	GO to B7
No	INSTALL a new RH front outer parking aid sensor. REFER to: Front Parking Aid Sensor (413-13A Parking Aid, Removal and Installation).

B7 CHECK THE RIGHT HAND (RH) FRONT INNER PARKING AID SENSOR FOR AN INTERNAL SHORT

- Ignition OFF.
- Disconnect: RH Front Inner Parking Aid Sensor.
- Ignition ON.
- Using a scan tool, clear the Diagnostic Trouble Codes (DTCs) and repeat the self-test.

Is DTC B1B57:11 still present?

Yes	GO to B8
No	INSTALL a new RH front inner parking aid sensor. REFER to: Front Parking Aid Sensor (413-13A Parking Aid, Removal and Installation).

B8 CHECK THE PARKING AID SENSOR VOLTAGE SUPPLY CIRCUIT FOR A SHORT TO GROUND

- Ignition OFF.
- Disconnect: Parking Aid Module (PAM) C4014B.
- Measure:

Positive Lead	Measurement / Action	Negative Lead
C4014B-2	Ω	—

Is the resistance greater than 10,000 ohms?

Yes	GO to B9
No	REPAIR the circuit.

B9 CHECK THE PARKING AID SENSOR VOLTAGE SUPPLY CIRCUIT AND GROUND CIRCUIT FOR A SHORT TOGETHER

- Measure:

Positive Lead	Measurement / Action	Negative Lead
C4014B-2	Ω	C4014B-1

Is the resistance greater than 10,000 ohms?

Yes	GO to B10
No	REPAIR the circuit in question.

B10 CHECK FOR CORRECT PARKING AID MODULE (PAM) OPERATION

- Ignition OFF.
- Disconnect and inspect all Parking Aid Module (PAM) connectors.
- Repair:
  - corrosion (install new connector or terminals - clean module pins)
  - damaged or bent pins - install new terminals/pins
  - pushed-out pins - install new pins as necessary
- Reconnect the Parking Aid Module (PAM) connectors. Make sure they seat and latch correctly.
- Operate the system and determine if the concern is still present.

Is the concern still present?

Yes	CHECK OASIS for any applicable Technical Service Bulletins (TSBs). If a TSB exists for this concern, DISCONTINUE this test and FOLLOW TSB instructions. If no Technical Service Bulletins (TSBs) address this concern, INSTALL a new Parking Aid Module (PAM). For the 4-door, REFER to: Parking Assist Control Module (PAM) - Vehicles With: 4-Door (413-13A Parking Aid, Removal and Installation). For the 5-door, REFER to: Parking Assist Control Module (PAM) - Vehicles With: 5-Door (413-13A Parking Aid, Removal and Installation).
No	The system is operating correctly at this time. Concern may have been caused by a loose or corroded connector. ADDRESS the root cause of any connector or pin issues.

B1B58:11

Diagnostics in this manual assume a certain skill level and knowledge of Ford-specific diagnostic practices.
REFER to: Diagnostic Methods (100-00 General Information, Description and Operation).

Refer to Wiring Diagrams Cell 131 for schematic and connector information.

Normal Operation and Fault Conditions

The Parking Aid Module (PAM) supplies voltage to the rear parking aid sensors via a common circuit.

DTC Fault Trigger Conditions

DTC	Description	Fault Trigger Conditions
B1B58:11	Rear Sensors Power Circuit: Circuit Short To Ground	A continuous and on-demand DTC that sets when the rear sensor voltage supply circuit is shorted to ground or to the signal return circuit.

Possible Sources

- Wiring, terminals or connectors
- Rear Parking aid sensor
- Parking Aid Module (PAM)

PINPOINT TEST C : B1B58:11

C1 CHECK THE REAR BUMPER WIRING HARNESS

- Inspect the rear bumper wiring harness for opens, shorts, grounds, or corrosion.

Is the rear bumper wiring harness OK?

Yes	GO to C2
No	REPAIR or INSTALL a new rear bumper wiring harness.

C2 CHECK THE LEFT HAND (LH) REAR OUTER PARKING AID SENSOR FOR AN INTERNAL SHORT

- Ignition OFF.
- Disconnect: LH Rear Outer Parking Aid Sensor.
- Ignition ON.
- Using a scan tool, clear the Diagnostic Trouble Codes (DTCs) and repeat the self-test.

Is DTC B1B58:11 still present?

Yes	GO to C3
No	INSTALL a new LH rear outer parking aid sensor. REFER to: Rear Parking Aid Sensor (413-13A Parking Aid, Removal and Installation).

C3 CHECK THE RIGHT HAND (RH) REAR OUTER PARKING AID SENSOR FOR AN INTERNAL SHORT

- Ignition OFF.
- Disconnect: RH Rear Outer Parking Aid Sensor.
- Ignition ON.
- Using a scan tool, clear the Diagnostic Trouble Codes (DTCs) and repeat the self-test.

Is DTC B1B58:11 still present?

Yes	GO to C4
No	INSTALL a new RH rear outer parking aid sensor. REFER to: Rear Parking Aid Sensor (413-13A Parking Aid, Removal and Installation).

C4 CHECK THE CENTER REAR PARKING AID SENSOR FOR AN INTERNAL SHORT

- Ignition OFF.
- Disconnect: Center Rear Parking Aid Sensor.
- Ignition ON.
- Using a scan tool, clear the Diagnostic Trouble Codes (DTCs) and repeat the self-test.

Is DTC B1B58:11 still present?

Yes	GO to C5

No	INSTALL a new center rear parking aid sensor. REFER to: Rear Parking Aid Sensor (413-13A Parking Aid, Removal and Installation).

C5 CHECK THE PARKING AID SENSOR VOLTAGE SUPPLY CIRCUIT FOR A SHORT TO GROUND

- Ignition OFF.
- Disconnect: Parking Aid Module (PAM) C4014C.
- Measure:

Positive Lead	Measurement / Action	Negative Lead
C4014C-11	Ω	—

Is the resistance greater than 10,000 ohms?

Yes	GO to C6
No	REPAIR the circuit.

C6 CHECK THE PARKING AID SENSOR VOLTAGE SUPPLY CIRCUIT AND GROUND CIRCUIT FOR A SHORT TOGETHER

- Measure:

Positive Lead	Measurement / Action	Negative Lead
C4014C-11	Ω	C4014C-8

Is the resistance greater than 10,000 ohms?

Yes	GO to C7
No	REPAIR the circuit in question.

C7 CHECK FOR CORRECT PARKING AID MODULE (PAM) OPERATION

- Ignition OFF.
- Disconnect and inspect all Parking Aid Module (PAM) connectors.
- Repair:
  - corrosion (install new connector or terminals – clean module pins)
  - damaged or bent pins – install new terminals/pins
  - pushed-out pins – install new pins as necessary
- Reconnect the Parking Aid Module (PAM) connectors. Make sure they seat and latch correctly.
- Operate the system and determine if the concern is still present.

Is the concern still present?

Yes	CHECK OASIS for any applicable Technical Service Bulletins (TSBs). If a TSB exists for this concern, DISCONTINUE this test and FOLLOW TSB instructions. If no Technical Service Bulletins (TSBs)

	address this concern, INSTALL a new Parking Aid Module (PAM). For the 4-door, REFER to: Parking Assist Control Module (PAM) - Vehicles With: 4-Door (413-13A Parking Aid, Removal and Installation). For the 5-door, REFER to: Parking Assist Control Module (PAM) - Vehicles With: 5-Door (413-13A Parking Aid, Removal and Installation).
No	The system is operating correctly at this time. Concern may have been caused by a loose or corroded connector. ADDRESS the root cause of any connector or pin issues.

B13B5:14, B1B44:14, B1B48:14

Diagnostics in this manual assume a certain skill level and knowledge of Ford-specific diagnostic practices.
REFER to: Diagnostic Methods (100-00 General Information, Description and Operation).

Refer to Wiring Diagrams Cell 131 for schematic and connector information.

Normal Operation and Fault Conditions

REFER to: Parking Aid - System Operation and Component Description (413-13A Parking Aid, Description and Operation).

DTC Fault Trigger Conditions

DTC	Description	Fault Trigger Conditions
B13B5:14	Rear Center Sensor: Circuit Short To Ground Or Open	A continuous and on-demand DTC that sets when any of the center rear parking aid sensor circuits are open or the sensor signal line is shorted to ground.
B1B44:14	Right Rear Outer Sensor: Circuit Short To Ground Or Open	A continuous and on-demand DTC that sets when any of the right rear outer parking aid sensor circuits are open or the sensor signal line is shorted to ground.
B1B48:14	Left Rear Outer Sensor: Circuit Short To Ground Or Open	A continuous and on-demand DTC that sets when any of the left rear outer parking aid sensor circuits are open or the sensor signal line is shorted to ground.

Possible Sources

- Wiring, terminals or connectors
- Rear Parking aid sensor
- Parking Aid Module (PAM)

PINPOINT TEST D : B13B5:14, B1B44:14, B1B48:14

D1 RETRIEVE THE DIAGNOSTIC TROUBLE CODES (DTCS) FROM THE PARKING AID MODULE (PAM) SELF-TEST

- Using a scan tool, perform the Parking Aid Module (PAM) self-test.
- Check the Parking Aid Module (PAM) Diagnostic Trouble Codes (DTCs) from the self-test.

Are multiple parking aid sensor Diagnostic Trouble Codes (DTCs) recorded?

Yes	GO to D2
No	For DTC B13B5:14, B1B44:14 or B1B48:14, GO to D3

	For all other Diagnostic Trouble Codes (DTCs), REFER to the Parking Aid Module (PAM) DTC Chart in this section.

D2 CHECK THE BUMPER WIRING HARNESS

- Inspect the bumper wiring harness for opens, shorts, grounds, or corrosion.

Is the bumper wiring harness OK?

Yes	GO to D3
No	REPAIR or INSTALL a new bumper wiring harness.

D3 CHECK THE SENSOR CIRCUITRY FOR OPENS

- Ignition OFF.
- Disconnect: Suspect Parking Aid Sensor(s).
- Disconnect: Parking Aid Module (PAM) C4014C.
- For DTC B13B5:14, measure:

Positive Lead	Measurement / Action	Negative Lead
C4014C-11	Ω	C4228-1
C4014C-3	Ω	C4228-2
C4014C-8	Ω	C4228-3

- For DTC B1B44:14, measure:

Positive Lead	Measurement / Action	Negative Lead
C4014C-11	Ω	C4011-1
C4014C-4	Ω	C4011-2
C4014C-8	Ω	C4011-3

- For DTC B1B48:14, measure:

Positive Lead	Measurement / Action	Negative Lead
C4014C-11	Ω	C4009-1
C4014C-5	Ω	C4009-2
C4014C-8	Ω	C4009-3

Is the resistance for the suspect sensor circuit less than 3 ohms?

Yes	GO to D4
No	REPAIR the circuit in question.

D4 CHECK THE SENSOR CIRCUITRY FOR SHORTS TO GROUND

- For DTC B13B5:14, measure:

Positive Lead	Measurement / Action	Negative Lead
C4228-2	Ω	—

- For DTC B1B44:14, measure:

Positive Lead	Measurement / Action	Negative Lead
C4011-2	Ω	—

- For DTC B1B48:14, measure:

Positive Lead	Measurement / Action	Negative Lead
C4009-2	Ω	—

Is the resistance greater than 10,000 ohms for the sensor circuit in question?

Yes	If all of the parking aid sensors recorded Diagnostic Trouble Codes (DTCs), GO to D5 If one or more (but not all) parking aid sensor(s) recorded Diagnostic Trouble Codes (DTCs), INSTALL a new sensor(s) for the one(s) in question. REFER to: Rear Parking Aid Sensor (413-13A Parking Aid, Removal and Installation).
No	REPAIR the circuit in question.

D5 CHECK FOR CORRECT PARKING AID MODULE (PAM) OPERATION

- Ignition OFF.
- Disconnect and inspect all Parking Aid Module (PAM) connectors.
- Repair:
  - corrosion (install new connector or terminals – clean module pins)
  - damaged or bent pins – install new terminals/pins
  - pushed-out pins – install new pins as necessary
- Reconnect the Parking Aid Module (PAM) connectors. Make sure they seat and latch correctly.
- Operate the system and determine if the concern is still present.

Is the concern still present?

Yes	CHECK OASIS for any applicable Technical Service Bulletins (TSBs). If a TSB exists for this concern, DISCONTINUE this test and FOLLOW TSB instructions. If no Technical Service Bulletins (TSBs) address this concern, INSTALL a new Parking Aid Module (PAM). For the 4-door, REFER to: Parking Assist Control Module (PAM) - Vehicles With: 4-Door (413-13A Parking Aid, Removal and Installation). For the 5-door, REFER to: Parking Assist Control Module (PAM) - Vehicles With: 5-Door (413-13A Parking Aid, Removal and Installation).

No	The system is operating correctly at this time. Concern may have been caused by a loose or corroded connector. ADDRESS the root cause of any connector or pin issues.

B13B5:12, B1B44:12, B1B48:12

Diagnostics in this manual assume a certain skill level and knowledge of Ford-specific diagnostic practices.
REFER to: Diagnostic Methods (100-00 General Information, Description and Operation).

Refer to Wiring Diagrams Cell 131 for schematic and connector information.

Normal Operation and Fault Conditions

REFER to: Parking Aid - System Operation and Component Description (413-13A Parking Aid, Description and Operation).

DTC Fault Trigger Conditions

DTC	Description	Fault Trigger Conditions
B13B5:12	Rear Center Sensor: Circuit Short To Battery	A continuous and on-demand DTC that sets when the center rear parking aid sensor signal circuit is shorted to battery voltage.
B1B44:12	Right Rear Outer Sensor: Circuit Short To Battery	A continuous and on-demand DTC that sets when the right rear outer parking aid sensor signal circuit is shorted to battery voltage.
B1B48:12	Left Rear Outer Sensor: Circuit Short To Battery	A continuous and on-demand DTC that sets when the left rear outer parking aid sensor signal circuit is shorted to battery voltage.

Possible Sources

- Wiring, terminals or connectors
- Rear Parking aid sensor
- Parking Aid Module (PAM)

PINPOINT TEST E : B13B5:12, B1B44:12, B1B48:12

E1 RETRIEVE THE DIAGNOSTIC TROUBLE CODES (DTCS) FROM THE PARKING AID MODULE (PAM) SELF-TEST

- Using a scan tool, perform the Parking Aid Module (PAM) self-test.
- Check the Parking Aid Module (PAM) Diagnostic Trouble Codes (DTCs) from the self-test.

Are multiple parking aid sensor Diagnostic Trouble Codes (DTCs) recorded?

Yes	GO to E2
No	For Diagnostic Trouble Codes (DTCs) B13B5:12, B1B44:12 and B1B48:12, GO to E3 For all other Diagnostic Trouble Codes (DTCs), REFER to the Parking Aid Module (PAM) DTC Chart in this section.

E2 CHECK THE BUMPER WIRING HARNESS

- Inspect the bumper wiring harness for opens, shorts, grounds, or corrosion.

Is the bumper wiring harness OK?

Yes	GO to E3
No	REPAIR or INSTALL a new bumper wiring harness.

E3 CHECK THE SENSOR CIRCUITRY FOR SHORTS TO VOLTAGE

- Ignition OFF.
- Disconnect: Suspect Parking Aid Sensor(s).
- Ignition ON.
- For DTC B13B5:12, measure:

Positive Lead	Measurement / Action	Negative Lead
C4228-2	V	—

- For DTC B1B44:12, measure:

Positive Lead	Measurement / Action	Negative Lead
C4011-2	V	—

- For DTC B1B48:12, measure:

Positive Lead	Measurement / Action	Negative Lead
C4009-2	V	—

Is any voltage present?

Yes	REPAIR the circuit in question.
No	GO to E4

E4 CHECK THE PARKING AID SENSOR CIRCUITRY FOR A SHORT TOGETHER

- For DTC B13B5:12, measure:

Positive Lead	Measurement / Action	Negative Lead
C4228-2	Ω	C4228-1

- For DTC B1B44:12, measure:

Positive Lead	Measurement / Action	Negative Lead
C4011-2	Ω	C4011-1

- For DTC B1B48:12, measure:

Positive Lead	Measurement / Action	Negative Lead
C4009-2	Ω	C4009-1

Is the resistance greater than 10,000 ohms?

Yes	If all the sensor Diagnostic Trouble Codes (DTCs) are set, GO to E5 If one or more parking aid sensor(s) recorded Diagnostic Trouble Codes (DTCs), INSTALL a new sensor(s) for the one in question. REFER to: Rear Parking Aid Sensor (413-13A Parking Aid, Removal and Installation).
No	REPAIR the circuits in question.

E5 CHECK FOR CORRECT PARKING AID MODULE (PAM) OPERATION

- Ignition OFF.
- Disconnect and inspect all Parking Aid Module (PAM) connectors.
- Repair:
  - corrosion (install new connector or terminals – clean module pins)
  - damaged or bent pins – install new terminals/pins
  - pushed-out pins – install new pins as necessary
- Reconnect the Parking Aid Module (PAM) connectors. Make sure they seat and latch correctly.
- Operate the system and determine if the concern is still present.

Is the concern still present?

Yes	CHECK OASIS for any applicable Technical Service Bulletins (TSBs). If a TSB exists for this concern, DISCONTINUE this test and FOLLOW TSB instructions. If no Technical Service Bulletins (TSBs) address this concern, INSTALL a new Parking Aid Module (PAM). For the 4-door, REFER to: Parking Assist Control Module (PAM) - Vehicles With: 4-Door (413-13A Parking Aid, Removal and Installation). For the 5-door, REFER to: Parking Assist Control Module (PAM) - Vehicles With: 5-Door (413-13A Parking Aid, Removal and Installation).
No	The system is operating correctly at this time. Concern may have been caused by a loose or corroded connector. ADDRESS the root cause of any connector or pin issues.

B13B5:96, B1B44:96, B1B48:96

Diagnostics in this manual assume a certain skill level and knowledge of Ford-specific diagnostic practices.
REFER to: Diagnostic Methods (100-00 General Information, Description and Operation).

Refer to Wiring Diagrams Cell 131 for schematic and connector information.

Normal Operation and Fault Conditions

REFER to: Parking Aid - System Operation and Component Description (413-13A Parking Aid, Description and Operation).

DTC Fault Trigger Conditions

DTC	Description	Fault Trigger Conditions
B13B5:96	Rear Center Sensor: Component Internal Failure	A continuous and on-demand DTC that sets when the rear center parking aid sensor has internally failed or has an incorrect attenuation time.
B1B44:96	Right Rear Outer Sensor: Component Internal Failure	A continuous and on-demand DTC that sets when the right rear outer parking aid sensor has internally failed or has an incorrect attenuation time.
B1B48:96	Left Rear Outer Sensor: Component Internal Failure	A continuous and on-demand DTC that sets when the left rear outer parking aid sensor has internally failed or has an incorrect attenuation time.

Possible Sources

- Rear Parking aid sensor
- Parking Aid Module (PAM)

PINPOINT TEST F : B13B5:96, B1B44:96, B1B48:96

F1 CHECK THE DIAGNOSTIC TROUBLE CODES (DTCS) FROM THE PARKING AID MODULE (PAM) SELF-TEST

- Using a scan tool, perform the Parking Aid Module (PAM) self-test.
- Check the Parking Aid Module (PAM) Diagnostic Trouble Codes (DTCs) from the self-test.

Are parking aid Diagnostic Trouble Codes (DTCs) other than B13B5:96, B1B44:96, and B1B48:96 recorded?

Yes	DIAGNOSE other Diagnostic Trouble Codes (DTCs) first. REFER to the Parking Aid Module (PAM) DTC Chart in this section.
No	GO to F2

F2 CHECK THE PARKING AID SENSOR OPERATION

NOTE: *Make sure the area around the vehicle is clear of anything that can activate the parking aid system.*

- Clean the rear bumper and sensors with high-pressure water.
- Carry out the azimuth system check.
  REFER to: Azimuth System Check (413-13A Parking Aid, General Procedures).

Does the parking aid system pass system check?

Yes	The system is operating correctly at this time. The concern may have been caused by a dirty or blocked parking aid sensor.
No	GO to F3

F3 CHECK THE PARKING AID SENSOR DISTANCE PARAMETER IDENTIFICATIONS (PIDS)

- Make sure the suspect parking aid sensor(s) is flush-mounted in the bezel.

Ignition ON.
- Using a scan tool, view the Parking Aid Module (PAM) Parameter Identifications (PIDs).
- **NOTE:** *Ensure the area around the vehicle is clear of anything that may be detected by the rear parking aid system.*

Monitor and record the rear parking aid sensor distance Parameter Identifications (PIDs) (CTR_DIST, LRO_DIST, RRO_DIST) while moving a test object into and out of the azimuth field for each of the sensors. For an example of an appropriate test object,
REFER to: Azimuth System Check (413-13A Parking Aid, General Procedures).

Do the rear parking aid sensor distance Parameter Identifications (PIDs) approximately match the distance from the vehicle to the test object?

Yes	GO to F5
No	GO to F4

F4 CHECK THE PARKING AID SENSORS

- Ignition OFF.
- Install a new sensor for the suspect parking aid sensor.
  REFER to: Rear Parking Aid Sensor (413-13A Parking Aid, Removal and Installation).
- Ignition ON.
- Using a scan tool, clear the Diagnostic Trouble Codes (DTCs). Repeat the self-test. Operate the system and verify the concern is still present.

Is the concern still present?

Yes	GO to F5
No	The cause of the concern was an inoperative parking aid sensor. The system is now operating correctly.

F5 CHECK FOR CORRECT PARKING AID MODULE (PAM) OPERATION

- Ignition OFF.
- Disconnect and inspect all Parking Aid Module (PAM) connectors.
- Repair:
  - corrosion (install new connector or terminals – clean module pins)
  - damaged or bent pins – install new terminals/pins
  - pushed-out pins – install new pins as necessary
- Reconnect the Parking Aid Module (PAM) connectors. Make sure they seat and latch correctly.
- Operate the system and determine if the concern is still present.

Is the concern still present?

Yes	CHECK OASIS for any applicable Technical Service Bulletins (TSBs). If a TSB exists for this concern, DISCONTINUE this test and FOLLOW TSB instructions. If no Technical Service Bulletins (TSBs) address this concern, INSTALL a new Parking Aid Module (PAM). For the 4-door, REFER to: Parking Assist Control Module (PAM) - Vehicles With: 4-Door (413-13A Parking Aid, Removal and Installation). For the 5-door, REFER to: Parking Assist Control Module (PAM) - Vehicles With: 5-Door (413-13A Parking Aid, Removal and Installation).
No	The system is operating correctly at this time. Concern may have been caused by a loose or corroded connector. ADDRESS the root cause of any connector or pin issues.

B1B36:12, B1B38:12, B1B40:12, B1B42:12

Diagnostics in this manual assume a certain skill level and knowledge of Ford-specific diagnostic practices.
REFER to: Diagnostic Methods (100-00 General Information, Description and Operation).

Refer to Wiring Diagrams Cell 131 for schematic and connector information.

Normal Operation and Fault Conditions

REFER to: Parking Aid - System Operation and Component Description (413-13A Parking Aid, Description and Operation).

DTC Fault Trigger Conditions

DTC	Description	Fault Trigger Conditions
B1B36:12	Right Front Outer Sensor: Circuit Short To Battery	A continuous and on-demand DTC that sets when the right front outer parking aid sensor signal circuit is shorted to battery voltage.
B1B38:12	Right Front Inner Sensor: Circuit Short To Battery	A continuous and on-demand DTC that sets when the right front inner parking aid sensor signal circuit is shorted to battery voltage.
B1B40:12	Left Front Outer Sensor: Circuit Short To Battery	A continuous and on-demand DTC that sets when the left front outer parking aid sensor signal circuit is shorted to battery voltage.
B1B42:12	Left Front Inner Sensor: Circuit Short To Battery	A continuous and on-demand DTC that sets when the left front inner parking aid sensor signal circuit is shorted to battery voltage.

Possible Sources

- Wiring, terminals or connectors
- Front parking aid sensor
- Parking Aid Module (PAM)

PINPOINT TEST G : B1B36:12, B1B38:12, B1B40:12, B1B42:12

G1 RETRIEVE THE DIAGNOSTIC TROUBLE CODES (DTCS) FROM THE PARKING AID MODULE (PAM) SELF-TEST

- Using a scan tool, perform the Parking Aid Module (PAM) self-test.
- Check the Parking Aid Module (PAM) Diagnostic Trouble Codes (DTCs) from the self-test.

Are multiple parking aid sensor Diagnostic Trouble Codes (DTCs) recorded?

Yes	GO to G2
No	For Diagnostic Trouble Codes (DTCs) B1B36:12, B1B38:12, B1B40:12 or B1B42:12, GO to G3 For all other Diagnostic Trouble Codes (DTCs), REFER to the Parking Aid Module (PAM) DTC Chart in this section.

G2 CHECK THE BUMPER WIRING HARNESS

- Inspect the bumper wiring harness for opens, shorts, grounds, or corrosion.

Is the bumper wiring harness OK?

Yes	GO to G3
No	REPAIR or INSTALL a new bumper wiring harness.

G3 CHECK THE SENSOR CIRCUITRY FOR SHORTS TO VOLTAGE

- Ignition OFF.
- Disconnect: Suspect Parking Aid Sensor(s)
- Disconnect: Parking Aid Module (PAM) C4014B.
- Ignition ON.
- For DTC B1B36:12, measure:

Positive Lead	Measurement / Action	Negative Lead
C1431-2	V	—

- For DTC B1B38:12, measure:

Positive Lead	Measurement / Action	Negative Lead
C1430-2	V	—

- For DTC B1B40:12, measure:

Positive Lead	Measurement / Action	Negative Lead
C1428-2	V	—

- For DTC B1B42:12, measure:

Positive Lead	Measurement / Action	Negative Lead
C1429-2	V	—

Is any voltage present?

Yes	REPAIR the circuit in question.
No	GO to G4

G4 CHECK THE PARKING AID SENSOR CIRCUITRY FOR A SHORT TOGETHER

- For DTC B1B36:12, measure:

Positive Lead	Measurement / Action	Negative Lead
C1431-2	Ω	C1431-1

- For DTC B1B38:12, measure:

Positive Lead	Measurement / Action	Negative Lead
C1430-2	Ω	C1430-1

- For DTC B1B40:12, measure:

Positive Lead	Measurement / Action	Negative Lead
C1428-2	Ω	C1428-1

- For DTC B1B42:12, measure:

Positive Lead	Measurement / Action	Negative Lead
C1429-2	Ω	C1429-1

Is the resistance greater than 10,000 ohms?

Yes	If all the sensor Diagnostic Trouble Codes (DTCs) are set, GO to G5 If one or more (but not all) parking aid sensor(s) recorded Diagnostic Trouble Codes (DTCs), INSTALL a new sensor(s) for the one in question. REFER to: Front Parking Aid Sensor (413-13A Parking Aid, Removal and Installation).
No	REPAIR the circuits in question.

G5 CHECK FOR CORRECT PARKING AID MODULE (PAM) OPERATION

- Ignition OFF.
- Disconnect and inspect all Parking Aid Module (PAM) connectors.
- Repair:
  - corrosion (install new connector or terminals - clean module pins)
  - damaged or bent pins - install new terminals/pins
  - pushed-out pins - install new pins as necessary
- Reconnect the Parking Aid Module (PAM) connectors. Make sure they seat and latch correctly.
- Operate the system and determine if the concern is still present.

Is the concern still present?

Yes	CHECK OASIS for any applicable Technical Service Bulletins (TSBs). If a TSB exists for this concern, DISCONTINUE this test and FOLLOW TSB instructions. If no Technical Service Bulletins (TSBs) address this concern, INSTALL a new Parking Aid Module (PAM). For the 4-door, REFER to: Parking Assist Control Module (PAM) - Vehicles With: 4-Door (413-13A Parking Aid, Removal and Installation). For the 5-door, REFER to: Parking Assist Control Module (PAM) - Vehicles With: 5-Door (413-13A Parking Aid, Removal and Installation).
No	The system is operating correctly at this time. Concern may have been caused by a loose or corroded connector. ADDRESS the root cause of any connector or pin issues.

B1B36:14, B1B38:14, B1B40:14, B1B42:14

Diagnostics in this manual assume a certain skill level and knowledge of Ford-specific diagnostic practices.
REFER to: Diagnostic Methods (100-00 General Information, Description and Operation).

Refer to Wiring Diagrams Cell 131 for schematic and connector information.

Normal Operation and Fault Conditions

REFER to: Parking Aid - System Operation and Component Description (413-13A Parking Aid, Description and Operation).

DTC Fault Trigger Conditions

DTC	Description	Fault Trigger Conditions
B1B36:14	Right Front Outer Sensor: Circuit Short To Ground Or Open	A continuous and on-demand DTC that sets when any of the right front outer parking aid sensor circuits are open or the sensor signal line is shorted to ground.
B1B38:14	Right Front Inner Sensor: Circuit Short To Ground Or Open	A continuous and on-demand DTC that sets when any of the right front inner parking aid sensor circuits are open or the sensor signal line is shorted to ground.
B1B40:14	Left Front Outer Sensor: Circuit Short To Ground Or Open	A continuous and on-demand DTC that sets when any of the left front outer parking aid sensor circuits are open or the sensor signal line is shorted to ground.
B1B42:14	Left Front Inner Sensor: Circuit Short To Ground Or Open	A continuous and on-demand DTC that sets when any of the left front inner parking aid sensor circuits are open or the sensor signal line is shorted to ground.

Possible Sources

- Wiring, terminals or connectors
- Front parking aid sensor
- Parking Aid Module (PAM)

PINPOINT TEST H : B1B36:14, B1B38:14, B1B40:14, B1B42:14

H1 RETRIEVE THE DIAGNOSTIC TROUBLE CODES (DTCS) FROM THE PARKING AID MODULE (PAM) SELF-TEST

- Using a scan tool, perform the Parking Aid Module (PAM) self-test.
- Check the Parking Aid Module (PAM) Diagnostic Trouble Codes (DTCs) from the self-test.

Are multiple parking aid sensor Diagnostic Trouble Codes (DTCs) recorded?

Yes	GO to H2
No	For DTC B1B36:14, B1B38:14, B1B40:14 or B1B42:14, GO to H3 For all other Diagnostic Trouble Codes (DTCs), REFER to the Parking Aid Module (PAM) DTC Chart in this section.

H2 CHECK THE BUMPER WIRING HARNESS

- Inspect the bumper wiring harness for opens, shorts, grounds, or corrosion.

Is the bumper wiring harness OK?

Yes	GO to H3
No	REPAIR or INSTALL a new bumper wiring harness.

H3 CHECK THE SENSOR CIRCUITRY FOR OPENS

- Ignition OFF.
- Disconnect: Suspect Parking Aid Sensor(s).
- Disconnect: Parking Aid Module (PAM) C4014B.
- For DTC B1B36:14, measure:

Positive Lead	Measurement / Action	Negative Lead
C4014B-2	Ω	C1431-1
C4014B-8	Ω	C1431-2
C4014B-1	Ω	C1431-3

- For DTC B1B38:14, measure:

Positive Lead	Measurement / Action	Negative Lead
C4014B-2	Ω	C1430-1
C4014B-7	Ω	C1430-2
C4014B-1	Ω	C1430-3

- For DTC B1B40:14, measure:

Positive Lead	Measurement / Action	Negative Lead
C4014B-2	Ω	C1428-1
C4014B-5	Ω	C1428-2
C4014B-1	Ω	C1428-3

- For DTC B1B42:14, measure:

Positive Lead	Measurement / Action	Negative Lead
C4014B-2	Ω	C1429-1
C4014B-6	Ω	C1429-2
C4014B-1	Ω	C1429-3

Is the resistance for the suspect sensor circuits less than 3 ohms?

Yes	GO to H4
No	REPAIR the circuit in question.

H4 CHECK THE SENSOR SIGNAL CIRCUITS FOR SHORTS TO GROUND

- For DTC B1B36:14, measure:

Positive Lead	Measurement / Action	Negative Lead
C1431-2	Ω	—

- For DTC B1B38:14, measure:

Positive Lead	Measurement / Action	Negative Lead
C1430-2	Ω	—

- For DTC B1B40:14, measure:

Positive Lead	Measurement / Action	Negative Lead
C1428-2	Ω	—

- For DTC B1B40:14, measure:

Positive Lead	Measurement / Action	Negative Lead
C1429-2	Ω	—

Is the resistance greater than 10,000 ohms for the sensor circuit in question?

Yes	If all of the parking aid sensors recorded Diagnostic Trouble Codes (DTCs), GO to H5 If one or more (but not all) parking aid sensor(s) recorded Diagnostic Trouble Codes (DTCs), INSTALL a new sensor(s) for the one(s) in question. REFER to: Front Parking Aid Sensor (413-13A Parking Aid, Removal and Installation).
No	REPAIR the circuit in question.

H5 CHECK FOR CORRECT PARKING AID MODULE (PAM) OPERATION

- Ignition OFF.
- Disconnect and inspect all Parking Aid Module (PAM) connectors.
- Repair:
  - corrosion (install new connector or terminals - clean module pins)

- damaged or bent pins - install new terminals/pins
- pushed-out pins - install new pins as necessary

- Reconnect the Parking Aid Module (PAM) connectors. Make sure they seat and latch correctly.
- Operate the system and determine if the concern is still present.

Is the concern still present?

Yes	CHECK OASIS for any applicable Technical Service Bulletins (TSBs). If a TSB exists for this concern, DISCONTINUE this test and FOLLOW TSB instructions. If no Technical Service Bulletins (TSBs) address this concern, INSTALL a new Parking Aid Module (PAM). For the 4-door, REFER to: Parking Assist Control Module (PAM) - Vehicles With: 4-Door (413-13A Parking Aid, Removal and Installation). For the 5-door, REFER to: Parking Assist Control Module (PAM) - Vehicles With: 5-Door (413-13A Parking Aid, Removal and Installation).
No	The system is operating correctly at this time. Concern may have been caused by a loose or corroded connector. ADDRESS the root cause of any connector or pin issues.

B1B36:96, B1B38:96, B1B40:96, B1B42:96

Diagnostics in this manual assume a certain skill level and knowledge of Ford-specific diagnostic practices.
REFER to: Diagnostic Methods (100-00 General Information, Description and Operation).

Refer to Wiring Diagrams Cell 131 for schematic and connector information.

Normal Operation and Fault Conditions

REFER to: Parking Aid - System Operation and Component Description (413-13A Parking Aid, Description and Operation).

DTC Fault Trigger Conditions

DTC	Description	Fault Trigger Conditions
B1B36:96	Right Front Outer Sensor: Component Internal Failure	A continuous and on-demand DTC that sets when the right front outer parking aid sensor has internally failed or has an incorrect attenuation time.
B1B38:96	Right Front Inner Sensor: Component Internal Failure	A continuous and on-demand DTC that sets when the right front inner parking aid sensor has internally failed or has an incorrect attenuation time.
B1B40:96	Left Front Outer Sensor: Component Internal Failure	A continuous and on-demand DTC that sets when the left front outer parking aid sensor has internally failed or has an incorrect attenuation time.
B1B42:96	Left Front Inner Sensor: Component Internal Failure	A continuous and on-demand DTC that sets when the left front inner parking aid sensor has internally failed or has an incorrect attenuation time.

Possible Sources

- Front parking aid sensor
- Parking Aid Module (PAM)

PINPOINT TEST I : B1B36:96, B1B38:96, B1B40:96, B1B42:96

I1 CHECK THE DIAGNOSTIC TROUBLE CODES (DTCS) FROM THE PARKING AID MODULE (PAM) SELF-TEST

- Using a scan tool, perform the Parking Aid Module (PAM) self-test.
- Check the Parking Aid Module (PAM) Diagnostic Trouble Codes (DTCs) from the self-test.

Are parking aid Diagnostic Trouble Codes (DTCs) other than B1B36:96, B1B38:96, B1B40:96 or B1B42:96 recorded?

Yes	DIAGNOSE other Diagnostic Trouble Codes (DTCs) first. REFER to the Parking Aid Module (PAM) DTC Chart in this section.
No	GO to I2

I2 CHECK THE PARKING AID SENSOR OPERATION

NOTE: *Make sure the area around the vehicle is clear of anything that can activate the parking aid system.*

- Clean the rear bumper and sensors with high-pressure water.
- Carry out the azimuth system check.
  REFER to: Azimuth System Check (413-13A Parking Aid, General Procedures).

Does the parking aid system pass the azimuth system check?

Yes	The system is operating correctly at this time. The concern may have been caused by a dirty or blocked parking aid sensor.
No	GO to I3

I3 CHECK THE PARKING AID SENSOR DISTANCE PARAMETER IDENTIFICATIONS (PIDS)

- Make sure the suspect parking aid sensor is flush-mounted in the bezel.
- Ignition ON.
- Using a scan tool, monitor the Parking Aid Module (PAM) Parameter Identifications (PIDs).
- Monitor and record the parking aid sensor distance Parameter Identifications (PIDs) (LFI_DIST, LFO_DIST, RFI_DIST, RFO_DIST) while moving a test object into and out of the azimuth field for each of the sensors. For an example of an appropriate test object,
  REFER to: Azimuth System Check (413-13A Parking Aid, General Procedures).

Do the PID distances approximately match the distance from the vehicle to the test object?

Yes	GO to I5
No	GO to I4

I4 CHECK THE PARKING AID SENSORS

- Ignition OFF.
- Install a new sensor for the suspect parking aid sensor.
  REFER to: Front Parking Aid Sensor (413-13A Parking Aid, Removal and Installation).
- Ignition ON.
- Using a scan tool, clear the Diagnostic Trouble Codes (DTCs). Repeat the self-test. Operate the system and verify the concern is still present.

Is the concern still present?

Yes	GO to I5
No	The cause of the concern was an inoperative parking aid sensor. The system is now operating correctly.

I5 CHECK FOR CORRECT PARKING AID MODULE (PAM) OPERATION

- Ignition OFF.
- Disconnect and inspect all Parking Aid Module (PAM) connectors.
- Repair:
  - corrosion (install new connector or terminals - clean module pins)
  - damaged or bent pins - install new terminals/pins
  - pushed-out pins - install new pins as necessary
- Reconnect the Parking Aid Module (PAM) connectors. Make sure they seat and latch correctly.
- Operate the system and determine if the concern is still present.

Is the concern still present?

Yes	CHECK OASIS for any applicable Technical Service Bulletins (TSBs). If a TSB exists for this concern, DISCONTINUE this test and FOLLOW TSB instructions. If no Technical Service Bulletins (TSBs) address this concern, INSTALL a new Parking Aid Module (PAM). For the 4-door, REFER to: Parking Assist Control Module (PAM) - Vehicles With: 4-Door (413-13A Parking Aid, Removal and Installation). For the 5-door, REFER to: Parking Assist Control Module (PAM) - Vehicles With: 5-Door (413-13A Parking Aid, Removal and Installation).
No	The system is operating correctly at this time. Concern may have been caused by a loose or corroded connector. ADDRESS the root cause of any connector or pin issues.

The Parking Aid Switch Status LED Is Inoperative Or Always On

Diagnostics in this manual assume a certain skill level and knowledge of Ford-specific diagnostic practices.
REFER to: Diagnostic Methods (100-00 General Information, Description and Operation).

Refer to Wiring Diagrams Cell 131 for schematic and connector information.

Normal Operation and Fault Conditions

The Parking Aid Module (PAM) supplies voltage to the parking aid switch status LED when the parking aid system is disabled.

DTC Fault Trigger Conditions

DTC	Description	Fault Trigger Conditions
B1B54:11	Function LED - Park Aid: Circuit Short To Ground	A continuous and on-demand DTC that sets when the parking aid switch status LED circuit is shorted to ground.
B1B54:12	Function LED - Park Aid: Circuit Short To Battery	A continuous and on-demand DTC that sets when the parking aid switch status LED circuit is shorted to battery voltage or is open.

Possible Sources

- Wiring, terminals or connectors
- Parking Aid Module (PAM)

Parking aid switch (integral to the active park assist switch)

PINPOINT TEST J : THE PARKING AID SWITCH STATUS LED (LIGHT EMITTING DIODE) IS INOPERATIVE OR ALWAYS ON

J1 CHECK THE CONTINUOUS AND ON-DEMAND PARKING AID MODULE (PAM) DIAGNOSTIC TROUBLE CODES (DTCS)

- Ignition ON.
- Using a scan tool, clear the Parking Aid Module (PAM) Diagnostic Trouble Codes (DTCs).
- Perform the Parking Aid Module (PAM) self-test.

Is DTC B1B54:11 present?

Yes	GO to J2
No	If the status LED is inoperative, GO to J6 If the status LED is always on, GO to J4

J2 CHECK THE PARKING AID MODULE (PAM) DIAGNOSTIC TROUBLE CODES (DTCS) WITH THE ACTIVE PARK ASSIST SWITCH DISCONNECTED

- Ignition OFF.
- Disconnect Active Park Assist Switch.
- Ignition ON.
- Using a scan tool, clear the Parking Aid Module (PAM) Diagnostic Trouble Codes (DTCs).
- Perform the Parking Aid Module (PAM) self-test.

Is DTC B1B54:11 still present?

Yes	GO to J3
No	INSTALL a new active park assist switch. REFER to: Active Park Assist Switch (413-13B Parking Aid - Vehicles With: Active Park Assist, Removal and Installation).

J3 CHECK THE PARKING AID SWITCH STATUS LED (LIGHT EMITTING DIODE) CIRCUIT FOR A SHORT TO GROUND

- Ignition OFF.
- Disconnect Parking Aid Module (PAM) C4014A.
- Measure:

Positive Lead	Measurement / Action	Negative Lead
C4014A-13	Ω	—

Is the resistance greater than 10,000 ohms?

Yes	GO to J9
No	REPAIR the circuit.

J4 CHECK THE PARKING AID SWITCH STATUS LED (LIGHT EMITTING DIODE) CIRCUIT FOR A SHORT TO VOLTAGE

- Ignition OFF.
- Disconnect Parking Aid Module (PAM) C4014A.
- Ignition ON.

Does the parking aid switch status LED continue to illuminate?

Yes	GO to J5
No	GO to J9

J5 CHECK FOR VOLTAGE ON THE PARKING AID SWITCH STATUS LED (LIGHT EMITTING DIODE) CIRCUIT

- Disconnect Active Park Assist Switch.
- Measure:

Positive Lead	Measurement / Action	Negative Lead
C2035-8		—

Is any voltage present?

Yes	REPAIR the circuit.
No	INSTALL a new active park assist switch. REFER to: Active Park Assist Switch (413-13B Parking Aid - Vehicles With: Active Park Assist, Removal and Installation).

J6 CHECK THE PARKING AID MODULE (PAM) DIAGNOSTIC TROUBLE CODES (DTCS) WITH THE PARKING AID SWITCH STATUS LED (LIGHT EMITTING DIODE) CIRCUIT JUMPERED TO GROUND

- Ignition OFF.
- Disconnect Active Park Assist Switch.
- Connect a fused jumper wire between:

Lead 1	Measurement / Action	Lead 2
C2035-7		C2035-12

- Ignition ON.
- Using a scan tool, clear the Parking Aid Module (PAM) Diagnostic Trouble Codes (DTCs).
- Perform the Parking Aid Module (PAM) self-test.

Is DTC B1B54:11 present?

Yes	REMOVE the jumper wire. INSTALL a new active park assist switch. REFER to: Active Park Assist Switch (413-13B Parking Aid - Vehicles With: Active Park Assist, Removal and Installation).
No	REMOVE the jumper wire. GO to J7

J7 CHECK THE PARKING AID SWITCH STATUS LED (LIGHT EMITTING DIODE) CIRCUIT FOR AN OPEN

- Ignition OFF.
- Disconnect Parking Aid Module (PAM) C4014A.
- Measure:

Positive Lead	Measurement / Action	Negative Lead
C2035-7	Ω	C4014A-13

Is the resistance less than 3 ohms?

Yes	GO to J8
No	REPAIR the circuit.

J8 CHECK THE PARKING AID SWITCH GROUND CIRCUIT FOR AN OPEN

- Measure:

Positive Lead	Measurement / Action	Negative Lead
C2035-12	Ω	—

Is the resistance less than 3 ohms?

Yes	GO to J9
No	REPAIR the circuit.

J9 CHECK FOR CORRECT PARKING AID MODULE (PAM) OPERATION

- Ignition OFF.
- Disconnect and inspect all Parking Aid Module (PAM) connectors.
- Repair:
  - corrosion (install new connector or terminals - clean module pins)
  - damaged or bent pins - install new terminals/pins
  - pushed-out pins - install new pins as necessary
- Reconnect the Parking Aid Module (PAM) connectors. Make sure they seat and latch correctly.
- Operate the system and determine if the concern is still present.

Is the concern still present?

Yes	CHECK OASIS for any applicable Technical Service Bulletins (TSBs). If a TSB exists for this concern, DISCONTINUE this test and FOLLOW TSB instructions. If no Technical Service Bulletins (TSBs) address this concern, INSTALL a new Parking Aid Module (PAM). For the 4-door, REFER to: Parking Assist Control Module (PAM) - Vehicles With: 4-Door (413-13A Parking Aid, Removal and Installation). For the 5-door, REFER to: Parking Assist Control Module (PAM) - Vehicles With: 5-Door (413-13A

	Parking Aid, Removal and Installation).
No	The system is operating correctly at this time. Concern may have been caused by a loose or corroded connector. ADDRESS the root cause of any connector or pin issues.

The Parking Aid Disable Switch Does Not Operate Correctly

Diagnostics in this manual assume a certain skill level and knowledge of Ford-specific diagnostic practices.
REFER to: Diagnostic Methods (100-00 General Information, Description and Operation).

Refer to Wiring Diagrams Cell 131 for schematic and connector information.

Normal Operation and Fault Conditions

REFER to: Parking Aid - System Operation and Component Description (413-13A Parking Aid, Description and Operation).

DTC Fault Trigger Conditions

DTC	Description	Fault Trigger Conditions
B1C30:73	Disable Switch - Park Aid: Actuator Stuck Closed	A continuous and on-demand DTC that sets when the parking aid switch is stuck closed or the signal circuit is shorted to ground.

Possible Sources

- Wiring, terminals or connectors
- Parking Aid Module (PAM)
- Parking aid switch (integral to the active park assist switch)

PINPOINT TEST K : THE PARKING AID DISABLE SWITCH DOES NOT OPERATE CORRECTLY

K1 RETRIEVE THE DIAGNOSTIC TROUBLE CODES (DTCS) FROM THE PARKING AID MODULE (PAM) SELF-TEST

- Ignition ON.
- Using a scan tool, perform the Parking Aid Module (PAM) self-test.

Are any Diagnostic Trouble Codes (DTCs) recorded?

Yes	For DTC B1C30:73, GO to K2 For all other Diagnostic Trouble Codes (DTCs), REFER to the Parking Aid Module (PAM) DTC in this section.
No	GO to K4

K2 CHECK THE PARKING AID SWITCH FOR AN INTERNAL FAULT

- Ignition OFF.
- Disconnect Active Park Assist Switch.
- Ignition ON.

Using a scan tool clear the Parking Aid Module (PAM) Diagnostic Trouble Codes (DTCs).
- Perform the Parking Aid Module (PAM) self-test.

Is DTC B1C30:73 still present?

Yes	GO to K3
No	INSTALL a new active park assist switch. REFER to: Active Park Assist Switch (413-13B Parking Aid - Vehicles With: Active Park Assist, Removal and Installation).

K3 CHECK THE DISABLE CIRCUIT FOR A SHORT TO GROUND

- Ignition OFF.
- Disconnect Parking Aid Module (PAM) C4014A.
- Measure:

Positive Lead	Measurement / Action	Negative Lead
C4014A-4	Ω	—

Is the resistance greater than 10,000 ohms?

Yes	GO to K7
No	REPAIR the circuit.

K4 CHECK THE DISABLE CIRCUIT FOR AN OPEN

- Ignition OFF.
- Disconnect Active Park Assist Switch.
- Disconnect Parking Aid Module (PAM) C4014A.
- Measure:

Positive Lead	Measurement / Action	Negative Lead
C4014A-4	Ω	C2035-3

Is the resistance less than 3 ohms?

Yes	GO to K5
No	REPAIR the circuit.

K5 CHECK THE ACTIVE PARK ASSIST SWITCH GROUND CIRCUIT FOR AN OPEN

- Measure:

Positive Lead	Measurement / Action	Negative Lead

C2035-12	Ω	—

Is the resistance less than 3 ohms?

Yes	GO to K6
No	REPAIR the circuit.

K6 CHECK SYSTEM OPERATION WITH THE PARKING AID SWITCH BYPASSED

- Connect Parking Aid Module (PAM) C4014A.
- Ignition ON.
- While monitoring the IPC message center, connect a fused jumper wire between:

Lead 1	Measurement / Action	Lead 2
C2035-3		—

Does the parking aid disable function operate?

Yes	INSTALL a new active park assist switch. REFER to: Active Park Assist Switch (413-13B Parking Aid - Vehicles With: Active Park Assist, Removal and Installation).
No	GO to K7

K7 CHECK FOR CORRECT PARKING AID MODULE (PAM) OPERATION

- Ignition OFF.
- Disconnect and inspect all Parking Aid Module (PAM) connectors.
- Repair:
  - corrosion (install new connector or terminals - clean module pins)
  - damaged or bent pins - install new terminals/pins
  - pushed-out pins - install new pins as necessary
- Reconnect the Parking Aid Module (PAM) connectors. Make sure they seat and latch correctly.
- Operate the system and determine if the concern is still present.

Is the concern still present?

Yes	CHECK OASIS for any applicable Technical Service Bulletins (TSBs). If a TSB exists for this concern, DISCONTINUE this test and FOLLOW TSB instructions. If no Technical Service Bulletins (TSBs) address this concern, INSTALL a new Parking Aid Module (PAM). For the 4-door, REFER to: Parking Assist Control Module (PAM) - Vehicles With: 4-Door (413-13A Parking Aid, Removal and Installation). For the 5-door, REFER to: Parking Assist Control Module (PAM) - Vehicles With: 5-Door (413-13A Parking Aid, Removal and Installation).
No	The system is operating correctly at this time. Concern may have been caused by a loose or corroded connector. ADDRESS the root cause of any connector or pin issues.

U0100:87

Diagnostics in this manual assume a certain skill level and knowledge of Ford-specific diagnostic practices.
REFER to: Diagnostic Methods (100-00 General Information, Description and Operation).

Refer to Wiring Diagrams Cell 14 for schematic and connector information.

Normal Operation and Fault Conditions

The Parking Aid Module (PAM) communicates with the PCM through the High Speed Controller Area Network (HS-CAN).

DTC Fault Trigger Conditions

DTC	Description	Fault Trigger Conditions
U0100:87	Lost Communication With ECM/PCM "A": Missing Message	A continuous and on-demand DTC that sets when the Parking Aid Module (PAM) is unable to communicate with the PCM .

Possible Sources

- Communication concern
- Parking Aid Module (PAM)
- PCM

PINPOINT TEST L : U0100:87

L1 VERIFY THE CUSTOMER CONCERN

- Ignition ON.
- Verify that a vehicle session can be established using the scan tool.

Can a vehicle session be established?

Yes	GO to L2
No	DIAGNOSE the scan tool communication concern with the PCM . REFER to: Communications Network (418-00 Module Communications Network, Diagnosis and Testing).

L2 RECHECK THE PARKING AID MODULE (PAM) DIAGNOSTIC TROUBLE CODES (DTCS)

- Using a scan tool, clear the Diagnostic Trouble Codes (DTCs).
- Operate the system and test for normal operation.
- Check the Parking Aid Module (PAM) continuous memory Diagnostic Trouble Codes (DTCs).

Is DTC U0100:87 still present?

Yes	GO to L2
No	The system is operating correctly at this time. The DTC may have been set due to high network traffic or an intermittent fault condition.

L3 RETRIEVE THE RECORDED DIAGNOSTIC TROUBLE CODES (DTCS) FROM THE PCM (POWERTRAIN CONTROL MODULE) KOEO (KEY ON, ENGINE OFF) SELF-TEST

- Using a scan tool, perform the PCM KOEO self-test.

Are any Diagnostic Trouble Codes (DTCs) recorded?

Yes	For vehicles equipped with the 2.0L Duratec engine, REFER to: Electronic Engine Controls (303-14A Electronic Engine Controls - 2.0L Duratec-HE (125kW/170PS) - MI4, Diagnosis and Testing). For vehicles equipped with the 2.0L EcoBoost engine, REFER to: Electronic Engine Controls (303-14B Electronic Engine Controls - 2.0L EcoBoost (184kW/250PS) - MI4, Diagnosis and Testing).
No	GO to L4

L4 CHECK FOR BATTERY VOLTAGE OUT OF RANGE DIAGNOSTIC TROUBLE CODES (DTCS)

- Using a scan tool, retrieve the continuous memory Diagnostic Trouble Codes (DTCs) from all modules.

Is DTC U3003:62 set in the Parking Aid Module (PAM)?

Yes	GO to Pinpoint Test R
No	GO to L5

L5 CHECK FOR DIAGNOSTIC TROUBLE CODE (DTC) U0100:00 OR DIAGNOSTIC TROUBLE CODE (DTC) U0100:87 IN OTHER MODULES

- Using a scan tool, clear all Diagnostic Trouble Codes (DTCs).
- Ignition OFF.
- Wait 10 seconds.
- Ignition ON.
- Wait 10 seconds.
- Using a scan tool, retrieve the continuous memory Diagnostic Trouble Codes (DTCs) from all modules.

Is DTC U0100:00 or DTC U0100:87 set in any other module?

Yes	INSTALL a new PCM. For vehicles equipped with the 2.0L Duratec engine, REFER to: Electronic Engine Controls (303-14A Electronic Engine Controls - 2.0L Duratec-HE (125kW/170PS) - MI4, Diagnosis and Testing). For vehicles equipped with the 2.0L EcoBoost engine, REFER to: Electronic Engine Controls (303-14B Electronic Engine Controls - 2.0L EcoBoost (184kW/250PS) - MI4, Diagnosis and Testing).
No	GO to L6

L6 CHECK FOR CORRECT PARKING AID MODULE (PAM) OPERATION

- Ignition OFF.
- Disconnect and inspect all Parking Aid Module (PAM) connectors.
- Repair:

- corrosion (install new connector or terminals – clean module pins)
- damaged or bent pins – install new terminals/pins
- pushed-out pins – install new pins as necessary

- Reconnect the Parking Aid Module (PAM) connectors. Make sure they seat and latch correctly.
- Operate the system and determine if the concern is still present.

Is the concern still present?

Yes	CHECK OASIS for any applicable Technical Service Bulletins (TSBs). If a TSB exists for this concern, DISCONTINUE this test and FOLLOW TSB instructions. If no Technical Service Bulletins (TSBs) address this concern, INSTALL a new Parking Aid Module (PAM). For the 4-door, REFER to: Parking Assist Control Module (PAM) - Vehicles With: 4-Door (413-13A Parking Aid, Removal and Installation). For the 5-door, REFER to: Parking Assist Control Module (PAM) - Vehicles With: 5-Door (413-13A Parking Aid, Removal and Installation).
No	The system is operating correctly at this time. Concern may have been caused by a loose or corroded connector. ADDRESS the root cause of any connector or pin issues.

U0101:87

Diagnostics in this manual assume a certain skill level and knowledge of Ford-specific diagnostic practices.
REFER to: Diagnostic Methods (100-00 General Information, Description and Operation).

Refer to Wiring Diagrams Cell 14 for schematic and connector information.

Normal Operation and Fault Conditions

The Parking Aid Module (PAM) communicates with the TCM through the High Speed Controller Area Network (HS-CAN).

DTC Fault Trigger Conditions

DTC	Description	Fault Trigger Conditions
U0101:87	Lost Communication With TCM: Missing Message	A continuous and on-demand DTC that sets when the Parking Aid Module (PAM) is unable to communicate with the TCM for 0.5 seconds or more.

Possible Sources

- Communication concern
- TCM
- Parking Aid Module (PAM)

PINPOINT TEST M : U0101:87

M1 VERIFY THE CUSTOMER CONCERN

- Ignition ON.
- Verify that there is an observable symptom present.

Is an observable symptom present?

Yes	GO to M2
No	The system is operating normally at this time. The DTC may have been set due to high network traffic or an intermittent fault condition.

M2 CHECK THE COMMUNICATION NETWORK

- Ignition ON.
- Using a scan tool, perform the network test.

Does the TCM pass the network test?

Yes	GO to M3
No	DIAGNOSE the communicatoin concern with the TCM . REFER to: Communications Network (418-00 Module Communications Network, Diagnosis and Testing).

M3 RETRIEVE THE RECORDED DIAGNOSTIC TROUBLE CODES (DTCS) FROM THE TCM (TRANSMISSION CONTROL MODULE) SELF-TEST

- Using a scan tool, perform the TCM self-test.

Are any Diagnostic Trouble Codes (DTCs) present?

Yes	REFER to: Automatic Transmission (307-01 Automatic Transmission - Vehicles With: 6-Speed PowerShift Transmission - DPS6/6DCT250, Diagnosis and Testing).
No	GO to M4

M4 RECHECK THE PARKING AID MODULE (PAM) DIAGNOSTIC TROUBLE CODES (DTCS)

- Using a scan tool, clear the Diagnostic Trouble Codes (DTCs).
- Operate the system and test the system for normal operation.
- Check the Parking Aid Module (PAM) Diagnostic Trouble Codes (DTCs).

Is DTC U0101:87 still present?

Yes	GO to M5
No	The system is operating correctly at this time. The DTC may have been set due to high network traffic or an intermittent fault condition.

M5 CHECK FOR BATTERY VOLTAGE OUT OF RANGE DIAGNOSTIC TROUBLE CODES (DTCS)

- Using a scan tool, retrieve the continuous memory Diagnostic Trouble Codes (DTCs).

Is DTC U3003:62 set in the Parking Aid Module (PAM)?

Yes	GO to Pinpoint Test R
No	GO to M6

M6 CHECK FOR DIAGNOSTIC TROUBLE CODE (DTC) U0101:00 OR DIAGNOSTIC TROUBLE CODE (DTC) U0101:87 IN OTHER MODULES

- Using a scan tool, clear all Diagnostic Trouble Codes (DTCs).
- Ignition OFF.
- Wait 10 seconds.
- Ignition ON.
- Wait 10 seconds.
- Using a scan tool, retrieve the continuous memory Diagnostic Trouble Codes (DTCs) from all modules.

Is DTC U0101:00 or DTC U0101:87 set in any other modules?

Yes	INSTALL a new TCM . REFER to: Transmission Control Module (TCM) (307-01 Automatic Transmission - Vehicles With: 6-Speed PowerShift Transmission - DPS6/6DCT250, Removal and Installation).
No	GO to M7

M7 CHECK FOR CORRECT PARKING AID MODULE (PAM) OPERATION

- Ignition OFF.
- Disconnect and inspect all Parking Aid Module (PAM) connectors.
- Repair:
  - corrosion (install new connector or terminals – clean module pins)
  - damaged or bent pins – install new terminals/pins
  - pushed-out pins – install new pins as necessary
- Reconnect the Parking Aid Module (PAM) connectors. Make sure they seat and latch correctly.
- Operate the system and determine if the concern is still present.

Is the concern still present?

Yes	CHECK OASIS for any applicable Technical Service Bulletins (TSBs). If a TSB exists for this concern, DISCONTINUE this test and FOLLOW TSB qinstructions. If no Technical Service Bulletins (TSBs) address this concern, INSTALL a new Parking Aid Module (PAM). For the 4-door, REFER to: Parking Assist Control Module (PAM) - Vehicles With: 4-Door (413-13A Parking Aid, Removal and Installation). For the 5-door, REFER to: Parking Assist Control Module (PAM) - Vehicles With: 5-Door (413-13A Parking Aid, Removal and Installation).
No	The system is operating correctly at this time. Concern may have been caused by a loose or corroded connector. ADDRESS the root cause of any connector or pin issues.

U0121:87

Diagnostics in this manual assume a certain skill level and knowledge of Ford-specific diagnostic practices.
REFER to: Diagnostic Methods (100-00 General Information, Description and Operation).

Refer to Wiring Diagrams Cell 14 for schematic and connector information.

Normal Operation and Fault Conditions

The Parking Aid Module (PAM) communicates with the ABS module through the High Speed Controller Area Network (HS-CAN).

DTC Fault Trigger Conditions

DTC	Description	Fault Trigger Conditions
U0121:87	Lost Communication With Anti-Lock Brake System (ABS) Control Module: Missing Message	A continuous and on-demand DTC that sets when the Parking Aid Module (PAM) is unable to communicate with the ABS module for 0.5 seconds or more.

Possible Sources

- Communication concern
- ABS module
- Parking Aid Module (PAM)

PINPOINT TEST N : U0121:87

N1 VERIFY THE CUSTOMER CONCERN

- Ignition ON.
- Verify that there is an observable symptom present.

Is an observable symptom present?

Yes	GO to N2
No	The system is operating normally at this time. The DTC may have been set due to high network traffic or an intermittent fault condition.

N2 CHECK THE COMMUNICATION NETWORK

- Ignition ON.
- Using a scan tool, perform the network test.

Does the ABS module pass the network test?

Yes	GO to N4
No	DIAGNOSE no communication with the ABS module. REFER to: Communications Network (418-00 Module Communications Network, Diagnosis and Testing).

N3 RETRIEVE THE RECORDED DIAGNOSTIC TROUBLE CODES (DTCS) FROM THE ABS (ANTI-LOCK BRAKE SYSTEM) MODULE SELF-TEST

- Using a scan tool, perform the ABS module self-test.

Are any Diagnostic Trouble Codes (DTCs) present?

Yes	REFER to: Anti-Lock Brake System (ABS) and Stability Control (206-09 Anti-Lock Brake System (ABS) and Stability Control, Diagnosis and Testing).
No	GO to N4

N4 RECHECK THE PARKING AID MODULE (PAM) DIAGNOSTIC TROUBLE CODES (DTCS)

- Using a scan tool, clear the Diagnostic Trouble Codes (DTCs).
- Operate the system and test the system for normal operation.
- Using a scan tool, repeat the Parking Aid Module (PAM) self-test.

Is DTC U0121:87 still present?

Yes	GO to N5
No	The system is operating correctly at this time. The DTC may have been set due to high network traffic or an intermittent fault condition.

N5 CHECK FOR BATTERY VOLTAGE OUT OF RANGE DIAGNOSTIC TROUBLE CODES (DTCS)

- Using a scan tool, retrieve the continuous memory Diagnostic Trouble Codes (DTCs).

Is DTC U3003:62 set in the Parking Aid Module (PAM)?

Yes	GO to Pinpoint Test R
No	GO to N6

N6 CHECK FOR DIAGNOSTIC TROUBLE CODE (DTC) U0121:00 OR DIAGNOSTIC TROUBLE CODE (DTC) U0121:87 IN OTHER MODULES

- Using a scan tool, clear all Diagnostic Trouble Codes (DTCs).
- Ignition OFF.
- Wait 10 seconds.
- Ignition ON.
- Wait 10 seconds.
- Using a scan tool, retrieve the continuous memory Diagnostic Trouble Codes (DTCs) from all modules.

Is DTC U0121:00 or DTC U0121:87 set in any other module?

Yes	INSTALL a new ABS module. REFER to: Hydraulic Control Unit (HCU) (206-09 Anti-Lock Brake System (ABS) and Stability Control, Removal and Installation).
No	GO to N7

N7 CHECK FOR CORRECT PARKING AID MODULE (PAM) OPERATION

- Ignition OFF.
- Disconnect and inspect all Parking Aid Module (PAM) connectors.
- Repair:
  - corrosion (install new connector or terminals – clean module pins)
  - damaged or bent pins – install new terminals/pins
  - pushed-out pins – install new pins as necessary
- Reconnect the Parking Aid Module (PAM) connectors. Make sure they seat and latch correctly.
- Operate the system and determine if the concern is still present.

Is the concern still present?

Yes	CHECK OASIS for any applicable Technical Service Bulletins (TSBs). If a TSB exists for this concern,

	DISCONTINUE this test and FOLLOW TSB instructions. If no Technical Service Bulletins (TSBs) address this concern, INSTALL a new Parking Aid Module (PAM). For the 4-door, REFER to: Parking Assist Control Module (PAM) - Vehicles With: 4-Door (413-13A Parking Aid, Removal and Installation). For the 5-door, REFER to: Parking Assist Control Module (PAM) - Vehicles With: 5-Door (413-13A Parking Aid, Removal and Installation).
No	The system is operating correctly at this time. Concern may have been caused by a loose or corroded connector. ADDRESS the root cause of any connector or pin issues.

U0126:87

Diagnostics in this manual assume a certain skill level and knowledge of Ford-specific diagnostic practices.
REFER to: Diagnostic Methods (100-00 General Information, Description and Operation).

Refer to Wiring Diagrams Cell 14 for schematic and connector information.

Normal Operation and Fault Conditions

The Parking Aid Module (PAM) communicates with the SASM through the High Speed Controller Area Network (HS-CAN).

DTC Fault Trigger Conditions

DTC	Description	Fault Trigger Conditions
U0126:87	Lost Communication With Steering Angle Sensor Module: Missing Message	Sets if the Parking Aid Module (PAM) if is unable to communicate with the SASM for 0.5 seconds or more after the active park assist system has been activated.

Possible Sources

- Communication concern
- SASM
- Parking Aid Module (PAM)

PINPOINT TEST O : U0126:87

O1 VERIFY THE CUSTOMER CONCERN

- Ignition ON.
- Verify that there is an observable symptom present.

Is an observable symptom present?

Yes	GO to O2
No	The system is operating normally at this time. The DTC may have been set due to high network traffic or an intermittent fault condition.

O2 CHECK THE COMMUNICATION NETWORK

- Ignition ON.
- Using a scan tool, perform the network test.

Does the SASM pass the network test?

Yes	GO to O4
No	DIAGNOSE no communication with the SASM . REFER to: Communications Network (418-00 Module Communications Network, Diagnosis and Testing).

O3 RETRIEVE THE RECORDED DIAGNOSTIC TROUBLE CODES (DTCS) FROM THE SASM (STEERING ANGLE SENSOR MODULE) SELF-TEST

- Using a scan tool, perform the SASM self-test.

Are any Diagnostic Trouble Codes (DTCs) recorded?

Yes	REFER to: Steering Wheel and Column Electrical Components (211-05 Steering Column Switches, Diagnosis and Testing).
No	GO to O4

O4 RECHECK THE PARKING AID MODULE (PAM) DIAGNOSTIC TROUBLE CODES (DTCS)

- Using a scan tool, clear the Diagnostic Trouble Codes (DTCs).
- Operate the system and test the system for normal operation.
- Using a scan tool, repeat the Parking Aid Module (PAM) self-test.

Is DTC U0126:87 still present?

Yes	GO to O5
No	The system is operating correctly at this time. The DTC may have been set due to high network traffic or an intermittent fault condition.

O5 CHECK FOR BATTERY VOLTAGE OUT OF RANGE DIAGNOSTIC TROUBLE CODES (DTCS)

- Using a scan tool, retrieve the continuous memory Diagnostic Trouble Codes (DTCs) from all modules.

Is DTC U3003:62 set in the Parking Aid Module (PAM)?

Yes	GO to Pinpoint Test R
No	GO to O6

O6 CHECK FOR DIAGNOSTIC TROUBLE CODE (DTC) U0126:00 OR DIAGNOSTIC TROUBLE CODE (DTC) U0126:87 IN OTHER MODULES

- Using a scan tool, clear all Diagnostic Trouble Codes (DTCs).
- Ignition OFF.
- Wait 10 seconds.
- Ignition ON.
- Wait 10 seconds.

- Using a scan tool, retrieve the continuous memory Diagnostic Trouble Codes (DTCs) from all modules.

Is DTC U0126:00 or DTC U0126:87 set in any other module?

Yes	INSTALL a new SASM . REFER to: Steering Angle Sensor Module (SASM) (211-05 Steering Column Switches, Removal and Installation).
No	GO to O7

O7 CHECK FOR CORRECT PARKING AID MODULE (PAM) OPERATION

- Ignition OFF.
- Disconnect and inspect all Parking Aid Module (PAM) connectors.
- Repair:
  - corrosion (install new connector or terminals – clean module pins)
  - damaged or bent pins – install new terminals/pins
  - pushed-out pins – install new pins as necessary
- Reconnect the Parking Aid Module (PAM) connectors. Make sure they seat and latch correctly.
- Operate the system and determine if the concern is still present.

Is the concern still present?

Yes	CHECK OASIS for any applicable Technical Service Bulletins (TSBs). If a TSB exists for this concern, DISCONTINUE this test and FOLLOW TSB instructions. If no Technical Service Bulletins (TSBs) address this concern, INSTALL a new Parking Aid Module (PAM). For the 4-door, REFER to: Parking Assist Control Module (PAM) - Vehicles With: 4-Door (413-13A Parking Aid, Removal and Installation). For the 5-door, REFER to: Parking Assist Control Module (PAM) - Vehicles With: 5-Door (413-13A Parking Aid, Removal and Installation).
No	The system is operating correctly at this time. Concern may have been caused by a loose or corroded connector. ADDRESS the root cause of any connector or pin issues.

U0131:87

Diagnostics in this manual assume a certain skill level and knowledge of Ford-specific diagnostic practices.
REFER to: Diagnostic Methods (100-00 General Information, Description and Operation).

Refer to Wiring Diagrams Cell 14 for schematic and connector information.

Normal Operation and Fault Conditions

The Parking Aid Module (PAM) communicates with the PSCM through the High Speed Controller Area Network (HS-CAN).

DTC Fault Trigger Conditions

DTC	Description	Fault Trigger Conditions
U0131:87	Lost Communication With Power Steering Control Module: Missing Message	Sets if the Parking Aid Module (PAM) if is unable to communicate with the PSCM for 0.5 seconds or more after the active park assist system has been activated.

Possible Sources

- Communication concern
- PSCM
- Parking Aid Module (PAM)

PINPOINT TEST P : U0131:87

P1 VERIFY THE CUSTOMER CONCERN

- Ignition ON.
- Verify that there is an observable symptom present.

Is an observable symptom present?

Yes	GO to P2
No	The system is operating normally at this time. The DTC may have been set due to high network traffic or an intermittent fault condition.

P2 CHECK THE COMMUNICATION NETWORK

- Ignition ON.
- Using a scan tool, perform the network test.

Does the PSCM pass the network test?

Yes	GO to P3
No	DIAGNOSE no communication with the PSCM . REFER to: Communications Network (418-00 Module Communications Network, Diagnosis and Testing).

P3 RETRIEVE THE RECORDED DIAGNOSTIC TROUBLE CODES (DTCS) FROM THE PSCM (POWER STEERING CONTROL MODULE) SELF-TEST

- Using a scan tool, perform the PSCM self-test.

Are any Diagnostic Trouble Codes (DTCs) recorded?

Yes	REFER to: Power Steering (211-02 Power Steering, Diagnosis and Testing).
No	GO to P4

P4 RECHECK THE PARKING AID MODULE (PAM) DIAGNOSTIC TROUBLE CODES (DTCS)

- Using a scan tool, clear the Diagnostic Trouble Codes (DTCs).
- Operate the system and test the system for normal operation.
- Using a scan tool, repeat the Parking Aid Module (PAM) self-test.

Is DTC U0131:87 still present?

Yes	GO to P5
No	The system is operating correctly at this time. The DTC may have been set due to high network traffic or an intermittent fault condition.

P5 CHECK FOR BATTERY VOLTAGE OUT OF RANGE DIAGNOSTIC TROUBLE CODES (DTCS)

- Using a scan tool, retrieve the continuous memory Diagnostic Trouble Codes (DTCs) from all modules.

Is DTC U3003:62 set in the Parking Aid Module (PAM)?

Yes	GO to Pinpoint Test R
No	GO to P6

P6 CHECK FOR DIAGNOSTIC TROUBLE CODE (DTC) U0131:00 OR DIAGNOSTIC TROUBLE CODE (DTC) U0131:87 IN OTHER MODULES

- Using a scan tool, clear all Diagnostic Trouble Codes (DTCs).
- Ignition OFF.
- Wait 10 seconds.
- Ignition ON.
- Wait 10 seconds.
- Using a scan tool, retrieve the continuous memory Diagnostic Trouble Codes (DTCs) from all modules.

Is DTC U0131:00 or DTC U0131:87 set in any other module?

Yes	INSTALL a new PSCM . REFER to: Steering Gear (211-02 Power Steering, Removal and Installation).
No	GO to P7

P7 CHECK FOR CORRECT PARKING AID MODULE (PAM) OPERATION

- Ignition OFF.
- Disconnect and inspect all Parking Aid Module (PAM) connectors.
- Repair:
  - corrosion (install new connector or terminals – clean module pins)
  - damaged or bent pins – install new terminals/pins
  - pushed-out pins – install new pins as necessary
- Reconnect the Parking Aid Module (PAM) connectors. Make sure they seat and latch correctly.
- Operate the system and determine if the concern is still present.

Is the concern still present?

Yes	CHECK OASIS for any applicable Technical Service Bulletins (TSBs). If a TSB exists for this concern, DISCONTINUE this test and FOLLOW TSB instructions. If no Technical Service Bulletins (TSBs) address this concern, INSTALL a new Parking Aid Module (PAM). For the 4-door, REFER to: Parking Assist Control Module (PAM) - Vehicles With: 4-Door (413-13A Parking Aid, Removal and Installation). For the 5-door, REFER to: Parking Assist Control Module (PAM) - Vehicles With: 5-Door (413-13A Parking Aid, Removal and Installation).
No	The system is operating correctly at this time. Concern may have been caused by a loose or corroded connector. ADDRESS the root cause of any connector or pin issues.

U0140:87

Diagnostics in this manual assume a certain skill level and knowledge of Ford-specific diagnostic practices.
REFER to: Diagnostic Methods (100-00 General Information, Description and Operation).

Refer to Wiring Diagrams Cell 14 for schematic and connector information.

Normal Operation and Fault Conditions

The Parking Aid Module (PAM) communicates with the BCM through the High Speed Controller Area Network (HS-CAN).

DTC Fault Trigger Conditions

DTC	Description	Fault Trigger Conditions
U0140:87	Lost Communication With Body Control Module: Missing Message	A continuous and on-demand DTC that sets when the Parking Aid Module (PAM) is unable to communicate with the BCM for 0.5 seconds or more.

Possible Sources

- Communication concern
- BCM
- Parking Aid Module (PAM)

PINPOINT TEST Q : U0140:87

Q1 VERIFY THE CUSTOMER CONCERN

- Ignition ON.
- Verify that there is an observable symptom present.

Is an observable symptom present?

Yes	GO to Q2
No	The system is operating normally at this time. The DTC may have been set due to high network traffic or an intermittent fault condition.

Q2 CHECK THE COMMUNICATION NETWORK

- Ignition ON.
- Using a scan tool, perform the network test.

Does the BCM pass the network test?

Yes	GO to Q4
No	DIAGNOSE no communication with the BCM . REFER to: Communications Network (418-00 Module Communications Network, Diagnosis and Testing).

Q3 RETRIEVE THE RECORDED DIAGNOSTIC TROUBLE CODES (DTCS) FROM THE BCM (BODY CONTROL MODULE) SELF-TEST

- Using a scan tool, perform the BCM self-test.

Are any Diagnostic Trouble Codes (DTCs) recorded?

Yes	REFER to: Body Control Module (BCM) (419-10 Multifunction Electronic Modules, Diagnosis and Testing).
No	GO to Q4

Q4 RECHECK THE PARKING AID MODULE (PAM) DIAGNOSTIC TROUBLE CODES (DTCS)

- Using a scan tool, clear the Diagnostic Trouble Codes (DTCs).
- Operate the system and test the system for normal operation.
- Using a scan tool, repeat the Parking Aid Module (PAM) self-test.

Is DTC U0140:87 still present?

Yes	GO to Q5
No	The system is operating correctly at this time. The DTC may have been set due to high network traffic or an intermittent fault condition.

Q5 CHECK FOR BATTERY VOLTAGE OUT OF RANGE DIAGNOSTIC TROUBLE CODES (DTCS)

- Using a scan tool, retrieve the continuous memory Diagnostic Trouble Codes (DTCs) from all modules.

Is DTC U3003:62 set in the Parking Aid Module (PAM)?

Yes	GO to Pinpoint Test R
No	GO to Q6

Q6 CHECK FOR DIAGNOSTIC TROUBLE CODE (DTC) U0140:00 OR DIAGNOSTIC TROUBLE CODE (DTC) U0140:87 IN OTHER MODULES

- Using a scan tool, clear all Diagnostic Trouble Codes (DTCs).
- Ignition OFF.
- Wait 10 seconds.
- Ignition ON.
- Wait 10 seconds.
- Using a scan tool, retrieve the continuous memory Diagnostic Trouble Codes (DTCs) from all modules.

Is DTC U0140:00 or U0140:87 set in any other module?

Yes	INSTALL a new BCM. REFER to: Body Control Module (BCM) (419-10 Multifunction Electronic Modules, Removal and Installation).
No	GO to Q7

Q7 CHECK FOR CORRECT PARKING AID MODULE (PAM) OPERATION

- Ignition OFF.
- Disconnect and inspect all Parking Aid Module (PAM) connectors.
- Repair:
  - corrosion (install new connector or terminals – clean module pins)
  - damaged or bent pins – install new terminals/pins
  - pushed-out pins – install new pins as necessary
- Reconnect the Parking Aid Module (PAM) connectors. Make sure they seat and latch correctly.
- Operate the system and determine if the concern is still present.

Is the concern still present?

Yes	CHECK OASIS for any applicable Technical Service Bulletins (TSBs). If a TSB exists for this concern, DISCONTINUE this test and FOLLOW TSB instructions. If no Technical Service Bulletins (TSBs) address this concern, INSTALL a new Parking Aid Module (PAM). For the 4-door, REFER to: Parking Assist Control Module (PAM) - Vehicles With: 4-Door (413-13A Parking Aid, Removal and Installation). For the 5-door, REFER to: Parking Assist Control Module (PAM) - Vehicles With: 5-Door (413-13A Parking Aid, Removal and Installation).
No	The system is operating correctly at this time. Concern may have been caused by a loose or corroded connector. ADDRESS the root cause of any connector or pin issues.

U3003:62

Diagnostics in this manual assume a certain skill level and knowledge of Ford-specific diagnostic practices.
REFER to: Diagnostic Methods (100-00 General Information, Description and Operation).

Refer to Wiring Diagrams Cell 131 for schematic and connector information.

Normal Operation and Fault Conditions

The Parking Aid Module (PAM) receives voltage from RJB fuse 30 (5A).

DTC Fault Trigger Conditions

DTC	Description	Fault Trigger Conditions
U3003:62	Battery Voltage: Signal Compare Failure	A continuous and on-demand DTC that sets in the BCM when battery voltage above 15.9 volts is detected.

Possible Sources

- Charging system concern.
- Parking Aid Module (PAM)

PINPOINT TEST R : U3003:62

R1 CHECK FOR HIGH VOLTAGE DIAGNOSTIC TROUBLE CODES (DTCS) SET IN OTHER MODULES

Ignition ON.
- Retrieve all continuous Diagnostic Trouble Codes (DTCs) from all modules.

Are high voltage Diagnostic Trouble Codes (DTCs) (e.g. B1317, B1676, P0563) set in more than one module?

Yes	For vehicles equipped with the 2.0L Duratec engine, REFER to: Charging System - 2.0L Duratec-HE (125kW/170PS) - MI4 (414-00 Charging System - General Information, Diagnosis and Testing). For vehicles equipped with a 2.0L EcoBoost engine, REFER to: Charging System - 2.0L EcoBoost (184kW/250PS) - MI4 (414-00 Charging System - General Information, Diagnosis and Testing).
No	GO to R2

R2 CHECK THE BATTERY VOLTAGE

- Turn off all interior/exterior lights and accessories.
- Start and run the engine at approximately 2,000 Revolutions Per Minute (RPM) for 3 minutes while monitoring the battery voltage.

Does the battery voltage rise to 15.9 volts or higher?

Yes	DIAGNOSE the charging system. For vehicles equipped with the 2.0L Duratec engine, REFER to: Charging System - 2.0L Duratec-HE (125kW/170PS) - MI4 (414-00 Charging System - General Information, Diagnosis and Testing). For vehicles equipped with a 2.0L EcoBoost engine, REFER to: Charging System - 2.0L EcoBoost (184kW/250PS) - MI4 (414-00 Charging System - General Information, Diagnosis and Testing).
No	GO to R3

R3 RECHECK FOR DIAGNOSTIC TROUBLE CODES (DTCS) U3003:62

- Turn the engine off.
- Ignition ON.
- Using a scan tool, clear the Parking Aid Module (PAM) Diagnostic Trouble Codes (DTCs).
- Using a scan tool, perform the Parking Aid Module (PAM) self-test.

Is Diagnostic Trouble Code (DTC) U3003:62 present?

Yes	INSTALL a new Parking Aid Module (PAM). For the 4-door, REFER to: Parking Assist Control Module (PAM) - Vehicles With: 4-Door (413-13A Parking Aid, Removal and Installation). For the 5-door, REFER to: Parking Assist Control Module (PAM) - Vehicles With: 5-Door (413-13A Parking Aid, Removal and Installation).
No	The system is operating normally at this time. The Diagnostic Trouble Code (DTC) may have been set previously during battery charging or while jump starting the vehicle.

The Rear Video Is Inoperative

Diagnostics in this manual assume a certain skill level and knowledge of Ford-specific diagnostic practices.
REFER to: Diagnostic Methods (100-00 General Information, Description and Operation).

Refer to Wiring Diagrams Cell 131 for schematic and connector information.

Normal Operation and Fault Conditions

See Image Display.
REFER to: Parking Aid - System Operation and Component Description (413-13B Parking Aid - Vehicles With: Active Park Assist, Description and Operation).

Image Processing Module - B (IPM-B) DTC Fault Trigger Conditions

DTC	Description	Fault Trigger Conditions
B115E:08	Camera Module: Bus Signal/Message Failure	An on-demand DTC that sets in the Image Processing Module - B (IPM-B) when there is a LIN communication fault from the video camera.

APIM DTC Fault Trigger Conditions

DTC	Description	Fault Trigger Conditions
C1001:01	Vision System Camera: General Electrical Failure	A continuous DTC that sets in the APIM when no video signal is detected from the video camera when the vehicle is in REVERSE.

FCDIM DTC Fault Trigger Conditions

DTC	Description	Fault Trigger Conditions
C1001:01	Vision System Camera: General Electrical Failure	A continuous and on-demand DTC that sets in the FCDIM when no video signal is detected from the video camera when the vehicle is in REVERSE.

Possible Sources

- Wiring, terminals or connectors
- Video camera
- FCDIM (vehicles with 4.2-inch (107-mm) display)
- FDIM (vehicles with 8-inch (203-mm) touchscreen
- BCM
- Image Processing Module - B (IPM-B)

Visual Inspection and Diagnostic Pre-checks

Verify that the manual zoom feature is enabled.

PINPOINT TEST S : THE REAR VIDEO IS INOPERATIVE

S1 CHECK THE DIAGNOSTIC TROUBLE CODES (DTCS) FROM THE IMAGE PROCESSING MODULE - B (IPM-B) SELF-TEST

- Using a scan tool, perform the Image Processing Module - B (IPM-B) self-test.

Are any Diagnostic Trouble Codes (DTCs) retrieved?

Yes	For DTC B115E:08, GO to S7 For all other Diagnostic Trouble Codes (DTCs), REFER to the Image Processing Module - B (IPM-B) DTC chart in this section.
No	If the vehicle is equipped with an 8-inch (203-mm) touchscreen, GO to S2 If the vehicle is equipped with a 4.2-inch (107-mm) display, GO to S3

S2 CHECK FOR DIAGNOSTIC TROUBLE CODES (DTCS) FROM THE ACCESSORY PROTOCOL INTERFACE MODULE (APIM) SELF-TEST

- Using a scan tool, perform the APIM self-test.

Are any Diagnostic Trouble Codes (DTCs) retrieved?

Yes	For DTC C1001:01, GO to S7 For all other APIM Diagnostic Trouble Codes, Refer to the appropriate section in Group 415 for the procedure.
No	GO to S4

S3 CHECK FOR DIAGNOSTIC TROUBLE CODES (DTCS) FROM THE FRONT CONTROL DISPLAY INTERFACE MODULE (FCDIM) SELF-TEST

- Using a scan tool, perform the FCDIM self-test.

Are any Diagnostic Trouble Codes (DTCs) retrieved?

Yes	For DTC C1001:01, GO to S7 For all other FCDIM Diagnostic Trouble Codes, REFER to: Information and Entertainment System (415-00B Information and Entertainment System - General Information - Vehicles With: AM/FM/CD/SYNC, Diagnosis and Testing).
No	GO to S4

S4 CHECK AND CLEAN THE REAR VIDEO CAMERA LENS

- Clean and make sure the rear video camera lens is clear of any debris.
- Test the video camera system and verify the video camera image.

Is the video camera concern still present?

Yes	GO to S5
No	The system is operating correctly at this time. The concern was caused by a dirty video camera lens.

S5 CHECK THE REVERSING LAMPS OPERATION

Check the operation of the reversing lamps.

Do the reversing lamps operate correctly?

Yes	GO to S6
No	DIAGNOSE the reverse lamps. PREF 417-01

S6 CHECK THE IMAGE DISPLAY

- Observe the FDIM (with 8-inch (203mm) touchscreen) or the FCDIM (with 4.2-inch (107mm) display) while placing the vehicle in reverse.
- Wait 30 seconds.

Does the FDIM or FCDIM switch to video camera mode and display "Rear Video Camera is Unavailable Please Contact Your Dealership"?

Yes	GO to S7
No	DIAGNOSE the FDIM or FCDIM . Refer to the appropriate section in Group 415 for the procedure.

S7 CHECK THE SUPPLY VOLTAGE TO THE VIDEO CAMERA

- Ignition OFF.
- Disconnect: Video Camera.
- Ignition ON.
- Measure:

Positive Lead	Measurement / Action	Negative Lead
C4357-1	V	—

Is the voltage greater than 11 volts?

Yes	GO to S10
No	GO to S8

S8 CHECK THE VOLTAGE SUPPLY CIRCUIT TO THE VIDEO CAMERA FOR AN OPEN

- Ignition OFF.
- Disconnect: Image Processing Module - B (IPM-B)
- Measure:

Positive Lead	Measurement / Action	Negative Lead
C4402-8	Ω	C4357-1

Is the resistance less than 3 ohms?

Yes	GO to S9
No	REPAIR the circuit.

S9 CHECK THE VOLTAGE SUPPLY CIRCUIT TO THE VIDEO CAMERA FOR A SHORT TO GROUND

- Measure:

Positive Lead	Measurement / Action	Negative Lead
C4357-1	Ω	—

Is the resistance greater than 10,000 ohms?

Yes	GO to S19
No	REPAIR the affected circuit.

S10 CHECK THE VIDEO CAMERA SIGNAL CIRCUITS FOR A SHORT TO GROUND

- Disconnect: APIM C2383 (if equpped with 8-inch (203-mm) touchscreen).
- Disconnect: FCDIM C2123 (if equpped with 4.2-inch (107-mm) display)
- Measure:

Positive Lead	Measurement / Action	Negative Lead
C4357-4	Ω	—
C4357-3	Ω	—

Are the resistances greater than 10,000 ohms?

Yes	GO to S11
No	REPAIR the circuit in question.

S11 CHECK THE VIDEO CAMERA VIDEO SIGNAL CIRCUITS FOR A SHORT TO VIDEO SHIELD

- Measure:

Positive Lead	Measurement / Action	Negative Lead
C4357-4	Ω	C4357-6
C4357-3	Ω	C4357-6

Are the resistances greater than 10,000 ohms?

Yes	GO to S12
No	REPAIR the circuit in question.

S12 CHECK THE VIDEO CAMERA VIDEO SIGNAL CIRCUITS FOR A SHORT TO VOLTAGE

- Ignition ON.
- Measure:

Positive Lead	Measurement / Action	Negative Lead
C4357-4		—
C4357-3		—

Is any voltage present?

Yes	REPAIR the circuit in question.
No	GO to S13

S13 CHECK VIDEO SIGNAL CIRCUITS FOR AN OPEN

- Ignition OFF.
- Connect a fused jumper wire:

Lead 1	Measurement / Action	Lead 2
C4357-4		C4357-3

- Measure:

Vehicles with 8-inch (203-mm) touchscreen

Positive Lead	Measurement / Action	Negative Lead
C2383-14	Ω	C2383-15

Vehicles with 4.2-inch (107-mm) display

Positive Lead	Measurement / Action	Negative Lead
C2123-6	Ω	C2123-12

Is the resistance less than 3 ohms?

Yes	GO to S15
No	GO to S14

S14 CHECK VIDEO (+) SIGNAL CIRCUIT FOR AN OPEN

- Measure:

Vehicles with 8-inch (203-mm) touchscreen

Positive Lead	Measurement / Action	Negative Lead
C4357-4	Ω	C2383-14

Vehicles with 4.2-inch (107-mm) display

Positive Lead	Measurement / Action	Negative Lead
C4357-4	Ω	C2123-6

Is the resistance less than 3 ohms?

Yes	REPAIR the video (-) circuit.
No	REPAIR the video (+) circuit.

S15 CHECK THE LOCAL INTERCONNECT NETWORK (LIN) CIRCUIT FOR AN OPEN

- Ignition OFF.
- Disconnect: Video Camera.
- Disconnect: Image Processing Module - B (IPM-B).
- Measure:

Positive Lead	Measurement / Action	Negative Lead
C4357-2	Ω	C4402-6

Is resistance less than 3 ohms ?

Yes	GO to S16
No	REPAIR the circuit.

S16 CHECK THE LOCAL INTERCONNECT NETWORK (LIN) CIRCUIT FOR A SHORT TO GROUND

- Measure:

Positive Lead	Measurement / Action	Negative Lead
C4357-2	Ω	—

Is resistance greater than 10,000 ohms?

Yes	GO to S17
No	REPAIR the circuit.

S17 CHECK THE LOCAL INTERCONNECT NETWORK (LIN) CIRCUIT FOR A SHORT TO VOLTAGE

- Ignition ON.
- Measure:

Positive Lead	Measurement / Action	Negative Lead
C4357-2	V	—

Is any voltage present?

Yes	REPAIR the circuit.
No	GO to S18

S18 CHECK FOR CORRECT VIDEO CAMERA OPERATION

- Ignition OFF.
- Disconnect and inspect the video camera connector.
- Repair:
  - corrosion (install new connector or terminals – clean module pins)
  - damaged or bent pins – install new terminals/pins
  - pushed-out pins – install new pins as necessary
- Reconnect the video camera connector. Make sure it seats correctly.
- Operate the system and determine if the concern is still present.

Is the concern still present?

Yes	CHECK OASIS for any applicable Technical Service Bulletins (TSBs). If a TSB exists for this concern, DISCONTINUE this test and FOLLOW TSB instructions. If no Technical Service Bulletins (TSBs) address this concern, INSTALL a new video camera. For the 4-door, REFER to: Parking Aid Camera - Vehicles With: 4-Door (413-13A Parking Aid, Removal and Installation). For the 5-door, REFER to: Parking Aid Camera - Vehicles With: 5-Door (413-13A Parking Aid, Removal and Installation).
No	The system is operating correctly at this time. Concern may have been caused by a loose or corroded connector. ADDRESS the root cause of any connector or pin issues.

S19 CHECK FOR CORRECT IMAGE PROCESSING MODULE - B (IPM-B) OPERATION

- Ignition OFF.
- Disconnect and inspect the Image Processing Module - B (IPM-B) connector.
- Repair:
  - corrosion (install new connector or terminals – clean module pins)
  - damaged or bent pins – install new terminals/pins
  - pushed-out pins – install new pins as necessary
- Reconnect the Image Processing Module - B (IPM-B) connector. Make sure it seats and latches correctly.
- Operate the system and determine if the concern is still present.

Is the concern still present?

Yes	CHECK OASIS for any applicable Technical Service Bulletins (TSBs). If a TSB exists for this concern, DISCONTINUE this test and FOLLOW TSB instructions. If no Technical Service Bulletins (TSBs) address this concern, INSTALL a new Image Processing Module - B (IPM-B). For the 4-door, REFER to: Image Processing Module B (IPMB) - Vehicles With: 4-Door (413-13A Parking Aid, Removal and Installation). For the 5-door, REFER to: Image Processing Module B (IPMB) - Vehicles With: 5-Door (413-13A Parking Aid, Removal and Installation).
No	The system is operating correctly at this time. Concern may have been caused by a loose or corroded connector. ADDRESS the root cause of any connector or pin issues.

Poor Image Quality

Diagnostics in this manual assume a certain skill level and knowledge of Ford-specific diagnostic practices.
REFER to: Diagnostic Methods (100-00 General Information, Description and Operation).

Refer to Wiring Diagrams Cell 131 for schematic and connector information.

Normal Operation and Fault Conditions

See Image Display.
REFER to: Parking Aid - System Operation and Component Description (413-13A Parking Aid, Description and Operation).

Possible Sources

- Wiring, terminals or connectors
- Video camera

Visual Inspection and Diagnostic Pre-checks

Clean and make sure the rear video camera lens is clear of any debris.

PINPOINT TEST T : POOR IMAGE QUALITY

T1 CHECK THE VIDEO (+) AND (-) SIGNAL CIRCUITS INTEGRITY

- Ignition OFF.
- Disconnect: APIM (Vehicles with 8-inch (203-mm) touchscreen).
- Disconnect: FCDIM (Vehciles with 4.2-inch (107-mm) display).
- Measure:

Vehicles with 8-inch (203-mm) touchscreen

Positive Lead	Measurement / Action	Negative Lead
	Ω	

C2383-14		C2383-15

Vehicles with 4.2-inch (107-mm) dispaly

Positive Lead	Measurement / Action	Negative Lead
C2123-6	Ω	C2123-12

Is the resistance between 74 and 106 ohms?

Yes	GO to T6
No	GO to T2

T2 CHECK THE VIDEO CAMERA (+) AND (-) SIGNAL CIRCUITS FOR A SHORT TO GROUND

- Disconnect: Video Camera.
- Measure:

Positive Lead	Measurement / Action	Negative Lead
C4357-4	Ω	—
C4357-3	Ω	—

Are the resistances greater than 10,000 ohms?

Yes	GO to T3
No	REPAIR the circuit in question.

T3 CHECK THE VIDEO CAMERA VIDEO (+) AND (-) SIGNAL CIRCUITS FOR A SHORT TO VIDEO SHIELD

- Measure:

Positive Lead	Measurement / Action	Negative Lead
C4357-4	Ω	C4357-6
C4357-3	Ω	C4357-6

Are the resistances greater than 10,000 ohms?

Yes	GO to T4
No	REPAIR the circuit in question.

T4 CHECK VIDEO (+) AND (-) SIGNAL CIRCUITS FOR AN OPEN

- Connect a fused jumper wire:

Lead 1	Measurement / Action	Lead 2
C4357-4		C4357-3

- Measure:

Vehicles with 8-inch (203-mm) touchscreen)

Positive Lead	Measurement / Action	Negative Lead
C2383-14	Ω	C2383-15

Vehicles with 4.2-inch (107-mm) display

Positive Lead	Measurement / Action	Negative Lead
C2123-6	Ω	C2123-12

Is the resistance less than 3 ohms?

Yes	REMOVE the jumper wire. GO to T6
No	REMOVE the jumper wire. GO to T5

T5 CHECK VIDEO (+) SIGNAL CIRCUIT FOR AN OPEN

- Measure:

Vehicles with 8-inch (203-mm) touchscreen)

Positive Lead	Measurement / Action	Negative Lead
C4357-4	Ω	C2383-14

Vehicles with 4.2-inch (107-mm) display

Positive Lead	Measurement / Action	Negative Lead
C4357-4	Ω	C2123-6

Is the resistance less than 3 ohms?

Yes	REPAIR the video (-) signal circuit.
No	REPAIR the video (+) signal circuit.

T6 CHECK FOR CORRECT VIDEO CAMERA OPERATION

- Ignition OFF.
- Disconnect and inspect the video camera connector.
- Repair:
  - corrosion (install new connector or terminals – clean module pins)
  - damaged or bent pins – install new terminals/pins
  - pushed-out pins – install new pins as necessary
- Reconnect the video camera connector. Make sure it seats correctly.
- Operate the system and determine if the concern is still present.

Is the concern still present?

Yes	CHECK OASIS for any applicable Technical Service Bulletins (TSBs). If a TSB exists for this concern, DISCONTINUE this test and FOLLOW TSB instructions. If no Technical Service Bulletins (TSBs) address this concern, INSTALL a new video camera. For the 4-door, REFER to: Parking Aid Camera - Vehicles With: 4-Door (413-13A Parking Aid, Removal and Installation). For the 5-door, REFER to: Parking Aid Camera - Vehicles With: 5-Door (413-13A Parking Aid, Removal and Installation).
No	The system is operating correctly at this time. Concern may have been caused by a loose or corroded connector. ADDRESS the root cause of any connector or pin issues.

The Visual Park Aid Alert Is Inoperative

Diagnostics in this manual assume a certain skill level and knowledge of Ford-specific diagnostic practices.
REFER to: Diagnostic Methods (100-00 General Information, Description and Operation).

Refer to Wiring Diagrams Cell 131 for schematic and connector information.

Normal Operation and Fault Conditions

See Image Display.
REFER to: Parking Aid - System Operation and Component Description (413-13A Parking Aid, Description and Operation).

Possible Sources

- Video camera
- Parking Aid Module (PAM) concern
- Image Processing Module - B (IPM-B) concern

Visual Inspection and Diagnostic Pre-checks

Verify that the visual park aid is enabled in the FDIM (with 8-inch (203-mm) touchscreen) or FCDIM (with 4.2-inch (107-mm) touchscreen).

PINPOINT TEST U : THE VISUAL PARK AID ALERT IS INOPERATIVE

U1 CHECK THE DIAGNOSTIC TROUBLE CODES (DTCS) FROM THE PARKING AID MODULE (PAM) SELF-TEST

- Using a scan tool, perform the Parking Aid Module (PAM) self-test.

Are any Parking Aid Module (PAM) Diagnostic Trouble Codes (DTCs) recorded?

Yes	REPAIR all Parking Aid Module (PAM) Diagnostic Trouble Codes (DTCs) first. REFER to Parking Aid Module (PAM) DTC Chart in this section.
No	GO to U2

U2 CHECK THE DIAGNOSTIC TROUBLE CODES (DTCS) FROM THE IMAGE PROCESSING MODULE - B (IPM-B) SELF-TEST

- Using a scan tool, perform the Image Processing Module - B (IPM-B) self-test.

Are any Image Processing Module - B (IPM-B) Diagnostic Trouble Codes (DTCs) recorded?

Yes	REFER to Image Processing Module B (IPM-B) DTC Chart in this section.
No	GO to U3

U3 CHECK FOR CORRECT VIDEO CAMERA OPERATION

- Ignition OFF.
- Disconnect and inspect the video camera connector.
- Repair:
  - corrosion (install new connector or terminals – clean module pins)
  - damaged or bent pins – install new terminals/pins
  - pushed-out pins – install new pins as necessary
- Reconnect the video camera connector. Make sure it seats correctly.
- Operate the system and determine if the concern is still present.

Is the concern still present?

Yes	CHECK OASIS for any applicable Technical Service Bulletins (TSBs). If a TSB exists for this concern, DISCONTINUE this test and FOLLOW TSB instructions. If no Technical Service Bulletins (TSBs) address this concern, INSTALL a new video camera. For the 4-door, REFER to: Parking Aid Camera - Vehicles With: 4-Door (413-13A Parking Aid, Removal and Installation). For the 5-door, REFER to: Parking Aid Camera - Vehicles With: 5-Door (413-13A Parking Aid, Removal and Installation).
No	The system is operating correctly at this time. Concern may have been caused by a loose or corroded connector. ADDRESS the root cause of any connector or pin issues.

The Video Delay Or Guidelines Are Inoperative

Diagnostics in this manual assume a certain skill level and knowledge of Ford-specific diagnostic practices.
REFER to: Diagnostic Methods (100-00 General Information, Description and Operation).

Refer to Wiring Diagrams Cell 131 for schematic and connector information.

Normal Operation and Fault Conditions

See Fixed Guidelines and Active Guidelines.
REFER to: Parking Aid - System Operation and Component Description (413-13A Parking Aid, Description and Operation).

Possible Sources

- Video camera
- APIM concern (vehicles with 8-inch (203-mm) touchscreen)
- FCDIM concern (vehicles with 4.2-inch (107-mm) display)
- Image Processing Module - B (IPM-B) concern

Visual Inspection and Diagnostic Pre-checks

Verify that the fixed guidelines and active guidelines are enabled.

PINPOINT TEST V : THE VIDEO DELAY OR GUIDELINES ARE INOPERATIVE

V1 CHECK THE DIAGNOSTIC TROUBLE CODES (DTCS) FROM THE IMAGE PROCESSING MODULE - B (IPM-B) SELF-TEST

- Using a scan tool, perform the Image Processing Module - B (IPM-B) self-test.

Are any Diagnostic Trouble Codes (DTCs) retrieved?

Yes	For DTC B115E:08, GO to Pinpoint Test S For all other Diagnostic Trouble Codes (DTCs), REFER to the Image Processing Module - B (IPM-B) DTC chart in this section.
No	If the vehicle is equipped with an 8-inch (203-mm) touchscreen, GO to V2 If the vehicle is equipped with a 4.2-inch (107-mm) display, GO to V3

V2 CHECK FOR DIAGNOSTIC TROUBLE CODES (DTCS) FROM THE ACCESSORY PROTOCOL INTERFACE MODULE (APIM) SELF-TEST

- Using a scan tool, perform the APIM self-test.

Are any Diagnostic Trouble Codes (DTCs) retrieved?

Yes	For DTC C1001:01, GO to Pinpoint Test S For all other APIM Diagnostic Trouble Codes, Refer to the appropriate section in Group 415 for the procedure.
No	GO to V4

V3 CHECK FOR DIAGNOSTIC TROUBLE CODES (DTCS) FROM THE FRONT CONTROL DISPLAY INTERFACE MODULE (FCDIM) SELF-TEST

- Using a scan tool, perform the FCDIM self-test.

Are any Diagnostic Trouble Codes (DTCs) retrieved?

Yes	For DTC C1001:01, GO to Pinpoint Test S For all other FCDIM Diagnostic Trouble Codes, REFER to: Information and Entertainment System (415-00B Information and Entertainment System - General Information - Vehicles With: AM/FM/CD/SYNC, Diagnosis and Testing).
No	GO to V4

V4 VERIFY AND ENABLE VIDEO CAMERA FEATURES

- Identify the inoperative video camera feature (video delay, fixed guidelines or active guidelines).
- Verify and enable the inoperative video camera feature within the FDIM or FCDIM .

Does the video camera feature operate correctly?

Yes	The video camera system is operating correctly at this time. The video camera feature concern was caused by the feature being disabled. INSTRUCT the customer on how to enable the video camera features. REFER to the Owner's Literature.
No	For an inoperative video camera delay, GO to V5 For all other video camera feature concerns, GO to V6

V5 CHECK FOR CORRECT ACCESSORY PROTOCOL INTERFACE MODULE (APIM) OPERATION

- Ignition OFF.
- Disconnect and inspect the APIM connector.
- Repair:
  - corrosion (install new connector or terminals – clean module pins)
  - damaged or bent pins – install new terminals/pins
  - pushed-out pins – install new pins as necessary
- Reconnect the APIM connector. Make sure it seats correctly.
- Operate the system and determine if the concern is still present.

Is the concern still present?

Yes	CHECK OASIS for any applicable Technical Service Bulletins (TSBs). If a TSB exists for this concern, DISCONTINUE this test and FOLLOW TSB instructions. If no Technical Service Bulletins (TSBs) address this concern, INSTALL a new APIM . Refer to the appropriate section in Group 415 for the procedure.
No	The system is operating correctly at this time. Concern may have been caused by a loose or corroded connector. ADDRESS the root cause of any connector or pin issues.

V6 CHECK FOR CORRECT VIDEO CAMERA OPERATION

- Ignition OFF.
- Disconnect and inspect the video camera connector.
- Repair:
  - corrosion (install new connector or terminals – clean module pins)
  - damaged or bent pins – install new terminals/pins
  - pushed-out pins – install new pins as necessary
- Reconnect the video camera connector. Make sure it seats correctly.
- Operate the system and determine if the concern is still present.

Is the concern still present?

Yes	CHECK OASIS for any applicable Technical Service Bulletins (TSBs). If a TSB exists for this concern, DISCONTINUE this test and FOLLOW TSB instructions. If no Technical Service Bulletins (TSBs) address this concern, INSTALL a new video camera. For the 4-door, REFER to: Parking Aid Camera - Vehicles With: 4-Door (413-13A Parking Aid, Removal and Installation). For the 5-door, REFER to: Parking Aid Camera - Vehicles With: 5-Door (413-13A Parking Aid, Removal and Installation).
No	The system is operating correctly at this time. Concern may have been caused by a loose or corroded

	connector. ADDRESS the root cause of any connector or pin issues.

Image Processing Module - B (IPM-B) DTC U0155:87

Diagnostics in this manual assume a certain skill level and knowledge of Ford-specific diagnostic practices.
REFER to: Diagnostic Methods (100-00 General Information, Description and Operation).

Refer to Wiring Diagrams Cell 131 for schematic and connector information.

Refer to Wiring Diagrams Cell 14 for schematic and connector information.

Normal Operation and Fault Conditions

The Image Processing Module - B (IPM-B) communicates with the IPC through the Medium Speed Controller Area Network (MS-CAN).

DTC Fault Trigger Conditions

DTC	Description	Fault Trigger Conditions
U0155:87	Lost Communication With Instrument Panel Cluster (IPC) Control Module: Missing Message	A continuous and on-demand DTC that sets when the Image Processing Module - B (IPM-B) is unable to communicate with the IPC for 5 seconds or more.

Possible Sources

- Communication Concern
- IPC
- Image Processing Module - B (IPM-B)

PINPOINT TEST W : IMAGE PROCESSING MODULE - B (IPM-B) DTC (DIAGNOSTIC TROUBLE CODE) U0155:87

W1 VERIFY THE CUSTOMER CONCERN

- Ignition ON.
- Verify that there is an observable symptom present.

Is an observable symptom present?

Yes	GO to W2
No	The system is operating normally at this time. The DTC may have been set due to high network traffic or an intermittent fault condition.

W2 CHECK THE COMMUNICATION NETWORK

- Using a scan tool, perform the network test.

Does the IPC pass the network test?

Yes	GO to W4
No	DIAGNOSE the failure to communicate with the IPC , REFER to: Communications Network (418-00 Module Communications Network, Diagnosis and Testing).

W3 CHECK FOR RECORDED DIAGNOSTIC TROUBLE CODES (DTCS) FROM THE IPC (INSTRUMENT PANEL CLUSTER) SELF-TEST

- Using a scan tool, perform the IPC self-test.

Are any Diagnostic Trouble Codes (DTCs) present?

Yes	REFER to: Instrumentation, Message Center and Warning Chimes (413-01 Instrumentation, Message Center and Warning Chimes, Diagnosis and Testing).
No	GO to W4

W4 RECHECK THE IMAGE PROCESSING MODULE - B (IPM-B) DIAGNOSTIC TROUBLE CODES (DTCS)

- Using a scan tool, clear Diagnostic Trouble Codes (DTCs).
- Operate the system and test the system for normal operation.
- Using a scan tool, repeat Image Processing Module - B (IPM-B) self-test.

Is DTC U0155:87 still present?

Yes	GO to W5
No	The system is operating correctly at this time. The DTC may have been set due to high network traffic or an intermittent fault condition.

W5 CHECK FOR BATTERY VOLTAGE OUT OF RANGE DIAGNOSTIC TROUBLE CODES (DTCS)

- Using a scan tool, retrieve continuous memory Diagnostic Trouble Codes (DTCs) from all modules.

Is DTC U3006:16 or U3006:17 set in the Image Processing Module - B (IPM-B)?

Yes	For DTC U3006:16, GO to Pinpoint Test X For DTC U3006:17, GO to Pinpoint Test Y
No	GO to W6

W6 CHECK FOR DTC (DIAGNOSTIC TROUBLE CODE) U0155 IN OTHER MODULES

- Using a scan tool, clear all Diagnostic Trouble Codes (DTCs).
- Ignition OFF.
- Wait 10 seconds.
- Ignition ON.
- Wait 10 seconds.
- Using a scan tool, retrieve the Diagnostic Trouble Codes (DTCs) from all modules.

Is DTC U0155:00 or U0155:87 present in any other module?

Yes	INSTALL a new BCM . REFER to: Body Control Module (BCM) (419-10 Multifunction Electronic Modules, Removal and Installation).
No	GO to W7

W7 CHECK FOR CORRECT IMAGE PROCESSING MODULE - B (IPM-B) OPERATION

- Ignition OFF.
- Disconnect and inspect the Image Processing Module - B (IPM-B) connector.
- Repair:
  - corrosion (install new connector or terminals – clean module pins)
  - damaged or bent pins – install new terminals/pins
  - pushed-out pins – install new pins as necessary
- Reconnect the Image Processing Module - B (IPM-B) connector. Make sure it seats and latches correctly.
- Operate the system and determine if the concern is still present.

Is the concern still present?

Yes	CHECK OASIS for any applicable Technical Service Bulletins (TSBs). If a TSB exists for this concern, DISCONTINUE this test and FOLLOW TSB instructions. If no Technical Service Bulletins (TSBs) address this concern, INSTALL a new Image Processing Module - B (IPM-B). For the 4-door, REFER to: Image Processing Module B (IPMB) - Vehicles With: 4-Door (413-13A Parking Aid, Removal and Installation). For the 5-door, REFER to: Image Processing Module B (IPMB) - Vehicles With: 5-Door (413-13A Parking Aid, Removal and Installation).
No	The system is operating correctly at this time. Concern may have been caused by a loose or corroded connector. ADDRESS the root cause of any connector or pin issues.

U3006:16

Diagnostics in this manual assume a certain skill level and knowledge of Ford-specific diagnostic practices.
REFER to: Diagnostic Methods (100-00 General Information, Description and Operation).

Refer to Wiring Diagrams Cell 131 for schematic and connector information.

Normal Operation and Fault Conditions

The Image Processing Module - B (IPM-B) receives voltage from the RJB fuse 29 (5A).

DTC Fault Trigger Conditions

DTC	Description	Fault Trigger Conditions
U3006:16	Control Module Input Power "A": Circuit Voltage Below Threshold	Set by the Image Processing Module - B (IPM-B) when the supply voltage falls below 8 volts.

Possible Sources

- Wiring, terminals or connectors
- Battery
- Charging system
- Image Processing Module - B (IPM-B)

PINPOINT TEST X : U3006:16

X1 RECHECK FOR DIAGNOSTIC TROUBLE CODE (DTC) U3006:16

- Ignition ON.
- Using a scan tool, clear the Diagnostic Trouble Codes (DTCs) for the Image Processing Module - B (IPM-B).
- Wait 15 seconds.
- Using a scan tool, repeat the self-test.

Is DTC U3006:16 still present?

Yes	GO to X2
No	The system is operating correctly at this time. The DTC may have been set due to a previous low battery voltage condition.

X2 CHECK FOR CHARGING SYSTEM DIAGNOSTIC TROUBLE CODES (DTCS) IN THE POWERTRAIN CONTROL MODULE (PCM)

- Using the scan tool, retrieve the continuous memory Diagnostic Trouble Codes (DTCs) from all modules.

Are any voltage-related Diagnostic Trouble Codes (DTCs) set in the PCM?

Yes	DIAGNOSE the charging system. For vehicles equipped with the 2.0L Duratec engine, REFER to: Charging System - 2.0L Duratec-HE (125kW/170PS) - MI4 (414-00 Charging System - General Information, Diagnosis and Testing). For vehicles equipped with the 2.0L EcoBoost engine, REFER to: Charging System - 2.0L EcoBoost (184kW/250PS) - MI4 (414-00 Charging System - General Information, Diagnosis and Testing).
No	GO to X3

X3 CHECK THE BATTERY CONDITION AND STATE OF CHARGE

- Check the battery condition and verify that the battery is fully charged.
  REFER to: Battery (414-01 Battery, Mounting and Cables, Diagnosis and Testing).

Is the battery OK and fully charged?

Yes	GO to X4
No	For vehicles with the 2.0L Duratec engine, REFER to: Charging System - 2.0L Duratec-HE (125kW/170PS) - MI4 (414-00 Charging System - General Information, Diagnosis and Testing). For vehicles with the 2.0L EcoBoost engine, REFER to: Charging System - 2.0L EcoBoost (184kW/250PS) - MI4 (414-00 Charging System - General Information, Diagnosis and Testing).

X4 CHECK THE IMAGE PROCESSING MODULE - B (IPM-B) VOLTAGE SUPPLY

Ignition OFF.
- Disconnect: Image Processing Module - B (IPM-B) C4402
- Ignition ON.
- Measure and record the voltage at the battery.
- Measure:

Positive Lead	Measurement / Action	Negative Lead
C4402-4		—

Is the voltage at the Image Processing Module - B (IPM-B) within 0.2 volt of the recorded battery voltage?

Yes	GO to X5
No	REPAIR the voltage supply circuit for high resistance.

X5 CHECK THE IMAGE PROCESSING MODULE - B (IPM-B) GROUND CIRCUIT FOR CONTINUITY

- Measure:

Positive Lead	Measurement / Action	Negative Lead
C4402-4		C4402-1

Is the Image Processing Module - B (IPM-B) voltage greater than 11 volts?

Yes	GO to X6
No	REPAIR the ground circuit for high resistance.

X6 CHECK FOR CORRECT IMAGE PROCESSING MODULE - B (IPM-B) OPERATION

- Ignition OFF.
- Disconnect and inspect the Image Processing Module - B (IPM-B) connector.
- Repair:
  - corrosion (install new connector or terminals – clean module pins)
  - damaged or bent pins – install new terminals/pins
  - pushed-out pins – install new pins as necessary
- Reconnect the Image Processing Module - B (IPM-B) connector. Make sure it seats and latches correctly.
- Operate the system and determine if the concern is still present.

Is the concern still present?

Yes	CHECK OASIS for any applicable Technical Service Bulletins (TSBs). If a TSB exists for this concern, DISCONTINUE this test and FOLLOW TSB instructions. If no Technical Service Bulletins (TSBs) address this concern, INSTALL a new Image Processing Module - B (IPM-B). For the 4-door, REFER to: Image Processing Module B (IPMB) - Vehicles With: 4-Door (413-13A Parking Aid, Removal and Installation). For the 5-door, REFER to: Image Processing Module B (IPMB) - Vehicles With: 5-Door (413-13A Parking Aid, Removal and Installation).

No	The system is operating correctly at this time. Concern may have been caused by a loose or corroded connector. ADDRESS the root cause of any connector or pin issues.

U3006:17

Diagnostics in this manual assume a certain skill level and knowledge of Ford-specific diagnostic practices.
REFER to: Diagnostic Methods (100-00 General Information, Description and Operation).

Refer to Wiring Diagrams Cell 131 for schematic and connector information.

Normal Operation and Fault Conditions

The Image Processing Module - B (IPM-B) receives voltage from the RJB fuse 29 (5A).

DTC Fault Trigger Conditions

DTC	Description	Fault Trigger Conditions
U3006:17	Control Module Input Power "A": Circuit Voltage Above Threshold	Set by the Image Processing Module - B (IPM-B) when the supply voltage is more than 16 volts.

Possible Sources

- Charging system
- Image Processing Module - B (IPM-B)

PINPOINT TEST Y : U3006:17

Y1 CHECK FOR HIGH VOLTAGE DIAGNOSTIC TROUBLE CODES (DTCS) SET IN OTHER MODULES

- Ignition ON.
- Using a scan tool, retrieve all continuous Diagnostic Trouble Codes (DTCs) from all modules.

Are high voltage Diagnostic Trouble Codes (DTCs) set in any other modules?

Yes	For vehicles with the 2.0L Duratec engine, REFER to: Charging System - 2.0L Duratec-HE (125kW/170PS) - MI4 (414-00 Charging System - General Information, Diagnosis and Testing). For vehicles with the 2.0L EcoBoost engine, REFER to: Charging System - 2.0L EcoBoost (184kW/250PS) - MI4 (414-00 Charging System - General Information, Diagnosis and Testing).
No	GO to Y2

Y2 CHECK THE BATTERY VOLTAGE

- Turn off all interior/exterior lights and accessories.
- Run the engine over 2000 RPM for 2 minutes.

Does the battery voltage rise to 15.5 volts or higher?

Yes	For vehicles with the 2.0L Duratec engine, REFER to: Charging System - 2.0L Duratec-HE (125kW/170PS) - MI4 (414-00 Charging System - General Information, Diagnosis and Testing). For vehicles with the 2.0L EcoBoost engine, REFER to: Charging System - 2.0L EcoBoost (184kW/250PS) - MI4 (414-00 Charging System - General Information, Diagnosis and Testing).
No	GO to Y3

Y3 RECHECK FOR DIAGNOSTIC TROUBLE CODES (DTCS) U3006:17

- Ignition OFF.
- Ignition ON.
- Using a scan tool, clear the Diagnostic Trouble Codes (DTCs).
- Using a scan tool, perform the Image Processing Module - B (IPM-B) self-test.

Is DTC U3006:17 present?

Yes	GO to Y4
No	The system is operating normally at this time. The DTC may have been set previously during battery charging or while jump starting the vehicle.

Y4 CHECK FOR CORRECT IMAGE PROCESSING MODULE - B (IPM-B) OPERATION

- Ignition OFF.
- Disconnect and inspect the Image Processing Module - B (IPM-B) connector.
- Repair:
  - corrosion (install new connector or terminals – clean module pins)
  - damaged or bent pins – install new terminals/pins
  - pushed-out pins – install new pins as necessary
- Reconnect the Image Processing Module - B (IPM-B) connector. Make sure it seats and latches correctly.
- Operate the system and determine if the concern is still present.

Is the concern still present?

Yes	CHECK OASIS for any applicable Technical Service Bulletins (TSBs). If a TSB exists for this concern, DISCONTINUE this test and FOLLOW TSB instructions. If no Technical Service Bulletins (TSBs) address this concern, INSTALL a new Image Processing Module - B (IPM-B). For the 4-door, REFER to: Image Processing Module B (IPMB) - Vehicles With: 4-Door (413-13A Parking Aid, Removal and Installation). For the 5-door, REFER to: Image Processing Module B (IPMB) - Vehicles With: 5-Door (413-13A Parking Aid, Removal and Installation).
No	The system is operating correctly at this time. Concern may have been caused by a loose or corroded connector. ADDRESS the root cause of any connector or pin issues.

Image Processing Module - B (IPM-B) DTC U0140:87

Diagnostics in this manual assume a certain skill level and knowledge of Ford-specific diagnostic practices.
REFER to: Diagnostic Methods (100-00 General Information, Description and Operation).

Refer to Wiring Diagrams Cell 131 for schematic and connector information.

Refer to Wiring Diagrams Cell 14 for schematic and connector information.

Normal Operation and Fault Conditions

The Image Processing Module - B (IPM-B) communicates with the BCM through the Medium Speed Controller Area Network (MS-CAN).

DTC Fault Trigger Conditions

DTC	Description	Fault Trigger Conditions
U0140:87	Lost Communication With Body Control Module: Missing Message	A continuous and on-demand DTC that sets when the Image Processing Module - B (IPM-B) is unable to communicate with the BCM for 5 seconds or more.

Possible Sources

- Communication concern
- BCM
- Image Processing Module - B (IPM-B)

PINPOINT TEST Z : IMAGE PROCESSING MODULE - B (IPM-B) DTC (DIAGNOSTIC TROUBLE CODE) U0140:87

Z1 VERIFY THE CUSTOMER CONCERN

- Ignition ON.
- Verify that there is an observable symptom present.

Is an observable symptom present?

Yes	GO to Z2
No	The system is operating normally at this time. The DTC may have been set due to high network traffic or an intermittent fault condition.

Z2 CHECK THE COMMUNICATION NETWORK

- Using a scan tool, perform the network test.

Does the BCM pass the network test?

Yes	GO to Z3
No	DIAGNOSE the failure to communicate with the BCM REFER to: Communications Network (418-00 Module Communications Network, Diagnosis and Testing).

Z3 CHECK FOR RECORDED DIAGNOSTIC TROUBLE CODES (DTCS) FROM THE BCM (BODY CONTROL MODULE) SELF-TEST

- Using a scan tool, perform the BCM self-test.

Are any Diagnostic Trouble Codes (DTCs) present?

Yes	REFER to: Body Control Module (BCM) (419-10 Multifunction Electronic Modules, Diagnosis and Testing).
No	GO to Z4

Z4 RECHECK THE IMAGE PROCESSING MODULE - B (IPM-B) DIAGNOSTIC TROUBLE CODES (DTCS)

- Clear the Diagnostic Trouble Codes (DTCs).
- Operate the system and test the system for normal operation.
- Repeat the Image Processing Module - B (IPM-B) self-test.

Is DTC U0140:87 still present?

Yes	GO to Z5
No	The system is operating correctly at this time. The DTC may have been set due to high network traffic or an intermittent fault condition.

Z5 CHECK FOR DIAGNOSTIC TROUBLE CODE (DTC) U0140:00 OR DIAGNOSTIC TROUBLE CODE (DTC) U0140:87 IN OTHER MODULES

- Clear the Diagnostic Trouble Codes (DTCs).
- Ignition OFF.
- Wait 10 seconds.
- Ignition ON.
- Wait 10 seconds.
- Using a scan tool, retrieve the continuous memory Diagnostic Trouble Codes (DTCs) from all modules.

Is DTC U0140:00 or DTC U0140:87 set in any other module?

Yes	INSTALL a new BCM . REFER to: Body Control Module (BCM) (419-10 Multifunction Electronic Modules, Removal and Installation).
No	GO to Z6

Z6 CHECK FOR CORRECT IMAGE PROCESSING MODULE - B (IPM-B) OPERATION

- Ignition OFF.
- Disconnect and inspect the Image Processing Module - B (IPM-B) connector.
- Repair:
  - corrosion (install new connector or terminals – clean module pins)
  - damaged or bent pins – install new terminals/pins
  - pushed-out pins – install new pins as necessary
- Reconnect the Image Processing Module - B (IPM-B) connector. Make sure it seats and latches correctly.
- Operate the system and determine if the concern is still present.

Is the concern still present?

Yes	CHECK OASIS for any applicable Technical Service Bulletins (TSBs). If a TSB exists for this concern,

	DISCONTINUE this test and FOLLOW TSB instructions. If no Technical Service Bulletins (TSBs) address this concern, INSTALL a new Image Processing Module - B (IPM-B). For the 4-door, REFER to: Image Processing Module B (IPMB) - Vehicles With: 4-Door (413-13A Parking Aid, Removal and Installation). For the 5-door, REFER to: Image Processing Module B (IPMB) - Vehicles With: 5-Door (413-13A Parking Aid, Removal and Installation).
No	The system is operating correctly at this time. Concern may have been caused by a loose or corroded connector. ADDRESS the root cause of any connector or pin issues.

Manual Zoom Function Is Inoperative

Diagnostics in this manual assume a certain skill level and knowledge of Ford-specific diagnostic practices.
REFER to: Diagnostic Methods (100-00 General Information, Description and Operation).

Normal Operation and Fault Conditions

The manual zoom feature is controlled by the video camera.

Possible Sources

- Video camera

PINPOINT TEST AA : MANUAL ZOOM FUNCTION IS INOPERATIVE

AA1 CHECK THE DIAGNOSTIC TROUBLE CODES (DTCS) FROM THE IMAGE PROCESSING MODULE - B (IPM-B) SELF-TEST

- Using a scan tool, perform the Image Processing Module - B (IPM-B) self-test.

Are any Diagnostic Trouble Codes (DTCs) retrieved?

Yes	For DTC B115E:08, GO to Pinpoint Test S For all other Diagnostic Trouble Codes (DTCs), REFER to the Image Processing Module - B (IPM-B) DTC chart in this section.
No	If the vehicle is equipped with an 8-inch (203-mm) touchscreen, GO to AA2 If the vehicle is equipped with a 4.2-inch (107-mm) display, GO to AA3

AA2 CHECK FOR DIAGNOSTIC TROUBLE CODES (DTCS) FROM THE ACCESSORY PROTOCOL INTERFACE MODULE (APIM) SELF-TEST

- Using a scan tool, perform the APIM self-test.

Are any Diagnostic Trouble Codes (DTCs) retrieved?

Yes	For DTC C1001:01, GO to Pinpoint Test S For all other APIM Diagnostic Trouble Codes, Refer to the appropriate section in Group 415 for the procedure.
No	GO to AA4

AA3 CHECK FOR DIAGNOSTIC TROUBLE CODES (DTCS) FROM THE FRONT CONTROL DISPLAY INTERFACE MODULE (FCDIM) SELF-TEST

- Using a scan tool, perform the FCDIM self-test.

Are any Diagnostic Trouble Codes (DTCs) retrieved?

Yes	For DTC C1001:01, GO to Pinpoint Test S For all other FCDIM Diagnostic Trouble Codes, REFER to: Information and Entertainment System (415-00B Information and Entertainment System - General Information - Vehicles With: AM/FM/CD/SYNC, Diagnosis and Testing).
No	GO to AA4

AA4 CHECK FOR CORRECT VIDEO CAMERA OPERATION

- Ignition OFF.
- Disconnect and inspect the video camera connector.
- Repair:
  - corrosion (install new connector or terminals – clean module pins)
  - damaged or bent pins – install new terminals/pins
  - pushed-out pins – install new pins as necessary
- Reconnect the video camera connector. Make sure it seats correctly.
- Operate the system and determine if the concern is still present.

Is the concern still present?

Yes	CHECK OASIS for any applicable Technical Service Bulletins (TSBs). If a TSB exists for this concern, DISCONTINUE this test and FOLLOW TSB instructions. If no Technical Service Bulletins (TSBs) address this concern, INSTALL a new video camera. For the 4-door, REFER to: Parking Aid Camera - Vehicles With: 4-Door (413-13A Parking Aid, Removal and Installation). For the 5-door, REFER to: Parking Aid Camera - Vehicles With: 5-Door (413-13A Parking Aid, Removal and Installation).
No	The system is operating correctly at this time. Concern may have been caused by a loose or corroded connector. ADDRESS the root cause of any connector or pin issues.

Copyright © Ford Motor Company

Elevation System Check

1. Turn the ignition ON, engine OFF.

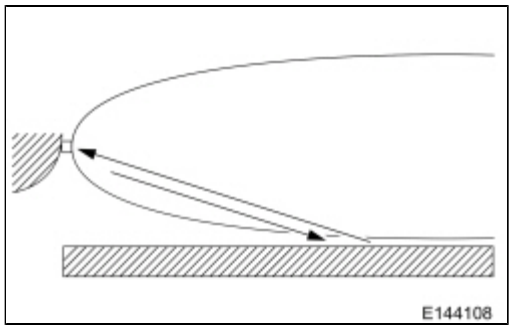

2. Set the parking brake.
3. Place the gearshift in REVERSE (R) for rear parking aid sensors.
4. Place the gearshift in DRIVE (D) for front parking aid sensors.
5. Verify no audible alerts are heard. If audible alerts are heard, check to make sure the bumper is correctly installed and is not tilted downward so the sensor is pointing at the ground.
6. If the audible warning is heard,
   Refer to: Parking Aid (413-13 Parking Aid) .

Copyright © Ford Motor Company

Rear Parking Aid Sensor

Removal

NOTE: *Removal steps in this procedure may contain installation details.*

1. **WARNING: Before beginning any service procedure in this section, refer to Safety Warnings in section 100-00 General Information. Failure to follow this instruction may result in serious personal injury.**

2. Remove the rear bumper cover.
   Refer to: Rear Bumper Cover - Vehicles With: 5-Door (501-19 Bumpers, Removal and Installation).

3.

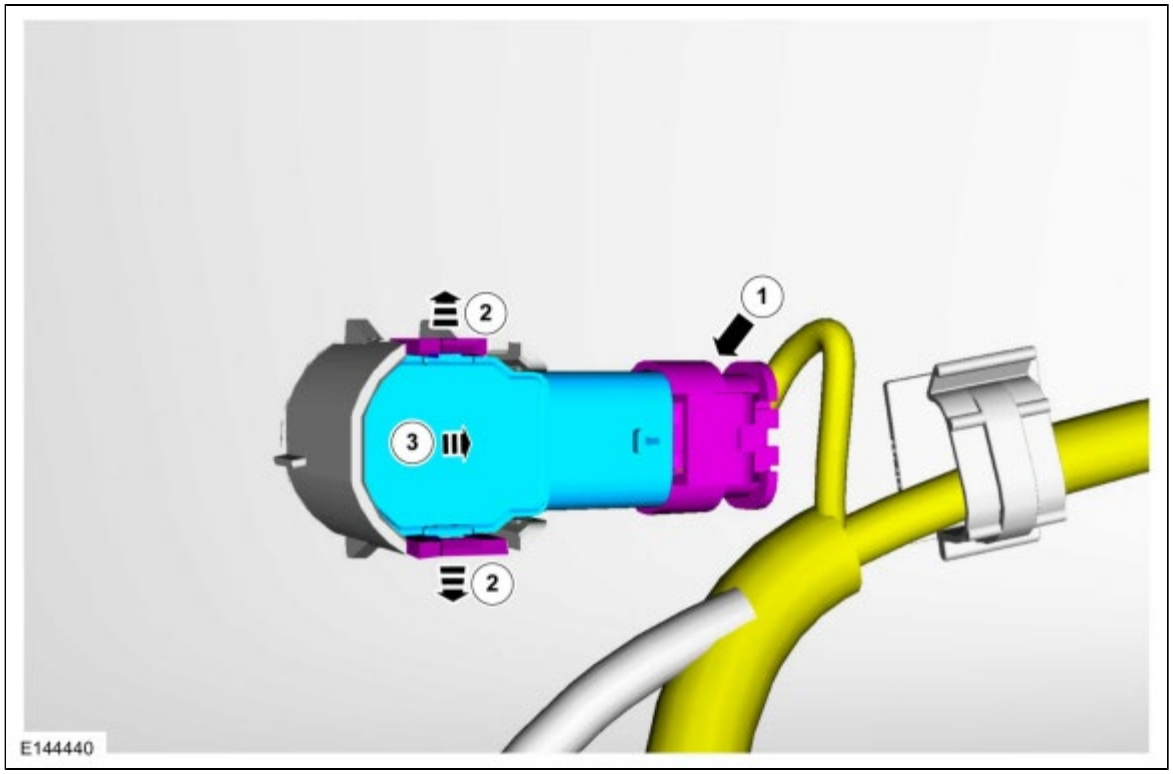

Installation

1. To install, reverse the removal procedure.

2. Carry out the azimuth and elevation system check.
   Refer to: Azimuth System Check (413-13B Parking Aid - Vehicles With: Active Park Assist, General Procedures).
   Refer to: Elevation System Check (413-13) .

Copyright © Ford Motor Company

Information and Entertainment System - Component Location

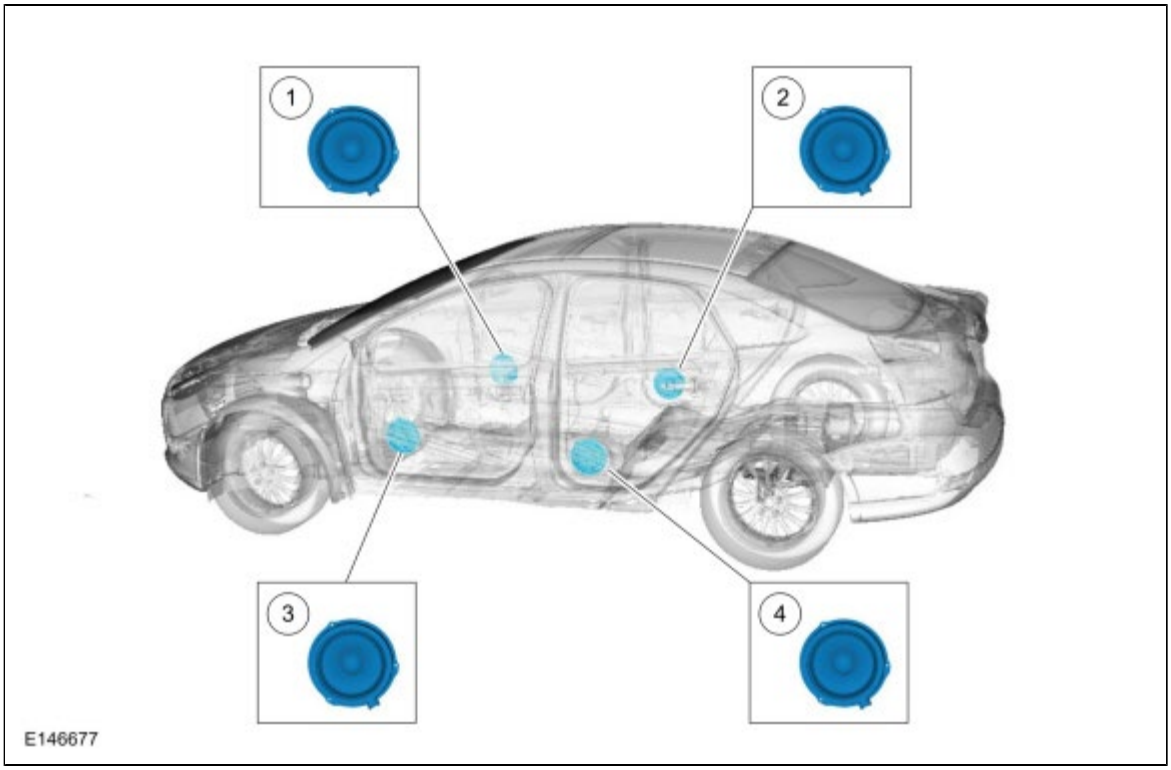

Item	Description
1	RH front door speaker
2	RH rear door speaker
3	LH front door speaker
4	LH rear door speaker

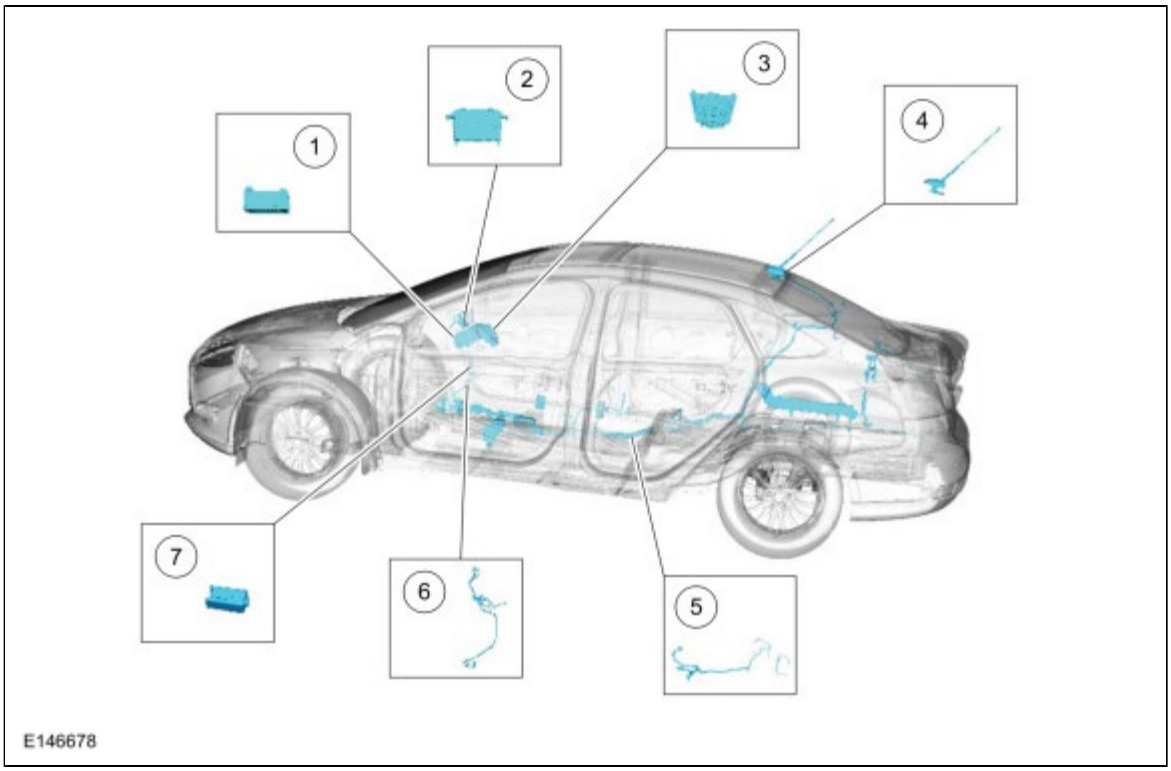

Item	Description
1	ACM
2	FCDIM
3	FCIM
4	Antenna
5	Antenna cable (upper)
6	Antenna cable (lower)
7	GPSM , located above the glove compartment

Copyright © Ford Motor Company

Information and Entertainment System - Overview

Overview

The audio system consists of 4 speakers with an AM / FM single CD ACM , 4.2-inch (107 mm) non-touchscreen FCDIM , FCIM , audio input jack, and optional redundant steering wheel controls.

Copyright © Ford Motor Company

Information and Entertainment System - System Operation and Component Description

System Operation

System Diagram

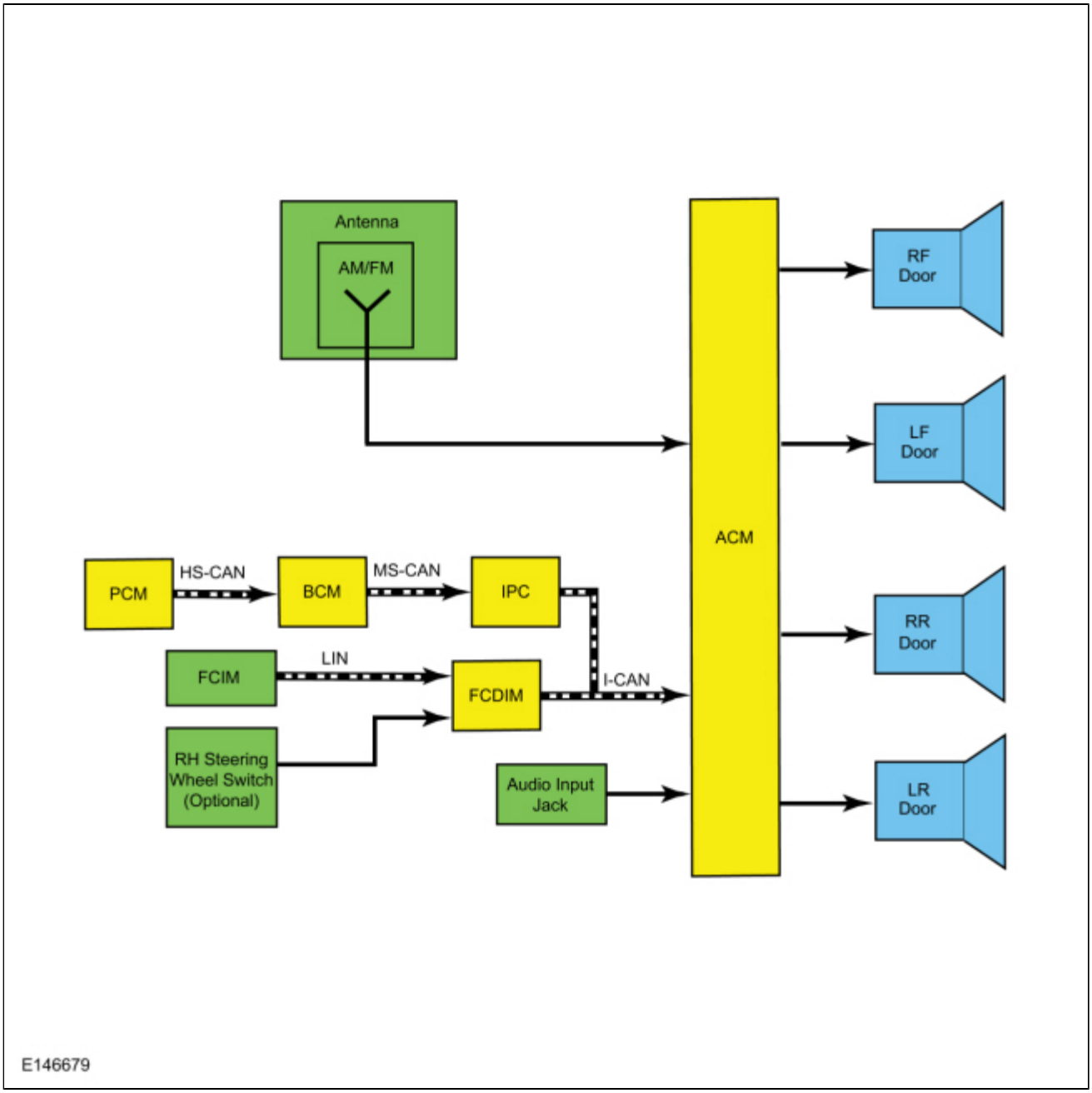

Network Message Chart

A missing network message is indicated by a U-code DTC . When a missing message DTC (U-code) sets, it is important to look for symptoms present in the audio system and throughout the vehicle, and to review the complete message list to determine which other modules rely on the same message.

Refer to: Communications Network - System Operation and Component Description (418-00 Module Communications Network, Description and Operation).
See CAN Multiplex Messages.

When the other modules have been identified, run the self-test for those modules. If the same message is missing from those modules, the identical, or similar lost communication Diagnostic Trouble Codes (DTCs) may be set in those modules. Confirmation of missing messages common to multiple modules can indicate that the originating module is the source of the concern, or that the communication network may be at fault.

It is very important to understand the following:

- Where the input originates
- All of the information necessary for a feature to operate
- Which module(s) receive(s) the input or command message
- Which module controls the output of the feature
- If the module that receives the input controls the output of the feature, or whether it outputs a message over the CAN to another module

Module Network Input Messages - ACM

Broadcast Message	Originating Module	Message Purpose
Audio button state	FCDIM	Used to indicate when a button is pressed on the FCIM so the audio system can make the desired setting change.
Audio mute	IPC	Used to mute the audio system so a warning notification from the IPC can be heard.
Belt-Minder® Mode	IPC	Used to mute speaker output so the Belt-Minder® tone can be heard. This message only applies to vehicles with MyKey® enabled.
Bezel test request	FCDIM	Used to request the bezel test for the audio system.
Chime request	IPC	Used to mute the audio system so a chime from the IPC can be heard.
Display set volume request	FCDIM	A request for the ACM set volume to be displayed on the FCDIM .
Ignition status	BCM	OFF, ACCESSORY, RUN, and START ignition states required for ACM operating modes and fault reporting.
MyKey® volume limit mode	IPC	Used to limit the audio system volume when a MyKey® restricted key is in use.
Steering wheel switch data	FCDIM	Used for the RH upper 5-way steering wheel switch input signal to operate the volume +/-, seek +/- and preset station.
Vehicle configuration/information	IPC	Used for vehicle configuration information to the ACM .
Vehicle speed	PCM	Used for the speed compensated volume function.

Module Network Input Messages - FCDIM

Broadcast Message	Originating Module	Message Purpose
ACM configuration	ACM	Used to verify the correct configuration and modules are installed.

ACM CD data	ACM	Used to display CD data on the FCDIM .
ACM radio functions	ACM	Used to display the ACM radio functions such as seek, tune and AM / FM stations on the FCDIM .
CD load/eject	ACM	Used to display the loaded or ejected CD status on the FCDIM .
Day/night status	BCM	Used for Day/Night illumination status for the FCDIM .
Ignition status	BCM	OFF, ACCESSORY, RUN, and START ignition states required for FCDIM operating modes and fault reporting.
Illumination dimming level	BCM	Used to control backlight intensity based on dimmer switch inputs.

Module Network Input Messages - IPC

Broadcast Message	Originating Module	Message Purpose
ACM configuration	ACM	Used to verify that the correct configuration and modules are installed.
ACM status	ACM	Used for the MyKey® status from the ACM for volume limit mode and Belt-Minder® Mode.

Accessory Delay Feature

The accessory delay feature allows the audio system to be operated for a preset period of time after the ignition is turned off and a front door has not been opened.

AM / FM Radio

The roof-mounted antenna receives AM / FM radio waves. The audio signals are sent via the AM / FM antenna cable from the roof-mounted antenna to the ACM . The ACM converts the radio waves to a fluctuating AC output voltage and sends the right and left audio signals to the speakers. The ACM powers the AM / FM antenna to amplify the AM signal.

Audio Extended Play

This feature allows the audio system to operate with the ignition OFF, regardless of door latch position. When the power button on the FCIM is pressed, audio system functionality is enabled and remains active for a period of 60 minutes. To turn the audio system off, the power button on the FCIM is pressed. Audio extended play is disabled if the battery saver function is enabled.

Audio Input Jack Mode

When a portable MP3 player is connected, audio from the MP3 audio device can be played through the vehicle speakers. Only the speaker volume can be controlled by the ACM . All other functions (such as seek, fast forward, pause, etc.) must be carried out on the device itself. No metadata is transferred when a device is connected through the audio input jack. Audio signals are sent from the audio input jack to the ACM . There are no external power or ground circuits to the audio input jack.

Battery Load Shed

The BCM uses the battery current sensor to monitor the battery state of charge. The battery current sensor is attached to the battery ground cable. With the vehicle OFF and the ignition in ACC or RUN, a load shed message is sent over the CAN when the BCM determines that the battery state of charge is below 40%, 45 minutes have elapsed, or 10% of the charge has been drained. This message turns off the audio system to save the remaining battery charge. Under this condition, SYS OFF TO SAVE BATT is displayed on the centerstack infotainment display to notify the driver that battery protection actions are active. To clear the load shed state, restart the vehicle.

MyKey® Audio Operation

When a MyKey® is in use, the audio system is muted whenever the Belt-Minder® is activated until the safety belts are buckled. This is a standard setting and cannot be changed.

The MyKey® also has an optional setting that limits the audio system volume. The maximum volume of the audio system is limited to 45%. In an attempt to exceed the limited volume, the MyKey® VOLUME LIMITED message is displayed in the centerstack infotainment display.

Speed Compensated Volume

The ACM adjusts the audio system volume based on the VSS signal to compensate for speed and wind noise.

When a MyKey® is in use and the MyKey® radio volume limiter is enabled, the speed compensated volume is disabled.

Steering Wheel Switch Function

The RH upper 5-way steering wheel switch operates the volume +/-, seek +/-, and the audio mode.

Component Description

ACM

The ACM can be operated with the ignition in RUN, ACC, or OFF.

Audio signals received by the ACM are sent to the audio system speakers as fluctuating AC voltage.

The ACM requires Programmable Module Installation (PMI) when it is replaced.

Antenna

The roof-mounted antenna has an integrated antenna module that is powered by the ACM to improve AM / FM reception.

Audio Input Jack

The audio input jack allows for a portable MP3 audio device (such as an iPod®) to be connected to the vehicle audio system utilizing a 1/8-inch (3 mm) audio jack.

FCDIM

The FCDIM displays driver information messages, vehicle settings, infotainment, audio, and climate control system information.

The FCDIM requires Programmable Module Installation (PMI) when it is replaced.

FCIM

The FCIM can be operated with the ignition in RUN, ACC, or OFF.

The FCIM is one of the customer interfaces to the audio system and is separate from the ACM . It transfers button press data over a dedicated LIN to the FCDIM .

Steering Wheel Switches

The RH upper steering wheel switch contains a series of resistors. Each steering wheel switch function corresponds with a specific resistance value within the switch. The FCDIM sends a 5-volt reference voltage to the RH upper steering wheel switch on the input circuits. When a switch is pressed, the voltage is routed through the corresponding resistor(s), and is then routed to ground through the FCDIM . The FCDIM monitors the resultant voltage drop to determine which switch was pressed. The voltage drop varies depending upon the resistance of the specific switch pressed.

Copyright © Ford Motor Company

Information and Entertainment System - Component Location

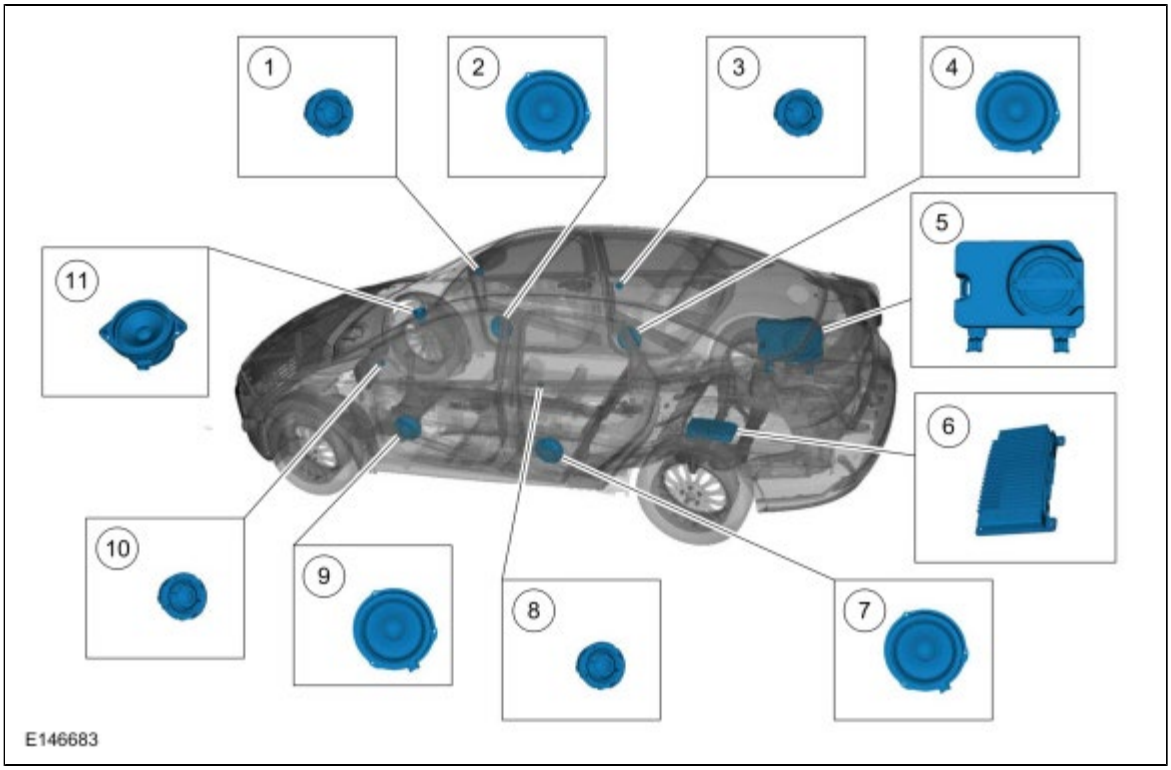

Item	Description
1	RH front tweeter speaker
2	RH front door speaker
3	RH rear tweeter speaker
4	RH rear door speaker
5	Subwoofer speaker
6	Audio DSP module
7	LH rear door speaker
8	LH rear tweeter speaker
9	LH front door speaker
10	LH front tweeter speaker
11	Instrument panel speaker

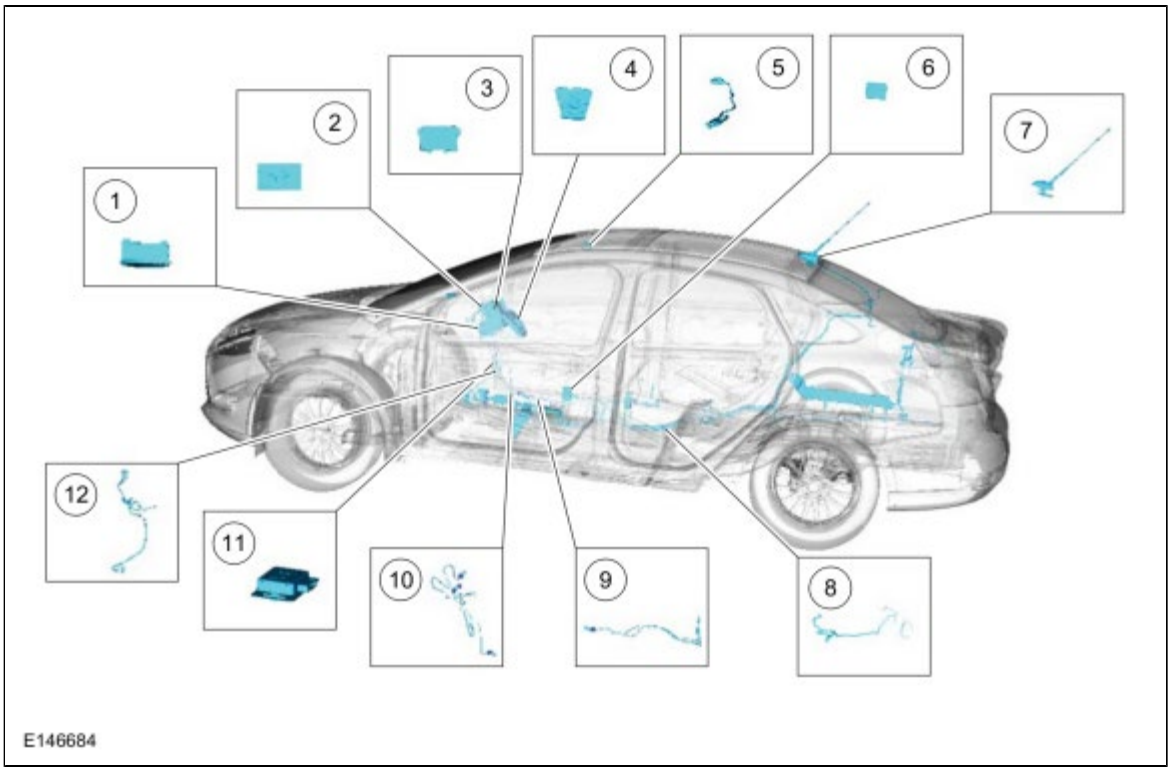

Item	Description
1	ACM
2	APIM , behind the FDIM
3	FDIM , attached to the APIM
4	FCIM
5	Microphone
6	Media hub, located in the console
7	Antenna
8	Antenna cable (upper)
9	USB cable, located in the console
10	USB cable, located in the instrument panel
11	GPSM , located above the glove compartment
12	Antenna cable (lower)

Copyright © Ford Motor Company

Information and Entertainment System - Overview

Overview

The audio system consists of 10 speakers with an AM / FM single CD ACM , 8-inch (203 mm) FDIM touchscreen, Sony® branded FCIM , audio DSP module, GPSM , redundant steering wheel controls, SYNC®, APIM , media hub, satellite radio, HD Radio®, and optional navigation.

Copyright © Ford Motor Company

Information and Entertainment System - System Operation and Component Description

System Operation

System Diagram

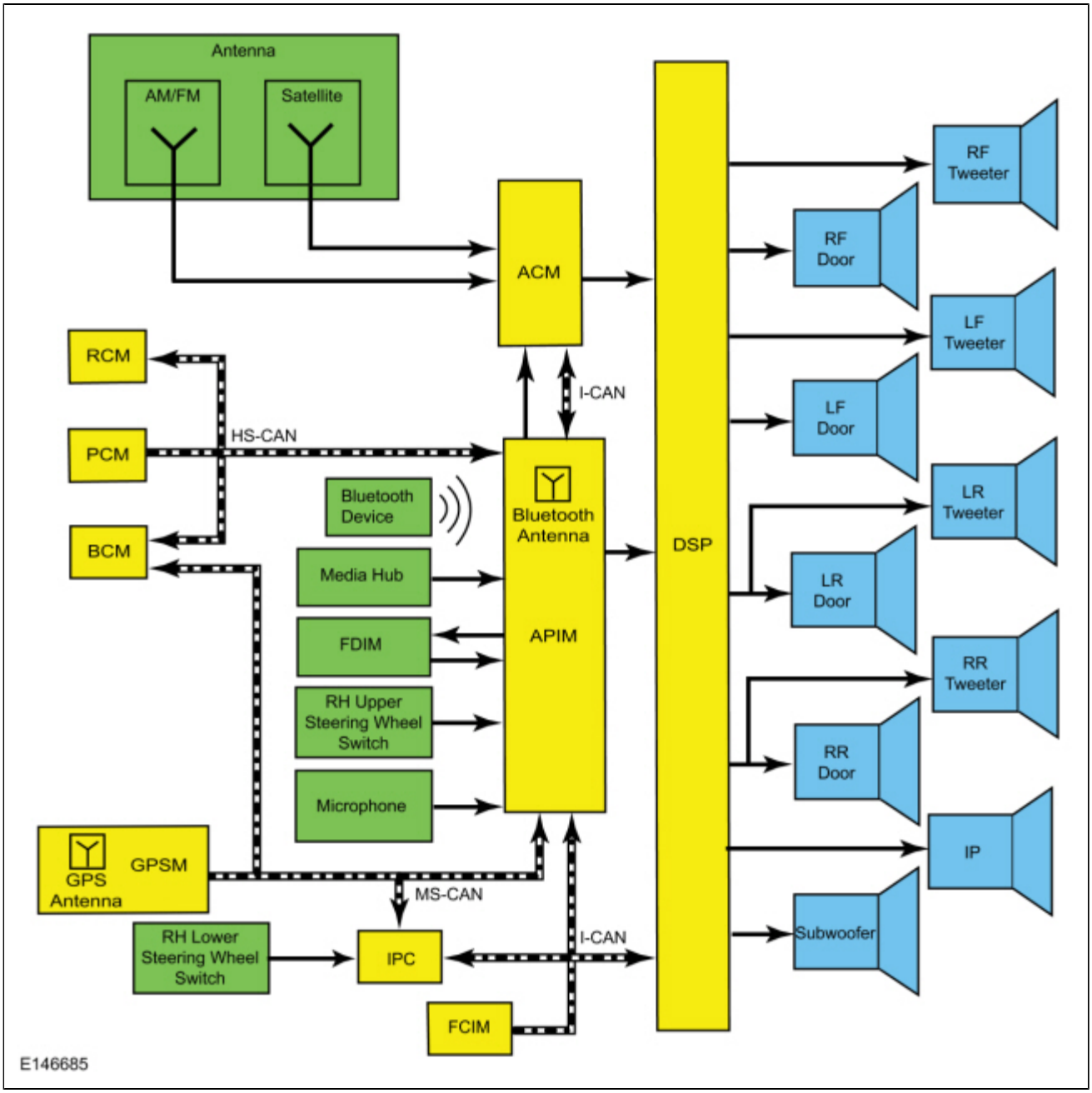

Network Message Chart

A missing network message is indicated by a U-code DTC . When a missing message DTC (U-code) sets, it is important to look for symptoms present in the audio system and throughout the vehicle, and to review the complete message list to determine which other modules rely on the same message.

Refer to: Communications Network - System Operation and Component Description (418-00 Module Communications Network, Description and Operation).
See CAN Multiplex Messages.

When the other modules have been identified, run the self-test for those modules. If the same message is missing from those modules, the identical, or similar lost communication Diagnostic Trouble Codes (DTCs) may be set in those modules. Confirmation of missing messages common to multiple modules can indicate that the originating module is the source of the concern, or that the communication network may be at fault.

It is very important to understand the following:

- Where the input originates
- All of the information necessary for a feature to operate
- Which module(s) receive(s) the input or command message
- Which module controls the output of the feature
- If the module that receives the input controls the output of the feature, or whether it outputs a message over the CAN to another module.

Module Network Input Messages - ACM

Broadcast Message	Originating Module	Message Purpose
Audio volume command	FCIM	Used for set volume from the FCIM to the ACM .
Beltminder audio mute	IPC	Used to mute speaker output so the Belt-Minder® tone can be heard. This message only applies to vehicles with MyKey® enabled.
Chime request	IPC	Used to mute the audio system so a chime from the IPC can be heard.
Day/night status	BCM	Used for day/night illumination status for the audio system.
FCIM button state	FCIM	Used to indicate when a button is pressed on the FCIM so the audio system can make the desired setting change.
Ignition status	BCM	OFF, ACCESSORY, RUN, and START ignition states required for ACM operating modes and fault reporting.
MyKey® volume limit status	IPC	Used to limit the audio system volume when a MyKey® restricted key is in use.
Power mode	IPC	Used to disable the functionality of the ACM due to the load shedding feature.
Steering wheel switch data	APIM	Used for the RH upper steering wheel switch input signal to operate the volume +/-, seek +/-, and mode.
SYNC® alerts	APIM	Used for text message, news, sports, weather, satellite radio artist/title favorites (if activated), and traffic alert notifications.
Transport mode	IPC	Used to disable the functionality of the ACM until taken out of transport mode.
Vehicle configuration data	BCM	Used to verify vehicle configuration data such as the VIN and system module configuration.
Vehicle configuration/Information	IPC	Used for vehicle configuration information to the ACM .
Vehicle speed	PCM	Used for the speed compensated volume function.

Module Network Input Messages - Accessory Protocol Interface Module (APIM)

Broadcast Message	Originating Module	Message Purpose
Airbag deployment eCall notification	RCM	This message indicates air bag deployment has occurred.
Airbag deployment status	RCM	Used to indicate that air bag deployment has occurred.
ACM CD information	ACM	ACM sends CD information to be displayed on the FDIM .
ACM configuration	ACM	Used to verify the correct configuration and modules are installed.
ACM radio functions	ACM	Used to display the ACM radio functions such as seek, tune and AM / FM stations on the FDIM .
ACM sound options	ACM	Used to display the ACM radio sound functions such as treble, bass, navigation command, volume, and phone volume on the FDIM .
Day/night status	BCM	Used for day/night illumination status for the FDIM .
Digital Signal Processing (DSP) beltminder audio status	Audio DSP module	Used to monitor the status of the Belt-Minder® chime from the IPC .
Digital Signal Processing (DSP) surround sound status	Audio DSP module	Indicates the audio DSP module surround sound status to the APIM .
Digital Signal Processing (DSP) volume status	Audio DSP module	Used to display the audio DSP module volume status on the FDIM .
Digital Signal Processing (DSP) setting status	Audio DSP module	Used to display the audio DSP module sound functions such as treble, bass, navigation command volume and phone volume on the FDIM .
eCall notification	RCM	Used to notify of a 911 assist call being initiated due to air bag deployment.
GPS data	GPSM	Used for vehicle positioning, heading, and direction for navigation and 911 assist.
HD Radio® status	ACM	Used for sending the HD Radio® status to the APIM to be displayed on the FDIM .
Ignition status	BCM	OFF, ACCESSORY, RUN, and START ignition states required for APIM operating modes and fault reporting.
Navigation rolling wheel count and direction	ABS module	This message provides for more accurate tracking of the vehicle position when the GPS signal is temporarily unavailable.
Satellite radio function	ACM	Used to display the satellite radio modes and functions.
Selector lever (PRNDL) status	BCM	Used to verify the gear lever position for navigation and parking aid tone readiness.
Transport mode	IPC	Used to disable the functionality of the APIM until taken out of transport mode.
Vehicle configuration data	BCM	Used to verify vehicle configuration data such as the VIN and system module configuration.
Vehicle speed	PCM	Used for navigation functionality.

Module Network Input Messages - Audio Digital Signal Processing (DSP) Module

Broadcast Message	Originating Module	Message Purpose
ACM radio functions	ACM	Used for the ACM radio functions such as current band selection.
Chime request	IPC	Used to mute the audio system so a chime from the IPC can be heard.

Belt-Minder® Status	IPC	When this signal is active, the speaker output is muted to allow the Belt-Minder® tone to be more easily heard. This message only applies to vehicles with MyKey® enabled.
Ignition status	BCM	OFF, ACCESSORY, RUN, and START ignition states required for audio DSP module operating modes and fault reporting.
MyKey® volume limit status	IPC	Used by the ACM to limit the audio system volume when a MyKey® restricted key is in use.
Set point volume	FCIM	Used for volume adjustment set point from the FCIM to the audio DSP module
Set volume	FCIM	Used for set volume from the FCIM to the audio DSP module.
Volume cutback	IPC	Used to reduce the volume from the audio system so a parking aid speaker chime can be heard or a warning notification from the IPC .

Module Network Input Messages - Front Controls Interface Module (FCIM)

Broadcast Message	Originating Module	Message Purpose
Day/night status	BCM	Used for day/night illumination status for the FCIM .
Ignition status	BCM	OFF, ACCESSORY, RUN, and START ignition states required for FCIM operating modes and fault reporting.
Illumination dimming level	BCM	Controls the backlight intensity, based on the input from the dimmer switch.
Transport mode	IPC	Used to disable the functionality of the FCIM until taken out of transport mode.

Module Network Input Messages - Global Positioning System Module (GPSM)

Broadcast Message	Originating Module	Message Purpose
Ignition status	BCM	OFF, ACCESSORY, RUN, and START ignition states required for GPSM operating modes and fault reporting.
Selector lever (PRNDL) status	BCM	Used to verify the selector lever status for navigation.
Navigation wheel rotation count and direction	BCM	This message provides for more accurate tracking of the vehicle position when the GPS signal is temporarily unavailable.
Vehicle yaw rate	RCM	Used to verify the vehicle acceleration data for navigation.

Module Network Input Messages - Instrument Panel Cluster (IPC)

Broadcast Message	Originating	Message Purpose

	Module	
APIM Bluetooth status	APIM	Used for Bluetooth phone status and data for microphone mute and signal strength.
ACM configuration	ACM	Used to verify the correct configuration and modules are installed.
Display language request	APIM	Indicates language selection.

Accessory Delay Feature

The accessory delay feature allows the audio system to be operated for a preset period of time after the ignition is turned off and a front door has not been opened.

AM / FM Radio

Audio signals are sent via the AM / FM antenna coaxial cable from the roof-mounted antenna to the ACM . The ACM converts the radio waves to a fluctuating AC output voltage and sends the left and right audio signals to the audio DSP module. The audio DSP module processes the audio signals and sends them to the speakers.

APIM Programming

The APIM requires specific programming procedures for correct operation. APIM programming is required when:

- The APIM is replaced.
- Directed by a TSB . Updates to resolve SYNC® performance concerns can only be performed when directed by a TSB .
- Feature upgrades are requested. Occasional feature upgrades and/or new applications can be programmed when they become available. This type of programming is available upon customer request and expense.

There are 3 types of APIM programming available:

- Module Replacement — Used when the APIM has been replaced. This type of programming performs the required provisioning (restores software for newly installed hardware).
- Standard — Used to update the APIM and any currently installed Applications to the latest software level.
- Custom — Used to show all the available software options (including applications that may not have been installed previously) that can be programmed into the APIM . Use this selection when upgrades become available or as directed by a TSB .

There are 3 types of software installation methods:

- Full Flash [Force Consumer Interface Processor (CIP)] — A Consumer Interface Processor (CIP) program is the entire software package for the APIM . Performing a Full Flash erases the existing APIM software and installs the complete program. A Full Flash should only be performed if a Service Pack is not available. If a Full Flash is performed, all applications must be re-installed. Performing a Full Flash by selecting Force Consumer Interface Processor (CIP) requires additional programming time and is not necessary unless directed by a TSB .
- Service Pack — A Service Pack update only provides the necessary software to update the existing APIM program to a new level. For example, a Service Pack changes the software program from an 'AA' to an 'AB' version level. It does not delete or overwrite the existing APIM software. A Service Pack is a much smaller program than a Full Flash and requires less downloading and programming time. A Service Pack software installation should always be performed instead of a Full Flash, if possible.
- Applications — Applications are special software programs that may be installed on the APIM . Applications necessary for each vehicle are determined by the vehicle build information stored in the Ford online database. Selecting individual applications for installation may not be necessary every time the APIM is programmed.

NOTE: *Vehicle Interface Processor (VIP) programming is not selectable because the Vehicle Interface Processor (VIP) is configured automatically during programming.*

There are some general programming guidelines that are applicable to multiple types of programming:

- Full Flash/Force Consumer Interface Processor (CIP)
    - The media hub must be removed for programming.

    - The diagnostic scan tool, along with the SYNC® Re-Flash Kit (or equivalent), is required to complete the flash procedure.
    - All previously paired phones are deleted from the SYNC® system.
    - The file needs to be downloaded from the Ford online database. Allow for extra time in order to complete the download. The compressed files are between 200 and 400 megabytes (MB), and once downloaded, are extracted to the full size of approximately 2 gigabytes (GB).
    - Once diagnostic scan tool programming is complete, applications need to be installed with the USB flash drive. This should be accomplished by reinstalling the media hub and connecting the USB flash drive to the media hub.
- Service Pack and Applications
    - A USB flash drive with a minimum 1 gigabyte (GB) storage capacity is required.
    - The file is downloaded from the Ford online database onto the flash drive. The files are then transferred via the flash drive to the APIM through the vehicle USB port.

To perform module replacement programming,
Refer to: SYNC Module [APIM] Replacement Programming (415-00C Information and Entertainment System - General Information - Vehicles With: SYNC/Sony AM/FM/CD, General Procedures).

To perform standard programming,
Refer to: SYNC Module [APIM] Standard Programming (415-00C Information and Entertainment System - General Information - Vehicles With: SYNC/Sony AM/FM/CD, General Procedures).

To perform custom programming,
Refer to: SYNC Module [APIM] Custom Programming (415-00C Information and Entertainment System - General Information - Vehicles With: SYNC/Sony AM/FM/CD, General Procedures).

Audible Prompts

The APIM receives stereo inputs from connected mobile phones and mono inputs from the SYNC® microphone.

Stereo and mono inputs, voice prompts, the Text-To-Speech (TTS) feature, ringtones, and any audio received through a connected mobile phone are transmitted to the ACM as stereo or mono sound.

The Text-To-Speech (TTS) feature speaks information so that it does not have to be read from the display.

Audio Extended Play

This feature allows the audio system to operate with the ignition OFF, regardless of door latch position. When the power button on the FCIM is pressed, audio system functionality is enabled and remains active for a period of 60 minutes. To turn the audio system off, the power button on the FCIM is pressed. Audio extended play is disabled if the battery saver function is enabled.

Battery Load Shed

The BCM uses the battery current sensor to monitor the battery state of charge. The battery current sensor is attached to the battery ground cable. With the vehicle OFF and the ignition in ACC or RUN, a load shed message is sent over the CAN when the BCM determines that the battery state of charge is below 40%, 45 minutes have elapsed, or 10% of the charge has been drained. This message turns off the audio system to save the remaining battery charge. Under this condition, SYS OFF TO SAVE BATT is displayed on the centerstack infotainment display to notify the driver that battery protection actions are active. To clear the load shed state, restart the vehicle.

Bluetooth Mode

Bluetooth is a secure, short-range radio frequency that allows devices to communicate wirelessly through radio waves. The operating range of a Bluetooth signal is a maximum of 9.75 m (32 feet).

The Bluetooth interface can accommodate both Bluetooth-enabled mobile phones and Bluetooth-enabled media devices. The SYNC® system allows interaction with several types of customer Bluetooth devices, including mobile phones and media devices. The APIM contains an on-board Bluetooth chipset, which enables certain wireless devices to interact with the system. Any Bluetooth device used with the SYNC® system must first be paired with the system before it is operational.

Only one Bluetooth phone and one Bluetooth media device can be connected to the system at any one time. If an additional device of either type is paired with the system and made active, the APIM disconnects any active connection and establishes a connection with the new device.

When a new Bluetooth device is added, the APIM and the Bluetooth device must be paired together. Most Bluetooth devices can pair with the SYNC® system, although functionality may vary. To determine if a Bluetooth device is supported, verify the customer device is on the compatibility list for the current APIM software level.

Pairing a Bluetooth device is accomplished through the "Add Device" selection of the phone menu. When pairing a device, the SYNC® system generates a unique PIN that must be entered on the Bluetooth device in order for the pairing process to be successful. There are also some device-specific actions that must take place. For information on the pairing process, refer to the Owner's Literature.

It is important to understand that not all mobile phones have the same level of features when interacting with the SYNC® system. For a list of compatible phones, REFER to www.syncmyride.com.

Composite Audio-Video Input Mode

The composite audio and video inputs consist of the RCA jack connections that are used for playing video or audio content from an external device (such as a gaming system). The media hub contains an internal composite audio/video translator connected to the external RCA jacks, which outputs video and audio signals to the APIM via a shielded audio and video harness.

Digital Signal Processing (DSP)

The Sony® audio system provides theatre quality sound in the vehicle. Audio signals are sent from the ACM to the audio DSP module. The audio DSP module processes the audio signals and sends them to the speakers.

The audio DSP module determines the correct audio environment based on the audio signals and network messages it receives from other audio system modules. These messages include such information as fade/balance and speed compensated volume settings.

HD Radio®

HD Radio® is a free to the public digital radio broadcast. Radio stations transmit digital AM and FM audio along with data (such as station call letters, artist, and title). HD Radio® channels duplicate analog channels. Some HD Radio® channels also subdivide (multicast) the digital signal into multiple channels that do not have analog equivalents.

MyKey® Audio Operation

When a MyKey® is in use, the audio system is muted whenever the Belt-Minder® is activated until the safety belts are buckled. This is a standard setting and cannot be changed.

The MyKey® also has an optional setting that limits the audio system volume. The maximum volume of the audio system is limited to 45%. In an attempt to exceed the limited volume, the MyKey® VOLUME LIMITED message is displayed in the centerstack infotainment display.

Navigation

The navigation system guides the user to a pre-entered destination. Map data is read from the map data Secure Digital (SD) card plugged into the media hub. The APIM calculates route information based on GPS data received by the GPSM . The APIM also uses vehicle speed and transmission gear selected signals received through the network to detect vehicle speed and direction, resulting in more accurate navigation tracking. The navigation display is shown on the FDIM .

The compass heading is derived from the GPS antenna signal. There are no serviceable parts for the compass.

The voice recognition system allows the user to interface with the system without using the touchscreen. A microphone located in the headliner provides a direct input to the APIM .

Satellite Radio

The AM / FM /satellite antenna receives digital signals and sends them to the ACM through the satellite radio antenna cable. The satellite radio receiver is built into the ACM .

SD (Secure Digital) Card Mode

The Secure Digital (SD) card slot can be used for playing audio content that is stored on a Secure Digital (SD) card.

Image files can be saved to the APIM from a Secure Digital (SD) card in order to be used as wallpaper backgrounds displayed on

the FDIM .

Secure Digital (SD) card data is transmitted to the APIM through the USB cable.

SIRIUS® Data Services

The satellite radio system has SIRIUS® data services that are separate subscription services which are received through the satellite receiver. The data services include periodic updates for:

- Traffic
- Movies
- Weather
- Gas prices
- Sports score tracking

Some services may be available separately while others are only available as packages.

Speed Compensated Volume

The audio DSP module adjusts the audio system volume based on the VSS signal to compensate for speed and wind noise.

When a MyKey® is in use and the MyKey® radio volume limiter is enabled, the speed compensated volume is disabled.

Steering Wheel Switch Function

The RH steering wheel switches consist of an upper and a lower 5-way switch. The upper 5-way steering wheel switch operates the volume +/-, seek +/- and the audio mode. The lower 5-way steering wheel switch operates the audio system SYNC® functions.

SYNC® System

- The SYNC® system is a hands-free communication and entertainment system that supports many features. All features are not available with every phone. For example, text messaging is supported by SYNC®, but may not be available with some phones. The SYNC® system provides the ability to:
    - Connect media devices (such as an iPod® or USB device) in order to play audio files.
    - Control the entertainment system, climate control system, ambient lighting system, and several other vehicle systems using the touchscreen or voice controls.
    - Initiate an emergency call (911 Assist) when the air bags deploy.
    - Play media files via a paired Bluetooth-enabled audio device.
    - Produce vehicle health reports.
    - Send and receive phone calls via a paired Bluetooth-enabled phone.
    - Send and receive text messages via a paired Bluetooth-enabled phone.
    - Wi-Fi signal receiver for in-car internet access (requires customer-supplied USB modem).

USB Mode

The USB port can be used for connecting a media device (such as an iPod®) with the device's available cable, or for directly plugging in a portable mass storage device (such as a "thumb drive"). When playing media files stored on a mass storage device, the SYNC® system only plays files that do not have Digital Rights Management (DRM) protection. The USB port can also be used for uploading vehicle application upgrades. The USB port is powered by the APIM , so no external power source is needed to power a device plugged into the USB port if the device supports this feature.

In addition to audio information, metadata (information such as artist, album title, song title, and genre) may also be sent to the APIM from a device plugged into the USB port. The APIM uses the metadata to create indexes that can be used to sort for particular music, based on customer preference. Not all USB devices can send metadata to the APIM . When a new media device is connected to the SYNC® system, the APIM automatically indexes the information. This may take several minutes (depending on the amount of data on the device), and is considered normal operation. When a device that was previously connected to the SYNC® system is reconnected, the APIM updates the index (rather than creating a new one), which reduces the amount of time needed to index the device.

Image files can be saved to the APIM from a USB device in order to be used as wallpaper backgrounds displayed on the FDIM .

Voice Recognition

Voice recognition is used for many vehicle functions, including audio system and climate controls. The microphone relays the

microphone input to the APIM through dedicated wiring. The Text-To-Speech (TTS) and voice prompt features speak certain text information and interaction requests to minimize driver distraction by having to look at the audio system display while driving. The ringtone alerts the driver to an incoming call. The microphone is also used to detect outgoing audio during a phone call.

Audible prompts can range from a simple tone to more elaborate spoken text, based on the customer setting. When interaction mode is set to standard, detailed guidance is provided. When interaction mode is set to advanced, most prompts are tones only and minimal audible guidance is provided. Refer to the Owner's Literature for further information on voice interaction.

The audio signals for the Text-To-Speech (TTS) and voice prompt features, ringtones, and audio from the outside device during a phone call, are sent from the APIM to the ACM .

Component Description

ACM

The ACM can be operated with the ignition in RUN, ACC, or OFF.

Audio signals received by the ACM are sent to the audio DSP module as fluctuating AC voltage.

The ACM requires Programmable Module Installation (PMI) when it is replaced.

Antenna

The roof-mounted antenna has an integrated antenna module that is powered by the ACM to improve AM / FM reception. The satellite antenna is integrated into the roof-mounted antenna.

APIM

Audio signals received by the APIM are sent to the ACM as fluctuating AC voltage.

The APIM consists of 2 internal modules: the Consumer Interface Processor (CIP) and the Vehicle Interface Processor (VIP). The modules are not replaceable individually, but can be flashed independently, if required.

The Consumer Interface Processor (CIP) interfaces with all of the inputs to the APIM . It contains an analog-to-digital-to analog converter, as well as the Bluetooth chipset. Any application upgrades that are available to the consumer are loaded directly to the Consumer Interface Processor (CIP) through the USB port.

The Vehicle Interface Processor (VIP) provides an interface between the Consumer Interface Processor (CIP) and the vehicle. Its main functions are controlling the APIM power management and translating both inbound and outbound signals. In addition, the Vehicle Interface Processor (VIP) queries the modules on the network to retrieve any Diagnostic Trouble Codes (DTCs) when a vehicle health report is requested.

Audio DSP Module

The audio DSP module enhances the input audio signal sound quality from the ACM .

Audio signals received by the audio DSP module are sent to the audio system speakers as fluctuating AC voltage.

The audio DSP module requires PMI when it is replaced.

FCIM

The FCIM can be operated with the ignition in RUN, ACC, or OFF.

The FCIM is one of the customer interfaces to the audio system and is separate from the ACM .

FDIM

The FDIM provides for customer interaction through the touchscreen display. The FDIM plugs directly into the APIM , and therefore does not communicate directly on any network and no external circuits are connected.

GPSM

The GPSM provides vehicle location for real-time traffic reports and re-routing, and for identifying vehicle location in the event of a collision.

For vehicles with navigation, the GPSM acts as the antenna for the navigation system.

The vehicle location information is broadcast to the APIM over the Medium Speed Controller Area Network (MS-CAN).

The GPSM provides the vehicle compass heading to the IPC over the Medium Speed Controller Area Network (MS-CAN). This information is displayed in the IPC message center.

The GPSM requires Programmable Module Installation (PMI) when it is replaced.

Media Hub

The media hub allows for various audio and video devices to be played through the vehicle speakers and viewed in the FDIM .

The media hub receives inputs from:

- 2 USB ports
- 1 Secure Digital (SD) card slot
- 1 set of component RCA jacks

Microphone

The microphone receives the voice command and sends a signal to the APIM . The microphone is also used to detect outgoing audio during a phone call and voice commands for the SYNC® system.

Steering Wheel Switches

The RH upper and lower steering wheel switches contain series of resistors. Each steering wheel switch function corresponds with a specific resistance value within the switch.

The IPC sends a 5-volt reference voltage to the RH lower steering wheel switch on the input circuits. When a switch is pressed, the voltage is routed through the corresponding resistor(s), and is then routed to ground through the IPC . The IPC monitors the resultant voltage drop to determine which switch was pressed. The voltage drop varies depending upon the resistance of the specific switch pressed.

The APIM sends a 5-volt reference voltage to the RH upper steering wheel switch on the input circuits. When a switch is pressed, the voltage is routed through the corresponding resistor(s), and is then routed to ground through the APIM . The APIM monitors the resultant voltage drop to determine which switch was pressed. The voltage drop varies depending upon the resistance of the specific switch pressed.

Copyright © Ford Motor Company

SYNC Module [APIM] Custom Programming

1. **WARNING: Before beginning any service procedure in this section, refer to Health and Safety Precautions in section 100-00 General Information. Failure to follow this instruction may result in serious personal injury.**

   Refer to: Health and Safety Precautions (100-00 General Information, Description and Operation).

2. **NOTE:** *Use this procedure to show all available software options, including Applications, that can be programmed into the APIM when upgrades become available, or as directed by a TSB . For additional information about choosing the correct APIM programming procedure, see Accessory Protocol Interface Module (APIM) Programming.*

   Refer to: Information and Entertainment System (415-00 Information and Entertainment System - General Information) .

NOTE: *A USB flash drive with a minimum storage size of 1 gigabyte (GB) may be required for this procedure.*

NOTE: *Some programming files are large (greater than 2 gigabytes). It is important that the diagnostic scan tool has enough available hard drive space to accommodate the programming file download. If a "Disk Space Error" is received, create additional free space on the hard drive.*

NOTE:

- *To prevent time out errors and to minimize programming time, a hardwired Internet connection is strongly recommended when programming.*
- *During programming, the vehicle display may go blank momentarily.*
- *Make sure the diagnostic scan tool is plugged into a power supply due to the length of programming time.*
- *Close the IDS program before attempting to perform this procedure.*

3. Connect a battery charger set on low. When connecting the charger, the negative battery charger lead must be connected to a clean chassis ground, not the negative battery post.

4. Place the ignition in the ON/RUN position. For ON/RUN position information with Push Button Start vehicles,
   Refer to: Steering Wheel and Column Electrical Components (211-05) .

5. Connect the diagnostic scan tool and VCM to the vehicle.

6. Open Internet Explorer on the diagnostic scan tool and go to the technician service publications web site. On the OASIS tab, select "Read VIN & DTCs," and select "Go."

7. **NOTE:** *This procedure clears all Continuous Memory Diagnostic Trouble Codes (CMDTCs). The Diagnostic Trouble Codes (DTCs) must be recorded now if other diagnoses are to be performed after this procedure.*

   Select "Toolbox" from the technician service publications web site to retrieve and record all Continuous Memory Diagnostic Trouble Codes (CMDTCs).

8. **NOTE:** *If unable to complete programming because the operation stops or errors are received, the web browser settings may need to be configured. Refer to "Software Programming v1.1" on the technician service publications web site under the Service Tips tab.*

   From the OASIS tab, select the "SYNC" button. The Last Recorded State — Software is displayed.

9. **NOTE:** *Scroll to the bottom of the screen, select "Custom," and select the "Read SYNC" button to compare the current APIM Vehicle Interface Processor (VIP), Consumer Interface Processor (CIP), and Application software levels to the last reported state in the Ford online database.*

   - After the comparison is performed, the diagnostic scan tool displays a list of available software. Select the software

level needed as indicated by the TSB . If the software level is not known, stop this procedure and perform standard programming, which automatically selects the latest software levels.
Refer to: SYNC Module [APIM] Standard Programming (415-00C Information and Entertainment System - General Information - Vehicles With: SYNC/Sony AM/FM/CD, General Procedures).
- Applications may require selection for installation. Applications with a green check mark next to them indicates the APIM already has the latest level installed (no re-installation required). All Applications can be selected for installation.
- Depending on the software level required, the diagnostic scan tool automatically selects either the Service Pack or Full Flash programming method.
- Although there may be an option available to override the Service Pack installation and perform a Full Flash/Force Consumer Interface Processor (CIP), choosing this option requires additional programming time and is not recommended unless directed by a TSB .

10. Select the customer-requested upgrade or the Application directed by the TSB .

11. **NOTE:** *Only Applications on a flash drive may be loaded to the APIM through the media hub.*

    NOTE: *If not performing a Full Flash/Force Consumer Interface Processor (CIP), go to step 13.*

    Remove the media hub.
    Refer to: Media Hub (415-00 Information and Entertainment System - General Information) .

12. **NOTE:** *Do not disconnect the diagnostic scan tool or cable from the APIM during programming unless directed by the diagnostic scan tool on-screen prompts.*

    Connect the special tool between the diagnostic scan tool USB port and the vehicle USB cable.
    Special Tool(s) : CCMSYNC-KIT SYNC Re-Flash Kit

13. **NOTE:** *Diagnostic scan tools that have never been used to program SYNC® may encounter a Hardware Wizard pop-up requesting a "WMA SBOOT" driver installation. If this request is encountered, install the driver and select the diagnostic scan tool "retry" button to continue programming.*

    NOTE: *This step may take 20 minutes or longer.*

    Select the "Program SYNC" button to begin the APIM programming process.

    - When prompted by the diagnostic scan tool, disconnect the battery charger, start the engine, and select "OK." Once "OK" is selected, do not interrupt this step, which may take 20 minutes or longer.
    - The updates are downloaded to the diagnostic scan tool or USB flash drive.

14. **NOTE:** *If the diagnostic scan tool does not have an available USB port, the cable from the special tool can be unplugged at this time to make room for the USB flash drive. Do **not** disconnect the VCM from the diagnostic scan tool.*

    NOTE: *This step may take 20 minutes or longer.*

    Connect the USB flash drive to the diagnostic scan tool and follow the on-screen instructions for downloading service packs and Applications onto the USB flash drive.

15. **NOTE:** *If the media hub was removed, install it before connecting the USB flash drive to the vehicle.*

    Refer to: Media Hub (415-00 Information and Entertainment System - General Information) .

16. **NOTE:** *This step may take 20 minutes or longer.*

    When prompted by the diagnostic scan tool, remove the USB flash drive and connect it to the media hub to install the Applications into the APIM .

    - The update should start automatically, and may take 20 minutes or longer.
    - It is normal for the APIM to reset during this step.

17. **NOTE:** *Re-installing the USB flash drive into the diagnostic scan tool initiates the remaining automated configuration steps. Failure to do so results in the loss of feature functionality such as navigation and SYNC® traffic, directions, and information services.*

Once diagnostic scan tool programming and USB flash drive programming are complete, re-install the flash drive into the diagnostic scan tool and select "OK" to report software installation to the Ford online database.

18. **NOTE:** *Calibrate the touchscreen.*

    Refer to: Touchscreen Calibration (415-00C Information and Entertainment System - General Information - Vehicles With: SYNC/Sony AM/FM/CD, General Procedures).

Copyright © Ford Motor Company

SYNC Module [APIM] Replacement Programming

1. **WARNING: Before beginning any service procedure in this section, refer to Health and Safety Precautions in section 100-00 General Information. Failure to follow this instruction may result in serious personal injury.**

   Refer to: Health and Safety Precautions (100-00 General Information, Description and Operation).

2. **NOTE:** *Use this procedure to program and provision the module when a new APIM is being installed. For additional information about choosing the correct APIM programming procedure, see Accessory Protocol Interface Module (APIM) Programming.*

   Refer to: Information and Entertainment System (415-00 Information and Entertainment System - General Information) .

NOTE: *A USB flash drive with a minimum storage size of 1 gigabyte (GB) may be required for this procedure.*

NOTE: *Some programming files are large (greater than 2 gigabytes). It is important that the diagnostic scan tool has enough available hard drive space to accommodate the programming file download. If a "Disk Space Error" is received, create additional free space on the hard drive.*

3. Install the new APIM before performing this procedure.
   Refer to: Accessory Protocol Interface Module (APIM) (415-00C) .

NOTE:

- *To prevent time out errors and to minimize programming time, a hardwired Internet connection is strongly recommended when programming.*
- *During programming, the vehicle display may go blank momentarily.*
- *Make sure the diagnostic scan tool is plugged into a power supply due to the length of programming time.*
- *Close the IDS program before attempting to perform this procedure.*

4. Connect a battery charger set on low. When connecting the charger, the negative battery charger lead must be connected to a clean chassis ground, not the negative battery post.

5. Place the ignition in the ON/RUN position. For ON/RUN position information with Push Button Start vehicles,
   Refer to: Steering Wheel and Column Electrical Components (211-05) .

6. Connect the diagnostic scan tool and VCM to the vehicle.

7. Open Internet Explorer on the diagnostic scan tool and go to the technician service publications web site. On the OASIS tab, select "Read VIN & DTCs," and select "Go."

8. **NOTE:** *This procedure clears all Continuous Memory Diagnostic Trouble Codes (CMDTCs). The Diagnostic Trouble Codes (DTCs) must be recorded now if other diagnoses are to be performed after this procedure.*

   Select "Toolbox" from the technician service publications web site to retrieve and record all Continuous Memory Diagnostic Trouble Codes (CMDTCs).

9. **NOTE:** *If unable to complete programming because the operation stops or errors are received, the web browser settings may need to be configured. Refer to "Software Programming v1.1" on the technician service publications web site under the Service Tips tab.*

   From the OASIS tab, select the "SYNC" button. The Last Recorded State — Software is displayed.

10. **NOTE:** *Scroll to the bottom of the screen, select "Module Replacement," and select the "Read SYNC" button to compare the current APIM Vehicle Interface Processor (VIP), Consumer Interface Processor (CIP), and Application software levels to the*

last reported state in the Ford online database.

- After the comparison is performed, the diagnostic scan tool automatically selects software for programming.
- Applications may require selection for installation. Applications with a green check mark next to them indicates the APIM already has the latest level installed (no re-installation required).
- Depending on the software level required, the diagnostic scan tool automatically selects either the Service Pack or Full Flash programming method.
- Although there may be an option available to override the Service Pack installation and perform a Full Flash/Force Consumer Interface Processor (CIP), choosing this option requires additional programming time and is not recommended unless directed by a TSB .

11. **NOTE:** *Only Applications on a flash drive may be loaded to the APIM through the media hub.*

    NOTE: *If not performing a Full Flash/Force Consumer Interface Processor (CIP), go to step 13.*

    Remove the media hub.
    Refer to: Media Hub (415-00 Information and Entertainment System - General Information) .

12. **NOTE:** *Do not disconnect the diagnostic scan tool or cable from the APIM during programming unless directed by the diagnostic scan tool on-screen prompts.*

    Connect the special tool between the diagnostic scan tool USB port and the vehicle USB cable.
    Special Tool(s) : CCMSYNC-KIT SYNC Re-Flash Kit

13. **NOTE:** *Diagnostic scan tools that have never been used to program SYNC® may encounter a Hardware Wizard pop-up requesting a "WMA SBOOT" driver installation. If this request is encountered, install the driver and select the diagnostic scan tool "retry" button to continue programming.*

    NOTE: *This step may take 20 minutes or longer.*

    Select the "Program SYNC" button to begin the APIM programming process.

    - When prompted by the diagnostic scan tool, disconnect the battery charger, start the engine, and select "OK." Once "OK" is selected, do not interrupt this step, which may take 20 minutes or longer.
    - The updates are downloaded to the diagnostic scan tool or USB flash drive.

14. **NOTE:** *If the diagnostic scan tool does not have an available USB port, the cable from the special tool can be unplugged at this time to make room for the USB flash drive. Do **not** disconnect the VCM from the diagnostic scan tool.*

    NOTE: *This step may take 20 minutes or longer.*

    Connect the USB flash drive to the diagnostic scan tool and follow the on-screen instructions for downloading service packs and Applications onto the USB flash drive.

15. **NOTE:** *If the media hub was removed, install it before connecting the USB flash drive to the vehicle.*

    Refer to: Media Hub (415-00 Information and Entertainment System - General Information) .

16. **NOTE:** *This step may take 20 minutes or longer.*

    When prompted by the diagnostic scan tool, remove the USB flash drive and connect it to the media hub to install the Applications into the APIM .

    - The update should start automatically, and may take 20 minutes or longer.
    - It is normal for the APIM to reset during this step.

17. **NOTE:** *Re-installing the USB flash drive into the diagnostic scan tool initiates the remaining automated configuration steps. Failure to do so results in the loss of feature functionality such as navigation and SYNC® traffic, directions, and information services.*

    Once diagnostic scan tool programming and USB flash drive programming are complete, re-install the flash drive into the diagnostic scan tool and select "OK" to report software installation to the Ford online database.

18. **NOTE:** *Calibrate the touchscreen.*

Refer to: Touchscreen Calibration (415-00C Information and Entertainment System - General Information - Vehicles With: SYNC/Sony AM/FM/CD, General Procedures).

Copyright © Ford Motor Company

SYNC Module [APIM] Standard Programming

1. **WARNING: Before beginning any service procedure in this section, refer to Health and Safety Precautions in section 100-00 General Information. Failure to follow this instruction may result in serious personal injury.**

   Refer to: Health and Safety Precautions (100-00 General Information, Description and Operation).

2. **NOTE:** *Use this procedure to update the APIM and any installed Applications to the latest level. For additional information about choosing the correct APIM programming procedure, see Accessory Protocol Interface Module (APIM) Programming.*

   Refer to: Information and Entertainment System (415-00 Information and Entertainment System - General Information) .

NOTE: *A USB flash drive with a minimum storage size of 1 gigabyte (GB) may be required for this procedure.*

NOTE: *Some programming files are large (greater than 2 gigabytes). It is important that the diagnostic scan tool has enough available hard drive space to accommodate the programming file download. If a "Disk Space Error" is received, create additional free space on the hard drive.*

NOTE:

- *To prevent time out errors and to minimize programming time, a hardwired Internet connection is strongly recommended when programming.*
- *During programming, the vehicle display may go blank momentarily.*
- *Make sure the diagnostic scan tool is plugged into a power supply due to the length of programming time.*
- *Close the IDS program before attempting to perform this procedure.*

3. Connect a battery charger set on low. When connecting the charger, the negative battery charger lead must be connected to a clean chassis ground, not the negative battery post.

4. Place the ignition in the ON/RUN position. For ON/RUN position information with Push Button Start vehicles,
   Refer to: Steering Wheel and Column Electrical Components (211-05) .

5. Connect the diagnostic scan tool and VCM to the vehicle.

6. Open Internet Explorer on the diagnostic scan tool and go to the technician service publications web site. On the OASIS tab, select "Read VIN & DTCs," and select "Go."

7. **NOTE:** *This procedure clears all Continuous Memory Diagnostic Trouble Codes (CMDTCs). The Diagnostic Trouble Codes (DTCs) must be recorded now if other diagnoses are to be performed after this procedure.*

   Select "Toolbox" from the technician service publications web site to retrieve and record all Continuous Memory Diagnostic Trouble Codes (CMDTCs).

8. **NOTE:** *If unable to complete programming because the operation stops or errors are received, the web browser settings may need to be configured. Refer to "Software Programming v1.1" on the technician service publications web site under the Service Tips tab.*

   From the OASIS tab, select the "SYNC" button. The Last Recorded State — Software is displayed.

9. **NOTE:** *Scroll to the bottom of the screen, select "Standard," and select the "Read SYNC" button to compare the current APIM Vehicle Interface Processor (VIP), Consumer Interface Processor (CIP), and Application software levels to the last reported state in the Ford online database.*

   - After the comparison is performed, the diagnostic scan tool automatically selects software for programming.
   - Applications may require selection for installation. Applications with a green check mark next to them indicates the

APIM already has the latest level installed (no re-installation required).
- Depending on the software level required, the diagnostic scan tool automatically selects either the Service Pack or Full Flash programming method.
- Although there may be an option available to override the Service Pack installation and perform a Full Flash/Force Consumer Interface Processor (CIP), choosing this option requires additional programming time and is not recommended unless directed by a TSB .

10. **NOTE:** *Only Applications on a flash drive may be loaded to the APIM through the media hub.*

    NOTE: *If not performing a Full Flash/Force Consumer Interface Processor (CIP), go to step 12.*

    Remove the media hub.
    Refer to: Media Hub (415-00 Information and Entertainment System - General Information) .

11. **NOTE:** *Do not disconnect the diagnostic scan tool or cable from the APIM during programming unless directed by the diagnostic scan tool on-screen prompts.*

    Connect the special tool between the diagnostic scan tool USB port and the vehicle USB cable.
    Special Tool(s) : CCMSYNC-KIT SYNC Re-Flash Kit

12. **NOTE:** *Diagnostic scan tools that have never been used to program SYNC® may encounter a Hardware Wizard pop-up requesting a "WMA SBOOT" driver installation. If this request is encountered, install the driver and select the diagnostic scan tool "retry" button to continue programming.*

    NOTE: *This step may take 20 minutes or longer.*

    Select the "Program SYNC" button to begin the APIM programming process.

    - When prompted by the diagnostic scan tool, disconnect the battery charger, start the engine, and select "OK." Once "OK" is selected, do not interrupt this step, which may take 20 minutes or longer.
    - The updates are downloaded to the diagnostic scan tool or USB flash drive.

13. **NOTE:** *If the diagnostic scan tool does not have an available USB port, the cable from the special tool can be unplugged at this time to make room for the USB flash drive. Do **not** disconnect the VCM from the diagnostic scan tool.*

    NOTE: *This step may take 20 minutes or longer.*

    Connect the USB flash drive to the diagnostic scan tool and follow the on-screen instructions for downloading service packs and Applications onto the USB flash drive.

14. **NOTE:** *If the media hub was removed, install it before connecting the USB flash drive to the vehicle.*

    Refer to: Media Hub (415-00 Information and Entertainment System - General Information) .

15. **NOTE:** *This step may take 20 minutes or longer.*

    When prompted by the diagnostic scan tool, remove the USB flash drive and connect it to the media hub to install the Applications into the APIM .

    - The update should start automatically, and may take 20 minutes or longer.
    - It is normal for the APIM to reset during this step.

16. **NOTE:** *Re-installing the USB flash drive into the diagnostic scan tool initiates the remaining automated configuration steps. Failure to do so results in the loss of feature functionality such as navigation and SYNC® traffic, directions, and information services.*

    Once diagnostic scan tool programming and USB flash drive programming are complete, re-install the flash drive into the diagnostic scan tool and select "OK" to report software installation to the Ford online database.

17. **NOTE:** *Calibrate the touchscreen.*

    Refer to: Touchscreen Calibration (415-00C Information and Entertainment System - General Information - Vehicles With: SYNC/Sony AM/FM/CD, General Procedures).

Copyright © Ford Motor Company

Audio Front Control Module (ACM) Self-Test

1. **WARNING: Before beginning any service procedure in this section, refer to Health and Safety Precautions in section 100-00 General Information. Failure to follow this instruction may result in serious personal injury.**

   Refer to: Health and Safety Precautions (100-00 General Information, Description and Operation).

2. **NOTE:** *If the ACM, FCDIM (if equipped), FCIM, or FDIM (if equipped) are inoperative (blank or do not power on), obtain the ACM part number by referencing the label attached to the ACM chassis.*

   Turn the ACM on.

3. Operate the audio system in radio tuner AM / FM mode.

4. Press and hold the eject button, and within 1 second, press and hold the seek up button. If supported, the speaker walk around test will begin, and the display will indicate each speaker as it is tested.

NOTE: *AHU Diagnostics refers to the ACM, EFP Diagnostics refers to the FCIM, and MFD Diagnostics (if supported) refers to the FCDIM (if equipped).*

5. To exit the self-diagnostic mode, turn the ACM off, or select "Exit Diagnostics."

Copyright © Ford Motor Company

Microphone - Vehicles With: SYNC

Removal

NOTE: *Removal steps in this procedure may contain installation details.*

1. **WARNING: Before beginning any service procedure in this section, refer to Safety Warnings in section 100-00 General Information. Failure to follow this instruction may result in serious personal injury.**

   Refer to: Health and Safety Precautions (100-00 General Information, Description and Operation).

2.

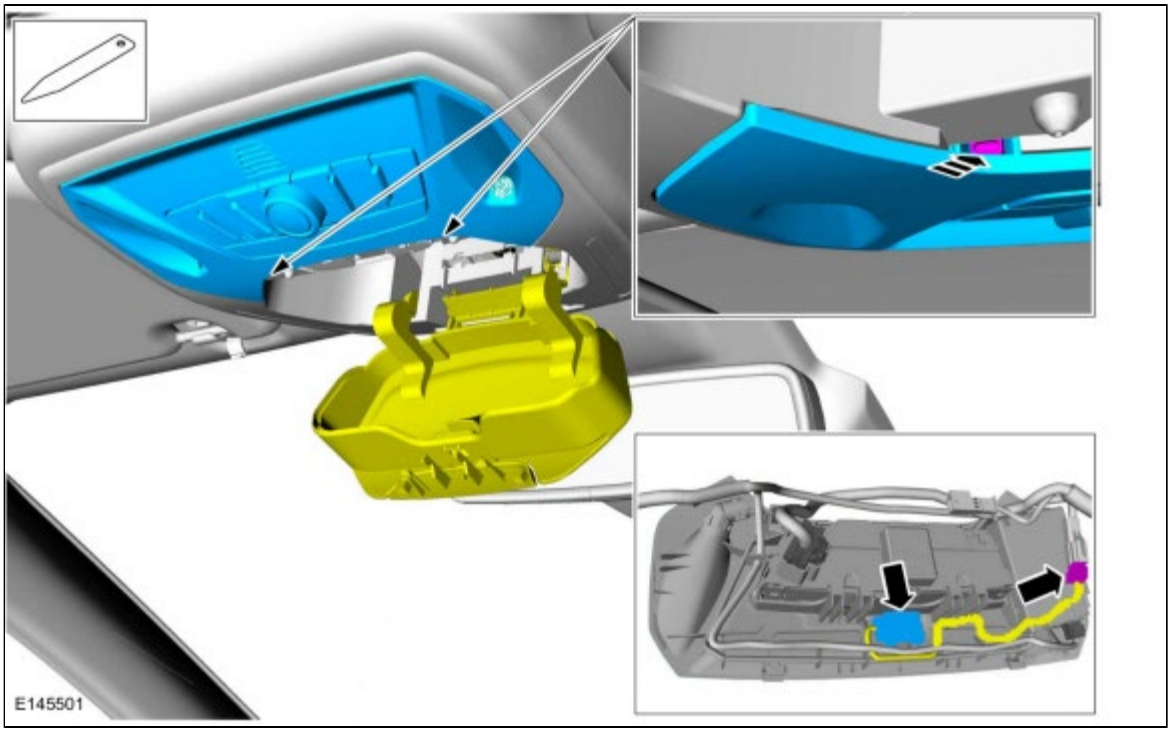

Installation

1. To install, reverse the removal procedure.

Copyright © Ford Motor Company

Information and Entertainment System - Component Location

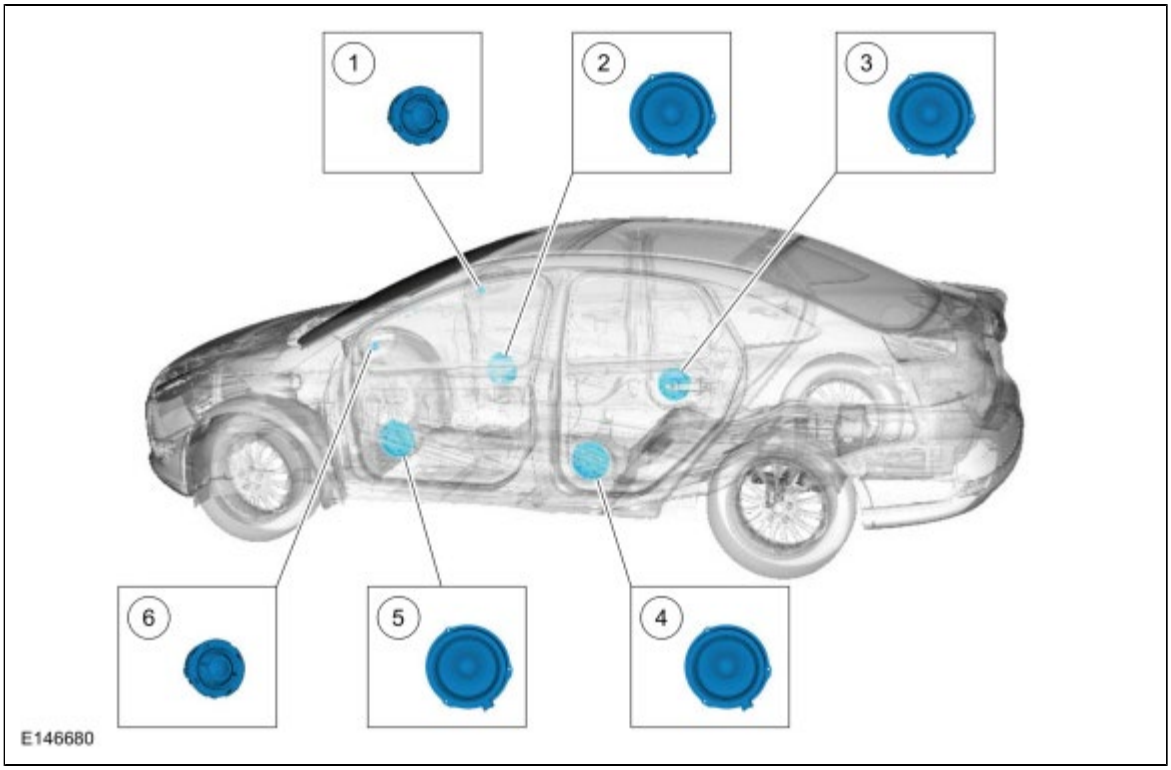

Item	Description
1	RH front tweeter speaker
2	RH front door speaker
3	RH rear door speaker
4	LH rear door speaker
5	LH front door speaker
6	LH front tweeter speaker

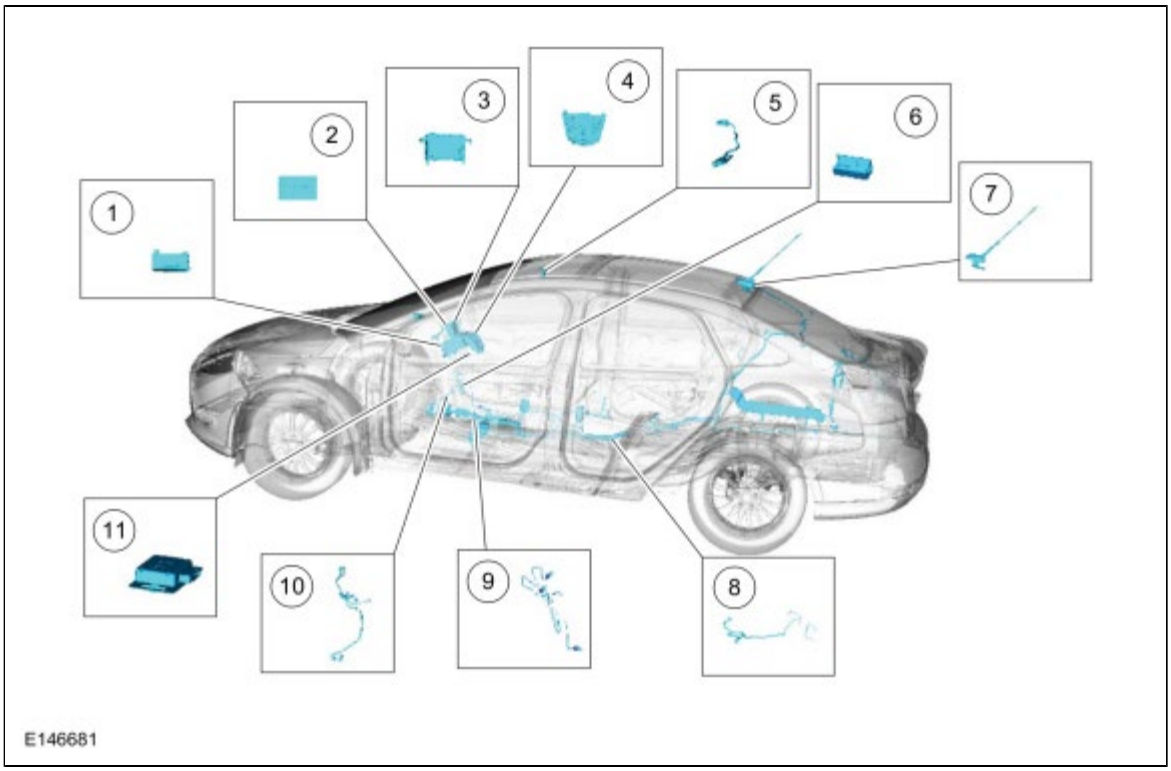

Item	Description
1	ACM
2	APIM
3	FCDIM
4	FCIM
5	Microphone
6	Audio input jack
7	Antenna
8	Antenna cable (upper)
9	USB cable
10	Antenna cable (lower)
11	GPSM , located above the glove compartment

Copyright © Ford Motor Company

Information and Entertainment System - Overview

Overview

The audio system consists of 6 speakers with an AM / FM single CD ACM , 4.2-inch (107 mm) non-touchscreen FCDIM , GPSM , FCIM , audio input jack, SYNC®, APIM , USB port, redundant steering wheel controls, and optional satellite radio.

Copyright © Ford Motor Company

Information and Entertainment System - System Operation and Component Description

System Operation

System Diagram

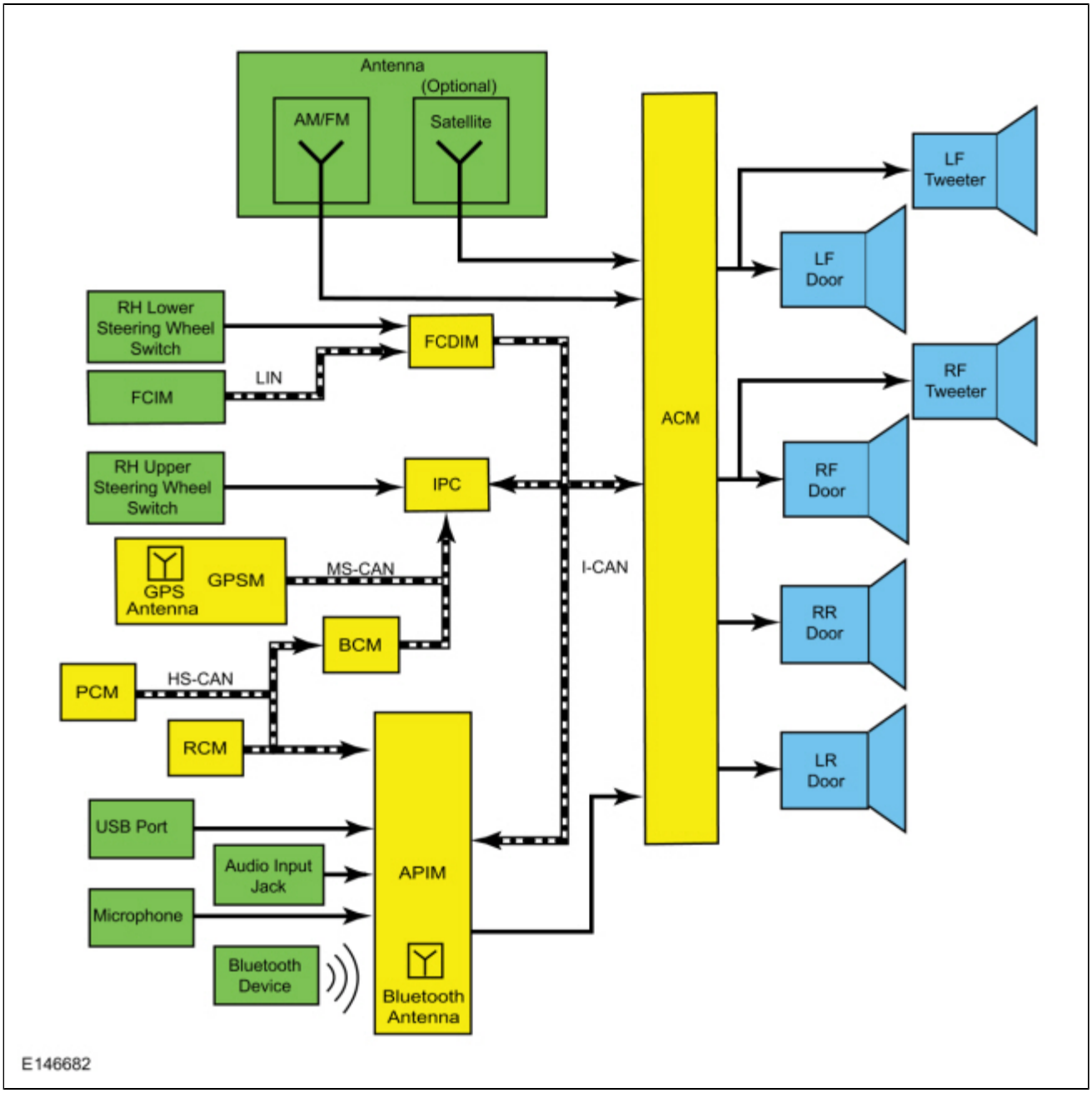

Network Message Chart

A missing network message is indicated by a U-code DTC . When a missing message DTC (U-code) sets, it is important to look for symptoms present in the audio system and throughout the vehicle, and to review the complete message list to determine which other modules rely on the same message.

Refer to: Communications Network - System Operation and Component Description (418-00 Module Communications Network, Description and Operation).
See CAN Multiplex Messages.

When the other modules have been identified, run the self-test for those modules. If the same message is missing from those modules, the identical, or similar lost communication Diagnostic Trouble Codes (DTCs) may be set in those modules. Confirmation of missing messages common to multiple modules can indicate that the originating module is the source of the concern, or that the communication network may be at fault.

It is very important to understand the following:

- Where the input originates
- All of the information necessary for a feature to operate
- Which module(s) receive(s) the input or command message
- Which module controls the output of the feature
- If the module that receives the input controls the output of the feature, or whether it outputs a message over the CAN to another module.

Module Network Input Messages - ACM

Broadcast Message	Originating Module	Message Purpose
Audio button state	FCDIM	The FCDIM sends this message to indicate when a button is pressed on the FCIM so the audio system can make the desired setting change.
Audio display request mode	FCDIM	Used to request a display mode from the ACM .
Audio mute	IPC	Used to mute the audio system so a warning notification from the IPC can be heard.
Belt-Minder® Mode	IPC	When a MyKey® is in use, the audio system is muted until the safety belts are buckled.
Bezel test request	FCDIM	Used to request the bezel test for the audio system.
Chime request	IPC	Used to mute the audio system so a chime from the IPC can be heard.
Display set volume request	FCDIM	A request for the ACM set volume to be displayed on the FCDIM .
Ignition status	BCM	OFF, ACCESSORY, RUN, and START ignition states required for ACM operating modes and fault reporting.
MyKey® volume limit mode	IPC	When a MyKey® is in use, maximum volume of the audio system is limited.
Steering wheel switch data	FCDIM	Used for the RH lower steering wheel switch input signal to operate the volume +/-, seek +/-.
Vehicle configuration/information	IPC	Used for vehicle configuration information to the ACM .
Vehicle speed	PCM	Used for the speed compensated volume function.

Module Network Input Messages - APIM

Broadcast Message	Originating Module	Message Purpose

ACM configuration	ACM	Used to verify the correct configuration and modules are installed.
Airbag deployment eCall notification	RCM	Used to indicate that air bag deployment has occurred.
Airbag deployment status	RCM	Used to monitor air bag deployment status for 911 assist.
eCall notification	RCM	Used to notify of a 911 assist call being initiated due to air bag deployment.
GPS data	GPSM	Used for vehicle positioning, heading, and direction for navigation and 911 assist.
Ignition status	BCM	OFF, ACCESSORY, RUN, and START ignition states required for the APIM operating modes and fault reporting.
Selector lever (PRNDL) status	BCM	Used to verify the gear lever position for vehicle direction data for navigation.
Steering wheel switch data	FCDIM	Used for the RH lower steering wheel switch input signal to operate SYNC® functions.
Vehicle configuration data	BCM	Used to verify vehicle configuration data such as VIN and system module configuration.
Vehicle speed	PCM	Used for navigation functionality.

Module Network Input Messages - FCDIM

Broadcast Message	Originating Module	Message Purpose
ACM CD data	ACM	Used to display CD data on the FCDIM .
ACM configuration	ACM	Used to verify the correct configuration and modules are installed.
ACM radio functions	ACM	Used to display the ACM radio functions such as seek, tune and AM / FM stations on the FCDIM .
ACM volume and mode status	ACM	Used to display audio volume and mode status.
CD load/eject	ACM	Used to display the loaded or ejected CD status on the FCDIM .
Day/night status	BCM	Used for day/night illumination status for the FCIM .
Ignition status	BCM	OFF, ACCESSORY, RUN, and START ignition states required for FCIM operating modes and fault reporting.
Illumination dimming level	BCM	Controls the backlight intensity, based on the input from the dimmer switch.
Satellite radio status	ACM	Used to display the satellite radio modes and functions.

Module Network Input Messages - GPSM

Broadcast Message	Originating Module	Message Purpose
Ignition status	BCM	OFF, ACCESSORY, RUN, and START ignition states required for GPSM operating modes and fault reporting.

Navigation wheel rotation count and direction	BCM	Used to provide more accurate tracking of the vehicle position when the GPS signal is temporarily unavailable.
Selector lever (PRNDL) status	BCM	Used to verify the selector lever status for navigation.
Vehicle yaw rate	RCM	Used to verify the vehicle acceleration data for navigation.

Module Network Input Messages - IPC

Broadcast Message	Originating Module	Message Purpose
ACM configuration	ACM	Used to verify the correct configuration and modules are installed.
ACM status	ACM	Used for the MyKey® status to limit volume in Belt-Minder® Mode.

Accessory Delay Feature

The accessory delay feature allows the audio system to be operated for a preset period of time after the ignition is turned off and a front door has not been opened.

AM / FM Radio

The roof-mounted antenna receives both AM / FM radio waves. The audio signals are sent via the AM / FM antenna cable from the roof-mounted antenna to the ACM . The ACM converts the radio waves to a fluctuating AC output voltage and sends the right and left audio signals to the speakers.

Audible Prompts

The APIM receives stereo inputs from connected mobile phones and mono inputs from the SYNC® microphone.

Stereo and mono inputs, voice prompts, the Text-To-Speech (TTS) feature, ringtones, and any audio received through a connected mobile phone are transmitted to the ACM as stereo or mono sound.

The Text-To-Speech (TTS) feature speaks information so that it does not have to be read from the display.

Audio Extended Play

This feature allows the audio system to operate with the ignition OFF, regardless of door latch position. When the power button on the FCIM is pressed, audio system functionality is enabled and remains active for a period of 60 minutes. To turn the audio system off, the power button on the FCIM is pressed. Audio extended play is disabled if the battery saver function is enabled.

Audio Input Jack Mode

When a portable MP3 player is connected, audio from the MP3 audio device can be played through the vehicle speakers. Only the speaker volume can be controlled by the ACM . All other functions (such as seek, fast forward, pause, etc.) must be carried out on the device itself. No metadata is transferred when a device is connected through the audio input jack. Audio signals are sent from the audio input jack to the APIM . There are no external power or ground circuits to the audio input jack.

Battery Load Shed

The BCM uses the battery current sensor to monitor the battery state of charge. The battery current sensor is attached to the battery ground cable. With the vehicle OFF and the ignition in ACC or RUN, a load shed message is sent over the CAN when the BCM determines that the battery state of charge is below 40%, 45 minutes have elapsed, or 10% of the charge has been drained. This message turns off the audio system to save the remaining battery charge. Under this condition, SYS OFF TO SAVE BATT is displayed on the centerstack infotainment display to notify the driver that battery protection actions are active. To clear the load shed state, restart the vehicle.

Bluetooth Mode

Bluetooth is a secure, short-range radio frequency that allows devices to communicate wirelessly through radio waves. The operating range of a Bluetooth signal is a maximum of 9.75 m (32 feet).

The Bluetooth interface can accommodate both Bluetooth-enabled mobile phones and Bluetooth-enabled media devices. The SYNC® system allows interaction with several types of customer Bluetooth devices, including mobile phones and media devices. The APIM contains an on-board Bluetooth chipset, which enables certain wireless devices to interact with the system. Any Bluetooth device used with the SYNC® system must first be paired with the system before it is operational.

Only one Bluetooth phone and one Bluetooth media device can be connected to the system at any one time. If an additional device of either type is paired with the system and made active, the APIM disconnects any active connection and establishes a connection with the new device.

When a new Bluetooth device is added, the APIM and the Bluetooth device must be paired together. Most Bluetooth devices can pair with the SYNC® system, although functionality may vary. To determine if a Bluetooth device is supported, verify the customer device is on the compatibility list for the current APIM software level.

Pairing a Bluetooth device is accomplished through the "Add Device" selection of the phone menu. When pairing a device, the SYNC® system generates a unique PIN that must be entered on the Bluetooth device in order for the pairing process to be successful. There are also some device-specific actions that must take place. For information on the pairing process, refer to the Owner's Literature.

It is important to understand that not all mobile phones have the same level of features when interacting with the SYNC® system. For a list of compatible phones, REFER to www.syncmyride.com.

MyKey® Audio Operation

When a MyKey® is in use, the audio system is muted whenever the Belt-Minder® is activated until the safety belts are buckled. This is a standard setting and cannot be changed.

The MyKey® also has an optional setting that limits the audio system volume. The maximum volume of the audio system is limited to 45%. In an attempt to exceed the limited volume, the MyKey® VOLUME LIMITED message is displayed in the centerstack infotainment display.

Satellite Radio

The AM / FM /satellite antenna receives digital signals and sends them to the ACM through the satellite radio antenna cable. The satellite radio receiver is built into the ACM .

Speed Compensated Volume

The ACM adjusts the audio system volume based on the VSS signal to compensate for speed and wind noise.

When a MyKey® is in use and the MyKey® radio volume limiter is enabled, the speed compensated volume is disabled.

Steering Wheel Switch Function

The RH steering wheel switches consist of an upper and a lower 5-way switch. The upper 5-way steering wheel switch operates the FCDIM . The lower 5-way steering wheel switch operates the volume +/-, seek +/-, and the audio system SYNC® functions.

SYNC® System

- The SYNC® system is a hands-free communication and entertainment system that supports many features. All features are not available with every phone. The SYNC® system provides the ability to:
  - Connect media devices (such as an iPod® or USB device) in order to play audio files.
  - Control the entertainment system using voice controls.
  - Initiate an emergency call (911 Assist) when the air bags deploy.
  - Play media files via a paired Bluetooth-enabled audio device.
  - Produce vehicle health reports.
  - Provide turn-by-turn traffic directions.
  - Send and receive phone calls via a paired Bluetooth-enabled phone.
  - Send and receive text messages via a paired Bluetooth-enabled phone.

SYNC® Traffic, Directions, and Information

The SYNC® traffic, directions and information service is a subscription-based service that includes precise turn-by-turn directions, personalized real-time traffic updates with text alerts, business search, entertainment, news, sports, stocks, travel, and weather. The customer's mobile phone is used to access and download the SYNC® services. The GPS antenna, integral to the GPSM , is used to detect the location and direction of the vehicle. For traffic, directions, and information services subscription information, REFER to www.syncmyride.com.

USB Audio Mode

The USB port can be used for connecting a media device (such as an iPod®) with the device's available cable, or for directly plugging in a portable mass storage device (such as a "thumb drive"). When playing media files stored on a mass storage device, the SYNC® system only plays files that do not have Digital Rights Management (DRM) protection. The USB port can also be used for uploading vehicle application upgrades. The USB port is powered by the APIM , so no external power source is needed to power a device plugged into the USB port if the device supports this feature.

In addition to audio information, metadata (information such as artist, album title, song title, and genre) may also be sent to the APIM from a device plugged into the USB port. The APIM uses the metadata to create indexes that can be used to sort for particular music, based on customer preference. Not all USB devices can send metadata to the APIM . When a new media device is connected to the SYNC® system, the APIM automatically indexes the information. This may take several minutes (depending on the amount of data on the device), and is considered normal operation. When a device that was previously connected to the SYNC® system is reconnected, the APIM updates the index (rather than creating a new one), which reduces the amount of time needed to index the device.

Voice Recognition

Voice recognition is used for many vehicle functions, including the audio system. The microphone relays the microphone input to the APIM through dedicated wiring. The Text-To-Speech (TTS) and voice prompt features speak certain text information and interaction requests to minimize driver distraction by having to look at the audio system display while driving. The ringtone alerts the driver to an incoming call. The microphone is also used to detect outgoing audio during a phone call.

Audible prompts can range from a simple tone to more elaborate spoken text, based on the customer setting. When interaction mode is set to standard, detailed guidance is provided. When interaction mode is set to advanced, most prompts are tones only and minimal audible guidance is provided. Refer to the Owner's Literature for further information on voice interaction.

The audio signals for the Text-To-Speech (TTS) and voice prompt features, ringtones, and audio from the outside device during a phone call, are sent from the APIM to the ACM .

Component Description

ACM

The ACM can be operated with the ignition in RUN, ACC, or OFF.

Audio signals received by the ACM are sent to the audio system speakers as fluctuating AC voltage.

The ACM requires Programmable Module Installation (PMI) when it is replaced.

Antenna

The roof-mounted antenna has an integrated antenna module that is powered by the ACM to improve AM / FM reception. The satellite antenna is integrated into the roof-mounted antenna.

APIM

Audio signals received by the APIM are sent to the ACM as fluctuating AC voltage.

The APIM consists of 2 internal modules: the Consumer Interface Processor (CIP) and the Vehicle Interface Processor (VIP). The modules are not replaceable individually, but can be flashed independently, if required.

The Consumer Interface Processor (CIP) interfaces with all of the inputs to the APIM . It contains an analog-to-digital-to analog converter, as well as the Bluetooth chipset. Any application upgrades that are available to the consumer are loaded directly to the Consumer Interface Processor (CIP) through the USB port.

The Vehicle Interface Processor (VIP) provides an interface between the Consumer Interface Processor (CIP) and the vehicle. Its main functions are controlling the APIM power management and translating both inbound and outbound signals. In addition, the Vehicle Interface Processor (VIP) queries the modules on the network to retrieve any Diagnostic Trouble Codes (DTCs) when a vehicle health report is requested.

Audio Input Jack

The audio input jack allows for a portable MP3 audio device (such as an iPod®) to be connected to the vehicle audio system utilizing a 1/8-inch (3 mm) audio jack.

FCDIM

The FCDIM displays driver information messages, vehicle settings, infotainment, audio, and climate control system information.

The FCDIM requires Programmable Module Installation (PMI) when it is replaced.

FCIM

The FCIM can be operated with the ignition in RUN, ACC, or OFF.

The FCIM is one of the customer interfaces to the audio system and is separate from the ACM . It transfers button press data over a dedicated LIN to the FCDIM .

GPSM

The GPSM provides vehicle location for real-time traffic reports and re-routing, and for identifying vehicle location in the event of a collision.

The GPSM provides the vehicle compass heading to the IPC over the Medium Speed Controller Area Network (MS-CAN). This information is displayed in the IPC message center.

The GPSM requires Programmable Module Installation (PMI) when it is replaced.

Microphone

The microphone receives the voice command and sends a signal to the APIM . The microphone is also used to detect outgoing audio during a phone call and voice commands for the SYNC® system.

Steering Wheel Switches

The RH upper and lower steering wheel switches contain series of resistors. Each steering wheel switch function corresponds with a specific resistance value within the switch.

The IPC sends a 5-volt reference voltage to the RH upper steering wheel switch on the input circuits. When a switch is pressed, the voltage is routed through the corresponding resistor(s), and is then routed to ground through the IPC . The IPC monitors the resultant voltage drop to determine which switch was pressed. The voltage drop varies depending upon the resistance of the specific switch pressed.

The FCDIM sends a 5-volt reference voltage to the RH lower steering wheel switch on the input circuits. When a switch is pressed, the voltage is routed through the corresponding resistor(s), and is then routed to ground through the FCDIM . The FCDIM monitors the resultant voltage drop to determine which switch was pressed. The voltage drop varies depending upon the resistance of the specific switch pressed.

USB Port

The USB port is connected to the APIM through the USB cable. The USB port can be used to play audio files, connect a media device, or upload software from mass storage.

Copyright © Ford Motor Company

Parking Aid Camera - Vehicles With: 5-Door

Removal

NOTE: *Removal steps in this procedure may contain installation details.*

1. **WARNING: Before beginning any service procedure in this section, refer to Safety Warnings in section 100-00 General Information. Failure to follow this instruction may result in serious personal injury.**
2. Remove the liftgate release handle.
3.

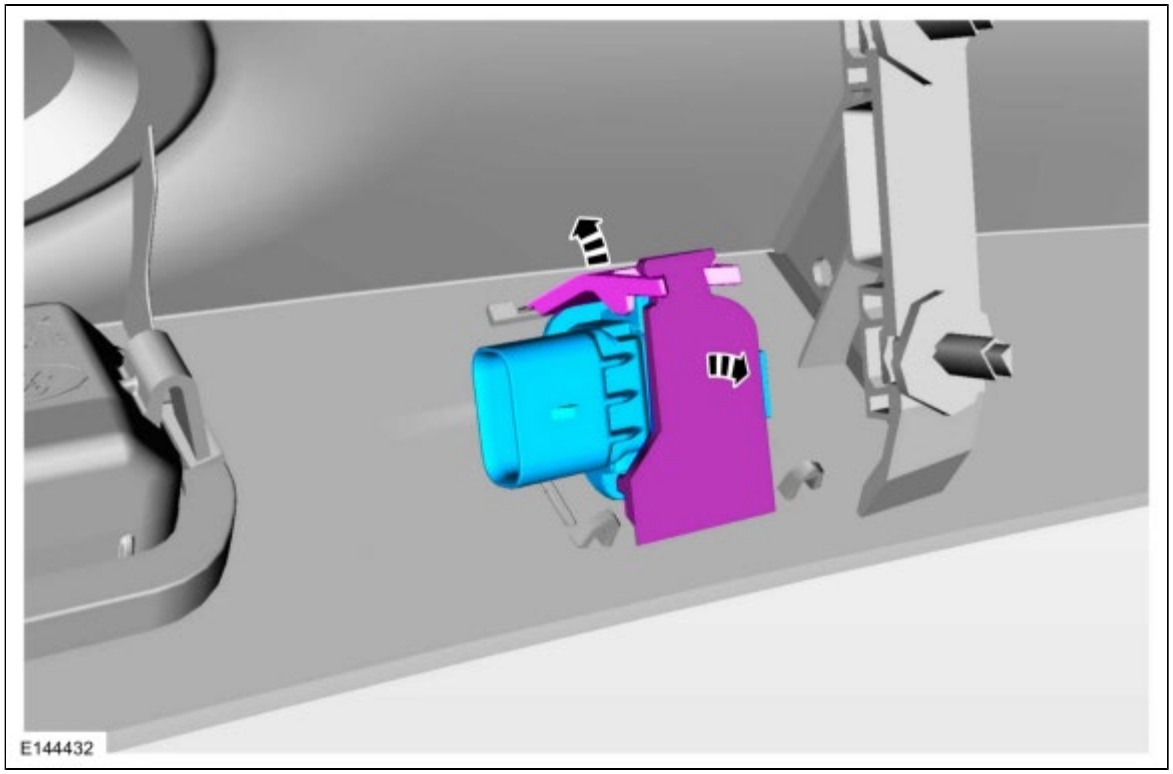

Installation

1. To install, reverse the removal procedure.
2. Verify camera operation. If the displayed image is inverted, place the ignition ON and leave on for 5 minutes to allow the Image Processing Module - B (IPM-B) to configure the camera.

Copyright © Ford Motor Company

Specifications

Lubricants, Fluids, Sealers and Adhesives

	Specifications
Motorcraft® PAG Refrigerant Compressor Oil YN-12-D	WSH-M1C231-B
Motorcraft® R-134a Refrigerant YN-19 (US); CYN-16-R (Canada)	WSH-M17B19-A
Motorcraft® A/C System Flushing Solvent YN-23	—
Motorcraft® A/C Cooling Coil Coating YN-29	—

Capacities

Motorcraft® PAG Refrigerant Compressor Oil YN-12-D	151 ml (5.1 fl oz)
Motorcraft® R-134a Refrigerant YN-19 (US); CYN-16-R (Canada)	624 ml (21.1 fl oz)

Air Conditioning Compressor Gap Clearance

Air gap clearance	0.3-0.6 mm (0.012-0.024 in)

Refrigerant Oil Adding (When new components are installed)

	Polyalkylene Glycol (PAG) Oil Amount fl oz (ml)	Method of Adding
After installing the A/C Compressor.	Service compressor already contains full system charge of oil. No oil matching is required.	—
After installing the receiver/drier cartridge.	1 fl oz (30 ml) plus the amount collected during refrigerant recovery.	Inject to low-side service port during system charging.

After installing the evaporator core, and the receiver/drier cartridge.	1 fl oz (30 ml) plus the amount collected during refrigerant recovery.	Add directly to inlet port or inject to low-side service port during system charging.
After installing the condenser core.	2 fl oz (60 ml)	Add directly to inlet port or inject to low-side service port during system charging.
After installing/reassembling the thermostatic expansion valve.	1 fl oz (30 ml) plus the amount collected during refrigerant recovery .	Inject to low-side service port during system charging.
After installing a refrigerant Hose/Line.	2 fl oz (60 ml) plus the amount collected during refrigerant recovery a .	Inject to low-side service port during system charging.
After an O-ring Leak Repair.	1 fl oz (30 ml) plus the amount collected during refrigerant recovery b .	Inject to low-side service port during system charging.
After a service port leak repair.	Amount collected during refrigerant recovery.	Inject to low-side service port during system charging.
a If an excessive amount of PAG oil is lost due to a hose rupture/separation or other damage, the total system PAG oil capacity must be added.		
b The amount specified may be used for one or multiple O-ring leak repairs. Do not multiply the PAG oil amount by the number of O-ring leaks being repaired.		

Copyright © Ford Motor Company

Climate Control System - Vehicles Built From: 05-March-2012, Vehicles With: Electronic Manual Temperature Control (EMTC) - Component Location

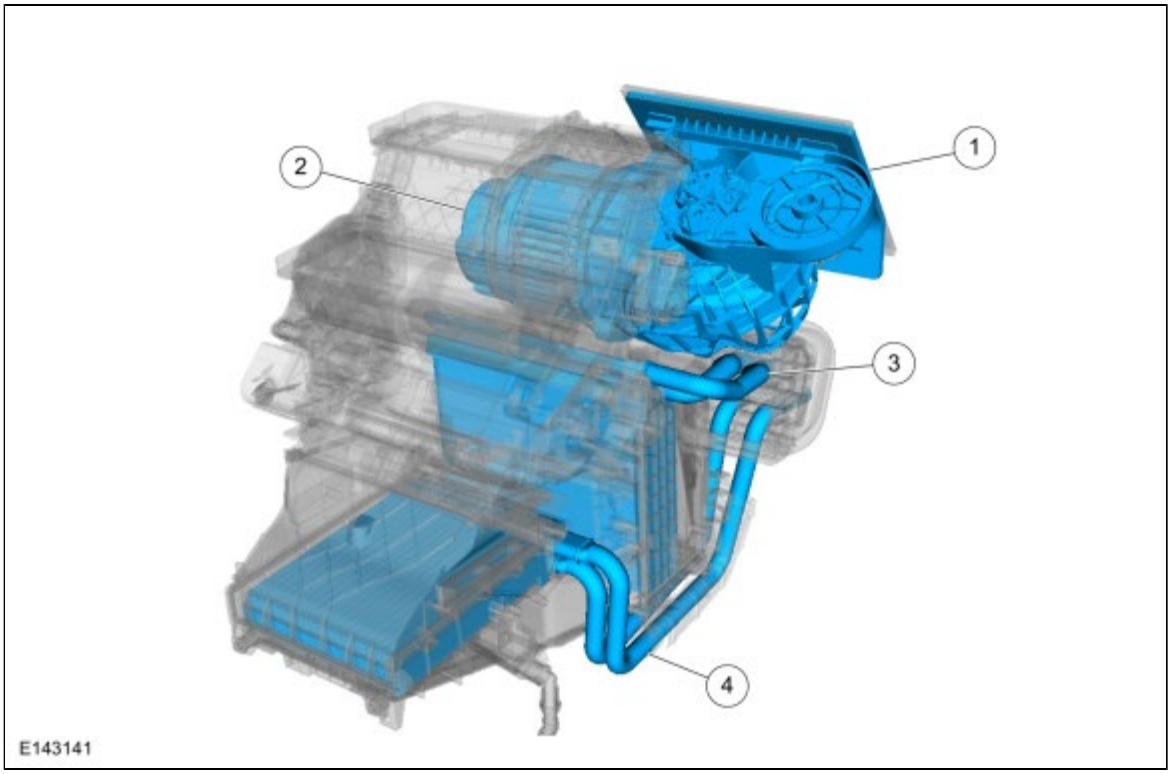

Item	Description
1	Air inlet duct
2	Blower motor
3	Evaporator
4	Heater core

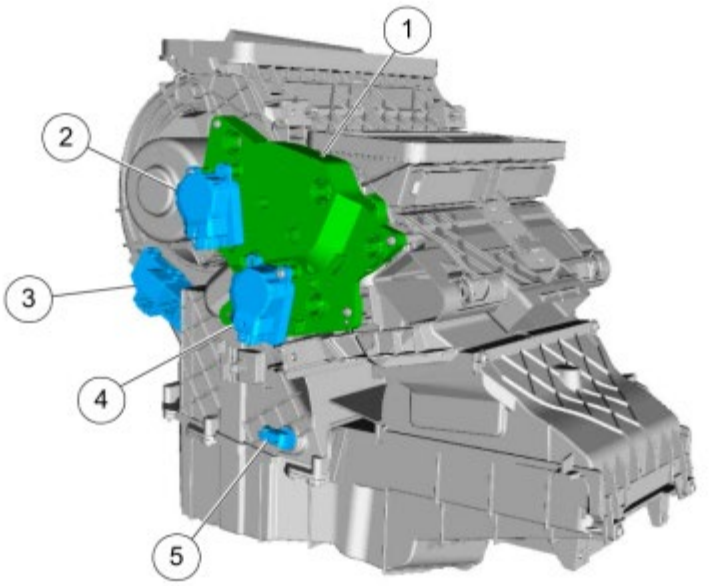

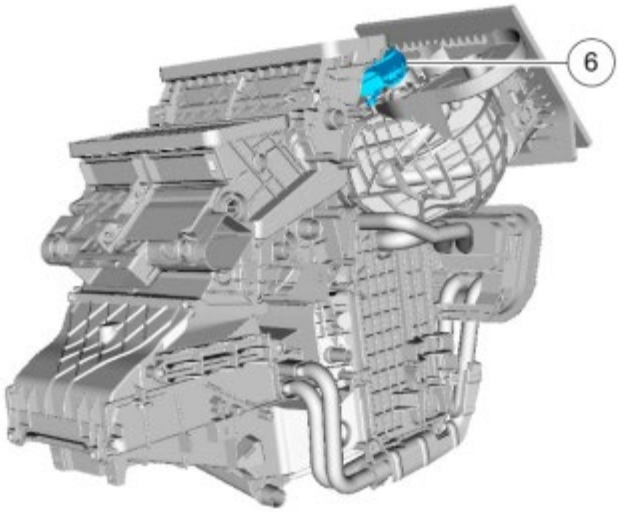

E149705

Item	Description
1	Actuating assembly
2	Defrost vent/register/footwell blend door actuator
3	Blower motor speed control
4	Temperature blend door actuator
5	Evaporator discharge air temperature sensor
6	Air inlet blend door actuator

2.0L GDI

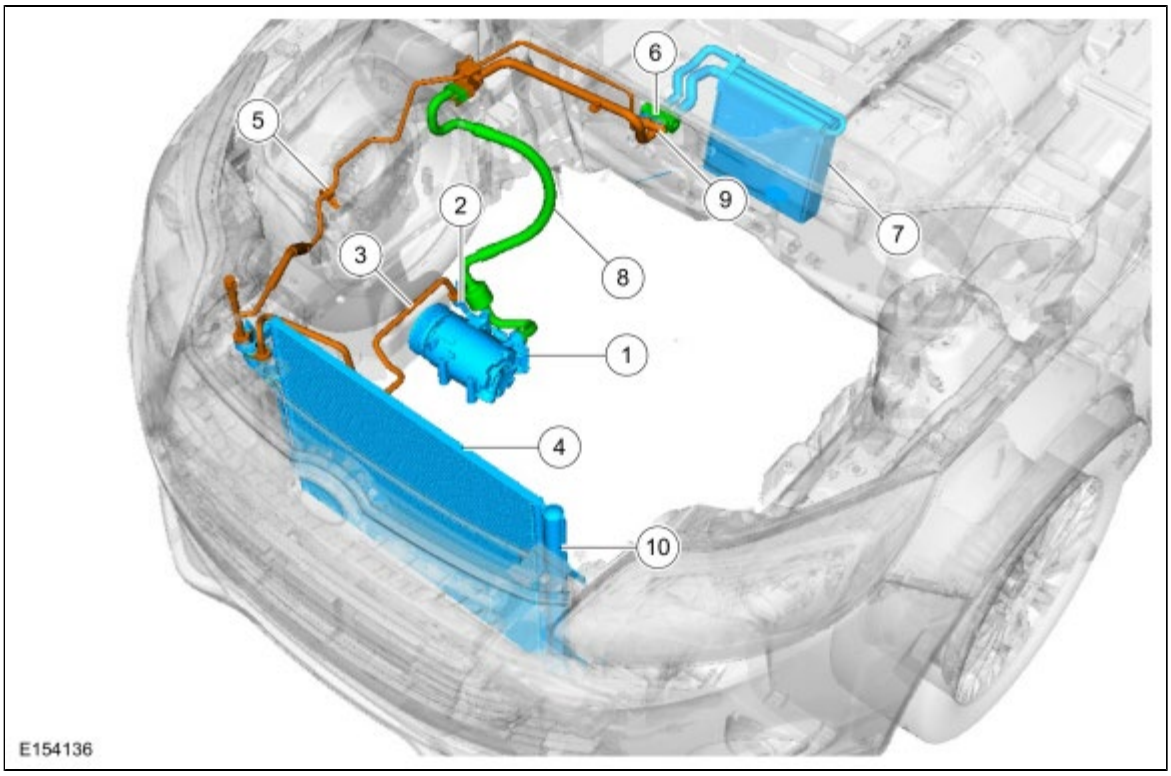

Item	Description
1	A/C compressor
2	Compressor-side compressor-to-condenser discharge line
3	Condenser-side compressor-to-condenser discharge line
4	Condenser
5	Thermostatic Expansion Valve (TXV) manifold and tube assembly
6	Thermostatic Expansion Valve (TXV)
7	Evaporator
8	A/C compressor inlet line
9	A/C pressure transducer
10	Receiver Drier Element (part of condenser)

2.0L GTDI

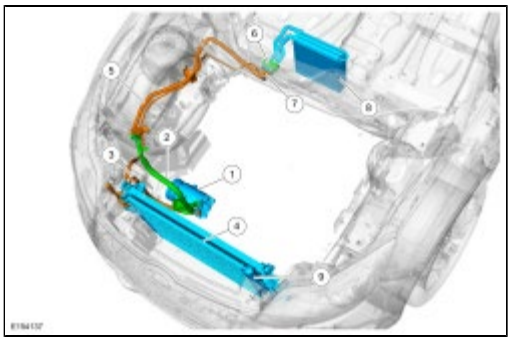

Item	Description
1	A/C compressor

2	A/C compressor inlet line
3	Condenser-side compressor-to-condenser discharge line
4	Condenser
5	Thermostatic Expansion Valve (TXV) manifold and tube assembly
6	Thermostatic Expansion Valve (TXV)
7	A/C pressure transducer
8	Evaporator
9	Receiver drier element (part of condenser)

Copyright © Ford Motor Company

Climate Control System - Vehicles With: Electronic Manual Temperature Control (EMTC) - Overview

Overview

WARNING: Take the following precautions when repairing an air conditioning system containing R-134a: Always wear safety goggles. Avoid contact with liquid refrigerant R-134a. R-134a vaporizes at approximately -25 C (-13 F) under atmospheric pressure and will freeze skin tissue. Never allow refrigerant R-134a gas to escape in quantity in an occupied space. It will displace the oxygen needed to support life. Never use a torch in an atmosphere containing R-134a gas. R-134a is non-toxic at all normal conditions, but it decomposes when exposed to high temperatures such as a torch flame. During decomposition it releases irritating and toxic gasses (as described in the Material Safety Data Sheet (MSDS) sheet from the manufacturer). Decomposition products are hydrofluoric acid, carbon dioxide and water. Failure to follow these instructions may result in serious personal injury.

NOTICE: To avoid damaging the vehicle or A/C components, the following precautions must be observed. The A/C refrigerant of all vehicles must be identified and analyzed prior to refrigerant charging. Failure to do so can contaminate the shop bulk refrigerant and other vehicles. Do not add R-12 refrigerant to an A/C system that requires the use of R-134a refrigerant. These 2 types of refrigerant must never be mixed. Doing so can damage the A/C system. Charge the A/C system with R-134a refrigerant gas while the engine is running only at the low-pressure side to prevent refrigerant slugging from damaging the A/C compressor. Use only R-134a refrigerant. Due to environmental concerns, when the A/C system is drained, the refrigerant must be collected using refrigerant recovery/recycling equipment. Federal, State/Provincial and/or local laws REQUIRE that R-134a be recovered into appropriate recovery equipment and the process be conducted by qualified technicians who have been certified by an approved organization, such as Automotive Service Excellence (ASE) or Mobile Air Conditioning Society (MACS). Use of a recovery machine dedicated to R-134a is necessary to reduce the possibility of oil and refrigerant incompatibility concerns. the instructions provided by the equipment manufacturer when removing refrigerant from or charging the A/C system. Refrigerant R-134a must not be mixed with air for leak testing or used with air for any other purpose above atmospheric pressure. R-134a is combustible when mixed with high concentrations of air and higher pressures. A number of manufacturers are producing refrigerant products that are described as direct substitutes for refrigerant R-134a. The use of any unauthorized substitute refrigerant can severely damage the A/C components. If repair is required, use only new or recycled refrigerant R-134a.

NOTICE: To avoid contamination of the A/C system, the following precautions must be observed. Never open or loosen a connection before recovering the refrigerant. When loosening a connection, if any residual pressure is evident, allow it to leak out before opening the fitting. Evacuate a system that has been opened to install a new component or one that has discharged through leakage before charging. Seal open fittings with a cap or plug immediately after disconnecting a component from the system. Clean the outside of the fittings thoroughly before disconnecting a component from the system. Do not remove the sealing caps from a new component until ready to install. Refrigerant oil will absorb moisture from the atmosphere if left uncapped. Do not open an oil container until ready to use and install the cap immediately after using. Store the oil in a clean, moisture-free container. Install a new O-ring seal before connecting an open fitting. Coat the fitting and O-ring seal with PAG oil before connecting. When installing a refrigerant line, avoid sharp bends. Position the line away from the exhaust or any sharp edges that can chafe the line. Tighten threaded fittings only to specifications. The steel and aluminum fittings used in the refrigerant system will not tolerate overtightening. When disconnecting a fitting, use a wrench on both halves of the fitting to prevent twisting of the refrigerant lines or tubes. Do not open a refrigerant system or uncap a new component unless it is as close as possible to room temperature. This will prevent condensation from forming inside a component that is cooler than the surrounding air.

The Electronic Manual Temperature Control (EMTC) system heats or cools the vehicle depending on the Heating, Ventilation, and A/C HVAC control panel selection.

- The control panel selection determines heating or cooling, air distribution and enables blower motor operation.
- The temperature control setting determines the outlet air temperature.
- The blower motor switch varies the blower motor speed.
- During A/C operation, the system reduces the relative humidity of the air inside the vehicle.

Copyright © Ford Motor Company

Climate Control System - Vehicles With: Electronic Manual Temperature Control (EMTC) - System Operation and Component Description

System Diagram

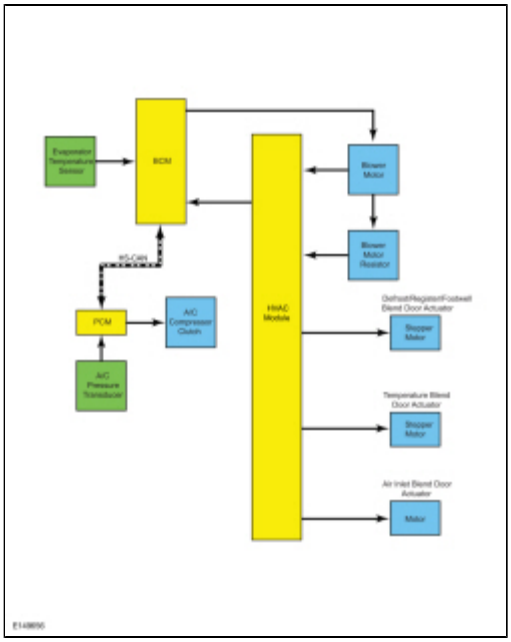

System Operation

The Refrigerant Cycle

During A/C system shutdown, the refrigerant pressures are equal throughout the system. When the A/C compressor is in operation, it uses a piston pump to compress the cool vapor, causing it to become high-temperature/high-pressure vapor. The high-temperature/high-pressure vapor is then released into the top of the A/C condenser.

The A/C condenser, being close to ambient temperature, causes the refrigerant vapor to condense into a liquid when heat is removed from the refrigerant by ambient air passing over the fins and tubing. The now liquid refrigerant, still at high pressure, exits from the bottom of the A/C condenser and enters the inlet side of the receiver drier element. The receiver drier element is designed to remove moisture from the refrigerant.

The outlet of the receiver drier element is connected to the Thermostatic Expansion Valve (TXV). The Thermostatic Expansion Valve (TXV) provides the orifice, which is the restriction in the refrigerant system, and separates the high and low pressure sides of the A/C system. As the liquid refrigerant passes across this restriction, its pressure and boiling point are reduced.

The liquid refrigerant is now at its lowest pressure and temperature. As it passes through the A/C evaporator, it absorbs heat from the airflow passing over the tube and fin sections of the A/C evaporator. This addition of heat causes the refrigerant to boil (convert to gas). The now cooler air can no longer support the same humidity level of the warmer air and this excess moisture condenses on the exterior of the evaporator tubes and fins and drains outside the vehicle.

The refrigerant cycle is now repeated with the A/C compressor again increasing the pressure and temperature of the refrigerant.

The PCM controls the A/C clutch relay. The evaporator temperature sensor monitors the temperature of the air that has passed through the evaporator and sends a signal to the PCM . If the temperature of the evaporator discharge air is low enough to cause the condensed water vapor to freeze, the A/C clutch is disengaged by the PCM .

The line pressure is monitored so that A/C compressor operation is interrupted if the system pressure becomes too high or too low.

The A/C compressor relief valve opens and vents refrigerant to relieve unusually high system pressure.

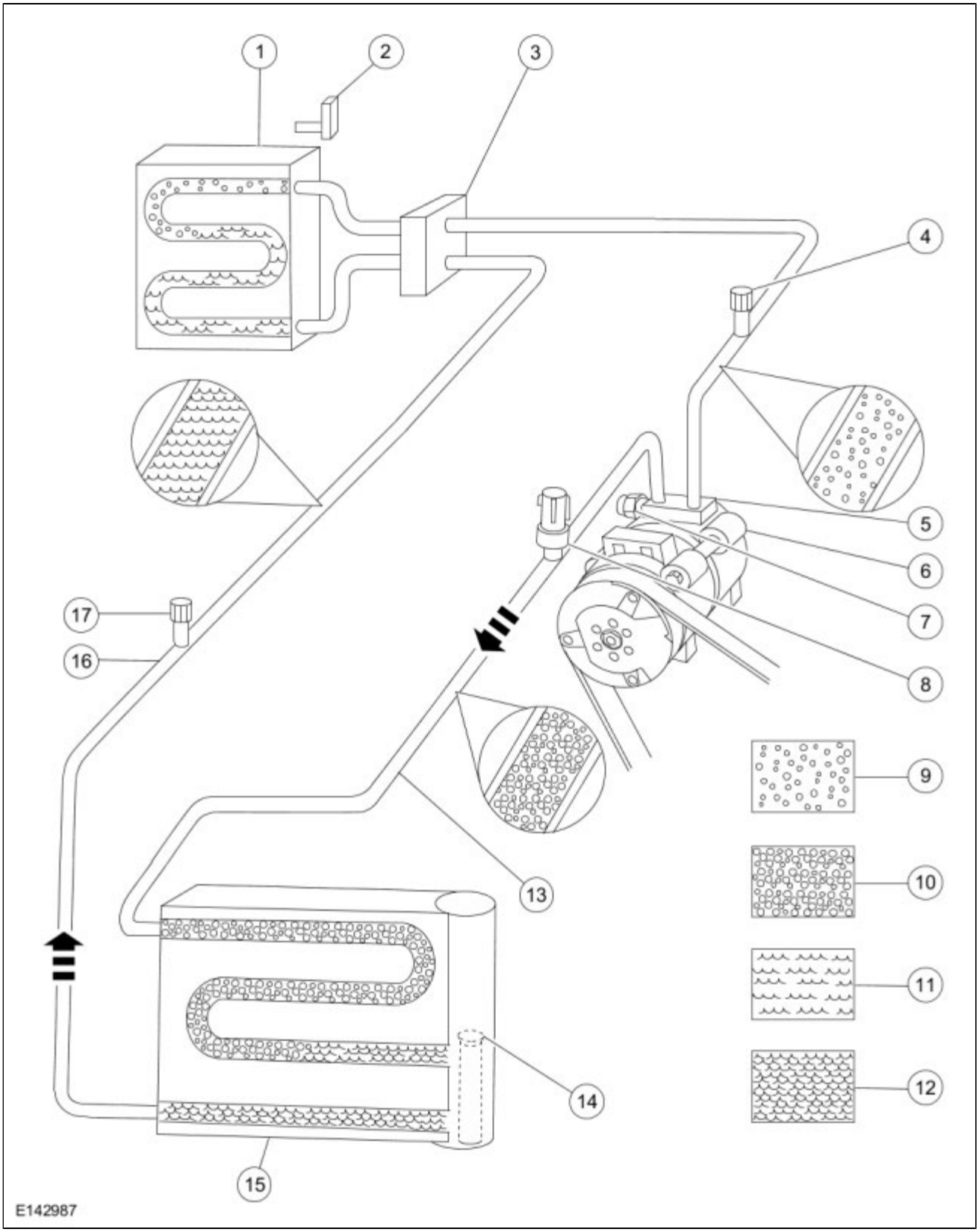

Item	Description
1	A/C evaporator
2	A/C evaporator outlet temperature sensor

3	Thermostatic Expansion Valve (TXV)
4	A/C charge valve port (low side)
5	A/C suction line
6	A/C compressor
7	A/C pressure relief valve
8	A/C pressure transducer
9	Low-pressure vapor
10	High-pressure vapor
11	Low-pressure liquid
12	High-pressure liquid
13	Compressor discharge line
14	Receiver Drier Element
15	A/C condenser
16	Condenser-to-evaporator line
17	A/C charge valve port (high side)

Controls and Compressor Cycling

All customer commands for the Electronic Manual Temperature Control (EMTC) climate control system come through the HVAC control head.

A/C Request

The HVAC control module uses a dedicated wire to send the A/C request message to the BCM . The BCM sends the A/C request through the High Speed Controller Area Network (HS-CAN) to the PCM .

When an A/C request is received by the PCM , the PCM engages the A/C clutch relay when:

- the refrigerant pressure isn't excessively high or low.
- the engine coolant temperature isn't excessively high.
- the ambient air temperature is above 6 C (43 F).
- a WOT condition is not present.
- the evaporator discharge air temperature is above 7 C (45 F).

Compressor Clutch

When A/C is requested and A/C line pressures allows, a ground is provided to the A/C clutch relay coil from the PCM , energizing the A/C clutch relay. When the PCM energizes the relay, voltage is supplied to the A/C compressor clutch field coil from the relay.

A/C Compressor Cycling

The evaporator discharge air temperature sensor is an input to the BCM and is relayed to the PCM over the High Speed Controller Area Network (HS-CAN). The evaporator discharge air temperature sensor prevents icing of the evaporator by measuring the temperature of the airflow immediately after the evaporator. An accurate evaporator temperature is critical for compressor engagement. The PCM uses the temperature measurement to regulate the on and off time of the A/C compressor to maintain the evaporator temperature within an acceptable temperature range.

The PCM monitors the discharge pressure measured by the A/C pressure transducer. The PCM interrupts A/C compressor operation in the event the A/C pressure transducer indicates high system discharge pressures. It is also used to sense low charge conditions. If the pressure is below a predetermined value for a given ambient temperature, the PCM does not allow the A/C clutch to engage.

Air Handling

Based on the climate control system temperature settings, the temperature blend door actuator directs airflow through the evaporator and heater core as needed. The defrost vent/register/footwell blend door actuator controls the airflow to the defrost, footwell or register vents. The air source is from outside air or recirculated passenger compartment air as determined by the air inlet blend door position.

The defrost vent/register/footwell blend door and temperature blend door actuators are stepper motors. There is no feedback circuit or potentiometer for these actuators. The pins labeled Door A, B, C and D are for the different phases (coils) of the motor. All the phases for a given motor are fed from a common power lead, the pin labeled Door Power and the HVAC control module controls each phase by turning on/off a low side output for the different phases. The motor turns or "steps" through a series of motions to position the actuator. The HVAC control module tracks the actuator positions by counting steps and periodically calibrates itself so it knows how many steps there are for the full range movement of the actuator. The HVAC control module sets Diagnostic Trouble Codes (DTCs) by monitoring the current flow through a given phase. If it sees too much current it identifies it as a short circuit. If it does not see any current it identifies it as an open circuit.

The blower motor is controlled using a blower motor resistor. The blower motor resister uses 3 resistors that are wired in series on the ground side of the blower motor. The blower motor has 4 speeds:

The HVAC control module grounds 1 of the 4 circuits to control the blower motor speed.

- for low speed, the all 3 resistors are used for low speed, the all 3 resistors are used
- for medium-low speed, 2 resistors are used for medium-low speed, 2 resistors are used
- for medium-high speed, 1 resistor is used for medium-high speed, 1 resistor is used
- for high speed, the blower motor is provided a path directly to ground and the blower motor resistor is not used for high speed, the blower motor is provided a path directly to ground and the blower motor resistor is not used

The HVAC control module grounds 1 of the 4 circuits to control the blower motor speed.

Control System Logic

The blower motor knob must be set to any speed other than 0 for the system to operate

MAX AC

When MAX A/C is selected:

- the air inlet door closes, preventing outside air and admits only recirculated air.
- the recirculated air indicator is illuminated (recirculated air forced on).
- the A/C button is illuminated. the A/C button is illuminated.
- the A/C compressor operates if the outside temperature is above approximately 6 C (43 F).

REGISTOR

When REGISTOR mode is selected:

- the defrost vent/register/footwell door directs airflow to the instrument panel registers.
- the recirculated air request button can be enabled.
- blended air temperature is available. The airflow temperature can only be cooled below the outside air temperature when the A/C is commanded on.

REGISTOR-FOOTWELL

When REGISTOR/FOOTWELL mode is selected:

- the defrost vent/register/footwell door directs airflow to the footwell duct and the instrument panel registers. A small amount of airflow from the side window demisters and defrost duct is present.
- the recirculated air request button can be enabled. the recirculated air request button can be enabled.
- blended air temperature is available. The airflow temperature can only be cooled below the outside air temperature when the A/C is commanded on.

OFF

When the system is OFF:

- the air inlet door closes, preventing outside air and allowing only recirculated air.

- the blower motor is off.

FOOTWELL

When FOOTWELL mode is selected:

- the defrost vent/register/footwell door directs airflow to the footwell duct. A small amount of airflow from the defroster duct and side window demisters is present.
- the recirculated air request button can be enabled.
- blended air temperature is available. The airflow temperature can only be cooled below the outside air temperature when the A/C is commanded on.

FOOTWELL-DEFROST

When FOOTWELL/DEFROST mode is selected:

- the defrost vent/register/footwell door directs airflow to the footwell duct, the defroster duct and the side window demisters.
- the recirculated air request button can be enabled, but can automatically turn off. The recirculated air request button can be enabled, but can automatically turn off.
- blended air temperature is available. The airflow temperature can only be cooled below the outside air temperature when the A/C is commanded on.

DEFROST

When DEFROST is selected:

- the defrost vent/register/footwell door door directs airflow to the defroster duct and side window demisters. A small amount of airflow from the footwell duct is present.
- the recirculated air request button can be enabled, but can automatically turn off.
- the A/C is automatically commanded on and will remain on until the system is either turned off or the airflow mode has changed and A/C button is pressed.
- blended air temperature is available.

Remote Start

Remote start is an optional feature available on this vehicle. When the factory remote start feature is used, the Electronic Manual Temperature Control system runs at the setting it was set to when the vehicle was last turned off. In addition to being able to start the vehicle remotely, the remote start feature also utilizes other vehicle systems to increase the level of comfort to the vehicle occupants upon entering the vehicle. Additional information on the remote start feature and the other vehicle systems can be found in section: 2.0L Duratec-HE
Refer to: Starting System - Vehicles With: Push Button Start - System Operation and Component Description (303-06A Starting System - 2.0L Duratec-HE (125kW/170PS) - MI4, Description and Operation).
2.0L Ecoboost Refer to: Starting System - System Operation and Component Description (303-06B Starting System - 2.0L EcoBoost (184kW/250PS) - MI4, Description and Operation).

Component Description

Heating Ventilation Air Conditioning (HVAC) Control Module - Electronic Manual Temperature Control (EMTC)

The blower motor speed switch is mounted in the HVAC control module and controls blower motor speed by adding or bypassing resistors in the blower motor resistor in all modes except OFF. The blower motor speed switch is serviced only as an assembly with the HVAC control module.

The temperature control switch adjusts the discharge air temperature. Movement of the temperature knob from cool to warm causes a corresponding movement of the temperature blend door. The position of the temperature blend door determines the discharge air temperature. The temperature control selector is an integral part of the HVAC control module and cannot be serviced separately.

The airflow mode setting adjusts the discharge air outlet location. Each airflow mode selector icon causes a corresponding movement of the airflow blend doors and determines the discharge air outlet location. The airflow mode selector knob is an integral part of the HVAC control module and cannot be serviced separately.

The A/C button determines A/C compressor operation, except when the temperature selector is set to MAX A/C or the airflow mode

selector is in defrost mode. The A/C button is an integral part of the HVAC control module and cannot be serviced separately.

The recirculated air request button can be activated in any mode except defrost, and in any mode except MAX A/C . The recirculated air request button is an integral part of the HVAC control module and cannot be serviced separately.

Air Conditioning (AC) Pressure Transducer

The PCM monitors the discharge pressure measured by the A/C pressure transducer. As the refrigerant pressure changes, the resistance of the A/C pressure transducer changes. It is not necessary to recover the refrigerant before removing the A/C pressure transducer.

A 5-volt reference voltage is supplied to the A/C pressure transducer from the PCM . The A/C pressure transducer receives a ground from the PCM . The A/C pressure transducer then sends a voltage to the PCM to indicate the A/C refrigerant pressure.

Ambient Air Temperature Sensor

The Ambient Air Temperature (AAT) sensor is an input to the PCM . If the temperature is below a predetermined value, the PCM does not allow the A/C clutch to engage.

Evaporator Temperature Sensor

The evaporator discharge air temperature sensor contains a thermistor. The sensor varies its resistance with the temperature. As the temperature rises, the resistance falls. As the temperature falls, the resistance rises.

Defrost-Registor-Footwell Blend Door Actuator

The defrost-registor-footwell blend door is a stepper motor style actuator. The HVAC control module monitors the position of the defrost-registor-footwell blend door by counting the motor steps as it rotates. The HVAC control module drives the actuator motor in the direction necessary to move the defrost-registor-footwell blend door to the position set by the air distribution control selection knob.

Temperature Blend Door Actuator

The temperature blend door is a stepper motor style actuator. The HVAC control module monitors the position of the temperature blend door by counting the motor steps as it rotates. The HVAC control module drives the temperature blend door actuator motor in the direction necessary to move the temperature blend door to the position set by the temperature selection knob.

Air Inlet Blend Door Actuator

The air inlet blend door actuator moves the air inlet door between the fresh and recirculated air positions on command from the Heating, Ventilation, and A/C HVAC control module. The air inlet blend door actuator is driven to, and will automatically stop at, the full recirculated air or full fresh air inlet position and does not require a potentiometer circuit to monitor its position. The airflow blend door does not stop at any point between the recirculated air or fresh air inlet position.

Air Conditioning (AC) Compressor Clutch

When battery voltage is applied to the A/C compressor clutch field coil, the clutch disc and hub assembly is drawn toward the A/C clutch pulley. The magnetic force locks the clutch plate and hub assembly and the A/C clutch pulley together as one unit, causing the compressor shaft to rotate with the engine. When battery voltage is removed from the A/C compressor clutch field coil, springs in the clutch plate and hub assembly move the clutch plate away from the A/C clutch pulley.

An A/C clutch diode is integrated into the coil. For A/C clutch field coil circuit spike suppression.

Internally Controlled Variable Displacement Air Conditioning (A/C) Compressor

The internally controlled variable displacement A/C compressor has the following characteristics:

- a non-serviceable shaft seal. a non-serviceable shaft seal.
- a non-serviceable pressure relief valve installed in the rear of the compressor to protect the refrigerant system against excessively high refrigerant pressures.
- Uses Polyalkylene Glycol (PAG) oil or equivalent. This oil contains special additives required for the A/C compressor. The oil may have some slightly dark-colored streaks while maintaining normal oil viscosity. This is normal for this A/C compressor because of break-in wear that can discolor the oil.

The internally controlled variable displacement A/C compressor changes the swash plate angle using an internal valve, springs and linkage, controlled with refrigerant pressure in the compressor housing, to change the displacement of the A/C compressor.

Air Conditioning (AC) Condenser

The A/C condenser is an aluminum fin-and-tube design heat exchanger. It cools compressed refrigerant gas by allowing air to pass over fins and tubes to extract heat, and condenses gas to liquid refrigerant as it is cooled.

Evaporator

The evaporator is an aluminum plate/fin type and is located in the heater core and evaporator housing. A mixture of liquid refrigerant and oil enters the bottom of the evaporator through the evaporator inlet tube and continues out of the evaporator through the evaporator outlet tube as a vapor. During A/C compressor operation, airflow from the blower motor is cooled and dehumidified as it flows through the evaporator fins.

Thermostatic Expansion Valve (TXV)

The Thermostatic Expansion Valve (TXV) is located at the evaporator inlet and outlet tubes at the center rear of the engine compartment. The Thermostatic Expansion Valve (TXV) provides a restriction to the flow of refrigerant and separates the low-pressure and high-pressure sides of the refrigerant system. Refrigerant entering and exiting the evaporator passes through the Thermostatic Expansion Valve (TXV) through 2 separate flow paths. An internal temperature sensing bulb senses the temperature of the refrigerant flowing out of the evaporator and adjusts an internal pin-type valve to meter the refrigerant flow into the evaporator. The internal pin-type valve decreases the amount of refrigerant entering the evaporator at lower temperatures and increases the amount of refrigerant entering the evaporator at higher temperatures.

Receiver-Drier Element

The receiver drier element stores high-pressure liquid and the removes any retained moisture from the refrigerant.

The receiver drier element is incorporated onto the LH side of the A/C condenser. The receiver drier element is a separate component and can be separately removed and installed without the A/C condenser being removed from the vehicle.

Service Gauge Port Valves

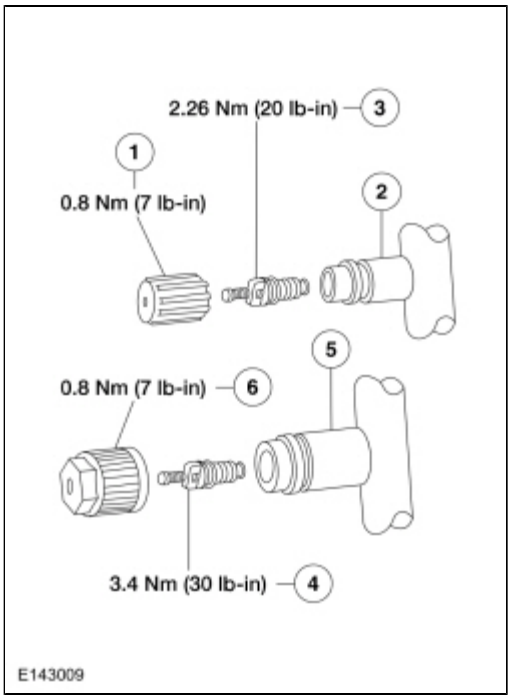

Item	Service Part Number	Description
1	19D702	Low-pressure service gauge port valve cap
2	—	Low-pressure service gauge port valve

3	19D701	Low-pressure Schrader-type valve
4	19D701	High-pressure Schrader-type valve
5	—	High-pressure service gauge port valve
6	19D702	High-pressure service gauge port valve cap

The service gauge port fitting is an integral part of the refrigerant line or component.

- Special couplings are required for both the high-side and low-side service gauge ports. Special couplings are required for both the high-side and low-side service gauge ports.
- A very small amount of leakage is always detectable around the Schrader-type valve with the service gauge port valve cap removed, and is considered normal. A new Schrader-type valve core can be installed if the seal leaks excessively.
- The A/C service gauge port valve caps are used as primary seals in the refrigerant system to prevent leakage through the Schrader-type valves from reaching the atmosphere. Always install and tighten the A/C service gauge port valve caps to the correct torque after they are removed.

Blend Door Actuator – Defrost-Registor-Footwell Door

The defrost-registor-footwell blend door is a stepper motor style actuator. The HVAC control module monitors the position of the defrost-registor-footwell blend door by counting the motor steps as it rotates. The HVAC control module drives the actuator motor in the direction necessary to move the defrost-registor-footwell blend door to the position set by the air distribution control selection knob.

Blend Door Actuator – Air Inlet Door

The air inlet blend door is a stepper motor style actuator. The HVAC control module monitors the position of the air inlet blend door by counting the motor steps as it rotates. The HVAC control module drives the actuator motor in the direction necessary to move the air inlet blend door to the position set by the recirculation button.

Temperature Blend Door Actuator

The temperature blend door is a stepper motor style actuator. The HVAC control module monitors the position of the temperature blend door by counting the motor steps as it rotates. The HVAC control module drives the temperature blend door actuator motor in the direction necessary to move the temperature blend door to the position set by the temperature selection knob.

Refrigerant System Dye

A fluorescent refrigerant system dye wafer is added to the receiver drier element to assist in refrigerant system leak diagnosis using a Rotunda-approved UV blacklight. This fluorescent dye wafer dissolves after about 30 minutes of continuous A/C operation. It is not necessary to add additional dye to the refrigerant system before diagnosing leaks, even if a significant amount of refrigerant has been removed from the system. Additional refrigerant system dye should only be added if more than 50% of the refrigerant system lubricant capacity has been lost due to a fitting separation or hose rupture.

Blower Motor Resistor

The blower motor resistor uses 3 resistance elements mounted on a resistor board to provide 4 blower motor speeds. Depending on the heater blower motor switch position, series resisters are added or bypassed in the blower motor resistor to decrease or increase blower motor speed.

Copyright © Ford Motor Company

Climate Control System - Vehicles Built From: 05-March-2012, Vehicles With: Dual Automatic Temperature Control (DATC) - Component Location

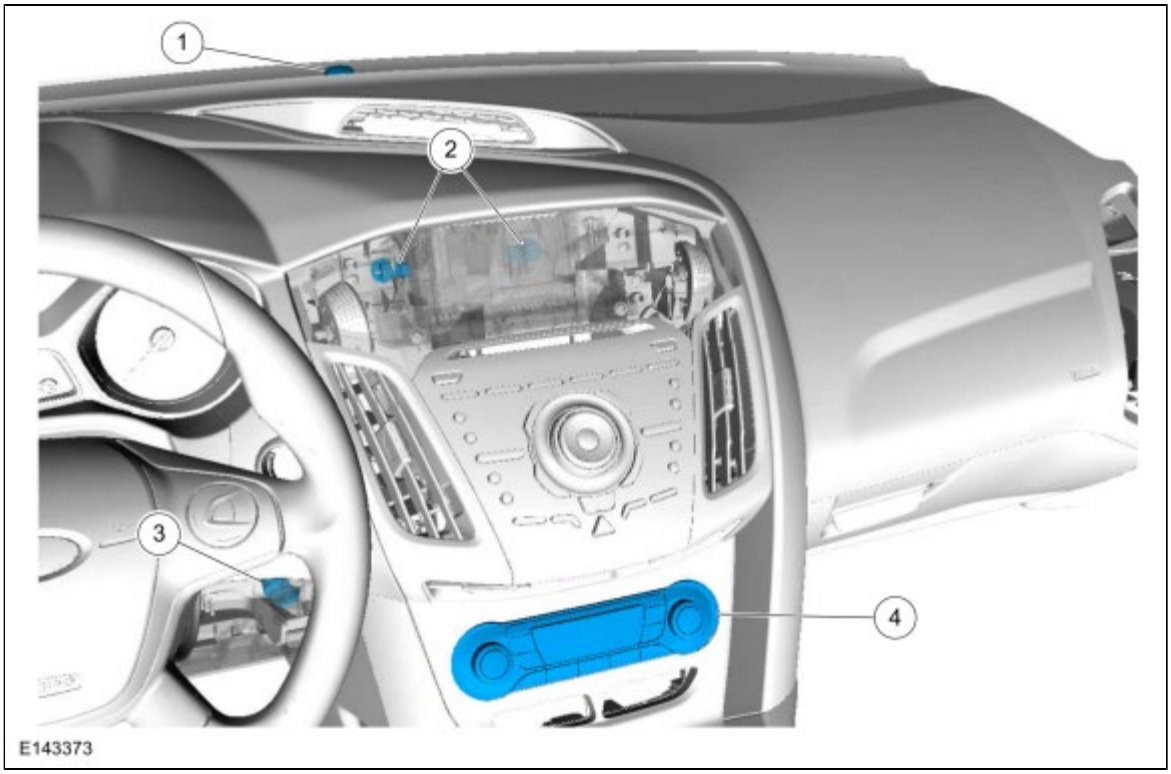

Item	Description
1	Sunload sensor
2	Center register air discharge temperature sensors
3	In-vehicle temperature sensor
4	HVAC module

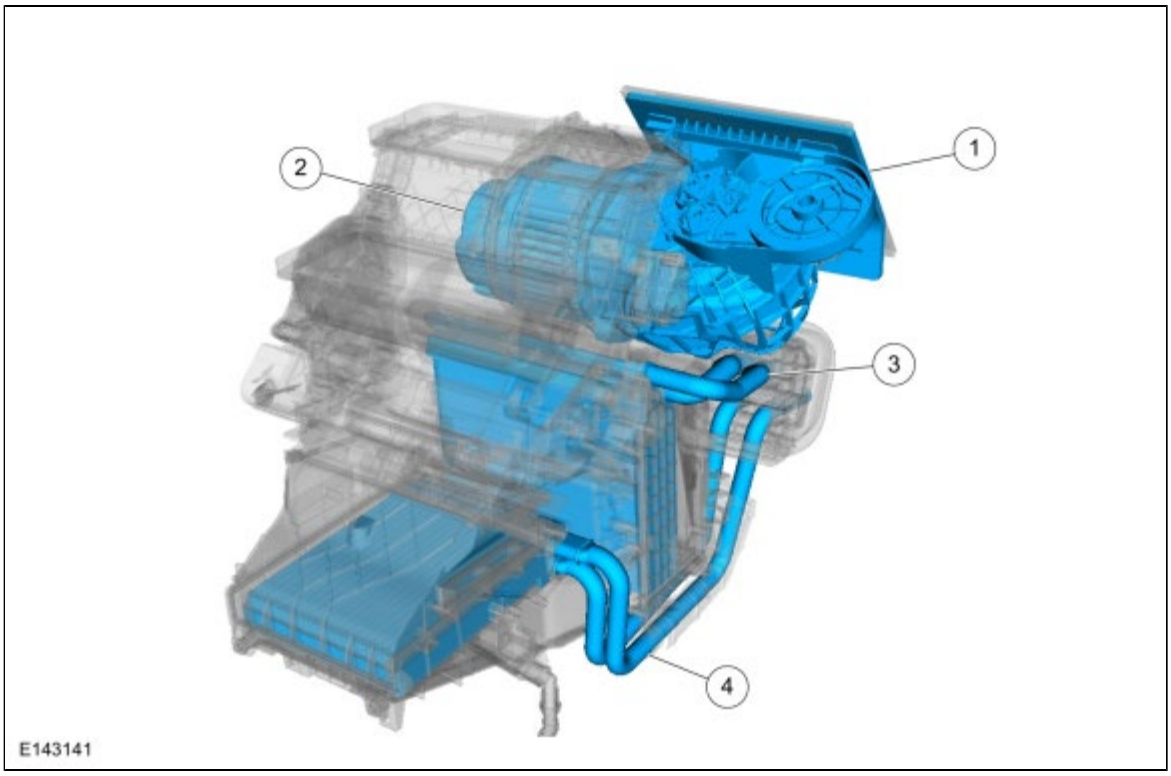

Item	Description
1	Air inlet duct
2	Blower motor
3	Evaporator
4	Heater core

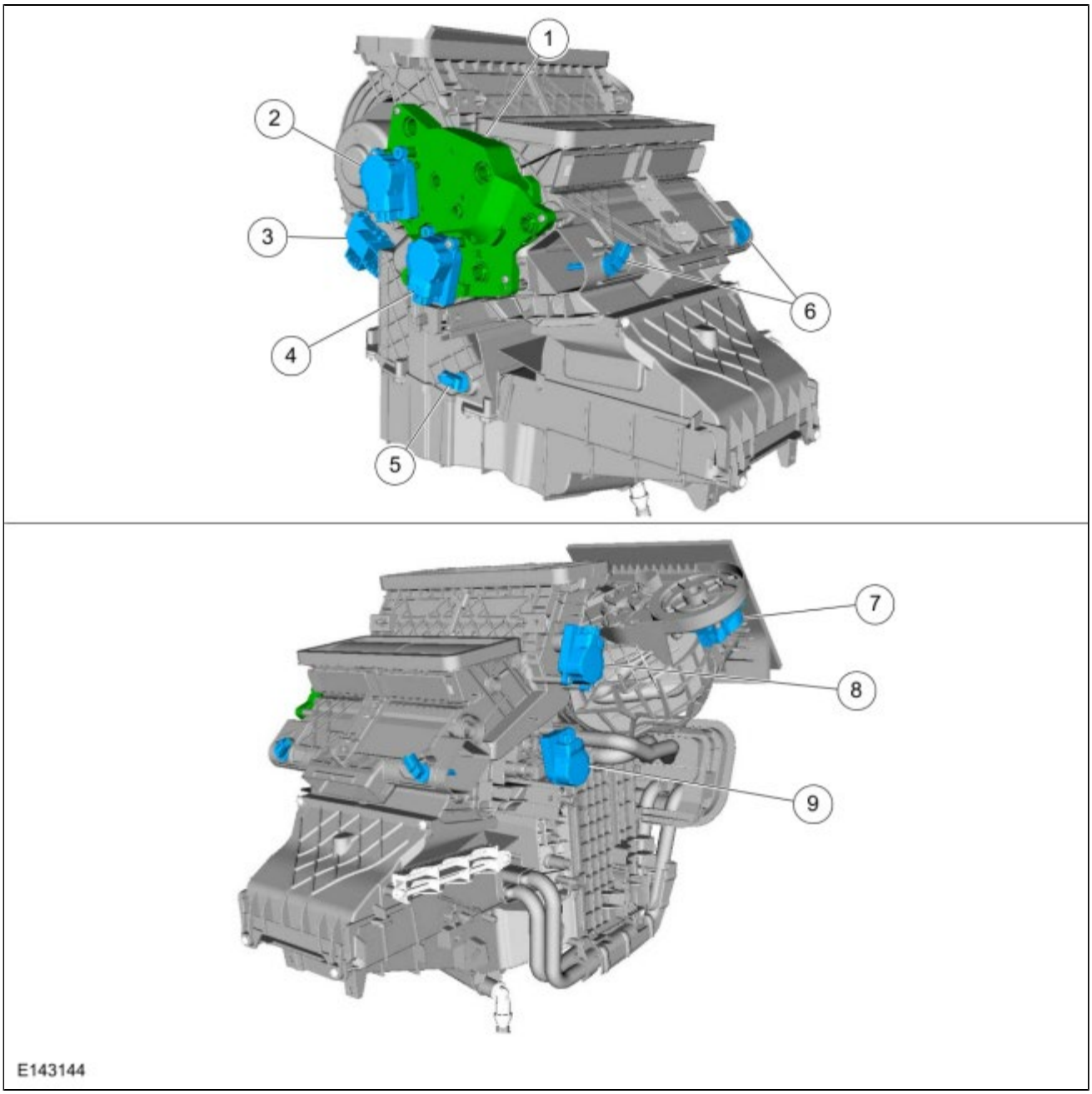

Item	Description
1	Actuating assembly
2	Footwell vent/duct blend door actuator
3	Blower motor speed control
4	Driver side temperature blend door actuator
5	Evaporator temperature sensor
6	Footwell air discharge temperature Sensor
7	Air inlet blend door actuator
8	Defrost vent/register blend door actuator
9	Passenger side temperature blend door actuator

2.0L GDI

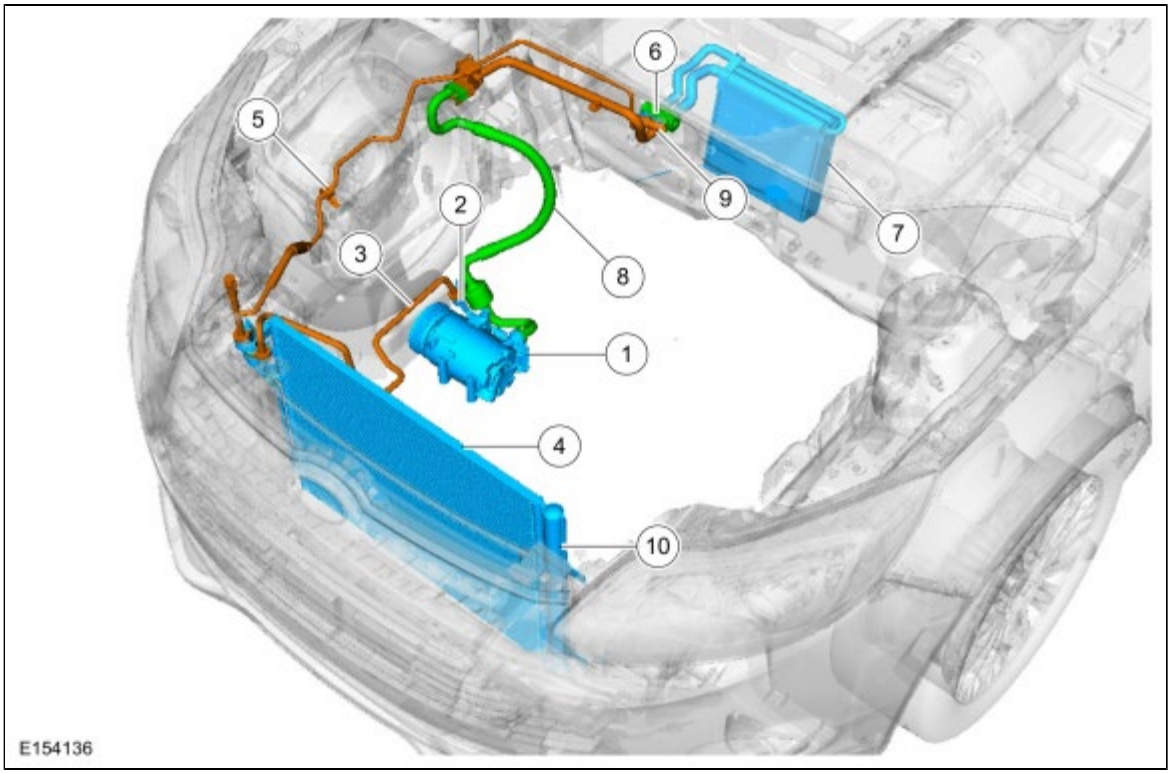

Item	Description
1	A/C compressor
2	Compressor-side compressor-to-condenser discharge line
3	Condenser-side compressor-to-condenser discharge line
4	Condenser
5	Thermostatic Expansion Valve (TXV) manifold and tube assembly
6	Thermostatic Expansion Valve (TXV)
7	Evaporator
8	A/C compressor inlet line
9	A/C pressure transducer
10	Receiver drier element (part of condenser)

2.0L GTDI

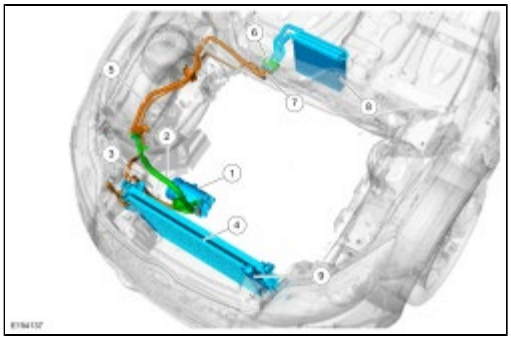

Item	Description

1	A/C compressor
2	A/C compressor inlet line
3	Condenser-side compressor-to-condenser discharge line
4	Condenser
5	Thermostatic Expansion Valve (TXV) manifold and tube assembly
6	Thermostatic Expansion Valve (TXV)
7	A/C pressure transducer
8	Evaporator
9	Receiver drier element (part of condenser)

Copyright © Ford Motor Company

Climate Control System - Vehicles With: Dual Automatic Temperature Control (DATC) - Overview

Overview

WARNING: Take the following precautions when repairing an air conditioning system containing R-134a: Always wear safety goggles. Avoid contact with liquid refrigerant R-134a. R-134a vaporizes at approximately -25 C (-13 F) under atmospheric pressure and will freeze skin tissue. Never allow refrigerant R-134a gas to escape in quantity in an occupied space. It will displace the oxygen needed to support life. Never use a torch in an atmosphere containing R-134a gas. R-134a is non-toxic at all normal conditions, but it decomposes when exposed to high temperatures such as a torch flame. During decomposition it releases irritating and toxic gasses (as described in the Material Safety Data Sheet (MSDS) sheet from the manufacturer). Decomposition products are hydrofluoric acid, carbon dioxide and water. Failure to follow these instructions may result in serious personal injury.

NOTICE: To avoid damaging the vehicle or A/C components, the following precautions must be observed. The A/C refrigerant of all vehicles must be identified and analyzed prior to refrigerant charging. Failure to do so can contaminate the shop bulk refrigerant and other vehicles. Do not add R-12 refrigerant to an A/C system that requires the use of R-134a refrigerant. These 2 types of refrigerant must never be mixed. Doing so can damage the A/C system. Charge the A/C system with R-134a refrigerant gas while the engine is running only at the low-pressure side to prevent refrigerant slugging from damaging the A/C compressor. Use only R-134a refrigerant. Due to environmental concerns, when the A/C system is drained, the refrigerant must be collected using refrigerant recovery/recycling equipment. Federal, State/Provincial and/or local laws REQUIRE that R-134a be recovered into appropriate recovery equipment and the process be conducted by qualified technicians who have been certified by an approved organization, such as Automotive Service Excellence (ASE) or Mobile Air Conditioning Society (MACS). Use of a recovery machine dedicated to R-134a is necessary to reduce the possibility of oil and refrigerant incompatibility concerns. the instructions provided by the equipment manufacturer when removing refrigerant from or charging the A/C system. Refrigerant R-134a must not be mixed with air for leak testing or used with air for any other purpose above atmospheric pressure. R-134a is combustible when mixed with high concentrations of air and higher pressures. A number of manufacturers are producing refrigerant products that are described as direct substitutes for refrigerant R-134a. The use of any unauthorized substitute refrigerant can severely damage the A/C components. If repair is required, use only new or recycled refrigerant R-134a.

NOTICE: To avoid contamination of the A/C system, the following precautions must be observed. Never open or loosen a connection before recovering the refrigerant. When loosening a connection, if any residual pressure is evident, allow it to leak out before opening the fitting. Evacuate a system that has been opened to install a new component or one that has discharged through leakage before charging. Seal open fittings with a cap or plug immediately after disconnecting a component from the system. Clean the outside of the fittings thoroughly before disconnecting a component from the system. Do not remove the sealing caps from a new component until ready to install. Refrigerant oil will absorb moisture from the atmosphere if left uncapped. Do not open an oil container until ready to use and install the cap immediately after using. Store the oil in a clean, moisture-free container. Install a new O-ring seal before connecting an open fitting. Coat the fitting and O-ring seal with PAG oil before connecting. When installing a refrigerant line, avoid sharp bends. Position the line away from the exhaust or any sharp edges that can chafe the line. Tighten threaded fittings only to specifications. The steel and aluminum fittings used in the refrigerant system will not tolerate overtightening. When disconnecting a fitting, use a wrench on both halves of the fitting to prevent twisting of the refrigerant lines or tubes. Do not open a refrigerant system or uncap a new component unless it is as close as possible to room temperature. This will prevent condensation from forming inside a component that is cooler than the surrounding air.

The Dual Automatic Temperature Control (DATC) system maintains the selected vehicle interior temperature by heating and/or cooling the air depending on the HVAC control panel selection.

- During A/C operation, the system reduces the relative humidity of the air inside the vehicle.
- The driver may override the automatic mode of operation.
- The temperature control setting is the desired cabin air temperature.
- The blower motor control override buttons vary the blower motor speed.
- The driver side and passenger side temperature settings can be individually controlled.

Copyright © Ford Motor Company

Climate Control System - Vehicles With: Dual Automatic Temperature Control (DATC) - System Operation and Component Description

System Diagram

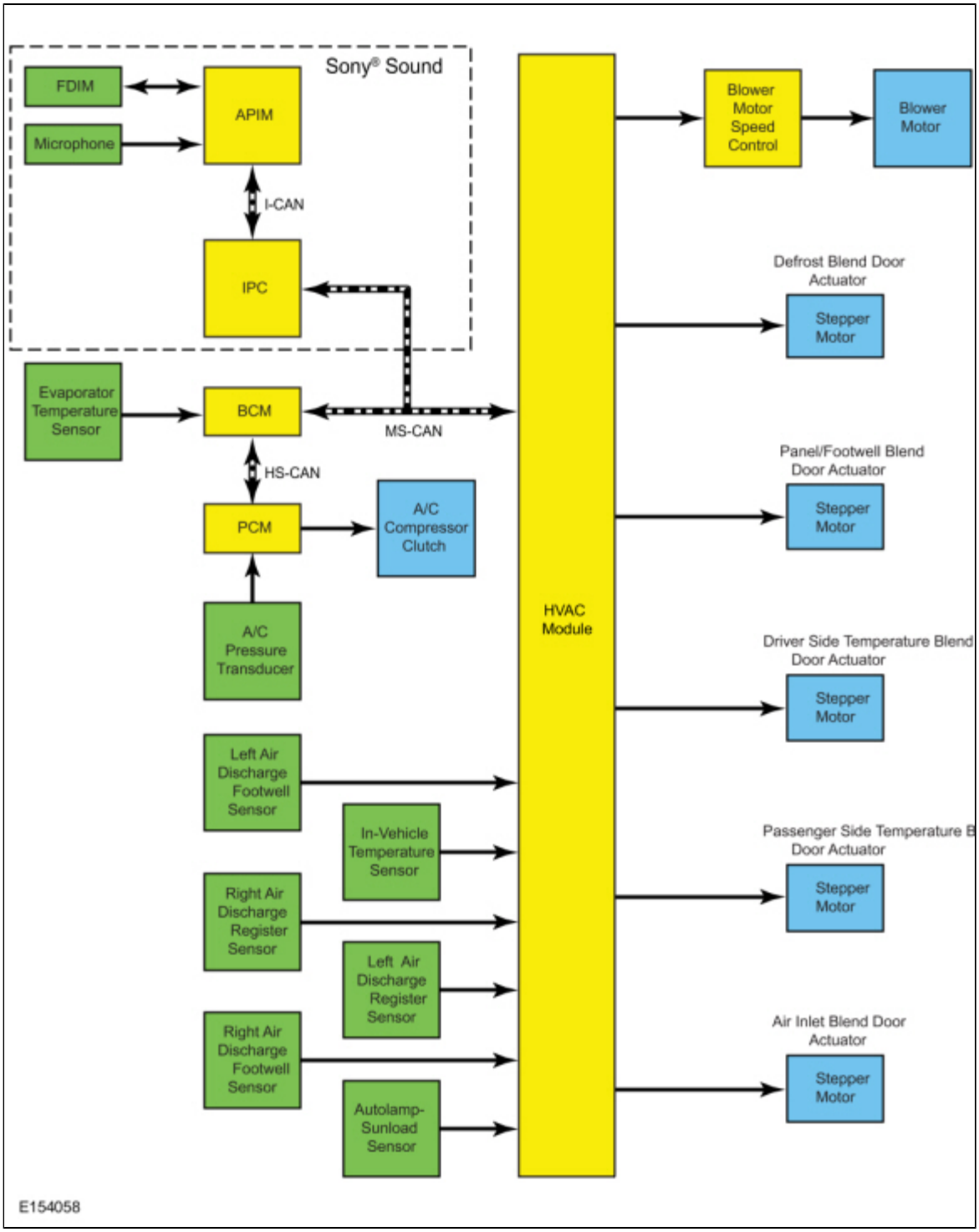

System Operation

Network Message Chart

Network Message Chart — Powertrain Control Module (PCM) (Dual Automatic Temperature Control (DATC) without Sony® Sound)

Broadcast Message	Originating Module	Message Purpose
A/C request	HVAC control module	This message requests the A/C compressor clutch to be engaged.
Evaporator temperature	BCM	This message contains the evaporator temperature. The PCM uses the evaporator temperature to cycle the A/C compressor clutch.

Network Message Chart — Heating, Ventilation, and Air Conditioning (HVAC) Control Module (Dual Automatic Temperature Control (DATC) without Sony® Sound)

Broadcast Message	Originating Module	Message Purpose
Remote start status	BCM	This message contains the climate control system controls request for remote start.
A/C clutch status	PCM	This message contains the A/C compressor clutch status.
Evaporator temperature	BCM	This message contains the evaporator temperature.
Ambient air temperature	PCM	This message contains raw value from the ambient air temperature sensor.

Network Message Chart — Accessory Protocol Interface Module (APIM) (Dual Automatic Temperature Control (DATC) with Sony® Sound)

Broadcast Message	Originating Module	Message Purpose
Climate control status	HVAC control module	This message contains the HVAC status.

Network Message Chart — Powertrain Control Module (PCM) (Dual Automatic Temperature Control (DATC) with Sony® Sound)

Broadcast Message	Originating Module	Message Purpose
A/C request	HVAC control module	This message requests the A/C compressor clutch to be engaged.
Evaporator temperature	BCM	This message contains the evaporator temperature. The PCM uses the evaporator temperature to cycle the A/C compressor clutch.

Network Message Chart — Heating, Ventilation, and Air Conditioning (HVAC) Control Module ((Dual Automatic Temperature Control (DATC) with Sony® Sound)

Broadcast Message	Originating Module	Message Purpose
Climate control requests	APIM	This message contains both the climate control system voice commands as well as all climate control system touch screen inputs.
Remote start status	BCM	This message contains the climate control system controls request for remote start.
Evaporator temperature	BCM	This message contains the evaporator temperature. The PCM uses the evaporator temperature to cycle the A/C compressor clutch.
A/C clutch status	PCM	This message contains the A/C compressor clutch status.
Evaporator temperature	BCM	This message contains the evaporator temperature.

The Refrigerant Cycle

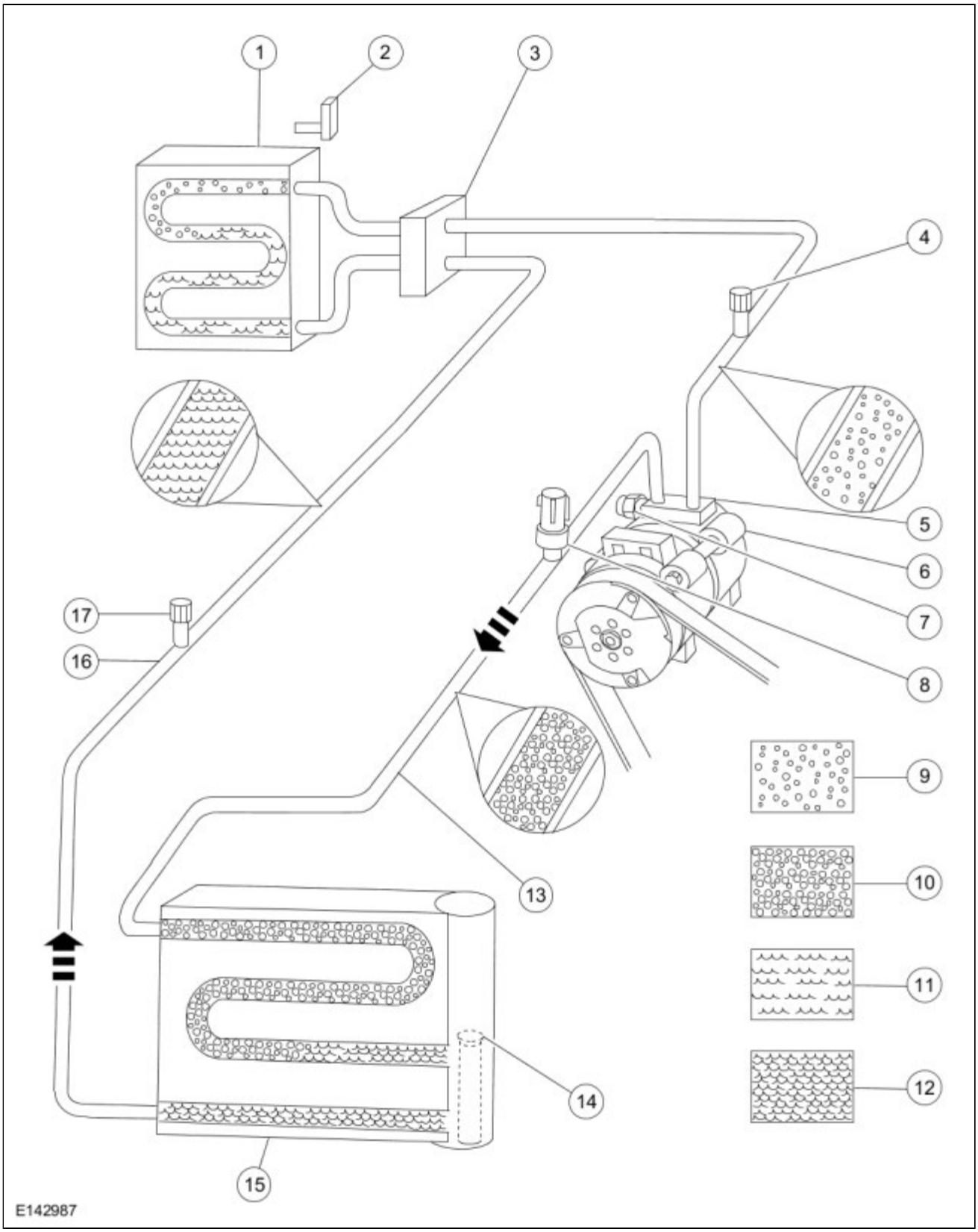

Item	Description
1	A/C evaporator
2	A/C evaporator outlet temperature sensor
3	Thermostatic Expansion Valve (TXV)

4	A/C charge valve port (low side)
5	A/C suction line
6	A/C compressor
7	A/C pressure relief valve
8	A/C pressure transducer
9	Low-pressure vapor
10	High-pressure vapor
11	Low-pressure liquid
12	High-pressure liquid
13	Compressor discharge line
14	Receiver Drier Element
15	A/C condenser
16	Condenser-to-evaporator line
17	A/C charge valve port (high side)

During A/C system shutdown the refrigerant pressures are equal throughout the system. When the A/C compressor is in operation, it uses a piston pump to compress the cool vapor, causing it to become high-temperature/high-pressure vapor. The high-temperature/high-pressure vapor is then released into the top of the A/C condenser.

The A/C condenser, being close to ambient temperature, causes the refrigerant vapor to condense into a liquid when heat is removed from the refrigerant by ambient air passing over the fins and tubing. The now liquid refrigerant, still at high pressure, exits from the bottom of the A/C condenser and enters the inlet side of the receiver drier element (integral to the condenser). The receiver drier element is designed to remove moisture and contaminants from the refrigerant system.

The outlet of the receiver drier element is connected to the Thermostatic Expansion Valve (TXV). The Thermostatic Expansion Valve (TXV) provides the orifice, which is the restriction in the refrigerant system which separates the high and low pressure sides of the A/C system. As the liquid refrigerant passes across this restriction, its pressure and boiling point are reduced.

The liquid refrigerant is now at its lowest pressure and temperature. As it passes through the A/C evaporator, it absorbs heat from the airflow passing over the plate/fin sections of the A/C evaporator. This addition of heat causes the refrigerant to boil (convert to gas). The now cooler air can no longer support the same humidity level of the warmer air and this excess moisture condenses on the exterior of the evaporator coils and fins and drains outside the vehicle.

The refrigerant cycle is now repeated with the A/C compressor again increasing the pressure and temperature of the refrigerant.

The PCM controls the A/C clutch relay. The evaporator temperature sensor monitors the temperature of the air that has passed through the evaporator and sends a signal to the PCM . If the temperature of the evaporator discharge air is low enough to cause the condensed water vapor to freeze, the A/C clutch is disengaged by the PCM .

The high-side line pressure is also monitored so that A/C compressor operation is interrupted if the system pressure becomes too high or is determined to be too low (low charge condition).

The A/C compressor relief valve opens and vents refrigerant to relieve unusually high system pressure.

Control System Logic

The controls for the climate control system are in one or more locations depending on vehicle option content:

The customer inputs are directly inputted in to the Dual Automatic Temperature Control (DATC) module.

When A/C is selected, the HVAC control module sends the request to the BCM over the Medium Speed Controller Area Network (MS-CAN). The BCM then sends the request to the PCM over the High Speed Controller Area Network (HS-CAN).

On vehicles with Sony Sound the touch screen and voice commands can be used for climate control inputs.

- Dual Automatic Temperature Control (DATC) module
- FCIM if equipped with Sony sound
- FDIM (part of APIM), if equipped with Sony sound

Controls and Compressor Cycling

Climate control commands are inputted through the HVAC control module and on vehicles equipped with Sony Sound inputs can also be commanded through voice commands or the touch screen.

When the A/C is requested, the HVAC control module sends the message over the Medium Speed Controller Area Network (MS-CAN) to the BCM . The BCM then forwards the message to the PCM over the High Speed Controller Area Network (HS-CAN).

When A/C is requested and A/C line pressures allows, a ground is provided to the A/C clutch relay coil from the PCM , energizing the A/C clutch relay. When the PCM energizes the relay, voltage is supplied to the A/C compressor clutch field coil from the relay.

The evaporator discharge air temperature sensor is an input to the BCM and is relayed to the PCM over the High Speed Controller Area Network (HS-CAN). The evaporator discharge air temperature sensor prevents icing of the evaporator by measuring the temperature of the airflow immediately after the evaporator. An accurate evaporator temperature is critical for compressor engagement. The PCM uses the temperature measurement to regulate the on and off time of the A/C compressor to maintain the evaporator temperature within an acceptable temperature range.

The PCM monitors the discharge pressure measured by the A/C pressure transducer. The PCM interrupts A/C compressor operation in the event the A/C pressure transducer indicates high system discharge pressures. It is also used to sense low charge conditions. If the pressure is below a predetermined value for a given ambient temperature, the PCM does not allow the A/C clutch to engage.

The HVAC control module adjusts the air inlet door depending on the humidity measured by the in-vehicle temperature and humidity sensor. If the vehicle cabin becomes too humid and recirculated air is not selected, the HVAC control module adjusts the air inlet door to allow more recirculated air. When the humidity level drops, it adjusts back to fresh air. The HVAC control module also adjusts the system based on in-vehicle temperature.

The autolamp/sunload sensor supplies information to the HVAC control module indicating the intensity of the sun on the vehicle and the HVAC control module adjusts the system based on the intensity.

Air Handling

The defrost, registor/footwell, air inlet, and temperature blend door actuators are stepper motors. There is no feedback circuit or potentiometer for these actuators. The pins labeled Door A, B, C and D are for the different phases (coils) of the motor. All the phases for a given motor are fed from a common power lead, the pin labeled Door Power and the HVAC control module controls each phase by turning on/off a low side output for the different phases. The motor turns or "steps" through a series of motions to position the actuator. The HVAC control module tracks the actuator positions by counting steps and periodically calibrates itself so it knows how many steps there are for the full range movement of the actuator. The HVAC control module sets Diagnostic Trouble Codes (DTCs) by monitoring the current flow through a given phase. If it sees too much current it identifies it as a short circuit. If it does not see any current it identifies it as an open circuit.

When an airflow mode, desired driver or passenger temperature or fresh air or recirculation mode is selected the HVAC control module drives the actuator motor in the direction necessary to make the actuator position agree with the expected HVAC control module position to be obtained.

The HVAC control module sends a PWM signal to the blower motor speed control to control the blower speed. The blower speed control provides variable ground feed for the blower motor. A delay function provides a gradual increase or decrease in blower motor speed under all conditions.

AUTO

When AUTO is selected:

- the HVAC system operates in a manner to achieve and maintain the temperature set by the operator.
- the air inlet door is automatically controlled by the HVAC control module based on the temperature setting.
- the blend door is automatically controlled by the HVAC control module based on the temperature setting.
- the temperature blend doors are automatically controlled by the HVAC control module, based on the temperature setting.
- the A/C compressor is automatically controlled by the HVAC control module, based on the temperature setting. The A/C

compressor does not operate if the outside temperature is below approximately 6 C (43 F).
- the blower motor speed is automatically controlled by the HVAC control module based on the temperature setting, but can be manually overridden.

OFF

When OFF is selected:

- the air inlet door closes, preventing outside air and allowing only recirculated air.
- the blower motor is off.

MAX AC

When MAX A/C is selected:

- the air inlet door closes, preventing outside air and admits only recirculated air.
- the recirculated air indicator is illuminated (recirculated air forced on).
- the blend doors direct airflow to the instrument panel registers.
- the temperature blend doors move to the full cool position. Air temperature can be manually overridden.
- the A/C button is illuminated.
- the A/C compressor operates if the outside temperature is above approximately 6 C (43 F).
- the blower motor is commanded to the highest speed. The blower motor speed is adjustable.

REGISTOR

When REGISTOR mode is selected:

- the recirculated air request button is enabled. If the recirculated air request button is selected (indicator on), the air inlet door closes, preventing outside air from entering the passenger compartment. If the recirculated air request button is not selected (indicator off), the air inlet door opens, allowing only outside air into the passenger compartment.
- the blend doors direct airflow to the instrument panel registers.
- blended air temperature is available. Only when A/C compressor operation has been selected by pressing the A/C button (indicator on) can the airflow temperature be cooled below the outside air temperature.
- the blower motor is on and the speed is adjustable.

REGISTOR-FOOTWELL

When REGISTOR/FOOTWELL mode is selected:

- the recirculated air request button is enabled. If the recirculated air request button is selected (indicator on), the air inlet door closes, preventing outside air from entering the passenger compartment. If the recirculated air request button is not selected (indicator off), the air inlet door opens, allowing only outside air into the passenger compartment.
- the blend doors direct airflow to the footwell duct and the instrument panel registers. A small amount of airflow from the side window demisters and defrost duct is present.
- blended air temperature is available. Only when A/C compressor operation has been selected by pressing the A/C button (indicator on) can the airflow temperature be cooled below the outside air temperature.
- the blower motor is on and the speed is adjustable.

FOOTWELL

When FOOTWELL mode is selected:

- the recirculated air request button is enabled. If the recirculated air request button is selected (indicator on), the air inlet door closes, preventing outside air from entering the passenger compartment. If the recirculated air request button is not selected (indicator off), the air inlet door opens, allowing only outside air into the passenger compartment.
- the blend doors direct airflow to the footwell duct. A small amount of airflow from the defroster duct and side window demisters is present.
- blended air temperature is available. Only when A/C compressor operation has been selected by pressing the A/C button (indicator on) can the airflow temperature be cooled below the outside air temperature.
- the blower motor is on and the speed is adjustable.

FOOTWELL-DEFROST

When FOOTWELL/DEFROST mode is selected:

- the recirculated air request button is enabled. If the recirculated air request button is selected (indicator on), the air inlet door closes, preventing outside air from entering the passenger compartment. If the recirculated air request button is not selected (indicator off), the air inlet door opens, allowing only outside air into the passenger compartment.
- the blend doors direct airflow to the footwell duct, the defroster duct and the side window demisters.
- blended air temperature is available. Only when A/C compressor operation has been selected by pressing the A/C button (indicator on) can the airflow temperature be cooled below the outside air temperature.
- the blower motor is on and the speed is adjustable.

DEFROST

When DEFROST mode is selected:

- the recirculated air request button is disabled. The air inlet door opens, allowing only outside air into the passenger compartment.
- the blend doors direct airflow to the defroster duct and side window demisters. A small amount of airflow from the footwell duct is present.
- the A/C is turned on in defrost. The A/C compressor operates as long as the outside temperature is above approximately 6 C (43 F).
- blended air temperature is available.
- the blower motor is on and the speed is adjustable.

MyTemp

The MyTemp feature can be used to store and recall a preset driver's temperature. This feature is provided so this temperature can be quickly adjusted to a frequently used setting with a single button press. For additional information about MyTemp, refer to the Owner's Literature.

Remote Start - Message Center Set To Auto

Remote start is an optional feature available on this vehicle. In addition to being able to start the vehicle remotely, the remote start feature also utilizes other vehicle systems to increase the level of comfort to the vehicle occupants upon entering the vehicle. Additional information on the remote start feature and the other vehicle systems can be found in section: 2.0L Duratec-HE
Refer to: Starting System - Vehicles With: Push Button Start - System Operation and Component Description (303-06A Starting System - 2.0L Duratec-HE (125kW/170PS) - MI4, Description and Operation).
2.0L Ecoboost Refer to: Starting System - System Operation and Component Description (303-06B Starting System - 2.0L EcoBoost (184kW/250PS) - MI4, Description and Operation).

When the factory remote start feature is used, the Dual Automatic Temperature Control (DATC) system automatically sets certain parameters in an attempt to achieve a comfortable cabin temperature. These parameters are set based on outside air temperature. During remote start, the outside air temperature is continually evaluated and HVAC system behavior can change if the outside air changes between cold, moderate and warm temperatures.

For cold ambient air temperatures as determined by the HVAC control module AUTO mode to request heat:

- the airflow mode is set to AUTO if Front Defrost is set to Off in the message center. (if the HVAC control module requests FOOTWELL in AUTO mode, FOOTWELL/DEFROST will be used in remote start mode).
- the airflow mode is set to DEFROST if Front Defrost is set to Auto in the message center.
- the temperature is set to 22 C (71.6 F).
- the blower speed is set to AUTO.
- the air inlet mode is set to AUTO.
- A/C is set to AUTO.

For moderate and warm ambient air temperatures as determined by the HVAC control module AUTO mode to request heat or cooling:

- the airflow mode is set to AUTO.
- the temperature is set to 22 C (71.6 F).
- the blower speed is set to AUTO.
- the air inlet mode is set to AUTO.
- A/C is set to AUTO.

Remote Start - Message Center Set To Last User Settings

Remote start is an optional feature available on this vehicle. In addition to being able to start the vehicle remotely, the remote start feature also utilizes other vehicle systems to increase the level of comfort to the vehicle occupants upon entering the vehicle. Additional information on the remote start feature and the other vehicle systems can be found in section: 2.0L Duratec-HE Refer to: Starting System - Vehicles With: Push Button Start - System Operation and Component Description (303-06A Starting System - 2.0L Duratec-HE (125kW/170PS) - MI4, Description and Operation).
2.0L Ecoboost Refer to: Starting System - System Operation and Component Description (303-06B Starting System - 2.0L EcoBoost (184kW/250PS) - MI4, Description and Operation).

When the factory remote start feature is used, the Dual Automatic Temperature Control (DATC) system automatically sets certain parameters in an attempt to achieve a comfortable cabin temperature. These parameters are set based on outside air temperature. During remote start, the outside air temperature is continually evaluated and HVAC system behavior can change if the outside air changes between cold, moderate and warm temperatures.

For cold ambient air temperatures as determined by the HVAC control module AUTO mode to request heat:

- the airflow mode is set to the last user setting if Front Defrost is set to Off in the message center.
- the airflow mode is set to DEFROST if Front Defrost is set to Auto in the message center.
- the temperature is set to the last user setting.
- the blower speed is set to the last user setting.
- the air inlet mode is set to the last user setting.
- A/C is set to the last user setting.

For moderate and warm ambient air temperatures as determined by the HVAC control module AUTO mode to request heat or cooling:

- the airflow mode is set to the last user setting.
- the temperature is set to the last user setting.
- the blower speed is set to the last user setting.
- the air inlet mode is set to the last user setting.
- A/C is set to the last user setting.

Component Description

Heating Ventilation Air Conditioning (HVAC) Control Module - Dual Automatic Temperature Control (DATC)

For vehicles equipped with Sony sound, the Dual Automatic Temperature Control (DATC) system uses voice commands or the touchscreen to control the system. For vehicles without Sony sound, the HVAC control module is the only control interface. For details on the HVAC control module communication, REFER to Control System Logic in this section.

The HVAC requires Programmable Module Installation (PMI) when it is replaced.

Air Conditioning (AC) Pressure Transducer

The PCM monitors the discharge pressure measured by the A/C pressure transducer. As the refrigerant pressure changes, the resistance of the A/C pressure transducer changes. It is not necessary to recover the refrigerant before removing the A/C pressure transducer.

A 5-volt reference voltage is supplied to the A/C pressure transducer from the PCM . The A/C pressure transducer receives a ground from the PCM . The A/C pressure transducer then sends a voltage to the PCM to indicate the A/C refrigerant pressure.

In-Vehicle Temperature and Humidity Sensor

The in-vehicle temperature and humidity sensor contains a thermistor and a sensing element which separately measure the in-vehicle air temperature and humidity and sends those readings to the HVAC control module. The in-vehicle temperature and humidity sensor has an electric fan within the sensor that draws in-vehicle air across the two sensing elements. The HVAC control module adjusts the air inlet door depending on the humidity measured by the in-vehicle temperature and humidity sensor. If the vehicle cabin becomes too humid the HVAC control module adjusts the air inlet door to allow more fresh air. When the humidity level drops, it adjusts back to recirculated air.

Ambient Air Temperature Sensor

The Ambient Air Temperature (AAT) sensor is an input to the PCM . If the temperature is below a predetermined value, the PCM

does not allow the A/C clutch to engage.

Autolamp-Sunload Sensor

The autolamp/sunload sensor supplies information to the HVAC control module indicating the intensity of the sun on the vehicle.

Evaporator Temperature Sensor

The evaporator temperature sensor contains a thermistor. The sensor varies its resistance with the temperature. As the temperature rises, the resistance falls. As the temperature falls, the resistance rises. The evaporator temperature sensor is an input to the BCM and the information is relayed to the PCM over the High Speed Controller Area Network (HS-CAN). If the temperature is below a predetermined value, the PCM does not allow the A/C clutch to engage.

Blower Motor Speed Control

The blower motor speed control uses a PWM signal from the HVAC control module to determine the desired blower speed and varies the ground feed for the blower motor to control the speed.

Air Conditioning (AC) Compressor Clutch

When battery voltage is applied to the A/C compressor clutch field coil, the clutch disc and hub assembly is drawn toward the A/C clutch pulley. The magnetic force locks the clutch plate and hub assembly and the A/C clutch pulley together as one unit, causing the compressor shaft to rotate with the engine. When battery voltage is removed from the A/C compressor clutch field coil, springs in the clutch plate and hub assembly move the clutch plate away from the A/C clutch pulley.

An A/C clutch diode is integrated into the coil. For A/C clutch field coil circuit spike suppression.

Internally Controlled Variable Displacement Air Conditioning (A/C) Compressor

The internally controlled variable displacement A/C compressor has the following characteristics:

- a non-serviceable shaft seal.
- a non-serviceable pressure relief valve installed in the rear of the compressor to protect the refrigerant system against excessively high refrigerant pressures.
- Uses PAG oil or equivalent. This oil contains special additives required for the A/C compressor. The oil may have some slightly dark-colored streaks while maintaining normal oil viscosity. This is normal for this A/C compressor because of break-in wear that can discolor the oil.

The internally controlled variable displacement A/C compressor changes the swash plate angle using an internal valve, springs and linkage, controlled with refrigerant pressure in the compressor housing, to change the displacement of the A/C compressor.

Air Conditioning (AC) Condenser

The A/C condenser is an aluminum fin-and-tube design heat exchanger. It cools compressed refrigerant gas by allowing air to pass over fins and tubes to extract heat, and condenses gas to liquid refrigerant as it is cooled.

Evaporator

The evaporator is an aluminum plate/fin type and is located in the heater core and evaporator housing. A mixture of liquid refrigerant and oil enters the bottom of the evaporator through the evaporator inlet tube and continues out of the evaporator through the evaporator outlet tube as a vapor. During A/C compressor operation, airflow from the blower motor is cooled and dehumidified as it flows through the evaporator fins.

Thermostatic Expansion Valve (TXV)

The Thermostatic Expansion Valve (TXV) is located at the evaporator inlet and outlet tubes at the center rear of the engine compartment. The Thermostatic Expansion Valve (TXV) provides a restriction to the flow of refrigerant and separates the low-pressure and high-pressure sides of the refrigerant system. Refrigerant entering and exiting the evaporator passes through the Thermostatic Expansion Valve (TXV) through 2 separate flow paths. An internal temperature sensing bulb senses the temperature of the refrigerant flowing out of the evaporator and adjusts an internal pin-type valve to meter the refrigerant flow into the evaporator. The internal pin-type valve decreases the amount of refrigerant entering the evaporator at lower temperatures and increases the amount of refrigerant entering the evaporator at higher temperatures.

Receiver-Drier

The receiver drier element stores high-pressure liquid and the removes any retained moisture from the refrigerant.

The receiver drier element is incorporated onto the LH side of the A/C condenser. The receiver drier element is a separate component and can be separately removed and installed without the A/C condenser being removed from the vehicle.

Service Gauge Port Valves

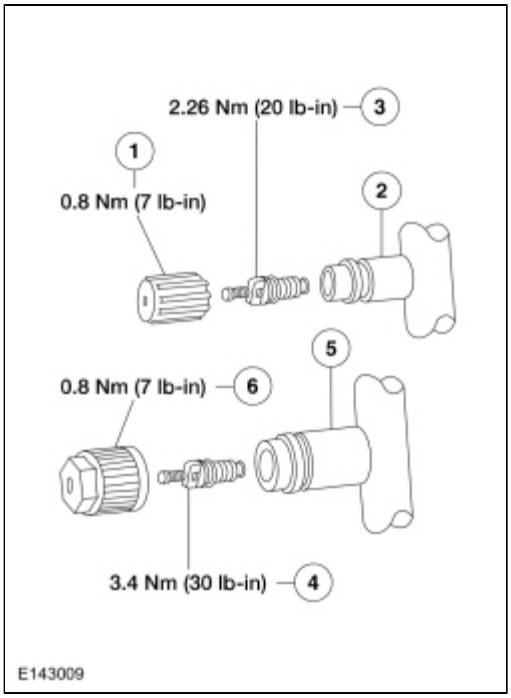

Item	Service Part Number	Description
1	19D702	Low-pressure service gauge port valve cap
2	—	Low-pressure service gauge port valve
3	19D701	Low-pressure Schrader-type valve
4	19D701	High-pressure Schrader-type valve
5	—	High-pressure service gauge port valve
6	19D702	High-pressure service gauge port valve cap

The service gauge port fitting is an integral part of the refrigerant line or component.

- Special couplings are required for both the high-side and low-side service gauge ports.
- A very small amount of leakage is always detectable around the Schrader-type valve with the service gauge port valve cap removed, and is considered normal. A new Schrader-type valve core can be installed if the seal leaks excessively.
- The A/C service gauge port valve caps are used as primary seals in the refrigerant system to prevent leakage through the Schrader-type valves from reaching the atmosphere. Always install and tighten the A/C service gauge port valve caps to the correct torque after they are removed.

Blend Door Actuator - Registor-Footwell Door

The registor-footwell blend door is a stepper motor style actuator. The HVAC control module monitors the position of the registor-footwell blend door by counting the motor steps as it rotates. The HVAC control module drives the actuator motor in the direction necessary to move the airflow blend doors to the position set by the vehicle occupants.

Blend Door Actuator - Defrost Door

The defrost blend door is a stepper motor style actuator. The HVAC control module monitors the position of the defrost blend door by counting the motor steps as it rotates. The HVAC control module drives the actuator motor in the direction necessary to move the airflow blend door to the position set by the vehicle occupants.

Blend Door Actuator - Air Inlet Door

The air inlet blend door is a stepper motor style actuator. The HVAC control module monitors the position of the air inlet blend door by counting the motor steps as it rotates. The HVAC control module drives the actuator motor in the direction necessary to move the air inlet blend door to the position set by the recirculation button and the in-vehicle temperature and humidity sensor information.

Temperature Blend Door Actuator - Driver Side

The driver side temperature blend door is a stepper motor style actuator. The HVAC control module monitors the position of the driver side temperature blend door by counting the motor steps as it rotates. The HVAC control module drives the temperature blend door actuator motor in the direction necessary to move the temperature blend door to the position set by the vehicle occupant.

Temperature Blend Door Actuator - Passenger Side

The passenger side temperature blend door actuator is a stepper motor style actuator. The HVAC control module monitors the position of the passenger side temperature blend door by counting the motor steps as it rotates. The HVAC control module drives the temperature blend door actuator motor in the direction necessary to move the temperature blend door to the position set by the vehicle occupant.

Refrigerant System Dye

A fluorescent refrigerant system dye wafer is added to the receiver drier element to assist in refrigerant system leak diagnosis using a Rotunda-approved UV blacklight. This fluorescent dye wafer dissolves after about 30 minutes of continuous A/C operation. It is not necessary to add additional dye to the refrigerant system before diagnosing leaks, even if a significant amount of refrigerant has been removed from the system.

Copyright © Ford Motor Company

Climate Control System - Vehicles With: Electronic Manual Temperature Control (EMTC)

DTC Chart: Powertrain Control Module (PCM)

Diagnostics in this manual assume a certain skill level and knowledge of Ford-specific diagnostic practices. For information about these practices,
REFER to: Diagnostic Methods (100-00 General Information, Description and Operation).

Powertrain Control Module (PCM) DTC Chart

DTC	Description	Action
PCM DTCs	Powertrain Control Module (PCM) Diagnostic Trouble Codes (DTCs) not listed in this chart	Refer to PC/ED Section 3 Symptom Charts.
P0532	A/C Refrigerant Pressure Sensor “A” Circuit Low	GO to Pinpoint Test A
P0533	A/C Refrigerant Pressure Sensor “A” Circuit High	GO to Pinpoint Test A
P0645	A/C Clutch Relay Control Circuit	GO to Pinpoint Test B
P1464	A/C Demand Out Of Self Test Range	GO to Pinpoint Test I
P193E	A/C Clutch Request Signal	GO to Pinpoint Test O

DTC Chart: Body Control Module (BCM)

Diagnostics in this manual assume a certain skill level and knowledge of Ford-specific diagnostic practices. For information about these practices,
REFER to: Diagnostic Methods (100-00 General Information, Description and Operation).

Body Control Module (BCM) DTC Chart

DTC	Description	Action
B101E:23	Air Conditioning Mode Switch: Signal Stuck Low	GO to Pinpoint Test M
B10AF:11	Blower Fan Relay: Circuit Short to Ground	GO to Pinpoint Test L
B10AF:13	Blower Fan Relay: Circuit Open	GO to Pinpoint Test K
B10AF:19	Blower Fan Relay: Circuit Current Above Threshold	GO to Pinpoint Test K
B1B71:21	Evaporator Temperature Sensor: Signal Amplitude < Minimum	GO to Pinpoint Test N
B1B71:22	Evaporator Temperature Sensor: Signal Amplitude > Maximum	GO to Pinpoint Test N
B1B71:2F	Evaporator Temperature Sensor: Signal Erratic	GO to Pinpoint Test N

Symptom Chart(s)

Symptom Chart: Climate Control - Electronic Manual Temperature Control (EMTC)

Diagnostics in this manual assume a certain skill level and knowledge of Ford-specific diagnostic practices. For information about these practices,
REFER to: Diagnostic Methods (100-00 General Information, Description and Operation).

Symptom Chart

Condition	Possible Sources	Actions
Unable to duplicate the customer concern	Refer to Diagnostic Routine	GO to Pinpoint Test C
Reduced outlet airflow	Refer to Diagnostic Routine	• If the A/C is always ON with mode selection switch turned OFF and PCM DTC P1464 is not present, GO to Pinpoint Test H • If the A/C is always ON with mode selection switch turned OFF and PCM DTC P1464 is present, GO to Pinpoint Test I • If the A/C turns on and off normally with the mode selection switch GO to Pinpoint Test L
The air inlet door is inoperative	Refer to Diagnostic Routine	GO to Pinpoint Test D
Incorrect/erratic direction of airflow from outlets	Refer to Diagnostic Routine	GO to Pinpoint Test E
Insufficient Air Conditioning (A/C) cooling	• Improper refrigerant level • Temperature door binding or stuck • Temperature door actuator	• CARRY OUT the refrigerant system tests. REFER to: Refrigerant System Tests (412-00 Climate Control System - General Information, General Procedures). If OK, DIAGNOSE for a temperature door actuator not operating correctly. GO to Pinpoint Test J
Insufficient, erratic or no heat	Refer to Diagnostic Routine	GO to Pinpoint Test F
The Air Conditioning (A/C) is inoperative	Refer to Diagnostic Routine	GO to Pinpoint Test G
The Air Conditioning (A/C) is always on	Refer to Diagnostic Routine	GO to Pinpoint Test H
The Air Conditioning (A/C) is always on — Air Conditioning (A/C) mode always commanded ON	Refer to Diagnostic Routine	GO to Pinpoint Test I
Temperature control is inoperative/does not operate correctly	Refer to Diagnostic Routine	GO to Pinpoint Test J
The blower motor is inoperative	Refer to Diagnostic Routine	GO to Pinpoint Test K
The blower motor does not operate correctly	Refer to Diagnostic Routine	GO to Pinpoint Test L
Air Conditioning (A/C) pressure relief valve	• High system pressure	CHECK the high-side system pressure. If the pressure is below the A/C pressure relief valve open pressure, INSTALL a new A/C pressure relief

discharging	• Air Conditioning (A/C) pressure relief valve	valve. If the system pressure is above the A/C pressure relief valve open pressure, REPAIR the system for a restriction.

Symptom Chart: Noise, Vibration and Harshness (NVH)

Diagnostics in this manual assume a certain skill level and knowledge of Ford-specific diagnostic practices. For information about these practices,
REFER to: Diagnostic Methods (100-00 General Information, Description and Operation).

Symptom Chart

Condition	Possible Sources	Actions
Noisy Air Conditioning (A/C) compressor	A/C compressor pulley bearing worn	INSPECT the A/C compressor pulley bearing for roughness. If bearing roughness is found, INSTALL a new A/C compressor. For 2.0L Duratec-HE REFER to: Air Conditioning (A/C) Compressor - 2.0L Duratec-HE (125kW/170PS) - MI4 (412-00 Climate Control System - General Information, Removal and Installation). For 2.0L Ecoboost REFER to: Air Conditioning (A/C) Compressor - 2.0L EcoBoost (184kW/250PS) - MI4 (412-00 Climate Control System - General Information, Removal and Installation).
	A/C compressor bearing worn	INSPECT the A/C compressor bearing for roughness. If bearing roughness is found, INSTALL a new A/C compressor. For 2.0L Duratec-HE REFER to: Air Conditioning (A/C) Compressor - 2.0L Duratec-HE (125kW/170PS) - MI4 (412-00 Climate Control System - General Information, Removal and Installation). For 2.0L Ecoboost REFER to: Air Conditioning (A/C) Compressor - 2.0L EcoBoost (184kW/250PS) - MI4 (412-00 Climate Control System - General Information, Removal and Installation).

Diagnostic Routine(s)

Diagnostics in this manual assume a certain skill level and knowledge of Ford-specific diagnostic practices. For information about these practices,
REFER to: Diagnostic Methods (100-00 General Information, Description and Operation).

P0532:00 P0533:00

Refer to Wiring Diagrams Cell 54 for schematic and connector information.

Normal Operation and Fault Conditions

REFER to: Climate Control System - Vehicles With: Electronic Manual Temperature Control (EMTC) - System Operation and Component Description (412-00 Climate Control System - General Information, Description and Operation).

DTC Fault Trigger Conditions

DTC	Description	Fault Trigger Conditions
P0532:00	A/C Refrigerant Pressure Sensor A Circuit Low: No Sub Type Information	The A/C pressure transducer inputs a feedback voltage to the PCM . This DTC sets if the feedback voltage is lower than expected.
P0533:00	A/C Refrigerant Pressure Sensor A Circuit High: No Sub Type Information	The A/C pressure transducer inputs a feedback voltage to the PCM . This DTC sets if the feedback voltage is greater than expected.

Possible Sources

- Wiring, terminals or connectors
- A/C Pressure Transducer
- PCM

PINPOINT TEST A : P0532:00 P0533:00

NOTICE: Use the correct probe adapter(s) from the Flex Probe Kit when taking measurements. Failure to use the correct probe adapter(s) may damage the connector.

A1 CHECK A/C (AIR CONDITIONING) PRESSURE TRANSDUCER CIRCUITS FOR A SHORT TO VOLTAGE

- Ignition OFF.
- Disconnect PCM C175B .
- Disconnect A/C Pressure Transducer C1260 .
- Ignition ON.
- Measure:

Positive Lead	Measurement / Action	Negative Lead
C1260-1	V	—
C1260-2	V	—
C1260-3	V	—

Is any voltage present?

Yes	REPAIR the circuit.
No	GO to A2

A2 CHECK THE A/C (AIR CONDITIONING) PRESSURE TRANSDUCER CIRCUITS FOR A SHORT TO GROUND

- Ignition OFF.
- Measure:

Positive Lead	Measurement / Action	Negative Lead
C1260-1	Ω	—
C1260-2	Ω	—
C1260-3	Ω	—

Is the resistance greater than 10,000 ohms?

Yes	GO to A3
No	REPAIR the circuit in question.

A3 CHECK A/C (AIR CONDITIONING) PRESSURE TRANSDUCER CIRCUITS FOR A SHORT TOGETHER

- Measure:

Positive Lead	Measurement / Action	Negative Lead
C1260-1	Ω	C1260-2
C1260-2	Ω	C1260-3
C1260-3	Ω	C1260-1

Are the resistances greater than 10,000 ohms?

Yes	GO to A4
No	REPAIR the circuits in question.

A4 CHECK A/C (AIR CONDITIONING) PRESSURE TRANSDUCER CIRCUITS FOR AN OPEN

- Measure:

Positive Lead	Measurement / Action	Negative Lead
C1260-1	Ω	C175B-37
C1260-2	Ω	C175B-31
C1260-3	Ω	C175B-51

Is the resistance less than 3 ohms?

Yes	GO to A5
No	REPAIR the circuit.

A5 CHECK THE PCM (POWERTRAIN CONTROL MODULE) OUTPUT VOLTAGE

- Ignition OFF.
- Connect PCM C175B .
- Ignition ON.
- Measure:

Positive Lead	Measurement / Action	Negative Lead

C1260-3		—

Is the voltage between 4.7 and 5.1 volts?

Yes	GO to A6
No	GO to A8

A6 CHECK THE A/C (AIR CONDITIONING) PRESSURE TRANSDUCER HIGH

- Using a scan tool, view PCM PIDs.
- Monitor the ACP_PRESS PID.
- Connect a fused jumper wire:

Positive Lead	Measurement / Action	Negative Lead
C1260-3		C1260-2

Does the PID voltage read greater than 4.7 volts?

Yes	INSTALL a new A/C pressure transducer, REFER to: Air Conditioning (A/C) Pressure Transducer (412-00 Climate Control System - General Information, Removal and Installation).
No	GO to A7

A7 CHECK THE A/C (AIR CONDITIONING) PRESSURE TRANSDUCER LOW

- Disconnect the fused jumper wire.

Does the ACP_PRESS PID voltage read less than 0.3 volts?

Yes	INSTALL a new A/C pressure transducer, REFER to: Air Conditioning (A/C) Pressure Transducer (412-00 Climate Control System - General Information, Removal and Installation).
No	GO to A8

A8 CHECK FOR CORRECT PCM (POWERTRAIN CONTROL MODULE) OPERATION

- Ignition OFF.
- Disconnect and inspect all the PCM connectors.
- Repair:
  - corrosion (install new connector or terminals – clean module pins)
  - damaged or bent pins – install new terminals/pins
  - pushed-out pins – install new pins as necessary
- Reconnect the PCM connectors. Make sure they seat and latch correctly.
- Operate the system and determine if the concern is still present.

Is the concern still present?

Yes	CHECK OASIS for any applicable Technical Service Bulletins (TSBs). If a TSB exists for this concern, DISCONTINUE this test and FOLLOW TSB instructions. If no Technical Service Bulletins (TSBs) address this concern, INSTALL a new PCM . For 2.0L Duratec-HE REFER to: Powertrain Control Module (PCM) (303-14A Electronic Engine Controls - 2.0L Duratec-HE (125kW/170PS) - MI4, Removal and Installation). For 2.0L Ecoboost REFER to: Powertrain Control Module (PCM) (303-14B Electronic Engine Controls - 2.0L EcoBoost (184kW/250PS) - MI4, Removal and Installation).
No	The system is operating correctly at this time. The concern may have been caused by module connections. Address the root cause of any connector or pin issues.

P0645:00

Refer to Wiring Diagrams Cell 54 for schematic and connector information.

Normal Operation and Fault Conditions

Voltage is provided to the AC clutch relay coil. When AC is requested and AC line pressures allow, a ground is provided to the AC clutch relay coil from the PCM , energizing the AC clutch relay.

DTC Fault Trigger Conditions

DTC	Description	Fault Trigger Conditions
P0645:00	A/C Clutch Relay Control Circuit: No Sub Type Information	The DTC sets when the PCM grounds the relay circuit and more voltage than expected is detected on the relay circuit. The DTC also sets when the relay circuit is off and no voltage is detected on the relay circuit. The PCM expects to detect voltage coming through the relay coil to the relay circuit when it is not grounding it.

Possible Sources

- Wiring, terminals or connectors
- A/C clutch relay
- PCM

Visual Inspection and Diagnostic Pre-checks

- Inspect BJB fuse 23 (5A).

PINPOINT TEST B : P0645:00

NOTICE: Use the correct probe adapter(s) from the Flex Probe Kit when taking measurements. Failure to use the correct probe adapter(s) may damage the connector.
B1 CHECK THE VOLTAGE TO THE A/C (AIR CONDITIONING) CLUTCH RELAY COIL VOLTAGE SUPPLY CIRCUIT FOR AN OPEN
• Ignition OFF. • Disconnect A/C Clutch Relay. • Measure:

Positive Lead	Measurement / Action	Negative Lead
 Pin 1		—

Is the voltage greater than 11 volts?

Yes	GO to B2
No	REPAIR the circuit.

B2 SUBSTITUTE A KNOWN GOOD RELAY FOR THE A/C (AIR CONDITIONING) CLUTCH RELAY

- Substitute a known good relay for the A/C clutch relay.
- Using a scan tool, perform PCM self-test.

Is DTC P0645:00 still present?

Yes	GO to B3
No	INSTALL a new A/C clutch relay.

B3 CHECK THE A/C (AIR CONDITIONING) CLUTCH RELAY CONTROL CIRCUIT FOR A SHORT TO VOLTAGE

- Ignition OFF.
- Disconnect PCM C175B .
- Ignition ON.
- Measure:

Positive Lead	Measurement / Action	Negative Lead
 Pin 2		—

Is any voltage present?

Yes	REPAIR the circuit.
No	GO to B4

B4 CHECK THE A/C (AIR CONDITIONING) CLUTCH RELAY CONTROL CIRCUIT FOR A SHORT TO GROUND

- Ignition OFF.
- Measure:

Positive Lead	Measurement / Action	Negative Lead
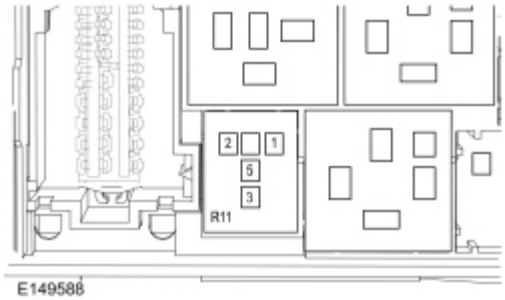 pin 2	Ω	—

Is the resistance greater than 10,000 ohms?

Yes	GO to B5
No	REPAIR the circuit.

B5 CHECK THE A/C (AIR CONDITIONING) CLUTCH RELAY CONTROL CIRCUIT FOR AN OPEN

- Measure:

Positive Lead	Measurement / Action	Negative Lead
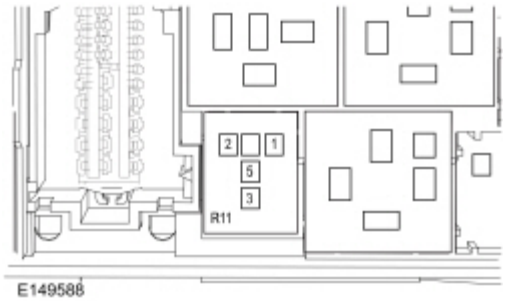 Pin 2	Ω	C175B-10

Is the resistance less than 3 ohms?

Yes	GO to B6
No	REPAIR the circuit.

B6 CHECK FOR CORRECT PCM (POWERTRAIN CONTROL MODULE) OPERATION

- Ignition OFF.
- Disconnect and inspect all the PCM connectors.
- Repair:
  - corrosion (install new connector or terminals – clean module pins)
  - damaged or bent pins – install new terminals/pins
  - pushed-out pins – install new pins as necessary
- Reconnect the PCM connectors. Make sure they seat and latch correctly.
- Operate the system and determine if the concern is still present.

Is the concern still present?

Yes	CHECK OASIS for any applicable Technical Service Bulletins (TSBs). If a TSB exists for this concern, DISCONTINUE this test and FOLLOW TSB instructions. If no Technical Service Bulletins (TSBs) address this concern, INSTALL a new PCM . For 2.0L Duratec-HE REFER to: Powertrain Control Module (PCM) (303-14A Electronic Engine Controls - 2.0L Duratec-HE (125kW/170PS) - MI4, Removal and Installation). For 2.0L Ecoboost REFER to: Powertrain Control Module (PCM) (303-14B Electronic Engine Controls - 2.0L EcoBoost (184kW/250PS) - MI4, Removal and Installation).
No	The system is operating correctly at this time. The concern may have been caused by module connections. Address the root cause of any connector or pin issues.

Climate Control System Functional Test

Normal Operation and Fault Conditions

This pinpoint test tests the functions of the HVAC system and identifies the correct HVAC symptom pinpoint test.
REFER to: Climate Control System - Vehicles With: Electronic Manual Temperature Control (EMTC) - System Operation and Component Description (412-00 Climate Control System - General Information, Description and Operation).

Possible Sources

- HVAC system and/or related components

PINPOINT TEST C : CLIMATE CONTROL SYSTEM FUNCTIONAL TEST

C1 CHECK THE PCM (POWERTRAIN CONTROL MODULE) FOR DIAGNOSTIC TROUBLE CODES (DTCS)

- Using a scan tool, perform PCM and BCM self-tests.

Are any climate control related Diagnostic Trouble Codes (DTCs) present?

Yes	Refer to PCM DTC chart in this section.
No	GO to C2

C2 CHECK THE BCM (BODY CONTROL MODULE) FOR DIAGNOSTIC TROUBLE CODES (DTCS)

- Ignition ON.

- Using a scan tool, perform BCM self-test.

Are any climate control related Diagnostic Trouble Codes (DTCs) present?

Yes	Refer to BCM DTC chart in this section.
No	GO to C3

C3 CHECK THE BLOWER MOTOR OPERATION

- Ignition ON.
- Select register mode.
- Observe blower motor operation and select each blower motor speed.

Does the blower motor operate in all selections and change speed in each?

Yes	GO to C4
No	If the blower motor does not operate in any setting, GO to Pinpoint Test K If the blower motor does not correctly change speeds or turn off, GO to Pinpoint Test L

C4 CHECK THE AIRFLOW OPERATION

- For correct airflow descriptions
  REFER to: Climate Control System - Vehicles With: Electronic Manual Temperature Control (EMTC) - System Operation and Component Description (412-00 Climate Control System - General Information, Description and Operation).
- Select the highest blower motor setting.
- While observing the airflow, select each of the airflow positions (register, register/footwell, footwell, footwell/defrost, defrost).

Is the airflow directed to the correct outlets?

Yes	GO to C5
No	GO to Pinpoint Test E

C5 CHECK THE RECIRCULATED AIR OPERATION

- Select register mode.
- Select the highest blower motor setting.
- Observe airflow noise.
- Press the recirculated air button (indicator on).

Does the airflow noise increase when the recirculated air mode is selected (indicator on)?

Yes	GO to C6
No	GO to Pinpoint Test D

C6 VERIFY THE TEMPERATURE CONTROL OPERATION

- Start the vehicle and allow it to reach normal operating temperature.
- Make sure the A/C indicator is off. Press the button once if it is on.
- Select register mode.
- Change the temperature setting from the coldest to the warmest.

Does the temperature vary between significantly warmer than the ambient air temperature to ambient air temperature or cooler?

Yes	GO to C7
No	If the temperature does not get significantly warmer, GO to Pinpoint Test F If the temperature does not change significantly, GO to Pinpoint Test J

C7 VERIFY THE A/C (AIR CONDITIONING) COMPRESSOR CLUTCH DOES NOT ENGAGE WITH A/C (AIR CONDITIONING) OFF

- Set the temperature setting halfway between the coldest and warmest.
- Visually inspect A/C compressor clutch.

Is the A/C compressor clutch engaged?

Yes	GO to Pinpoint Test I
No	GO to C8

C8 VERIFY THE A/C (AIR CONDITIONING) COMPRESSOR CLUTCH ENGAGEMENT IN THE A/C (AIR CONDITIONING) MODE

NOTE: *If the A/C indicator does not turn on for this test, install a new HVAC control module.*

- Make sure the ambient air temperature is above 6 C (43 F).
- Change the temperature setting to coldest (MAX A/C).
- Press the A/C button if the indicator is not on.

Does the A/C clutch engage and cycle on/off when the A/C indicator is on?

Yes	GO to C9
No	If the A/C clutch engages but never cycles on/off, GO to Pinpoint Test H If the A/C clutch never turns on, GO to Pinpoint Test G

C9 CHECK FOR INSUFFICIENT COOLING

- Change the temperature setting to coldest (MAX A/C).
- Press the A/C button if the indicator is not on.

Does the A/C compressor clutch engage and cycle on/off when the A/C indicator is on?

Yes	The system is operating correctly.
No	REFER to: Refrigerant System Tests (412-00 Climate Control System - General Information, General Procedures).

The Air Inlet Door Is Inoperative

Refer to Wiring Diagrams Cell 54 for schematic and connector information.

Normal Operation and Fault Conditions

REFER to: Climate Control System - Vehicles With: Electronic Manual Temperature Control (EMTC) - System Operation and Component Description (412-00 Climate Control System - General Information, Description and Operation).

Possible Sources

- Wiring, terminals or connectors
- Air inlet blend door actuator
- Air inlet blend door binding or stuck
- HVAC control module

PINPOINT TEST D : THE AIR INLET DOOR IS INOPERATIVE

NOTICE: Use the correct probe adapter(s) from the Flex Probe Kit when taking measurements. Failure to use the correct probe adapter(s) may damage the connector.

NOTE: *Access to the air inlet blend door actuator connector in the is difficult. Before disconnecting the air inlet blend door actuator connector, visually inspect the actuator and harness for obvious damage. If no damage is evident, proceed with the test.*

D1 CHECK THE AIR INLET MODE DOOR ACTUATOR CIRCUITS FOR A SHORT TO VOLTAGE

- Ignition OFF.
- Disconnect HVAC control module C2357A .
- Disconnect Air Inlet Mode Door Actuator C289 .
- Ignition ON.
- Measure:

Positive Lead	Measurement / Action	Negative Lead
C2357A-19	V	—
C2357A-18	V	—

Is any voltage present?

Yes	REPAIR the circuit in question.
No	GO to D2

D2 CHECK THE AIR INLET MODE DOOR ACTUATOR CIRCUITS FOR A SHORT TO GROUND

- Ignition OFF.
- Measure:

Positive Lead	Measurement / Action	Negative Lead
C2357A-19	Ω	—
C2357A-18	Ω	—

Are the resistances greater than 10,000 ohms?

Yes	GO to D3
No	REPAIR the circuit in question.

D3 CHECK THE AIR INLET MODE DOOR ACTUATOR CIRCUITS FOR AN OPEN

- Measure:

Positive Lead	Measurement / Action	Negative Lead
C2357A-19	Ω	C289-6
C2357A-18	Ω	C289-5

Are the resistances less than 3 ohms?

Yes	GO to D4
No	REPAIR the circuit.

D4 CHECK THE AIR INLET MODE DOOR ACTUATOR CIRCUITS FOR A SHORT TOGETHER

- Ignition OFF.
- Measure:

Positive Lead	Measurement / Action	Negative Lead
C2357A-19	Ω	C2357A-18

Is the resistance greater than 10,000 ohms?

Yes	INSTALL a new air inlet door actuator. REFER to: Air Inlet Door Actuator - Vehicles With: Dual Automatic Temperature Control (DATC) (412-00 Climate Control System - General Information, Removal and Installation).
No	REPAIR the circuits for a short together.

D5 CHECK FOR CORRECT HVAC (HEATING, VENTILATION AND AIR CONDITIONING) CONTROL MODULE OPERATION

- Ignition OFF.
- Disconnect and inspect all the HVAC control module connectors.
- Repair:
  - corrosion (install new connector or terminals – clean module pins)
  - damaged or bent pins – install new terminals/pins
  - pushed-out pins – install new pins as necessary
- Reconnect the HVAC control module connectors. Make sure they seat and latch correctly.
- Operate the system and determine if the concern is still present.

Is the concern still present?

Yes	CHECK OASIS for any applicable Technical Service Bulletins (TSBs). If a TSB exists for this concern, DISCONTINUE this test and FOLLOW TSB instructions. If no Technical Service Bulletins (TSBs) address this concern, INSTALL a new HVAC control module. REFER to: Heating, Ventilation and Air Conditioning (HVAC) Control Module (412-00 Climate Control System - General Information, Removal and Installation).
No	The system is operating correctly at this time. The concern may have been caused by module connections. Address the root cause of any connector or pin issues.

Incorrect or Erratic Direction of Airflow From Outlets

Refer to Wiring Diagrams Cell 54 for schematic and connector information.

Normal Operation and Fault Conditions

REFER to: Climate Control System - Vehicles With: Electronic Manual Temperature Control (EMTC) - System Operation and Component Description (412-00 Climate Control System - General Information, Description and Operation).

During an actuator calibration cycle, the HVAC control module drives the defrost/register/footwell blend door until the door reaches both internal stops in the HVAC case. If the defrost/register/footwell blend door is temporarily obstructed or binding during a calibration cycle, the HVAC control module can interpret this as the actual end of travel for the door. When this condition occurs and the HVAC control module commands the actuator to its end of travel, the airflow may not be from the expected outlets.

Possible Sources

- Wiring, terminals or connectors
- Defrost/register/footwell blend door actuator
- Defrost/register/footwell blend door binding or stuck
- HVAC control module

PINPOINT TEST E : INCORRECT OR ERRATIC DIRECTION OF AIRFLOW FROM OUTLETS

NOTICE: Use the correct probe adapter(s) from the Flex Probe Kit when taking measurements. Failure to use the correct probe adapter(s) may damage the connector.

E1 CHECK THE HVAC (HEATING, VENTILATION AND AIR CONDITIONING) CONTROL MODULE POWER CIRCUIT

- Ignition OFF.
- Disconnect HVAC C2357A .
- Ignition ON.
- Measure:

Positive Lead	Measurement / Action	Negative Lead
C2357A-14		—

Is the voltage greater than 11 volts?

Yes	GO to E2
No	VERIFY the BCM fuse 71 (10A) is OK. If OK, REPAIR the circuit. If not OK, REFER to the Wiring

	Diagrams manual to identify the possible causes of the circuit short.

E2 CHECK THE HVAC (HEATING, VENTILATION AND AIR CONDITIONING) CONTROL MODULE GROUND CIRCUITS

- Ignition OFF.
- Measure:

Positive Lead	Measurement / Action	Negative Lead
C2357A-4	Ω	—
C2357A-17	Ω	—

Are the resistances less than 3 ohms?

Yes	GO to E3
No	REPAIR the circuit in question.

E3 CHECK THE DEFROST/REGISTER/FOOTWELL MODE DOOR ACTUATOR CIRCUITS FOR A SHORT TO VOLTAGE

- Ignition OFF.
- Disconnect Defrost/Register/Footwell Mode Door Actuator C2448 .
- Ignition ON.
- Measure:

Positive Lead	Measurement / Action	Negative Lead
C2357A-7	V	—
C2357A-3	V	—
C2357A-8	V	—
C2357A-9	V	—
C2357A-10	V	—

Is any voltage present?

Yes	REPAIR the circuit in question.
No	GO to E4

E4 CHECK THE DEFROST/REGISTER/FOOTWELL MODE DOOR ACTUATOR CIRCUITS FOR A SHORT TO GROUND

- Ignition OFF.
- Measure:

Positive Lead	Measurement / Action	Negative Lead
C2357A-7	Ω	—
C2357A-3	Ω	—
C2357A-8	Ω	—
C2357A-9	Ω	—
C2357A-10	Ω	—

Are the resistances greater than 10,000 ohms?

Yes	GO to E5
No	REPAIR the circuit in question.

E5 CHECK THE DEFROST/REGISTER/FOOTWELL MODE DOOR ACTUATOR CIRCUITS FOR AN OPEN

- Measure:

Positive Lead	Measurement / Action	Negative Lead
C2357A-7	Ω	C2448-1
C2357A-3	Ω	C2448-2
C2357A-8	Ω	C2448-3
C2357A-9	Ω	C2448-4
C2357A-10	Ω	C2448-6

Are the resistances less than 3 ohms?

Yes	GO to E6
No	REPAIR the circuit in question.

E6 CHECK THE DEFROST/REGISTER/FOOTWELL MODE DOOR ACTUATOR CIRCUITS FOR BEING SHORTED TOGETHER

- Measure:

Positive Lead	Measurement / Action	Negative Lead
C2448-1	Ω	C2448-2
C2448-1	Ω	C2448-3
C2448-1	Ω	C2448-4
C2448-1	Ω	C2448-6
C2448-2	Ω	C2448-3
C2448-2	Ω	C2448-4

C2448-2	Ω	C2448-6
C2448-3	Ω	C2448-4
C2448-3	Ω	C2448-6
C2448-4	Ω	C2448-6

Are the resistances greater than 10,000 ohms?

Yes	GO to E7
No	REPAIR the circuit in question.

E7 CHECK THE DEFROST/REGISTER/FOOTWELL MODE DOOR ACTUATOR POWER CIRCUIT FOR VOLTAGE

- Connect HVAC control module C2357A .
- Ignition ON.
- Measure:

Positive Lead	Measurement / Action	Negative Lead
C2448-2	V	—

Is any voltage present?

Yes	INSTALL a new defrost/register/footwell blend door actuator, REFER to: Air Distribution Door Actuator - Vehicles With: Electronic Manual Temperature Control (EMTC) (412-00 Climate Control System - General Information, Removal and Installation). TEST the system for normal operation. If the concern is still present, GO to E8
No	GO to E8

E8 CHECK FOR CORRECT HVAC (HEATING, VENTILATION AND AIR CONDITIONING) CONTROL MODULE OPERATION

- Ignition OFF.
- Disconnect and inspect all the HVAC control module connectors.
- Repair:
  - corrosion (install new connector or terminals – clean module pins)
  - damaged or bent pins – install new terminals/pins
  - pushed-out pins – install new pins as necessary
- Reconnect the HVAC control module connectors. Make sure they seat and latch correctly.
- Operate the system and determine if the concern is still present.

Is the concern still present?

Yes	CHECK OASIS for any applicable Technical Service Bulletins (TSBs). If a TSB exists for this concern, DISCONTINUE this test and FOLLOW TSB instructions. If no Technical Service Bulletins (TSBs) address this concern, INSTALL a new HVAC control module. REFER to: Heating, Ventilation and Air Conditioning (HVAC) Control Module (412-00 Climate Control System - General Information, Removal and Installation).

No	The system is operating correctly at this time. The concern may have been caused by module connections. Address the root cause of any connector or pin issues.

Insufficient, Erratic or No Heat

Normal Operation and Fault Conditions

When the engine is at operating temperature hot coolant flows from the engine through the heater core and back to the engine. Correct coolant temperatures are critical for good heater performance.

Visual Inspection and Diagnostic Pre-checks

- Inspect for low engine coolant level.

Possible Sources

- Low engine coolant level
- Plugged or partially plugged heater core
- Temperature blend door binding or stuck
- Temperature blend door actuator

PINPOINT TEST F : INSUFFICIENT, ERRATIC OR NO HEAT

F1 CHECK FOR CORRECT ENGINE COOLANT LEVEL

- Ignition OFF.
- Check the engine coolant level.

Is the engine coolant at the correct level as indicated on the engine coolant recovery reservoir?

Yes	GO to F2
No	For 2.0L Duratec-HE REFER to: Engine Cooling (303-03A Engine Cooling - 2.0L Duratec-HE (125kW/170PS) - MI4, Diagnosis and Testing). For 2.0L Ecoboost REFER to: Engine Cooling (303-03B Engine Cooling - 2.0L EcoBoost (184kW/250PS) - MI4, Diagnosis and Testing).

F2 CHECK FOR COOLANT FLOW TO THE HEATER CORE

- Run the engine until it reaches normal operating temperature. Select the footwell position on the control assembly. Set the temperature control to full warm and the blower to the lowest setting.
- Using a suitable temperature measuring device, measure the heater core inlet hose temperature.

Is the heater core inlet hose temperature above 65.6 C (150 F)?

Yes	GO to F3
No	Diagnose the engine does not reach normal operating temperature. For 2.0L Duratec-HE REFER to: Engine Cooling (303-03A Engine Cooling - 2.0L Duratec-HE (125kW/170PS) - MI4, Diagnosis and Testing). For 2.0L Ecoboost REFER to: Engine Cooling (303-03B Engine Cooling - 2.0L EcoBoost (184kW/250PS) - MI4, Diagnosis and Testing).

F3 CHECK FOR A PLUGGED OR RESTRICTED HEATER CORE

- Using a suitable temperature measuring device, measure the heater core outlet hose temperature.

Is the heater core outlet hose temperature similar to the inlet hose temperature (within approximately 6 C (42.8 F) – 17 C (62.6 F)?

Yes	DIAGNOSE for a blend door actuator. GO to Pinpoint Test J
No	INSTALL a new heater core. REFER to: Heater Core (412-00 Climate Control System - General Information, Removal and Installation).

The Air Conditioning (AC) Is Inoperative

Refer to Wiring Diagrams Cell 54 for schematic and connector information.

Normal Operation and Fault Conditions

REFER to: Climate Control System - Vehicles With: Electronic Manual Temperature Control (EMTC) - System Operation and Component Description (412-00 Climate Control System - General Information, Description and Operation).

Possible Sources

- Fuse
- Wiring, terminals or connectors
- A/C system discharged/low charge
- A/C clutch relay
- A/C compressor clutch air gap
- A/C pressure transducer
- Evaporator temperature sensor
- A/C compressor clutch field coil
- A/C compressor
- HVAC control module
- BCM
- PCM

Visual Inspection and Diagnostic Pre-checks

- Inspect BJB fuse 27 (15A).
- Inspect the A/C clutch relay.

PINPOINT TEST G : THE AIR CONDITIONING (AC) IS INOPERATIVE

NOTICE: Use the correct probe adapter(s) from the Flex Probe Kit when taking measurements. Failure to use the correct probe adapter(s) may damage the connector.

G1 CHECK THE A/C SYSTEM PRESSURE

- Ignition OFF.
- With a manifold gauge set connected, check the A/C system pressure.

Is the A/C system pressure above 290 kPa (42 psi)?

Yes	GO to G2
No	CHECK the A/C system for leaks. Refer to Evaporator or Condenser On-Vehicle Leak Test or Air Conditioning (AC) Compressor External Leak Test in this section. RECHARGE the A/C system.

	REFER to: Air Conditioning (A/C) System Recovery, Evacuation and Charging (412-00 Climate Control System - General Information, General Procedures).

G2 CHECK THE A/C (AIR CONDITIONING) PRESSURE SENSOR (ACP_PRESS) PID

- Ignition ON.
- Using a scan tool, view PCM PIDs.
- With a manifold gauge set connected, compare the pressure readings of the manifold gauge set and the ACP_PRESS PID.

Are the pressure values of the manifold gauge set and the PID similar?

Yes	GO to G3
No	INSTALL a new A/C pressure transducer. REFER to: Air Conditioning (A/C) Pressure Transducer (412-00 Climate Control System - General Information, Removal and Installation).

G3 COMPARE THE EVAPORATOR TEMPERATURE SENSOR RESISTANCE TO THE POWERTRAIN CONTROL MODULE (PCM) AMBIENT AIR TEMPERATURE (AAT) PID

- Ignition OFF.
- Allow the vehicle exterior and interior to stabilize to the outside ambient temperature.
- Disconnect Evaporator Temperature Sensor C296 .
- Measure:

Positive Lead	Measurement / Action	Negative Lead
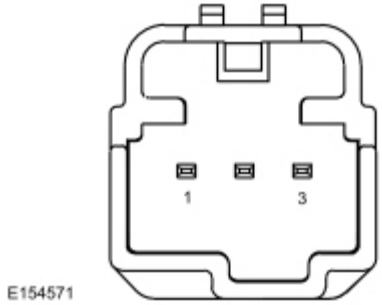 pin 1 - (component side)	Ω	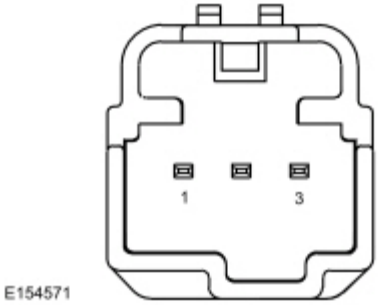 pin 3 - (Component Side)

- Compare the resistance values to the table below:

Ambient Temperature °F (°C)	Resistance
-4.0°F (-20°C)	263,111 — 290,807 ohms
32.0°F (0°C)	91,058 — 100,644 ohms
68.0°F (20°C)	35,473 — 39,207 ohms
77.0°F (25°C)	28,500 — 31,500 ohms
103.9°F (40°C)	15,307 — 16,919 ohms
139.9°F (60°C)	7,171 — 7,925 ohms

- Ignition ON.
- Using a scan tool, view PCM PIDs.
- Monitor the AAT PID.

Are the temperature values similar?

Yes	GO to G4
No	INSTALL a new evaporator temperature sensor. REFER to: Evaporator Temperature Sensor (412-00 Climate Control System - General Information, Removal and Installation).

G4 CHECK THE AIR CONDITIONING REQUEST SIGNAL (AC_REQ) PID WITH THE A/C (AIR CONDITIONING) ON

- Start the engine.
- Using a scan tool, view PCM PIDs.
- Monitor the AC_REQ PID.
- Select panel, press the A/C button (indicator on) on the HVAC controls.

Does the PID read ON?

Yes	GO to G7
No	GO to G5

G5 CHECK THE VOLTAGE ON THE AIR CONDITIONING REQUEST CIRCUIT

- Ignition OFF.
- Disconnect HVAC control module C2357A .
- Ignition ON.
- Measure:

Positive Lead	Measurement / Action	Negative Lead
C2357A-5	V	—

Is the voltage between 4.7 and 5.1 volts?

Yes	GO to G14
No	GO to G6

G6 CHECK THE AIR CONDITIONING REQUEST CIRCUIT FOR AN OPEN

- Ignition OFF.
- Disconnect HVAC control module C2357A .
- Disconnect BCM C2280C .
- Measure:

Positive Lead	Measurement / Action	Negative Lead
	Ω	

C2357A-5		C2280C-10

Is the resistance less than 3 ohms?

Yes	GO to G13
No	REPAIR the circuit.

G7 CHECK THE AIR CONDITIONING COMPRESSOR COMMANDED STATE (ACC_CMD) PID WITH THE A/C (AIR CONDITIONING) ON

- Using a scan tool, view PCM PIDs.
- Monitor the ACC_CMD PID.

Does the PID read ON?

Yes	GO to G8
No	GO to G15

G8 CHECK THE DC/ACA/C (AIR CONDITIONING) CLUTCH RELAY VOLTAGE SUPPLY CIRCUIT FOR AN OPEN

- Ignition OFF.
- Disconnect A/C clutch relay.
- Ignition ON.
- Measure:

Positive Lead	Measurement / Action	Negative Lead
Pin 3	V	—

Is the voltage greater than 11 volts?

Yes	GO to G9
No	VERIFY BJB fuse 27 (15A) is OK. If OK, REPAIR the circuit.

G9 CHECK THE A/C (AIR CONDITIONING) COMPRESSOR CLUTCH FIELD COIL VOLTAGE SUPPLY CIRCUIT FOR AN OPEN

Start the engine.

- Connect a fused jumper wire:

Positive Lead	Measurement / Action	Negative Lead
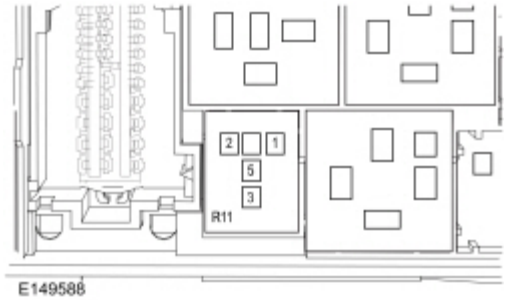 Pin 3	—	Pin 5

Does the A/C compressor clutch engage?

Yes	INSTALL a new A/C clutch relay.
No	LEAVE jumper wire connected. GO to G10

G10 CHECK THE A/C (AIR CONDITIONING) COMPRESSOR CLUTCH FIELD COIL VOLTAGE SUPPLY CIRCUIT FOR AN OPEN

- Ignition OFF.
- Disconnect A/C Compressor Clutch Field Coil C100 .
- Measure:

Positive Lead	Measurement / Action	Negative Lead
C100-1	▲▽■	—

Is the voltage greater than 11 volts?

Yes	LEAVE jumper wire connected. GO to G11
No	REPAIR the circuit.

G11 CHECK THE A/C (AIR CONDITIONING) COMPRESSOR CLUTCH FIELD COIL GROUND CIRCUIT FOR AN OPEN

- Measure:

Positive Lead	Measurement / Action	Negative Lead
C100-1	▲▽■	C100-2

Is the voltage greater than 11 volts?

Yes	GO to G12
No	REPAIR the circuit.

G12 CHECK THE A/C (AIR CONDITIONING) COMPRESSOR CLUTCH AIR GAP

- Measure the A/C compressor clutch air gap at 3 equally spaced locations between the clutch hub and the A/C compressor clutch pulley.

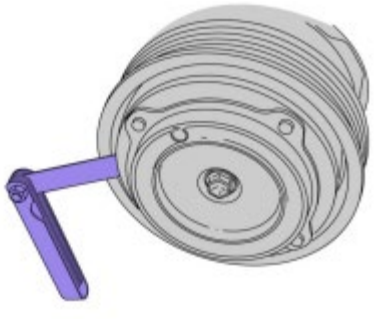

Is the A/C compressor clutch air gap greater than 0.6 mm (0.0236 in)?

Yes	ADJUST the A/C compressor clutch gap. REFER to: Air Conditioning (A/C) Clutch Air Gap Adjustment (412-00 Climate Control System - General Information, General Procedures).
No	INSTALL a new A/C compressor clutch assembly. REFER to: Air Conditioning (A/C) Clutch and Air Conditioning (A/C) Clutch Field Coil (412-00 Climate Control System - General Information, Removal and Installation).

G13 CHECK FOR CORRECT BCM (BODY CONTROL MODULE) OPERATION

- Ignition OFF.
- Disconnect and inspect all the BCM connectors.
- Repair:
  - corrosion (install new connector or terminals – clean module pins)
  - damaged or bent pins – install new terminals/pins
  - pushed-out pins – install new pins as necessary
- Reconnect the BCM connectors. Make sure they seat and latch correctly.
- Operate the system and determine if the concern is still present.

Is the concern still present?

Yes	CHECK OASIS for any applicable Technical Service Bulletins (TSBs). If a TSB exists for this concern, DISCONTINUE this test and FOLLOW TSB instructions. If no Technical Service Bulletins (TSBs) address this concern, INSTALL a new BCM . REFER to: Body Control Module (BCM) (419-10 Multifunction Electronic Modules, Removal and Installation).
No	The system is operating correctly at this time. The concern may have been caused by module connections. Address the root cause of any connector or pin issues.

G14 CHECK FOR CORRECT HVAC (HEATING, VENTILATION AND AIR CONDITIONING) CONTROL MODULE OPERATION

- Ignition OFF.
- Disconnect and inspect all the HVAC control module connectors.
- Repair:
  - corrosion (install new connector or terminals – clean module pins)
  - damaged or bent pins – install new terminals/pins
  - pushed-out pins – install new pins as necessary
- Reconnect the HVAC control module connectors. Make sure they seat and latch correctly.
- Operate the system and determine if the concern is still present.

Is the concern still present?

Yes	CHECK OASIS for any applicable Technical Service Bulletins (TSBs). If a TSB exists for this concern, DISCONTINUE this test and FOLLOW TSB instructions. If no Technical Service Bulletins (TSBs) address this concern, INSTALL a new HVAC control module. REFER to: Heating, Ventilation and Air Conditioning (HVAC) Control Module (412-00 Climate Control System - General Information, Removal and Installation).
No	The system is operating correctly at this time. The concern may have been caused by module connections. Address the root cause of any connector or pin issues.

G15 CHECK FOR CORRECT PCM (POWERTRAIN CONTROL MODULE) OPERATION

- Ignition OFF.
- Disconnect and inspect all the PCM connectors.
- Repair:
  - corrosion (install new connector or terminals – clean module pins)
  - damaged or bent pins – install new terminals/pins
  - pushed-out pins – install new pins as necessary
- Reconnect the PCM connectors. Make sure they seat and latch correctly.
- Operate the system and determine if the concern is still present.

Is the concern still present?

Yes	CHECK OASIS for any applicable Technical Service Bulletins (TSBs). If a TSB exists for this concern, DISCONTINUE this test and FOLLOW TSB instructions. If no Technical Service Bulletins (TSBs) address this concern, INSTALL a new PCM . For 2.0L Duratec-HE REFER to: Powertrain Control Module (PCM) (303-14A Electronic Engine Controls - 2.0L Duratec-HE (125kW/170PS) - MI4, Removal and Installation). For 2.0L Ecoboost REFER to: Powertrain Control Module (PCM) (303-14B Electronic Engine Controls - 2.0L EcoBoost (184kW/250PS) - MI4, Removal and Installation).
No	The system is operating correctly at this time. The concern may have been caused by module connections. Address the root cause of any connector or pin issues.

The Air Conditioning (AC) Is Always On

Normal Operation and Fault Conditions

REFER to: Climate Control System - Vehicles With: Electronic Manual Temperature Control (EMTC) - System Operation and Component Description (412-00 Climate Control System - General Information, Description and Operation).

Possible Sources

- Wiring, terminals or connectors

AC clutch relay
- AC compressor clutch air gap
- Evaporator temperature sensor
- AC pressure transducer
- BCM

Visual Inspection and Diagnostic Pre-checks

Inspect the A/C clutch relay.

PINPOINT TEST H : THE AIR CONDITIONING (AC) IS ALWAYS ON

NOTICE: Use the correct probe adapter(s) from the Flex Probe Kit when taking measurements. Failure to use the correct probe adapter(s) may damage the connector.

H1 CHECK FOR A/C (AIR CONDITIONING) CLUTCH OPERATION WITH THE A/C (AIR CONDITIONING) CLUTCH RELAY DISCONNECTED

- Disconnect A/C Clutch Relay.
- Start the engine.
- Key ON Engine Running (KOER).

Is the A/C compressor on?

Yes	GO to H2
No	INSTALL a new A/C clutch relay. TEST the system for normal operation. If the concern is still present, GO to H4

H2 CHECK THE POWER CIRCUIT TO THE A/C (AIR CONDITIONING) COMPRESSOR CLUTCH FOR A SHORT TO VOLTAGE

- Ignition OFF.
- Disconnect A/C Clutch Relay..
- Disconnect A/C Clutch Field Coil.
- Measure:

Positive Lead	Measurement / Action	Negative Lead
Pin 5	V	—

Is any voltage present?

Yes	REPAIR the circuit.
No	GO to H3

H3 CHECK THE A/C (AIR CONDITIONING) COMPRESSOR CLUTCH AIR GAP

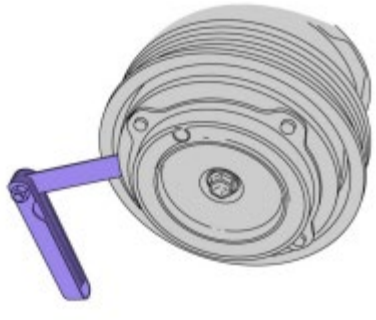

- Measure the A/C compressor clutch air gap at 3 equally spaced locations between the clutch hub and the A/C compressor clutch pulley.

Is the Air Conditioning (A/C) compressor clutch air gap greater than 0.6 mm (0.0236 in)?

Yes	ADJUST the Air Conditioning (A/C) compressor clutch gap.
No	INSTALL a new Air Conditioning (A/C) compressor clutch assembly. REFER to: Air Conditioning (A/C) Clutch and Air Conditioning (A/C) Clutch Field Coil (412-00 Climate Control System - General Information, Removal and Installation).

H4 CHECK THE A/C (AIR CONDITIONING) RELAY CONTROL CIRCUIT FOR A SHORT TO GROUND

- Ignition OFF.
- Disconnect A/C Clutch Relay.
- Disconnect PCM C175B .
- Measure:

Positive Lead	Measurement / Action	Negative Lead
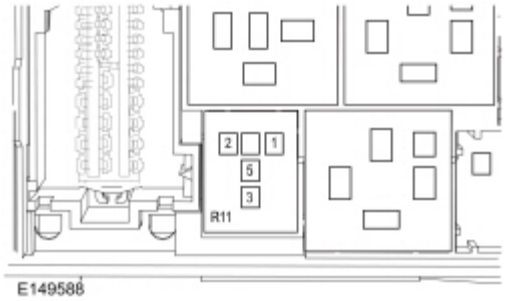 Pin 2	Ω	—

Is the resistance greater than 10,000 ohms?

Yes	GO to H5
No	REPAIR the circuit.

H5 CHECK FOR CORRECT PCM (POWERTRAIN CONTROL MODULE) OPERATION

- Ignition OFF.
- Disconnect and inspect all the PCM connectors.
- Repair:
  - corrosion (install new connector or terminals – clean module pins)
  - damaged or bent pins – install new terminals/pins
  - pushed-out pins – install new pins as necessary
- Reconnect the PCM connectors. Make sure they seat and latch correctly.
- Operate the system and determine if the concern is still present.

Is the concern still present?

Yes	CHECK OASIS for any applicable Technical Service Bulletins (TSBs). If a TSB exists for this concern, DISCONTINUE this test and FOLLOW TSB instructions. If no Technical Service Bulletins (TSBs) address this concern, INSTALL a new PCM . For 2.0L Duratec-HE REFER to: Powertrain Control Module (PCM) (303-14A Electronic Engine Controls - 2.0L Duratec-HE (125kW/170PS) - MI4, Removal and Installation). For 2.0L Ecoboost REFER to: Powertrain Control Module (PCM) (303-14B Electronic Engine Controls - 2.0L EcoBoost (184kW/250PS) - MI4, Removal and Installation).
No	The system is operating correctly at this time. The concern may have been caused by module connections. Address the root cause of any connector or pin issues.

The Air Conditioning (AC) Is Always On - AC Mode Always Commanded On

Normal Operation and Fault Conditions

REFER to: Climate Control System - Vehicles With: Electronic Manual Temperature Control (EMTC) - System Operation and Component Description (412-00 Climate Control System - General Information, Description and Operation).

DTC Fault Trigger Conditions

DTC	Description	Fault Trigger Conditions
P1464:00	A/C Demand Out Of Self Test Range: No Sub Type Information	This DTC sets when the PCM senses an A/C request during a PCM self-test.

Body Control Module (BCM) DTC Fault Trigger Conditions

DTC	Description	Fault Trigger Conditions
B101E:23	Air Conditioning Mode Switch General Signal Failures Signal: Stuck Low	This on demand DTC sets when the BCM senses a path to ground on the A/C control circuit for when a self test is being performed.

Possible Sources

- Wiring, terminals or connectors

- HVAC control module
- BCM

PINPOINT TEST I : THE AIR CONDITIONING (AC) IS ALWAYS ON - AC MODE ALWAYS COMMANDED ON

NOTICE: Use the correct probe adapter(s) from the Flex Probe Kit when taking measurements. Failure to use the correct probe adapter(s) may damage the connector.

I1 PERFORM BCM (BODY CONTROL MODULE) SELF-TEST

- Ignition ON.
- Using a scan tool, perform BCM self-test.

Is DTC B101E:23 received?

Yes	GO to I2
No	GO to I4

I2 PERFORM BCM (BODY CONTROL MODULE) SELF-TEST WITH THE HVAC (HEATING, VENTILATION AND AIR CONDITIONING) CONTROL MODULE DISCONNECTED

- Ignition OFF.
- Disconnect HVAC control module C2357A .
- Ignition ON.
- Using a scan tool, perform BCM self-test.

Is DTC B101E:23 received?

Yes	GO to I3
No	GO to I7

I3 CHECK THE A/C (AIR CONDITIONING) REQUEST CIRCUIT BETWEEN THE HVAC (HEATING, VENTILATION AND AIR CONDITIONING) CONTROL MODULE AND THE BCM (BODY CONTROL MODULE) FOR A SHORT TO GROUND

- Ignition OFF.
- Disconnect BCM C2280C .
- Measure:

Positive Lead	Measurement / Action	Negative Lead
C2280C-10	Ω	—

Is the resistance greater than 10,000 ohms?

Yes	GO to I8
No	REPAIR the circuit.

I4 CHECK THE AIR CONDITIONING REQUEST SIGNAL (AC_REQ) PID

- Using a scan tool, view PCM PIDs.
- Monitor the AC_REQ PID.

- Select vent on the HVAC control module and toggle the A/C on and off.

Does the PID correspond with the switch position?

Yes	The A/C request is being received by the PCM .
No	GO to I5

I5 CHECK THE AIR CONDITIONING REQUEST SIGNAL (AC_REQ) PID WITH THE HVAC (HEATING, VENTILATION AND AIR CONDITIONING) CONTROL MODULE DISCONNECTED

- Ignition OFF.
- Disconnect HVAC control module C2357A .
- **NOTE:** *Do not connect the jumper to ground until step 7.*

  Connect a fused jumper wire:

Positive Lead	Measurement / Action	Negative Lead
C2357A-5		—

- Ignition ON.
- Using a scan tool, view PCM PIDs.
- Monitor the AC_REQ PID.
- Momentarily touch the jumper to ground.

Does the PID switch states when the jumper touched ground?

Yes	GO to I7
No	GO to I6

I6 CHECK THE A/C (AIR CONDITIONING) REQUEST CIRCUIT BETWEEN THE HVAC (HEATING, VENTILATION AND AIR CONDITIONING) CONTROL MODULE AND THE BCM (BODY CONTROL MODULE) FOR AN OPEN

- Ignition OFF.
- Disconnect BCM C2280C .
- Measure:

Positive Lead	Measurement / Action	Negative Lead
C2280C-10	Ω	C2357A-5

Is the resistance greater than 10,000 ohms?

Yes	GO to I8
No	REPAIR the circuit.

I7 CHECK FOR CORRECT HVAC (HEATING, VENTILATION AND AIR CONDITIONING) CONTROL MODULE OPERATION

- Ignition OFF.
- Disconnect and inspect all the HVAC control module connectors.
- Repair:
  - corrosion (install new connector or terminals – clean module pins)
  - damaged or bent pins – (install new terminals/pins
  - pushed-out pins – (install new pins as necessary
- Reconnect the HVAC control module connectors. Make sure they seat and latch correctly.
- Operate the system and determine if the concern is still present.

Is the concern still present?

Yes	CHECK OASIS for any applicable Technical Service Bulletins (TSBs). If a TSB exists for this concern, DISCONTINUE this test and FOLLOW TSB instructions. If no Technical Service Bulletins (TSBs) address this concern, INSTALL a new HVAC control module. REFER to: Heating, Ventilation and Air Conditioning (HVAC) Control Module (412-00 Climate Control System - General Information, Removal and Installation).
No	The system is operating correctly at this time. The concern may have been caused by module connections. Address the root cause of any connector or pin issues.

I8 CHECK FOR CORRECT BCM (BODY CONTROL MODULE) OPERATION

- Ignition OFF.
- Disconnect and inspect the BCM connectors.
- Repair:
  - corrosion (install new connector or terminals – clean module pins)
  - damaged or bent pins – (install new terminals/pins
  - pushed-out pins – (install new pins as necessary
- Reconnect the BCM connectors. Make sure they seat and latch correctly.
- Operate the system and determine if the concern is still present.

Is the concern still present?

Yes	CHECK OASIS for any applicable Technical Service Bulletins (TSBs). If a TSB exists for this concern, DISCONTINUE this test and FOLLOW TSB instructions. If no Technical Service Bulletins (TSBs) address this concern, INSTALL a new BCM . REFER to: Body Control Module (BCM) (419-10 Multifunction Electronic Modules, Removal and Installation).
No	The system is operating correctly at this time. The concern may have been caused by module connections. Address the root cause of any connector or pin issues.

The Temperature Control is inoperative or Does Not Operate Correctly

Refer to Wiring Diagrams Cell 54 for schematic and connector information.

Normal Operation and Fault Conditions

REFER to: Climate Control System - Vehicles With: Electronic Manual Temperature Control (EMTC) - System Operation and Component Description (412-00 Climate Control System - General Information, Description and Operation).

During an actuator calibration cycle, the HVAC control module drives the temperature blend door until the door reaches both internal stops in the HVAC case. If the temperature blend door is temporarily obstructed or binding during a calibration cycle, the

HVAC control module can interpret this as the actual end of travel for the door. When this condition occurs and the HVAC control module commands the actuator to its end of travel, the airflow may not be the expected temperature.

Possible Sources

- Wiring, terminals or connectors
- Temperature blend door is binding or stuck
- Temperature blend door actuator
- HVAC control module

PINPOINT TEST J : THE TEMPERATURE CONTROL IS INOPERATIVE OR DOES NOT OPERATE CORRECTLY

NOTICE: Use the correct probe adapter(s) from the Flex Probe Kit when taking measurements. Failure to use the correct probe adapter(s) may damage the connector.

J1 CHECK THE TEMPERATURE BLEND DOOR ACTUATOR CIRCUITS FOR A SHORT TO VOLTAGE

- Ignition OFF.
- Disconnect HVAC C2357A .
- Disconnect Temperature Blend Door Actuator C2381 .
- Ignition ON.
- Measure:

Positive Lead	Measurement / Action	Negative Lead
C2357A-23	V	—
C2357A-2	V	—
C2357A-22	V	—
C2357A-21	V	—
C2357A-20	V	—

Is any voltage present?

Yes	REPAIR the circuit in question.
No	GO to J2

J2 CHECK THE TEMPERATURE BLEND DOOR ACTUATOR CIRCUITS FOR A SHORT TO GROUND

- Ignition OFF.
- Measure:

Positive Lead	Measurement / Action	Negative Lead
C2357A-23	Ω	—
C2357A-2	Ω	—
C2357A-22	Ω	—
C2357A-21	Ω	—
C2357A-20	Ω	—

Are the resistances greater than 10,000 ohms?

Yes	GO to J3
No	REPAIR the circuit in question.

J3 CHECK THE TEMPERATURE BLEND DOOR ACTUATOR CIRCUITS FOR AN OPEN

- Measure:

Positive Lead	Measurement / Action	Negative Lead
C2357A-23	Ω	C2381-1
C2357A-2	Ω	C2381-2
C2357A-22	Ω	C2381-3
C2357A-21	Ω	C2381-4
C2357A-20	Ω	C2381-6

Are the resistances less than 3 ohms?

Yes	GO to J4
No	REPAIR the circuit in question.

J4 CHECK THE TEMPERATURE BLEND DOOR ACTUATOR CIRCUITS FOR BEING SHORTED TOGETHER

- Measure:

Positive Lead	Measurement / Action	Negative Lead
C2381-1	Ω	C2381-2
C2381-1	Ω	C2381-3
C2381-1	Ω	C2381-4
C2381-1	Ω	C2381-6
C2381-2	Ω	C2381-3
C2381-2	Ω	C2381-4
C2381-2	Ω	C2381-6
C2381-3	Ω	C2381-4
C2381-3	Ω	C2381-6
C2381-4	Ω	C2381-6

Are the resistances greater than 10,000 ohms?

Yes	GO to J5

No	REPAIR the circuit in question.

J5 CHECK THE TEMPERATURE BLEND DOOR ACTUATOR POWER CIRCUIT FOR VOLTAGE

- Connect HVAC control module C2357A .
- Ignition ON.
- Measure:

Positive Lead	Measurement / Action	Negative Lead
C2381-2		—

Is any voltage present?

Yes	INSTALL a new temperature blend door actuator. REFER to: Temperature Door Actuator - Vehicles With: Electronic Manual Temperature Control (EMTC) (412-00 Climate Control System - General Information, Removal and Installation). If the concern is still present, GO to J6
No	GO to J6

J6 CHECK FOR CORRECT HVAC (HEATING, VENTILATION AND AIR CONDITIONING) CONTROL MODULE OPERATION

- Ignition OFF.
- Disconnect and inspect all the HVAC control module connectors.
- Repair:
  - corrosion (install new connector or terminals – clean module pins)
  - damaged or bent pins – install new terminals/pins
  - pushed-out pins – install new pins as necessary
- Reconnect the HVAC control module connectors. Make sure they seat and latch correctly.
- Operate the system and determine if the concern is still present.

Is the concern still present?

Yes	CHECK OASIS for any applicable Technical Service Bulletins (TSBs). If a TSB exists for this concern, DISCONTINUE this test and FOLLOW TSB instructions. If no Technical Service Bulletins (TSBs) address this concern, INSTALL a new HVAC control module. REFER to: Heating, Ventilation and Air Conditioning (HVAC) Control Module (412-00 Climate Control System - General Information, Removal and Installation).
No	The system is operating correctly at this time. The concern may have been caused by module connections. Address the root cause of any connector or pin issues.

The Blower Motor Is Inoperative

Refer to Wiring Diagrams Cell 54 for schematic and connector information.

Normal Operation and Fault Conditions

Voltage is supplied to the relay coil from the BJB fuse 23 (5A) and relay switch contacts from the BJB fuse 10 (40A).

DTC Fault Trigger Conditions

DTC	Description	Fault Trigger Conditions
B10AF:13	Blower Fan Relay General Electrical Failures Circuit: Open	This Continuous Memory Diagnostic Trouble Code (CMDTC) sets when the BCM senses no voltage on the relay coil ground circuit when the module is grounding the circuit.
B10AF:19	Blower Fan Relay General Electrical Failures Circuit: Current Above Threshold	This Continuous Memory Diagnostic Trouble Code (CMDTC) sets when the BCM senses excessive voltage on the relay coil ground circuit when the module is grounding the circuit.

Possible Sources

- Fuse
- Wiring, terminals or connectors
- Blower motor relay
- Blower motor
- BCM
- HVAC control module

Visual Inspection and Diagnostic Pre-checks

- Inspect BJB fuses 10 (40A) and 23 (5A).

PINPOINT TEST K : THE BLOWER MOTOR IS INOPERATIVE

NOTICE: Use the correct probe adapter(s) from the Flex Probe Kit when taking measurements. Failure to use the correct probe adapter(s) may damage the connector.

K1 CHECK THE BCM (BODY CONTROL MODULE) FOR DIAGNOSTIC TROUBLE CODES (DTCS)

- Ignition ON.
- Using a daignostic scan tool, perform BCM self-test.

Is DTC B10AF:13 or B10AF:19 received?

Yes	For DTC B10AF:13, GO to K2 For DTC B10AF:19, GO to K5
No	GO to K6

K2 CHECK THE BLOWER MOTOR RELAY

- Swap the blower motor relay with a known good relay.
- Attempt to operate the blower motor.

Does the motor operate?

Yes	INSTALL a new blower motor relay.
No	GO to K3

K3 CHECK VOLTAGE TO THE BCM (BODY CONTROL MODULE) FROM THE BLOWER MOTOR RELAY COIL CIRCUIT

- Ignition OFF.
- Disconnect BCM C2280A .
- Measure:

Positive Lead	Measurement / Action	Negative Lead
C2280A-28	V	—

Is the voltage greater than 11 volts?

Yes	GO to K12
No	GO to K4

K4 CHECK THE BLOWER MOTOR RELAY CONTROL CIRCUIT FOR AN OPEN

NOTE: *Early build vehicles may be equipped with a diode in the blower motor relay coil ground circuit. Make sure the multimeter leads are correctly attached during testing or a false reading will occur causing misdiagnosis of the circuit.*

- Disconnect Blower Motor Relay.
- Measure:

Positive Lead	Measurement / Action	Negative Lead
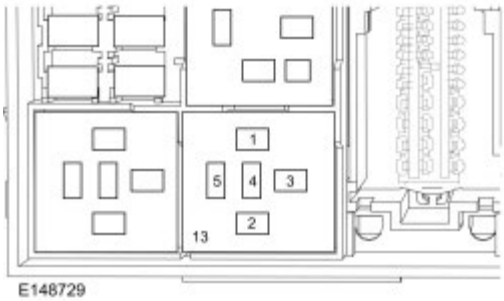 Pin 2	Ω	C2280A-28

Is the resistance less than 3 ohms?

Yes	VERIFY BJB fuses 23 (5A) is OK. If OK, REPAIR the circuit. If not OK, REFER to the Wiring Diagrams manual to identify the possible causes of the circuit short.
No	REPAIR the circuit.

K5 CHECK THE BLOWER MOTOR RELAY CONTROL CIRCUIT FOR A SHORT TO VOLTAGE

- Ignition OFF.
- Disconnect Blower Motor Relay.
- Disconnect BCM C2280A .

- Ignition ON.
- Measure:

Positive Lead	Measurement / Action	Negative Lead
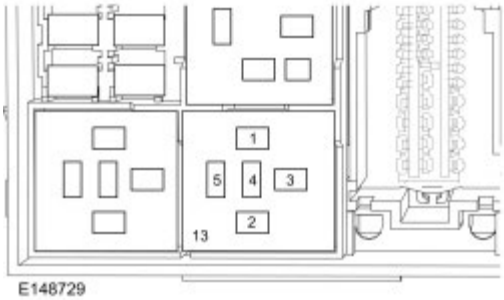 Pin 2		—

Is any voltage present?

Yes	REPAIR the circuit.
No	GO to K12

K6 CHECK THE BLOWER MOTOR RELAY

- Swap the blower motor relay with a known good relay.
- Attempt to operate the blower motor.

Does the motor operate?

Yes	INSTALL a new blower motor relay.
No	GO to K7

K7 CHECK THE RELAY SWITCH VOLTAGE

- Disconnect Blower Motor Relay.
- Measure:

Positive Lead	Measurement / Action	Negative Lead
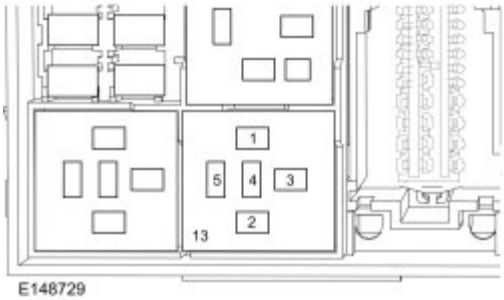 Pin 3		—

Is the voltage greater than 11 volts?

Yes	GO to K8
No	VERIFY BJB 10 (40A) is OK. If OK, REPAIR the circuit. If not OK, REFER to the Wiring Diagrams manual to identify the possible causes of the circuit short.

K8 CHECK FOR VOLTAGE AT THE BLOWER MOTOR

- Connect Blower Motor Relay.
- Disconnect Blower Motor C2004 .
- Ignition ON.
- Turn the blower switch to the "HI" position.
- Measure:

Positive Lead	Measurement / Action	Negative Lead
C2004-1	V	—

Is the voltage greater than 11 volts?

Yes	GO to K9
No	REPAIR the circuit.

K9 CHECK THE BLOWER MOTOR GROUND CIRCUIT FOR AN OPEN

- Ignition OFF.
- Measure:

Positive Lead	Measurement / Action	Negative Lead
C2004-2	Ω	—

Is the resistance less than 3 ohms?

Yes	INSTALL a new blower motor. REFER to: Blower Motor - Vehicles With: Electronic Manual Temperature Control (EMTC) (412-00 Climate Control System - General Information, Removal and Installation).
No	GO to K10

K10 CHECK THE CIRCUIT BETWEEN THE BLOWER MOTOR AND THE BLOWER MOTOR SWITCH FOR AN OPEN

- Disconnect HVAC C2357B .
- Measure:

Positive Lead	Measurement / Action	Negative Lead
C2357B-4	Ω	C2004-2

Is the resistance less than 3 ohms?

Yes	GO to K11
No	REPAIR the circuit.

K11 CHECK BLOWER MOTOR SWITCH GROUND CIRCUIT FOR AN OPEN

- Measure:

Positive Lead	Measurement / Action	Negative Lead
C2357B-5	Ω	—

Is the resistance less than 3 ohms?

Yes	GO to K13
No	REPAIR the circuit.

K12 CHECK FOR CORRECT BCM (BODY CONTROL MODULE) OPERATION

- Ignition OFF.
- Disconnect and inspect all the BCM connectors.
- Repair:
  - corrosion (install new connector or terminals – clean module pins)
  - damaged or bent pins – install new terminals/pins
  - pushed-out pins – install new pins as necessary
- Reconnect the BCM . Make sure they seat and latch correctly.
- Operate the system and determine if the concern is still present.

Is the concern still present?

Yes	CHECK OASIS for any applicable Technical Service Bulletins (TSBs). If a TSB exists for this concern, DISCONTINUE this test and FOLLOW TSB instructions. If no Technical Service Bulletins (TSBs) address this concern, INSTALL a new BCM . REFER to: Body Control Module (BCM) (419-10 Multifunction Electronic Modules, Removal and Installation).
No	The system is operating correctly at this time. The concern may have been caused by module connections. Address the root cause of any connector or pin issues.

K13 CHECK FOR CORRECT HVAC (HEATING, VENTILATION AND AIR CONDITIONING) CONTROL MODULE OPERATION

- Ignition OFF.
- Disconnect and inspect all the HVAC control module connectors.

- Repair:
  - corrosion (install new connector or terminals – clean module pins)
  - damaged or bent pins – install new terminals/pins
  - pushed-out pins – install new pins as necessary
- Reconnect the HVAC control module connectors. Make sure they seat and latch correctly.
- Operate the system and determine if the concern is still present.

Is the concern still present?

Yes	CHECK OASIS for any applicable Technical Service Bulletins (TSBs). If a TSB exists for this concern, DISCONTINUE this test and FOLLOW TSB instructions. If no Technical Service Bulletins (TSBs) address this concern, INSTALL a new HVAC control module. REFER to: Heating, Ventilation and Air Conditioning (HVAC) Control Module (412-00 Climate Control System - General Information, Removal and Installation).
No	The system is operating correctly at this time. The concern may have been caused by module connections. Address the root cause of any connector or pin issues.

The Blower Motor Does Not Operate Correctly

Refer to Wiring Diagrams Cell 54 for schematic and connector information.

Normal Operation and Fault Conditions

Voltage is supplied to the relay coil from the BCM fuse 23 (5A) and relay switch contacts from the BCM fuse 10 (40A). When the blower motor relay coil receives a ground from the BCM , the relay coil is energized and voltage is delivered to the blower motor. The HVAC control module controls the ground for the blower motor.
REFER to: Climate Control System - Vehicles With: Electronic Manual Temperature Control (EMTC) - System Operation and Component Description (412-00 Climate Control System - General Information, Description and Operation).

DTC Fault Trigger Conditions

DTC	Description	Fault Trigger Conditions
B10AF:11	Blower Fan Relay General Electrical Failures Circuit: Short to Ground	This Continuous Memory Diagnostic Trouble Code (CMDTC) sets when the BCM senses a path to ground on the blower motor control circuit.

Possible Sources

- Wiring, terminals or connectors
- Blower motor
- Blower motor resistor
- HVAC control module

PINPOINT TEST L : THE BLOWER MOTOR DOES NOT OPERATE CORRECTLY

NOTICE: Use the correct probe adapter(s) from the Flex Probe Kit when taking measurements. Failure to use the correct probe adapter(s) may damage the connector.

NOTICE: The following step uses a test light to simulate normal circuit loads. Use only the test light recommended in the Special Tools table at the beginning of this section. To avoid connector terminal damage, use the Flex Probe

Kit for the test light probe connection to the vehicle. Do not use the test light probe directly on any connector.

L1 CHECK THE BLOWER MOTOR OPERATION

- Ignition ON.
- Select all blower speed positions.

Does the blower motor operate in any position?

Yes	If the blower motor does not operate in HI setting only, GO to L2 If the blower motor does not operate in LO setting only, GO to L3 If the blower motor does not operate in MED-LO setting only, GO to L5 If the blower motor does not operate in MED-HI setting only, GO to L7 If the blower motor operates in HI setting only, GO to L9 For all other symptoms, GO to L10
No	GO to Pinpoint Test K

L2 CHECK THE CIRCUIT BETWEEN THE BLOWER MOTOR AND THE BLOWER MOTOR RESISTOR FOR AN OPEN

- Ignition OFF.
- Disconnect HVAC C2357B .
- Disconnect Blower Motor C2004 .
- Measure:

Positive Lead	Measurement / Action	Negative Lead
C2357B-4	Ω	C2004-2

Is the resistance less than 1 ohm?

Yes	GO to L11
No	REPAIR the circuit.

L3 CHECK LOW CONTROL CIRCUIT FOR AN OPEN

- Ignition OFF.
- Disconnect HVAC C2357B .
- Disconnect Blower Motor Resistor C293 .
- Measure:

Positive Lead	Measurement / Action	Negative Lead
C2357B-1	Ω	C293-2

Is the resistance less than 1 ohm?

Yes	GO to L4
No	REPAIR the circuit.

L4 CHECK BLOWER MOTOR RESISTOR FOR AN OPEN

- Measure:

Positive Lead	Measurement / Action	Negative Lead
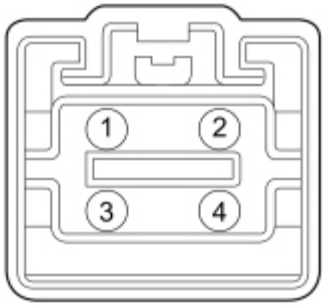 E154805 pin 4 - (component side)	Ω	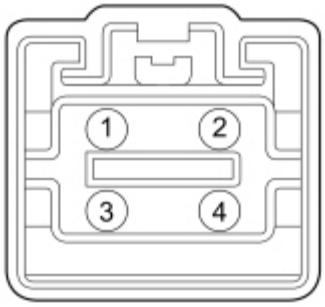 E154805 pin 2 - (component side)

Is the resistance approximately 2.5 ohms?

Yes	GO to L11
No	INSTALL a new blower motor resistor. REFER to: Blower Motor Resistor - Vehicles With: Electronic Manual Temperature Control (EMTC) (412-00 Climate Control System - General Information, Removal and Installation).

L5 CHECK THE MED-LO CONTROL CIRCUIT FOR AN OPEN

- Ignition OFF.
- Disconnect Blower Motor Resistor C293 .
- Disconnect HVAC control module C2357B .
- Measure:

Positive Lead	Measurement / Action	Negative Lead
C2357B-2	Ω	C293-1

Is the resistance less than 1 ohm?

Yes	GO to L6
No	REPAIR the circuit.

L6 CHECK BLOWER MOTOR RESISTOR AN OPEN

Measure:

Positive Lead	Measurement / Action	Negative Lead
C293-4 (Component Side)	Ω	C293-1 (Component Side)

Is the resistance approximately 1.1 ohms?

Yes	GO to L11
No	INSTALL a new blower motor resistor. REFER to: Blower Motor Resistor - Vehicles With: Electronic Manual Temperature Control (EMTC) (412-00 Climate Control System - General Information, Removal and Installation).

L7 CHECK THE MED-HI CONTROL CIRCUIT FOR AN OPEN

- Ignition OFF.
- Disconnect Blower Motor Resistor C293 .
- Disconnect HVAC C2357B .
- Measure:

Positive Lead	Measurement / Action	Negative Lead
C2357B-3	Ω	C293-3

Is the resistance less than 1 ohm?

Yes	GO to L8
No	REPAIR the circuit.

L8 CHECK BLOWER MOTOR RESISTOR FOR AN OPEN

- Measure:

Positive Lead	Measurement / Action	Negative Lead
C293-4 (Component Side)	Ω	C293-3 (Component Side)

Is the resistance approximately 0.3 ohm?

Yes	GO to L11
No	INSTALL a new blower motor resistor. REFER to: Blower Motor Resistor - Vehicles With: Electronic Manual Temperature Control (EMTC) (412-00 Climate Control System - General Information, Removal and Installation).

L9 CHECK THE CIRCUIT BETWEEN THE BLOWER MOTOR AND THE BLOWER MOTOR RESISTOR FOR AN OPEN

- Ignition OFF.
- Disconnect Blower Motor Resistor C293 .
- Disconnect Blower Motor C2004 .
- Measure:

Positive Lead	Measurement / Action	Negative Lead
C293-4	Ω	C2004-2

Is the resistance less than 1 ohm?

Yes	INSTALL a new blower motor resistor. REFER to: Blower Motor Resistor - Vehicles With: Electronic Manual Temperature Control (EMTC) (412-00 Climate Control System - General Information, Removal and Installation).
No	REPAIR the circuit.

L10 CHECK BLOWER MOTOR CONTROL CIRCUITS FOR A SHORT TO GROUND

- Ignition OFF.
- Disconnect Blower Motor Resistor C293 .
- Disconnect HVAC control module C2357B .
- Measure:

Positive Lead	Measurement / Action	Negative Lead
C293-3	Ω	—
C293-4	Ω	—

Are the resistances greater than 10,000 ohms?

Yes	GO to L11
No	REPAIR the circuit in question.

L11 CHECK FOR CORRECT HVAC (HEATING, VENTILATION AND AIR CONDITIONING) CONTROL MODULE OPERATION

- Ignition OFF.
- Disconnect and inspect all the HVAC control module connectors.
- Repair:
  - corrosion (install new connector or terminals – clean module pins)
  - damaged or bent pins – install new terminals/pins
  - pushed-out pins – install new pins as necessary
- Reconnect the HVAC control module connectors. Make sure they seat and latch correctly.
- Operate the system and determine if the concern is still present.

Is the concern still present?

Yes	CHECK OASIS for any applicable Technical Service Bulletins (TSBs). If a TSB exists for this concern, DISCONTINUE this test and FOLLOW TSB instructions. If no Technical Service Bulletins (TSBs) address this concern, INSTALL a new HVAC control module. REFER to: Heating, Ventilation and Air Conditioning (HVAC) Control Module (412-00 Climate Control System - General Information, Removal and Installation).
No	The system is operating correctly at this time. The concern may have been caused by module connections. Address the root cause of any connector or pin issues.

B101E:23

Refer to Wiring Diagrams Cell 54 for schematic and connector information.

DTC Fault Trigger Conditions

DTC	Description	Fault Trigger Conditions
B101E:23	Air Conditioning Mode Switch General Signal Failures Signal: Stuck Low	This on demand DTC sets when the BCM senses a path to ground on the A/C control circuit for when a self-test is being performed.

PINPOINT TEST M : B101E:23

NOTICE: Use the correct probe adapter(s) from the Flex Probe Kit when taking measurements. Failure to use the correct probe adapter(s) may damage the connector.

M1 CHECK THE A/C (AIR CONDITIONING) COMMAND CIRCUIT FOR A SHORT TO GROUND

- Ignition OFF.
- Disconnect HVAC C2357A .
- Disconnect BCM C2280C .
- Measure:

Positive Lead	Measurement / Action	Negative Lead
C2357A-5	Ω	—

Is the resistance greater than 10,000 ohms?

Yes	GO to M2
No	REPAIR the circuit for a short to ground.

M2 CHECK FOR CORRECT HVAC (HEATING, VENTILATION AND AIR CONDITIONING) CONTROL MODULE OPERATION

- Ignition OFF.
- Disconnect and inspect the HVAC control module connectors.

Repair:
  - corrosion (replace connector or terminals – clean module pins)
  - damaged or bent pins – replace terminals/pins
  - pushed-out pins – replace pins as necessary
- Reconnect the HVAC control module connectors. Make sure they seat and latch correctly.
- Operate the system and verify the concern is still present.

Is the concern still present?

Yes	CHECK OASIS for any applicable Technical Service Bulletins (TSBs). If a TSB exists for this concern, discontinue this test and follow TSB . If no Technical Service Bulletins (TSBs) address this concern, INSTALL a new HVAC control module. REFER to: Heating, Ventilation and Air Conditioning (HVAC) Control Module (412-00 Climate Control System - General Information, Removal and Installation).
No	The system is operating correctly at this time. The concern may have been caused by module connections. Address the root cause of any connector or pin issues.

B1B71:21, B1B71:22, B1B71:2F

Refer to Wiring Diagrams Cell 54 for schematic and connector information.

Normal Operation and Fault Conditions

REFER to: Climate Control System - Vehicles With: Electronic Manual Temperature Control (EMTC) - System Operation and Component Description (412-00 Climate Control System - General Information, Description and Operation).

DTC Fault Trigger Conditions

DTC	Description	Fault Trigger Conditions
B1B71:21	Evaporator Temperature Sensor General Signal Failures Signal Amplitude < Minimum	This Continuous Memory Diagnostic Trouble Code (CMDTC) and on-demand DTC sets when the BCM senses lower than expected voltage from the evaporator temperature sensor.
B1B71:22	Evaporator Temperature Sensor General Signal Failures Signal Amplitude > Maximum	This Continuous Memory Diagnostic Trouble Code (CMDTC) sets when the BCM senses greater than expected voltage from the evaporator temperature sensor.
B1B71:2F	Evaporator Temperature Sensor General Signal Failures Signal Erratic	This on-demand DTC sets when the BCM senses erratic voltages from the evaporator temperature sensor.

PINPOINT TEST N : B1B71:21, B1B71:22, B1B71:2F

NOTICE: Use the correct probe adapter(s) from the Flex Probe Kit when taking measurements. Failure to use the correct probe adapter(s) may damage the connector.

N1 CHECK THE BCM (BODY CONTROL MODULE) SENSOR OUTPUT VOLTAGE

- Ignition ON.
- Disconnect evaporator discharge air temperature sensor C296 .

- Measure:

Positive Lead	Measurement / Action	Negative Lead
C296-1	V	C296-3

Is the voltage between 4.7 and 5.1 volts?

Yes	INSTALL a new evaporator discharge air temperature sensor. REFER to: Evaporator Temperature Sensor (412-00 Climate Control System - General Information, Removal and Installation).
No	For DTC B1B71:22, GO to N2 For DTC B1B71:21, GO to N5

N2 CHECK THE EVAPORATOR TEMPERATURE SENSOR SIGNAL RETURN CIRCUIT FOR A SHORT TO VOLTAGE

- Ignition OFF.
- Disconnect BCM C2280C .
- Ignition ON.
- Measure:

Positive Lead	Measurement / Action	Negative Lead
C2280C-29	V	—

Is any voltage present?

Yes	REPAIR the circuit.
No	GO to N3

N3 CHECK THE EVAPORATOR TEMPERATURE SENSOR CIRCUIT FOR AN OPEN

- Ignition OFF.
- Measure:

Positive Lead	Measurement / Action	Negative Lead
C296-1	Ω	C2280C-9

Is the resistance less than 3 ohms?

Yes	GO to N4
No	REPAIR the circuit.

N4 CHECK THE EVAPORATOR TEMPERATURE SENSOR SIGNAL RETURN CIRCUIT FOR AN OPEN

- Measure:

Positive Lead	Measurement / Action	Negative Lead
C296-3	Ω	C2280C-29

Is the resistance less than 3 ohms?

Yes	GO to N5
No	REPAIR the circuit.

N5 CHECK THE EVAPORATOR TEMPERATURE SENSOR SIGNAL AND SIGNAL RETURN CIRCUITS FOR A SHORT TOGETHER

- Ignition OFF.
- Disconnect BCM C2280C .
- Measure:

Positive Lead	Measurement / Action	Negative Lead
C296-1	Ω	C296-3

Is the resistance greater than 10,000 ohms?

Yes	GO to N6
No	REPAIR the circuits.

N6 CHECK THE EVAPORATOR TEMPERATURE SENSOR SIGNAL CIRCUIT FOR A SHORT TO GROUND

- Measure:

Positive Lead	Measurement / Action	Negative Lead
C296-1	Ω	—

Is the resistance greater than 10,000 ohms?

Yes	GO to N7
No	REPAIR the circuit.

N7 CHECK FOR CORRECT BCM (BODY CONTROL MODULE) OPERATION

- Ignition OFF.
- Disconnect and inspect all the BCM connectors.
- Repair:
  - corrosion (install new connector or terminals – clean module pins)
  - damaged or bent pins – install new terminals/pins
  - pushed-out pins – install new pins as necessary
- Reconnect the BCM connectors. Make sure they seat and latch correctly.
- Operate the system and determine if the concern is still present.

Is the concern still present?

Yes	CHECK OASIS for any applicable Technical Service Bulletins (TSBs). If a TSB exists for this concern, DISCONTINUE this test and FOLLOW TSB instructions. If no Technical Service Bulletins (TSBs) address this concern, INSTALL a new BCM . REFER to: Body Control Module (BCM) (419-10 Multifunction Electronic Modules, Removal and Installation).
No	The system is operating correctly at this time. The concern may have been caused by module connections. Address the root cause of any connector or pin issues.

P193E

Refer to Wiring Diagrams Cell 54 for schematic and connector information.

Normal Operation and Fault Conditions

REFER to: Climate Control System - Vehicles With: Electronic Manual Temperature Control (EMTC) - System Operation and Component Description (412-00 Climate Control System - General Information, Description and Operation).

DTC Fault Trigger Conditions

DTC	Description	Fault Trigger Conditions
P193E	A/C Clutch Request Signal	This Continuous Memory Diagnostic Trouble Code (CMDTC) sets when the PCM does not receive the A/C request message from the BCM .

PINPOINT TEST O : P193E

O1 VERIFY THE CUSTOMER CONCERN

- Ignition ON.
- Verify that there is an observable symptom present.

Is an observable symptom present?

Yes	GO to O2
No	The system is operating correctly at this time. The DTC may have been set due to high network traffic or an intermittent fault condition.

O2 CHECK THE COMMUNICATION NETWORK

- Ignition ON.
- Using a scan tool, perform network test.
- Carry out the network test.

Does the BCM pass the network test?

Yes	GO to O3
No	REFER to: Communications Network (418-00 Module Communications Network, Diagnosis and Testing).

O3 RECHECK THE PCM (POWERTRAIN CONTROL MODULE) FOR DIAGNOSTIC TROUBLE CODES (DTCS)

- Clear the Diagnostic Trouble Codes (DTCs).
- Operate the system and test the system for normal operation.
- Using a scan tool, perform PCM self-test.

Are any PCM Diagnostic Trouble Codes (DTCs) present?

Yes	For Diagnostic Trouble Codes (DTCs) U0422 or U0140, REFER to the PC/ED manual. For any other Diagnostic Trouble Codes (DTCs) refer to appropriate PCM DTC chart. For 2.0L Duratec-HE REFER to: Electronic Engine Controls (303-14A Electronic Engine Controls - 2.0L Duratec-HE (125kW/170PS) - MI4, Diagnosis and Testing). For 2.0L Ecoboost REFER to: Electronic Engine Controls (303-14B Electronic Engine Controls - 2.0L EcoBoost (184kW/250PS) - MI4, Diagnosis and Testing). For DTC P193E, GO to O4
No	The system is operating correctly at this time. The DTC may have been set due to high network traffic or an intermittent fault condition.

O4 CHECK FOR CORRECT PCM (POWERTRAIN CONTROL MODULE) OPERATION

- Ignition OFF.
- Disconnect and inspect all the PCM connectors.
- Repair:
  - corrosion (install new connector or terminals – clean module pins)
  - damaged or bent pins – install new terminals/pins
  - pushed-out pins – install new pins as necessary
- Reconnect the PCM connectors. Make sure they seat and latch correctly.
- Operate the system and determine if the concern is still present.

Is the concern still present?

Yes	CHECK OASIS for any applicable Technical Service Bulletins (TSBs). If a TSB exists for this concern, DISCONTINUE this test and FOLLOW TSB instructions. If no Technical Service Bulletins (TSBs) address this concern, INSTALL a new PCM . For 2.0L Duratec-HE REFER to: Powertrain Control Module (PCM) (303-14A Electronic Engine Controls - 2.0L Duratec-HE (125kW/170PS) - MI4, Removal and Installation). For 2.0L Ecoboost REFER to: Powertrain Control Module (PCM) (303-14B Electronic Engine Controls - 2.0L EcoBoost (184kW/250PS) - MI4, Removal and Installation).
No	The system is operating correctly at this time. The concern may have been caused by module

connections. Address the root cause of any connector or pin issues.

Component Test- Heater Core

NOTE: *If a heater core leak is suspected, test the heater core by following the plugged heater core component test before the heater core pressure test. Carry out a system inspection by checking the heater system thoroughly as follows:*

1. Inspect for evidence of coolant leakage at the heater hose to heater core attachments. A coolant leak in the heater hose could follow the heater core tube to the heater core and appear as a leak in the heater core.

NOTE: *Spring-type clamps are installed as original equipment. Installation and overtightening of non-specified clamps can cause leakage at the heater hose connection and damage the heater core.*

2. Check the integrity of the heater hose clamps.

Heater Core - Plugged

1. Check to see that the engine coolant is at the correct level.
2. Start the engine and turn on the heater.
3. When the engine coolant reaches operating temperature, check the heater core inlet and outlet hoses to see if they are hot.
4. If the outlet only is not hot:

- the heater core may have an air pocket.
- the heater core may be plugged.

5. If the inlet only is not hot, the thermostat may not be working correctly.

Heater Core - Pressure Test

NOTE: *Due to space limitations, a bench test may be necessary for pressure testing.*

1. Drain the coolant from the cooling system.
2. Disconnect the heater hoses from the heater core.
3. Install a short piece of heater hose, approximately 101 mm (4 in) long on each heater core tube.
4. Fill the heater core and heater hoses with water and install the plug BT-7422-B and the adapter BT-7422-A from the Pressure Test Kit. Secure the heater hoses, plug and adapter with hose clamps.
5. Attach the pump and gauge assembly from the Pressure Test Kit to the adapter.
6. Close the bleed valve at the base of the gauge. Pump 138 kPa (20 psi) of air pressure into the heater core.
7. Observe the pressure gauge for a minimum of 3 minutes.
8. If the pressure drops, check the heater hose connections to the core tubes for leaks. If the heater hoses do not leak, remove the heater core from the vehicle and carry out the bench test.

Heater Core - Bench Test

1. Remove the heater core from the vehicle.
2. Drain all of the coolant from the heater core.
3. Connect the 101 mm (4 in) test heater hoses with plug and adapter to the core tubes. Then connect the Pressure Test Kit to the adapter.
4. Apply 138 kPa (20 psi) of air pressure to the heater core. Submerge the heater core in water.

5. If a leak is observed, install a new heater core.

Component Test- Evaporator or Condenser On-Vehicle Leak Test

1. Discharge and recover the refrigerant.
2. Disconnect the suspect evaporator or condenser from the Air Conditioning A/C .
3. Clean the manifold fittings.
4. Connect the appropriate test fittings from the A/C Flush Adapter Kit to the condenser or evaporator tube connections.

NOTE: *The automatic shut-off valves on some gauge set hoses do not open when connected to the test fittings. If available, use hoses without shut-off valves. If hoses with shut-off valves are used, make sure the valve opens when attached to the test fittings or install an adapter that will activate the valve. The test is not valid if the shut-off valve does not open.*

5. Connect the red and blue hoses from the R-134a Manifold Gauge Set to the test fittings on the evaporator or condenser. Connect the yellow hose to a known good vacuum pump.
6. Open both gauge set valves and start the vacuum pump. Allow the vacuum pump to operate for a minimum of 45 minutes after the gauge set low pressure gauge indicates 101 kPa (30 in-Hg). The 45-minute evacuation is necessary to remove any refrigerant from oil left in the evaporator or condenser. If the refrigerant is not completely removed from the oil, outgassing will degrade the vacuum and appear as a refrigerant leak.
7. If the low pressure gauge reading will not drop to 101 kPa (30 in-Hg) when the valves on the gauge and manifold set are open and the vacuum pump is operating, close the gauge set valves and observe the low pressure gauge. If the pressure rises rapidly to zero, a large leak is indicated. Recheck the test fitting connections and gauge set connections before installing a new evaporator or condenser.
8. After evacuating for 45 minutes, close the gauge set valves and stop the vacuum pump. Observe the low pressure gauge; it should remain at the 101 kPa (30 in-Hg) mark.

- If the low pressure gauge reading rises 34 or more kPa (10 or more in-Hg) of vacuum from the 101 kPa (30 in-Hg) position in 10 minutes, a leak is indicated.
- If a very small leak is suspected, wait 30 minutes and observe the vacuum gauge.
- If a small amount of vacuum is lost, operate the vacuum pump with gauge valves open for an additional 30 minutes to remove any remaining refrigerant from the oil in the evaporator or condenser. Then recheck for loss of vacuum.
- If a very small leak is suspected, allow the system to sit overnight with vacuum applied and check for vacuum loss.

9. If the evaporator or condenser does leak, as verified by the above procedure, install a new evaporator or condenser.

Component Test- Air Conditioning (AC) Compressor External Leak Test

1. Install the adapter from the A/C Flush Adapter Kit on the port of the A/C compressor, using the existing manifold retaining bolt.
2. Connect the high and low pressure lines of a manifold gauge set or a refrigerant recovery/recycling station to the corresponding fittings on the adapter.
3. Attach the center hose of a manifold gauge set to a refrigerant container standing in an upright position.
4. Open the low pressure gauge valve, the high pressure gauge valve and the valve on the refrigerant container to allow the refrigerant vapor to flow into the A/C compressor.
5. Using the Refrigerant Leak Detector, check for leaks at the compressor shaft.
6. If an external leak is found, install a new A/C compressor.
7. When the leak test is complete, recover the refrigerant from the compressor.

Copyright © Ford Motor Company

Climate Control System - Vehicles With: Dual Automatic Temperature Control (DATC)

DTC Chart: Heating Ventilation Air Conditioning (HVAC) Module - Dual Automatic Temperature Control (DATC)

Diagnostics in this manual assume a certain skill level and knowledge of Ford-specific diagnostic practices. For information about these practices,
REFER to: Diagnostic Methods (100-00 General Information, Description and Operation).

NOTE: *Network Diagnostic Trouble Codes (DTCs) (U-codes) are often a result of intermittent concerns such as damaged wiring or low battery voltage occurrences. Additionally, vehicle repair procedures, such as module reprogramming, often set network Diagnostic Trouble Codes (DTCs). Replacing a module to resolve a network DTC is unlikely to resolve the concern. To prevent repeat network DTC concerns, inspect all network wiring, especially connectors. Test the vehicle battery.*

REFER to: Battery (414-01 Battery, Mounting and Cables, Diagnosis and Testing).

Heating, Ventilation, and Air Conditioning (HVAC) Module - DATC DTC Chart

DTC	Description	Action
B10B3:00	Right Register Air Discharge Temperature: No Sub Type Information	GO to Pinpoint Test O
B10B4:00	Right Footwell Air Discharge Temperature: No Sub Type Information	GO to Pinpoint Test O
B10B5:00	Left Register Air Discharge Temperature: No Sub Type Information	GO to Pinpoint Test O
B10B6:00	Left Footwell Air Discharge Temperature: No Sub Type Information	GO to Pinpoint Test O
B1081:00	Left Temperature Damper Motor: No Sub Type Information	GO to Pinpoint Test K
B1082:00	Right Temperature Damper Motor: No Sub Type Information	GO to Pinpoint Test L
B1083:00	Recirculation	GO to Pinpoint Test E

	Damper Motor: No Sub Type Information	
B1085:00	Defroster Damper Motor: No Sub Type Information	GO to Pinpoint Test F
B1086:00	Air Distribution Damper Motor: No Sub Type Information	GO to Pinpoint Test F
B10B9:00	Blower Control: No Sub Type Information	• For the blower motor is inoperative, GO to Pinpoint Test M • For all other blower motor symptoms, GO to Pinpoint Test N
B1A61:00	Cabin Temperature Sensor: No Sub Type Information	GO to Pinpoint Test P
B1A63:00	Right Solar Sensor: No Sub Type Information	GO to Pinpoint Test Q
B1A64:00	Left Solar Sensor: No Sub Type Information	GO to Pinpoint Test Q
B10B8:00	Push Buttons: No Sub Type Information	INSTALL a new HVAC control module. REFER to: Heating, Ventilation and Air Conditioning (HVAC) Control Module (412-00 Climate Control System - General Information, Removal and Installation).
B105A:00	Cabin Temperature Sensor Fan: No Sub Type Information	GO to Pinpoint Test P
U0140:00	Lost Communication With Body Control Module: No Sub Type Information	GO to Pinpoint Test C
U0155:00	Lost Communication With Instrument Panel Cluster (IPC) Control Module: No Sub Type Information	GO to Pinpoint Test S
U0422:00	Invalid Data Received From Body Control Module: No Sub Type Information	RETRIEVE and REPAIR all non-network Diagnostic Trouble Codes (DTCs) in the BCM . REFER to: Body Control Module (BCM) (419-10 Multifunction Electronic Modules, Diagnosis and Testing).
U2100:00	Initial Configuration Not Complete: No Sub Type Information	CHECK vehicle service history for recent service actions related to this module. This DTC sets due to incomplete or incorrect Programmable Module Installation (PMI) procedures. If there have been recent service actions with this module, REPEAT/PERFORM the Programmable Module Installation (PMI) procedure as directed by the scan tool. If there have been no recent service actions, INSTALL a new HVAC control module. REFER to: Heating, Ventilation and Air Conditioning (HVAC) Control Module (412-00 Climate Control System - General Information, Removal and Installation).
U2101:00	Control Module Configuration Incompatible: No Sub Type	CHECK vehicle service history for recent service actions related to this module. This DTC sets due to incomplete or incorrect Programmable Module Installation (PMI) procedures. If there have been recent service actions with this module, REPEAT/PERFORM the Programmable Module Installation (PMI) procedure as directed by the scan tool. If there have been no recent

	Information	service actions, INSTALL a new HVAC control module. REFER to: Heating, Ventilation and Air Conditioning (HVAC) Control Module (412-00 Climate Control System - General Information, Removal and Installation).
U3000:00	Control Module: No Sub Type Information	INSTALL a new HVAC control module. REFER to: Heating, Ventilation and Air Conditioning (HVAC) Control Module (412-00 Climate Control System - General Information, Removal and Installation).
U3006:16	Control Module Input Power "A": Circuit Voltage Below Threshold	GO to Pinpoint Test R
U3006:17	Control Module Input Power "A": Circuit Voltage Above Threshold	GO to Pinpoint Test R

DTC Chart: Powertrain Control Module (PCM)

Diagnostics in this manual assume a certain skill level and knowledge of Ford-specific diagnostic practices. For information about these practices,
REFER to: Diagnostic Methods (100-00 General Information, Description and Operation).

Powertrain Control Module (PCM) DTC Chart

DTC	Description	Action
P0532	A/C Refrigerant Pressure Sensor “A” Circuit Low	GO to Pinpoint Test A
P0533	A/C Refrigerant Pressure Sensor “A” Circuit High	GO to Pinpoint Test A
P0645	A/C Clutch Relay Control Circuit	GO to Pinpoint Test B
P1464	A/C Demand Out Of Self Test Range	GO to Pinpoint Test J
P193E	A/C Clutch Request Signal	GO to Pinpoint Test U
All Other DTCs	—	For 2.0L Duratec-HE REFER to: Electronic Engine Controls (303-14A Electronic Engine Controls - 2.0L Duratec-HE (125kW/170PS) - MI4, Diagnosis and Testing). For 2.0L Ecoboost REFER to: Electronic Engine Controls (303-14B Electronic Engine Controls - 2.0L EcoBoost (184kW/250PS) - MI4, Diagnosis and Testing).

DTC Chart: Body Control Module (BCM)

Diagnostics in this manual assume a certain skill level and knowledge of Ford-specific diagnostic practices. For information about these practices,
REFER to: Diagnostic Methods (100-00 General Information, Description and Operation).

Body Control Module (BCM) DTC Chart

DTC	Description	Action
B10AF:11	Blower Fan Relay: Circuit Short to Ground	GO to Pinpoint Test N
B10AF:13	Blower Fan Relay: Circuit Open	GO to Pinpoint Test M
B10AF:19	Blower Fan Relay: Circuit Current Above Threshold	GO to Pinpoint Test M
B1B71:21	Evaporator Temperature Sensor: Signal Amplitude < Minimum	GO to Pinpoint Test T
B1B71:22	Evaporator Temperature Sensor: Signal Amplitude > Maximum	GO to Pinpoint Test T
B1B71:2F	Evaporator Temperature Sensor: Signal Erratic	GO to Pinpoint Test T
All Other DTCs	—	REFER to: Body Control Module (BCM) (419-10 Multifunction Electronic Modules, Diagnosis and Testing).

Symptom Chart(s)

Symptom Chart: Climate Control - Dual Automatic Temperature Control (DATC)

Diagnostics in this manual assume a certain skill level and knowledge of Ford-specific diagnostic practices. For information about these practices,
REFER to: Diagnostic Methods (100-00 General Information, Description and Operation).

Symptom Chart

Condition	Possible Sources	Actions
No communication with the HVAC control module	• Fuse(s) • Wiring, terminals or connectors • HVAC control module	REFER to: Communications Network (418-00 Module Communications Network, Diagnosis and Testing).
Unable to duplicate the customer concern	Refer to Diagnostic Routine	GO to Pinpoint Test D
HVAC functions are inoperative/do not operate correctly from touchscreen only	• Communication network • FDIM • APIM	REFER to: Information and Entertainment System (415-00C Information and Entertainment System - General Information - Vehicles With: SYNC/Sony AM/FM/CD, Diagnosis and Testing).
Reduced outlet airflow	Refer to Diagnostic Routine	• If the A/C compressor clutch is always ON with the mode selection switch turned off and PCM DTC P1464 is not present, GO to Pinpoint Test I • If the AC compressor clutch is always ON with the mode selection switch turned off and the PCM DTC P1464 is present, GO to Pinpoint Test J • If the A/C compressor clutch turns on and off normally with the

		mode selection switch, GO to Pinpoint Test N
The air inlet door is inoperative	Refer to Diagnostic Routine	GO to Pinpoint Test E
Incorrect/erratic direction of airflow from outlets	Refer to Diagnostic Routine	GO to Pinpoint Test F
Insufficient A/C cooling	• Improper refrigerant level • Temperature door(s) binding or stuck • Temperature door actuator(s)	• CARRY OUT the refrigerant system tests. REFER to: Refrigerant System Tests (412-00 Climate Control System - General Information, General Procedures). If OK, DIAGNOSE for a temperature door actuator not operating correctly. • For inadequate temperature out of the driver side, GO to Pinpoint Test K • For inadequate temperature out of the passenger side, GO to Pinpoint Test L
Insufficient, erratic or no heat	Refer to Diagnostic Routine	GO to Pinpoint Test G
The A/C is inoperative	Refer to Diagnostic Routine	GO to Pinpoint Test H
The A/C is always on	Refer to Diagnostic Routine	GO to Pinpoint Test I
The A/C is always on — A/C mode always commanded ON	Refer to Diagnostic Routine	GO to Pinpoint Test J
Temperature control is inoperative/does not operate correctly — LH	Refer to Diagnostic Routine	GO to Pinpoint Test K
Temperature control is inoperative/does not operate correctly — RH	Refer to Diagnostic Routine	GO to Pinpoint Test L
The blower motor is inoperative	Refer to Diagnostic Routine	GO to Pinpoint Test M
The blower motor does not operate correctly	Refer to Diagnostic Routine	GO to Pinpoint Test N
The temperature setpoint does not repeat after turning the ignition switch OFF	HVAC control module	INSTALL a new HVAC control module. REFER to: Heating, Ventilation and Air Conditioning (HVAC) Control Module (412-00 Climate Control System - General Information, Removal and Installation).
The temperature display will not switch between Celsius and Fahrenheit	• HVAC control module • IPC	• If the IPC does not switch between English and Metric, REFER to: Instrumentation, Message Center and Warning Chimes (413-01 Instrumentation, Message Center and Warning Chimes, Diagnosis and Testing). • If only the HVAC control module does not switch between English and Metric, INSTALL a new HVAC control module. REFER to: Heating, Ventilation and Air Conditioning (HVAC) Control Module (412-00 Climate Control System - General Information, Removal and Installation).
A/C pressure relief valve discharging	• High system pressure • A/C pressure relief valve	CHECK the high side system pressure. If the pressure is below the A/C pressure relief valve open pressure, REPLACE the A/C compressor. For 2.0L Duratec-HE REFER to: Air Conditioning (A/C) Compressor - 2.0L Duratec-HE (125kW/170PS) - MI4 (412-00 Climate Control System - General Information, Removal and Installation).

		For 2.0L Ecoboost REFER to: Air Conditioning (A/C) Compressor - 2.0L EcoBoost (184kW/250PS) - MI4 (412-00 Climate Control System - General Information, Removal and Installation). If the system pressure is above the A/C pressure relief valve open pressure, REPAIR the system for a restriction.

Symptom Chart: Noise, Vibration, and Harshness (NVH)

Diagnostics in this manual assume a certain skill level and knowledge of Ford-specific diagnostic practices. For information about these practices,
REFER to: Diagnostic Methods (100-00 General Information, Description and Operation).

Symptom Chart

Condition	Possible Sources	Actions
Noisy A/C compressor	A/C compressor pulley bearing worn	INSPECT the A/C compressor pulley bearing for roughness. If bearing roughness is found, INSTALL a new A/C compressor. For 2.0L Duratec-HE REFER to: Air Conditioning (A/C) Compressor - 2.0L Duratec-HE (125kW/170PS) - MI4 (412-00 Climate Control System - General Information, Removal and Installation). For 2.0L Ecoboost REFER to: Air Conditioning (A/C) Compressor - 2.0L EcoBoost (184kW/250PS) - MI4 (412-00 Climate Control System - General Information, Removal and Installation).
	A/C compressor bearing worn	INSPECT the A/C compressor pulley bearing for roughness. If bearing roughness is found, INSTALL a new A/C compressor. For 2.0L Duratec-HE REFER to: Air Conditioning (A/C) Compressor - 2.0L Duratec-HE (125kW/170PS) - MI4 (412-00 Climate Control System - General Information, Removal and Installation). For 2.0L Ecoboost REFER to: Air Conditioning (A/C) Compressor - 2.0L EcoBoost (184kW/250PS) - MI4 (412-00 Climate Control System - General Information, Removal and Installation).

Diagnostic Routine(s)

Diagnostics in this manual assume a certain skill level and knowledge of Ford-specific diagnostic practices. For information about these practices,
REFER to: Diagnostic Methods (100-00 General Information, Description and Operation).

P0532:00 P0533:00

Refer to Wiring Diagrams Cell 55 for schematic and connector information.

Normal Operation and Fault Conditions

REFER to: Climate Control System - Vehicles With: Electronic Manual Temperature Control (EMTC) - System Operation and Component Description (412-00 Climate Control System - General Information, Description and Operation).

DTC Fault Trigger Conditions

DTC	Description	Fault Trigger Conditions
P0532:00	A/C Refrigerant Pressure Sensor A Circuit Low: No Sub Type Information	The A/C pressure transducer inputs a feedback voltage to the PCM . This DTC sets if the feedback voltage is lower than expected.
P0533:00	A/C Refrigerant Pressure Sensor A Circuit High: No Sub Type Information	The A/C pressure transducer inputs a feedback voltage to the PCM . This DTC sets if the feedback voltage is greater than expected.

Possible Sources

- Wiring, terminals or connectors
- A/C Pressure Transducer
- PCM

PINPOINT TEST A : P0532:00 P0533:00

NOTICE: Use the correct probe adapter(s) from the Flex Probe Kit when taking measurements. Failure to use the correct probe adapter(s) may damage the connector.

A1 CHECK A/C (AIR CONDITIONING) PRESSURE TRANSDUCER CIRCUITS FOR A SHORT TO VOLTAGE

- Ignition OFF.
- Disconnect PCM C175B .
- Disconnect A/C Pressure Transducer C1260 .
- Ignition ON.
- Measure:

Positive Lead	Measurement / Action	Negative Lead
C1260-1	V	—
C1260-2	V	—
C1260-3	V	—

Is any voltage present?

Yes	REPAIR the circuit.
No	GO to A2

A2 CHECK THE A/C (AIR CONDITIONING) PRESSURE TRANSDUCER CIRCUITS FOR A SHORT TO GROUND

- Ignition OFF.
- Measure:

Positive Lead	Measurement / Action	Negative Lead
C1260-1	Ω	—
C1260-2	Ω	—
C1260-3	Ω	—

Is the resistance greater than 10,000 ohms?

Yes	GO to A3
No	REPAIR the circuit in question.

A3 CHECK A/C (AIR CONDITIONING) PRESSURE TRANSDUCER CIRCUITS FOR AN OPEN

- Measure:

Positive Lead	Measurement / Action	Negative Lead
C1260-1	Ω	C175B-37
C1260-2	Ω	C175B-31
C1260-3	Ω	C175B-51

Is the resistance less than 3 ohms?

Yes	GO to A4
No	REPAIR the circuit.

A4 CHECK A/C (AIR CONDITIONING) PRESSURE TRANSDUCER CIRCUITS FOR A SHORT TOGETHER

- Measure:

Positive Lead	Measurement / Action	Negative Lead
C1260-1	Ω	C1260-2
C1260-2	Ω	C1260-3
C1260-3	Ω	C1260-1

Are the resistances greater than 10,000 ohms?

Yes	GO to A5
No	REPAIR the circuits in question.

A5 CHECK THE PCM (POWERTRAIN CONTROL MODULE) OUTPUT VOLTAGE

- Ignition OFF.
- Connect PCM C175B .
- Ignition ON.
- Measure:

Positive Lead	Measurement / Action	Negative Lead

C1260-3		—

Is the voltage between 4.7 and 5.1 volts?

Yes	GO to A6
No	GO to A8

A6 CHECK THE A/C (AIR CONDITIONING) PRESSURE TRANSDUCER HIGH

- Using a scan tool, view PCM PIDs.
- Monitor the ACP_PRESS PID.
- Connect a fused jumper wire:

Positive Lead	Measurement / Action	Negative Lead
C1260-3		C1260-2

Does the PID voltage read greater than 4.7 volts?

Yes	INSTALL a new A/C pressure transducer, REFER to: Air Conditioning (A/C) Pressure Transducer (412-00 Climate Control System - General Information, Removal and Installation).
No	GO to A7

A7 CHECK THE A/C (AIR CONDITIONING) PRESSURE TRANSDUCER LOW

- Disconnect the fused jumper wire.

Does the ACP_PRESS PID voltage read less than 0.3 volts?

Yes	INSTALL a new A/C pressure transducer, REFER to: Air Conditioning (A/C) Pressure Transducer (412-00 Climate Control System - General Information, Removal and Installation).
No	GO to A8

A8 CHECK FOR CORRECT PCM (POWERTRAIN CONTROL MODULE) OPERATION

- Ignition OFF.
- Disconnect and inspect all the PCM connectors.
- Repair:
  - corrosion (install new connector or terminals – clean module pins)
  - damaged or bent pins – install new terminals/pins
  - pushed-out pins – install new pins as necessary
- Reconnect the PCM connectors. Make sure they seat and latch correctly.
- Operate the system and determine if the concern is still present.

Is the concern still present?

Yes	CHECK OASIS for any applicable Technical Service Bulletins (TSBs). If a TSB exists for this concern, DISCONTINUE this test and FOLLOW TSB instructions. If no Technical Service Bulletins (TSBs) address this concern, INSTALL a new PCM . For 2.0L Duratec-HE REFER to: Powertrain Control Module (PCM) (303-14A Electronic Engine Controls - 2.0L Duratec-HE (125kW/170PS) - MI4, Removal and Installation). For 2.0L Ecoboost REFER to: Powertrain Control Module (PCM) (303-14B Electronic Engine Controls - 2.0L EcoBoost (184kW/250PS) - MI4, Removal and Installation).
No	The system is operating correctly at this time. The concern may have been caused by module connections. Address the root cause of any connector or pin issues.

P0645:00

Refer to Wiring Diagrams Cell 55 for schematic and connector information.

Normal Operation and Fault Conditions

Voltage is provided to the AC clutch relay coil. When AC is requested and AC line pressures allow, a ground is provided to the AC clutch relay coil from the PCM , energizing the AC clutch relay.

DTC Fault Trigger Conditions

DTC	Description	Fault Trigger Conditions
P0645:00	A/C Clutch Relay Control Circuit: No Sub Type Information	The DTC sets when the PCM grounds the relay circuit and more voltage than expected is detected on the relay circuit. The DTC also sets when the relay circuit is off and no voltage is detected on the relay circuit. The PCM expects to detect voltage coming through the relay coil to the relay circuit when it is not grounding it.

Possible Sources

- Wiring, terminals or connectors
- A/C clutch relay
- PCM

Visual Inspection and Diagnostic Pre-checks

- Inspect BJB fuse 23 (5A).

PINPOINT TEST B : P0645:00

NOTICE: Use the correct probe adapter(s) from the Flex Probe Kit when taking measurements. Failure to use the correct probe adapter(s) may damage the connector.

B1 CHECK THE VOLTAGE TO THE A/C (AIR CONDITIONING) CLUTCH RELAY COIL VOLTAGE SUPPLY CIRCUIT FOR AN OPEN

- Ignition OFF.
- Disconnect A/C Clutch Relay.
- Measure:

Positive Lead	Measurement / Action	Negative Lead
 Pin 1		—

Is the voltage greater than 11 volts?

Yes	GO to B2
No	REPAIR the circuit.

B2 SUBSTITUTE A KNOWN GOOD RELAY FOR THE A/C (AIR CONDITIONING) CLUTCH RELAY

- Substitute a known good relay for the A/C clutch relay.
- Using a scan tool, perform PCM self-test.

Is DTC P0645:00 still present?

Yes	GO to B3
No	INSTALL a new A/C clutch relay.

B3 CHECK THE A/C (AIR CONDITIONING) CLUTCH RELAY CONTROL CIRCUIT FOR A SHORT TO VOLTAGE

- Ignition OFF.
- Disconnect PCM C175B .
- Ignition ON.
- Measure:

Positive Lead	Measurement / Action	Negative Lead
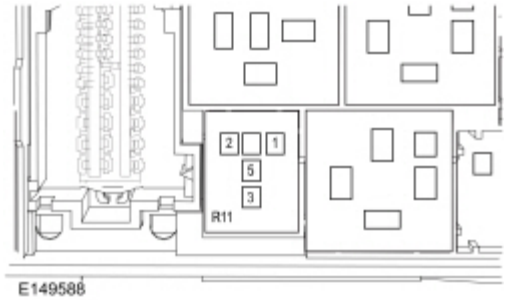 Pin 2		—

Is any voltage present?

Yes	REPAIR the circuit.
No	GO to B4

B4 CHECK THE A/C (AIR CONDITIONING) CLUTCH RELAY CONTROL CIRCUIT FOR A SHORT TO GROUND

- Ignition OFF.
- Measure:

Positive Lead	Measurement / Action	Negative Lead
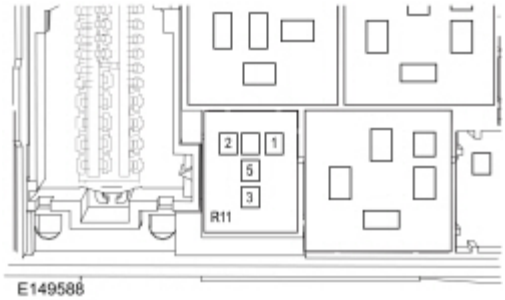 pin 2	Ω	—

Is the resistance greater than 10,000 ohms?

Yes	GO to B5
No	REPAIR the circuit.

B5 CHECK THE A/C (AIR CONDITIONING) CLUTCH RELAY CONTROL CIRCUIT FOR AN OPEN

- Measure:

Positive Lead	Measurement / Action	Negative Lead
Pin 2	Ω	C175B-10

Is the resistance less than 3 ohms?

Yes	GO to B6
No	REPAIR the circuit.

B6 CHECK FOR CORRECT PCM (POWERTRAIN CONTROL MODULE) OPERATION

- Ignition OFF.
- Disconnect and inspect all the PCM connectors.
- Repair:
  - corrosion (install new connector or terminals – clean module pins)
  - damaged or bent pins – install new terminals/pins
  - pushed-out pins – install new pins as necessary
- Reconnect the PCM connectors. Make sure they seat and latch correctly.
- Operate the system and determine if the concern is still present.

Is the concern still present?

Yes	CHECK OASIS for any applicable Technical Service Bulletins (TSBs). If a TSB exists for this concern, DISCONTINUE this test and FOLLOW TSB instructions. If no Technical Service Bulletins (TSBs) address this concern, INSTALL a new PCM . For 2.0L Duratec-HE REFER to: Powertrain Control Module (PCM) (303-14A Electronic Engine Controls - 2.0L Duratec-HE (125kW/170PS) - MI4, Removal and Installation). For 2.0L Ecoboost REFER to: Powertrain Control Module (PCM) (303-14B Electronic Engine Controls - 2.0L EcoBoost (184kW/250PS) - MI4, Removal and Installation).
No	The system is operating correctly at this time. The concern may have been caused by module connections. Address the root cause of any connector or pin issues.

U0140:00

Normal Operation and Fault Conditions

REFER to: Climate Control System - Vehicles With: Dual Automatic Temperature Control (DATC) - System Operation and Component Description (412-00 Climate Control System - General Information, Description and Operation).

DTC Fault Trigger Conditions

DTC	Description	Fault Trigger Conditions
U0140:00	Lost Communication With Body Control Module: No Sub-Type Information	This Continuous Memory Diagnostic Trouble Code (CMDTC) sets in the HVAC control module if data messages received from the BCM over the CAN are missing for 5 seconds or more.

Possible Sources

- Fuse(s)
- Wiring, terminals or connectors
- 12V battery voltage
- BCM
- HVAC

PINPOINT TEST C : U0140:00

C1 VERIFY THE CUSTOMER CONCERN

- Ignition ON.
- Verify there is an observable symptom present.

Is an observable symptom present?

Yes	GO to C2
No	The system is operating correctly at this time. The DTC may have been set due to high network traffic or an intermittent fault condition.

C2 CHECK THE COMMUNICATION NETWORK

- Ignition ON.
- Using a scan tool, perform network test.

Does the BCM pass the network test?

Yes	GO to C3
No	REFER to: Communications Network (418-00 Module Communications Network, Diagnosis and Testing).

C3 RETRIEVE THE RECORDED DIAGNOSTIC TROUBLE CODES (DTCS) FROM THE BCM (BODY CONTROL MODULE) SELF-TEST

- Using a scan tool, perform BCM self-test.
- Check for recorded Diagnostic Trouble Codes (DTCs) from the BCM self-test.

Is DTC U3003:16 or DTC U3003:17 recorded?

Yes	REFER to: Body Control Module (BCM) (419-10 Multifunction Electronic Modules, Diagnosis and Testing).
No	GO to C4

C4 RETRIEVE THE RECORDED DIAGNOSTIC TROUBLE CODES (DTCS) FROM THE HVAC (HEATING, VENTILATION AND AIR CONDITIONING) MODULE SELF-TEST

- Using a scan tool, perform HVAC control module self-test.
- Check for recorded Diagnostic Trouble Codes (DTCs) from the HVAC control module self-test.

Is DTC U3006:16 or DTC U3006:17 recorded?

Yes	GO to Pinpoint Test R
No	GO to C5

C5 RECHECK THE HVAC (HEATING, VENTILATION AND AIR CONDITIONING) MODULE DIAGNOSTIC TROUBLE

CODES (DTCS)

NOTE: *If new modules were installed prior to the DTC being set, the module configuration may be incorrectly set during the Programmable Module Installation (PMI) or the Programmable Module Installation (PMI) may not have been carried out.*

- Clear the Diagnostic Trouble Codes (DTCs).
- Wait 10 seconds.
- Repeat the HVAC control module self-test.

Is DTC U0140:00 still present?

Yes	GO to C6
No	The system is operating correctly at this time. The DTC may have been set due to high network traffic or an intermittent fault condition.

C6 CHECK FOR DTC (DIAGNOSTIC TROUBLE CODE) U0140:00 SET IN OTHER MODULES

- Clear all Diagnostic Trouble Codes (DTCs).
- Ignition OFF.
- Ignition ON.
- Wait 10 seconds.
- Using a scan tool, retrieve all continuous memory Diagnostic Trouble Codes (DTCs).

Is DTC U0140:00 set in any other modules?

Yes	INSTALL a new BCM. REFER to: Body Control Module (BCM) (419-10 Multifunction Electronic Modules, Removal and Installation).
No	INSTALL a new HVAC control module. REFER to: Heating, Ventilation and Air Conditioning (HVAC) Control Module (412-00 Climate Control System - General Information, Removal and Installation).

Diagnostic Overview

Climate Control System Functional Test

Normal Operation and Fault Conditions

The function test tests the functions of the HVAC system and identifies the correct HVAC symptom pinpoint test.
REFER to: Climate Control System - Vehicles With: Dual Automatic Temperature Control (DATC) - System Operation and Component Description (412-00 Climate Control System - General Information, Description and Operation).

Possible Sources

- HVAC system and/or related components

PINPOINT TEST D : CLIMATE CONTROL SYSTEM FUNCTIONAL TEST

D1 CHECK THE PCM (POWERTRAIN CONTROL MODULE) FOR DIAGNOSTIC TROUBLE CODES (DTCS)

- Ignition ON.
- Using a scan tool, perform PCM self-test.

Are any climate control related Diagnostic Trouble Codes (DTCs) present?

Yes	Refer to PCM DTC chart in this section.
No	GO to D2

D2 CHECK THE BCM (BODY CONTROL MODULE) FOR DIAGNOSTIC TROUBLE CODES (DTCS)

- Ignition ON.
- Using a scan tool, perform BCM self-test.

Are any climate control related Diagnostic Trouble Codes (DTCs) present?

Yes	Refer to BCM DTC chart in this section.
No	GO to D3

D3 CHECK THE HVAC (HEATING, VENTILATION AND AIR CONDITIONING) MODULE FOR DIAGNOSTIC TROUBLE CODES (DTCS)

- Ignition ON.
- Using a scan tool, perform HVAC control module self-test.

Are any Diagnostic Trouble Codes (DTCs) present?

Yes	Refer to HVAC control module DTC chart in this section.
No	GO to D4

D4 CHECK THE BLOWER MOTOR OPERATION

- Ignition ON.
- Select register mode.
- Observe blower motor operation and select each blower motor speed.

Does the blower motor operate in all ranges?

Yes	GO to D5
No	If the blower motor does not operate in any setting, GO to Pinpoint Test M If the blower motor does not correctly change speeds or turn off when the system is turned off, GO to Pinpoint Test N

D5 CHECK AIRFLOW OPERATION

- Select the highest blower motor setting.
- While observing the airflow, select each of the airflow positions (register, register/footwell, footwell, footwell/defrost, defrost).

Is the airflow directed to the correct outlets?

Yes	GO to D6
No	GO to Pinpoint Test F

D6 VERIFY TEMPERATURE CONTROL OPERATION

- Start the vehicle and allow it to reach normal operating temperature.
- With the AC off, select register mode.
- Change the driver and passenger temperature settings from the coldest to the warmest and back to the coldest.

Does the temperature change between very warm to cool?

Yes	GO to D7
No	If the temperature does not get very warm, GO to Pinpoint Test G If the LH temperature does not change at all, GO to Pinpoint Test K If the RH temperature does not change at all, GO to Pinpoint Test L

D7 VERIFY THE A/C (AIR CONDITIONING) CLUTCH DOES NOT ENGAGE WITH A/C (AIR CONDITIONING) OFF

- With the engine running and the A/C off, select register mode.
- Select the coldest temperature setting.

Is the outlet temperature close to ambient temperature?

Yes	GO to D8
No	If the LH temperature is warmer than ambient temperature, GO to Pinpoint Test K If the RH temperature is warmer than ambient temperature, GO to Pinpoint Test L If the outlet temperature is significantly colder than ambient temperature and PCM DTC P1464:00 is present, GO to Pinpoint Test J If the outlet temperature is significantly colder than ambient temperature and PCM DTC P1464:00 is not present, GO to Pinpoint Test I

D8 VERIFY A/C (AIR CONDITIONING) CLUTCH ENGAGEMENT IN THE A/C (AIR CONDITIONING) MODE

- Make sure the ambient air temperature is above 6 C (43 F) .
- With the engine running, select register mode.
- Press the A/C button (indicator on).

Does the A/C clutch engage when the register and A/C button (indicator on) is pressed?

Yes	GO to D9
No	GO to Pinpoint Test H

D9 CHECK THE RECIRCULATED AIR OPERATION

- With the engine running, press the recirculated air button (indicator off).
- Select register mode.
- Select the highest blower motor setting.
- Observe airflow noise.
- Press the recirculated air button (indicator on).

Does the airflow noise increase when the recirculated air mode is selected (indicator on)?

Yes	If the vehicle is not equipped with Sony sound, the system is operating normally. If the vehicle is equipped with Sony sound, GO to D10
No	GO to Pinpoint Test E

D10 CHECK THE LDFTEMP PID

- Using a scan tool, view the HVAC control module PIDs.
- Monitor the LDFTTEMP PID.

Is the temperature coming out of the left footwell vent similar to the PID?

Yes	GO to D11
No	GO to Pinpoint Test O

D11 CHECK THE LDPT PID

- Using a scan tool view the HVAC control module PIDs.
- Monitor the LDPT PID.

Is the temperature coming out of the left register vent similar to the PID?

Yes	GO to D12
No	GO to Pinpoint Test O

D12 CHECK THE AIRTEMP_RFP PID

- Using a scan tool view the HVAC control module PIDs.
- Monitor the AIRTEMP_RF PID.

Is the temperature coming out of the right footwell vent similar to the PID?

Yes	GO to D10
No	GO to Pinpoint Test O

D13 CHECK THE AIRTEMP_RP PID

- Using a scan tool view the HVAC control module PIDs.
- Monitor the AIRTEMP_RP PID.

Is the temperature coming out of the right register vent similar to the PID?

Yes	GO to D14
No	GO to Pinpoint Test O

D14 CHECK THE INT_TEMP PID

- Using a scan tool view the HVAC control module PIDs.
- Monitor the INT_TEMP PID.

Is the air temperature at the cabin temperature sensor similar to the PID?

Yes	GO to D15

No	GO to Pinpoint Test P

D15 CHECK THE TOUCHSCREEN CONTROLS OPERATION

- Using the touchscreen controls, select each climate control function.
- Using the touchscreen controls, select each audio control function.

Do all touchscreen controls operate?

Yes	The system is operating correctly.
No	REFER to: Information and Entertainment System (415-00C Information and Entertainment System - General Information - Vehicles With: SYNC/Sony AM/FM/CD, Diagnosis and Testing).

The Air Inlet Door Is Inoperative

Refer to Wiring Diagrams Cell 55 for schematic and connector information.

Normal Operation and Fault Conditions

REFER to: Climate Control System - Vehicles With: Dual Automatic Temperature Control (DATC) - System Operation and Component Description (412-00 Climate Control System - General Information, Description and Operation).

During an actuator calibration cycle, the HVAC control module drives the air inlet blend door until the door reaches both internal stops in the HVAC case. If the air inlet blend door is temporarily obstructed or binding during a calibration cycle, the HVAC control module may interpret this as the actual end of travel for the door. When this condition occurs and the HVAC control module commands the actuator to its end of travel, the air intake may not be from the expected source.

DTC Fault Trigger Conditions

DTC	Description	Fault Trigger Conditions
B1083:00	Recirculation Damper Motor: No Sub Type Information	This DTC sets when the HVAC control module senses a short to voltage, a short to ground, or an open when motor movement is commanded.

Possible Sources

- Wiring, terminals or connectors
- Air inlet blend door actuator
- Air inlet blend door binding or stuck
- HVAC control module

PINPOINT TEST E : THE AIR INLET DOOR IS INOPERATIVE

NOTICE: Use the correct probe adapter(s) from the Flex Probe Kit when taking measurements. Failure to use the correct probe adapter(s) may damage the connector.

E1 CHECK THE AIR INLET MODE DOOR ACTUATOR CIRCUITS FOR A SHORT TO VOLTAGE

- Ignition OFF.
- Disconnect HVAC C228A .
- Disconnect Air Inlet Mode Door Actuator C282 .
- Ignition ON.
- Measure:

Positive Lead	Measurement / Action	Negative Lead
C228A-1	V	—
C228A-13	V	—
C228A-2	V	—
C228A-14	V	—
C228A-15	V	—

Is there any voltage present?

Yes	REPAIR the circuit in question.
No	GO to E2

E2 CHECK THE AIR INLET MODE DOOR ACTUATOR CIRCUITS FOR A SHORT TO GROUND

- Ignition OFF.
- Measure:

Positive Lead	Measurement / Action	Negative Lead
C228A-1	Ω	—
C228A-13	Ω	—
C228A-2	Ω	—
C228A-14	Ω	—
C228A-15	Ω	—

Are the resistances greater than 10,000 ohms?

Yes	GO to E3
No	REPAIR the circuit in question.

E3 CHECK THE AIR INLET MODE DOOR ACTUATOR CIRCUITS FOR AN OPEN

- Measure:

Positive Lead	Measurement / Action	Negative Lead
C228A-1	Ω	C282-1

C228A-13	Ω	C282-2
C228A-2	Ω	C282-3
C228A-14	Ω	C282-4
C228A-15	Ω	C282-6

Are the resistances less than 3 ohms?

Yes	GO to E4
No	REPAIR the circuit in question.

E4 CHECK THE AIR INLET MODE DOOR ACTUATOR CIRCUITS FOR BEING SHORTED TOGETHER

- Measure:

Positive Lead	Measurement / Action	Negative Lead
C282-1	Ω	C282-2
C282-1	Ω	C282-3
C282-1	Ω	C282-4
C282-1	Ω	C282-6
C282-2	Ω	C282-3
C282-2	Ω	C282-4
C282-2	Ω	C282-6
C282-3	Ω	C282-4
C282-3	Ω	C282-6
C282-4	Ω	C282-6

Are the resistances greater than 10,000 ohms?

Yes	INSTALL a new air inlet blend door actuator, REFER to: Air Inlet Door Actuator - Vehicles With: Dual Automatic Temperature Control (DATC) (412-00 Climate Control System - General Information, Removal and Installation). TEST the system for normal operation. If the concern is still present,
No	REPAIR the circuit in question.

E5 CHECK THE INLET MODE DOOR ACTUATOR POWER CIRCUIT FOR VOLTAGE

- Connect HVAC control module C228A .
- Ignition ON.
- Measure:

Positive Lead	Measurement / Action	Negative Lead
	V	

C282-2		—

Is any voltage present?

Yes	INSTALL a new air inlet blend door actuator, REFER to: Air Inlet Door Actuator - Vehicles With: Dual Automatic Temperature Control (DATC) (412-00 Climate Control System - General Information, Removal and Installation). TEST the system for normal operation. If the concern is still present, GO to E6
No	GO to E6

E6 CHECK FOR CORRECT HVAC (HEATING, VENTILATION AND AIR CONDITIONING) MODULE OPERATION

- Ignition OFF.
- Disconnect and inspect all the HVAC control module connectors.
- Repair:
  - corrosion (install new connector or terminals – clean module pins)
  - damaged or bent pins – install new terminals/pins
  - pushed-out pins – install new pins as necessary
- Reconnect the HVAC control module connectors. Make sure they seat and latch correctly.
- Operate the system and determine if the concern is still present.

Is the concern still present?

Yes	CHECK OASIS for any applicable Technical Service Bulletins (TSBs). If a TSB exists for this concern, DISCONTINUE this test and FOLLOW TSB instructions. If no Technical Service Bulletins (TSBs) address this concern, INSTALL a new HVAC control module. REFER to: Heating, Ventilation and Air Conditioning (HVAC) Control Module (412-00 Climate Control System - General Information, Removal and Installation).
No	The system is operating correctly at this time. The concern may have been caused by module connections. Address the root cause of any connector or pin issues.

Incorrect or Erratic Direction of Airflow From Outlets

Refer to Wiring Diagrams Cell 55 for schematic and connector information.

Normal Operation and Fault Conditions

REFER to: Climate Control System - Vehicles With: Dual Automatic Temperature Control (DATC) - System Operation and Component Description (412-00 Climate Control System - General Information, Description and Operation).

During an actuator calibration cycle, the HVAC control module drives the defrost blend door or the register/footwell blend door until the door reaches the internal stops in the HVAC case. If either blend door is temporarily obstructed or binding during a calibration cycle, the HVAC control module may interpret this as the actual end of travel for the door. When this condition occurs and the HVAC control module commands the actuator to its end of travel, the airflow may not be from the expected outlets.

DTC Fault Trigger Conditions

DTC	Description	Fault Trigger Conditions
B1085:00	Defroster Damper Motor: No Sub Type Information	This DTC sets when the HVAC control module senses a short to voltage, a short to ground, or an open when motor movement is commanded.
B1086:00	Air Distribution Damper Motor: No Sub Type Information	This DTC sets when the HVAC control module senses a short to voltage, a short to ground, or an open when motor movement is commanded.

Possible Sources

- Wiring, terminals or connectors
- Defrost blend door actuator
- Panel/footwell blend door actuator
- HVAC control module

PINPOINT TEST F : INCORRECT OR ERRATIC DIRECTION OF AIRFLOW FROM OUTLETS

NOTICE: Use the correct probe adapter(s) from the Flex Probe Kit when taking measurements. Failure to use the correct probe adapter(s) may damage the connector.

F1 CHECK THE DEFROST MODE DOOR OR PANEL/FLOOR MODE DOOR ACTUATOR CIRCUITS FOR A SHORT TO VOLTAGE

- Ignition OFF.
- Disconnect HVAC C228A .
- Disconnect Defrost Mode Door Actuator C232 or Panel/Floor Mode Door Actuator C236 .
- Ignition ON.
- For the defrost blend door, measure:

Positive Lead	Measurement / Action	Negative Lead
C228A-7		—
C228A-11		—
C228A-8		—
C228A-20		—
C228A-21		—

- For the register/footwell blend door, measure:

Positive Lead	Measurement / Action	Negative Lead
C228A-5		—
C228A-26		—
C228A-6		—
C228A-18		—
C228A-19		—

Is there any voltage present?

Yes	REPAIR the circuit in question.

No	GO to F2

F2 CHECK THE DEFROST MODE DOOR OR PANEL/FLOOR MODE DOOR ACTUATOR CIRCUITS FOR A SHORT TO GROUND

- Ignition OFF.
- For the defrost blend door, measure:

Positive Lead	Measurement / Action	Negative Lead
C228A-7	Ω	—
C228A-11	Ω	—
C228A-8	Ω	—
C228A-20	Ω	—
C228A-21	Ω	—

- For the register/footwell blend door, measure:

Positive Lead	Measurement / Action	Negative Lead
C228A-5	Ω	—
C228A-26	Ω	—
C228A-6	Ω	—
C228A-18	Ω	—
C228A-19	Ω	—

Are the resistances greater than 10,000 ohms?

Yes	GO to F3
No	REPAIR the circuit in question.

F3 CHECK THE DEFROST MODE DOOR OR PANEL/FLOOR MODE DOOR ACTUATOR CIRCUITS FOR AN OPEN

- For the defrost blend door, measure:

Positive Lead	Measurement / Action	Negative Lead
C228A-7	Ω	C232-1
C228A-11	Ω	C232-2
C228A-8	Ω	C232-3
C228A-20	Ω	C232-4
C228A-21	Ω	C232-6

- For the register/footwell blend door, measure:

Positive Lead	Measurement / Action	Negative Lead
C228A-5	Ω	C236-1
C228A-26	Ω	C236-2
C228A-6	Ω	C236-3
C228A-18	Ω	C236-4
C228A-19	Ω	C236-6

Are the resistances less than 3 ohms?

Yes	GO to F4
No	REPAIR the circuit.

F4 CHECK THE DEFROST MODE DOOR OR PANEL/FLOOR MODE DOOR ACTUATOR CIRCUITS FOR BEING SHORTED TOGETHER

- For the defrost blend door, measure:

Positive Lead	Measurement / Action	Negative Lead
C232-1	Ω	C232-2
C232-1	Ω	C232-3
C232-1	Ω	C232-4
C232-1	Ω	C232-6
C232-2	Ω	C232-3
C232-2	Ω	C232-4
C232-2	Ω	C232-6
C232-3	Ω	C232-4
C232-3	Ω	C232-6
C232-4	Ω	C232-6

- For the register/footwell blend door, measure:

Positive Lead	Measurement / Action	Negative Lead
C236-1	Ω	C236-2
C236-1	Ω	C236-3
C236-1	Ω	C236-4
C236-1	Ω	C236-6
C236-2	Ω	C236-3
C236-2	Ω	C236-4

C236-2	Ω	C236-6
C236-3	Ω	C236-4
C236-3	Ω	C236-6
C236-4	Ω	C236-6

Are the resistances greater than 10,000 ohms?

Yes	GO to F5
No	REPAIR the circuit in question.

F5 CHECK THE DEFROST MODE DOOR OR PANEL/FLOOR MODE DOOR ACTUATOR POWER CIRCUIT FOR VOLTAGE

- Connect HVAC control module C228A .
- Ignition ON.
- For the defrost blend door, measure:

Positive Lead	Measurement / Action	Negative Lead
C232-2	V	—

- For the register/footwell blend door, measure:

Positive Lead	Measurement / Action	Negative Lead
C236-2	V	—

Is any voltage present?

Yes	INSTALL a new air inlet blend door actuator, REFER to: Air Inlet Door Actuator - Vehicles With: Dual Automatic Temperature Control (DATC) (412-00 Climate Control System - General Information, Removal and Installation). TEST the system for normal operation. If the concern is still present, GO to F6
No	GO to F6

F6 CHECK FOR CORRECT HVAC (HEATING, VENTILATION AND AIR CONDITIONING) MODULE OPERATION

- Ignition OFF.
- Disconnect and inspect all the HVAC control module connectors.
- Repair:
  - corrosion (install new connector or terminals – clean module pins)
  - damaged or bent pins – install new terminals/pins
  - pushed-out pins – install new pins as necessary
- Reconnect the HVAC control module connectors. Make sure they seat and latch correctly.
- Operate the system and determine if the concern is still present.

Is the concern still present?

Yes	CHECK OASIS for any applicable Technical Service Bulletins (TSBs). If a TSB exists for this concern, DISCONTINUE this test and FOLLOW TSB instructions. If no Technical Service Bulletins (TSBs) address this concern, INSTALL a new HVAC control module. REFER to: Heating, Ventilation and Air Conditioning (HVAC) Control Module (412-00 Climate Control System - General Information, Removal and Installation).
No	The system is operating correctly at this time. The concern may have been caused by module connections. Address the root cause of any connector or pin issues.

Insufficient, Erratic or No Heat

Normal Operation and Fault Conditions

When the engine is at operating temperature hot coolant flows from the engine through the heater core and back to the engine. Correct coolant temperatures are critical for good heater performance.

Visual Inspection and Diagnostic Pre-checks

- Inspect for low engine coolant level.

Possible Sources

- Low engine coolant level
- Plugged or partially plugged heater core
- Temperature blend door(s) binding or stuck
- Temperature blend door actuator(s)

PINPOINT TEST G : INSUFFICIENT, ERRATIC, OR NO HEAT

G1 CHECK FOR CORRECT ENGINE COOLANT LEVEL

- Ignition OFF.
- Check the engine coolant level.

Is the engine coolant at the correct level as indicated on the engine coolant recovery reservoir?

Yes	GO to G2
No	For 2.0L Duratec-HE REFER to: Engine Cooling (303-03A Engine Cooling - 2.0L Duratec-HE (125kW/170PS) - MI4, Diagnosis and Testing). For 2.0L Ecoboost REFER to: Engine Cooling (303-03B Engine Cooling - 2.0L EcoBoost (184kW/250PS) - MI4, Diagnosis and Testing).

G2 CHECK FOR COOLANT FLOW TO THE HEATER CORE

- Run the engine until it reaches normal operating temperature. Select the footwell position on the control assembly. Set the temperature control to full warm and the blower to the lowest setting.
- Using a suitable temperature measuring device, measure the heater core inlet hose temperature.

Is the heater core inlet hose temperature above 65.6 C (150 F)?

Yes	GO to G3
No	Diagnose the engine does not reach normal operating temperature. For 2.0L Duratec-HE

	REFER to: Engine Cooling (303-03A Engine Cooling - 2.0L Duratec-HE (125kW/170PS) - MI4, Diagnosis and Testing). For 2.0L Ecoboost REFER to: Engine Cooling (303-03B Engine Cooling - 2.0L EcoBoost (184kW/250PS) - MI4, Diagnosis and Testing).

G3 CHECK FOR A PLUGGED OR RESTRICTED HEATER CORE

- Using a suitable temperature measuring device, measure the heater core outlet hose temperature.

Is the heater core outlet hose temperature similar to the inlet hose temperature (within approximately 6 C (42.8 F) – 17 C (62.6 F)?

Yes	DIAGNOSE for a blend door actuator. For inadequate temperature out of the LH side, GO to Pinpoint Test K For inadequate temperature out of the RH side, GO to Pinpoint Test L
No	INSTALL a new heater core. REFER to: Heater Core (412-00 Climate Control System - General Information, Removal and Installation).

The Air Conditioning (AC) Is Inoperative

Refer to Wiring Diagrams Cell 55 for schematic and connector information.

Normal Operation and Fault Conditions

REFER to: Climate Control System - Vehicles With: Dual Automatic Temperature Control (DATC) - System Operation and Component Description (412-00 Climate Control System - General Information, Description and Operation).

Possible Sources

- Fuse
- Wiring, terminals or connectors
- A/C system discharged/low charge
- A/C clutch relay
- A/C compressor clutch air gap
- A/C pressure transducer
- Evaporator temperature sensor
- A/C compressor clutch field coil
- HVAC control module
- PCM
- FCIM

Visual Inspection and Diagnostic Pre-checks

- Inspect BJB fuse 27 (15A).
- Inspect the A/C clutch relay.

PINPOINT TEST H : THE AIR CONDITIONING (AC) IS INOPERATIVE

NOTICE: Use the correct probe adapter(s) from the Flex Probe Kit when taking measurements. Failure to use the correct probe adapter(s) may damage the connector.

H1 CHECK THE A/C SYSTEM PRESSURE

Ignition OFF.
- With a manifold gauge set connected, check the A/C system pressure.

Is the A/C system pressure above 290 kPa (42 psi)?

Yes	GO to H2
No	CHECK the A/C system for leaks. Refer to Evaporator or Condenser On-Vehicle Leak Test or Air Conditioning (AC) Compressor External Leak Test in this section. RECHARGE the A/C system. REFER to: Air Conditioning (A/C) System Recovery, Evacuation and Charging (412-00 Climate Control System - General Information, General Procedures).

H2 CHECK THE A/C (AIR CONDITIONING) PRESSURE SENSOR (ACP_PRESS) PID

- Using a scan tool, view PCM PIDs.
- With a manifold gauge set connected, compare the pressure readings of the manifold gauge set and the ACP_PRESS PID.

Are the pressure values of the manifold gauge set and the PID similar?

Yes	GO to H3
No	INSTALL a new A/C pressure transducer. REFER to: Air Conditioning (A/C) Pressure Transducer (412-00 Climate Control System - General Information, Removal and Installation).

H3 COMPARE THE EVAPORATOR TEMPERATURE SENSOR RESISTANCE TO THE POWERTRAIN CONTROL MODULE (PCM) AMBIENT AIR TEMPERATURE (AAT) PID

- Ignition OFF.
- Allow the vehicle exterior and interior to stabilize to the outside ambient temperature.
- Disconnect Evaporator Temperature Sensor C296 .
- Measure:

Positive Lead	Measurement / Action	Negative Lead
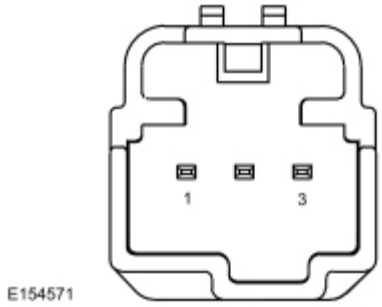 pin 1 - (component side)	Ω	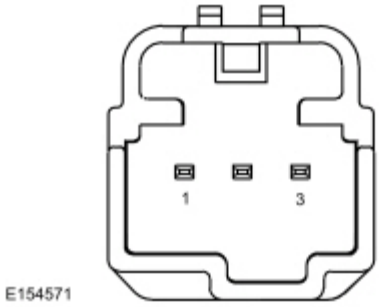 pin 3 - (Component Side)

- Compare the resistance values to the table below:

Ambient Temperature °F (°C)	Resistance
-4.0°F (-20°C)	263,111 — 290,807 ohms
32.0°F (0°C)	91,058 — 100,644 ohms

68.0°F (20°C)	35,473 — 39,207 ohms
77.0°F (25°C)	28,500 — 31,500 ohms
103.9°F (40°C)	15,307 — 16,919 ohms
139.9°F (60°C)	7,171 — 7,925 ohms

- Ignition ON.
- Using a scan tool, view PCM PIDs.
- Monitor the AAT PID.

Are the temperature values similar?

Yes	GO to H4
No	INSTALL a new evaporator temperature sensor. REFER to: Evaporator Temperature Sensor (412-00 Climate Control System - General Information, Removal and Installation).

H4 CHECK THE A/C SWITCH (CC_SW_AC) HVAC PID WITH THE A/C ON

- Using a scan tool, view HVAC module PIDs.
- Monitor the CC_SW_AC PID.
- Select panel, press the A/C button (indicator on) on the HVAC control module.

Does the PID read ON when the button is pressed?

Yes	GO to H5
No	GO to H12

H5 CHECK THE AIR CONDITIONING REQUEST SIGNAL (AC_REQ) PCM PID WITH THE A/C ON

- Start the engine.
- Using a scan tool, view PCM PIDs.
- Monitor the AC_REQ PID
- Select panel, press the A/C button (indicator on) on the HVAC controls.

Does the PID read ON when the button is pressed?

Yes	GO to H6
No	GO to H12

H6 CHECK THE AIR CONDITIONING COMPRESSOR COMMANDED STATE (ACC_CMD) PCM (POWERTRAIN CONTROL MODULE) PID WITH THE A/C (AIR CONDITIONING) ON

- Using a scan tool, view PCM PIDs.
- Active command the A/C compressor on using the ACC_CMD PID.

Does the A/C compressor turn on?

Yes	GO to H13
No	GO to H7

H7 CHECK THE VOLTAGE TO THE A/C CLUTCH RELAY

- Ignition OFF.
- Disconnect A/C Clutch Relay.
- Measure:

Positive Lead	Measurement / Action	Negative Lead
Pin 3	V	—

Is the voltage greater than 11 volts?

Yes	GO to H8
No	VERIFY BJB fuse 27 (15A) is OK. If OK, REPAIR the circuit. If not OK, REFER to the Wiring Diagrams manual to identify the possible causes of the circuit short.

H8 BYPASS THE A/C CLUTCH RELAY

- Connect a fused jumper wire between:

Positive Lead	Measurement / Action	Negative Lead
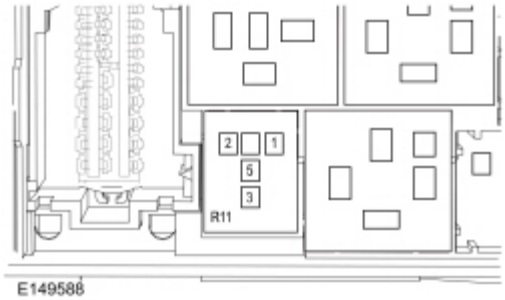 pin 3		pin 5

Does the A/C compressor clutch engage?

Yes	REMOVE the fused jumper wire. INSTALL a new A/C clutch relay.

No	LEAVE the fused jumper wire installed. GO to H9

H9 CHECK THE A/C COMPRESSOR CLUTCH FIELD COIL VOLTAGE SUPPLY CIRCUIT FOR AN OPEN

- Disconnect A/C Compressor Clutch Field Coil C100 .
- Measure:

Positive Lead	Measurement / Action	Negative Lead
C100-1	⊕ V ⊖	—

Is the voltage greater than 11 volts?

Yes	REMOVE the fused jumper wire. GO to H10
No	REMOVE the fused jumper wire. REPAIR the circuit.

H10 CHECK THE A/C COMPRESSOR CLUTCH FIELD COIL GROUND CIRCUIT FOR AN OPEN

- Measure:

Positive Lead	Measurement / Action	Negative Lead
C100-2	Ω	—

Is the resistance less than 3 ohms?

Yes	GO to H11
No	REPAIR the circuit.

H11 CHECK THE A/C (AIR CONDITIONING) COMPRESSOR CLUTCH AIR GAP

- Measure the A/C compressor clutch air gap at 3 equally spaced locations between the clutch hub and the A/C compressor clutch pulley.

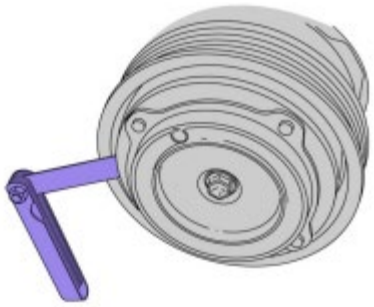

E153155

Is the A/C compressor clutch air gap greater than 0.6 mm (0.0236 in)?

Yes	ADJUST the A/C compressor clutch gap.

	REFER to: Air Conditioning (A/C) Clutch Air Gap Adjustment (412-00 Climate Control System - General Information, General Procedures).
No	INSTALL a new A/C compressor clutch assembly. REFER to: Air Conditioning (A/C) Clutch and Air Conditioning (A/C) Clutch Field Coil (412-00 Climate Control System - General Information, Removal and Installation).

H12 CHECK FOR CORRECT HVAC (HEATING, VENTILATION AND AIR CONDITIONING) MODULE OPERATION

- Ignition OFF.
- Disconnect and inspect the HVAC control module connectors.
- Repair:
  - corrosion (replace connector or terminals – clean module pins)
  - damaged or bent pins – replace terminals/pins
  - pushed-out pins – replace pins as necessary
- Reconnect the HVAC control module connectors. Make sure they seat and latch correctly.
- Operate the system and verify the concern is still present.

Is the concern still present?

Yes	CHECK OASIS for any applicable Technical Service Bulletins (TSBs). If a TSB exists for this concern, discontinue this test and follow TSB instructions. If no Technical Service Bulletins (TSBs) address this concern, INSTALL a new HVAC control module. REFER to: Heating, Ventilation and Air Conditioning (HVAC) Control Module (412-00 Climate Control System - General Information, Removal and Installation).
No	The system is operating correctly at this time. The concern may have been caused by module connections. Address the root cause of any connector or pin issues.

H13 CHECK FOR CORRECT PCM (POWERTRAIN CONTROL MODULE) OPERATION

- Ignition OFF.
- Disconnect and inspect the PCM connectors.
- Repair:
  - corrosion (replace connector or terminals – clean module pins)
  - damaged or bent pins – replace terminals/pins
  - pushed-out pins – replace pins as necessary
- Reconnect the PCM connectors. Make sure they seat and latch correctly.
- Operate the system and verify the concern is still present.

Is the concern still present?

Yes	CHECK OASIS for any applicable Technical Service Bulletins (TSBs). If a TSB exists for this concern, discontinue this test and follow TSB instructions. If no Technical Service Bulletins (TSBs) address this concern, INSTALL a new PCM . For 2.0L Duratec-HE REFER to: Powertrain Control Module (PCM) (303-14A Electronic Engine Controls - 2.0L Duratec-HE (125kW/170PS) - MI4, Removal and Installation). For 2.0L Ecoboost REFER to: Powertrain Control Module (PCM) (303-14B Electronic Engine Controls - 2.0L EcoBoost (184kW/250PS) - MI4, Removal and Installation).
No	The system is operating correctly at this time. The concern may have been caused by module connections. Address the root cause of any connector or pin issues.

The Air Conditioning (AC) Is Always On

Refer to Wiring Diagrams Cell 55 for schematic and connector information.

Normal Operation and Fault Conditions

REFER to: Climate Control System - Vehicles With: Dual Automatic Temperature Control (DATC) - System Operation and Component Description (412-00 Climate Control System - General Information, Description and Operation).

Possible Sources

- Wiring, terminals or connectors
- A/C clutch relay
- A/C compressor clutch air gap
- PCM

Visual Inspection and Diagnostic Pre-checks

- Inspect the A/C clutch relay.

PINPOINT TEST I : THE AIR CONDITIONING (AC) IS ALWAYS ON

NOTICE: Use the correct probe adapter(s) from the Flex Probe Kit when taking measurements. Failure to use the correct probe adapter(s) may damage the connector.

I1 CHECK FOR A/C (AIR CONDITIONING) CLUTCH OPERATION WITH THE A/C (AIR CONDITIONING) CLUTCH RELAY DISCONNECTED

- Disconnect A/C Clutch Relay.
- KOER

Is the A/C compressor on?

Yes	GO to I2
No	INSTALL a new A/C clutch relay. TEST the system for normal operation. If the concern is still present, GO to I4

I2 CHECK THE POWER CIRCUIT TO THE A/C (AIR CONDITIONING) COMPRESSOR CLUTCH FOR A SHORT TO VOLTAGE

- Ignition OFF.
- Disconnect A/C Clutch Relay.
- Disconnect A/C Compressor Clutch Field Coil.
- Measure:

Positive Lead	Measurement / Action	Negative Lead
Pin 5	V	—

Is any voltage present?

Yes	REPAIR the circuit.
No	GO to I3

I3 CHECK THE A/C (AIR CONDITIONING) COMPRESSOR CLUTCH AIR GAP

- Measure the A/C compressor clutch air gap at 3 equally spaced locations between the clutch hub and the A/C compressor clutch pulley.

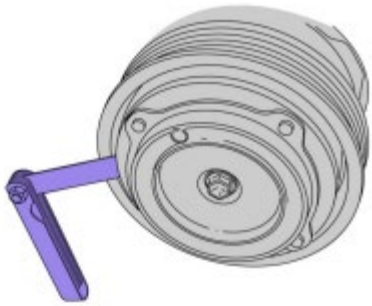

E153155

Is the A/C compressor clutch air gap less than 0.6 mm (0.0236 in)?

Yes	ADJUST the A/C compressor clutch gap. REFER to: Air Conditioning (A/C) Clutch Air Gap Adjustment (412-00 Climate Control System - General Information, General Procedures).
No	INSTALL a new A/C compressor clutch assembly. REFER to: Air Conditioning (A/C) Clutch and Air Conditioning (A/C) Clutch Field Coil (412-00 Climate Control System - General Information, Removal and Installation).

I4 CHECK THE A/C (AIR CONDITIONING) RELAY CONTROL CIRCUIT FOR A SHORT TO GROUND

- Ignition OFF.
- Disconnect A/C Clutch Relay.
- Disconnect PCM C175B .
- Measure:

Positive Lead	Measurement / Action	Negative Lead
 E149588 Pin 2	Ω	—

Is the resistance greater than 10,000 ohms?

Yes	GO to I5
No	REPAIR the circuit.

I5 CHECK FOR CORRECT PCM (POWERTRAIN CONTROL MODULE) OPERATION

- Ignition OFF.
- Disconnect and inspect all the PCM connectors.
- Repair:
  - corrosion (install new connector or terminals – clean module pins)
  - damaged or bent pins – install new terminals/pins
  - pushed-out pins – install new pins as necessary
- Reconnect the PCM connectors. Make sure they seat and latch correctly.
- Operate the system and determine if the concern is still present.

Is the concern still present?

Yes	CHECK OASIS for any applicable Technical Service Bulletins (TSBs). If a TSB exists for this concern, DISCONTINUE this test and FOLLOW TSB instructions. If no Technical Service Bulletins (TSBs) address this concern, INSTALL a new PCM . For 2.0L Duratec-HE REFER to: Powertrain Control Module (PCM) (303-14A Electronic Engine Controls - 2.0L Duratec-HE (125kW/170PS) - MI4, Removal and Installation). For 2.0L Ecoboost REFER to: Powertrain Control Module (PCM) (303-14B Electronic Engine Controls - 2.0L EcoBoost (184kW/250PS) - MI4, Removal and Installation).
No	The system is operating correctly at this time. The concern may have been caused by module connections. Address the root cause of any connector or pin issues.

The Air Conditioning (AC) Is Always On - AC Mode Always Commanded On

Refer to Wiring Diagrams Cell 55 for schematic and connector information.

Normal Operation and Fault Conditions

REFER to: Climate Control System - Vehicles With: Dual Automatic Temperature Control (DATC) - System Operation and Component Description (412-00 Climate Control System - General Information, Description and Operation).

DTC Fault Trigger Conditions

DTC	Description	Fault Trigger Conditions
P1464:00	A/C Demand Out Of Self Test Range: No Sub Type Information	This DTC sets when the PCM senses an A/C request during a PCM self-test.

Possible Sources

- Wiring, terminals or connectors
- HVAC control module
- PCM

PINPOINT TEST J : THE AIR CONDITIONING (AC) IS ALWAYS ON - AC MODE ALWAYS COMMANDED ON

J1 CHECK THE AIR CONDITIONING SWITCH STATUS (CC_SW_AC) PID WITH THE A/C (AIR CONDITIONING) OFF

- Using a scan tool, view HVAC control module PIDs.
- Monitor the CC_SW_AC PID.

Does the PID read off?

Yes	GO to J2
No	GO to J4

J2 CHECK THE AIR CONDITIONING REQUEST SIGNAL (AC_REQ) PID WITH THE A/C (AIR CONDITIONING) OFF

- Using a scan tool, view PCM PIDs.
- Monitor the AC_REQ PID
- Select MAX A/C on the HVAC control module.

Does the PID read OFF?

Yes	GO to J5
No	GO to J3

J3 CHECK THE AIR CONDITIONING REQUEST SIGNAL (AC_REQ) PID WITH THE A/C (AIR CONDITIONING) OFF

- Disconnect HVAC Module C228A .
- Using a scan tool, view PCM PIDs.
- Monitor the AC_REQ PID.

Does the PID read OFF?

Yes	GO to J5
No	GO to J4

J4 CHECK FOR CORRECT HVAC (HEATING, VENTILATION AND AIR CONDITIONING) MODULE OPERATION

- Ignition OFF.
- Disconnect and inspect all the HVAC control module connectors.
- Repair:
  - corrosion (install new connector or terminals – clean module pins)
  - damaged or bent pins – install new terminals/pins
  - pushed-out pins – install new pins as necessary
- Reconnect the HVAC control module connectors. Make sure they seat and latch correctly.
- Operate the system and determine if the concern is still present.

Is the concern still present?

Yes	CHECK OASIS for any applicable Technical Service Bulletins (TSBs). If a TSB exists for this concern,

	DISCONTINUE this test and FOLLOW TSB instructions. If no Technical Service Bulletins (TSBs) address this concern, INSTALL a new HVAC control module. REFER to: Heating, Ventilation and Air Conditioning (HVAC) Control Module (412-00 Climate Control System - General Information, Removal and Installation).
No	The system is operating correctly at this time. The concern may have been caused by module connections. Address the root cause of any connector or pin issues.

J5 CHECK FOR CORRECT PCM (POWERTRAIN CONTROL MODULE) OPERATION

- Ignition OFF.
- Disconnect and inspect all the PCM connectors.
- Repair:
  - corrosion (install new connector or terminals – clean module pins)
  - damaged or bent pins – install new terminals/pins
  - pushed-out pins – install new pins as necessary
- Reconnect the PCM connectors. Make sure they seat and latch correctly.
- Operate the system and determine if the concern is still present.

Is the concern still present?

Yes	CHECK OASIS for any applicable Technical Service Bulletins (TSBs). If a TSB exists for this concern, DISCONTINUE this test and FOLLOW TSB instructions. If no Technical Service Bulletins (TSBs) address this concern, INSTALL a new PCM . For 2.0L Duratec REFER to: Powertrain Control Module (PCM) (303-14A Electronic Engine Controls - 2.0L Duratec-HE (125kW/170PS) - MI4, Removal and Installation). For 2.0L Ecoboost REFER to: Powertrain Control Module (PCM) (303-14B Electronic Engine Controls - 2.0L EcoBoost (184kW/250PS) - MI4, Removal and Installation).
No	The system is operating correctly at this time. The concern may have been caused by module connections. Address the root cause of any connector or pin issues.

The Temperature Control Is Inoperative or Does Not Operate Correctly - LH

Refer to Wiring Diagrams Cell 55 for schematic and connector information.

Normal Operation and Fault Conditions

REFER to: Climate Control System - Vehicles With: Dual Automatic Temperature Control (DATC) - System Operation and Component Description (412-00 Climate Control System - General Information, Description and Operation).

During an actuator calibration cycle, the HVAC control module drives the temperature blend door until the door reaches both internal stops in the HVAC case. If the temperature blend door is temporarily obstructed or binding during a calibration cycle, the HVAC control module may interpret this as the actual end of travel for the door. When this condition occurs and the HVAC control module commands the actuator to its end of travel, the airflow may not be the expected temperature.

DTC Fault Trigger Conditions

DTC	Description	Fault Trigger Conditions
B1081:00	Left Temperature Damper Motor: No Sub Type Information	This DTC sets when the HVAC control module senses a short to voltage, a short to ground, or an open when motor movement is commanded.

Possible Sources

- Wiring, terminals or connectors
- Temperature blend door is binding or stuck
- Temperature blend door actuator
- HVAC control module

PINPOINT TEST K : THE TEMPERATURE CONTROL IS INOPERATIVE OR DOES NOT OPERATE CORRECTLY - DRIVER SIDE

NOTICE: Use the correct probe adapter(s) from the Flex Probe Kit when taking measurements. Failure to use the correct probe adapter(s) may damage the connector.

K1 CHECK THE DRIVER SIDE TEMPERATURE BLEND DOOR ACTUATOR CIRCUITS FOR A SHORT TO VOLTAGE

- Ignition OFF.
- Disconnect HVAC Module C228A .
- Disconnect Driver Side Temperature Blend Door Actuator C2091 .
- Ignition ON.
- Measure:

Positive Lead	Measurement / Action	Negative Lead
C228A-3	V	—
C228A-12	V	—
C228A-4	V	—
C228A-16	V	—
C228A-17	V	—

Is any voltage present?

Yes	REPAIR the circuit in question.
No	GO to K2

K2 CHECK THE DRIVER SIDE TEMPERATURE BLEND DOOR ACTUATOR CIRCUITS FOR A SHORT TO GROUND

- Ignition OFF.
- Measure:

Positive Lead	Measurement / Action	Negative Lead
C228A-3	Ω	—
C228A-12	Ω	—
C228A-4	Ω	—
C228A-16	Ω	—
C228A-17	Ω	—

Are the resistances greater than 10,000 ohms?

Yes	GO to K3
No	REPAIR the circuit in question.

K3 CHECK THE DRIVER SIDE TEMPERATURE BLEND DOOR ACTUATOR CIRCUITS FOR AN OPEN

- Measure:

Positive Lead	Measurement / Action	Negative Lead
C228A-3	Ω	C2091-1
C228A-12	Ω	C2091-2
C228A-4	Ω	C2091-3
C228A-16	Ω	C2091-4
C228A-17	Ω	C2091-6

Are the resistances less than 3 ohms?

Yes	GO to K4
No	REPAIR the circuit in question.

K4 CHECK THE DRIVER SIDE TEMPERATURE BLEND DOOR ACTUATOR CIRCUITS FOR BEING SHORTED TOGETHER

- Measure:

Positive Lead	Measurement / Action	Negative Lead
C2091-1	Ω	C2091-2
C2091-1	Ω	C2091-3
C2091-1	Ω	C2091-4
C2091-1	Ω	C2091-6
C2091-2	Ω	C2091-3
C2091-2	Ω	C2091-4
C2091-2	Ω	C2091-6
C2091-3	Ω	C2091-4
C2091-3	Ω	C2091-6
C2091-4	Ω	C2091-6

Are the resistances greater than 10,000 ohms?

Yes	GO to K5
No	REPAIR the circuit in question.

K5 CHECK THE DRIVER SIDE TEMPERATURE BLEND DOOR ACTUATOR POWER CIRCUIT FOR VOLTAGE

- Connect HVAC control module C228A .
- Ignition ON.
- Measure:

Positive Lead	Measurement / Action	Negative Lead
C2091-2	V	—

Is any voltage present?

Yes	INSTALL a new driver side temperature blend door actuator. REFER to: Driver Side Temperature Door Actuator - Vehicles With: Dual Automatic Temperature Control (DATC) (412-00 Climate Control System - General Information, Removal and Installation). TEST the system for normal operation. If the concern is still present, GO to K6
No	GO to K6

K6 CHECK FOR CORRECT HVAC (HEATING, VENTILATION AND AIR CONDITIONING) MODULE OPERATION

- Ignition OFF.
- Disconnect and inspect all the HVAC control module connectors.
- Repair:
  - corrosion (install new connector or terminals – clean module pins)
  - damaged or bent pins – install new terminals/pins
  - pushed-out pins – install new pins as necessary
- Reconnect the HVAC control module connectors. Make sure they seat and latch correctly.
- Operate the system and determine if the concern is still present.

Is the concern still present?

Yes	CHECK OASIS for any applicable Technical Service Bulletins (TSBs). If a TSB exists for this concern, DISCONTINUE this test and FOLLOW TSB instructions. If no Technical Service Bulletins (TSBs) address this concern, INSTALL a new HVAC control module. REFER to: Heating, Ventilation and Air Conditioning (HVAC) Control Module (412-00 Climate Control System - General Information, Removal and Installation).
No	The system is operating correctly at this time. The concern may have been caused by module connections. Address the root cause of any connector or pin issues.

The Temperature Control Is Inoperative or Does Not Operate Correctly - RH

Refer to Wiring Diagrams Cell 55 for schematic and connector information.

Normal Operation and Fault Conditions

REFER to: Climate Control System - Vehicles With: Dual Automatic Temperature Control (DATC) - System Operation and Component Description (412-00 Climate Control System - General Information, Description and Operation).

During an actuator calibration cycle, the HVAC control module drives the temperature blend door until the door reaches both internal stops in the HVAC case. If the temperature blend door is temporarily obstructed or binding during a calibration cycle, the HVAC control module may interpret this as the actual end of travel for the door. When this condition occurs and the HVAC control module commands the actuator to its end of travel, the airflow may not be the expected temperature.

DTC Fault Trigger Conditions

DTC	Description	Fault Trigger Conditions
B1082:00	Right Temperature Damper Motor: No Sub Type Information	This DTC sets when the HVAC control module senses a short to voltage, a short to ground, or an open when motor movement is commanded.

Possible Sources

- Wiring, terminals or connectors
- Temperature blend door is binding or stuck
- Temperature blend door actuator
- HVAC control module

PINPOINT TEST L : THE TEMPERATURE CONTROL IS INOPERATIVE OR DOES NOT OPERATE CORRECTLY - PASSENGER SIDE

NOTICE: Use the correct probe adapter(s) from the Flex Probe Kit when taking measurements. Failure to use the correct probe adapter(s) may damage the connector.

L1 CHECK THE PASSENGER SIDE TEMPERATURE BLEND DOOR ACTUATOR CIRCUITS FOR A SHORT TO VOLTAGE

- Ignition OFF.
- Disconnect HVAC Module C228A .
- Disconnect Passenger Side Temperature Blend Door Actuator C2092 .
- Ignition ON.
- Measure:

Positive Lead	Measurement / Action	Negative Lead
C228A-9		—
C228A-25		—
C228A-10		—
C228A-22		—
C228A-23		—

Is any voltage present?

Yes	REPAIR the circuit in question.

No	GO to L2

L2 CHECK THE PASSENGER SIDE TEMPERATURE BLEND DOOR ACTUATOR CIRCUITS FOR A SHORT TO GROUND

- Ignition OFF.
- Measure:

Positive Lead	Measurement / Action	Negative Lead
C228A-9	Ω	—
C228A-25	Ω	—
C228A-10	Ω	—
C228A-22	Ω	—
C228A-23	Ω	—

Are the resistances greater than 10,000 ohms?

Yes	GO to L3
No	REPAIR the circuit in question.

L3 CHECK THE PASSENGER SIDE TEMPERATURE BLEND DOOR ACTUATOR CIRCUITS FOR AN OPEN

- Measure:

Positive Lead	Measurement / Action	Negative Lead
C228A-9	Ω	C2092-1
C228A-25	Ω	C2092-2
C228A-10	Ω	C2092-3
C228A-22	Ω	C2092-4
C228A-23	Ω	C2092-6

Are the resistance less than 3 ohms?

Yes	GO to L4
No	REPAIR the circuit in question.

L4 CHECK THE PASSENGER SIDE TEMPERATURE BLEND DOOR ACTUATOR CIRCUITS FOR BEING SHORTED TOGETHER

- Measure:

Positive Lead	Measurement / Action	Negative Lead
C2092-1	Ω	C2092-2
C2092-1	Ω	C2092-3
C2092-1	Ω	C2092-4
C2092-1	Ω	C2092-6
C2092-2	Ω	C2092-3
C2092-2	Ω	C2092-4
C2092-2	Ω	C2092-6
C2092-3	Ω	C2092-4
C2092-3	Ω	C2092-6
C2092-4	Ω	C2092-6

Are the resistances greater than 10,000 ohms?

Yes	GO to L5
No	REPAIR the circuit in question.

L5 CHECK THE PASSENGER SIDE TEMPERATURE BLEND DOOR ACTUATOR POWER CIRCUIT FOR VOLTAGE

- Connect HVAC control module C228A .
- Ignition ON.
- Measure:

Positive Lead	Measurement / Action	Negative Lead
C2092-2	V	—

Is any voltage present?

Yes	INSTALL a new passenger side temperature blend door actuator. REFER to: Passenger Side Temperature Door Actuator - Vehicles With: Dual Automatic Temperature Control (DATC) (412-00 Climate Control System - General Information, Removal and Installation). TEST the system for normal operation. If the concern is still present, GO to L6 .
No	GO to L6

L6 CHECK FOR CORRECT HVAC (HEATING, VENTILATION AND AIR CONDITIONING) MODULE OPERATION

- Ignition OFF.
- Disconnect and inspect all the HVAC control module connectors.
- Repair:
  - corrosion (install new connector or terminals – clean module pins)
  - damaged or bent pins – install new terminals/pins
  - pushed-out pins – install new pins as necessary
- Reconnect the HVAC control module connectors. Make sure they seat and latch correctly.
- Operate the system and determine if the concern is still present.

Is the concern still present?

Yes	CHECK OASIS for any applicable Technical Service Bulletins (TSBs). If a TSB exists for this concern, DISCONTINUE this test and FOLLOW TSB instructions. If no Technical Service Bulletins (TSBs) address this concern, INSTALL a new HVAC control module. REFER to: Heating, Ventilation and Air Conditioning (HVAC) Control Module (412-00 Climate Control System - General Information, Removal and Installation).
No	The system is operating correctly at this time. The concern may have been caused by module connections. Address the root cause of any connector or pin issues.

The Blower Motor Is Inoperative

Refer to Wiring Diagrams Cell 55 for schematic and connector information.

Normal Operation and Fault Conditions

Voltage is supplied to the relay coil from BJB fuse 23 (5A) and relay switch contacts from BJB fuse 10 (40A). When the blower motor relay coil receives a ground from the BCM , the relay coil is energized and voltage is delivered to the blower motor control module. Power and ground for the blower motor is provided by the blower motor speed control. The HVAC control module sends a PWM signal to the blower motor speed control to control the blower speed.

DTC Fault Trigger Conditions

DTC	Description	Fault Trigger Conditions
B10AF:13	Blower Fan Relay General Electrical Failures Circuit: Open	This Continuous Memory Diagnostic Trouble Code (CMDTC) sets when the BCM senses no voltage on the relay coil ground circuit when the module is grounding the circuit.
B10AF:19	Blower Fan Relay General Electrical Failures Circuit: Current Above Threshold	This Continuous Memory Diagnostic Trouble Code (CMDTC) sets when the BCM senses excessive voltage on the relay coil ground circuit when the module is grounding the circuit.
B10B9:00	Blower Control: No Sub Type Information	This Continuous Memory Diagnostic Trouble Code (CMDTC) and on-demand DTC sets when the HVAC control module senses no voltage on the blower motor control PWM circuit.

Possible Sources

- Fuse
- Wiring, terminals or connectors
- Blower motor relay
- Blower motor
- Blower motor speed control
- HVAC control module
- BCM

Visual Inspection and Diagnostic Pre-checks

- Inspect BJB fuses 10 (40A) and 23 (5A).

PINPOINT TEST M : THE BLOWER MOTOR IS INOPERATIVE

NOTICE: Use the correct probe adapter(s) from the Flex Probe Kit when taking measurements. Failure to use the correct probe adapter(s) may damage the connector.

M1 CHECK THE BCM (BODY CONTROL MODULE) FOR DIAGNOSTIC TROUBLE CODES (DTCS)

- Ignition ON.
- Using a scan tool, perform BCM self-test.

Is DTC B10AF:13 or B10AF:19 received?

Yes	DTC B10AF:13, GO to M2 For DTC B10AF:19, GO to M5
No	GO to M6

M2 CHECK THE BLOWER MOTOR RELAY

- Swap the blower motor relay with a known good relay.
- Attempt to operate the blower motor.

Does the blower motor operate?

Yes	INSTALL a new blower motor relay.
No	GO to M3

M3 CHECK VOLTAGE TO THE BCM (BODY CONTROL MODULE) FROM THE BLOWER MOTOR REALY COIL CIRCUIT

- Ignition OFF.
- Disconnect BCM C2280A .
- Measure:

Positive Lead	Measurement / Action	Negative Lead
C2280A-28		—

Is the voltage greater than 11 volts?

Yes	GO to M18
No	GO to M4

M4 CHECK THE BLOWER MOTOR RELAY CONTROL CIRCUIT FOR AN OPEN

NOTE: *Early build vehicles may be equipped with a diode in the blower motor relay coil ground circuit. Make sure the multimeter leads are correctly attached during testing or a false reading will occur causing misdiagnosis of the circuit.*

- Disconnect Blower Motor Relay.
- Measure:

Positive Lead	Measurement / Action	Negative Lead
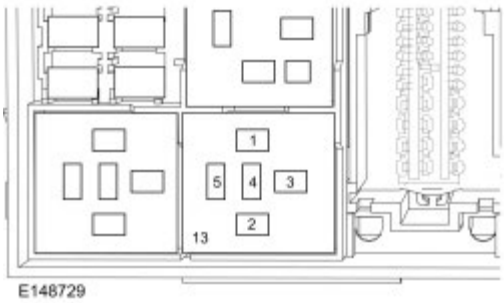 Pin 2	Ω	C2280A-28

Is the resistance less than 3 ohms?

Yes	VERIFY BJB fuse 23 (5A) is OK. If OK, REPAIR the circuit. If not OK, REFER to the Wiring Diagrams manual to identify the possible causes of the circuit short.
No	REPAIR the circuit.

M5 CHECK THE BLOWER MOTOR RELAY CONTROL CIRCUIT FOR A SHORT TO VOLTAGE

- Ignition OFF.
- Disconnect Blower Motor Relay.
- Disconnect BCM C2280A .
- Ignition ON.
- Measure:

Positive Lead	Measurement / Action	Negative Lead
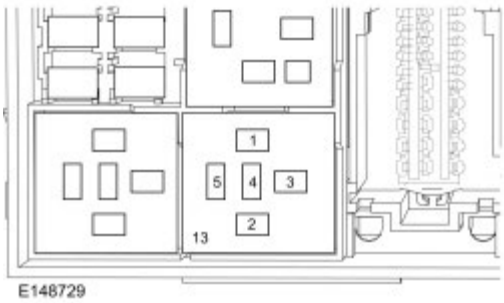 Pin 2	V	—

Is any voltage present?

Yes	REPAIR the circuit.
No	GO to M18

M6 CHECK THE BLOWER MOTOR RELAY

- Swap the blower motor relay with a known good relay.

- Attempt to operate the blower motor.

Does the blower motor operate?

Yes	INSTALL a new blower motor relay.
No	GO to M7

M7 CHECK VOLTAGE TO THE BLOWER MOTOR RELAY SWITCH CIRCUIT

- Disconnect Blower Motor Relay.
- Measure:

Positive Lead	Measurement / Action	Negative Lead
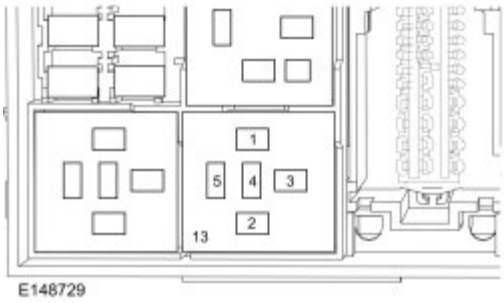 Pin 3	V	—

Is the voltage greater than 11 volts?

Yes	GO to M8
No	VERIFY BJB fuse 10 (40A) is OK. If OK, REPAIR the circuit. If not OK, REFER to the Wiring Diagrams manual to identify the possible causes of the circuit short.

M8 CHECK FOR VOLTAGE AT THE BLOWER MOTOR CONTROL

- Connect Blower Motor Relay.
- Disconnect Blower Motor Control C297A .
- Ignition ON.
- Select any panel mode position except "OFF".
- Measure:

Positive Lead	Measurement / Action	Negative Lead
C297A-4	V	—

Is the voltage greater than 11 volts?

Yes	GO to M11
No	GO to M9

M9 CHECK THE POWER CIRCUIT BETWEEN THE BJB (BATTERY JUNCTION BOX) AND BLOWER MOTOR CONTROL MODULE FOR AN OPEN

- Disconnect Blower Motor Relay.
- Measure:

Positive Lead	Measurement / Action	Negative Lead
C297A-4	Ω	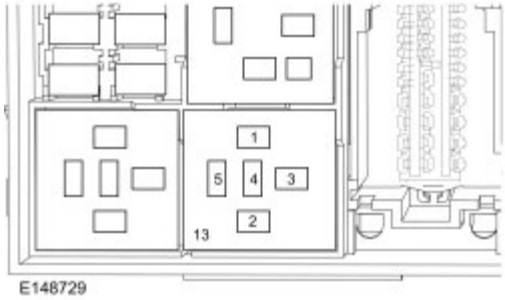 Pin 5

Is the resistance less than 3 ohms?

Yes	GO to M10
No	REPAIR the circuit.

M10 CHECK THE POWER CIRCUIT BETWEEN THE BJB (BATTERY JUNCTION BOX) AND BLOWER MOTOR CONTROL MODULE FOR A SHORT TO GROUND

- Measure:

Positive Lead	Measurement / Action	Negative Lead
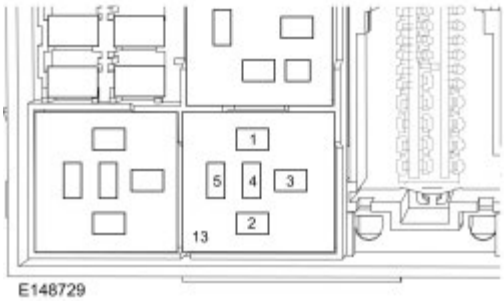 Pin 5	Ω	—

Is the resistance greater than 10,000 ohms?

Yes	GO to M18
No	REPAIR the circuit.

M11 CHECK BLOWER MOTOR CONTROL GROUND FOR AN OPEN

- Ignition OFF.
- Measure:

Positive Lead	Measurement / Action	Negative Lead
C297A-2	Ω	—

Is the resistance less than 3 ohms?

Yes	GO to M12
No	REPAIR the circuit.

M12 CHECK FOR VOLTAGE TO THE BLOWER MOTOR

- Ignition OFF.
- Connect Blower Motor Control C297A .
- Disconnect Blower Motor C2004 .
- Ignition ON.
- Select the highest blower motor setting.
- Measure:

Positive Lead	Measurement / Action	Negative Lead
C2004-1	V	C2004-2

Is the voltage greater than 11 volts?

Yes	INSTALL a new blower motor. REFER to: Blower Motor - Vehicles With: Dual Automatic Temperature Control (DATC) (412-00 Climate Control System - General Information, Removal and Installation).
No	GO to M13

M13 CHECK THE CIRCUITS TO THE BLOWER MOTOR FOR AN OPEN

- Ignition OFF.
- Disconnect Blower Motor Control C297B .
- Measure:

Positive Lead	Measurement / Action	Negative Lead
C297B-1	Ω	C2004-1
C297B-2	Ω	C2004-2

Are the resistances less than 3 ohms?

Yes	GO to M14
No	REPAIR the circuit in question.

M14 CHECK THE BLOWER MOTOR CIRCUITS FOR A SHORT TOGETHER

- Measure:

Positive Lead	Measurement / Action	Negative Lead
C297B-1	Ω	C297B-2

Is the resistance greater than 10,000 ohms?

Yes	GO to M15
No	REPAIR the circuits.

M15 CHECK THE BLOWER MOTOR CONTROL CIRCUIT FOR A SHORT TO VOLTAGE

- Ignition OFF.
- Disconnect Blower Motor Speed Control C297A .
- Disconnect HVAC C228B .
- Ignition ON.
- Measure:

Positive Lead	Measurement / Action	Negative Lead
C228B-15	V	—

Is any voltage present?

Yes	REPAIR the circuit.
No	GO to M16

M16 CHECK THE BLOWER MOTOR CONTROL CIRCUIT FOR A SHORT TO GROUND

- Ignition OFF.
- Measure:

Positive Lead	Measurement / Action	Negative Lead
C228B-15	Ω	—

Is the resistance greater than 10,000 ohms?

Yes	GO to M17
No	REPAIR the circuit.

M17 CHECK THE BLOWER MOTOR CONTROL CIRCUIT FOR AN OPEN

- Measure:

Positive Lead	Measurement / Action	Negative Lead
C228B-15	Ω	C297A-3

Is the resistance less than 3 ohms?

Yes	INSTALL a new blower motor speed control. REFER to: Blower Motor Speed Control - Vehicles With: Dual Automatic Temperature Control (DATC) (412-00 Climate Control System - General Information, Removal and Installation). TEST the system for normal operation. If the concern is still present, GO to M19
No	REPAIR the circuit.

M18 CHECK FOR CORRECT BCM (BODY CONTROL MODULE) OPERATION

- Ignition OFF.
- Disconnect and inspect all the BCM connectors.
- Repair:
  - corrosion (install new connector or terminals – clean module pins)
  - damaged or bent pins – install new terminals/pins
  - pushed-out pins – install new pins as necessary
- Reconnect the BCM connectors. Make sure they seat and latch correctly.
- Operate the system and determine if the concern is still present.

Is the concern still present?

Yes	CHECK OASIS for any applicable Technical Service Bulletins (TSBs). If a TSB exists for this concern, DISCONTINUE this test and FOLLOW TSB instructions. If no Technical Service Bulletins (TSBs) address this concern, INSTALL a new BCM . REFER to: Body Control Module (BCM) (419-10 Multifunction Electronic Modules, Removal and Installation).
No	The system is operating correctly at this time. The concern may have been caused by module connections. Address the root cause of any connector or pin issues.

M19 CHECK FOR CORRECT HVAC (HEATING, VENTILATION AND AIR CONDITIONING) MODULE OPERATION

- Ignition OFF.
- Disconnect and inspect all the HVAC control module connectors.
- Repair:
  - corrosion (install new connector or terminals – clean module pins)
  - damaged or bent pins – install new terminals/pins

- pushed-out pins – install new pins as necessary
- Reconnect the HVAC control module connectors. Make sure they seat and latch correctly.
- Operate the system and determine if the concern is still present.

Is the concern still present?

Yes	CHECK OASIS for any applicable Technical Service Bulletins (TSBs). If a TSB exists for this concern, DISCONTINUE this test and FOLLOW TSB instructions. If no Technical Service Bulletins (TSBs) address this concern, INSTALL a new HVAC control module. REFER to: Heating, Ventilation and Air Conditioning (HVAC) Control Module (412-00 Climate Control System - General Information, Removal and Installation).
No	The system is operating correctly at this time. The concern may have been caused by module connections. Address the root cause of any connector or pin issues.

The Blower Motor Does Not Operate Correctly

Refer to Wiring Diagrams Cell 55 for schematic and connector information.

Normal Operation and Fault Conditions

Voltage is supplied to the relay coil from BJB fuse 23 (5A) and relay switch contacts from BJB fuse 10 (40A). When the blower motor relay coil receives a ground from the BCM , the relay coil is energized and voltage is delivered to the blower motor control module. Power and ground for the blower motor is provided by the blower motor speed control. The HVAC control module sends a PWM signal to the blower motor speed control to control the blower speed.

DTC Fault Trigger Conditions

DTC	Description	Fault Trigger Conditions
B10AF:11	Blower Fan Relay General Electrical Failures Circuit: Short To Ground	This Continuous Memory Diagnostic Trouble Code (CMDTC) sets when the BCM senses a path to ground on the blower motor control circuit.
B10B9:00	Blower Control: No Sub Type Information	This Continuous Memory Diagnostic Trouble Code (CMDTC) and on-demand DTC sets when the HVAC control module senses no voltage on the blower motor control PWM circuit.

Possible Sources

- Wiring, terminals or connectors
- Blower motor speed control
- Blower motor relay
- HVAC control module
- BCM

PINPOINT TEST N : THE BLOWER MOTOR DOES NOT OPERATE CORRECTLY

NOTICE: Use the correct probe adapter(s) from the Flex Probe Kit when taking measurements. Failure to use the correct probe adapter(s) may damage the connector.
N1 VERIFY THE BLOWER MOTOR OPERATION

- Ignition ON.
- Press the register button on the HVAC control module. Adjust the blower motor setting to the minimum and maximum settings.

Does the blower motor operate at any setting?

Yes	If the blower motor is always ON, GO to N5 For all other blower motor concerns, GO to N2
No	GO to Pinpoint Test M

N2 CHECK THE BLOWER MOTOR CONTROL CIRCUIT FOR A SHORT TO VOLTAGE

- Ignition OFF.
- Disconnect Blower Motor Speed Control C297A .
- Disconnect HVAC Module C228B .
- Ignition ON.
- Measure:

Positive Lead	Measurement / Action	Negative Lead
C228B-4	V	—

Is any voltage present?

Yes	REPAIR the circuit.
No	GO to N3

N3 CHECK THE BLOWER MOTOR CONTROL CIRCUIT FOR A SHORT TO GROUND

- Ignition OFF.
- Measure:

Positive Lead	Measurement / Action	Negative Lead
C228B-4	Ω	—

Is the resistance greater than 10,000 ohms?

Yes	GO to N4
No	REPAIR the circuit.

N4 CHECK THE BLOWER MOTOR CONTROL CIRCUIT FOR AN OPEN

- Measure:

Positive Lead	Measurement / Action	Negative Lead
C228B-15	Ω	C297A-3

Is the resistance less than 3 ohms?

Yes	INSTALL a new blower motor speed control. REFER to: Blower Motor Speed Control - Vehicles With: Dual Automatic Temperature Control (DATC) (412-00 Climate Control System - General Information, Removal and Installation). TEST the system for normal operation. If the concern is still present, GO to N7
No	REPAIR the circuit.

N5 CHECK THE BLOWER MOTOR OPERATION WITH THE BLOWER MOTOR RELAY DISCONNECTED

- Ignition OFF.
- Disconnect Blower Motor Relay.

Does the fan still operate all the time?

Yes	REPAIR the circuit [CBB28 (GY/VT)/CBB18 (GY/OG)] for a short to voltage.
No	INSTALL a new blower motor relay. TEST the system for normal operation. If the concern is still present, GO to N6

N6 CHECK THE BLOWER MOTOR RELAY CONTROL CIRCUIT FOR A SHORT TO GROUND

- Disconnect BCM C2280A .
- Measure:

Positive Lead	Measurement / Action	Negative Lead
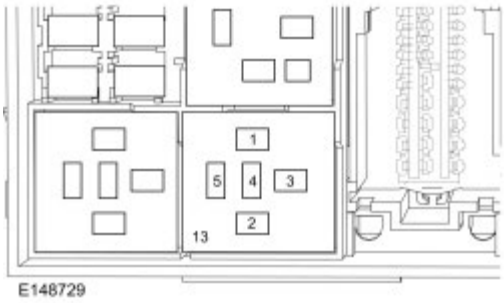 Pin 2	Ω	—

Is the resistance greater than 10,000 ohms?

Yes	GO to N8
No	REPAIR the circuit.

N7 CHECK FOR CORRECT HVAC (HEATING, VENTILATION AND AIR CONDITIONING) MODULE OPERATION

- Ignition OFF.
- Disconnect and inspect all the HVAC control module connectors.
- Repair:
  - corrosion (install new connector or terminals – clean module pins)
  - damaged or bent pins – install new terminals/pins
  - pushed-out pins – install new pins as necessary
- Reconnect the HVAC control module connectors. Make sure they seat and latch correctly.
- Operate the system and determine if the concern is still present.

Is the concern still present?

Yes	CHECK OASIS for any applicable Technical Service Bulletins (TSBs). If a TSB exists for this concern, DISCONTINUE this test and FOLLOW TSB instructions. If no Technical Service Bulletins (TSBs) address this concern, INSTALL a new HVAC control module. REFER to: Heating, Ventilation and Air Conditioning (HVAC) Control Module (412-00 Climate Control System - General Information, Removal and Installation).
No	The system is operating correctly at this time. The concern may have been caused by module connections. Address the root cause of any connector or pin issues.

N8 CHECK FOR CORRECT BCM (BODY CONTROL MODULE) OPERATION

- Ignition OFF.
- Disconnect and inspect all the BCM connectors.
- Repair:
  - corrosion (install new connector or terminals – clean module pins)
  - damaged or bent pins – install new terminals/pins
  - pushed-out pins – install new pins as necessary
- Reconnect the BCM connectors. Make sure they seat and latch correctly.
- Operate the system and determine if the concern is still present.

Is the concern still present?

Yes	CHECK OASIS for any applicable Technical Service Bulletins (TSBs). If a TSB exists for this concern, DISCONTINUE this test and FOLLOW TSB instructions. If no Technical Service Bulletins (TSBs) address this concern, INSTALL a new BCM . REFER to: Body Control Module (BCM) (419-10 Multifunction Electronic Modules, Removal and Installation).
No	The system is operating correctly at this time. The concern may have been caused by module connections. Address the root cause of any connector or pin issues.

B10B3:00, B10B4:00, B10B5:00, B10B6:00

Refer to Wiring Diagrams Cell 55 for schematic and connector information.

DTC Fault Trigger Conditions

DTC	Description	Fault Trigger Conditions

B10B3:00	Right Register Air Discharge Temperature: No Sub Type Information	This Continuous Memory Diagnostic Trouble Code (CMDTC) sets when the HVAC control module senses erratic voltages from the right register air discharge temperature sensor.
B10B4:00	Right Footwell Air Discharge Temperature: No Sub Type Information	This Continuous Memory Diagnostic Trouble Code (CMDTC) sets when the HVAC control module senses erratic voltages from the right footwell air discharge temperature sensor.
B10B5:00	Left Register Air Discharge Temperature: No Sub Type Information	This Continuous Memory Diagnostic Trouble Code (CMDTC) sets when the HVAC control module senses erratic voltages from the left register air discharge temperature sensor.
B10B6:00	Left Footwell Air Discharge Temperature: No Sub Type Information	This Continuous Memory Diagnostic Trouble Code (CMDTC) sets when the HVAC control module senses erratic voltages from the left footwell air discharge temperature sensor.

Possible Sources

- Wiring, terminals or connectors
- Left register air discharge temperature sensor
- Left footwell air discharge temperature sensor
- Right register air discharge temperature sensor
- Right footwell air discharge temperature sensor
- HVAC Module

PINPOINT TEST O : B10B3:00, B10B4:00, B10B5:00, B10B6:00

NOTICE: Use the correct probe adapter(s) from the Flex Probe Kit when taking measurements. Failure to use the correct probe adapter(s) may damage the connector.

O1 CHECK THE AIR DISCHARGE TEMPERATURE SENSOR OUTPUT VOLTAGE

- Ignition ON.
- Turn the HVAC system on.
- Disconnect: the appropriate air discharge temperature sensor:
  - left register air discharge temperature sensor C2438
  - left footwell air discharge temperature sensor C2436
  - right register air discharge temperature sensor C2439
  - right footwell air discharge temperature sensor C2437
- Measure:

Positive Lead	Measurement / Action	Negative Lead
C2438-1		C2438-3
C2436-1		C2436-3
C2439-1		C2439-3
C2437-1		C2437-3

Is the voltage between 4.7 and 5.1 volts?

Yes	INSTALL a new Air Discharge Temperature Sensor. REFER to: Center Register Air Discharge Temperature Sensor - Vehicles With: Dual Automatic Temperature Control (DATC) (412-00 Climate Control System - General Information, Removal and Installation). or REFER to: Footwell Air Discharge Temperature Sensor - Vehicles With: Dual Automatic Temperature

	Control (DATC) (412-00 Climate Control System - General Information, Removal and Installation). CLEAR the Diagnostic Trouble Codes (DTCs). REPEAT the self-test. If code returns, GO to O7
No	GO to O2

O2 CHECK THE AIR DISCHARGE TEMPERATURE SENSOR SIGNAL CIRCUIT FOR A SHORT TO VOLTAGE

- Ignition OFF.
- Disconnect HVAC Module C228B .
- Ignition ON.
- Measure:

Positive Lead	Measurement / Action	Negative Lead
C2438-1	V	—
C2436-1	V	—
C2439-1	V	—
C2437-1	V	—

Is any voltage present?

Yes	REPAIR the circuit in question.
No	GO to O3

O3 CHECK THE AIR DISCHARGE TEMPERATURE SENSOR SIGNAL CIRCUIT FOR A SHORT TO GROUND

- Measure:

Positive Lead	Measurement / Action	Negative Lead
C2438-1	Ω	—
C2436-1	Ω	—
C2439-1	Ω	—
C2437-1	Ω	—

Is the resistance greater than 10,000 ohms?

Yes	GO to O4
No	REPAIR the circuit in question.

O4 CHECK THE AIR DISCHARGE TEMPERATURE SENSOR SIGNAL CIRCUIT FOR AN OPEN

- Ignition OFF.
- Disconnect HVAC Module C228B .
- Measure:

Positive Lead	Measurement / Action	Negative Lead
C2438-1	Ω	C228B-10
C2436-1	Ω	C228B-9
C2439-1	Ω	C228B-8
C2437-1	Ω	C228B-7

Is the resistance less than 3 ohms?

Yes	GO to O5
No	REPAIR the circuit in question.

O5 CHECK THE AIR DISCHARGE TEMPERATURE SENSOR SIGNAL RETURN CIRCUIT FOR AN OPEN

- Measure:

Positive Lead	Measurement / Action	Negative Lead
C2438-3	Ω	C228B-17
C2436-3	Ω	C228B-17
C2439-3	Ω	C228B-17
C2437-3	Ω	C228B-17

Is the resistance less than 3 ohms?

Yes	GO to O6
No	REPAIR the circuit in question.

O6 CHECK AIR DISCHARGE TEMPERATURE SENSOR SIGNAL CIRCUIT AND THE SIGNAL RETURN FOR A SHORT TO TOGETHER

- Ignition OFF.
- Measure:

Positive Lead	Measurement / Action	Negative Lead
C2438-1	Ω	C2438-3
C2436-1	Ω	C2436-3
C2439-1	Ω	C2439-3
C2437-1	Ω	C2437-3

Is the resistance greater than 10,000 ohms?

Yes	GO to O7
No	REPAIR the circuits in question.

O7 CHECK FOR CORRECT HVAC (HEATING, VENTILATION AND AIR CONDITIONING) MODULE OPERATION

- Ignition OFF.
- Disconnect and inspect all the HVAC control module connectors.
- Repair:
  - corrosion (install new connector or terminals – clean module pins)
  - damaged or bent pins – install new terminals/pins
  - pushed-out pins – install new pins as necessary
- Reconnect the HVAC control module connectors. Make sure they seat and latch correctly.
- Operate the system and determine if the concern is still present.

Is the concern still present?

Yes	CHECK OASIS for any applicable Technical Service Bulletins (TSBs). If a TSB exists for this concern, DISCONTINUE this test and FOLLOW TSB instructions. If no Technical Service Bulletins (TSBs) address this concern, INSTALL a new HVAC control module. REFER to: Heating, Ventilation and Air Conditioning (HVAC) Control Module (412-00 Climate Control System - General Information, Removal and Installation).
No	The system is operating correctly at this time. The concern may have been caused by module connections. Address the root cause of any connector or pin issues.

B1A61:00, B105A:00

Refer to Wiring Diagrams Cell 55 for schematic and connector information.

DTC Fault Trigger Conditions

DTC	Description	Fault Trigger Conditions
B1A61:00	Cabin Temperature Sensor: No Sub Type Information	This Continuous Memory Diagnostic Trouble Code (CMDTC) sets when the HVAC control module senses erratic voltages from the cabin temperature sensor.
B105A:00	Cabin Temperature Sensor Fan: No Sub Type Information	This Continuous Memory Diagnostic Trouble Code (CMDTC) sets when the HVAC control module senses no voltage or expected voltage on the circuit for the cabin temperature sensor fan.

Possible Sources

- Fuse
- Wiring, terminals or connectors
- In-vehicle temperature sensor
- HVAC Module

PINPOINT TEST P : B1A61:00, B105A:00

NOTICE: Use the correct probe adapter(s) from the Flex Probe Kit when taking measurements. Failure to use the correct probe adapter(s) may damage the connector.

P1 CHECK THE HVAC (HEATING, VENTILATION AND AIR CONDITIONING) MODULE DIAGNOSTIC TROUBLE CODES (DTCS)

- Ignition ON.
- Using a scan tool, perform HVAC control module self-test.

Is DTC B1A61:00 received?

Yes	GO to P2
No	GO to P7

P2 CHECK THE HVAC (HEATING, VENTILATION AND AIR CONDITIONING) MODULE OUTPUT VOLTAGE

- Disconnect In-vehicle Temperature Sensor C2247 .
- Ignition ON.
- Turn the HVAC system on.
- Measure:

Positive Lead	Measurement / Action	Negative Lead
C2247-4	V	C2247-6

Is the voltage between 4.7 and 5.1 volts?

Yes	INSTALL a new in-vehicle temperature sensor. REFER to: In-Vehicle Temperature and Humidity Sensor - Vehicles With: Dual Automatic Temperature Control (DATC) (412-00 Climate Control System - General Information, Removal and Installation). TEST the system for normal operation. If the DTC returns, GO to P11
No	GO to P3

P3 CHECK THE IN-VEHICLE TEMPERATURE SENSOR FEEDBACK CIRCUIT FOR SHORT TO VOLTAGE

- Ignition OFF.
- Disconnect HVAC Module C228B .
- Ignition ON.
- Measure:

Positive Lead	Measurement / Action	Negative Lead
C228B-21	V	—

Is any voltage present?

Yes	REPAIR the circuit.

No	GO to P4

P4 CHECK THE IN-VEHICLE TEMPERATURE SENSOR FEEDBACK CIRCUIT FOR SHORT TO GROUND

- Ignition OFF.
- Measure:

Positive Lead	Measurement / Action	Negative Lead
C228B-21	Ω	—

Is the resistance greater than 10,000 ohms?

Yes	GO to P5
No	REPAIR the circuit.

P5 CHECK THE IN-VEHICLE TEMPERATURE SENSOR FEEDBACK CIRCUIT FOR AN OPEN

- Measure:

Positive Lead	Measurement / Action	Negative Lead
C228B-21	Ω	C2247-4

Is the resistance less than 3 ohms?

Yes	GO to P6
No	REPAIR the circuit.

P6 CHECK THE SIGNAL RETURN CIRCUIT FOR AN OPEN

- Measure:

Positive Lead	Measurement / Action	Negative Lead
C228B-20	Ω	C2247-6

Is the resistance less than 3 ohms?

Yes	GO to P11
No	REPAIR the circuit.

P7 CHECK THE ASPIRATOR FAN POWER CIRCUIT FOR VOLTAGE

- Disconnect In-vehicle Temperature Sensor C2247 .
- Ignition ON.
- Measure:

Positive Lead	Measurement / Action	Negative Lead
C2247-1	V	—

Is the voltage greater than 11 volts?

Yes	GO to P8
No	VERIFY the BCM fuse 85 (7.5A) is OK. If OK, REPAIR the circuit. If not OK, REFER to the Wiring Diagrams manual to identify the possible causes of the circuit short.

P8 CHECK THE ASPIRATOR FAN GROUND CIRCUIT FOR A SHORT TO VOLTAGE

- Ignition ON.
- Measure:

Positive Lead	Measurement / Action	Negative Lead
C228B-2	V	—

Is any voltage present?

Yes	REPAIR the circuit.
No	GO to P9

P9 CHECK THE ASPIRATOR FAN GROUND CIRCUIT FOR A SHORT TO GROUND

- Ignition OFF.
- Measure:

Positive Lead	Measurement / Action	Negative Lead
C228B-2	Ω	—

Is the resistance greater than 10,000 ohms?

Yes	GO to P10
No	REPAIR the circuit.

P10 CHECK THE ASPIRATOR FAN GROUND CIRCUIT FOR AN OPEN

- Disconnect HVAC Module C228B .
- Measure:

Positive Lead	Measurement / Action	Negative Lead
C228B-2	Ω	C2247-3

Is the resistance less than 3 ohms?

Yes	INSTALL a new in-vehicle temperature sensor. REFER to: In-Vehicle Temperature and Humidity Sensor - Vehicles With: Dual Automatic Temperature Control (DATC) (412-00 Climate Control System - General Information, Removal and Installation). TEST the system for normal operation. If the DTC returns, GO to P11
No	REPAIR the circuit.

P11 CHECK FOR CORRECT HVAC (HEATING, VENTILATION AND AIR CONDITIONING) MODULE OPERATION

- Ignition OFF.
- Disconnect and inspect the HVAC control module connectors.
- Repair:
  - corrosion (replace connector or terminals – clean module pins)
  - damaged or bent pins – replace terminals/pins
  - pushed-out pins – replace pins as necessary
- Reconnect the HVAC control module connectors. Make sure they seat and latch correctly.
- Operate the system and verify the concern is still present.

Is the concern still present?

Yes	CHECK OASIS for any applicable Technical Service Bulletins (TSBs). If a TSB exists for this concern, discontinue this test and follow TSB instructions. If no Technical Service Bulletins (TSBs) address this concern, INSTALL a new HVAC control module. REFER to: Heating, Ventilation and Air Conditioning (HVAC) Control Module (412-00 Climate Control System - General Information, Removal and Installation).
No	The system is operating correctly at this time. The concern may have been caused by module connections. Address the root cause of any connector or pin issues.

B1A63:00, B1A64:00

Refer to Wiring Diagrams Cell 55 for schematic and connector information.

Normal Operation and Fault Conditions

REFER to: Climate Control System - Vehicles With: Dual Automatic Temperature Control (DATC) - System Operation and Component Description (412-00 Climate Control System - General Information, Description and Operation).

DTC Fault Trigger Conditions

DTC	Description	Fault Trigger Conditions
B1A63:00	Right Solar Sensor: No Sub Type Information	This Continuous Memory Diagnostic Trouble Code (CMDTC) sets when the HVAC control module senses lower than expected voltage on an open, short to voltage or short to ground from the light sensor input circuit.
B1A64:00	Left Solar Sensor: No Sub Type Information	This Continuous Memory Diagnostic Trouble Code (CMDTC) sets when the HVAC control module senses an open, short to voltage or short to ground from the light sensor input circuit.

Possible Sources

- Wiring, terminals or connectors
- Right Sunload Sensor
- Left Sunload Sensor
- HVAC Module

PINPOINT TEST Q : B1A63:00, B1A64:00

NOTICE: Use the correct probe adapter(s) from the Flex Probe Kit when taking measurements. Failure to use the correct probe adapter(s) may damage the connector.

Q1 CHECK THE LIGHT SENSOR REFERENCE VOLTAGE

- Ignition ON.
- Using a scan tool, perform HVAC control module self-test.

Are both Diagnostic Trouble Codes (DTCs) B1A63:00 and B1A64:00 received.

Yes	GO to Q10
No	For DTC B1A63:00, GO to Q2 For DTC B1A64:00, GO to Q6

Q2 CHECK THE RIGHT LIGHT SENSOR REFERENCE VOLTAGE

- Ignition OFF.
- Disconnect Light Sensor C286 .
- Ignition ON.
- Press the AUTO button.
- Measure:

Positive Lead	Measurement / Action	Negative Lead
C286-2	V	C286-3

Is the voltage between 4.7 and 5.1 volts?

Yes	INSTALL a new light sensor. REFER to: Sunload Sensor - Vehicles With: Dual Automatic Temperature Control (DATC) (412-00 Climate Control System - General Information, Removal and Installation).

No	GO to Q5

Q3 CHECK THE RIGHT LIGHT SENSOR FEEDBACK CIRCUIT FOR A SHORT TO VOLTAGE

- Ignition OFF.
- Disconnect HVAC Module C228B .
- Ignition ON.
- Measure:

Positive Lead	Measurement / Action	Negative Lead
C228B-23	⊕ V ⊖	—

Is any voltage present?

Yes	REPAIR the circuit.
No	GO to Q4

Q4 CHECK THE RIGHT LIGHT SENSOR FEEDBACK CIRCUIT FOR A SHORT TO GROUND

- Ignition OFF.
- Measure:

Positive Lead	Measurement / Action	Negative Lead
C228B-23	Ω	—

Is the resistance greater than 10,000 ohms?

Yes	GO to Q5
No	REPAIR the circuit.

Q5 CHECK THE RIGHT LIGHT FEEDBACK CIRCUIT FOR AN OPEN

- Measure:

Positive Lead	Measurement / Action	Negative Lead
C228B-23	Ω	C286-2

Is the resistance less than 3 ohms?

Yes	GO to Q10
No	REPAIR the circuit.

Q6 CHECK THE LEFT LIGHT SENSOR REFERENCE VOLTAGE

- Ignition OFF.
- Disconnect Light Sensor C286 .
- Ignition ON.
- Press the AUTO button.
- Measure:

Positive Lead	Measurement / Action	Negative Lead
C286-1	V	C286-3

Is the voltage between 4.7 and 5.1 volts?

Yes	INSTALL a new light sensor. REFER to: Sunload Sensor - Vehicles With: Dual Automatic Temperature Control (DATC) (412-00 Climate Control System - General Information, Removal and Installation).
No	GO to Q7

Q7 CHECK THE LEFT LIGHT SENSOR FEEDBACK CIRCUIT FOR A SHORT TO VOLTAGE

- Ignition OFF.
- Disconnect HVAC C228B .
- Ignition ON.
- Measure:

Positive Lead	Measurement / Action	Negative Lead
C228B-22	V	—

Is any voltage present?

Yes	REPAIR the circuit.
No	GO to Q8

Q8 CHECK THE LEFT LIGHT SENSOR FEEDBACK CIRCUIT FOR A SHORT TO GROUND

- Ignition OFF.
- Measure:

Positive Lead	Measurement / Action	Negative Lead
C228B-22	Ω	—

Is the resistance greater than 10,000 ohms?

Yes	GO to Q9
No	REPAIR the circuit.

Q9 CHECK THE LEFT LIGHT FEEDBACK CIRCUIT FOR AN OPEN

- Measure:

Positive Lead	Measurement / Action	Negative Lead
C228B-22	Ω	C286-1

Is the resistance less than 3 ohms?

Yes	GO to Q10
No	REPAIR the circuit.

Q10 CHECK THE SENSOR GROUND CIRCUIT FOR AN OPEN

- Ignition OFF.
- Disconnect HVAC Module C228B .
- Disconnect Light Sensor C286 .
- Measure:

Positive Lead	Measurement / Action	Negative Lead
C228B-20	Ω	C286-3

Is the resistance less than 3 ohms?

Yes	INSTALL a new light sensor. REFER to: Sunload Sensor - Vehicles With: Dual Automatic Temperature Control (DATC) (412-00 Climate Control System - General Information, Removal and Installation). If the DTC returns, GO to Q11
No	REPAIR the circuit.

Q11 CHECK FOR CORRECT HVAC (HEATING, VENTILATION AND AIR CONDITIONING) MODULE OPERATION

- Ignition OFF.
- Disconnect and inspect all the HVAC control module connectors.
- Repair:
  - corrosion (install new connector or terminals – clean module pins)
  - damaged or bent pins – install new terminals/pins
  - pushed-out pins – install new pins as necessary
- Reconnect the HVAC control module connectors. Make sure they seat and latch correctly.
- Operate the system and determine if the concern is still present.

Is the concern still present?

Yes	CHECK OASIS for any applicable Technical Service Bulletins (TSBs). If a TSB exists for this concern, DISCONTINUE this test and FOLLOW TSB instructions. If no Technical Service Bulletins (TSBs) address this concern, INSTALL a new HVAC control module. REFER to: Heating, Ventilation and Air Conditioning (HVAC) Control Module (412-00 Climate Control System - General Information, Removal and Installation).
No	The system is operating correctly at this time. The concern may have been caused by module connections. Address the root cause of any connector or pin issues.

U3006:16, U3006:17

Refer to Wiring Diagrams Cell 55 for schematic and connector information.

DTC Fault Trigger Conditions

DTC	Description	Fault Trigger Conditions
U3006:16	Control Module Input Power "A": Circuit Voltage Below Threshold	This Continuous Memory Diagnostic Trouble Code (CMDTC) sets when the HVAC control module senses lower than expected voltage.
U3006:17	Control Module Input Power "A": Circuit Voltage Above Threshold	This Continuous Memory Diagnostic Trouble Code (CMDTC) sets when the HVAC control module senses greater than expected voltage.

Possible Sources

- Wiring, terminals or connectors
- 12V battery
- External battery charger connected to 12V battery
- HVAC Module

PINPOINT TEST R : U3006:16, U3006:17

NOTICE: Use the correct probe adapter(s) from the Flex Probe Kit when taking measurements. Failure to use the correct probe adapter(s) may damage the connector.

R1 CARRY OUT THE HVAC (HEATING, VENTILATION AND AIR CONDITIONING) MODULE SELF-TEST

- Ignition ON.
- Using a scan tool, clear Diagnostic Trouble Codes (DTCs).
- Wait 10 seconds.
- Using a scan tool, perform HVAC control module self-test.

Is DTC U3006:16 or U3006:17 still present?

Yes	GO to R2
No	The system is operating correctly at this time. The DTC may have been set due to a previous low battery voltage condition or external battery charger being connected to vehicle.

R2 RETRIEVE PCM (POWERTRAIN CONTROL MODULE) DIAGNOSTIC TROUBLE CODES (DTCS)

- Using a scan tool, perform PCM self-test.

Are any charging system Diagnostic Trouble Codes (DTCs) present in the PCM ?

Yes	Reference appropriate PCM DTC chart. For 2.0L Duratec-HE REFER to: Electronic Engine Controls (303-14A Electronic Engine Controls - 2.0L Duratec-HE (125kW/170PS) - MI4, Diagnosis and Testing). For 2.0L Ecoboost REFER to: Electronic Engine Controls (303-14B Electronic Engine Controls - 2.0L EcoBoost (184kW/250PS) - MI4, Diagnosis and Testing).
No	GO to R3

R3 CHECK BATTERY CONDITION

- Ignition OFF.
- Carry out the battery condition test.
  REFER to: Battery (414-01 Battery, Mounting and Cables, Diagnosis and Testing).

Does the battery pass the condition test?

Yes	If the battery passed the condition test but required a recharge, For 2.0L Duratec-HE REFER to: Charging System - 2.0L Duratec-HE (125kW/170PS) - MI4 (414-00 Charging System - General Information, Diagnosis and Testing). For 2.0L Ecoboost REFER to: Charging System - 2.0L EcoBoost (184kW/250PS) - MI4 (414-00 Charging System - General Information, Diagnosis and Testing). If the battery passed the condition test and did not require a recharge, GO to R4
No	INSTALL a new battery. REFER to: Battery (414-01 Battery, Mounting and Cables, Removal and Installation).

R4 CHECK THE CHARGING SYSTEM VOLTAGE

NOTE: *Do not allow the engine Revolutions Per Minute (RPM) to exceed 2,000 Revolutions Per Minute (RPM) while carrying out this step or the generator may self-excite, resulting in default charging system output voltage. If engine Revolutions Per Minute (RPM) has exceeded 2,000 Revolutions Per Minute (RPM), shut the vehicle off and restart the engine before carrying out this step.*

- Start the engine.
- Measure:

Positive Lead	Measurement / Action	Negative Lead
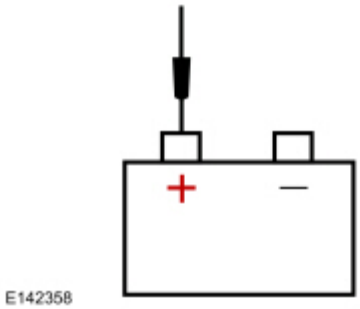		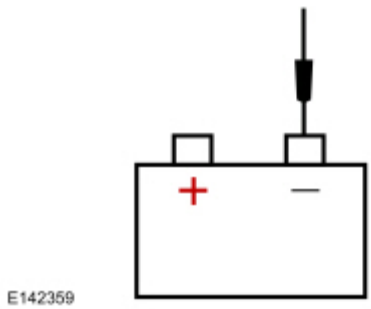

- For DTC U3006:17, turn off all accessories and run the engine at 1,500 Revolutions Per Minute (RPM) for a minimum of 2 minutes.
- For DTC U3006:16, turn on headlights and HVAC fan on high and run engine at 1,500 Revolutions Per Minute (RPM) for a minimum of 2 minutes.

Is the battery voltage between 13-15.2 volts?

Yes	For DTC U3006:16, GO to R5 For DTC U3006:17, GO to R7
No	Diagnose the charging system. For 2.0L Duratec-HE REFER to: Charging System - 2.0L Duratec-HE (125kW/170PS) - MI4 (414-00 Charging System - General Information, Diagnosis and Testing). For 2.0L Ecoboost REFER to: Charging System - 2.0L EcoBoost (184kW/250PS) - MI4 (414-00 Charging System - General Information, Diagnosis and Testing).

R5 CHECK THE HVAC (HEATING, VENTILATION AND AIR CONDITIONING) MODULE VOLTAGE SUPPLY CIRCUIT FOR HIGH RESISTANCE

- Ignition OFF.
- Disconnect HVAC Module C228B .
- Ignition ON.
- Measure:

Positive Lead	Measurement / Action	Negative Lead
C228B-14	V	—

Is the voltage greater than 11 volts?

Yes	GO to R6
No	REPAIR the circuit.

R6 CHECK THE HVAC (HEATING, VENTILATION AND AIR CONDITIONING) MODULE GROUND CIRCUIT FOR HIGH RESISTANCE

- Ignition OFF.
- Measure:

Positive Lead	Measurement / Action	Negative Lead
C228B-6	Ω	—

Is the resistance less than 3 ohms?

Yes	GO to R7
No	REPAIR the circuit.

R7 CHECK FOR CORRECT HVAC (HEATING, VENTILATION AND AIR CONDITIONING) MODULE OPERATION

- Ignition OFF.
- Disconnect and inspect all the HVAC control module connectors.
- Repair:
  - corrosion (install new connector or terminals – clean module pins)
  - damaged or bent pins – install new terminals/pins
  - pushed-out pins – install new pins as necessary
- Reconnect the HVAC control module connectors. Make sure they seat and latch correctly.
- Operate the system and determine if the concern is still present.

Is the concern still present?

Yes	CHECK OASIS for any applicable Technical Service Bulletins (TSBs). If a TSB exists for this concern, DISCONTINUE this test and FOLLOW TSB instructions. If no Technical Service Bulletins (TSBs) address this concern, INSTALL a new HVAC control module. REFER to: Heating, Ventilation and Air Conditioning (HVAC) Control Module (412-00 Climate Control System - General Information, Removal and Installation).
No	The system is operating correctly at this time. The concern may have been caused by module connections. Address the root cause of any connector or pin issues.

U0155:00

DTC Fault Trigger Conditions

DTC	Description	Fault Trigger Conditions
U0155:00	Lost Communication With IPC Control Module: No Sub Type Information	This Continuous Memory Diagnostic Trouble Code (CMDTC) sets in the HVAC control module if data messages received from the IPC over the CAN are missing for 5 seconds or more.

Possible Sources

- Fuse(s)
- Wiring, terminals or connectors
- 12V battery voltage
- IPC
- HVAC Module

PINPOINT TEST S : U0155:00

S1 VERIFY THE CUSTOMER CONCERN

- Ignition ON.
- Verify there is an observable symptom present.

Is an observable symptom present?

Yes	GO to S2

No	The system is operating normally at this time. The DTC may have been set due to high network traffic or an intermittent fault condition.

S2 CHECK THE COMMUNICATION NETWORK

- Ignition ON.
- Using a scan tool, perform network test.

Does the IPC pass the network test?

Yes	GO to S3
No	REFER to: Communications Network (418-00 Module Communications Network, Diagnosis and Testing).

S3 RETRIEVE THE RECORDED DIAGNOSTIC TROUBLE CODES (DTCS) FROM THE IPC (INSTRUMENT PANEL CLUSTER) SELF-TEST

- Using a scan tool, perform IPC self-test.
- Check for recorded Diagnostic Trouble Codes (DTCs) from the IPC self-test.

Is DTC U3006:16 or DTC U3006:17 recorded?

Yes	REFER to: Instrumentation, Message Center and Warning Chimes (413-01 Instrumentation, Message Center and Warning Chimes, Diagnosis and Testing).
No	GO to S4

S4 RETRIEVE THE RECORDED DIAGNOSTIC TROUBLE CODES (DTCS) FROM THE HVAC (HEATING, VENTILATION AND AIR CONDITIONING) MODULE SELF-TEST

- Using a scan tool, perform HVAC control module self-test.
- Check for recorded Diagnostic Trouble Codes (DTCs) from the HVAC control module self-test.

Is DTC U3006:16 or DTC U3006:17 recorded?

Yes	GO to Pinpoint Test R
No	GO to S5

S5 RECHECK THE HVAC (HEATING, VENTILATION AND AIR CONDITIONING) MODULE DIAGNOSTIC TROUBLE CODES (DTCS)

NOTE: *If new modules were installed prior to the DTC being set, the module configuration may be incorrectly set during the Programmable Module Installation (PMI) or the Programmable Module Installation (PMI) may not have been carried out.*

- Clear the Diagnostic Trouble Codes (DTCs).
- Wait 10 seconds.
- Using a scan tool, perform HVAC control module self-test.

Is DTC U0155:00 still present?

Yes	GO to S6

No	The system is operating correctly at this time. The DTC may have been set due to high network traffic or an intermittent fault condition.

S6 CHECK FOR DTC (DIAGNOSTIC TROUBLE CODE) U0155:00 SET IN OTHER MODULES

- Clear all Diagnostic Trouble Codes (DTCs).
- Ignition OFF.
- Ignition ON.
- Wait 10 seconds.
- Using a scan tool, retrieve all continuous memory Diagnostic Trouble Codes (DTCs).

Is DTC U0155:00 set in any other module?

Yes	INSTALL a new IPC . REFER to: Instrument Panel Cluster (IPC) (413-01 Instrumentation, Message Center and Warning Chimes, Removal and Installation).
No	INSTALL a new HVAC control module. REFER to: Heating, Ventilation and Air Conditioning (HVAC) Control Module (412-00 Climate Control System - General Information, Removal and Installation).

B1B71:21, B1B71:22, B1B71:2F

Refer to Wiring Diagrams Cell 55 for schematic and connector information.

Normal Operation and Fault Conditions

REFER to: Climate Control System - Vehicles With: Dual Automatic Temperature Control (DATC) - System Operation and Component Description (412-00 Climate Control System - General Information, Description and Operation).

DTC Fault Trigger Conditions

DTC	Description	Fault Trigger Conditions
B1B71:21	Evaporator Temperature Sensor General Signal Failures Signal Amplitude < Minimum	This Continuous Memory Diagnostic Trouble Code (CMDTC) and on-demand DTC sets when the BCM senses lower than expected voltage from the evaporator temperature sensor.
B1B71:22	Evaporator Temperature Sensor General Signal Failures Signal Amplitude > Maximum	This Continuous Memory Diagnostic Trouble Code (CMDTC) sets when the BCM senses greater than expected voltage from the evaporator temperature sensor.
B1B71:2F	Evaporator Temperature Sensor General Signal Failures Signal Erratic	This on-demand DTC sets when the BCM senses erratic voltages from the evaporator temperature sensor.

Possible Sources

- Wiring, terminals or connectors

Evaporator Temperature Sensor
- BCM

PINPOINT TEST T : B1B71:21, B1B71:22, B1B71:2F

NOTICE: Use the correct probe adapter(s) from the Flex Probe Kit when taking measurements. Failure to use the correct probe adapter(s) may damage the connector.

T1 CHECK THE BCM (BODY CONTROL MODULE) SENSOR OUTPUT VOLTAGE

- Ignition ON.
- Disconnect Evaporator Discharge Temperature Sensor C296 .
- Measure:

Positive Lead	Measurement / Action	Negative Lead
C296-1		C296-3

Is the voltage between 4.7 and 5.1 volts?

Yes	INSTALL a new evaporator discharge air temperature sensor. REFER to: Evaporator Temperature Sensor (412-00 Climate Control System - General Information, Removal and Installation).
No	For DTC B1B71:22, GO to T3 For DTC B1B71:21, GO to T5

T2 CHECK THE EVAPORATOR TEMPERATURE SENSOR SIGNAL CIRCUIT FOR A SHORT TO VOLTAGE

- Ignition OFF.
- Disconnect BCM C2280C .
- Ignition ON.
- Measure:

Positive Lead	Measurement / Action	Negative Lead
C2280C-9		—

Is any voltage present?

Yes	REPAIR the circuit.
No	GO to T3

T3 CHECK THE EVAPORATOR TEMPERATURE SENSOR SIGNAL CIRCUIT FOR AN OPEN

- Ignition OFF.
- Measure:

Positive Lead	Measurement / Action	Negative Lead

C296-1	Ω	C2280A-9

Is the resistance less than 3 ohms?

Yes	GO to T4
No	REPAIR the circuit.

T4 CHECK THE EVAPORATOR TEMPERATURE SENSOR SIGNAL RETURN CIRCUIT FOR AN OPEN

- Measure:

Positive Lead	Measurement / Action	Negative Lead
C296-3	Ω	C2280C-29

Is the resistance less than 3 ohms?

Yes	GO to T7
No	REPAIR the circuit.

T5 CHECK THE EVAPORATOR TEMPERATURE SENSOR SIGNAL CIRCUIT FOR A SHORT TO GROUND

- Ignition OFF.
- Disconnect BCM C2280C .
- Measure:

Positive Lead	Measurement / Action	Negative Lead
C296-1	Ω	—

Is the resistance greater than 10,000 ohms?

Yes	GO to T6
No	REPAIR the circuit.

T6 CHECK THE EVAPORATOR TEMPERATURE SENSOR SIGNAL AND SIGNAL RETURN CIRCUITS FOR A SHORT TOGETHER

- Measure:

Positive Lead	Measurement / Action	Negative Lead
C296-1	Ω	C296-3

Is the resistance greater than 10,000 ohms?

Yes	GO to T7
No	REPAIR the circuits.

T7 CHECK FOR CORRECT BCM (BODY CONTROL MODULE) OPERATION

- Ignition OFF.
- Disconnect and inspect all the BCM connectors.
- Repair:
  - corrosion (install new connector or terminals – clean module pins)
  - damaged or bent pins – install new terminals/pins
  - pushed-out pins – install new pins as necessary
- Reconnect the BCM connectors. Make sure they seat and latch correctly.
- Operate the system and determine if the concern is still present.

Is the concern still present?

Yes	CHECK OASIS for any applicable Technical Service Bulletins (TSBs). If a TSB exists for this concern, DISCONTINUE this test and FOLLOW TSB instructions. If no Technical Service Bulletins (TSBs) address this concern, INSTALL a new BCM . REFER to: Body Control Module (BCM) (419-10 Multifunction Electronic Modules, Removal and Installation).
No	The system is operating correctly at this time. The concern may have been caused by module connections. Address the root cause of any connector or pin issues.

P193E

Refer to Wiring Diagrams Cell 55 for schematic and connector information.

Normal Operation and Fault Conditions

REFER to: Climate Control System - Vehicles With: Dual Automatic Temperature Control (DATC) - System Operation and Component Description (412-00 Climate Control System - General Information, Description and Operation).

DTC Fault Trigger Conditions

DTC	Description	Fault Trigger Conditions
P193E	A/C Clutch Request Signal	This Continuous Memory Diagnostic Trouble Code (CMDTC) sets when the PCM does not receive the A/C request message from the BCM .

Possible Sources

- Wiring, terminals or connectors

- BCM
- PCM

PINPOINT TEST U : P193E

U1 VERIFY THE CUSTOMER CONCERN

- Ignition ON.
- Verify that there is an observable symptom present.

Is an observable symptom present?

Yes	GO to U2
No	The system is operating correctly at this time. The DTC may have been set due to high network traffic or an intermittent fault condition.

U2 CHECK THE COMMUNICATION NETWORK

- Ignition ON.
- Using a scan tool, perform network test.
- Carry out the network test.

Does the BCM pass the network test?

Yes	GO to U3
No	REFER to: Communications Network (418-00 Module Communications Network, Diagnosis and Testing).

U3 RECHECK THE PCM (POWERTRAIN CONTROL MODULE) FOR DIAGNOSTIC TROUBLE CODES (DTCS)

- Clear the Diagnostic Trouble Codes (DTCs).
- Operate the system and test the system for normal operation.
- Using a scan tool, carry out the PCM self-test.

Are any Powertrain Control Module (PCM) Diagnostic Trouble Codes (DTCs) present?

Yes	For Diagnostic Trouble Codes (DTCs) U0422 or U0140, REFER to the PC/ED manual. For any other Diagnostic Trouble Codes (DTCs), REFER to: Electronic Engine Controls (303-14A Electronic Engine Controls - 2.0L Duratec-HE (125kW/170PS) - MI4, Diagnosis and Testing). (2.0L Duratec-HE) or REFER to: Electronic Engine Controls (303-14B Electronic Engine Controls - 2.0L EcoBoost (184kW/250PS) - MI4, Diagnosis and Testing). (2.0L Ecoboost) For DTC P193E, GO to U4
No	The system is operating correctly at this time. The DTC may have been set due to high network traffic or an intermittent fault condition.

U4 CHECK FOR CORRECT PCM (POWERTRAIN CONTROL MODULE) OPERATION

- Ignition OFF.
- Disconnect and inspect all the PCM connectors.
- Repair:

corrosion (install new connector or terminals – clean module pins)
  - damaged or bent pins – install new terminals/pins
  - pushed-out pins – install new pins as necessary
- Reconnect the PCM connectors. Make sure they seat and latch correctly.
- Operate the system and determine if the concern is still present.

Is the concern still present?

Yes	CHECK OASIS for any applicable Technical Service Bulletins (TSBs). If a TSB exists for this concern, DISCONTINUE this test and FOLLOW TSB instructions. If no Technical Service Bulletins (TSBs) address this concern, INSTALL a new PCM . For 2.0L Duratec-HE REFER to: Powertrain Control Module (PCM) (303-14A Electronic Engine Controls - 2.0L Duratec-HE (125kW/170PS) - MI4, Removal and Installation). For 2.0L Ecoboost REFER to: Powertrain Control Module (PCM) (303-14B Electronic Engine Controls - 2.0L EcoBoost (184kW/250PS) - MI4, Removal and Installation).
No	The system is operating correctly at this time. The concern may have been caused by module connections. Address the root cause of any connector or pin issues.

Component Test- Heater Core

NOTE: *If a heater core leak is suspected, test the heater core by following the plugged heater core component test before the heater core pressure test. Carry out a system inspection by checking the heater system thoroughly as follows:*

1. Inspect for evidence of coolant leakage at the heater hose to heater core attachments. A coolant leak in the heater hose could follow the heater core tube to the heater core and appear as a leak in the heater core.

NOTE: *Spring-type clamps are installed as original equipment. Installation and overtightening of non-specified clamps can cause leakage at the heater hose connection and damage the heater core.*

2. Check the integrity of the heater hose clamps.

Heater Core - Plugged

1. Check to see that the engine coolant is at the correct level.
2. Start the engine and turn on the heater.
3. When the engine coolant reaches operating temperature, check the heater core inlet and outlet hoses to see if they are hot.
4. If the outlet only is not hot:

- the heater core may have an air pocket.
- the heater core may be plugged.

5. If the inlet only is not hot, the thermostat may not be working correctly.

Heater Core - Pressure Test

NOTE: *Due to space limitations, a bench test may be necessary for pressure testing.*

1. Drain the coolant from the cooling system.
2. Disconnect the heater hoses from the heater core.
3. Install a short piece of heater hose, approximately 101 mm (4 in) long on each heater core tube.
4. Fill the heater core and heater hoses with water and install the plug BT-7422-B and the adapter BT-7422-A from the Pressure Test Kit. Secure the heater hoses, plug and adapter with hose clamps.

5. Attach the pump and gauge assembly from the Pressure Test Kit to the adapter.
6. Close the bleed valve at the base of the gauge. Pump 138 kPa (20 psi) of air pressure into the heater core.
7. Observe the pressure gauge for a minimum of 3 minutes.
8. If the pressure drops, check the heater hose connections to the core tubes for leaks. If the heater hoses do not leak, remove the heater core from the vehicle and carry out the bench test.

Heater Core - Bench Test

1. Remove the heater core from the vehicle.
2. Drain all of the coolant from the heater core.
3. Connect the 101 mm (4 in) test heater hoses with plug and adapter to the core tubes. Then connect the Pressure Test Kit to the adapter.
4. Apply 138 kPa (20 psi) of air pressure to the heater core. Submerge the heater core in water.
5. If a leak is observed, install a new heater core.

Component Test- Evaporator or Condenser On-Vehicle Leak Test

1. Discharge and recover the refrigerant.
2. Disconnect the suspect evaporator or condenser from the A/C system.
3. Clean the manifold fittings.
4. Connect the appropriate test fittings from the A/C Flush Adapter Kit to the condenser or evaporator tube connections.

NOTE: *The automatic shut-off valves on some gauge set hoses do not open when connected to the test fittings. If available, use hoses without shut-off valves. If hoses with shut-off valves are used, make sure the valve opens when attached to the test fittings or install an adapter that will activate the valve. The test is not valid if the shut-off valve does not open.*

5. Connect the red and blue hoses from the R-134a Manifold Gauge Set to the test fittings on the evaporator or condenser. Connect the yellow hose to a known good vacuum pump.
6. Open both gauge set valves and start the vacuum pump. Allow the vacuum pump to operate for a minimum of 45 minutes after the gauge set low pressure gauge indicates 101 kPa (30 in-Hg). The 45-minute evacuation is necessary to remove any refrigerant from oil left in the evaporator or condenser. If the refrigerant is not completely removed from the oil, outgassing will degrade the vacuum and appear as a refrigerant leak.
7. If the low pressure gauge reading will not drop to 101 kPa (30 in-Hg) when the valves on the gauge and manifold set are open and the vacuum pump is operating, close the gauge set valves and observe the low pressure gauge. If the pressure rises rapidly to zero, a large leak is indicated. Recheck the test fitting connections and gauge set connections before installing a new evaporator or condenser.
8. After evacuating for 45 minutes, close the gauge set valves and stop the vacuum pump. Observe the low pressure gauge; it should remain at the 101 kPa (30 in-Hg) mark.

- If the low pressure gauge reading rises 34 or more kPa (10 or more in-Hg) of vacuum from the 101 kPa (30 in-Hg) position in 10 minutes, a leak is indicated.
- If a very small leak is suspected, wait 30 minutes and observe the vacuum gauge.
- If a small amount of vacuum is lost, operate the vacuum pump with gauge valves open for an additional 30 minutes to remove any remaining refrigerant from the oil in the evaporator or condenser. Then recheck for loss of vacuum.
- If a very small leak is suspected, allow the system to sit overnight with vacuum applied and check for vacuum loss.

9. If the evaporator or condenser does leak, as verified by the above procedure, install a new evaporator or condenser.

Component Test- Air Conditioning (AC) Compressor External Leak Test

1. Install the adapter from the A/C Flush Adapter Kit on the port of the A/C compressor, using the existing manifold retaining bolt.

2. Connect the high and low pressure lines of a manifold gauge set or a refrigerant recovery/recycling station to the corresponding fittings on the adapter.
3. Attach the center hose of a manifold gauge set to a refrigerant container standing in an upright position.
4. Open the low pressure gauge valve, the high pressure gauge valve and the valve on the refrigerant container to allow the refrigerant vapor to flow into the A/C compressor.
5. Using the Refrigerant Leak Detector, check for leaks at the compressor shaft.
6. If an external leak is found, install a new A/C compressor.
7. When the leak test is complete, recover the refrigerant from the compressor.

Copyright © Ford Motor Company

SYNC Module [APIM] Programming

1. **WARNING: Before beginning any service procedure in this section, refer to Health and Safety Precautions in section 100-00 General Information. Failure to follow this instruction may result in serious personal injury.**

   Refer to: Health and Safety Precautions (100-00 General Information, Description and Operation).

2. If a new APIM is being installed, install the new APIM before carrying out the following procedure.
   Refer to: SYNC Module [APIM] (415-00B Information and Entertainment System - General Information - Vehicles With: AM/FM/CD/SYNC, Removal and Installation).

3. **NOTE:**

   - *The programming procedure deletes any phones that were paired with the SYNC® system.*
   - *To prevent timeout errors and to minimize programming time, a hardwired Internet connection is strongly recommended when programming.*
   - *A file of approximately 80 megabytes needs to be downloaded from the online database for the programming. Allow extra time for the file to download.*
   - *The diagnostic scan tool is required.*
     - *Ensure that the IDS version and patch software levels are up to date.*
   - *Make sure the diagnostic scan tool is plugged into a power supply due to the length of programming time.*

   The following is required:
   Special Tool(s) : CCMSYNC-KIT SYNC Re-Flash Kit

4. **NOTE:**

   - *Close the IDS program before attempting to program the APIM .*
   - *Install a battery charger set on low.*
     - *When connecting the charger, the negative battery charger lead must be connected to a clean chassis ground, not the negative battery post.*
   - *Connect one end of the USB male-A to male-A cable to the diagnostic scan tool, and the other end to the vehicle's USB port.*
   - *Connect the diagnostic scan tool to the DLC .*
   - *Access the technician service publication website and run OASIS using "Read VIN & DTCs."*
     - *If the "Read VIN & DTCs" button is green with a red IDS icon, refer to the "SYNC - Software Programming" document under the "Service Tips" tab.*
     - *If the "Read VIN & DTCs" button is red with a grey IDS icon, ensure pop ups are enabled, follow the Internet Explorer pop ups, and then refer to the "SYNC - Software Programming" document under the "Service Tips" tab.*
   - *If the "SYNC - Software Programming" document is not followed, the programming may stop or encounter errors due to improperly configured Internet browser settings.*

5. From the OASIS tab, select the "SYNC" button.

6. **NOTE:** *There are 3 types of APIM programming available:*

   - *Standard — Used to update the APIM and any currently installed Applications to the latest software levels.*
   - *Custom — Used to show all the available software options (including Applications that may not have been installed previously) that can be programmed into the APIM . Use this selection when upgrades become available or as directed by a TSB .*
   - *Module Replacement — Used when the APIM has been replaced. This type of programming performs the required provisioning (restores software for newly installed hardware).*

7. After selecting 1 of the 3 options (Standard, Custom, or Module Replacement), select the "Read SYNC" button to verify the current APIM assembly, Vehicle Interface Processor (VIP), and Consumer Interface Processor (CIP) software levels. The software levels are compared to an online database, followed by the available software being displayed.

8. **NOTE:** *Do not disconnect the Vehicle Communication Module (VCM) or USB cable during APIM programming.*

   Select the "Program SYNC" button to begin the APIM programming process.

9. Follow the diagnostic scan tool on-screen directions. After programming is complete, the diagnostic scan tool displays "Programming has been successfully completed."

Copyright © Ford Motor Company

Audio Front Control Module (ACM)

Removal

NOTE: *Removal steps in this procedure may contain installation details.*

1. **WARNING: Before beginning any service procedure in this section, refer to Safety Warnings in section 100-00 General Information. Failure to follow this instruction may result in serious personal injury.**

   Refer to: Health and Safety Precautions (100-00 General Information, Description and Operation).

2. **NOTE:** *If installing a new module, it is necessary to upload the module configuration information to the scan tool prior to removing the module. This information must be downloaded into the new module after installation.*

   Upload the ACM configuration information to the scan tool by following the scan tool on screen instructions.

3.

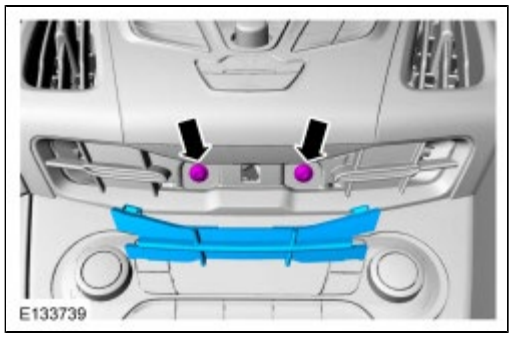

4.

5. *Torque* : 1.3 Nm

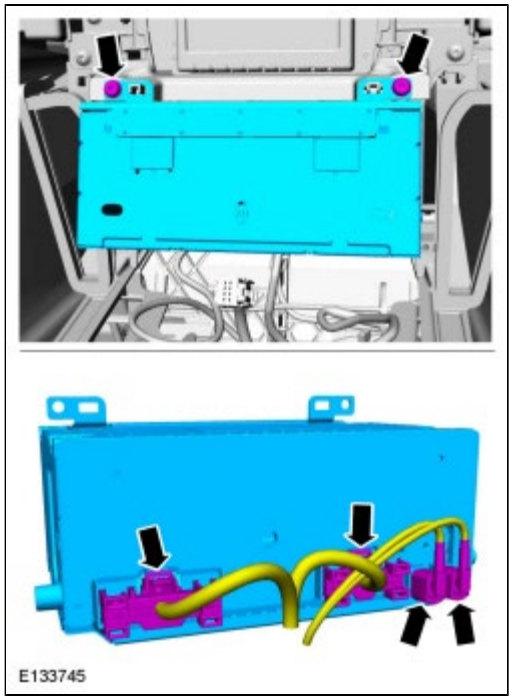

Installation

1. To install, reverse the removal procedure.
2. If installing a new ACM , download the ACM configuration information from the scan tool to the new ACM following the scan tool on screen instructions.

Copyright © Ford Motor Company

Air Conditioning (A/C) System Flushing

1. **NOTICE: An A/C refrigerant analyzer must be used before the recovery of any vehicle's A/C refrigerant. Failure to do so puts the shop's bulk refrigerant at risk of contamination. If the vehicle's A/C refrigerant is contaminated, refer the customer to the service facility that carried out the last A/C service. If the customer wishes to pay the additional cost, use the A/C recovery equipment that is designated for recovering contaminated A/C refrigerant. All contaminated A/C refrigerant must be disposed of as hazardous waste. For all equipment, follow the equipment manufacturer procedures and instructions.**

   NOTICE: Suction accumulator or receiver/drier, TXV and/or evaporator core orifice, and hoses with mufflers, should be removed when flushing the A/C system. Internal plumbing of these devices makes it impossible to correctly remove any residual-flushing agent. These components are typically discarded after A/C system contamination. Hoses without mufflers can normally be reused unless they are clogged with foreign material.

   NOTICE: Only the listed A/C Flush and Purge Machine, A/C Flush and Purge Fitting Kit, A/C Flush Adapter Kit and Motorcraft® A/C System Flushing Solvent are approved for use on Ford vehicles. No other flushing device or solvent is approved for flushing heat exchangers (A/C condenser, A/C evaporator). Use of any other flusher or solvent may cause damage to the A/C system and the flushing unit.

   NOTE: *Specialized equipment to flush debris and contaminates from the Focus A/C refrigeration system is currently not available . After a compressor or receiver dryer (desiccant) failure, the condenser, evaporator, thermostatic expansion valve with tube, evaporator-to-compressor suction line and compressor to condenser discharge line must be replaced. Once the special flushing equipment is made available, this procedure will be revised. Please continue to reference the online workshop manual on each repair for any updates or revisions to this procedure.*

Copyright © Ford Motor Company

Air Conditioning (A/C) System Recovery, Evacuation and Charging

1. Prior to recovering, the purity of the refrigerant must be verified.
2. Connect the special tool or the special tool to the low- and high-pressure service gauge port valves following the operating instructions provided by the equipment manufacturer.
   Special Tool(s) : 199-00067 A/C SERVICE MACHINE PRINTER , 300-ROB34288 R134a Refrigerant Recovery Recycling and Recharge Machine (R134a Refrigerant Management Machine (SAE Compliant))
3. Recover the refrigerant from the system following the operating instructions provided by the equipment manufacturer. Note the amount of oil removed during the refrigerant recovery (if any). Add that same amount back into the system once repairs are complete.
4. Once the R-134a has been recovered, switch OFF the power supply.
5. Allow the system to set for about 2 minutes, and observe the system vacuum reading. If the vacuum is not lost, disconnect the recovery equipment.
6. If the system does lose vacuum, repeat Steps 3 through 5 until the vacuum level remains stable for 2 minutes.
7. Carry out the required repairs.
8. Connect the special tool or the special tool to the low- and high-pressure service gauge port valves following the operating instructions provided by the equipment manufacturer.
   Special Tool(s) : 199-00067 A/C SERVICE MACHINE PRINTER , 300-ROB34288 R134a Refrigerant Recovery Recycling and Recharge Machine (R134a Refrigerant Management Machine (SAE Compliant))
9. Evacuate the system until the low-pressure gauge reads at least 99.4 kPa (29.5 in-Hg) of vacuum and as close to 101.1 kPa (30 in-Hg) as possible. Continue to operate the Vacuum Pump for a minimum of 45 minutes.
10. Turn OFF the vacuum pump. Observe the low-pressure gauge for 5 minutes to make sure that the system vacuum is held.
11. Lubricate the refrigerant system with the correct amount of clean Polyalkylene Glycol (PAG) oil.
12. Connect a the special tool or the special tool to the low-side and high-side service gauge port valves following the operating instructions provided by the equipment manufacturer.
    Special Tool(s) : 199-00067 A/C SERVICE MACHINE PRINTER , 300-ROB34288 R134a Refrigerant Recovery Recycling and Recharge Machine (R134a Refrigerant Management Machine (SAE Compliant))
13. Set the refrigerant charge amount, and charge the refrigerant system following the instructions provided by the equipment manufacturer.

Copyright © Ford Motor Company

Refrigerant Oil Adding

NOTICE: Motorcraft® PAG Refrigerant Compressor Oil YN-12-D only must be used as a refrigerant system lubricant. Addition of any oil other than Motorcraft® PAG Refrigerant Compressor Oil YN-32 to the refrigerant system will damage the Air Conditioning (A/C) compressor and contaminate the refrigerant system.

NOTICE: During normal Air Conditioning (A/C) operation, oil is circulated through the system with the refrigerant, and a small amount is retained in each component. If certain components of the system are removed, some of the refrigerant oil will go with the component. To maintain the original total oil charge, it is necessary to compensate for the oil lost by adding oil to the system with the new part.

Refrigerant Oil Adding

1. **NOTICE: Make sure that the equipment is clean and free of foreign material.**

   NOTE: *During normal A/C operation, oil is circulated through the system with the refrigerant, and a small amount is retained in each component. If certain components of the system are removed, some of the PAG oil will go with the component. To maintain the original total oil charge, it is necessary to compensate for the oil lost by adding oil to the system with the new part.*

   Fill the system with the calculated quantity of new refrigerant oil in accordance with the A/C service unit manufacturer instructions.
   Refer to: Specifications (412-00 Climate Control System - General Information, Specifications).

Oil Injection Using a Dye/Lubricant Injector

2. **NOTE:** *If fluorescent leak detection dye is also to be added during A/C charging, the dye may be added to the dye/lubricant injector, from the R-134a Loop/Add On Injector Kit-Set, along with the PAG oil.*

   Evacuate the refrigerant system.
   Refer to: Air Conditioning (A/C) System Recovery, Evacuation and Charging (412-00 Climate Control System - General Information, General Procedures).

3. Assemble the dye/lubricant injector and the correct adapters to match the amount of refrigerant compressor oil to be injected.

4. Verify that all the valves on the dye/lubricant injector are closed.

5. Fill the dye/lubricant injector with the correct amount of clean, new PAG oil.

6. Install the dye/lubricant injector between the low-side service gauge port valve and the refrigerant service station or manifold gauge set.

7. Open all valves and charge the refrigerant system.
   Refer to: Air Conditioning (A/C) System Recovery, Evacuation and Charging (412-00 Climate Control System - General Information, General Procedures).

Copyright © Ford Motor Company

Fluorescent Dye Leak Detection

1. **WARNING: Before beginning any service procedure in this section, refer to Safety Warnings in section 100-00 General Information. Failure to follow this instruction may result in serious personal injury.**

   Refer to: Climate Control System Health and Safety Precautions (100-00 General Information, Description and Operation).

2. Locate the leaks. Check all components, fittings and lines of the A/C system for leaks.
3. After the leak is found and rectified, remove any traces of dye with a general purpose solvent.
4. Check the repair by operating the system for some minutes and inspecting with the UV lamp again.

Copyright © Ford Motor Company

Electronic Leak Detection

1. **NOTE:** *Good ventilation is necessary in the area where electronic A/C leak testing is to be carried out. If the surrounding air is contaminated with refrigerant gas, the leak detector will indicate this gas all the time. Odors from other chemicals such as antifreeze, disc brake cleaner or other cleaning solvents can cause the same problem. Using a fan to ventilate the area to be tested before proceeding with the leak detection procedure is helpful in removing small traces of contamination from the air, but the fan should be turned off during actual testing.*

   NOTE: *R-134a is heavier than air, and will tend to move downward from the source of the leak if present. It is possible that a leak may not be detected if the leak detector tip is held above the leaking fitting, line or component. Always be sure to thoroughly leak test below the fitting, line or component for the presence of R-134a as well as leak testing above and around.*

   NOTE: *The system pressure should be between 413 kPa (59.9 psi) to 551 kPa (79.91 psi) at 24 C (75.2 F) with the engine off and cool. The pressure reading may be higher if the electric motor is hot.*

   Leak test the refrigerant system using a general Electronic Leak Detector. Follow the instructions included with the general Electronic Leak Detector tool for handling and operation techniques.

Copyright © Ford Motor Company

Refrigerant Identification Testing

1. **NOTE:** *A Refrigerant Blend Identifier must be used to identify gas samples taken directly from the refrigeration system or storage containers prior to recovering or charging the refrigerant system.*

   Follow the instructions included with Refrigerant Blend Identifier to obtain the sample for testing.

2. The refrigerant identifier will display one of the following:
   - If the purity level of R-134a is 98% or greater by weight, the green PASS LED will light. The weight concentrations of R-134a, R-12, R-22, hydrocarbons and air will be displayed on the digital display.
   - If refrigerant R-134a does not meet the 98% purity level, the red FAIL LED will light and an alarm will sound alerting the user of potential hazards. The weight concentrations of R-134a, R-12, R-22 and hydrocarbons will be displayed on the digital display.
   - If hydrocarbon concentrations are 2% or greater by weight, the red FAIL LED will light, "Hydrocarbon High" will be displayed on the digital display, and an alarm will sound alerting the user of potential hazards. The weight concentrations of R-134a, R-12, R-22 and hydrocarbons will also be displayed on the digital display.

3. The percentage of air contained in the sample will be displayed if the R-134a content is 98% or greater. The refrigerant identifier eliminates the effect of air when determining the refrigerant sample content because air is not considered a contaminant, although air can affect A/C system performance. When the refrigerant identifier has determined that a refrigerant source is pure (R-134a is 98% or greater by weight) and air concentration levels are 2% or greater by weight, it will prompt the user if an air purge is desired.

4. If contaminated refrigerant is detected, repeat the refrigerant identification test to verify that the refrigerant is indeed contaminated.

5. **NOTICE: If contaminated refrigerant is detected, DO NOT recover the refrigerant into R-134a recovery/recycling equipment. Recovery of contaminated refrigerant will contaminate the recovered refrigerant supply and may damage the recovery/recycling equipment.**

   NOTE: *A new suction accumulator or receiver/drier must be installed as directed by the A/C system flushing procedure.*

   Recover the contaminated refrigerant using suitable recovery-only equipment designed for capturing and storing contaminated refrigerant only.
   - Recover the contaminated refrigerant using suitable recovery-only equipment designed for capturing and storing contaminated refrigerant only.

6. Determine and correct the cause of the customer's initial concern.

7. Flush the A/C system .

8. Dispose of the contaminated refrigerant in accordance with all federal, state and local regulations.

Copyright © Ford Motor Company

Refrigerant System Tests

1. **NOTE:** *Ambient Temperature at or Below 38C (100F)*

   Drive the vehicle or run the engine until it reaches normal operating temperature.

2. Connect the air conditioning service unit to the refrigerant system.

3. Set the climate controls.

4. Set temperature to (lowest possible temp setting) with the dual function disabled (if equipped). Manually set blower on HI. If the vehicle has a fresh air/recirc button, set it to FRESH. If the vehicle has an Air Conditioning (A/C) switch or compressor on switch, set it to Air Conditioning (A/C) ON.

5. Open all vehicle windows and leave the hood open for the test. Open the rear doors.

6. Confirm the compressor is operating and the engine cooling fan(s) are operating or engaged. Allow the vehicle to idle until the suction (low-side) and discharge (high-side) pressures are stable or fluctuate in a range that repeats.

7. Record the ambient (shop) temperature.

8. Record the discharge pressure. If the pressure is fluctuating, record the average value.

9. Determine if the discharge pressure falls within the normal operating limits using the Normal Refrigerant Discharge Pressures chart.

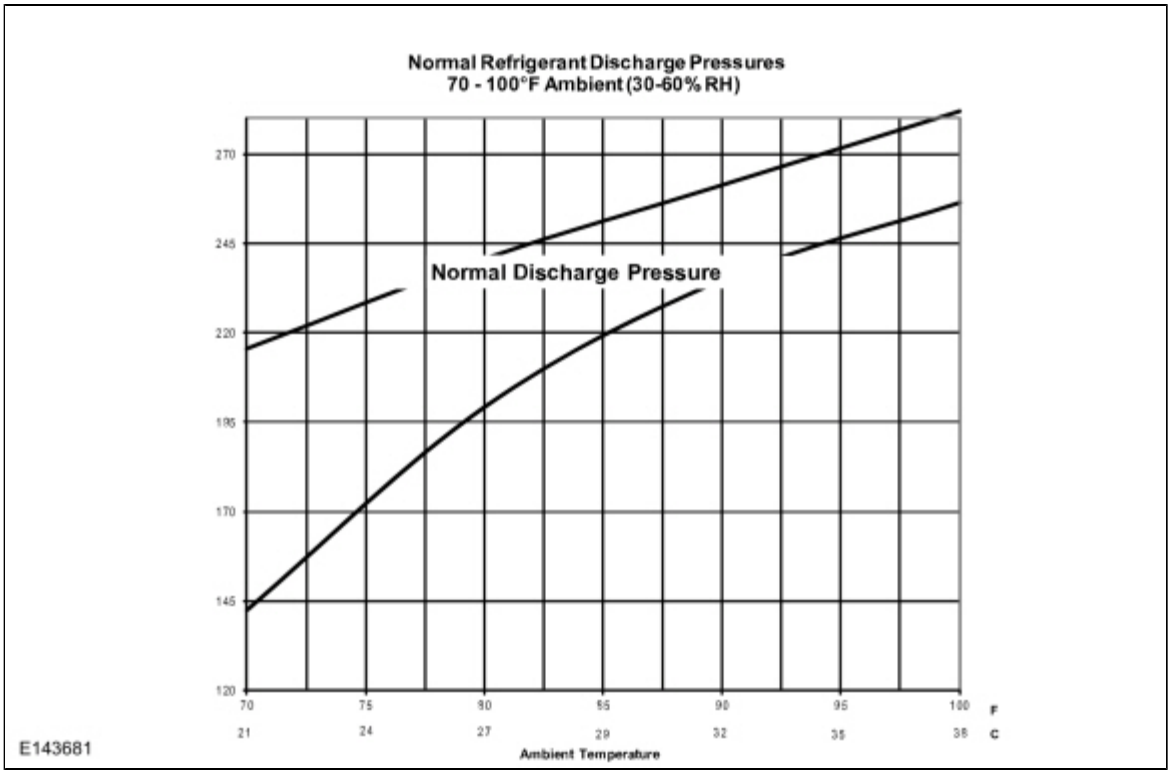

10. Record the suction pressure . If the pressure is fluctuating, record the average value.

11. Determine if the suction pressure falls between normal operating limits using the Normal Refrigerant Suction Pressures chart.

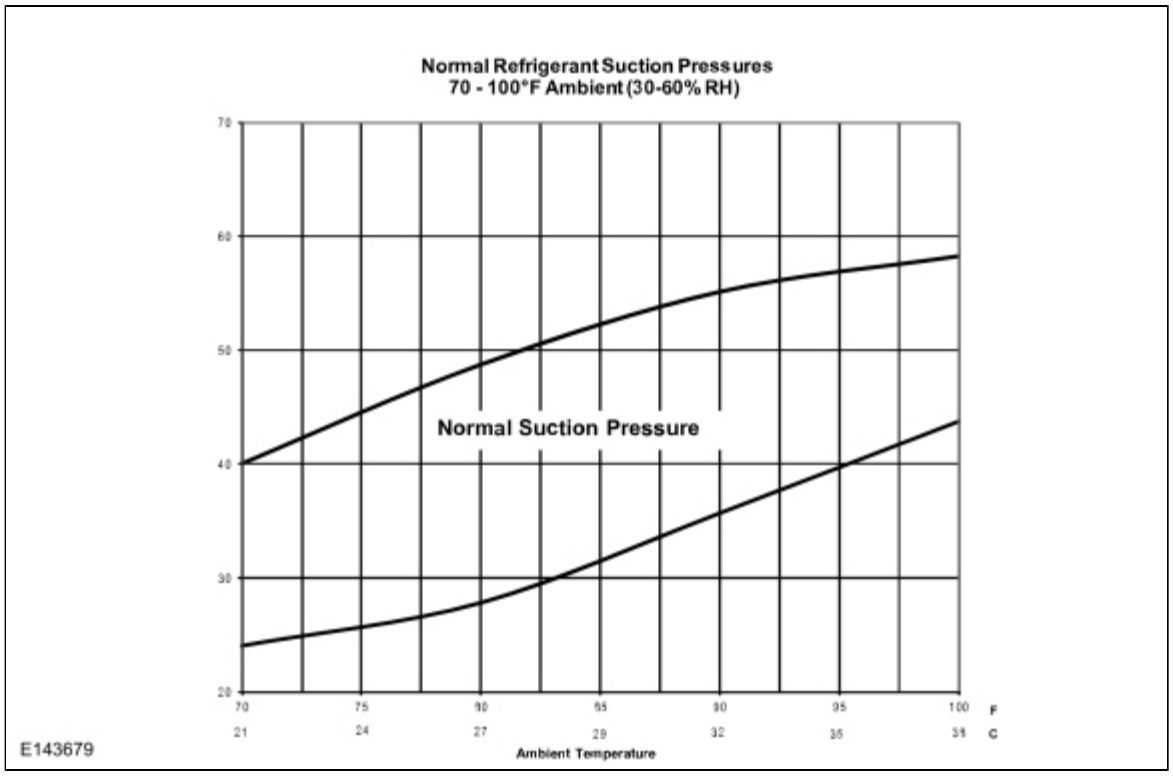

12. Proceed to the Diagnostic Table.

1. **NOTE:** *Ambient Temperature Above 38C (100F)*

   Drive the vehicle or run the engine until it reaches normal operating temperature.

2. Connect the air conditioning service unit to the refrigerant system.

3. Set the climate controls.

4. Set temperature to (lowest possible temp setting) with the dual function disabled (if equipped). Manually set blower on HI. If the vehicle has a fresh air/recirc button, set it to FRESH. If the vehicle has an Air Conditioning (A/C) switch or compressor on switch, set it to Air Conditioning (A/C) ON.

5. Open all vehicle windows and leave the hood open for the test. Open the rear hatch and/or rear doors (if equipped).

6. Confirm the compressor is operating and the engine cooling fan(s) are operating or engaged. Allow the vehicle to idle until the suction (low-side) and discharge (high-side) pressures are stable or fluctuate in a range that repeats.

7. Record the ambient (shop) temperature.

8. Record the discharge pressure. If the pressure is fluctuating, record the average value.

9. Determine if the discharge pressure falls within the normal operating limits using the Normal Refrigerant Discharge Pressures chart.

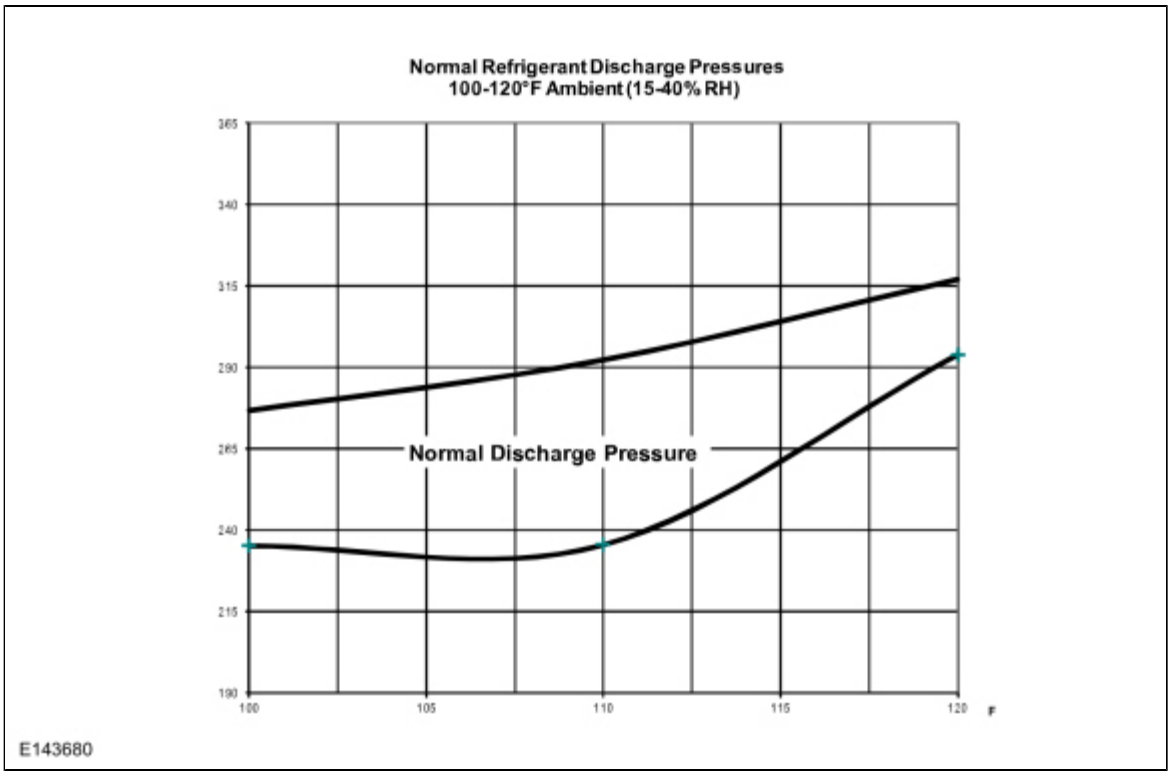

10. Record the suction pressure. If the pressure is fluctuating, record the average value.

11. Determine if the suction pressure falls between normal operating limits using the Normal Refrigerant Suction Pressures chart.

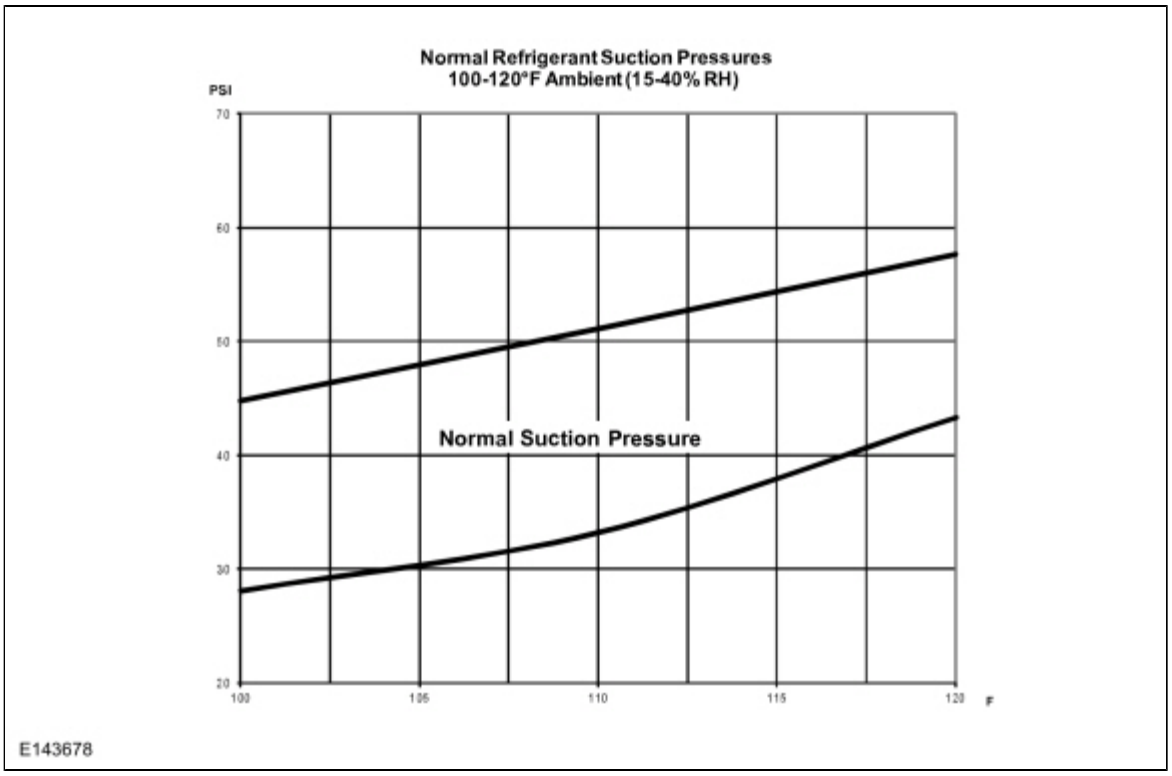

12. Proceed to the Diagnostic Table.

Copyright © Ford Motor Company

Air Conditioning (A/C) Odor Treatment

WARNING: Carry out this procedure in a well-ventilated area with all vehicle windows and doors opened. Carefully read cautionary information on product label. For EMERGENCY MEDICAL INFORMATION, seek medical advice. On Ford/Motorcraft products in the USA or Canada call: 1-800-959-3673. For additional information, consult the product MSDS, if available. Failure to follow these instructions may result in serious personal injury.

NOTE: *There are typically 4 types of objectionable odors found in a vehicle: Chemical odors, environmental odors, human and other interior-generated odors, microbiological odors Before determining that A/C odor treatment is required, the source and the circumstances under which the odor occurs must be determined.*

NOTE: *Chemical odors are usually constant regardless of the climate control system setting although they may be enhanced by A/C operation. Most chemical odors are caused by fluid leaks or incorrectly cured adhesives. Chemical odors can be eliminated by repairing the leaking component and removing any residue.*

NOTE: *Environmental odors usually occur for a short time and diminish after the vehicle passes through the affected area. These odors are typically only detected when the vehicle windows are open, or when the climate control system is operating in a mode that allows for fresh air. Environmental odors cannot be eliminated because they are external in source, but they may be minimized by switching to a climate control setting that uses recirculated air.*

NOTE: *Human and other interior-generated odors occur while the source is present and may linger for a short time after. These odors may be more noticeable during A/C operation. Human odors may be eliminated by removing the source and cleaning the affected area.*

NOTE: *Microbiological odors, if in the A/C system, usually last for about 30 seconds after the system is turned on. They will be detected while the A/C is turned on and using either outside or recirculated air. Microbiological odors that occur in areas other than the A/C system (for example, water in doors or wet carpeting) may last indefinitely and will be more intense when recirculated air is used. Microbiological odors will not be present at temperatures at or below 10 C (50 F) .*

1. Microbiological odors can be eliminated by removing the source and treating the affected area. Standing water must be allowed to drain and dry out. A/C systems may be treated by using A/C Cooling Coil Coating as described in the service procedure below. Microbiological odors result from microbial growth supported by warm temperatures and moisture. Microbiological odors are described as musty/mildew type smells and may occur on/in: foam seals, rubber seals, adhesives, standing water, water soaked carpet/trim.

2. **NOTE:** *Identify the type of odor present in the vehicle. Do not proceed with A/C odor treatment if the odor source is found to be outside of the A/C system. Refer to the following list for examples.*

    - Transmission Fluid - Oil type or burning smell
    - Washer Fluid - Alcohol type smell
    - Gear Lube - Garlic/sulfur smell
    - Refrigerant Oil - Ether type smell
    - Carpet/Trim Adhesives - Fishy, urine or sweet smell
    - Evaporator Core Coating - Wet cement type smell
    - Industrial Pollutants - Various smells
    - Dust - Musty, mildew or wet cement type smell
    - Pollen - Sweet smell
    - Tobacco - Burning, tar smell
    - Body Secretions - Body odor
    - Perfuming Agents - Sweet or fragrance smell
    - Clothing - Musty, mildew or body odors
    - Food/Beverage
    - Microbiological Odors Occurring Inside of A/C System - Musty, mildew smell lasting about 30 seconds after A/C is turned on
    - Microbiological Odors Occurring Outside of A/C System - Musty, mildew smell lasting indefinitely and possibly more pronounced when using recirculated air

3. **NOTE:** *Identify the source of the odor.*

    - Check the evaporator core drain tube for restriction.
    - Check the passenger and driver side carpet for moisture. If moisture is found, A/C odor treatment is not necessary. Diagnose for a water leak as needed.
    - Check the blower motor and blower motor cover (if equipped) for moisture resulting from water bypassing the cowl baffling system. If moisture is found, A/C odor treatment is not necessary. Diagnose for a water leak as needed.
    - Check the cowl top panel and air inlet screen for standing water or foreign material. If possible, remove any standing water and clean the air inlet screen using a wet/dry vacuum.

4. Open all vehicle windows and doors.

5. Make sure that the A/C is off.

6. Set the following:

7. Select REGISTER mode (A/C off).

8. Adjust the temperature setting to full warm.

9. Adjust the blower motor speed to HI.

10. Run the electric motor for 25 minutes to dry out the A/C system.

11. Turn the ignition OFF.

12. Remove the blower motor.

13. **NOTE:** *Blower motor speed controls that are mounted outside of the evaporator core housing and not exposed to the blower motor airflow do not need to be removed.*

    Remove the blower motor speed control (if equipped and exposed to the inside of the evaporator core housing).

14. **NOTICE: To avoid damage to the vehicle interior, do not spill or spray this product on any interior surface.**

    Add one full bottle of A/C Cooling Coil Coating to the Flexible Applicator Tool.

15. Insert the nozzle into the evaporator housing and direct the spray toward the evaporator core face. Spray the entire evaporator core face until empty.

16. Install the blower motor and blower motor speed control.

17. Repeat Steps 5 through 10 to cure the evaporator core coating.

Copyright © Ford Motor Company

Blower Motor Resistor - Vehicles With: Electronic Manual Temperature Control (EMTC)

Removal

NOTE: *Removal steps in this procedure may contain installation details.*

1.

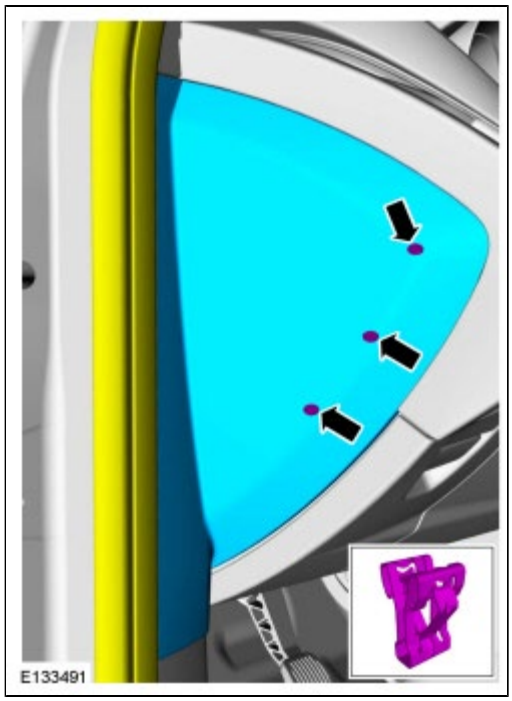

2.

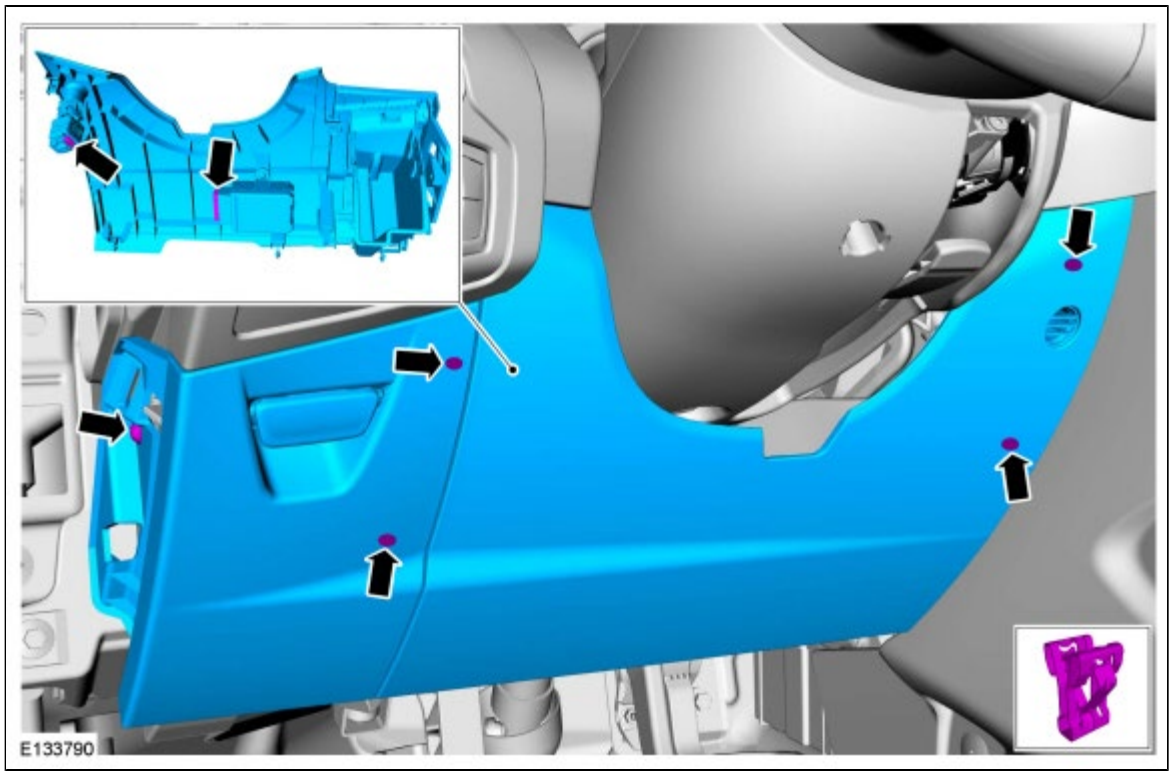

3. *Torque* : 3 Nm

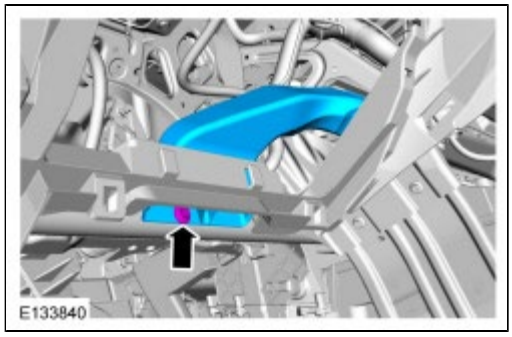

4.

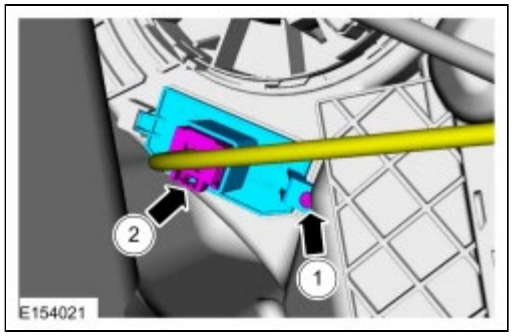

Installation

1. To install, reverse the removal procedure.

Copyright © Ford Motor Company

Air Conditioning (A/C) Compressor - 2.0L Duratec-HE (125kW/170PS) - MI4

Removal

NOTE: *Removal steps in this procedure may contain installation details.*

1. **WARNING: Before beginning any service procedure in this section, refer to Safety Warnings in section 100-00 General Information. Failure to follow this instruction may result in serious personal injury.**

   Refer to: Climate Control System Health and Safety Precautions (100-00 General Information, Description and Operation).

2. Refer to: Air Conditioning (A/C) System Recovery, Evacuation and Charging (412-00 Climate Control System - General Information, General Procedures).

3. Refer to: Jacking and Lifting - Overview (100-02 Jacking and Lifting, Description and Operation).

4. Refer to: Air Conditioning (A/C) Compressor Belt (303-05A Accessory Drive - 2.0L Duratec-HE (125kW/170PS) - MI4, Removal and Installation).

5. *Torque* : 25 Nm

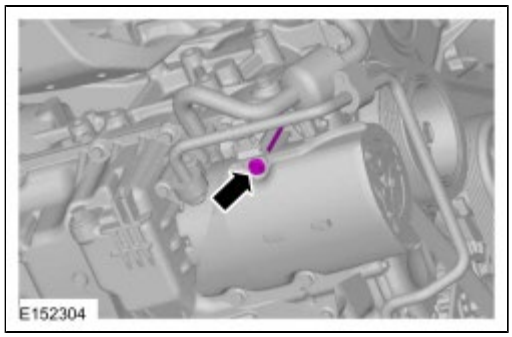

6. *Torque* : 20 Nm

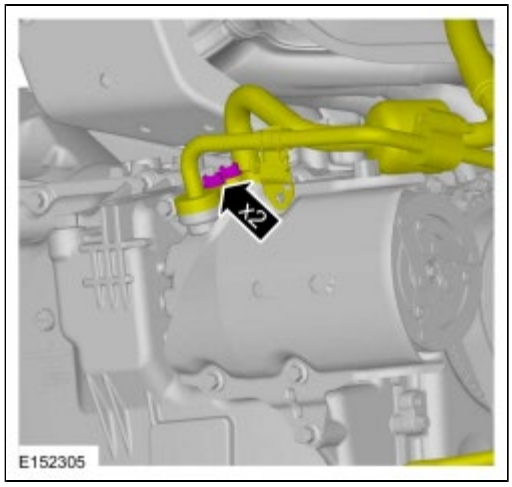

7.

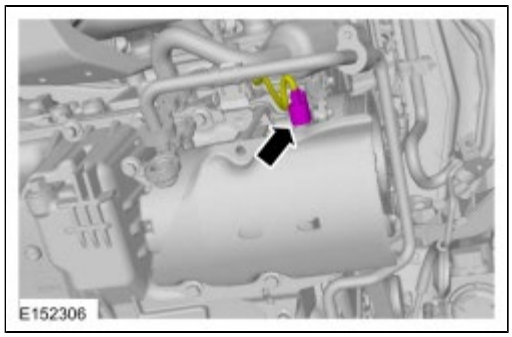

8. *Torque* : 25 Nm

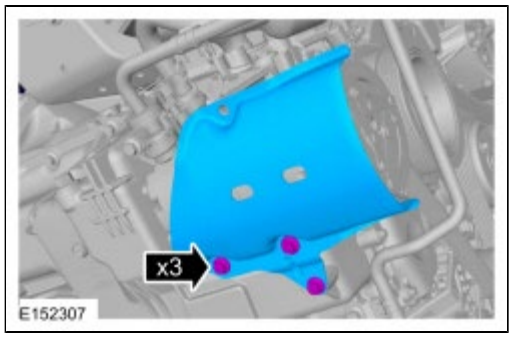

9. *Torque* : 25 Nm

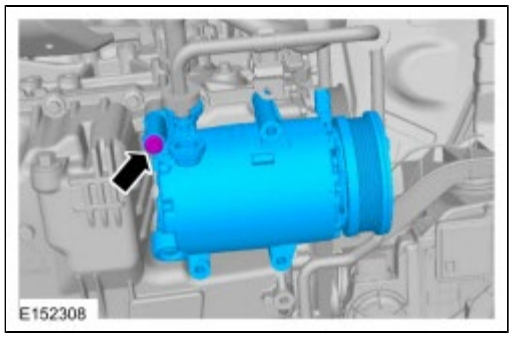

Installation

NOTE: *Install new O-ring seals and gasket seals.*

1. To install, reverse the removal procedure.
2. Refer to: Refrigerant Oil Adding (412-00 Climate Control System - General Information, General Procedures).

Copyright © Ford Motor Company

Condenser - 2.0L Duratec-HE (125kW/170PS) - MI4

Removal

NOTE: *Removal steps in this procedure may contain installation details.*

1. **WARNING: Before beginning any service procedure in this section, refer to Safety Warnings in section 100-00 General Information. Failure to follow this instruction may result in serious personal injury.**

   Refer to: Climate Control System Health and Safety Precautions (100-00 General Information, Description and Operation).

2. Refer to: Radiator (303-03A Engine Cooling - 2.0L Duratec-HE (125kW/170PS) - MI4, Removal and Installation).

Installation

1. To install, reverse the removal procedure.

2. Refer to: Refrigerant Oil Adding (412-00 Climate Control System - General Information, General Procedures).

Copyright © Ford Motor Company

Air Conditioning (A/C) Compressor - 2.0L EcoBoost (184kW/250PS) - MI4

Removal

NOTE: *Removal steps in this procedure may contain installation details.*

1. **WARNING: Before beginning any service procedure in this section, refer to Safety Warnings in section 100-00 General Information. Failure to follow this instruction may result in serious personal injury.**

   Refer to: Climate Control System Health and Safety Precautions (100-00 General Information, Description and Operation).

2. Refer to: Air Conditioning (A/C) System Recovery, Evacuation and Charging (412-00 Climate Control System - General Information, General Procedures).

3. Refer to: Jacking and Lifting - Overview (100-02 Jacking and Lifting, Description and Operation).

4. Refer to: Air Conditioning (A/C) Compressor Belt (303-05G) .

5.

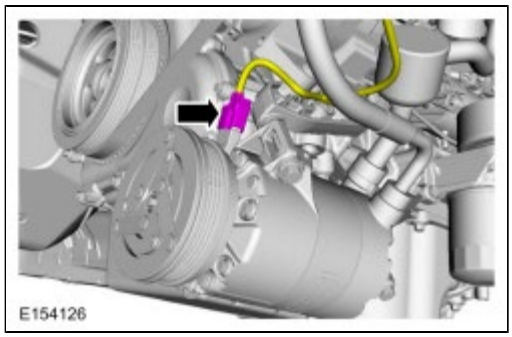

6. *Torque* : 20 Nm

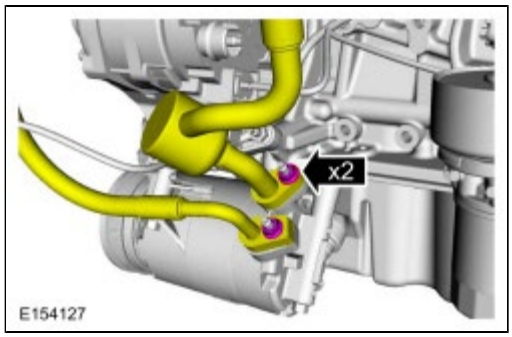

7. *Torque* : 25 Nm

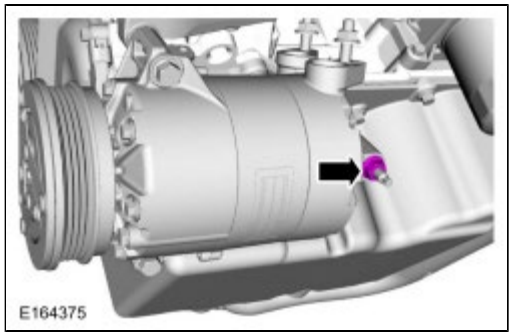

8. *Torque* : 9 Nm

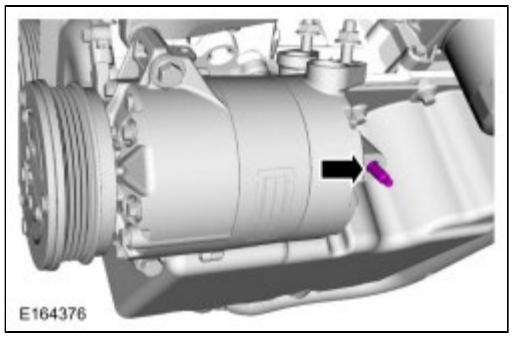

9. *Torque* : 25 Nm

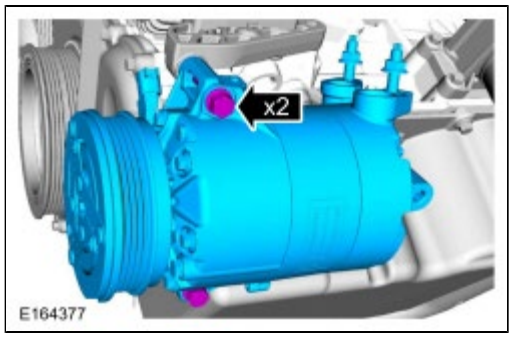

Installation

NOTE: *Install new O-ring seals and gasket seals.*

1. To install, reverse the removal procedure.
2. Refer to: Refrigerant Oil Adding (412-00 Climate Control System - General Information, General Procedures).

Copyright © Ford Motor Company

Condenser - 2.0L EcoBoost (184kW/250PS) - MI4

Removal

NOTE: *Removal steps in this procedure may contain installation details.*

1. **WARNING: Before beginning any service procedure in this section, refer to Safety Warnings in section 100-00 General Information. Failure to follow this instruction may result in serious personal injury.**

   Refer to: Climate Control System Health and Safety Precautions (100-00 General Information, Description and Operation).

2. Refer to: Air Conditioning (A/C) System Recovery, Evacuation and Charging (412-00 Climate Control System - General Information, General Procedures).

3. *Torque* : 15 Nm

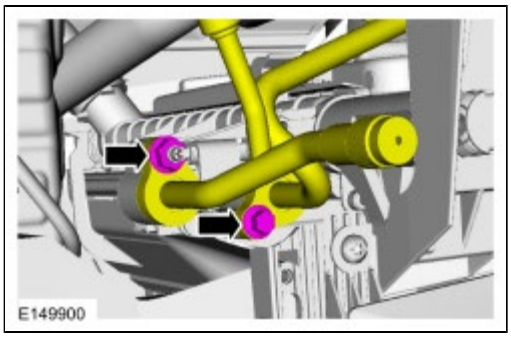

4. *Torque* : 7 Nm

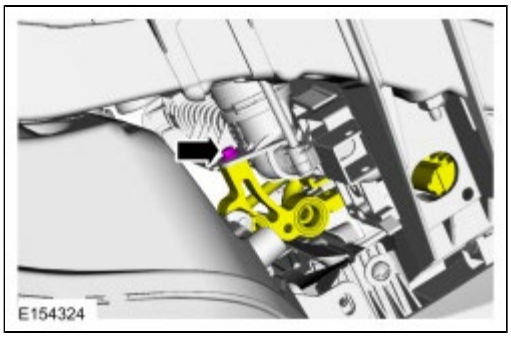

5. Refer to: Charge Air Cooler (CAC) (303-12B Intake Air Distribution and Filtering - 2.0L EcoBoost (184kW/250PS) - MI4, Removal and Installation).

6.

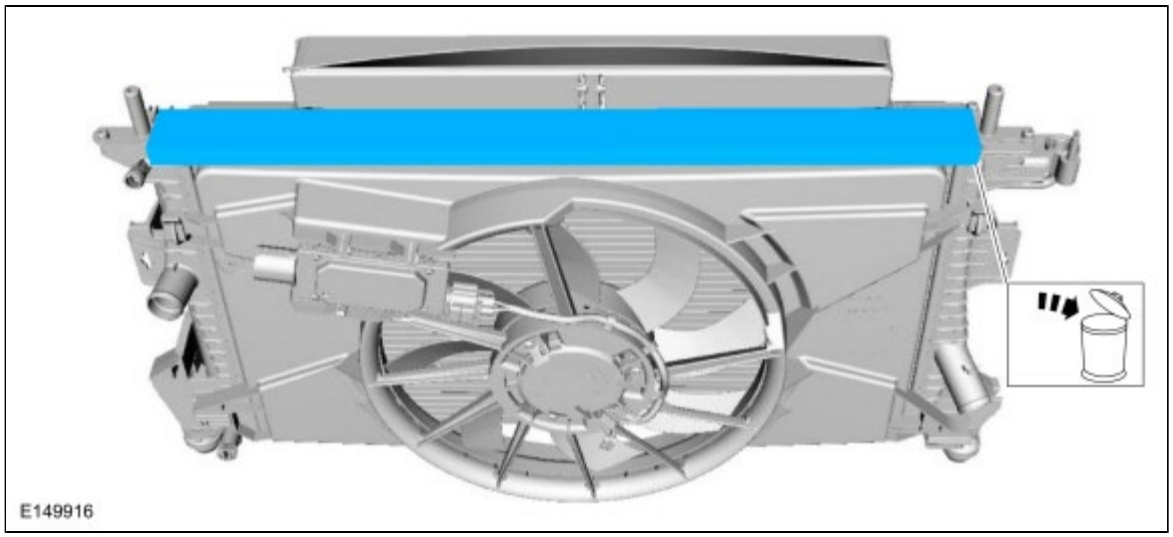

7.

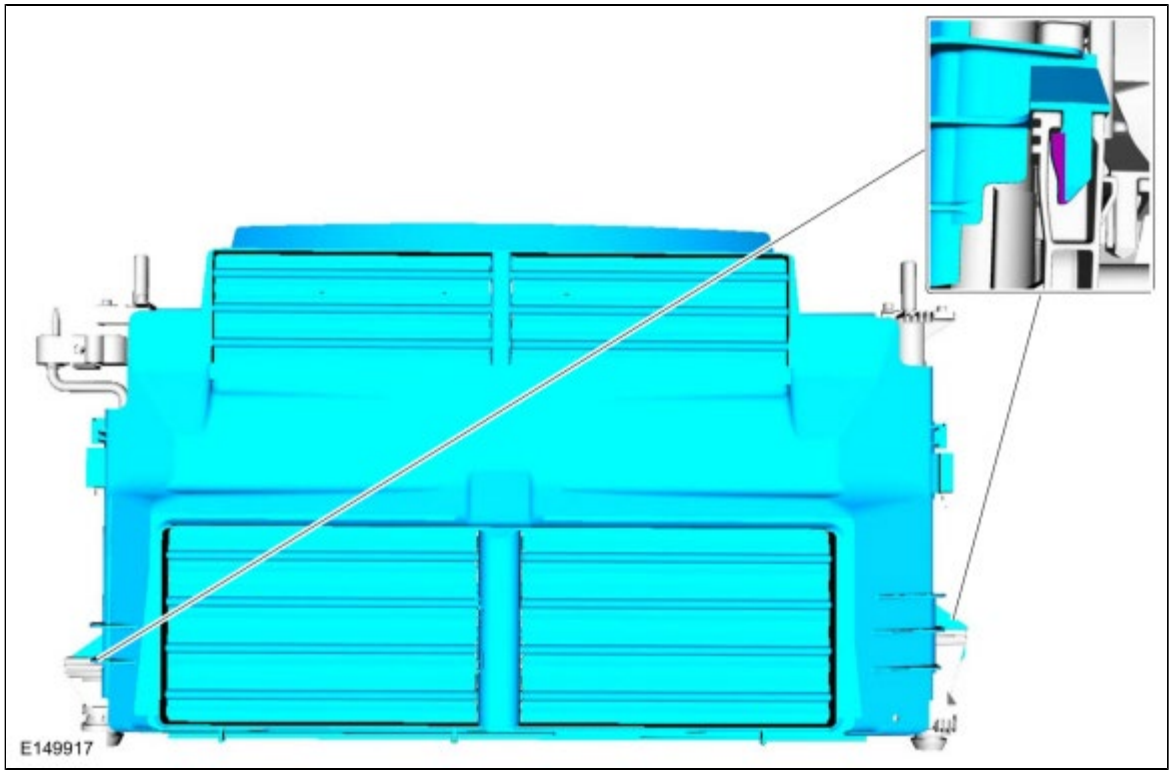

8.

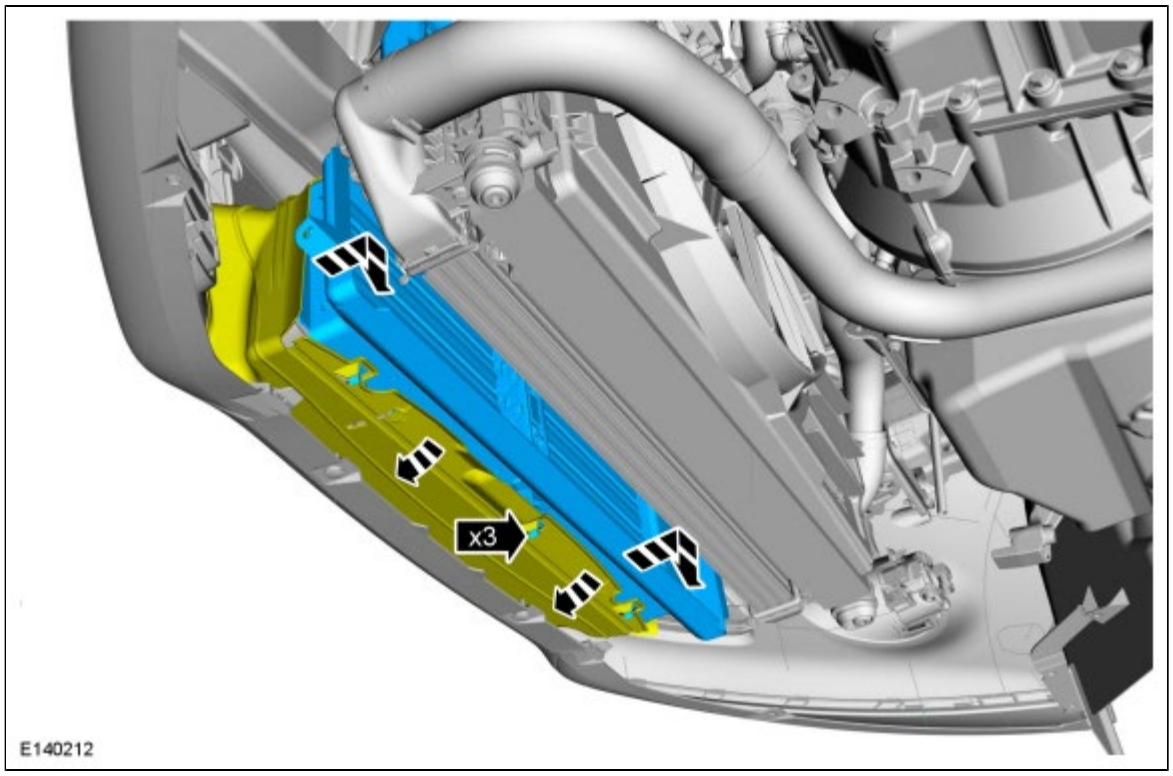

9.

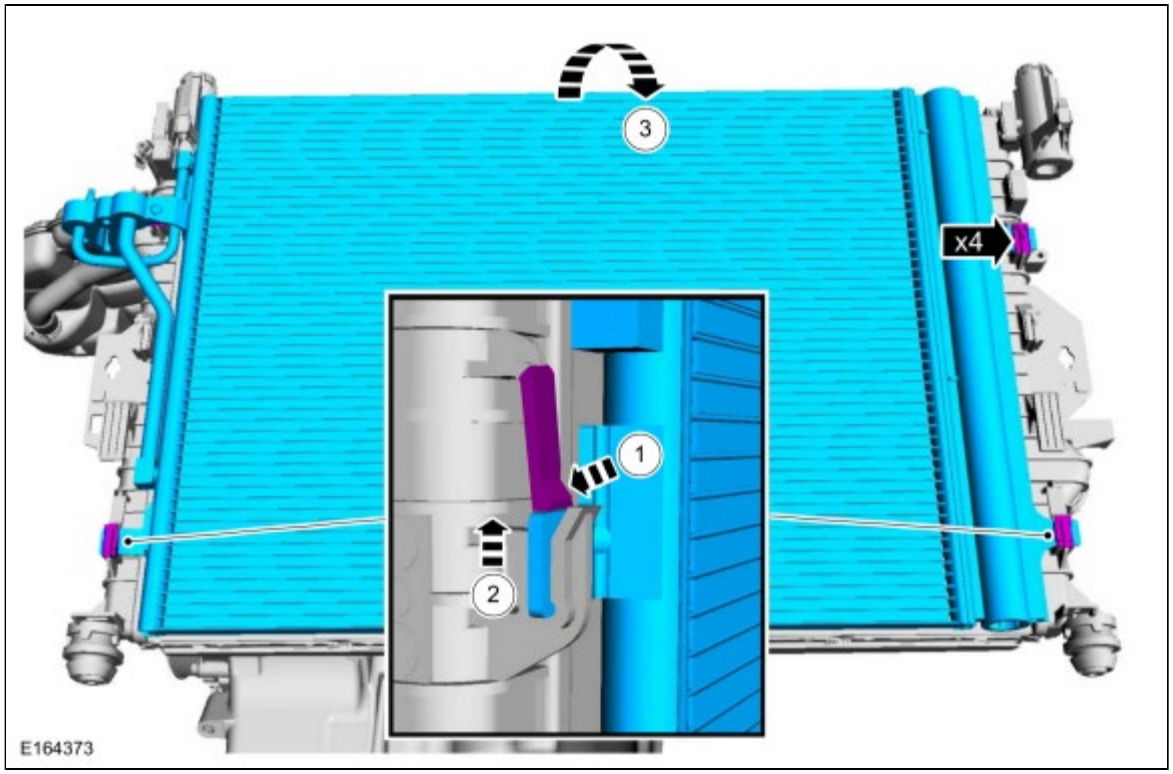

Installation

NOTE: *Install new O-ring seals and gasket seals.*

1. To install, reverse the removal procedure.
2. Refer to: Refrigerant Oil Adding (412-00 Climate Control System - General Information, General Procedures).

Copyright © Ford Motor Company

Thermostatic Expansion Valve - 2.0L Duratec-HE (125kW/170PS) - MI4, Vehicles Built From: 05-March-2012

Removal

NOTE: *Removal steps in this procedure may contain installation details.*

1. **WARNING: Before beginning any service procedure in this section, refer to Safety Warnings in section 100-00 General Information. Failure to follow this instruction may result in serious personal injury.**

   Refer to: Climate Control System Health and Safety Precautions (100-00 General Information, Description and Operation).

2. Refer to: Air Conditioning (A/C) System Recovery, Evacuation and Charging (412-00 Climate Control System - General Information, General Procedures).

3. *Torque* :
   1. 11 Nm
   2. 3 Nm

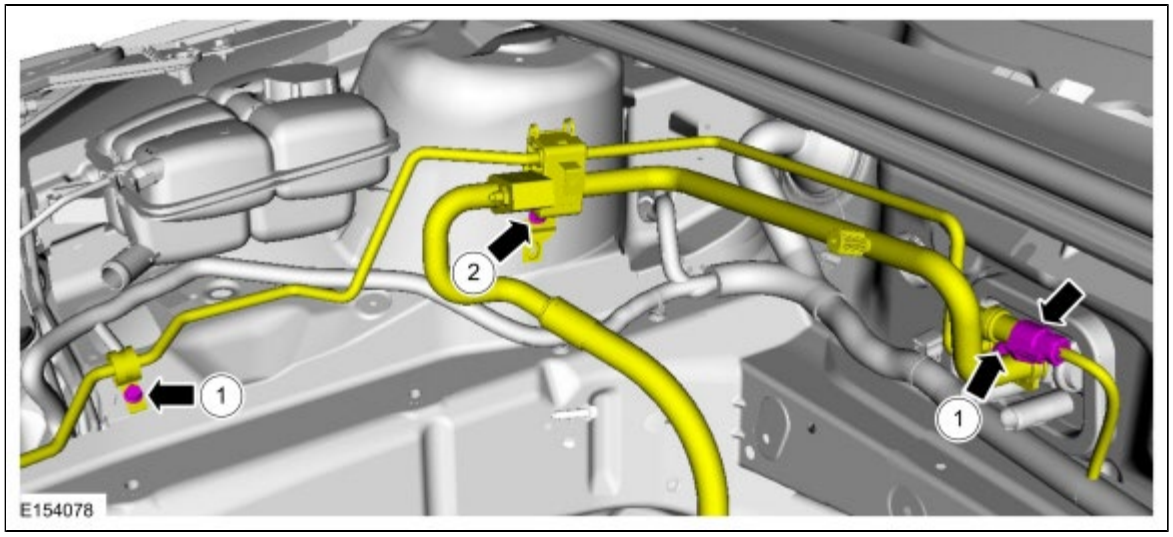

4. *Torque* : 8 Nm

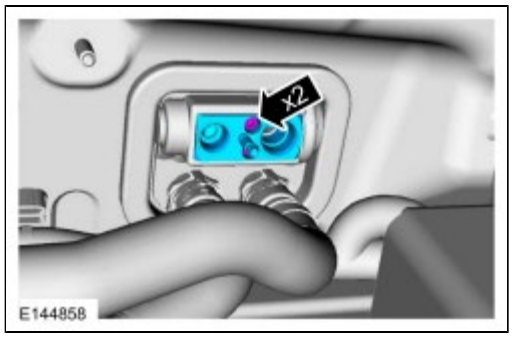

Installation

NOTE: *Install new O-ring seals and gasket seals.*

1. To install, reverse the removal procedure.

2. Refer to: Refrigerant Oil Adding (412-00 Climate Control System - General Information, General Procedures).

Copyright © Ford Motor Company

Temperature Door Actuator - Vehicles With: Electronic Manual Temperature Control (EMTC)

Removal

NOTE: *Removal steps in this procedure may contain installation details.*

1.

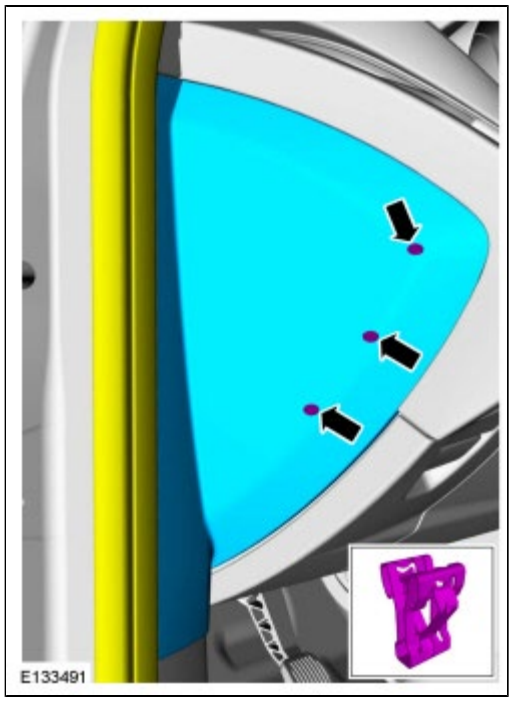

2.

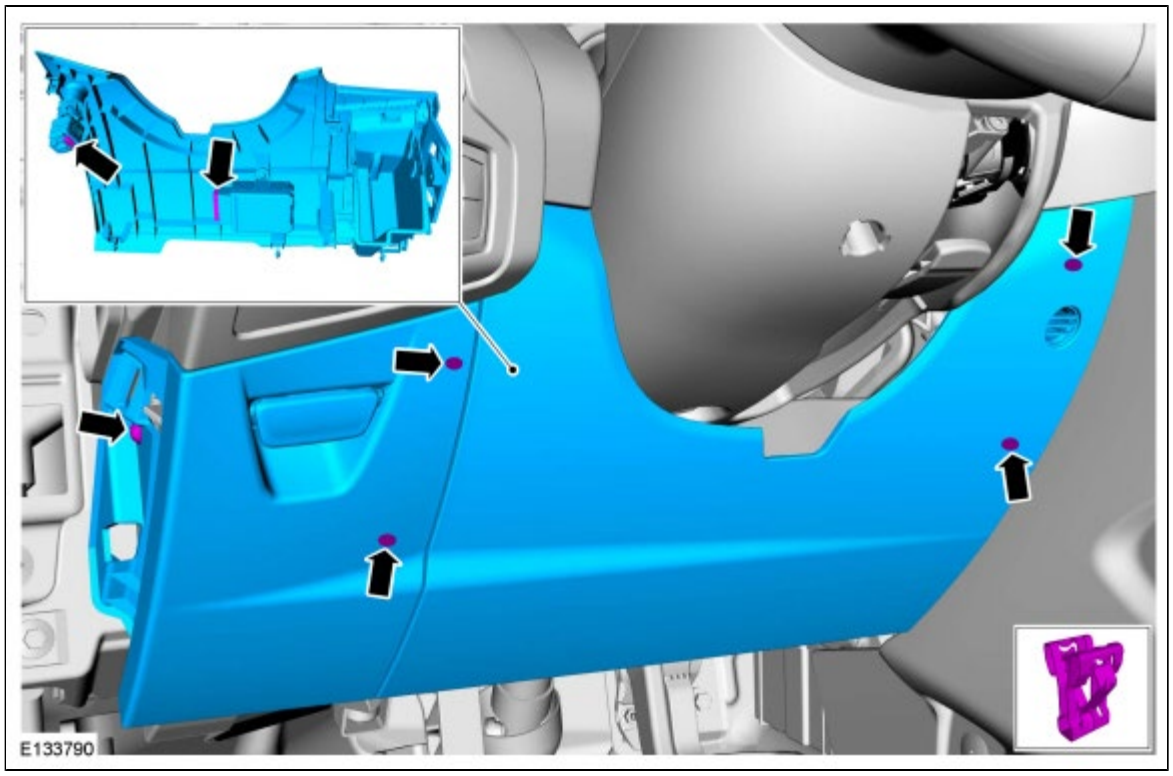

3. *Torque* : 3 Nm

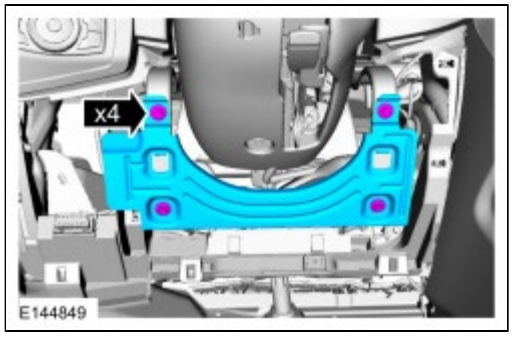

4. *Torque* : 3 Nm

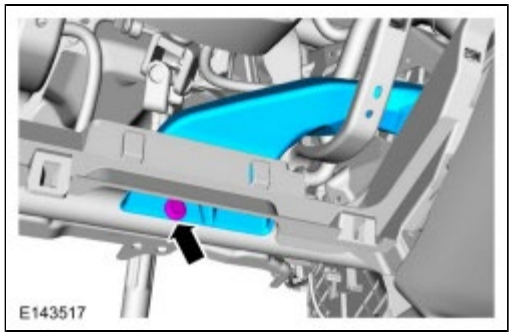

5.

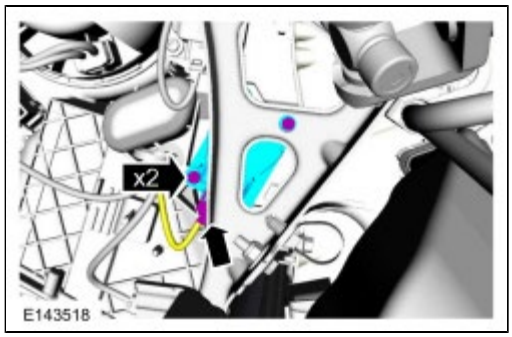

Installation

1. To install, reverse the removal procedure.

Copyright © Ford Motor Company

Driver Side Temperature Door Actuator - Vehicles With: Dual Automatic Temperature Control (DATC)

Removal

NOTE: *Removal steps in this procedure may contain installation details.*

1.

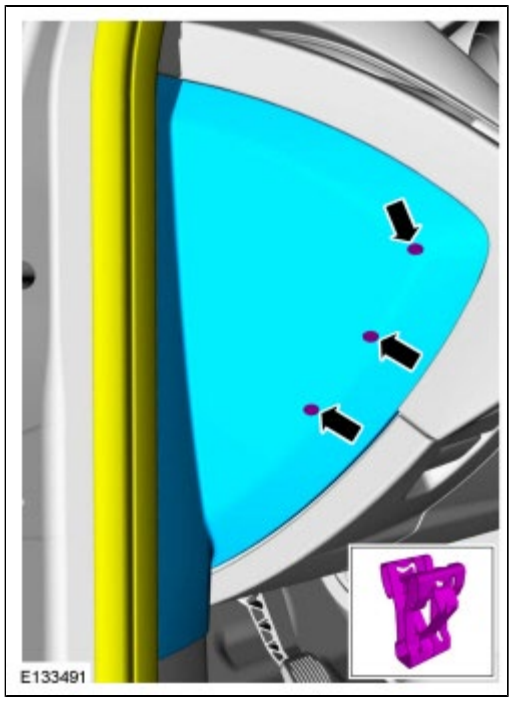

2.

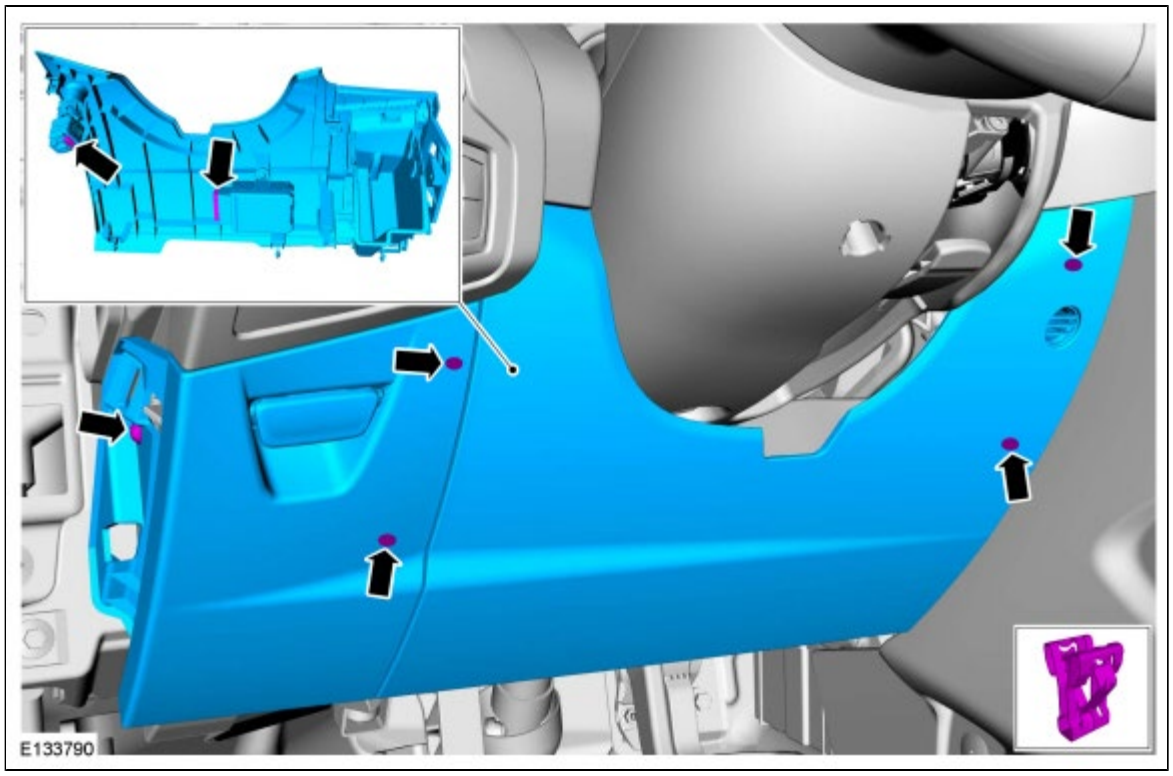

3. *Torque* : 3 Nm

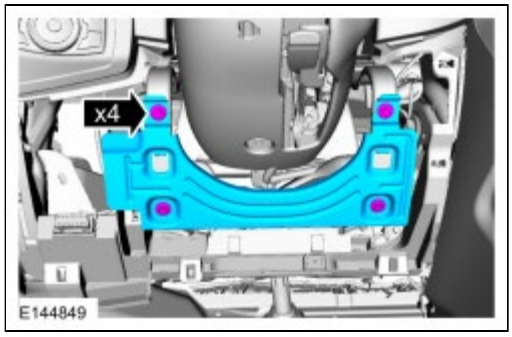

4. *Torque* : 3 Nm

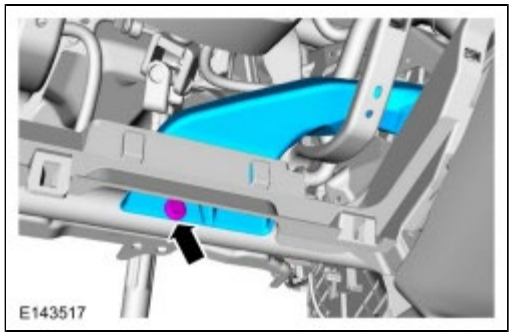

5.

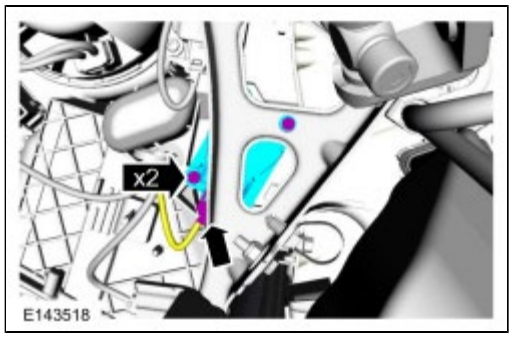

Installation

1. To install, reverse the removal procedure.

Copyright © Ford Motor Company

Passenger Side Temperature Door Actuator - Vehicles With: Dual Automatic Temperature Control (DATC)

Removal

NOTE: *Removal steps in this procedure may contain installation details.*

1.

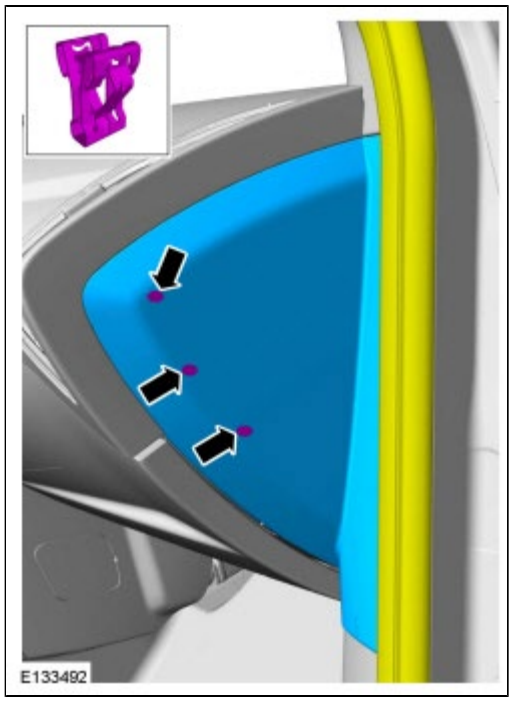

2.

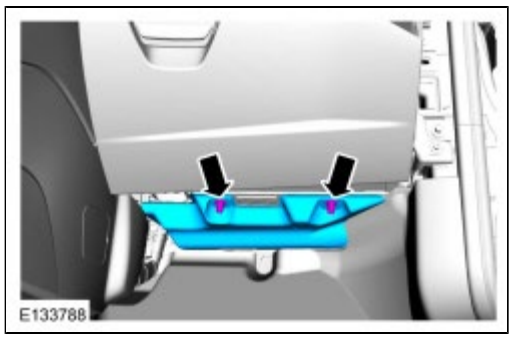

3.

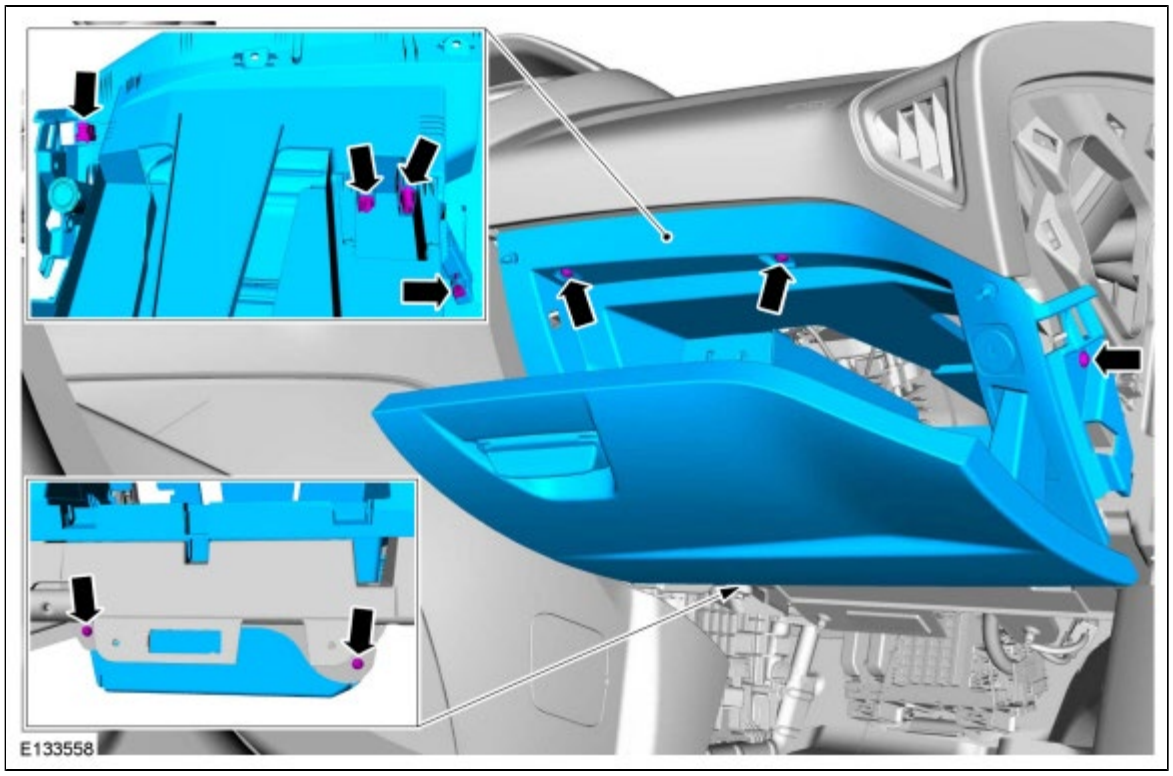

4. *Torque* : 3 Nm

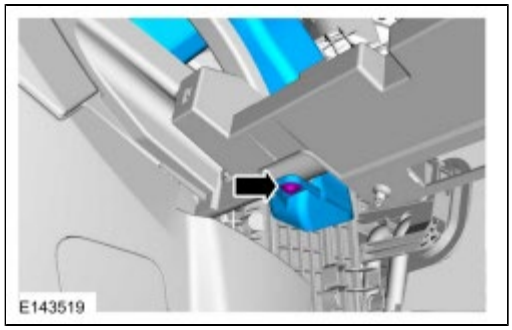

5.

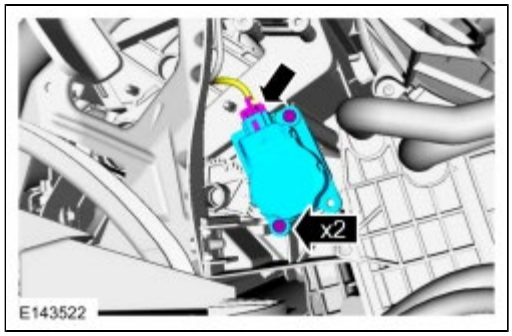

Installation

1. To install, reverse the removal procedure.

Copyright © Ford Motor Company

Air Conditioning (A/C) Compressor Inlet Line - 2.0L Duratec-HE (125kW/170PS) - MI4, Vehicles Built From: 05-March-2012

Removal

NOTE: *Removal steps in this procedure may contain installation details.*

1. **WARNING: Before beginning any service procedure in this section, refer to Safety Warnings in section 100-00 General Information. Failure to follow this instruction may result in serious personal injury.**

   Refer to: Climate Control System Health and Safety Precautions (100-00 General Information, Description and Operation).

2. Refer to: Air Conditioning (A/C) System Recovery, Evacuation and Charging (412-00 Climate Control System - General Information, General Procedures).

3. Refer to: Jacking and Lifting - Overview (100-02 Jacking and Lifting, Description and Operation).

4.

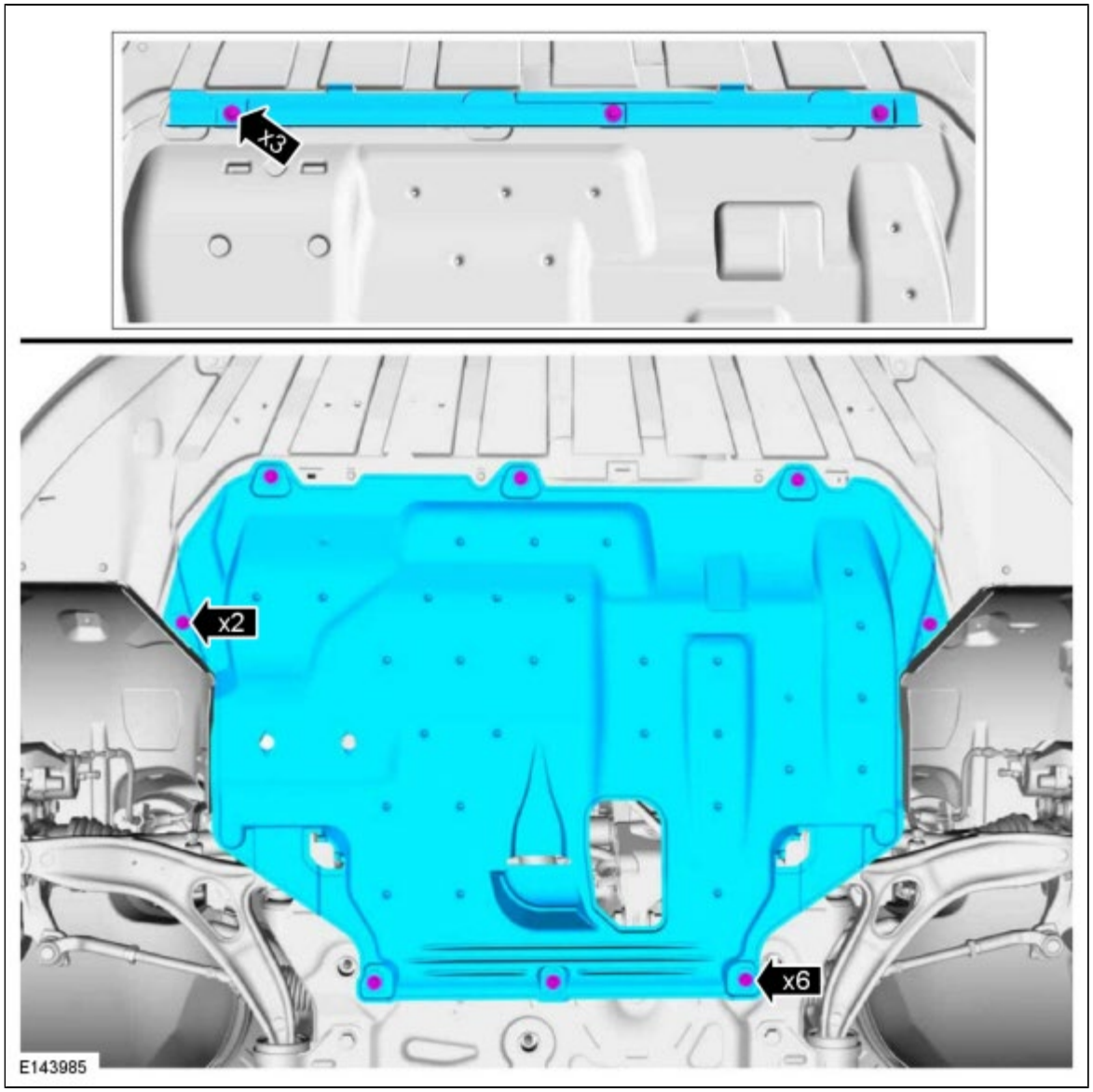

5. *Torque* : 15 Nm

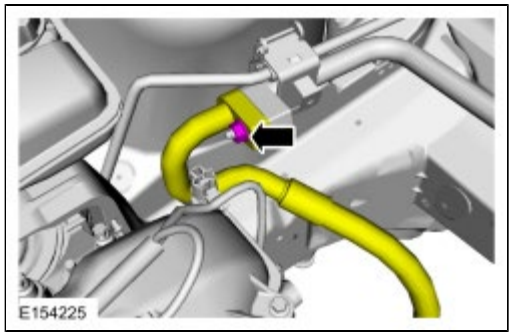

6. *Torque* : 20 Nm

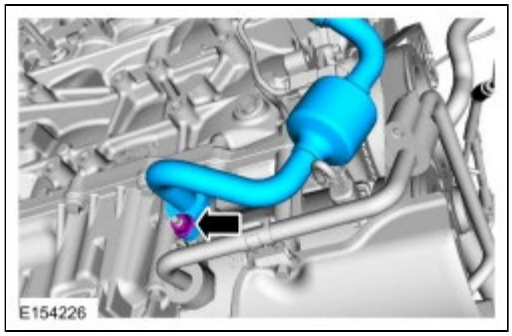

Installation

NOTE: *Install new O-ring seals and gasket seals.*

1. To install, reverse the removal procedure.
2. Refer to: Refrigerant Oil Adding (412-00 Climate Control System - General Information, General Procedures).

Copyright © Ford Motor Company

Air Conditioning (A/C) Pressure Transducer

Removal

NOTE: *Removal steps in this procedure may contain installation details.*

1. *Torque* : 7 Nm

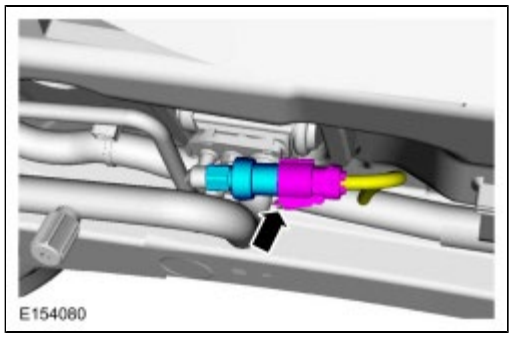

Installation

1. To install, reverse the removal procedure.

Copyright © Ford Motor Company

Air Conditioning (A/C) Compressor to Condenser Line - 2.0L Duratec-HE (125kW/170PS) - MI4

Removal

NOTE: *Removal steps in this procedure may contain installation details.*

1. **WARNING: Before beginning any service procedure in this section, refer to Safety Warnings in section 100-00 General Information. Failure to follow this instruction may result in serious personal injury.**

   Refer to: Climate Control System Health and Safety Precautions (100-00 General Information, Description and Operation).

2. Refer to: Air Conditioning (A/C) System Recovery, Evacuation and Charging (412-00 Climate Control System - General Information, General Procedures).

3. Refer to: Jacking and Lifting - Overview (100-02 Jacking and Lifting, Description and Operation).

4.

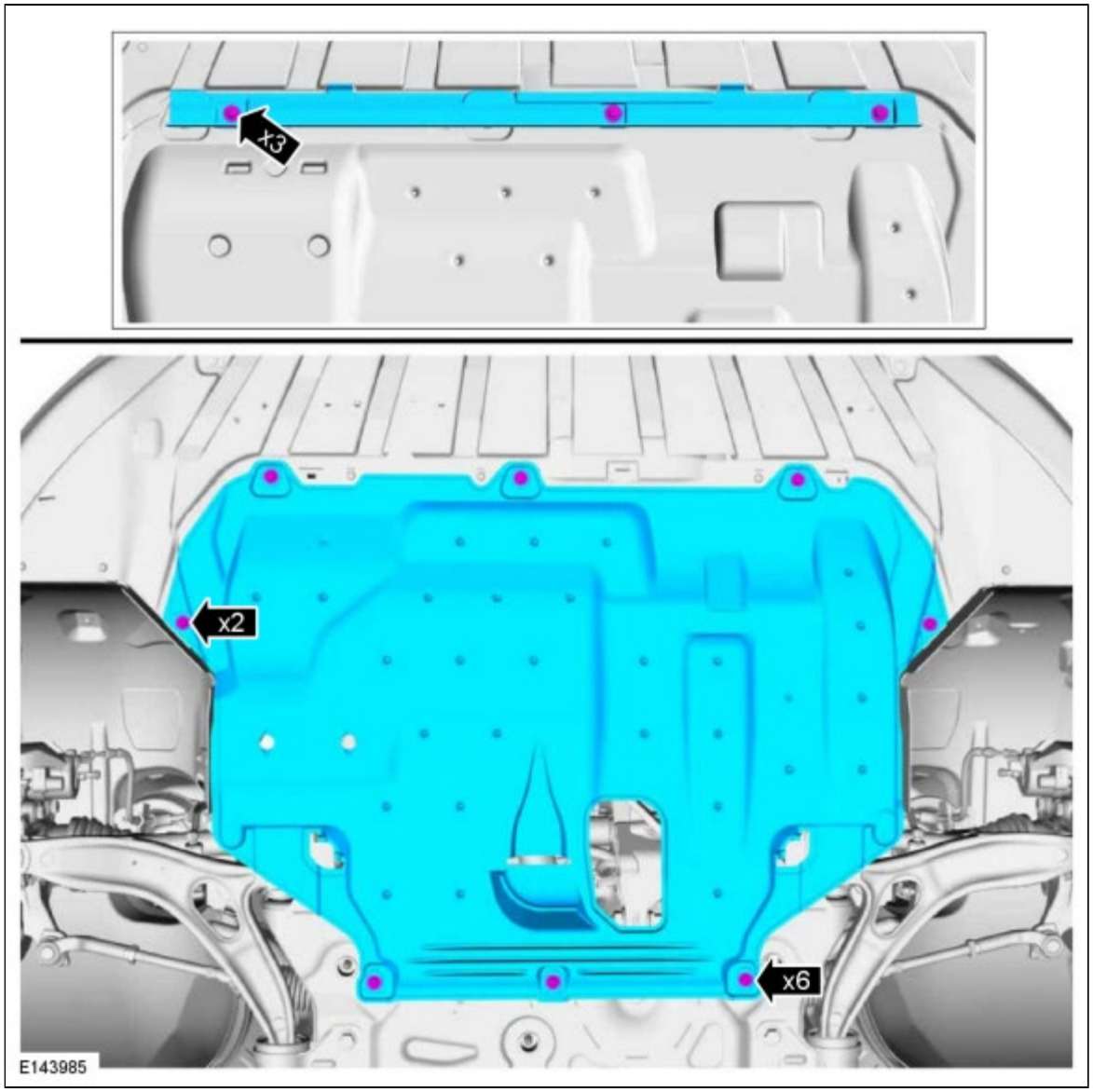

5. *Torque* : 25 Nm

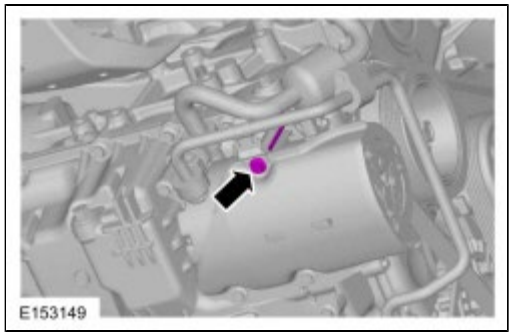

6. *Torque* : 20 Nm

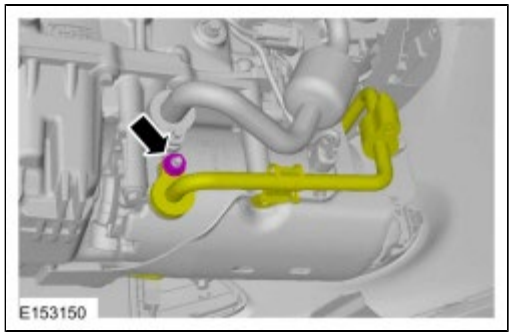

7. *Torque* : 15 Nm

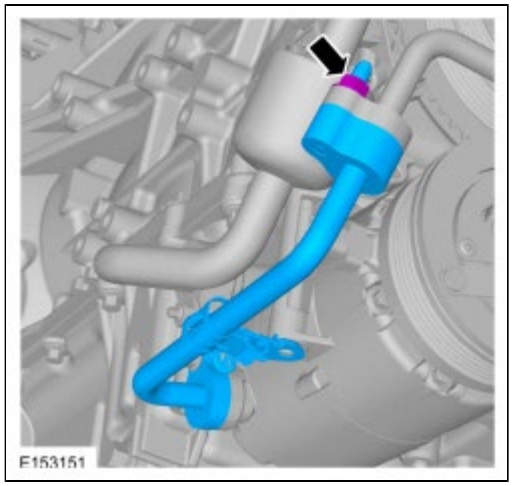

8. *Torque* : 18 Nm

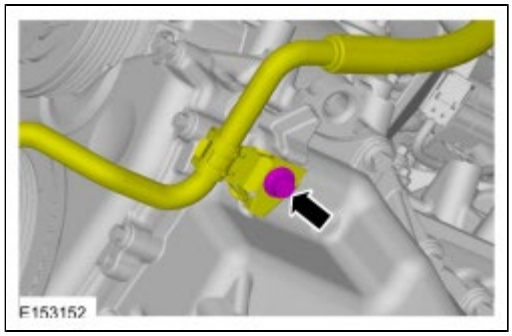

9. *Torque* : 15 Nm

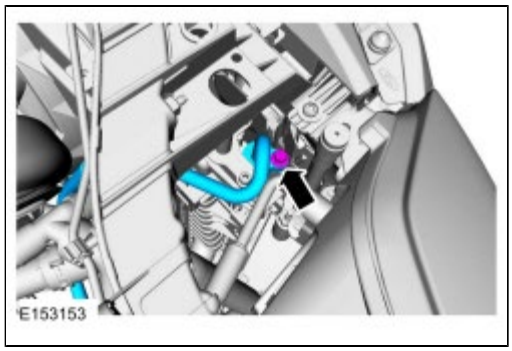

Installation

1. **NOTE:** *Install new O-ring seals and gasket seals.*

   To install, reverse the removal procedure.

2. Refer to: Refrigerant Oil Adding (412-00 Climate Control System - General Information, General Procedures).

Copyright © Ford Motor Company

Air Conditioning (A/C) Compressor to Condenser Line - 2.0L EcoBoost (184kW/250PS) - MI4

Removal

NOTE: *Removal steps in this procedure may contain installation details.*

1. **WARNING: Before beginning any service procedure in this section, refer to Safety Warnings in section 100-00 General Information. Failure to follow this instruction may result in serious personal injury.**

   Refer to: Climate Control System Health and Safety Precautions (100-00 General Information, Description and Operation).

2. Refer to: Air Conditioning (A/C) System Recovery, Evacuation and Charging (412-00 Climate Control System - General Information, General Procedures).

3. Refer to: Jacking and Lifting - Overview (100-02 Jacking and Lifting, Description and Operation).

4. *Torque* : 15 Nm

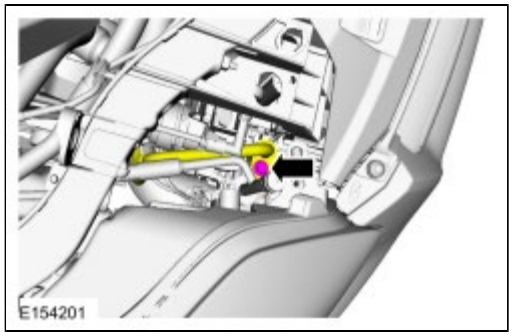

5.

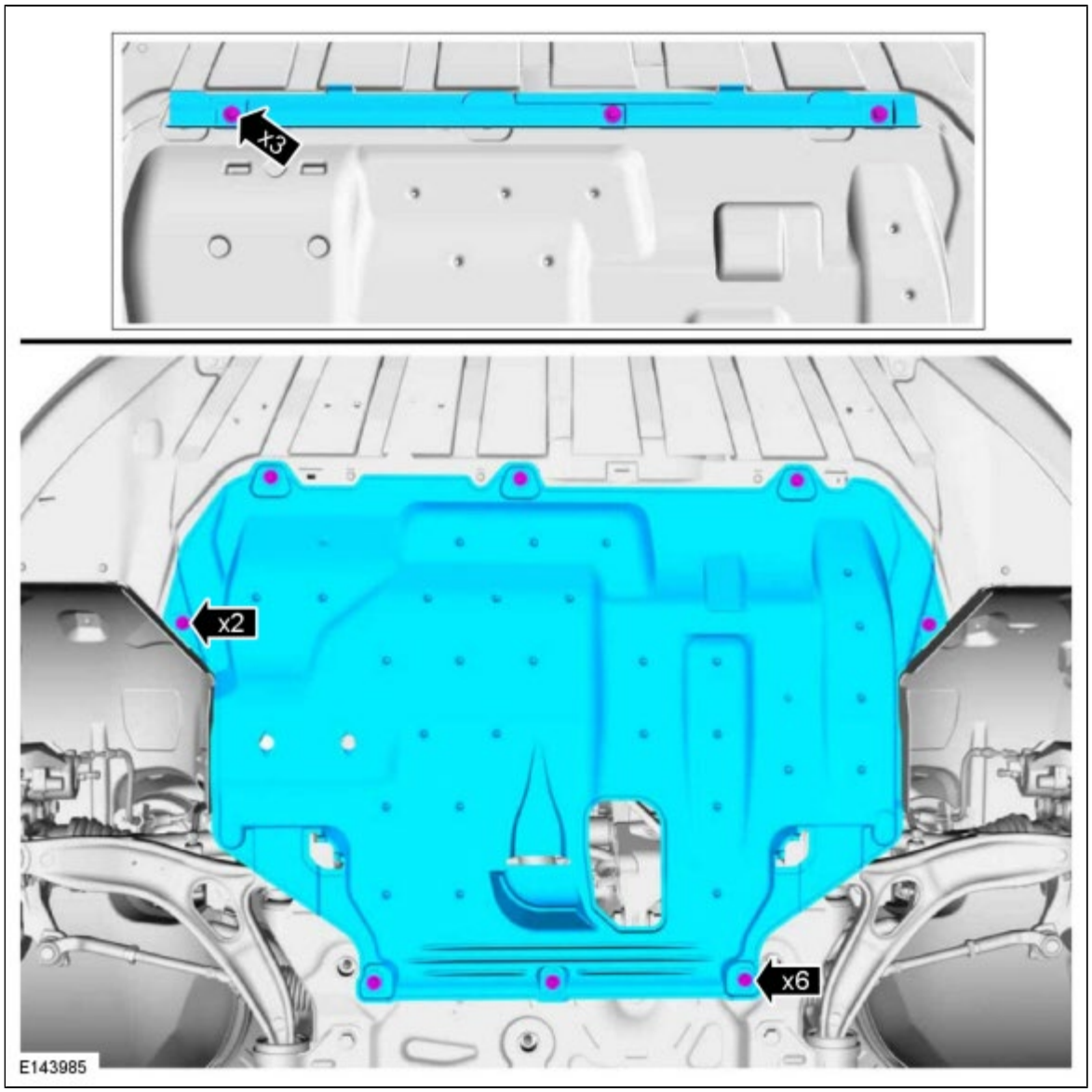

6. *Torque* : 20 Nm

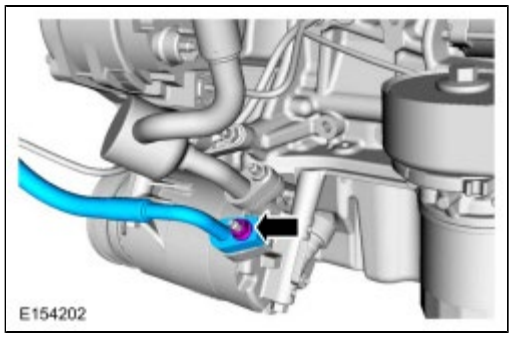

Installation

NOTE: *Install new O-ring seals and gasket seals.*

1. To install, reverse the removal procedure.
2. Refer to: Refrigerant Oil Adding (412-00 Climate Control System - General Information, General Procedures).

Copyright © Ford Motor Company

Exhaust System Alignment

WARNING: Before beginning any service procedure in this section, refer to Safety Warnings in section 100-00 General Information. Failure to follow this instruction may result in serious personal injury.

1. Refer to: Health and Safety Precautions (100-00 General Information, Description and Operation).
2. With the vehicle in NEUTRAL, position it on a hoist.
   Refer to: Jacking and Lifting - Overview (100-02 Jacking and Lifting, Description and Operation).
3. Loosen all fasteners joining the exhaust system components.
4. Beginning at the front of the vehicle, align the exhaust system to establish the maximum clearance. Make sure all fit pipes are pushed all the way into the preceding pipe and the notches are correctly lined up with the tabs.
5. Beginning at the front of the vehicle, tighten all fasteners and clamps to specification.
6. Start the engine and check the exhaust system for leaks.

Copyright © Ford Motor Company

Muffler and Tailpipe

Removal

WARNING: Before beginning any service procedure in this section, refer to Safety Warnings in section 100-00 General Information. Failure to follow this instruction may result in serious personal injury.

1. Refer to: Health and Safety Precautions (100-00 General Information, Description and Operation).
2. With the vehicle in NEUTRAL, position it on a hoist.
   Refer to: Jacking and Lifting - Overview (100-02 Jacking and Lifting, Description and Operation).
3. **NOTICE: Do not forcibly bend or twist the exhaust flexible pipe. Failure to follow these instructions may cause damage to the flexible pipe.**

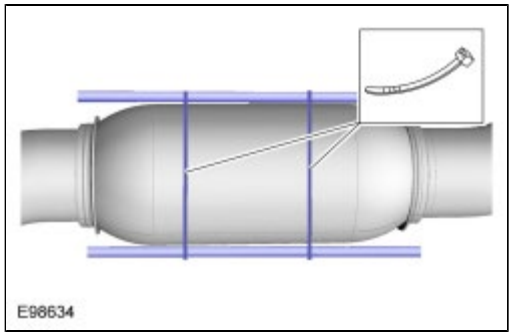

4. **NOTICE: Failure to tighten the catalytic converter manifold-to-muffler and tailpipe nuts to specification in this sequence may cause the catalytic converter manifold-to-muffler and tailpipe flange to develop an exhaust leak.**

   NOTE: *Always install new fasteners and gaskets as indicated. Clean flange faces prior to new gasket installation to make sure of proper sealing.*

   During installation, install 2 new catalytic converter manifold-to-muffler and tailpipe nuts and tighten in 2 stages in the sequence shown.
   Torque : 48 Nm

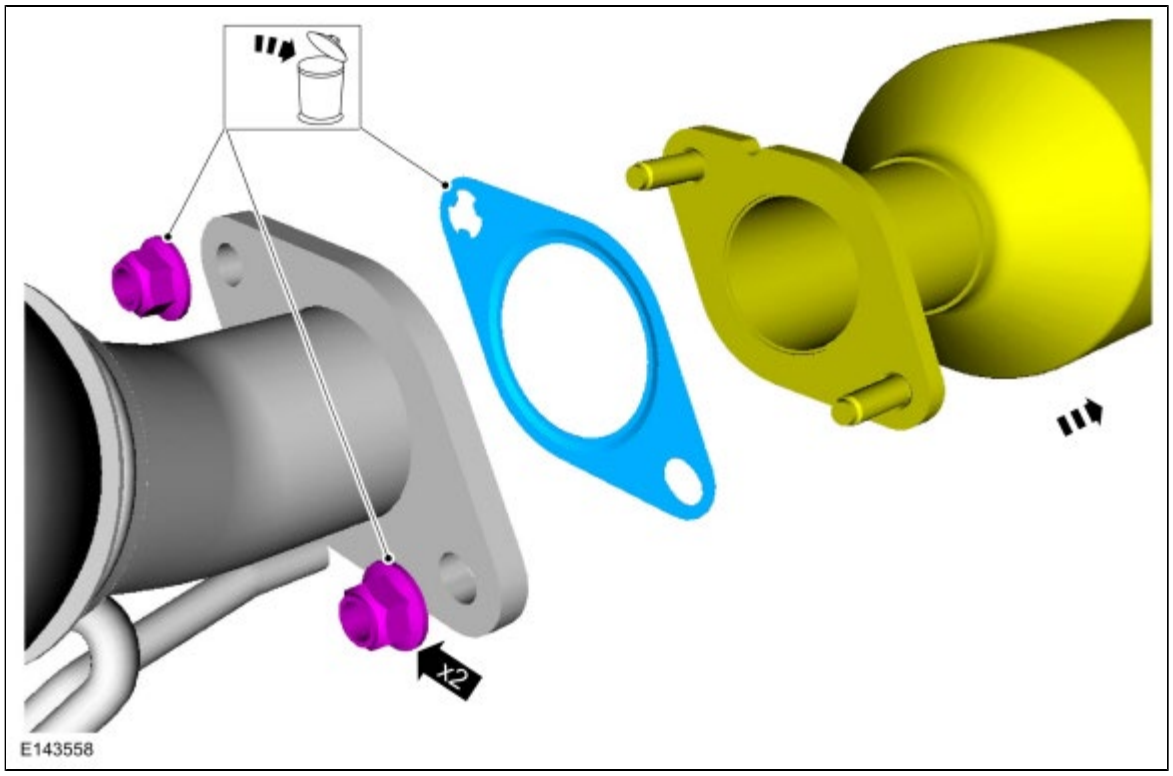

5.

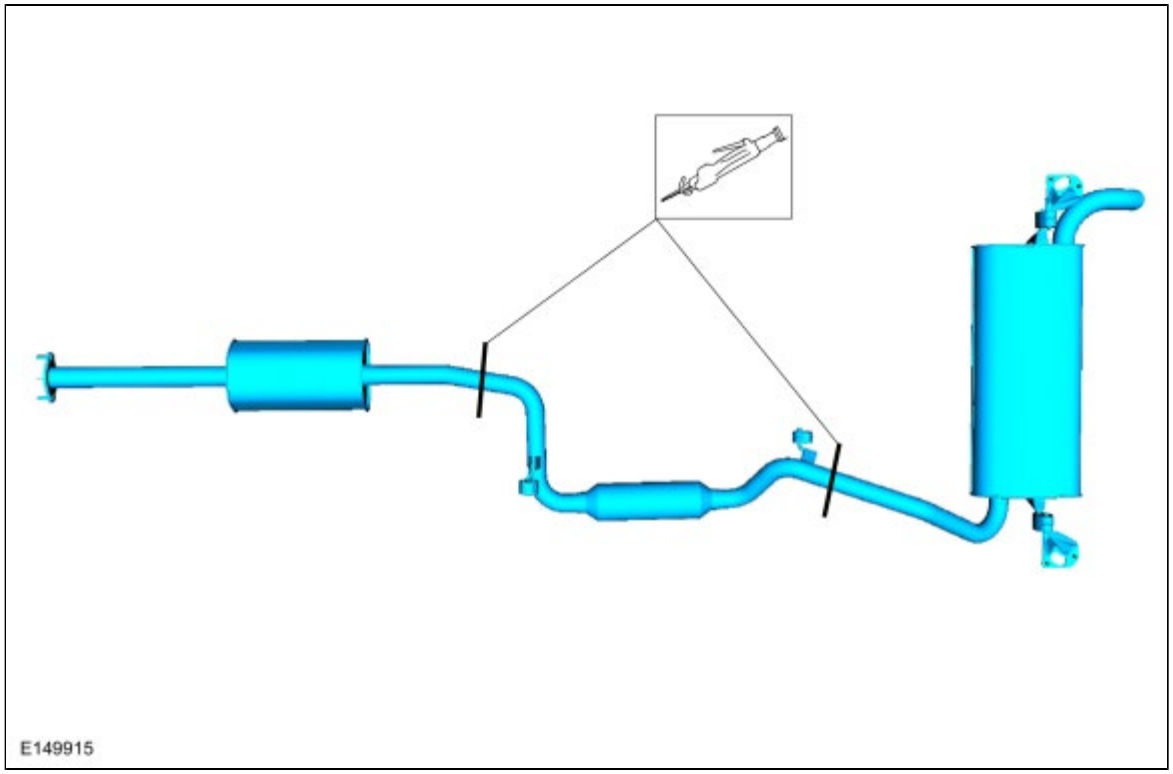

6.

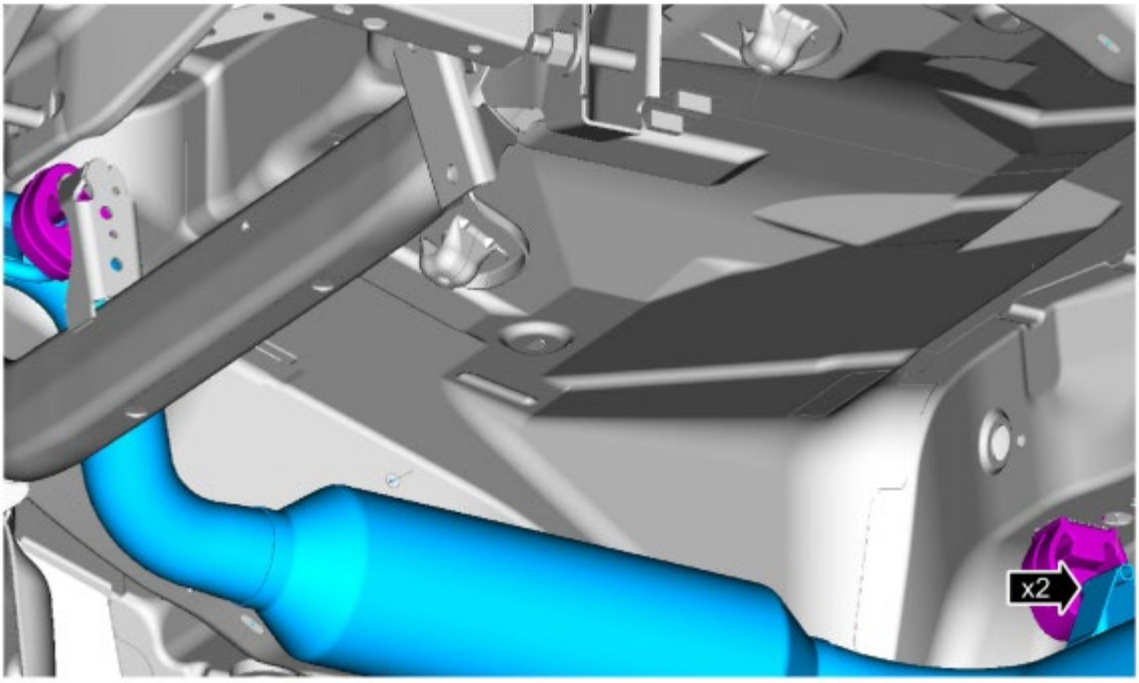

E149972

7.

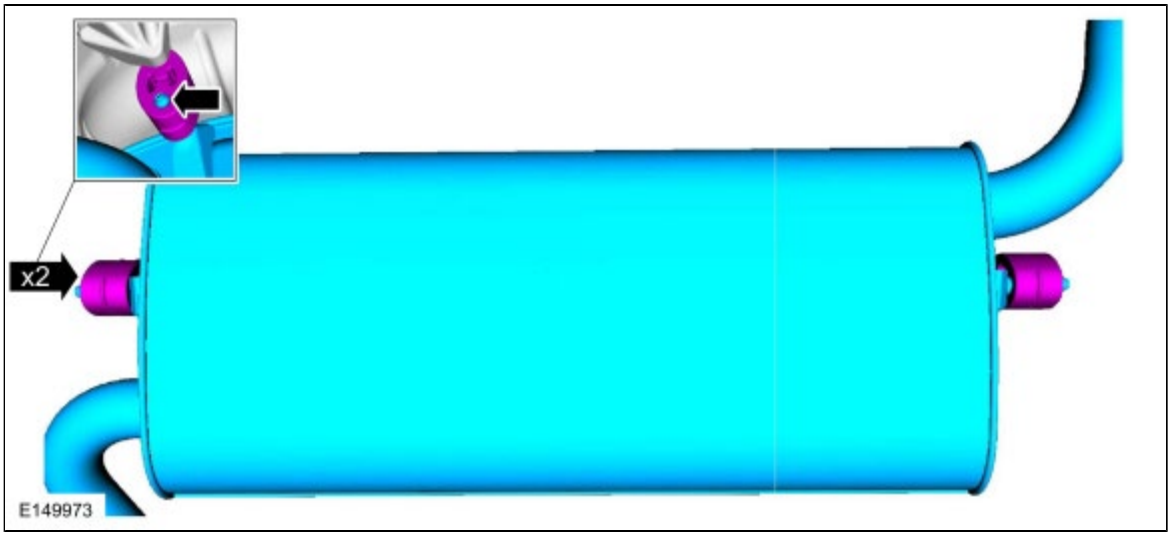

E149973

Installation

1. To install, reverse the removal procedure.

Copyright © Ford Motor Company

Health and Safety Precautions

General Service Warnings

Review carefully the information below before beginning any repair. Following these warnings is a list of specific system warnings that must be reviewed before beginning work on any listed system.

WARNING: Wear eye and ear protection when servicing a vehicle. Failure to follow this instruction may result in serious personal injury.

WARNING: Wear protective gloves when handling components or parts that have pointed or sharp edges. Failure to follow this instruction may result in serious personal injury.

WARNING: Chemicals or materials specified in this manual, if used improperly, may present a personal health hazard. Always consult the material safety information sheet before using any material specified by this manual. Failure to follow this instruction may result in serious personal injury.

WARNING: Do not work under the hood of a vehicle with a damaged cooling fan, as it can separate during operation. With the ignition OFF, inspect all cooling fans for damage, cracks or separation and replace with a new fan as necessary. Failure to follow this instruction may result in serious personal injury.

WARNING: Cooling fans may run with the ignition off. Disable the fans before working nearby. On electric vehicles, disconnect the charging cable to prevent unexpected fan operation. Failure to follow this instruction may result in personal injury.

WARNING: Vehicles with engine auto start-stop technology may start automatically with the ignition on. Make sure the ignition is off when servicing or working in close proximity to rotating engine parts. Failure to follow this instruction may result in serious personal injury.

WARNING: Serious injury may occur if the engine is accidently started by another person during service work. Remove the key from the vehicle to prevent unauthorized starts. Failure to follow this instruction may result in serious personal injury.

WARNING: Before lifting the vehicle with a jack, make sure the jack capacity is adequate for the vehicle weight, including any vehicle cargo or modifications. Identify the correct jacking points in section 100-02 of this manual. Position the vehicle on a hard, level surface. After jacking, always support vehicle with jack stands. Never get under a vehicle supported only by a jack. Set the parking brake and block all wheels remaining on the ground. Failure to follow these instructions may result in unintended vehicle movement and serious personal injury or death.

WARNING: Before raising the vehicle on a hoist, make sure the hoist capacity is adequate for the vehicle weight, including any vehicle cargo or modifications. Always position the hoist lift arms as shown in section 100-02 of this manual. Do not use the engine to power the drive wheels unless all drive wheels are elevated off the ground. Incorrect hoist arm positioning or drive wheels in contact with the ground can cause unintended vehicle movement. Failure to follow these instructions may result in serious personal injury or death.

WARNING: Removal of heavy components (such as engines, transmissions or axles) while the vehicle is lifted on a hoist may create a dangerous weight imbalance. Restrain the vehicle on the hoist with chains or straps to prevent vehicle movement. Failure to follow this instruction may result in serious personal injury or death.

WARNING: Always secure transmission, transfer case, and axle assemblies to their service jack. Avoid obstructions while lowering and raising the jack. Improperly secured assemblies or contact with obstructions may cause the assembly

to fall off the jack, which could result in serious personal injury.

WARNING: Always secure engines, transmissions, or other heavy components to the support fixture with straps and wooden support blocks. Improperly secured assemblies could fall off the fixture, resulting in serious personal injury.

WARNING: Never support an engine by the intake or exhaust manifolds. The engine may drop suddenly. Failure to follow this instruction may result in serious personal injury.

WARNING: Turn off (disable) the power running boards (if equipped) before jacking, lifting or placing any object under the vehicle. Never place your hand between the power running board and the vehicle. Extended power running boards will retract when doors are closed. Failure to follow these instructions may result in serious personal injury.

WARNING: Keep solvents away from ignition sources. Solvents may be flammable and can ignite or explode if not handled correctly. Failure to follow this instruction may result in serious personal injury.

WARNING: Use tools, not fingers, to hold flagnuts. Flagnuts may slip or spin unexpectedly when removing fasteners. Failure to follow this instruction may result in injured fingers.

Carefully review the safety warnings for each system using the links below before beginning any service or repair.

For additional information, refer to: High Voltage System Health and Safety Precautions - Overview (100-00 General Information, Description and Operation).

For additional information, refer to: Climate Control System Health and Safety Precautions (100-00 General Information, Description and Operation).

For additional information, refer to: Battery and Battery Charging Health and Safety Precautions (100-00 General Information, Description and Operation).

For additional information, refer to: Brake System Health and Safety Precautions (100-00 General Information, Description and Operation).

For additional information, refer to: Body Repair Health and Safety and General Precautions (100-00 General Information, Description and Operation).

For additional information, refer to: Engine Cooling System Health and Safety Precautions (100-00 General Information, Description and Operation).

For additional information, refer to: Gasoline and Gasoline-Ethanol Fuel Systems Health and Safety Precautions (100-00 General Information, Description and Operation).

For additional information, refer to: Safety Belt and Supplemental Restraint System (SRS) Health and Safety Precautions (100-00 General Information, Description and Operation).

For additional information, refer to: Wheel and Tire Health and Safety Precautions (100-00 General Information, Description and Operation).

Copyright © Ford Motor Company

Gasoline and Gasoline-Ethanol Fuel Systems Health and Safety Precautions

WARNING: Before working on or disconnecting any of the fuel tubes or fuel system components, relieve the fuel system pressure to prevent accidental spraying of fuel. Fuel in the fuel system remains under high pressure, even when the engine is not running. Failure to follow this instruction may result in serious personal injury.

WARNING: Do not smoke, carry lighted tobacco or have an open flame of any type when working on or near any fuel-related component. Highly flammable mixtures are always present and may be ignited. Failure to follow these instructions may result in serious personal injury.

WARNING: Clean all fuel residue from the engine compartment. If not removed, fuel residue may ignite when the engine is returned to operation. Failure to follow this instruction may result in serious personal injury.

WARNING: Do not carry personal electronic devices such as cell phones, pagers or audio equipment of any type when working on or near any fuel-related component. Highly flammable mixtures are always present and may be ignited. Failure to follow these instructions may result in serious personal injury.

WARNING: Always disconnect the battery ground cable at the battery when working on an evaporative emission (EVAP) system or fuel-related component. Highly flammable mixtures are always present and may be ignited. Failure to follow these instructions may result in serious personal injury.

WARNING: When handling fuel, always observe fuel handling precautions and be prepared in the event of fuel spillage. Spilled fuel may be ignited by hot vehicle components or other ignition sources. Failure to follow these instructions may result in serious personal injury.

WARNING: Remove the fuel filler cap slowly. The fuel system may be under pressure. If the fuel filler cap is venting vapor or if you hear a hissing sound, wait until it stops before completely removing the fuel filler cap. Otherwise, fuel may spray out. Failure to follow these instructions may result in serious personal injury.

WARNING: Avoid contact with fuel during a visual inspection for fuel leaks with the engine running. Do not work on the fuel system until the pressure has been released and the engine has cooled. Fuel in the high-pressure fuel system is hot and under very high pressure. High-pressure fuel may cause cuts and contact with hot fuel may cause burns. Failure to follow these instructions may result in serious personal injury.

Copyright © Ford Motor Company

Climate Control System Health and Safety Precautions

WARNING: Air conditioning R-134a liquid refrigerant is capable of harming eyes or freezing skin. Always wear safety goggles and avoid contact with liquid refrigerant. Failure to follow these instructions may result in serious personal injury.

WARNING: Air conditioning R-134a refrigerant gas is capable of displacing the air necessary for breathing in a confined space and can produce toxic gasses if burned at high temperatures. Do not release a large quantity of R-134a gas within a confined space or allow it to be exposed to a high temperature flame (such as a torch). Consult the Material Safety Data Sheet for further information. Failure to follow these instructions may result in serious personal injury or death.

WARNING: Use extreme care and observe all safety and service precautions related to the use of refrigerants as outlined on refrigerant tank and on recovery and charging equipment. Failure to follow these instructions may result in serious personal injury.

WARNING: Before disconnecting any heater water hoses, shut OFF the engine and wait until engine is fully cool. Failure to comply with this warning may result in serious injury or burns from hot liquid escaping from the engine cooling system.

WARNING: The electric booster heater may become hot during use and can burn unprotected skin. Allow enough time for the heater to cool before servicing. Failure to follow this instruction may result in serious personal injury.

Copyright © Ford Motor Company

Battery and Battery Charging Health and Safety Precautions

WARNING: Batteries contain sulfuric acid and produce explosive gases. Work in a well-ventilated area. Do not allow the battery to come in contact with flames, sparks or burning substances. Avoid contact with skin, eyes or clothing. Shield eyes when working near the battery to protect against possible splashing of acid solution. In case of acid contact with skin or eyes, flush immediately with water for a minimum of 15 minutes, then get prompt medical attention. If acid is swallowed, call a physician immediately. Failure to follow these instructions may result in serious personal injury.

WARNING: Always lift a plastic-cased battery with a battery carrier or with hands on opposite corners. Excessive pressure on the battery end walls may cause acid to flow through the vent caps, resulting in personal injury and/or damage to the vehicle or battery.

WARNING: Battery posts, terminals and related accessories contain lead and lead components. Wash hands after handling. Failure to follow these instructions may result in serious personal injury.

Copyright © Ford Motor Company

Brake System Health and Safety Precautions

WARNING: Do not use any fluid other than clean brake fluid meeting manufacturer's specification. Additionally, do not use brake fluid that has been previously drained. Following these instructions will help prevent system contamination, brake component damage and the risk of serious personal injury.

WARNING: Do not breathe dust or use compressed air to blow dust from storage containers or friction components. Remove dust using government-approved techniques. Friction component dust may be a cancer and lung disease hazard. Exposure to potentially hazardous components may occur if dusts are created during repair of friction components, such as brake pads and clutch discs. Exposure may also cause irritation to skin, eyes and respiratory tract, and may cause allergic reactions and/or may lead to other chronic health effects. If irritation persists, seek medical attention or advice. Failure to follow these instructions may result in serious personal injury.

Copyright © Ford Motor Company

Engine Cooling System Health and Safety Precautions

WARNING: Always allow the engine to cool before opening the cooling system. Do not unscrew the coolant pressure relief cap when the engine is operating or the cooling system is hot. The cooling system is under pressure; steam and hot liquid can come out forcefully when the cap is loosened slightly. Failure to follow these instructions may result in serious personal injury.

Copyright © Ford Motor Company

Safety Belt and Supplemental Restraint System (SRS) Health and Safety Precautions

WARNING: Always carry or place a live air bag module with the air bag and deployment door/trim cover/tear seam pointed away from the body. Do not set a live air bag module down with the deployment door/trim cover/tear seam face down. Failure to follow these instructions may result in serious personal injury in the event of an accidental deployment.

WARNING: Always carry or transport a live safety belt inflator with the safety belt buckle bolt installed in the inflator tube hand tight. Failure to follow this instruction may result in serious personal injury in the event of an accidental deployment.

WARNING: Deploy all supplemental restraint system (SRS) devices (air bags, pretensioners, load limiters, etc.) outdoors with all personnel at least 9 meters (30 feet) away to make sure of personal safety. Due to the loud report which occurs when an SRS device is deployed, hearing protection is required. Failure to follow these instructions may result in serious personal injury.

WARNING: Do not bleach or re-dye the safety belt webbing, as the webbing may weaken. Failure to follow this instruction may increase the risk of serious personal injury or death in a crash.

WARNING: If a vehicle has been in a crash, inspect the restraints control module (RCM) and the impact sensor (if equipped) mounting areas for deformation. If damaged, restore the mounting areas to the original production configuration. A new RCM and sensors must be installed whether or not the air bags have deployed. Failure to follow these instructions may result in serious personal injury or death in a crash.

WARNING: All safety belt components must be inspected and corrected as part of any collision repair. Inspect all safety belt components as prescribed by Safety Belt Inspection and Repair After a Collision found in Section 501-20A General Procedures of this manual. Failure to follow this instruction may result in incorrect operation of the safety belt system and increase the risk of serious personal injury or death in a crash.

WARNING: Anytime the Safety Canopy or side air curtain module has deployed, a new headliner and new A-, B-, C-, and/or D-pillar upper trim panels and attaching hardware must be installed. Make sure the headliner includes the word AIRBAG where it meets each B-pillar trim panel. Remove any other damaged components/hardware, and install new components/hardware as required. Always use new torque-prevailing type J-nuts when installing the Safety Canopy. Failure to follow these instructions may result in the Safety Canopy or side air curtain module deploying incorrectly and increases the risk of serious personal injury or death in a crash.

WARNING: Do not repair or service restraint component connector terminals. If restraint connector terminals need repair, replace with the service connector pigtails. Failure to follow this instruction may result in incorrect operation of the vehicle safety restraint, which increases the risk of serious personal injury or death in a crash.

WARNING: Never disassemble or tamper with seat belt deployable components, including pretensioners, load limiters and inflators. Never back probe deployable device electrical connectors. Tampering or back probing may cause an accidental deployment and result in personal injury or death.

WARNING: Never tamper with, repair, or modify a Restraints Control Module (RCM) or any other Supplemental Restraint System (SRS) component. Failure to follow this instruction may result in incorrect operation of the Supplemental Restraint System (SRS), which increases the risk of serious personal injury or death in a crash.

WARNING: Never probe the electrical connectors on air bag, Safety Canopy® or side air curtain modules. Failure to follow this instruction may result in the accidental deployment of these modules, which increases the risk of serious personal injury or death.

WARNING: Do not handle, move or change the original horizontal mounting position of the restraints control module (RCM) while the RCM is connected and the ignition switch is ON. Failure to follow this instruction may result in the accidental deployment of the Safety Canopy® and cause serious personal injury or death.

WARNING: Do not obstruct or place objects in the deployment path of the Safety Canopy or side air curtain assembly. Never insert any type of fastener or tie strap around any portion of the Safety Canopy, side air curtain assembly, or related interior trim panel. Failure to follow this instruction may result in the Safety Canopy or side airbag curtain module deploying incorrectly and increases the risk of serious personal injury or death in a crash.

WARNING: Occupant Classification System (OCS) parts are calibrated as an assembly and must only be replaced in the configuration they are sold. Never separate parts of an assembly. Failure to follow this instruction may result in incorrect operation of the OCS and increases the risk of serious personal injury or death in a crash.

WARNING: Never allow oil, grease, water or foreign contaminants to get on/in the occupant classification system (OCS) components or electrical connectors. Failure to follow this instruction may result in incorrect operation of the OCS and increases the risk of serious personal injury or death in a crash.

WARNING: Always tighten the fasteners of the restraints control module (RCM) and impact sensor (if equipped) to the specified torque. Failure to do so may result in incorrect restraint system operation, which increases the risk of personal injury or death in a crash.

WARNING: Always carry or place a live Safety Canopy®, or side air curtain module, with the module and tear seam pointed away from your body. Failure to follow this instruction may result in serious personal injury or death in the event of an accidental deployment.

WARNING: Do not paint any air bag module trim covers or deployment doors. Paint may cause the air bag to deploy incorrectly. Failure to follow this instruction may increase the risk of serious personal injury or death in a crash.

Copyright © Ford Motor Company

Body Repair Health and Safety and General Precautions

WARNING: Always refer to Material Safety Data Sheet (MSDS) when handling chemicals and wear protective equipment as directed. Examples may include but are not limited to respirators and chemically resistant gloves. Failure to follow these instructions may result in serious personal injury.

WARNING: Always wear protective equipment including eye protection with side shields, and a dust mask when sanding or grinding. Failure to follow these instructions may result in serious personal injury.

WARNING: Do not carry out body side sectioning repairs in areas of door hinge or striker anchoring points. Welding within 50 mm (1.96 in) of door hinge or striker locations may compromise structural integrity during a collision. Failure to follow these instructions may result in serious injury to vehicle occupant(s).

WARNING: Invisible ultraviolet and infrared rays emitted in welding can injure unprotected eyes and skin. Always use protection such as a welder's helmet with dark-colored filter lenses of the correct density. Electric welding will produce intense radiation, therefore, filter plate lenses of the deepest shade providing adequate visibility are recommended. It is strongly recommended that persons working in the weld area wear flash safety goggles. Also wear protective clothing. Failure to follow these instructions may result in serious personal injury.

WARNING: All safety belt components must be inspected and corrected as part of any collision repair. Inspect all safety belt components as prescribed by Safety Belt Inspection and Repair After a Collision found in Section 501-20A General Procedures of this manual. Failure to follow this instruction may result in incorrect operation of the safety belt system and increase the risk of serious personal injury or death in a crash.

WARNING: If a vehicle has been in a crash, inspect the restraints control module (RCM) and the impact sensor (if equipped) mounting areas for deformation. If damaged, restore the mounting areas to the original production configuration. A new RCM and sensors must be installed whether or not the air bags have deployed. Failure to follow these instructions may result in serious personal injury or death in a crash.

Copyright © Ford Motor Company

Wheel and Tire Health and Safety Precautions

WARNING: Never inflate a tire that has been run flat without first removing the tire from the wheel to inspect for damage. A damaged tire can fail during inflation. Failure to follow this instruction may result in serious personal injury.

WARNING: Do not mount tube-type tires on tubeless wheels or tubeless tires on tube-type wheels. Incorrect combinations could result in tire separation from wheel and may result in serious injury to vehicle occupant(s).

WARNING: Cracked wheels can be dangerous. Deflate tires on cracked wheels prior to removal of wheels from the vehicle. Failure to follow this instruction may result in serious personal injury.

WARNING: Retighten wheel nuts within 160 km (100 mi) after a wheel is reinstalled. For dual rear wheel (DRW) only, a second retightening is required within 800 km (500 mi). Wheels can loosen after initial tightening. Failure to follow this instruction may result in serious injury to vehicle occupant(s).

WARNING: Always match the tire size to the wheel size during assembly. Incorrect matching can result in tire bead damage or tire separation from the wheel. Failure to follow this instruction may result in serious personal injury to technician or vehicle occupant(s).

WARNING: Do not weld or peen wheels. A wheel needing such repairs must have a new wheel installed. Failure to follow these instructions may result in wheel failure and serious personal injury.

Copyright © Ford Motor Company

High Voltage System Health and Safety Precautions - Overview

WARNING: To prevent the risk of high-voltage shock, always follow precisely all warnings and service instructions, including instructions to depower the system. The high-voltage system utilizes approximately 300 volts DC, provided through high-voltage cables to its components and modules. The high-voltage cables and wiring are identified by orange harness tape or orange wire covering. All high-voltage components are marked with high-voltage warning labels with a high-voltage symbol. Failure to follow these instructions may result in serious personal injury or death.

WARNING: Never install the service disconnect plug when a high-voltage service cover is removed. Always install the cover prior to connecting the service disconnect plug. The cover prevents inadvertent contact with the high voltage which is present at several points under the cover. Failure to follow these instructions may result in serious personal injury or death.

WARNING: Disconnect the 12 volt battery before servicing the direct current to alternating current (DC-AC) inverter or alternating current (AC) powerpoint to prevent the risk of high voltage shock. Failure to follow this instruction may result in serious personal injury.

Copyright © Ford Motor Company

Diesel Fuel System Health and Safety Precautions

WARNING: Contact with exposed fuel injector wiring, if energized, may result in electric shock. Use care when working on or around energized fuel injector wiring. Fuel injector wiring supplies high voltage to operate the fuel injectors. Failure to follow this instruction may result in serious personal injury.

WARNING: Do not work on the fuel system until the pressure has been released and the engine has cooled. Fuel in the high-pressure fuel system is hot and under very high pressure. High-pressure fuel may cause cuts and contact with hot fuel may cause burns. Failure to follow these instructions may result in serious personal injury.

Copyright © Ford Motor Company

Safety Belt System - Overview

Overview - Safety Belt System - 1st Row

WARNING: Before beginning any service procedure in this section, refer to Safety Warnings in section 100-00 General Information. Failure to follow this instruction may result in serious personal injury.

Refer to: Health and Safety Precautions (100-00 General Information, Description and Operation).

Each first row safety belt is a combination lap and shoulder belt (continuous loop), 3-point system. The continuous loop uses a common slip tongue and retractor.

When replacing safety belt buckles and/or retractor assemblies, use only the replacement parts specified in the Ford Catalog Advantage™ or equivalent.

Overview - Safety Belt System - 2nd Row

WARNING: Before beginning any service procedure in this section, refer to Safety Warnings in section 100-00 General Information. Failure to follow this instruction may result in serious personal injury.

Refer to: Health and Safety Precautions (100-00 General Information, Description and Operation).

Each second row safety belt is a combination lap and shoulder belt (continuous loop), 3-point system. The continuous loop uses a common slip tongue and retractor.

When replacing safety belt buckles and/or retractor assemblies, use only the replacement parts specified in the Ford Catalog Advantage™ or equivalent.

Copyright © Ford Motor Company

Safety Belt System - System Operation and Component Description

System Operation

Emergency Locking Retractor (ELR)

All retractors have an Emergency Locking Retractor (ELR) mode, which is a vehicle-sensitive feature designed to activate and lock the safety belt webbing during hard braking, cornering, or an impact of approximately 24 kmh (14.9 mph). The Emergency Locking Retractor (ELR) feature helps reduce the forward movement of the driver and passengers. For testing, see Functional Test - Safety Belt Retractor, Road Test Inspection
Refer to: Safety Belt System (501-20A Safety Belt System, Diagnosis and Testing).

Automatic Locking Retractor (ALR)

The Automatic Locking Retractor (ALR) mode is used when locking a child seat in any passenger seating position. The Automatic Locking Retractor (ALR) mode automatically activates when the safety belt webbing is fully extracted from the retractor and then allowed to retract. As the safety belt webbing retracts back onto the spool, an audible clicking sound is made, indicating the safety belt retractor is in Automatic Locking Retractor (ALR) mode and the safety belt webbing cannot pull back out of the safety belt retractor. The Automatic Locking Retractor (ALR) mode disengages when the webbing is allowed to fully retract back into the retractor. For testing, see Functional Test - Safety Belt Retractor, Automatic Locking Retractor (ALR) Mode
Refer to: Safety Belt System (501-20A Safety Belt System, Diagnosis and Testing).

Safety Belt Warning Chime

The conditions of operation for the driver and/or front passenger safety belt warning indicator and chime operate as follows:

- If the driver and/or passenger safety belt is not buckled with the ignition ON, then the safety belt warning indicator illuminates for 1 to 2 minutes and the warning chime sounds for 4 to 8 seconds.
- If the driver and/or passenger safety belt is buckled while the warning indicator is illuminated and the warning chime is sounding, then the indicator and chime turn off.
- If the driver and/or passenger safety belt is buckled before the ignition is in the ON position, the safety belt warning indicator and chime remain off.

Belt-Minder®

The Belt-Minder® feature is a supplemental warning to the safety belt warning function. This feature provides an additional reminder that the driver and/or front passenger safety belt is unbuckled by intermittently sounding a chime and illuminating the safety belt warning indicator in the IPC .

Either the driver or front passenger safety belt systems may activate the Belt-Minder®. If the Belt-Minder® warnings have expired (warnings for approximately 5 minutes) for one occupant (driver or front passenger), the other occupant can still activate the Belt-Minder® feature.

When a MyKey® is in the ignition, deactivation of Belt-Minder® and the 5-minute Belt-Minder® timer are overridden. The Belt-Minder® feature cannot be deactivated when a MyKey® is in use. Refer to the Owner's Literature for further information on MyKey® functionality.

The passenger Belt-Minder® feature is activated only when the OCS detects a passenger in the right front seat and the passenger weight exceeds a programmed limit. For information on the OCS ,
Refer to: Airbag and Safety Belt Pretensioner Supplemental Restraint System (SRS) - Vehicles Built From: 11-June-2012 - System Operation and Component Description (501-20B Supplemental Restraint System, Description and Operation).

To activate or deactivate the Belt-Minder® feature,
Refer to: Safety Belt Minder Deactivating/Activating (413-01 Instrumentation, Message Center and Warning Chimes, General Procedures).

If...	Then...
the driver and/or passenger safety belt is buckled before the ignition is turned ON or less than 1-2 minutes have elapsed since the ignition has been turned ON...	the Belt-Minder® feature will not activate.
the driver and/or front passenger safety belt is not buckled before the vehicle has reached at least 9.7 kmh (6.0 mph) and 1-2 minutes have elapsed since the ignition has been turned ON...	the Belt-Minder® feature is activated — the safety belt warning indicator illuminates and the warning chime sounds for 6 seconds every 30 seconds, repeating for approximately 5 minutes or until the safety belt(s) is buckled.
the driver or front passenger safety belt becomes unbuckled for approximately one minute while the vehicle is traveling at least 9.7 kmh (6.0 mph) and more than 1-2 minutes have elapsed since the ignition has been ON...	the Belt-Minder® feature is activated — the safety belt warning indicator illuminates and the warning chime sounds for 6 seconds every 30 seconds, repeating for approximately 5 minutes or until the safety belt(s) is buckled.

Component Description

Safety Belt Shoulder Height Adjuster

Safety belt shoulder height adjusters are used on both first row seats. They allow the seat occupant to change the height of the safety belt D-ring, which helps to increase comfort for the seat occupant. The height adjuster also makes it possible to match the safety belt geometry to the size of the seat occupant, which increases the effectiveness of the safety belt.

Safety Belt Retractor Adaptive Load Limiter

The adaptive load limiting safety belt retractor is a pyrotechnic device integrated with the safety belt retractor assembly that controls the tension of the front passenger safety belt when deployed.

To diagnose any adaptive load limiter Diagnostic Trouble Codes (DTCs),
Refer to: Airbag Supplemental Restraint System (SRS) - Vehicles Built From: 11-June-2012 (501-20B Supplemental Restraint System, Diagnosis and Testing).

For any concerns regarding safety belt retractor function,
Refer to: Safety Belt System (501-20A Safety Belt System, Diagnosis and Testing).

Child Safety Seat Tether Anchor

Each second row seating position has a child safety seat tether anchor. On 4-door sedans, the child safety tether anchors are bolted to the parcel shelf sheet metal. On 5-door hatchbacks, the child safety seat tether anchors are part of the second row seat back and are not serviced separately from the seat back.

If a child safety seat was in use during a collision, inspect the child safety seat mounting areas and restore the vehicle to the original production configuration.

Child Safety Seat Tether Anchor - Lower Anchors and Tethers for Children (LATCH)

Both outboard seating positions are equipped with Lower Anchors and Tethers for Children (LATCH). The outboard anchors are part of the seat hinge and the inboard anchors are welded to the floorpan.

If a child safety seat was in use during a collision, inspect the child safety seat mounting areas and restore the vehicle to the original production configuration.

Copyright © Ford Motor Company

Safety Belt System

Symptom Chart(s)

Preliminary Inspection

Diagnostics in this manual assume a certain skill level and knowledge of Ford-specific diagnostic practices.
REFER to: Diagnostic Methods (100-00 General Information, Description and Operation).

Before diagnosing or repairing the safety belt system, inspect the following items:

- Safety belt webbing integrity (torn, frayed, cut or stretched)
- Safety belt buckle and tongue assembly

Symptom Chart: Safety Belt System

Symptom Chart

Condition	Possible Sources	Actions
The safety belt warning indicator does not operate	• Burned-out indicator • Wiring, terminals or connectors • IPC • RCM	If the airbag warning indicator is illuminated, REFER to: Airbag Supplemental Restraint System (SRS) - Vehicles Built From: 11-June-2012 (501-20B Supplemental Restraint System, Diagnosis and Testing). If the airbag warning indicator is not illuminated, REFER to: Instrumentation, Message Center and Warning Chimes (413-01 Instrumentation, Message Center and Warning Chimes, Diagnosis and Testing).
The safety belt warning chime does not operate	• Wiring, terminals or connectors • Safety belt switch • IPC • RCM	If the airbag warning indicator is illuminated, REFER to: Airbag Supplemental Restraint System (SRS) - Vehicles Built From: 11-June-2012 (501-20B Supplemental Restraint System, Diagnosis and Testing). If the airbag warning indicator is not illuminated, REFER to: Instrumentation, Message Center and Warning Chimes (413-01 Instrumentation, Message Center and Warning Chimes, Diagnosis and Testing).
The safety belt retractor webbing does not extract or exhibits excessive pressure on the occupant during use	• Safety belt retractor is in Automatic Locking Retractor (ALR) mode • Safety belt retractor binding internally	CARRY OUT the appropriate component test. REFER to Functional Test - Safety Belt Retractor in this section, REFER to Functional Test - Safety Belt Retractor, Automatic Locking Retractor (ALR) Mode in this section, REFER to Functional Test - Safety Belt Retractor, Road Test Inspection in this section as appropriate. INSTALL new components as directed.
The safety belt retractor webbing does not retract or has excessive slack	• Twisted or incorrectly routed	CORRECT the twisted safety belt webbing. REFER to: Safety Belt Tongue Rotated On Belt (501-20A Safety Belt System, General Procedures).

during use	safety belt webbing • Safety belt retractor binding internally	REFER to: Safety Belt Twisted at the Safety Belt Guide (501-20A Safety Belt System, General Procedures). CARRY OUT the appropriate component test. REFER to Functional Test - Safety Belt Retractor in this section, REFER to Functional Test - Safety Belt Retractor, Automatic Locking Retractor (ALR) Mode in this section, or REFER to Functional Test - Safety Belt Retractor, Road Test Inspection as appropriate.
The Belt-Minder® feature is inoperative	• Belt-Minder® feature is deactivated • Wiring, terminals or connectors	To activate the Belt-Minder® feature, REFER to the Seating and Safety Restraints section of the Owner's Literature or REFER to: Safety Belt Minder Deactivating/Activating (413-01 Instrumentation, Message Center and Warning Chimes, General Procedures). If the Belt-Minder® is activated, DIAGNOSE the inoperative Belt-Minder® feature. REFER to: Instrumentation, Message Center and Warning Chimes (413-01 Instrumentation, Message Center and Warning Chimes, Diagnosis and Testing).
The safety belt tongue is rotated at the webbing	Twisted or incorrectly routed safety belt webbing	REFER to: Safety Belt Tongue Rotated On Belt (501-20A Safety Belt System, General Procedures).
The safety belt webbing is dirty or soiled	Dirty or soiled safety belt webbing	REFER to: Safety Belt Cleaning (501-20A Safety Belt System, General Procedures).

Functional Test - Safety Belt Buckle and Tongue

WARNING: All safety belt components must be inspected and corrected as part of any collision repair. Inspect all safety belt components as prescribed by Safety Belt Inspection and Repair After a Collision found in Section 501-20A General Procedures of this manual. Failure to follow this instruction may result in incorrect operation of the safety belt system and increase the risk of serious personal injury or death in a crash.

NOTE: *The safety belt buckle and tongue assembly must operate freely during the latching and unlatching function. Fasten the safety belt by inserting the tongue (male portion) into the buckle (female portion).*

1. Verify the following during the latching sequence:

- Tongue insertion does not require excessive effort.
- A click is heard when the safety belt buckle latches the tongue.

2. Verify the system integrity by forcefully pulling on the safety belt webbing.

3. Unlatch the safety belt by fully pressing the safety belt buckle release button and allowing the safety belt to release and retract.

4. Verify the following during the unlatching process:

- Pressing the push button does not require excessive effort.
- The tongue can be removed easily from the buckle.

5. Repeat the above steps 3 times.

6. If the functional test reveals a concern(s), install a new safety belt buckle or safety belt retractor as required.

Functional Test - Safety Belt Retractor

WARNING: All safety belt components must be inspected and corrected as part of any collision repair. Inspect all safety belt components as prescribed by Safety Belt Inspection and Repair After a Collision found in Section 501-20A General Procedures of this manual. Failure to follow this instruction may result in incorrect operation of the safety belt

system and increase the risk of serious personal injury or death in a crash.

NOTE: *The safety belt retractor must operate freely for extraction and retraction of the safety belt webbing between full extension and in-vehicle stowed positions.*

1. Extract and retract the safety belt between the full extension and stowed positions.
2. Verify the safety belt retractor operates without excessive effort or binding.
3. Install a new safety belt retractor if any concern is found or the complaint has been verified.

Functional Test - Safety Belt Retractor, Automatic Locking Retractor (ALR) Mode

WARNING: All safety belt components must be inspected and corrected as part of any collision repair. Inspect all safety belt components as prescribed by Safety Belt Inspection and Repair After a Collision found in Section 501-20A General Procedures of this manual. Failure to follow this instruction may result in incorrect operation of the safety belt system and increase the risk of serious personal injury or death in a crash.

1. Position the seat backrest fully upright (if adjustable).
2. Position the safety belt shoulder height adjuster (if equipped) in the full down or up position.
3. Fasten the safety belt.
4. Pull out the safety belt webbing until the ALR feature is activated.
5. Allow the safety belt webbing to retract until it stops.
6. Pull on the safety belt webbing to make sure the safety belt retractor has remained in the ALR mode. If the safety belt retractor is not locked, install a new safety belt retractor.
7. Unfasten the safety belt and allow the safety belt webbing to retract to its stowed position.
8. Pull out and retract the safety belt webbing to verify the safety belt retractor has automatically converted out of ALR mode. If the safety belt retractor remains locked in the ALR mode, install a new safety belt retractor.

Functional Test - Safety Belt Retractor, Road Test Inspection

WARNING: All safety belt components must be inspected and corrected as part of any collision repair. Inspect all safety belt components as prescribed by Safety Belt Inspection and Repair After a Collision found in Section 501-20A General Procedures of this manual. Failure to follow this instruction may result in incorrect operation of the safety belt system and increase the risk of serious personal injury or death in a crash.

NOTE: *Make sure there is no excessive slack in the safety belt webbing across the torso during testing.*

NOTE: *Do not jerk on the safety belt webbing when carrying out this test.*

1. Fasten the safety belts and proceed to a safe area.
2. Reach a speed of 24 km/h (14.9 mph).

WARNING: Apply maximum brake force only on dry concrete or equivalent hard surface, never on wet pavement or gravel. Failure to follow this instruction may result in serious personal injury.

3. Grasp the shoulder harness, lean forward and apply the brakes, making a maximum braking application without a skid.
4. The safety belts should lock up with minimum webbing extension.
5. If there is a lockup of all safety belt retractors being tested, the safety belt retractors are functioning correctly. If any safety belt retractor fails to lock up, install a new safety belt retractor(s).

Copyright © Ford Motor Company

Safety Belt Cleaning

WARNING: Do not bleach or re-dye the safety belt webbing, as the webbing may weaken. Failure to follow this instruction may increase the risk of serious personal injury or death in a crash.

1. Clean the safety belt webbing with a mild soap solution recommended for cleaning upholstery or carpets. Follow the manufacturer's instructions provided with the soap.

Copyright © Ford Motor Company

Safety Belt Maintenance

WARNING: All safety belt components must be inspected and corrected as part of any collision repair. Inspect all safety belt components as prescribed by Safety Belt Inspection and Repair After a Collision found in Section 501-20A General Procedures of this manual. Failure to follow this instruction may result in incorrect operation of the safety belt system and increase the risk of serious personal injury or death in a crash.

1. Periodically inspect the safety belt assemblies for damage and that they remain in correct operating condition, particularly if they have been subjected to severe stress.
2. Before installing the new safety belt assembly, inspect the safety belt retaining areas for damage and distortion. If the retaining points are damaged and distorted, work the sheet metal back to its original shape and structural integrity.
3. Install the new safety belt(s) using the appropriate instructions. Carry out the appropriate Functional Test procedure for all seating positions.
   Refer to: Safety Belt System (501-20A) .

Copyright © Ford Motor Company

Safety Belt Procedure After a Collision

WARNING: All safety belt components must be inspected and corrected as part of any collision repair. Inspect all safety belt components as prescribed by Safety Belt Inspection and Repair After a Collision found in Section 501-20A General Procedures of this manual. Failure to follow this instruction may result in incorrect operation of the safety belt system and increase the risk of serious personal injury or death in a crash.

1. Before installing the new safety belt assembly, inspect the safety belt attaching areas for damage and distortion. If the attaching points are damaged and distorted, work the sheet metal back to its original shape and structural integrity.
2. Install new safety belt(s) at any seating position(s) where deployment has occurred and the safety belt(s) were used. Carry out the appropriate Functional Test procedure for all seating positions.
   Refer to: Safety Belt System (501-20A) .

Copyright © Ford Motor Company

Safety Belt Tongue Rotated On Belt

1. Fold the safety belt as indicated.

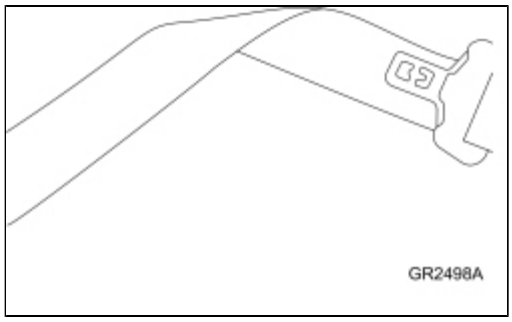

2. Pull the safety belt tongue over the fold in the safety belt.

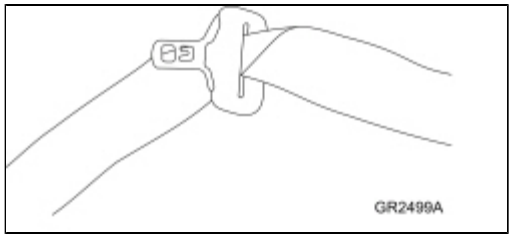

Copyright © Ford Motor Company

Safety Belt Twisted at the Safety Belt Guide

1. **WARNING: Before beginning any service procedure in this section, refer to Safety Warnings in section 100-00 General Information. Failure to follow this instruction may result in serious personal injury.**

   Refer to: Health and Safety Precautions (100-00 General Information, Description and Operation).

2. If necessary, remove the B-pillar trim panel.
   Refer to: B-Pillar Trim Panel - Vehicles Built From: 11-June-2012 (501-05 Interior Trim and Ornamentation, Removal and Installation).

3. **NOTE:** *Typical D-ring shown, others similar.*

   Grasp the safety belt webbing at the D-ring and fold the twisted portion of the safety belt webbing over itself.

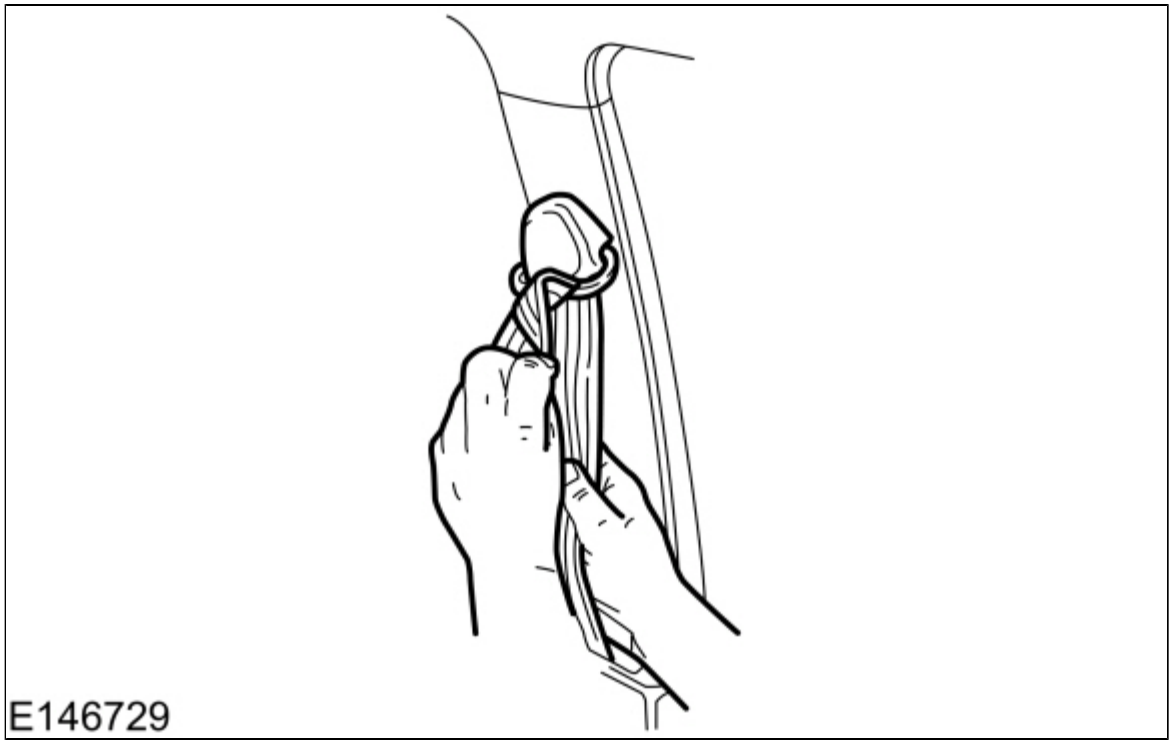

4. Feed the folded portion of the safety belt webbing through the D-ring to remove the twist from the safety belt webbing.

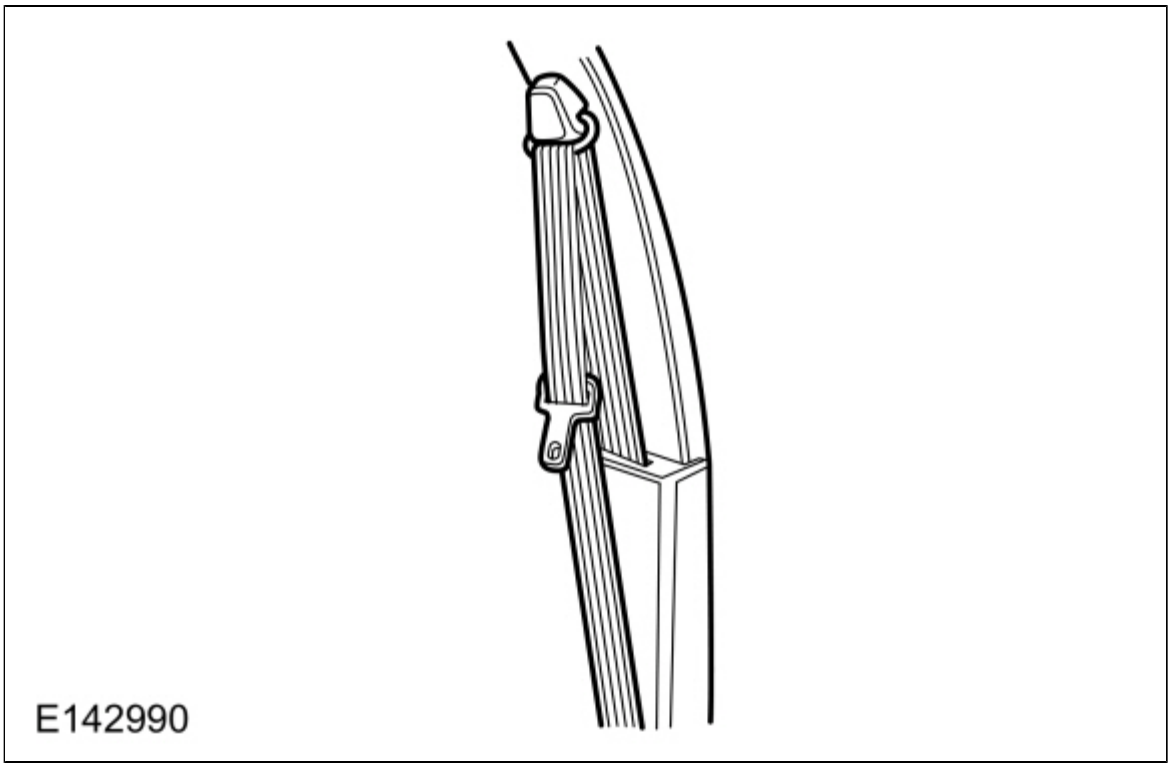

Copyright © Ford Motor Company

Child Safety Seat Tether Anchor

Removal

1. **WARNING: Before beginning any service procedure in this section, refer to Safety Warnings in section 100-00 General Information. Failure to follow this instruction may result in serious personal injury.**

   Refer to: Health and Safety Precautions (100-00 General Information, Description and Operation).

2.
   - Part of 5446668 (Child safety seat tether anchor covers)
   - W505264 (Child safety seat tether anchor bolts)
     Torque : 28 Nm
   - 54613D74 (Child safety seat tether anchors)

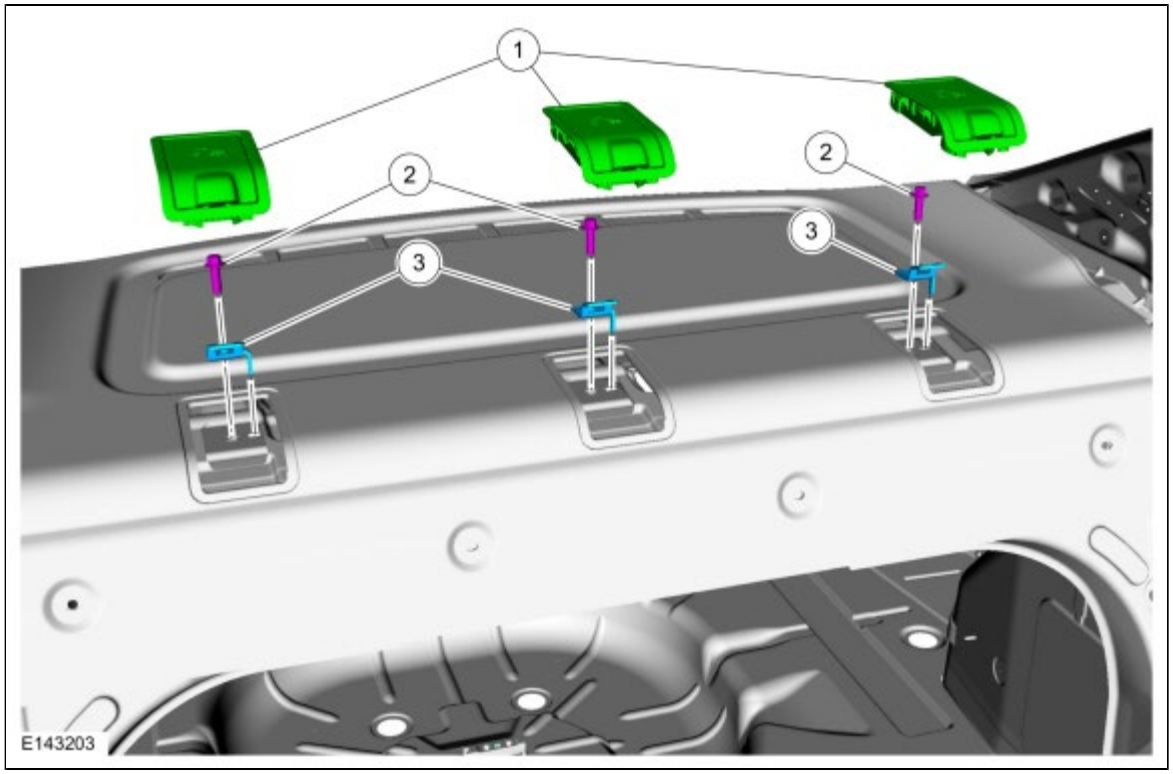

3. **WARNING: All safety belt components must be inspected and corrected as part of any collision repair. Inspect all safety belt components as prescribed by Safety Belt Inspection and Repair After a Collision found in Section 501-20A General Procedures of this manual. Failure to follow this instruction may result in incorrect operation of the safety belt system and increase the risk of serious personal injury or death in a crash.**

4. Open the child safety seat tether anchor cover, disengage the 4 tabs and remove the cover.

Installation

1. To install, reverse the removal procedure.

Copyright © Ford Motor Company

Front Safety Belt Buckle

Removal

NOTE: *Removal steps in this procedure may contain installation details.*

All vehicles

1. **WARNING: Before beginning any service procedure in this section, refer to Safety Warnings in section 100-00 General Information. Failure to follow this instruction may result in serious personal injury.**

   Refer to: Health and Safety Precautions (100-00 General Information, Description and Operation).

2. Remove the front seat.
   Refer to: Front Seat (501-10 Seating, Removal and Installation).

Driver seat

3.

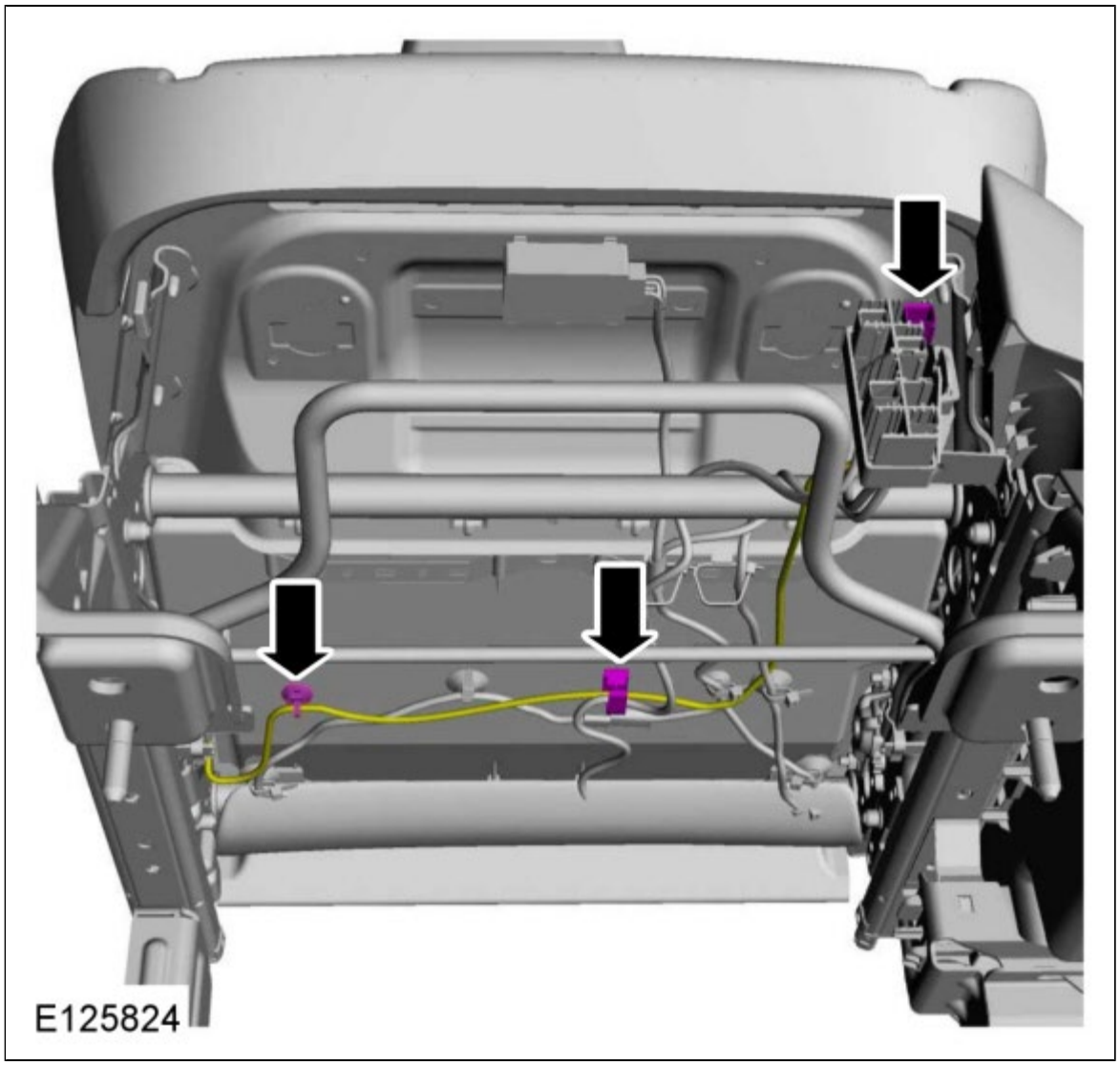

4. *Torque* : 47 Nm

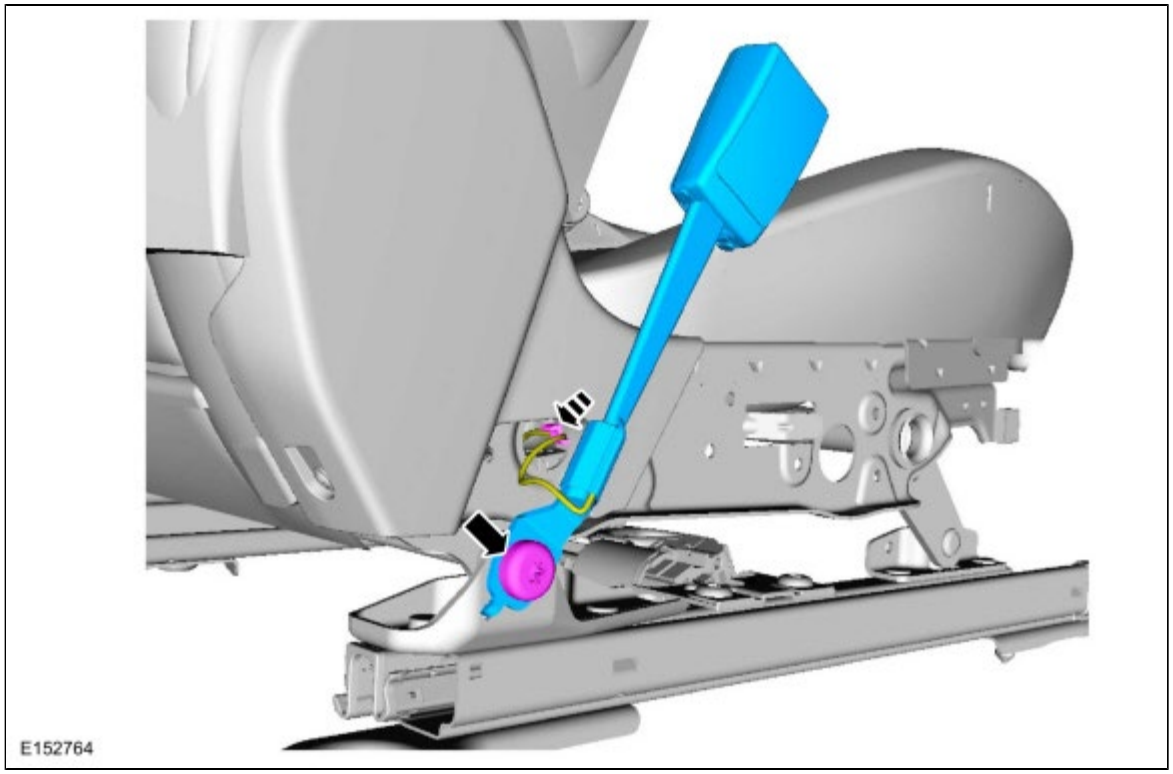

Passenger seat

5.

6.
    1. *Torque* : 47 Nm
    2. -

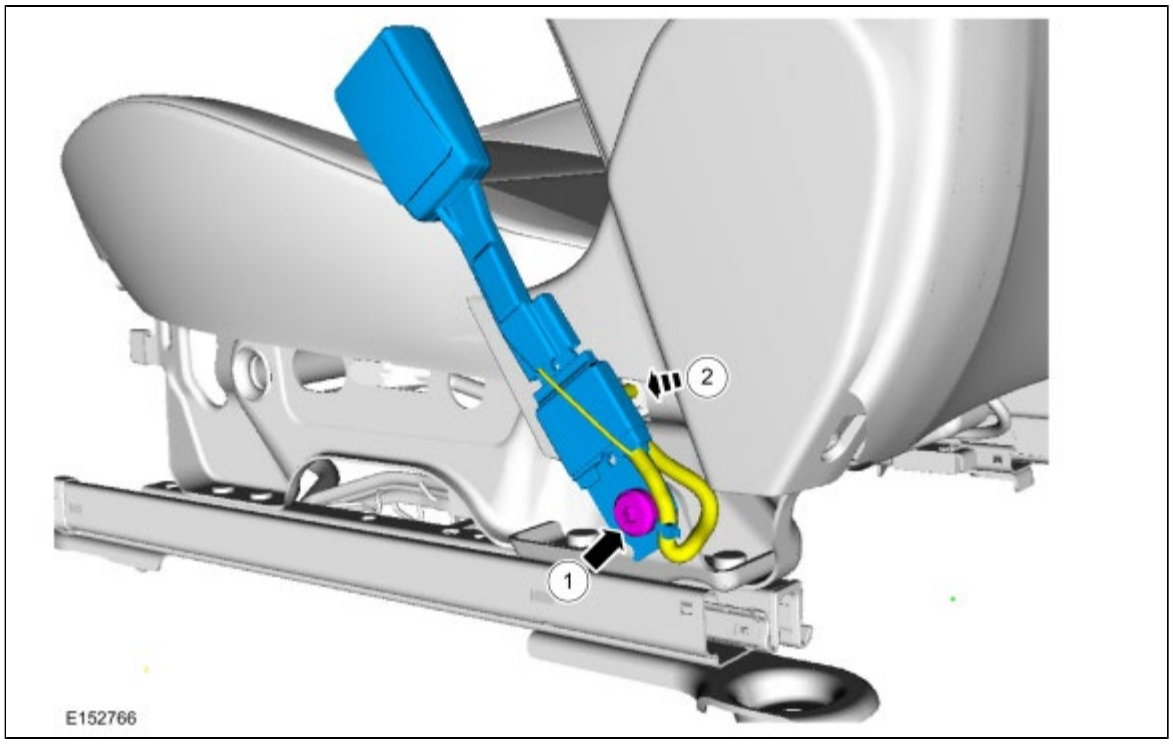

Installation

1. To install, reverse the removal procedure.
2. Check the active restraint system for correct operation.
   Refer to: Safety Belt System (501-20A Safety Belt System, Diagnosis and Testing).

Copyright © Ford Motor Company

Rear Center Safety Belt Retractor

Removal

1. **WARNING: Before beginning any service procedure in this section, refer to Safety Warnings in section 100-00 General Information. Failure to follow this instruction may result in serious personal injury.**

   Refer to: Health and Safety Precautions (100-00 General Information, Description and Operation).

2.

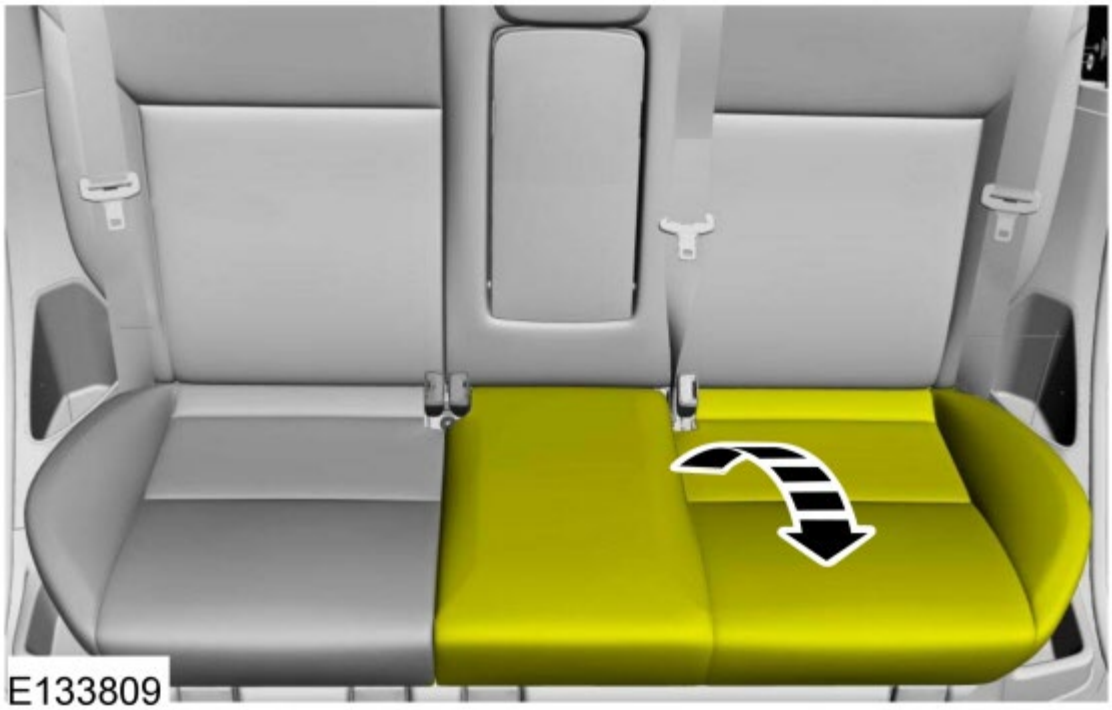

3. **NOTE:** *Note the position of the component before removal.*

   NOTE: *Make sure the component is installed to the position noted before removal.*

   NOTE: *Install all the bolts finger tight before final tightening.*

   Visual check.
   Torque : 55 Nm

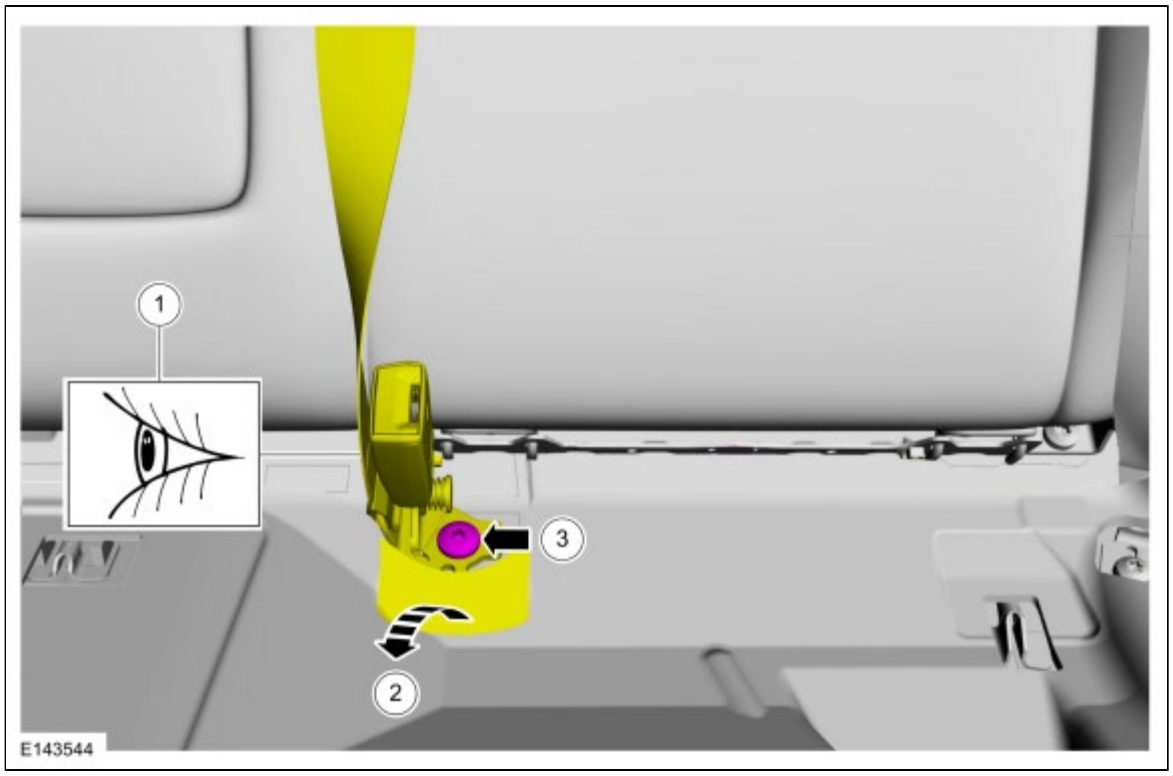

4.

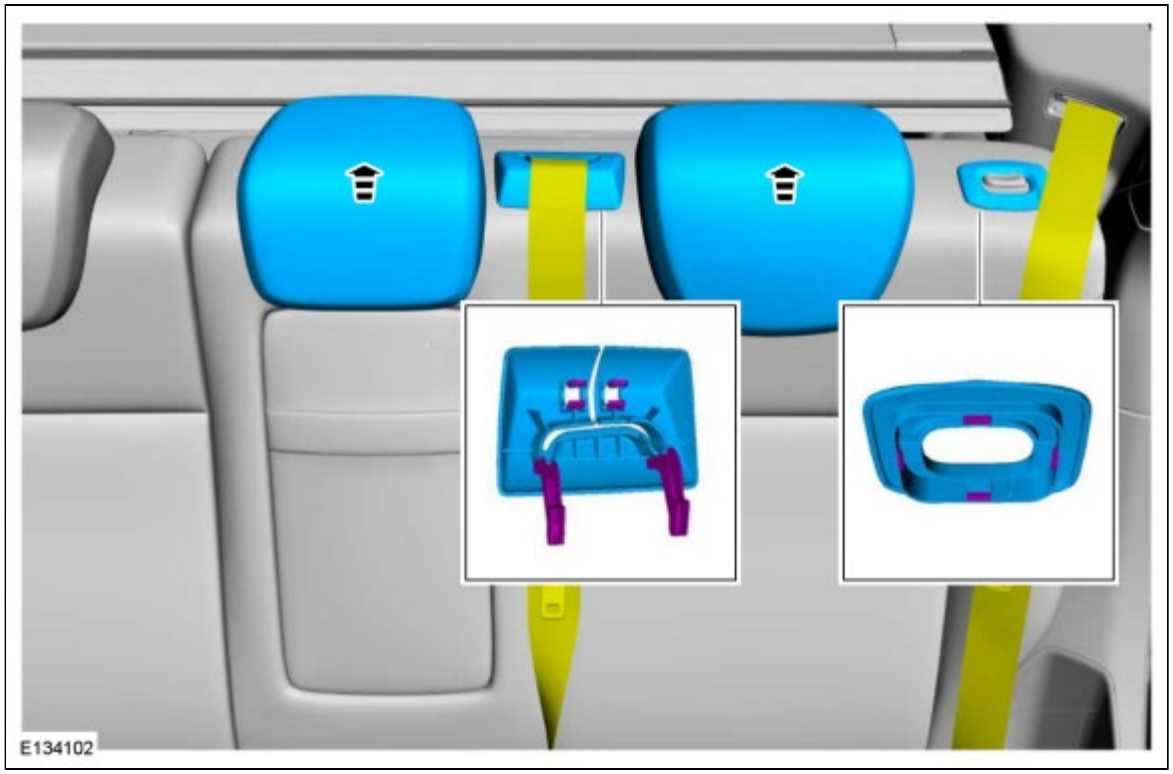

5.

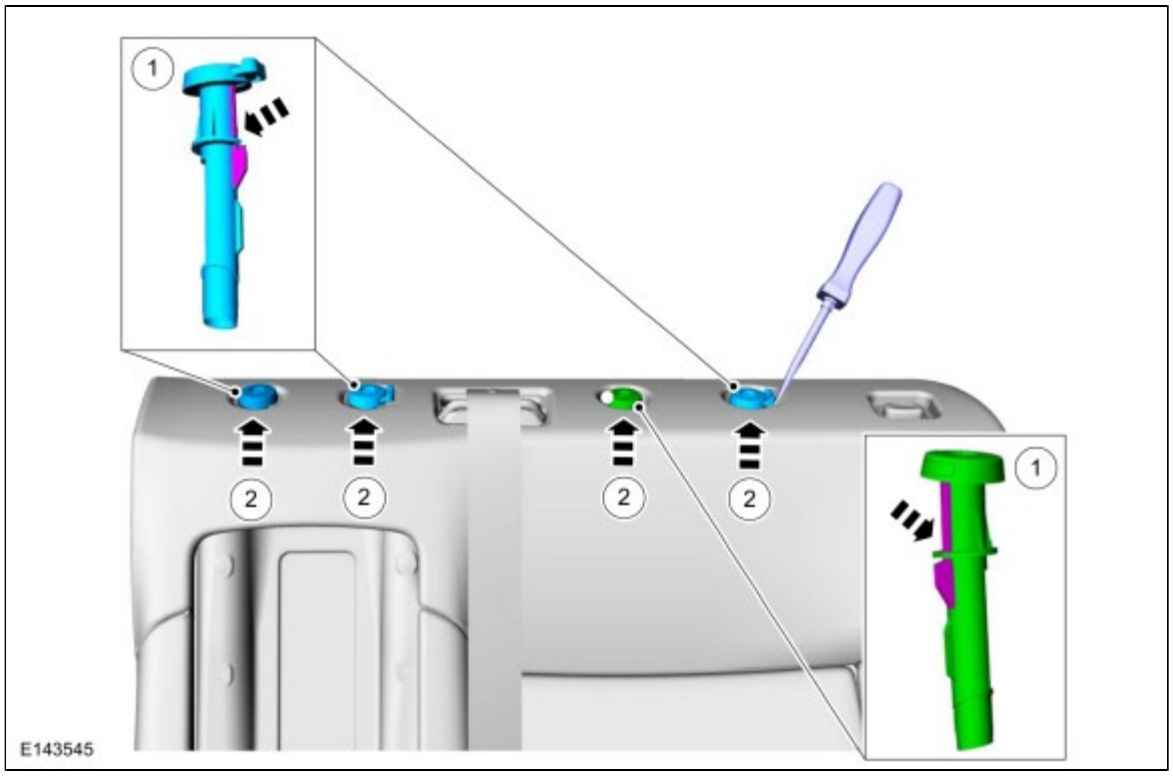

6.

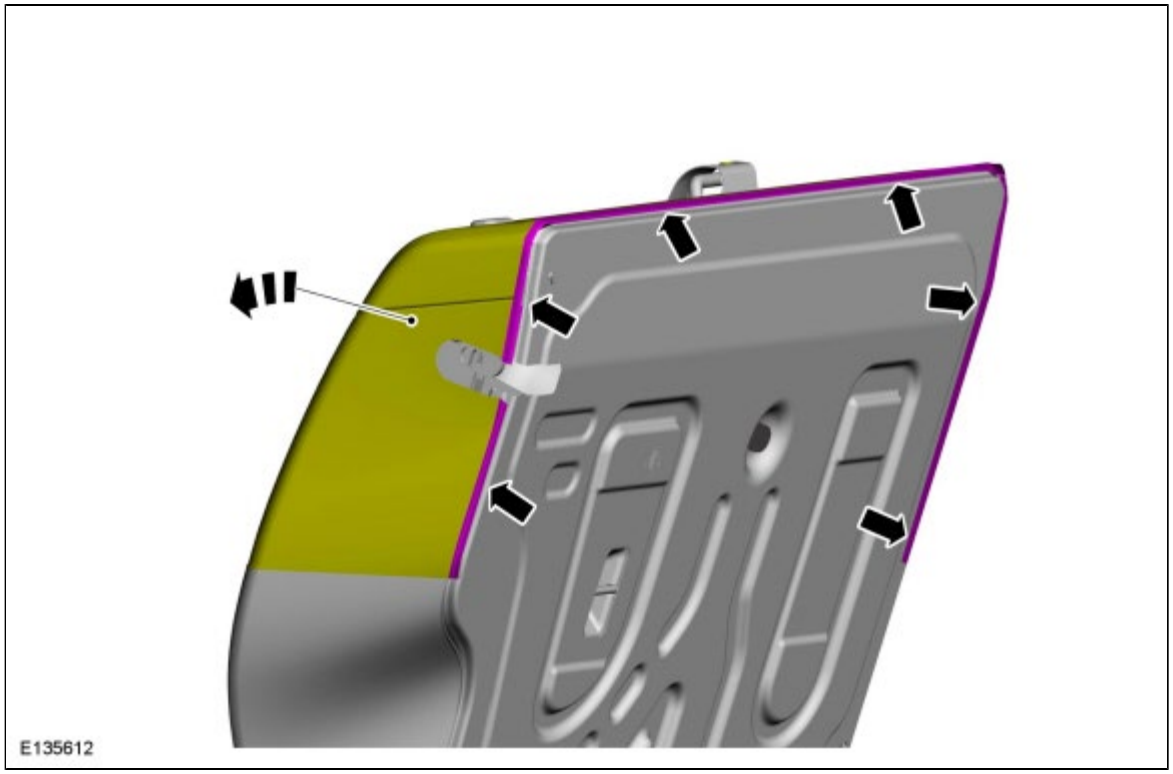

7. **NOTE:** *Touching the adhesive surface will impair rebonding.*

   NOTE: *During installation, apply 3M™ Fast Tack Adhesive (08031, 08033, 08034) to retain the backrest carpet.*

   Torque : 48 Nm

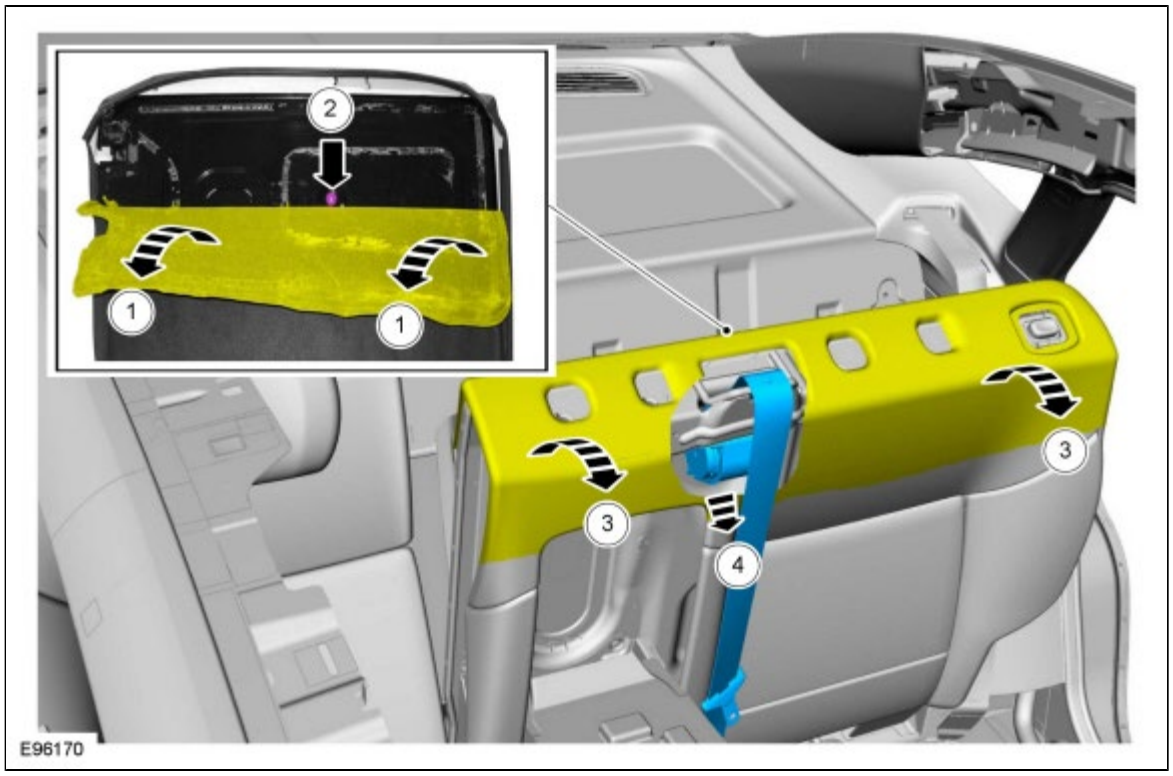

Installation

1. To install, reverse the removal procedure.

2. Check the active restraint system for correct operation.
   Refer to: Safety Belt System (501-20A Safety Belt System, Diagnosis and Testing).

Copyright © Ford Motor Company

Rear Safety Belt Retractor

Removal

1. **WARNING: Before beginning any service procedure in this section, refer to Safety Warnings in section 100-00 General Information. Failure to follow this instruction may result in serious personal injury.**

   Refer to: Health and Safety Precautions (100-00 General Information, Description and Operation).

2.
   1. W504775 (Safety belt retractor bolt)
      Torque : 40 Nm
   2. 54611B68 (Safety belt retractor)
   3. W707941 (Safety belt anchor bolt)
      Torque : 47.5 Nm
   4. Part of 54611B68 (Safety belt anchor)

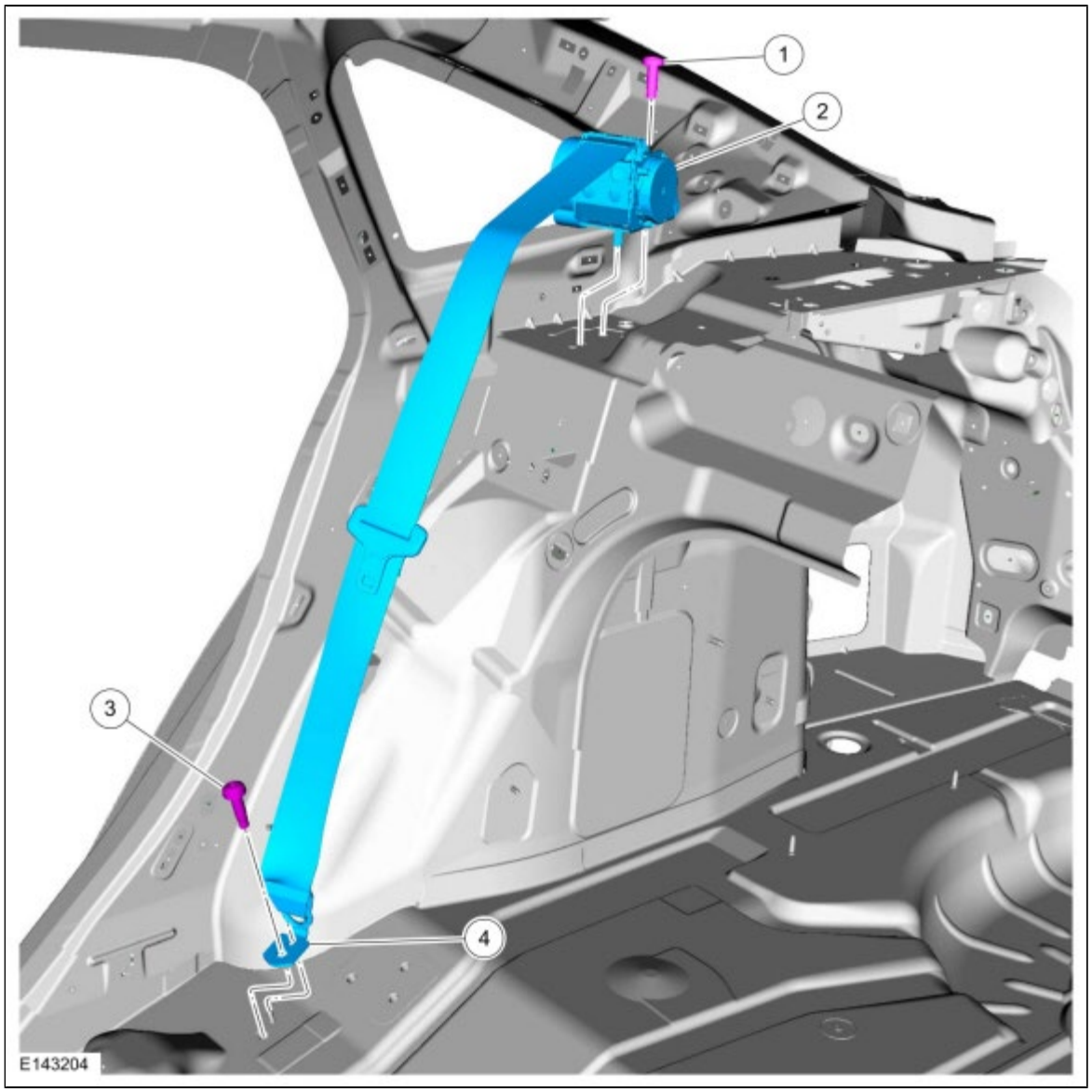

3. Remove the C-pillar trim panel.

Refer to: C-Pillar Trim Panel - Vehicles With: 4-Door (501-05 Interior Trim and Ornamentation, Removal and Installation).

4. Remove the safety belt anchor bolt.

5. Remove the safety belt retractor bolt and the safety belt retractor.

Installation

1. Position the safety belt retractor and install the bolt..
   Torque : 40 Nm

2. Install the C-pillar trim panel.
   Refer to: C-Pillar Trim Panel - Vehicles With: 4-Door (501-05 Interior Trim and Ornamentation, Removal and Installation).

3. Position the safety belt anchor and install the bolt.
   Torque : 47.5 Nm

4. Check the active restraint system for correct operation.
   Refer to: Safety Belt System (501-20A Safety Belt System, Diagnosis and Testing).

Copyright © Ford Motor Company

Safety Belt Retractor and Pretensioner

Removal

1. **WARNING: Before beginning any service procedure in this section, refer to Safety Warnings in section 100-00 General Information. Failure to follow this instruction may result in serious personal injury.**

   Refer to: Health and Safety Precautions (100-00 General Information, Description and Operation).

2. **WARNING: Turn the ignition OFF and wait one minute to deplete the backup power supply. Ignition must remain OFF until repair is complete. Failure to follow this instruction may result in serious personal injury or death in the event of an accidental deployment.**

   If a SRS fault is present, continue to step 3. Otherwise, turn the ignition OFF, wait at least one minute and continue to step 4.

3. **NOTE:** *The air bag warning indicator illuminates when the correct RCM fuse is removed and the ignition is on.*

   Depower the SRS .
   Refer to: Supplemental Restraint System (SRS) Depowering and Repowering (501-20B Supplemental Restraint System, General Procedures).

4. Remove the B-pillar trim panel.
   Refer to: B-Pillar Trim Panel - Vehicles Built From: 11-June-2012 (501-05 Interior Trim and Ornamentation, Removal and Installation).

5.

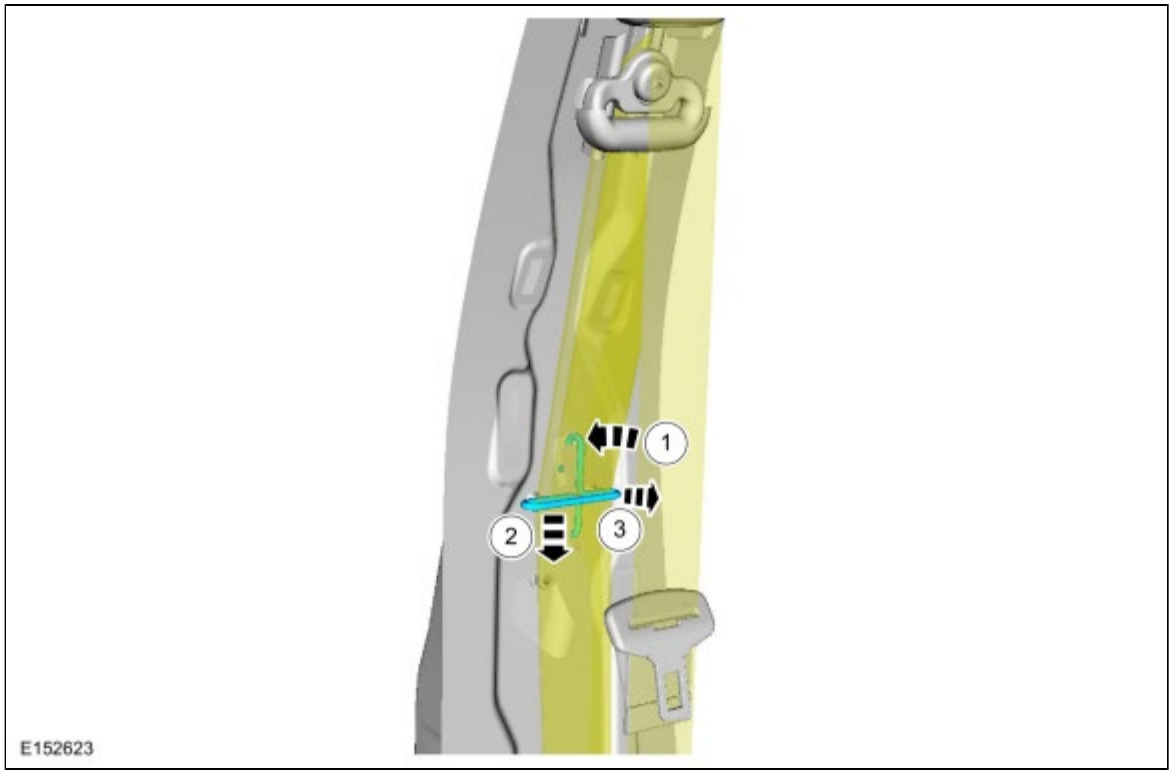

6. *Torque* : 35 Nm

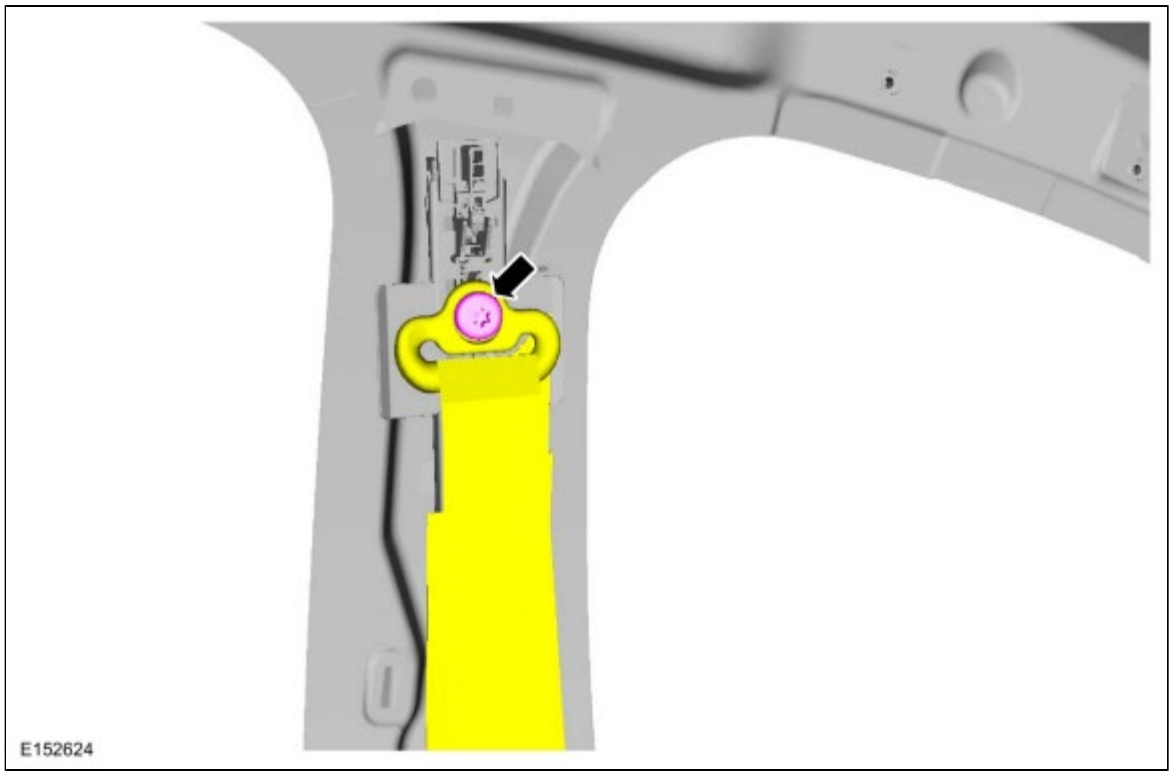

7. *Torque* : 35 Nm

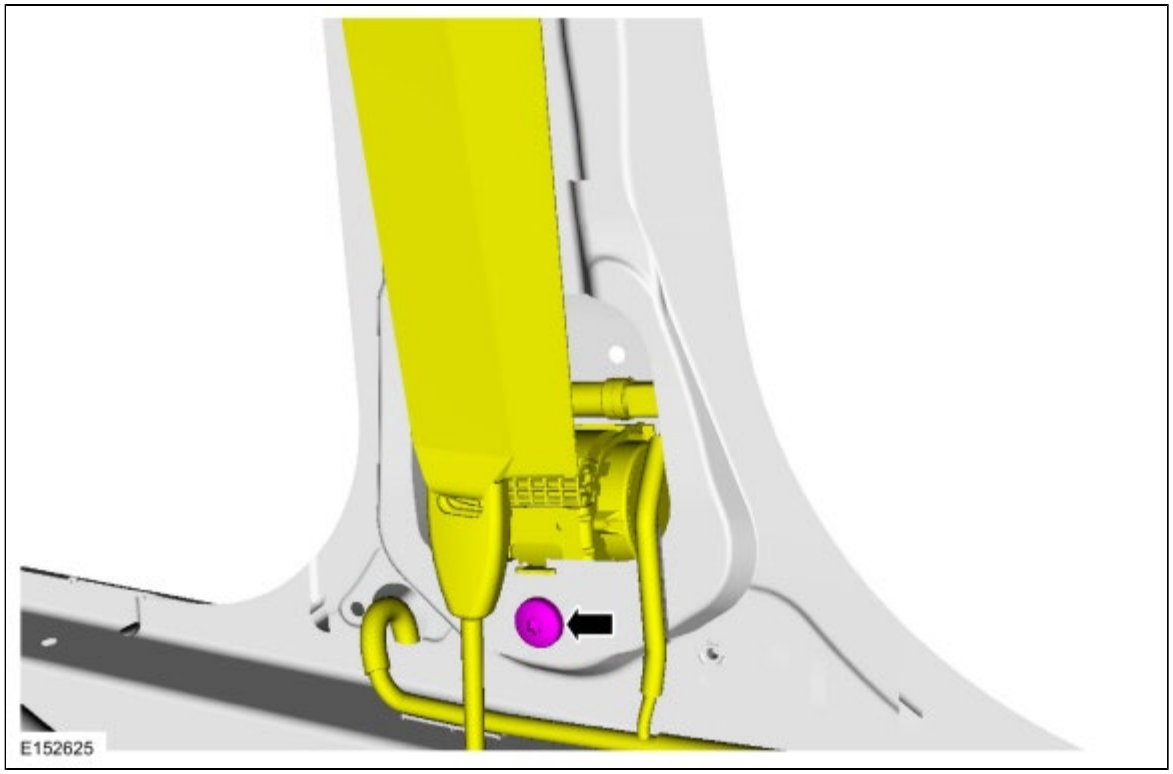

8. For driver side.

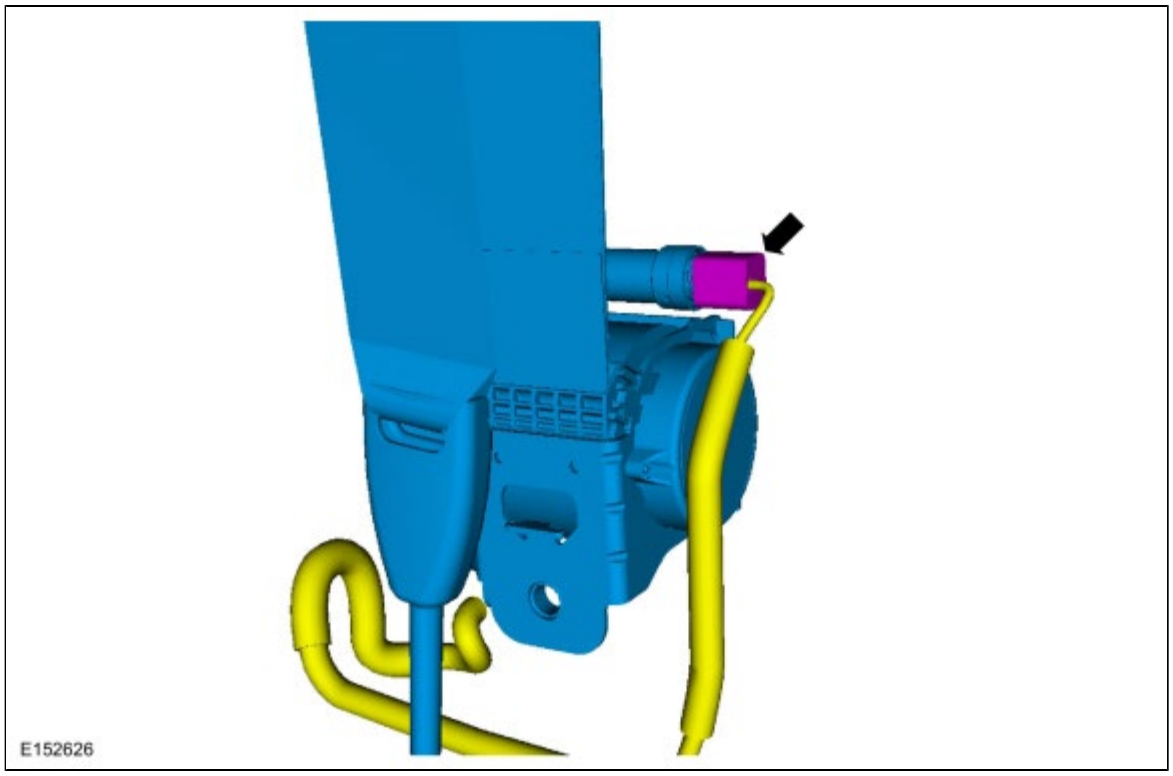

9. For passenger side.

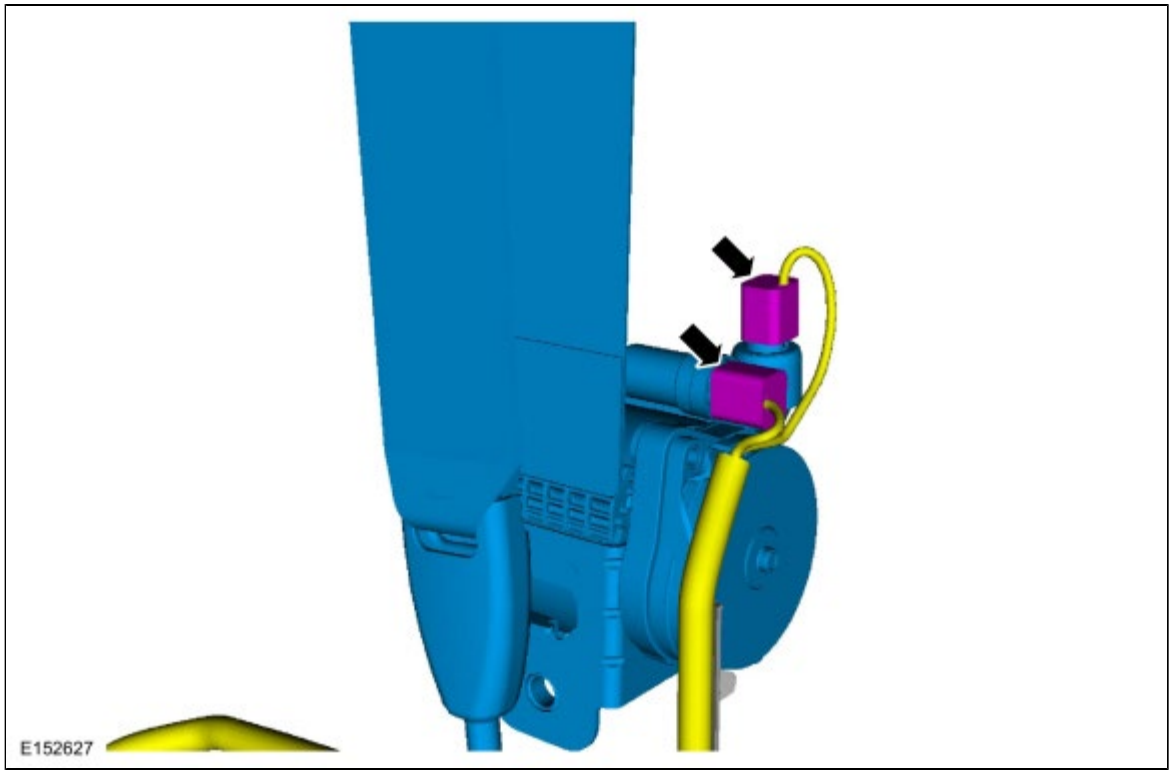

Installation

1. To install, reverse the removal procedure.

2. If the SRS was depowered, repower the SRS .
   Refer to: Supplemental Restraint System (SRS) Depowering and Repowering (501-20B Supplemental Restraint System, General Procedures).

Copyright © Ford Motor Company

Safety Belt Shoulder Height Adjuster

Removal

1. **WARNING: Before beginning any service procedure in this section, refer to Safety Warnings in section 100-00 General Information. Failure to follow this instruction may result in serious personal injury.**

   Refer to: Health and Safety Precautions (100-00 General Information, Description and Operation).

2.
   - Part of 54602B82 (Safety belt shoulder height adjuster bolts)
     Torque : 35 Nm
   - 54602B82 (Safety belt shoulder height adjuster)

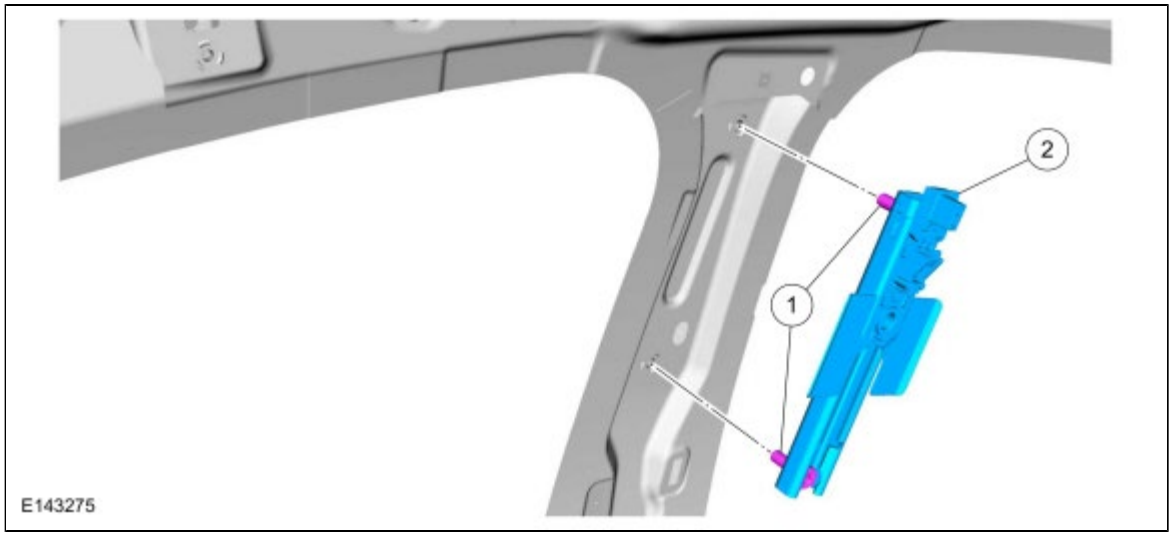

3. Remove the B-pillar trim panel.
   Refer to: B-Pillar Trim Panel - Vehicles Built Up To: 25-June-2012 (501-05 Interior Trim and Ornamentation, Removal and Installation).
   Refer to: B-Pillar Trim Panel - Vehicles Built From: 11-June-2012 (501-05 Interior Trim and Ornamentation, Removal and Installation).

4. Remove the bolt and separate the D-ring.

5. Remove the 2 bolts and the safety belt shoulder height adjuster.

Installation

1. Position the safety belt shoulder height adjuster and install the 2 bolts.
   Torque : 35 Nm

2. Position the D-ring and install the bolt.
   Torque : 35 Nm

3. Install the B-pillar trim panel.
   Refer to: B-Pillar Trim Panel - Vehicles Built Up To: 25-June-2012 (501-05 Interior Trim and Ornamentation, Removal and Installation).
   Refer to: B-Pillar Trim Panel - Vehicles Built From: 11-June-2012 (501-05 Interior Trim and Ornamentation, Removal and Installation).

Copyright © Ford Motor Company

Rear Safety Belt Buckle

Removal

1. **WARNING: Before beginning any service procedure in this section, refer to Safety Warnings in section 100-00 General Information. Failure to follow this instruction may result in serious personal injury.**

   Refer to: Health and Safety Precautions (100-00 General Information, Description and Operation).

2.
   - Safety belt buckle assembly (5460045)
   - Safety belt buckle assembly bolt (W715640)
     Torque : 55 Nm

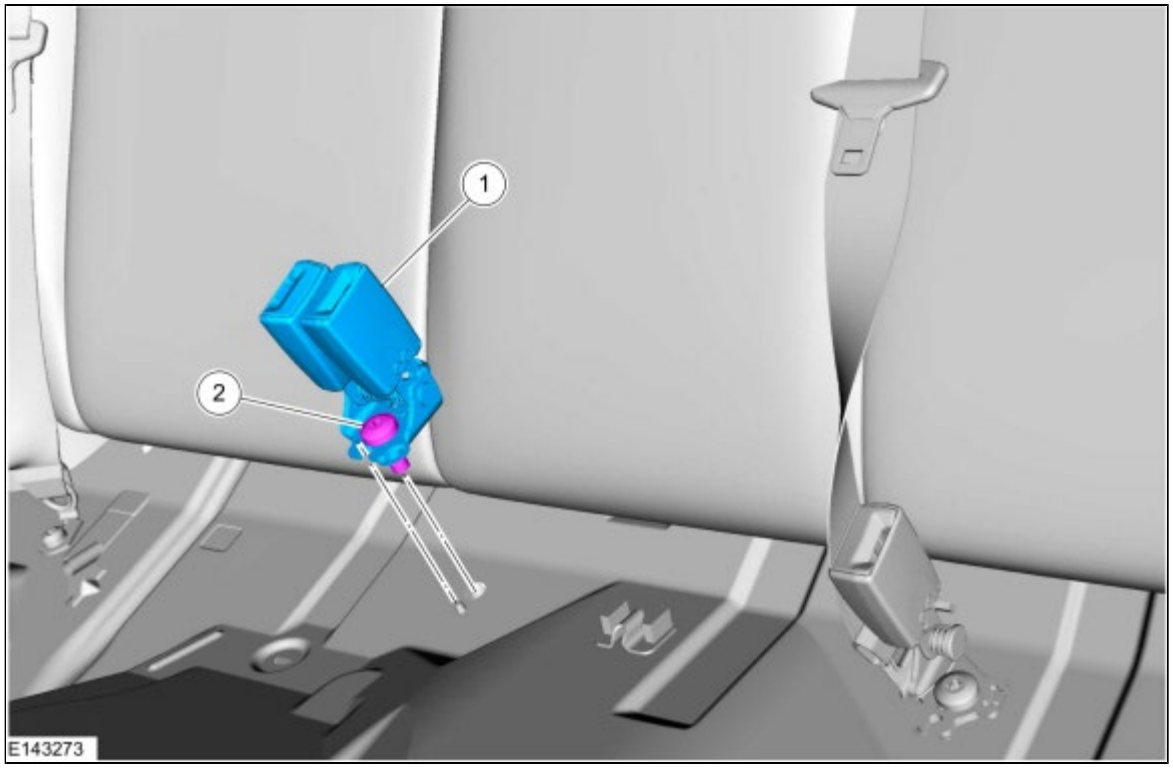

3. Position the rear seat cushion.

4.
   - Pivot the 60/40 seat cushion up.

5. Remove the bolt and the safety belt buckle assembly.

Installation

1. Position the safety belt buckle assembly and install the bolt.
   Torque : 55 Nm

2. Position the rear seat cushion.

3.
   - Pivot the 60/40 seat cushion down.

4. Check the active restraint system for correct operation.

Refer to: Safety Belt System (501-20A Safety Belt System, Diagnosis and Testing).

Copyright © Ford Motor Company

Power Steering - Overview

Overview

The EPAS system provides steering assist to the driver by replacing the conventional, hydraulic valve system with a steering gear equipped with an integrated electrical motor and PSCM . The motor operation and level of steering assist provided is controlled by the PSCM .

Copyright © Ford Motor Company

Power Steering - System Operation and Component Description

System Operation

System Diagram

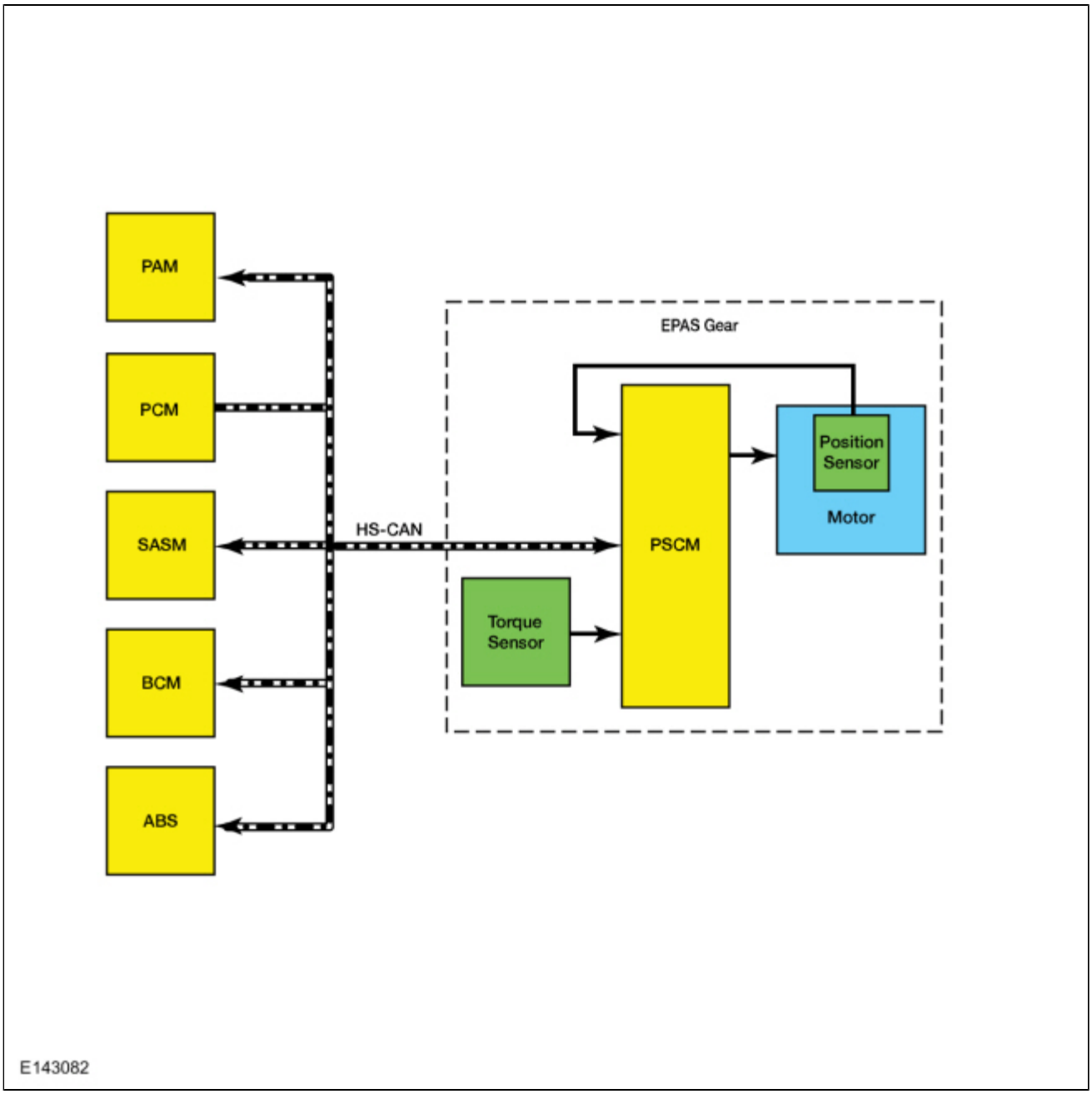

Network Message Chart

Module Network Input Messages: Power Steering Control Module (PSCM)

Broadcast Message	Originating Module	Message Purpose

ABS active	ABS	Used to confirm that the ABS is operational.
Engine speed	PCM	Engine speed monitored to initiate EPAS activation and continued operation.
Power mode	BCM	Used to confirm the ignition status of the vehicle.
Stability control brake active	ABS	Used to confirm the operational state of the stability control system.
Steering angle counter	SASM	Used to verify the validity of the steering angle message.
Steering angle status	SASM	Used to confirm the steering angle sensor is initialized and operating correctly.
Steering wheel direction of rotation	SASM	Used to confirm the direction in which the EPAS motor is driven.
Traction control brake active	ABS	Used to confirm the operational state of the traction control system.
Transport mode	BCM	Used to confirm the vehicle is in normal operation mode, factory mode, transport mode or a crash event has been identified and the vehicle has been set to a post crash configuration.
Vehicle configuration/information	ABS	Used to compare the PSCM configuration against the vehicles specific configuration (central car configuration).
Vehicle speed	ABS	Used to determine the level of assist supplied.
Wheel speed data	ABS	Used to validate the steering wheel component angle by comparing the rotational speeds of each wheel. The difference in the speed of each wheel is used to derive a steering angle for comparison against the absolute steering angle message from the SASM .

EPAS System

The PSCM controls the functions of the EPAS system and communicates with other modules over the High Speed Controller Area Network (HS-CAN).

To activate, the EPAS system needs to be connected to battery voltage at the hot at all times input and at the ignition/run input to the PSCM . In addition, the system must communicate with other modules over the High Speed Controller Area Network (HS-CAN). The PSCM must receive the power mode signal from the BCM in order to be set into operation mode.

The main input for calculating the level of EPAS assist is the torque sensor signal. Vehicle speed is also taken into consideration in order to achieve the vehicle speed dependent steering assist characteristic.

The EPAS gear uses a reversible motor to apply the steering assist. The motor is connected to the rack of the steering gear by a toothed belt and pulley/bearing assembly. The motor is used by the PSCM to move the rack inside the steering gear housing.

The PSCM continually monitors and adjusts steering efforts based on the torque sensor, motor position and High Speed Controller Area Network (HS-CAN) inputs to enhance the feel of the steering system. As vehicle speed increases, the amount of assist decreases to improve and enhance road feel at the steering wheel. As vehicle speed decreases, the amount of assist increases to ease vehicle maneuvering. Compensation is made to reduce the effect of pull or drift that can be experienced when driving on roads with a high degree of camber. Also compensation for the impact of wheel imbalance on steering feel is made up to a predetermined threshold.

The steering torque sensor senses the torque at the steering wheel. It is hard wired to the PSCM and works by measuring the relative rotation between an input and output shaft which are connected by a torsion bar. The torque sensor sends out 2 PWM signals which allows a channel to channel cross-check and an accurate correction of the neutral point.

The PSCM is self-monitoring and is capable of setting and storing Diagnostic Trouble Codes (DTCs). Depending on the DTC set, the PSCM may enter a failure mode. In addition, the PSCM may send a request to the IPC to display a message in the message center, alerting the driver of a potential EPAS concern. The warning message is sent over the High Speed Controller Area Network (HS-CAN) to the BCM where it is converted to a Medium Speed Controller Area Network (MS-CAN) message and forwarded on to the IPC over the Medium Speed Controller Area Network (MS-CAN).

Failure Modes

When a DTC is present in the PSCM , the EPAS enters 1 of 2 modes of operation.

The EPAS enters a reduced steering assist mode to protect the internal components of the EPAS when a concern is detected by the PSCM such as low/high battery voltage or over-temperature concerns that are not considered to be a critical safety concern. This reduced steering assist mode gives the steering a heavier than normal feel.

The EPAS enters a manual steering mode (no electrical steering assistance is provided) when a concern that is considered to be a critical safety concern is detected. In manual steering mode, the vehicle has mechanical steering operation only, which gives steering operation a heavy feel.

Active Park Assist

Some vehicles equipped with EPAS may also be equipped with active park assist. The active park assist system is controlled by the Parking Aid Module (PAM) and, when activated, can detect a parking space and steer the vehicle into the space by sending commands to the EPAS gear (the driver still controls the throttle, brakes and transmission). The active park assist system is comprised of several systems/modules that work together to aid in parallel parking maneuvers. The presence of certain DTC in any of those systems/modules may either keep the active park assist system from being enabled or may disable the system if currently being used.
Refer to: Parking Aid - System Operation and Component Description (413-13B Parking Aid - Vehicles With: Active Park Assist, Description and Operation).

Component Description

EPAS Steering Gear

The EPAS gear is an assembly that consists of a PSCM , a motor, a steering shaft torque sensor and EPAS gear isolators, all of which are serviced as an assembly. The inner and outer tie rods and the gear bellows boots are available for service.

- The steering shaft torque sensor is mounted near the input shaft of the EPAS gear and is used by the PSCM to determine how much force the steering wheel is being turned by. The steering shaft torque sensor is mounted near the input shaft of the EPAS gear and is used by the PSCM to determine how much force the steering wheel is being turned by.
- The EPAS gear has one inner tie rod located at each end of the gear assembly and is available separately for service.
- The EPAS gear has one outer tie rod located at each end of the gear assembly and is available separately for service.
- The EPAS gear has one bellows boot located at each side of the EPAS gear assembly. Each boot is held in place with 2 boot clamps. The boots and clamps are available for service. The boot kit for service includes an O-ring (not used for producction) that is used between the boot and gear.
- The EPAS gear has isolators located at each attachment point of the gear. These isolators (2 rubber and 1 steel) aid in the reduction of NVH concerns and are **not** available separately for service.

PSCM

The PSCM is the Electronic Control Unit (ECU) for the EPAS system. The module monitors all sensor inputs and High Speed Controller Area Network (HS-CAN) messages that relate to the EPAS system and directly controls the output of the EPAS motor.

Copyright © Ford Motor Company

Power Steering

Interactive Diagnostics

For diagnosing and testing please refer to the on-line Workshop Manual. If you do not have an on-line subscription, go to www.motorcraftservice.com.

Copyright © Ford Motor Company

Steering Gear

Removal

1. **WARNING: Before beginning any service procedure in this section, refer to Safety Warnings in section 100-00 General Information. Failure to follow this instruction may result in serious personal injury.**

   Refer to: Health and Safety Precautions (100-00 General Information, Description and Operation).

2. Refer to: Front Subframe (502-00 Uni-Body, Subframe and Mounting System, Removal and Installation).

3.

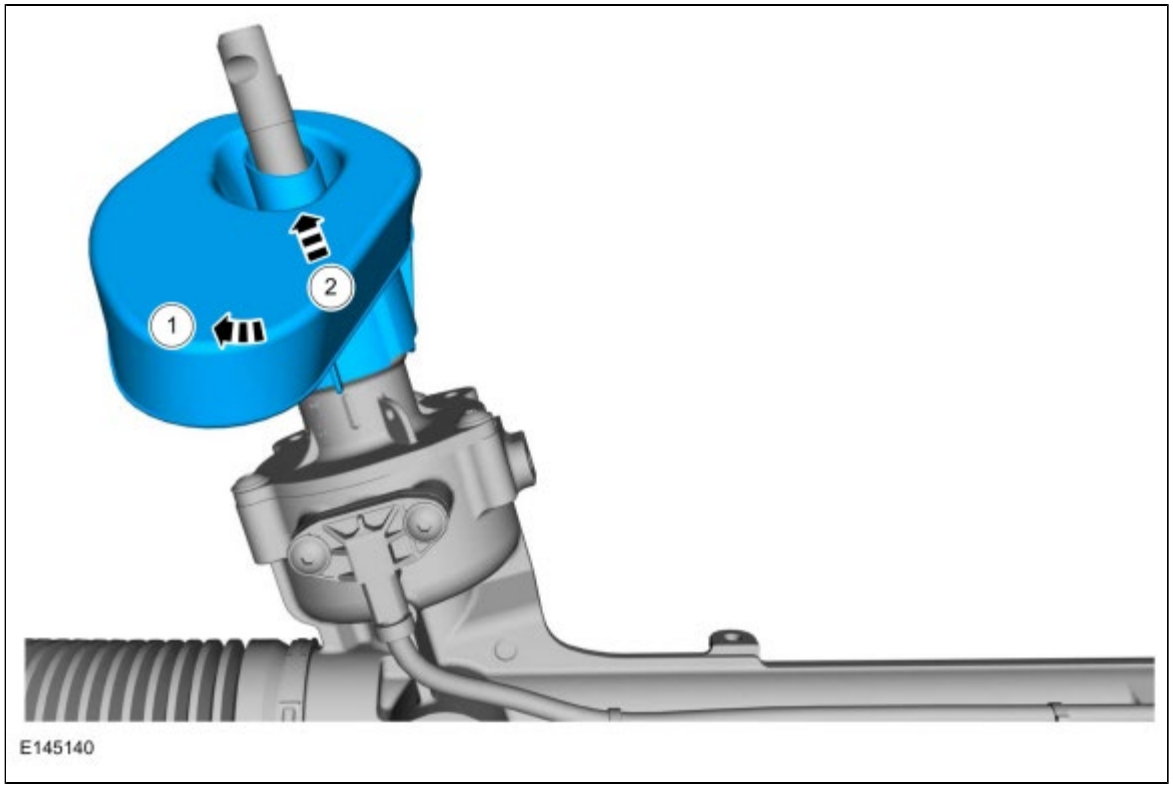

4.

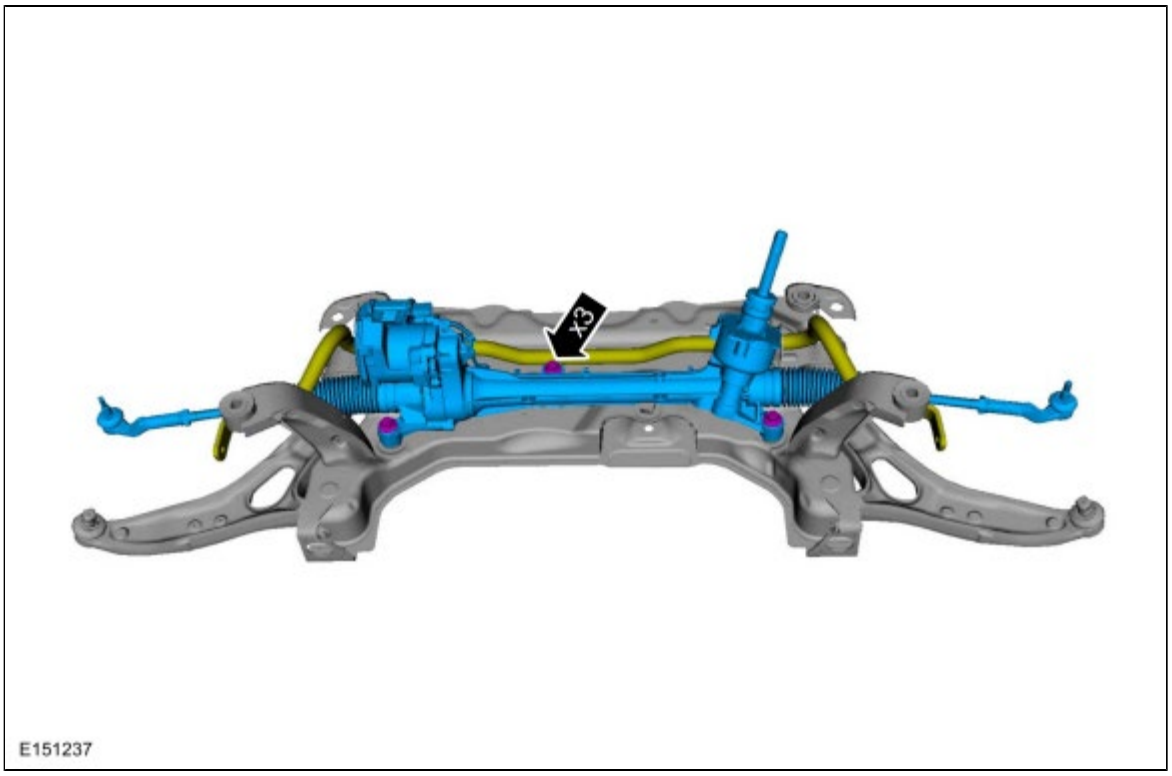

Installation

1. Finger tight at this stage.

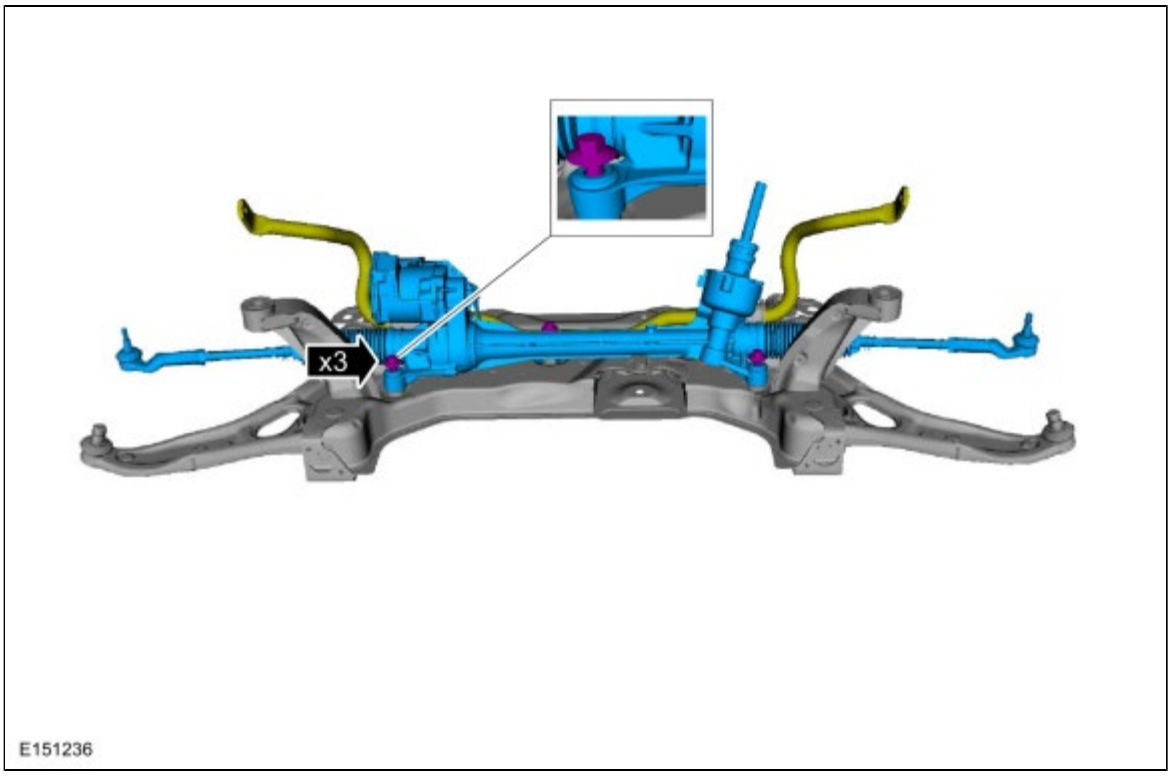

2.

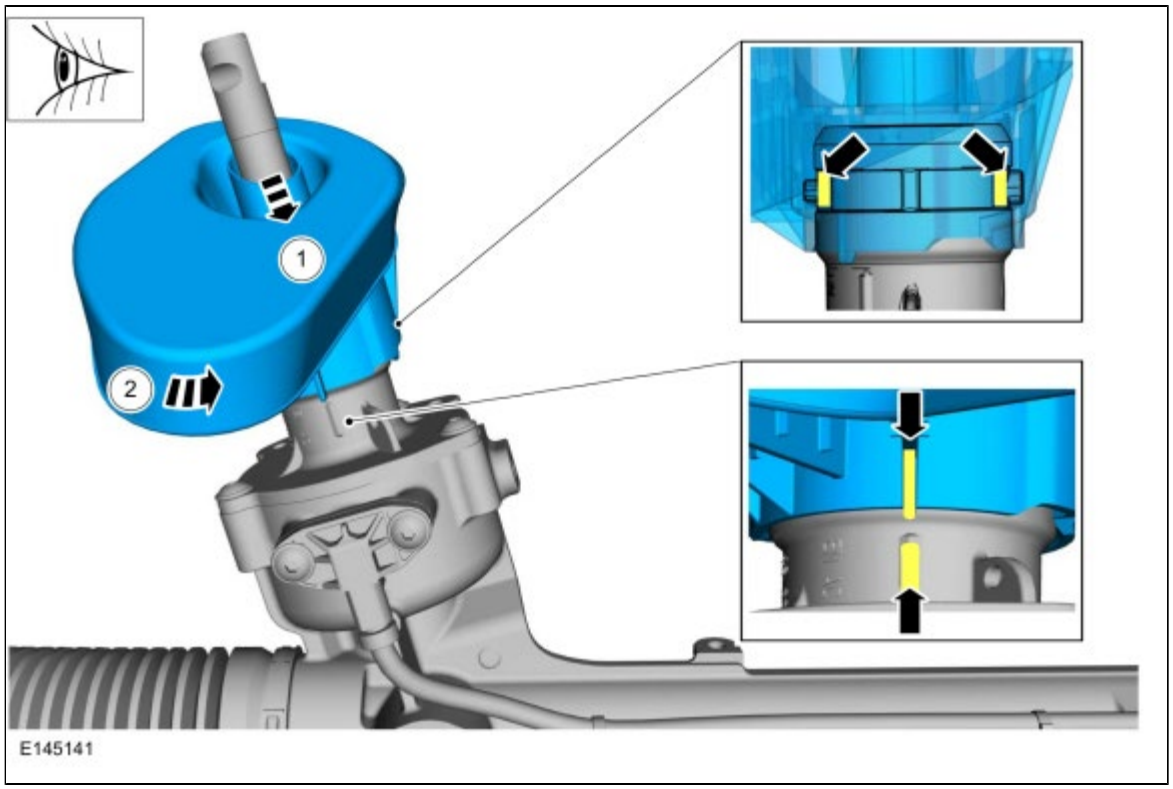

3.
   1. *Torque* :
      Stage 1: 110 Nm
      Stage 2: *Loosen* : 360°
      Stage 3: 56 Nm
      Stage 4: 180°
   2. *Torque* :
      Stage 1: 110 Nm
      Stage 2: *Loosen* : 360°
      Stage 3: 56 Nm
      Stage 4: 180°
   3. *Torque* :
      Stage 1: 110 Nm
      Stage 2: *Loosen* : 360°
      Stage 3: 56 Nm
      Stage 4: 180°

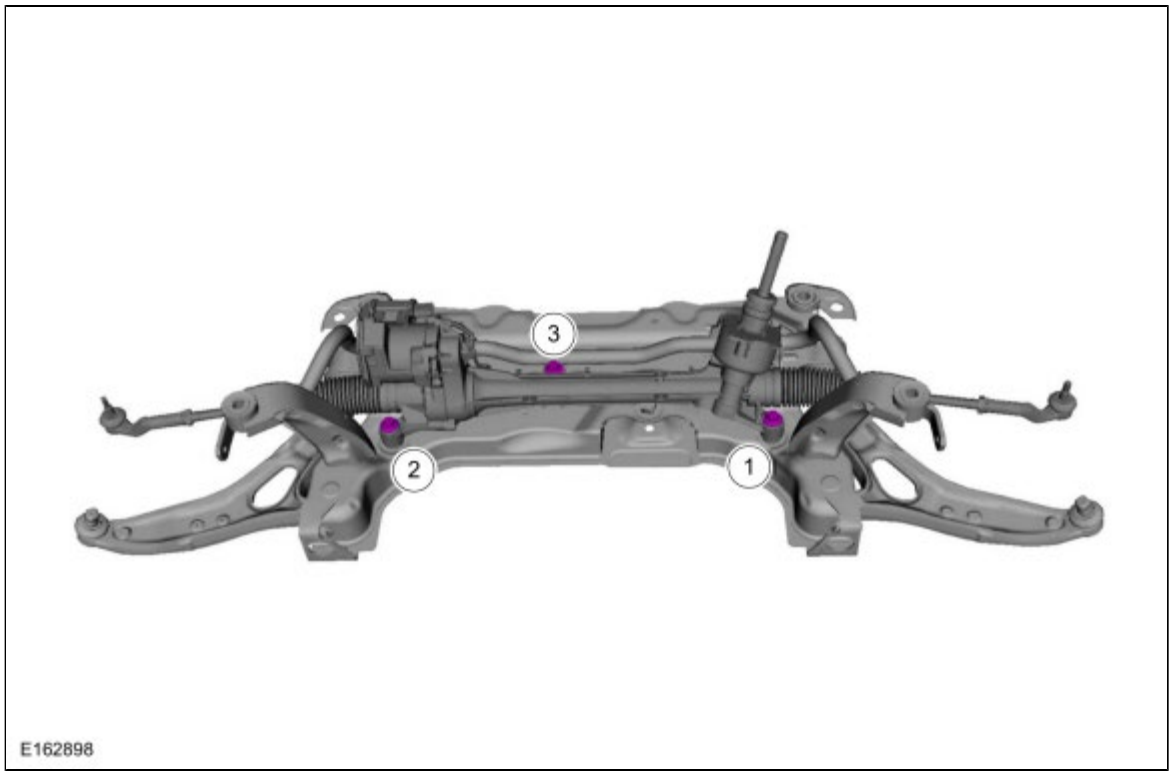

4. Refer to: Front Subframe (502-00 Uni-Body, Subframe and Mounting System, Removal and Installation).

Copyright © Ford Motor Company

Tie Rod

Removal

NOTICE: When servicing inner tie rods, install a new bellows boot and clamps. The boots and clamps are designed to provide an airtight seal and protect the internal components of the steering gear. If the seal is not airtight, the vacuum generated during turning will draw water and contamination into the gear, causing failure of the steering gear components. Zip ties must not be used as they do not provide an airtight seal.

NOTICE: The inner ball joint grease is not compatible with water contamination. Do not allow water to become trapped in the grease or degradation and failure of the joint may occur.

NOTE: *If the RH inner tie rod is being serviced, remove the LH outer tie rod end and bellows boot to access and hold the steering rack when loosening and tightening the inner tie rod.*

1. **NOTICE: Disconnect the battery ground cable anytime the steering linkage is being serviced or damage to the steering gear internal power relay may occur resulting in steering gear replacement.**

   Disconnect the battery ground cable.
   Refer to: Battery Disconnect and Connect (414-01 Battery, Mounting and Cables) .

2. Refer to: Wheel and Tire (204-04A Wheels and Tires, Removal and Installation).

3.

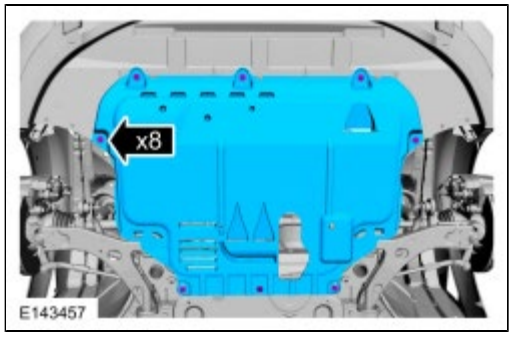

4. **NOTICE: Do not use a hammer to separate the outer tie-rod end from the wheel knuckle or damage to the wheel knuckle may result.**

   NOTICE: Use care when installing the tie rod separator or damage to the outer tie-rod end boot may occur.

   NOTE: *Count and record the number of turns required to remove the outer tie-rod end for reference during installation.*

   General equipment: Tie-rod separator. Discard the specified component. Follow local disposal regulations.

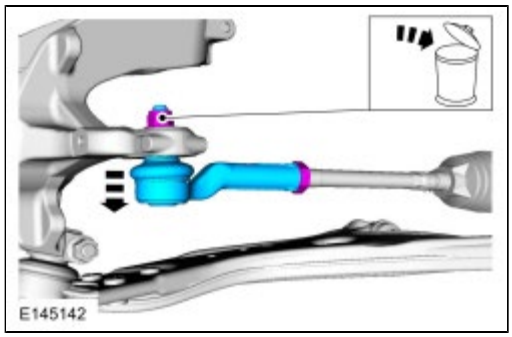

5. Discard the specified component. Follow local disposal regulations.

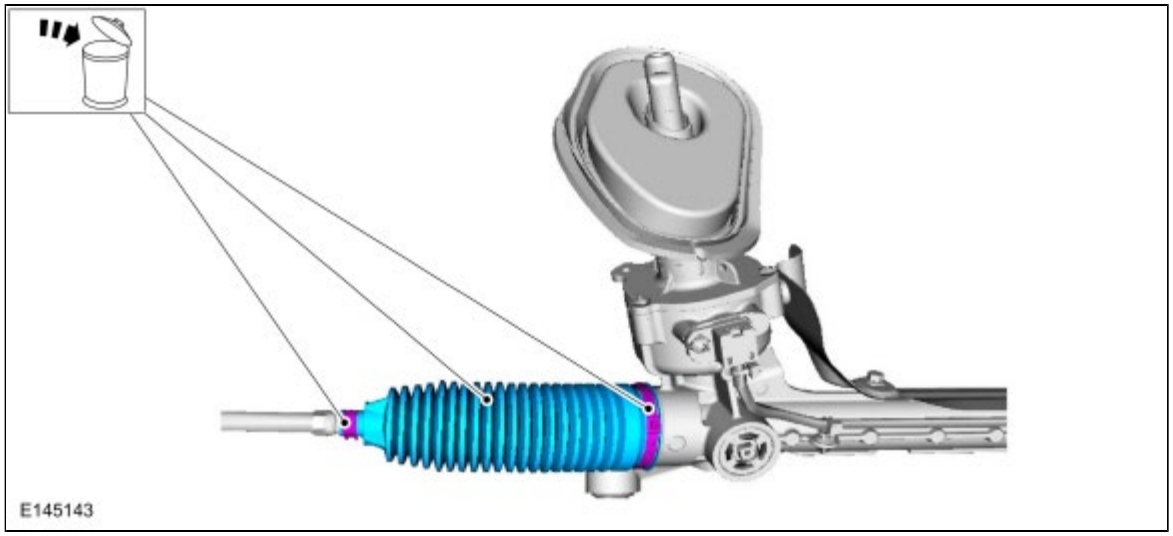

6. **NOTICE: Place the steering gear at the center position and hold the steering gear rack while loosening or tightening the inner tie rod. Use an appropriate-sized wrench on the flat/teeth of the rack to resist rotation and to prevent damage during removal of the inner tie rod.**

   NOTE: *An assistant will be needed to hold the steering gear rack on the Left Hand (LH) side when servicing the Right Hand (RH) inner tie rod.*

   NOTE: *Crowfoot-style inner tie-rod tool shown.*

   General equipment: Inner tie-rod remover/installer.

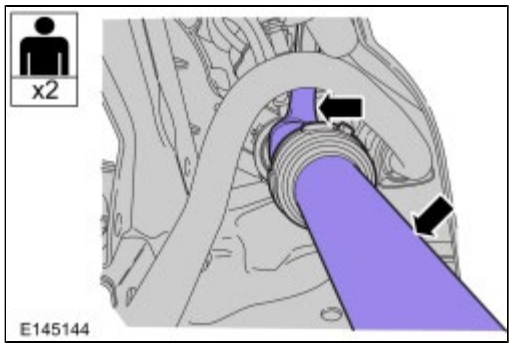

Installation

1. **NOTICE: Place the steering gear at the center position and hold the steering gear rack while loosening or tightening the inner tie rod. Use an appropriate-sized wrench on the flat/teeth of the rack to resist rotation and to prevent damage during removal of the inner tie rod.**

   NOTE: *Use an assistant to hold the steering gear rack on the Left Hand (LH) side when servicing the Right Hand (RH) inner tie rod.*

   NOTE: *Crowfoot-style inner tie-rod tool shown.*

   General equipment: Inner tie-rod remover/installer.
   Torque : 83 Nm

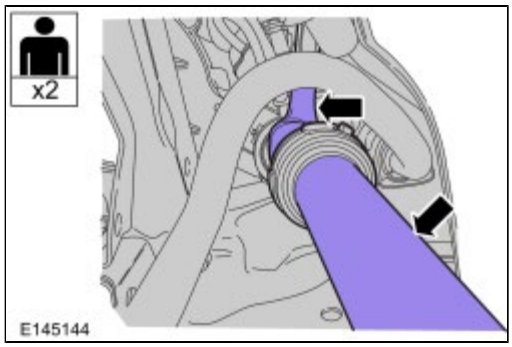

2. **NOTICE: Make sure to install the O-ring seal provided with the bellows boot kit or a leak may occur.**

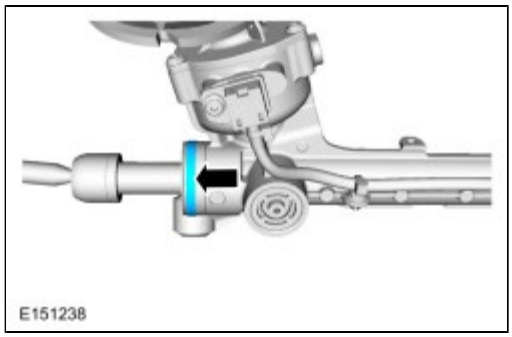

3. Apply the substance from the specified tube.
   Material : Premium Long-Life Grease / XG-1-C or XG-1-K (ESA-M1C75-B)

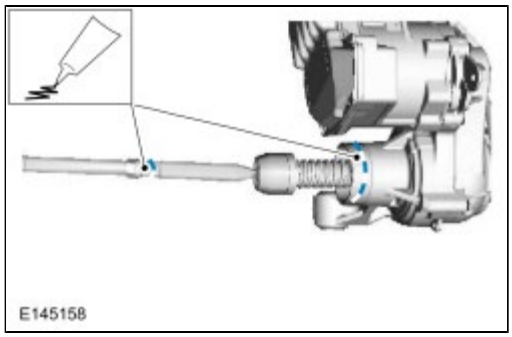

4. **NOTE:** *Make sure the steering gear bellows is positioned correctly over the steering gear housing bead and the grooves in the inner tie-rod casting.*

5. **NOTICE: Make sure the end of the steering gear bellows boot is positioned between the 2 grooves on the inner tie rod or an internal leak may occur.**

   Visual check. General equipment: Boot clamp installer.

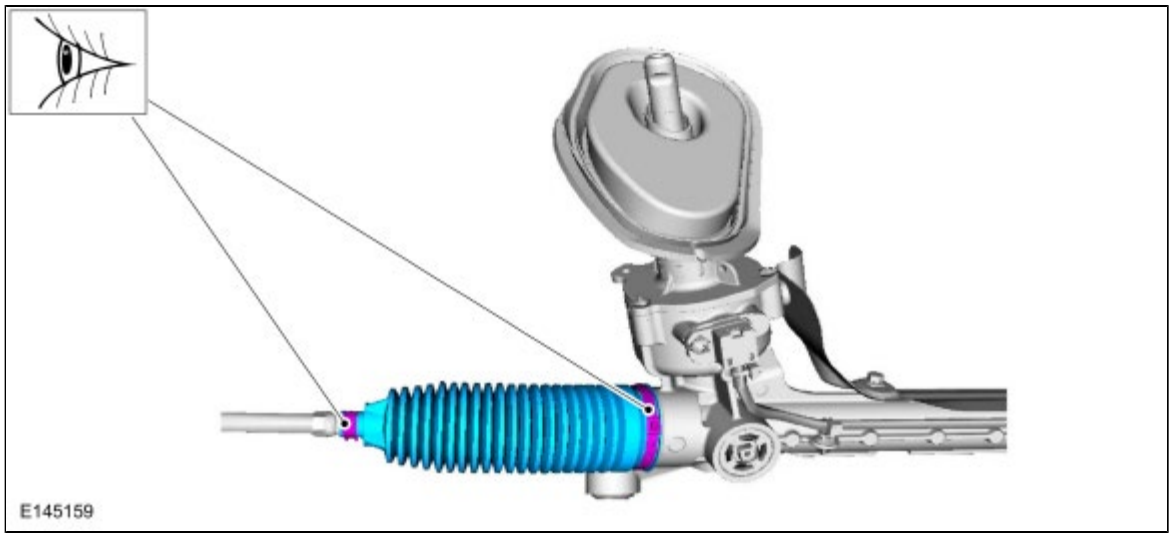

6.

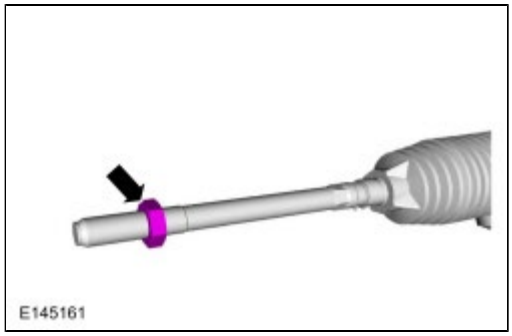

7. **NOTE:** *Install the outer tie rod the same number of turns recorded during removal.*

    1. *Torque* : 48 Nm
    2. *Torque* : 90 Nm

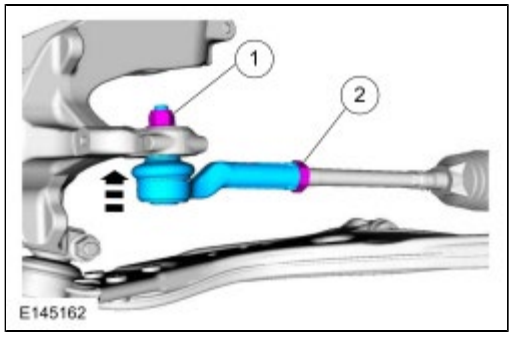

8. *Torque* : 1.1 Nm

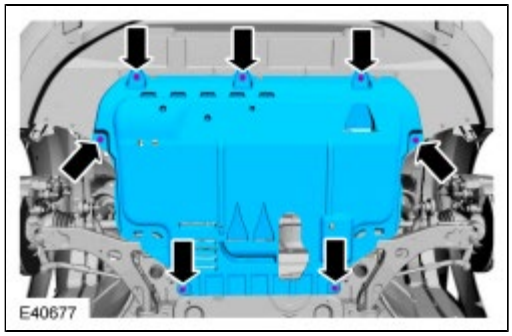

9. Refer to: Wheel and Tire (204-04A Wheels and Tires, Removal and Installation).

10. Connect the battery ground cable.
    Refer to: Battery Disconnect and Connect (414-01 Battery, Mounting and Cables) .

11. Refer to: Front Toe Adjustment (204-00 Suspension System - General Information, General Procedures).

Copyright © Ford Motor Company

Identification Codes - Vehicles Built From: 11-June-2012

Vehicle Identification Number (VIN)

VIN Locator

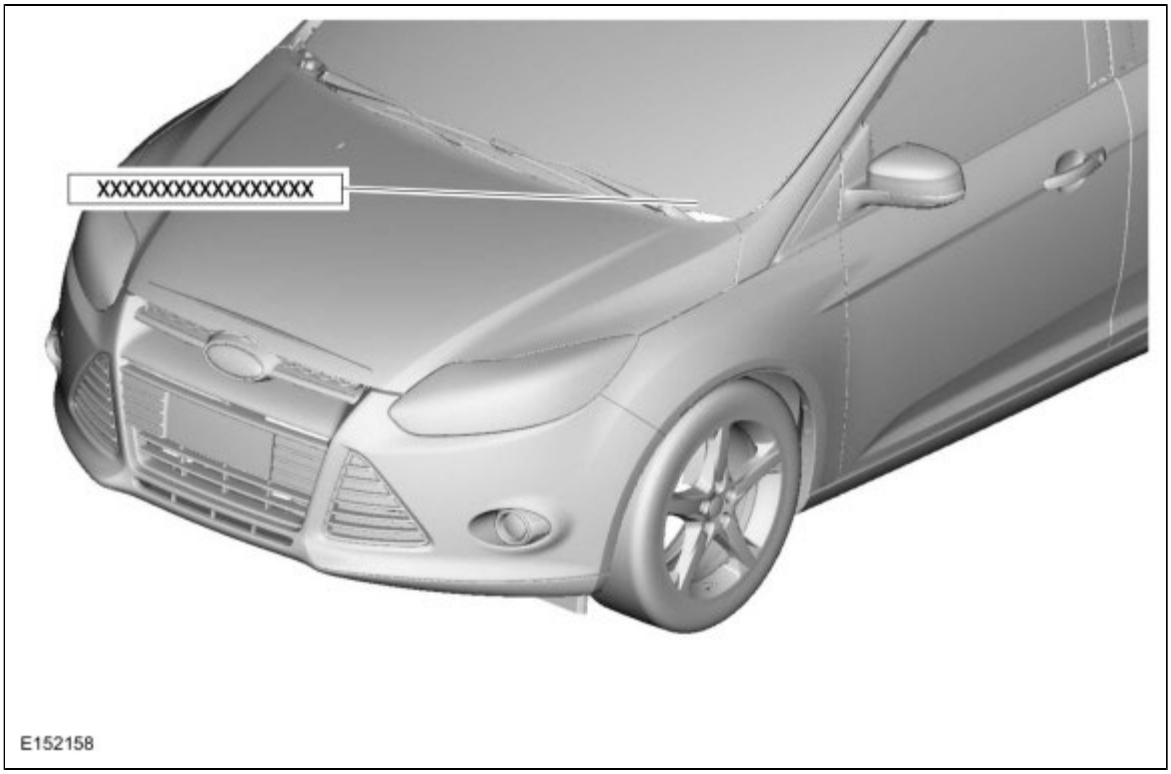

The VIN is a 17-digit combination of letters and numbers. The VIN is stamped on a metal tab riveted to the instrument panel, top upper left of the dash. The VIN is also found on the VC label. If the VIN plate requires replacement, authorized dealers must contact their respective regional office.

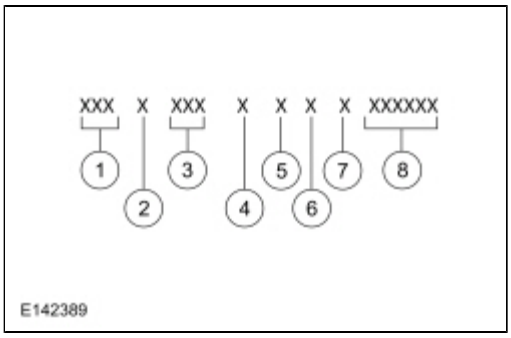

Item	Description
1	WMI (World Manufacturer Identifier)
2	Restraint-type code
3	Vehicle line, series, body-type code
4	Engine-type code

5	Computer-generated check digit
6	Model year code
7	Assembly plant code
8	Production sequence number

World Manufacturer Identifier

The first 3 VIN positions are the WMI (World Manufacturer Identifier).

- 1FA - Ford Motor Company, USA, passenger car

Restraint Type

The fourth VIN position is the vehicle restraint type code.

- D - Active safety belts (all positions), driver and front passenger air bags, driver and front passenger side impact air bags and driver knee air bag

Vehicle Line, Series and Body Type

Positions 5 through 7 indicate vehicle line, series and body type.

- P3E - 4-door sedan, S series
- P3F - 4-door sedan, SE series
- P3J - 4-door sedan, Titanium series
- P3K - 5-door hatchback, SE series
- P3L - 5-door hatchback, ST series
- P3N - 5-door hatchback, Titanium series

Engine Type

The eighth VIN position identifies the engine type, displacement and number of cylinders.

- 2 - 2.0L, in-line 4-cylinder, 16-valve
- 9 - 2.0L GTDI (gasoline turbo-charged direct injection)

Check Digit

The ninth VIN position is a government-assigned, computer-generated check digit.

- 0-9

Model Year

The tenth VIN position is the model year code.

- D - 2013

Assembly Plant

The eleventh VIN position is the assembly plant code.

- L - Michigan Assembly - Wayne, Michigan

Production Sequence Number

The last 6 VIN positions are a numeric code for the vehicle build sequence. This is also the vehicle serial and warranty number. The serial number can also be found on the engine block, transmission and frame.

- 100001-599999

Vehicle Certification (VC) Codes

VC Label Locator

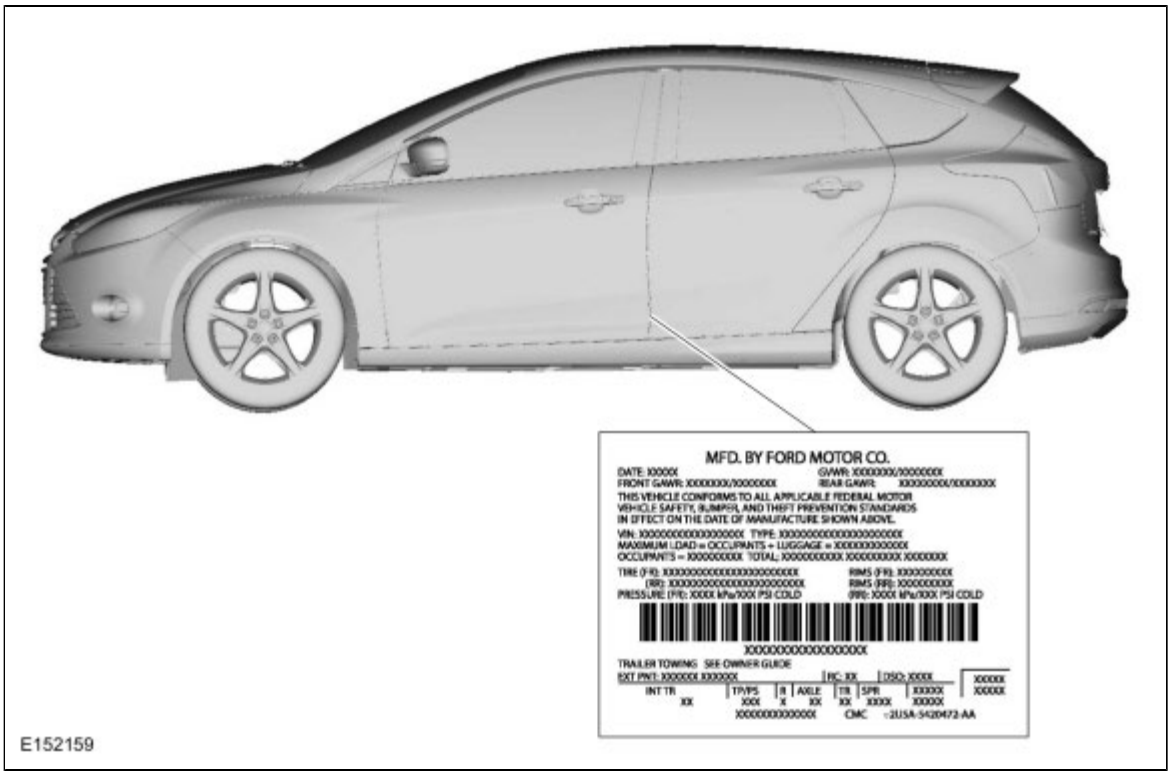

The VC label contains the manufacturer name, the month and year of manufacture, the certification statement and the VIN . It also includes GVW and tire information. If a vehicle requires replacement of the VC label and is 4 years old or less, an authorized dealer must submit the VIN to their respective regional office. The regional office will submit a web form to the assembly plant for the replacement label. Once the label has been printed, a representative from the regional office will deliver the label to the dealer and witness installation on the vehicle. If a vehicle is more than 4 years old and requires a replacement label, the dealer must submit a request to the Department of Motor Vehicles.

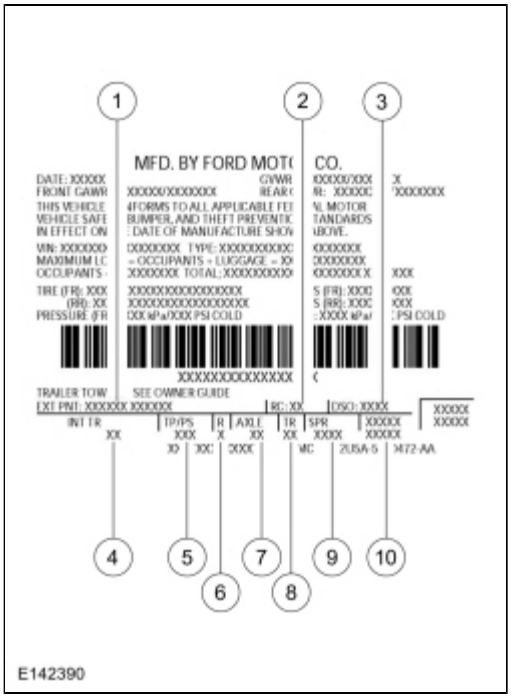

Item	Description

1	Exterior paint code
2	Region code
3	Domestic special order code
4	Interior trim code
5	Tape/paint stripe code
6	Radio code
7	Axle code
8	Transmission code
9	Spring code
10	Powertrain calibration information

Paint Code

Paint codes are listed as a 2-part code. The first set of paint code numbers/letters indicate the vehicle primary body color. The second set of letters/numbers (if applicable) indicate a 2-tone or accent body color. All paint codes are a base coat/clear coat finish.

- L1 - Performance Blue
- LP - Electric Gold 2
- PQ - Race Red
- RR - Ruby Red
- UG - White Platinum (tri-coat)
- UH - Tuxedo Black Metallic
- UJ - Sterling Gray Metallic
- UX - Ingot Silver Metallic
- YQ - Ice Storm
- YZ - Oxford White
- Z9 - Blue Candy Tint

Interior Trim Codes

Interior trim codes are listed as a 2-part code. The first digit listed indicates the seat and fabric style. The second digit listed indicates the interior trim color.

Trim Codes

- 2 - Torino leather
- 8 - Protection cloth/Torino leather
- 9 - Windsor leather
- E - Rack/Ghecko cloth (88E)
- F - Otis/Lux cloth
- G - Pur/Lux cloth
- K - Black/White leather
- L - Red/Black leather
- M - Lux cloth
- N - Rack/Ghecko cloth (88N)

Interior Trim Color Codes

- G - Charcoal Black/Tangerine Scream
- K - Gold
- L - Medium Light Stone
- R - Blue
- U - Light Stone
- W - Charcoal Black
- Z - Oxford White

- 4 - Soft Charcoal
- 5 - Smoke Storm

Tape/Paint Stripe Codes

Tape and paint stripe codes do not apply.

Radio Codes

The following lists available radio codes:

- 1 - AM / FM stereo, CD player
- 3 - AM / FM stereo, CD player, SYNC®
- 4 - AM / FM stereo, CD player, SDARS (Satellite Digital Audio Receiver System), SYNC®
- 5 - AM / FM stereo, CD player, SDARS (Satellite Digital Audio Receiver System), HD (high-definition), SYNC®
- 6 - AM / FM stereo, CD player, SDARS (Satellite Digital Audio Receiver System), HD (high-definition), SYNC® and navigation

Axle Codes

The following lists available axle ratios:

- AB - 3.81/2.77 ratio
- AU - 3.850/4.278 ratio
- KB - 3.82 ratio

Transmission Codes

Available transmissions are as follows:

- V - 6-speed manual (MMT6)
- W - 6-speed automatic (DCPS)
- Z - 6-speed manual (MTX75)

Spring Codes

Spring codes are listed as a 2-part code. The first set of characters identify the front springs. The second set of characters identify the rear springs.

Front Springs

- DD - BV61-5310-MD
- FF - BV61-5310-NF
- GG - BV61-5310-NG
- SS - BV61-5310-SG

Rear Springs

- DD - CV61-5560-MD
- FF - BV61-5560-NF
- GG - BV61-5560-NG
- SS - CV61-5B669-SG

Powertrain Calibration Information

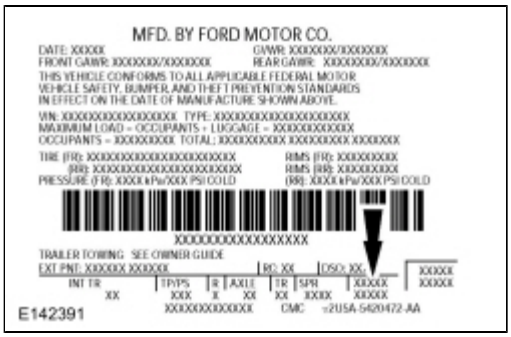

NOTE: *Powertrain calibration information is limited to a maximum of 5 characters per line on the VC label. Because of this, calibration identification consisting of more than 5 characters will wrap to the second line on the VC label.*

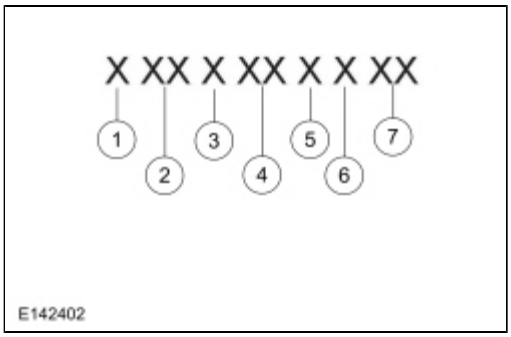

Powertrain calibration information is printed in the lower right corner of the VC label. Only the base calibration information is printed. Revision levels will not appear, however, they can be obtained through a scan tool using the most current software revision.

Item	Description
1	Model year (year in which the calibration strategy was first introduced).
2	Vehicle code
3	Transmission code
4	Unique calibrations (designates different hardware to similar vehicles), example: tires or drive ratios
5	Fleet code (describes fleet to which the vehicle belongs), example: 6 - EVAP
6	Certification region (lead region where multiple regions are included in one calibration), example: A - U.S. federal
7	Revision level (will advance as revisions occur), obtained through scan tool

Model Year

- C - 2012
- D - 2013

Vehicle Code

- DH - Focus

Transmission Code

- 2 - Automatic transmission
- Z - Manual transmission

Unique Calibration

The Emission/Corporate Average Fuel Economy/CO2 Compliance Department is responsible for assigning these calibration numbers. Unique identifications are assigned to cover similar vehicles to differentiate between tires, drive configurations, final drive ratios and other calibration-significant factors. These 2 characters are chosen by the analyst to provide identifiable information unique to each calibration. For example, using the number 2 to denote a 2- valve engine versus using the number 4 to denote a 4-valve engine provides an easily identifiable difference.

Fleet Coding

- 0 - Certification (U.S. 4K, final sale in export markets)
- 1 - Heavy duty gas engine/Dyno
- 2 - Fast Automobile Manufacturers' Association, U.S.
- 3 - Alternative durability protocol, U.S.
- 4 - Not assigned
- 5 - Not assigned
- 6 - EVAP
- 7 - Mileage accumulation aging endurance durability
- 8 - OBD
- 9 - Not assigned

Certification Region

- 5 - U.S. 50 states
- A - U.S. federal, including altitude, may include Canada and/or Mexico
- B - U.S. California standard, includes U.S. green states
- C - Canada
- D - China
- E - European Community (Austria, Belgium, Denmark, Finland, France, Germany, Greece, Ireland, Italy, Luxembourg, Netherlands, Portugal, Spain, Sweden and United Kingdom)
- F - European Extended Community (E-plus Croatia, Czech Republic, Estonia, Hungary, Norway, Poland, Romania, Russian Federation, Slovakia, Slovenia, Switzerland and Yugoslavia)
- G - Gulf Cooperative Council (Bahrain, Kuwait, Oman, Qatar, Saudi Arabia and United Arab Emirates)
- H - Hong Kong
- J - Japan
- K - Korea
- L - Malaysia
- M - Mexico
- N - New Zealand
- P - Australia
- Q - South America (Brazil)
- S - Singapore
- T - Taiwan
- U - South America (unleaded fuel regions)
- V - Vietnam
- X - Rest Of World
- Y - Military
- Z - Israel

Revision Level (not printed on label)

- 91-99 - Hardware and certification levels
- 01-04 - Preliminary levels
- 00 - Job 1 production (initial certification)
- 05-09 - Pre-job 1 revisions to calibrations
- 10-89 - Post-job 1 revisions to calibrations
- 0B - Durability test level
- BD - OBD intermediate level (pre-05)

Copyright © Ford Motor Company

Specifications

General Specifications

Item	Specification
Plug Weld hole	8 mm (0.315 in)
Weld Wire ER70S-3	0.9 mm (0.0354 in) - 1.1 mm (0.0433 in)
Weld Wire ER70S-6	0.9 mm (0.0354 in) - 1.1 mm (0.0433 in)

Weld Nugget Chart

Test Thickness of Metal	Nugget Size
0.7 mm (0.0276 in) + 0.7 mm (0.0276 in)	4.3 mm (0.1693 in)
0.7 mm (0.0276 in) + 0.7 mm (0.0276 in) + 0.7 mm (0.0276 in)	4.3 mm (0.1693 in)
0.9 mm (0.0354 in) + 0.9 mm (0.0354 in)	4.7 mm (0.185 in)
0.9 mm (0.0354 in) + 0.9 mm (0.0354 in) + 0.9 mm (0.0354 in)	4.7 mm (0.185 in)
1 mm (0.0394 in) + 1 mm (0.0394 in)	5.2 mm (0.2047 in)
1 mm (0.0394 in) + 1 mm (0.0394 in) + 1 mm (0.0394 in)	5.2 mm (0.2047 in)
2 mm (0.0787 in) + 2 mm (0.0787 in)	7.1 mm (0.2795 in)
2 mm (0.0787 in) + 2 mm (0.0787 in) + 2 mm (0.0787 in)	7.1 mm (0.2795 in)
3 mm (0.1181 in) + 3 mm (0.1181 in)	8.7 mm (0.3425 in)
3 mm (0.1181 in) + 3 mm (0.1181 in) + 3 mm (0.1181 in)	8.7 mm (0.3425 in)
3 mm (0.1181 in) + 0.7 mm (0.0276 in)	4.3 mm (0.1693 in)
0.7 mm (0.0276 in) + 3 mm (0.1181 in) + 1 mm (0.0394 in)	5.2 mm (0.2047 in)
2 mm (0.0787 in) + 2 mm (0.0787 in) + 0.7 mm (0.0276 in)	4.3 mm (0.1693 in)
0.9 mm (0.0354 in) + 0.9 mm (0.0354 in) + 2 mm (0.0787 in)	4.7 mm (0.185 in)
2 mm (0.0787 in) + 0.9 mm (0.0354 in) + 1 mm (0.0394 in)	5.2 mm (0.2047 in)
1 mm (0.0394 in) + 3 mm (0.1181 in) + 1 mm (0.0394 in)	5.2 mm (0.2047 in)
3 mm (0.1181 in) + 1 mm (0.0394 in) + 2 mm (0.0787 in)	7.1 mm (0.2795 in)
0.9 mm (0.0354 in) + 0.7 mm (0.0276 in) + 0.9 mm (0.0354 in)	4.3 mm (0.1693 in)

Ford Recommended Steel Repairability Matrix

Grade	Trade Descriptions	Welding Method			Cold Repairs	Use of Heat for Repair	Temperature Range	Maximum Heat
		MIG	Squeeze-Type Resistance Spot Welding (STRW)	MIG Braze				
Mild Steel	Mild	Yes	Yes	N/A	Yes a	Yes	Up to 650° C (1,200° F)	90 seconds x 2
Laminate Steel	Quiet Steel	No	Yes	No	Yes a	NA	NA	NA
Bake Hardened Steel (BH)	Bake Hardened Steel (BH) 180, 200, 210, 220, 250, 280	Yes	Yes	Yes b	Yes a	Yes	Up to 650° C (1,200° F)	90 seconds x 2
Solid Solution Strengthened	-	Yes	Yes	Yes b	Yes a	Yes	Up to 650° C (1,200° F)	90 seconds x 2
High-Strength Low Alloy (HSLA)	High-Strength Low Alloy (HSLA) 200, High-Strength Low Alloy (HSLA 250, High-Strength Low Alloy (HSLA 260, High-Strength Low Alloy (HSLA 300, High-Strength Low Alloy (HSLA 340, High-Strength Low Alloy (HSLA 350, High-Strength Low Alloy (HSLA 500, High-Strength Low Alloy (HSLA) 550	Yes	Yes	Yes b	Yes a	Yes	Up to 650° C (1,200° F)	90 seconds x 2
Dual Phase Steel (DP) 600 MPa Ultimate Tensile Strength	Dual Phase Steel (DP) 500, Dual Phase Steel (DP) 600	Yes	Yes	Yes b	Yes a	No	NA	NA
Dual Phase Steel (DP) 600 MPa Ultimate Tensile Strength (particular to 780 and 980 grades) c	Dual Phase Steel (DP) 700, Dual Phase Steel (DP) 780, Dual Phase Steel (DP) 900	Yes d	Yes	Yes b	No	No	NA	NA
Ultra High Strength Steel (UHSS) (Martensitic, Boron) e	Boron, Martensitic	Yes a	Yes	Yes b	No	No	NA	NA
Transformation Induced Plasticity Steel (TRIP)	Transformation Induced Plasticity Steel (TRIP) 590, Transformation Induced Plasticity Steel (TRIP) 780, Transformation Induced Plasticity Steel (TRIP) 980	NA	NA	NA	NA	NA	NA	NA

[a] Cold repairs can be performed if damage excludes kinks. May section only if approved procedure in workshop manual.

[b] Metal Inert Gas (MIG) braze allowed for non-structural applications only.

[c] Dual phase steels DP 700, DP 780 and DP 980 must be replaced at factory joints, no sectioning unless approved procedure in

workshop manual.

[d] For DP 980 and Boron use Metal Inert Gas (MIG) plug welding only, no stitch welding.

[e] Boron and Ultra High Strength Steel (UHSS)-Mortensite components must be replaced at factory joints, no sectioning allowed.

Copyright © Ford Motor Company

Body Construction - Component Location

Steel Type Legend

	Mild Steel	Green/yellow
	Bake Hardened - (BH 180, BH210, BH 250, BH 280)	Blue/red
	Solid Solution Strengthened	Yellow/orange
	High- Strength Low Alloy (HSLA)	Red/green
	Dual Phase (DP 500, DP 600)	Blue/green
	Dual Phase (DP 700, DP 780, DP 900)	Pink/orange
	Laminate Steel	Yellow/green
	Ultra High Strength Steel (UHSS) (Martensitic, Boron)	Orange/green
	Transformation Induced Plasticity (TRIP 590, TRIP 780, TRIP 980)	Blue/orange

E144669

Front Frame Rail/Apron Assembly

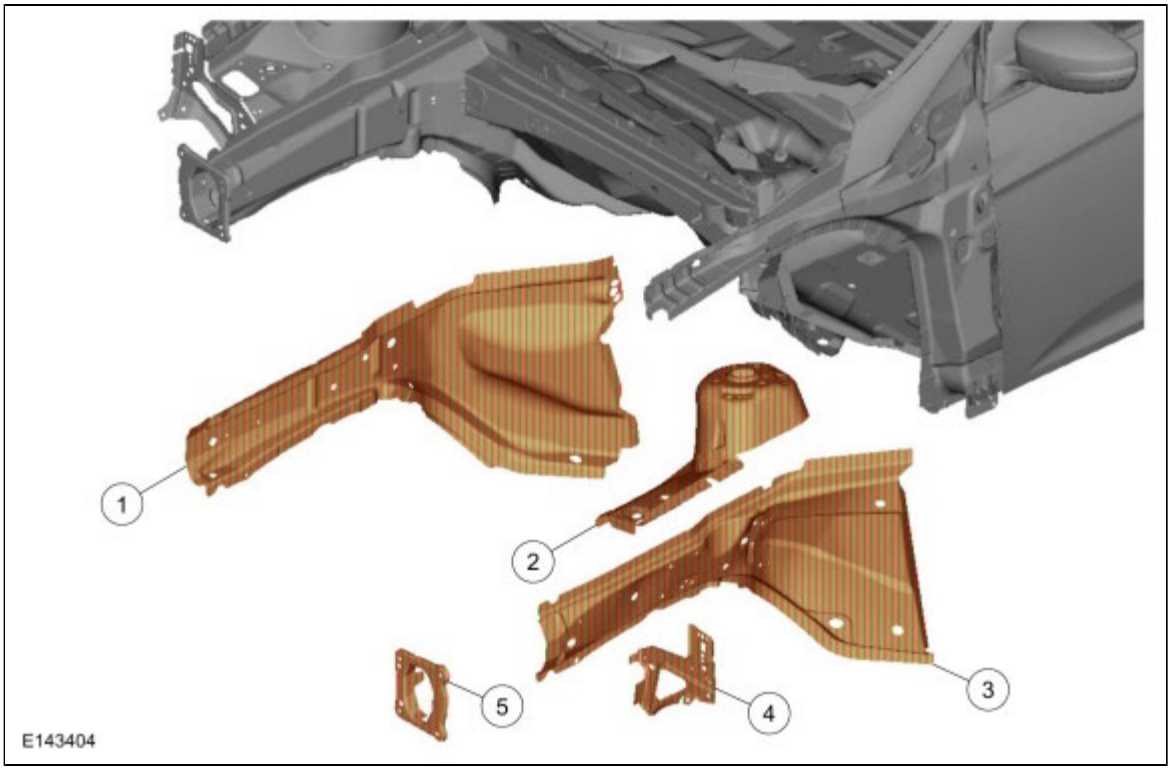

Item	Description
1	Frame rail inner (part of frame rail assembly) - High-Strength Low Alloy (HSLA) 350
2	Strut tower (part of frame rail assembly) - High-Strength Low Alloy (HSLA) 350
3	Frame rail outer (part of frame rail assembly) - High-Strength Low Alloy (HSLA) 350

4	Front fender mounting bracket - High-Strength Low Alloy (HSLA) 350
5	Bumper mounting bracket - High-Strength Low Alloy (HSLA) 350

Front Door

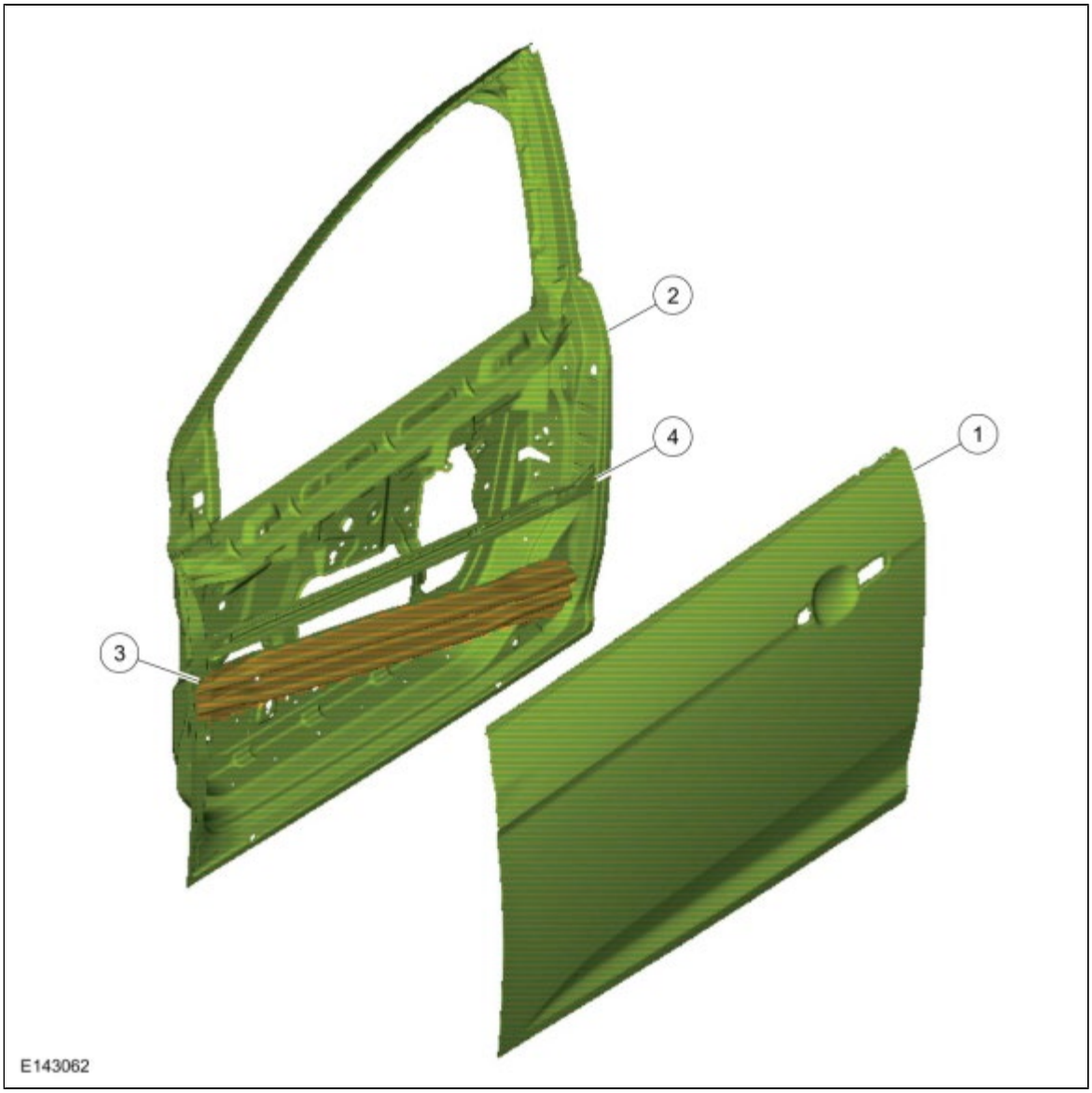

Item	Description
1	Front door outer panel - mild steel
2	Front door assembly - mild steel
3	Front door intrusion beam (part of door assembly) - boron steel
4	Front door anti-flutter beam (part of door assembly) - mild steel

Rear Door

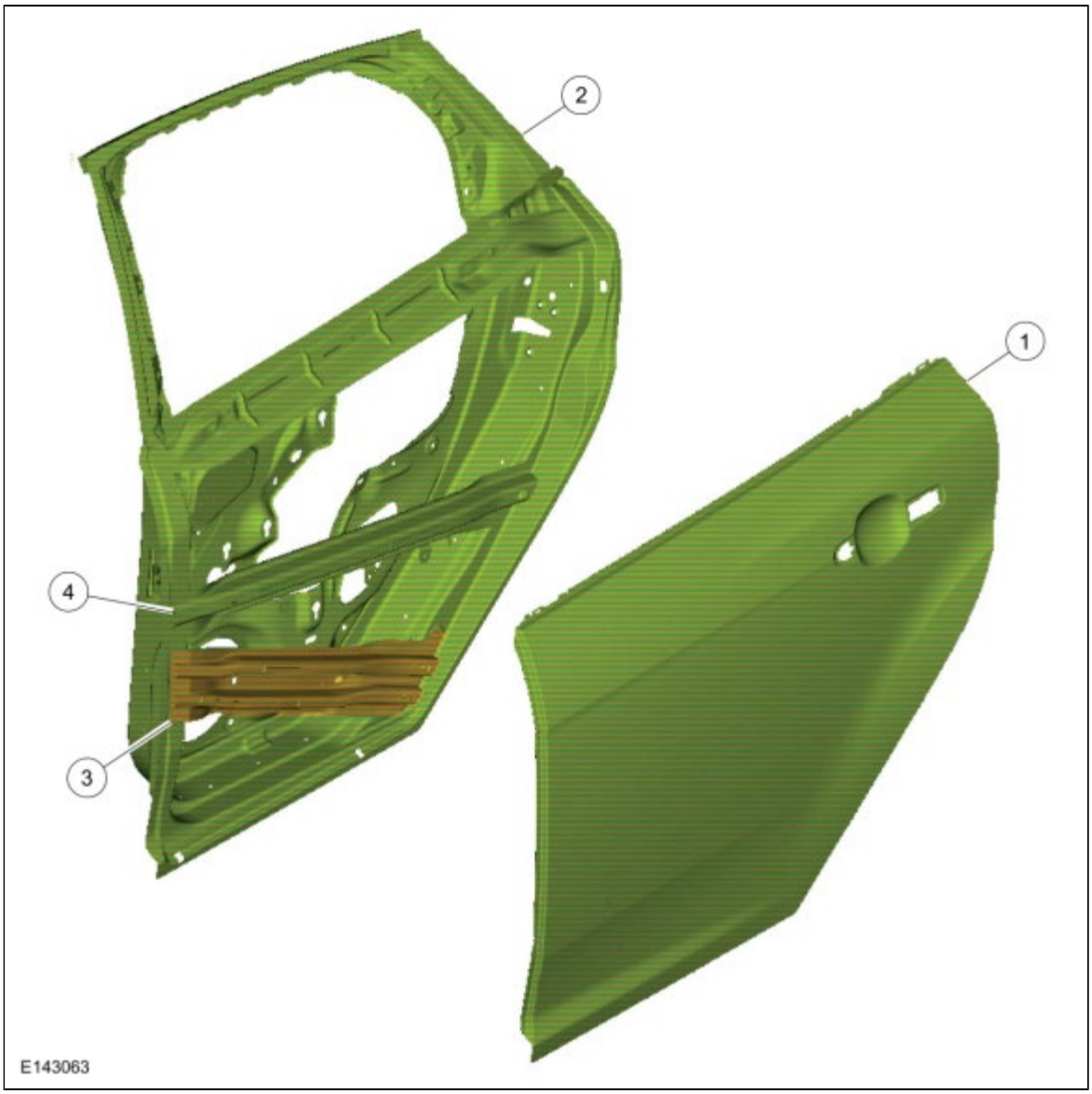

Item	Description
1	Rear door outer panel - mild steel
2	Rear door assembly - mild steel
3	Rear door intrusion beam (part of door assembly) - boron steel
4	Rear door anti-flutter beam (part of door assembly) - mild steel

5-Door Roof Panel

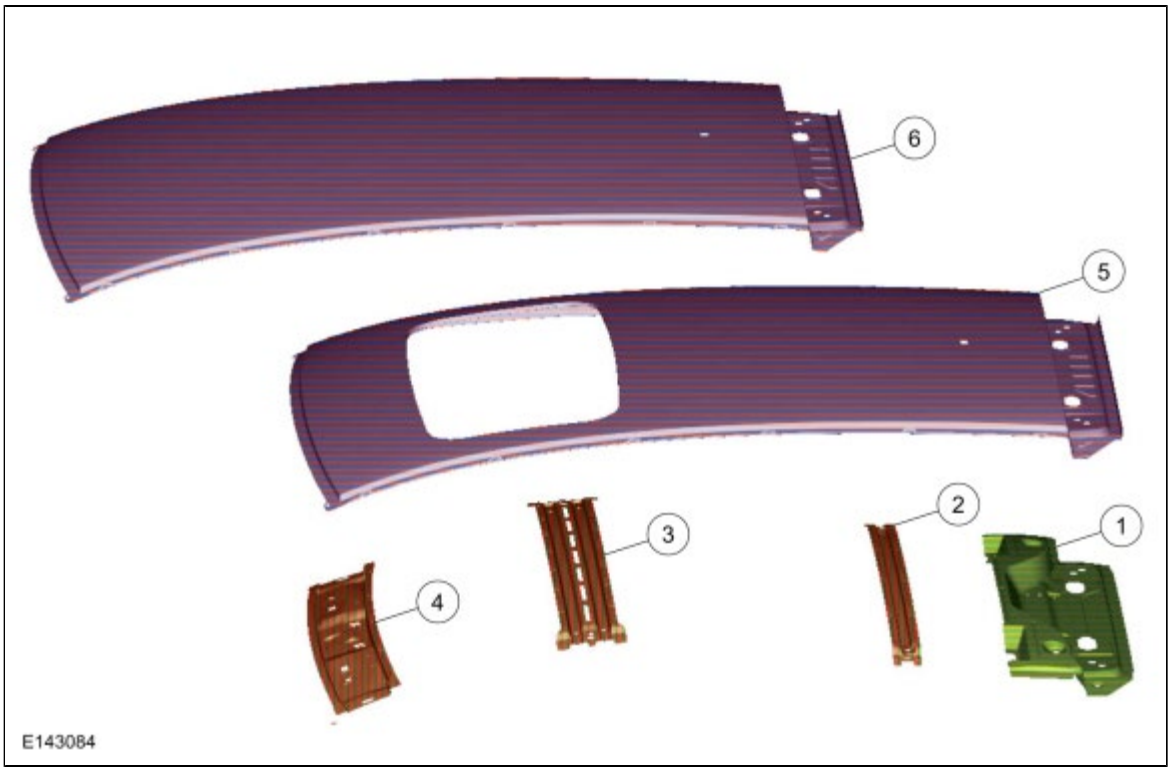

Item	Description
1	Rear roof header panel - mild steel
2	Roof bow - High-Strength Low Alloy (HSLA) 340
3	Roof bow (less sunroof) - High-Strength Low Alloy (HSLA) 340
4	Windshield header panel - High-Strength Low Alloy (HSLA) 340
5	Roof panel (with sunroof) - Bake Hardened Steel (BH) 220
6	Roof panel (less sunroof) - Bake Hardened Steel (BH) 220

4-Door Roof Panel

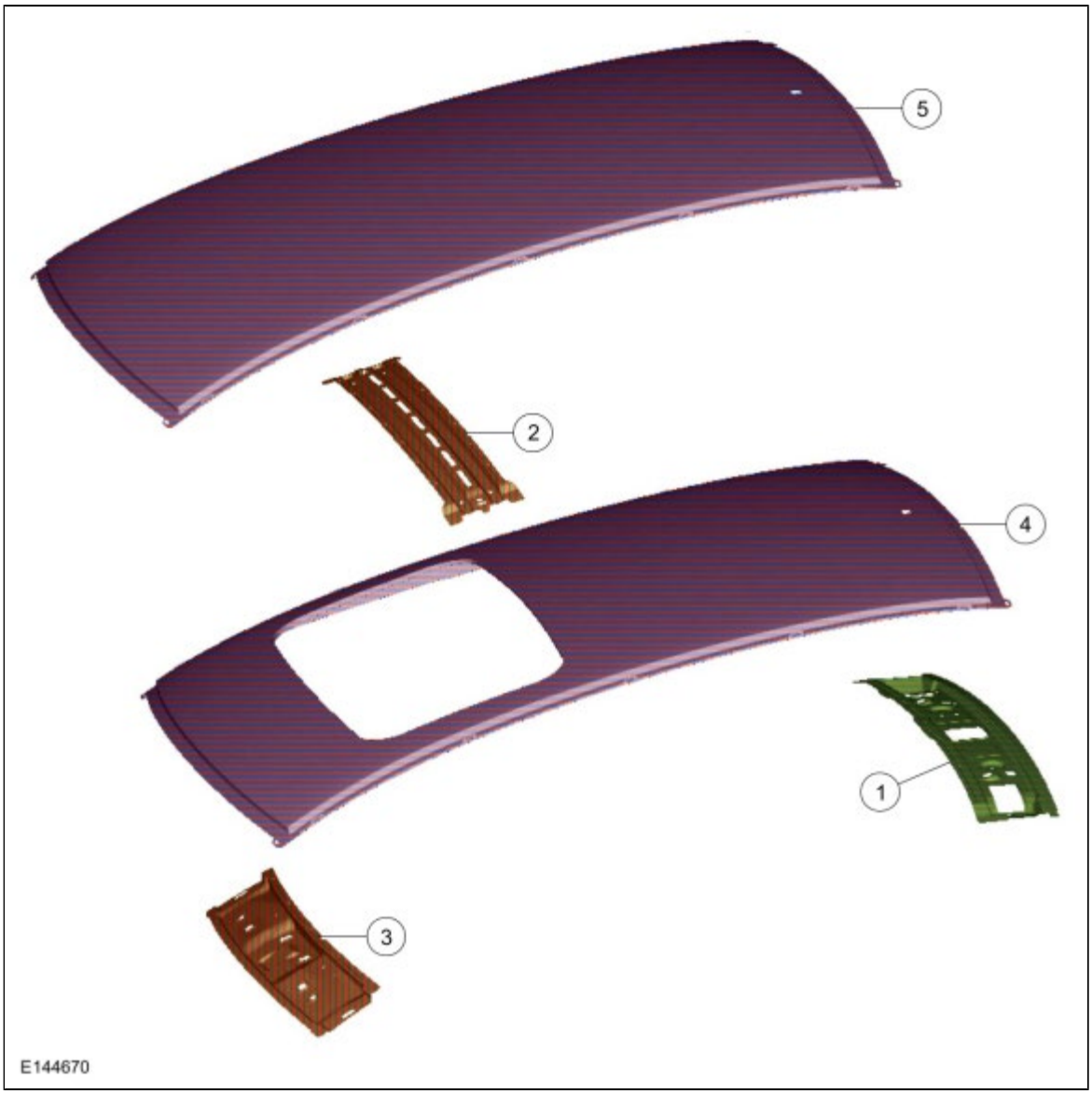

Item	Description
1	Rear roof header panel - mild steel
2	Roof bow (less sunroof) - High-Strength Low Alloy (HSLA) 340
3	Windshield header panel - High-Strength Low Alloy (HSLA) 250
4	Roof panel (with sunroof) - Bake Hardened Steel (BH) 210
5	Roof panel (less sunroof) - Bake Hardened Steel (BH) 210

Side Panel Inner Reinforcements - 4-Door Sedan

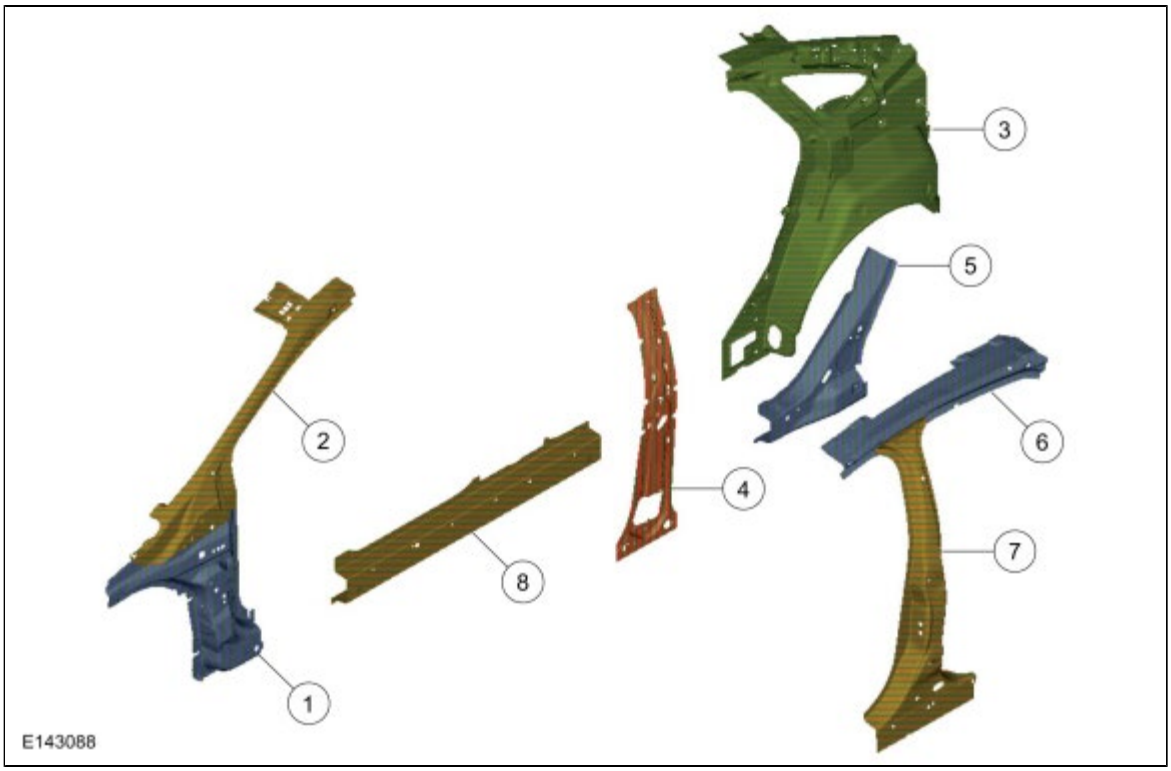

Item	Description
1	A-pillar reinforcement - Dual Phase Steel (DP) 600
2	A-pillar - boron steel
3	Quarter panel reinforcement - mild steel
4	B-pillar - High-Strength Low Alloy (HSLA) 250
5	C-pillar reinforcement - Dual Phase Steel (DP) 600
6	Roof reinforcement (part of B-pillar outer assembly) - Dual Phase Steel (DP) 600
7	B-pillar outer assembly - boron steel
8	Rocker panel - Ultra High Strength Steel (UHSS) Martensitic

Side Panel Inner Reinforcements - 5-Door Hatchback

Item	Description
1	A-pillar reinforcement - Dual Phase (DP) Steel 600
2	A-pillar - boron steel
3	Quarter panel reinforcement - mild steel
4	Luggage compartment drain trough - mild steel
5	Luggage compartment drain trough reinforcement (part of quarter panel reinforcement - mild steel
6	B-pillar inner - High-Strength Low Alloy (HSLA) 300
7	C-pillar reinforcement - Dual Phase Steel (DP) 600
8	Roof reinforcement (part of B-pillar outer) - Dual Phase Steel (DP) 600
9	B-pillar outer assembly - boron steel
10	Rocker panel - Ultra High Strength Steel (UHSS) Martensitic

Front Floor Assembly

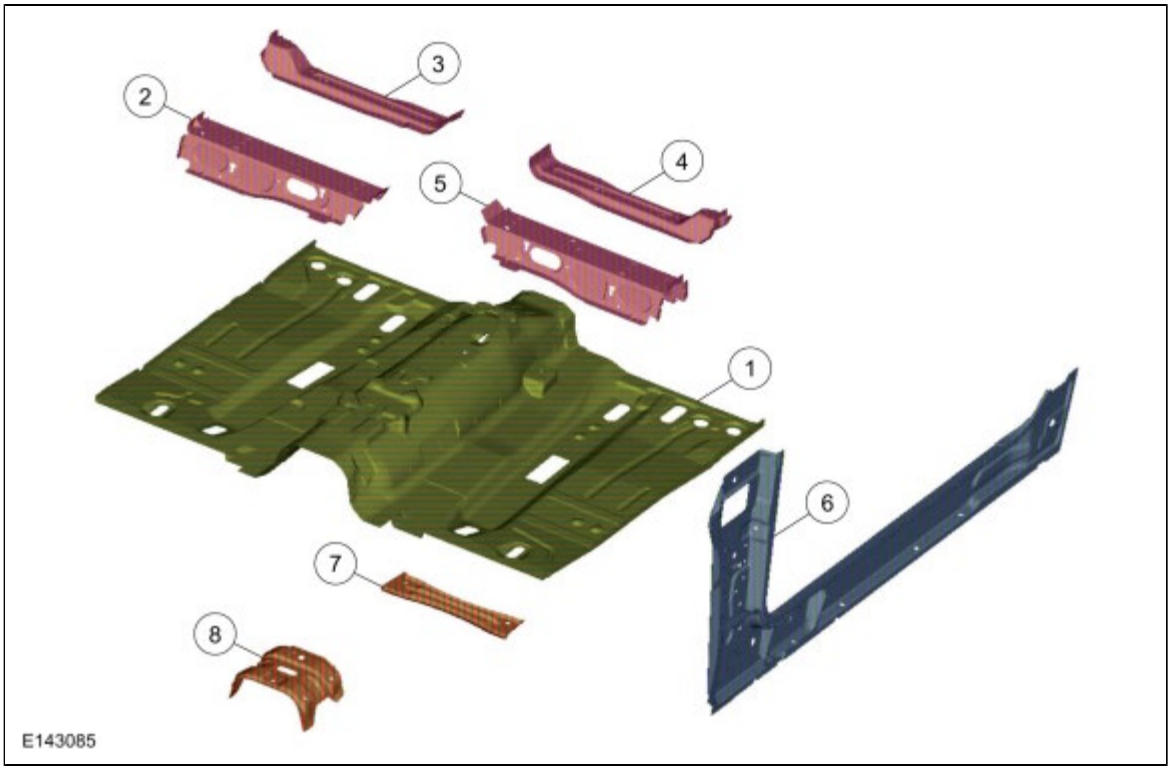

Item	Description
1	Floor pan - mild steel
2	Floor pan crossmember - Dual Phase (DP) Steel 700
3	Crossmember - Dual Phase (DP) Steel 700
4	Crossmember - Dual Phase (DP) Steel 700
5	Floor pan crossmember - Dual Phase (DP) Steel 700
6	Side member - Dual Phase (DP) Steel 600
7	Floor pan reinforcement - High-Strength Low Alloy (HSLA) 250
8	Reinforcement (part of floor pan) - High-Strength Low Alloy (HSLA) 250

Rear Floor - 4-Door Sedan

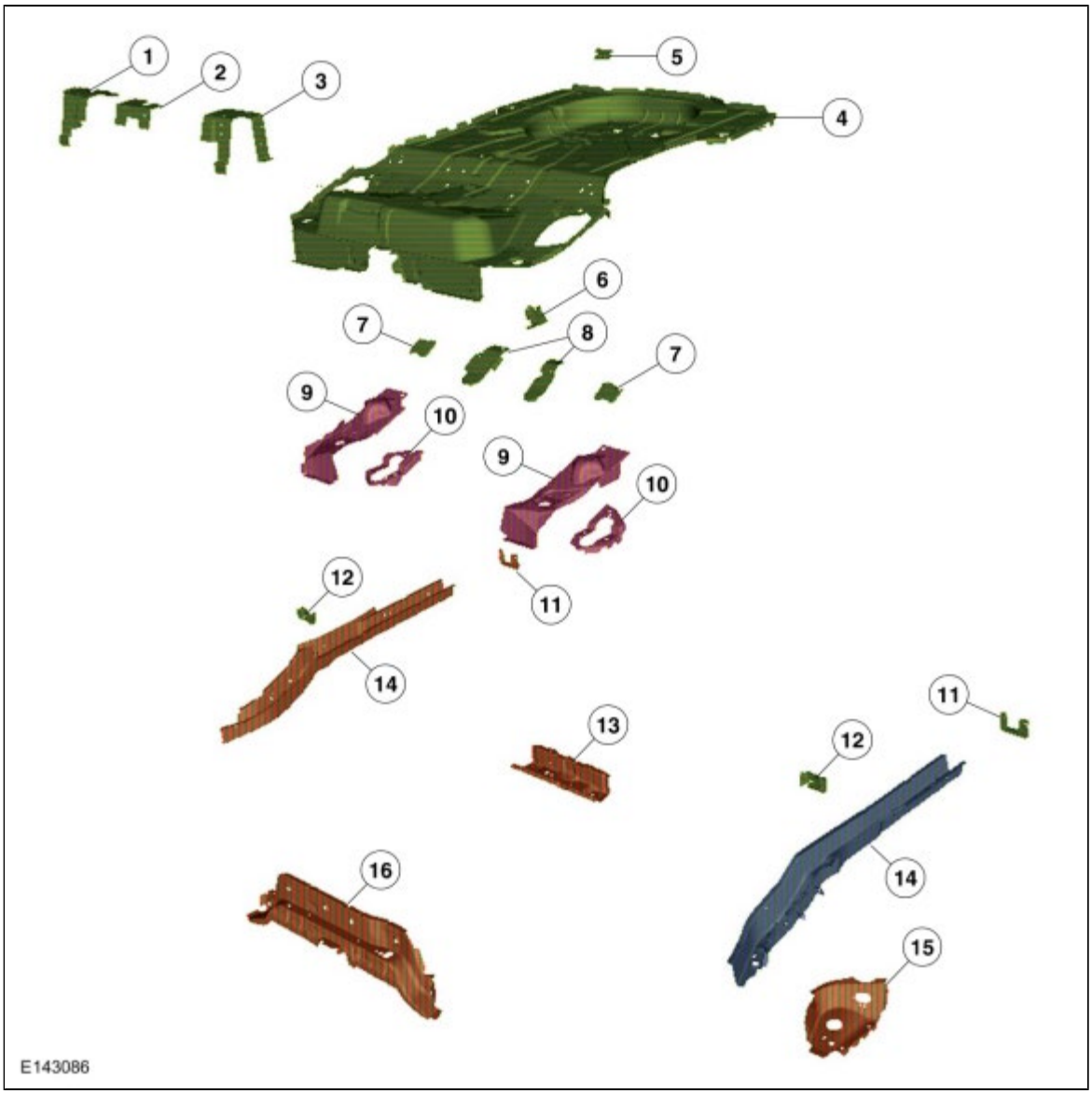

Item	Description
1	Floor pan bracket (part of floor pan assembly) - mild steel
2	Floor pan bracket reinforcement (part of floor pan assembly) - mild steel
3	Floor pan bracket (part of floor pan assembly) - mild steel
4	Floor pan assembly - mild steel
5	Spare tire bracket - mild steel
6	Reinforcement (part of floor pan assembly) - mild steel
7	Reinforcement (part of floor pan assembly) - mild steel
8	Reinforcement (part of floor pan assembly) - mild steel
9	Under floor brace (part of floor pan assembly) - Dual Phase Steel (DP) 600
10	Under floor reinforcement (part of floor pan assembly) - Dual Phase Steel (DP) 600
11	Floor side member brace - High-Strength Low Alloy (HSLA) 250
12	Floor side member bracket - mild steel
13	Floor center crossmember - High-Strength Low Alloy (HSLA) 350
14	Floor side member - High-Strength Low Alloy (HSLA) 250
15	Gussett (part of floor side member) - High-Strength Low Alloy (HSLA) 250

16	Front floor-to-rear floor crossmember - High-Strength Low Alloy (HSLA) 350

Rear Floor - 5-Door Hatchback

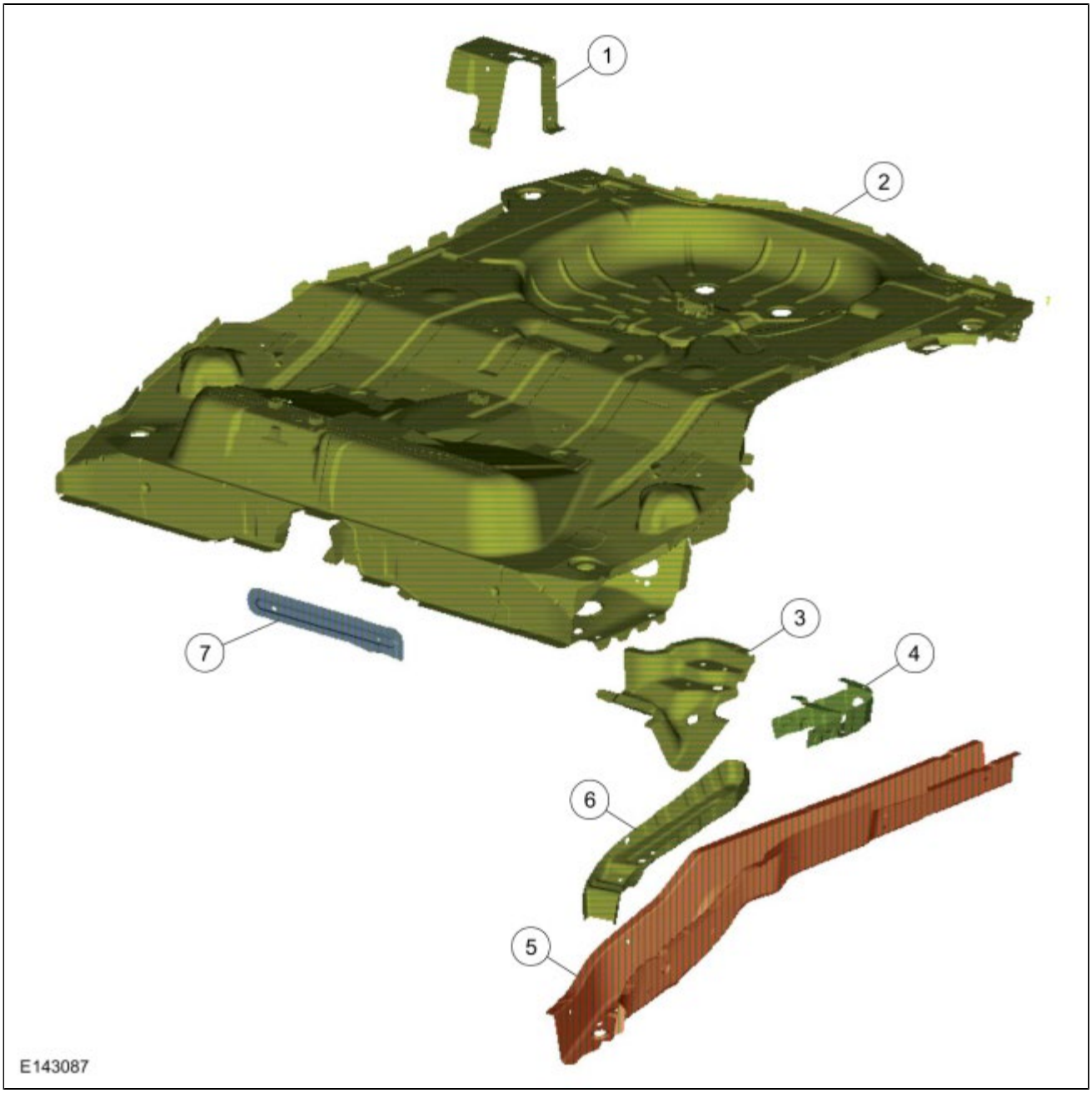

Item	Description
1	Bracket (part of floor pan assembly) - mild steel
2	Floor pan assembly - mild steel
3	Floor pan extension (part of floor pan assembly) - mild steel
4	Bracket (part of floor pan assembly) - mild steel
5	Floor side member - High-Strength Low Alloy (HSLA) 250
6	Reinforcement (part of floor side member) - mild steel
7	Reinforcement (part of floor pan assembly) - Dual Phase Steel (DP) 600

Rear End Panels - 4-Door Sedan

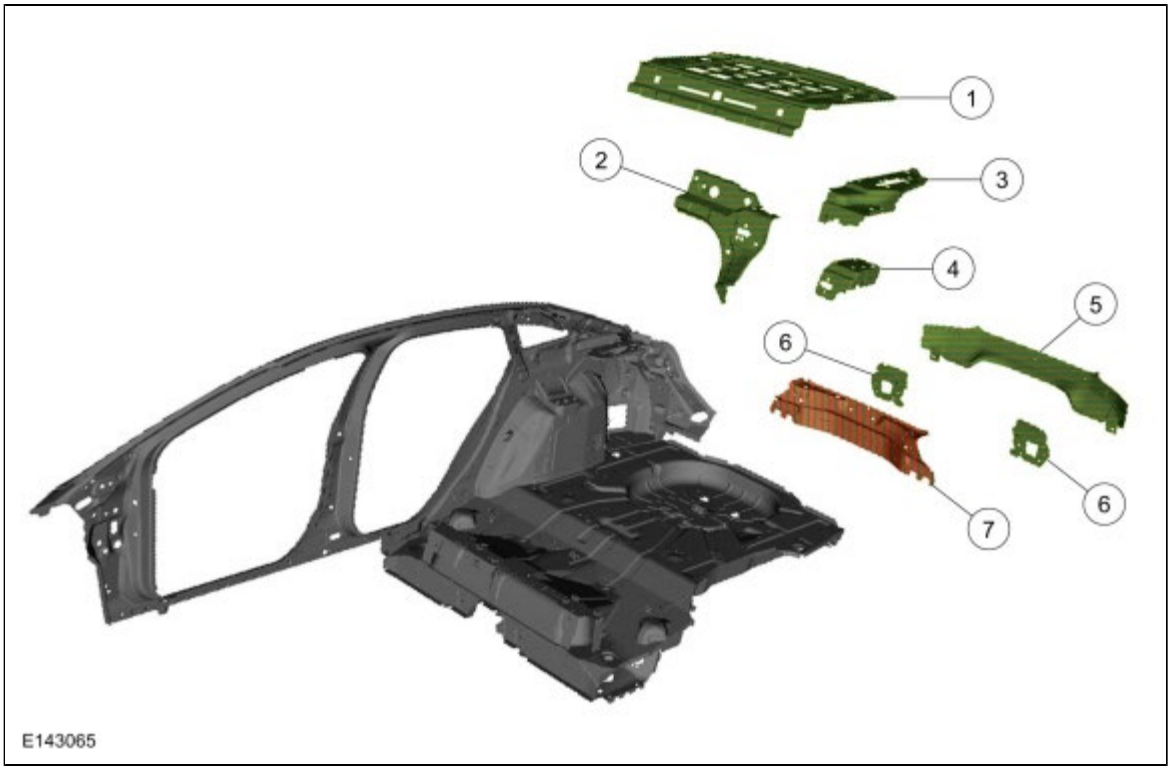

Item	Description
1	Package tray - mild steel
2	Package tray reinforcement - mild steel
3	Luggage compartment lid hinge reinforcement (part of package tray) - mild steel
4	Safety belt reinforcement (part of package tray) - mild steel
5	Back panel upper - mild steel
6	Bumper mount reinforcement - mild steel
7	Back panel lower - High-Strength Low Alloy (HSLA) 250

Rear End Panels - 5-Door Hatchback

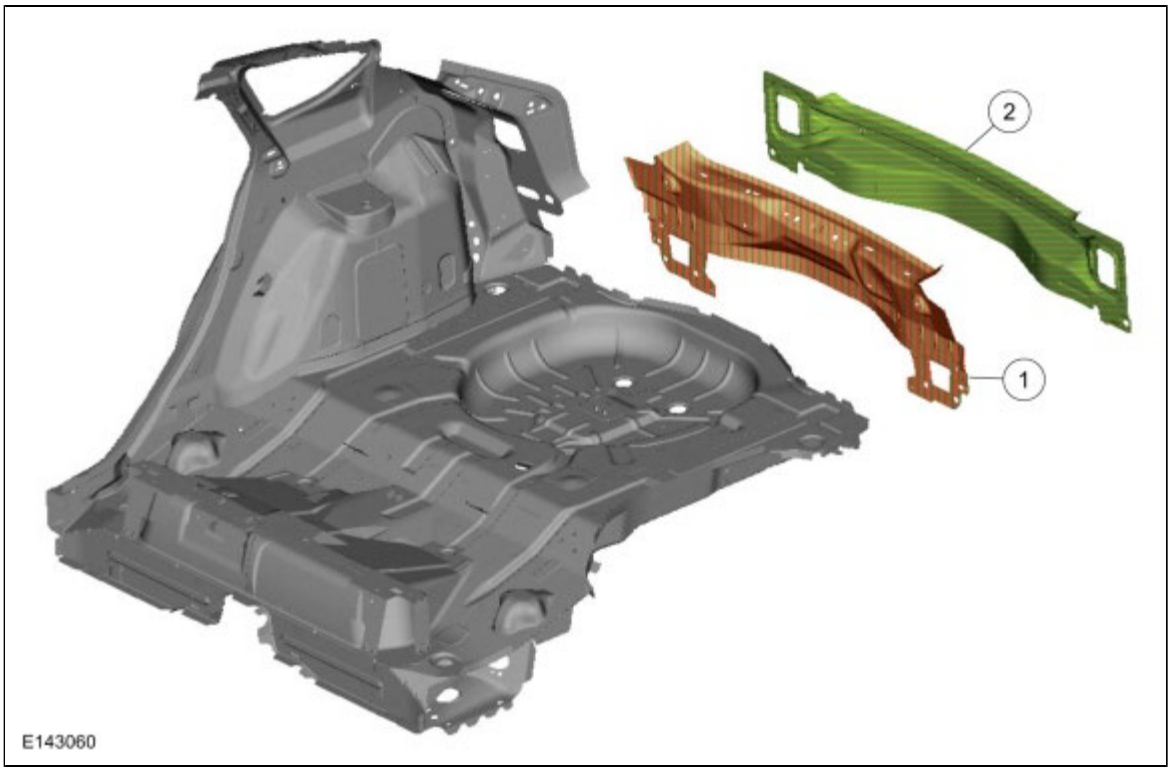

Item	Description
1	Back panel lower - High-Strength Low Alloy (HSLA) 250
2	Back panel upper - mild steel

Copyright © Ford Motor Company

Sealer, Underbody Protection Material and Adhesives

Adhesives

NOTE: *The following illustrations are examples of structural adhesive application and are not all inclusive.*

Upper Cowl Panel to Lower Cowl Panel

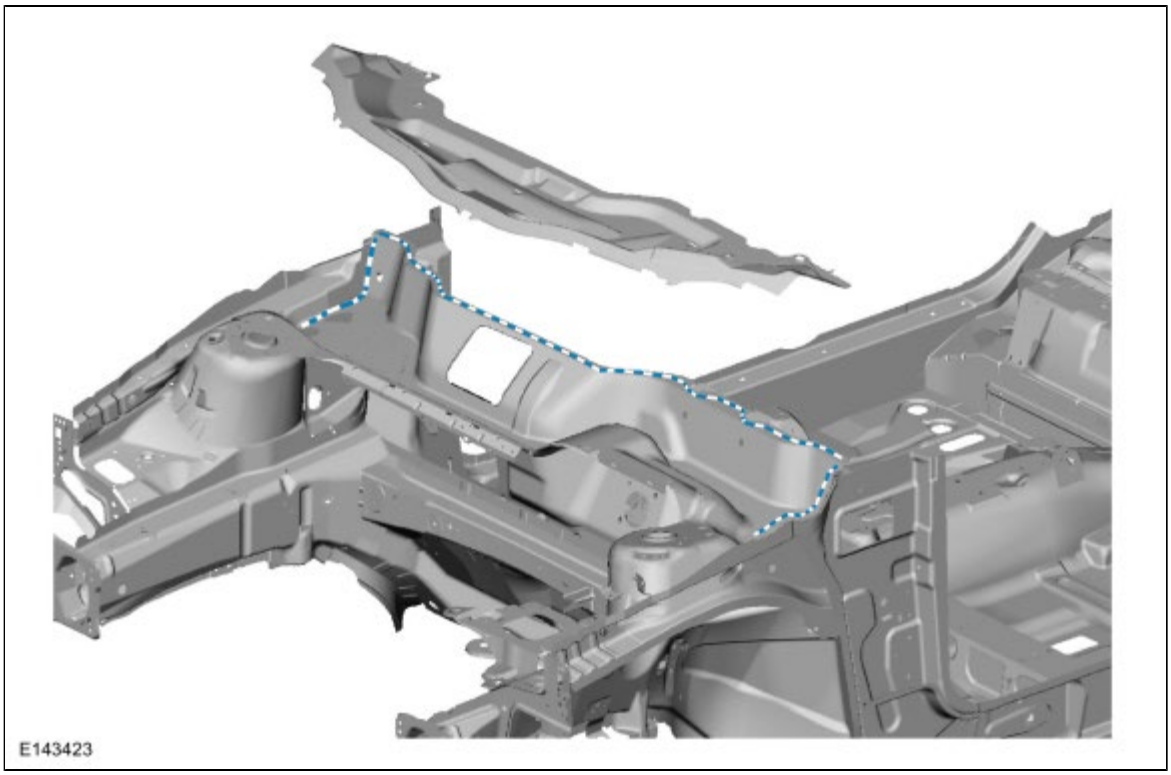

Front Structure to A-Pillar

NOTE: *Right Hand (RH) side shown, Left Hand (LH) side similar.*

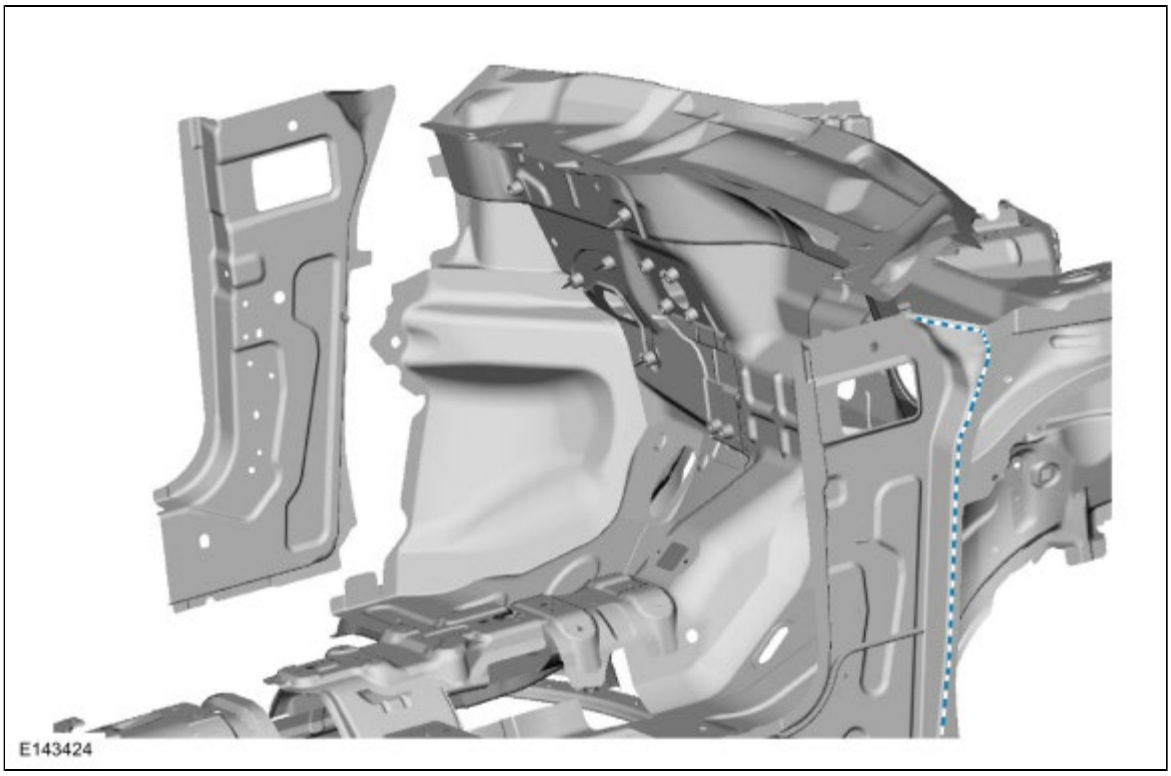

Body Side Outer to Body Side Inner

NOTE: *5-door hatchback shown, 4-door sedan similar.*

NOTE: *Right Hand (RH) side shown, Left Hand (LH) side similar.*

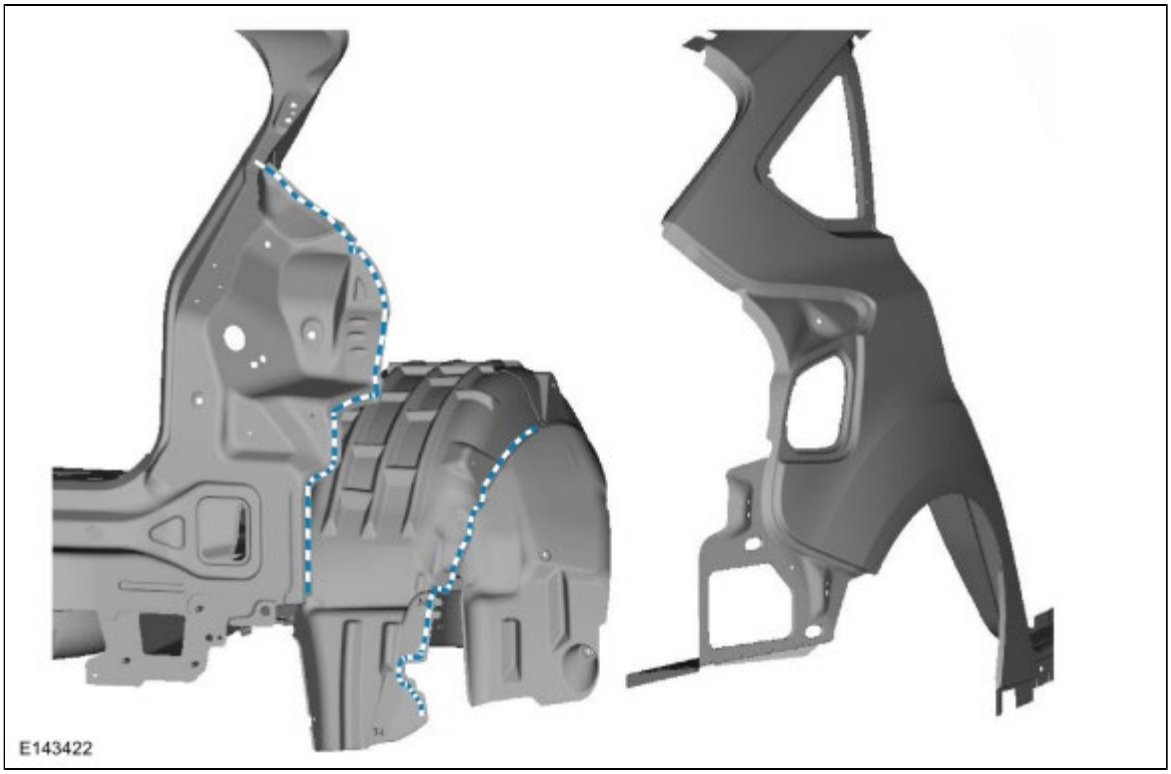

The correct adhesive bonding is essential to repairing the vehicle correctly. Adhesives are used in many areas of the body structure in place of welding. In addition to providing a structural bond between component, adhesives can also help prevent wind noise, water leaks, exhaust fumes and dust from entering the vehicle. They also provide anti-corrosion barriers.

Sealers

NOTE: *The following illustrations are examples of sealer application and are not all inclusive.*

Hood

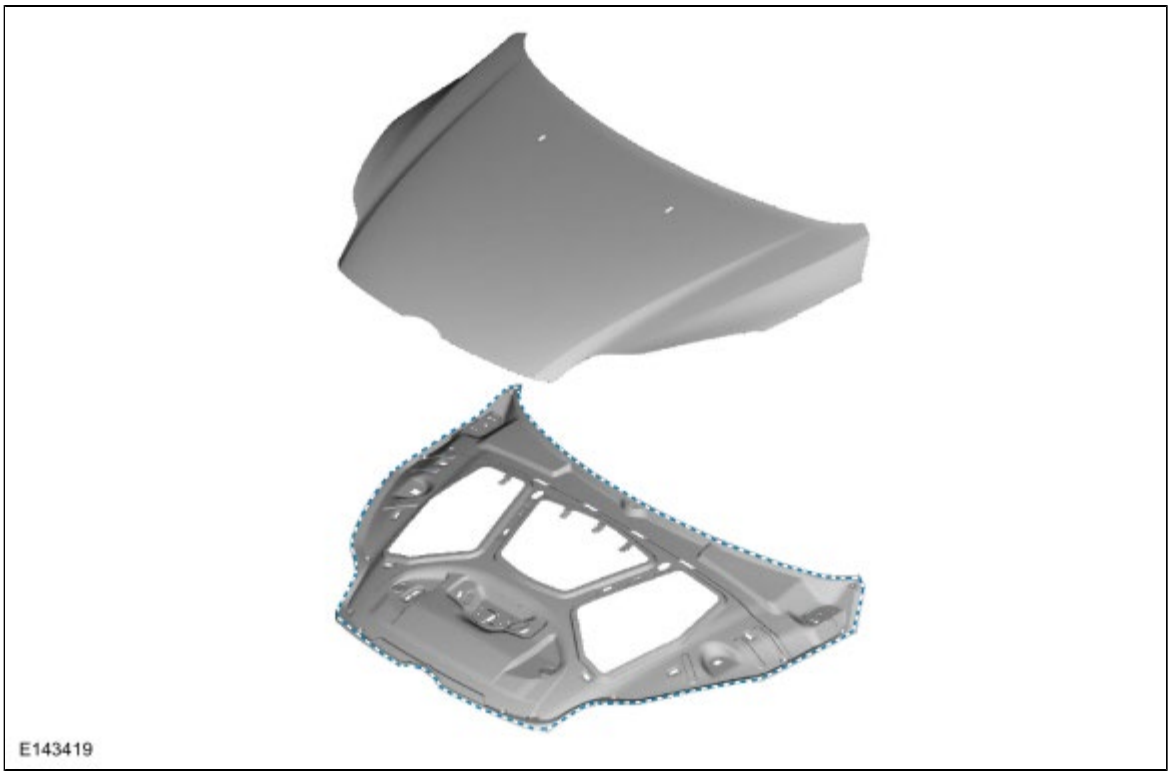

Roof

NOTE: *4-door sedan shown, 5-door hatchback similar.*

NOTE: *Roof ditch moulding removed.*

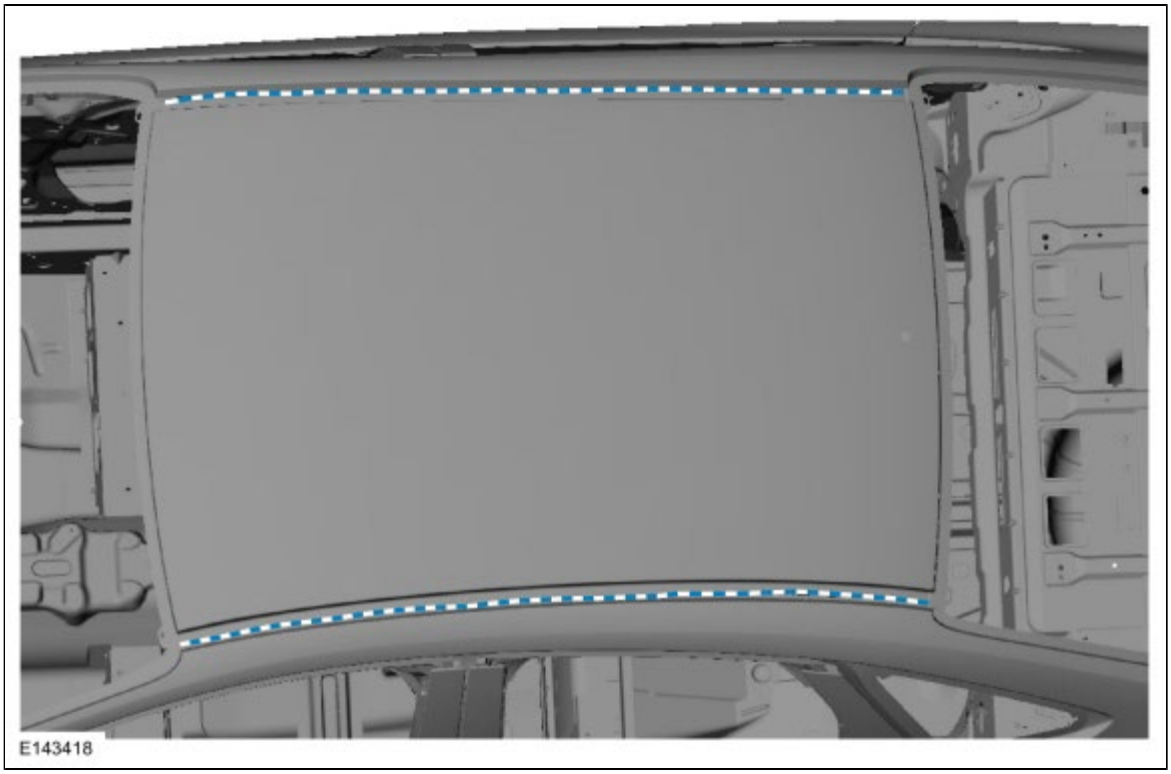

Front Door

E143416

Rear Door

E143417

Dash Panel

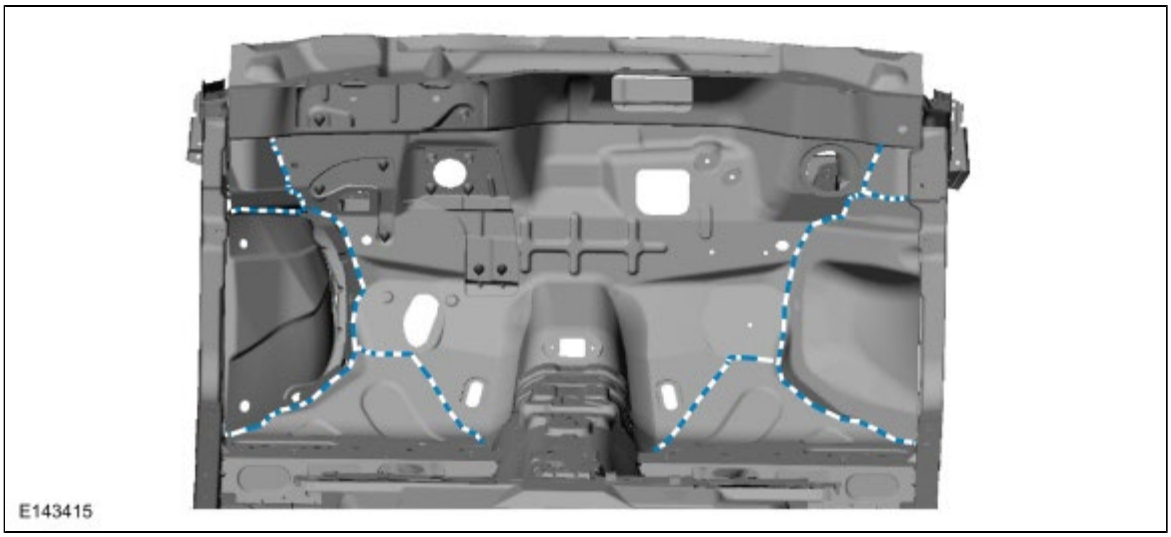

Floor Pan

NOTE: *4-door sedan shown, 5-door hatchback similar.*

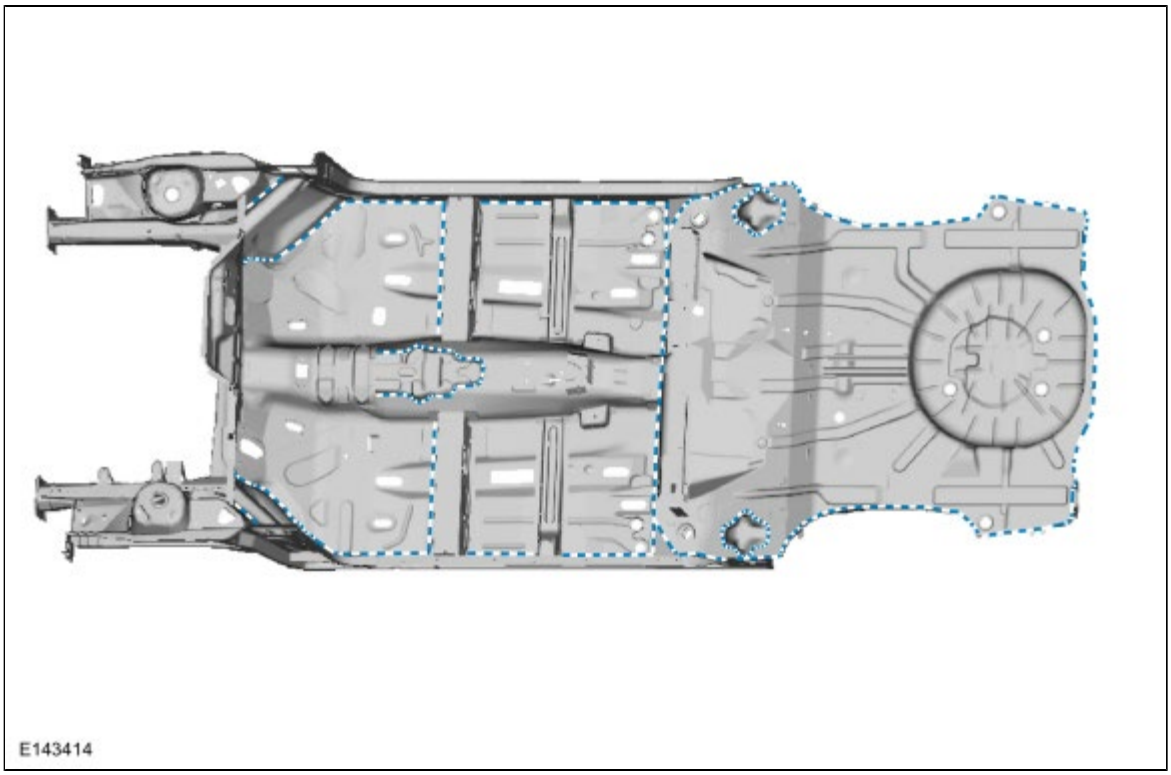

Luggage Compartment Lid - 4-Door Sedan

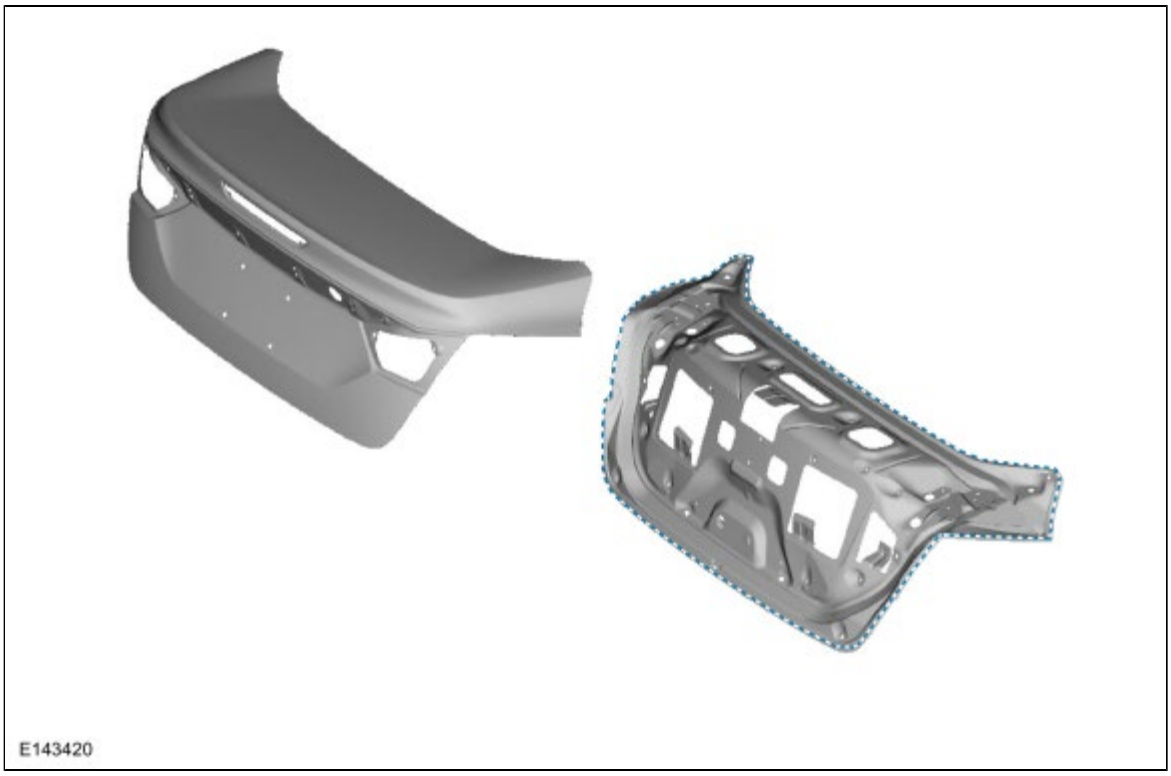

Liftgate - 5-Door Hatchback

The correct sealing of joints is essential to repairing the vehicle correctly. Sealers are used to prevent wind noise, water leaks, exhaust fumes and dust from entering the vehicle. They also provide anti-corrosion barriers. Sealers are applied to areas such as door and rear compartment hem flanges, wheelhouse, quarter outer, floor, cowl, roof and other panel-to-panel attaching points. The following joint sealers are recommended for use depending upon the application:

- Seam Sealer - Heavy-bodied, non-sag adhesive/sealer for use on standing cosmetic seams, truck bed seams, tooled door skin seams and floor pans.

Sealers should remain flexible after curing and must be paintable. Follow the manufacturer's directions for correct application of

these materials.

Any damage to originally sealed joints should be repaired by resealing. Along with attaching points of new panels, open joints that require bridging of sealer to close a gap should be sealed using a heavy-bodied sealer.

Copyright © Ford Motor Company

Plastic Repairs

Plastic Components

The following illustration(s) are not all-inclusive of trim levels available. The actual trim level of the vehicle will determine the viability of carrying out a plastics repair. Typically components with moulded-in color or a textured finish are not considered repairable components.

Exterior Plastic Components - Front

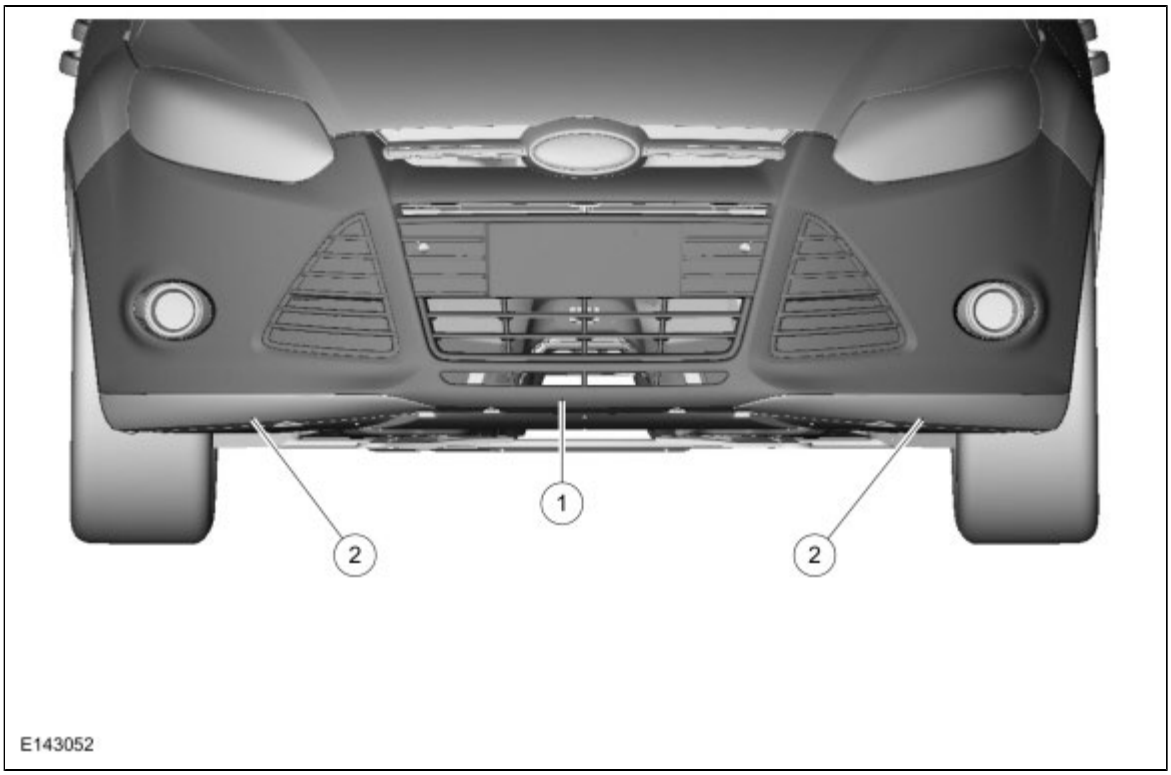

Item	Service Part Number	Description	Torque	Material Name	Notes
1	17D957	Front bumper cover	-	Thermoplastic Olefin (TPO)	-
2	17626-A Right Hand (RH) /17626-B Left Hand (LH)	Front bumper cover lower panel	-	Thermoplastic Olefin (TPO)	-

Exterior Plastic Components - Side, 4-Door Sedan

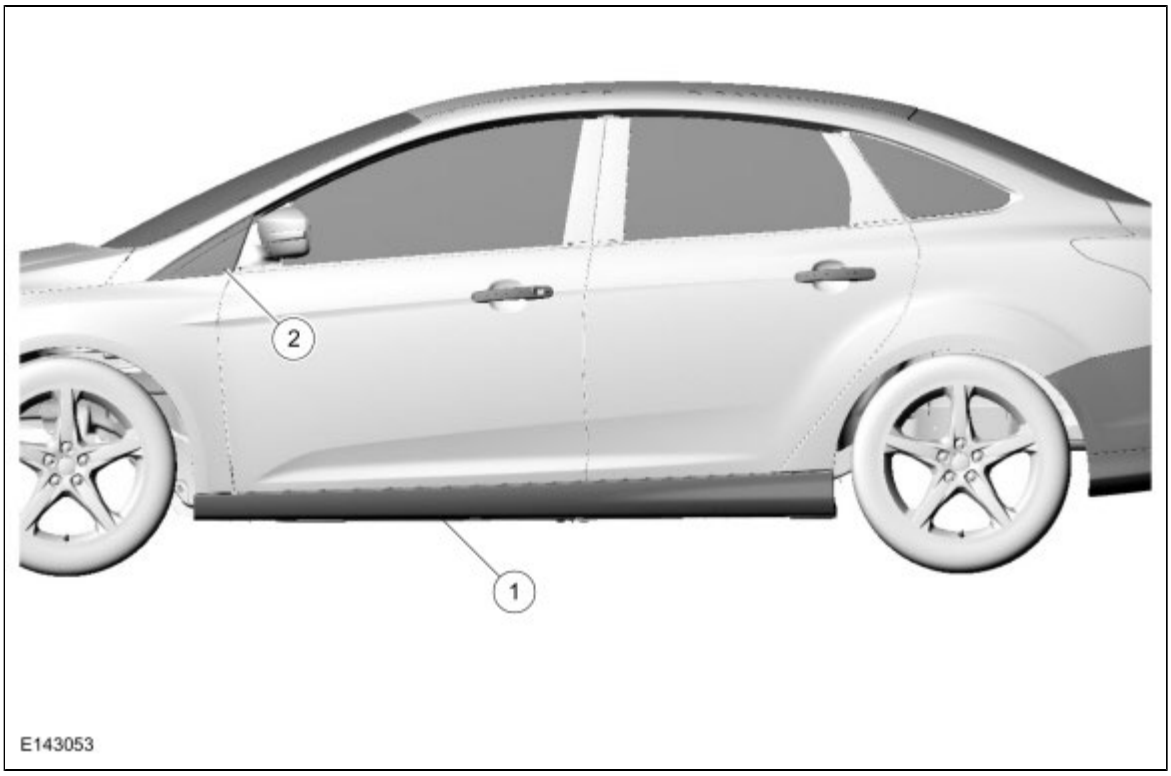

Item	Service Part Number	Description	Torque	Material Name	Notes
1	5810176 Right Hand (RH) /5810177 Left Hand (LH)	Rocker panel moulding	-	Thermoplastic Olefin (TPO)	-
2	16003 Right Hand (RH) /16004 Left Hand (LH)	A-pillar-to-door moulding	-	Acrylonitrile Butadiene Styrene (ABS)	-

Exterior Plastic Components - Side, 5-Door Hatchback

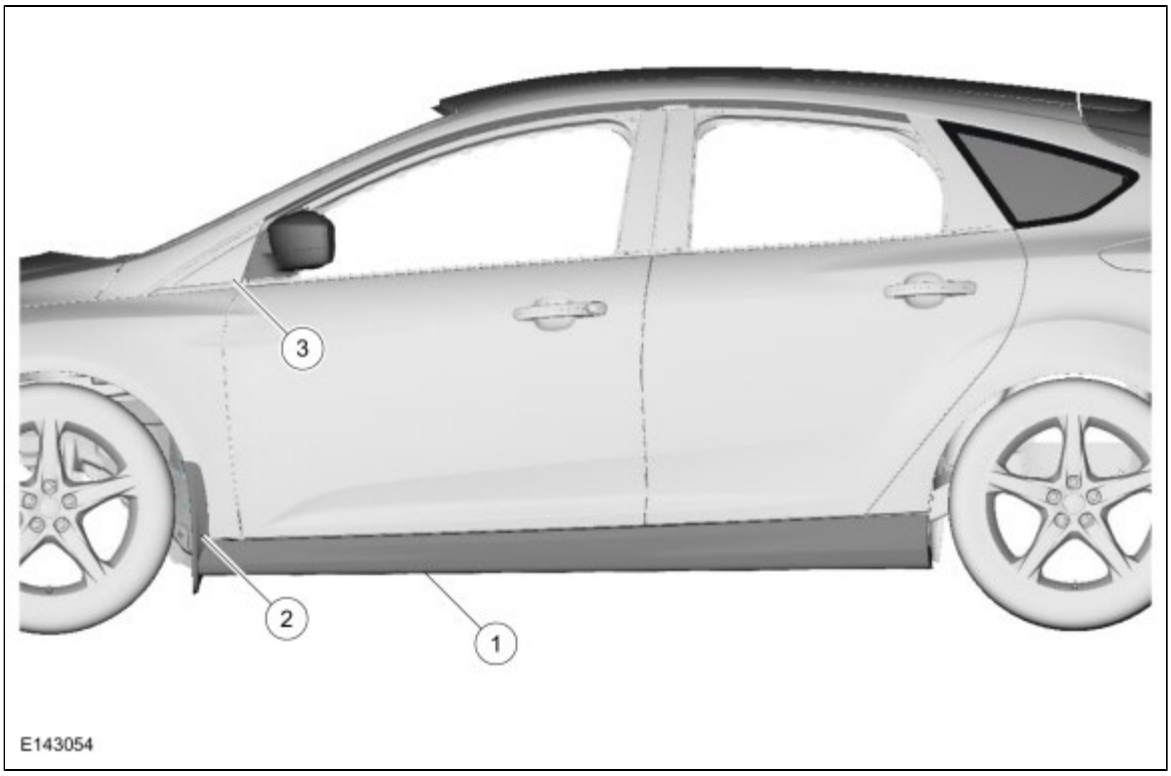

Item	Service Part Number	Description	Torque	Material Name	Notes
1	5810176 Right Hand (RH) /5810177 Left Hand (LH)	Rocker panel moulding	-	Thermoplastic Olefin (TPO)	-
2	7810154 Right Hand (RH) /7810155 Left Hand (LH)	Mud flap	-	Thermoplastic Olefin (TPO)	-
3	16003 Right Hand (RH) /16004 Left Hand (LH)	A-pillar-to-door moulding	-	Acrylonitrile Butadiene Styrene (ABS)	-

Exterior Plastic Components - Rear, 4-Door Sedan

Item	Service Part Number	Description	Torque	Material Name	Notes
1	17K835	Rear bumper cover	-	Thermoplastic Olefin (TPO)	-
2	17810	rear bumper cover extension	-	Thermoplastic Olefin (TPO)	-
3	5444210-AA	Rear spoiler	-	Acrylonitrile Butadiene Styrene (ABS)	-

Exterior Plastic Components - Rear, 5-Door Hatchback

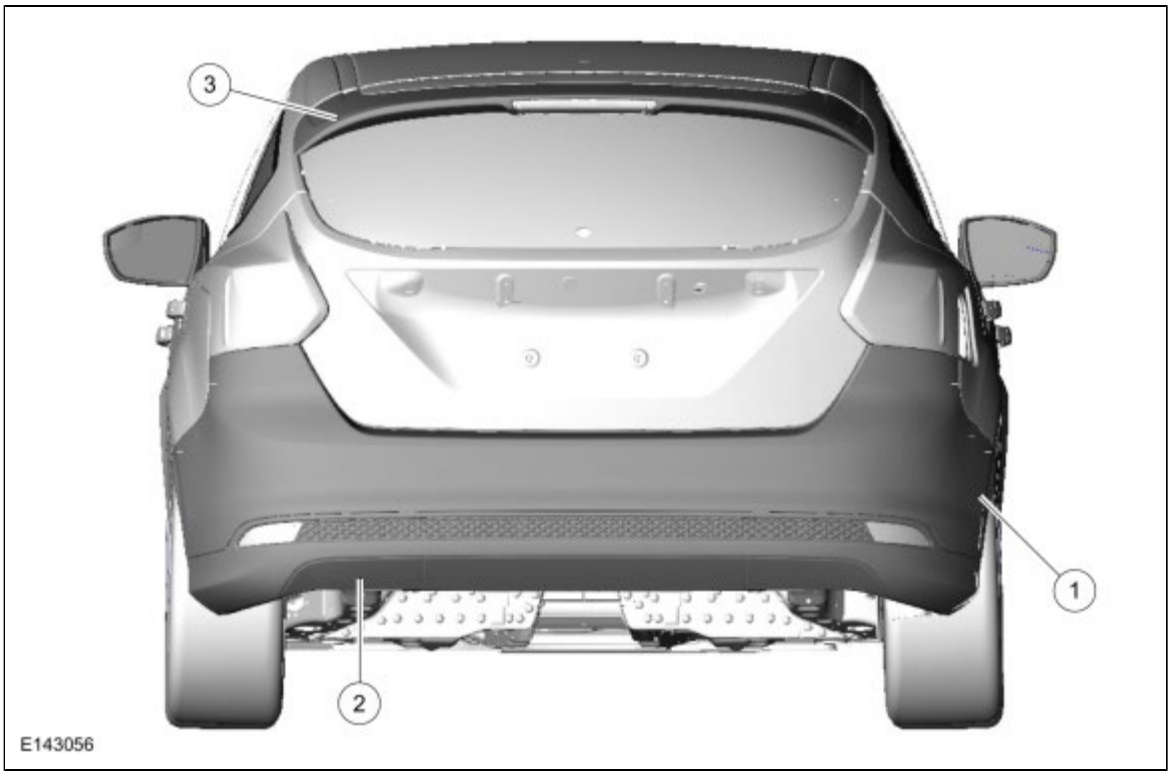

Item	Service Part Number	Description	Torque	Material Name	Notes
1	17K835	Rear bumper cover	-	Thermoplastic Olefin (TPO)	-
2	17810	Rear bumper cover extension	-	Thermoplastic Olefin (TPO)	-
3	5444210-BA	Rear spoiler	-	Acrylonitrile Butadiene Styrene (ABS)	-

Repair Considerations

Several considerations will determine viability of plastic repair procedure(s):

- Is the damage cosmetic or structural?
- Can the repair be carried out on the vehicle?
- Is the part readily available?
- Is component repair the most cost effective method?
- Will the repair provide for the fastest, highest quality repair?

Several types of plastic are in use for automotive application. However, all plastics will fall into 2 primary categories of thermoplastic or thermosetting plastic.

Thermosetting Plastic

Generally, thermosetting plastics are made with 2-part thermosetting resins. When mixed together, heat is generated, producing a cure that is irreversible. Because of this, thermosetting plastics will require the use of a 2-part adhesive for repair.

Sheet-Molded Composite (SMC):

- Sheet-Molded Composite (SMC) is a type of thermosetting plastic that uses glass fibers or nylon fibers in combination with thermosetting polyester resins. When fully cured, Sheet-Molded Composite (SMC) is strong and rigid.
- Sheet-Molded Composite (SMC) is similar to, but not identical to fiberglass. Ford Motor Company uses Sheet-Molded Composite (SMC) in components such as fenders, hoods and liftgates.

Thermoplastic Compounds

Thermoplastic compounds are manufactured by a process that is reversible. Thermoplastics can be remolded repeatedly by reheating. This characteristic of thermoplastics makes plastic welding a possible repair alternative. A repair of thermoplastic compounds is still possible through the use of a 2-part adhesive and filler repair materials and reinforcements as needed. Thermoplastics are widely used in interior trim components, wheel flares, body side cladding and bumper covers.

Polyolefin

Polyolefins fall into the family of thermoplastics with one unique characteristic: an oily or waxy feel to the material when sanded or ground. Polyolefin lends itself very well to remolding through the use of heat. Because of this, components made of this material lend themselves well to the possibility of plastic welding. Most adhesive repair materials and paint will not bond to the surface of a polyolefin unless an adhesion promoter specially formulated for plastic is first applied to the exposed raw surface. Otherwise, polyolefins are repaired like most other thermoplastics. Polyolefins are used in bumper covers, fan shrouds and wheel housings.

Proper identification of the various types of plastic is necessary to select the appropriate repair method(s) to carry out high quality plastic repairs.

Copyright © Ford Motor Company

Noise, Vibration and Harshness

Sound Deadeners and Insulators

NOTICE: Mastic is made of a combustible material and should be removed prior to carrying out welding procedures to the area. Heat zones from welding near mastic may cause the mastic material to burn.

NOTICE: Corrosion protection must be restored to the area after the mastic material is applied. Corrosion protection products may be wax based and loss of adhesion may occur if applied prior to mastic installation.

NOTE: *The following illustration serves as a reference to indicate mastic patch (butyl) locations. Additional insulators and sound deadeners are used beyond those indicated in the illustration.*

Floor Pan

NOTE: *4-Door Sedan shown, 5-Door Hatchback similar.*

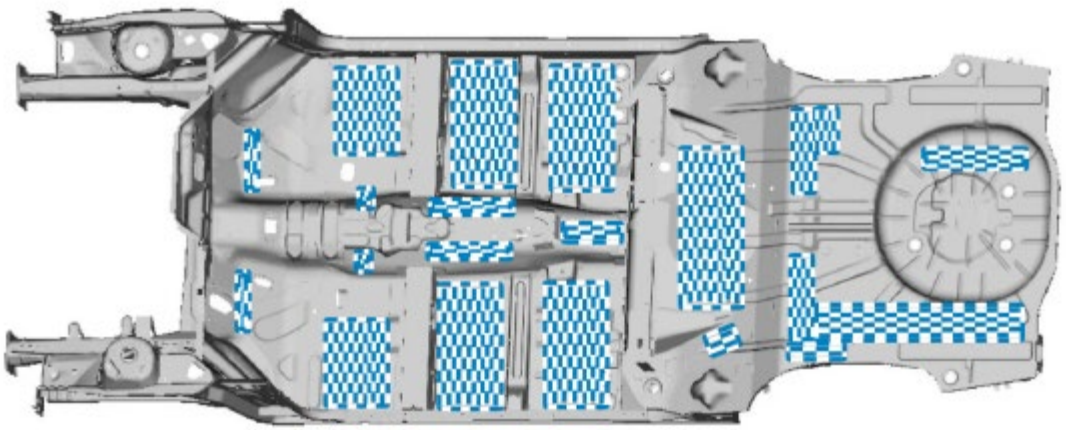

E143409

Cowl Panel

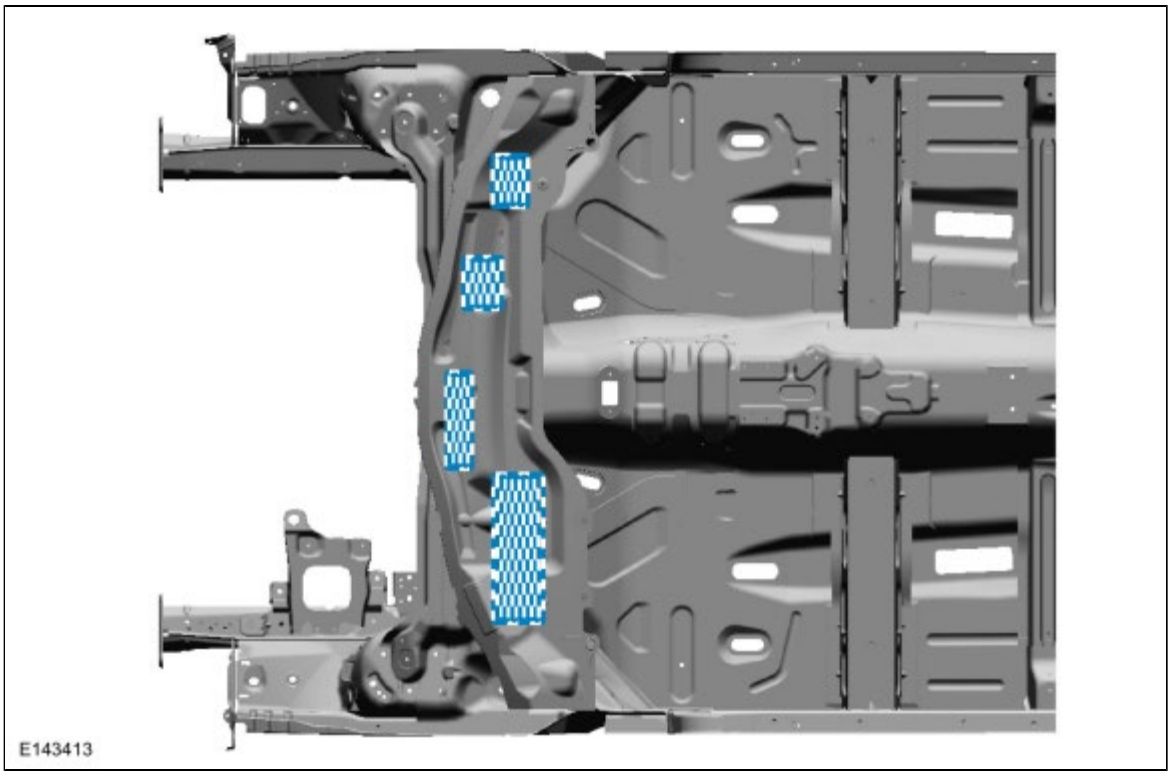

Dash Panel

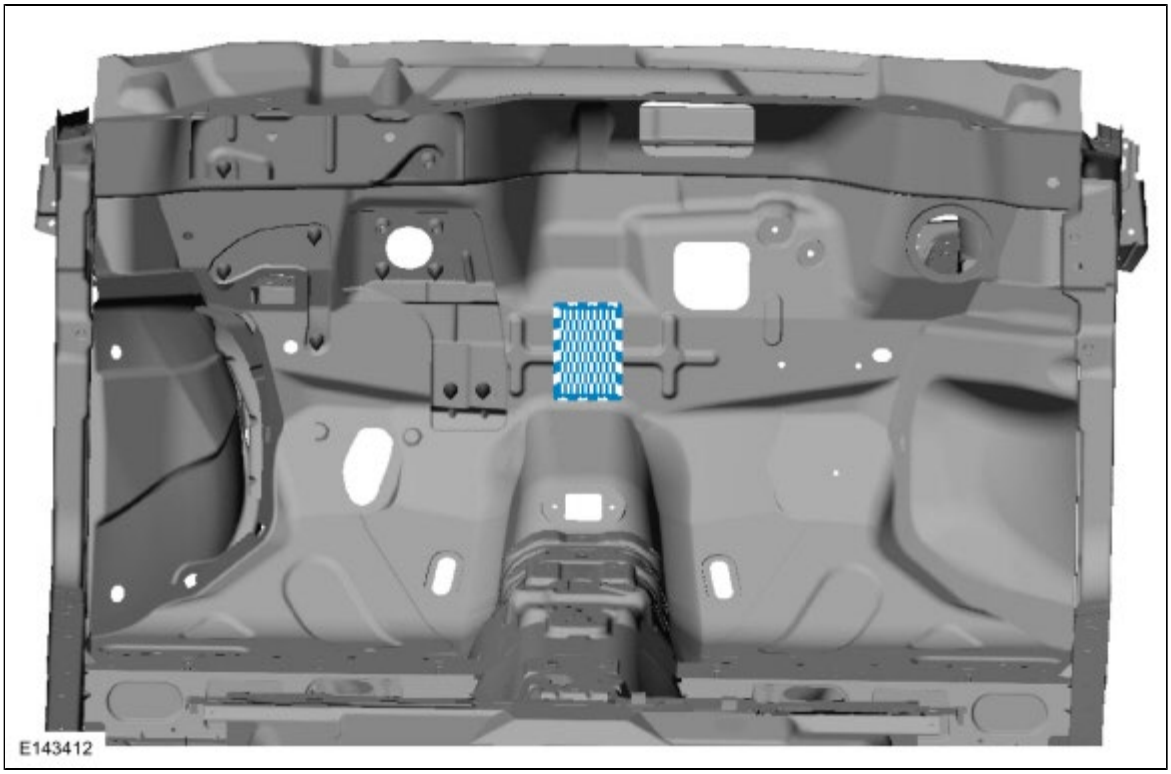

Roof Panel - 4-Door Sedan

NOTE: *Roof panel without sunroof shown. Roof panels with sunroof do not use the forward Noise, Vibration, or Harshness (NVH) pad.*

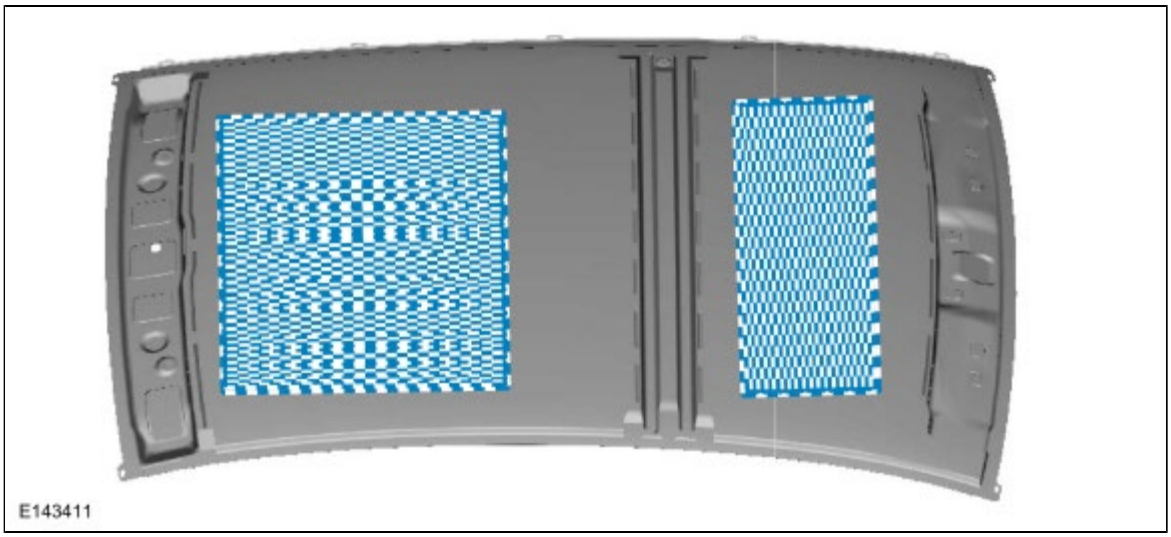

Roof Panel - 5-Door Hatchback

NOTE: *Roof panel without sunroof shown. Roof panels with sunroof do not use the forward Noise, Vibration, or Harshness (NVH) pad.*

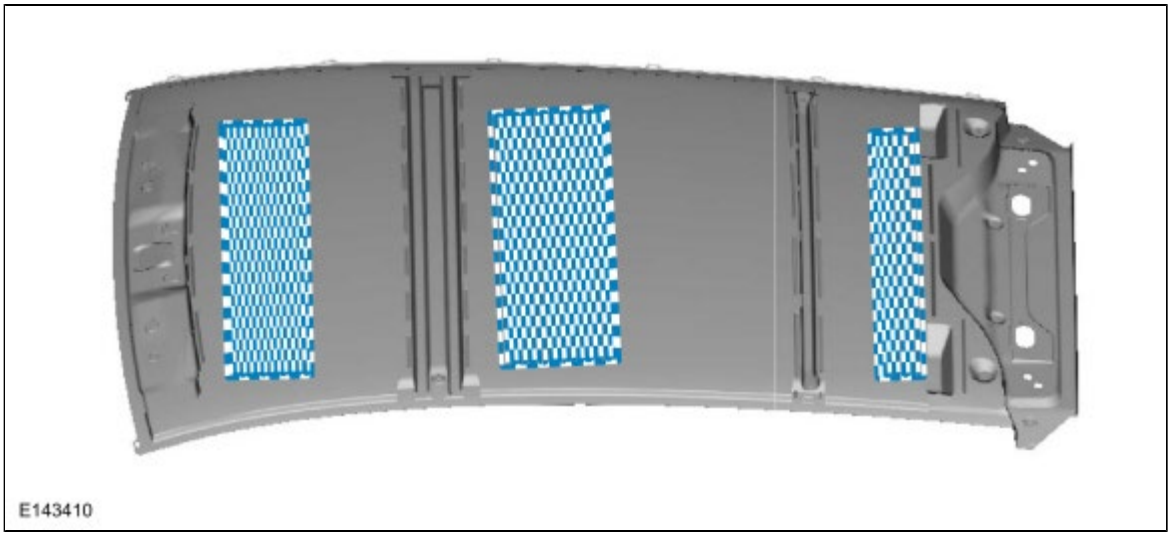

Copyright © Ford Motor Company

Corrosion Prevention

NOTE: *Undercoating*

NOTE: *The following illustrations are not vehicle specific and are intended for reference only.*

1. **WARNING: Before beginning any service procedure in this section, REFER to Safety Warnings in section 100-00 General Information. Failure to follow this instruction may result in serious personal injury.**

   Refer to: Health and Safety Precautions (100-00 General Information, Description and Operation).

2. Wire brush the area and make sure the surfaces are free of oil, dirt and other foreign material. Carry out the undercoating process in the following sequence.

3. Thoroughly clean and degrease metal surfaces to remove wax and grease.
   Material : Motorcraft® Metal Surface Prep / ZC-31-A

4. For best results, the vehicle should be at room temperature.

5. Canister attaches directly to the dispensing gun. Attach the undercoating canister to the special tool .
   Special Tool(s) : 300-SAT12740 UBE Gun
   Material : ValuGard™ Premium Undercoating / VG101, VG101A

6. Undercoating should be applied after the welding and refinishing process. Product cannot be welded through.

7. Air pressure setting for applicator gun is 552 kPa (80.06 psi) – 621 kPa (90.07 psi).

8. Apply light mist coats, applicator sprays in fogging pattern. Material displaces moisture.

9. Clean up any overspray with a mild solvent such as mineral spirits or bug and tar remover.

10. **NOTE:** *Frame rail exterior spot-weld flange view.*

    Apply Premium Undercoating material to the exterior exposed edges after carrying out the welding and refinishing process.

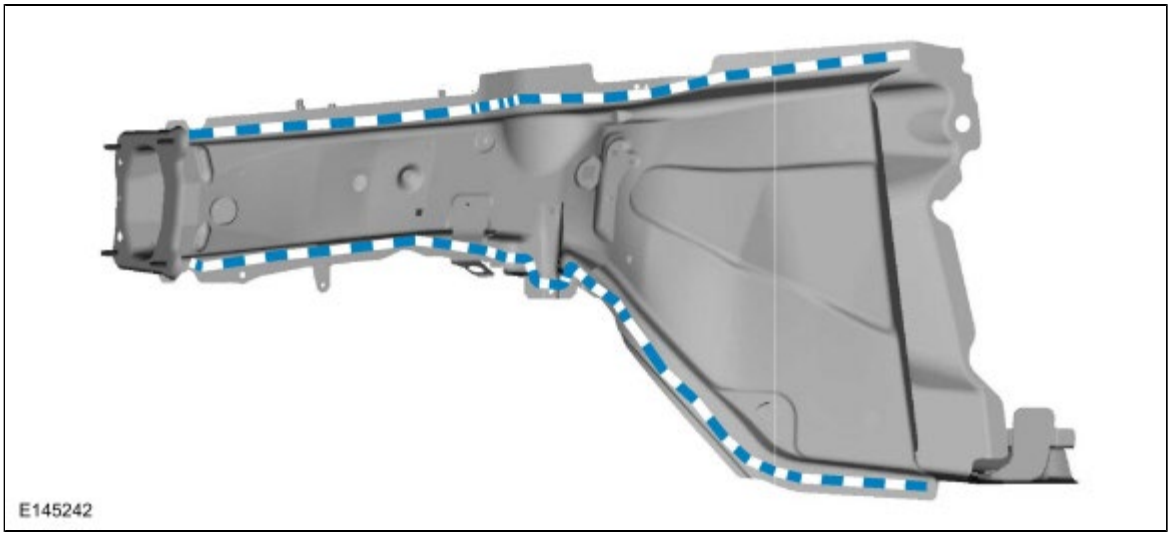

11. **NOTE:** *Cross section view of typical unibody frame rail shown.*

    Apply Rust Inhibitor to the inner surfaces of the rail after carrying out welding process. Depress trigger and wait 2-3 seconds and slowly pull the wand to make sure the area is completely fogged.

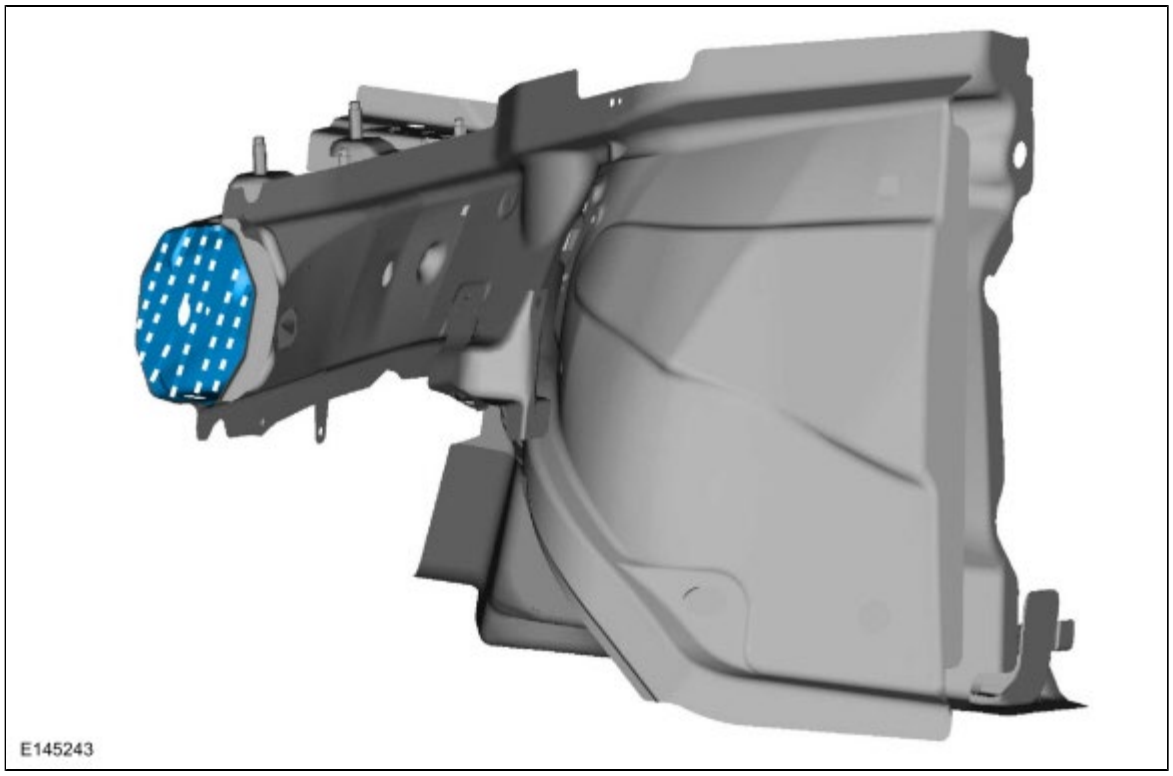

12. **NOTE:** *Full frame vehicle, front rail-to-mid rail section repair shown.*

    Apply Premium Undercoating to the exposed surfaces after carrying out the welding process. Make sure to completely cover any bare metal areas.

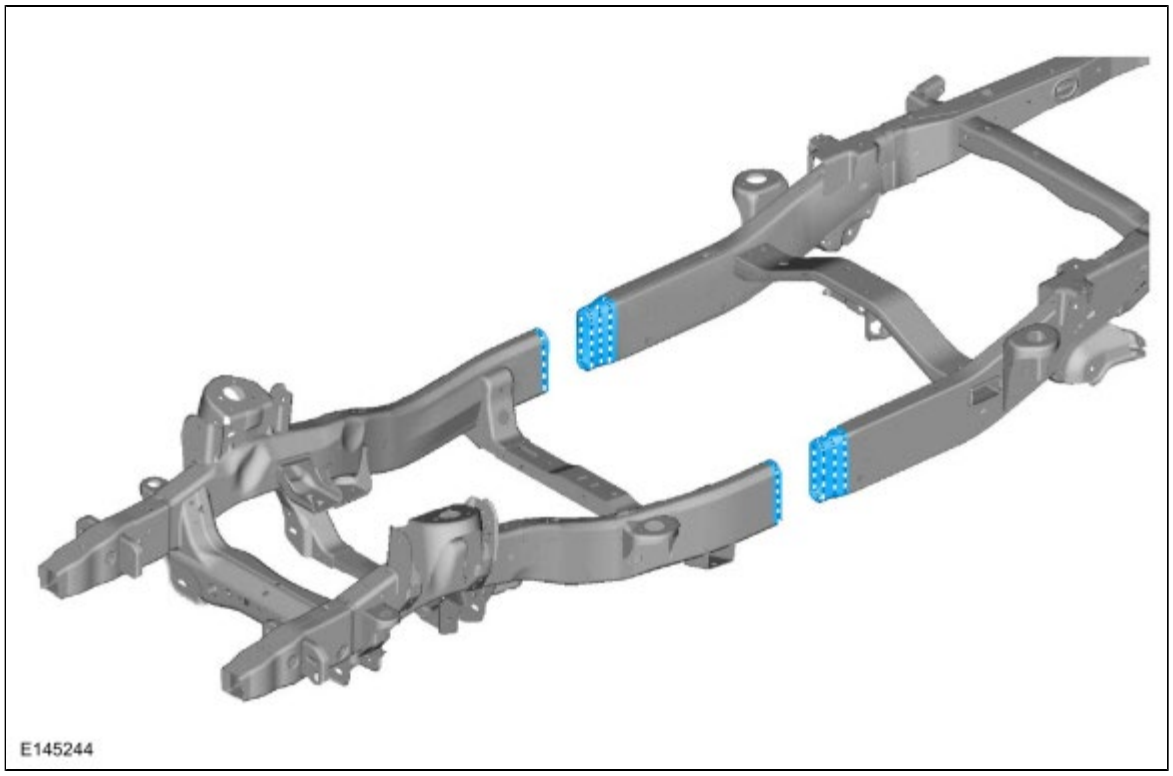

NOTE: *Rust Inhibitor*

1. The surfaces must be free of oil, dirt and other foreign material. Carry out the process in the following sequence.
2. Thoroughly clean and degrease metal surfaces to remove wax and grease.
   Material : Motorcraft® Metal Surface Prep / ZC-31-A

3. For best results, the vehicle should be at room temperature. Attach the rust inhibitor canister to the special tool .
   Special Tool(s) : 300-SAT9795 HRS Rust Gun
   Material : ValuGard™ Rust Inhibitor / VG104, VG104A

4. Rust inhibitor should be applied after the welding and refinishing process. Product cannot be welded through.

5. Air pressure setting for applicator gun is 448 kPa (64.97 psi) - 517 kPa (74.98 psi).

6. Use the appropriate length wand when spraying enclosed areas. Insert the wand as far as possible into the access hole, pull the trigger and wait 2-3 seconds and slowly pull the wand out of the access hole. Apply the material in light mist coats. Material displaces moisture.

7. Clean up any overspray with a mild solvent such as mineral spirits or bug and tar remover.

8. **NOTE:** *Door assembly lower view.*

   Apply as shown to the inside of the door shell on all the interior metal surfaces using the most suitable applicator wand. Apply material to the exposed edges after carrying out the welding process. Make sure horizontal surfaces are well protected as they are more susceptible to corrosion. Keep door drain holes clear to prevent moisture buildup.
   Material : ValuGard™ Rust Inhibitor / VG104, VG104A

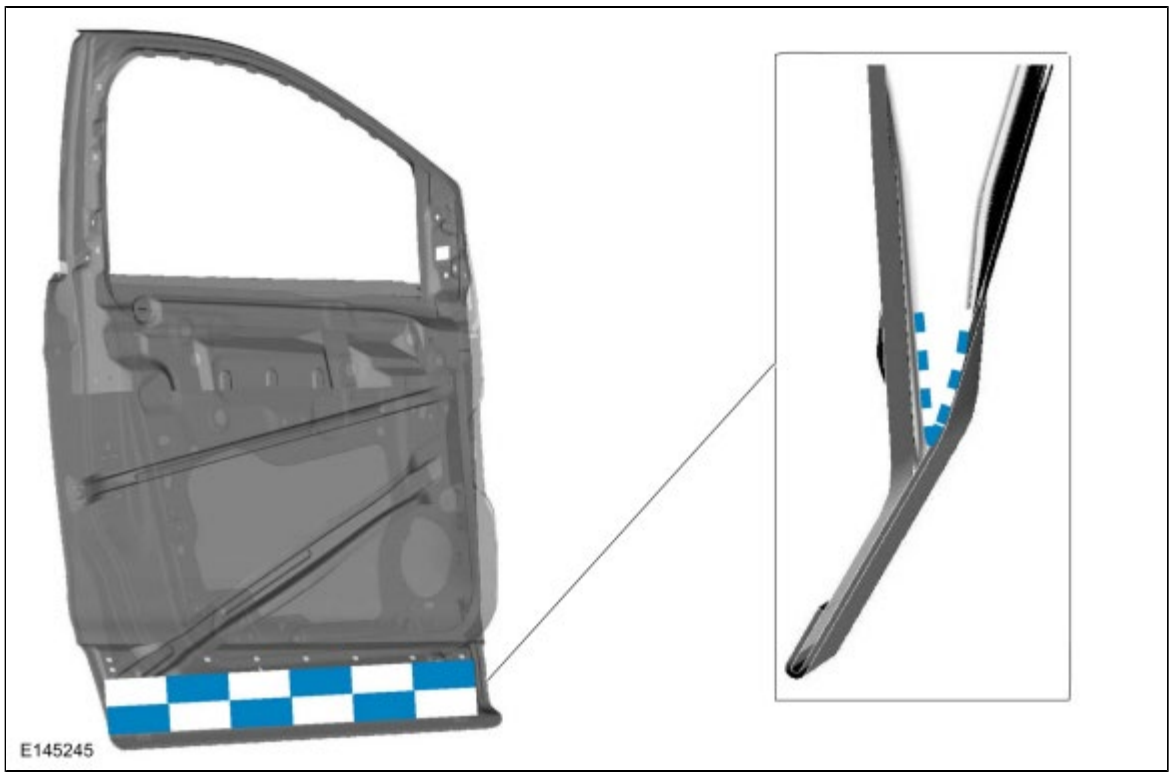

9. **NOTE:** *Quarter panel inner view.*

   Apply to the closed channel portion of the spot weld flange areas. Apply to the exposed edges after carrying out the welding process. Make sure horizontal surfaces are well protected as they are more susceptible to corrosion.
   Material : ValuGard™ Rust Inhibitor / VG104, VG104A

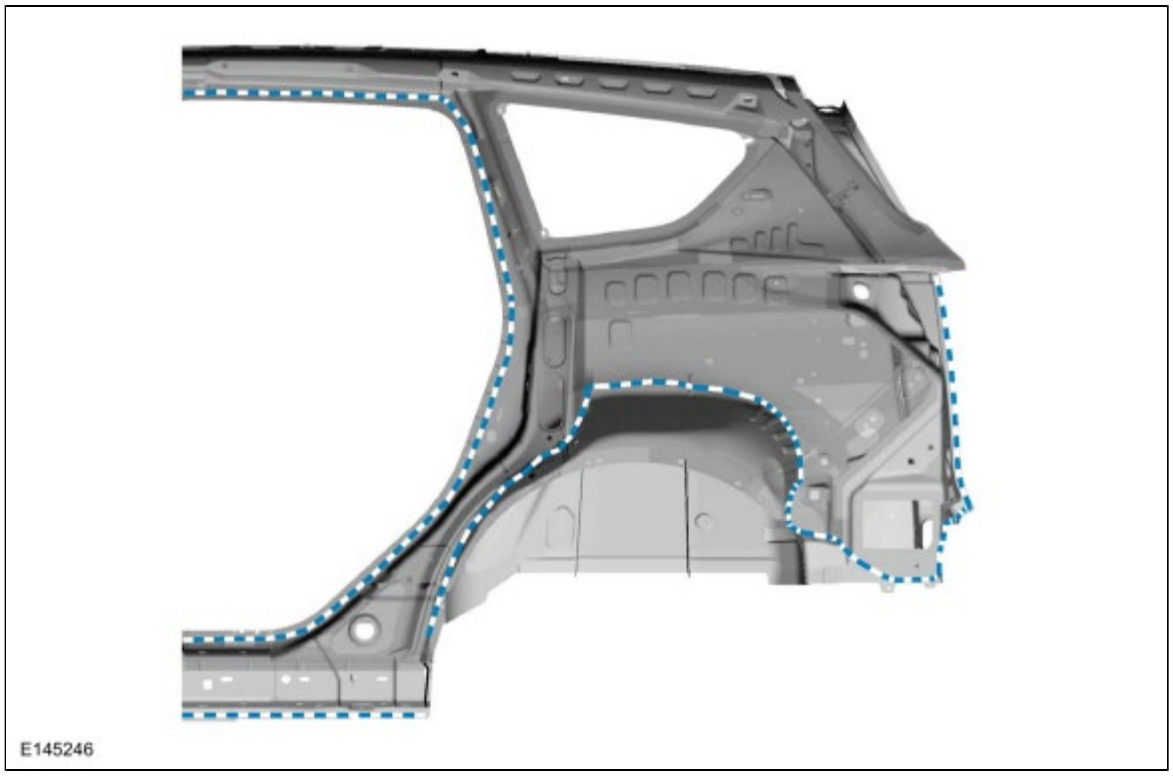

10. **NOTE:** *Door frame opening view.*

    Apply to the closed channel portion of the spot weld flange areas. Make sure horizontal surfaces are well protected as they are more susceptible to corrosion.
    Material : ValuGard™ Rust Inhibitor / VG104, VG104A

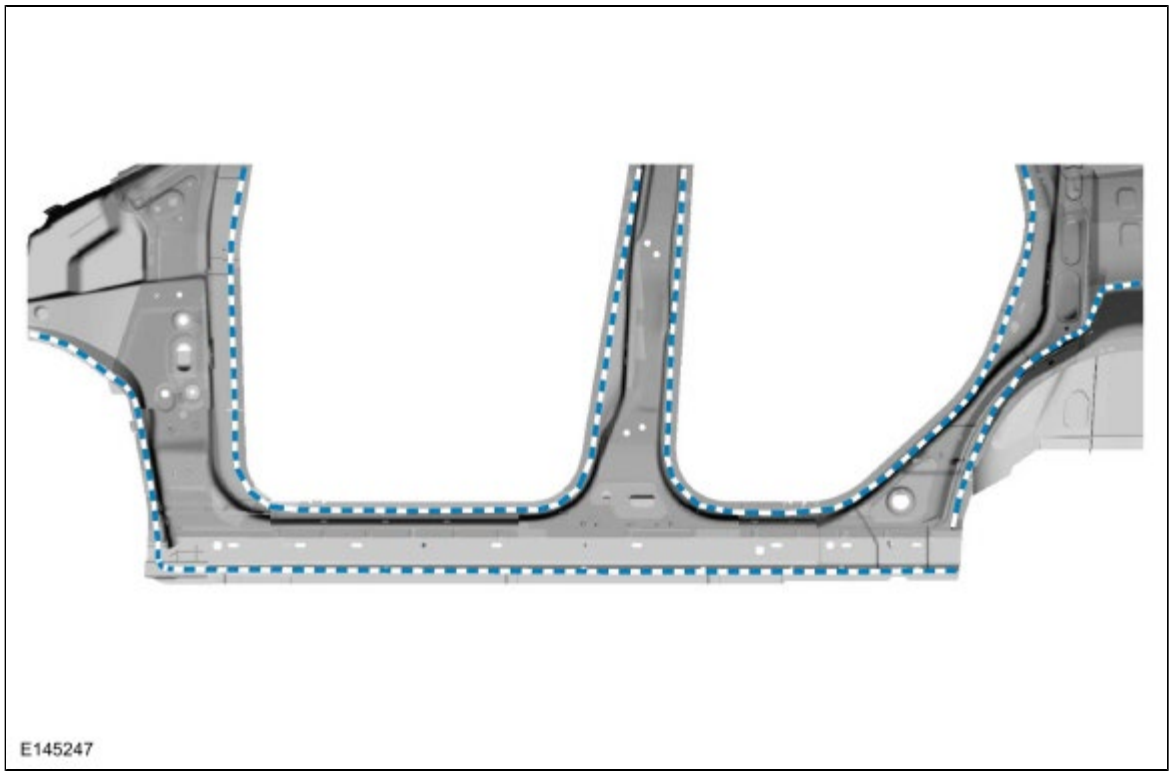

Copyright © Ford Motor Company

Plastic Repairs

NOTE: *Plastics Identification*

1. **WARNING: Before beginning any service procedure in this section, REFER to Safety Warnings in section 100-00 General Information. Failure to follow this instruction may result in serious personal injury.**

   Refer to: Health and Safety Precautions (100-00 General Information, Description and Operation).

2. **NOTE:** *In some instances, a code or material designation is moulded or stamped on the component indicating the plastic type.*

   Thermoplastics are solvent reactive. Types of thermoplastics include Thermoplastic Olefin (TPO), Polyvinyl Chloride (PVC), Sheet-Molded Composite (SMC) and Acrylonitrile Butadiene Styrene (ABS). Polyolefins have an oily or waxy appearance. Examples include some bumper covers, stone shields, fender aprons and fan shrouds. Polyolefins require an adhesion promoter prior to carrying out any refinish procedure.

3. To determine if the part is a polyolefin, grind the damaged area in an out-of-sight area. Grinding a polyolefin will melt and smear the plastic and leave a ragged edge. If the part is non-polyolefin, the area will grind or sand smoothly, producing a powdery dust.

4. Polyolefin plastic can also be identified by placing a small sliver in a container of water, if the sample floats, it is a polyolefin plastic. A non-polyolefin will sink when placed in a container of water.

5. Generally, thermosetting plastics are rigid or semi-rigid. Sheet-Molded Composite (SMC) is reinforced with glass and other fibers and are strong and rigid. Sheet-Molded Composite (SMC) is used for large panels such as hoods, liftgates, fenders and quarter panels.

6. A burn test can be a reliable method to determine if a plastic is a thermosetting plastic. Extreme care must be exercised when using this method. Apply an open flame to the corner of the damaged component. If the material crystallizes and becomes hard, it is a thermosetting plastic.

7. In deciding whether to repair or install a new component, follow these guidelines.

8. Is a part readily available? Can the damaged part be economically returned to its original strength and appearance, or will the labor cost exceed the cost of a new component? Will repair provide for the fastest, highest quality repair?

9. **NOTICE: Never apply solvents such as lacquer thinner or reducer at any stage of plastic repair. Solvents, cleaners and water are absorbed by many types of plastics and by the glass fibers used for reinforcements. If this occurs, the plastic may swell in the area of repair and cause the repair to fail. Remove cleaners and water quickly and use air and heat to speed up drying.**

   NOTICE: During the repair of many plastics and particularly polyolefin plastics, an adhesion promoter must be applied to the substrate to allow repair materials and paint to bond correctly. Reapplication is required when grinding or sanding through the sealer or primered layers.

   NOTE: *When possible, it is recommended to carry out as much of the plastic repair as possible on the vehicle. Parts mounted on the vehicle are held in correct alignment throughout the repair. Attempting to repair the part off the vehicle may cause misalignment. This could lead to failure of the repair.*

   NOTE: *Always refer to the manufacturer's label directions for the type of repair materials, fillers and bonding agents being used as they are material specific.*

   NOTE: *The following procedure applies to repair of structural cracks and large gouges. If damage is cosmetic, use of reinforcing cloth may not be necessary.*

   Panels to be repaired should be dry and at room temperature 18 C (64.4 F) to 24 C (75.2 F) prior to carrying out any repairs.

Both sides of the panel must be thoroughly cleaned before sanding or grinding.

NOTE: *Sheet-Molded Composite (SMC) Panel Repair*

1. Cover the break in the Sheet-Molded Composite (SMC) (front and back) with masking tape. This protects the damaged area from absorbing the prep cleaner and eliminates wicking of the cleaner through the fibers into the Sheet-Molded Composite (SMC).

2. Remove all waxes, silicones, dirt and road oils from the area surrounding both sides of the damaged area with a plastics wax and grease remover.

3. Remove the tape and sand the back of the repair area with an angle grinder, Dual Action (D/A) sander or by hand using 80-grit sandpaper. Remove all dust with a vacuum and tack cloth.
   Special Tool(s) : ALCV-200 6 inch Viking Dual Action Sander

4. Create a reinforcing patch using a piece of scrap Sheet-Molded Composite (SMC) that conforms well to the back of the damaged area or form a patch from fiberglass cloth.

5. Cut a section of cloth large enough to cover the repair, plus around the repair area. Cut a section of plastic film backing approximately larger than the cloth. Lay the plastic on a smooth, flat surface where it will be used to create a pyramid patch.

6. Follow manufacturer's directions and apply adhesive to the plastic film backing and smooth with plastic spreader to recommended thickness. Place the pre-cut fiberglass cloth on the adhesive-coated plastic film. Cover the cloth with a coat of repair adhesive and spread to the recommended thickness.
   Material : Plastic Bonding Adhesive / TA-9

7. Apply the prepared patch to the backside of the panel and compress. Follow manufacturer's instructions for adhesive cure. Remove plastic film after adhesive cures and sand as necessary to remove roughness.

8. Remove masking tape from the front side of damaged area and grind down to the backing patch. Use an angle grinder with a 30 to 40-grit wheel. Make a gradual taper in the area, this will prevent bull's-eyes or read-through in the finished repair. Sand prepared area with a Dual Action (D/A) sander or hand-sand with 80-grit sandpaper.
   Special Tool(s) : ALCV-200 6 inch Viking Dual Action Sander

9. Build a pyramid patch using fiberglass cloth or equivalent and adhesive. Following manufacturer's directions, apply patch to damaged area.
   Material : Plastic Bonding Adhesive / TA-9

10. Rough-grind area to remove excess adhesive. Sand repair area with 80-grit sandpaper, making sure to cut slightly below the Sheet-Molded Composite (SMC) finished surface. This will allow for a finish coat of plastic repair filler material.

11. Apply a finish coat of plastic repair filler material per manufacturer's directions.

12. Finish-sand, prime and topcoat using Ford-approved paint systems.

NOTE: *Thermoplastic Compounds Repair*

1. Select the correct repair method by identifying the type of plastic being repaired.

2. **NOTE:** *Always refer to the manufacturer's label directions for the type of repair materials, fillers and bonding agents being used as they are material specific.*

   Determine whether a reinforcement piece is needed as a backer on large repairs.

3. Construct a reinforcement piece from a scrap piece of the type of plastic being repaired and follow manufacturer's label directions for the type of system being used.

4. **NOTE:** *The following steps are to be used as a guideline. Depending on what brand of adhesives or patch materials are used, procedures may vary slightly.*

   Thoroughly clean the damaged area with wax and grease remover formulated for use with plastics.

5. Hand sand the repair area with 80-grit sandpaper and remove any foreign material with compressed air.

6. Apply a plastics adhesion promoter per label directions to the repair area.

7. For small repairs, a adhesive filler can be applied to the damaged area. Follow manufacturer's directions and build layers to form a thickness above the damaged area. This will allow the area to be sanded smooth.
   Material : Plastic Bonding Adhesive / TA-9

8. To repair large holes or cracks, measure and cut a piece of fiberglass cloth or equivalent 25.4 mm (1 in) larger than the crack or hole.

9. Apply adhesive to the damaged area and immediately apply fiberglass cloth into plastic adhesive for reinforcement. Apply additional plastic repair adhesive for strength and shape as required.
   Material : Plastic Bonding Adhesive / TA-9

10. Contour and sand to shape the repair as necessary. Avoid sanding through the repair.
    Special Tool(s) : ALCV-200 6 inch Viking Dual Action Sander

11. Finish-sand the area and carry out any required paint operations using Ford-approved paint systems.

NOTE: *Tab Repair*

1. **NOTE:** *Illustration is not vehicle specific.*

   NOTE: *Inspect the component to determine if part of it can be repaired to an acceptable level of quality of appearance, fit and durability. Will labor and material cost of the repair meet or exceed the cost of a new replacement bumper cover? If the bumper cover is determined to be repairable, proceed to the following steps.*

   NOTE: *The following steps are to be used as a guideline. Depending on what brand of adhesives or patch materials are used, procedures may vary slightly.*

   Clean the broken tab(s) with a plastics wax and grease remover.

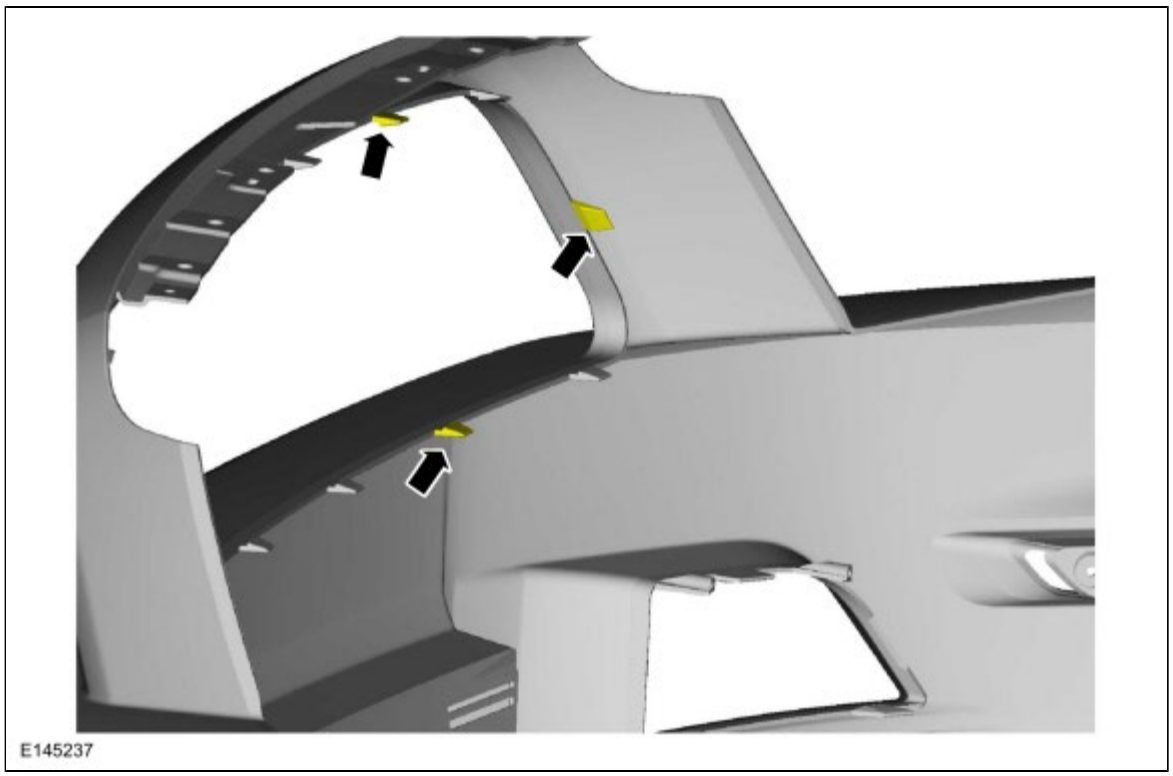

2. Hand sand the repair area with 80-grit sandpaper and remove any foreign material with compressed air.

3. Apply a plastics adhesion promoter per label directions to the repair area.

4. Measure and cut a patch of fiberglass cloth or equivalent large enough to form the front of the tab, then slope back in a wedge shape approximately 51 mm (2 in) from original tab.

5. Prepare the repair adhesive cloth patch per manufacturer's instructions and apply to the affected area.

6. Immediately position the plastic repair material patch to form the tab shape.
7. Allow appropriate cure time and shape the repair tab using a small angle sander. Use extreme care to not sand through the exterior surface.
8. Carry out any required paint repair operations to the bumper cover using Ford-approved paint systems.

NOTE: *Plastics Refinishing*

1. **NOTE:** *Care must be used if applying heat to parts. Thermoplastics soften and tend to lose their shape when heated.*

   The first step for any repair or refinish procedure is to identify the type of plastic. Is it thermosetting or thermoplastic, grained or smooth? This will determine how it should be cleaned and prepared for refinishing.
2. It is essential that the correct cleaner is used, depending on which painting system is employed, solvent-based or water-based. Clean part with warm water/mild detergent, then with plastic cleaner to remove wax, silicone and other contaminants. Do not allow parts to remain wet for extended periods. As a general rule, if water beads on the part, it requires additional cleaning as all the manufacturing release agents have not been removed.
3. New parts may require baking in a spray booth or heating with heat lamps to release trapped solvents or mold release agents used in the manufacturing processes.
4. **NOTICE: Grained components may only be lightly sanded through use of a gray scuff pad. Failure to follow this direction may result in graining being flattened.**

   After cleaning, lightly sand with 600-grit or finer sandpaper. Remove sanding residue with plastic cleaner and wipe dry.
5. Apply a plastics adhesion promoter to any bare plastic part following manufacturer's recommendation. Throughout the refinish procedure, any time bare plastic is exposed for any reason, it is essential that adhesion promoter be reapplied to that area.
6. A sealer may be required to prevent wrinkling and lifting of the topcoat prior to carrying out the refinish procedure.
7. Flexible and non-flexible components should be refinished separately as a flex additive may be required when refinishing flexible parts (refer to the paint manufacturer's recommendation).
8. It is recommended to carry out refinishing of exterior components on-vehicle (after cut-in) to control color match and blending to adjacent panels.
9. Interior trim components may be refinished using Motorcraft® Interior Spray Paint or any Ford-approved paint system procedures. Steps may vary between paint manufacturers.
10. Proceed with the refinish process and follow the Ford-approved paint system procedures. Steps may vary between paint manufacturers.

Copyright © Ford Motor Company

Joining Techniques

NOTE: *Weld Bonding - Squeeze-Type Resistance Spot Welding (STRW) Method*

1. **WARNING: Before beginning any service procedure in this section, REFER to Safety Warnings in section 100-00 General Information. Failure to follow this instruction may result in serious personal injury.**

   Refer to: Body Repair Health and Safety and General Precautions (100-00 General Information, Description and Operation).

2. Verify the vehicle is dimensionally correct on a frame machine. Straighten if necessary.

3. Remove damaged panels. Remove only large portions of the damaged panel. Avoid cutting into mating flanges or adjacent parts.
   General Equipment : Air Body Saw
   General Equipment : Plasma Cutter

4. Drill out the spot welds and remove the remaining portions of the panel to be replaced.
   General Equipment : Spot weld drill Bit

5. Prepare any damaged flanges on the vehicle using hammer and dolly.

6. Grind the mating surface of the original flanges no greater than 25 mm (0.9843 in) where the metal bonding adhesive will be applied.

7. Be sure to remove galvanizing on metal. Metal should have a shiny appearance. Be careful not to damage the corners or thin the metal. The E-coat should also be removed on the opposite side of the flange only where the spot welds are to be placed. Clean surfaces with surface prep.
   Material : Motorcraft® Metal Surface Prep / ZC-31-A

8. Dry-fit and clamp the replacement service parts to verify a correct fit.

9. Remove the service part after verifying correct fit and alignment.

10. Prepare the adhesive. Dispense a small amount of adhesive from the cartridge to make sure of an even flow of both components. Attach the mixing tip and dispense a mixing tip length of adhesive to make sure of a correct mix ratio.
    Material : Metal Bonding Adhesive / TA-1

11. **NOTE:** *Welding can be carried out anytime during the adhesive curing process, or after the adhesive is fully cured. Welder settings will vary when welding through wet adhesive versus welding through fully cured adhesive. Refer to welder manufacturer's recommended settings for welding through fully cured adhesive. It is recommended to place a shunt weld in an area with no adhesive to make sure of conductivity, particularly when welding through fully cured adhesive.*

    NOTE: *Refer to the product label for handling and preparation instructions.*

    Create a test sample.

12. Prepare the metal and adhesive as described. Apply a 6 mm (0.2362 in) - 9 mm (0.3543 in) bead of adhesive and weld the sample.
    General Equipment : Resistance Spotwelding Equipment

13. Place the welded sample in a vice and carry out destructive weld tests by peeling the scrap metal apart using large lock-type pliers. Measure the weld nugget to determine that the nugget meets Ford weld nugget requirements. If the weld nugget does not meet required size, adjust welder settings until the correct weld nugget size is achieved.
    Refer to: Specifications (501-25 Body Repairs - General Information, Specifications).

14. Apply a 6 mm (0.2362 in) - 9 mm (0.3543 in) bead of adhesive to the vehicle prepared flange surface.

15. Place the service part(s) in the correct position on the vehicle.

16. When positioned, do not pull the component away from the vehicle. If repositioning is necessary, slide the service part(s). This will make sure of correct contact between the components and adhesive.

17. Clamp evenly and tightly. The adhesive contains glass beads which will prevent over-clamping the component.

18. **NOTE:** *Refer to the product label for cure times and handling instructions. Clamps may be removed immediately after the component is welded.*

    Wipe excess adhesive from the panel before it cures.

19. **NOTE:** *The ends of welding clamps should be insulated on the ends using tape or similar material when welding is carried out.*

    Complete the spot welding process following Ford recommendations and welder manufacturer procedures and settings.
    Refer to: Specifications (501-25 Body Repairs - General Information, Specifications).
    General Equipment : Resistance Spotwelding Equipment

20. Finish any cosmetic section seams with fiber-filled body filler. Rough sand the filler, apply conventional body filler after the adhesive cures and block-sand the area.

21. Mix and apply primer surfacer per Ford-approved paint recommendations.

22. Seal wherever a cosmetic seam sealer is required.
    Material : Seam Sealer / TA-2

23. Refinish using a Ford approved paint system.

24. Refer to: Corrosion Prevention (501-25 Body Repairs - General Information, General Procedures).
    Material : ValuGard™ Premium Undercoating / VG101, VG101A
    Material : ValuGard™ Rust Inhibitor / VG104, VG104A

NOTE: *Weld Bonding - Metal Inert Gas (MIG) Welding Method*

1. **WARNING: Before beginning any service procedure in this section, REFER to Safety Warnings in section 100-00 General Information. Failure to follow this instruction may result in serious personal injury.**

   Refer to: Body Repair Health and Safety and General Precautions (100-00 General Information, Description and Operation).

2. Verify the vehicle is dimensionally correct on a frame machine. Straighten if necessary.

3. Remove damaged panels. Remove only large portions of the damaged panel. Avoid cutting into mating flanges or adjacent parts.
   General Equipment : Air Body Saw
   General Equipment : Plasma Cutter

4. Drill out the spot welds and remove the remaining portions of the panel to be replaced.
   General Equipment : Spot weld drill Bit

5. After removing the damaged sheet metal panel(s), repair any damaged flanges on the vehicle using a hammer and dolly.

6. Using an appropriate grinder, carefully grind around the entire receiving flange area following the original welds. Be sure to remove all E-coat, paint or galvanized coating from the mating surfaces of the joint.
   General Equipment : Grinder

7. Be sure to remove galvanizing on metal. Metal should have a shiny appearance. Be careful not to damage the corners or thin the metal. The E-coat should also be removed on the opposite side of the flange only where the spot welds are to be placed. Clean the surface.

8. Repeat the procedure on the mating surface of the replacement service part(s).
   General Equipment : Grinder

9. Prepare the new service panel for plug welds.

10. Using the original panel as a reference, drill or punch holes in the exact number as the original spot welds. The holes should be positioned as close as possible to the original spot weld locations, without lining up exactly on top of an original spot weld site. To make sure of correct weld performance, grind the immediate perimeter of the plug weld hole. Grind only in the area of the plug weld; this will keep the potential of corrosion to a minimum.
    General Equipment : 8 mm Drill Bit

11. Clean all mating surfaces on both the vehicle and replacement panel.
    Material : Motorcraft® Metal Surface Prep / ZC-31-A

12. Dry-fit and clamp the replacement service parts to verify a correct fit and alignment.

13. Remove the service part after verifying correct fit and alignment.

14. The vehicle prepared flange areas where plug welds will be located must be kept free of adhesive. Apply 25 mm (0.9843 in) tape to the plug weld areas to prevent contamination from the adhesive.

15. Prepare the adhesive. Dispense a small amount of adhesive from the cartridge to make sure of an even flow of both components. Attach the mixing tip and dispense a mixing tip length of adhesive to make sure of correct mix ratio.
    Material : Metal Bonding Adhesive / TA-1

16. **NOTE:** *Refer to the product label for cure times and handling instructions.*

    Apply a 6 mm (0.2362 in)-9 mm (0.3543 in) wide bead of adhesive to the vehicle prepared flange surface. Remove the tape from the plug weld areas.
    Material : Metal Bonding Adhesive / TA-1

17. Place the service part(s) in the correct position on the vehicle.

18. When positioned, do not pull the component away from the vehicle. If repositioning is necessary, slide the service part(s). This will make sure of correct contact between the components and adhesive.

19. Clamp evenly and tightly. The adhesive contains glass beads which will prevent over-clamping the component.

20. **NOTE:** *Welding can be carried out anytime during the adhesive curing process or after the adhesive is fully cured.*

    NOTE: *If welding will not be carried out immediately, refer to product label for cure times and handling instructions. Clamps may be removed immediately after the component is welded.*

    Wipe excess adhesive from the panel before it cures.

21. Complete the plug-welding process following Ford recommendations.
    Refer to: Specifications (501-25 Body Repairs - General Information, Specifications).
    General Equipment : MIG/MAG Welding Equipment

22. Finish any cosmetic section seams with fiber-filled body filler. Rough sand the filler, apply conventional body filler after the adhesive cures and block-sand the area.

23. Mix and apply primer surfacer per Ford-approved paint recommendations.

24. Seal wherever a cosmetic seam sealer is required.
    Material : Seam Sealer / TA-2

25. Refinish using a Ford approved paint system.

26. Refer to: Corrosion Prevention (501-25 Body Repairs - General Information, General Procedures).
    Material : ValuGard™ Premium Undercoating / VG101, VG101A
    Material : ValuGard™ Rust Inhibitor / VG104, VG104A

Copyright © Ford Motor Company

Body and Frame

Body

WARNING: Never install used or reconditioned parts (as specified below) from pre-owned, salvaged or damaged vehicles. The use of such parts could lead to serious injury. Never use non-Ford parts or accessories for completing repairs. Ford Motor Company does not approve or recognize body and structural repair procedures, tools, parts or anything but new genuine Ford equipment. Ford cannot attest to the safety, quality, durability or legality of non-Ford parts or accessories. Use of such parts could lead to serious personal injury as they may contain damage which is not visible. Ford does not approve use of the following: Salvaged or used parts Major body clips or assemblies from salvage vehicles Aftermarket structural or body components Salvaged or reconditioned wheels Used Supplemental Restraint System (SRS) components air bags restraint system modules safety belts, buckles or retractors crash sensors Returning a vehicle to pre-accident condition can only be assured if repair procedures are carried out by skilled technicians using new genuine Ford parts and Ford-approved methods. Structural component repair procedures approved by Ford, using genuine Ford parts, have been validated by Ford Motor Company engineers. Ford Motor Company does not endorse, cannot attest to, and makes no representations regarding structural repairs (frames, rails, aprons and body panels) carried out using non-genuine Ford Motor Company parts or non-Ford-approved methods. In particular, Ford makes no representations that the vehicle will meet any crash safety or anti-corrosion performance requirement. Such parts and methods have not been tested by Ford, and may not meet Ford's requirements for safety, performance, strength, quality, durability and corrosion protection. Ford Motor Company bears no responsibility or liability of any kind if repairs are performed using alternative structural component repair procedures and/or parts.

The body consists of the following:

- High-Strength Low Alloy (HSLA), high-strength, ultra high strength steel (UHSS) and mild steels
- Roof outer panel constructed of mild steel
- Steel hood
- Steel luggage compartment lid
- Body side outer panels constructed of mild steel
- DP (Dual Phase Steel) in select body structure components
- Bolted, removable front fenders, hinged doors and hood
- Dent resistant steel fenders
- Ultra high-strength steel rear bumper beam
- Front and rear subframe assemblies housing suspension and steering components
- Underbody components constructed of mild, dual-phase and high-strength steels
- Mastic pads used on floor pan for sound deadening

Body Dimensions

Body Margins - Front Panels

NOTE: *Unless otherwise indicated, margin dimensions apply to Right Hand (RH) and Left Hand (LH) side of vehicle.*

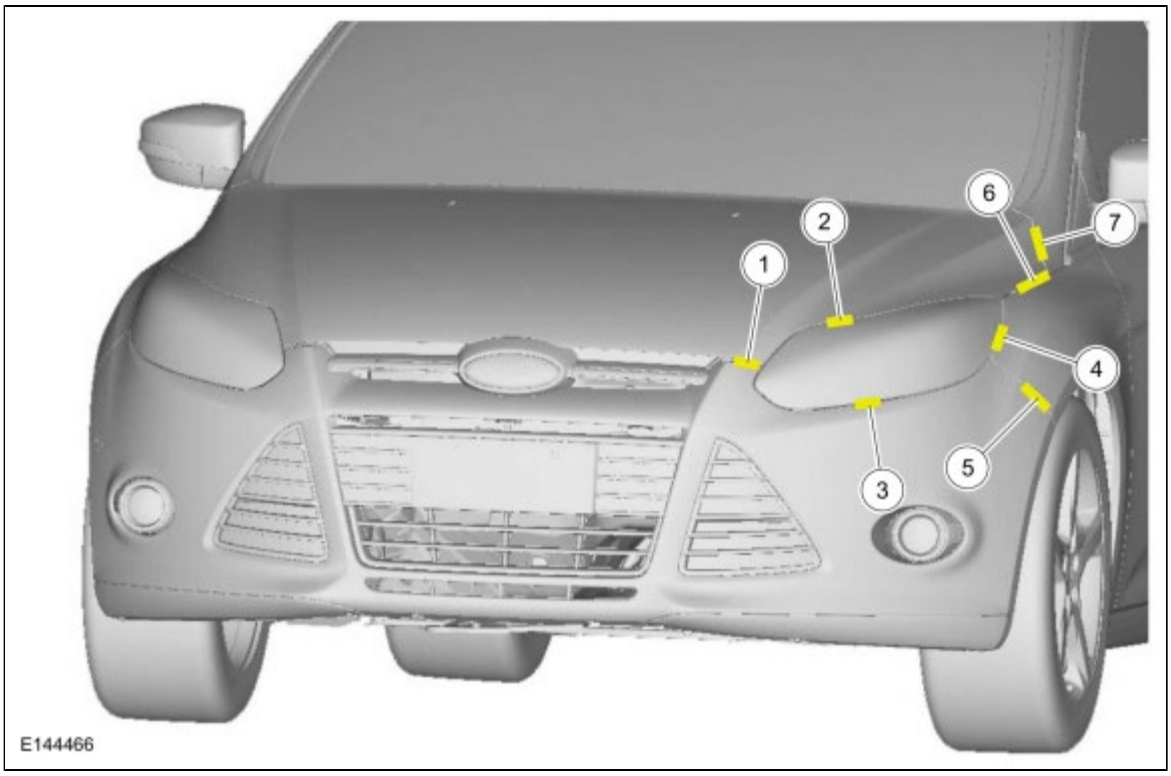

Item	Description	Margin Specification	Flushness Specification
1	Hood to fascia	0.2362 ± 0.0787 in (6 ± 2 mm)	0.0394 ± 0.0591 in (1 ± 1.5 mm)
2	Headlamp to hood	3.5 mm (0.1378 in) ± 1.5 mm (0.0591 in)	1.5 mm (0.0591 in) ± 1.5 mm (0.0591 in)
3	Headlamp to fascia	2.5 mm (0.0984 in) ± 1.9 mm (0.0748 in)	-
4	Headlamp to fender	2.5 mm (0.0984 in) ± 1.5 mm (0.0591 in)	1.5 mm (0.0591 in) ± 1.5 mm (0.0591 in)
5	Fender to fascia	-	0 mm (0 in) ± 0.7 mm (0.0276 in)
6	Fender to hood	3.5 mm (0.1378 in) ± 1.5 mm (0.0591 in)	3.5 mm (0.1378 in) ± 1.5 mm (0.0591 in)
7	Hood to A-pillar	3.5 mm (0.1378 in) ± 1.5 mm (0.0591 in)	0.2 mm (0.0079 in) ± 1 mm (0.0394 in)

Body Margins - Side Panels, 4-Door Sedan

NOTE: *Unless otherwise indicated, margin dimensions apply to Right Hand (RH) and Left Hand (LH) side of vehicle.*

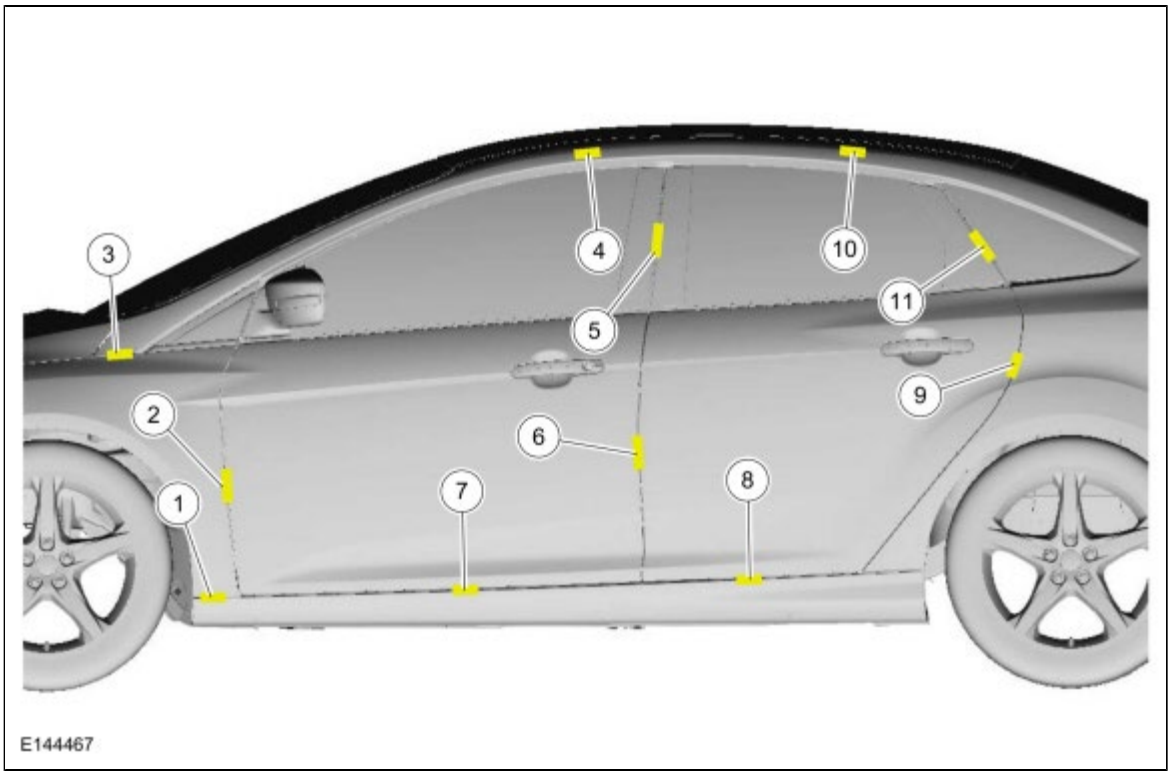

Item	Description	Margin Specification	Flushness Specification
1	Fender to rocker panel	6 mm (0.2362 in) ± 1.5 mm (0.0591 in)	-
2	Fender to door	4 mm (0.1575 in) ± 1.5 mm (0.0591 in)	1 mm (0.0394 in) ± 1 mm (0.0394 in)
3	Fender to A-pillar	3.5 mm (0.1378 in) ± 1.5 mm (0.0591 in)	-
4	Front door to body side	4 mm (0.1575 in) ± 1.5 mm (0.0591 in)	2.5 mm (0.0984 in) ± 1 mm (0.0394 in)
5	Front door to rear door - upper	4 mm (0.1575 in) ± 1.5 mm (0.0591 in)	0 mm (0 in) ± 1 mm (0.0394 in)
6	Front door to rear door - lower	4 mm (0.1575 in) ± 1.5 mm (0.0591 in)	4 mm (0.1575 in) ± 1.5 mm (0.0591 in)
7	Front door to rocker panel	5.3 mm (0.2087 in) ± 1.5 mm (0.0591 in)	8.2 mm (0.3228 in) ± 1.5 mm (0.0591 in)
8	Rear door to rocker panel	5.3 mm (0.2087 in) ± 1.5 mm (0.0591 in)	8.2 mm (0.3228 in) ± 1.5 mm (0.0591 in)
9	Rear door to quarter panel	4 mm (0.1575 in) ± 1.5 mm (0.0591 in)	0 mm (0 in) ± 1 mm (0.0394 in)
10	Rear door to body side	4 mm (0.1575 in) ± 1.5 mm (0.0591 in)	2.5 mm (0.0984 in) ± 1 mm (0.0394 in)
11	C-pillar applique to quarter glass	4.5 mm (0.1772 in) ± 1.5 mm (0.0591 in)	1.5 mm (0.0591 in) ± 1 mm (0.0394 in)

Body Margins - Side Panels, 5-Door Hatchback

NOTE: *Unless otherwise indicated, margin dimensions apply to Right Hand (RH) and Left Hand (LH) side of vehicle.*

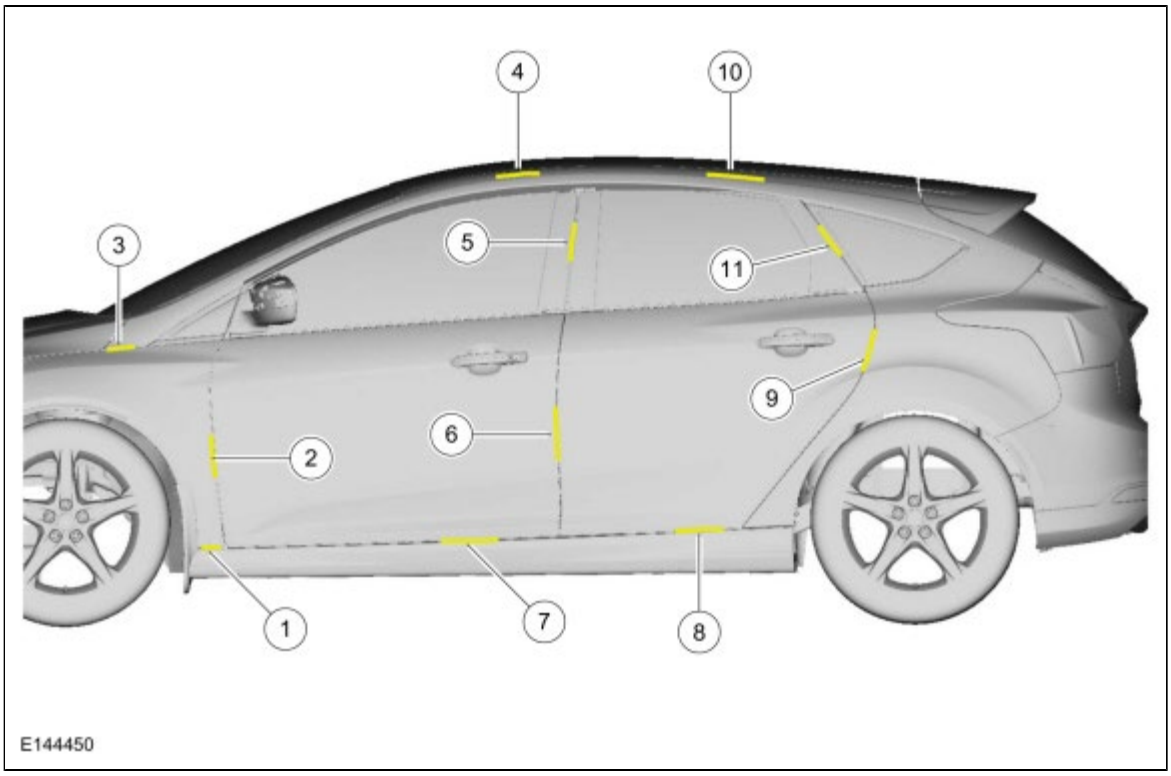

Item	Description	Margin Specification	Flushness Specification
1	Fender to rocker panel	6 mm (0.2362 in) ± 1.5 mm (0.0591 in)	-
2	Fender to door	4 mm (0.1575 in) ± 1.5 mm (0.0591 in)	1 mm (0.0394 in) ± 1 mm (0.0394 in)
3	Fender to A-pillar	3.5 mm (0.1378 in) ± 1.5 mm (0.0591 in)	-
4	Front door to body side	4 mm (0.1575 in) ± 1.5 mm (0.0591 in)	2.5 mm (0.0984 in) ± 1 mm (0.0394 in)
5	Front door to rear door - upper	4 mm (0.1575 in) ± 1.5 mm (0.0591 in)	0 mm (0 in) ± 1 mm (0.0394 in)
6	Front door to rear door - lower	4 mm (0.1575 in) ± 1.5 mm (0.0591 in)	4 mm (0.1575 in) ± 1.5 mm (0.0591 in)
7	Front door to rocker panel	5.3 mm (0.2087 in) ± 1.5 mm (0.0591 in)	8.2 mm (0.3228 in) ± 1.5 mm (0.0591 in)
8	Rear door to rocker panel	5.3 mm (0.2087 in) ± 1.5 mm (0.0591 in)	8.2 mm (0.3228 in) ± 1.5 mm (0.0591 in)
9	Rear door to quarter panel	4 mm (0.1575 in) ± 1.5 mm (0.0591 in)	0 mm (0 in) ± 1 mm (0.0394 in)
10	Rear door to body side	4 mm (0.1575 in) ± 1.5 mm (0.0591 in)	2.5 mm (0.0984 in) ± 1 mm (0.0394 in)
11	C-pillar applique to quarter glass	4.5 mm (0.1772 in) ± 1.5 mm (0.0591 in)	1.5 mm (0.0591 in) ± 1 mm (0.0394 in)

Body Margins - Rear Panels, 4-Door Sedan

NOTE: *Unless otherwise indicated, margin dimensions apply to Right Hand (RH) and Left Hand (LH) side of vehicle.*

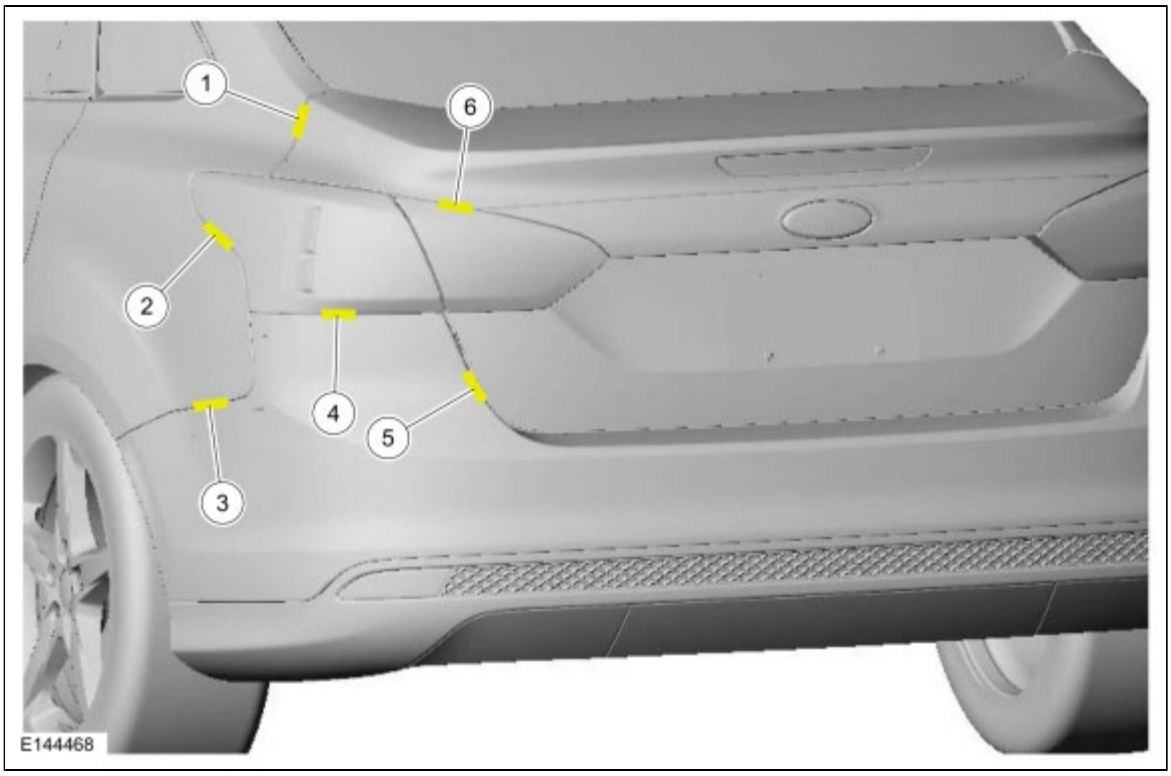

Item	Description	Margin Specification	Flushness Specification
1	Luggage compartment lid to body side	4.5 mm (0.1772 in) ± 1.5 mm (0.0591 in)	-1.5 mm (-0.0591 in) ± 1.4 mm (0.0551 in)
2	Tail lamp to body side	1.5 mm (0.0591 in) ± 1.4 mm (0.0551 in)	1.5 mm (0.0591 in) ± 1.4 mm (0.0551 in)
3	Body side to rear fascia	0 mm (0 in) ± 0.5 mm (0.0197 in)	0 mm (0 in) ± 0.7 mm (0.0276 in)
4	Tail lamp to rear fascia	2.2 mm (0.0866 in) ± 1.4 mm (0.0551 in)	1.5 mm (0.0591 in) ± 1.4 mm (0.0551 in)
5	Luggage compartment lid to rear fascia	6 mm (0.2362 in) ± 2 mm (0.0787 in)	-
6	Rear redundant lamp to luggage compartment lid	1.5 mm (0.0591 in) ± 1.4 mm (0.0551 in)	0 mm (0 in) ± 0.7 mm (0.0276 in)

Body Margins - Rear Panels, 5-Door Hatchback

NOTE: *Unless otherwise indicated, margin dimensions apply to Right Hand (RH) and Left Hand (LH) side of vehicle.*

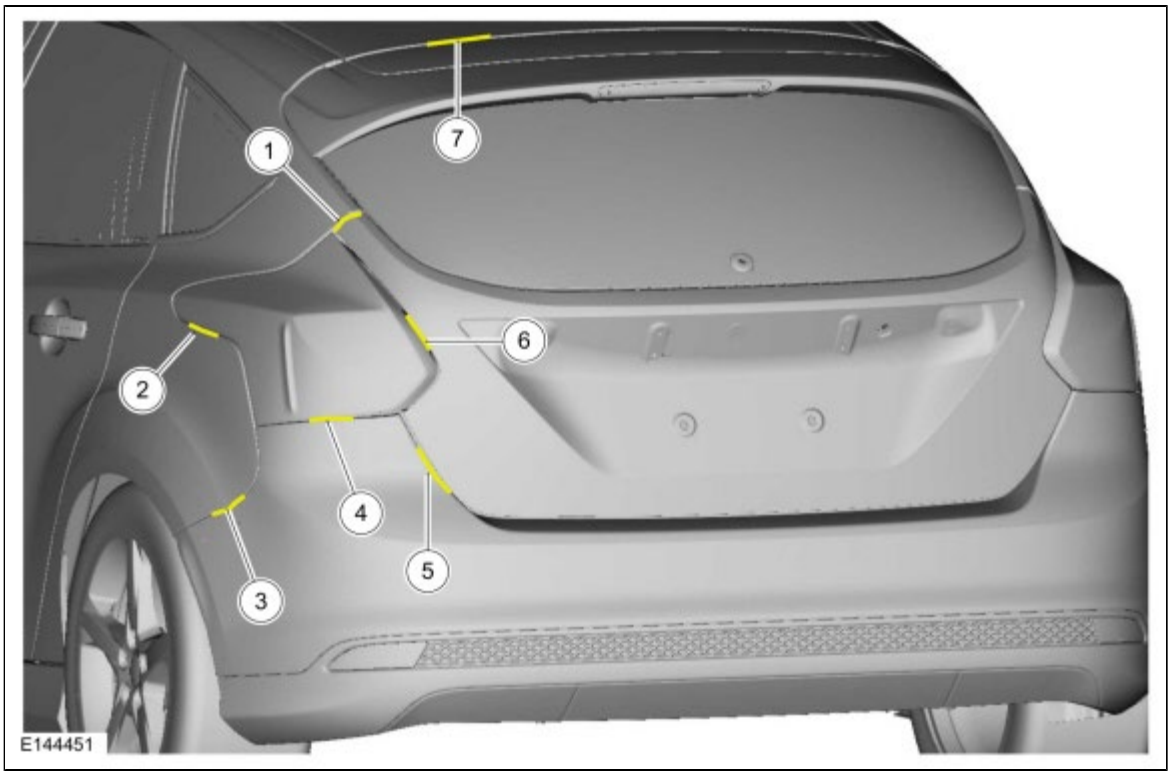

Item	Description	Margin Specification	Flushness Specification
1	Liftgate to body side	3.5 mm (0.1378 in) ± 1.5 mm (0.0591 in)	-1.5 mm (-0.0591 in) ± 1.4 mm (0.0551 in)
2	Tail lamp to body side	4.2 mm (0.1654 in) ± 1.4 mm (0.0551 in)	4.2 mm (0.1654 in) ± 1.4 mm (0.0551 in)
3	Body side to rear fascia	0 mm (0 in) ± 0.5 mm (0.0197 in)	0 mm (0 in) ± 0.7 mm (0.0276 in)
4	Tail lamp to rear fascia	2 mm (0.0787 in) ± 1.7 mm (0.0669 in)	1.5 mm (0.0591 in) ± 1.7 mm (0.0669 in)
5	Liftgate to rear fascia	6 mm (0.2362 in) ± 2 mm (0.0787 in)	-
6	Tail lamp to liftgate	4 mm (0.1575 in) ± 1.7 mm (0.0669 in)	0.2 mm (0.0079 in) ± 1.7 mm (0.0669 in)
7	Liftgate to roof	7 mm (0.2756 in) ± 1 mm (0.0394 in)	-1.5 mm (-0.0591 in) ± 1.4 mm (0.0551 in)

Under Hood Dimensions

NOTE: *All measurements are on center unless otherwise indicated.*

NOTE: *Dimensions apply to both 4-door and 5-door models.*

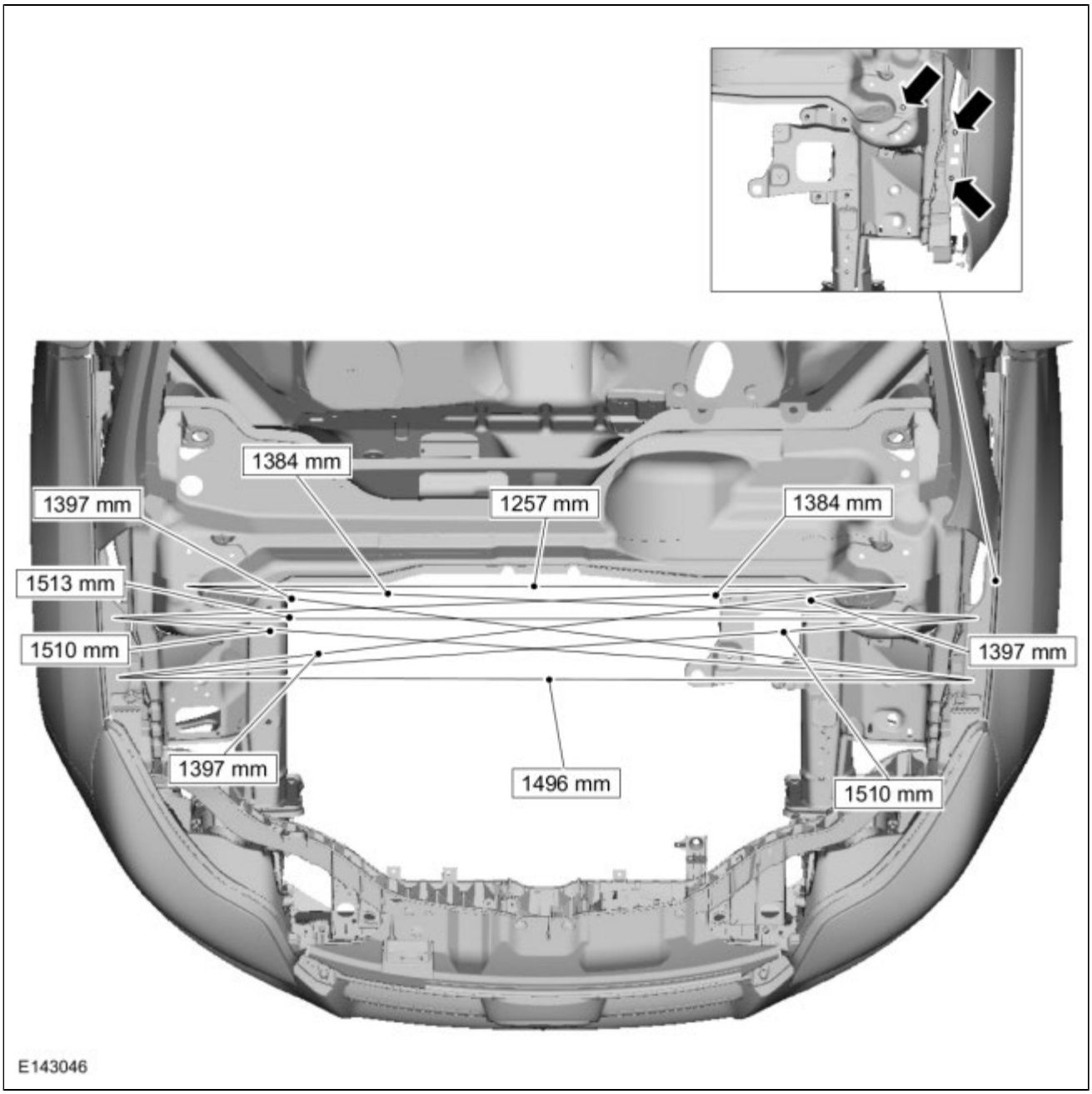

Front Door Opening Dimensions

NOTE: *All measurements are on center unless otherwise indicated.*

NOTE: *Dimensions apply to both 4-door and 5-door models.*

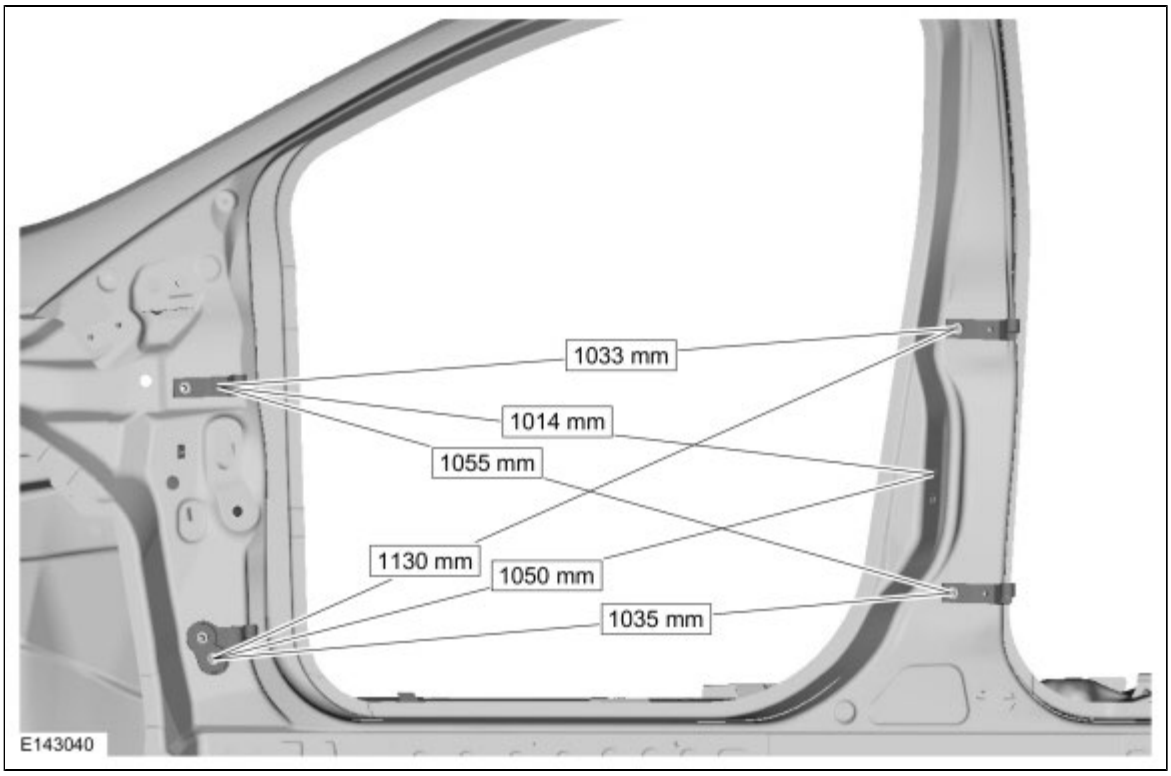

Rear Door Opening Dimensions

NOTE: *All measurements are on center unless otherwise indicated.*

NOTE: *Dimensions apply to both 4-door and 5-door models.*

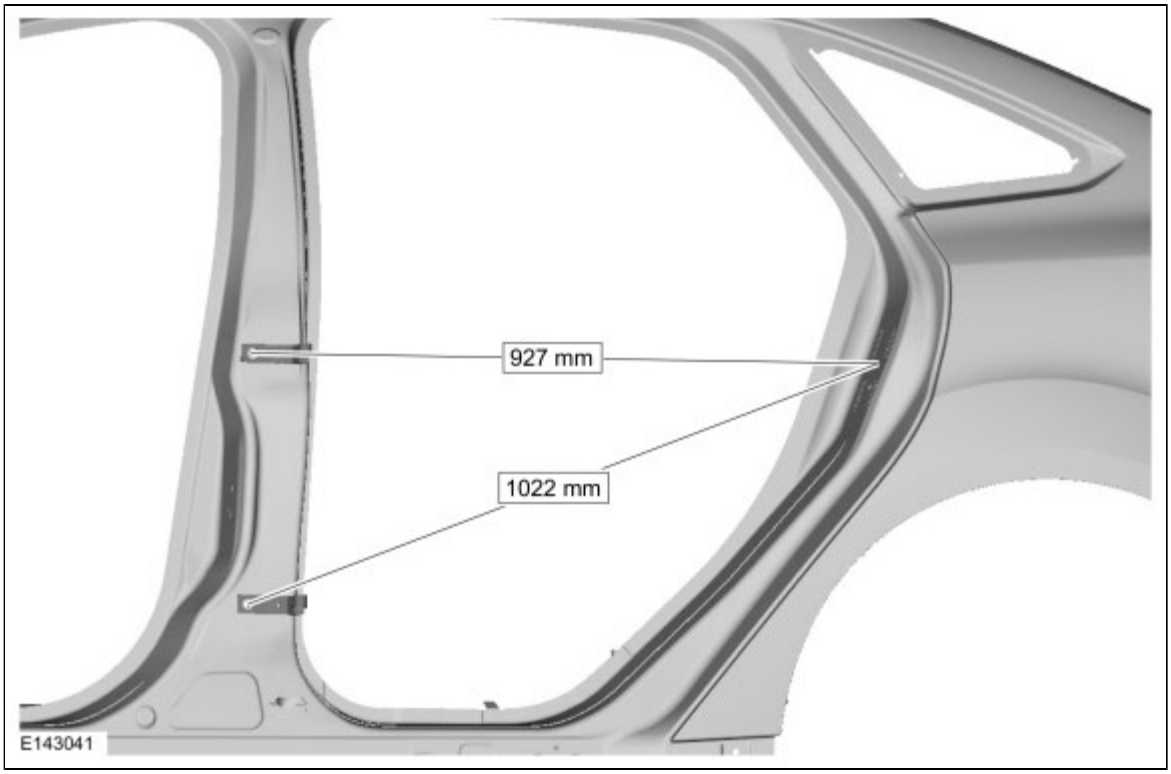

Luggage Compartment Opening Dimensions - 4-Door Sedan

NOTE: *Upper measurement taken from center of top weatherstrip flange all measurements are on center.*

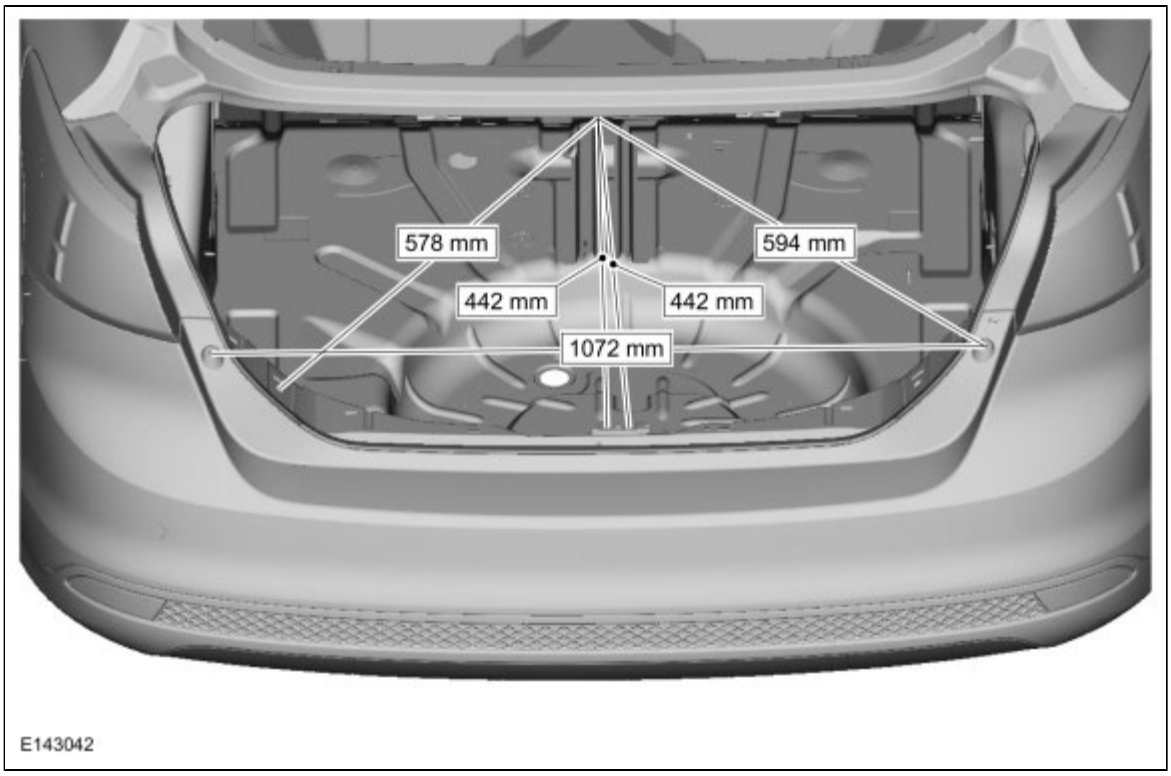

Luggage Compartment Opening Dimensions - 5-Door Hatchback

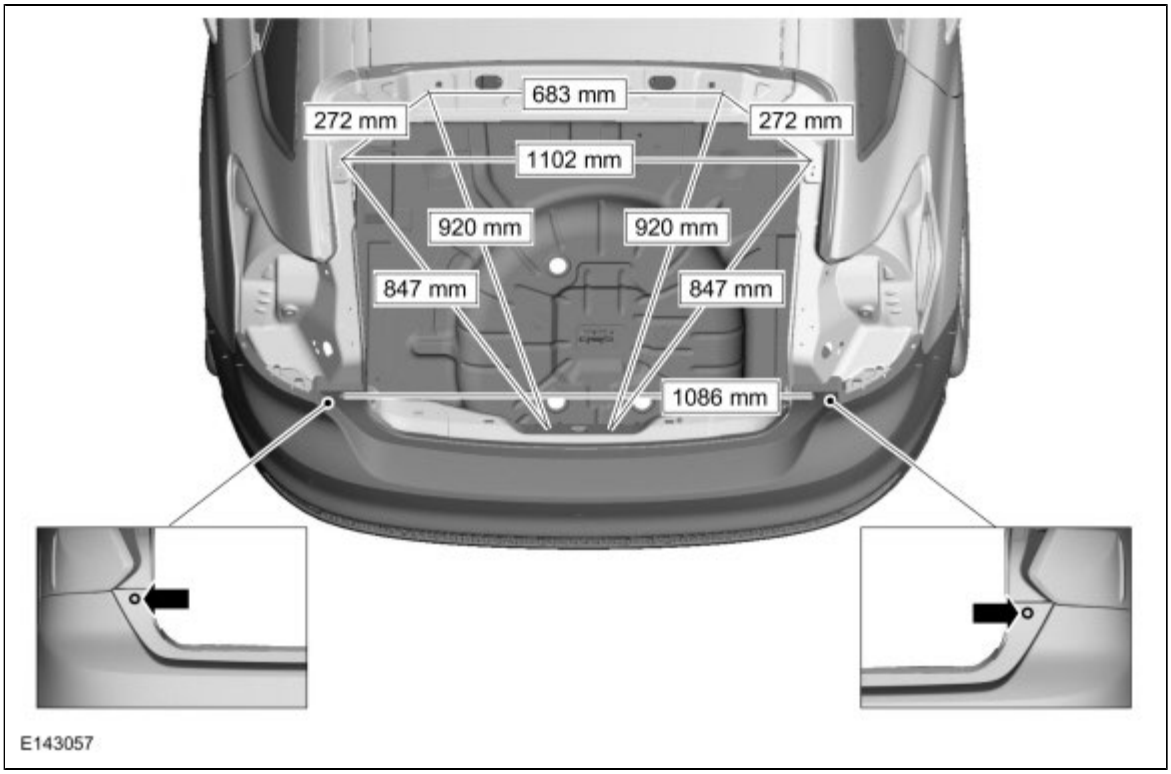

Under Body Measurements - 4-Door Sedan

NOTE: *All measurements are on center unless otherwise indicated.*

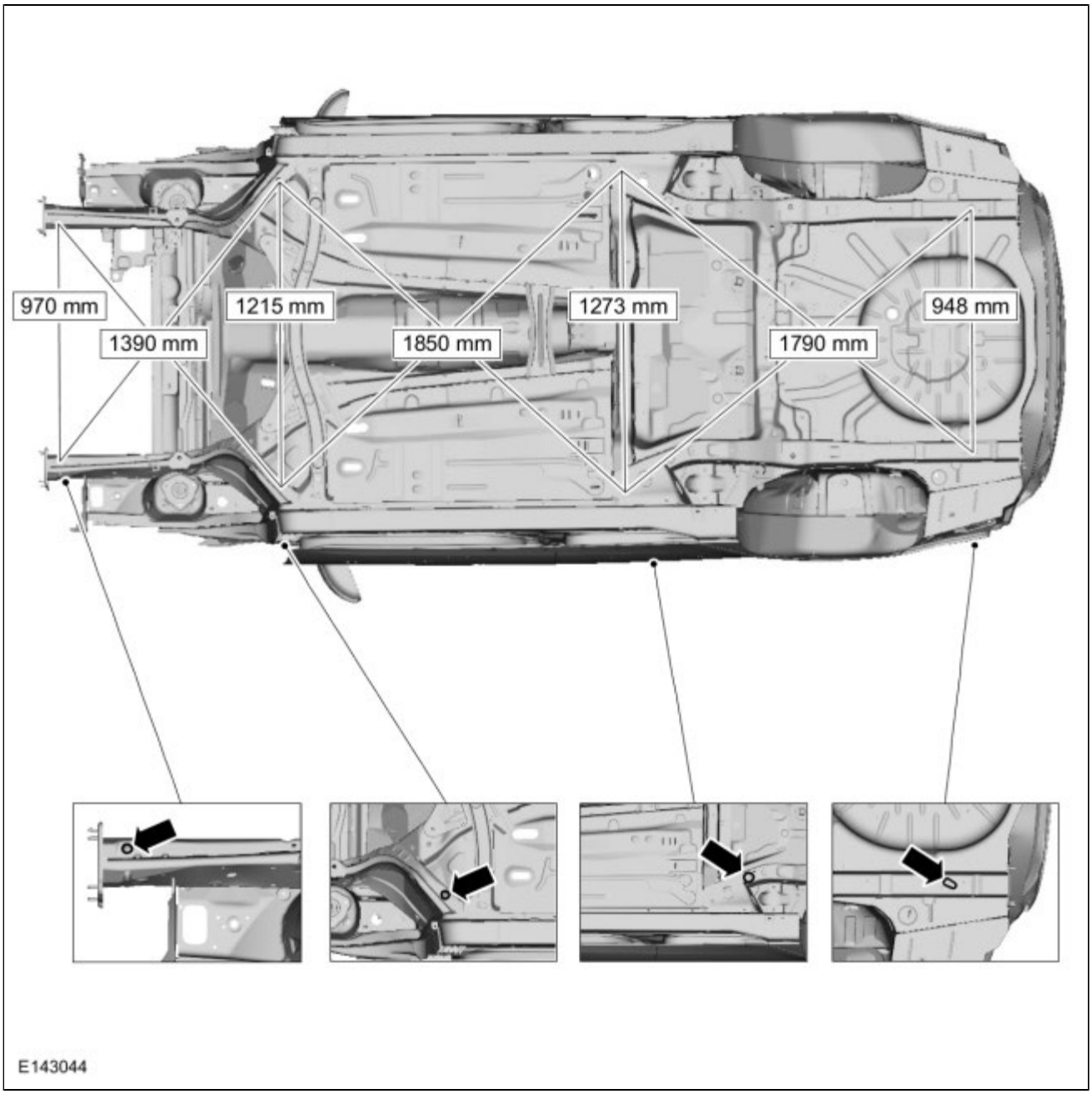

Datum Height Dimensions - 4-Door Sedan

NOTE: *Second measurement is from the top of strut tower. Last measurement taken from the bottom of the hole indicated. All other measurements are on center.*

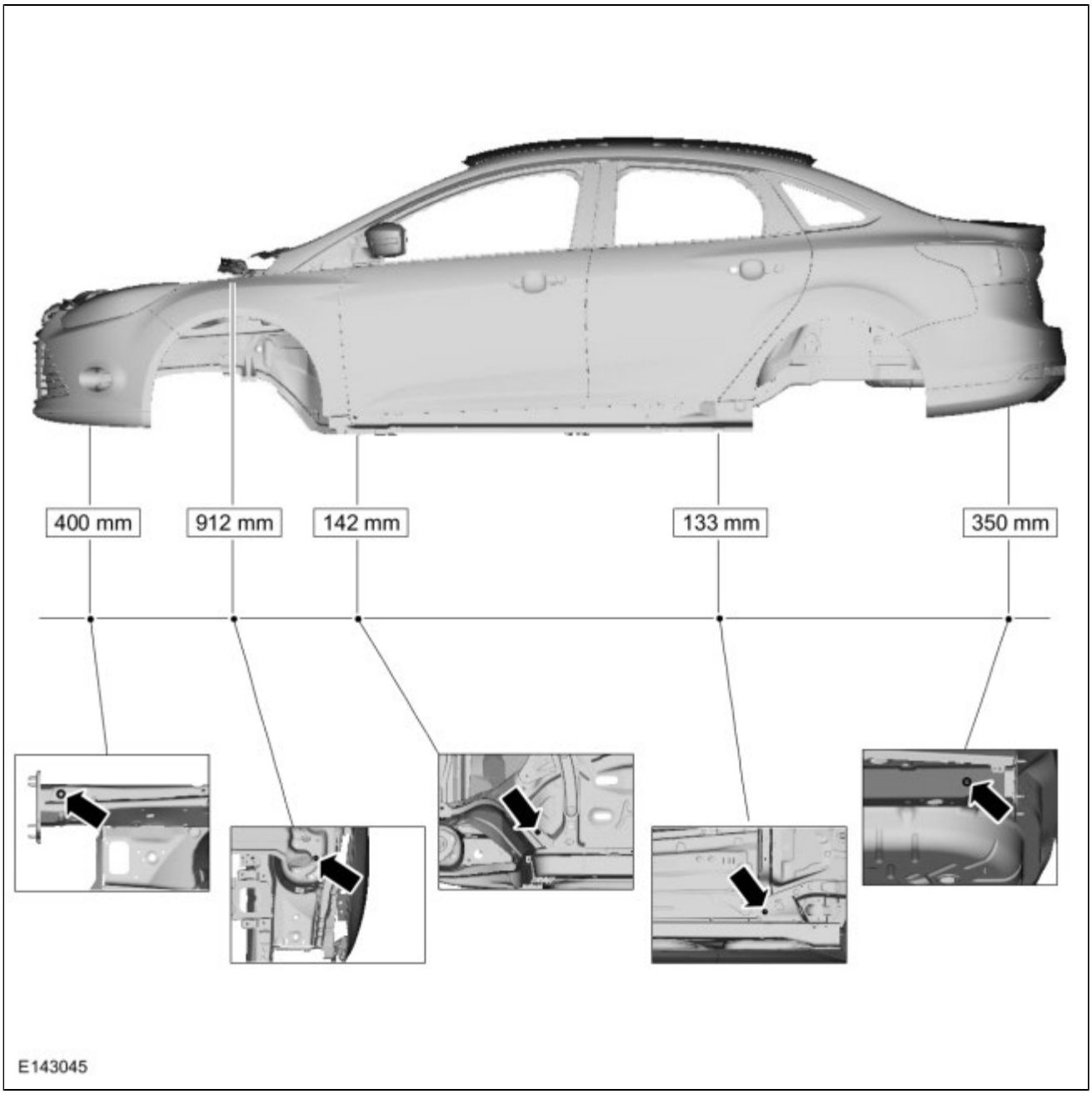

Under Body Measurements - 5-Door Hatchback

NOTE: *All measurements are on center unless otherwise indicated.*

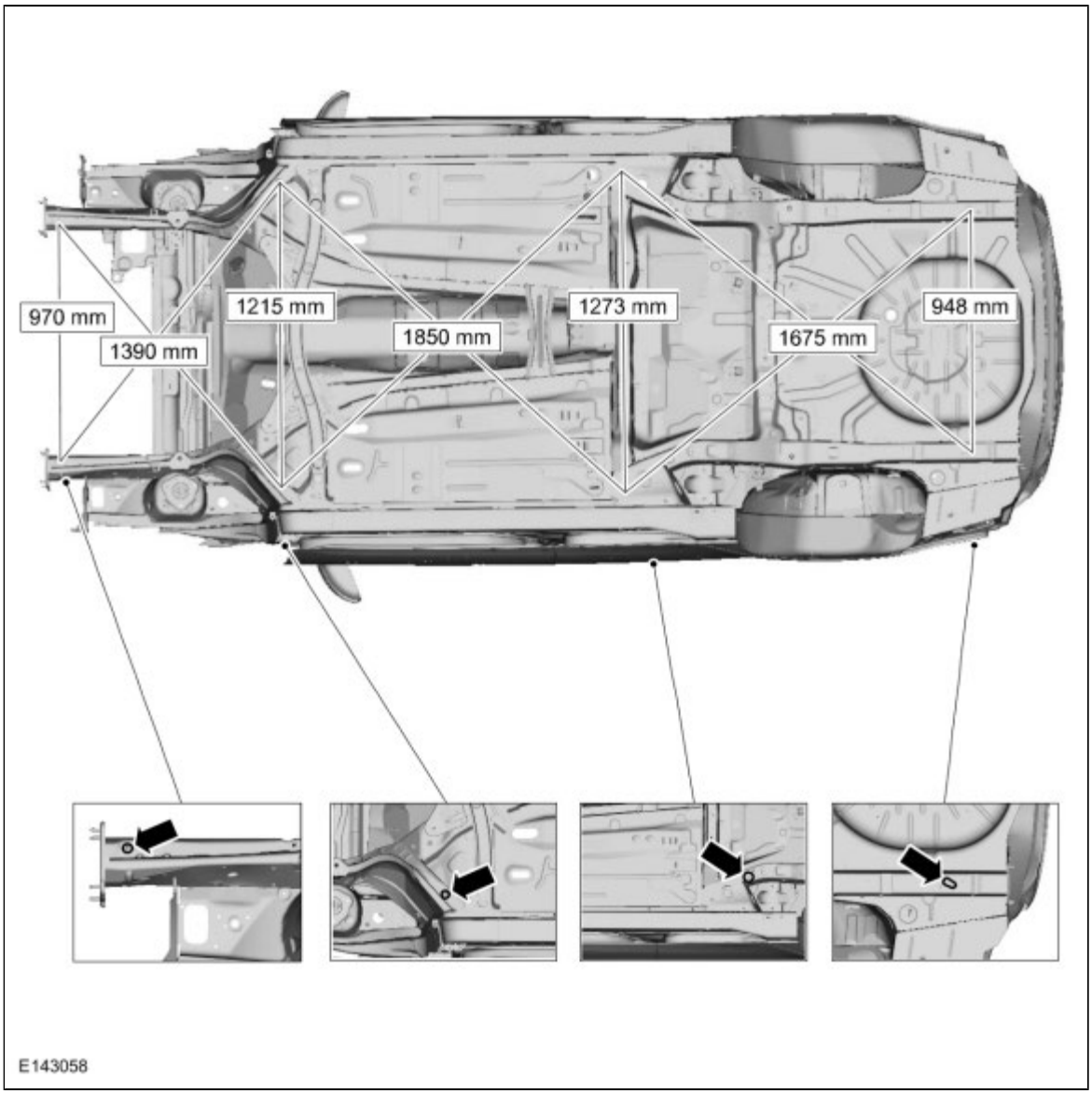

Datum Height Dimensions - 5-Door Hatchback

NOTE: *Second measurement is from the top of strut tower. Last measurement taken from the bottom of the hole indicated. All other measurements are on center.*

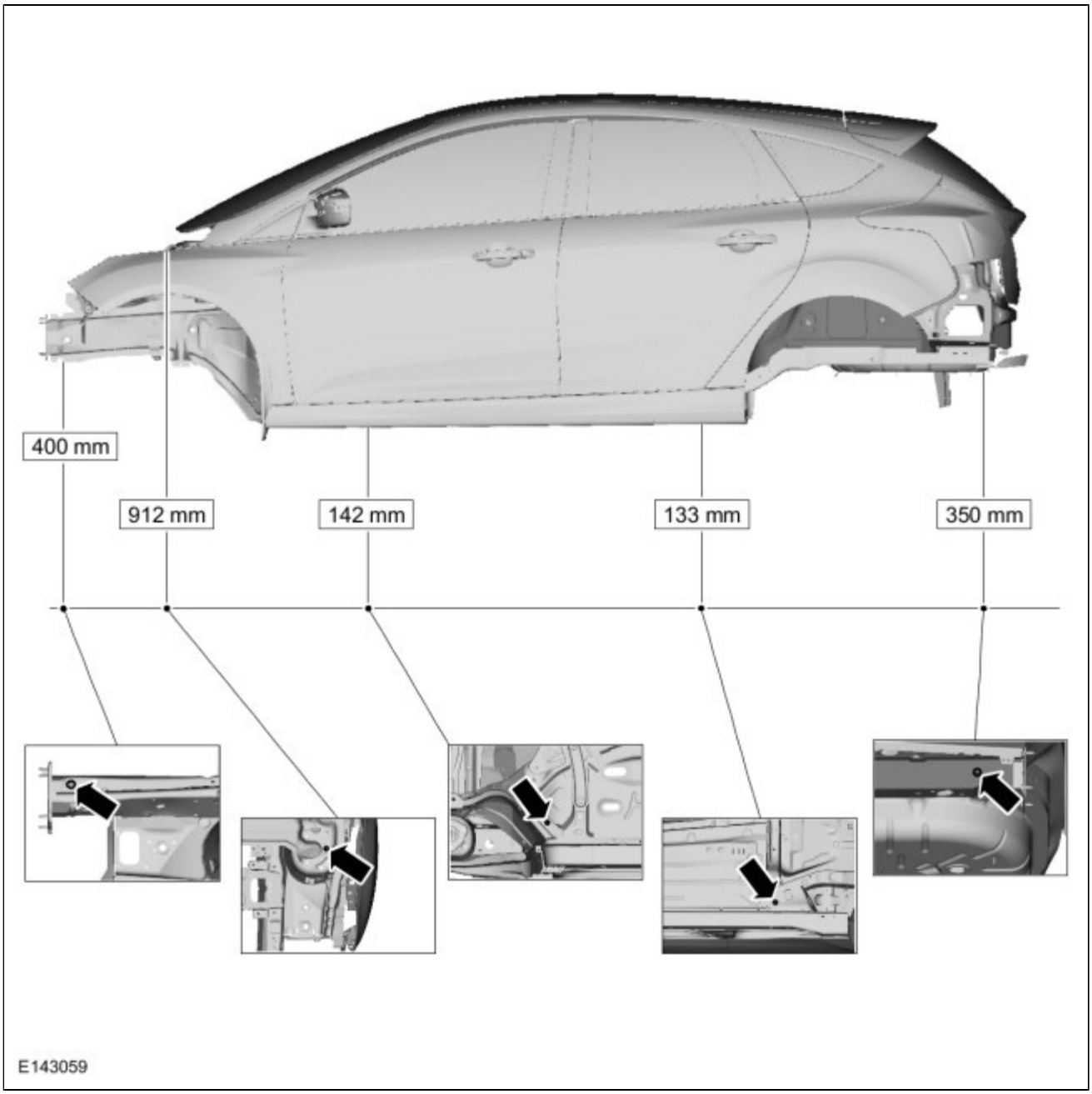

Body Side Replacement Panels

Before beginning repair of any steel body component, see the Ford recommended repair matrix.
For additional information, refer to: Specifications (501-25 Body Repairs - General Information, Specifications).

Steel Type Legend

	Mild Steel	Green/yellow
	Bake Hardened - (BH 180, BH210, BH 250, BH 280)	Blue/red
	Solid Solution Strengthened	Yellow/orange
	High- Strength Low Alloy (HSLA)	Red/green
	Dual Phase (DP 500, DP 600)	Blue/green
	Dual Phase (DP 700, DP 780, DP 900)	Pink/orange
	Laminate Steel	Yellow/green
	Ultra High Strength Steel (UHSS) (Martensitic, Boron)	Orange/green
	Transformation Induced Plasticity (TRIP 590, TRIP 780, TRIP 980)	Blue/orange

E144669

4-Door Sedan

NOTE: *Left Hand (LH) side shown, right hand (RH) side similar.*

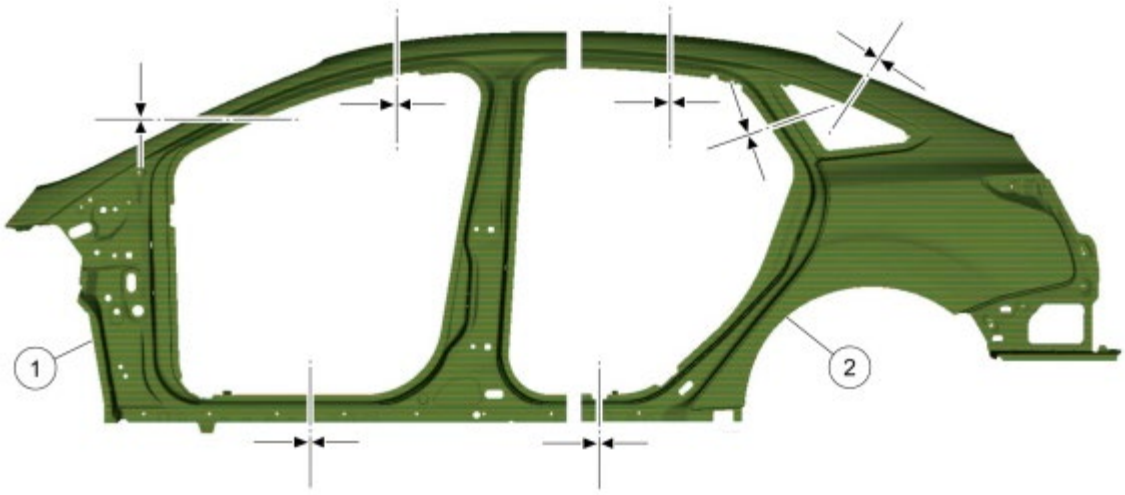

E143064

Item	Part Number	Description
1	58211A10 (RH)	Front door frame outer - mild steel
1	58211A11 (LH)	Front door frame outer - mild steel
2	5427840 (RH)	Quarter panel outer - mild steel
2	5427841 (LH)	Quarter panel outer - mild steel

5-Door Hatchback

NOTE: *Left Hand (LH) side shown, right hand (RH) side similar.*

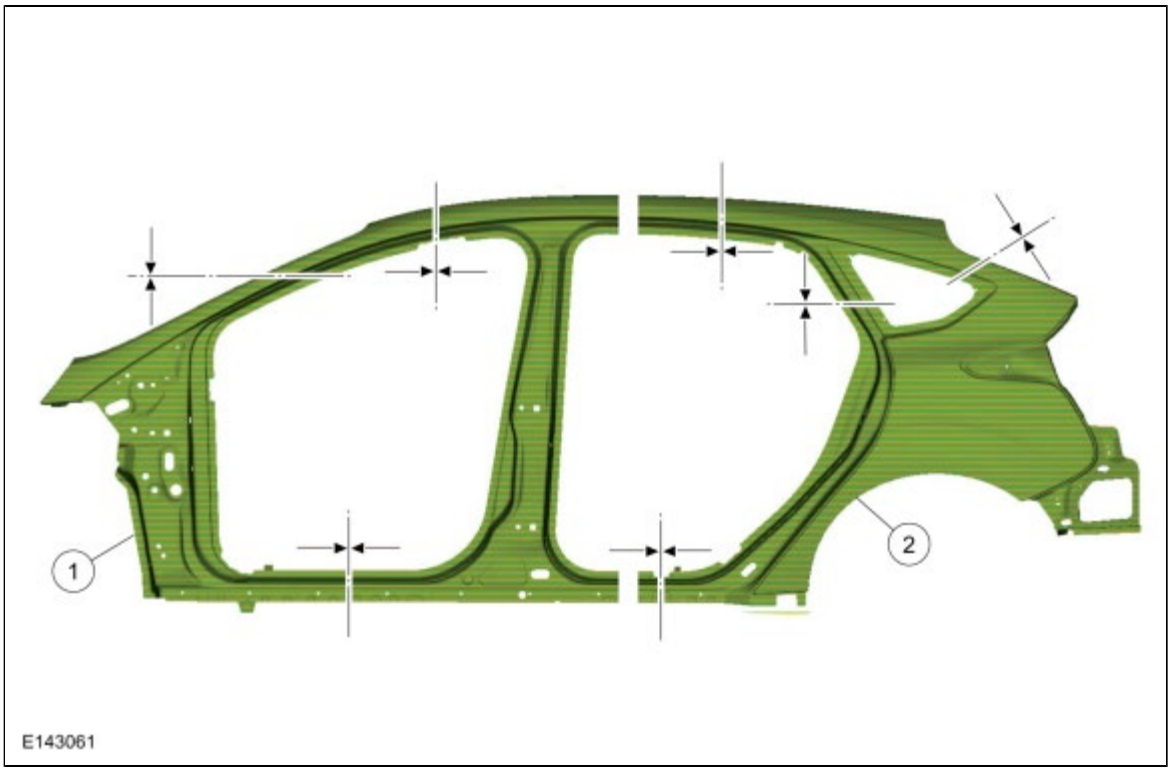

Item	Part Number	Description
1	58211A10 (RH)	Front door frame outer - mild steel
1	58211A11 (LH)	Front door frame outer - mild steel
2	5827840 (RH)	Quarter panel outer - mild steel
2	5827841 (LH)	Quarter panel outer - mild steel

Copyright © Ford Motor Company

Body Panel Sectioning

NOTICE: Do not begin removal of the vehicle body side until the replacement panel is available for reference.

1. **WARNING: Before beginning any service procedure in this section, REFER to Safety Warnings in section 100-00 General Information. Failure to follow this instruction may result in serious personal injury.**

   Refer to: Body Repair Health and Safety and General Precautions (100-00 General Information, Description and Operation).

2. Detrim the vehicle as necessary and remove spot welds from the damaged area.
   General Equipment : Spot weld drill Bit

3. Body side replacement panels are released as 2-part panels. Only remove as much of the body side as necessary.
   General Equipment : Air Body Saw
   General Equipment : Plasma Cutter

4. **NOTE:** *Use resistance spotwelding equipment where possible. This will produce a higher quality repair.*

   NOTE: *When welding overlapping surfaces or substrates, apply a high quality weld-through primer between the surfaces prior to welding.*

   Where possible, create a lap-joint backer plate using a portion of the old panel. This will create a stronger joint.
   General Equipment : Resistance Spotwelding Equipment
   General Equipment : MIG/MAG Welding Equipment

5. Rough finish all sectioning joints with a fibre-based body filler, final finish sectioning joints and plug welds with a conventional body filler.

6. Properly seal all horizontal joints to prevent moisture intrusion. Water and moisture migrate toward horizontal joints and corrosion tends to occur more rapidly in these areas.
   Material : Seam Sealer / TA-2

7. Proceed with the refinishing process using a Ford approved paint system and manufacturers recommendations.

8. Refer to: Corrosion Prevention (501-25 Body Repairs - General Information, General Procedures).

9. Reapply vehicle trim as necessary.

Copyright © Ford Motor Company

Front Side Member and Fender Apron Panel LH

Removal

NOTICE: No frame rail sectioning is allowed on this vehicle. Components must be replaced at the factory seams.

NOTICE: To assure correct fit, the vehicle must be dimensionally returned to a pre-accident condition before removal of any structural components.

NOTE: *Spot welds indicated in the following are intended as a reference only and are not intended for use as a weld quantity.*

NOTE: *Factory spot welds may be substituted by MIG (Metal Inert Gas) plug welds or STRW (Squeeze-Type Resistance Spot Welding). Welds must match factory spot welds in both location and quantity.*

NOTE: *Engine removed for clarity.*

1. **WARNING: Before beginning any service procedure in this section, REFER to Safety Warnings in section 100-00 General Information. Failure to follow this instruction may result in serious personal injury.**

   Refer to: Health and Safety Precautions (100-00 General Information, Description and Operation).

2. Dimensionally restore the vehicle to a pre-accident condition.
   Refer to: Body and Frame (501-26 Body Repairs - Vehicle Specific Information and Tolerance Checks, Description and Operation).

3. Refer to: Front Bumper (501-19 Bumpers, Removal and Installation).

4. Refer to: Fender (501-02 Front End Body Panels, Removal and Installation).

5. Refer to: Battery (414-01 Battery, Mounting and Cables, Removal and Installation).

6. *General Equipment* : Spot weld drill Bit

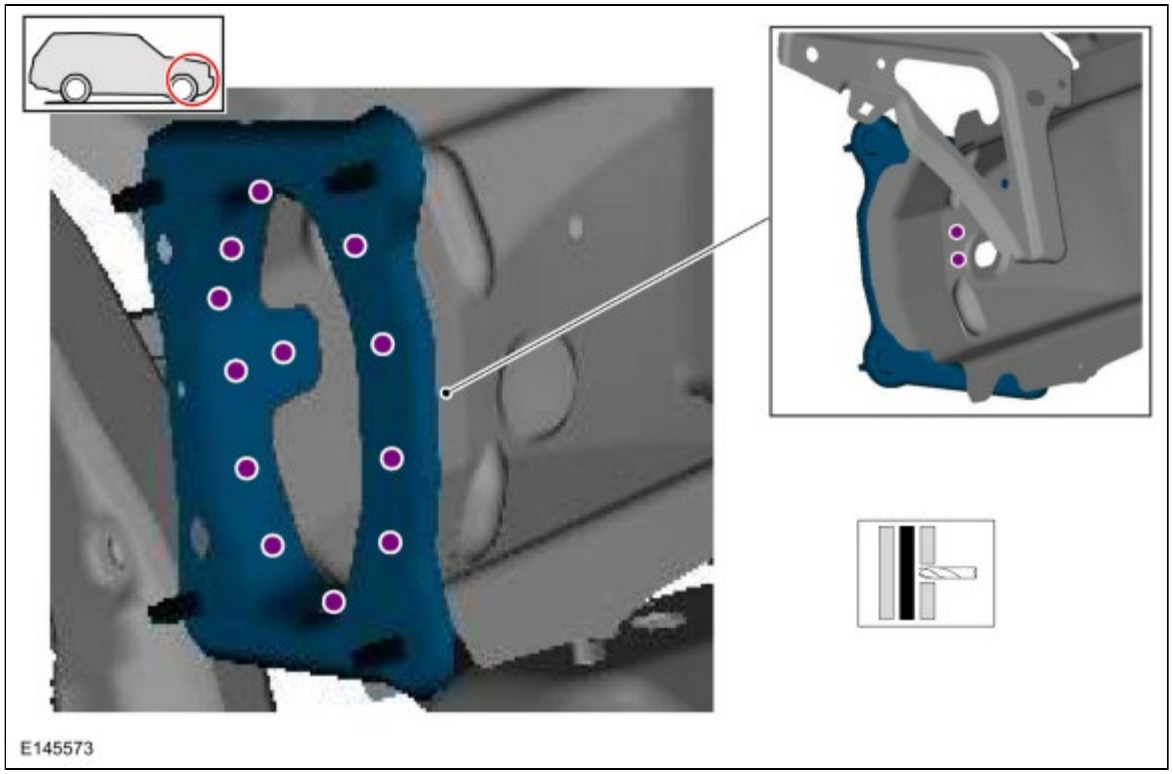

7. *General Equipment* : Spot weld drill Bit

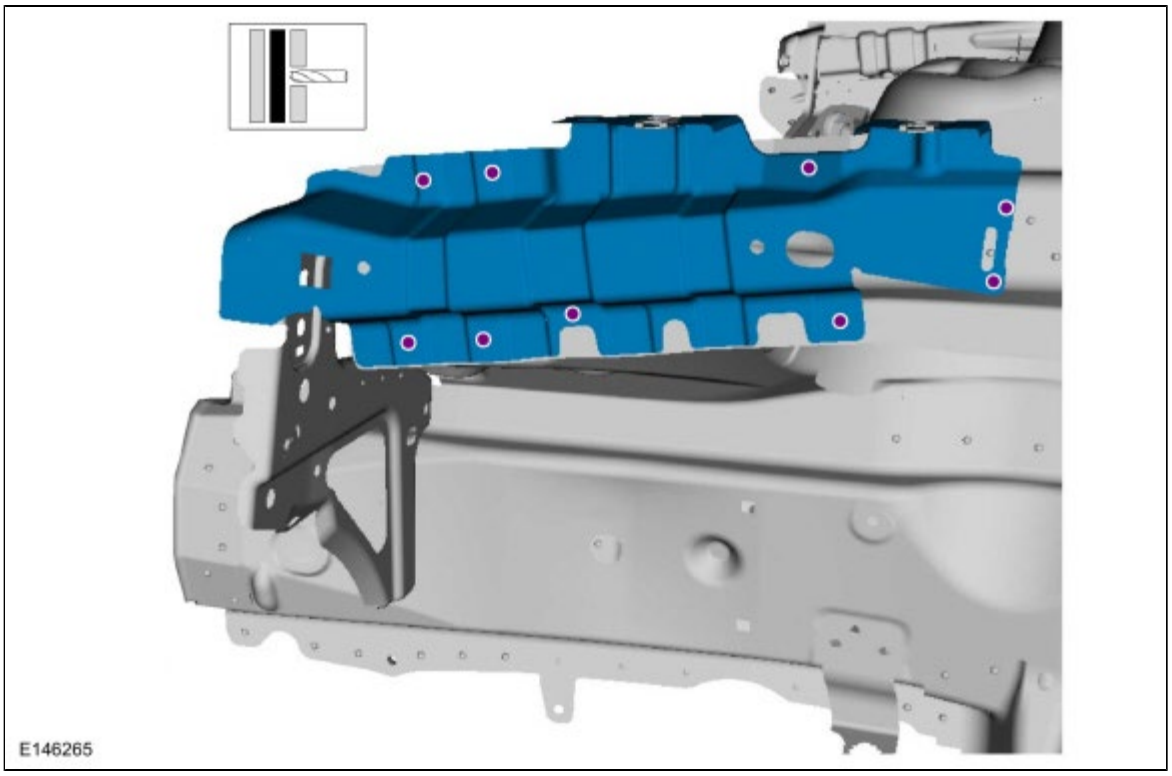

8. *General Equipment* : Spot weld drill Bit

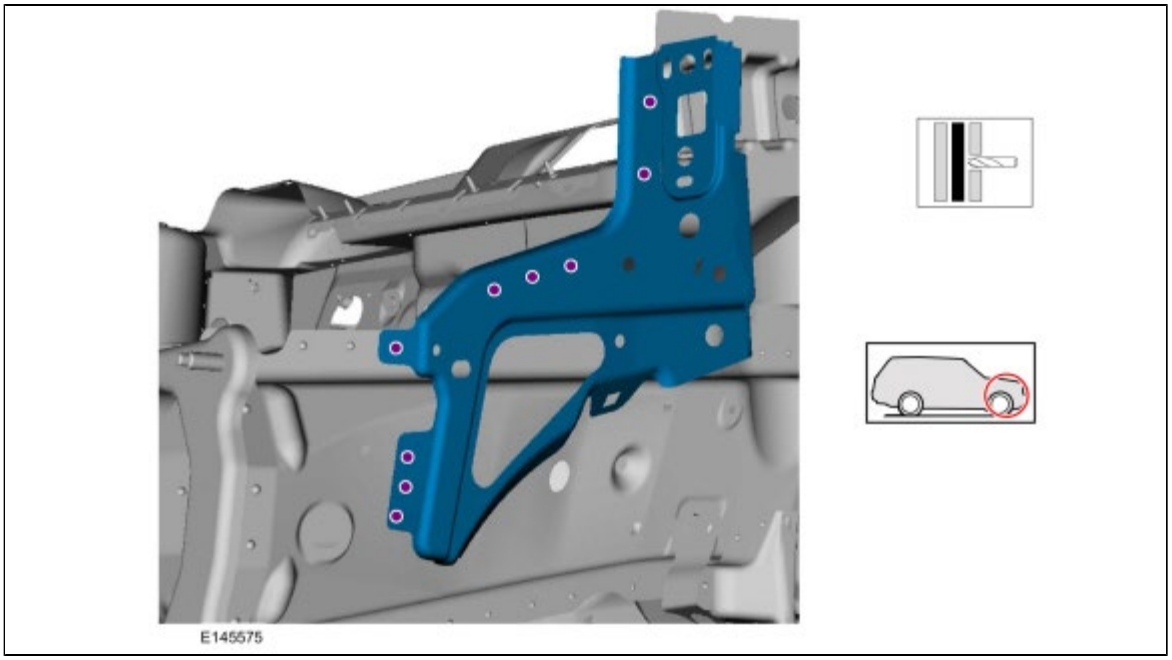

9. *General Equipment* : Spot weld drill Bit

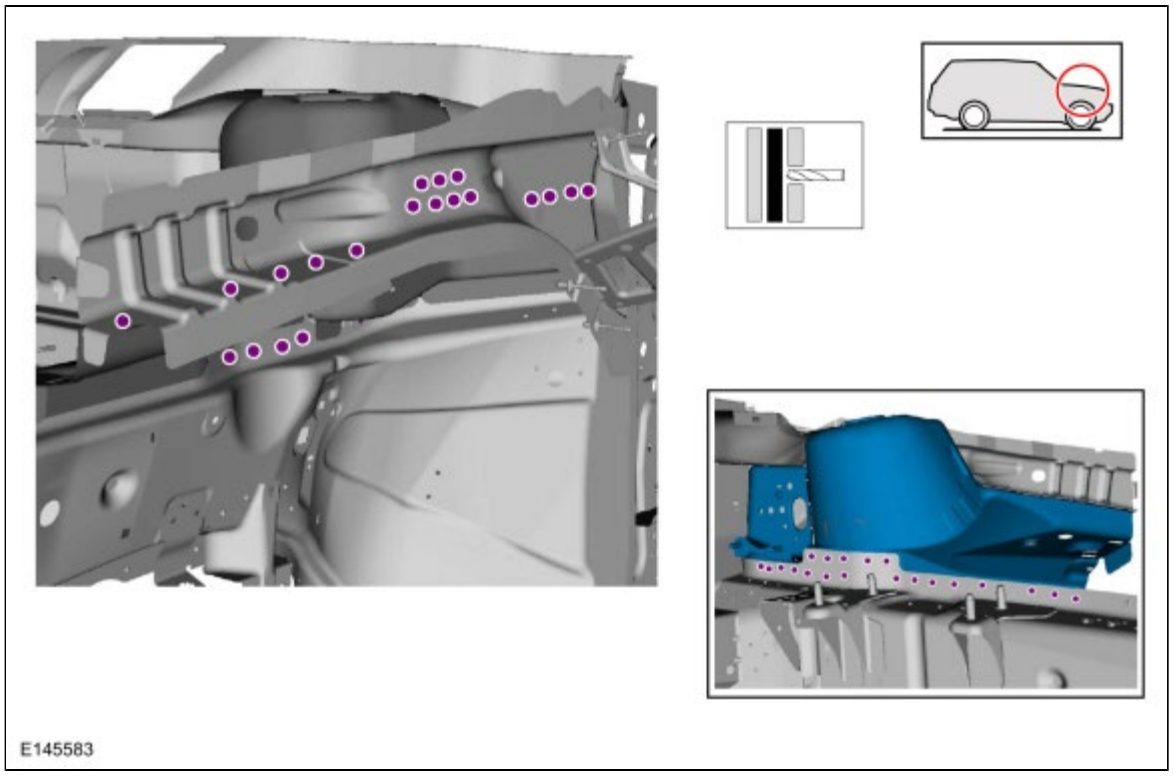

10. *General Equipment* : Spot weld drill Bit

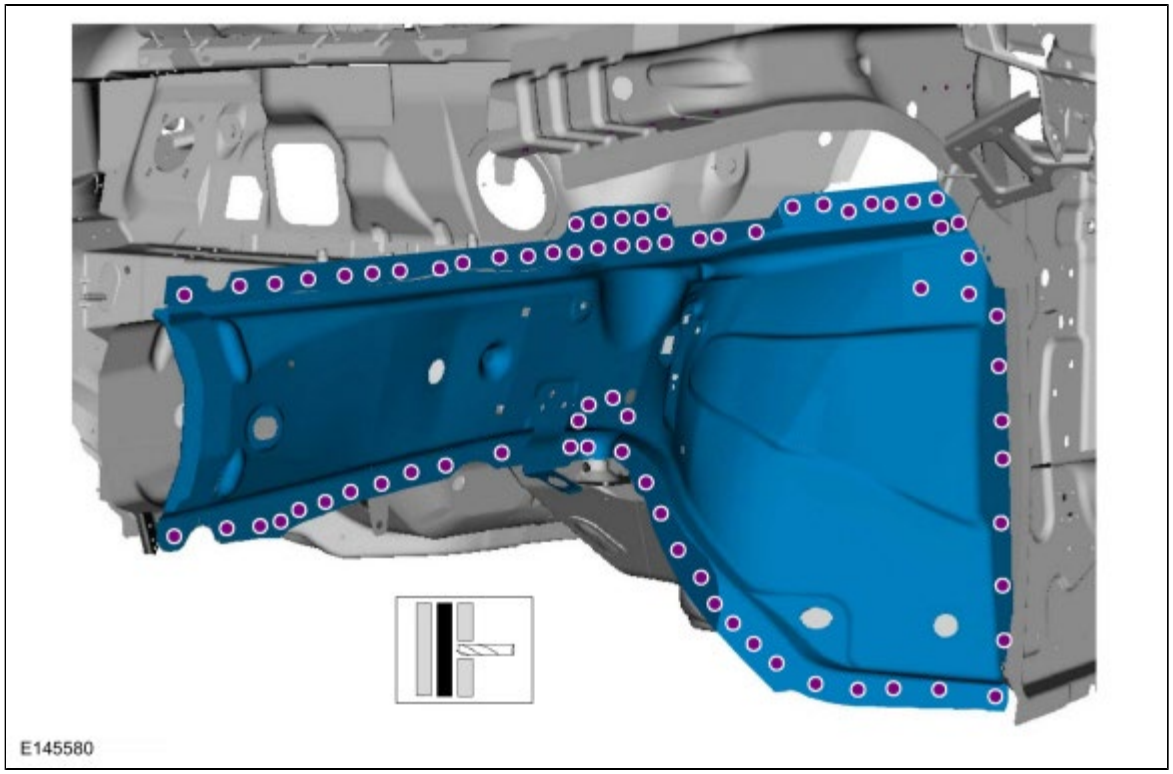

11. *General Equipment* : Spot weld drill Bit

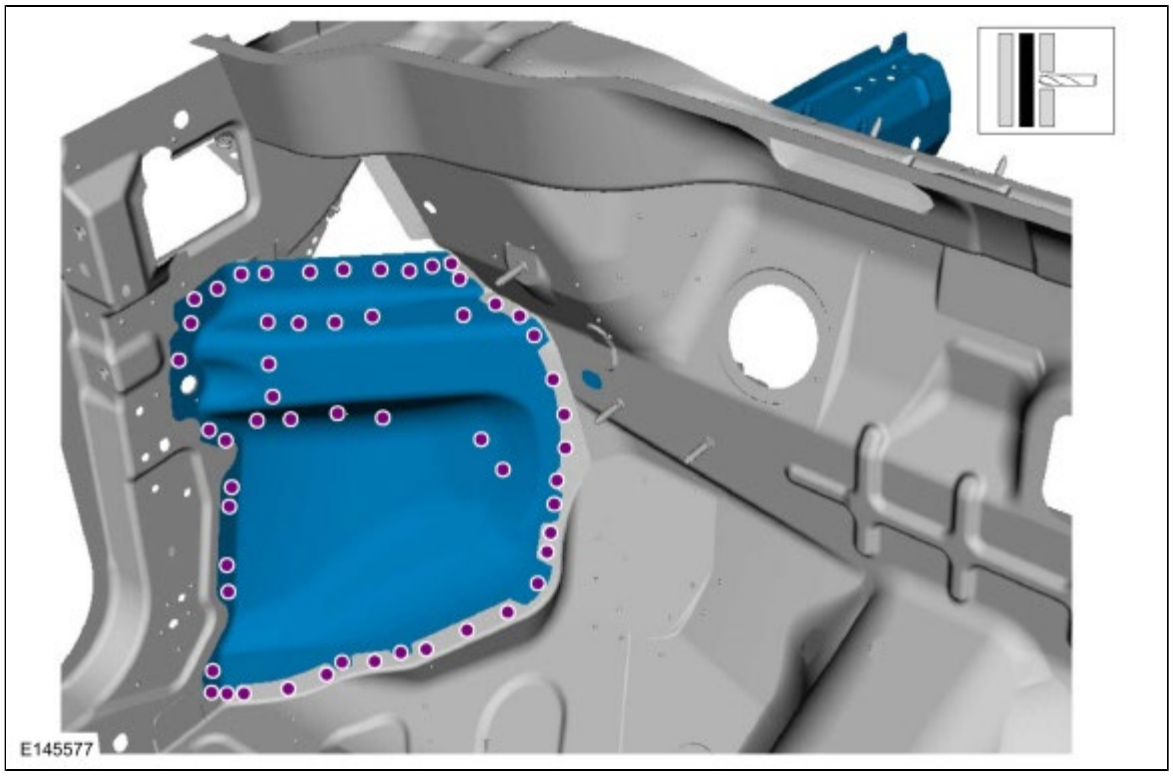

Installation

NOTE: *See the Ford recommended steel repairability matrix (contained in Specifications) for correct welding guidelines.*

NOTE: *Spot welds indicated in the following are intended as a reference only and are not intended for use as a weld quantity. For actual location and quantity, refer to original component removed.*

NOTE: *Factory spot welds may be substituted by Metal Inert Gas (MIG) plug welds or Squeeze-Type Resistance Spot Welding (STRW). Welds must match factory spot welds in both location and quantity.*

1. Verify inner frame rail is dimensionally correct.
   Refer to: Body and Frame (501-26 Body Repairs - Vehicle Specific Information and Tolerance Checks, Description and Operation).

2. Refer to: Body Construction - Component Location (501-25 Body Repairs - General Information, Description and Operation).
   Refer to: Specifications (501-25 Body Repairs - General Information, Specifications).
   General Equipment : Resistance Spotwelding Equipment
   General Equipment : MIG/MAG Welding Equipment

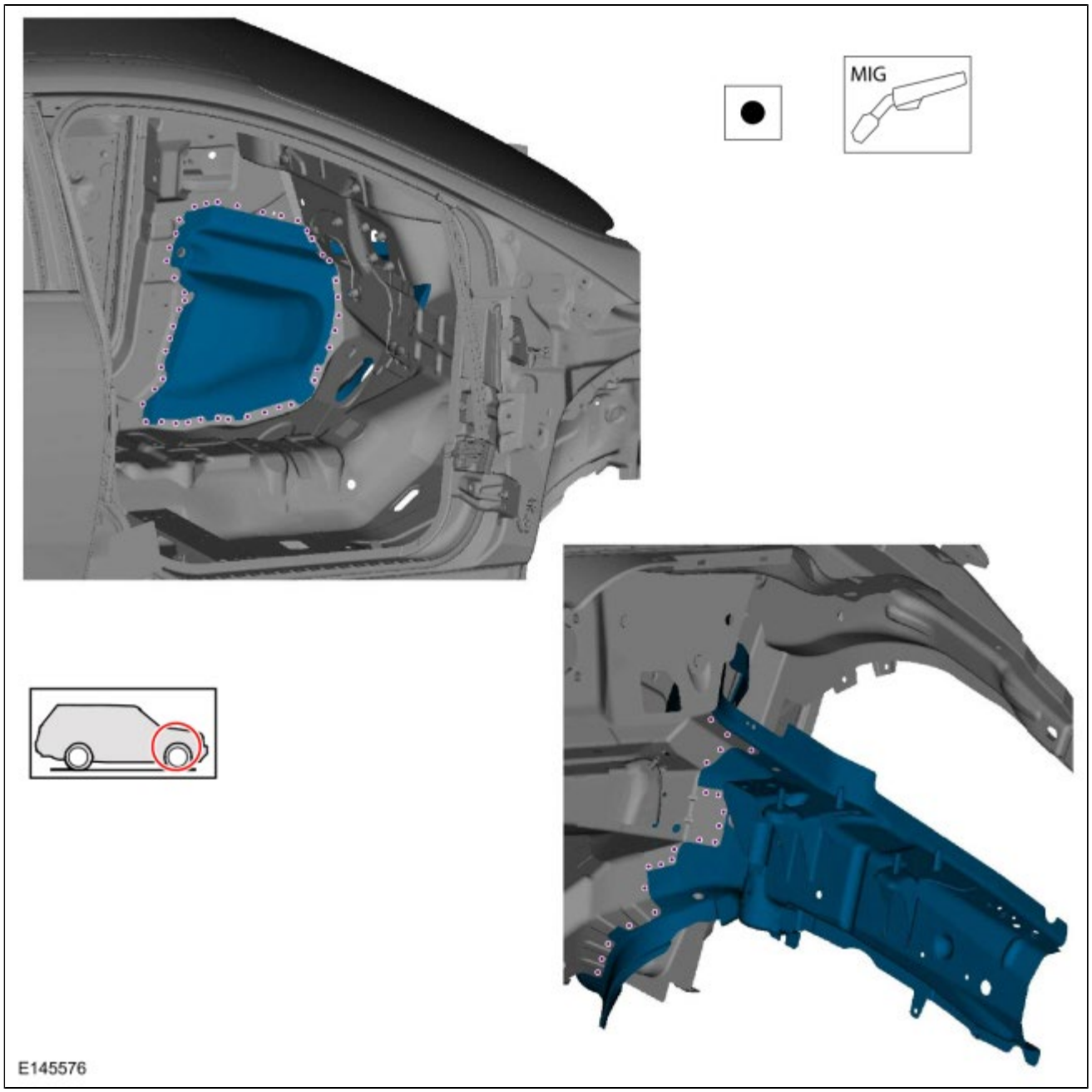

3.

4. Refer to: Body Construction - Component Location (501-25 Body Repairs - General Information, Description and Operation).
   Refer to: Specifications (501-25 Body Repairs - General Information, Specifications).
   General Equipment : Resistance Spotwelding Equipment
   General Equipment : MIG/MAG Welding Equipment

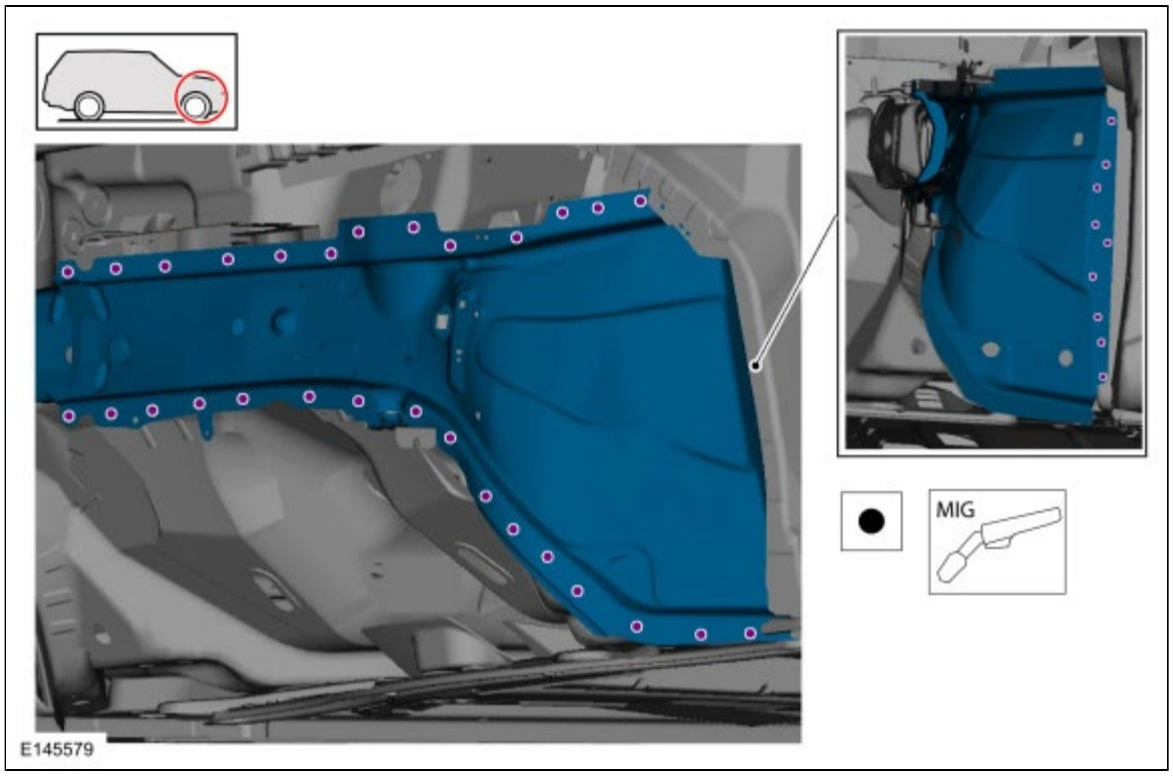

5.

6. Refer to: Body Construction - Component Location (501-25 Body Repairs - General Information, Description and Operation).
   Refer to: Specifications (501-25 Body Repairs - General Information, Specifications).
   General Equipment : Resistance Spotwelding Equipment
   General Equipment : MIG/MAG Welding Equipment

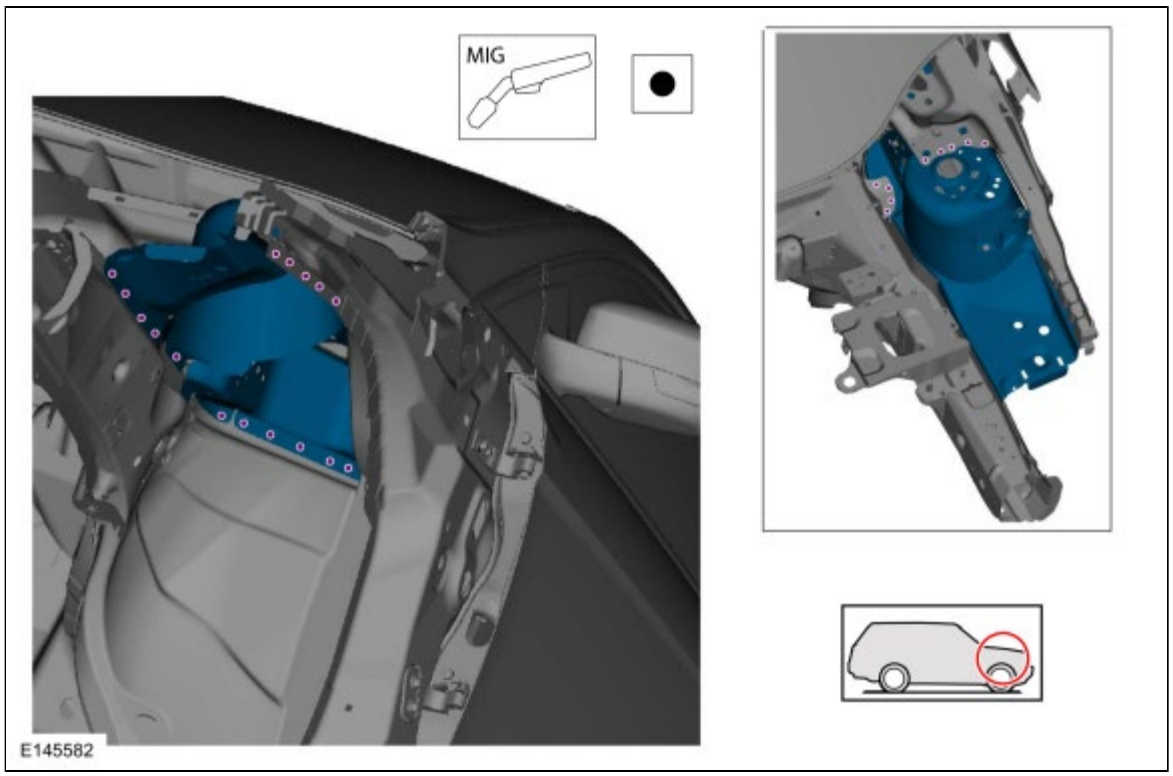

7. *General Equipment* : Resistance Spotwelding Equipment
   General Equipment : MIG/MAG Welding Equipment

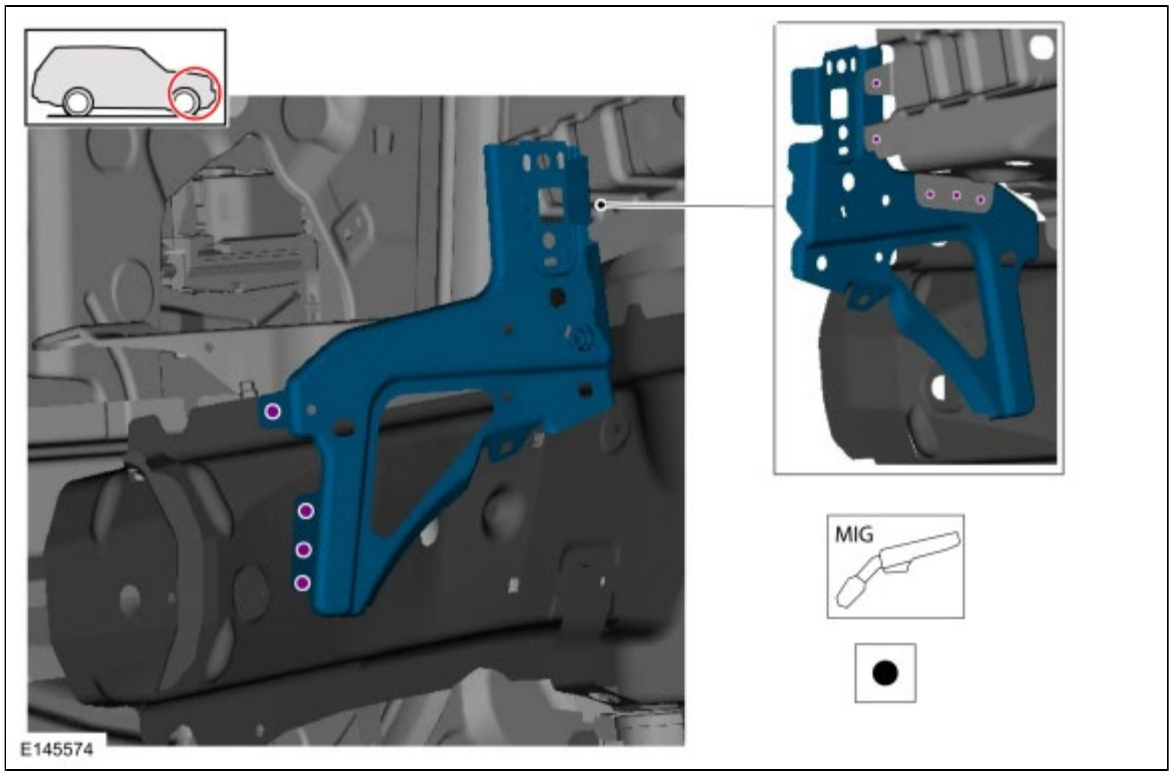

8. *General Equipment* : Resistance Spotwelding Equipment
   General Equipment : MIG/MAG Welding Equipment

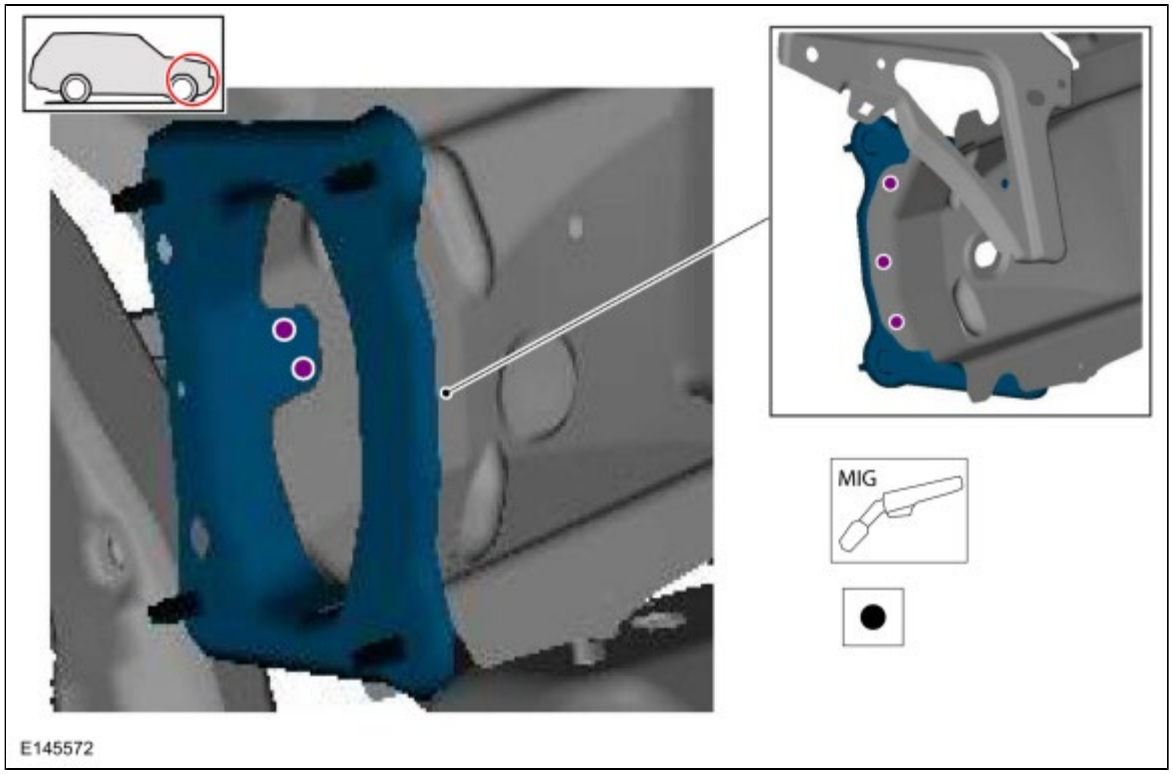

9. Refer to: Corrosion Prevention (501-25 Body Repairs - General Information, General Procedures).

10. *Material* : Seam Sealer / TA-2

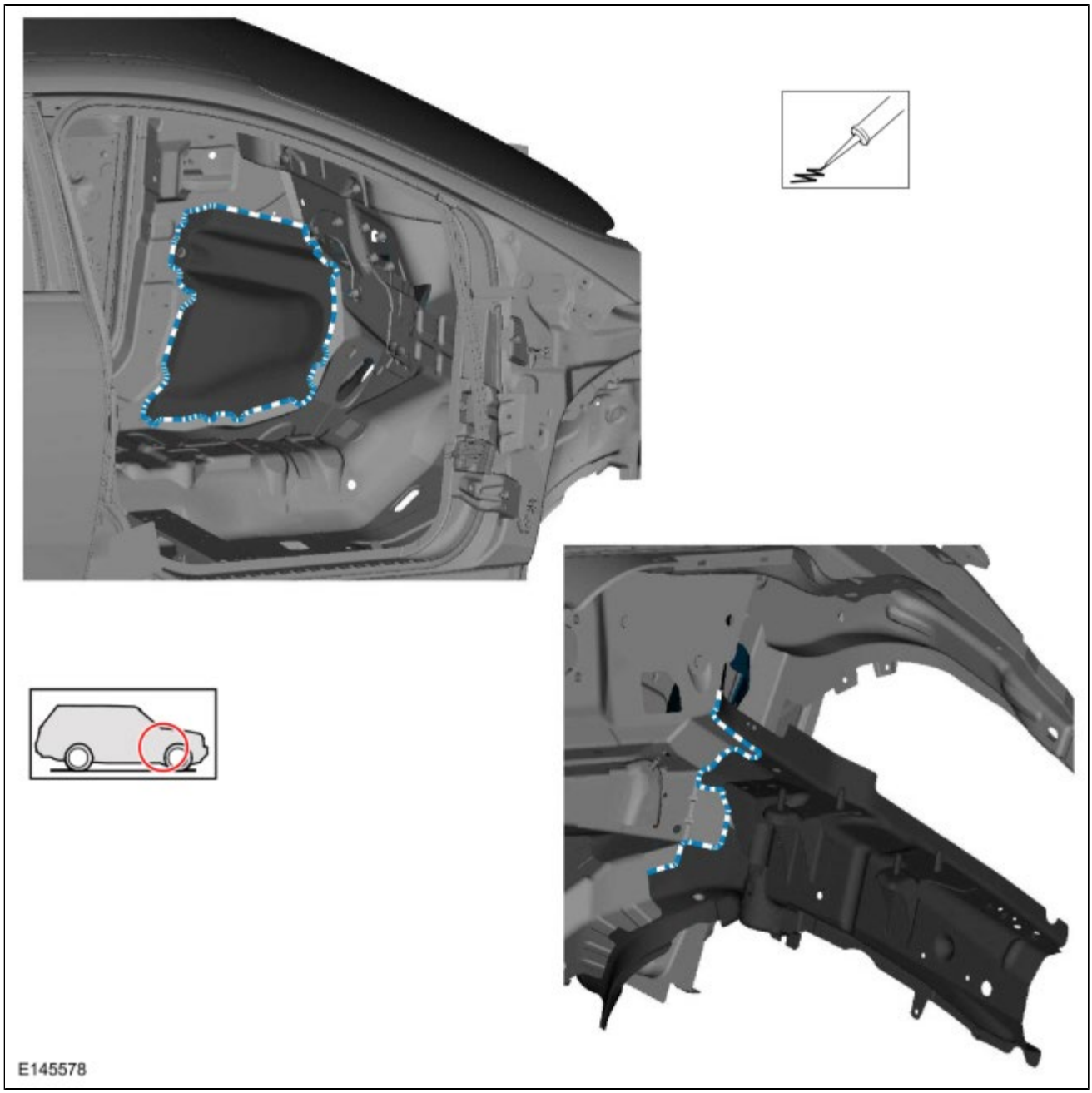

11. *Material* : Seam Sealer / TA-2

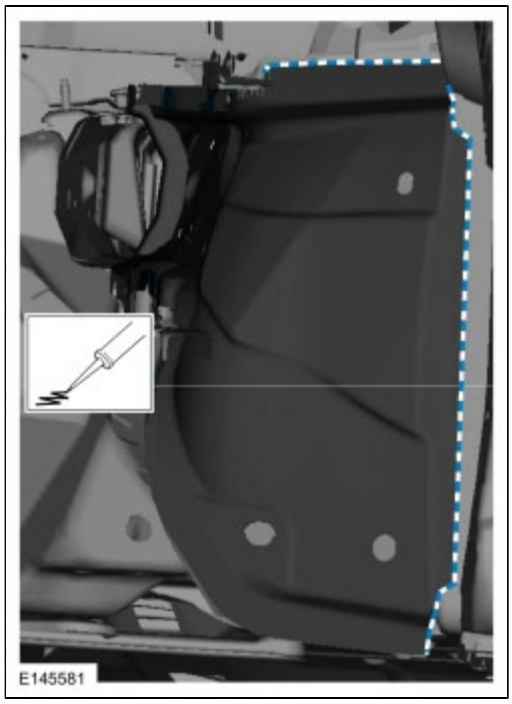

12. Refinish using a Ford approved paint system.
13. Refer to: Fender (501-02 Front End Body Panels, Removal and Installation).
14. Refer to: Front Bumper (501-19 Bumpers, Removal and Installation).
15. Refer to: Front Bumper Cover (501-19 Bumpers, Disassembly and Assembly).
16. Refer to: Battery (414-01 Battery, Mounting and Cables, Removal and Installation).

Copyright © Ford Motor Company

Roof Panel - Vehicles With: 4-Door

Removal

WARNING: Before beginning any service procedure in this section, refer to Safety Warnings in section 100-00 General Information. Failure to follow this instruction may result in serious personal injury.

1. Refer to: Health and Safety Precautions (100-00 General Information, Description and Operation).
2. Refer to: Supplemental Restraint System (SRS) Depowering and Repowering (501-20B Supplemental Restraint System, General Procedures).
3. Refer to: Windshield Glass (501-11A Glass, Frames and Mechanisms - Vehicles Without: One-Touch Up Door Window, Removal and Installation).
   Refer to: Windshield Glass (501-11B Glass, Frames and Mechanisms - Vehicles With: One-Touch Up Door Window, Removal and Installation).
   Refer to: Rear Window Glass - Vehicles With: 4-Door (501-11A Glass, Frames and Mechanisms - Vehicles Without: One-Touch Up Door Window, Removal and Installation).
   Refer to: Rear Window Glass - Vehicles With: 4-Door (501-11B Glass, Frames and Mechanisms - Vehicles With: One-Touch Up Door Window, Removal and Installation).
4. Refer to: Headliner - Vehicles With: 4-Door (501-05 Interior Trim and Ornamentation, Removal and Installation).
5. If equipped.
   Refer to: Roof Opening Panel Frame - Vehicles With: 4-Door (501-17 Roof Opening Panel, Removal and Installation).
6. Refer to: A-Pillar Trim Panel (501-05 Interior Trim and Ornamentation, Removal and Installation).
   Refer to: B-Pillar Trim Panel - Vehicles Built From: 11-June-2012 (501-05 Interior Trim and Ornamentation, Removal and Installation).
   Refer to: C-Pillar Upper Trim Panel (501-05 Interior Trim and Ornamentation, Removal and Installation).
   Refer to: D-Pillar Trim Panel - Vehicles With: 4-Door (501-05 Interior Trim and Ornamentation, Removal and Installation).
7. Refer to: Side Air Curtain (501-20B Supplemental Restraint System, Removal and Installation).
8. On both sides.
   General Equipment : Spot weld drill Bit

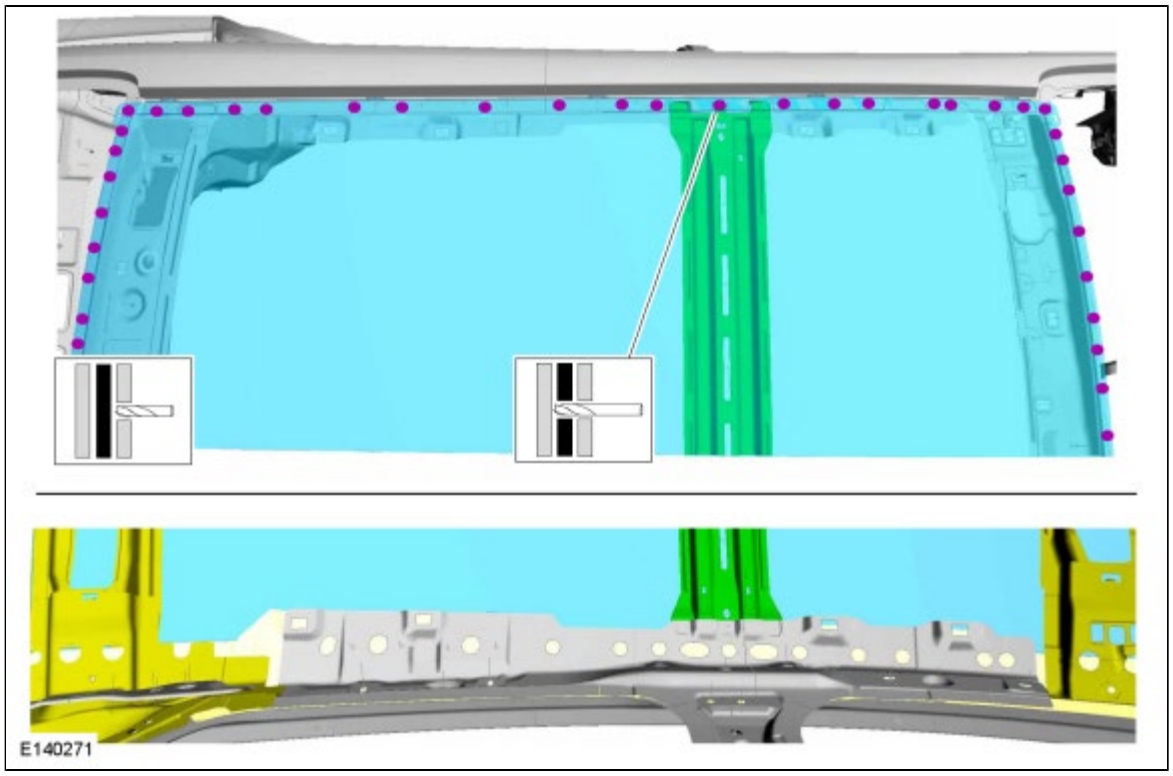

9. On both sides.
   General Equipment : Hot Air Gun

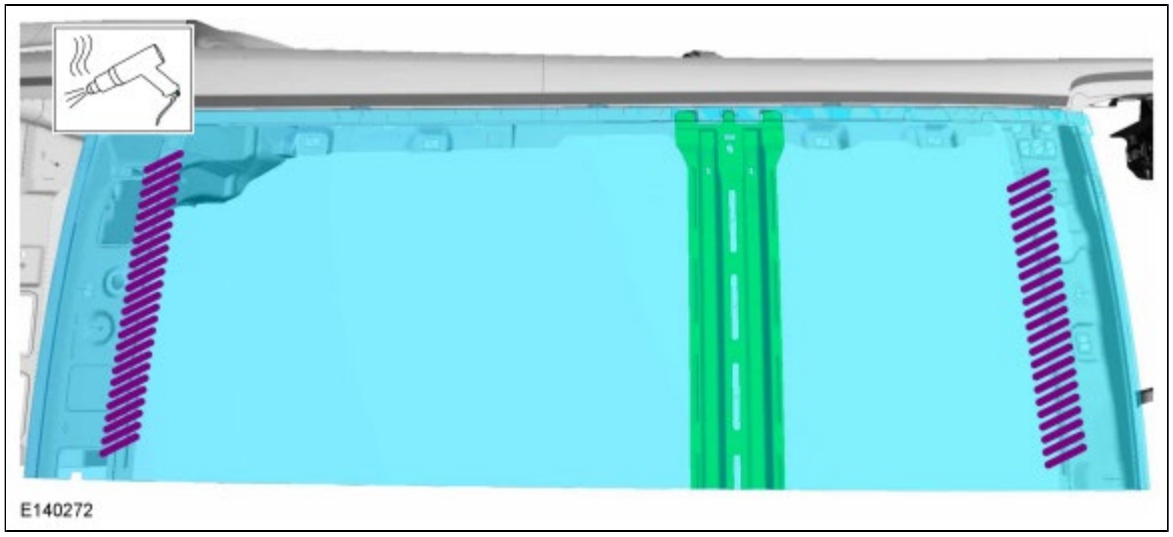

Installation

1. **NOTE:** *Make sure that the component is clean, free of foreign material and lubricant.*

   On both sides.

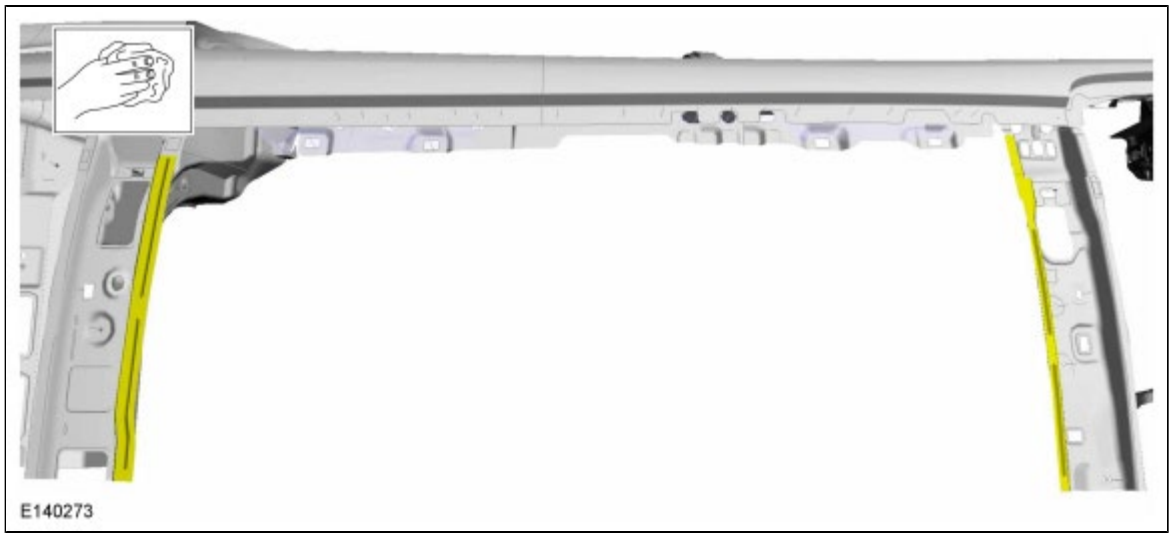

2. On both sides.
   Material : Metal Bonding Adhesive / TA-1

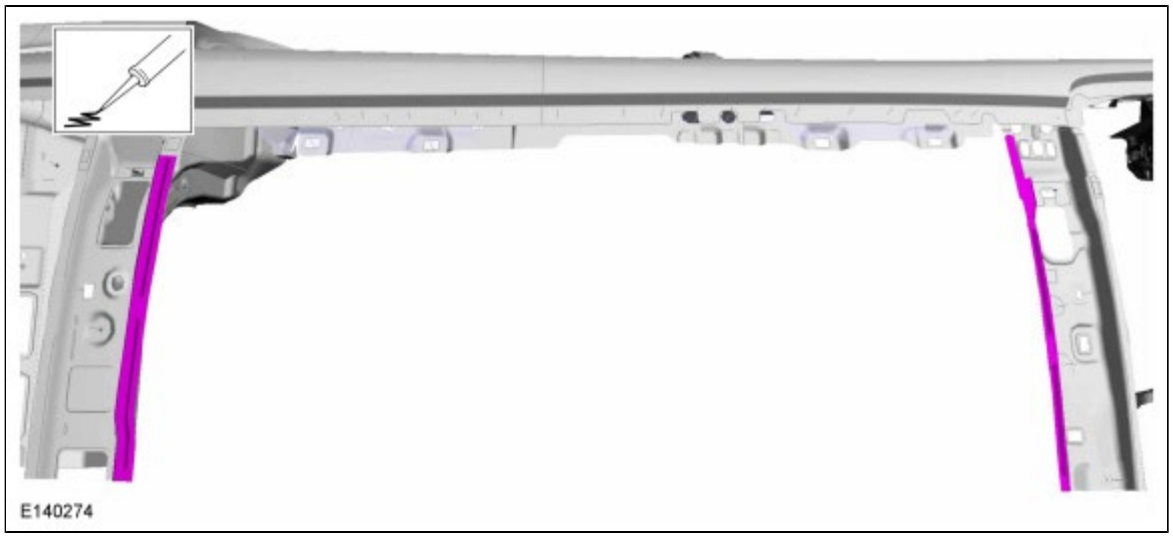

3. On both sides.
   General Equipment : Resistance Spotwelding Equipment

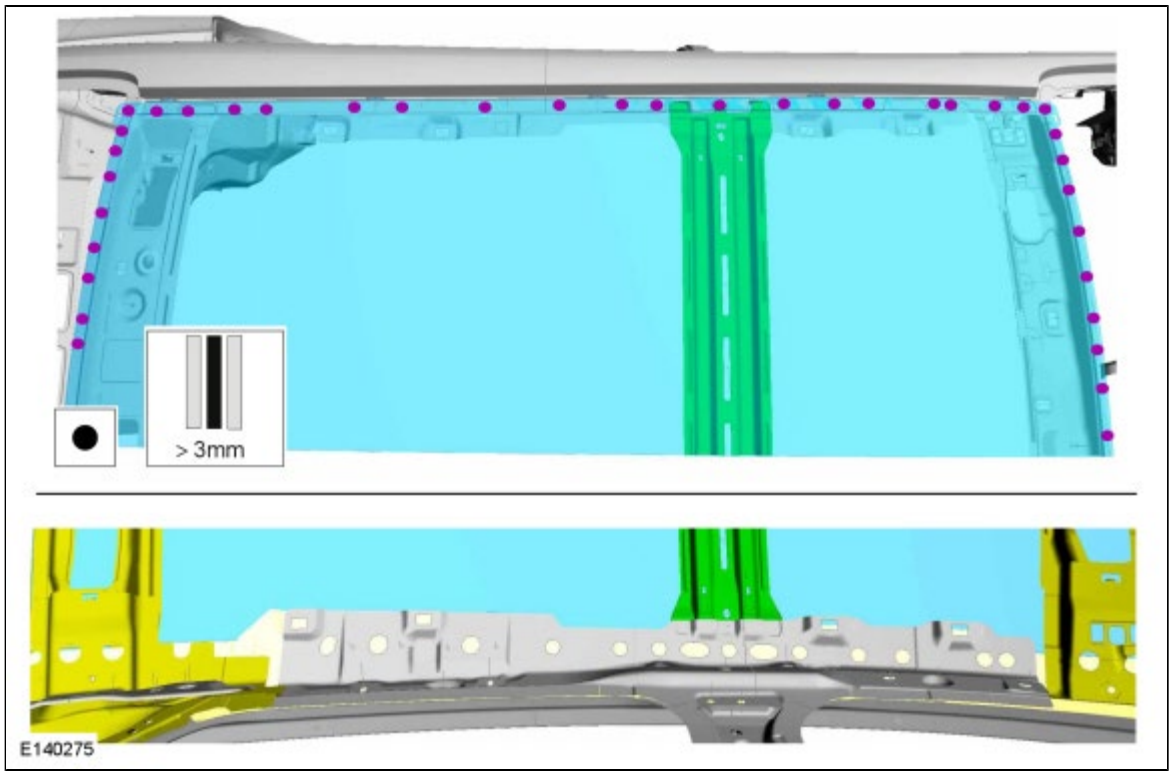

4. Sealing work: All areas must be sealed to production level.
   Material : Seam Sealer / TA-2
   Material : Fusor® Flexible Foam Repair / 121

5. Refer to: Side Air Curtain (501-20B Supplemental Restraint System, Removal and Installation).

6. If equipped.
   Refer to: Roof Opening Panel Frame - Vehicles With: 4-Door (501-17 Roof Opening Panel, Removal and Installation).

7. Refer to: Windshield Glass (501-11A Glass, Frames and Mechanisms - Vehicles Without: One-Touch Up Door Window, Removal and Installation).
   Refer to: Windshield Glass (501-11B Glass, Frames and Mechanisms - Vehicles With: One-Touch Up Door Window, Removal and Installation).
   Refer to: Rear Window Glass - Vehicles With: 4-Door (501-11A Glass, Frames and Mechanisms - Vehicles Without: One-Touch Up Door Window, Removal and Installation).
   Refer to: Rear Window Glass - Vehicles With: 4-Door (501-11B Glass, Frames and Mechanisms - Vehicles With: One-Touch Up Door Window, Removal and Installation).
   Refer to: A-Pillar Trim Panel (501-05 Interior Trim and Ornamentation, Removal and Installation).
   Refer to: B-Pillar Trim Panel - Vehicles Built From: 11-June-2012 (501-05 Interior Trim and Ornamentation, Removal and Installation).
   Refer to: C-Pillar Upper Trim Panel (501-05 Interior Trim and Ornamentation, Removal and Installation).
   Refer to: D-Pillar Trim Panel - Vehicles With: 4-Door (501-05 Interior Trim and Ornamentation, Removal and Installation).
   Refer to: Headliner - Vehicles With: 4-Door (501-05 Interior Trim and Ornamentation, Removal and Installation).

8. Refer to: Supplemental Restraint System (SRS) Depowering and Repowering (501-20B Supplemental Restraint System, General Procedures).

Copyright © Ford Motor Company

Roof Panel - Vehicles With: 5-Door

Removal

NOTICE: Adequately protect all glass, exterior finish and interior trim from contamination during entire repair procedure.

1. **WARNING: Before beginning any service procedure in this section, refer to Safety Warnings in section 100-00 General Information. Failure to follow this instruction may result in serious personal injury.**

   Refer to: Health and Safety Precautions (100-00 General Information, Description and Operation).

2. Refer to: Supplemental Restraint System (SRS) Depowering and Repowering (501-20B Supplemental Restraint System, General Procedures).

3. Refer to: A-Pillar Trim Panel (501-05 Interior Trim and Ornamentation, Removal and Installation).
   Refer to: B-Pillar Trim Panel - Vehicles Built From: 11-June-2012 (501-05 Interior Trim and Ornamentation, Removal and Installation).
   Refer to: C-Pillar Upper Trim Panel (501-05 Interior Trim and Ornamentation, Removal and Installation).
   Refer to: D-Pillar Trim Panel - Vehicles With: 5-Door (501-05 Interior Trim and Ornamentation, Removal and Installation).

4. If equipped.
   Refer to: Headliner - Vehicles With: 5-Door (501-05 Interior Trim and Ornamentation, Removal and Installation).

5. Refer to: Headliner - Vehicles With: 5-Door (501-05 Interior Trim and Ornamentation, Removal and Installation).

6. Refer to: Side Air Curtain (501-20B Supplemental Restraint System, Removal and Installation).

7. If equipped.
   Refer to: Roof Opening Panel Frame - Vehicles With: 5-Door (501-17 Roof Opening Panel, Removal and Installation).

8. Refer to: Windshield Glass (501-11A Glass, Frames and Mechanisms - Vehicles Without: One-Touch Up Door Window, Removal and Installation).
   Refer to: Windshield Glass (501-11B Glass, Frames and Mechanisms - Vehicles With: One-Touch Up Door Window, Removal and Installation).

9. Both sides:
   Refer to: Liftgate Hinge (501-03 Body Closures, Removal and Installation).

10. Refer to: Audio Unit Antenna (415-00A Information and Entertainment System - General Information - Vehicles With: AM/FM/CD, Removal and Installation).
    Refer to: Audio Unit Antenna (415-00B Information and Entertainment System - General Information - Vehicles With: AM/FM/CD/SYNC, Removal and Installation).
    Refer to: Audio Unit Antenna (415-00C Information and Entertainment System - General Information - Vehicles With: SYNC/Sony AM/FM/CD, Removal and Installation).

11.

12. *General Equipment* : Spot weld drill Bit

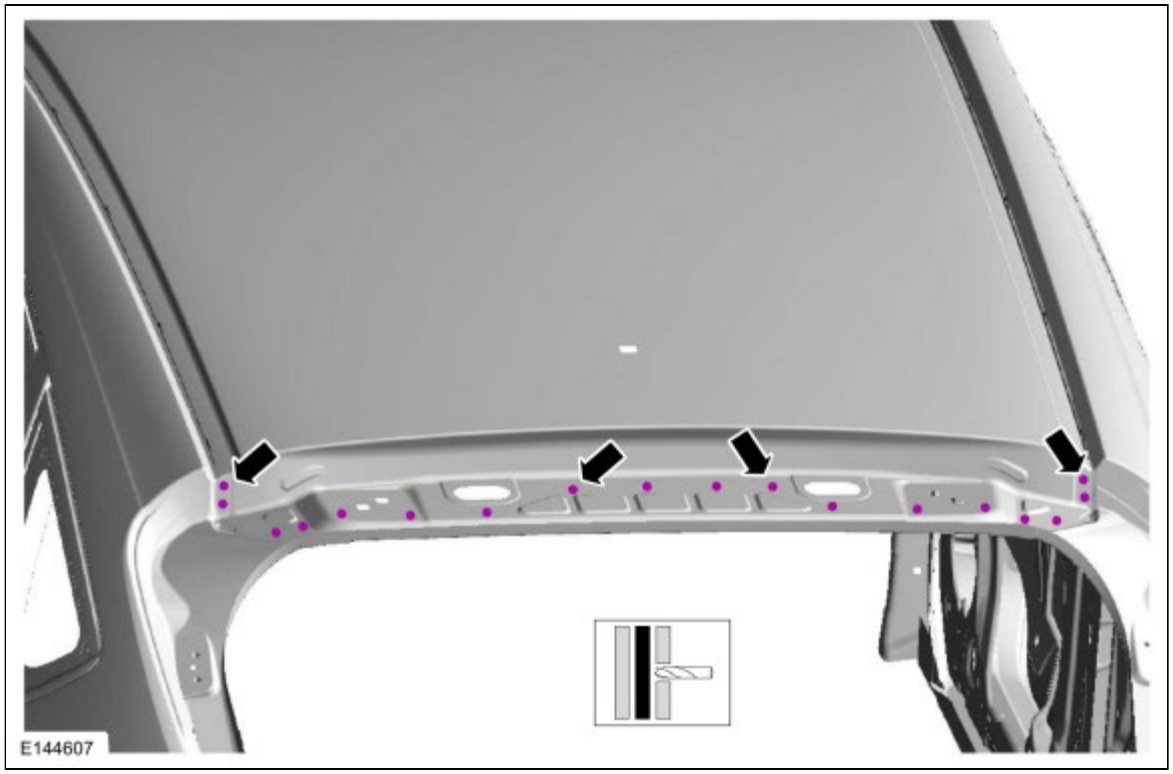

13. *General Equipment* : Spot weld drill Bit

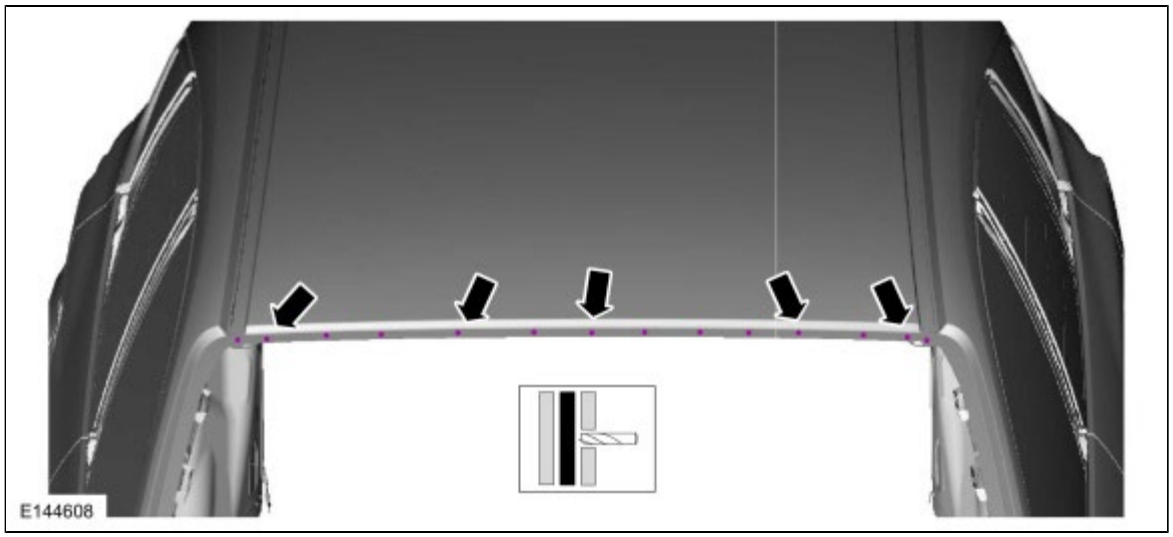

14. *General Equipment* : Spot weld drill Bit

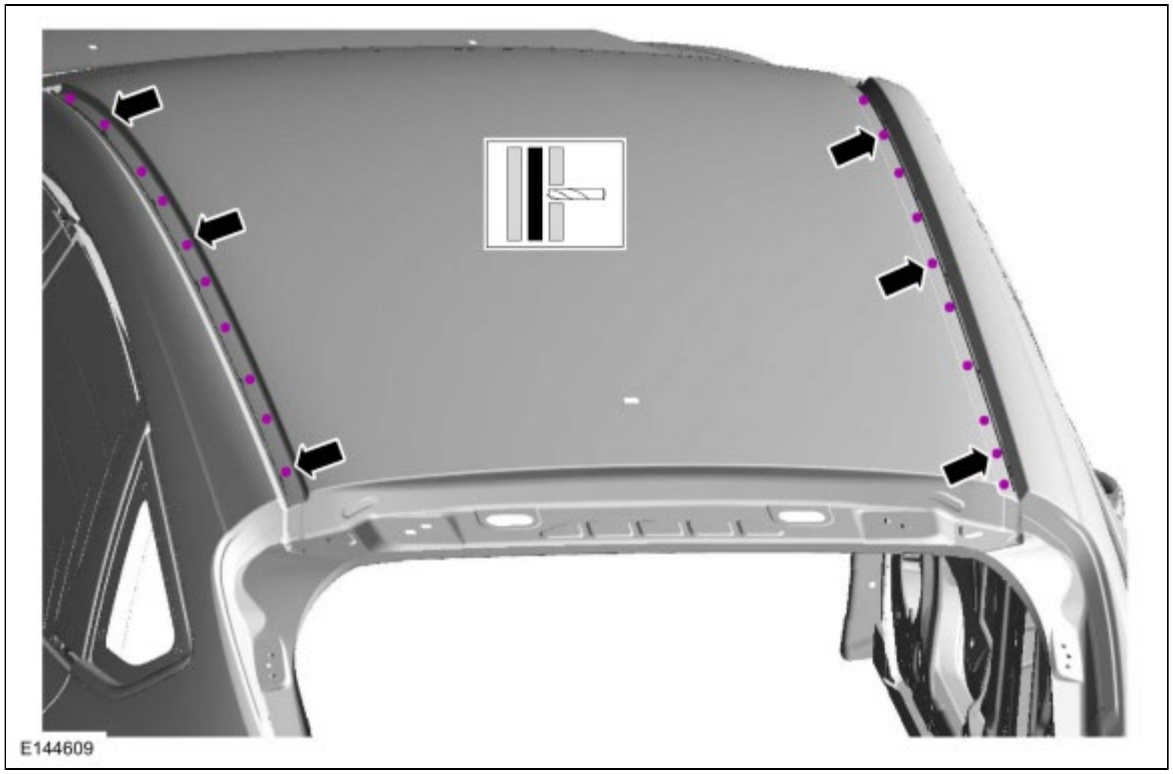

15. *General Equipment* : Knife

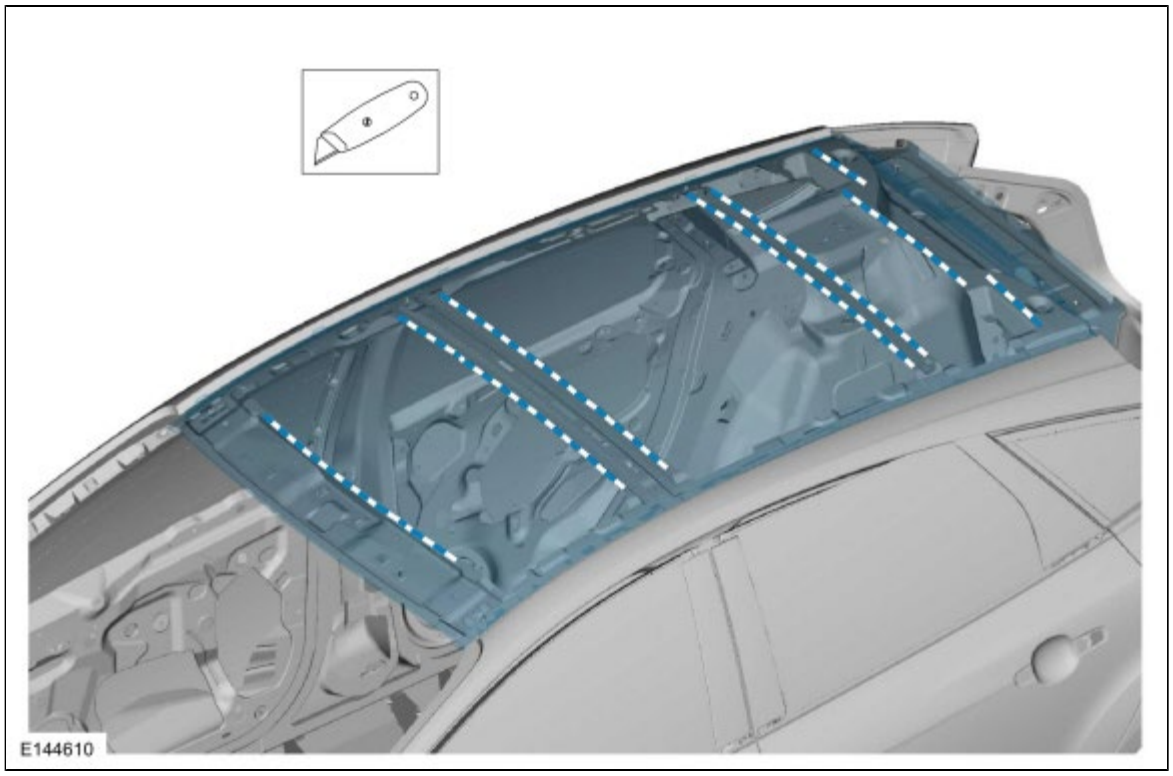

16.

Installation

1. Properly identify component steel type before proceeding with straightening or welding operations.
   Refer to: Body Construction - Component Location (501-25 Body Repairs - General Information, Description and Operation).
   Refer to: Specifications (501-25 Body Repairs - General Information, Specifications).

2. **NOTICE: Be sure to adequately protect all glass, exterior finish and interior trim to avoid contamination from repair methods and materials.**

   Carefully grind the roof ditch area, windshield opening and rear header panel areas smooth to level out any weld nuggets.

General Equipment : Grinder

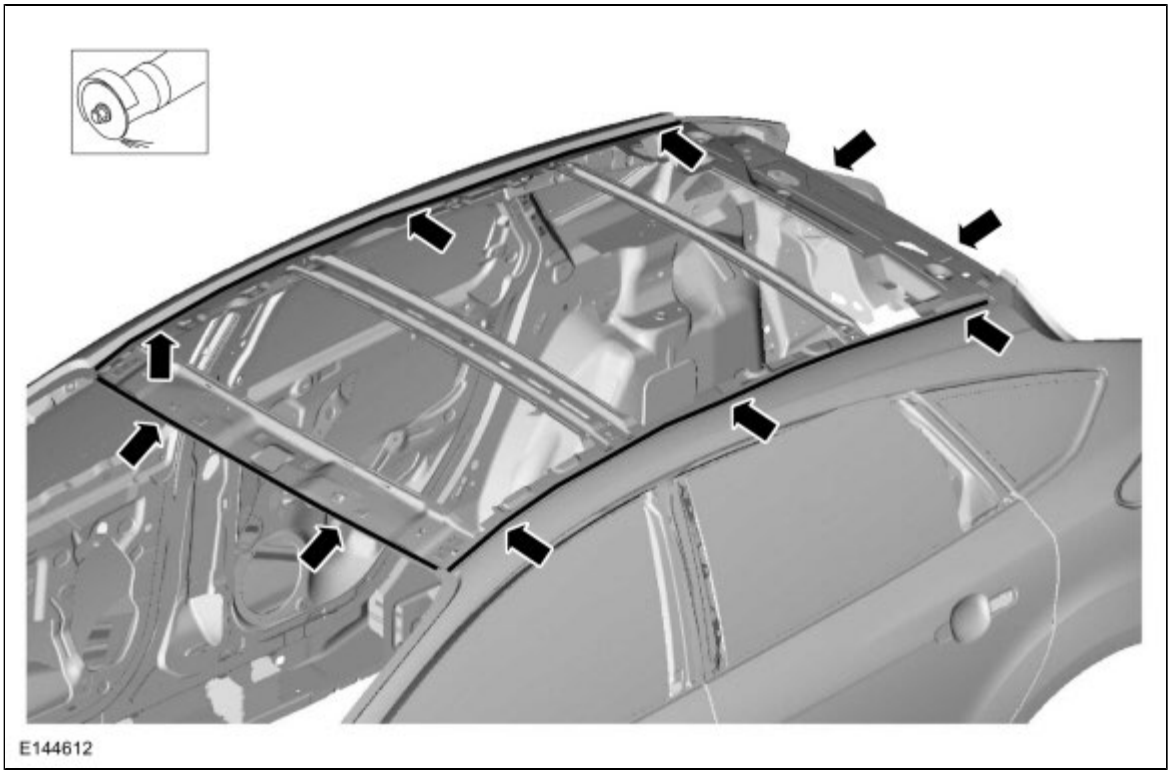

3.

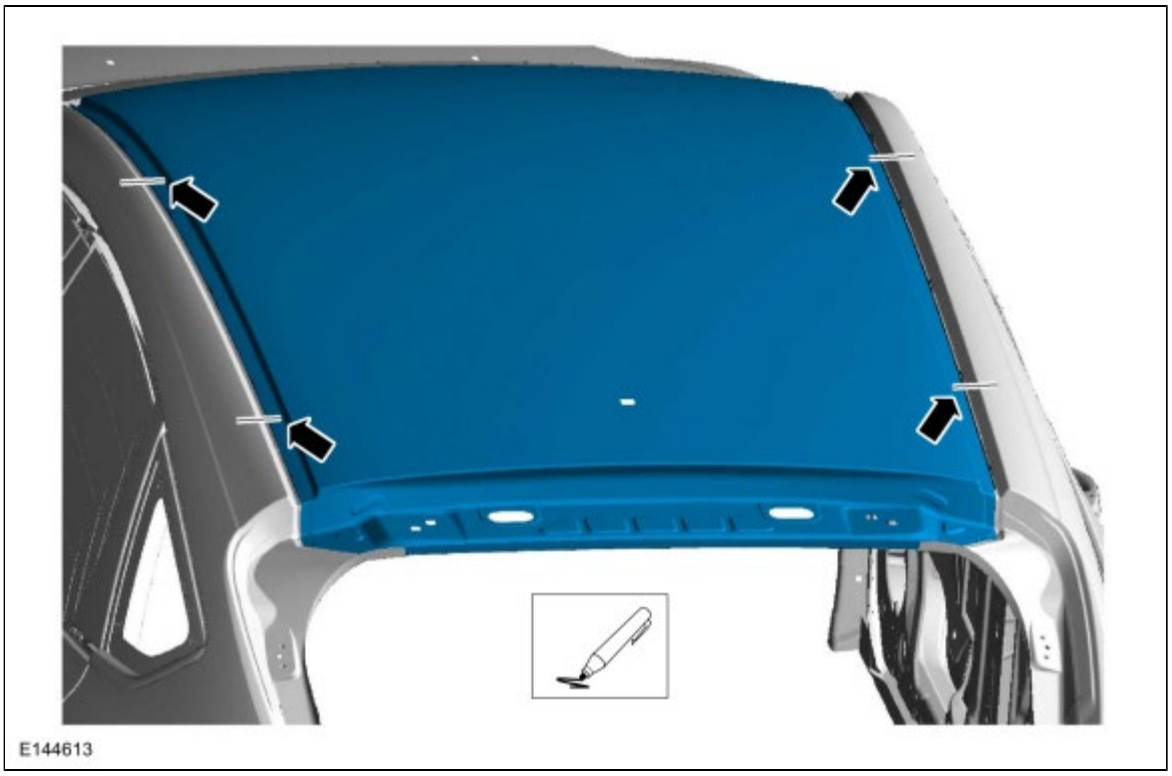

4.

5. **NOTE:** *To assure complete bonding, check all locations for full adhesive contact. Add additional adhesive as necessary.*

   Material : Metal Bonding Adhesive / TA-1

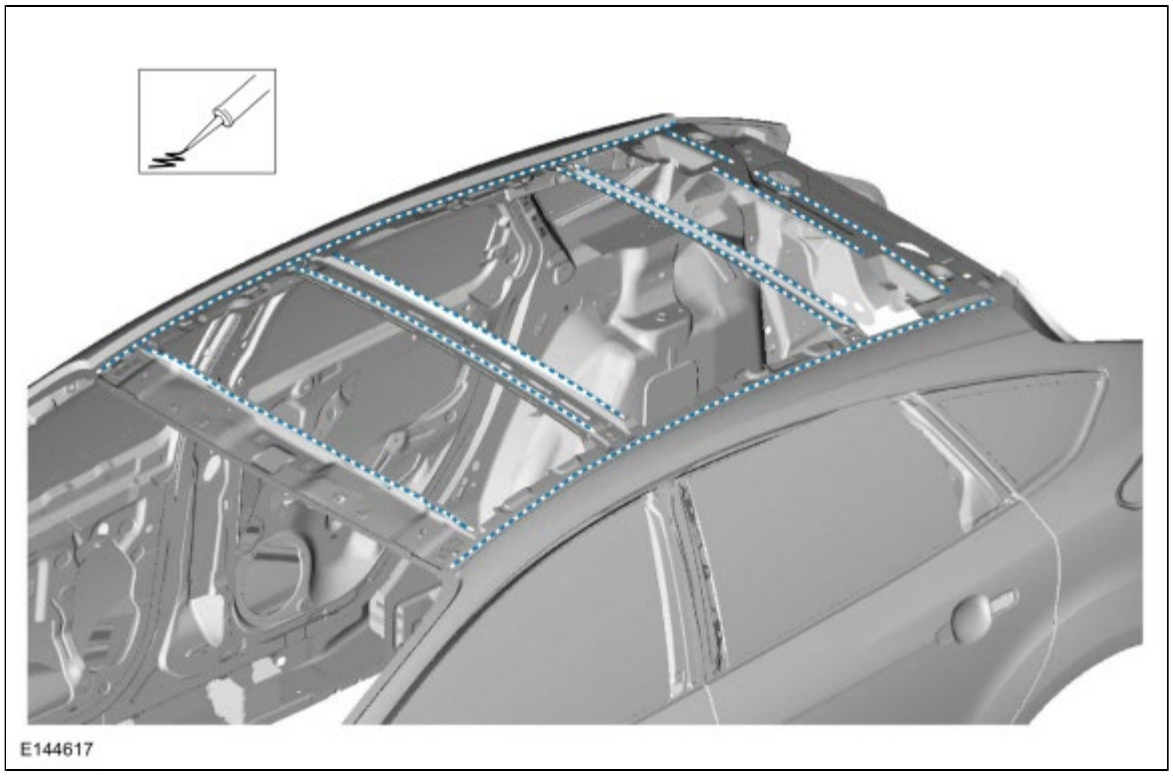

6. **NOTE:** *Do not lift the panel from the body once installed. If the panel requires repositioning, slide the panel to correct alignment location.*

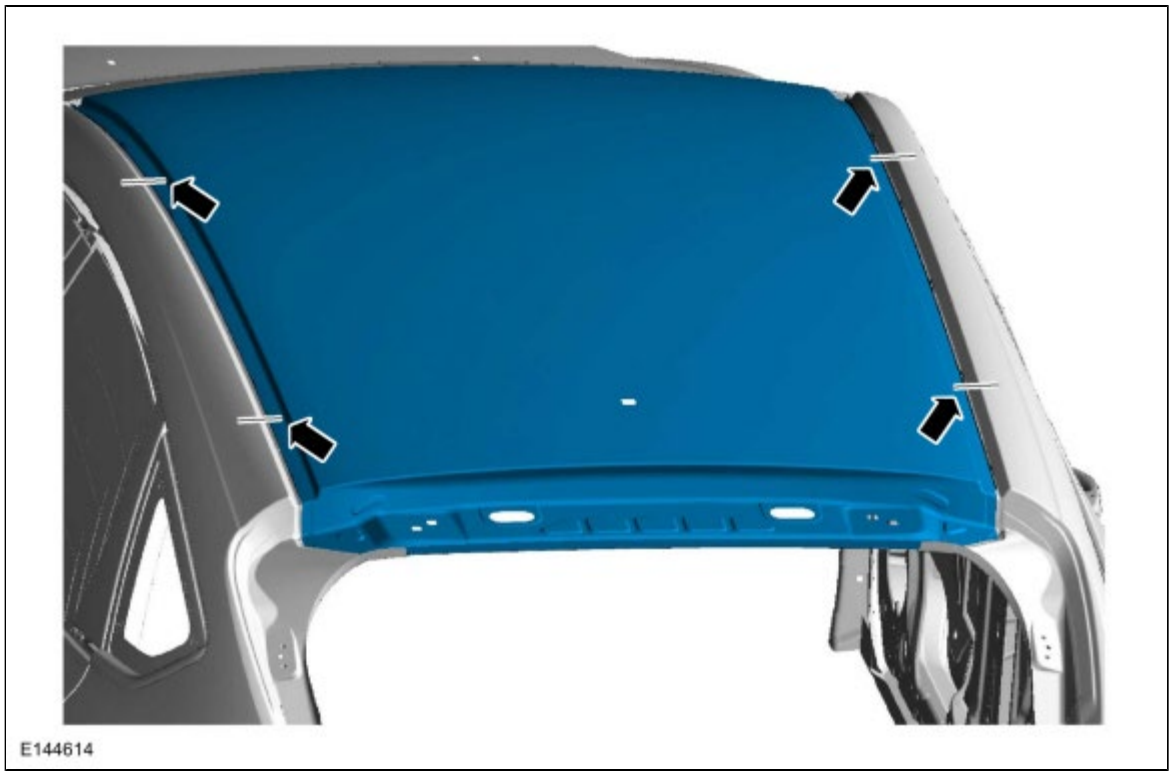

7. *General Equipment* : Locking Pliers
   General Equipment : Resistance Spotwelding Equipment

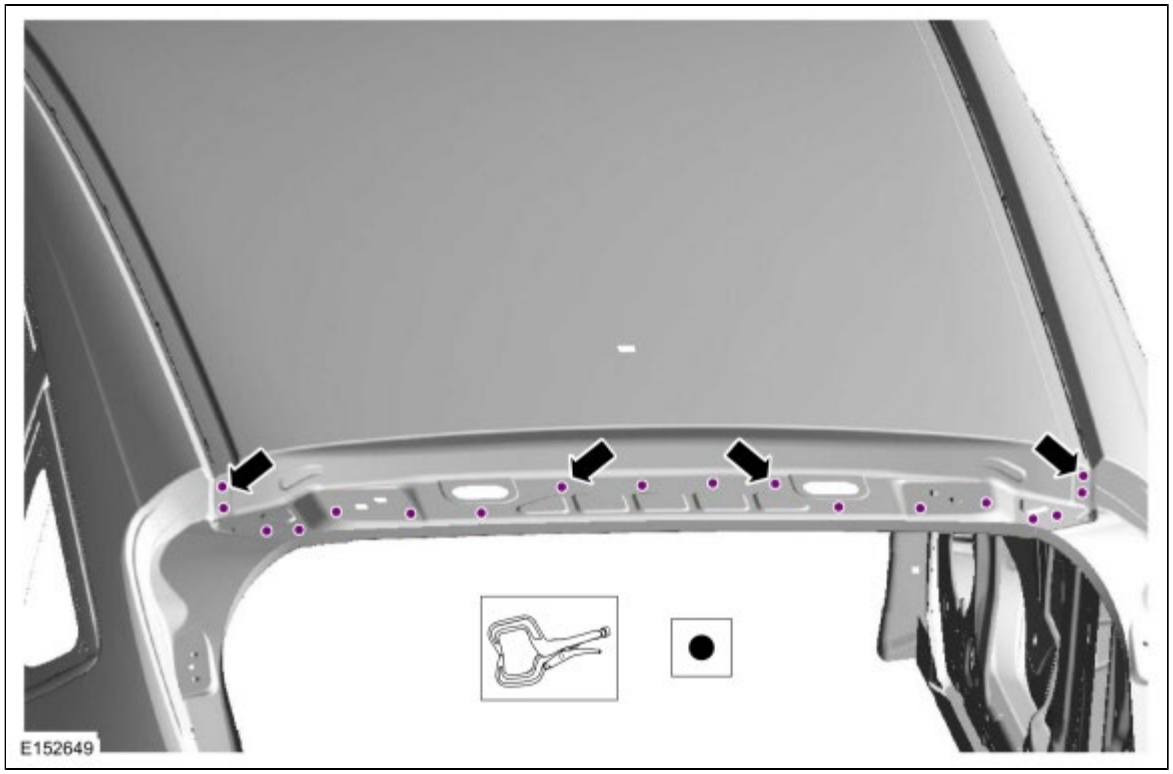

8. *General Equipment* : Locking Pliers
   General Equipment : Resistance Spotwelding Equipment

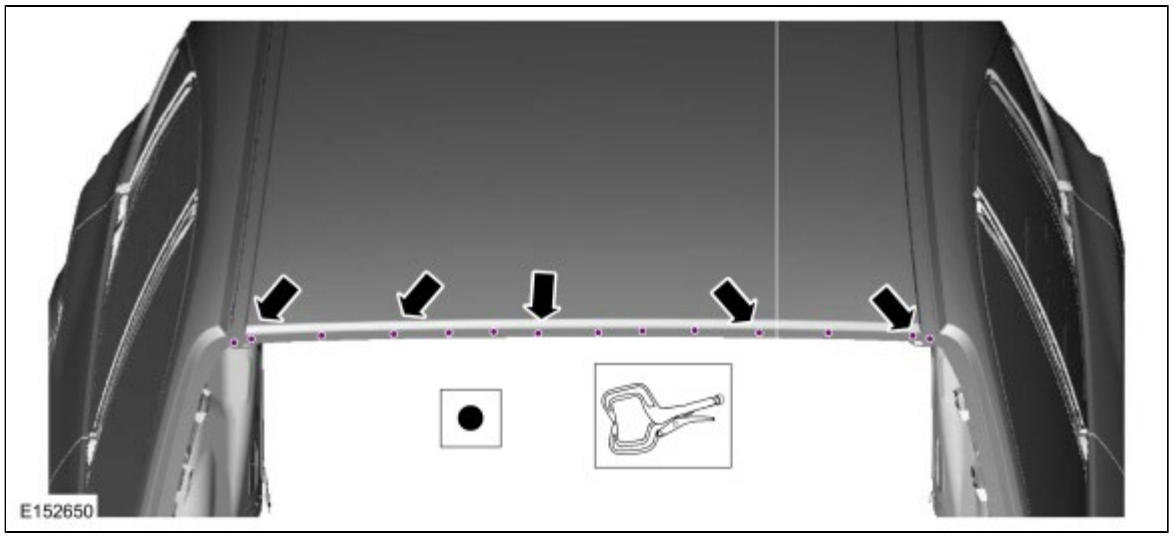

9. Allow panel adhesive to fully cure, sand and prime the roof ditch areas.

10. *Material* : Seam Sealer / TA-2

11. Refinish the roof panel using a Ford approved refinishing system.

12. If equipped.
    Refer to: Roof Opening Panel Frame - Vehicles With: 5-Door (501-17 Roof Opening Panel, Removal and Installation).

13. Refer to: Side Air Curtain (501-20B Supplemental Restraint System, Removal and Installation).

14. Refer to: Audio Unit Antenna (415-00A Information and Entertainment System - General Information - Vehicles With: AM/FM/CD, Removal and Installation).
    Refer to: Audio Unit Antenna (415-00B Information and Entertainment System - General Information - Vehicles With: AM/FM/CD/SYNC, Removal and Installation).
    Refer to: Audio Unit Antenna (415-00C Information and Entertainment System - General Information - Vehicles With: SYNC/Sony AM/FM/CD, Removal and Installation).

15. If equipped.

Refer to: Headliner - Vehicles With: 5-Door (501-05 Interior Trim and Ornamentation, Removal and Installation).

16. Refer to: Headliner - Vehicles With: 5-Door (501-05 Interior Trim and Ornamentation, Removal and Installation).

17. Refer to: A-Pillar Trim Panel (501-05 Interior Trim and Ornamentation, Removal and Installation).
    Refer to: B-Pillar Trim Panel - Vehicles Built From: 11-June-2012 (501-05 Interior Trim and Ornamentation, Removal and Installation).
    Refer to: C-Pillar Upper Trim Panel (501-05 Interior Trim and Ornamentation, Removal and Installation).
    Refer to: D-Pillar Trim Panel - Vehicles With: 5-Door (501-05 Interior Trim and Ornamentation, Removal and Installation).

18.

19. Both sides:
    Refer to: Liftgate Hinge (501-03 Body Closures, Removal and Installation).
    Refer to: Liftgate (501-03 Body Closures, Removal and Installation).

20. Refer to: Windshield Glass (501-11A Glass, Frames and Mechanisms - Vehicles Without: One-Touch Up Door Window, Removal and Installation).
    Refer to: Windshield Glass (501-11B Glass, Frames and Mechanisms - Vehicles With: One-Touch Up Door Window, Removal and Installation).

21. Refer to: Supplemental Restraint System (SRS) Depowering and Repowering (501-20B Supplemental Restraint System, General Procedures).
    Refer to: Supplemental Restraint System (SRS) Depowering and Repowering (501-20B Supplemental Restraint System, General Procedures).

Copyright © Ford Motor Company

Jacking and Lifting - Overview

Jacking Points

WARNING: Before beginning any service procedure in this section, REFER to Safety Warnings in section 100-00 General Information. Failure to follow this instruction may result in serious personal injury.

Refer to: Health and Safety Precautions (100-00 General Information, Description and Operation).

NOTICE: The jack provided with the vehicle is intended to be used in an emergency for changing a deflated tire. To avoid damage to the vehicle, never use the jack to hoist the vehicle for any other purpose.

NOTICE: Do not attempt to use jack pressure on either the front bumper or the rear bumper on any vehicle. Damage to bumper covers will occur.

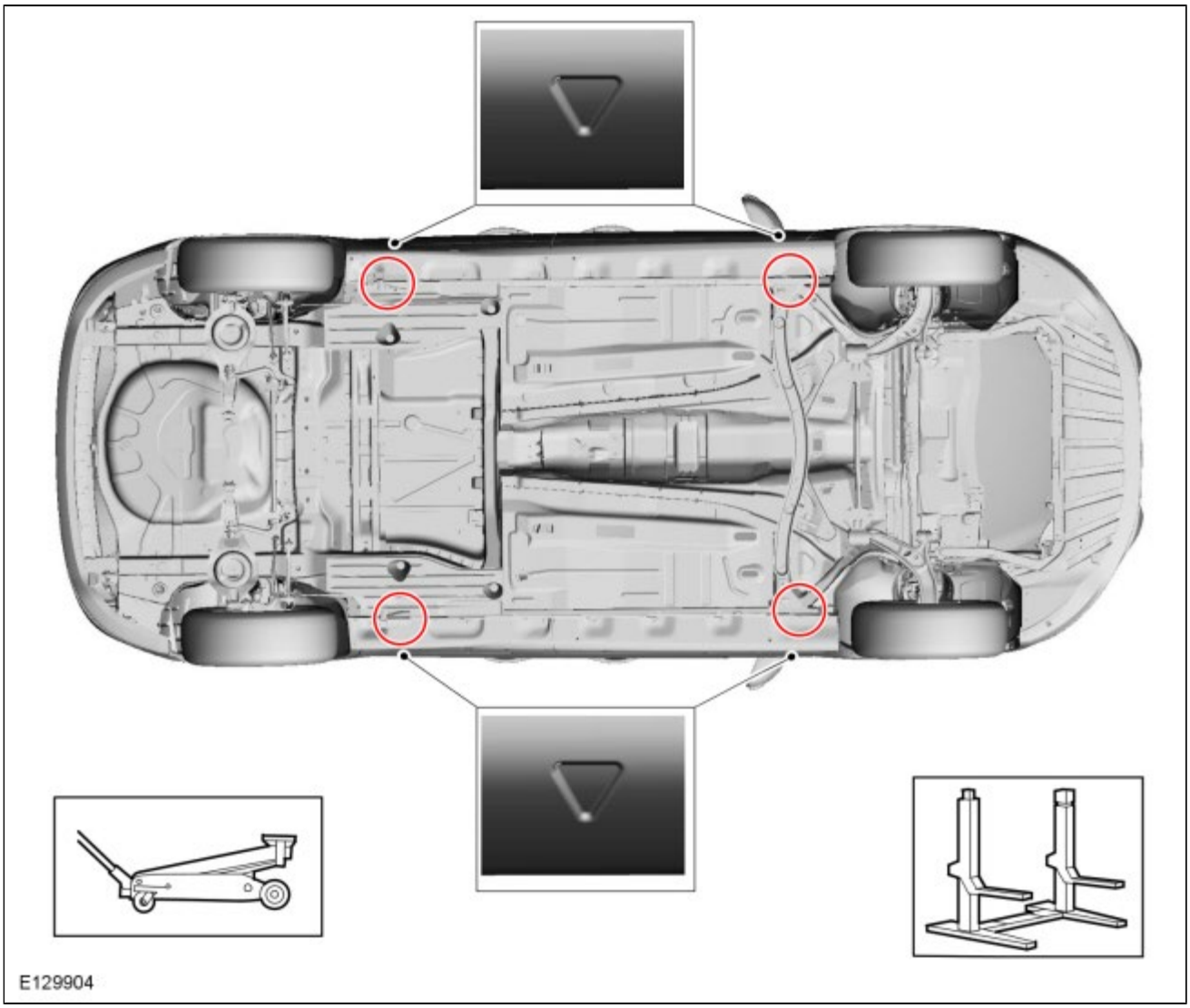

Lifting Points

WARNING: Before beginning any service procedure in this section, REFER to Safety Warnings in section 100-00

General Information. Failure to follow this instruction may result in serious personal injury.

Refer to: Health and Safety Precautions (100-00 General Information, Description and Operation).

NOTICE: Damage to the suspension, exhaust or steering linkage components may occur if care is not exercised when positioning the hoist adapters prior to lifting the vehicle.

NOTICE: To prevent possible damage to the underbody, do not drive the vehicle onto the drive-on lift without first checking for possible interference.

NOTICE: When raising a vehicle on a twin-post hoist, use care when positioning the vehicle so that the hoisting forks do not interfere with suspension components, mounting brackets or stabilizer mounting brackets, if equipped. In addition, use care in hoist positioning to avoid possible damage to the axle carrier or rear cover.

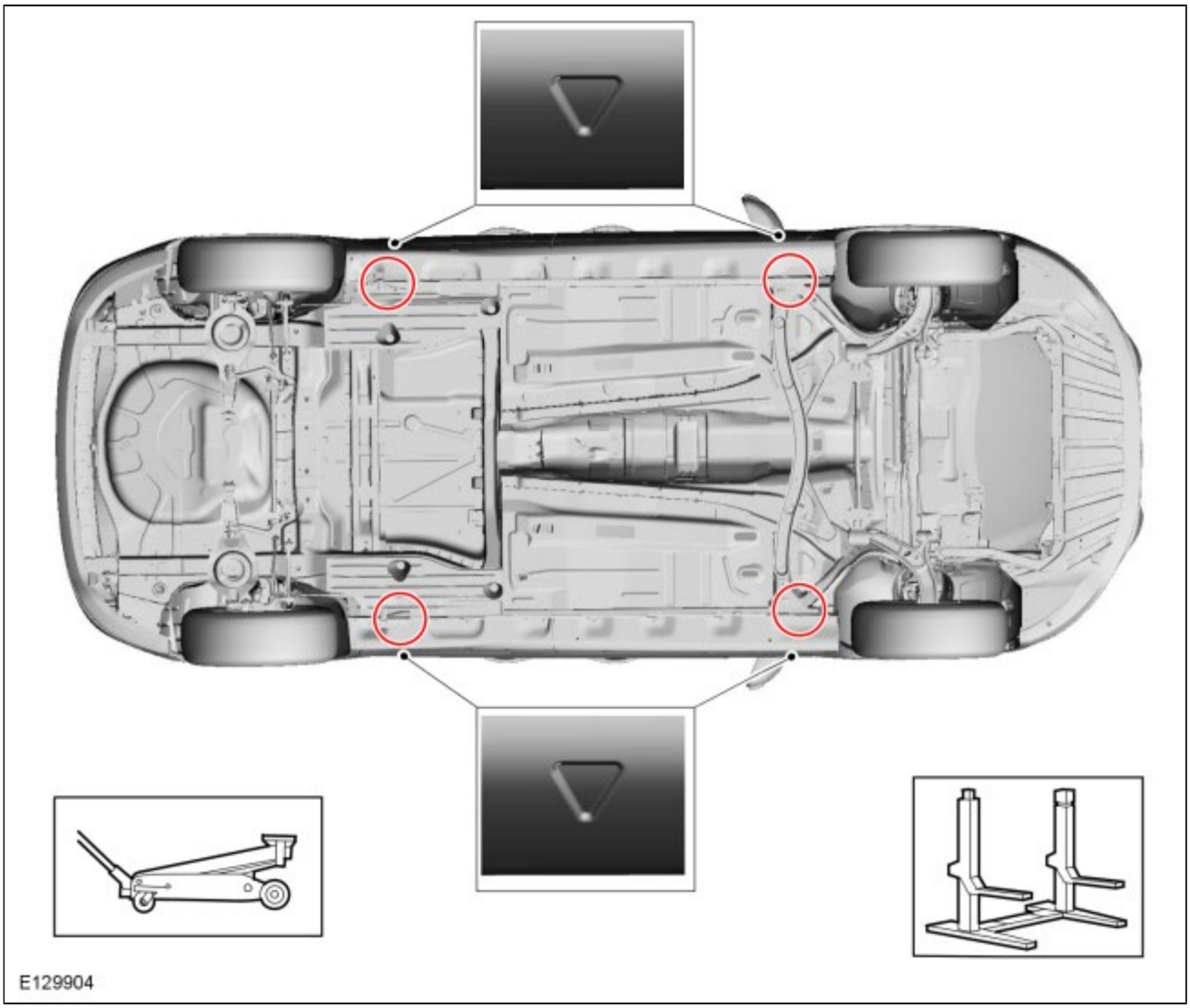

Copyright © Ford Motor Company

Rear Spoiler - Vehicles With: 5-Door

Removal

NOTE: *Removal steps may include installation details.*

1. **WARNING: Before beginning any service procedure in this section, REFER to Safety Warnings in section 100-00 General Information. Failure to follow this instruction may result in serious personal injury.**

   Refer to: Health and Safety Precautions (100-00 General Information, Description and Operation).

2.

NOTE: *Base model shown, all others mount the same.*

3.

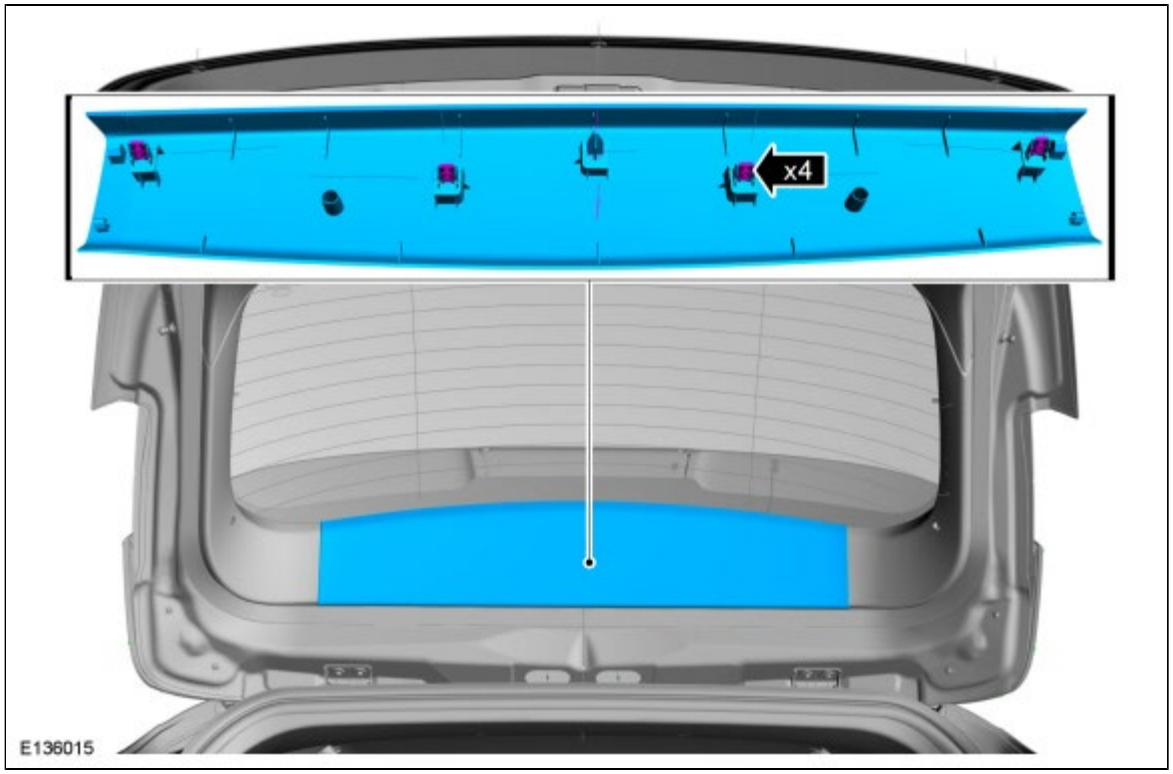

4.
   1. *Torque* : 1.5 Nm
   2. *Torque* : 5.4 Nm

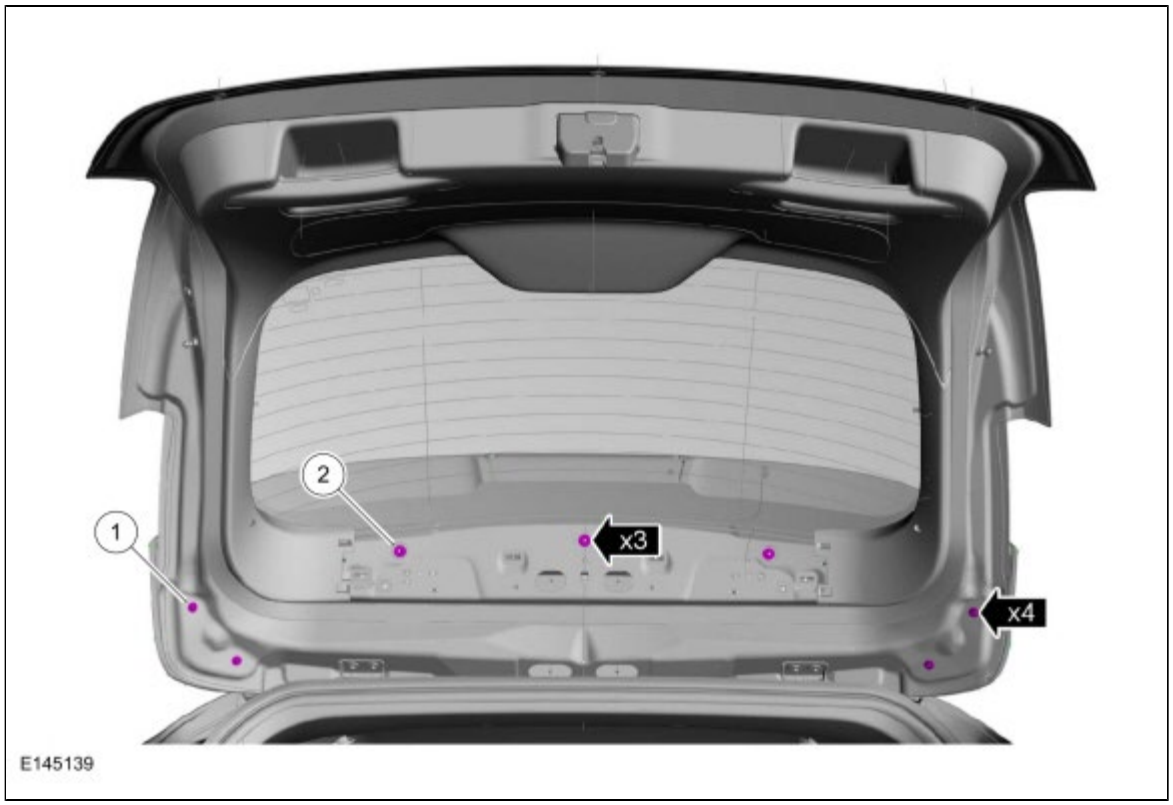

5.

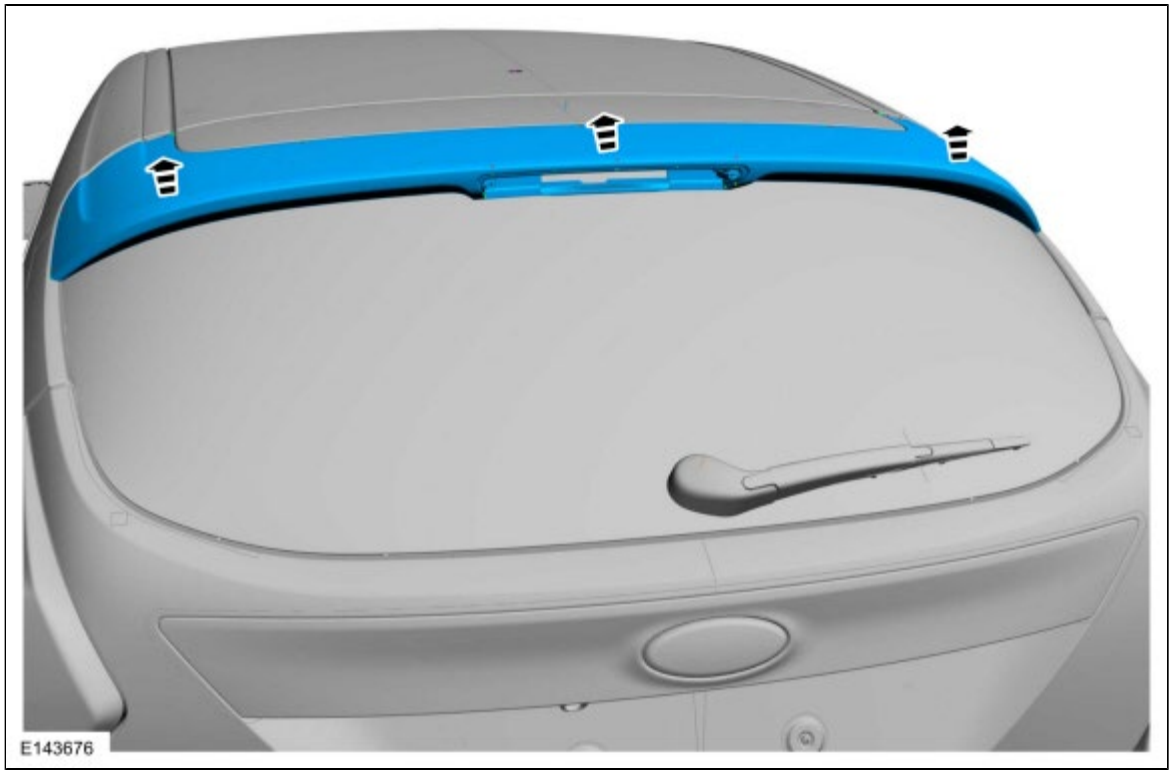

Installation

1. To install, reverse the removal procedure.

Copyright © Ford Motor Company

A-Pillar Outer Panel Section and Reinforcement

Removal

1. **WARNING: Before beginning any service procedure in this section, refer to Safety Warnings in section 100-00 General Information. Failure to follow this instruction may result in serious personal injury.**

   Refer to: Health and Safety Precautions (100-00 General Information, Description and Operation).

2. Remove the exterior sheet metal in the affected area.
   Refer to: Body Panel Sectioning (501-26 Body Repairs - Vehicle Specific Information and Tolerance Checks, General Procedures).

3. **NOTE:** *Due to the metal composition of the A-pillar and front floor panel reinforcement, no sectioning is permitted in these areas. Components must be replaced at the factory seams.*

   Remove the welds and remove the inner body reinforcing panel at the factory seams only.
   Refer to: Body Construction - Component Location (501-25 Body Repairs - General Information, Description and Operation).

Installation

1. Install the component and weld following recommended practices.
   Refer to: Specifications (501-25 Body Repairs - General Information, Specifications).

2. Corrosion protection must be restored following any repair procedure.
   Refer to: Corrosion Prevention (501-25 Body Repairs - General Information, General Procedures).

3. Refinish using a Ford Motor Company approved paint system.

Copyright © Ford Motor Company

Front Door Skin Panel

Removal

NOTE: *Left Hand (LH) side shown, Right Hand (RH) side similar.*

1. **WARNING: Before beginning any service procedure in this section, refer to Safety Warnings in section 100-00 General Information. Failure to follow this instruction may result in serious personal injury.**

   Refer to: Health and Safety Precautions (100-00 General Information, Description and Operation).

2. Install new or rebuild as necessary.

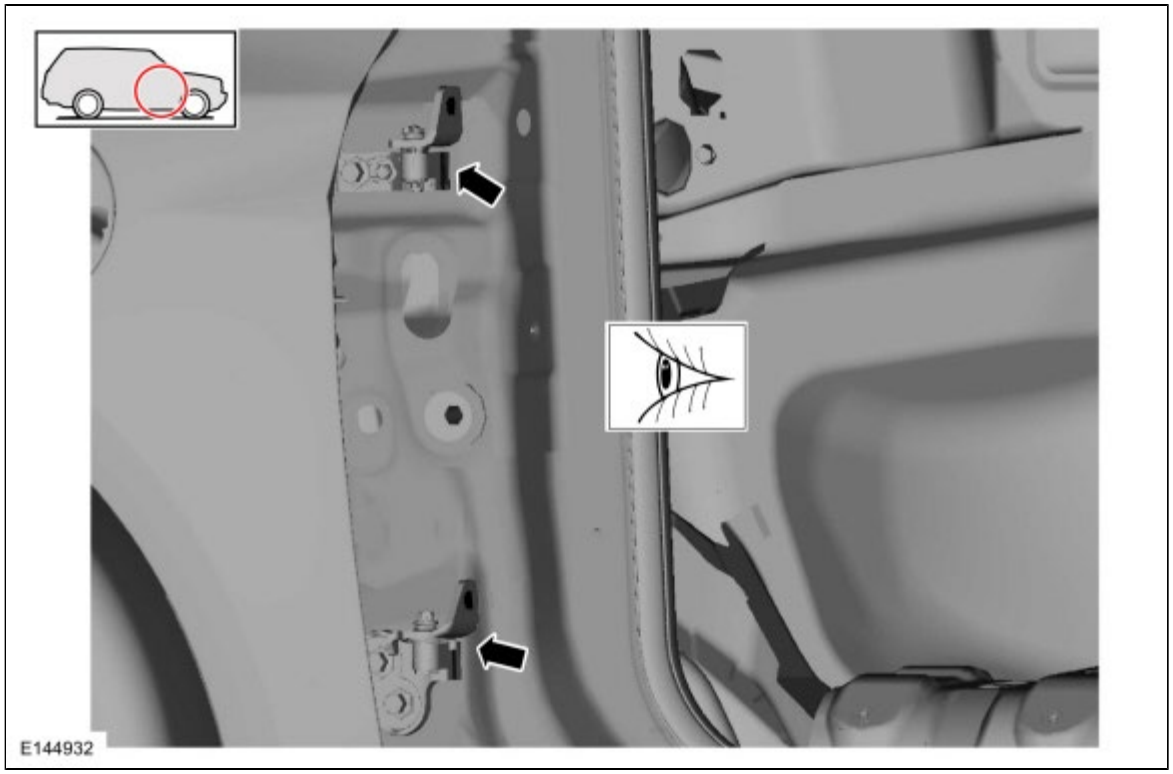

3. Refer to: Exterior Mirror (501-09A Rear View Mirrors - Vehicles Without: One-Touch Up Door Window, Removal and Installation).
   Refer to: Exterior Mirror (501-09B Rear View Mirrors - Vehicles With: One-Touch Up Door Window, Removal and Installation).

4. Refer to: Front Door Window Glass (501-11A Glass, Frames and Mechanisms - Vehicles Without: One-Touch Up Door Window, Removal and Installation).
   Refer to: Front Door Window Glass (501-11B Glass, Frames and Mechanisms - Vehicles With: One-Touch Up Door Window, Removal and Installation).

5. Refer to: Front Door (501-03 Body Closures, Removal and Installation).

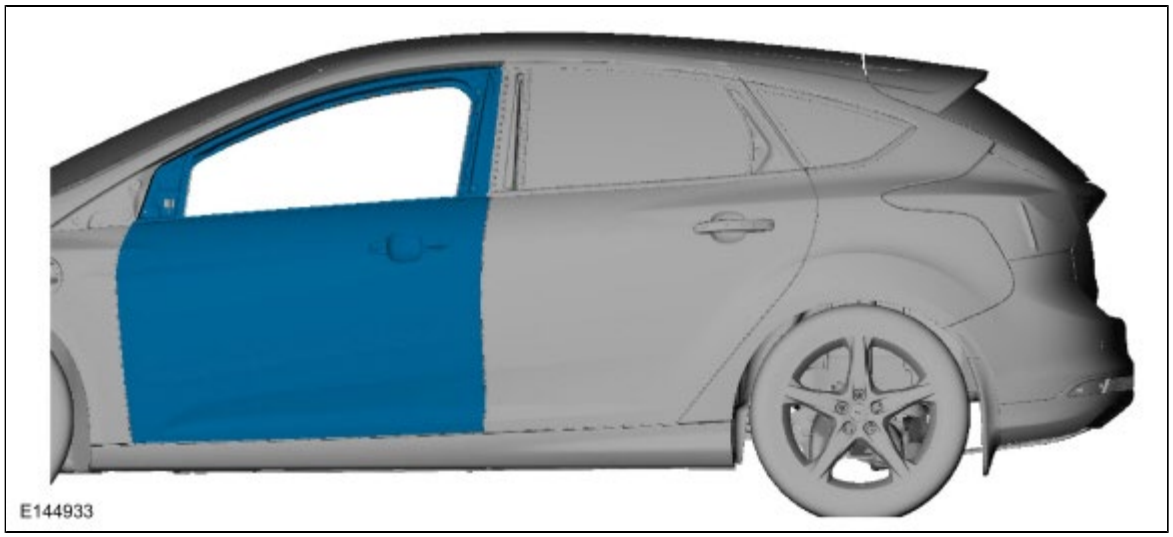

6. Refer to: Exterior Front Door Handle (501-14A Handles, Locks, Latches and Entry Systems - Vehicles Without: One-Touch Up Door Window, Removal and Installation).
   Refer to: Exterior Front Door Handle (501-14B Handles, Locks, Latches and Entry Systems - Vehicles With: One-Touch Up Door Window, Removal and Installation).

7.

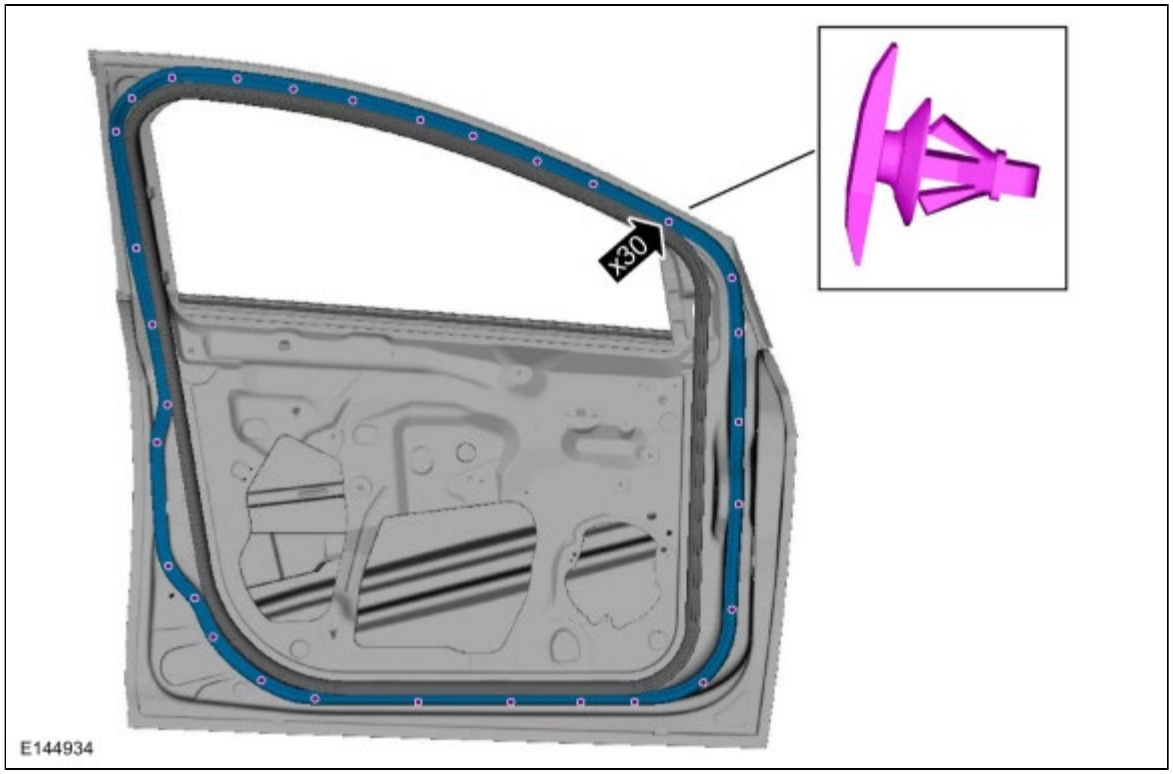

8.

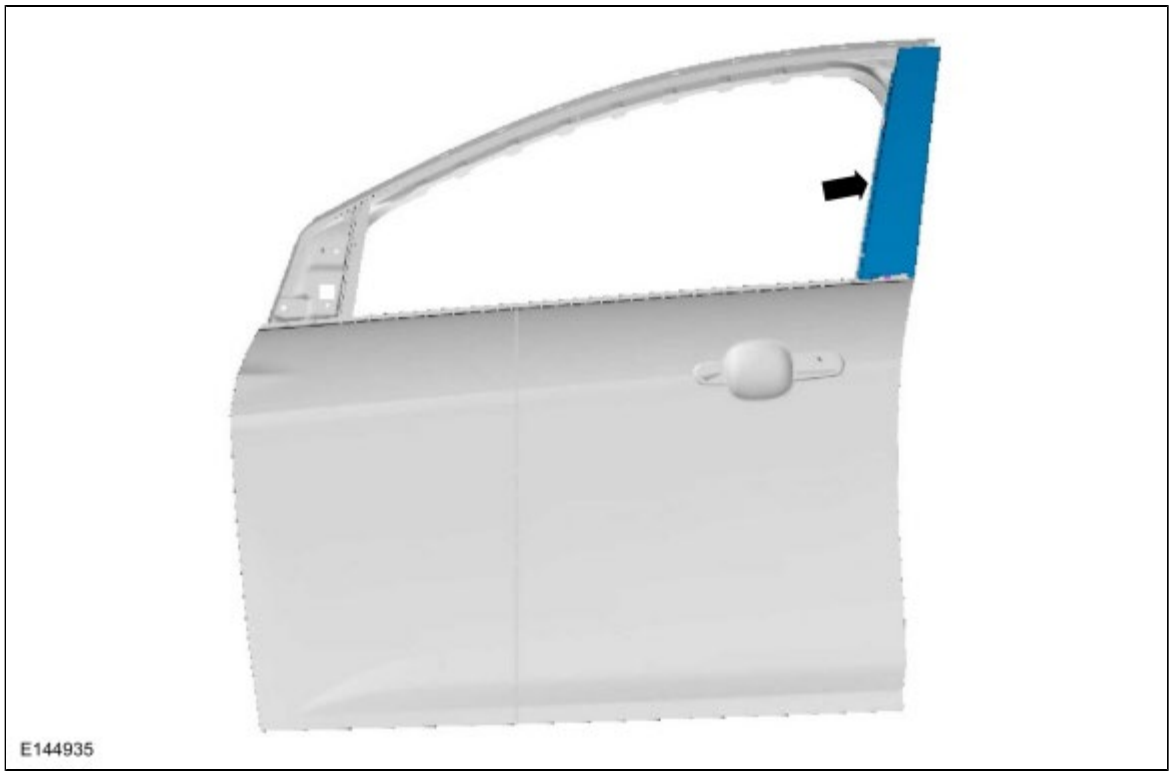

9. *General Equipment* : Grinder

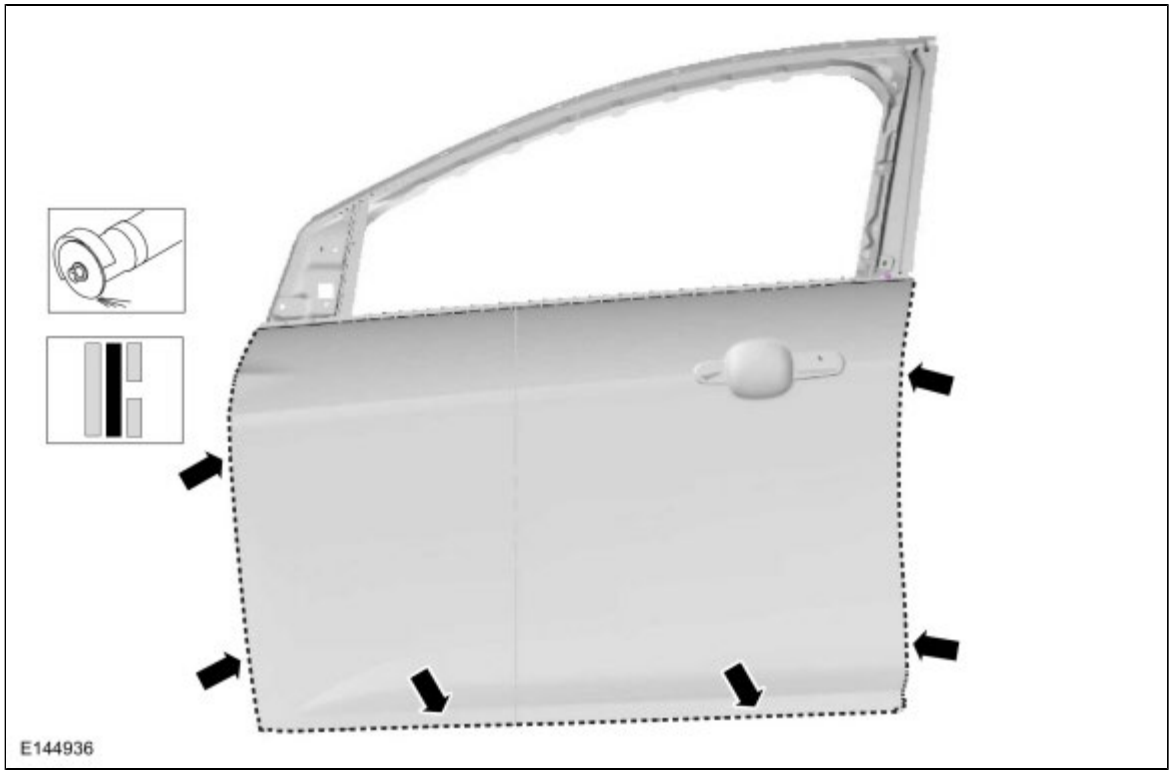

10.

11. *General Equipment* : Knife

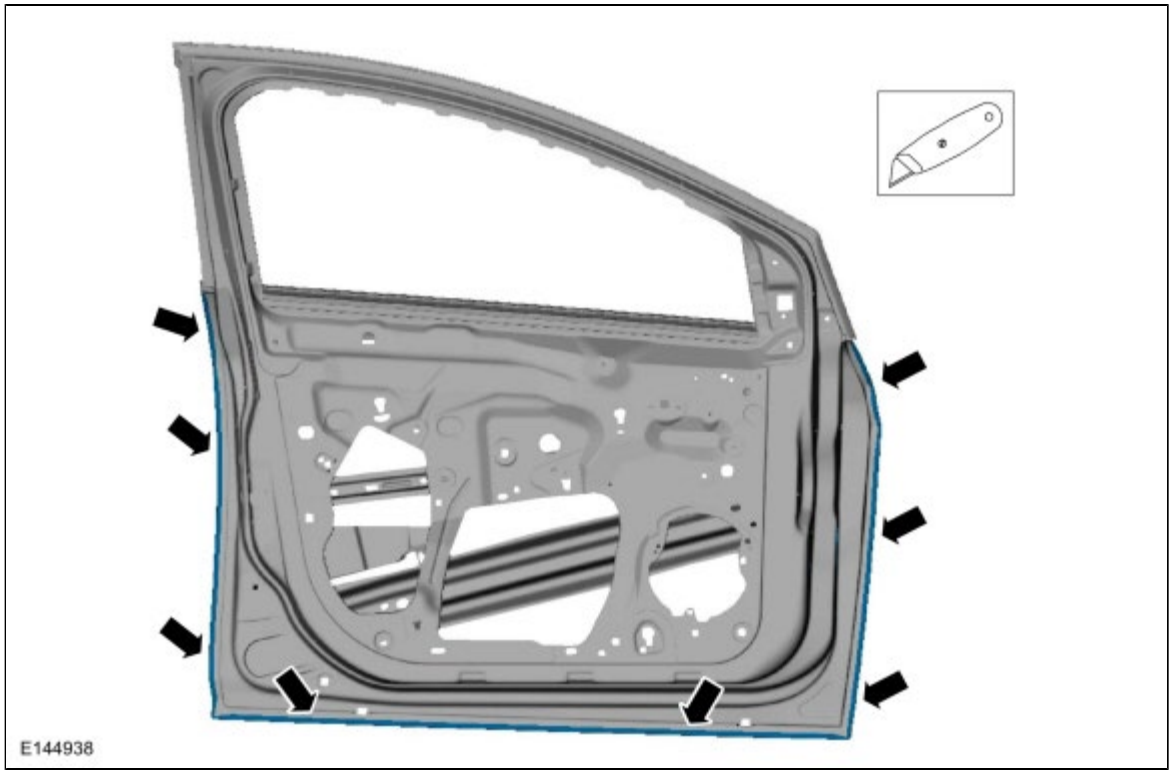

Installation

NOTE: *Left Hand (LH) side shown, Right Hand (RH) side similar.*

1.

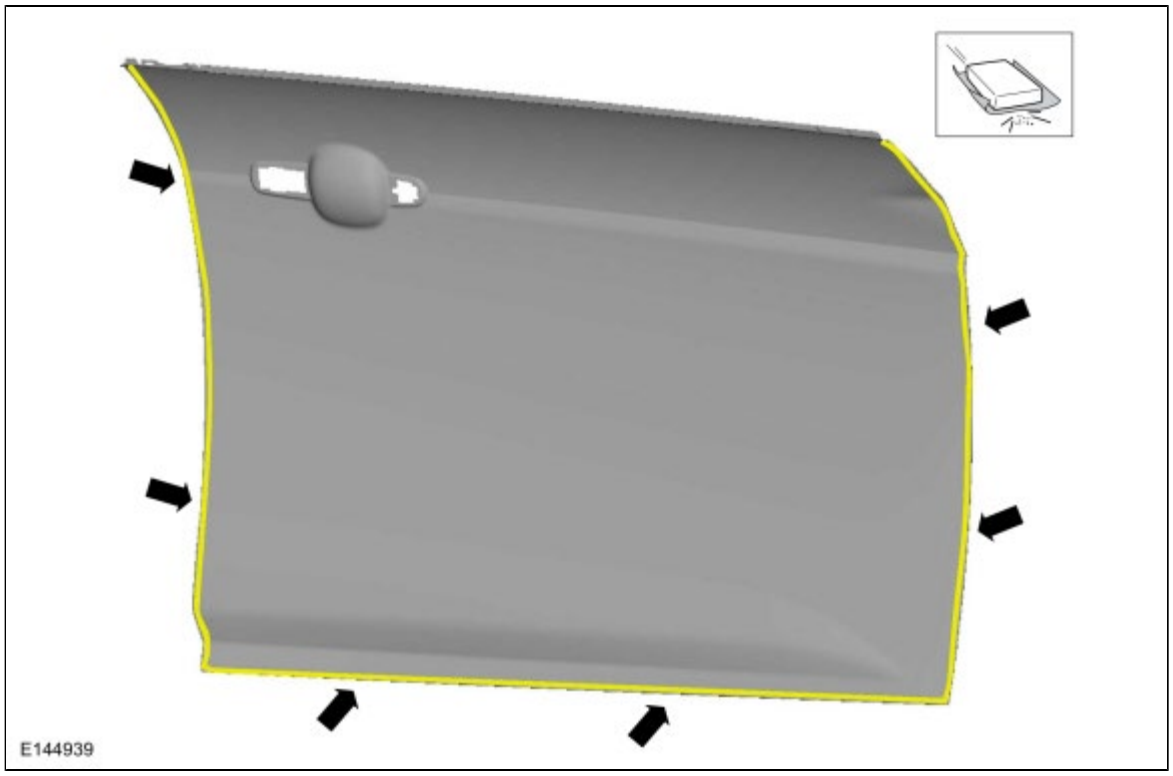

2.

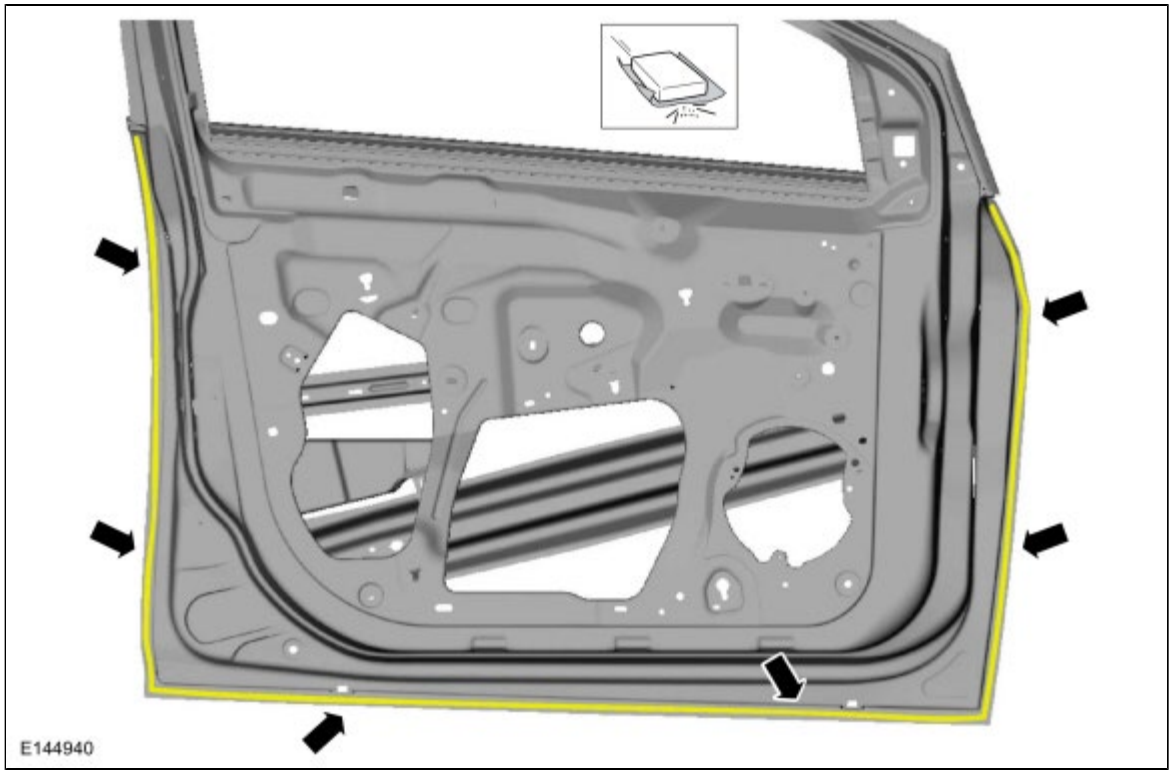

3. **NOTE:** *Hem closing and panel alignment must be completed before the adhesive has begun to cure.*

   Material : Metal Bonding Adhesive / TA-1

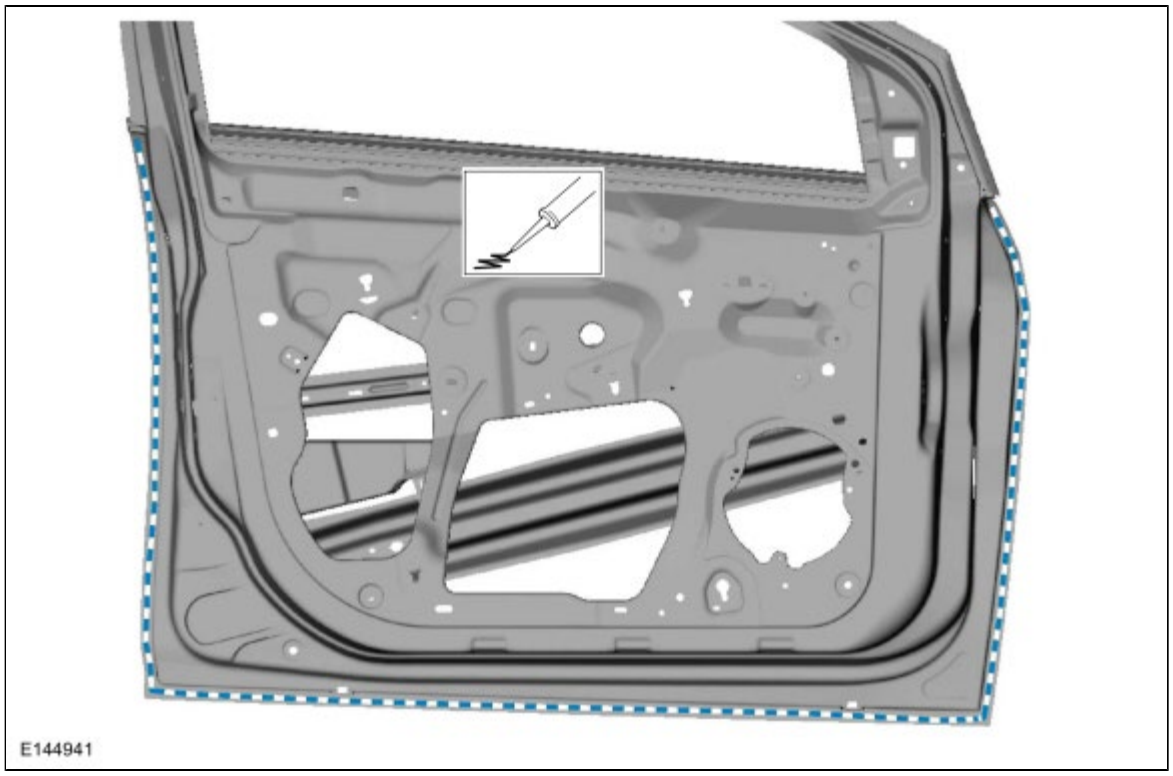

4. Using a door panel installation tool or hammer and dolly method, partially close the door hem flange around the entire perimeter of the door assembly.

5.

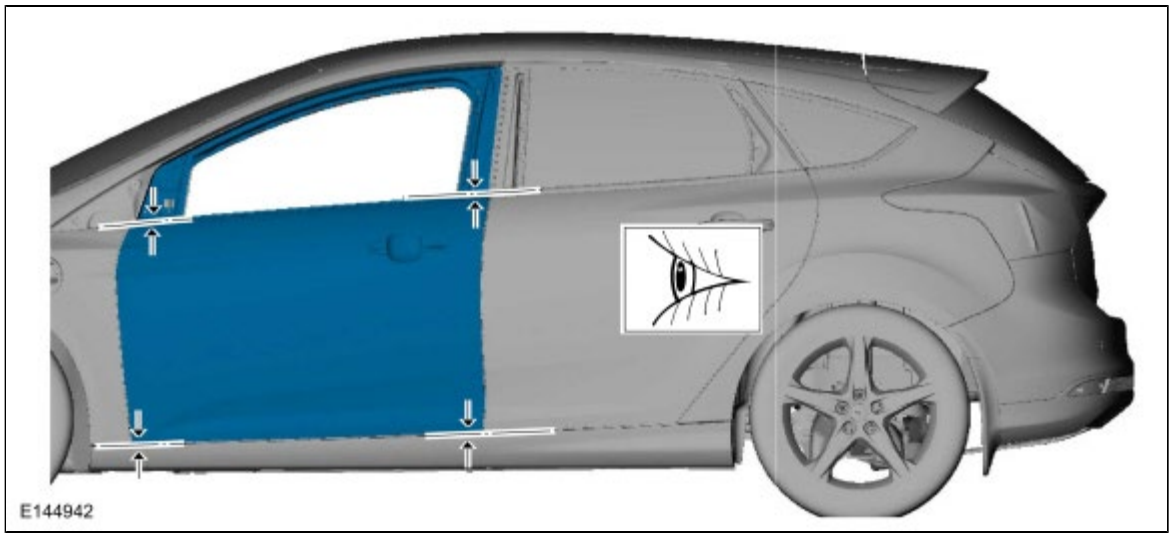

6. Tack weld.
   General Equipment : MIG/MAG Welding Equipment

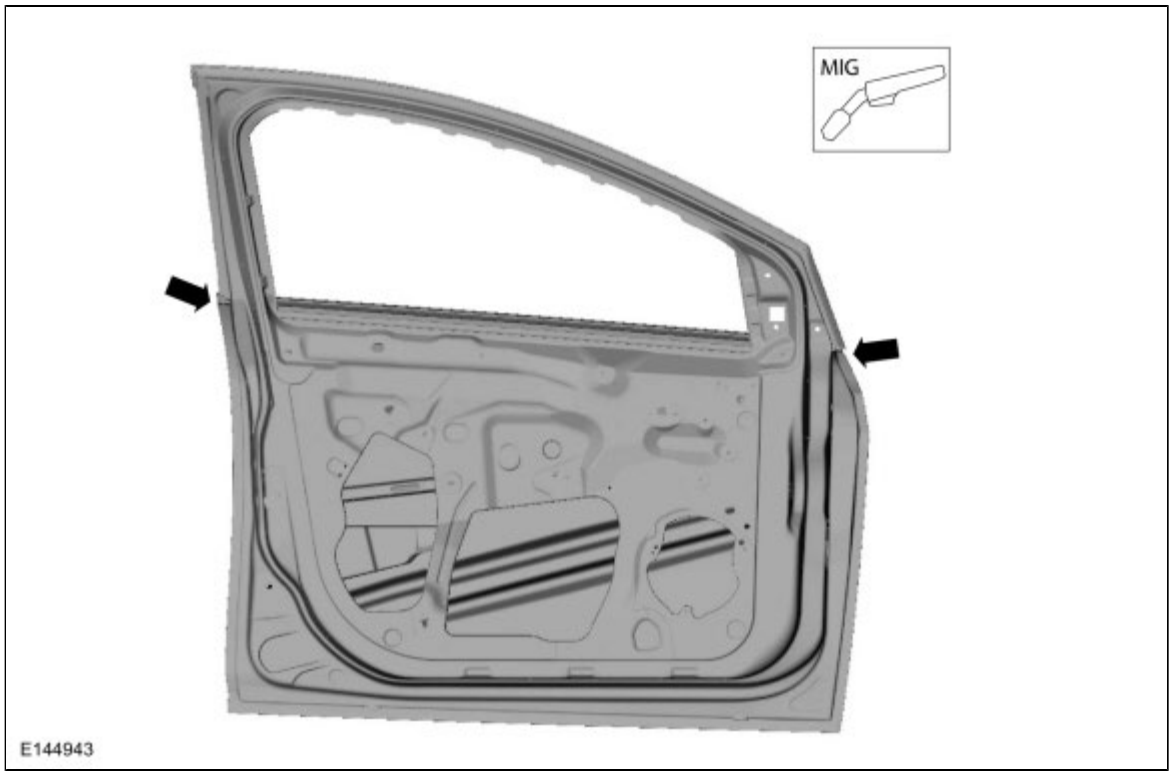

7.

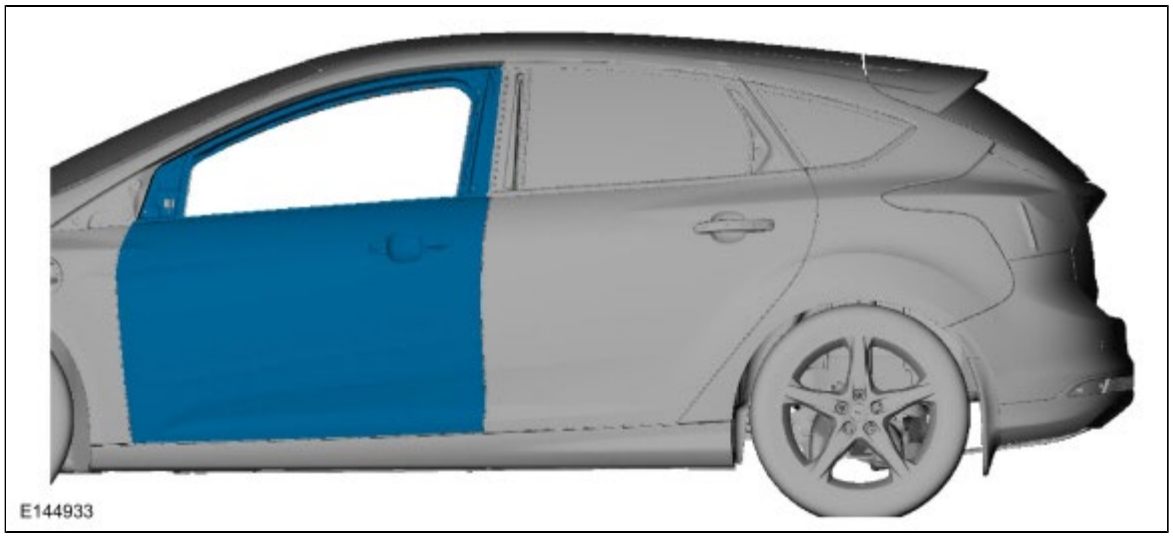

8. Using a door panel installation tool or hammer and dolly method, finish closing the door hem flange around the entire perimeter of the door assembly. Smooth any residual adhesive squeeze-out in to the seam to act as a seam sealer.

9. **NOTE:** *Outer door panel removed for illustration purpose.*

   Material : Fusor® Flexible Foam Repair / 121

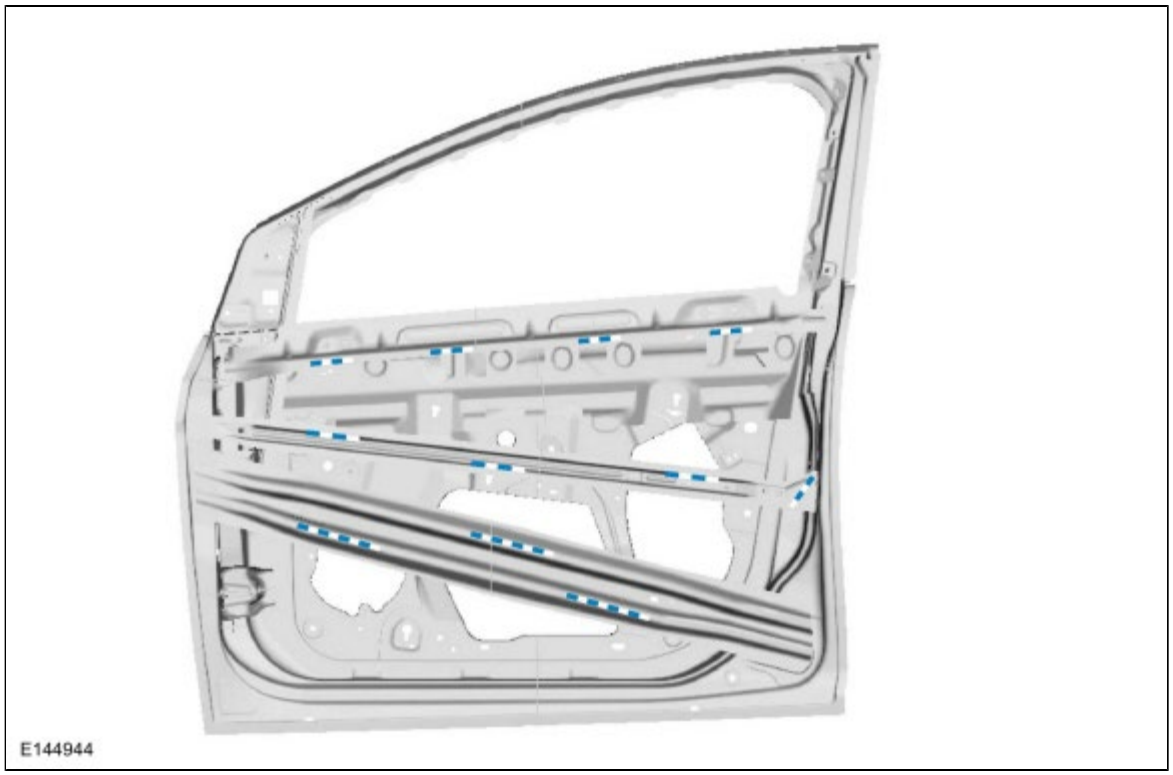

10.

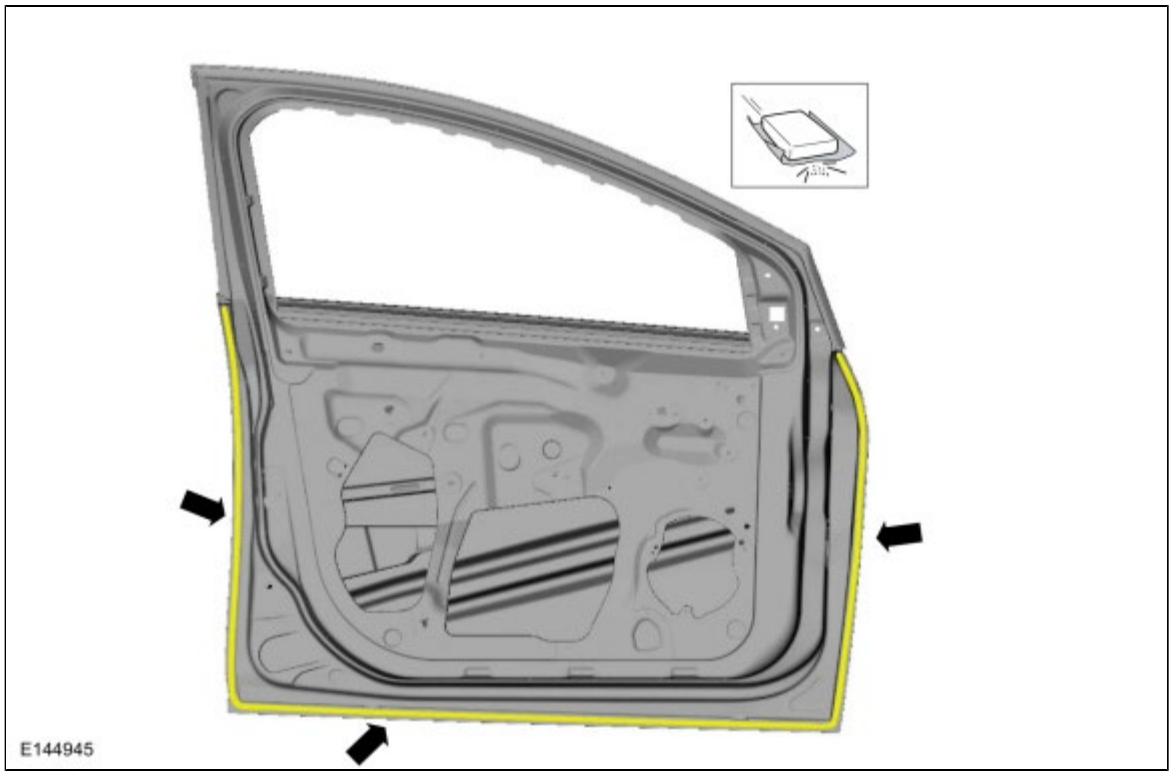

11. Prime the flange seam using a Ford approved primer.

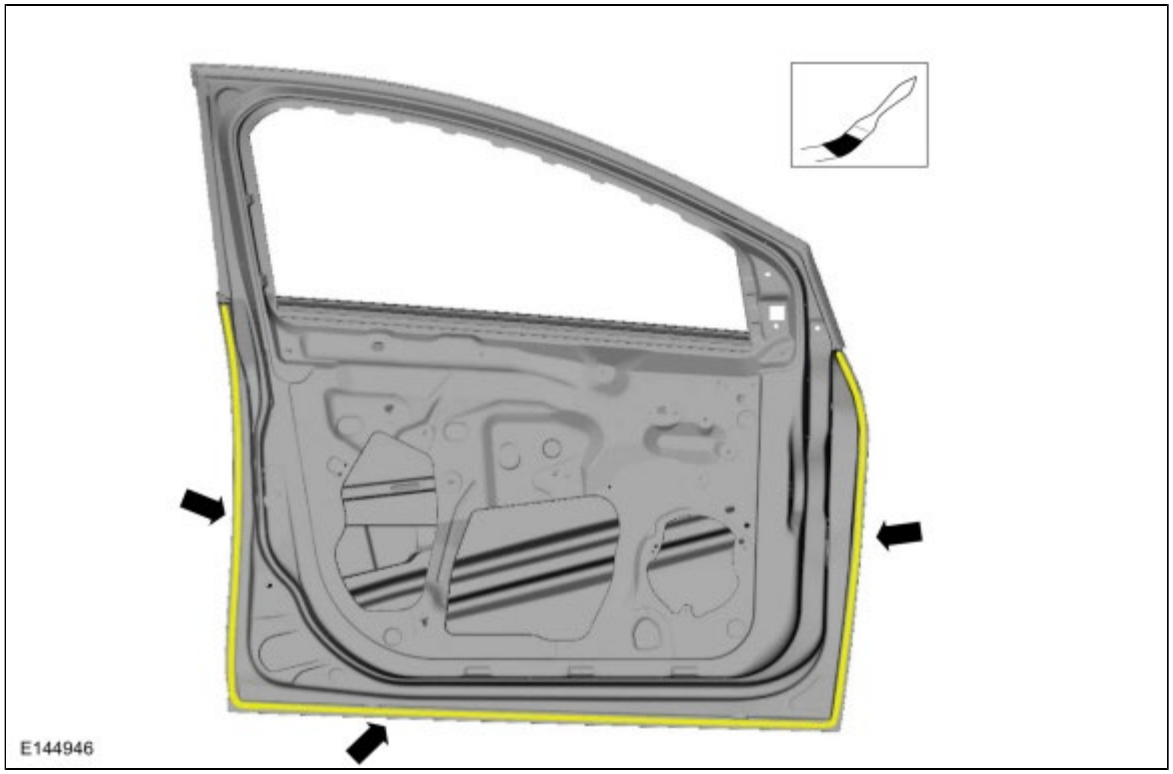

12. *Material* : Seam Sealer / TA-2

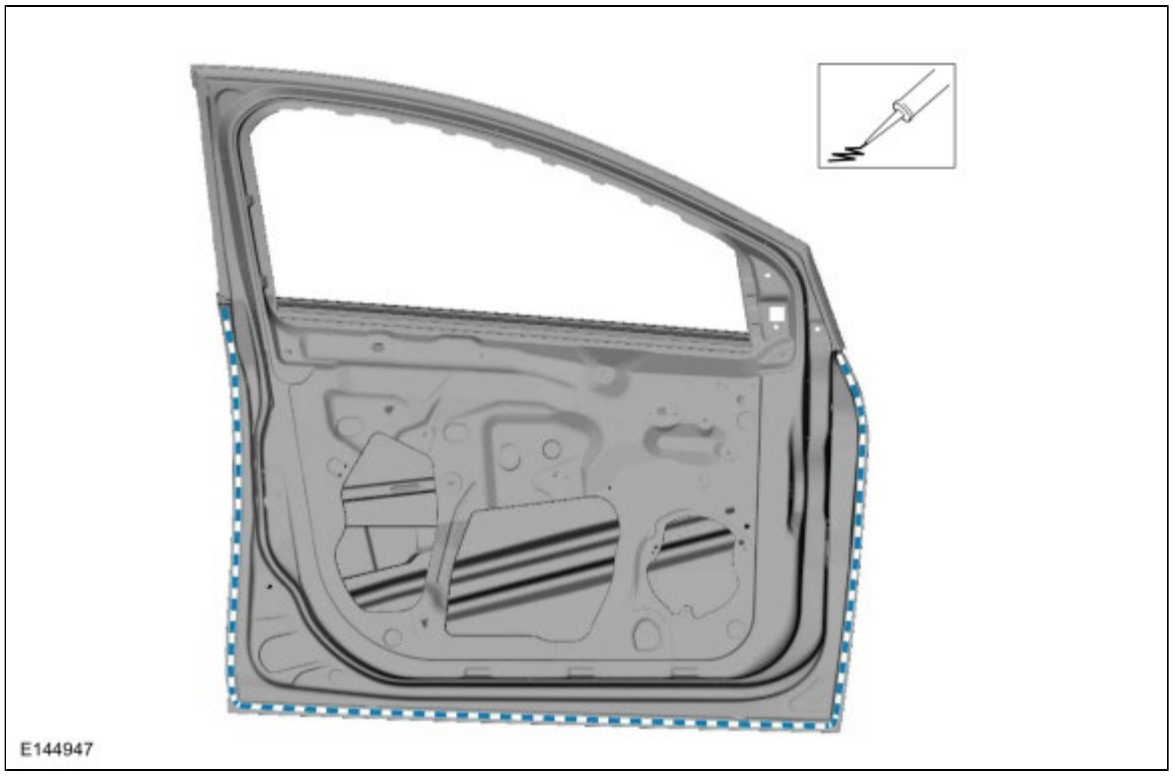

13. Refinish the door seam using a Ford approved paint system.

14. Refer to: Corrosion Prevention (501-25 Body Repairs - General Information, General Procedures).

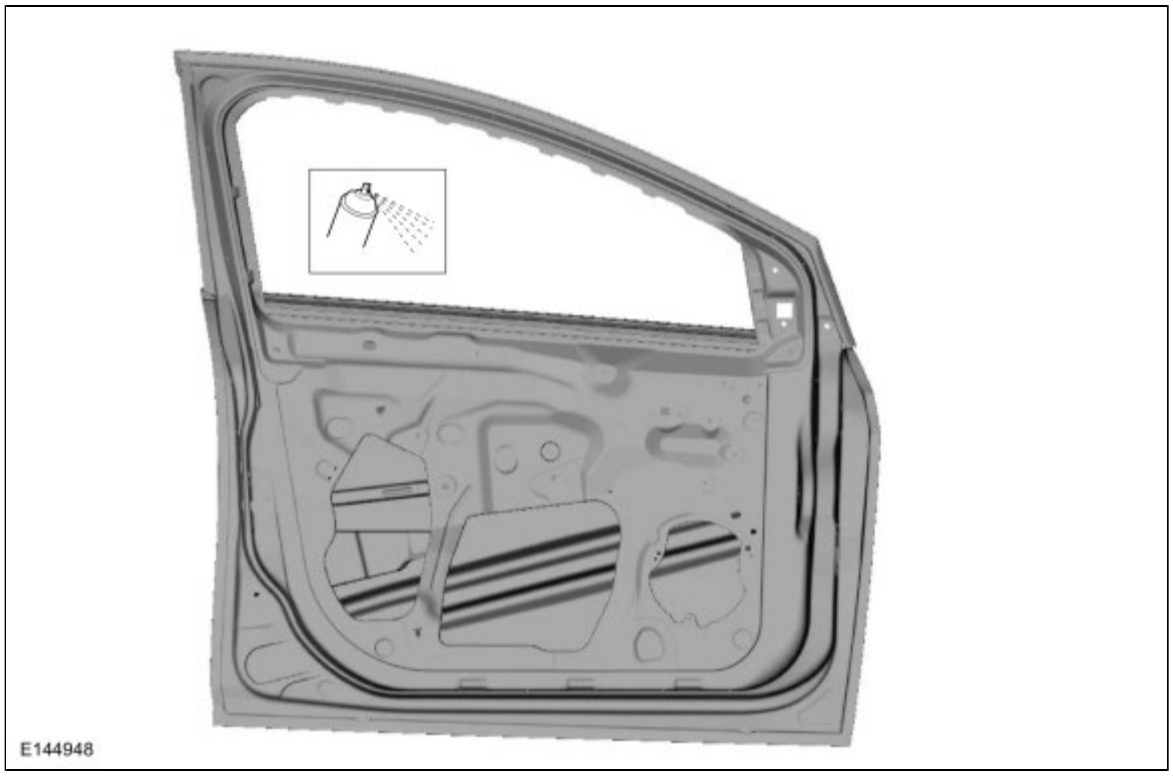

15.

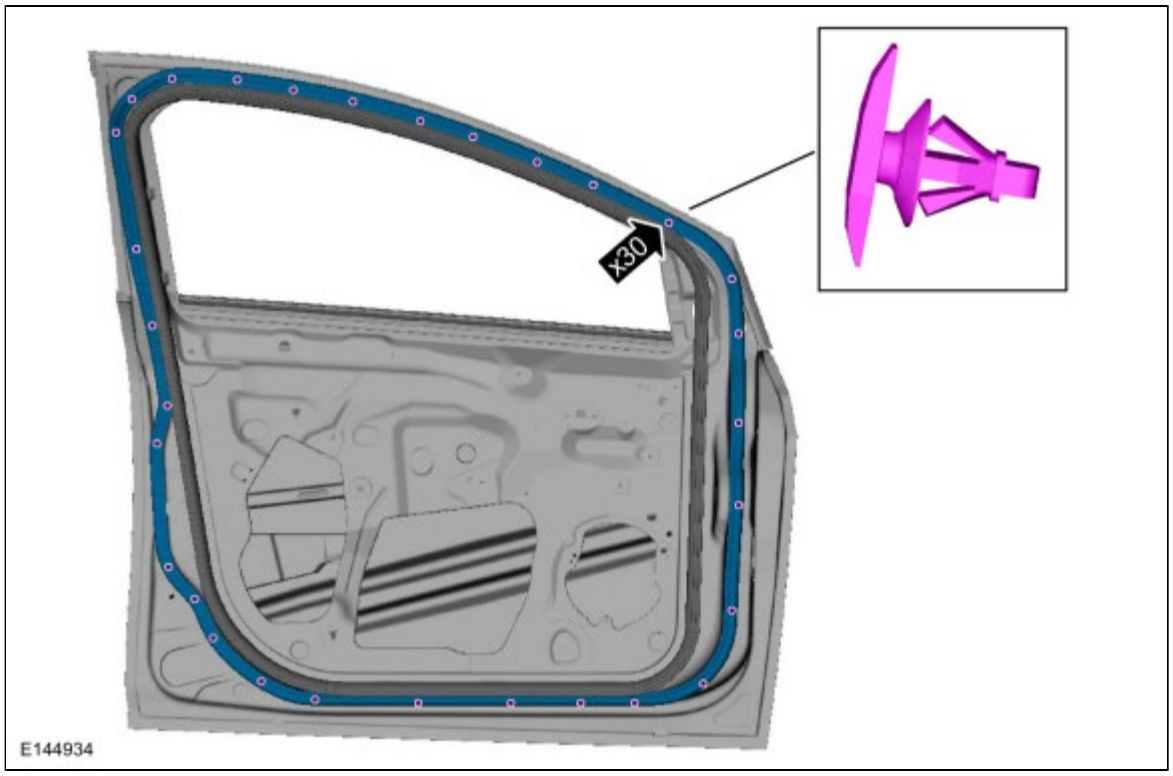

16. Refer to: Front Door (501-03 Body Closures, Removal and Installation).

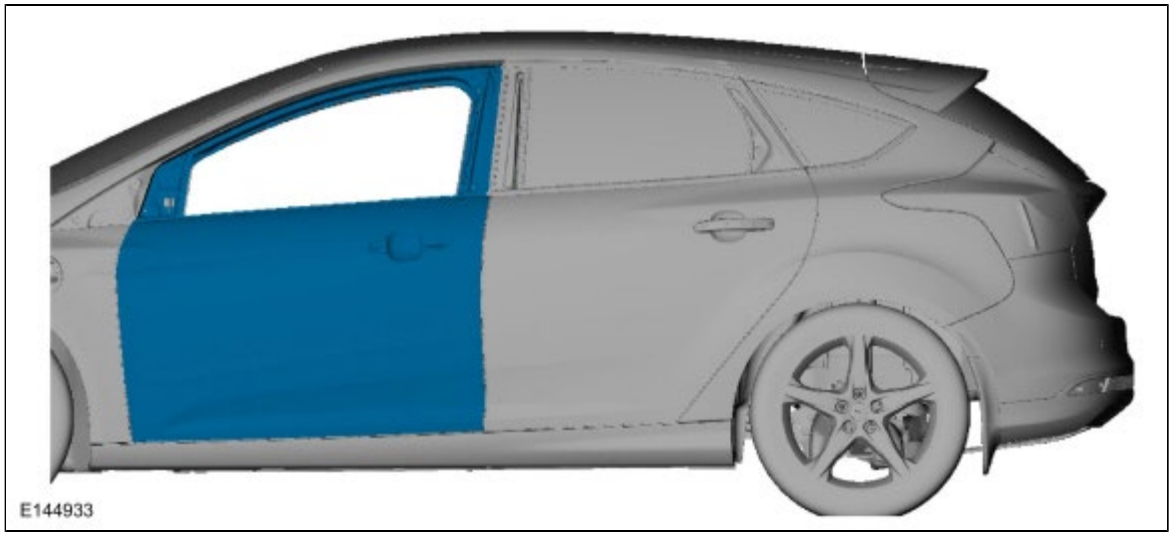

17. Refinish the door using a Ford approved paint system.

18. Refer to: Exterior Front Door Handle (501-14A Handles, Locks, Latches and Entry Systems - Vehicles Without: One-Touch Up Door Window, Removal and Installation).
    Refer to: Exterior Front Door Handle (501-14B Handles, Locks, Latches and Entry Systems - Vehicles With: One-Touch Up Door Window, Removal and Installation).

19. Refer to: Front Door Window Glass (501-11A Glass, Frames and Mechanisms - Vehicles Without: One-Touch Up Door Window, Removal and Installation).
    Refer to: Front Door Window Glass (501-11B Glass, Frames and Mechanisms - Vehicles With: One-Touch Up Door Window, Removal and Installation).

20. Refer to: Exterior Mirror (501-09A Rear View Mirrors - Vehicles Without: One-Touch Up Door Window, Removal and Installation).
    Refer to: Exterior Mirror (501-09B Rear View Mirrors - Vehicles With: One-Touch Up Door Window, Removal and Installation).

21.

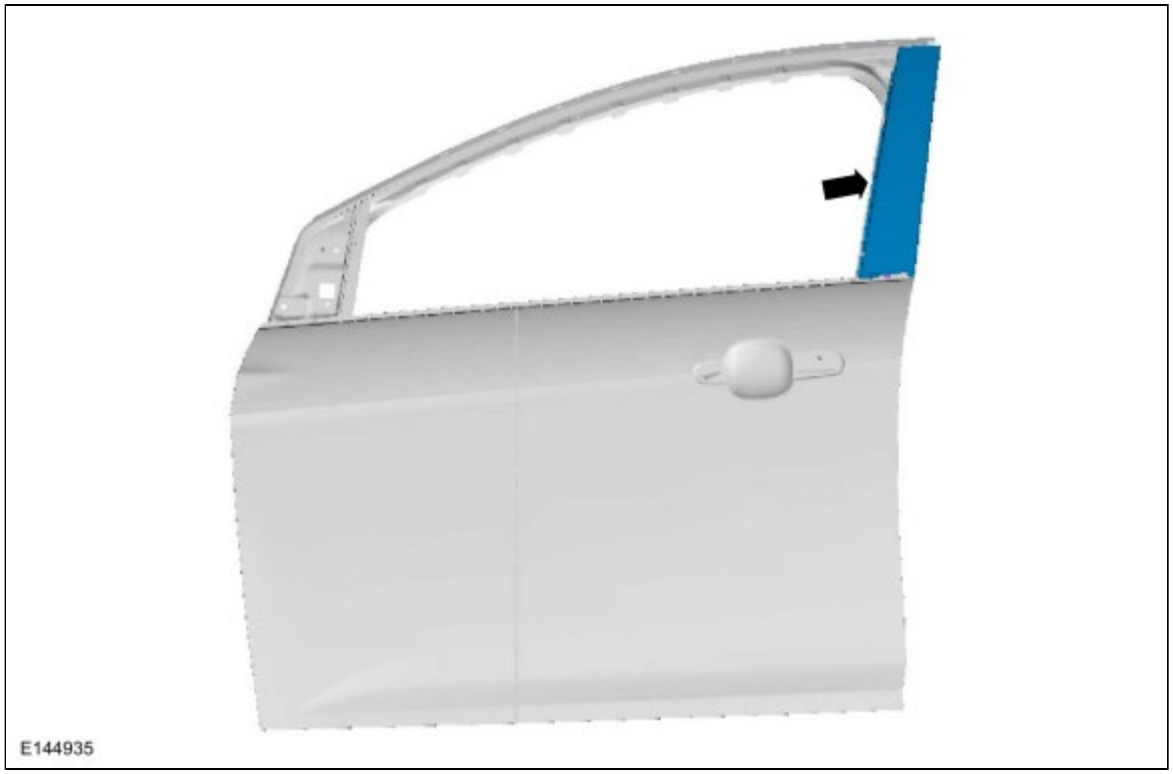

Copyright © Ford Motor Company

Rear Door Skin Panel

Removal

NOTE: *Left hand (LH) side shown, right hand (RH) side similar.*

1. **WARNING: Before beginning any service procedure in this section, refer to Safety Warnings in section 100-00 General Information. Failure to follow this instruction may result in serious personal injury.**

   Refer to: Health and Safety Precautions (100-00 General Information, Description and Operation).

2. Install new or rebuild as necessary.

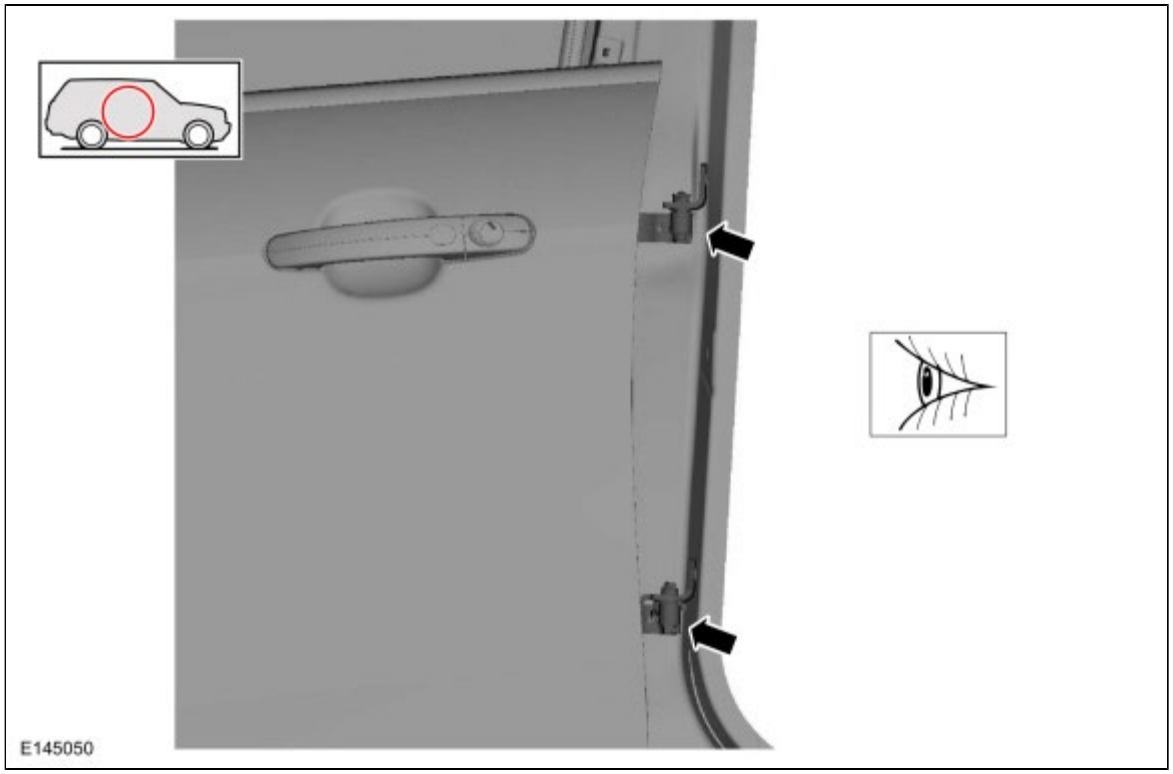

3. Refer to: Rear Door Window Glass (501-11A Glass, Frames and Mechanisms - Vehicles Without: One-Touch Up Door Window, Removal and Installation).
   Refer to: Rear Door Window Glass (501-11B Glass, Frames and Mechanisms - Vehicles With: One-Touch Up Door Window, Removal and Installation).

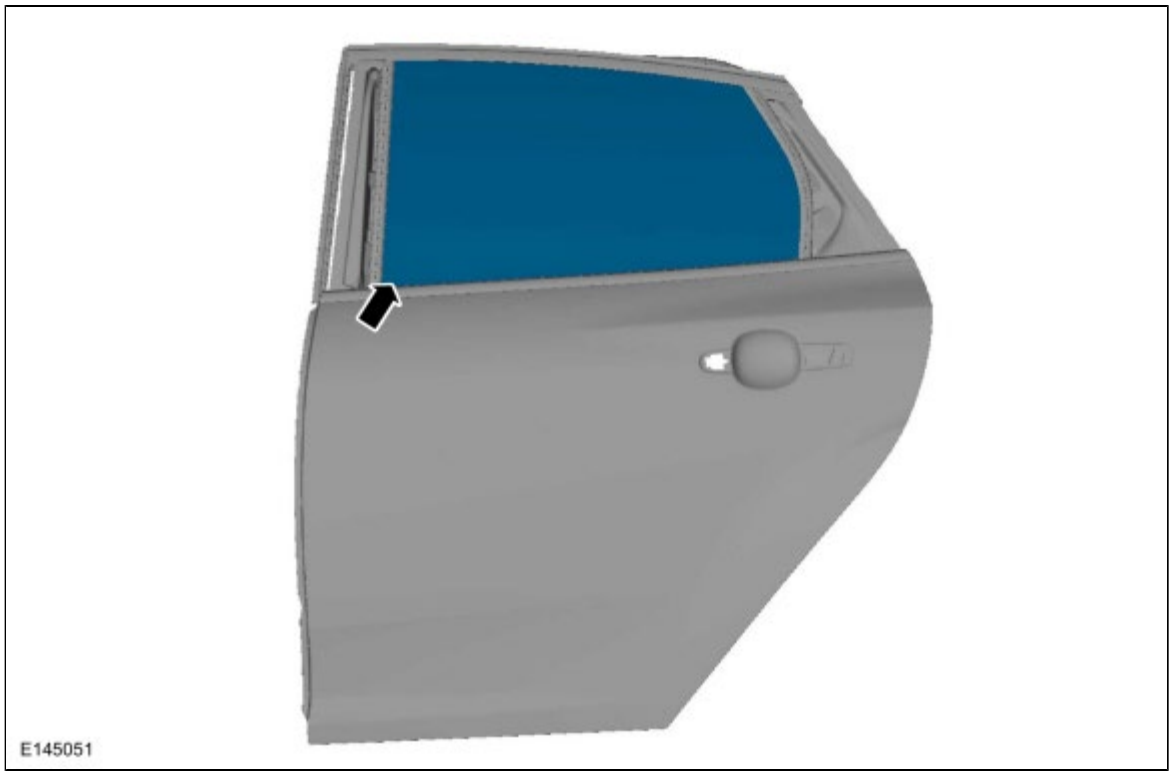

4. Refer to: Rear Door (501-03 Body Closures, Removal and Installation).

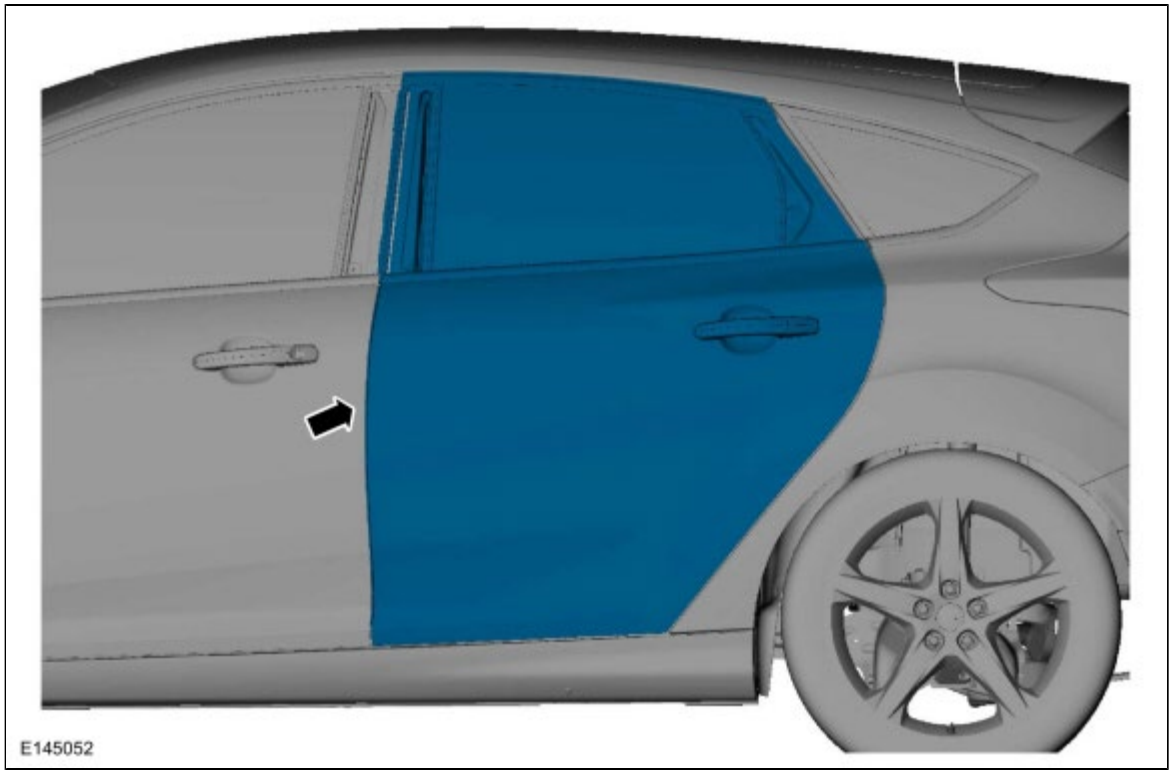

5. Refer to: Exterior Rear Door Handle (501-14A Handles, Locks, Latches and Entry Systems - Vehicles Without: One-Touch Up Door Window, Removal and Installation).
   Refer to: Exterior Rear Door Handle (501-14B Handles, Locks, Latches and Entry Systems - Vehicles With: One-Touch Up Door Window, Removal and Installation).

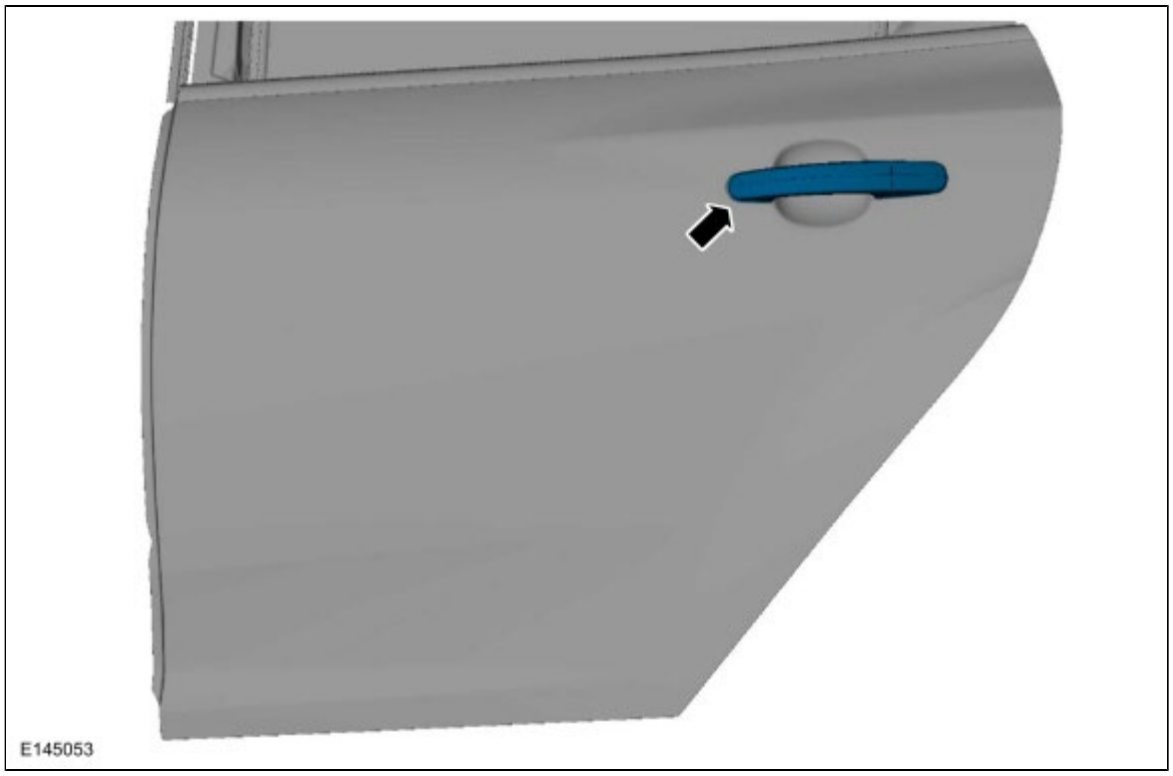

6.

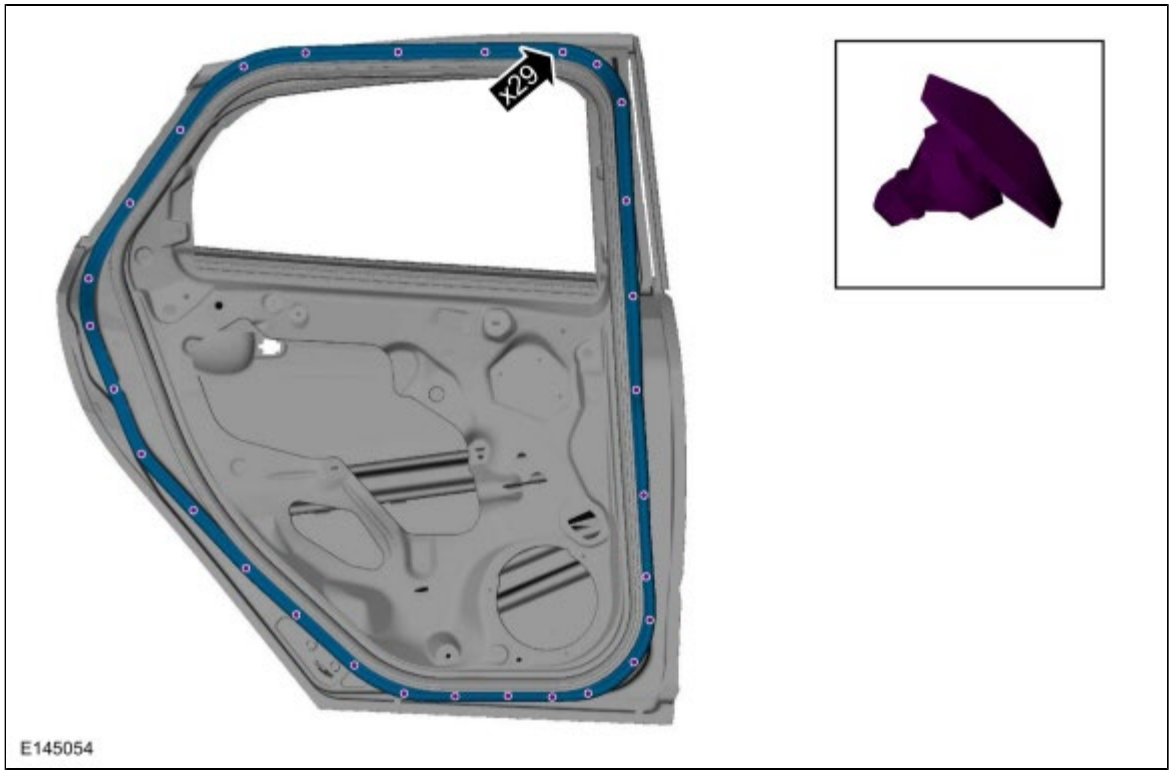

7.

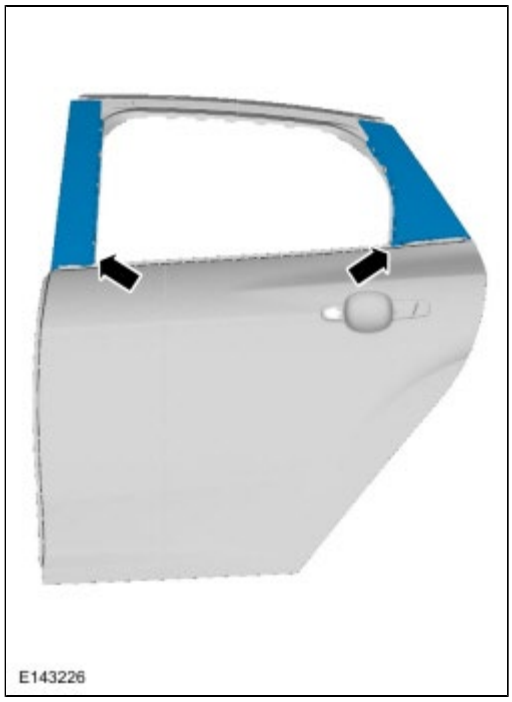

8. *General Equipment* : Grinder

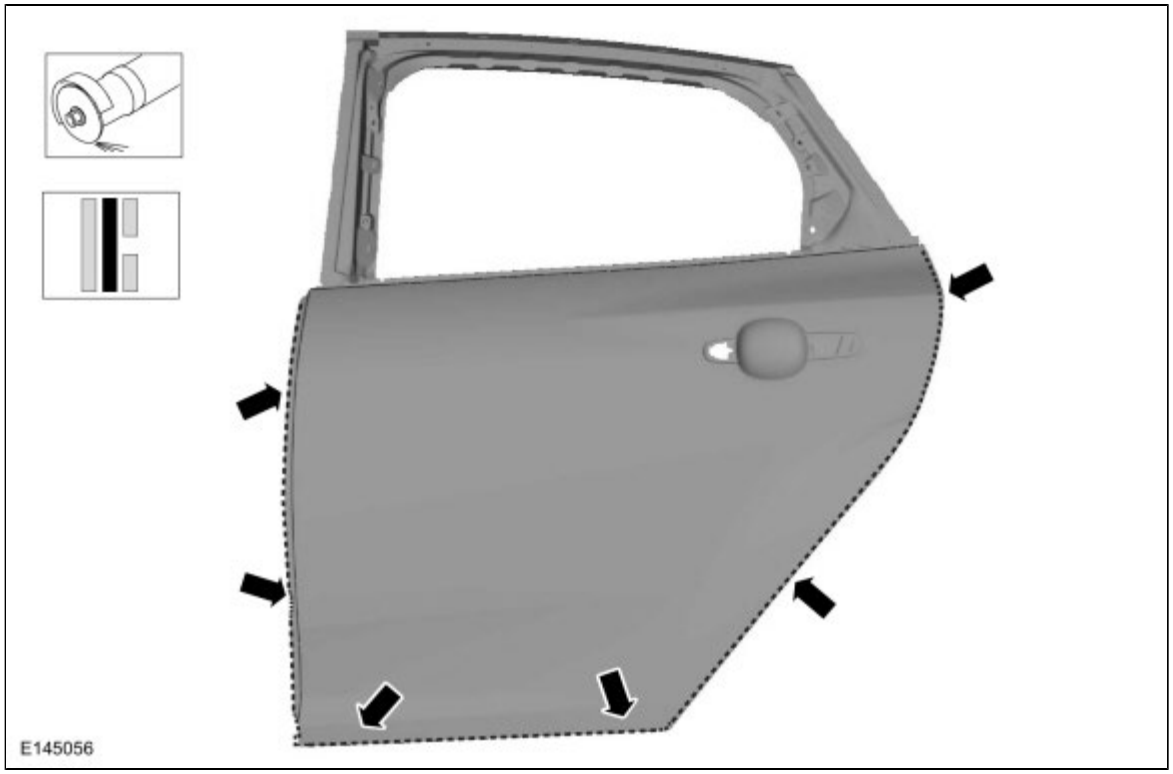

9.

10. *General Equipment* : Knife

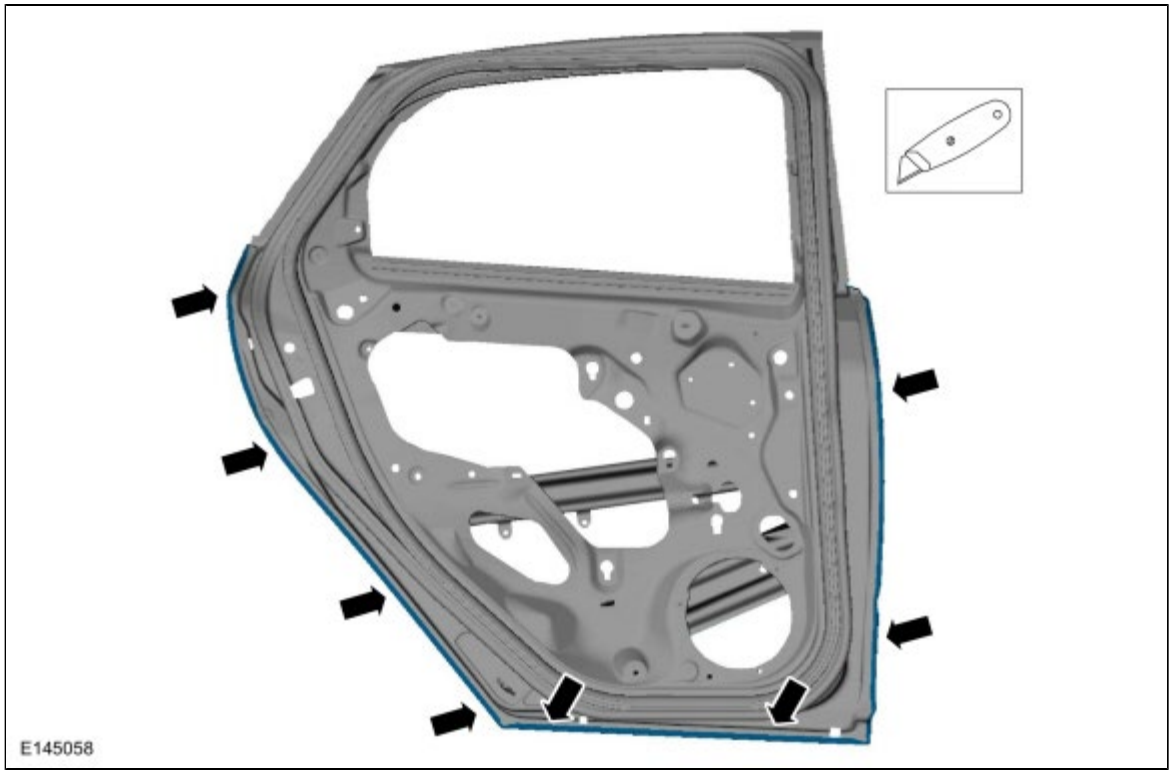

Installation

NOTE: *Left hand (LH) side shown, right hand (RH) side similar.*

1.

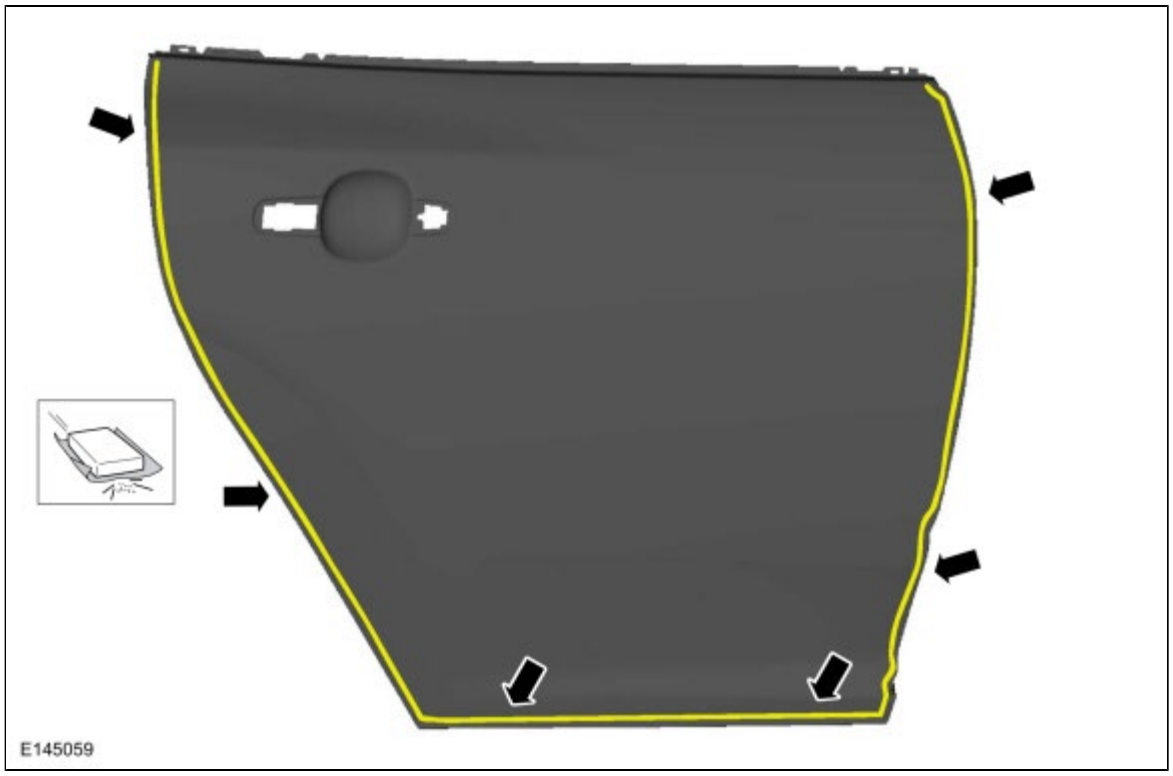

2.

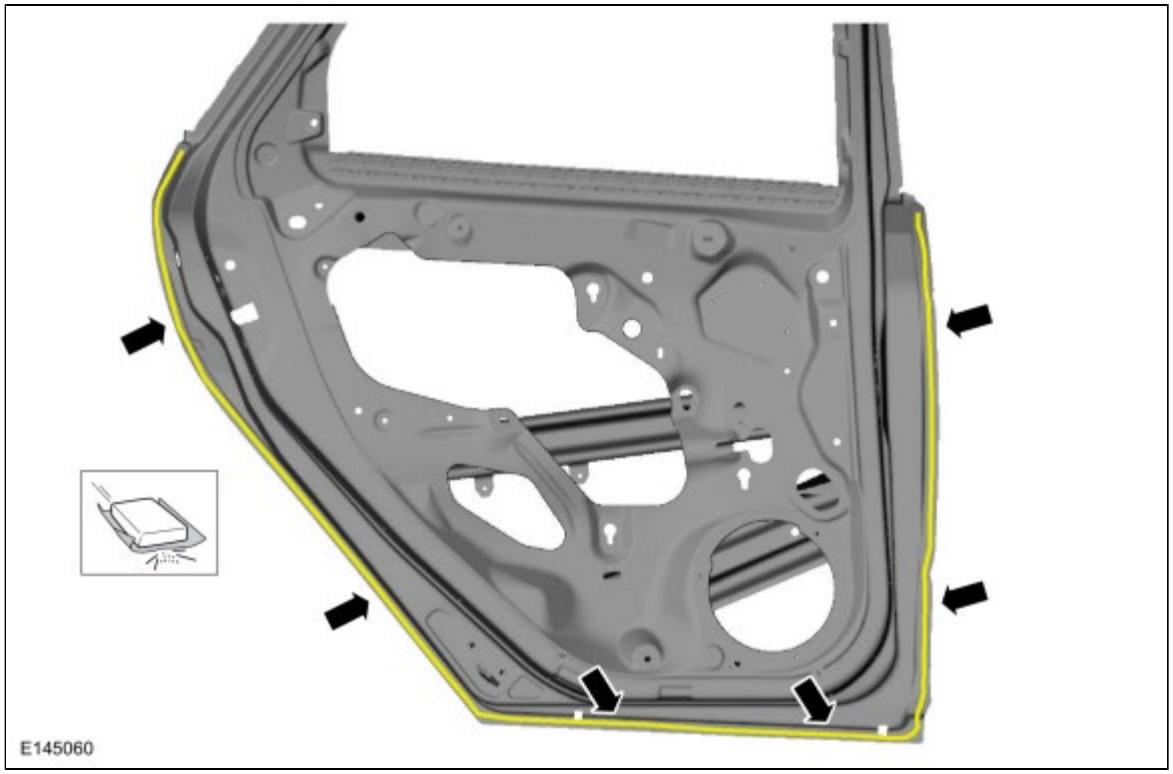

3. **NOTE:** *Hem closing and panel alignment must be completed before the adhesive has begun to cure.*

   Material : Metal Bonding Adhesive / TA-1

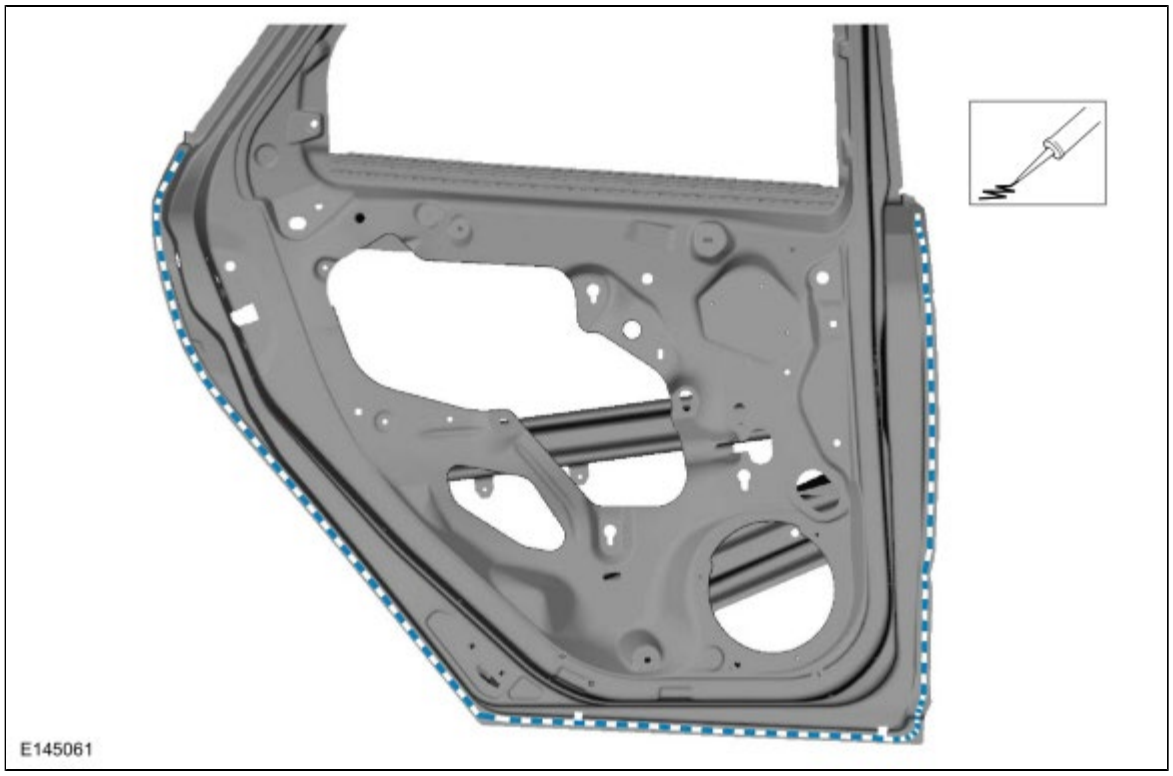

4. Using a door panel installation tool or hammer and dolly method, partially close the door hem flange around the perimeter of the door assembly.

5.

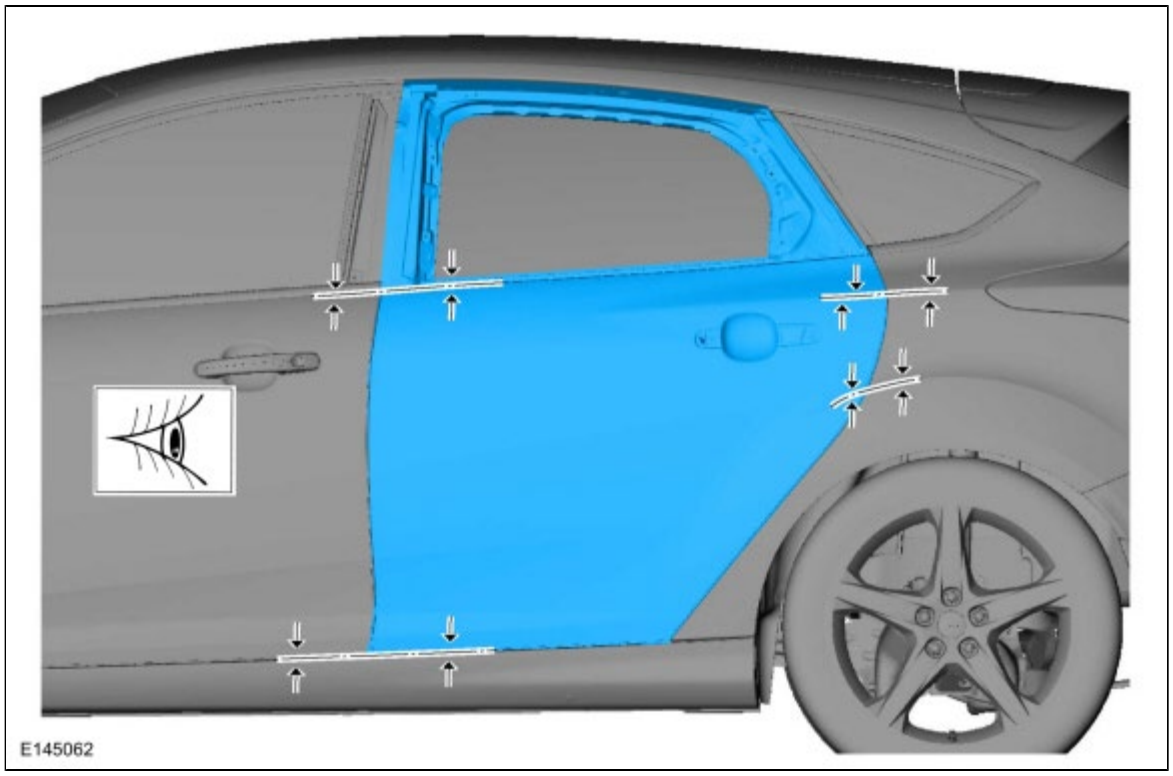

6. Tack weld.
   General Equipment : MIG/MAG Welding Equipment

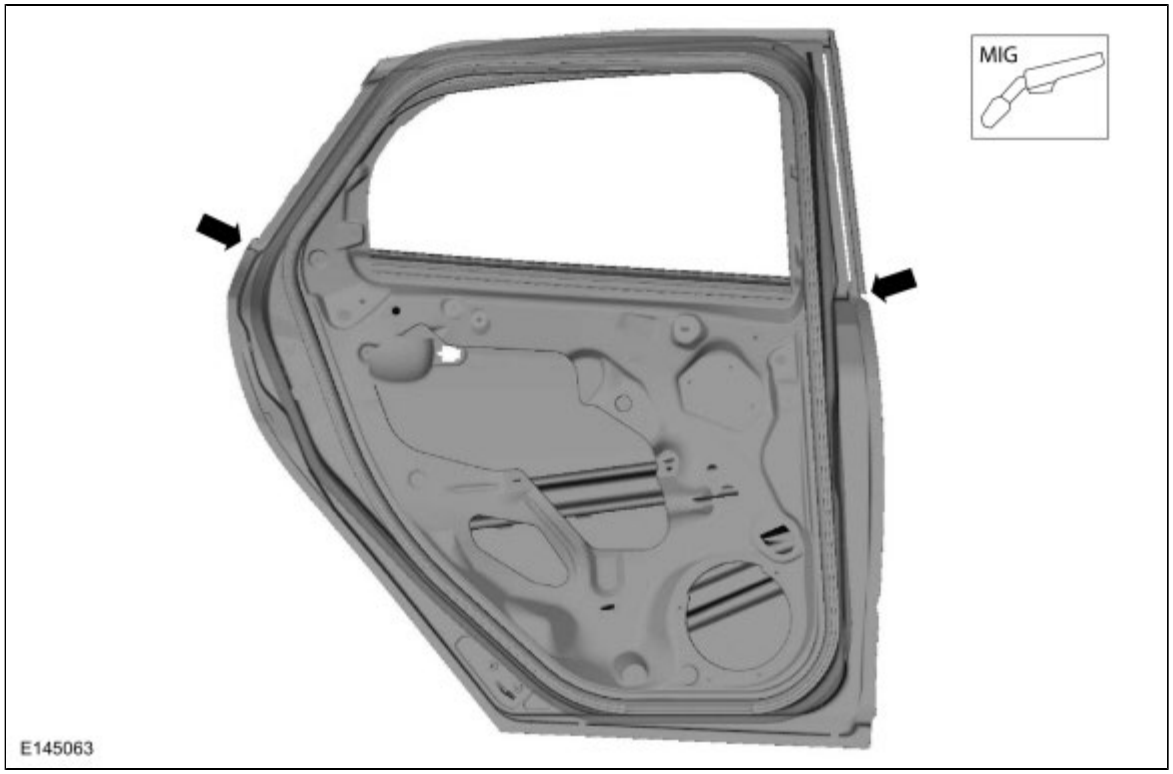

7.

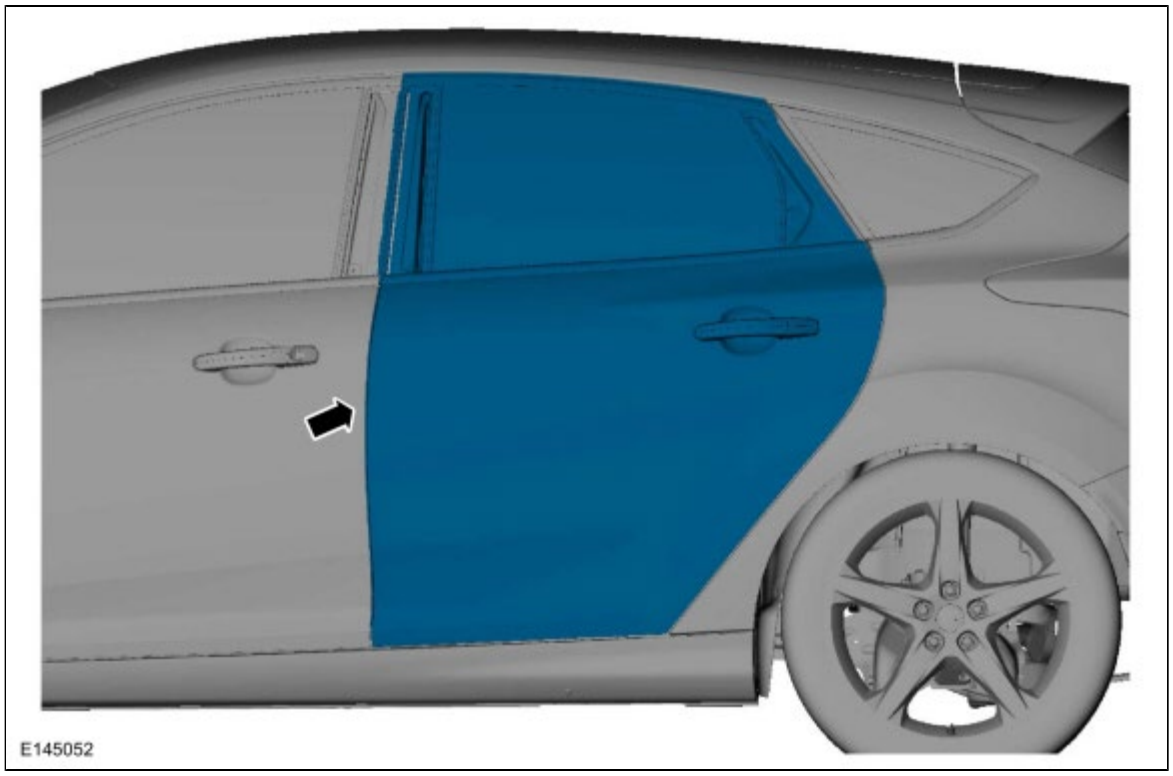

8. Using a door panel installation tool or hammer and dolly method, finish closing the door hem flange around the entire perimeter of the door assembly. Smooth any residual adhesive squeeze-out in to the seam to act as a seam sealer.

9. **NOTE:** *Outer door panel removed for illustration purpose.*

   Material : Fusor® Flexible Foam Repair / 121

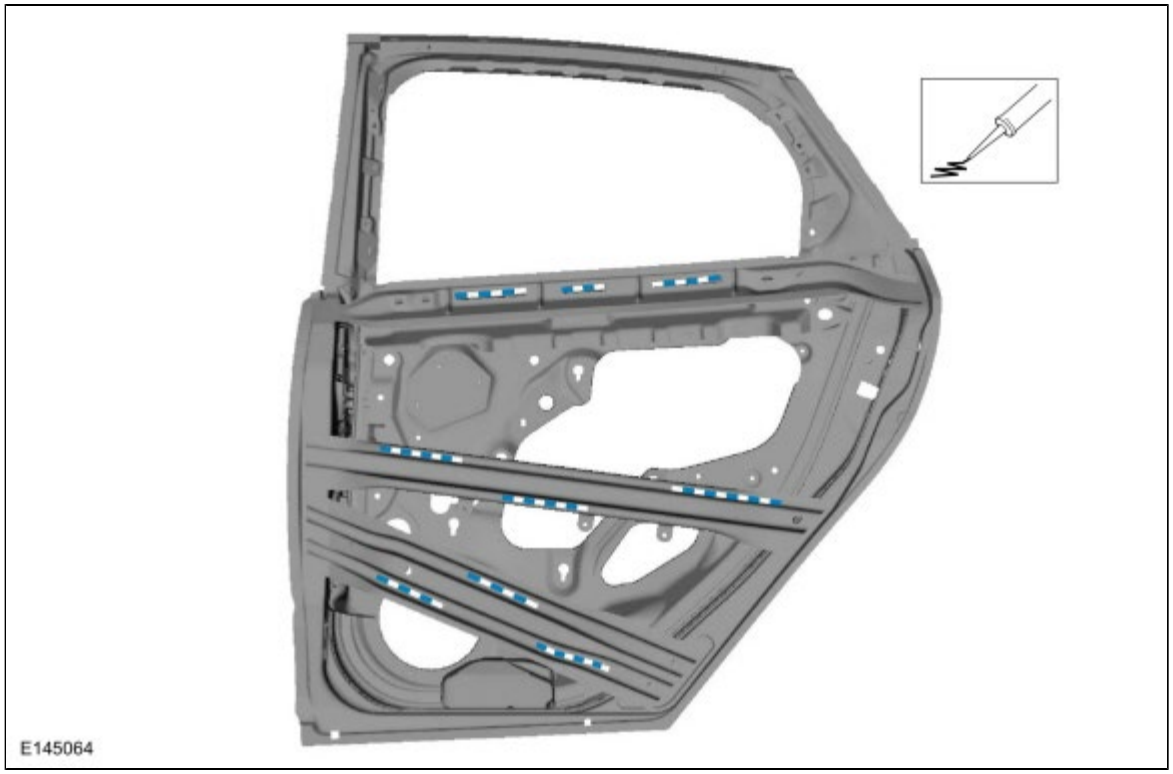

10.

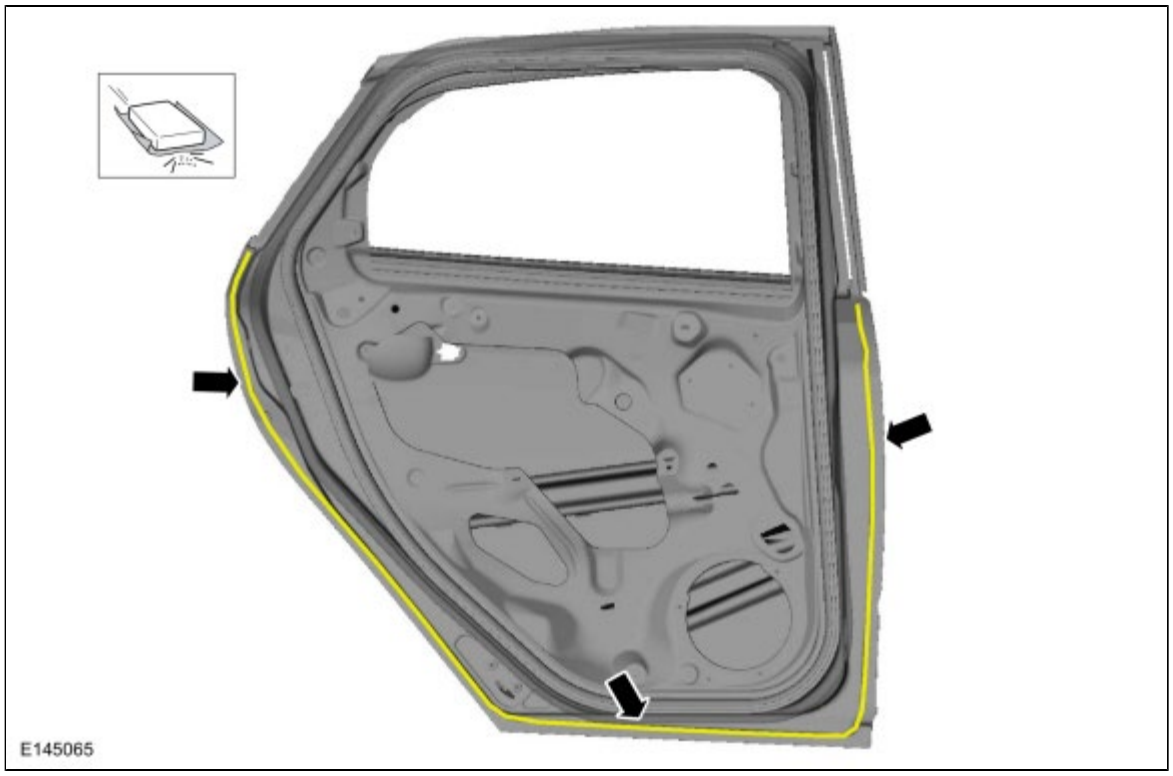

11. Prime the door flange area using a Ford approved paint system.

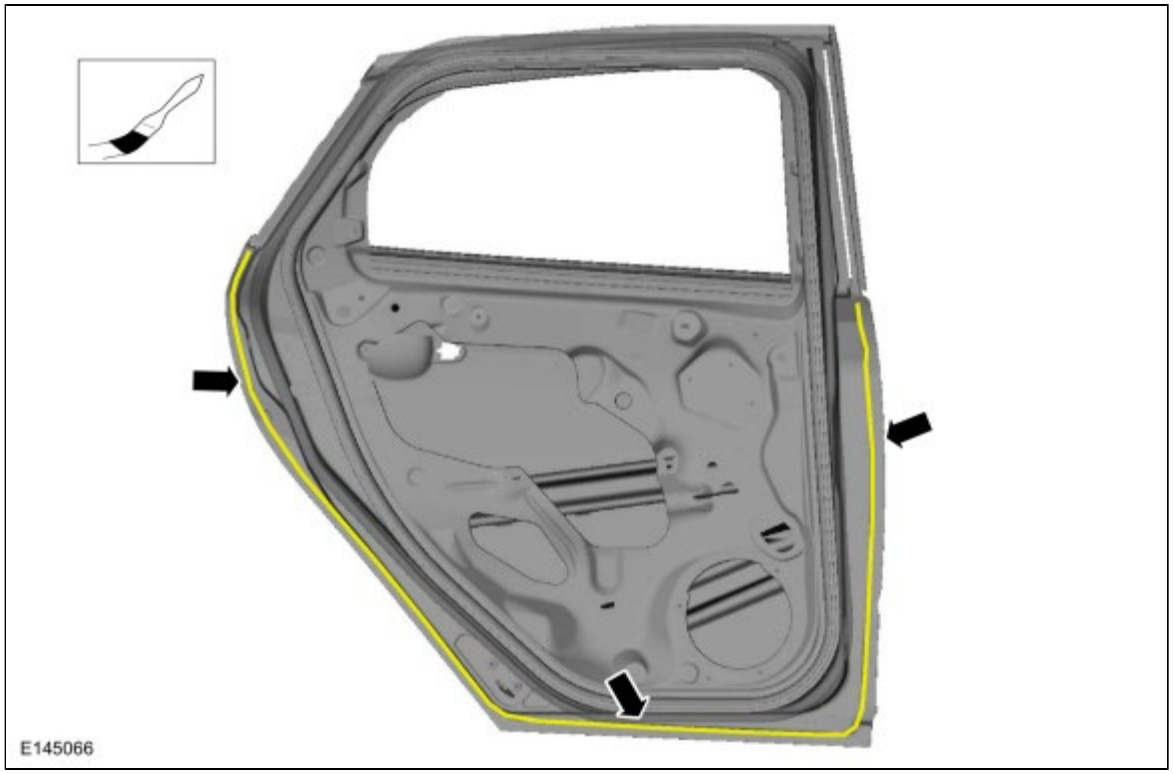

12. *Material* : Seam Sealer / TA-2

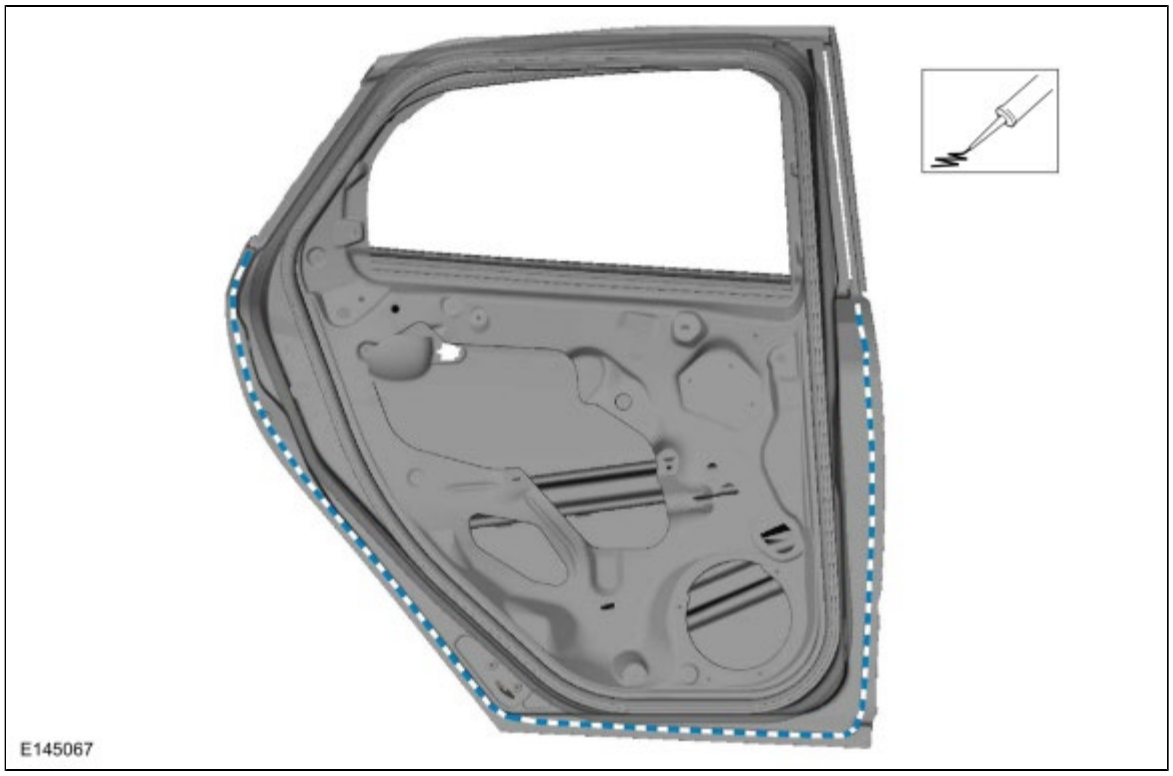

13. Refinish the door seam using a Ford approved paint system.

14. Refer to: Corrosion Prevention (501-25 Body Repairs - General Information, General Procedures).

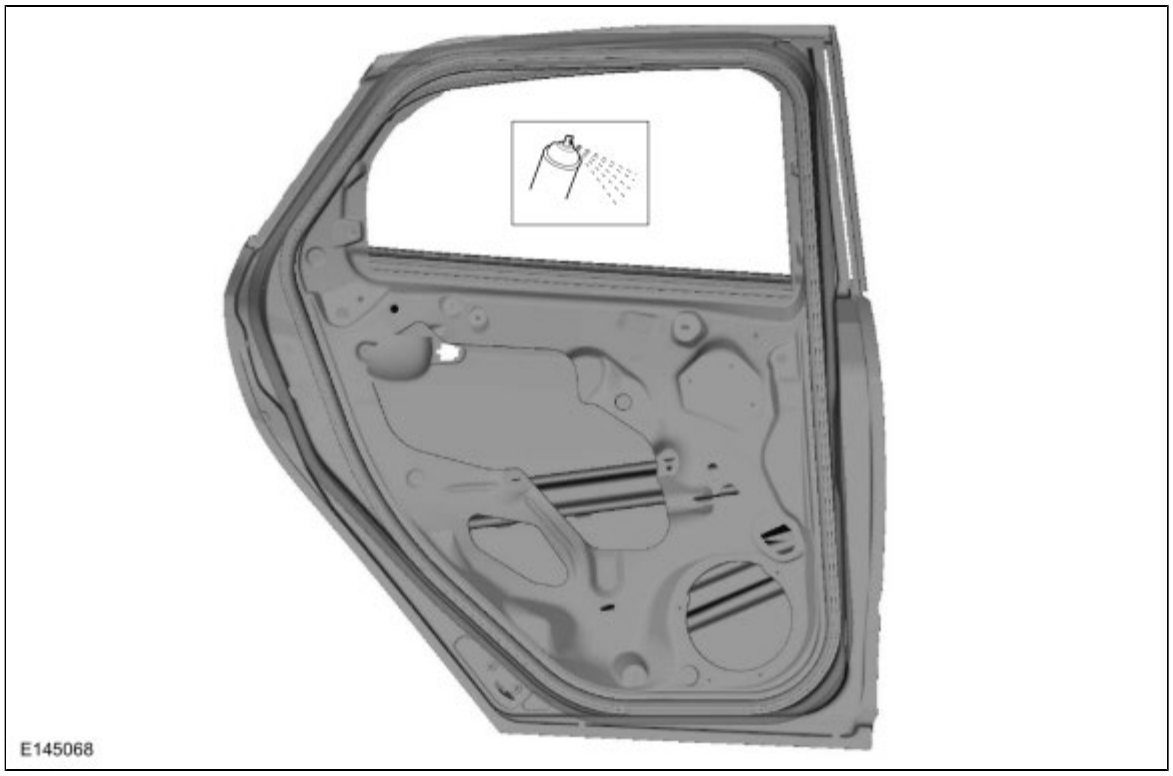

15.

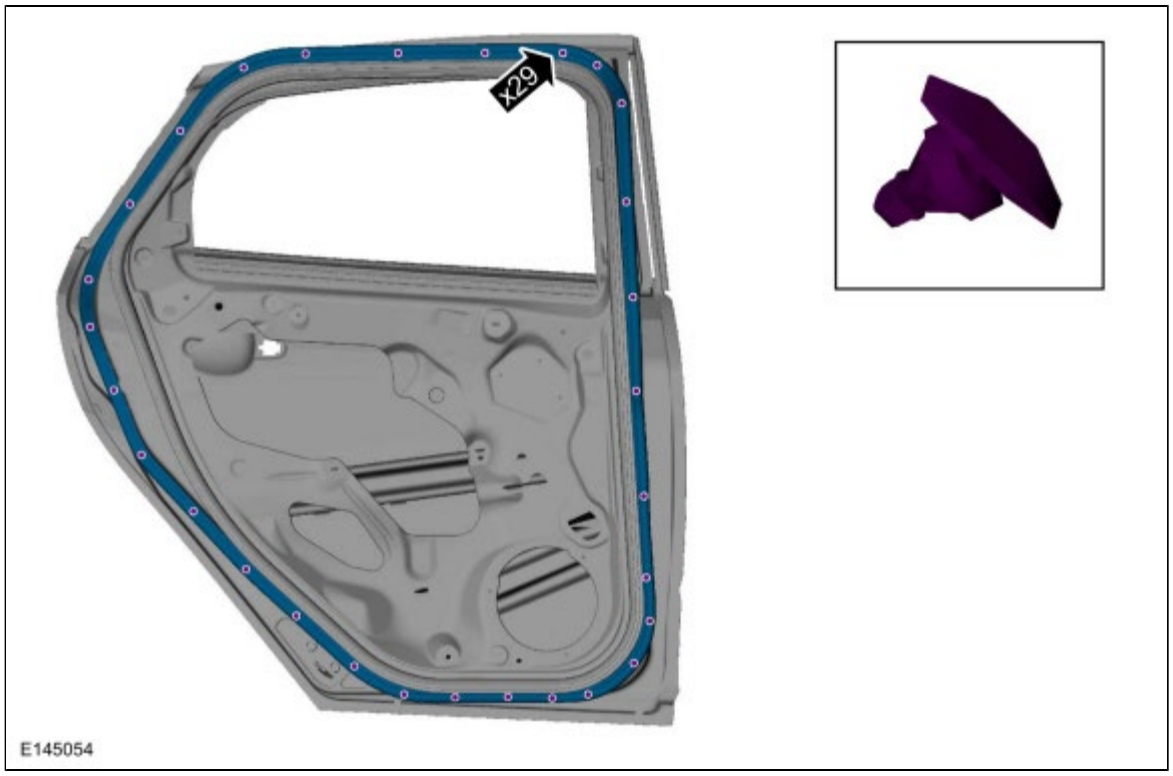

16. Refer to: Rear Door (501-03 Body Closures, Removal and Installation).

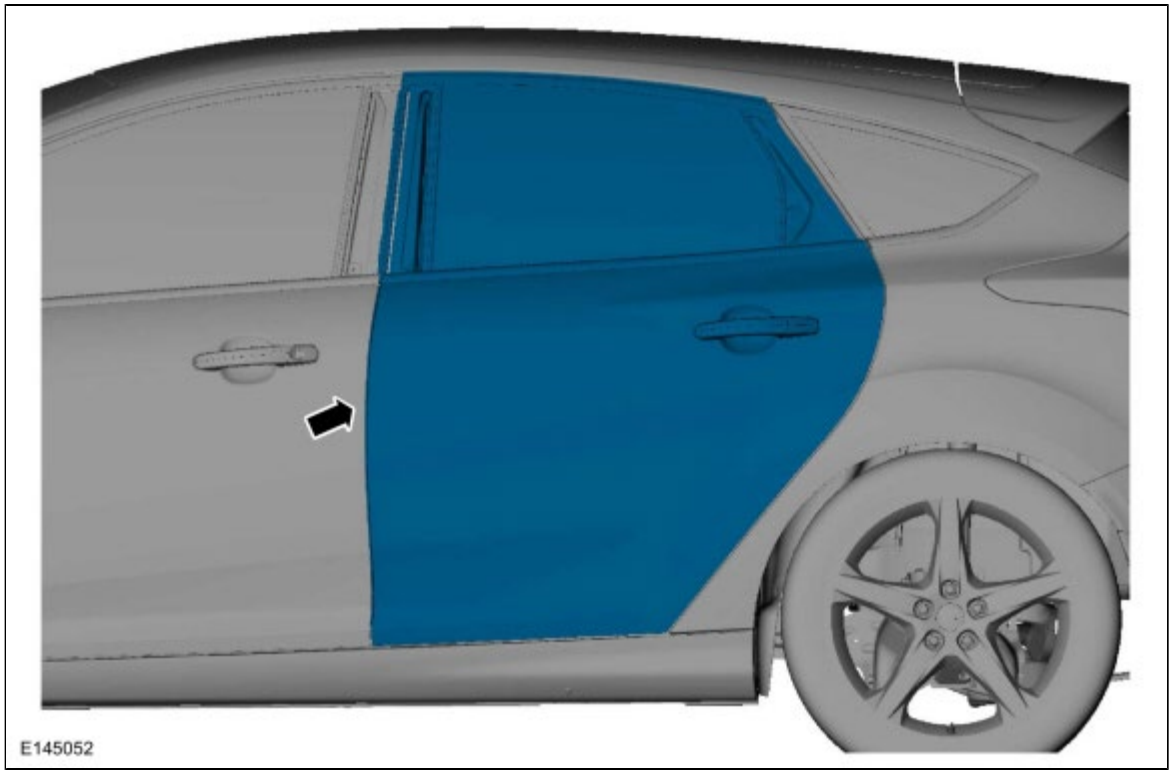

17. Refinish the door using a Ford approved paint system.

18. Refer to: Exterior Rear Door Handle (501-14A Handles, Locks, Latches and Entry Systems - Vehicles Without: One-Touch Up Door Window, Removal and Installation).
    Refer to: Exterior Rear Door Handle (501-14B Handles, Locks, Latches and Entry Systems - Vehicles With: One-Touch Up Door Window, Removal and Installation).

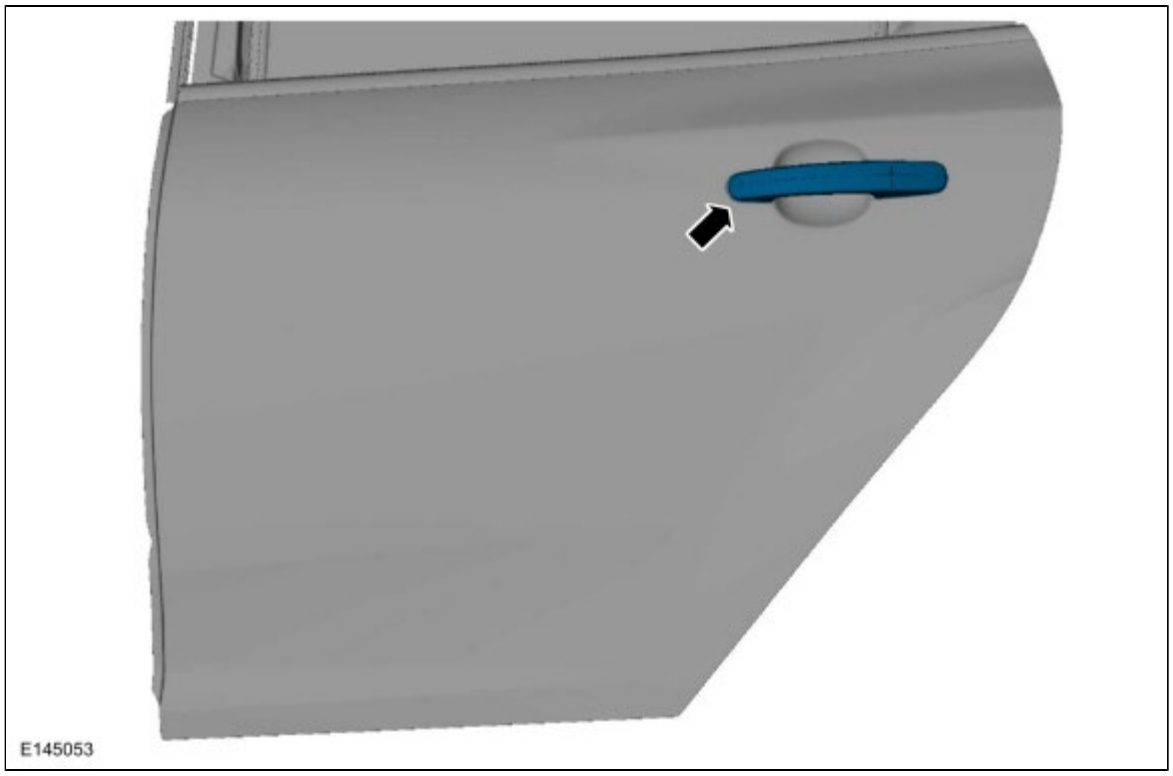

19. Refer to: Rear Door Window Glass (501-11A Glass, Frames and Mechanisms - Vehicles Without: One-Touch Up Door Window, Removal and Installation).
    Refer to: Rear Door Window Glass (501-11B Glass, Frames and Mechanisms - Vehicles With: One-Touch Up Door Window, Removal and Installation).

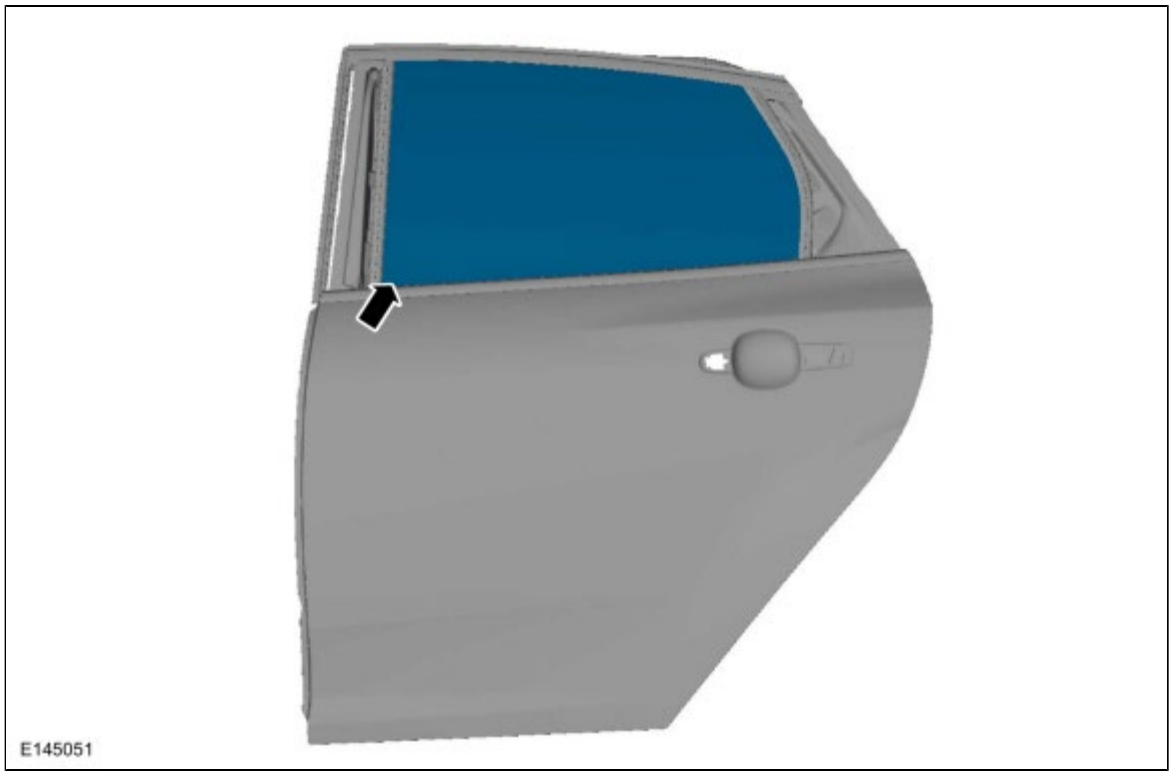

20.

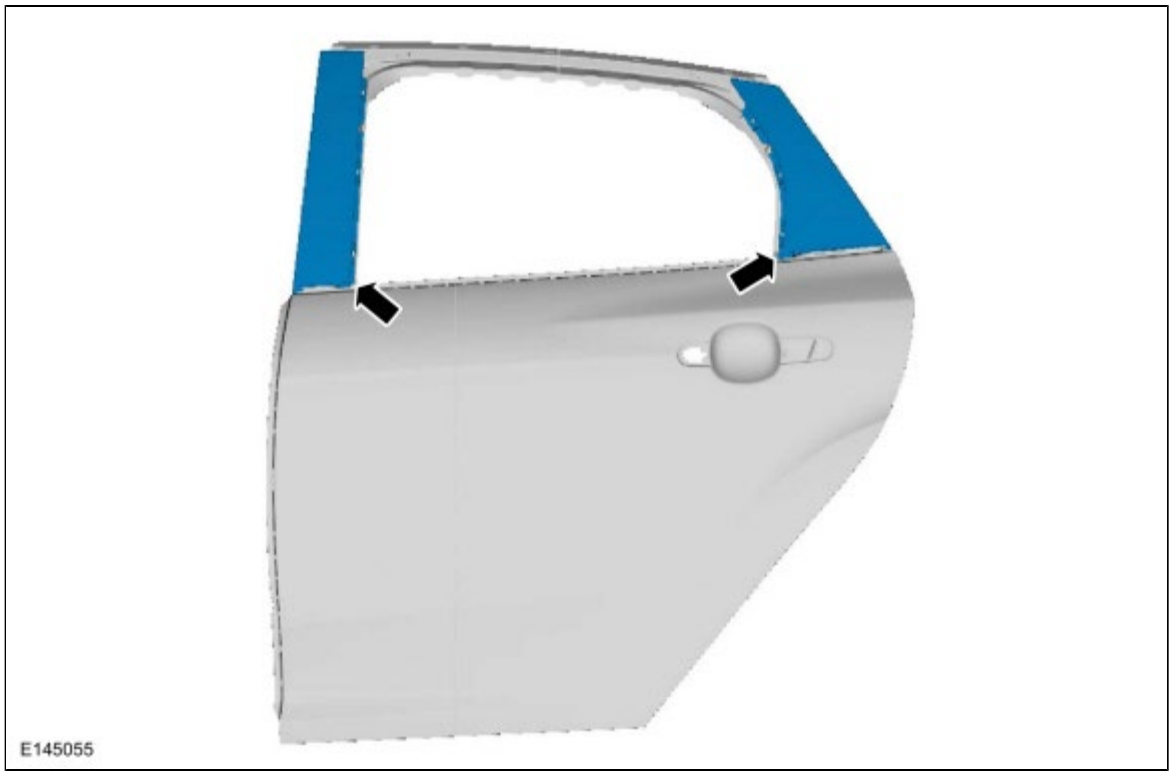

Copyright © Ford Motor Company

Back Panel and Reinforcement - Vehicles With: 4-Door

Removal

1. *General Equipment* : Spot weld drill Bit

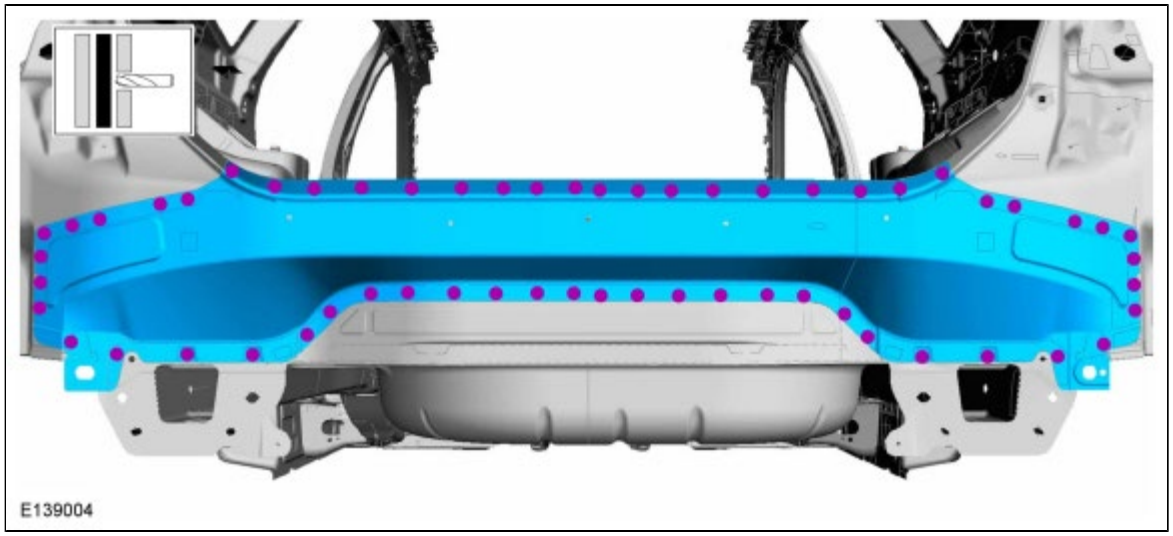

2. *General Equipment* : Spot weld drill Bit

3. *General Equipment* : Spot weld drill Bit

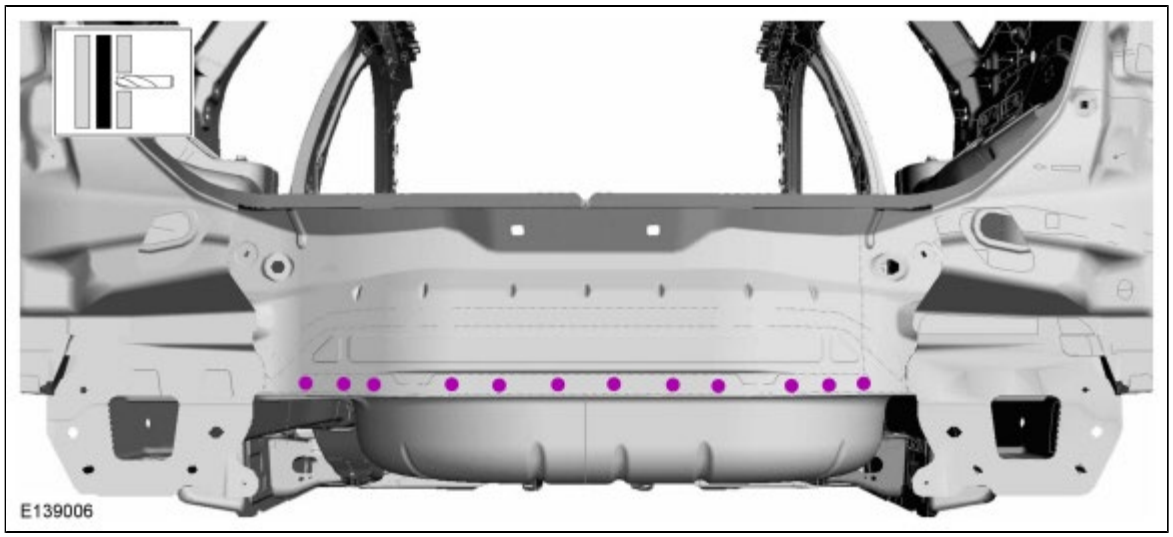

4. *General Equipment* : Spot weld drill Bit

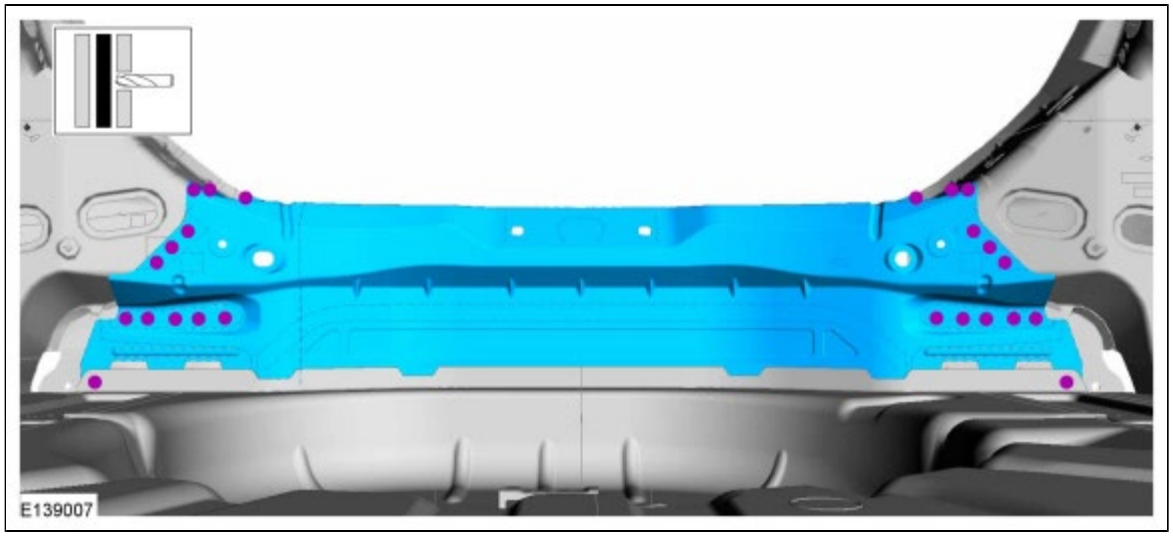

5. On both sides .
   General Equipment : Spot weld drill Bit

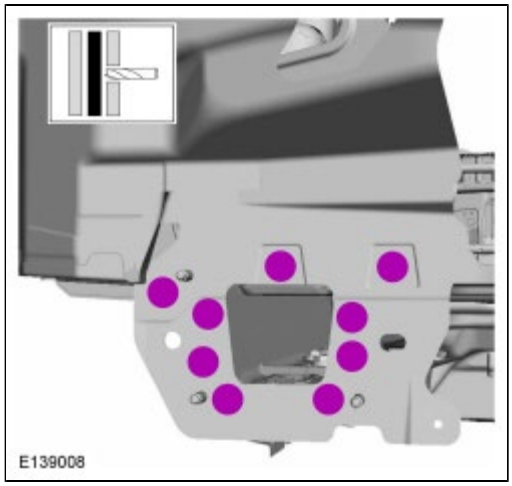

6. On both sides.
   General Equipment : Spot weld drill Bit

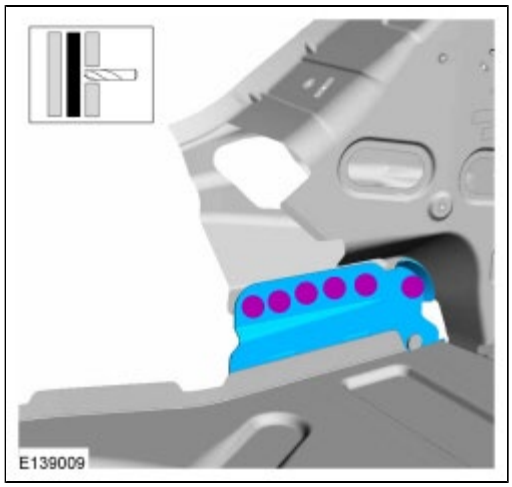

Installation

1. On both sides.
   General Equipment : Resistance Spotwelding Equipment

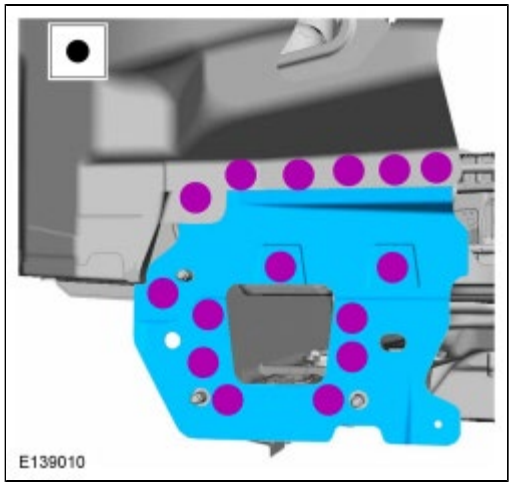

2. *General Equipment* : Resistance Spotwelding Equipment

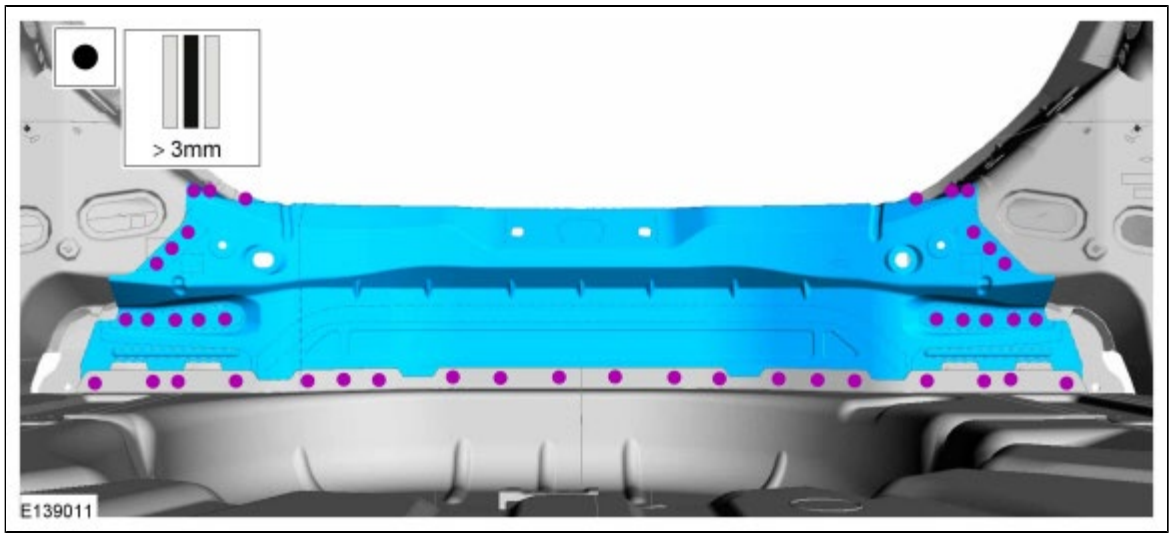

3. *General Equipment* : Resistance Spotwelding Equipment

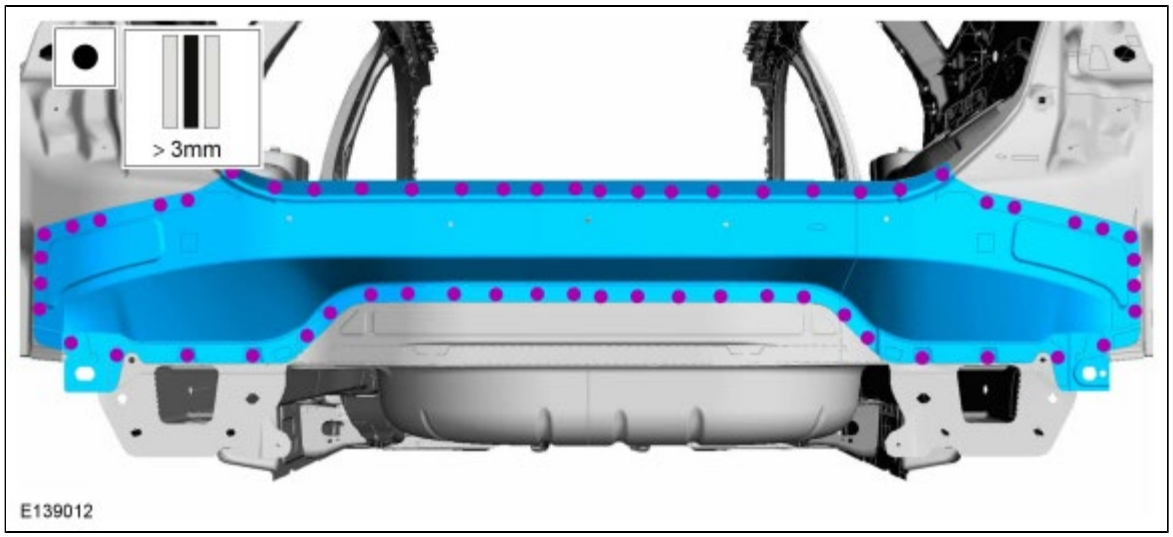

4. Sealing work: All areas must be sealed to production level.
   Refer to: Corrosion Prevention (501-25 Body Repairs - General Information, General Procedures).

Copyright © Ford Motor Company

Back Panel and Reinforcement - Vehicles With: 5-Door

Removal

1. Reposition the carpeting and the wiring harness away from the working area.

2. On both sides.
   General Equipment : Spot weld drill Bit

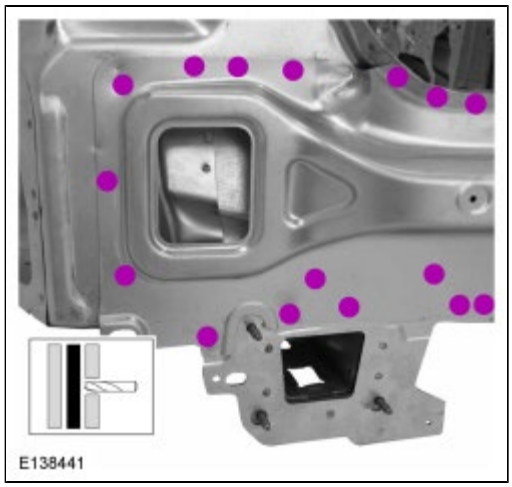

3. On both sides.
   General Equipment : Spot weld drill Bit

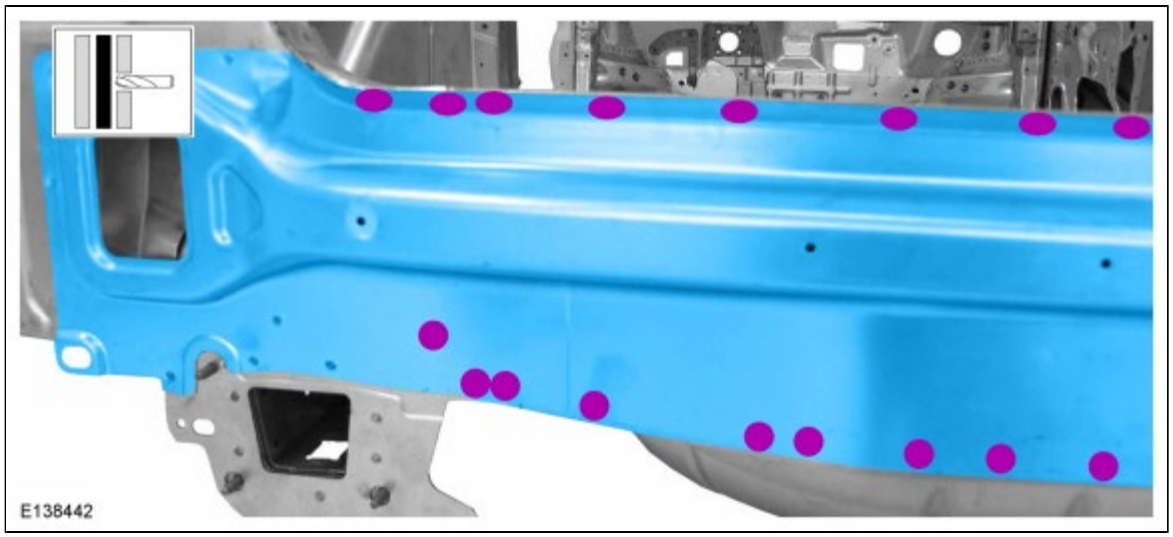

4. On both sides.
   General Equipment : Spot weld drill Bit

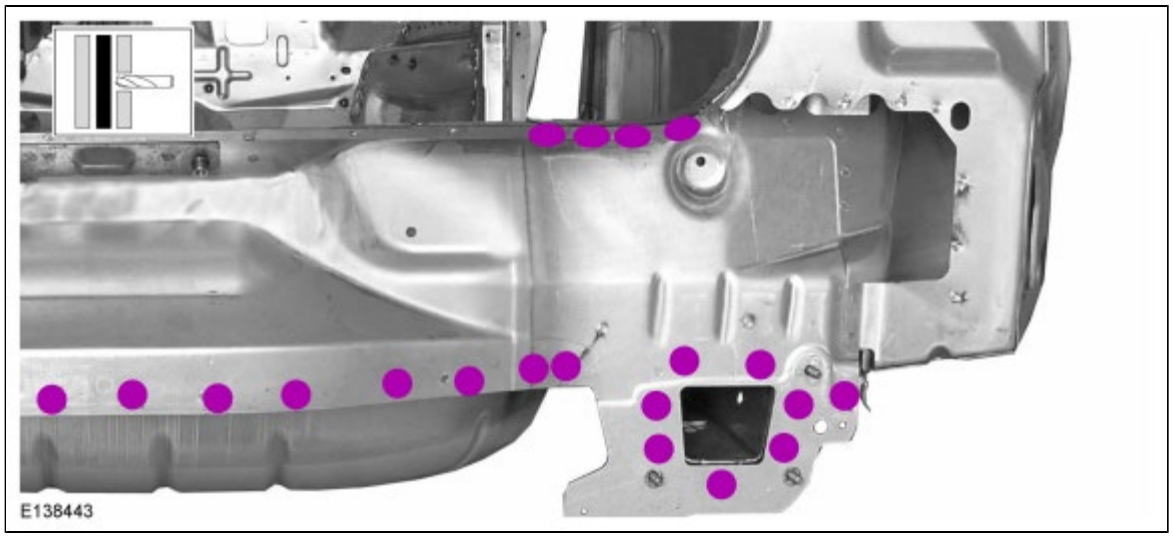

5. On both sides.
   General Equipment : Spot weld drill Bit

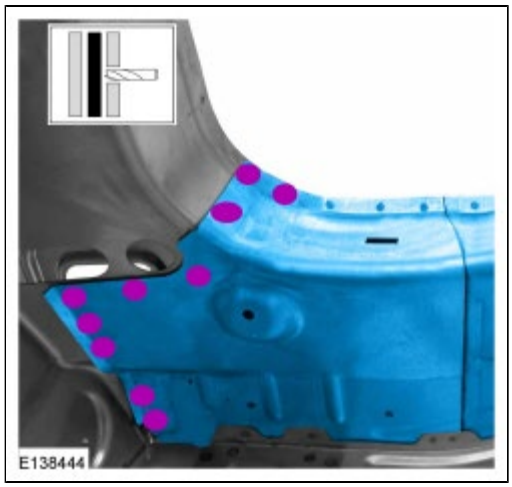

Installation

1. On both sides.
   General Equipment : 8 mm Drill Bit

2. On both sides.
   General Equipment : Resistance Spotwelding Equipment

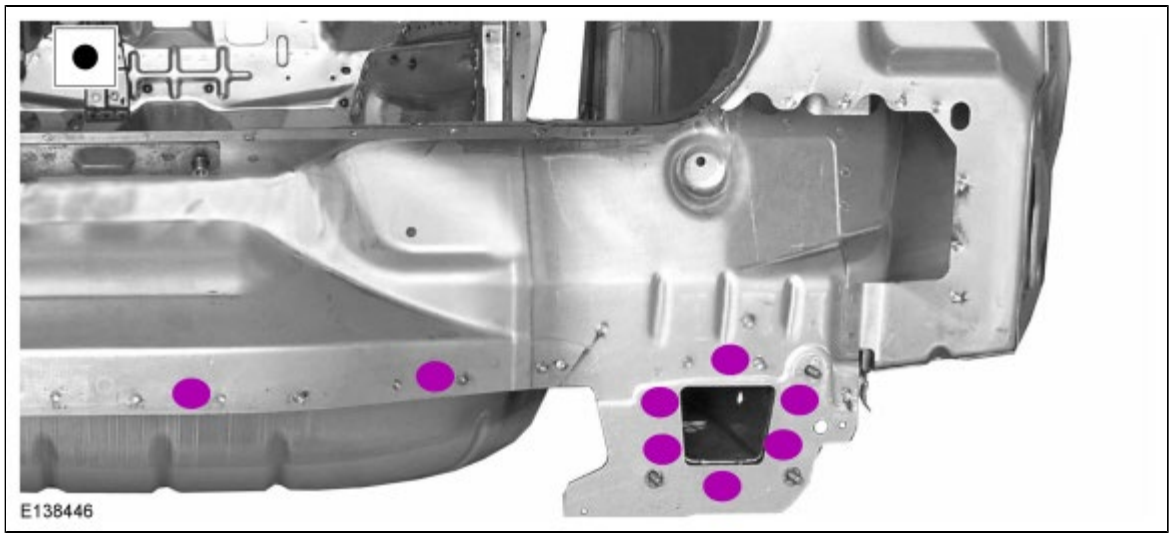

3. On both sides.
   General Equipment : Resistance Spotwelding Equipment

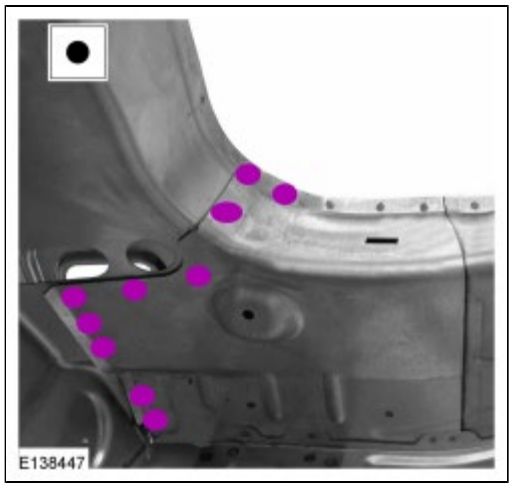

4. On both sides.
   General Equipment : MIG/MAG Welding Equipment

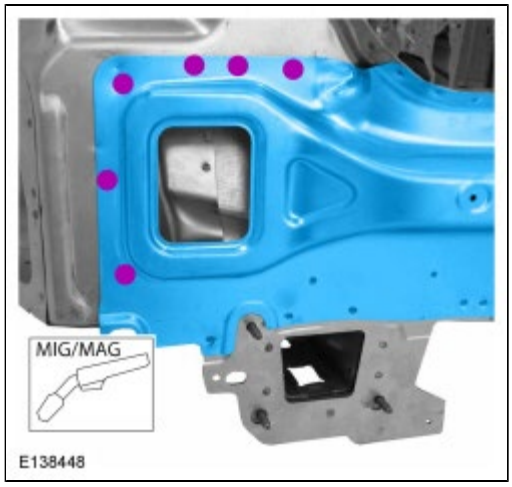

5. On both sides.
   General Equipment : Resistance Spotwelding Equipment

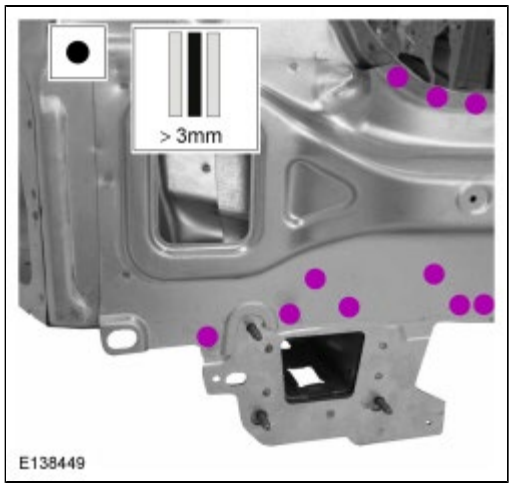

6. On both sides.
   General Equipment : Resistance Spotwelding Equipment

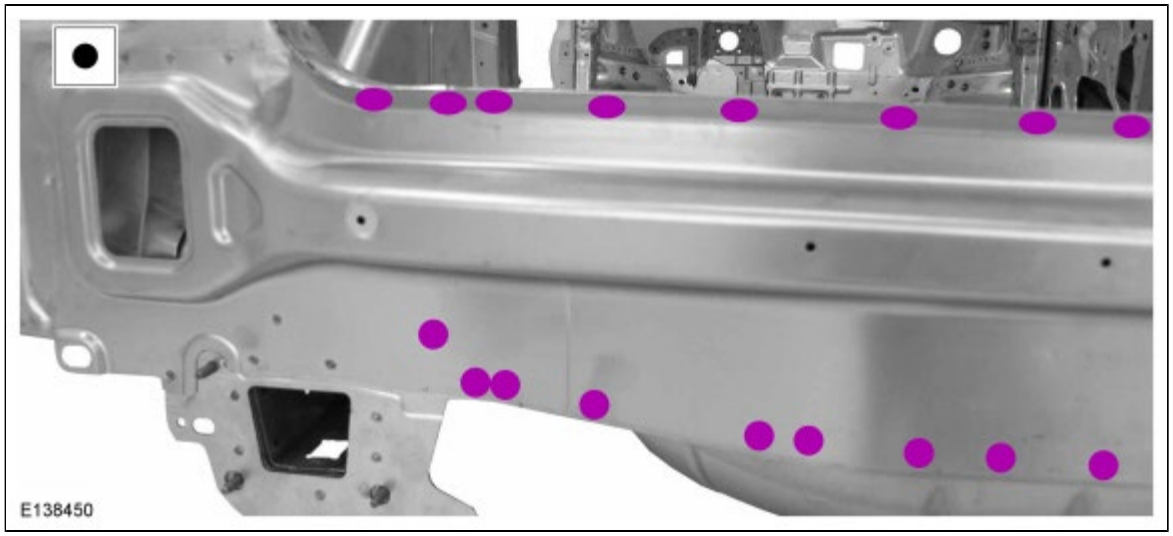

7. Sealing work: All areas must be sealed to production level.
   Material : Seam Sealer / TA-2

Copyright © Ford Motor Company

Rear Side Member Section - Vehicles With: 4-Door

Removal

1. Refer to: Rear Floor Panel - Vehicles With: 4-Door (501-30 Rear End Sheet Metal Repairs, Removal and Installation).
   Refer to: Rear Floor Panel - Vehicles With: 4-Door (501-30 Rear End Sheet Metal Repairs, Removal and Installation).

2. Possible Cut Lines

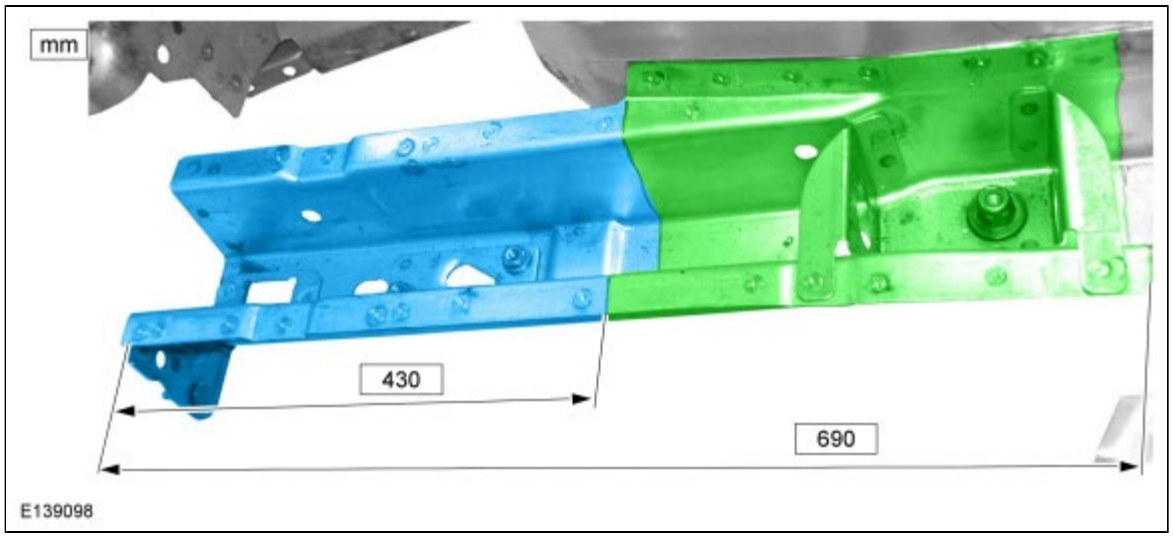

3. *General Equipment* : Spot weld drill Bit

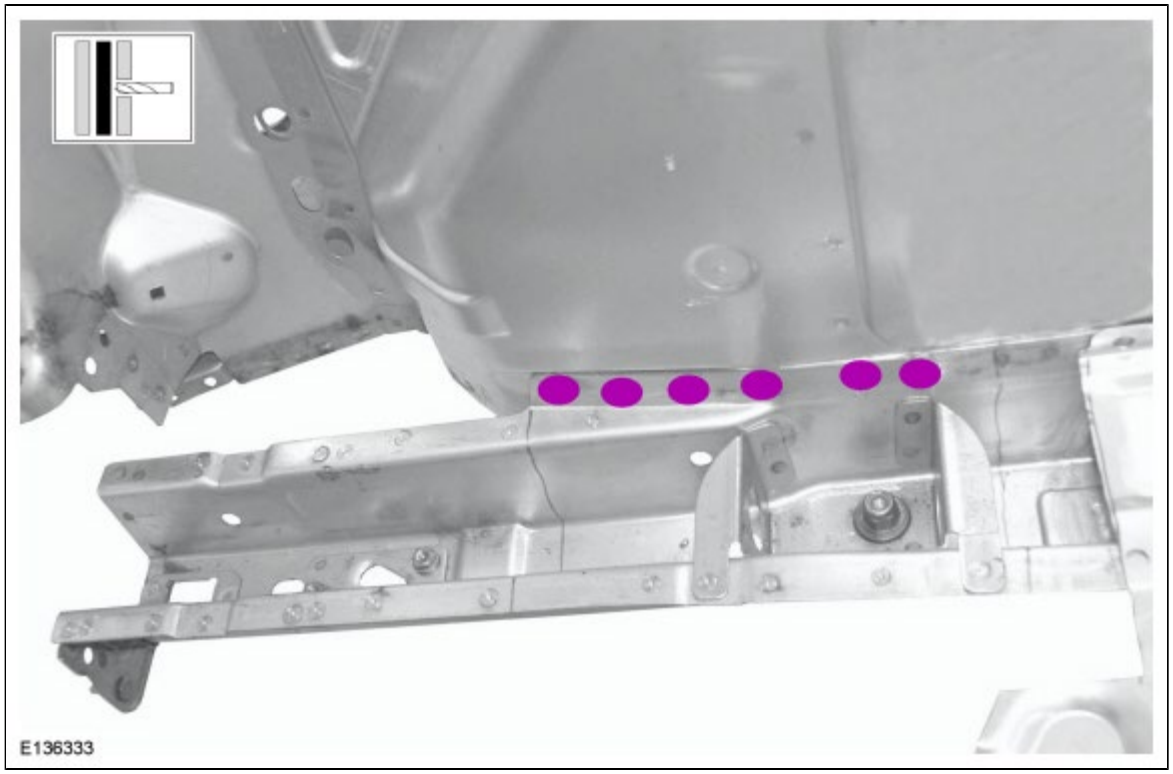

4. *General Equipment* : Air Body Saw

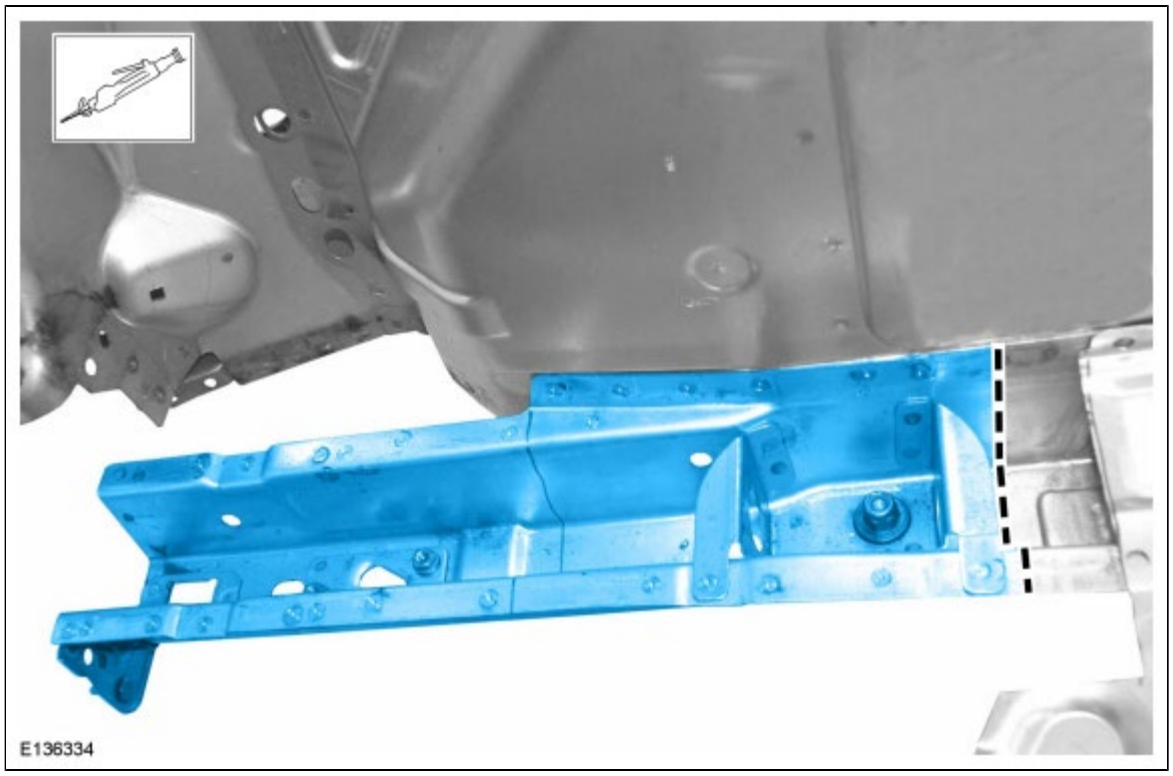

Installation

1. *General Equipment* : 8 mm Drill Bit

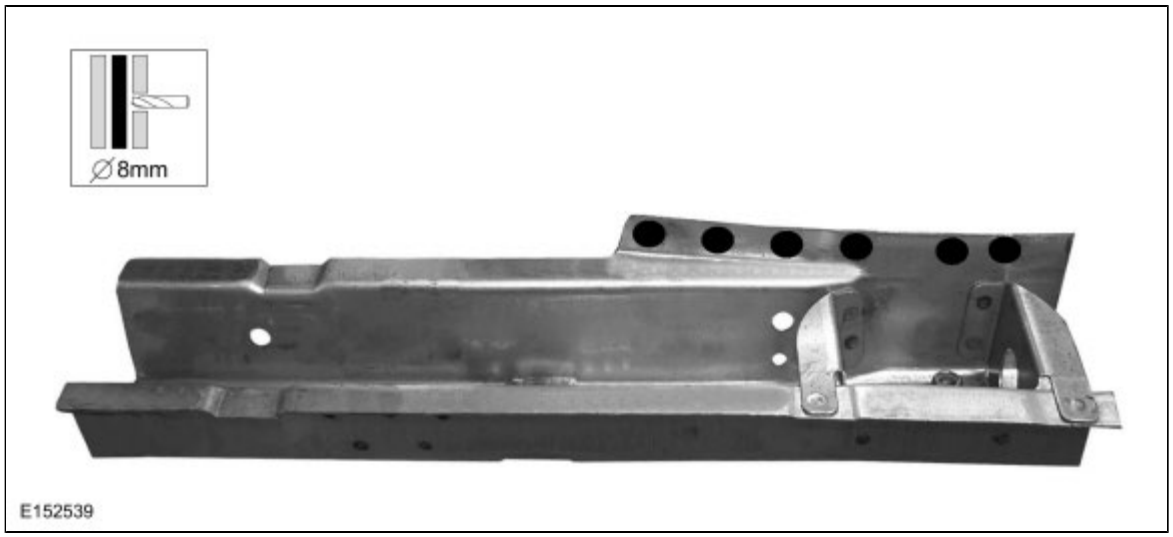

2.
    1. Tack Weld
       General Equipment : MIG/MAG Welding Equipment
    2. Complete Weld with Rear Floor Panel
       Refer to: Rear Floor Panel - Vehicles With: 4-Door (501-30 Rear End Sheet Metal Repairs, Removal and Installation).
       Refer to: Rear Floor Panel - Vehicles With: 4-Door (501-30 Rear End Sheet Metal Repairs, Removal and Installation).

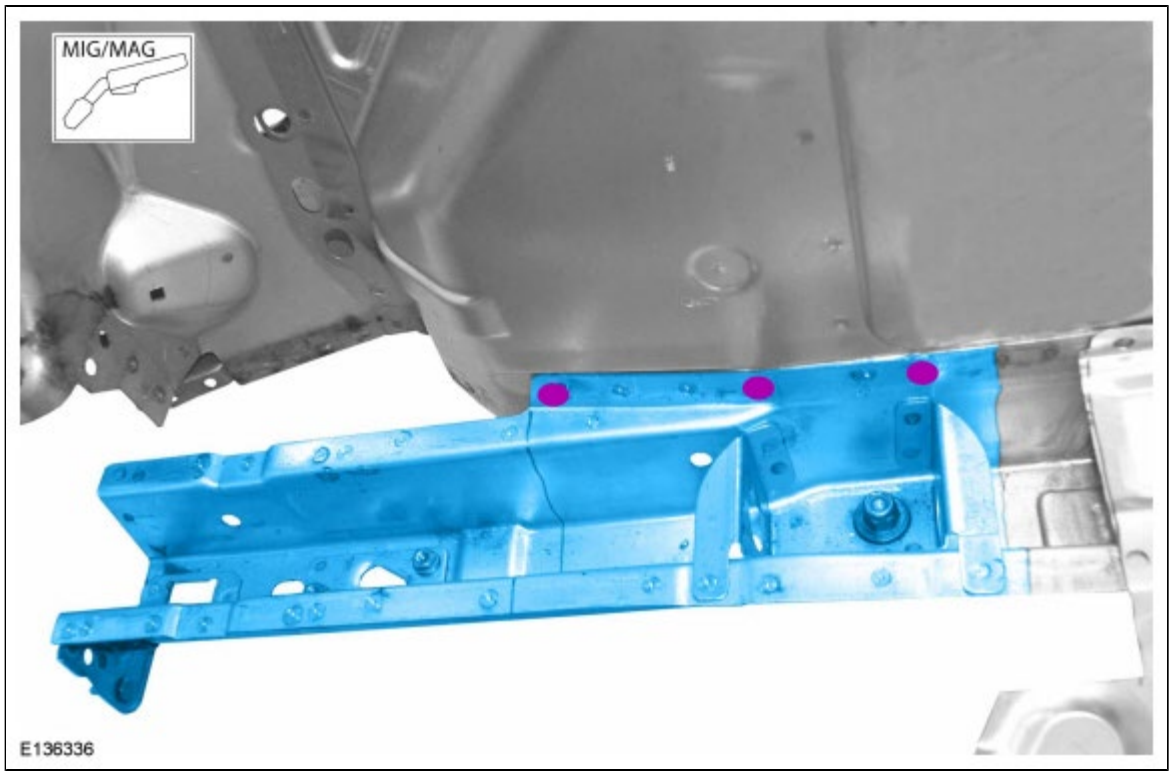

3. *General Equipment* : MIG/MAG Welding Equipment

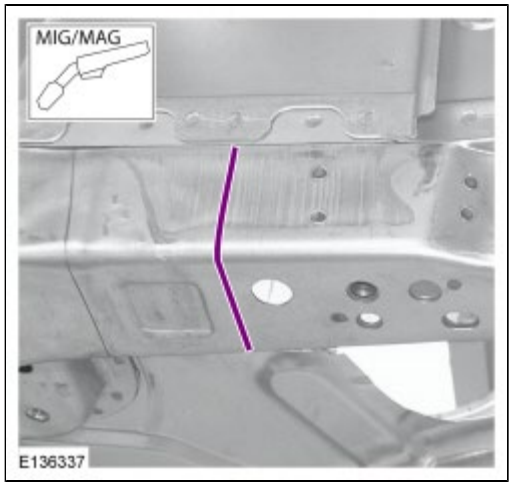

4. *General Equipment* : MIG/MAG Welding Equipment

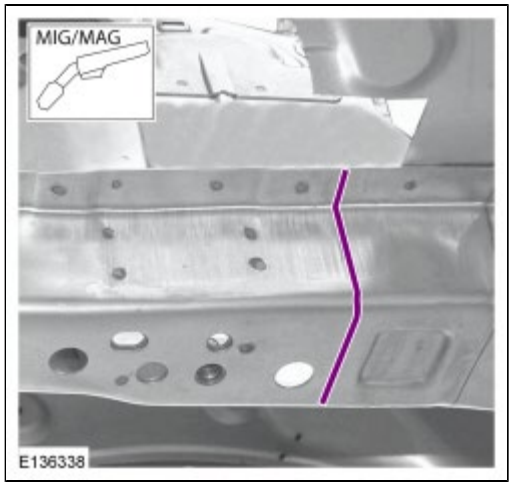

5. *General Equipment* : MIG/MAG Welding Equipment

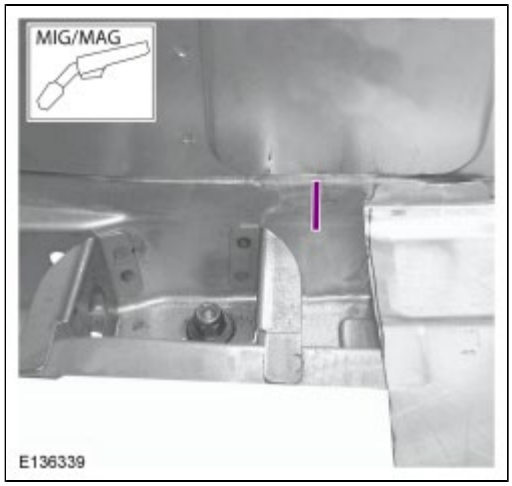

6. *General Equipment* : Resistance Spotwelding Equipment

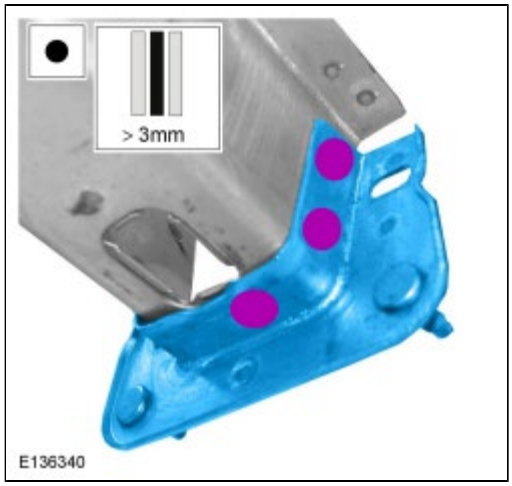

7. *General Equipment* : Resistance Spotwelding Equipment

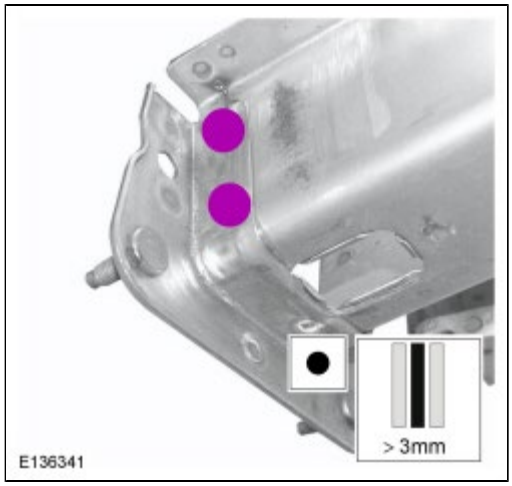

8. Complete weld with:
   Refer to: Rear Floor Panel - Vehicles With: 4-Door (501-30 Rear End Sheet Metal Repairs, Removal and Installation).
   Refer to: Rear Floor Panel - Vehicles With: 4-Door (501-30 Rear End Sheet Metal Repairs, Removal and Installation).

9. Sealing work: All areas must be sealed to production level.
   Material : Seam Sealer / TA-2

Copyright © Ford Motor Company

Rear Side Member Section - Vehicles With: 5-Door

Removal

1. Refer to: Rear Floor Panel - Vehicles With: 5-Door (501-30 Rear End Sheet Metal Repairs, Removal and Installation).
2. Possible Cut Lines

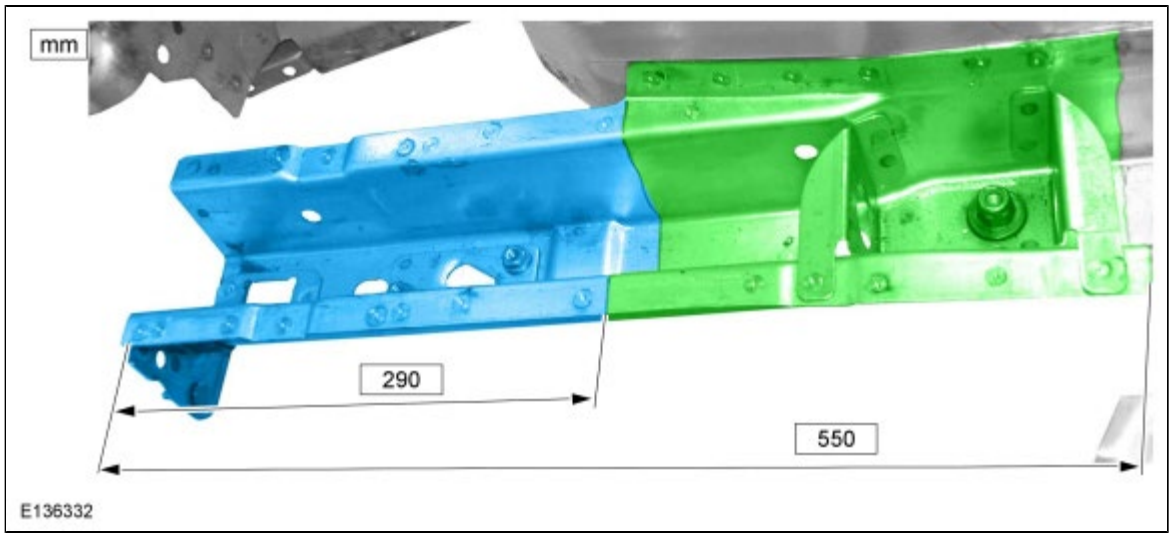

3. *General Equipment* : Spot weld drill Bit

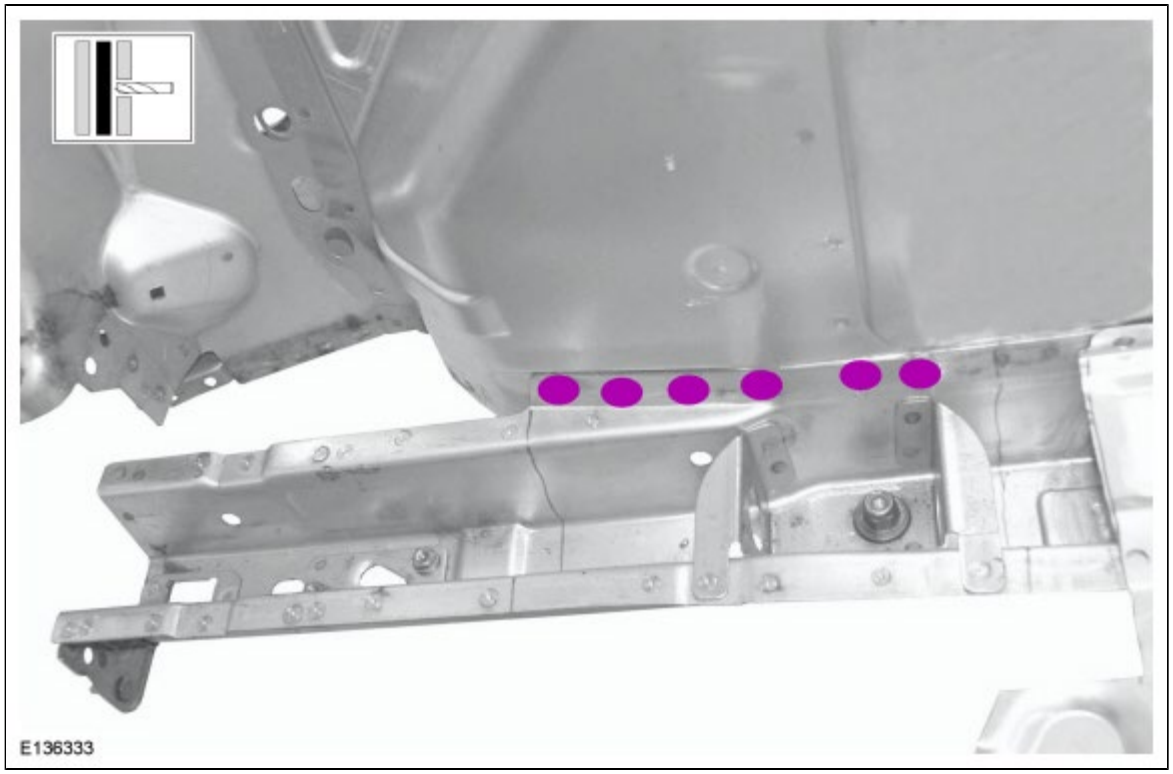

4. *General Equipment* : Air Body Saw

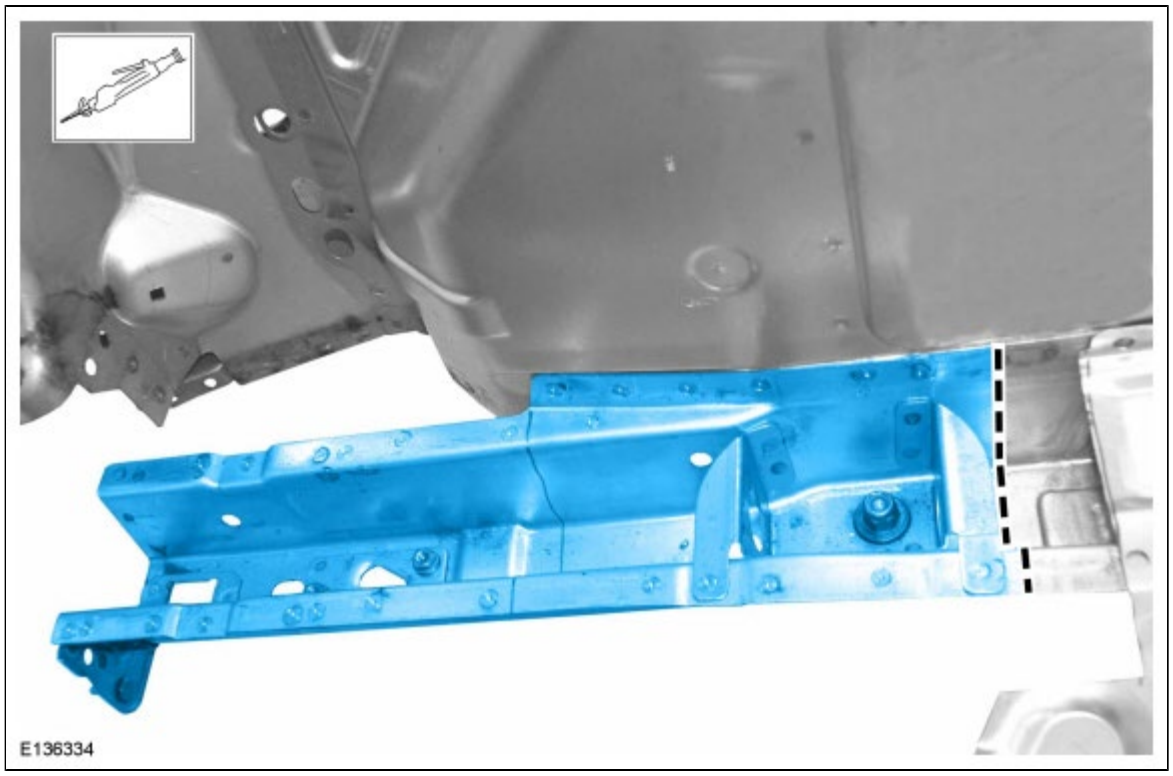

Installation

1. *General Equipment* : 8 mm Drill Bit

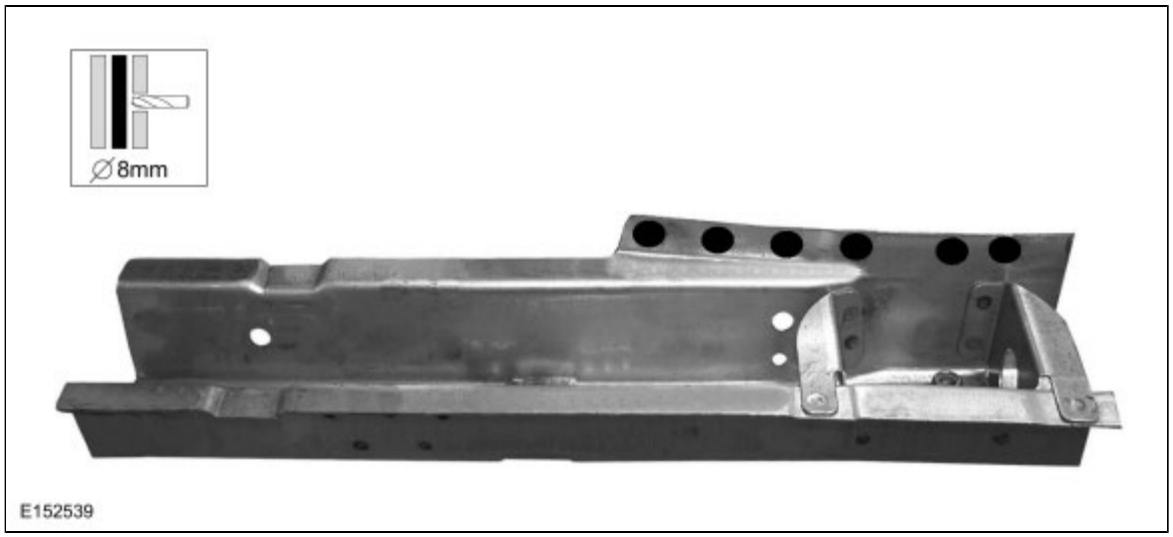

2.
    1. Tack Weld
       General Equipment : MIG/MAG Welding Equipment
    2. Complete Weld with Rear Floor Panel
       Refer to: Rear Floor Panel - Vehicles With: 5-Door (501-30 Rear End Sheet Metal Repairs, Removal and Installation).

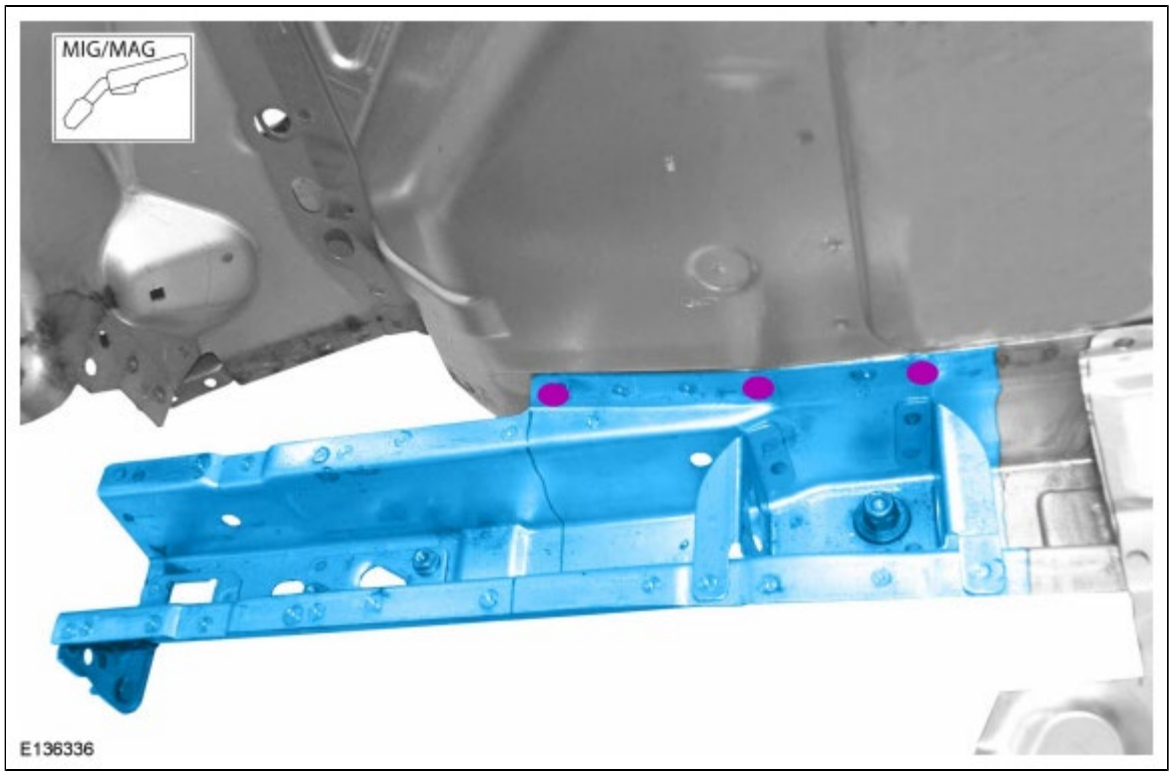

3. *General Equipment* : MIG/MAG Welding Equipment

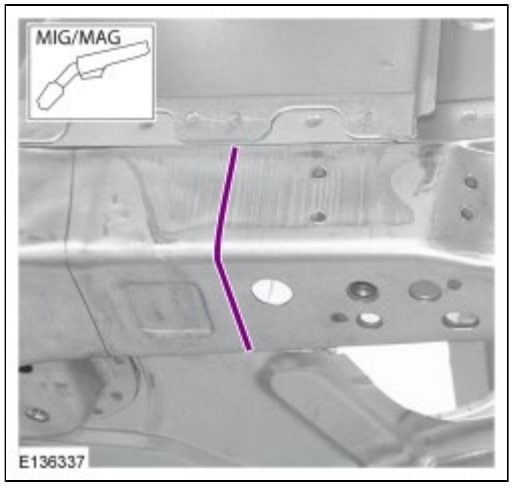

4. *General Equipment* : MIG/MAG Welding Equipment

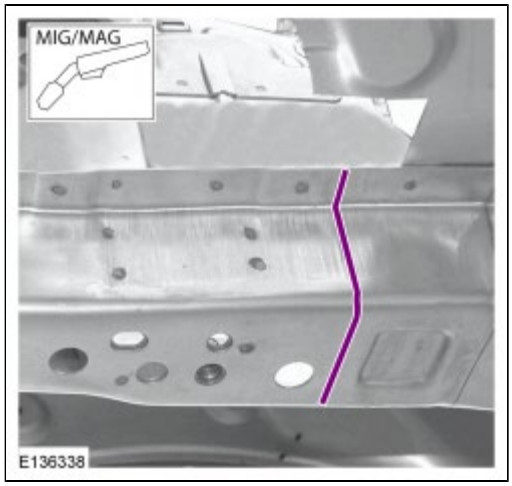

5. *General Equipment* : MIG/MAG Welding Equipment

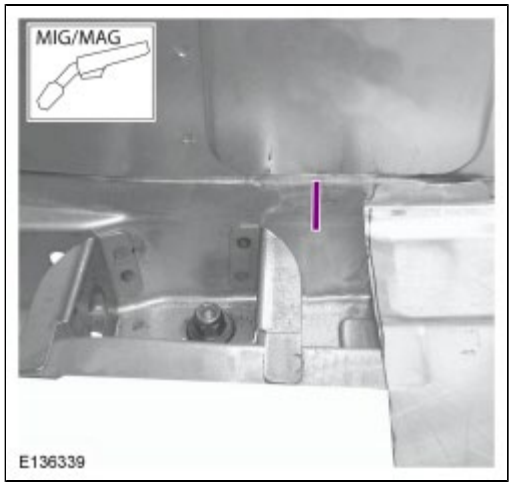

6. *General Equipment* : Resistance Spotwelding Equipment

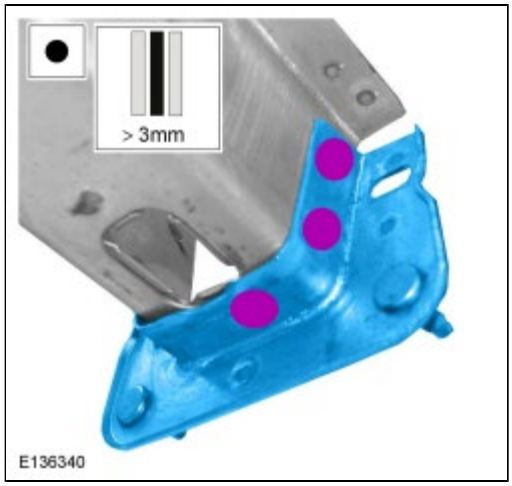

7. *General Equipment* : Resistance Spotwelding Equipment

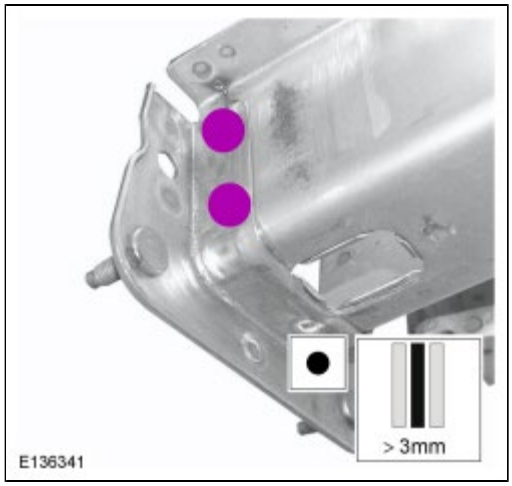

8. Refer to: Corrosion Prevention (501-25 Body Repairs - General Information, General Procedures).
   Refer to: Rear Floor Panel - Vehicles With: 5-Door (501-30 Rear End Sheet Metal Repairs, Removal and Installation).

Copyright © Ford Motor Company

Rear Floor Panel - Vehicles With: 4-Door

Removal

1. Refer to: Back Panel and Reinforcement - Vehicles With: 4-Door (501-30 Rear End Sheet Metal Repairs, Removal and Installation).

2. Rough Cut - Do not cut in panels below!
   General Equipment : Air Body Saw

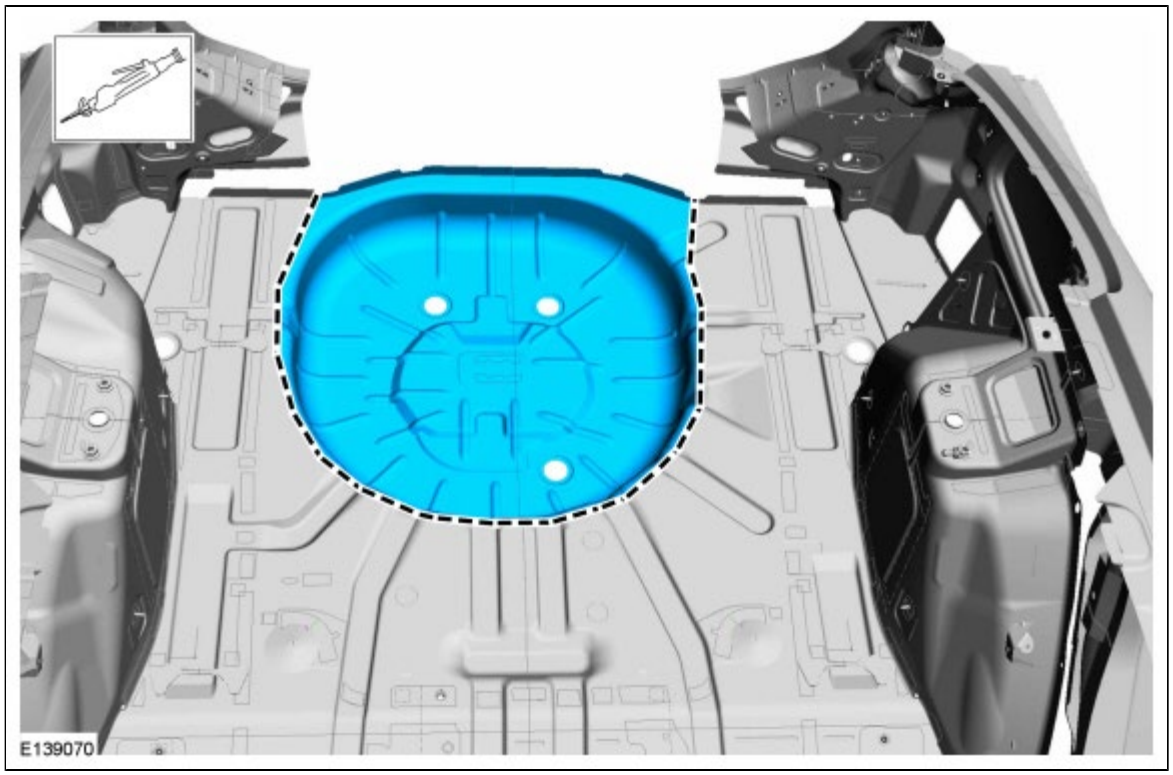

3. On both sides.
   General Equipment : Spot weld drill Bit

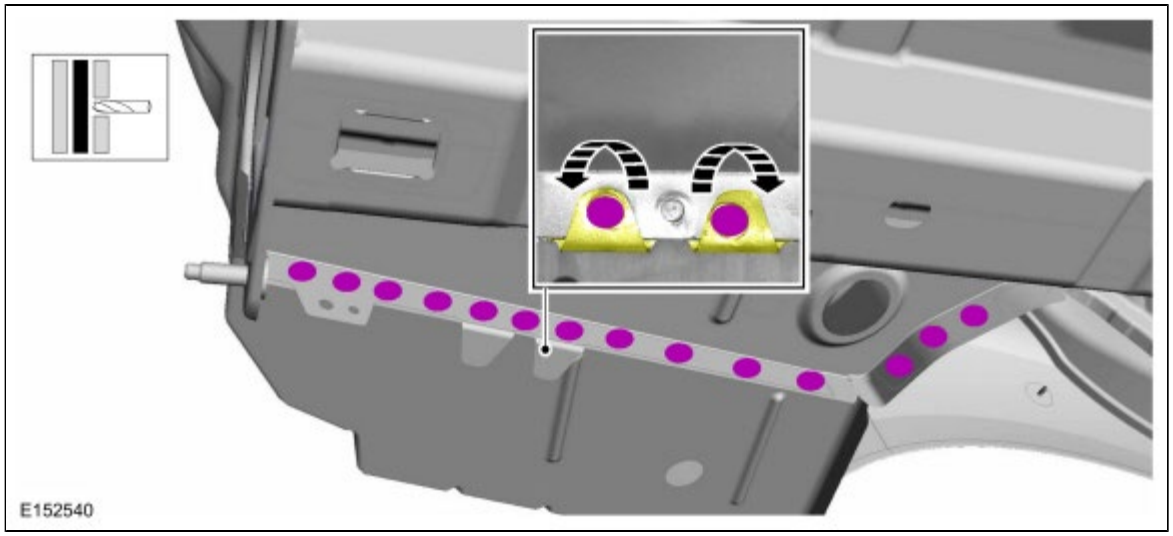

4. On both sides.
   General Equipment : Spot weld drill Bit

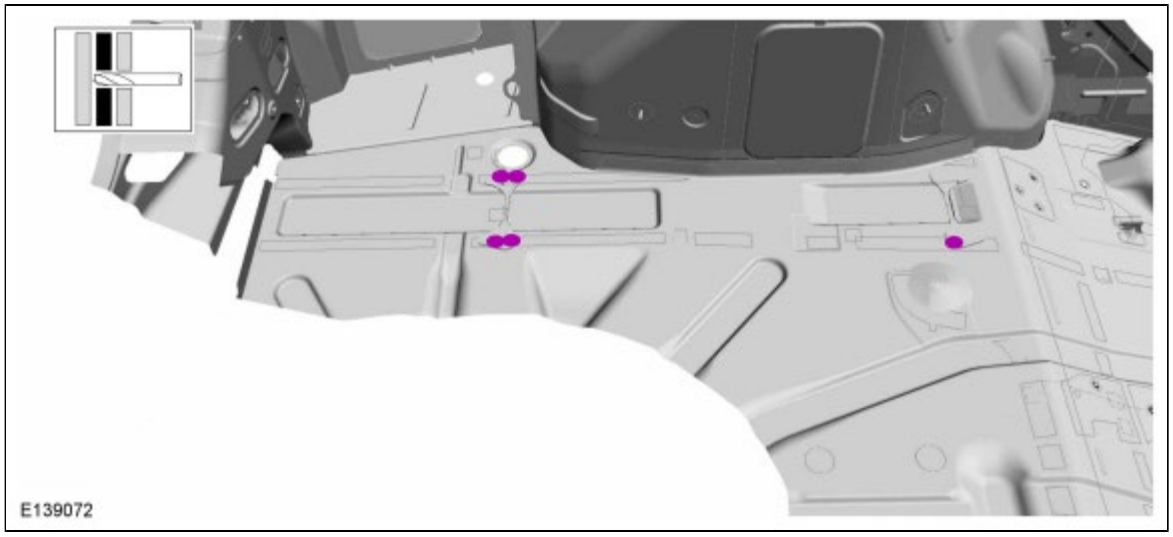

5. On both sides.
   General Equipment : Spot weld drill Bit

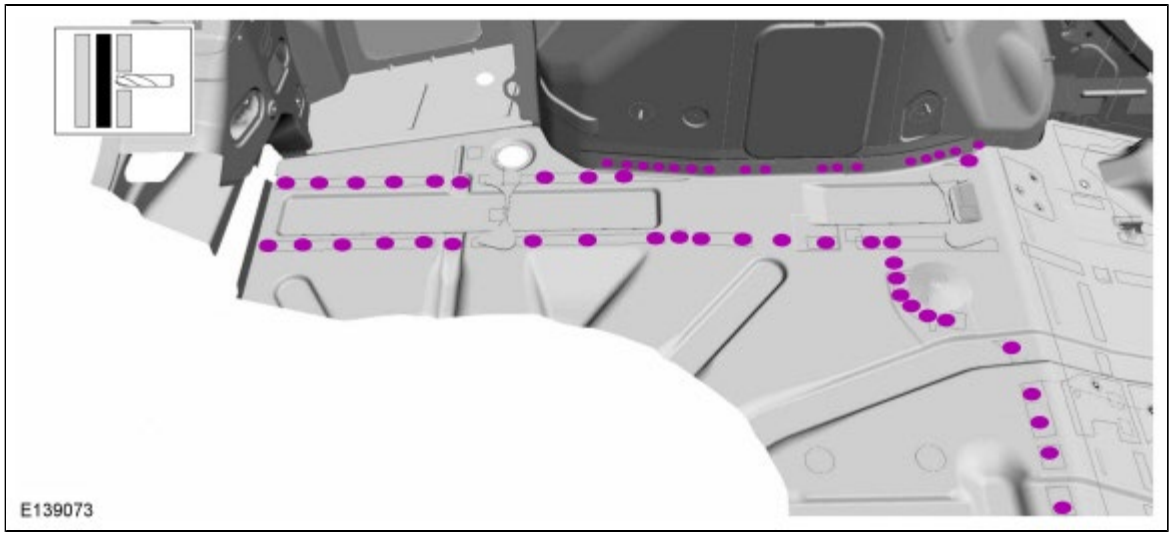

6. Do not cut in panels below!
   General Equipment : Air Body Saw

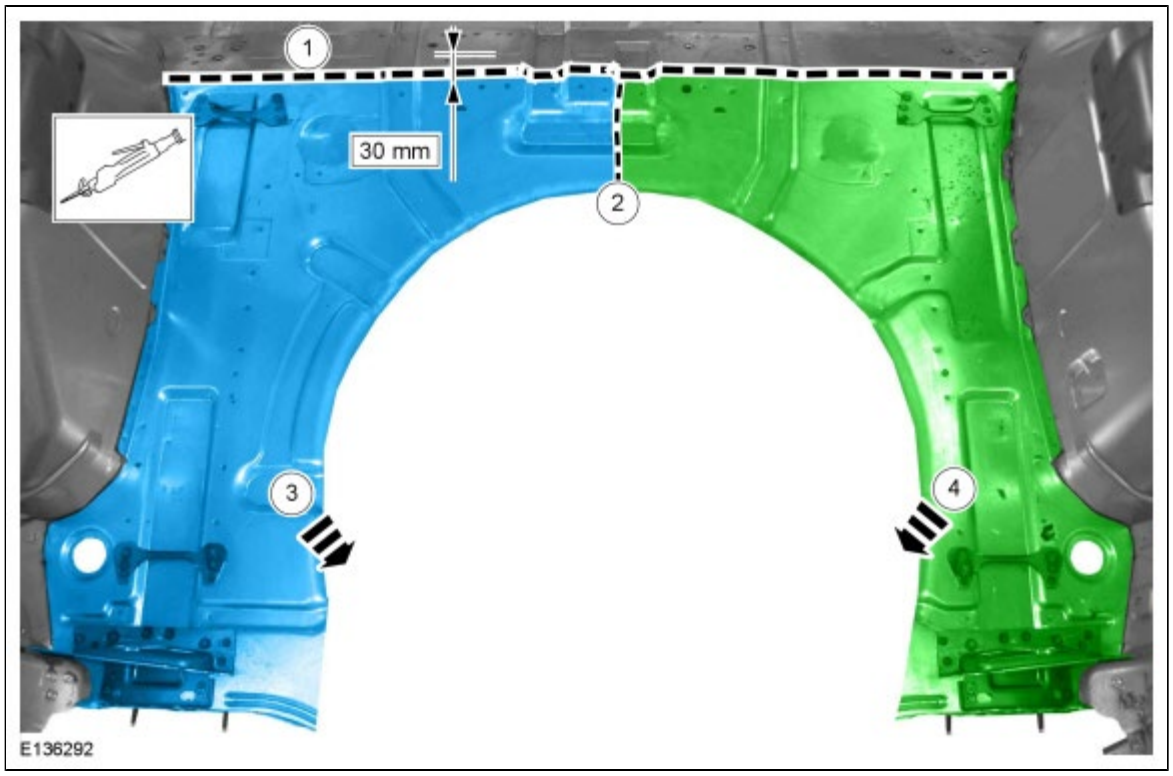

Installation

1. *General Equipment* : 8 mm Drill Bit

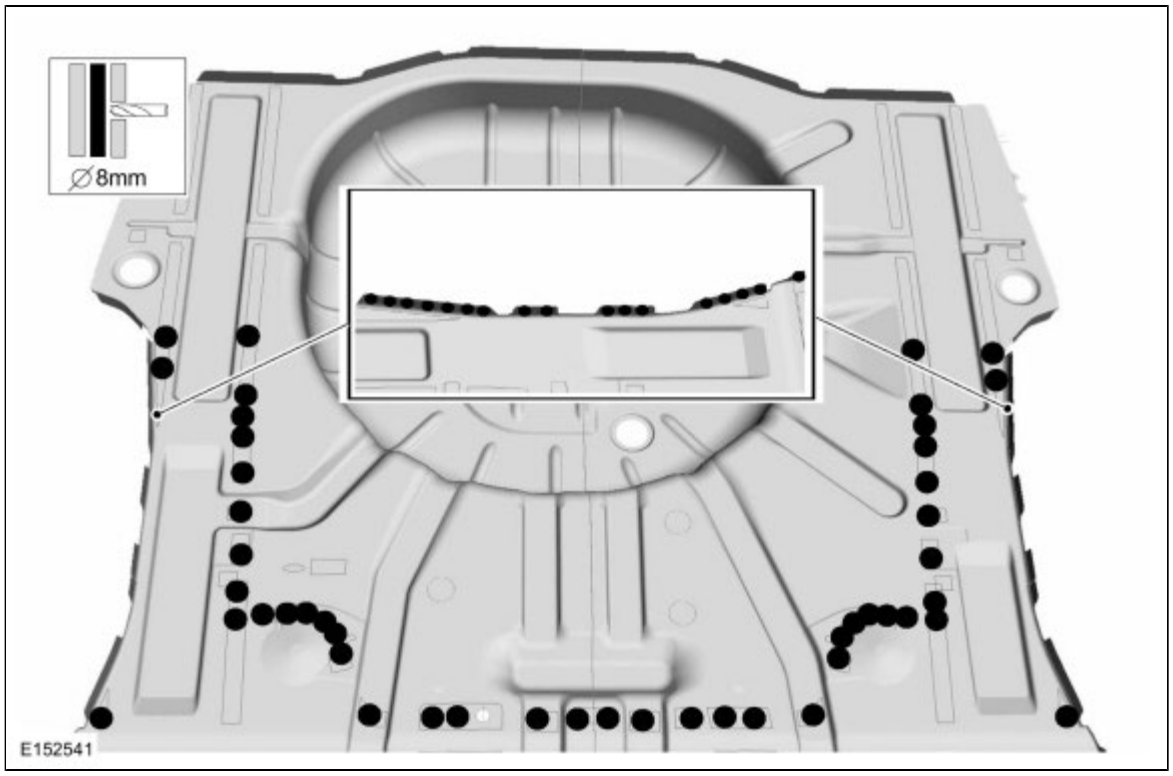

2. On both sides.
   General Equipment : Resistance Spotwelding Equipment

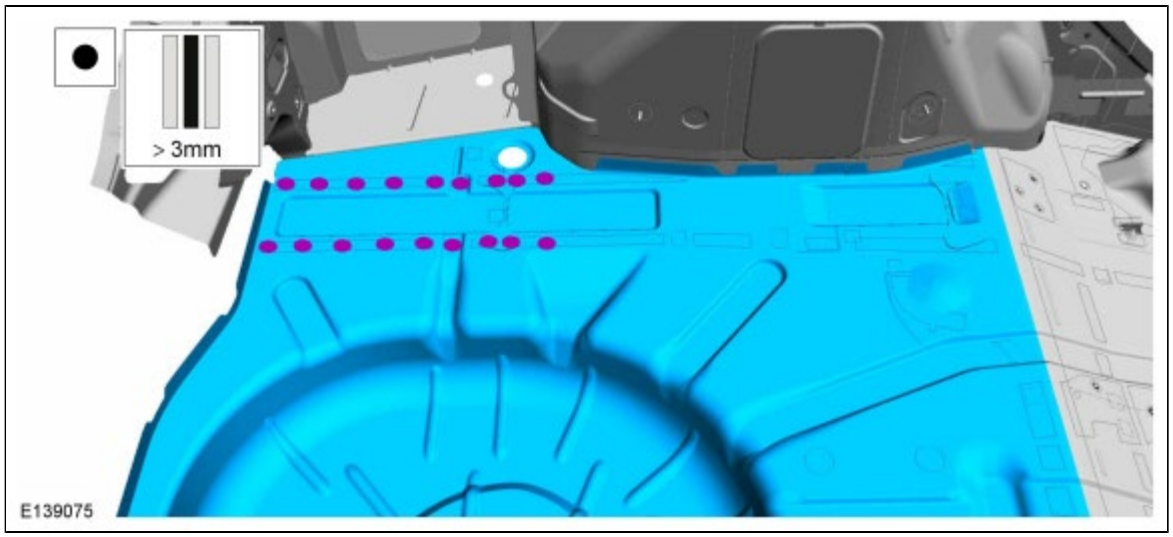

3. On both sides.
   General Equipment : MIG/MAG Welding Equipment

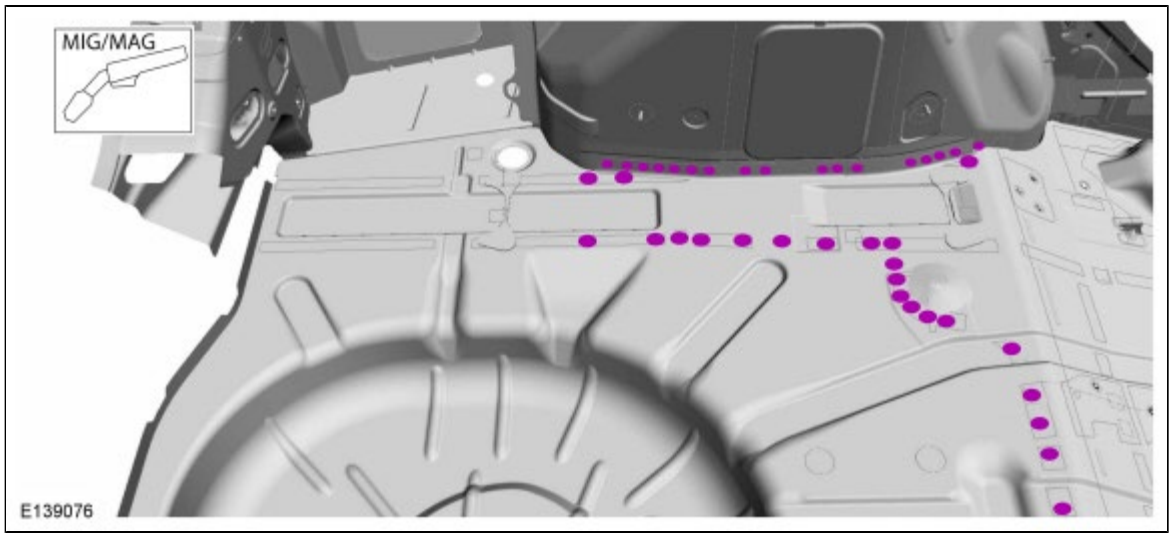

4. Refer to: Corrosion Prevention (501-25 Body Repairs - General Information, General Procedures).
   General Equipment : MIG/MAG Welding Equipment

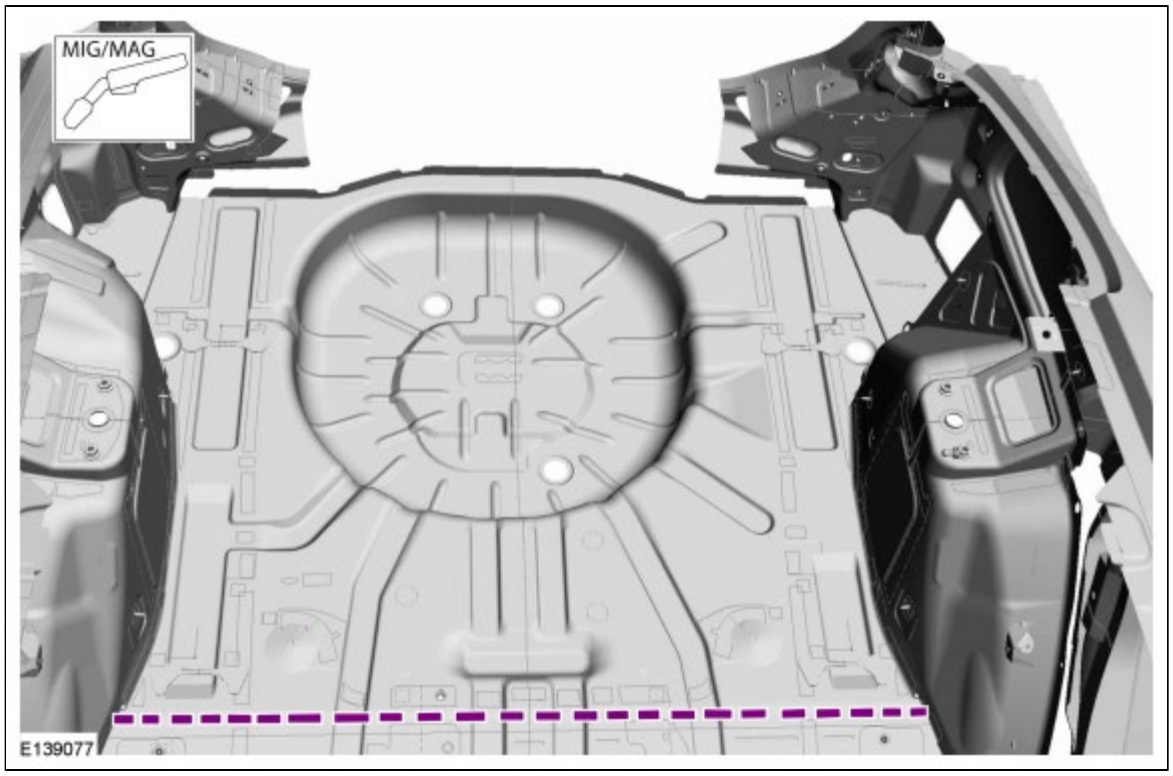

5. On both sides.
   General Equipment : Resistance Spotwelding Equipment

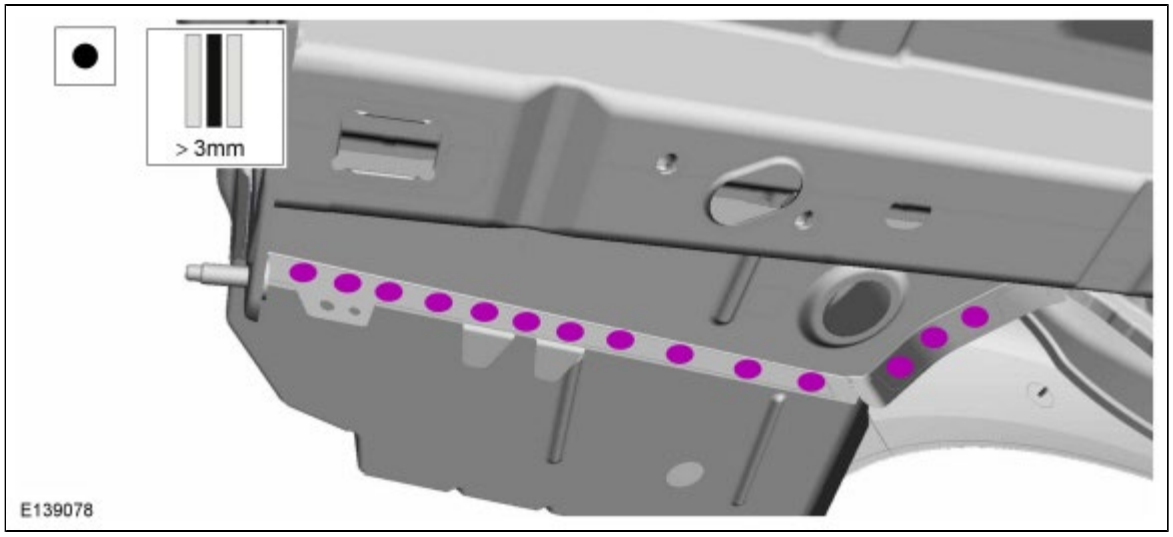

6. On both sides.
   General Equipment : Resistance Spotwelding Equipment

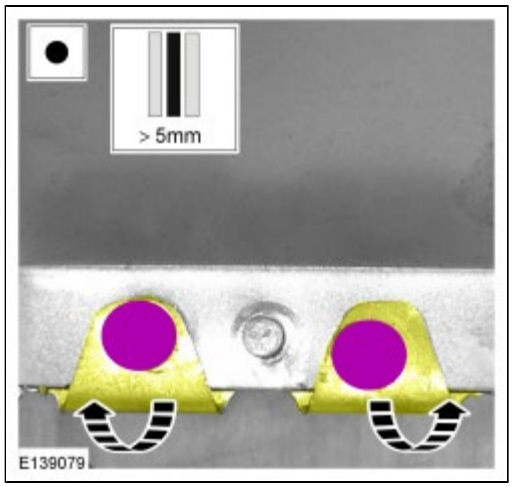

7. Complete weld with:
   Refer to: Back Panel and Reinforcement - Vehicles With: 4-Door (501-30 Rear End Sheet Metal Repairs, Removal and Installation).

8. Sealing work: All areas must be sealed to production level.
   Material : Seam Sealer / TA-2

Copyright © Ford Motor Company

Rear Floor Panel - Vehicles With: 5-Door

Removal

1. Reposition the carpeting and the wiring harness away from the working area.
   Refer to: Back Panel and Reinforcement - Vehicles With: 5-Door (501-30 Rear End Sheet Metal Repairs, Removal and Installation).

2. Rough Cut - Do not cut in panels below!
   General Equipment : Air Body Saw

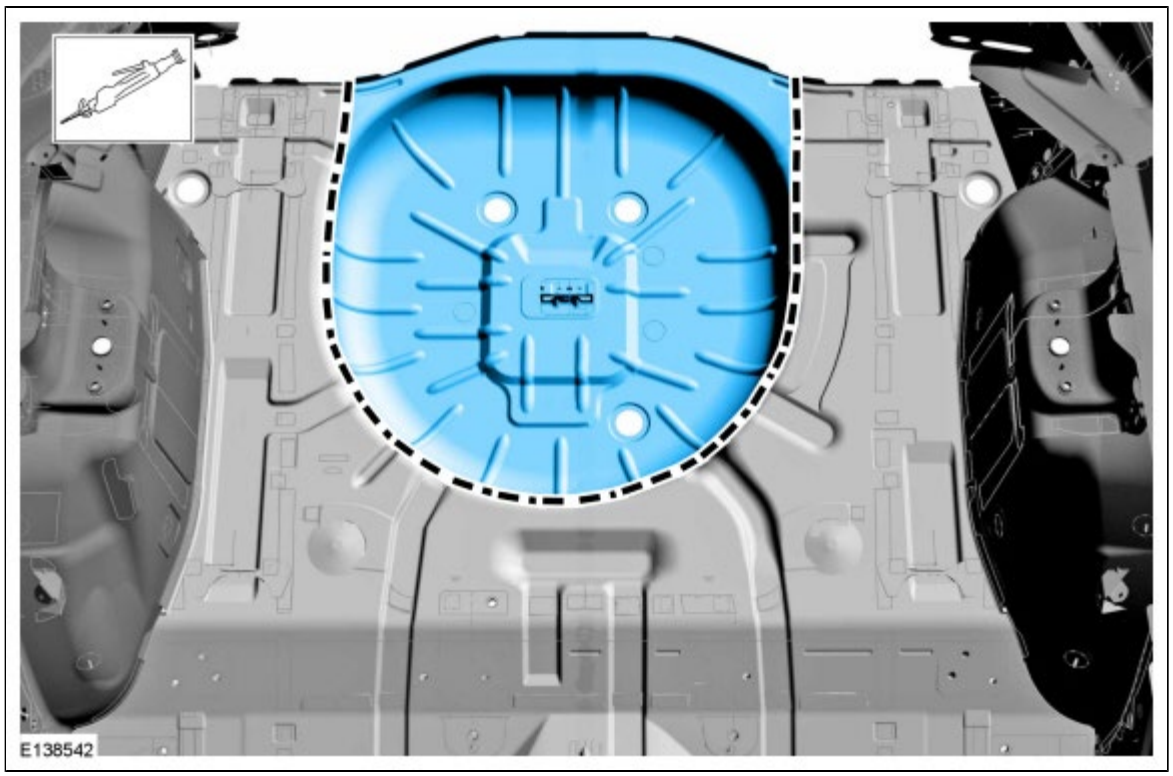

3. *General Equipment* : Spot weld drill Bit

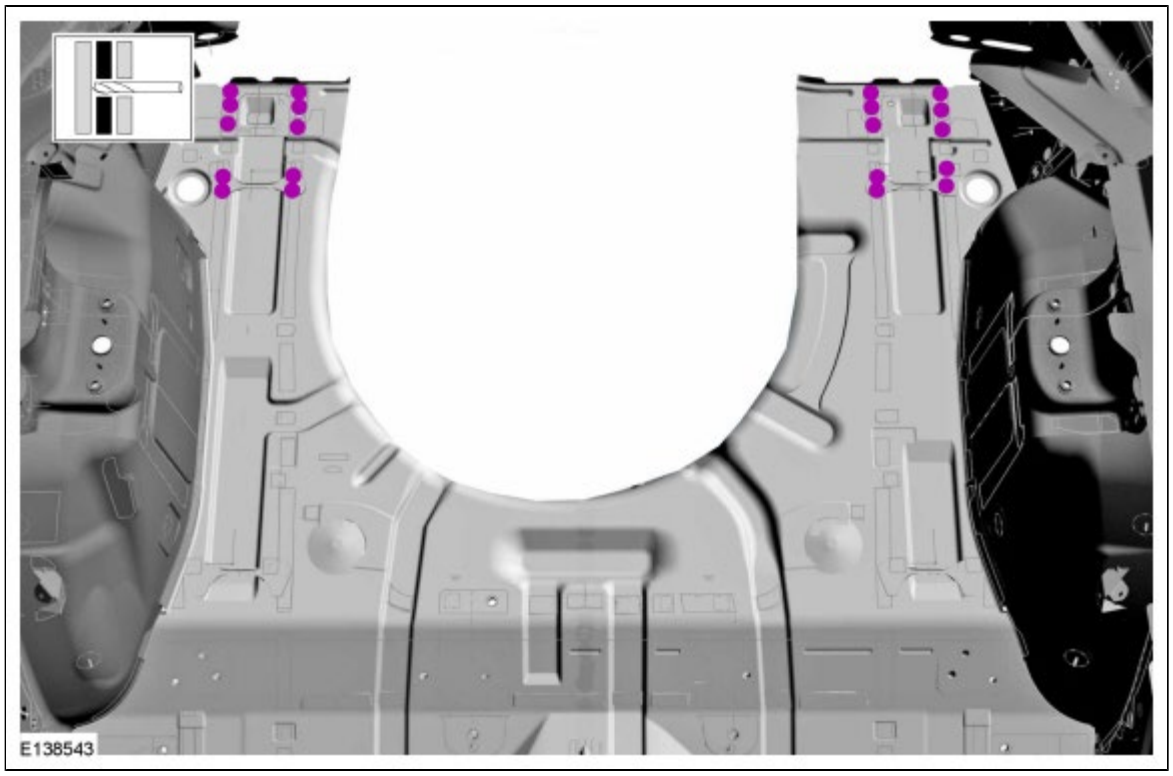

4. *General Equipment* : Spot weld drill Bit

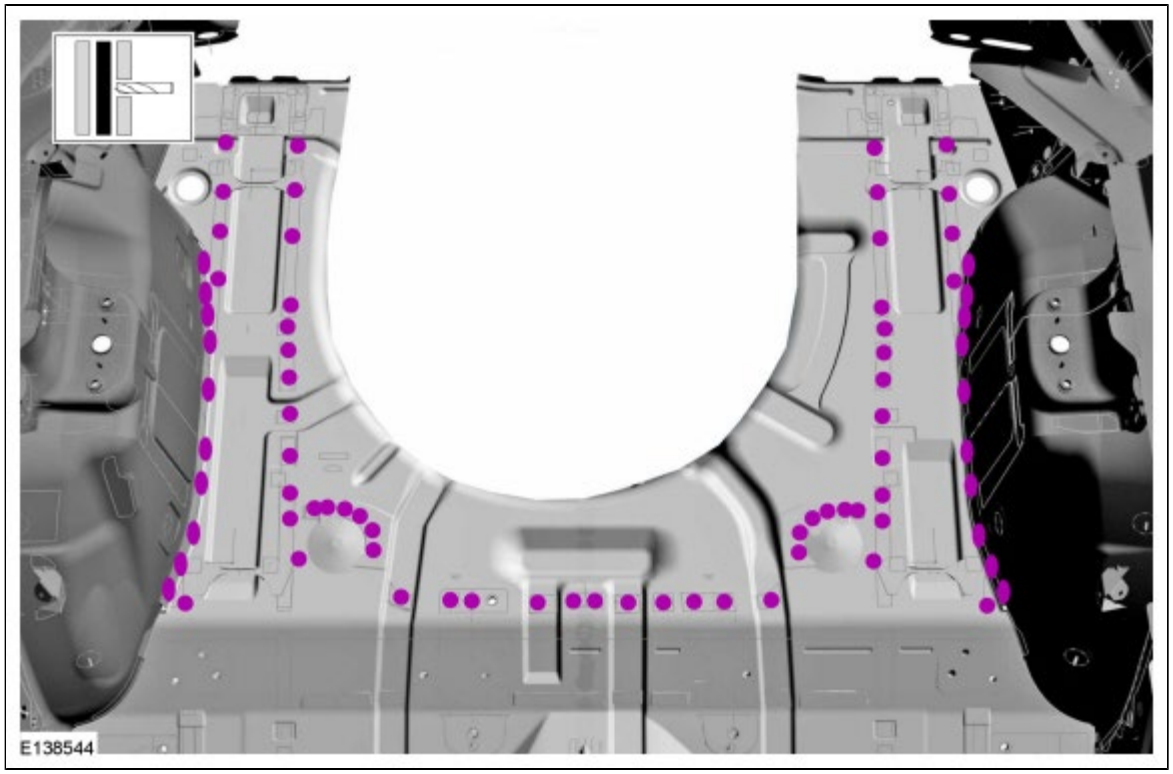

5. On both sides.
   General Equipment : Spot weld drill Bit

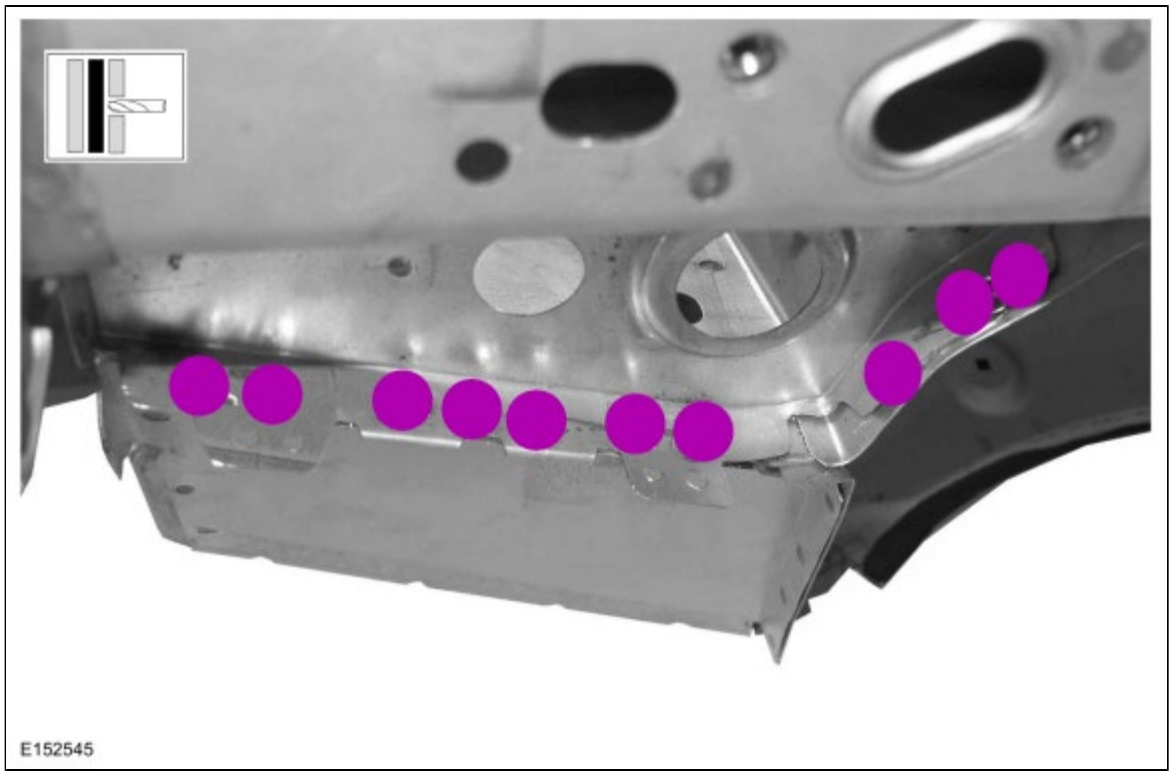

6. On both sides.
   General Equipment : Spot weld drill Bit

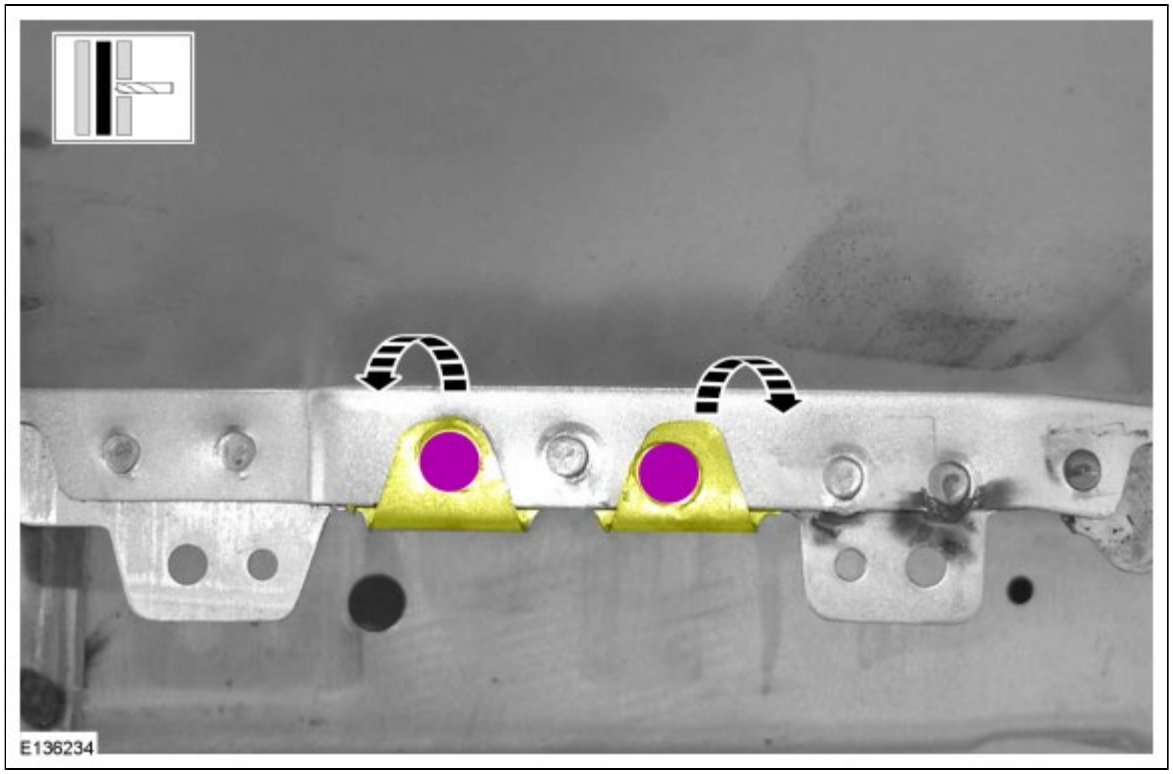

7. Do not cut in panels below!
   General Equipment : Air Body Saw

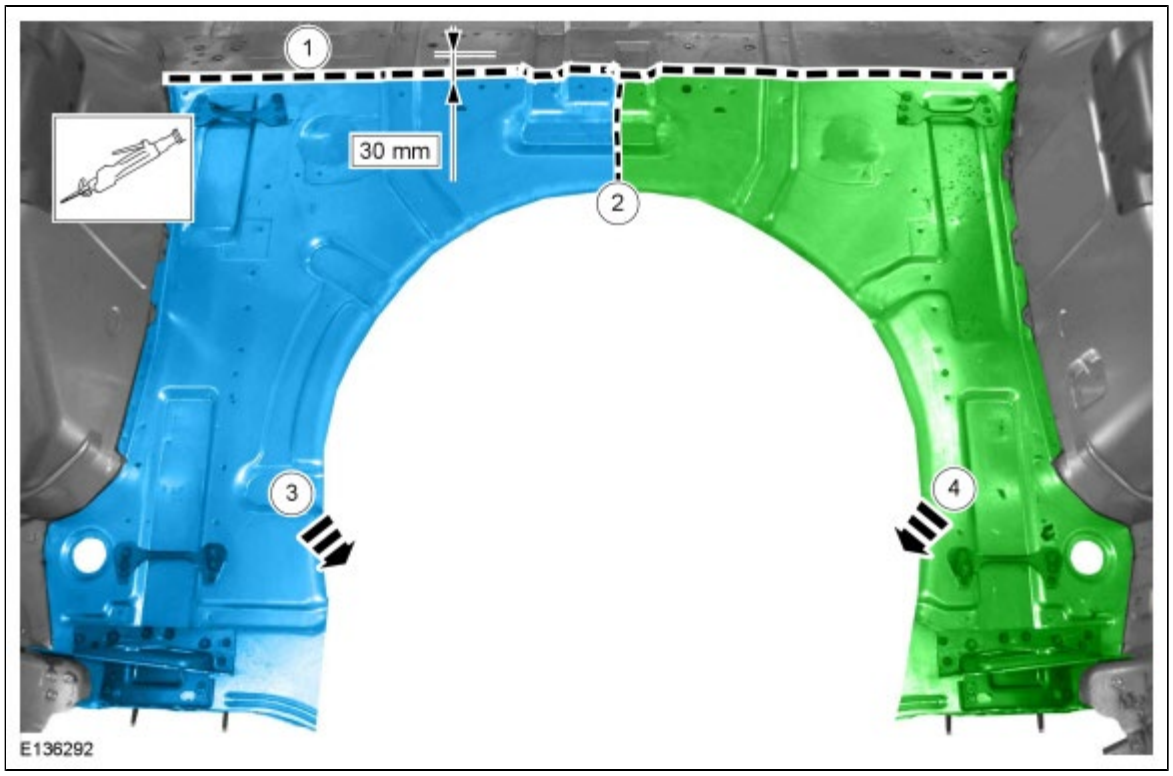

Installation

1. *General Equipment* : 8 mm Drill Bit

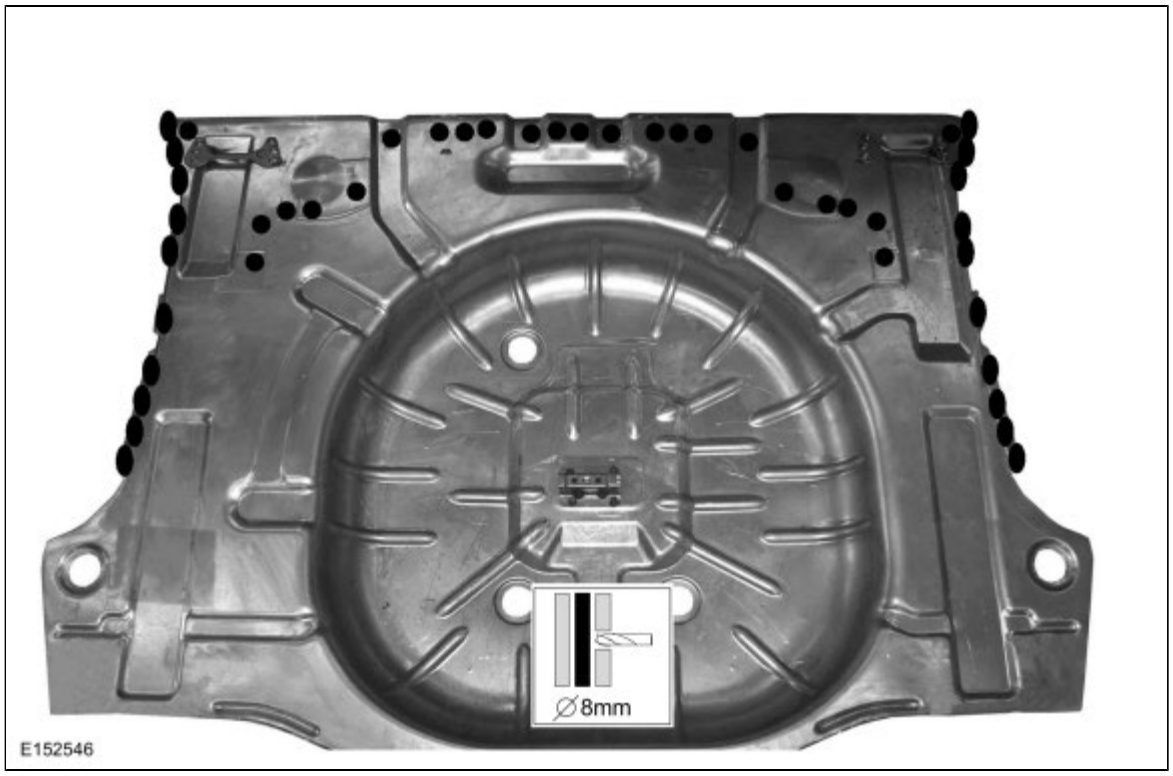

2. *General Equipment* : Resistance Spotwelding Equipment

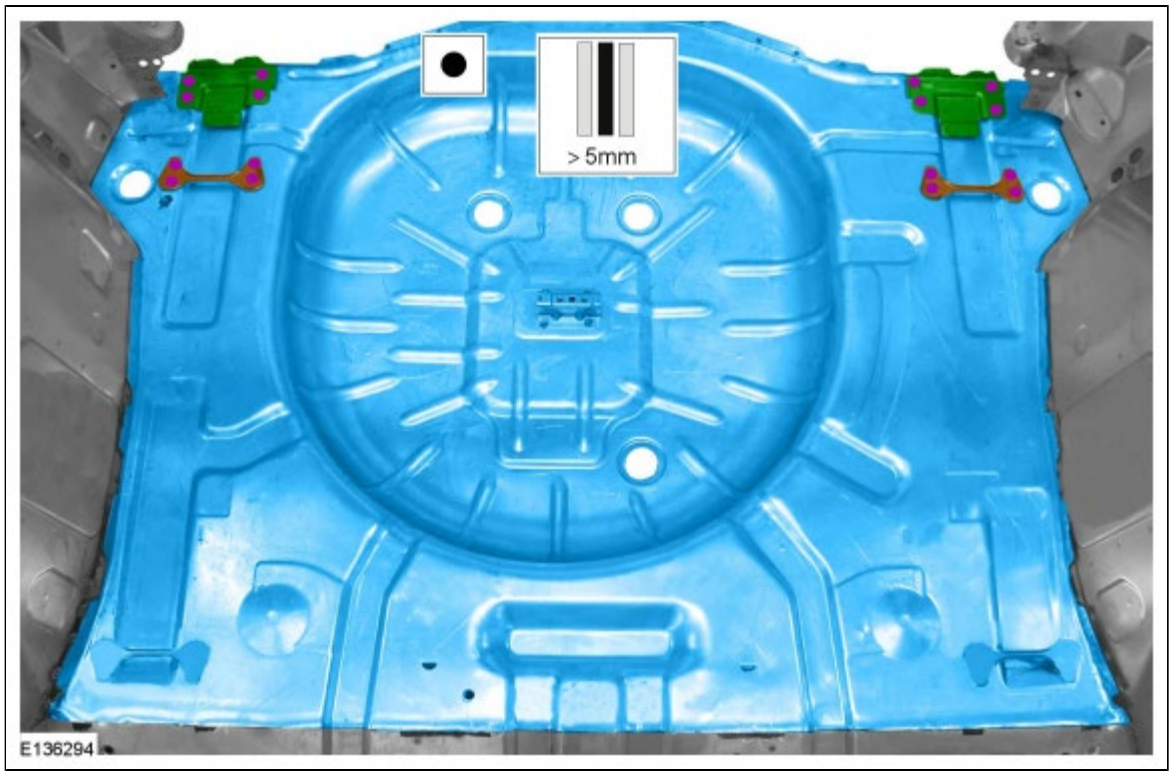

3. *General Equipment* : Resistance Spotwelding Equipment

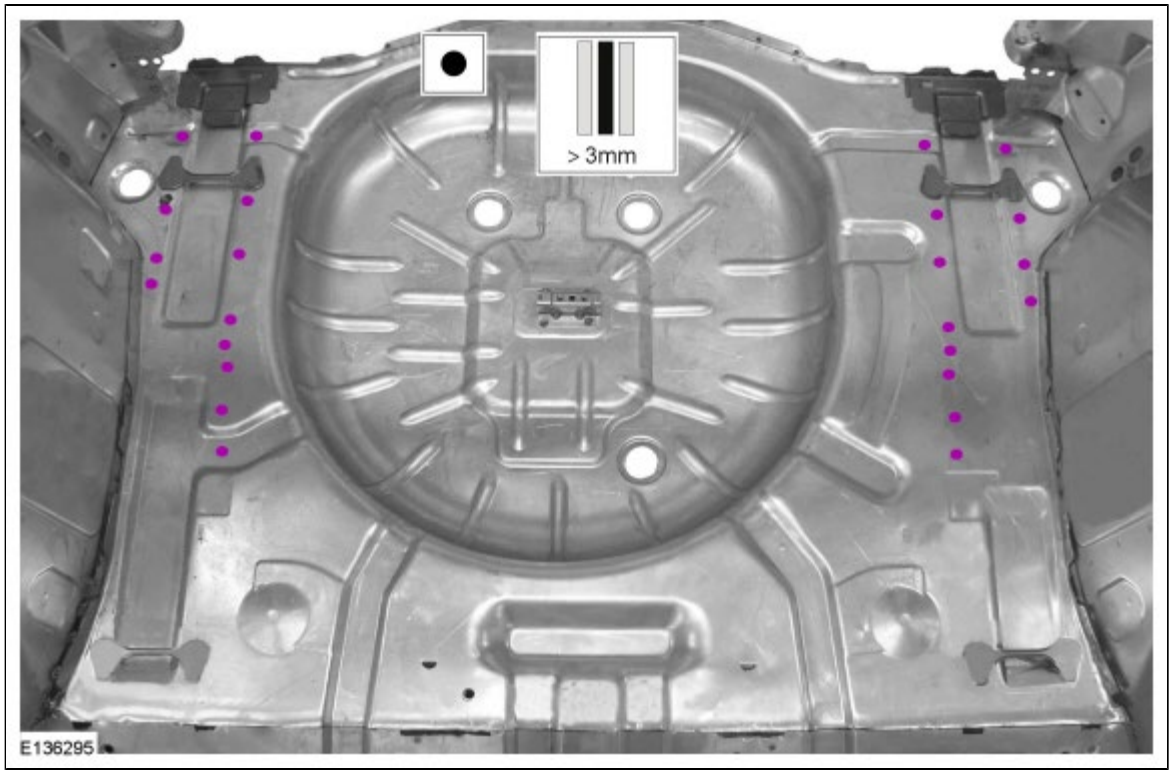

4. *General Equipment* : MIG/MAG Welding Equipment

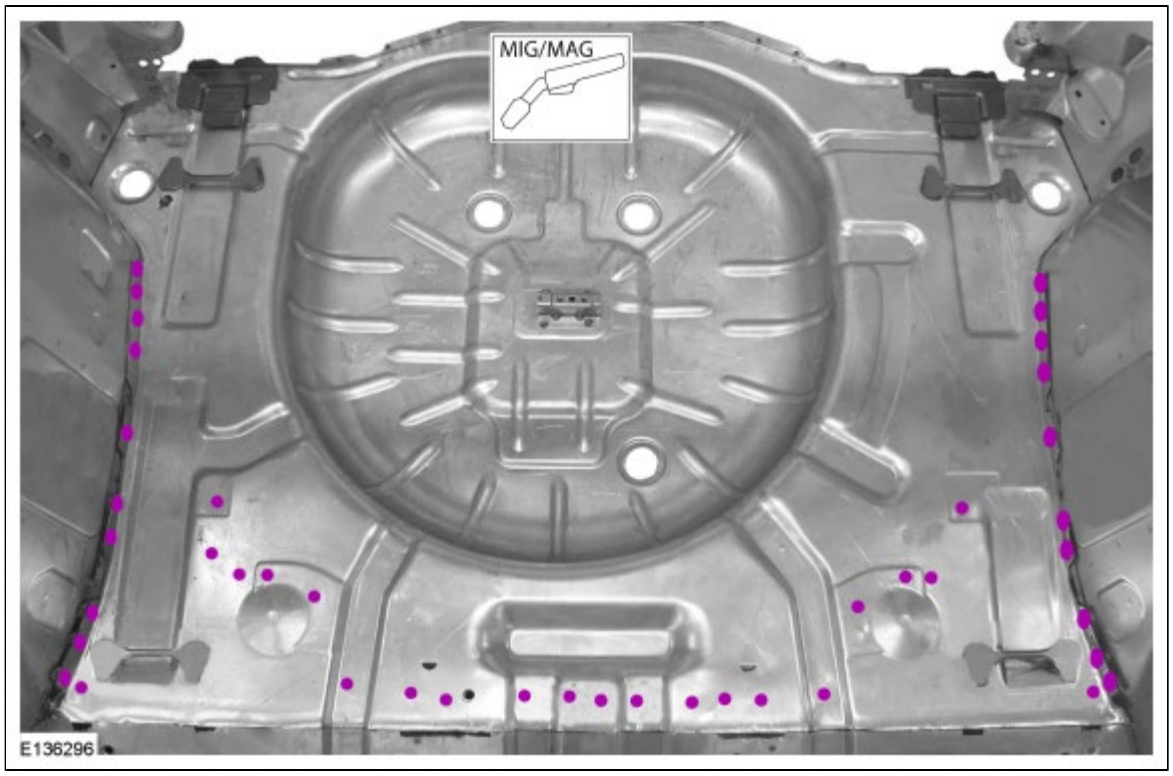

5. *General Equipment* : MIG/MAG Welding Equipment

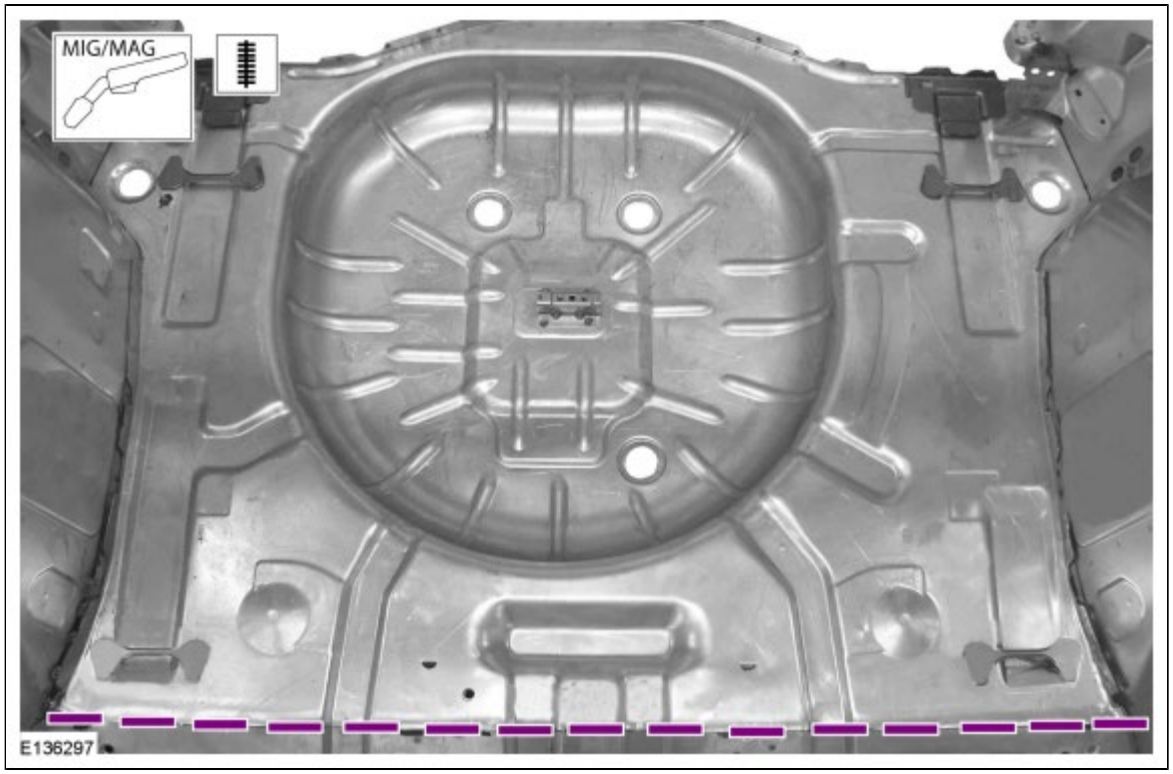

6. On both sides.
   General Equipment : Resistance Spotwelding Equipment

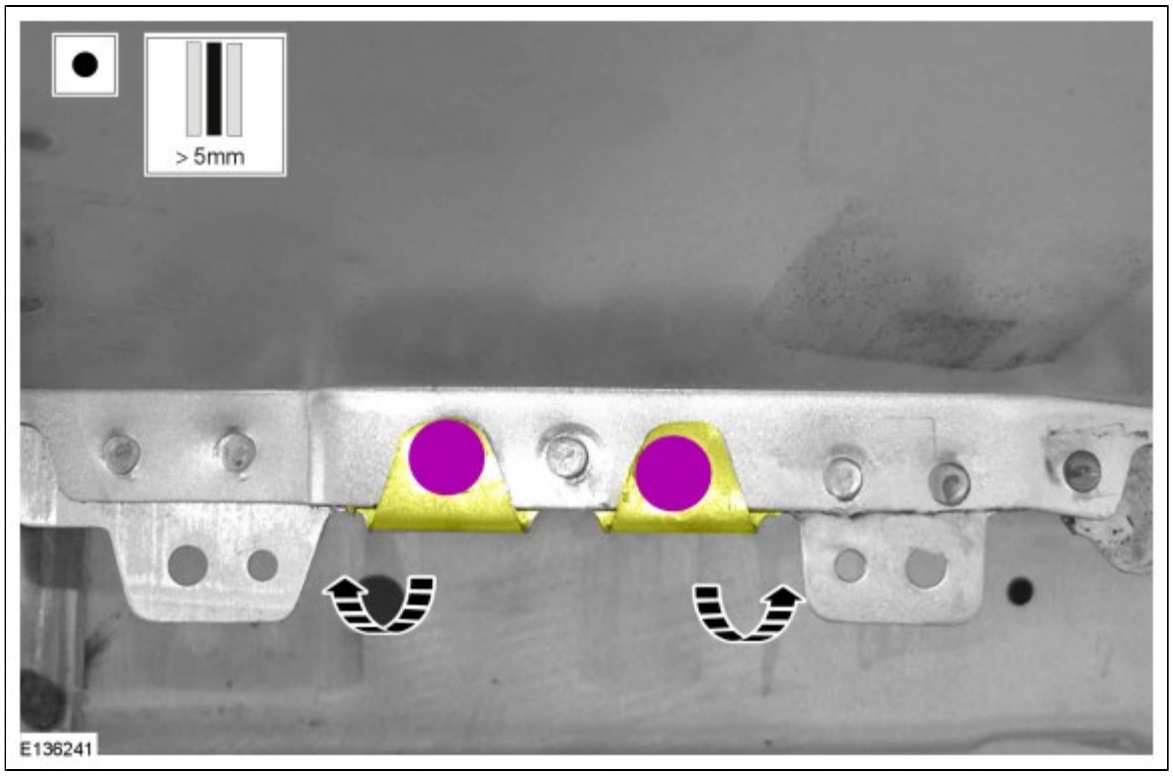

7. On both sides.
   General Equipment : Resistance Spotwelding Equipment

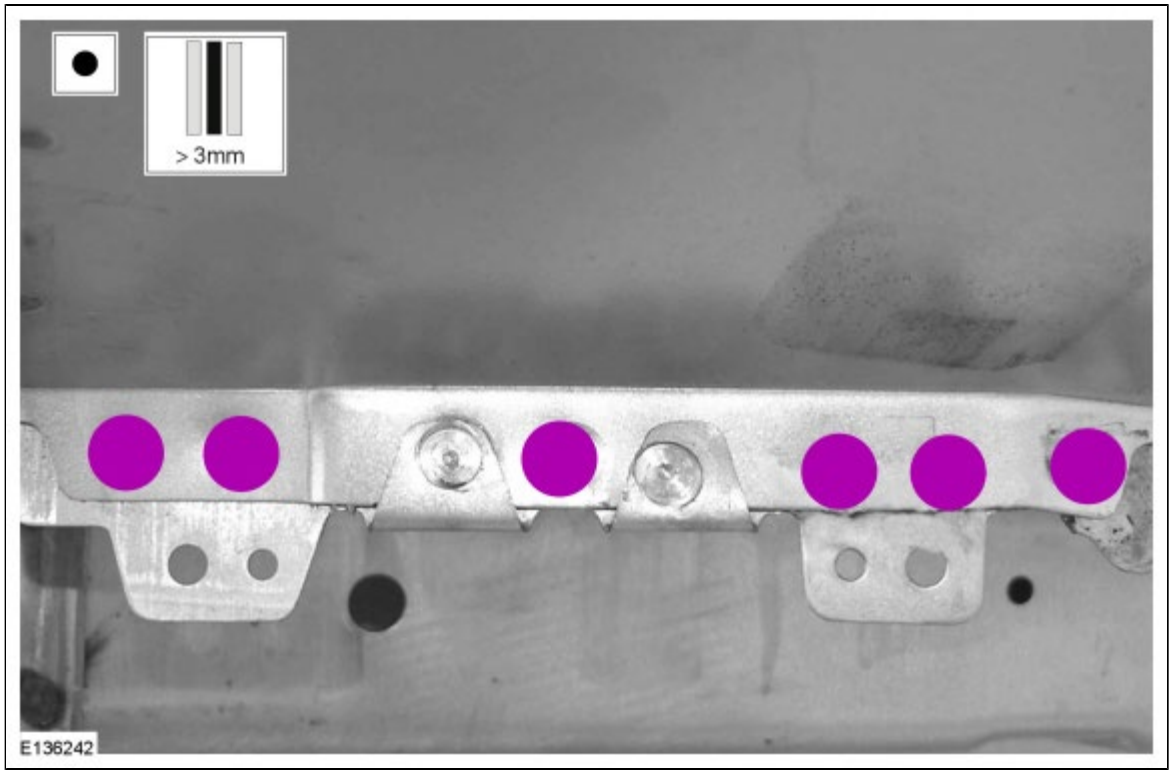

8. On both sides.
   General Equipment : Resistance Spotwelding Equipment

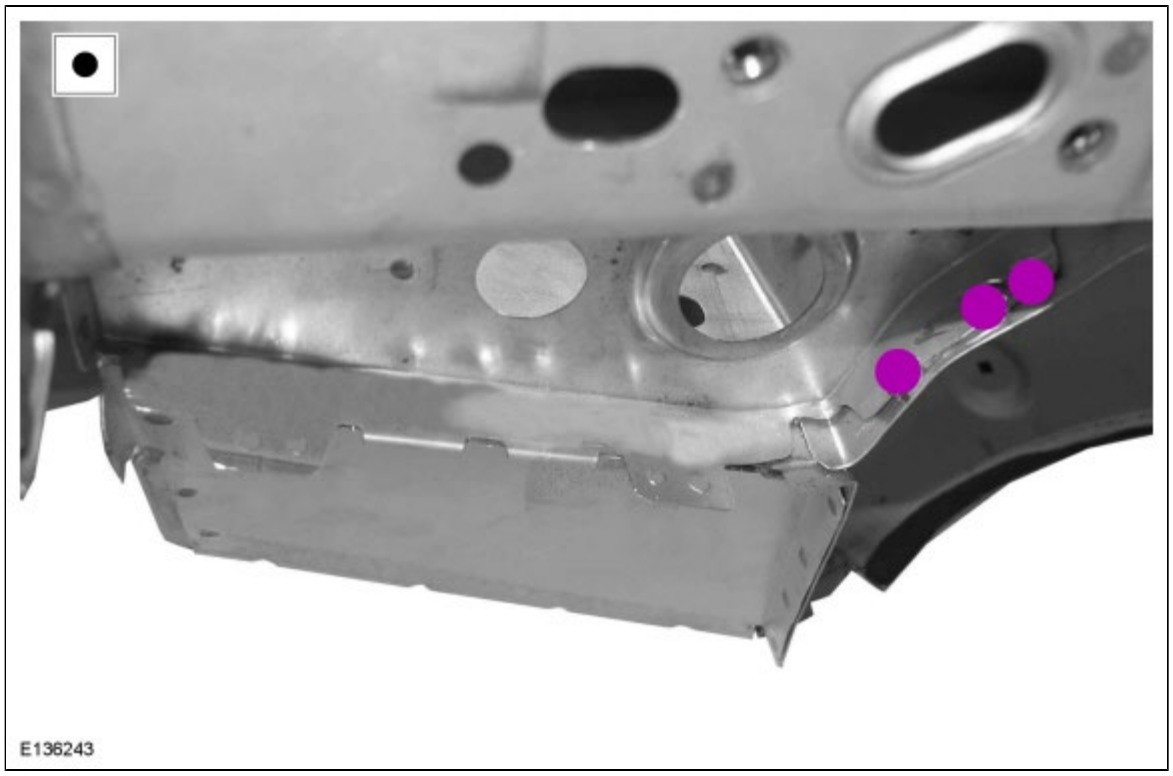

9. Complete weld with:
   Refer to: Back Panel and Reinforcement - Vehicles With: 5-Door (501-30 Rear End Sheet Metal Repairs, Removal and Installation).

10. Sealing work: All areas must be sealed to production level.
    Material : Seam Sealer / TA-2

Copyright © Ford Motor Company

Audio Digital Signal Processing (DSP) Module

Removal

NOTE: *Removal steps in this procedure may contain installation details.*

1. **WARNING: Before beginning any service procedure in this section, refer to Safety Warnings in section 100-00 General Information. Failure to follow this instruction may result in serious personal injury.**

   Refer to: Health and Safety Precautions (100-00 General Information, Description and Operation).

2. **NOTE:** *If installing a new module, it is necessary to upload the module configuration information to the scan tool prior to removing the module. This information must be downloaded into the new module after installation.*

   Upload the Audio DSP Module configuration information to the scan tool by following the scan tool on screen instructions.

3. 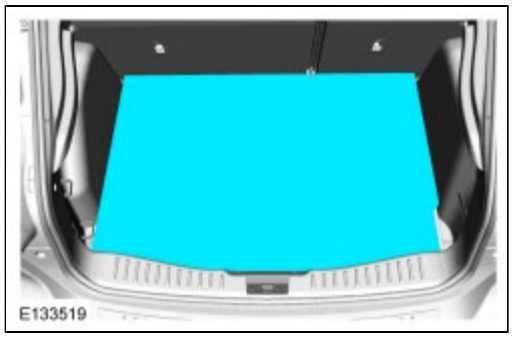

4.

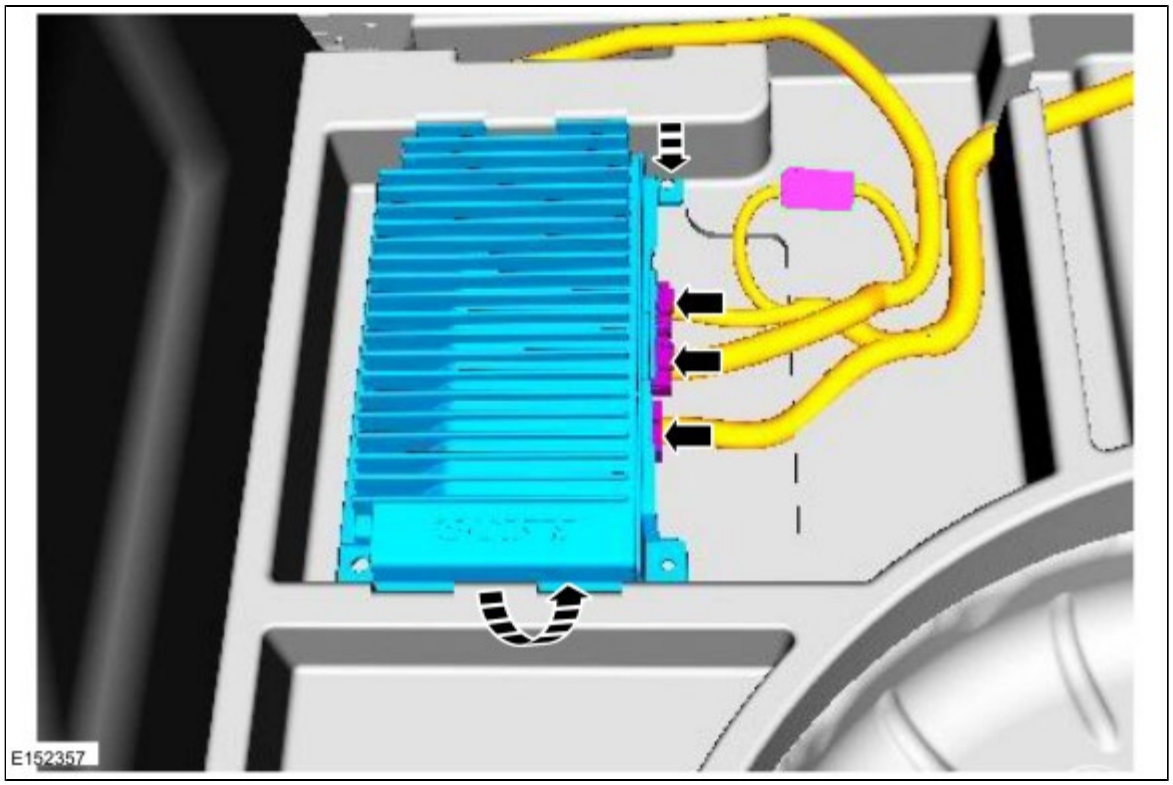

Installation

1. To install, reverse the removal procedure.
2. If installing a new DSP , download the Audio DSP Module configuration information from the scan tool to the new Audio DSP Module following the scan tool on screen instructions.

Copyright © Ford Motor Company

Compass Module

Removal

NOTE: *Do not bend or crease the headliner during removal or installation. Failure to follow this will result in damage to the headliner.*

NOTE: *Removal steps in this procedure may contain installation details.*

1. **WARNING: Before beginning any service procedure in this section, refer to Safety Warnings in section 100-00 General Information. Failure to follow this instruction may result in serious personal injury.**

   Refer to: Health and Safety Precautions (100-00 General Information, Description and Operation).

2. Remove both A-pillar trim panels.
   Refer to: A-Pillar Trim Panel (501-05 Interior Trim and Ornamentation, Removal and Installation).

3. 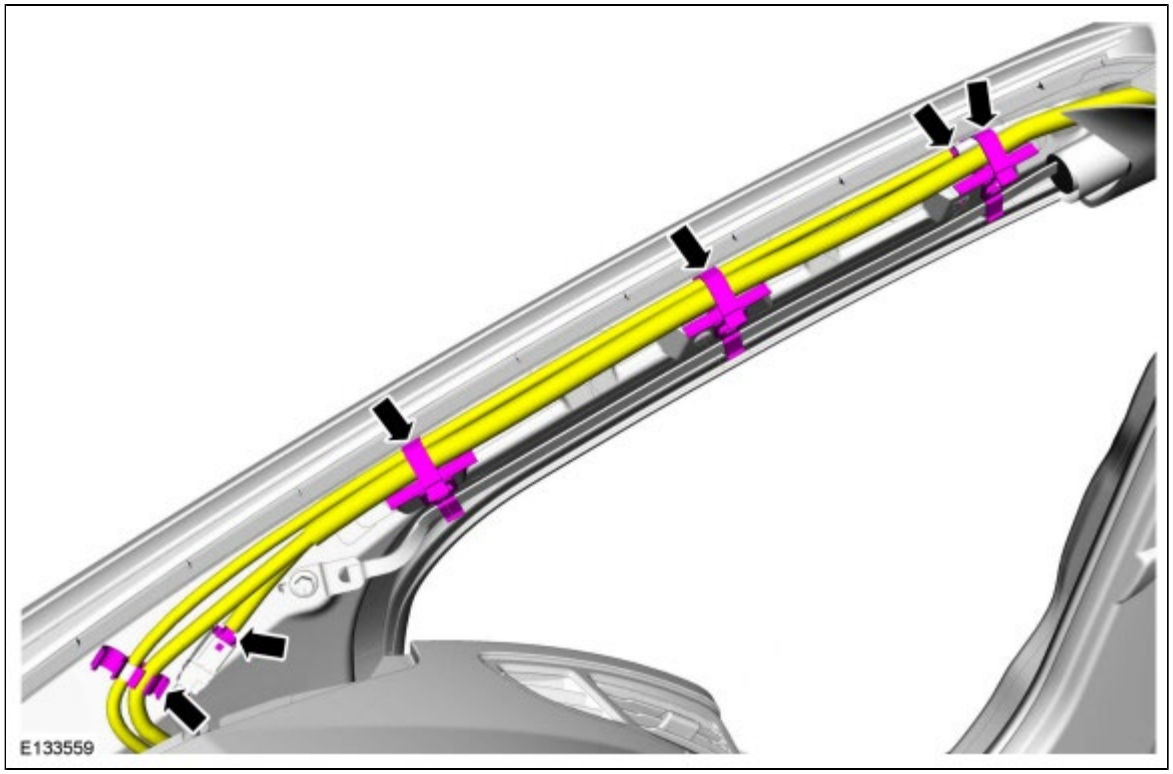

4. If equipped.

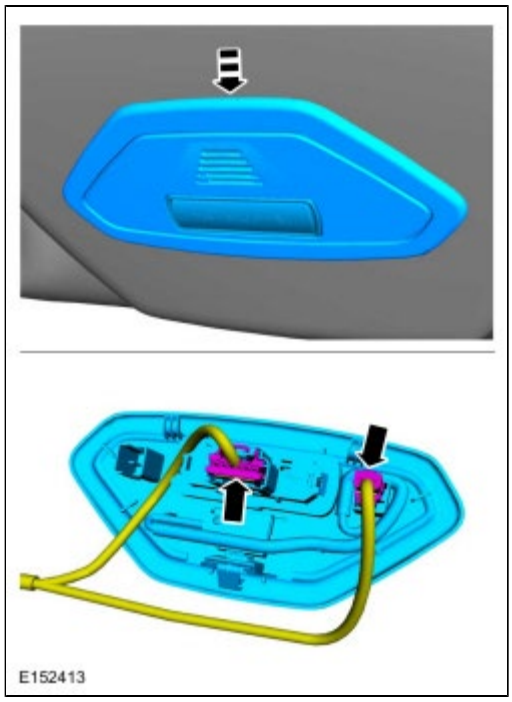

5. If equipped, remove the overhead console.
   Refer to: Overhead Console (501-12 Instrument Panel and Console, Removal and Installation).

6. If equipped.

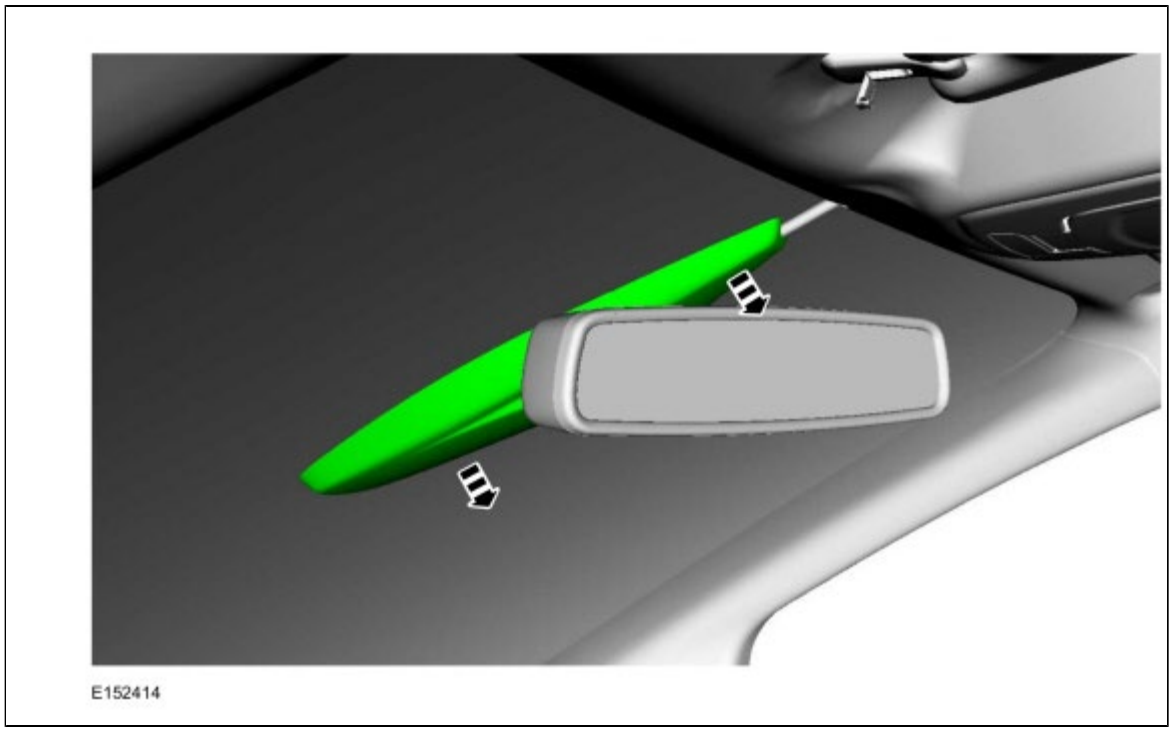

7. If equipped.

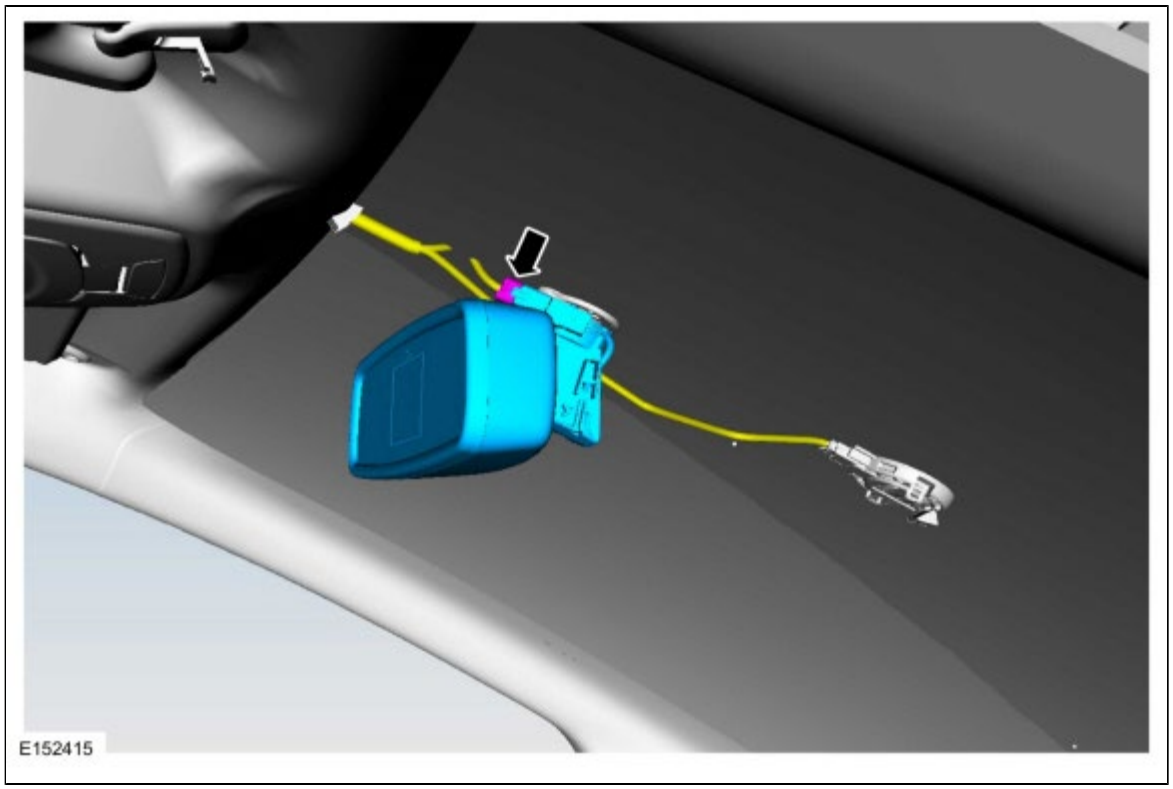

8. Position aside both upper B-pillar trim panels.

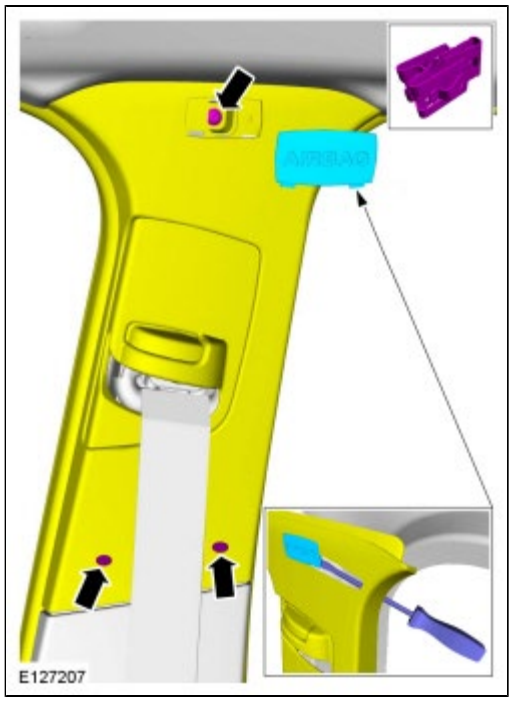

9. Remove both D-pillar trim panels.
   Refer to: D-Pillar Trim Panel - Vehicles With: 5-Door (501-05 Interior Trim and Ornamentation, Removal and Installation).
   Refer to: D-Pillar Trim Panel - Vehicles With: 4-Door (501-05 Interior Trim and Ornamentation, Removal and Installation).

10. **NOTE:** *4 door vehicles only.*

    Remove both upper C-pillar trim panels.
    Refer to: C-Pillar Upper Trim Panel (501-05 Interior Trim and Ornamentation, Removal and Installation).

11. Remove both sunvisors

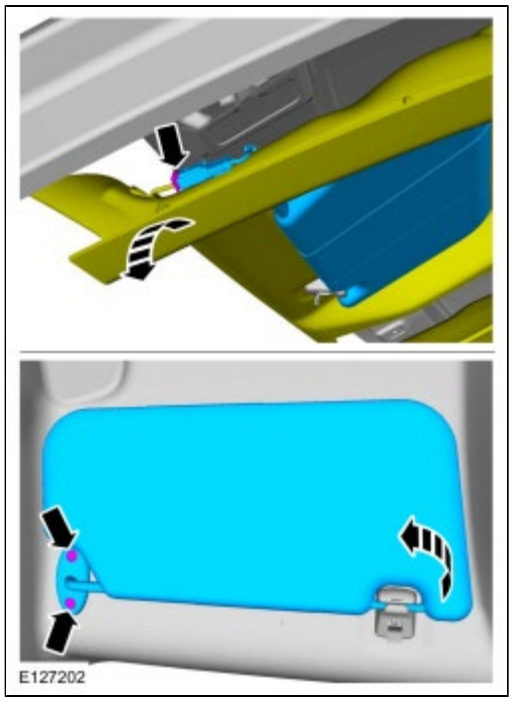

12. **NOTE:** *Assist handle shown, garment hooks similar.*

    Remove the passenger front assist handle and both rear garment hooks.

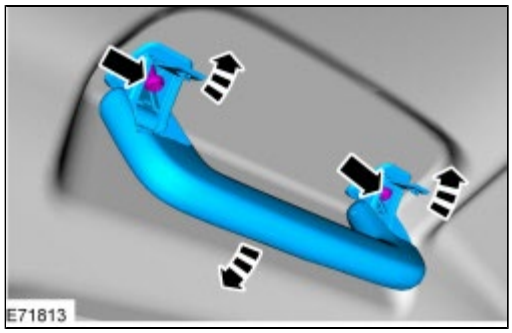

13. **NOTE:** *5 door vehicles only*

    Disconnect and plug the rear window washer hose from the RH D-pillar.

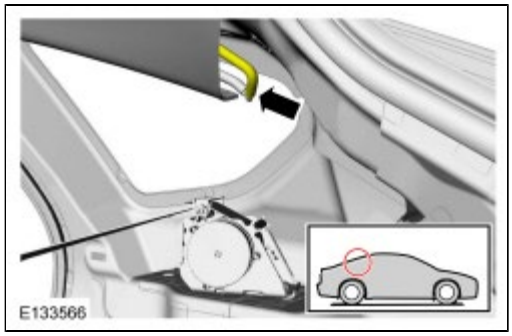

14. **NOTE:** *5 door shown, 4 door similar.*

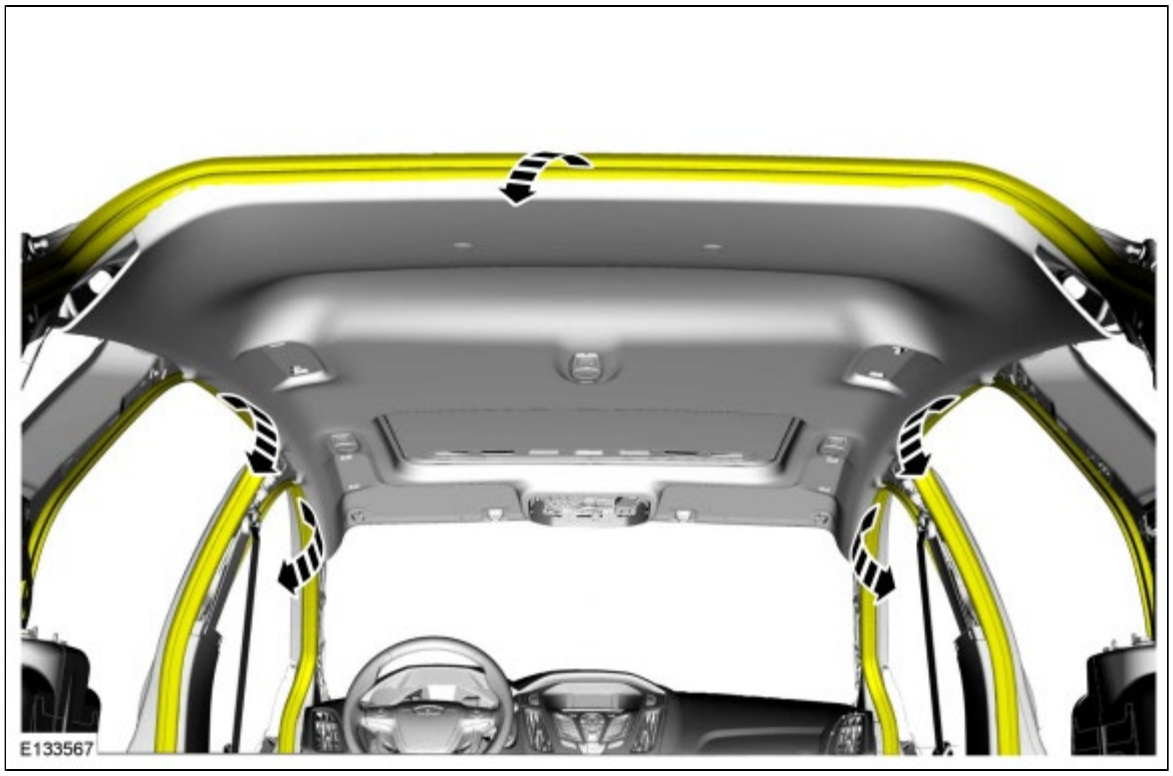

15.

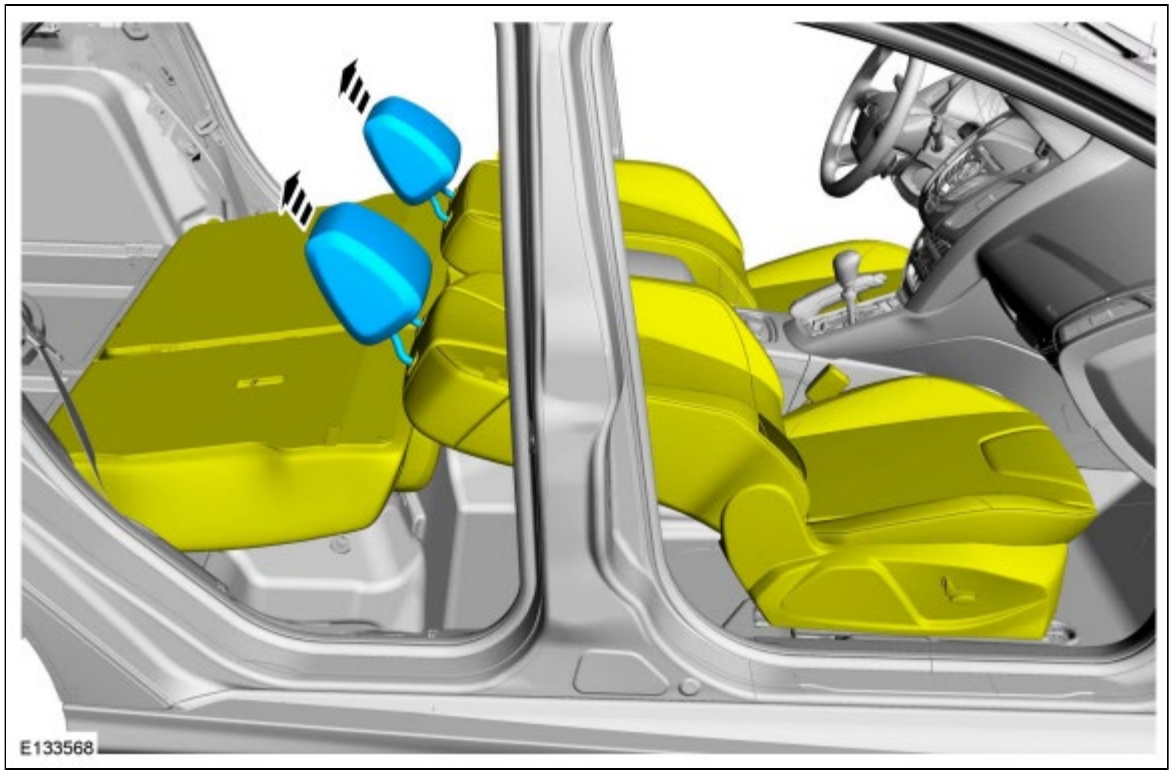

16.

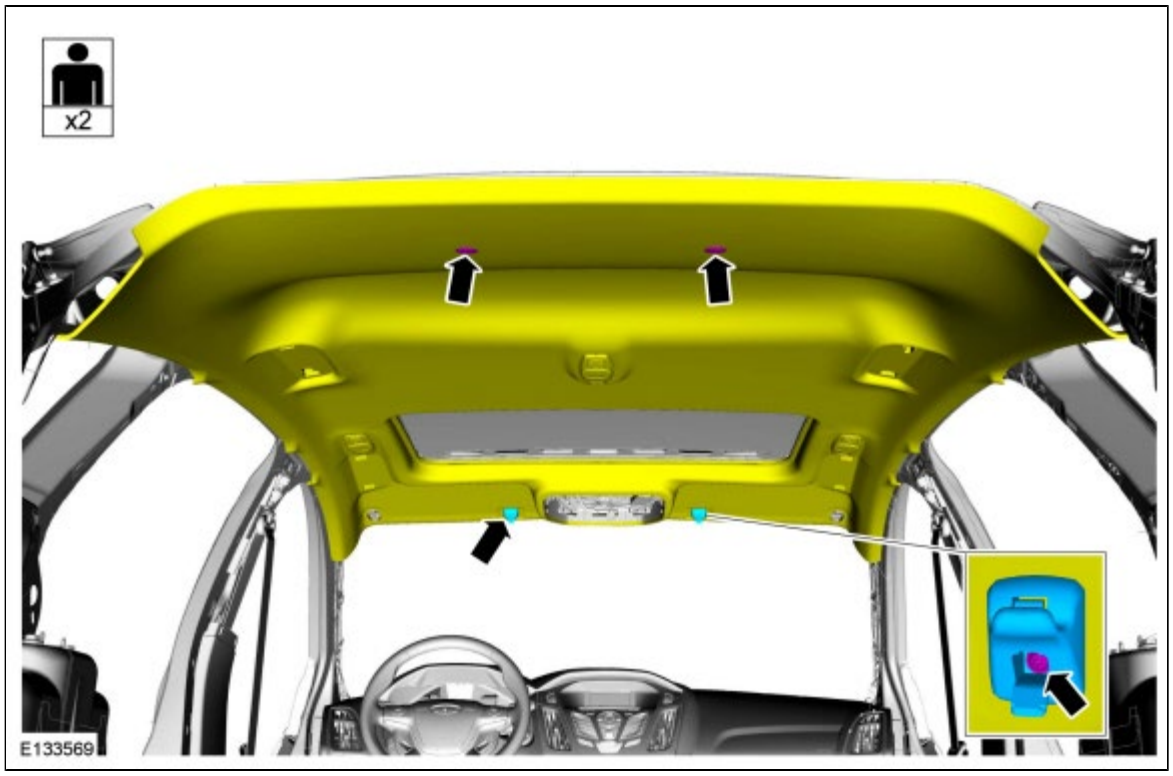

17. **NOTE:** *Gently pry the compass module away from the headliner or damage to the headliner may occur.*

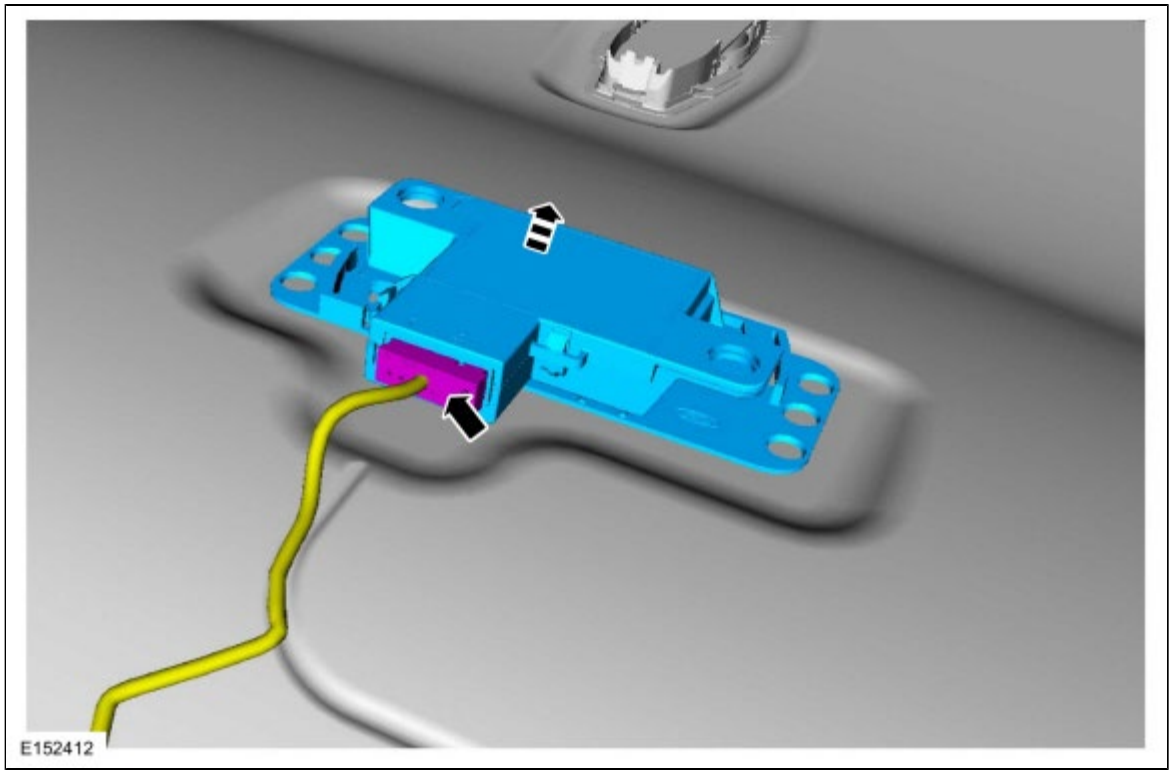

Installation

1. To install, reverse the removal procedure.

2. **NOTE:** *Obtain the 3M ™ Duramix™ 4747 Super Fast Adhesive commercially. The 3M™ Duramix™ Super Fast Adhesives is a 2-part adhesive in a 50 ml dual-tube applicator. The 3M™ Duramix™ 4747 Super Fast Adhesive will set in 20 seconds.*

   Install the compass module using 3M™ Duramix ™ 4747 Super Fast Adhesive to secure the compass module to the headliner in the same position and orientation on the headliner.

Copyright © Ford Motor Company

Specifications

General Specifications

Item	Specification
Fuel tank capacity	12.40 gal (46.95 L)

Copyright © Ford Motor Company

Fuel Tank and Lines - Overview

Overview

The fuel system consists of:

- a Closed Loop Pressure Control System (CLPCS).
- a standard fuel tank.
- fuel, vapor and brake tubes in an integrated bundle assembly attached to the underside of the vehicle by retaining clips.
- a Fuel Tank Pressure (FTP) sensor (part of the fuel vapor tube assembly).
- a lifetime fuel filter (serviced as part of the Fuel Pump (FP) module).
- a Fuel Pump (FP) module that supplies fuel under pressure to the high pressure Fuel Pump (FP).
- a serviceable fuel level sender mounted on the Fuel Pump (FP) module.
- an Easy Fuel™ fuel tank filler pipe assembly, which cannot be modified in any way and is serviced only by the installation of a new fuel tank filler pipe assembly.
- a supplemental refueling adapter located in the spare tire compartment.

FP Shut-off Feature

In the event of a moderate to severe collision, the vehicle is equipped with a FP shut-off feature that is initiated by the event notification signal.

Copyright © Ford Motor Company

Fuel Tank and Lines

Symptom Chart(s)

Refer to Powertrain Control/Emissions Diagnosis (PC/ED) manual., Section 3. Symptom Charts.

Copyright © Ford Motor Company

Fuel Tank

Removal

WARNING: Before beginning any service procedure in this section, refer to Safety Warnings in section 100-00 General Information. Failure to follow this instruction may result in serious personal injury.

1. Refer to: Gasoline and Gasoline-Ethanol Fuel Systems Health and Safety Precautions (100-00 General Information, Description and Operation).

2. With the vehicle in NEUTRAL, position it on a hoist.
   Refer to: Jacking and Lifting - Overview (100-02 Jacking and Lifting, Description and Operation).

3. Release the fuel system pressure.
   Refer to: Fuel System Pressure Release (310-00B Fuel System - General Information, General Procedures).

4. Disconnect the battery ground cable.
   Refer to: Battery Cables - 2.0L Duratec-HE (125kW/170PS) - MI4 (414-01 Battery, Mounting and Cables, Removal and Installation).

5. Drain the fuel tank.
   Refer to: Fuel Tank Draining (310-00B Fuel System - General Information, General Procedures).

6. Remove the 5 nuts and position fuel tank heat shield aside.
   Torque : 5 Nm

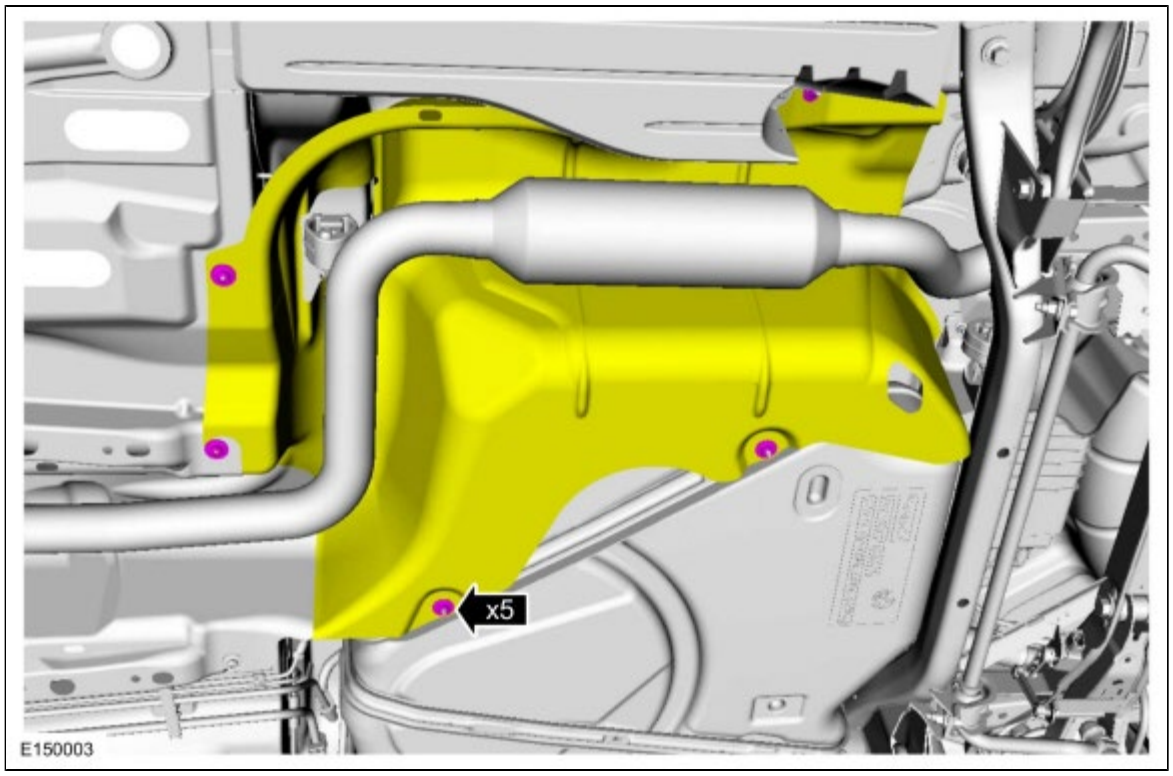

7. Disconnect the Evaporative Emission (EVAP) tube assembly-to-fuel tank tube quick release coupling and the fuel tank jumper tube-to-Fuel Pump (FP) assembly quick release coupling.
   Refer to: Quick Release Coupling (310-00B Fuel System - General Information, General Procedures).

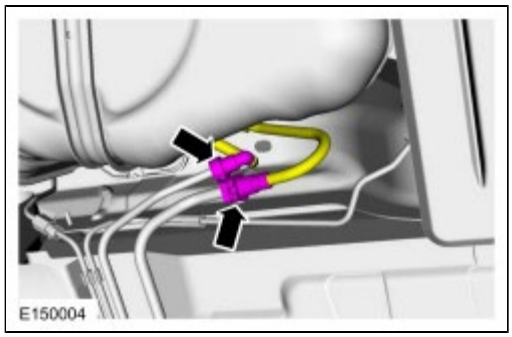

8. Disconnect the fuel vapor tube assembly-to-fuel tank quick release coupling and the vapor tube assembly-to-Evaporative Emission (EVAP) canister quick release coupling.
   Refer to: Quick Release Coupling (310-00B Fuel System - General Information, General Procedures).

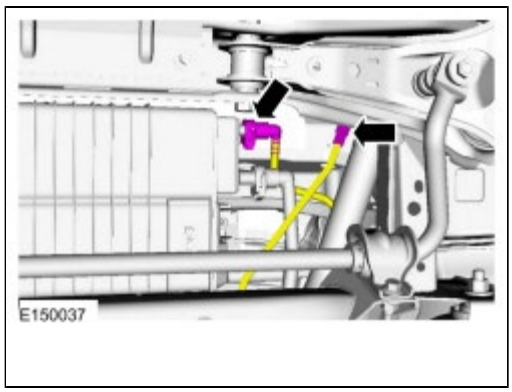

9. Loosen the hose clamp and disconnect the fuel tank filler pipe from the fuel tank.

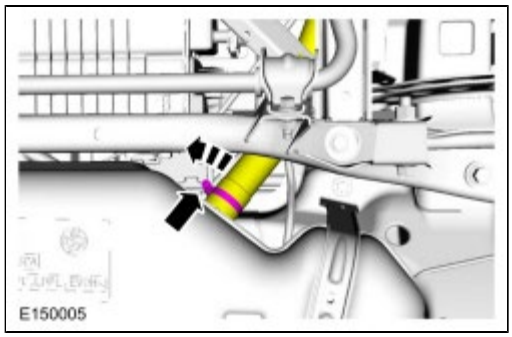

10. Position the Powertrain Jack under the fuel tank.
    General Equipment : Powertrain Jack

11. Remove the 3 fuel tank strap bolts.
    Torque : 25 Nm

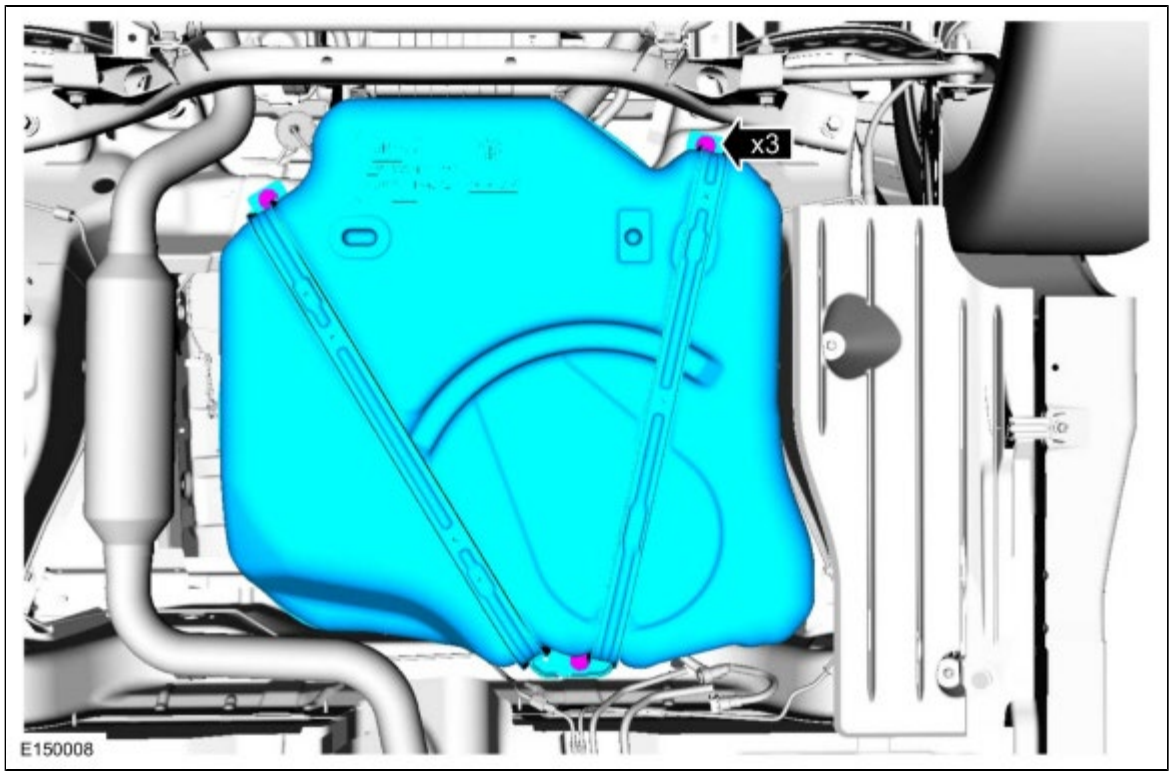

12. Partially lower the fuel tank for access.
13. Disconnect the Fuel Tank Pressure (FTP) sensor electrical connector.

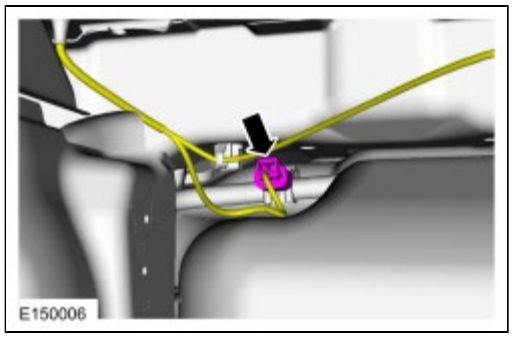

14. Disconnect the Fuel Pump (FP) module electrical connector.

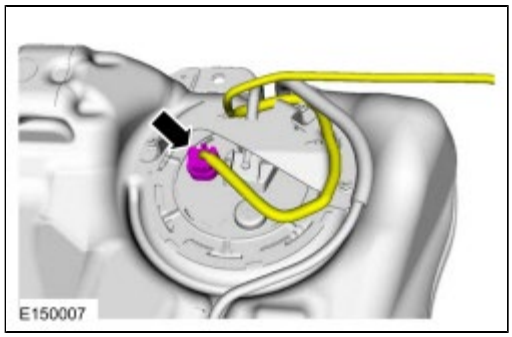

15. Lower the fuel tank.

Installation

1. To install, reverse the removal procedure.

Copyright © Ford Motor Company

Fuel Tank Filler Pipe

Removal

WARNING: Before beginning any service procedure in this section, refer to Safety Warnings in section 100-00 General Information. Failure to follow this instruction may result in serious personal injury.

1. Refer to: Gasoline and Gasoline-Ethanol Fuel Systems Health and Safety Precautions (100-00 General Information, Description and Operation).

2. With the vehicle in NEUTRAL, position it on a hoist.
   Refer to: Jacking and Lifting - Overview (100-02 Jacking and Lifting, Description and Operation).

3. Disconnect the battery ground cable.
   Refer to: Battery Cables - 2.0L Duratec-HE (125kW/170PS) - MI4 (414-01 Battery, Mounting and Cables, Removal and Installation).

4. **NOTE:** *The supplemental refueling adapter is located in the luggage compartment.*

   Install the supplemental refueling adapter and a length of semi-rigid fuel drain tube into the Easy Fuel (capless) fuel tank filler pipe.

5. **NOTE:** *If the fuel tank is completely full, this step will lower the fuel level to the fuel tank inlet.*

   Attach the Fuel Storage Tanker to the fuel drain tube and remove any residual fuel in the fuel tank filler pipe.

6. Remove the information bezel.

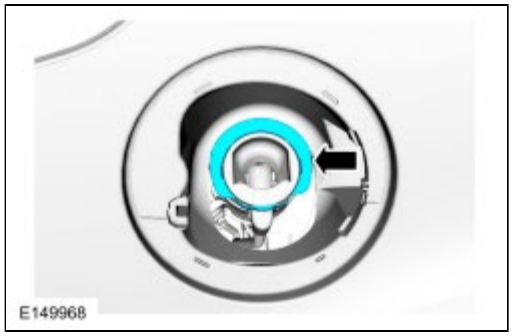

7. Remove the Right Rear (RR) wheel and tire.
   Refer to: Wheel and Tire (204-04A Wheels and Tires, Removal and Installation).

8. If equipped, remove the rear deflector.
   Torque : 2 Nm

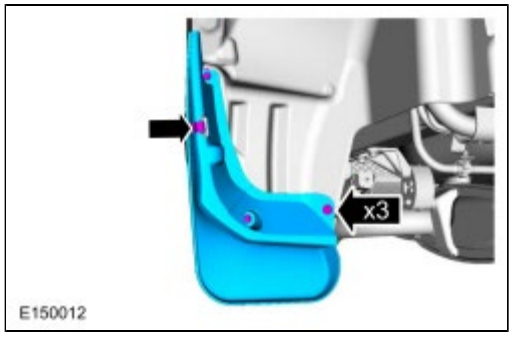

9. Remove the 6 retainers and the Right Rear (RR) fender splash shield.

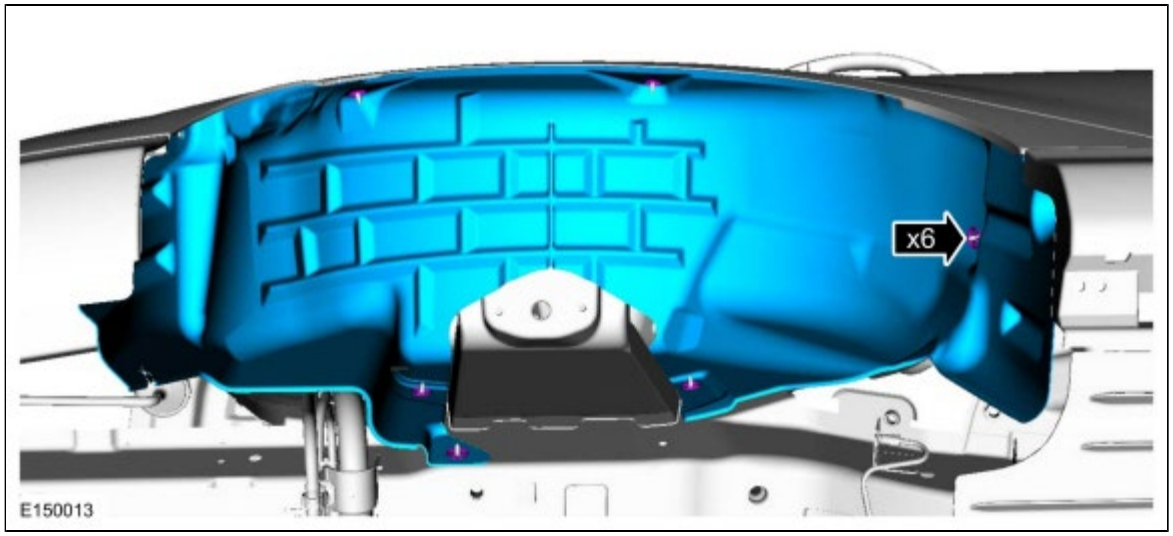

10. Disconnect the Evaporative Emission (EVAP) tube assembly-to-fuel tank filler pipe recirculation tube quick connect coupling.

11. Release the clamp and disconnect the fuel tank filler pipe from the fuel tank.
    Torque : 4 Nm

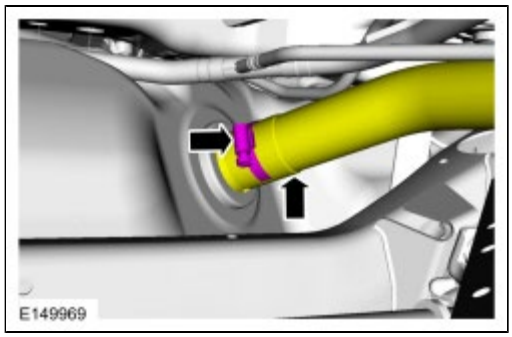

12. Disconnect the fresh air hose from the fuel tank filler pipe.

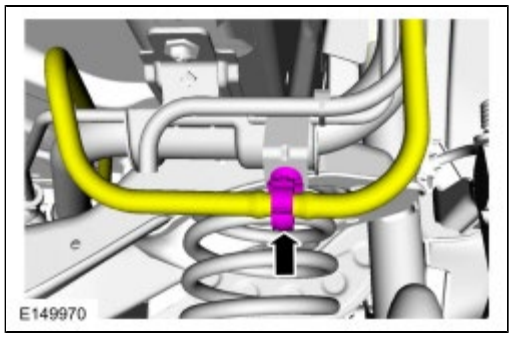

13. Remove the 2 fuel tank filler pipe bracket bolts and remove the fuel tank filler pipe from the vehicle.
    Torque : 9 Nm

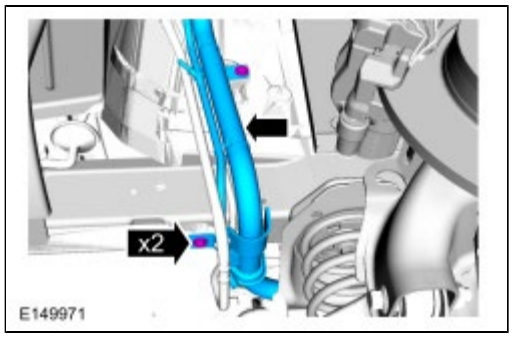

Installation

1. To install, reverse the removal procedure.

Copyright © Ford Motor Company

Fuel Pump

Removal

WARNING: Before beginning any service procedure in this section, refer to Safety Warnings in section 100-00 General Information. Failure to follow this instruction may result in serious personal injury.

1. Refer to: Gasoline and Gasoline-Ethanol Fuel Systems Health and Safety Precautions (100-00 General Information, Description and Operation).

2. Remove the fuel tank.
   Refer to: Fuel Tank (310-01A Fuel Tank and Lines, Removal and Installation).

3. **NOTE:** *Clean the Fuel Pump (FP) module connections, couplings, flange surfaces and the immediate surrounding area of any dirt or foreign material.*

   Detach the fuel vapor tube, disconnect the fuel supply tube-to-Fuel Pump (FP) module quick connect coupling. Remove the 3 fuel tank shield nut and remove the fuel tank shield.
   Torque : 9 Nm

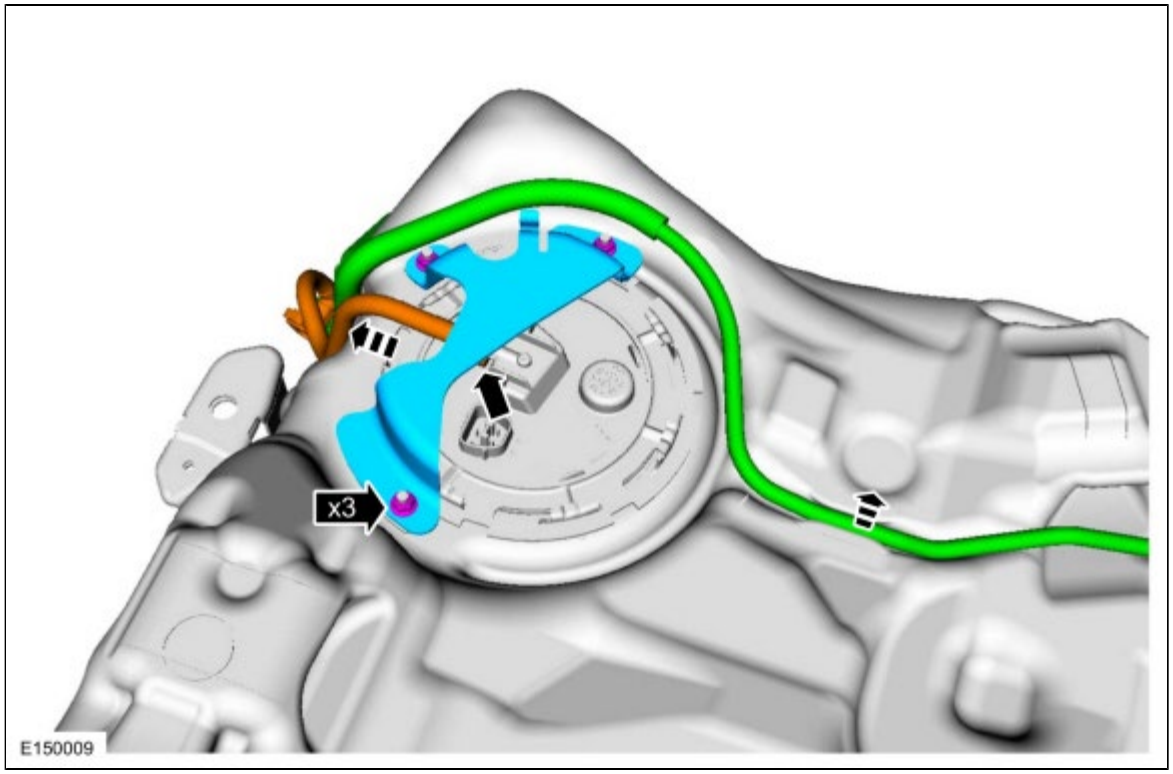

4. **NOTICE: Carefully install the lock ring wrench to avoid damaging the Fuel Pump (FP) module when removing the lock ring.**

   NOTICE: The Fuel Pump (FP) module must be handled carefully to avoid damage to the float arm.

   NOTE: *The Fuel Pump (FP) module will have residual fuel remaining internally, drain into a suitable container.*

   NOTE: *Inspect the mating surfaces of the Fuel Pump (FP) module flange and the fuel tank O-ring seal contact surfaces. Do not polish or adjust the O-ring seal contact area of the fuel tank flange or the fuel tank. Install a new Fuel Pump (FP) module or fuel tank if the O-ring seal contact area is bent, scratched or corroded.*

NOTE:

Using the lock ring wrench, rotate the lock ring counterclockwise and remove the Fuel Pump (FP) module lock ring. Remove the Fuel Pump (FP) module from the fuel tank.
Special Tool(s) : 310-123 Locking Ring, Fuel Tank

5. Remove and discard the Fuel Pump (FP) module O-ring seal.

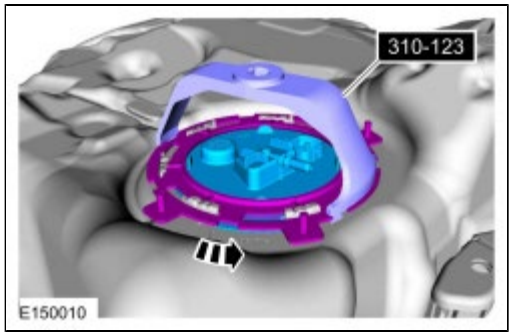

Installation

1. To install, reverse the removal procedure.
2. Make sure the alignment arrows on the Fuel Pump (FP) module and the fuel tank meet before tightening the Fuel Pump (FP) module lock ring.
3. Tighten the Fuel Pump (FP) lock ring until it meets the stop tabs on the fuel tank.

Copyright © Ford Motor Company

Fuel Level Sender

Removal

WARNING: Before beginning any service procedure in this section, refer to Safety Warnings in section 100-00 General Information. Failure to follow this instruction may result in serious personal injury.

1. Refer to: Gasoline and Gasoline-Ethanol Fuel Systems Health and Safety Precautions (100-00 General Information, Description and Operation).
2. Remove the Fuel Pump (FP) assembly.
   Refer to: Fuel Pump (310-01B Fuel Tank and Lines, Removal and Installation).
3. Disconnect the fuel level sender electrical connector. Depress the lock tabs and slide the fuel level sender upwards, and remove the sender from theFuel Pump (FP) assembly.

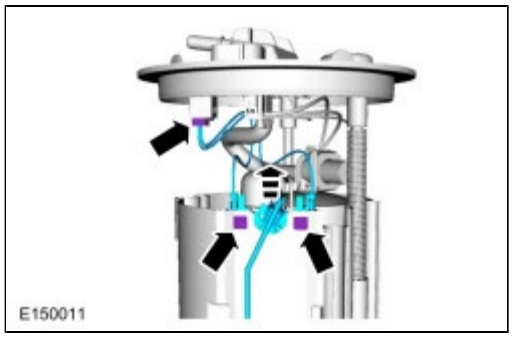

Installation

1. To install, reverse the removal procedure.

Copyright © Ford Motor Company

Fuel Lines

Removal

WARNING: Before beginning any service procedure in this section, refer to Safety Warnings in section 100-00 General Information. Failure to follow this instruction may result in serious personal injury.

1. Refer to: Gasoline and Gasoline-Ethanol Fuel Systems Health and Safety Precautions (100-00 General Information, Description and Operation).

2. Release the fuel system pressure.
   Refer to: Fuel System Pressure Release (310-00B Fuel System - General Information, General Procedures).

3. Remove the battery.
   Refer to: Battery Cables - 2.0L Duratec-HE (125kW/170PS) - MI4 (414-01 Battery, Mounting and Cables, Removal and Installation).

4. *Torque* : 15 Nm

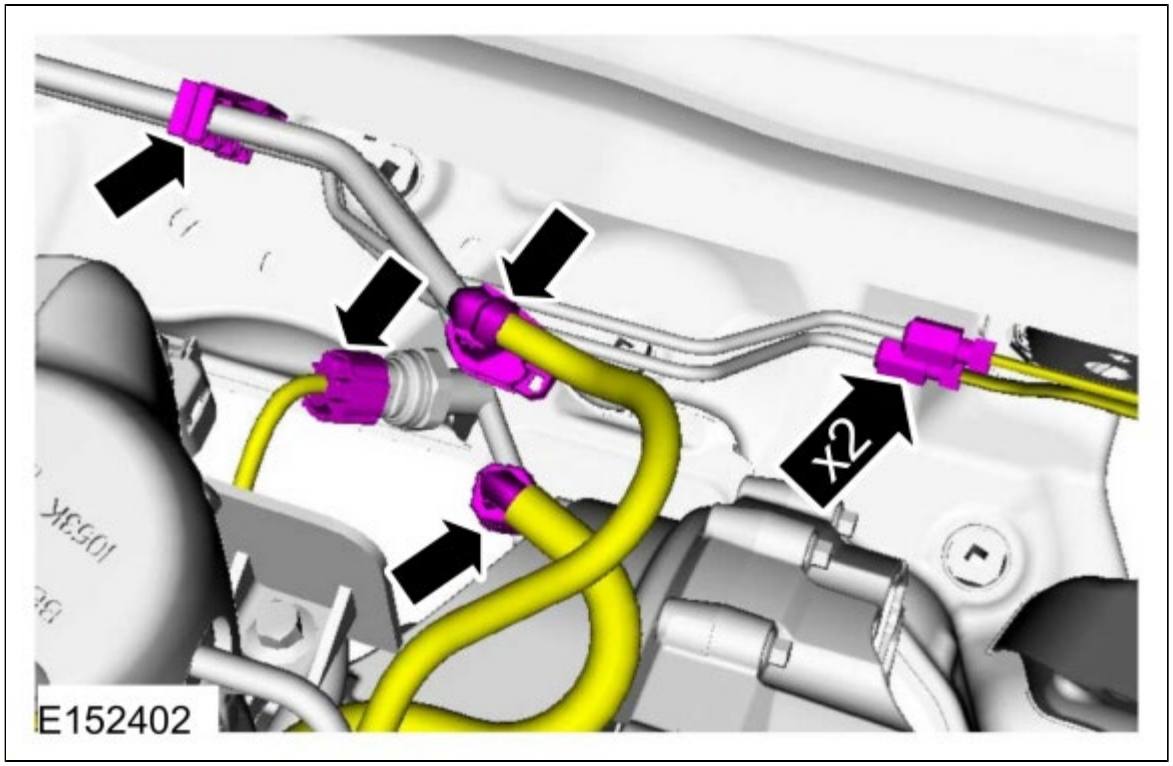

5.
   1. *Torque* : 20 Nm
   2. *Torque* : 20 Nm

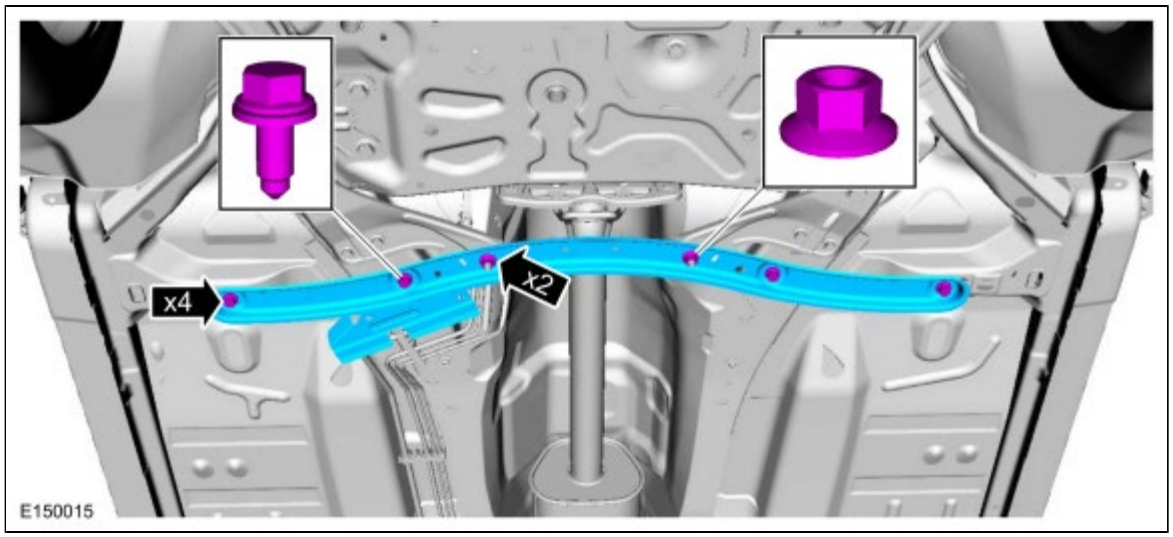

6.

1. Discard the specified component. Follow local disposal regulations.
   Torque :
   Stage 1: 140 Nm
   Stage 2: 180°
2. *Torque* : 20 Nm

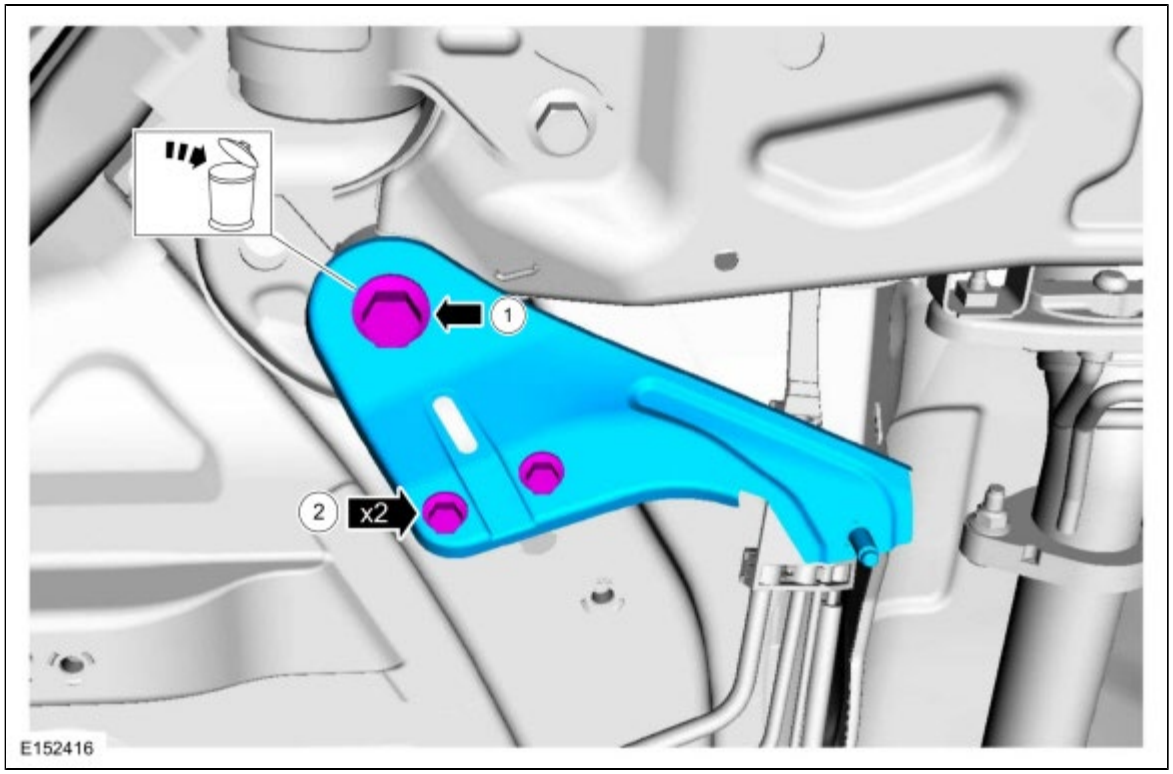

7. *Torque* : 5 Nm

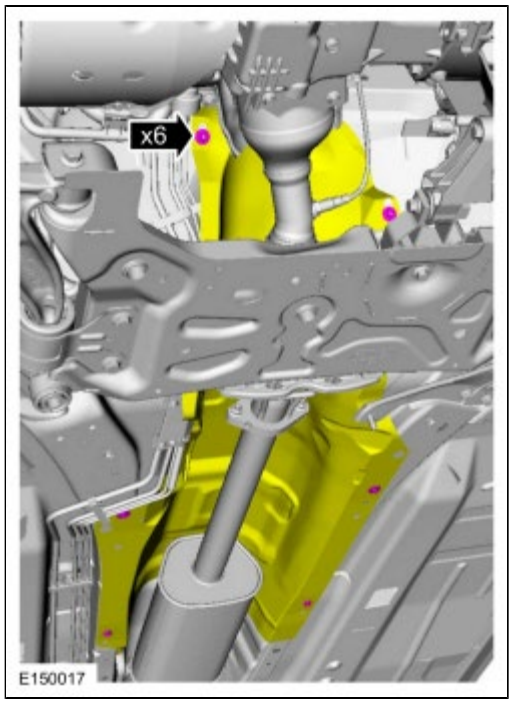

8. Refer to: Quick Release Coupling (310-00B Fuel System - General Information, General Procedures).
   Torque : 15 Nm

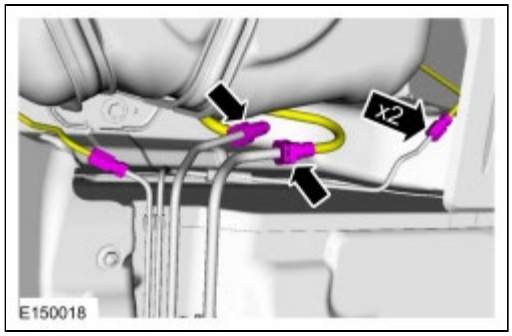

9.

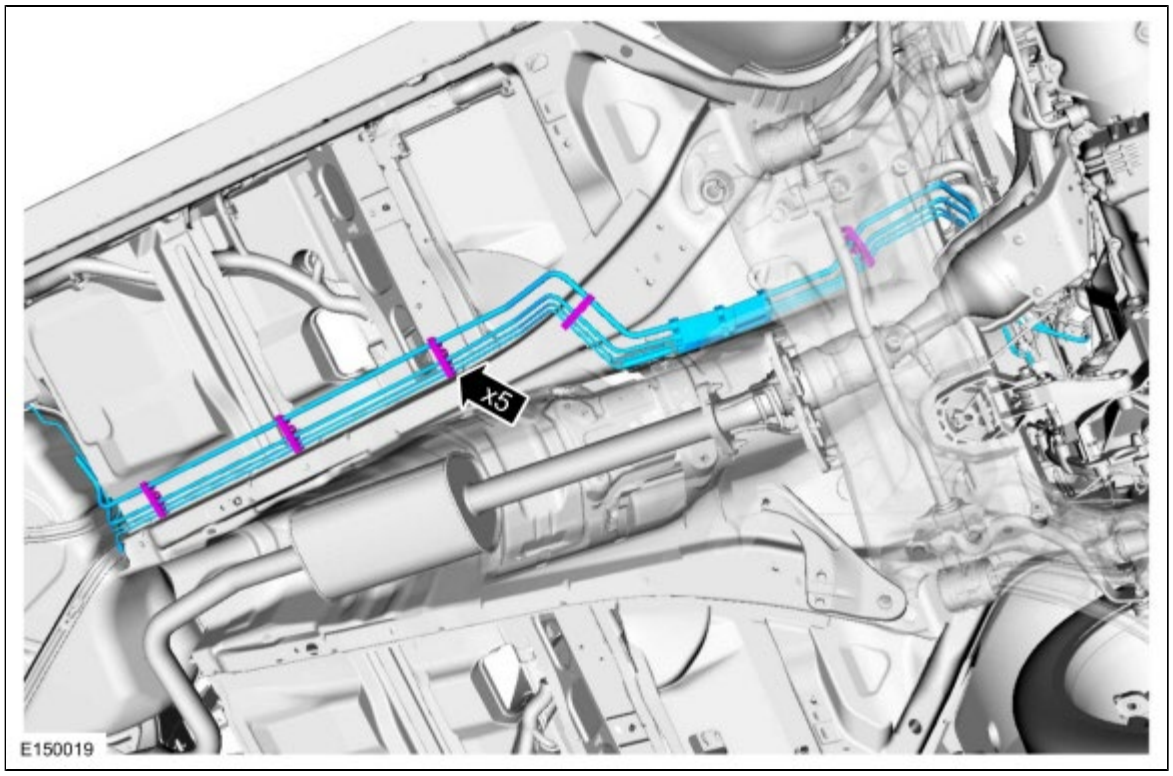

Installation

1. To install, reverse the removal procedure.

2. Bleed the brake system.
   Refer to: Brake System Bleeding (206-00 Brake System - General Information, General Procedures).

Copyright © Ford Motor Company

Specifications

General Specifications

Item	Specification
Fuel Capacity	12.40 gal (46.94 L)
Fuel Pressure	
Engine running - 2.0L GTDI	55.1 –79.7 psi (380 –550 kPa)
Key ON Engine OFF (KOEO)	58.0 psi (400 kPa)
Engine running - 2.0L GDI	79.7 psi (550 kPa)
Key ON Engine OFF (KOEO)	72.5 psi (500 kPa)

Copyright © Ford Motor Company

Fuel System - Overview

Fuel System

Overview

The fuel system consist of:

- a Closed Loop Pressure Control System (CLPCS).
- a standard fuel tank.
- fuel, vapor and brake tubes in an integrated bundle assembly attached to the underside of the vehicle by retaining clips.
- a FTP sensor (part of the fuel vapor tube assembly).
- a lifetime fuel filter (serviced as part of the FP module).
- a FP module that supplies fuel under pressure to the high pressure FP.
- a serviceable fuel level sender mounted on the FP module.
- an Easy Fuel™ fuel tank filler pipe assembly, which cannot be modified in any way and is serviced only by the installation of a new fuel tank filler pipe assembly.
- a supplemental refueling adapter located in the spare tire compartment.

FP Shut-off Feature

In the event of a moderate to severe collision, the vehicle is equipped with a FP shut-off feature that is initiated by the event notification signal.

Copyright © Ford Motor Company

Fuel System

Symptom Chart(s)

Symptom Chart: Fuel System

Diagnostics in this manual assume a certain skill level and knowledge of Ford-specific diagnostic practices.
REFER to: Diagnostic Methods (100-00 General Information, Description and Operation).
for information regarding Ford-specific diagnostic practices.

NOTE: *The following procedure diagnoses a slow to fill concern only. For all other concerns, refer to Refer to Powertrain Control/Emissions Diagnosis (PC/ED) manual.*

Symptom Chart

Condition	Possible Sources	Actions
Slow to fill	• Fuel tank filler pipe • Fuel tank filler pipe vent tube, if equipped • Evaporative Emission (EVAP) system • Fuel tank inlet check valve (part of the fuel tank) • Fuel level vent valve (part of the fuel tank)	Refer to Diagnostic Routine A: Slow to Fill. GO to Pinpoint Test A A
All other fuel system concerns	Fuel system components	Refer to Powertrain Control/Emissions Diagnosis (PC/ED) manual.

Diagnostic Routine(s)

Slow to Fill

Normal Operation and Fault Conditions

Under normal operation, fuel should flow at a steady rate through the fuel tank filler pipe into the fuel tank. As fuel enters the fuel tank air is vented through the filler pipe or the ORVR system.

PINPOINT TEST A A : SLOW TO FILL

A1 A1 CHECK COMPONENTS FOR SIGNS OF DAMAGE

• Visually inspect the following components for signs of damage:
  • Fuel tank filler pipe
  • Fuel tank filler pipe vent tube, if equipped
  • EVAP system
  • Fuel tank inlet check valve (part of the fuel tank)
  • Fuel level vent valve (part of the fuel tank)
 	
Was the cause of the concern found?

Yes	REPAIR or INSTALL new components to correct the concern.
No	GO to A2 A2

A2 A2 CHECK THE FUEL TANK FILLER PIPE ASSEMBLY FOR BLOCKAGE OR RESTRICTION

- Remove the fuel tank filler pipe assembly.
  REFER to: Fuel Tank Filler Pipe (310-01A Fuel Tank and Lines, Removal and Installation).
- Inspect the fuel tank filler pipe and fuel tank filler pipe vent tube (if equipped) for a blockage or restriction.

Is the fuel tank filler pipe or fuel tank filler pipe vent tube (if equipped) blocked or restricted?

Yes	If possible, REPAIR the blockage or restriction. If the blockage or restriction cannot be repaired, INSTALL a new fuel tank filler pipe or fuel tank filler pipe vent tube.
No	GO to A3 A3

A3 A3 CHECK THE FUEL TANK INLET CHECK VALVE

- Inspect the fuel tank inlet check valve for restriction or sticking.

Is the fuel tank filler pipe inlet check valve restricted or sticking?

Yes	If possible, REPAIR the restriction. If the restriction cannot be repaired, INSTALL a new fuel tank. REFER to: Fuel Tank (310-01A Fuel Tank and Lines, Removal and Installation).
No	INSTALL a new fuel tank.

Copyright © Ford Motor Company

Fuel System Pressure Release

WARNING: Before beginning any service procedure in this section, refer to Safety Warnings in section 100-00 General Information. Failure to follow this instruction may result in serious personal injury.

1. Refer to: Gasoline and Gasoline-Ethanol Fuel Systems Health and Safety Precautions (100-00 General Information, Description and Operation).

2. Remove the 2 instrument panel insulator retainers and the instrument panel insulator.

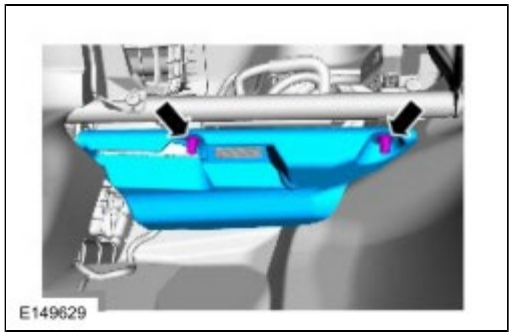

3. **NOTE:** *The Fuel Pump (FP) control module fuse is located in the Body Control Module (BCM), location F56.*

   Remove theFuel Pump (FP) control module fuse.

4. **NOTE:** *A message center warning display 'engine malfunction service now' may display on the Instrument Panel Cluster (IPC). Reset the message center by pressing the OK button on the steering wheel controls.*

   Start the engine and allow it to idle until it stalls.

5. After the engine stalls, crank the engine for approximately 20 seconds to make sure the fuel system pressure has been released.

6. Turn the ignition switch to the OFF position.

7. When fuel system service is complete, install the Fuel Pump (FP) control module fuse.

8. **NOTE:** *It may take more than one key cycle to pressurize the fuel system.*

   Cycle the ignition key and wait 3 seconds to pressurize the fuel system. Check for leaks before starting the engine.

9. Install the instrument panel insulator and retainers.

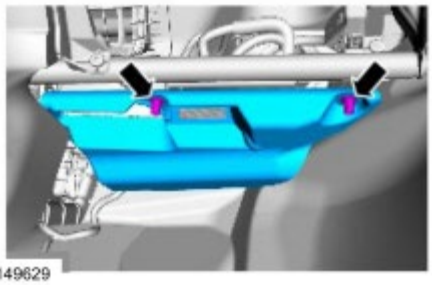

Copyright © Ford Motor Company

Fuel System Pressure Check

WARNING: Before beginning any service procedure in this section, refer to Safety Warnings in section 100-00 General Information. Failure to follow this instruction may result in serious personal injury.

1. Refer to: Gasoline and Gasoline-Ethanol Fuel Systems Health and Safety Precautions (100-00 General Information, Description and Operation).

2. Release the fuel system pressure.
   Refer to: Fuel System Pressure Release (310-00B Fuel System - General Information, General Procedures).

3. Disconnect the battery ground cable.
   Refer to: Battery Disconnect and Connect (414-01 Battery, Mounting and Cables, General Procedures).

4. Disconnect the fuel tube-to-fuel jumper tube quick connect coupling. or

5. Install the Fuel Pressure Test Adapter and the Fuel Pressure Test Kit between the fuel tube and the fuel jumper tube.
   Special Tool(s) : 310-D009 (D95L-7211-A) Fuel Pressure Test Kit

6. **NOTE:** *The Fuel Pump (FP) control module fuse was previously removed to release the fuel system pressure and must be installed to test the fuel system pressure.*

   Install the Fuel Pump (FP) control module fuse.

7. Connect the battery ground cable.
   Refer to: Battery Disconnect and Connect (414-01 Battery, Mounting and Cables, General Procedures).

8. **NOTE:** *Carry out a ignition ON engine OFF visual inspection for fuel leaks prior to completing the fuel system pressure test.*

   NOTE: *After completing the fuel system pressure test, open the drain valve on the Fuel Pressure Test Kit and release any residual fuel into a suitable container prior to removing the tool.*

   Test the fuel system pressure to make sure it is within the specified range.

Copyright © Ford Motor Company

Fuel Tank Draining

WARNING: Before beginning any service procedure in this section, refer to Safety Warnings in section 100-00 General Information. Failure to follow this instruction may result in serious personal injury.

1. Refer to: Gasoline and Gasoline-Ethanol Fuel Systems Health and Safety Precautions (100-00 General Information, Description and Operation).

2. Disconnect the battery ground cable.
   Refer to: Battery Cables - 2.0L Duratec-HE (125kW/170PS) - MI4 (414-01 Battery, Mounting and Cables, Removal and Installation).

3. **NOTE:** *The supplement refueling adapter is located in the luggage compartment.*

   Install the supplemental refueling adapter and a length of semi-rigid fuel drain tube into the Easy Fuel (capless) fuel tank filler pipe.

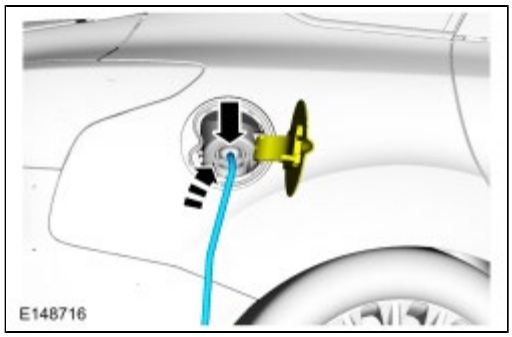

4. Attach the Fuel Tanker to the fuel drain tube and drain as much fuel as possible from the fuel tank filler pipe.

5. **NOTE:** *Some residual fuel may remain in the fuel tank filler pipe. Carefully drain into a suitable container.*

   Release the clamp and remove the fuel tank filler pipe hose from the fuel tank.

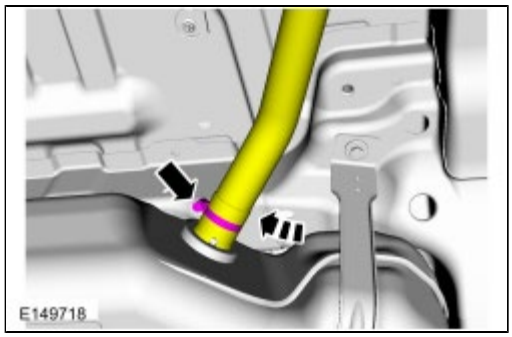

6. Insert the fuel drain tube into the fuel tank inlet spout, attach the Fuel Storage Tanker and drain as much fuel as possible from the fuel tank.

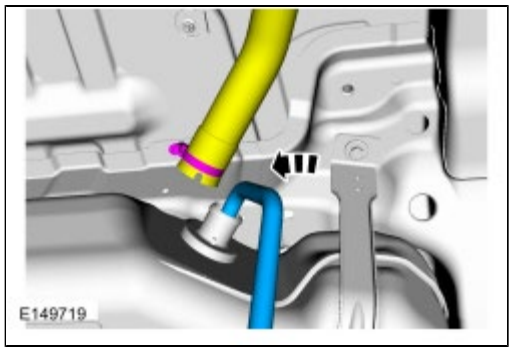

Copyright © Ford Motor Company

Spring Lock Couplings

WARNING: Before beginning any service procedure in this section, refer to Safety Warnings in section 100-00 General Information. Failure to follow this instruction may result in serious personal injury.

1. Refer to: Gasoline and Gasoline-Ethanol Fuel Systems Health and Safety Precautions (100-00 General Information, Description and Operation).

2. If servicing a liquid fuel tube spring lock coupling, release the fuel system pressure.
   Refer to: Fuel System Pressure Release (310-00A Fuel System - General Information, General Procedures).

3. Disconnect the battery ground cable.
   Refer to: Battery Cables - 2.0L Duratec-HE (125kW/170PS) - MI4 (414-01 Battery, Mounting and Cables, Removal and Installation).

4. Install the Spring Lock Coupling Disconnect Tool on the tube and push into the spring lock coupling to release.
   Special Tool(s) : 310-S039 (T90T-9550-S) Disconnect Tool, Spring Lock Coupling

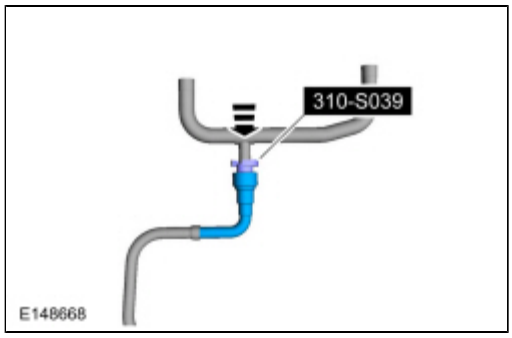

5. Separate the spring lock coupling from the tube.

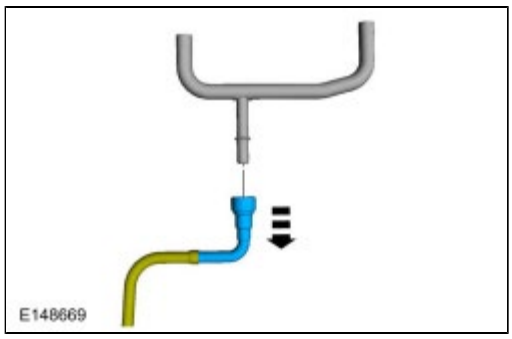

1. Align and push the spring lock coupling onto the tube until fully seated.

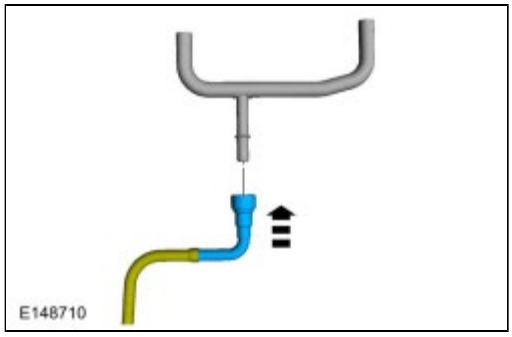

2. Pull on the coupling to make sure it is fully engaged.

3. Connect the battery ground cable.
   Refer to: Battery Cables - 2.0L Duratec-HE (125kW/170PS) - MI4 (414-01 Battery, Mounting and Cables, Removal and Installation).

Copyright © Ford Motor Company

Specifications

Engine

Item	Specification
Displacement	122 in³ (2 L)
No. of cylinders	4
Bore	3.4449 in (87.5 mm)
Stroke	3.2717 in (83.1 mm)
Firing order	1-3-4-2
Compression ratio	9.3:1
Spark plug	NGK T4025R
Spark plug gap	0.031 in (.8 mm)
Engine weight - (without accessory drive components and flywheel)	311 lb (141 kg)

Lubricants

Item	Specification
Motorcraft® SAE 5W-30 Premium Synthetic Blend Motor Oil (US); Motorcraft® SAE 5W-30 Super Premium Motor Oil (Canada) XO-5W30-QSP (US); CXO-5W30-LSP12 (Canada); or equivalent	WSS-M2C946-A, 5W30;

Engine Oil Capacity

Item	Specification
Service fill including oil filter	5.7 qt (5.4 L)

Oil Pressure

Item	Specification

Oil pressure (hot @ 2,000 rpm)	29 –60 psi (200 –414 kPa)

Cylinder Block

Item	Specification
Cylinder bore diameter	3.4449 –3.4461 in (87.5 –87.53 mm)
Cylinder bore maximum out-of-round	0.0003 in (.008 mm)
Main bearing bore diameter	2.245 –2.246 in (57.018 –57.04 mm)
Head gasket surface flatness	0.1 mm (0.0039 in) - 0.05 mm (0.002 in)/200 mm (7.874 in) x 200 mm (7.874 in)

Piston

Item	Specification
Piston diameter (grade 1)	3.4435 –3.4439 in (87.465 –87.475 mm)
Piston diameter (grade 2)	3.4438 –3.4444 in (87.4725 –87.4875 mm)
Piston diameter (grade 3)	3.4443 –3.4447 in (87.485 –87.495 mm)
Piston-to-bore clearance	0.0009 –0.0019 in (.0225 –.0475 mm)
Piston ring groove width - compression (top)	0.0484 –0.0492 in (1.23 –1.25 mm)
Piston ring groove width - compression (bottom)	0.0484 –0.0492 in (1.23 –1.25 mm)
Piston ring groove width - oil	0.0799 –0.0807 in (2.03 –2.05 mm)
Piston skirt coating thickness	0.0004 –0.0007 in (.009 –.019 mm)

Piston Pin

Item	Specification
Diameter	0.8857 –0.8858 in (22.497 –22.5 mm)
Length	2.1929 –2.2047 in (55.7 –56 mm)
Piston-to-pin clearance	0.0001 –0.0005 in (.0035 –.0115 mm)
Piston pin-to-connecting rod clearance	0.0004 –0.0007 in (.01 –.019 mm)
Piston ring width - compression (top)	0.05 in (1.2 mm)
Piston ring width - compression (bottom)	0.05 in (1.2 mm)
Piston ring width - oil	0.08 in (2 mm)
Piston ring gap (in bore) - compression (top)	0.0067 –0.0106 in (.17 –.27 mm)
Piston ring gap (in bore) - compression (bottom)	0.0177 –0.0256 in (.45 –.65 mm)

Piston ring gap (in bore) - oil	0.0059 –0.0177 in (.15 –.45 mm)
Connecting rod bearing-to-crankshaft clearance	0.0011 –0.0020 in (.027 –.052 mm)
Connecting rod bearing thickness	0.0589 –0.0598 in (1.495 –1.519 mm)
Connecting rod crankshaft bore diameter	2.1663 –2.1671 in (55.025 –55.045 mm)
Connecting rod pin bore diameter	0.8862 –0.8865 in (22.51 –22.516 mm)
Connecting rod length (center-to-center)	6.1366 in (155.869 mm)
Connecting rod side clearance (assembled-to-crankshaft)	0.1020 –0.1453 in (2.59 –3.69 mm)
Axial clearance	0.0055 –0.0142 in (.14 –.36 mm)

Crankshaft

Item	Specification
Main bearing journal diameter	2.0464 –2.0473 in (51.978 –52.002 mm)
Main bearing clearance	0.0006 –0.0018 in (.016 –.046 mm)
Connecting rod journal diameter	2.0464 –2.0473 in (51.978 –52.002 mm)
End play	0.0087 –0.0177 in (.22 –.45 mm)

Cylinder Head

Item	Specification
Cylinder head flatness	0.08 mm (0.0031 in) maxim overall, a maximum of 0.05 mm (0.0020 in) within 150 mm (5.9055 in) and a maximum of 0.025 mm (0.0010 in) within 25 mm (0.9843 in)
Maximum valve lift @ zero lash (exhaust)	0.291 in (7.4 mm)
Maximum valve lift @ zero lash (intake)	0.327 in (8.3 mm)
Valve guide diameter	0.2169 –0.2181 in (5.509 –5.539 mm)
Valve seat width - intake/exhaust	0.0551 –0.0591 in (1.4 –1.5 mm)
Valve seat angle	45
Valve seat runout	0.003 in (.075 mm)
Valve tappet bore diameter	1.2205 –1.2217 in (31 –31.03 mm)
Cam bore diameter	0.9848 –0.9858 in (25.015 –25.04 mm)

Valve

Item	Specification
Valve head diameter - intake	1.2795 in (32.5 mm)
Valve head diameter - exhaust	1.1024 in (28 mm)
Valve stem diameter - intake	0.2165 in (5.5 mm)
Valve stem diameter - exhaust	0.2165 in (5.5 mm)
Valve stem-to-guide clearance - intake	0.0012 –0.0028 in (.03 –.07 mm)
Valve stem-to-guide clearance - exhaust	0.0012 –0.0028 in (.03 –.07 mm)
Valve face runout	0.002 in (.05 mm)
Valve face angle	44.67 –45

Valve Spring Compression Pressure

Item	Specification
Intake and exhaust (installed)	40 lb (18 kg)
Intake (valve open) 9.2 mm (0.3622 in) of lift	101 lb (46 kg)
Exhaust (valve open) 9.2 mm (0.3622 in) of lift	101 lb (46 kg)
Free length	1.8860 in (47.904 mm)
Assembled height	1.4921 in (37.9 mm)

Valve Tappet

Item	Specification
Diameter	1.2197 –1.2191 in (30.98 –30.964 mm)
Tappet-to-valve clearance - intake	0.0075 –0.0122 in (.19 –.31 mm)
Tappet-to-valve clearance - exhaust	0.0118 –0.0165 in (.3 –.42 mm)
Tappet-to-bore clearance	0.0008 –0.0024 in (.02 –.06 mm)

Camshaft

Item	Specification
Lobe lift - intake	0.327 in (8.3 mm)
Lobe lift - exhaust	0.291 in (7.4 mm)
Runout	0.0012 in (.03 mm)

Thrust clearance	0.0045 –0.0057 in (.115 –.145 mm)
Journal diameter	0.9827 –0.9835 in (24.96 –24.98 mm)
Journal-to-bore clearance	0.0014 –0.0031 in (.035 –.08 mm)

Copyright © Ford Motor Company

Engine

1. For basic mechanical concerns
   REFER to: Engine (303-00 Engine System - General Information, Diagnosis and Testing).
   For driveability concerns Refer to Powertrain Control/Emissions Diagnosis (PC/ED) manual.

Copyright © Ford Motor Company

Valve Clearance Check

1. Remove the following items:
   - Valve cover.
     Refer to: Valve Cover (303-01B Engine - 2.0L EcoBoost (184kW/250PS) - MI4, Removal and Installation).
   - RH fender splash shield.
     Refer to: Fender Splash Shield (501-02 Front End Body Panels, Removal and Installation).

2. **NOTE:** *Turn the engine clockwise only, and only use the crankshaft bolt.*

   NOTE: *Measure the clearance of each valve at base circle, with the lobe pointed away from the tappet.*

   Use a feeler gauge to measure the clearance of each valve and record its location.
   General Equipment : Feeler Gauge

   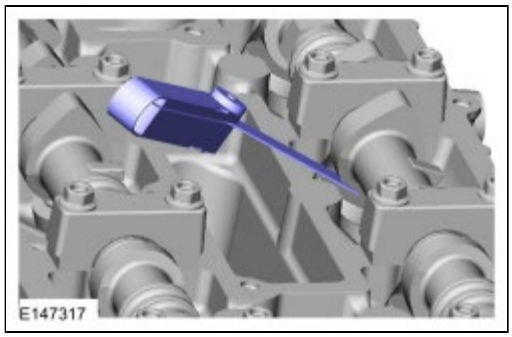

3. **NOTE:** *The number on the valve tappet only reflects the digits that follow the decimal. For example, a tappet with the number 0.650 has the thickness of 3.650 mm.*

   NOTE: *Select tappets using this formula: tappet thickness = measured clearance + the existing tappet thickness - nominal clearance.*

   NOTE: *The nominal clearance is:*

   - *intake: 0.25 mm (0.0095 in).*
   - *exhaust: 0.36 mm (0.0142 in).*

   NOTE: *The acceptable clearances after being fully installed are:*

   - *intake: 0.19-0.31 mm (0.007-0.012 in).*
   - *exhaust: 0.30-0.42 mm (0.012-0.017 in).*

   Select the closest tappet size to the ideal tappet thickness available and mark the installation location.

4. If any tappets do not measure within specifications, install new tappets in these locations.
   Refer to: Valve Tappets (303-01B Engine - 2.0L EcoBoost (184kW/250PS) - MI4, Removal and Installation).

Copyright © Ford Motor Company

Balance Shaft Backlash

1. Rotate the crankshaft slowly clockwise until the crankshaft balance weight is up against the Crankshaft TDC Timing Peg. The engine is now at TDC .
   Install Special Service Tool : 303-507 Timing Peg, Crankshaft TDC

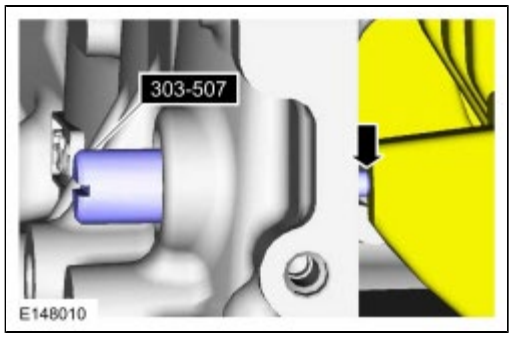

2. Mark the balancer unit and shafts on the top for reference that the balancer unit is at TDC .

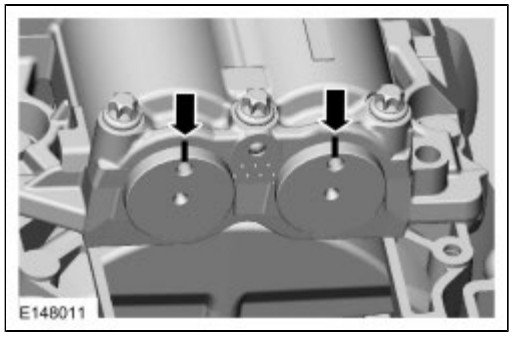

3. **NOTE:** *Due to the precision interior construction of the balancer unit, it should not be disassembled.*

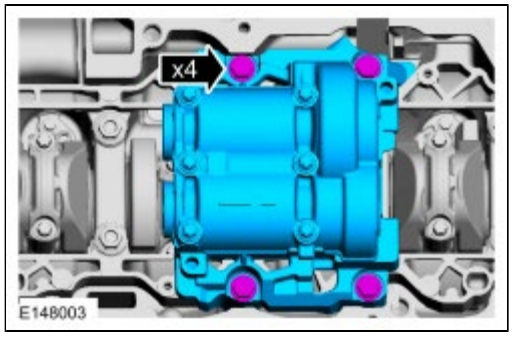

4. Remove the adjustment shims from the seat faces of the balancer unit.

5. **NOTE:** *Visually inspect the balancer unit gear for damage and verify that the shaft turns smoothly. If there is any damage or malfunction, replace the balancer unit.*

   Install the master adjustment shims (No. 50) on the seat faces of the balancer unit.

6. With the balancer unit shaft marks at the TDC position, slowly install the balancer unit to the cylinder block to avoid interference between the crankshaft drive gear and the balancer unit driven gear.

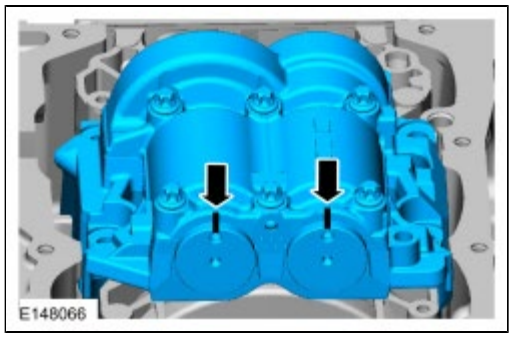

7. *Torque* :
   Stage 1: 25 Nm
   Stage 2: 42 Nm

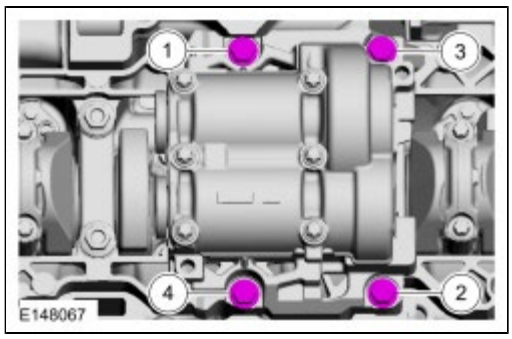

8. Rotate the crankshaft to confirm that there are no meshing problems between the balancer unit gear and the crankshaft gear.
   Remove Special Service Tool : 303-507 Timing Peg, Crankshaft TDC

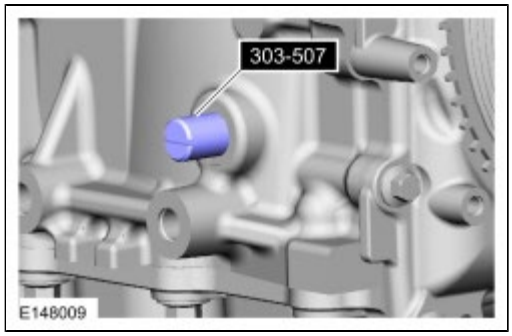

9. Rotate the crankshaft slowly clockwise until the crankshaft balance weight is up against the Crankshaft TDC Timing Peg. The engine is now at TDC .
   Install Special Service Tool : 303-507 Timing Peg, Crankshaft TDC

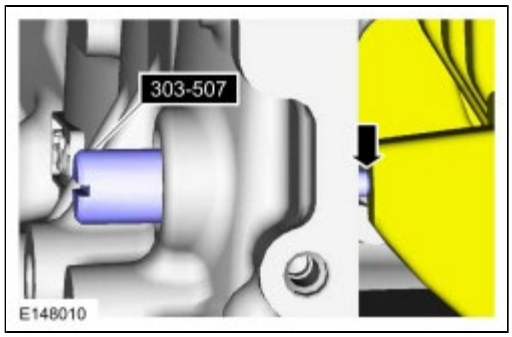

10. **NOTE:** *Measure the backlash and verify that it is within specified range at all of the following 6 positions: 10 degrees, 30 degrees, 100 degrees, 190 degrees, 210 degrees and 280 degrees. It will be necessary to reset the measuring equipment between measurements.*

    NOTE: *The measurement must be taken with the Dial Indicator Gauge with Holding Fixture, a 5-mm Allen wrench and worm*

clamp set up as shown. Mark the Allen wrench with a file 80 mm (3.149 in) above the driven gear shaft center. Make sure the worm clamp and Allen wrench are not touching the balance shaft housing.

NOTE: *For an accurate measurement while measuring the gear backlash, insert a screwdriver as shown into the crankshaft No. 1 crankweight area and set both the rotation and the thrust direction with the screwdriver, using a prying action as shown.*

- Position as shown. Measure the gear backlash.
  Special Tool(s) : 100-002 (TOOL-4201-C) Holding Fixture with Dial Indicator Gauge
- Position the Dial Indicator Gauge with Holding Fixture (1) on the Allen wrench 80 mm (3.149 in) above the driven gear shaft center (2) on the balancer unit.
- Rotate the crankshaft clockwise and measure the backlash at all of the following 6 positions: 10 degrees, 30 degrees, 100 degrees, 190 degrees, 210 degrees and 280 degrees.

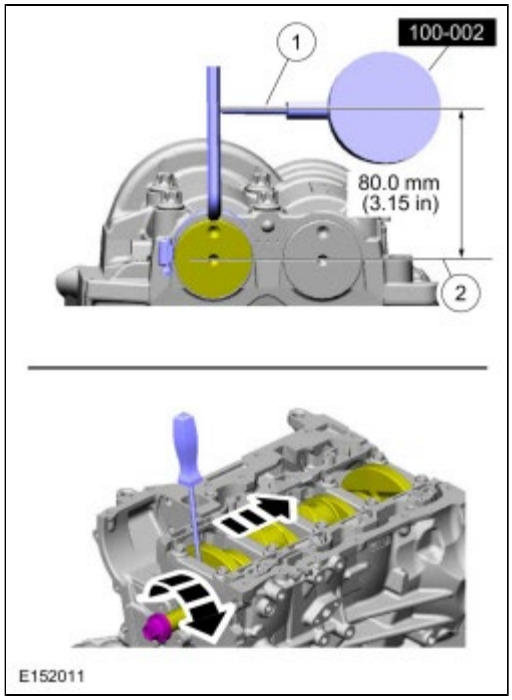

11. **NOTE:** *If maximum backlash exceeds 0.120 mm (0.0047 in), install a new balancer unit.*

    - Using the backlash measurement, select the proper shims from the Adjustment Shim Selection Table.
    - Remove the balancer unit from the cylinder block.
    - Install the selected adjustment shims on the seat faces of the balancer unit.

ADJUSTMENT SHIM SELECTION TABLE

Backlash mm (in)	Selection shim (No.)	Shim thicness mm (in)
0.516-0.528 (0.0203-0.0207)	15	1.15 (0.0452)
0.502-0.514 (0.0197-0.0202)	16	1.16 (0.0456)
0.489-0.500 (0.0192-0.0196)	17	1.17 (0.0460)
0.475-0.487 (0.0187-0.0191)	18	1.18 (0.0464)
0.462-0.473 (0.0181-0.0186)	19	1.19 (0.0468)
0.448-0.460 (0.0176-0.0181)	20	1.20 (0.0472)
0.435-0.446 (0.0171-0.0175)	21	1.21 (0.0476)
0.421-0.433 (0.0165-0.0170)	22	1.22 (0.0480)
0.408-0.419 (0.0160-0.0164)	23	1.23 (0.0484)
0.394-0.406 (0.0155-0.0159)	24	1.24 (0.0488)
0.381-0.392 (0.0150-0.0154)	25	1.25 (0.492)
0.367-0.379 (0.0144-0.0149)	26	1.26 (0.0496)
0.354-0.365 (0.0139-0.0143)	27	1.27 (0.0499)
0.340-0.352 (0.0133-0.0138)	28	1.28 (0.0503)
0.327-0.338 (0.0128-0.0133)	29	1.29 (0.0507)
0.313-0.325 (0.0123-0.0127)	30	1.30 (0.0511)
0.300-0.311 (0.0118-0.0122)	31	1.31 (0.0515)
0.286-0.298 (0.0112-0.0117)	32	1.32 (0.0519)
0.272-0.284 (0.0107-0.0111)	33	1.33 (0.0523)
0.259-0.271 (0.0101-0.0106)	34	1.34 (0.0527)

Backlash mm (in)	Selection shim (No.)	Shim thicness mm (in)
0.245-0.257 (0.0096-0.0101)	35	1.35 (0.0531)
0.232-.0243 (0.0091-0.0095)	36	1.36 (0.535)
0.218-0.230 (0.0085-0.0090)	37	1.37 (0.539)
0.205-.0216 (0.0080-0.0085)	38	1.38 (0.0543)
0.191-0.203 (0.0075-0.0079)	39	1.39 (0.0547)
0.178-0.189 (0.0070-0.0074)	40	1.40 (0.0551)
0.164-0.176 (0.0064-0.0069)	41	1.41 (0.0555)
0.151-0.162 (0.0059-0.0063)	42	1.42 (0.0559)
0.137-0.149 (0.0053-0.0058)	43	1.43 (0.0562)
0.124-0.135 (0.0048-0.0053)	44	1.44 (0.0566)
0.110-0.122 (0.0043-0.0048)	45	1.45 (0.0570)
0.097-0.108 (0.0038-0.0042)	46	1.46 (0.0574)
0.083-0.095 (0.0032-0.0037)	47	1.47 (0.0578)
0.070-0.081 (0.0027-0.0031)	48	1.48 (0.0582)
0.056-0.068 (0.0022-0.0026)	49	1.49 (0.0586)
0.043-0.054 (0.0016-0.0021)	50 (master)	1.50 (0.0590)
0.029-0.041 (0.0011-0.0016)	51	1.51 (0.0594)
0.015-0.027 (0.0005-0.0010)	52	1.52 (0.0598)
0.002-0.014 (0.00007-0.0005)	53	1.53 (0.0602)
0.000-0.000 (0.0000-0.0000)	54	1.54 (0.0606)

E152012

12. Rotate the crankshaft slowly clockwise until the crankshaft balance weight is up against the Crankshaft TDC Timing Peg. The engine is now at TDC .
    Install Special Service Tool : 303-507 Timing Peg, Crankshaft TDC

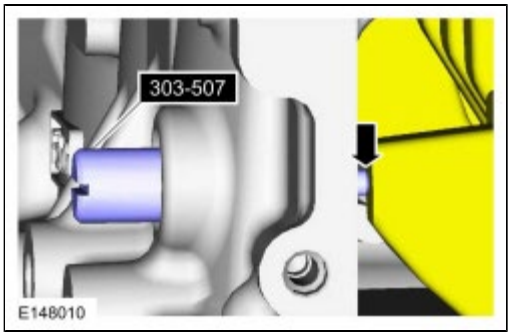

13. With the balancer unit shaft marks at the TDC position, slowly install the balancer unit to the cylinder block to avoid interference between the crankshaft drive gear and the balancer unit driven gear.

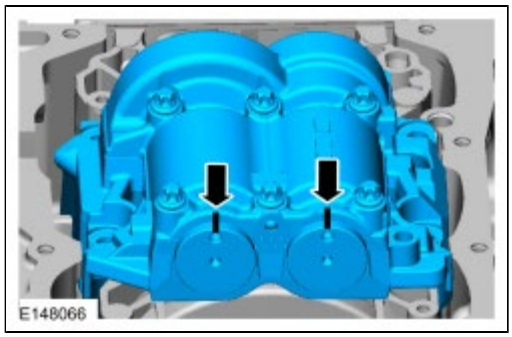

14. *Torque* :
    Stage 1: 25 Nm
    Stage 2: 42 Nm

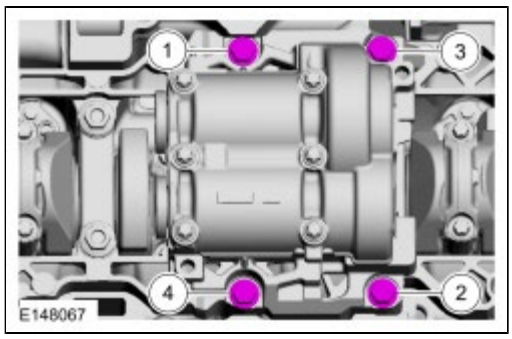

15. **NOTE:** *Measure the backlash and verify that it is within specified range at all of the following 6 positions: 10 degrees, 30 degrees, 100 degrees, 190 degrees, 210 degrees and 280 degrees. It will be necessary to reset the measuring equipment between measurements.*

    NOTE: *The measurement must be taken with the Dial Indicator Gauge with Holding Fixture, a 5-mm Allen wrench and worm clamp set up as shown. Mark the Allen wrench with a file 80 mm (3.149 in) above the driven gear shaft center. Make sure the worm clamp and Allen wrench are not touching the balance shaft housing.*

    NOTE: *For an accurate measurement while measuring the gear backlash, insert a screwdriver as shown into the crankshaft No. 1 crankweight area and set both the rotation and the thrust direction with the screwdriver, using a prying action as shown.*

    - Position as shown. Measure the gear backlash.
      Special Tool(s) : 100-002 (TOOL-4201-C) Holding Fixture with Dial Indicator Gauge
    - Position the Dial Indicator Gauge with Holding Fixture (1) on the Allen wrench 80 mm (3.149 in) above the driven gear shaft center (2) on the balancer unit.
    - Rotate the crankshaft clockwise and measure the backlash at all of the following 6 positions: 10 degrees, 30 degrees, 100 degrees, 190 degrees, 210 degrees and 280 degrees.
    - If the backlash exceeds the specified range of 0.020 to 0.120 mm (0.00078 to 0.0047 in), install a new balancer unit and repeat the procedure.

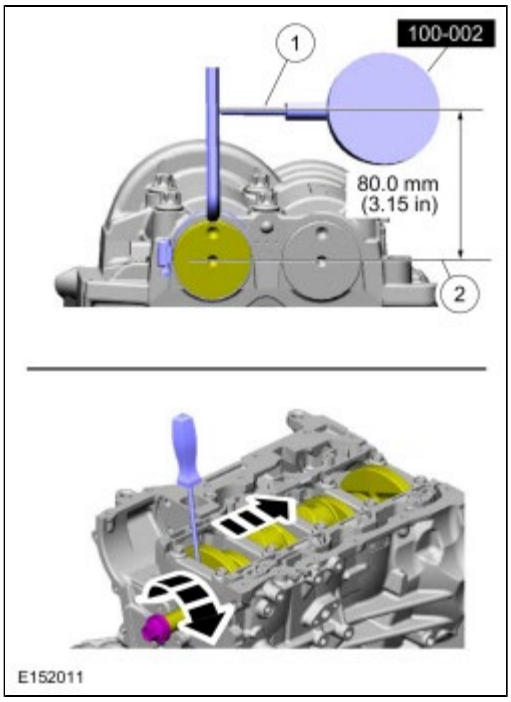

Copyright © Ford Motor Company

Intake Manifold

Removal

1. Refer to: Jacking and Lifting - Overview (100-02 Jacking and Lifting, Description and Operation).
2. Refer to: Battery Disconnect and Connect (414-01 Battery, Mounting and Cables, General Procedures).
3. 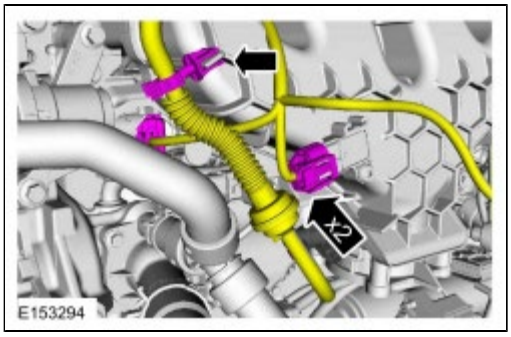

4. 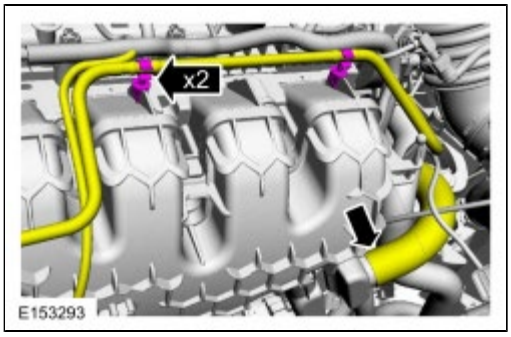

5. 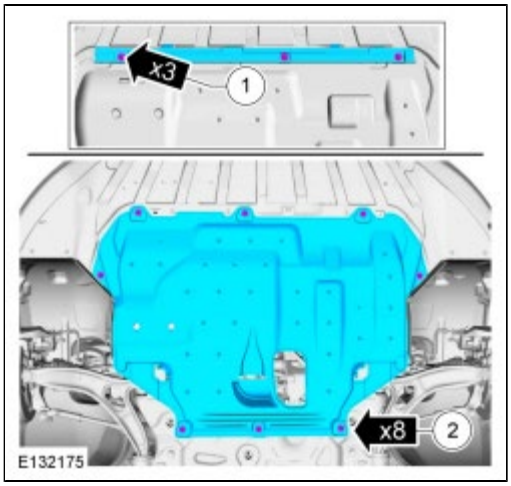

6.
    1. Refer to: Quick Release Coupling (310-00B Fuel System - General Information, General Procedures).

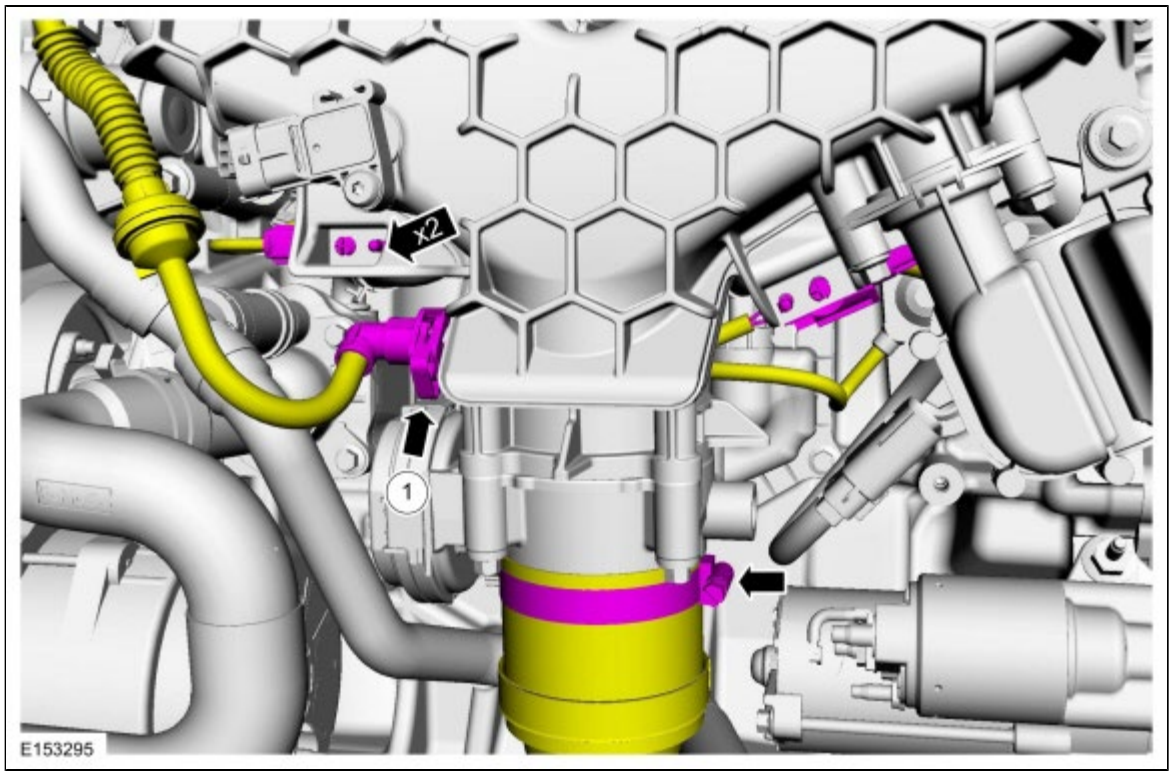

7.

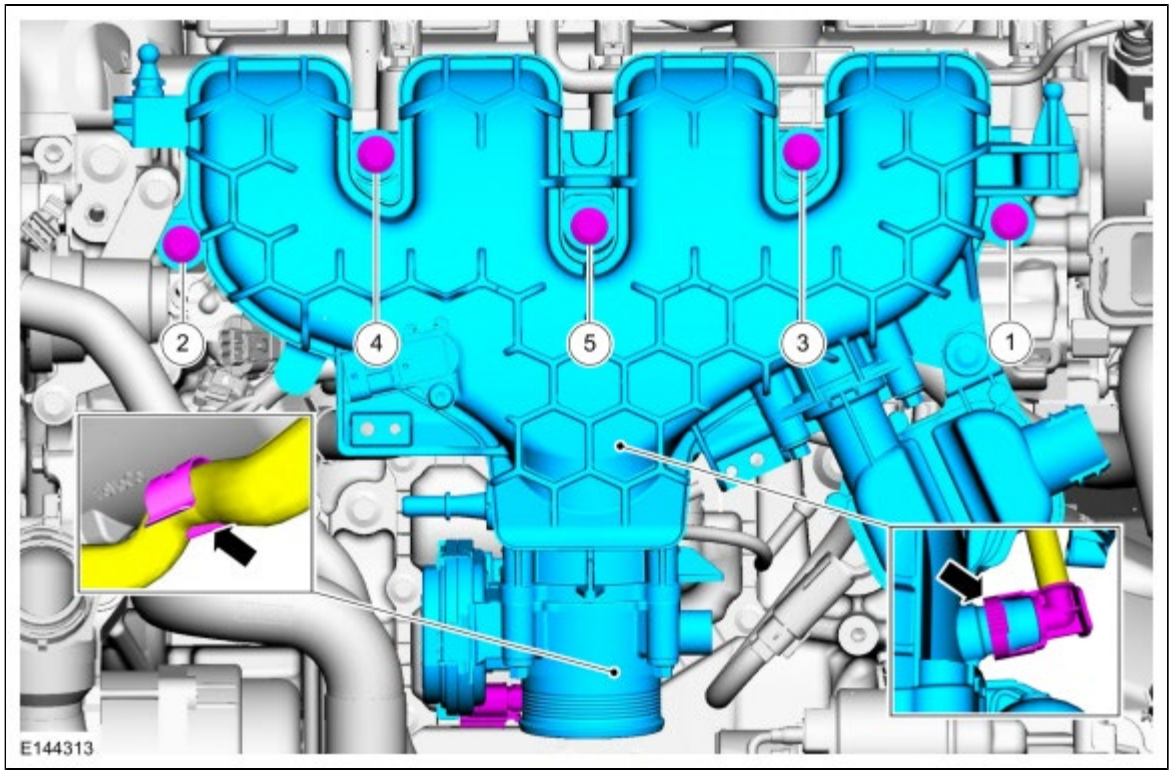

Installation

NOTICE: If the engine is repaired or replaced because of upper engine failure, typically including valve or piston damage, check the intake manifold for metal debris. If metal debris is found, install a new intake manifold. Failure to follow these instructions can result in engine damage.

1. **NOTE:** *Visually inspect the intake manifold gaskets for nicks, cuts and abrasions. If these conditions are not present, the gaskets may be re-used.*

   Visual check.

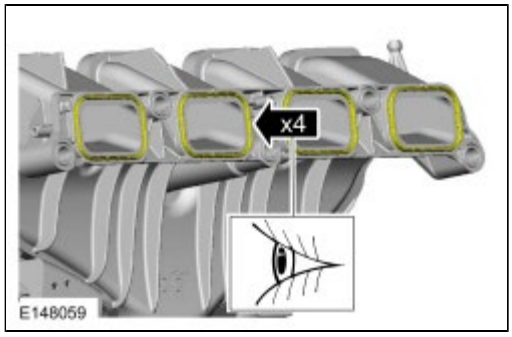

2. *Torque* : 20 Nm

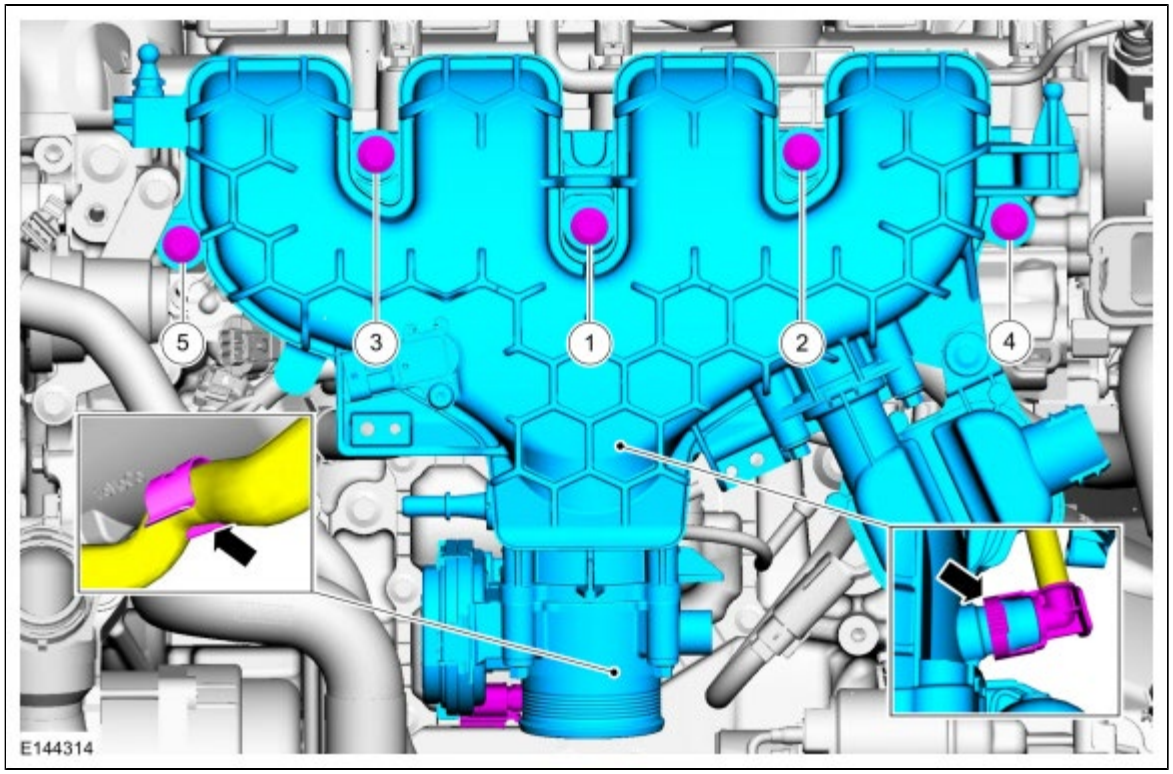

3.
    1. Refer to: Quick Release Coupling (310-00B Fuel System - General Information, General Procedures).

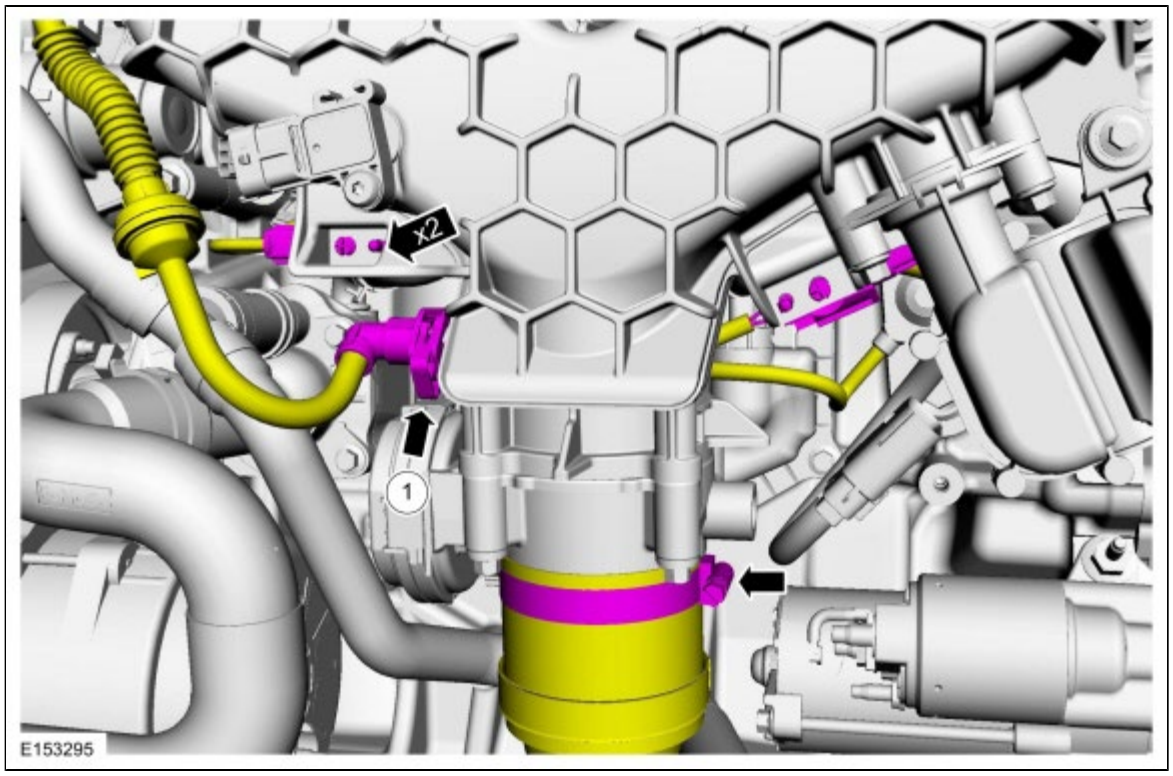

4.

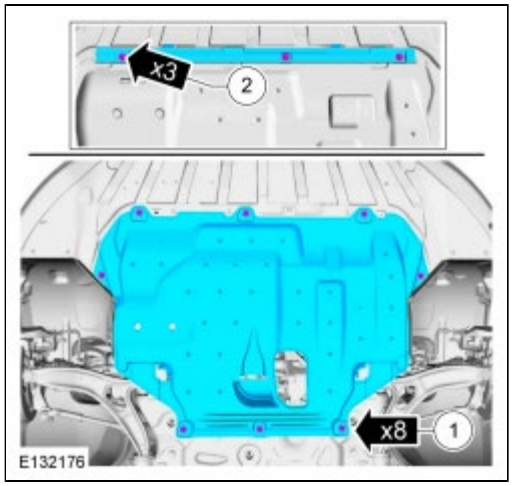

5.

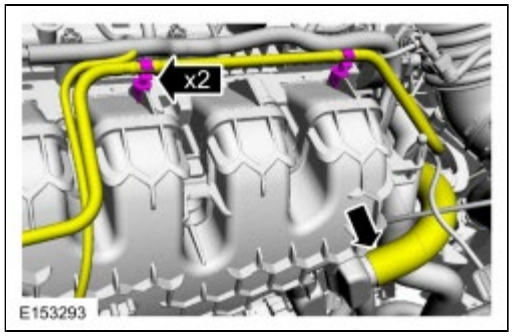

6.

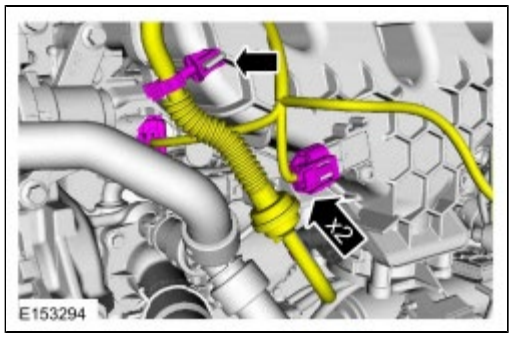

7. Refer to: Battery Disconnect and Connect (414-01 Battery, Mounting and Cables, General Procedures).

Copyright © Ford Motor Company

Valve Cover

Removal

NOTICE: During engine repair procedures, cleanliness is extremely important. Any foreign material, including any material created while cleaning gasket surfaces, that enters the oil passages, coolant passages or the oil pan can cause engine failure.

1. Refer to: Jacking and Lifting - Overview (100-02 Jacking and Lifting, Description and Operation).
2. Refer to: Cowl Panel Grille (501-02 Front End Body Panels, Removal and Installation).
3. Refer to: Battery Disconnect and Connect (414-01 Battery, Mounting and Cables, General Procedures).
4. 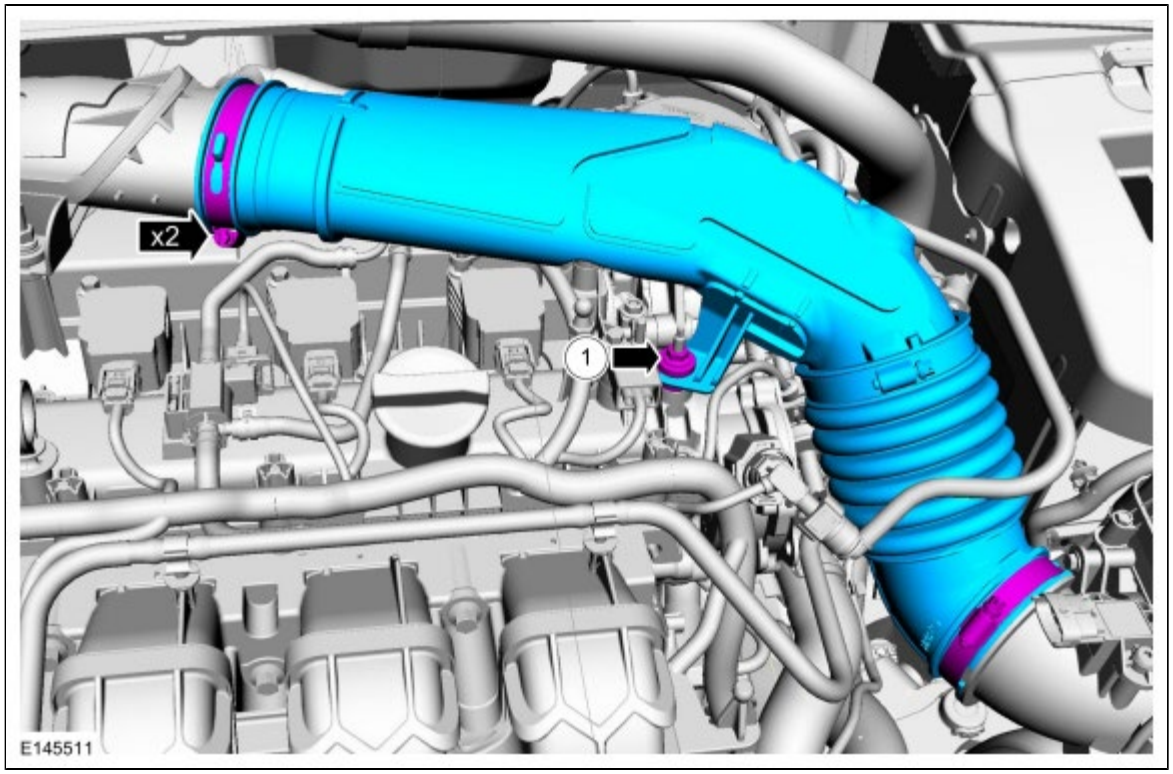

5.

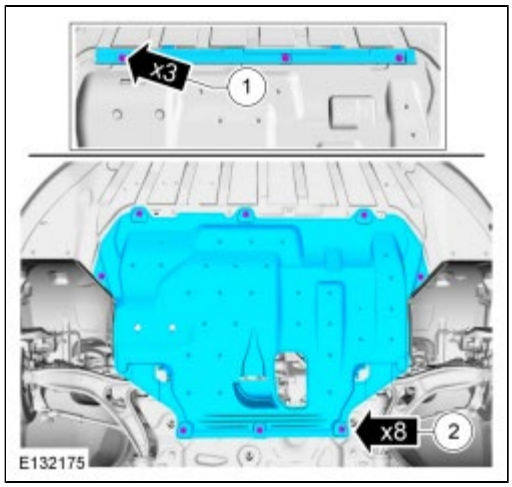

6.

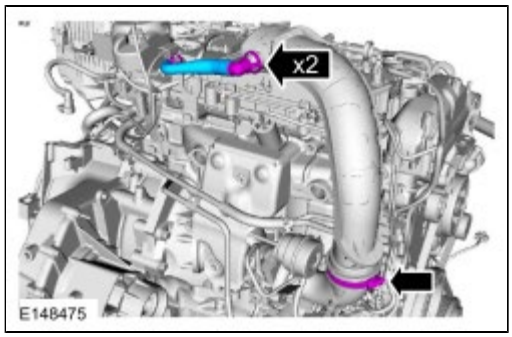

7.

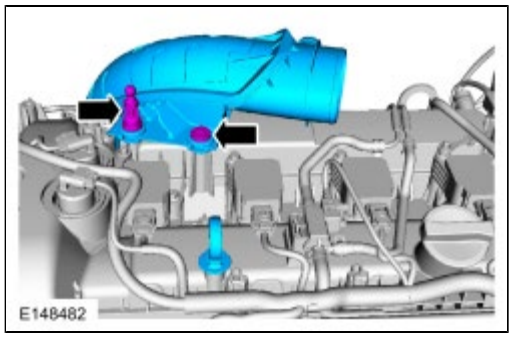

8. Refer to: Ignition Coil-On-Plug (303-07B Engine Ignition - 2.0L EcoBoost (184kW/250PS) - MI4, Removal and Installation).

9.

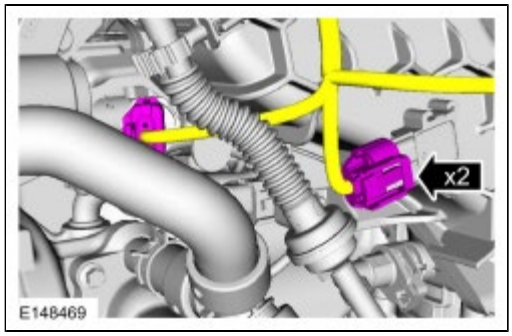

10.

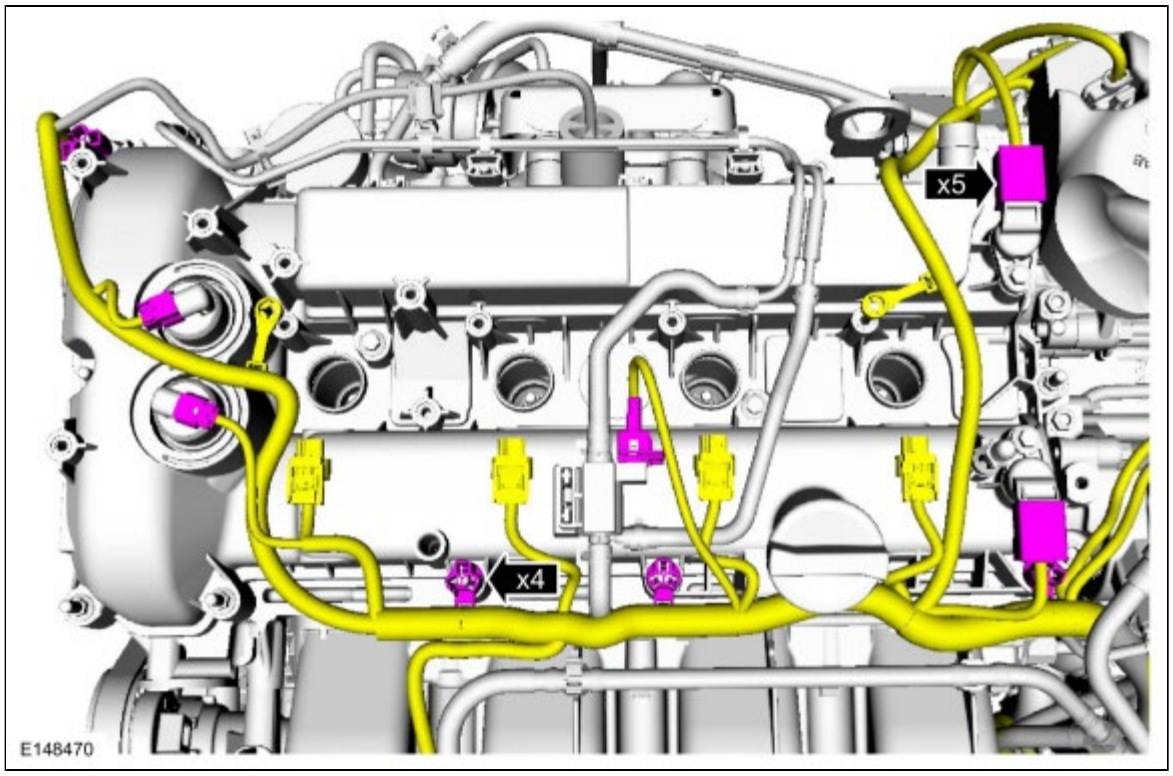

11.

1. Refer to: Quick Release Coupling (310-00B Fuel System - General Information, General Procedures).

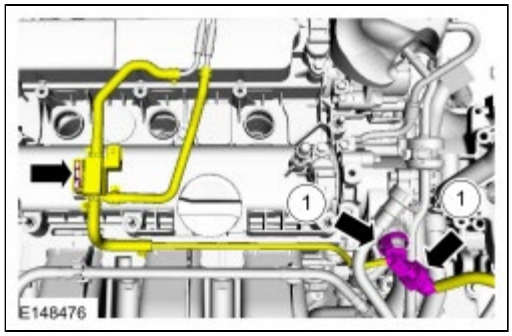

12.

1. Early build vehicles equipped with metal vacuum tubes.
2. Late build vehicles equipped with nylon vacuum tubes.

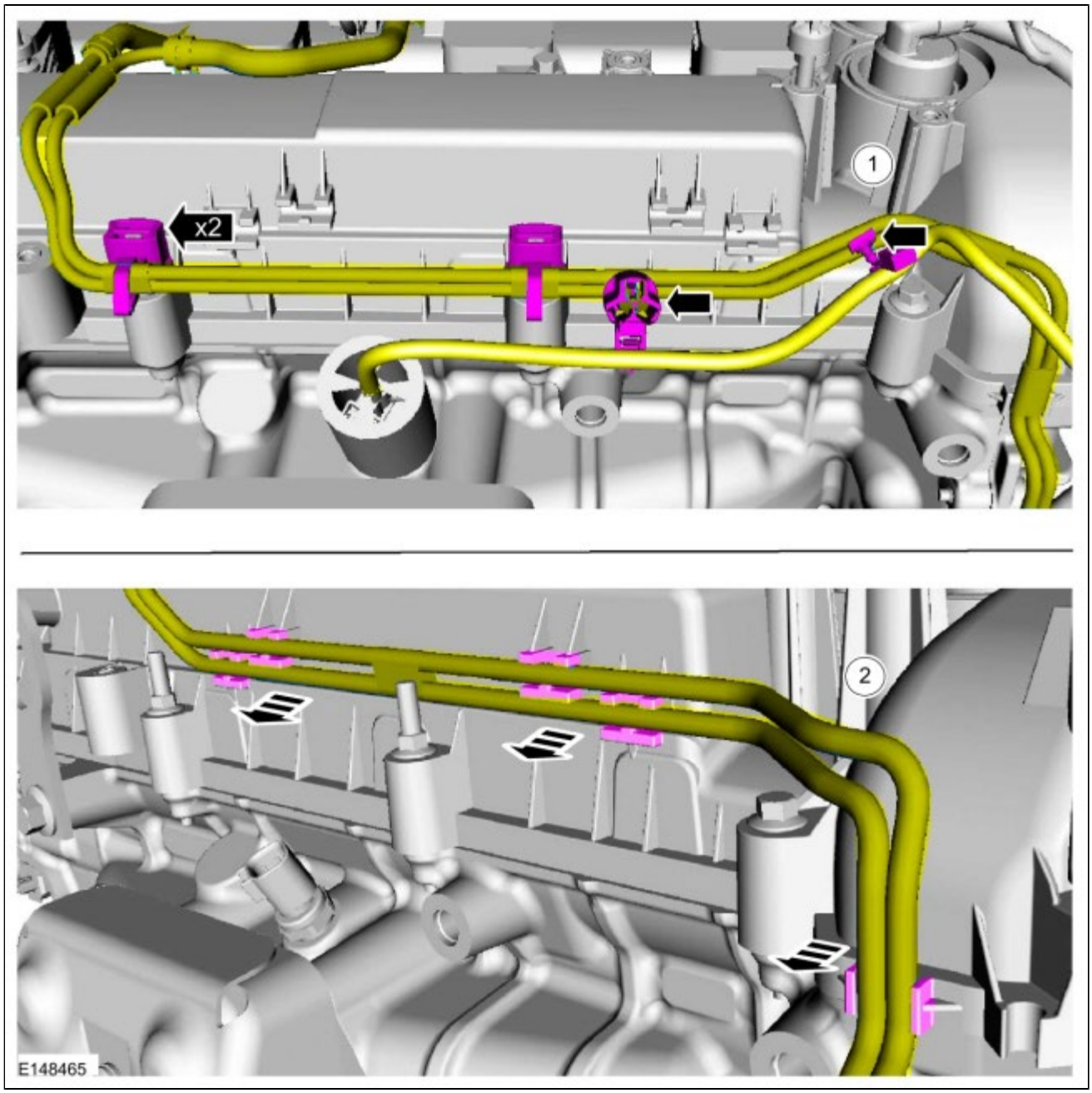

13.

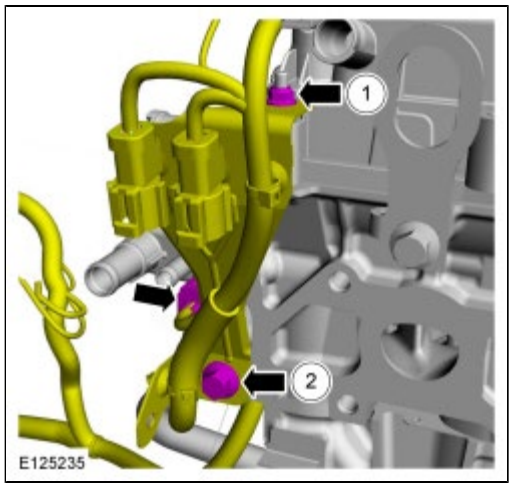

14.

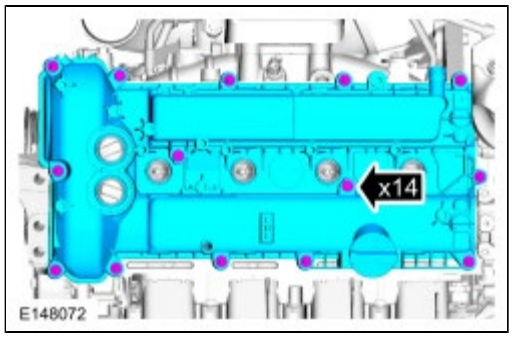

15. Discard the specified component. Follow local disposal regulations.

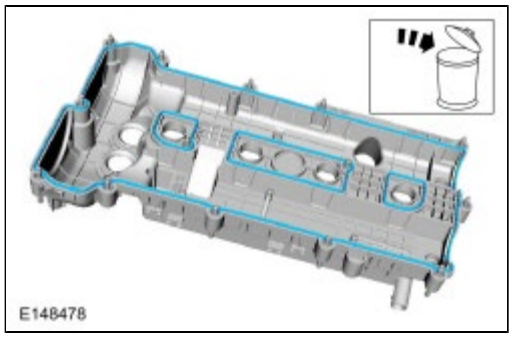

16. **NOTE:** *The VCT solenoid seals should only be replaced if they are damaged.*

    - Visual check.
    - Discard the specified component. Follow local disposal regulations.
      Special Tool(s) : 205-153 (T80T-4000-W) Handle , 303-1247/1 Remover, VCT Spark Plug Tube Seal

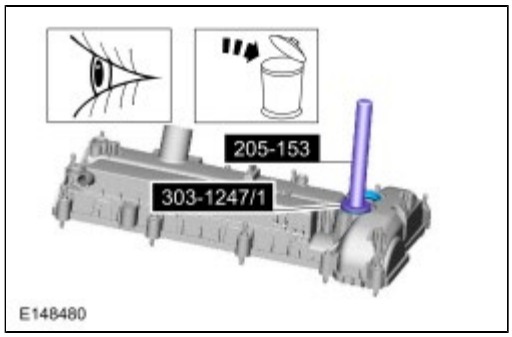

Installation

1. **NOTICE: Do not use metal scrapers, wire brushes, power abrasive discs or other abrasive means to clean the sealing surfaces. These tools cause scratches and gouges which make leak paths.**

   Clean the specified component with the specified material.
   Material : Motorcraft® Metal Surface Prep / ZC-31-A

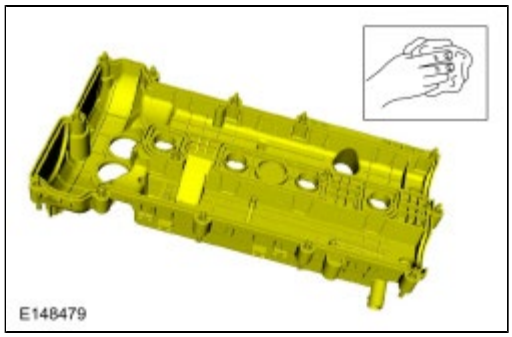

2. **NOTE:** *Installation of new seals is only required if damaged seals were removed during disassembly of the engine.*

Special Tool(s) : 205-153 (T80T-4000-W) Handle , 303-1247/2 Installer, VCT Spark Plug Tube Seal

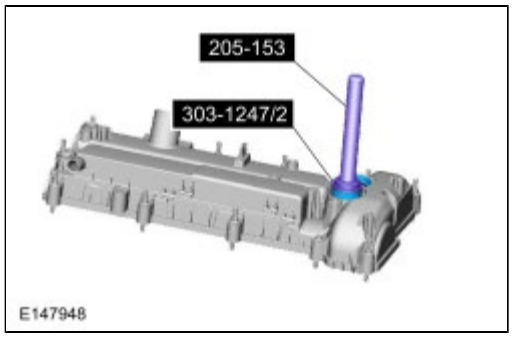

3.

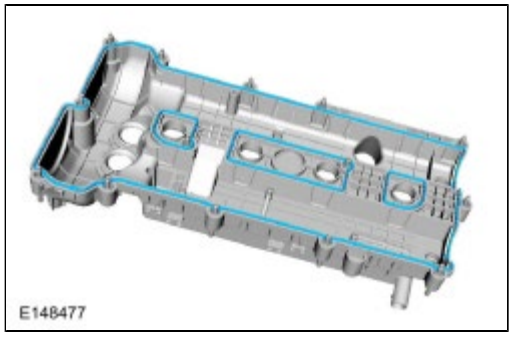

4. Apply a bead of the specified diameter from the specified tube.
   Material : Silicone Gasket and Sealant / TA-30 (WSE-M4G323-A4)

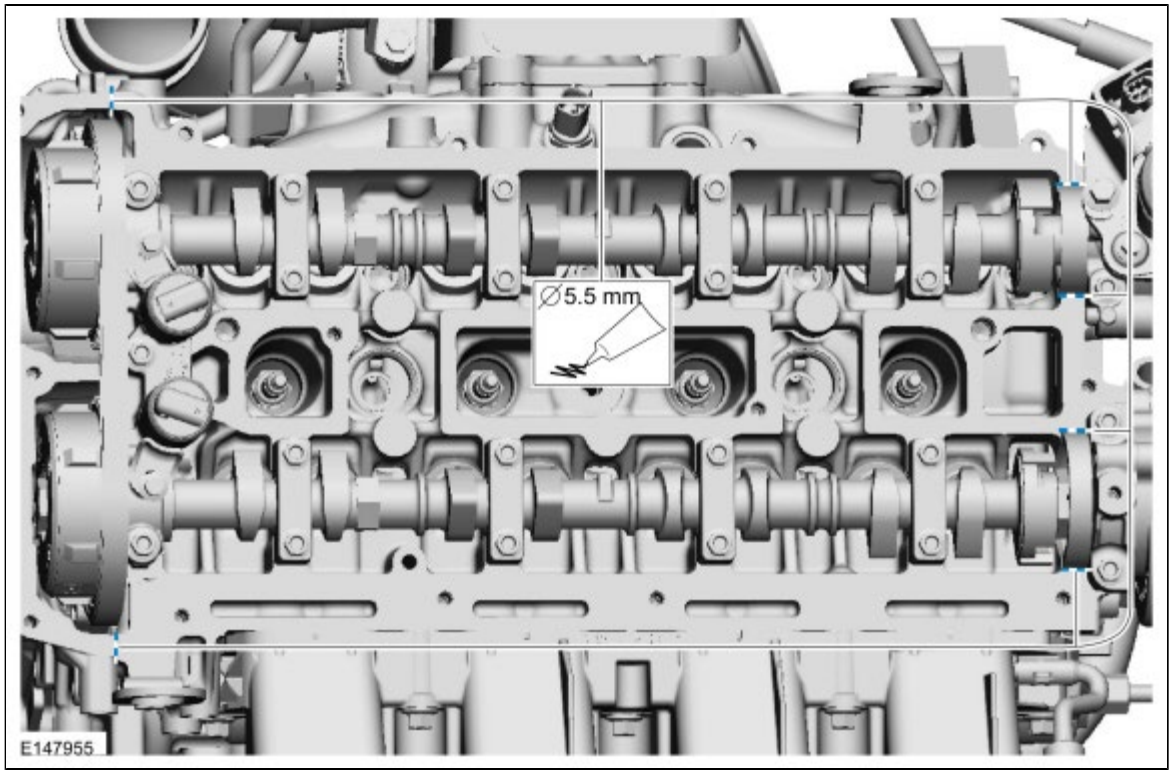

5. **NOTE:** *The valve cover must be secured within 10 minutes of silicone gasket application. If the valve cover is not secured within 10 minutes, the sealant must be removed and the sealing area cleaned with metal surface prep.*

   Material : Motorcraft® Metal Surface Prep / ZC-31-A
   Torque : 10 Nm

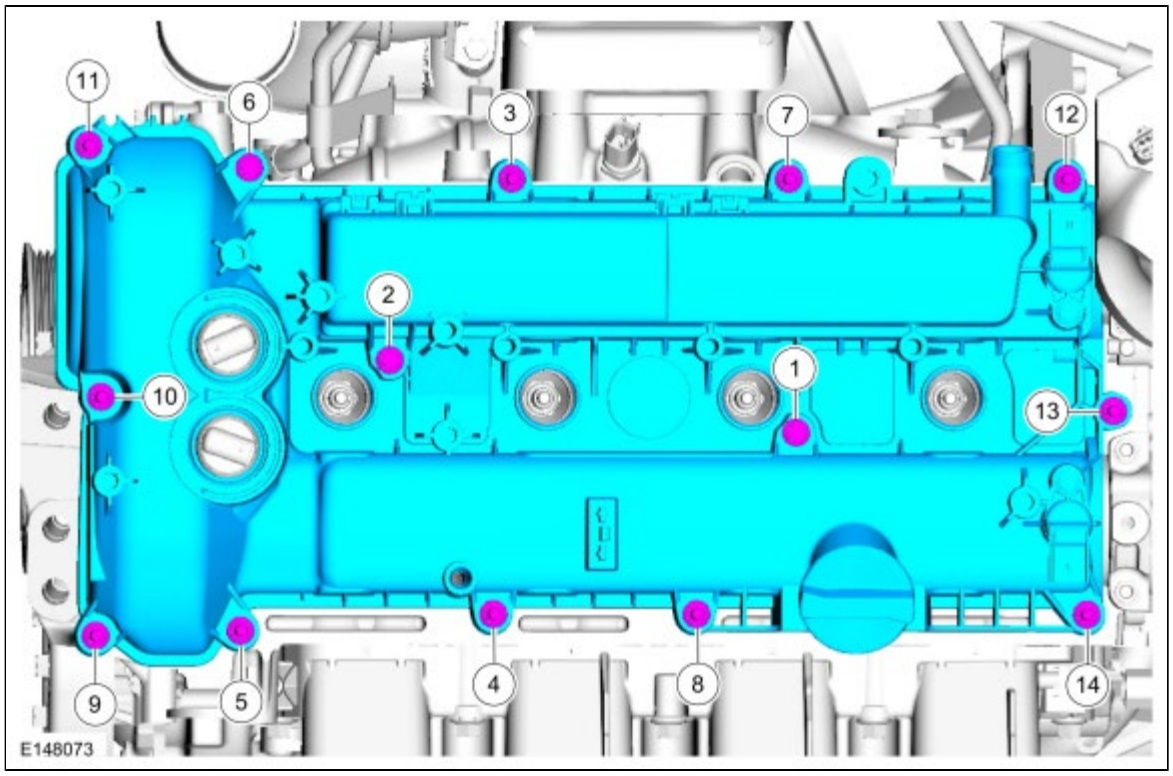

6. *Torque* :
   1 10 Nm
   2 25 Nm

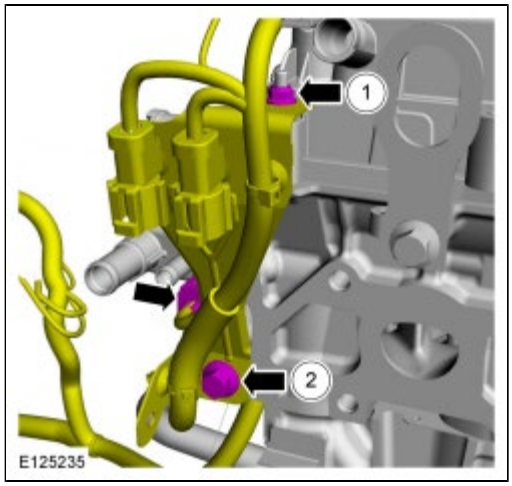

7.
   1. Early build vehicles equipped with metal vacuum tubes.
   2. Late build vehicles equipped with nylon vacuum tubes.

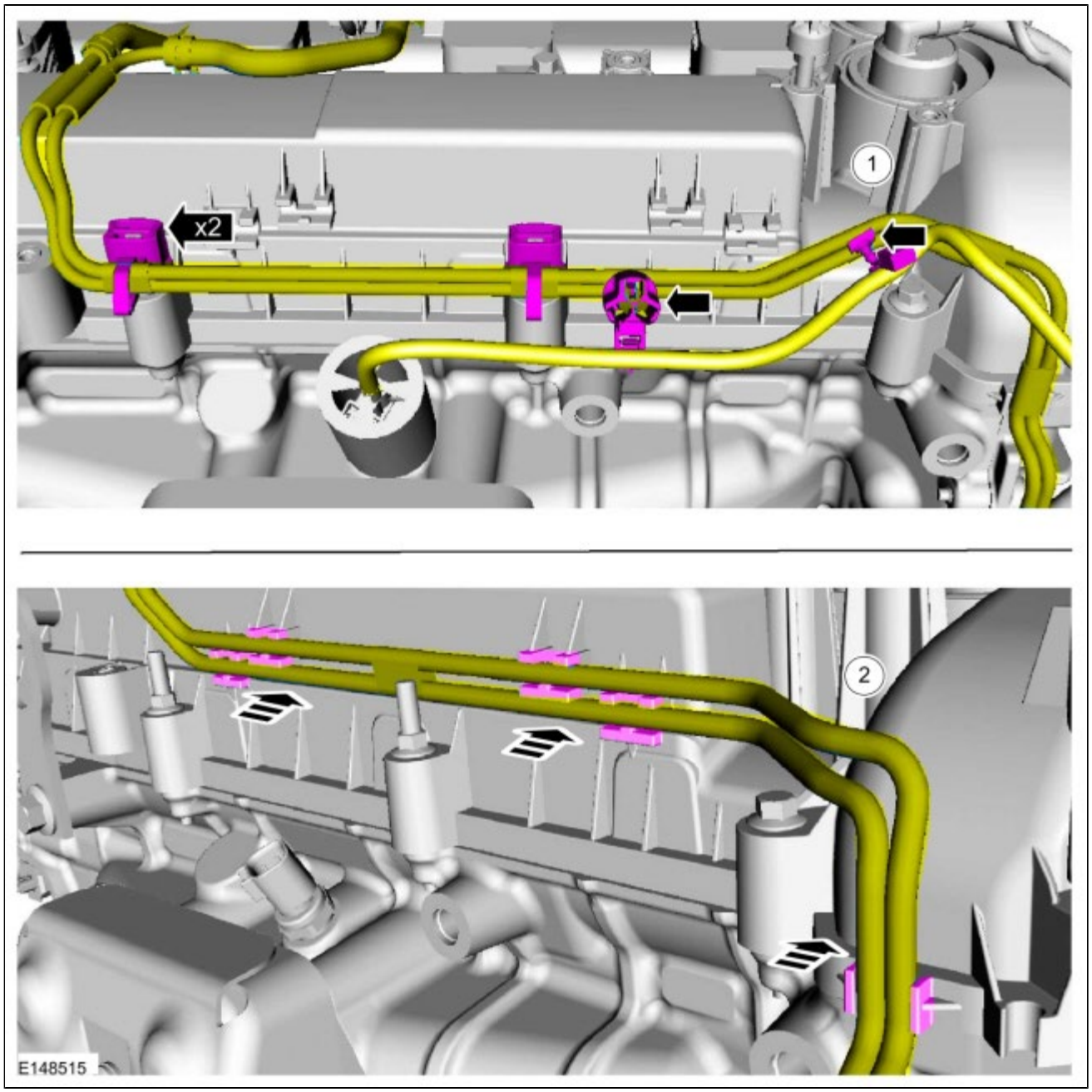

8.

1. Refer to: Quick Release Coupling (310-00B Fuel System - General Information, General Procedures).

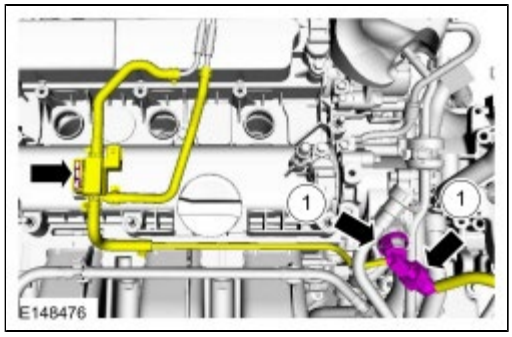

9.

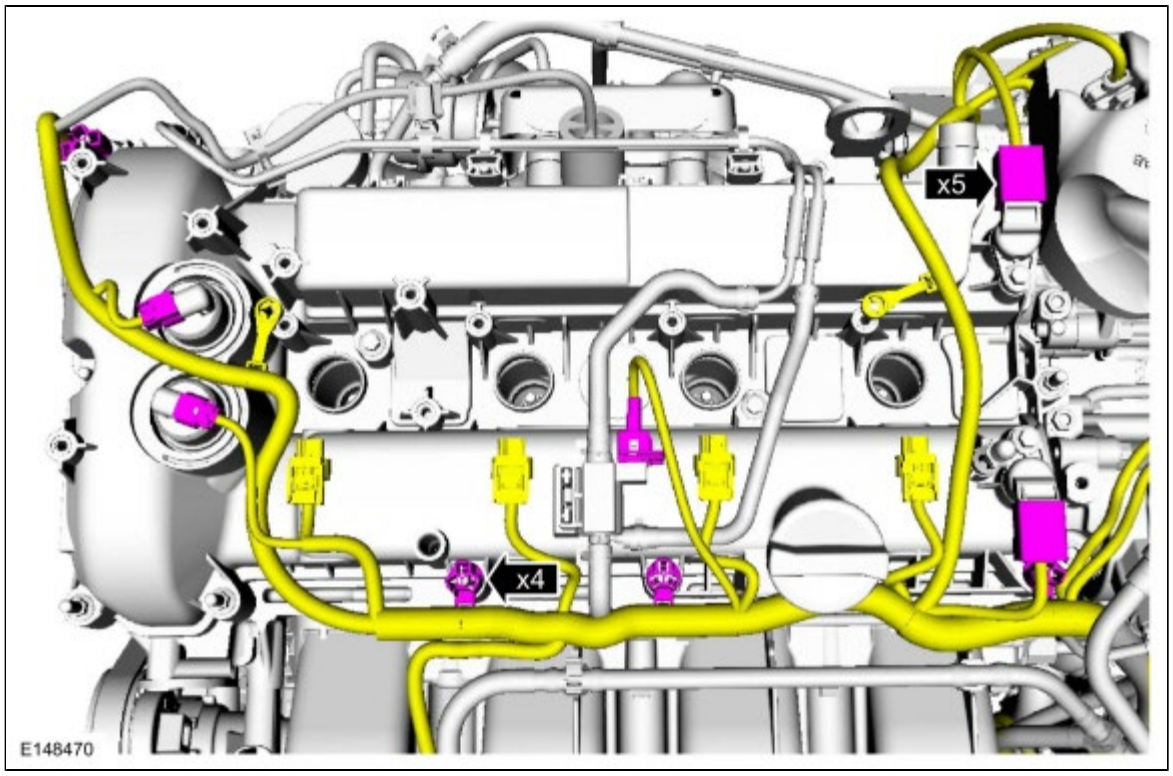

10.

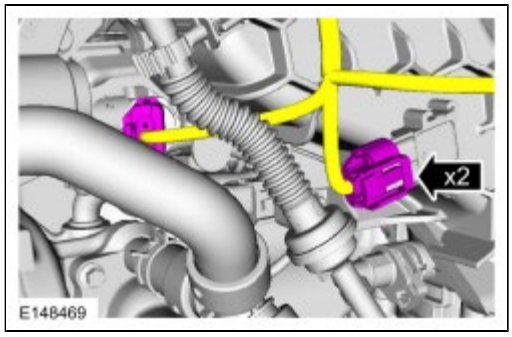

11. Refer to: Ignition Coil-On-Plug (303-07B Engine Ignition - 2.0L EcoBoost (184kW/250PS) - MI4, Removal and Installation).

12. *Torque* : 12 Nm

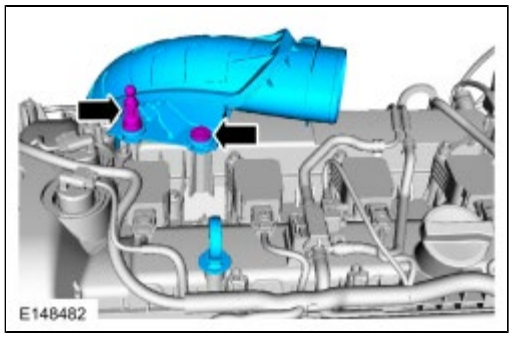

13.

- *Torque* : 5 Nm

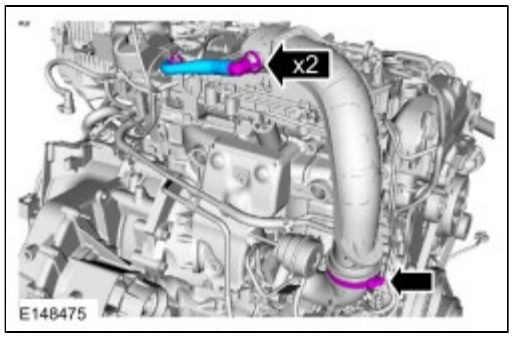

14.

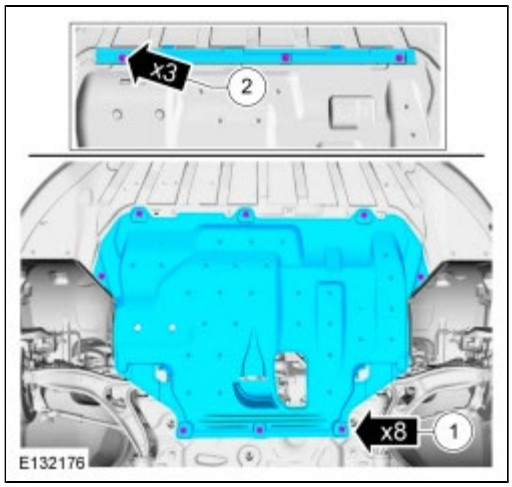

15. *Torque* : 12 Nm

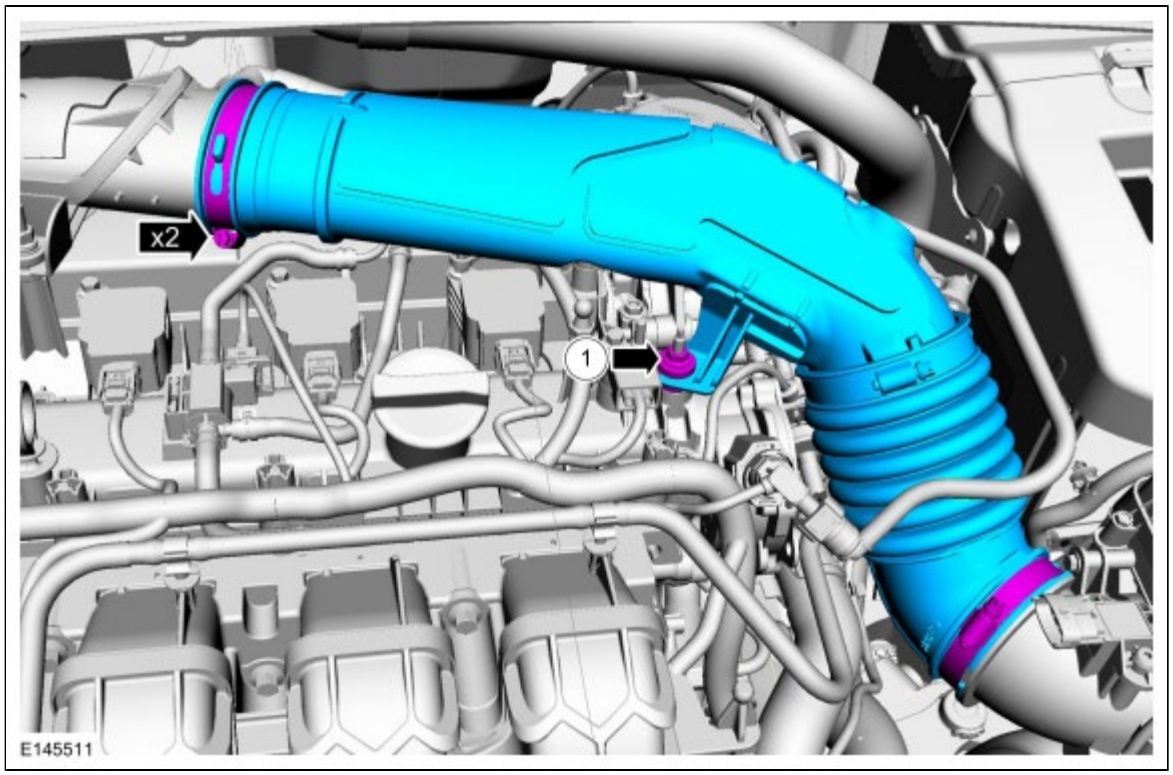

16. Refer to: Battery Disconnect and Connect (414-01 Battery, Mounting and Cables, General Procedures).

17. Refer to: Cowl Panel Grille (501-02 Front End Body Panels, Removal and Installation).

Copyright © Ford Motor Company

Crankshaft Pulley

Removal

NOTICE: Do not loosen or remove the crankshaft pulley bolt without first installing the special tools as instructed in this procedure. The crankshaft pulley and the crankshaft timing sprocket are not keyed to the crankshaft. The crankshaft, the crankshaft sprocket and the pulley are fitted together by friction, using diamond washers between the flange faces on each part. For that reason, the crankshaft sprocket is also unfastened if the pulley bolt is loosened. Before any repair requiring loosening or removal of the crankshaft pulley bolt, the crankshaft and camshafts must be locked in place by the special service tools, otherwise severe engine damage can occur.

NOTICE: During engine repair procedures, cleanliness is extremely important. Any foreign material, including any material created while cleaning gasket surfaces, that enters the oil passages, coolant passages or the oil pan can cause engine failure.

1.

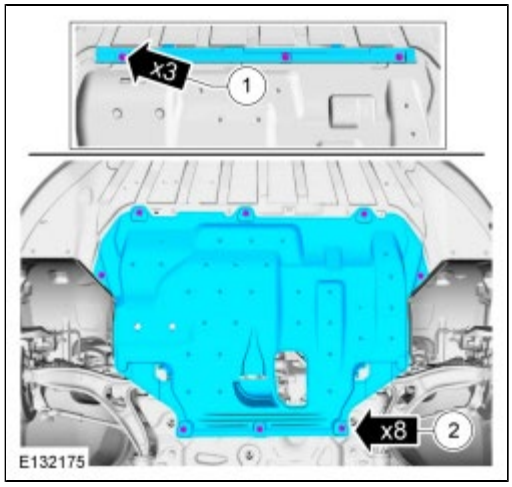

2. Remove the following items:
    1. RH fender splash shield.
       Refer to: Fender Splash Shield (501-02 Front End Body Panels, Removal and Installation).
    2. Refer to: Accessory Drive Belt (303-05B Accessory Drive - 2.0L EcoBoost (184kW/250PS) - MI4, Removal and Installation).
    3. Refer to: Brake Vacuum Pump - 2.0L EcoBoost (184kW/250PS) - MI4 (206-07 Power Brake Actuation, Removal and Installation).
    4. Refer to: Valve Cover (303-01B Engine - 2.0L EcoBoost (184kW/250PS) - MI4, Removal and Installation).

3.

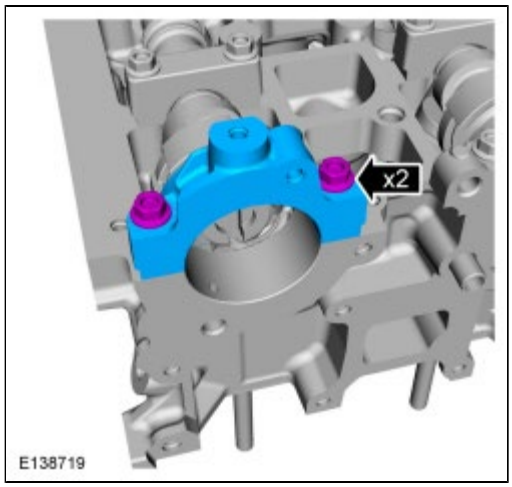

4.

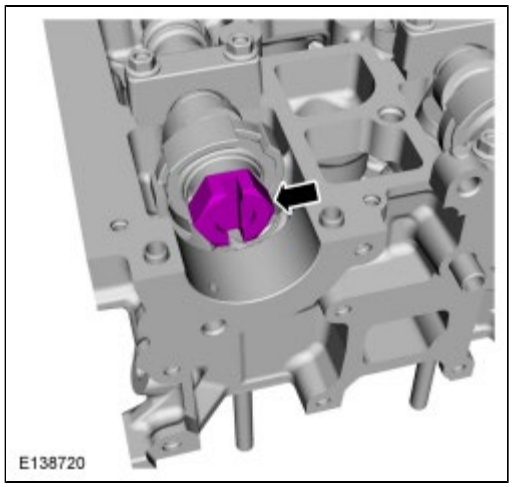

5.

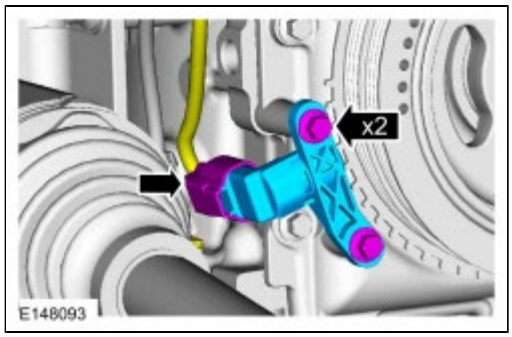

6. Turn the crankshaft clockwise until the No.1 piston is 45 degrees BTDC using the guide holes on the engine front cover and the crankshaft pulley.

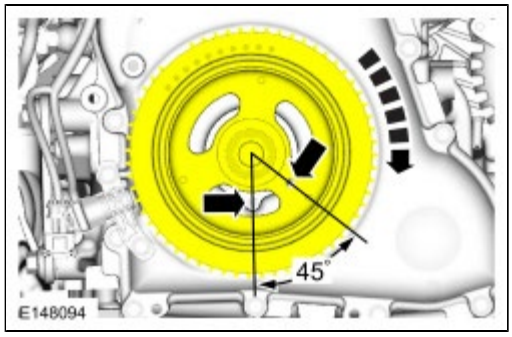

7.

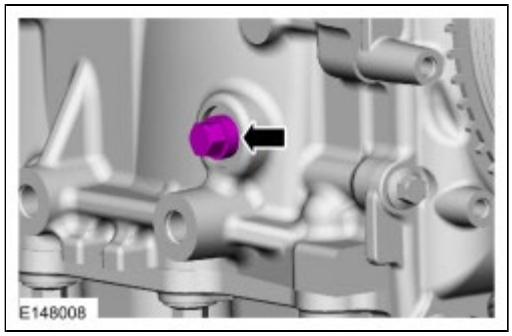

8. *Install Special Service Tool* : 303-507 Timing Peg, Crankshaft TDC

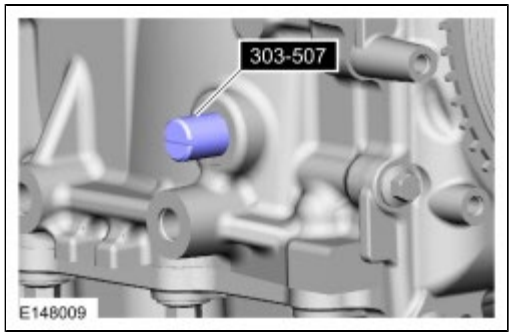

9. **NOTE:** *The Crankshaft TDC Timing Peg will contact the crankshaft and prevent it from turning past TDC . However, the crankshaft can still be rotated in the counterclockwise direction. The crankshaft must remain at the TDC position during the crankshaft pulley removal and installation.*

   NOTE: *The engine front cover is removed from graphic for clarity.*

   Special Tool(s) : 303-507 Timing Peg, Crankshaft TDC

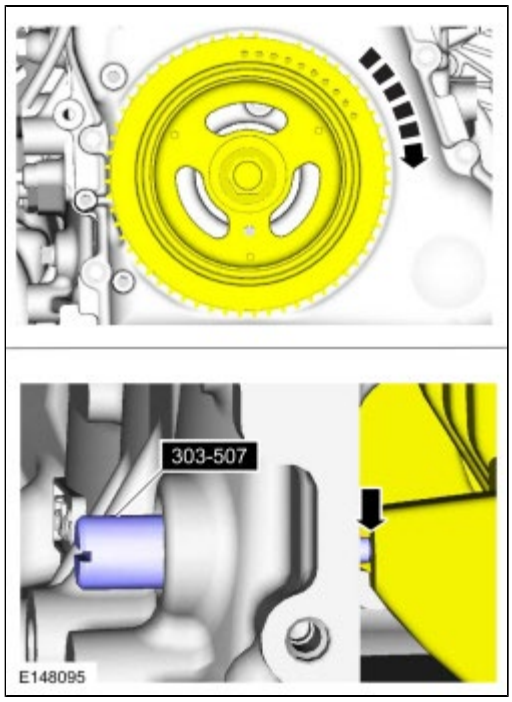

10. **NOTICE: The Camshaft Alignment Tool is for camshaft alignment only. Using this tool to prevent engine rotation can result in engine damage.**

    NOTE: *The camshaft timing slots are offset. If the Camshaft Alignment Tool cannot be installed, remove the TDC Timing Peg and rotate the crankshaft three-fourths of a revolution clockwise and repeat the previous 2 steps of this procedure.*

Install Special Service Tool : 303-1565 Alignment Tool, Camshaft

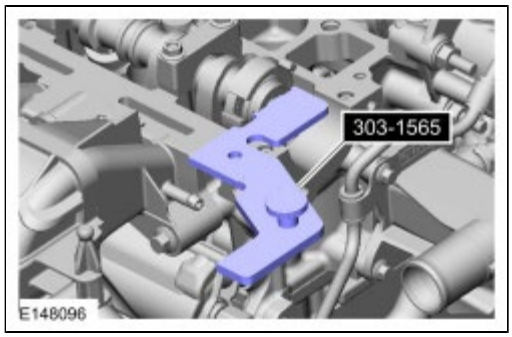

11. **NOTICE: The crankshaft must remain in the TDC position during removal of the pulley bolt or damage to the engine can occur. Therefore, the crankshaft pulley must be held in place with the Strap Wrench and the bolt should be removed using an air impact wrench (1/2-in drive minimum).**

    NOTE: *The crankshaft sprocket diamond washer may come off with the crankshaft pulley.*

    - Strap Wrench.
    - Discard the specified component. Follow local disposal regulations.
      General Equipment : Strap Wrench

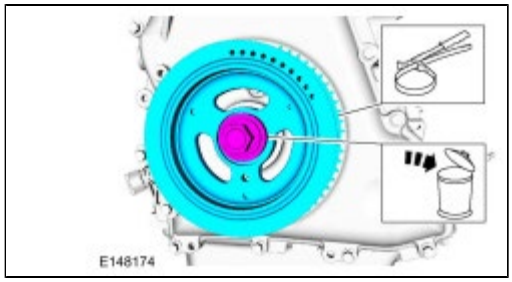

12. If the diamond washer did not come off with the crankshaft pulley, remove the diamond washer.

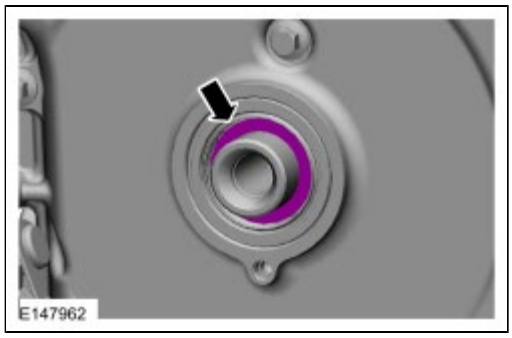

Installation

1. **NOTICE: The crankshaft sprocket diamond washer may come off with the crankshaft pulley. The diamond washer should be cleaned and inspected for any damage. If damage is evident, replace the diamond washer. If no damage, the diamond washer is to be reused. If the diamond washer is not installed, engine damage may occur.**

   Install the diamond washer onto the crankshaft.

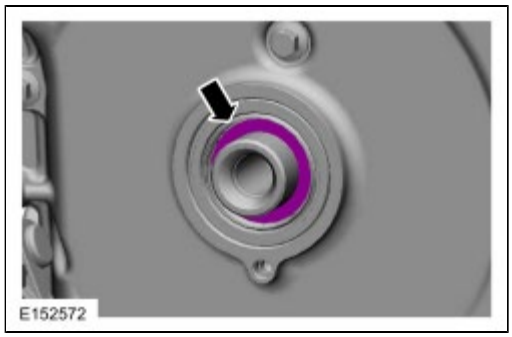

2. Apply the specified lubricant to the specified component.
   Material : Motorcraft® SAE 5W-30 Premium Synthetic Blend Motor Oil / XO-5W30-QSP (WSS-M2C946-A)

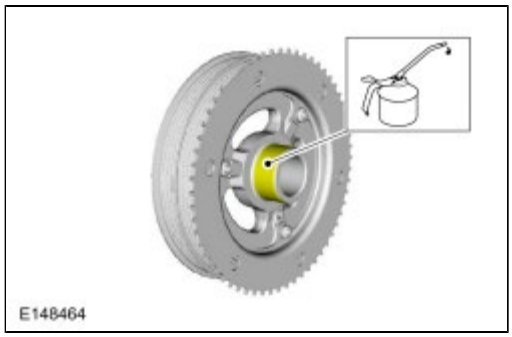

3.

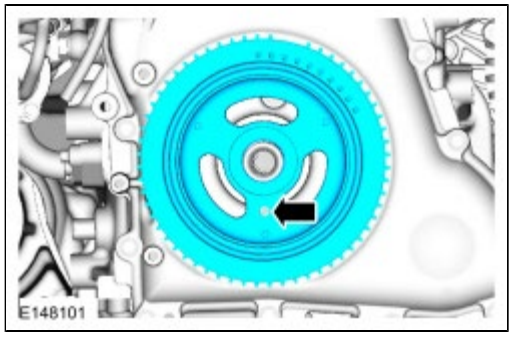

4. **NOTE:** *This step will correctly align the crankshaft pulley to the crankshaft.*

   Install an M6 bolt.

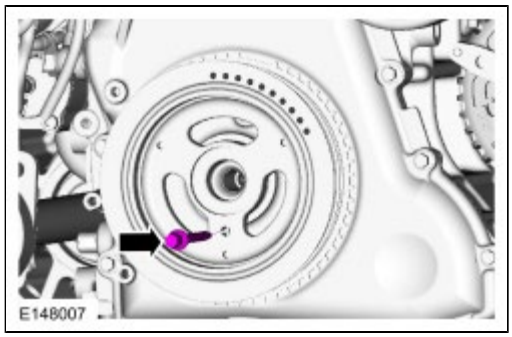

5. **NOTICE: The crankshaft must remain in the <u>TDC</u> position during installation of the pulley bolt or damage to the engine can occur. Therefore, the crankshaft pulley must be held in place with the Strap Wrench and the bolt should be installed using hand tools only.**

   - Strap Wrench.
   - Do not use power tools.
     General Equipment : Strap Wrench
     Torque :

Stage 1: 100 Nm
Stage 2: 90°

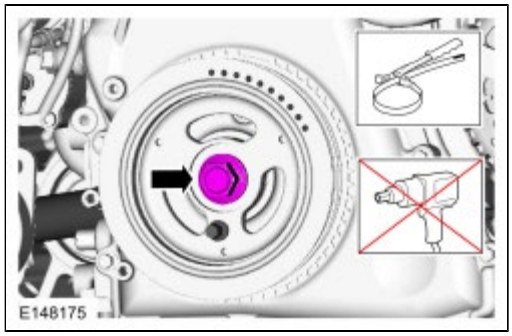

6. Remove the M6 bolt.

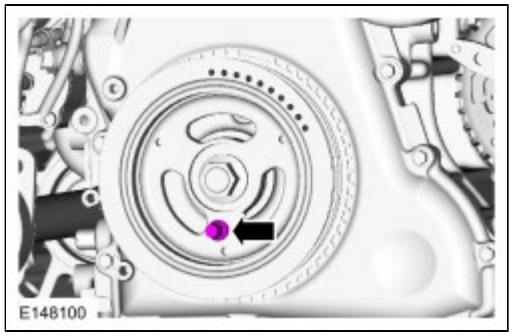

7. **NOTE:** *Do not tighten the CKP sensor bolts at this time.*

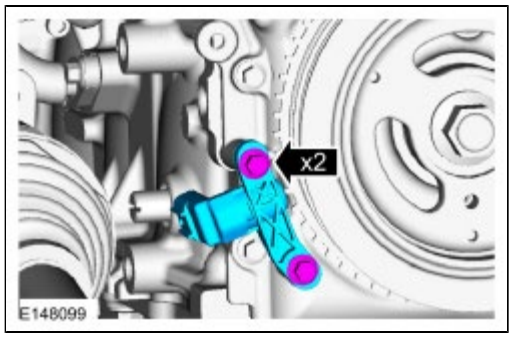

8. Install the Special Tool onto the CKP sensor and the tooth of the crankshaft pulley trigger wheel.
   Special Tool(s) : 303-1521 Alignment Tool, Crankshaft Position Sensor
   Torque : 7 Nm

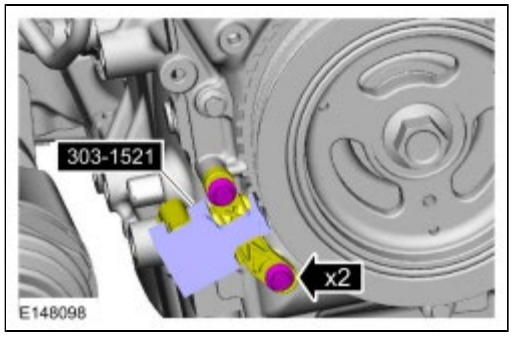

9.

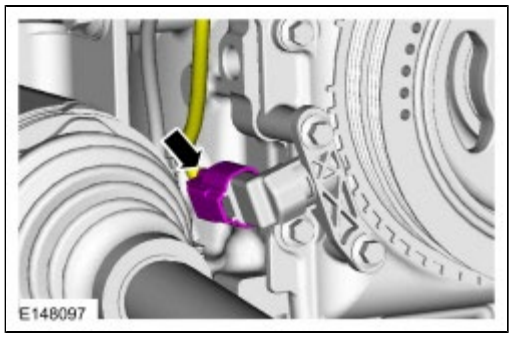

10. *Remove Special Service Tool* : 303-507 Timing Peg, Crankshaft TDC

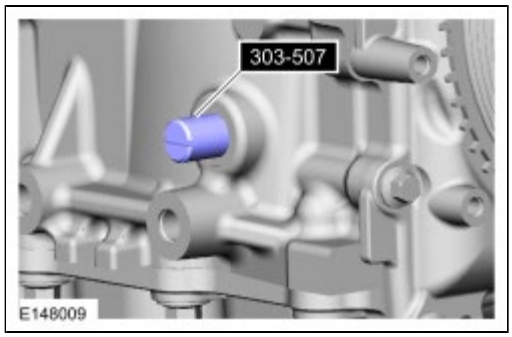

11. *Torque* : 20 Nm

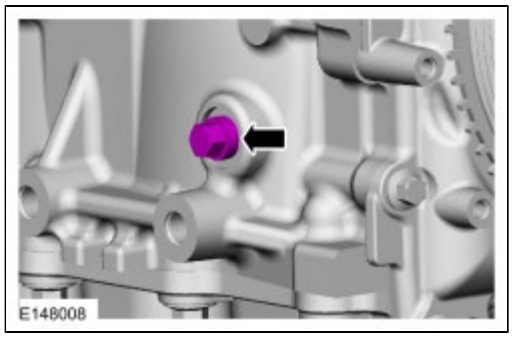

12. *Remove Special Service Tool* : 303-1565 Alignment Tool, Camshaft

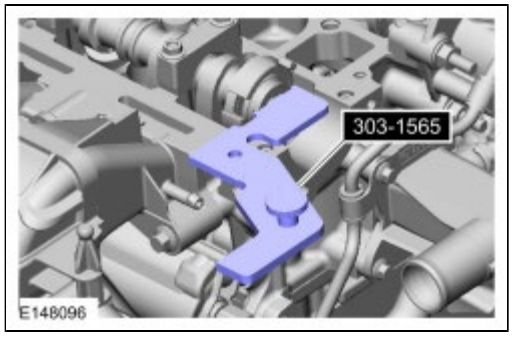

13. *Torque* : 63 Nm

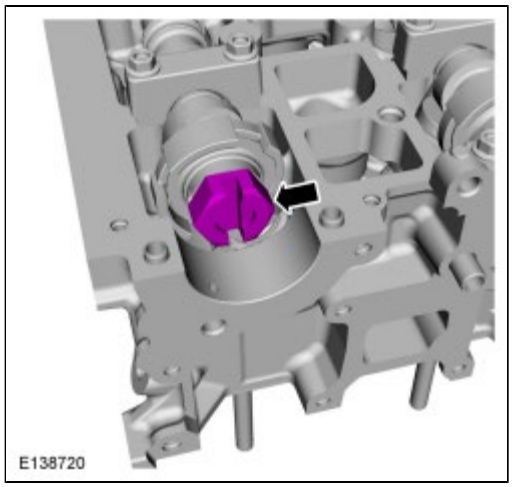

14. **NOTE:** *The intake camshaft rear bearing cap must be secured within 10 minutes of Gasket Maker application. If the bearing cap is not secured within 10 minutes, the sealant must be removed and the sealing area cleaned with Motorcraft® Metal Surface Prep.*

    Apply a continuos bead of the specified diameter from the specified tube.
    Material : Flange Sealant / CU7Z-19B508-A (WSS-M2G348-A11)
    Material : Motorcraft® Metal Surface Prep / ZC-31-A

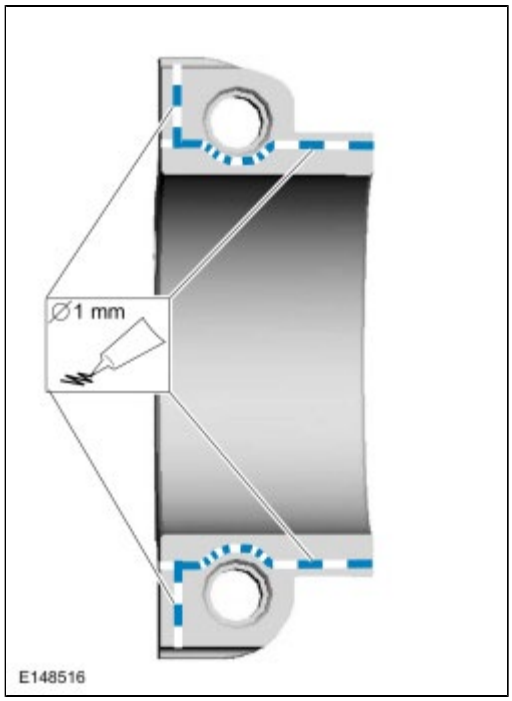

15. **NOTICE: Wipe off any excess sealer from the vacuum pump sealing surface of the cylinder head and camshaft cap.**

    Torque :
    Stage 1: 7 Nm
    Stage 2: 16 Nm

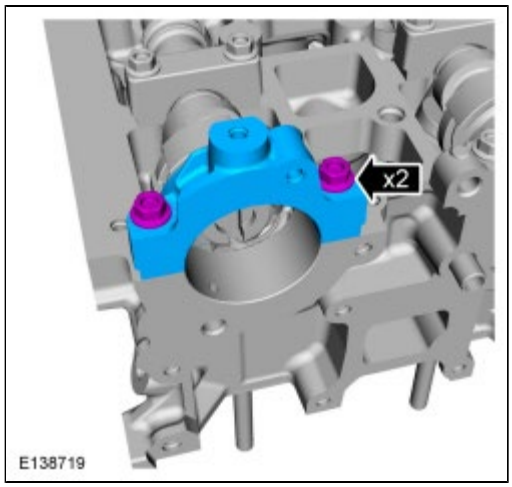

16. Install the following items:
    1. Refer to: Valve Cover (303-01B Engine - 2.0L EcoBoost (184kW/250PS) - MI4, Removal and Installation).
    2. Refer to: Brake Vacuum Pump - 2.0L EcoBoost (184kW/250PS) - MI4 (206-07 Power Brake Actuation, Removal and Installation).
    3. Refer to: Accessory Drive Belt (303-05B Accessory Drive - 2.0L EcoBoost (184kW/250PS) - MI4, Removal and Installation).
    4. RH fender splash shield.
       Refer to: Fender Splash Shield (501-02 Front End Body Panels, Removal and Installation).

17.

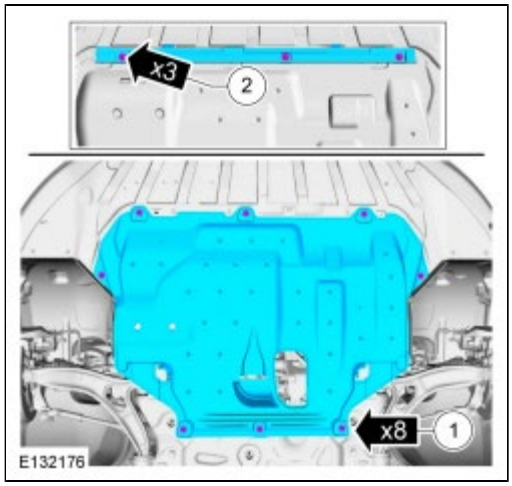

18. After completing the repairs, perform the Misfire Monitor Neutral Profile Correction procedure.

Copyright © Ford Motor Company

Crankshaft Front Seal

Removal

NOTE: *Do not loosen or remove the crankshaft pulley bolt without first installing the special tools as instructed in this procedure. The crankshaft pulley and the crankshaft timing sprocket are not keyed to the crankshaft. The crankshaft, the crankshaft sprocket and the pulley are fitted together by friction, using diamond washers between the flange faces on each part. For that reason, the crankshaft sprocket is also unfastened if the pulley bolt is loosened. Before any repair requiring loosening or removal of the crankshaft pulley bolt, the crankshaft and camshafts must be locked in place by the special service tools, otherwise severe engine damage can occur.*

NOTE: *During engine repair procedures, cleanliness is extremely important. Any foreign material (including any material created while cleaning gasket surfaces) that enters the oil passages, coolant passages or the oil pan can cause engine failure.*

1. Refer to: Crankshaft Pulley (303-01B Engine - 2.0L EcoBoost (184kW/250PS) - MI4, Removal and Installation).
2. **NOTICE: Use care not to damage the engine front cover or the crankshaft when removing the seal.**

   Discard the specified component. Follow local disposal regulations.
   Special Tool(s) : 303-409 (T92C-6700-CH) Remover, Crankshaft Seal

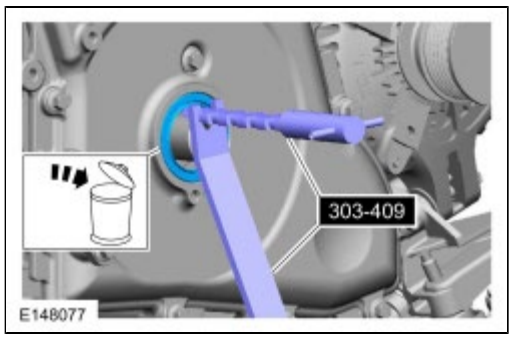

Installation

1. **NOTE:** *Remove the through-bolt from the Camshaft Front Oil Seal Installer.*

   Apply the specified lubricant to the specified component.
   Special Tool(s) : 303-096 (T74P-6150-A) Installer, Camshaft Front Oil Seal
   Material : Motorcraft® SAE 5W-30 Premium Synthetic Blend Motor Oil / XO-5W30-QSP (WSS-M2C946-A)

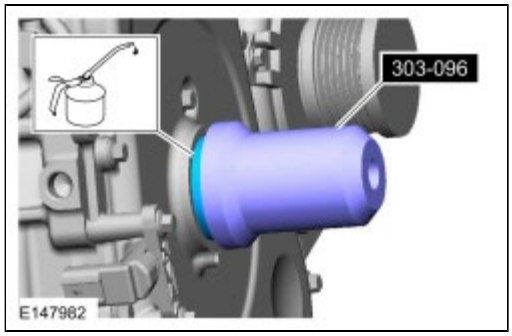

2. Refer to: Crankshaft Pulley (303-01B Engine - 2.0L EcoBoost (184kW/250PS) - MI4, Removal and Installation).

Copyright © Ford Motor Company

Engine Front Cover

Removal

NOTE: *Do not loosen or remove the crankshaft pulley bolt without first installing the special tools as instructed in this procedure. The crankshaft pulley and the crankshaft timing sprocket are not keyed to the crankshaft. The crankshaft, the crankshaft sprocket and the pulley are fitted together by friction, using diamond washers between the flange faces on each part. For that reason, the crankshaft sprocket is also unfastened if the pulley bolt is loosened. Before any repair requiring loosening or removal of the crankshaft pulley bolt, the crankshaft and camshafts must be locked in place by the special service tools, otherwise severe engine damage can occur.*

NOTE: *During engine repair procedures, cleanliness is extremely important. Any foreign material (including any material created while cleaning gasket surfaces) that enters the oil passages, coolant passages or the oil pan can cause engine failure.*

1. Refer to: Jacking and Lifting - Overview (100-02 Jacking and Lifting, Description and Operation).

2. Remove the following items:
    1. Refer to: Accessory Drive Belt (303-05B Accessory Drive - 2.0L EcoBoost (184kW/250PS) - MI4, Removal and Installation).
    2. Refer to: Accessory Drive Belt Tensioner (303-05B Accessory Drive - 2.0L EcoBoost (184kW/250PS) - MI4, Removal and Installation).
    3. Refer to: Crankshaft Front Seal (303-01B Engine - 2.0L EcoBoost (184kW/250PS) - MI4, Removal and Installation).
    4. Refer to: Engine Mount (303-01B Engine - 2.0L EcoBoost (184kW/250PS) - MI4, Removal and Installation).

3.

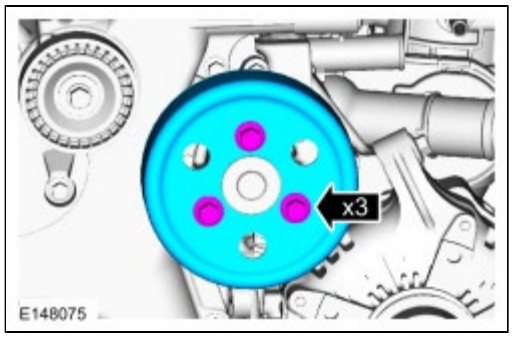

4.

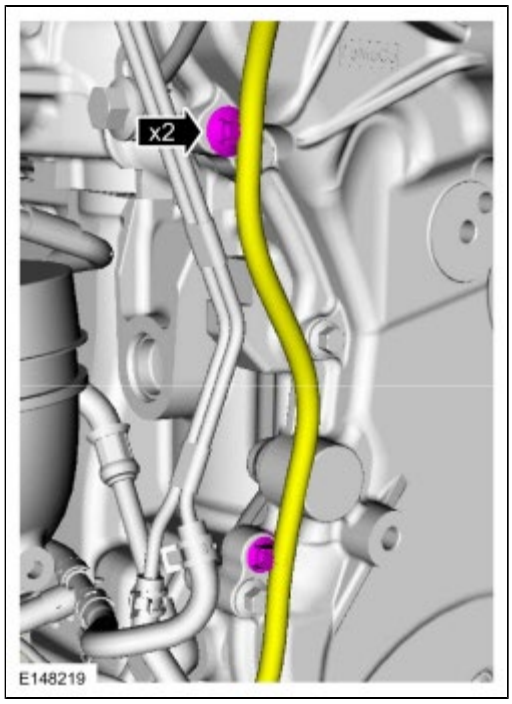

5.

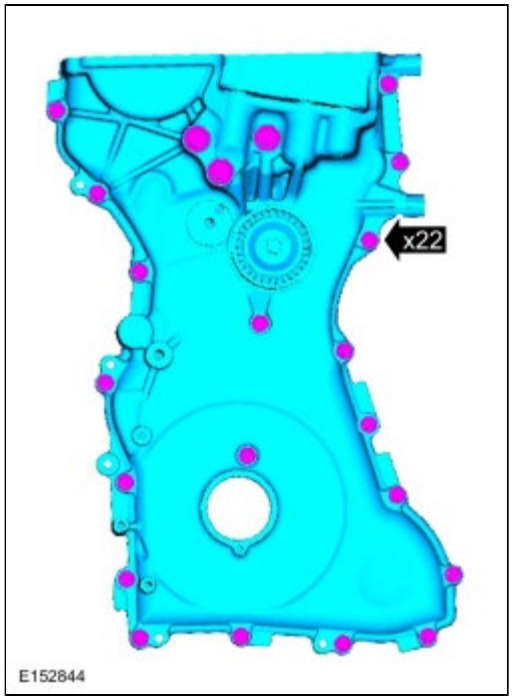

6. **NOTICE: Do not use metal scrapers, wire brushes, power abrasive discs or other abrasive means to clean the sealing surfaces. These tools cause scratches and gouges, which make leak paths. Use a plastic scraping tool to remove traces of sealant.**

   Plastic Scraper.

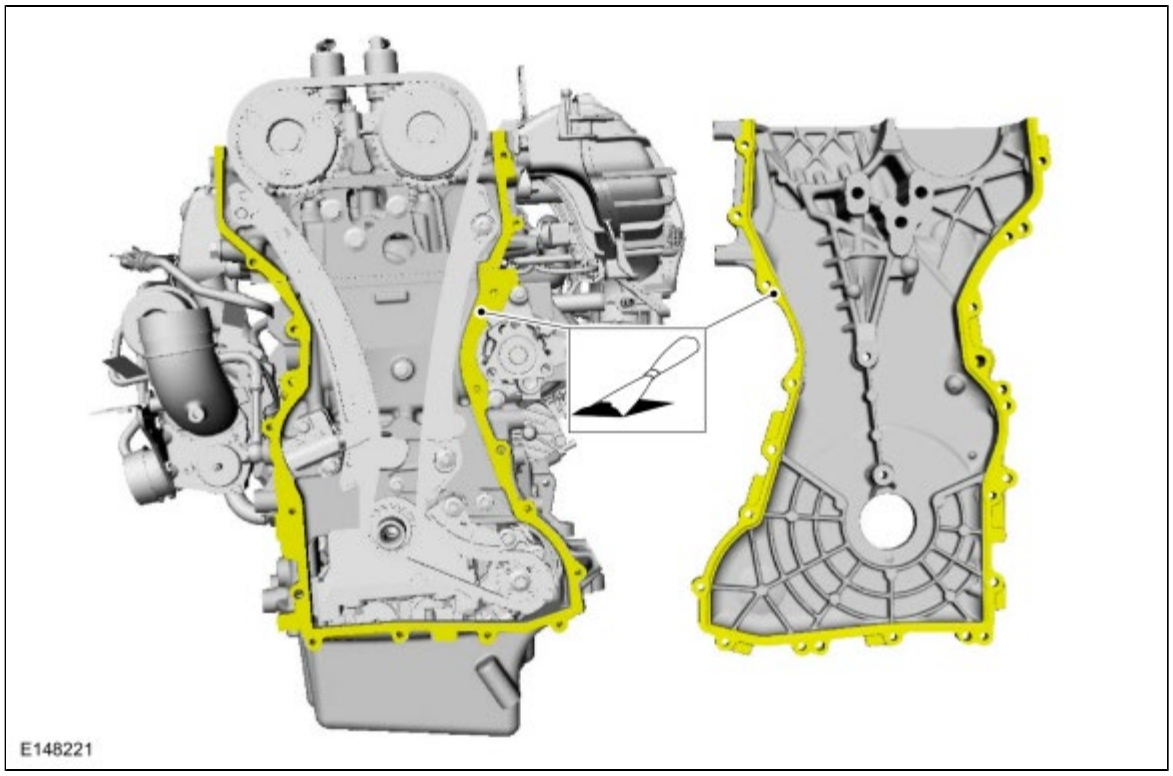

Installation

1. **NOTE:** *The engine front cover must be secured within 10 minutes of Silicone Gasket and Sealant application. If the valve cover is not secured within 10 minutes, the sealant must be removed and the sealing area cleaned with Motorcraft® Metal Surface Prep.*

   Apply a continuous bead of the specified diameter from the specified tube.
   Material : Silicone Gasket and Sealant / TA-30 (WSE-M4G323-A4)
   Material : Motorcraft® Metal Surface Prep / ZC-31-A

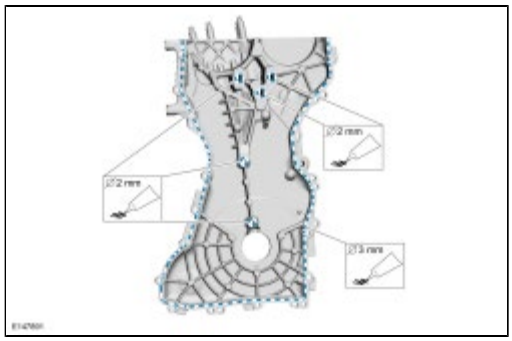

2. **NOTE:** *The engine front cover must be secured within 10 minutes of Silicone Gasket and Sealant application. If the engine front cover is not secured within 10 minutes, the sealant must be removed and the sealing area cleaned with Motorcraft® Metal Surface Prep.*

   Apply beads of silicone gasket and sealant that are 2 mm (0.078 in) in diameter and 5 mm (0.19 in) in length across the cylinder head and cylinder block joint areas.
   Material : Silicone Gasket and Sealant / TA-30 (WSE-M4G323-A4)
   Material : Motorcraft® Metal Surface Prep / ZC-31-A

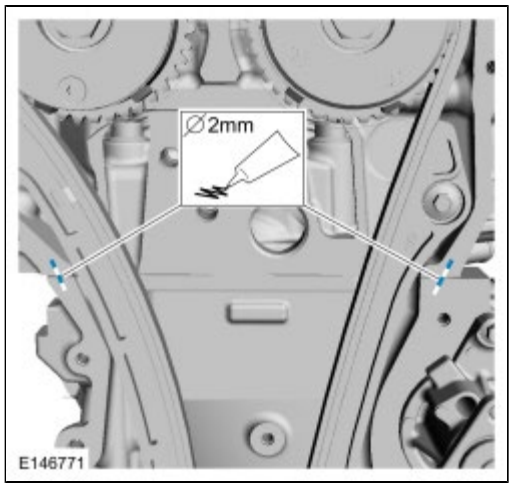

3. *Torque* :
   Bolts 1 - 19 10 Nm
   Bolts 20 - 22 48 Nm

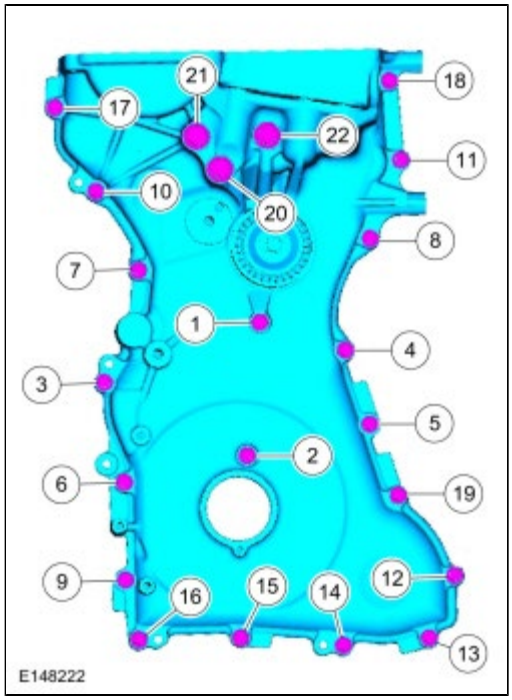

4.

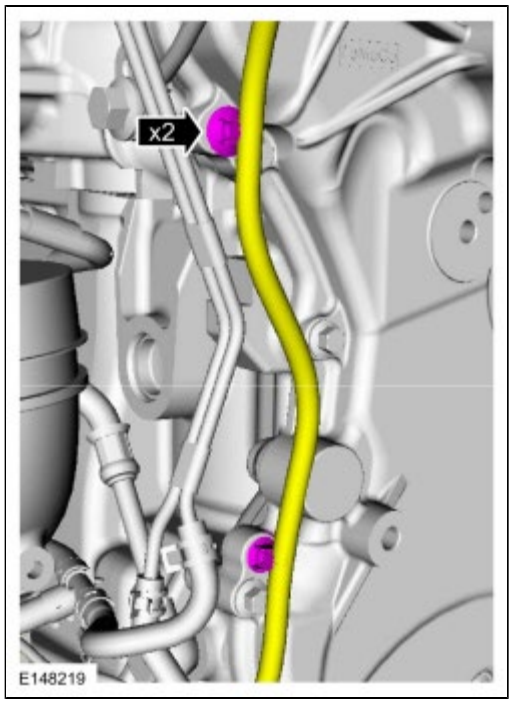

5. *Torque* : 20 Nm

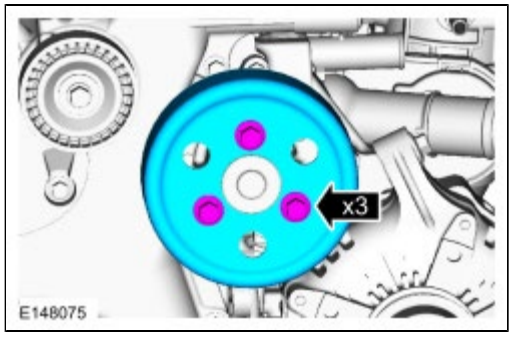

6. Install the following items:
    1. Refer to: Engine Mount (303-01B Engine - 2.0L EcoBoost (184kW/250PS) - MI4, Removal and Installation).
    2. Refer to: Crankshaft Front Seal (303-01B Engine - 2.0L EcoBoost (184kW/250PS) - MI4, Removal and Installation).
    3. Refer to: Accessory Drive Belt Tensioner (303-05B Accessory Drive - 2.0L EcoBoost (184kW/250PS) - MI4, Removal and Installation).
    4. Refer to: Accessory Drive Belt (303-05B Accessory Drive - 2.0L EcoBoost (184kW/250PS) - MI4, Removal and Installation).

Copyright © Ford Motor Company

Timing Drive Components

Removal

NOTICE: Do not loosen or remove the crankshaft pulley bolt without first installing the special tools as instructed in this procedure. The crankshaft pulley and the crankshaft timing sprocket are not keyed to the crankshaft. The crankshaft, the crankshaft sprocket and the pulley are fitted together by friction, using diamond washers between the flange faces on each part. For that reason, the crankshaft sprocket is also unfastened if the pulley bolt is loosened. Before any repair requiring loosening or removal of the crankshaft pulley bolt, the crankshaft and camshafts must be locked in place by the special service tools, otherwise severe engine damage can occur.

NOTICE: During engine repair procedures, cleanliness is extremely important. Any foreign material, including any material created while cleaning gasket surfaces, that enters the oil passages, coolant passages or the oil pan can cause engine failure.

1. Refer to: Jacking and Lifting - Overview (100-02 Jacking and Lifting, Description and Operation).

2. Remove the following items:
   1. Fuel injection pump and tappet.
      Refer to: Fuel Injection Pump (303-04B Fuel Charging and Controls - 2.0L EcoBoost (184kW/250PS) - MI4, Removal and Installation).
   2. RH fender splash shield.
      Refer to: Fender Splash Shield (501-02 Front End Body Panels, Removal and Installation).

3. **NOTICE: The fuel injection cam lobe must be positioned at zero lift before removing the fuel injection pump housing.**

   Turn the component clockwise.

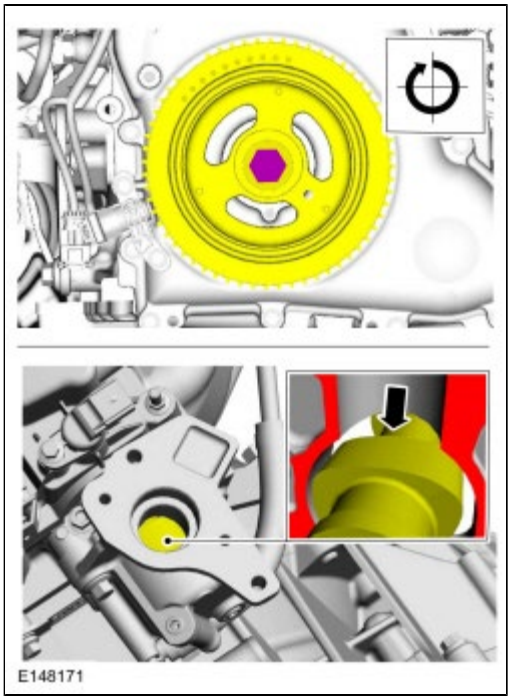

4.

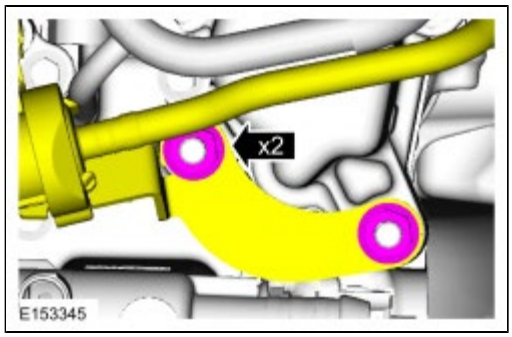

5.

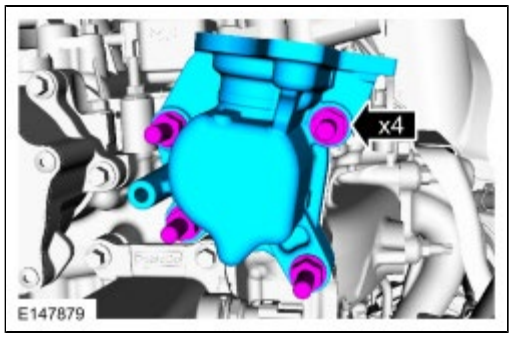

6. Refer to: Engine Front Cover (303-01B Engine - 2.0L EcoBoost (184kW/250PS) - MI4, Removal and Installation).

7. **NOTICE: The Camshaft Alignment Tool is for camshaft alignment only. Do not rely on the Camshaft Alignment Tool to prevent camshaft rotation. Damage to the tool or the camshaft can occur.**

   Install Special Service Tool : 303-1565 Alignment Tool, Camshaft

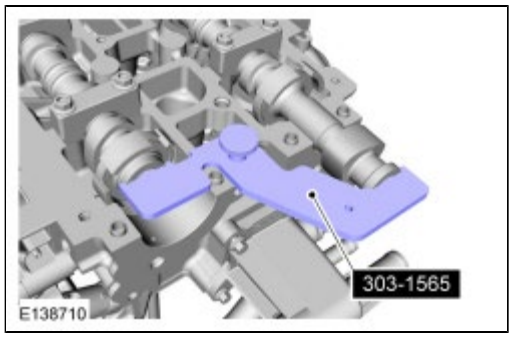

8. **NOTICE: Use an open-ended wrench to prevent the component from turning.**

   Loosen bolt.

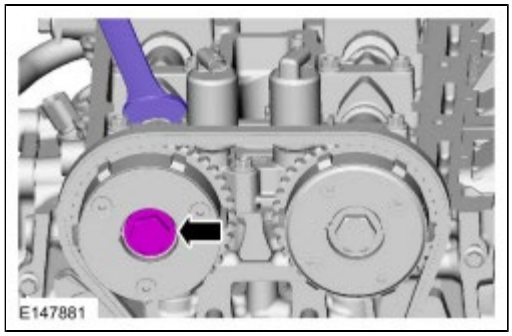

9. **NOTICE: Use an open-ended wrench to prevent the component from turning.**

   Loosen bolt.

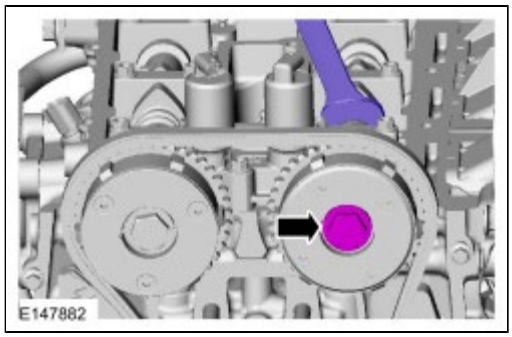

10.

1. Using a small pick, release and hold the ratchet mechanism.
2. While holding the ratchet mechanism in the released position, compress the tensioner by pushing the timing chain arm toward the tensioner.
3. Insert a holding pin into the hole to retain the tensioner.

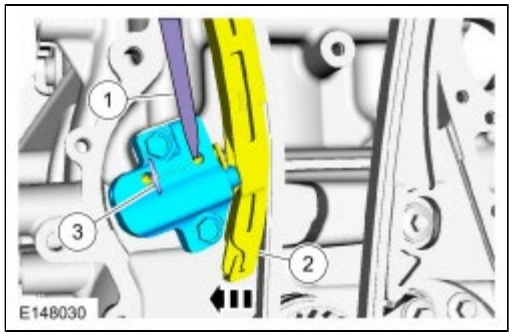

11.

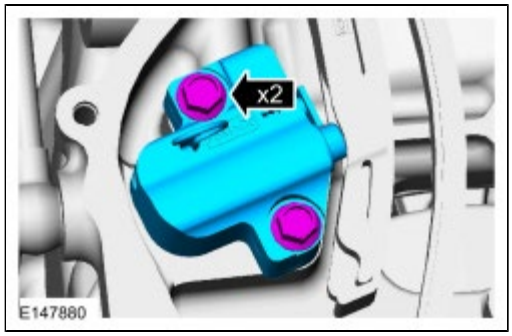

12.

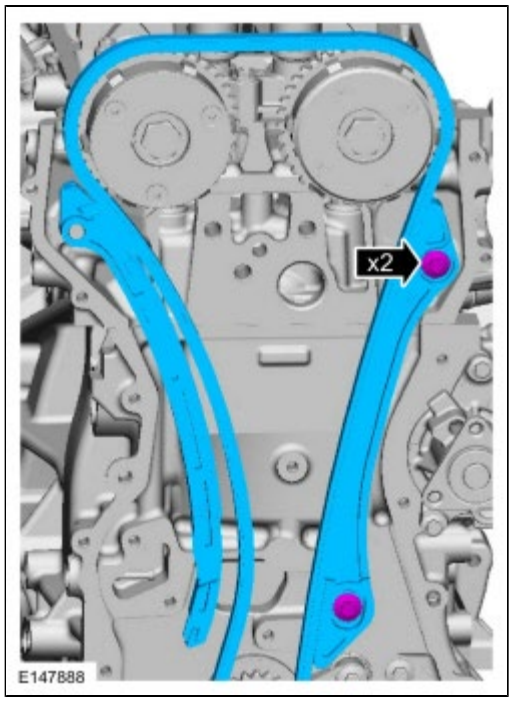

Installation

1. *Torque* : 10 Nm

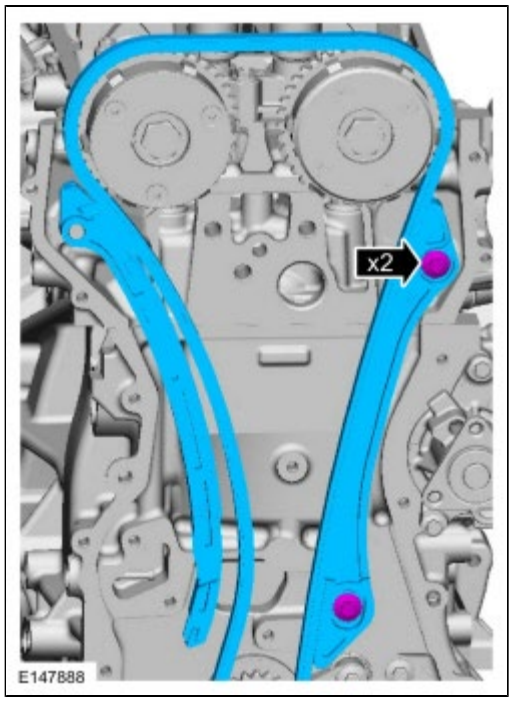

NOTE: *If the timing chain tensioner plunger and ratchet assembly are not pinned in the compressed position, follow the next 4 steps.*

2. **NOTICE: Do not compress the ratchet assembly. This will damage the ratchet assembly.**

   Using the edge of a vise, compress the timing chain tensioner plunger.

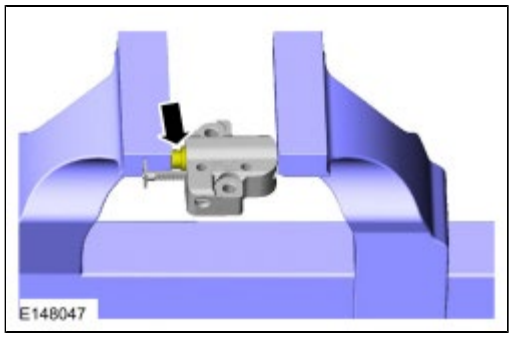

3. Using a small pick, push back and hold the ratchet mechanism.

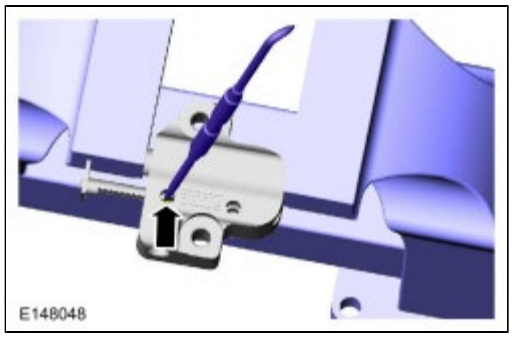

4. While holding the ratchet mechanism, push the ratchet arm back into the tensioner housing.

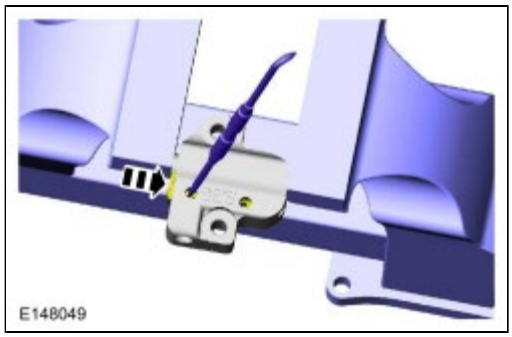

5. Install a holding pin into the hole in the tensioner housing to hold the ratchet assembly and the plunger in during installation.

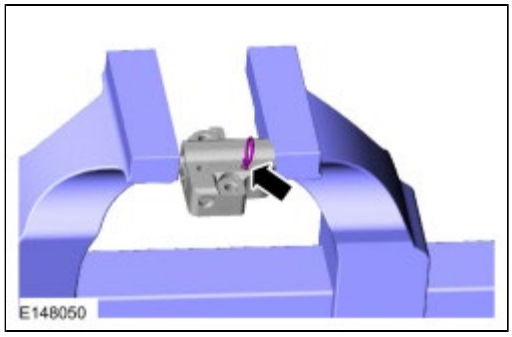

6. **NOTE:** *Do not remove the holding pin until the tensioner bolts are tightened.*

   Torque : 10 Nm

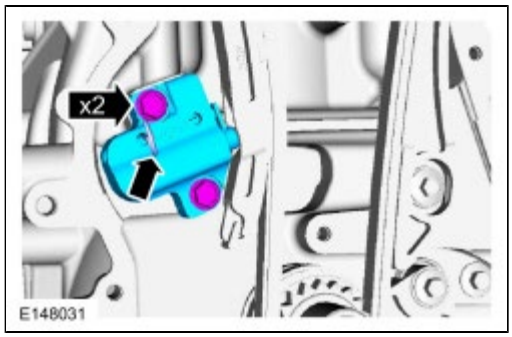

7. **NOTICE: Use an open-ended wrench to prevent the component from turning.**

   Torque : 72 Nm

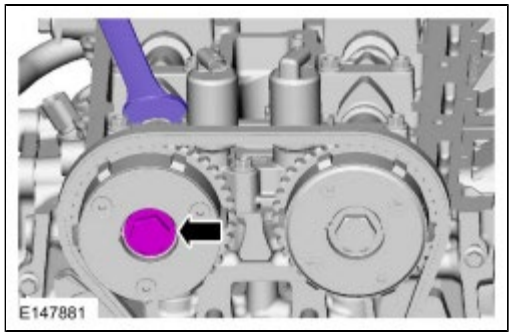

8. **NOTICE: Use an open-ended wrench to prevent the component from turning.**

   Torque : 72 Nm

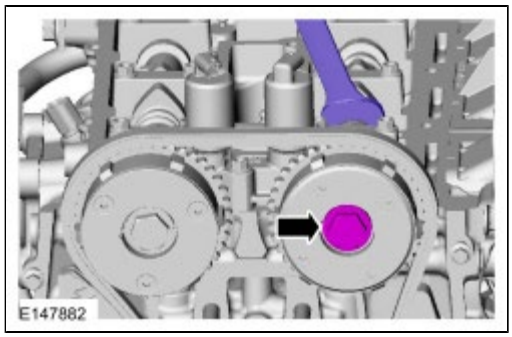

9. Refer to: Engine Front Cover (303-01B Engine - 2.0L EcoBoost (184kW/250PS) - MI4, Removal and Installation).

10. **NOTICE: The fuel injection cam lobe must be positioned at zero lift before installing the fuel injection pump housing.**

    Turn the component clockwise.

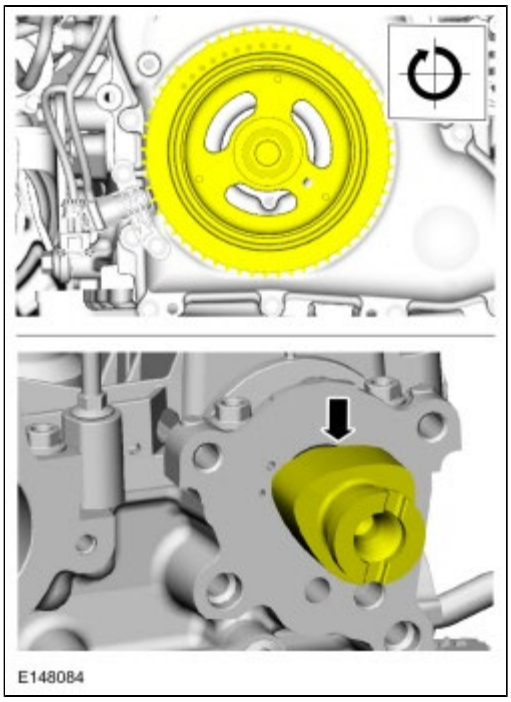

11.
- Visual check.
- Replace as necessary.

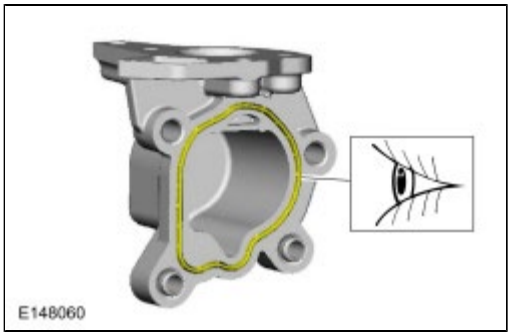

12. *Torque* :
    Stage 1: 15 Nm
    Stage 2: 60°

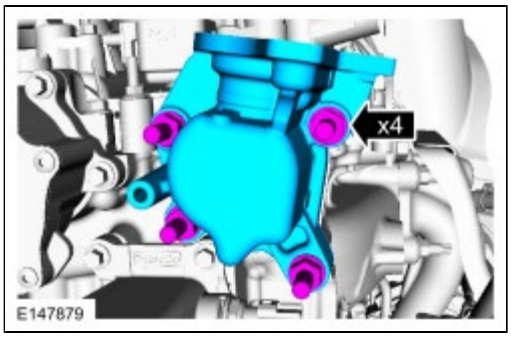

13. *Torque* : 11 Nm

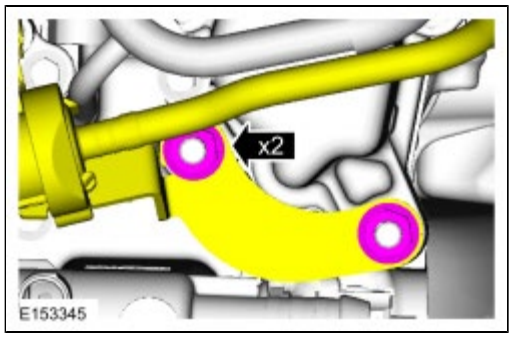

14. Install the following items:
    1. Fuel injection pump and tappet.
       Refer to: Fuel Injection Pump (303-04B Fuel Charging and Controls - 2.0L EcoBoost (184kW/250PS) - MI4, Removal and Installation).
    2. RH fender splash shield.
       Refer to: Fender Splash Shield (501-02 Front End Body Panels, Removal and Installation).

Copyright © Ford Motor Company

Camshaft

Removal

NOTE: *During engine repair procedures, cleanliness is extremely important. Any foreign material (including any material created while cleaning gasket surfaces) that enters the oil passages, coolant passages or the oil pan can cause engine failure.*

NOTE: *Do not rotate the camshafts unless instructed to in this procedure. Rotating the camshafts or crankshaft with timing components loosened or removed can cause serious damage to the valves and pistons.*

1. Refer to: Jacking and Lifting - Overview (100-02 Jacking and Lifting, Description and Operation).
2. Refer to: Variable Valve Timing (VVT) Unit (303-01B Engine - 2.0L EcoBoost (184kW/250PS) - MI4, Removal and Installation).
3. *Remove Special Service Tool* : 303-1565 Alignment Tool, Camshaft

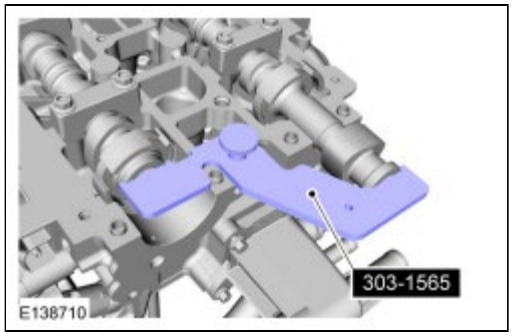

4.

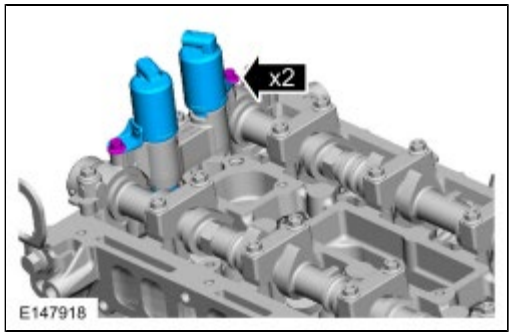

5.

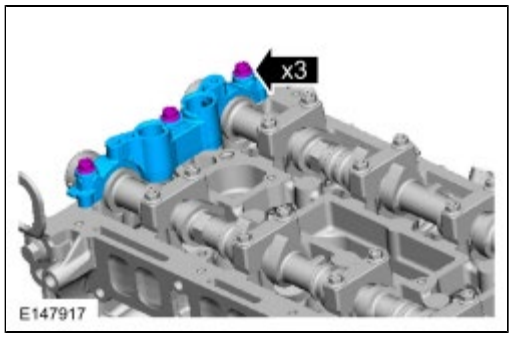

6. **NOTICE: Failure to follow the camshaft loosening procedure can result in damage to the camshafts.**

NOTE: *Note the location and orientation of each camshaft bearing cap and the position of the camshaft lobes on the No. 1 cylinder for installation reference.*

Loosen the camshaft bearing caps in sequence 2 turns at a time until all tension is released from the camshaft bearing caps.

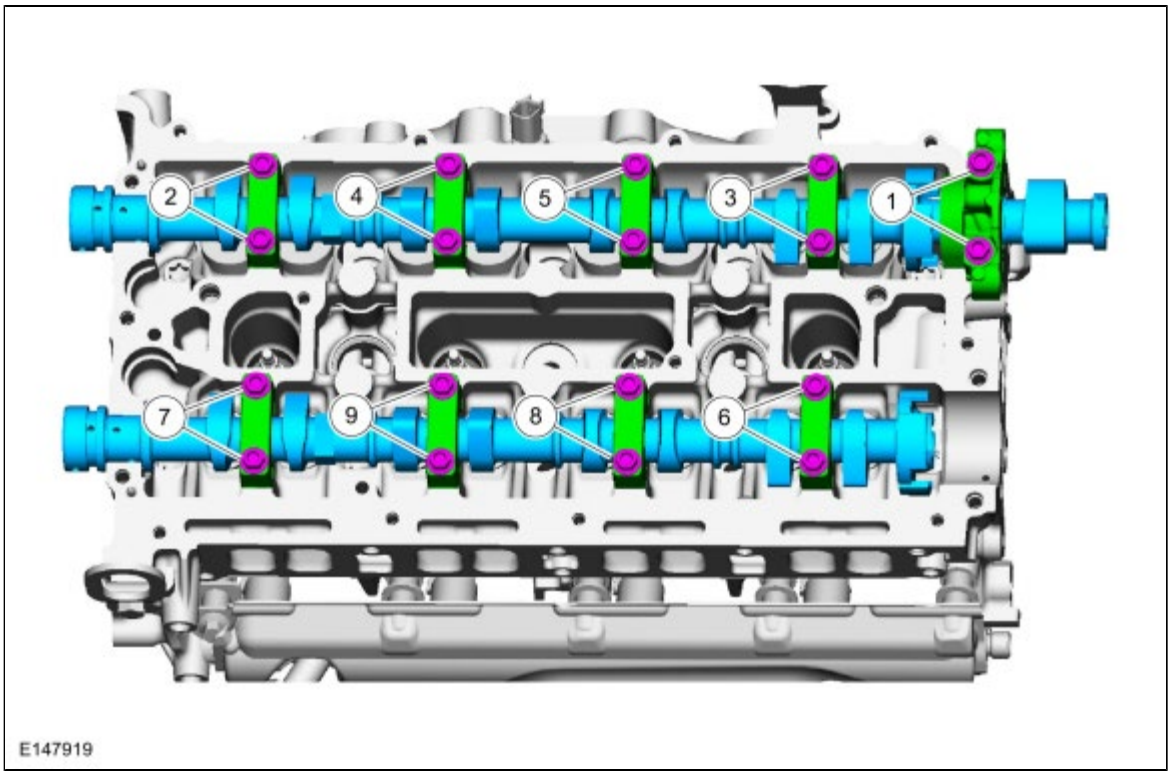

Installation

1. **NOTICE: If any new parts are being installed (cylinder head, valves, tappets, camshafts) it is necessary to check the valve clearance, follow the next 12 steps exactly or serious damage to the engine may occur. If the original parts are being installed it is not necessary to check the valve clearance so proceed to step 13.**

   Place a paint mark on the crankshaft at the 12 o'clock position.

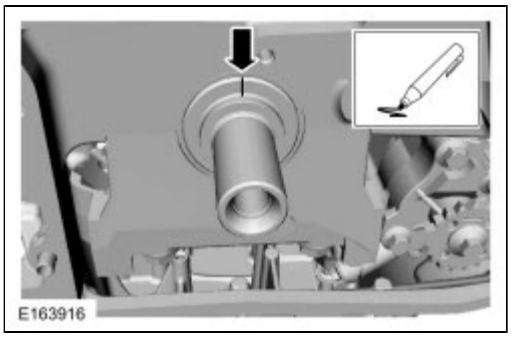

2.
   - *Remove Special Service Tool* : 303-507 Timing Peg, Crankshaft TDC

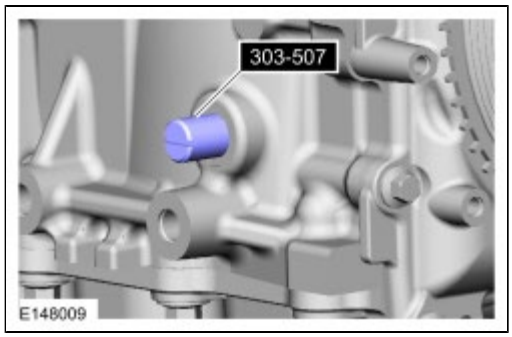

3. **NOTE:** *Rotating the crankshaft will position all of the pistons below the deck of the cylinder block and allow the camshafts to be installed and the valve clearance checked without the possibility of damage to the valves or pistons.*

   Using the crankshaft bolt and washer, rotate the crankshaft clockwise 270 degrees until the paint mark is at the 9 o'clock position.

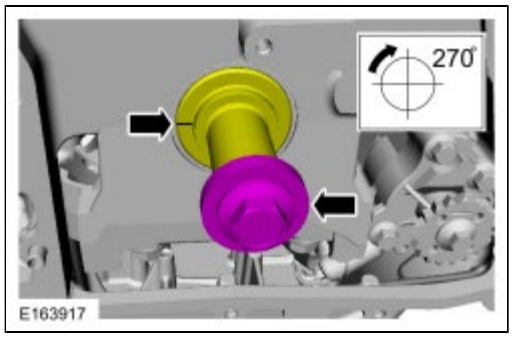

4. **NOTICE: Failure to follow the camshaft tightening procedure can result in damage to the camshafts.**

   NOTE: *Lubricate the camshaft journals and camshaft bearing caps with clean engine oil.*

   - *Material* : Motorcraft® SAE 5W-30 Premium Synthetic Blend Motor Oil / XO-5W30-QSP (WSS-M2C946-A)
   - Tighten 2 turns at a time in the sequence shown in 2 stages.
     Torque :
     Stage 1: 7 Nm
     Stage 2: 16 Nm

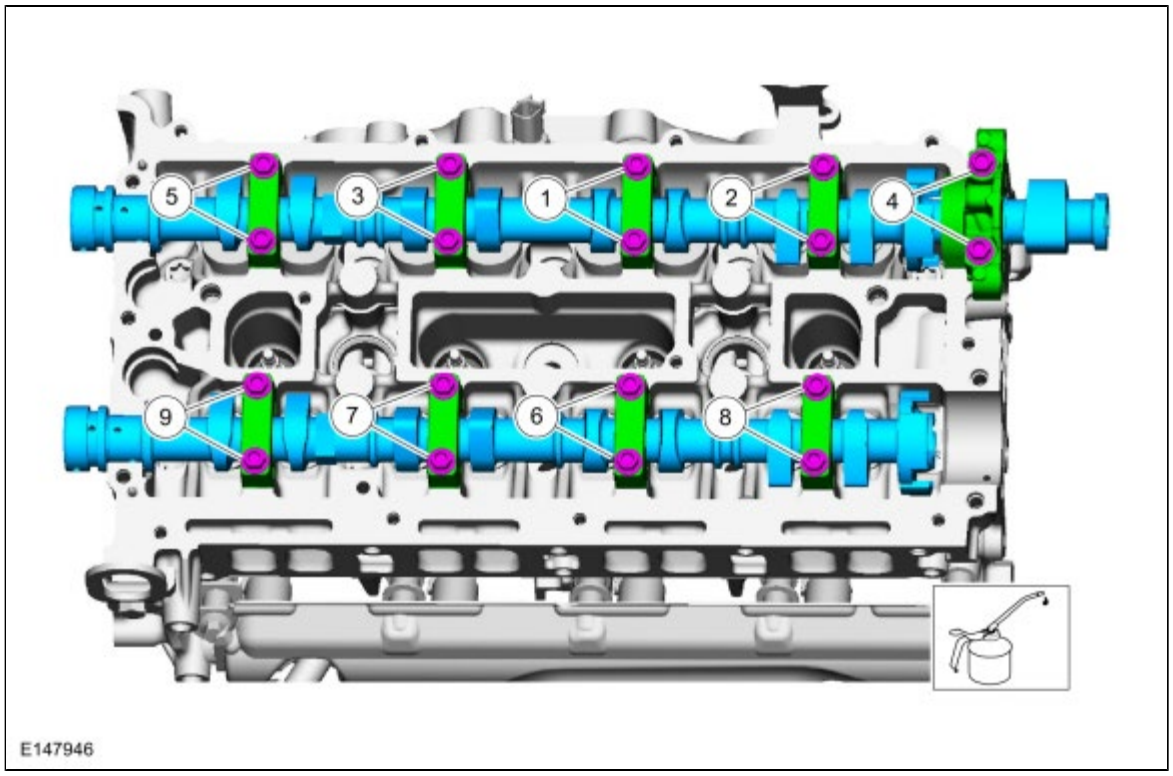

5. *Material* : Motorcraft® SAE 5W-30 Premium Synthetic Blend Motor Oil / XO-5W30-QSP (WSS-M2C946-A)
   Torque :
   Stage 1: 7 Nm
   Stage 2: 16 Nm

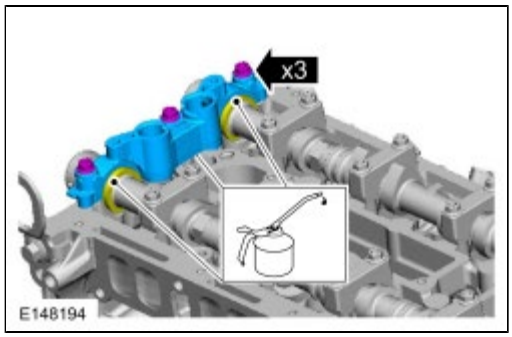

6.
   1. Using the flats of the camshaft, rotate the camshaft to place the cam lobe at base circle, with the lobe pointed away from the tappet.
   2. Use a feeler gauge to measure the clearance of each valve and record its location.
      General Equipment : Feeler Gauge
   3. Repeat to measure all of the lobe/tappet clearances.

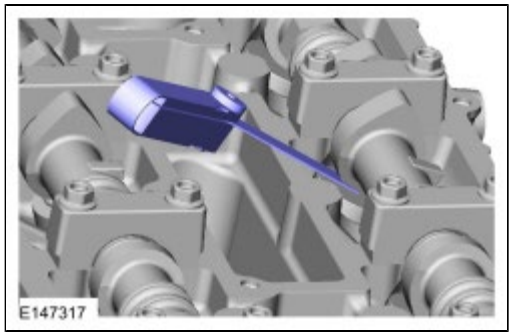

7. **NOTE:** *The number on the valve tappet only reflects the digits that follow the decimal. For example, a tappet with the number 0.650 has the thickness of 3.650 mm.*

NOTE: *Select tappets using this formula: tappet thickness = measured clearance + the existing tappet thickness - nominal clearance.*

NOTE: *The nominal clearance is:*

- *intake: 0.25 mm (0.0095 in).*
- *exhaust: 0.36 mm (0.0142 in).*

NOTE: *The acceptable clearances after being fully installed are:*

- *intake: 0.19-0.31 mm (0.007-0.012 in).*
- *exhaust: 0.30-0.42 mm (0.012-0.017 in).*

Select the closest tappet size to the ideal tappet thickness available and mark the installation location.

8.

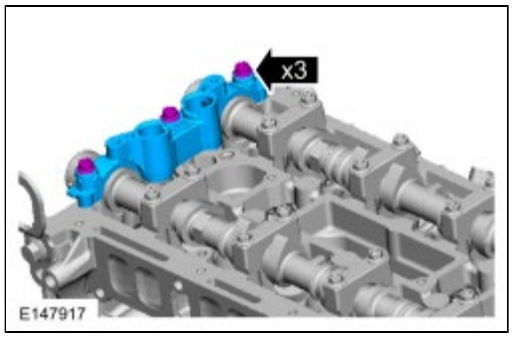

9. **NOTICE: Failure to follow the camshaft loosening procedure can result in damage to the camshafts.**

   Loosen the camshaft bearing caps in sequence 2 turns at a time until all tension is released from the camshaft bearing caps.

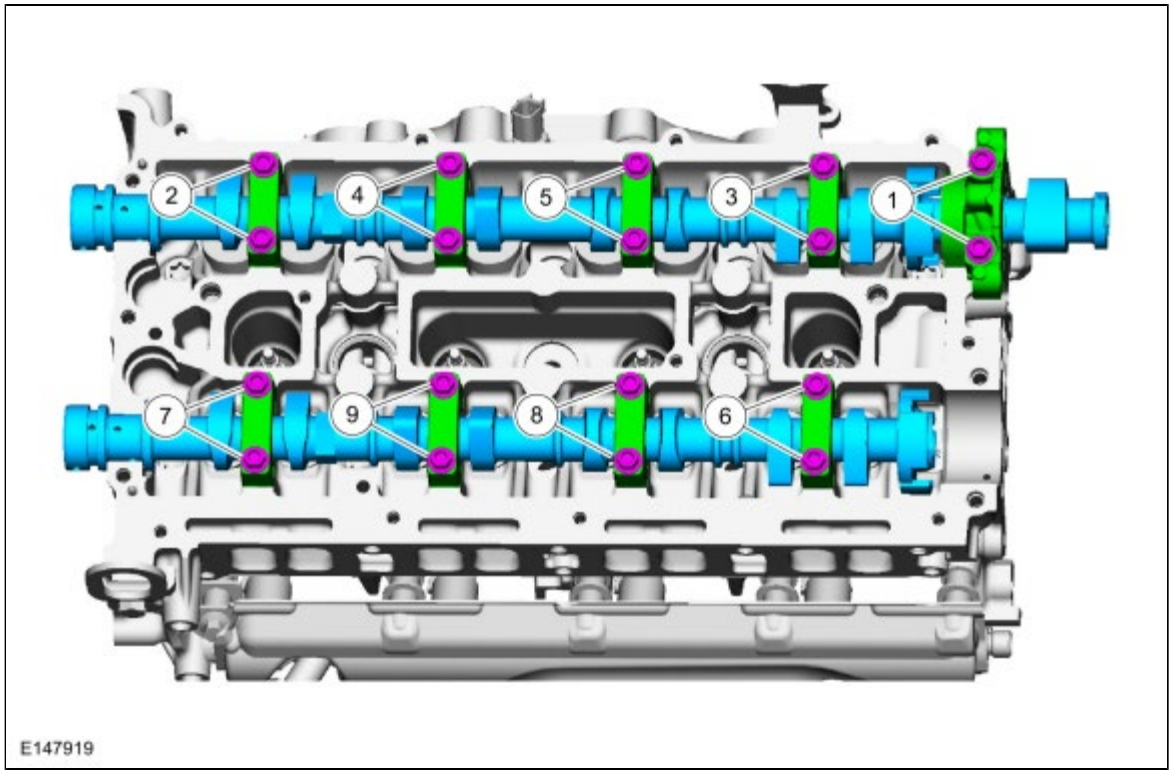

10.

- *Install Special Service Tool* : 303-507 Timing Peg, Crankshaft TDC

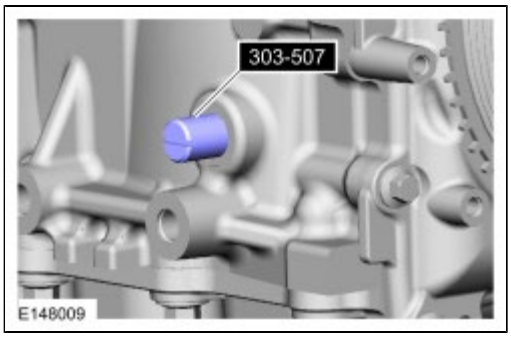

11. **NOTE:** *Rotating the crankshaft will position the engine at TDC and allow you to install the camshafts in the same position as noted during the disassembly.*

    Rotate the crankshaft clockwise 90 degrees so the crankshaft contacts the Timing Peg, Crankshaft TDC 303-507.

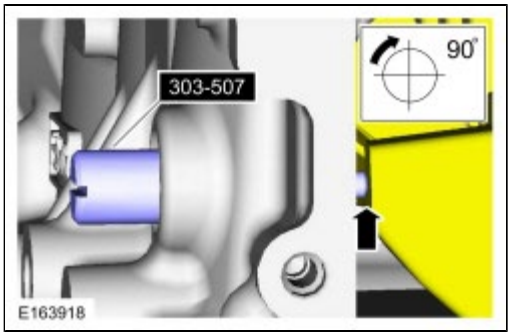

12. If necessary, replace any tappets with the correct tappets selected during the valve clearance check.
    Material : Motorcraft® SAE 5W-30 Premium Synthetic Blend Motor Oil / XO-5W30-QSP (WSS-M2C946-A)

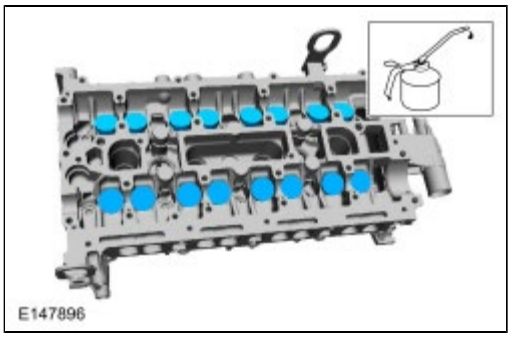

13. **NOTE:** *The exhaust camshaft rear bearing cap must be secured within 10 minutes of Gasket Maker application. If the bearing cap is not secured within 10 minutes, the sealant must be removed and the sealing area cleaned with Motorcraft® Metal Surface Prep.*

    NOTE: *Do not allow Gasket Maker to enter the camshaft bearing journal. If Gasket Maker is applied to the camshaft bearing journal, the journal and sealing area must be cleaned with Motorcraft® Metal Surface Prep.*

    Apply a continuos bead of the specified diameter from the specified tube.
    Material : Flange Sealant / CU7Z-19B508-A (WSS-M2G348-A11)

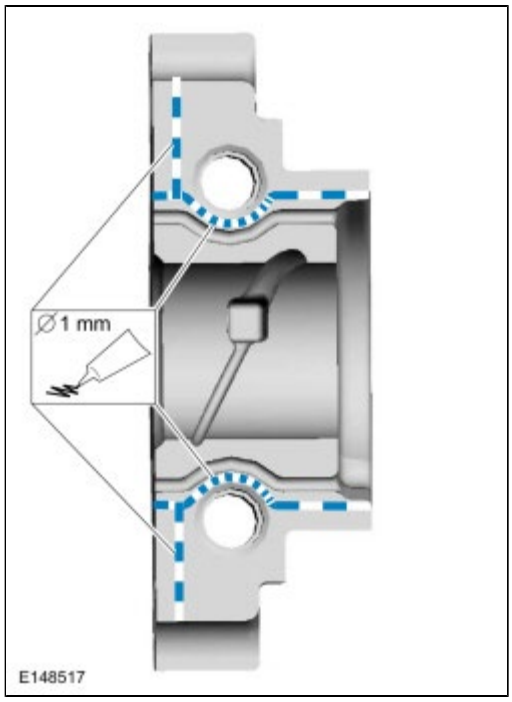

14. **NOTICE: Install the camshafts with the alignment slots in the camshafts lined up so the Camshaft Alignment Plate can be installed without rotating the camshafts. Make sure the lobes on the No. 1 cylinder are in the same position as noted in the removal procedure. Rotating the camshafts when the timing chain is removed, or installing the camshafts 180 degrees out of position can cause severe damage to the valves and pistons.**

    NOTICE: Failure to follow the camshaft tightening procedure can result in damage to the camshafts.

    NOTICE: Wipe off any excess sealer from the fuel injection pump housing sealing surface of the cylinder head and rear camshaft cap.

    NOTE: *Lubricate the camshaft journals and camshaft bearing caps with clean engine oil.*

    - Apply the specified lubricant to the specified component.
    - Tighten the camshaft bearing cap bolts one turn at a time, until finger-tight.
      Material : Motorcraft® SAE 5W-30 Premium Synthetic Blend Motor Oil / XO-5W30-QSP (WSS-M2C946-A)
      Torque :
      Stage 1: 7 Nm
      Stage 2: 16 Nm

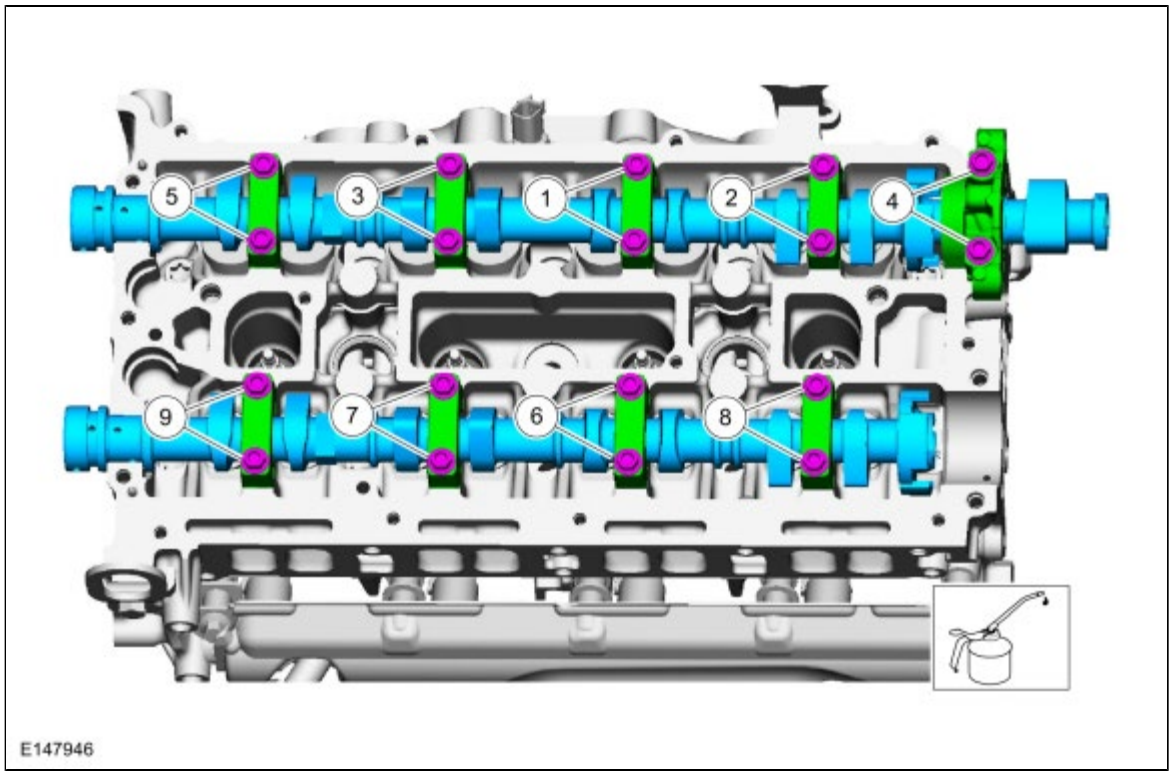

15. Apply the specified lubricant to the specified component.
    Material : Motorcraft® SAE 5W-30 Premium Synthetic Blend Motor Oil / XO-5W30-QSP (WSS-M2C946-A)
    Torque :
    Stage 1: 7 Nm
    Stage 2: 16 Nm

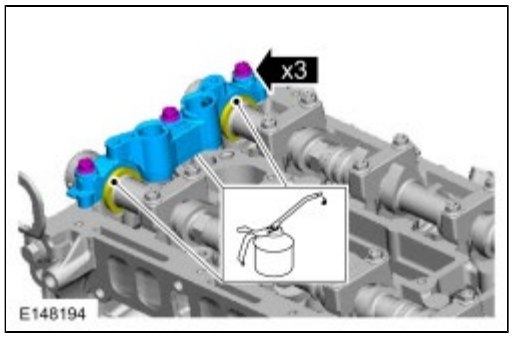

16. *Torque* : 10 Nm

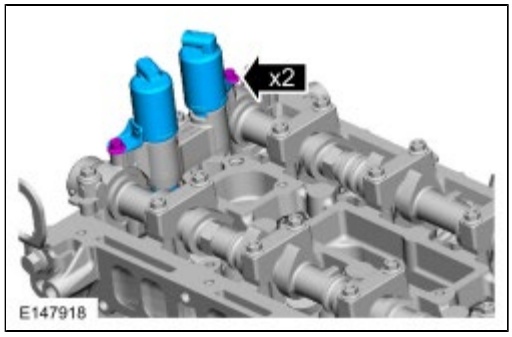

17. **NOTICE: The Camshaft Alignment Tool is for camshaft alignment only. Using this tool to prevent engine rotation can result in engine damage.**

    Install Special Service Tool : 303-1565 Alignment Tool, Camshaft

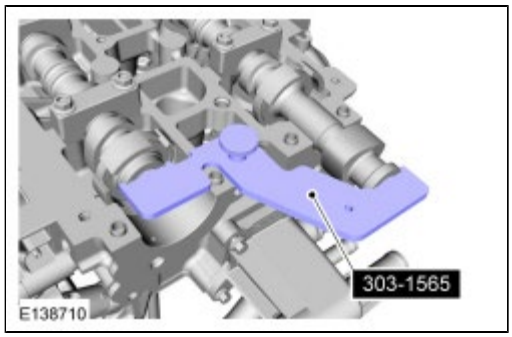

18. Refer to: Variable Valve Timing (VVT) Unit (303-01B Engine - 2.0L EcoBoost (184kW/250PS) - MI4, Removal and Installation).

Copyright © Ford Motor Company

Valve Tappets

Removal

NOTICE: During engine repair procedures, cleanliness is extremely important. Any foreign material, including any material created while cleaning gasket surfaces, that enters the oil passages, coolant passages or the oil pan can cause engine failure.

NOTE: *If the camshafts and valve tappets are to be reused, note the location of the valve tappets to make sure they are assembled in their original positions.*

NOTE: *Removal steps in this procedure may contain installation details.*

1. Refer to: Jacking and Lifting - Overview (100-02 Jacking and Lifting, Description and Operation).
2. Refer to: Camshaft (303-01B Engine - 2.0L EcoBoost (184kW/250PS) - MI4, Removal and Installation).
3. Apply the specified lubricant to the specified component.
   Material : Motorcraft® SAE 5W-30 Premium Synthetic Blend Motor Oil / XO-5W30-QSP (WSS-M2C946-A)

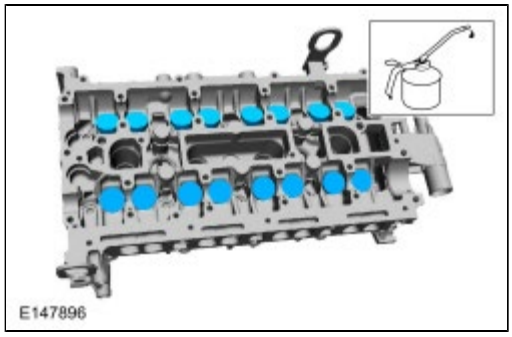

4. **NOTE:** *The number on the valve tappets only reflects the digits that follow the decimal. For example, a tappet with the number 0.650 has the thickness of 3.650 mm.*
   - Visual check.
   - Install new components as necessary.

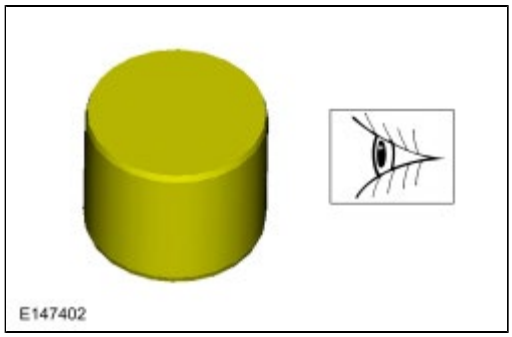

Installation

1. To install, reverse the removal procedure.

Copyright © Ford Motor Company

Valve Springs

Removal

NOTE: *During engine repair procedures, cleanliness is extremely important. Any foreign material, including any material created while cleaning gasket surfaces, that enters the oil passages, coolant passages or the oil pan can cause engine failure.*

1. Refer to: Jacking and Lifting - Overview (100-02 Jacking and Lifting, Description and Operation).
2. Remove the following items:
   1. Refer to: Valve Tappets (303-01B Engine - 2.0L EcoBoost (184kW/250PS) - MI4, Removal and Installation).
   2. Refer to: Spark Plugs (303-07B Engine Ignition - 2.0L EcoBoost (184kW/250PS) - MI4, Removal and Installation).
3. **NOTICE: Use compressed air at 7 to 10 bars (100-150 psi). Do not disconnect the compressed air from the cylinder until the valve spring, valve spring retainer and valve collet is installed. Any loss of air pressure will allow the valve to fall into the cylinder.**

   NOTE: *Using some multi-purpose grease and a small screwdriver will aid in the removal of the valve collet.*

   1. Apply compressed air to the cylinder.
   2. Remove the valve collet, valve spring retainer and the valve spring.
      Special Tool(s) : 303-300 (T87C-6565-A) Set, Valve Spring Compressor , 303-350 (T89P-6565-A) Compressor, Valve Spring , 303-472 (T94P-6565-AH) Adapter, Valve Spring Compressor , 303-1249 Valve Spring Compressor
      Material : Multi-Purpose Grease / Motorcraft® XL-5 (aerosol), CRC® SL3151 (ESB-M1C93-B)

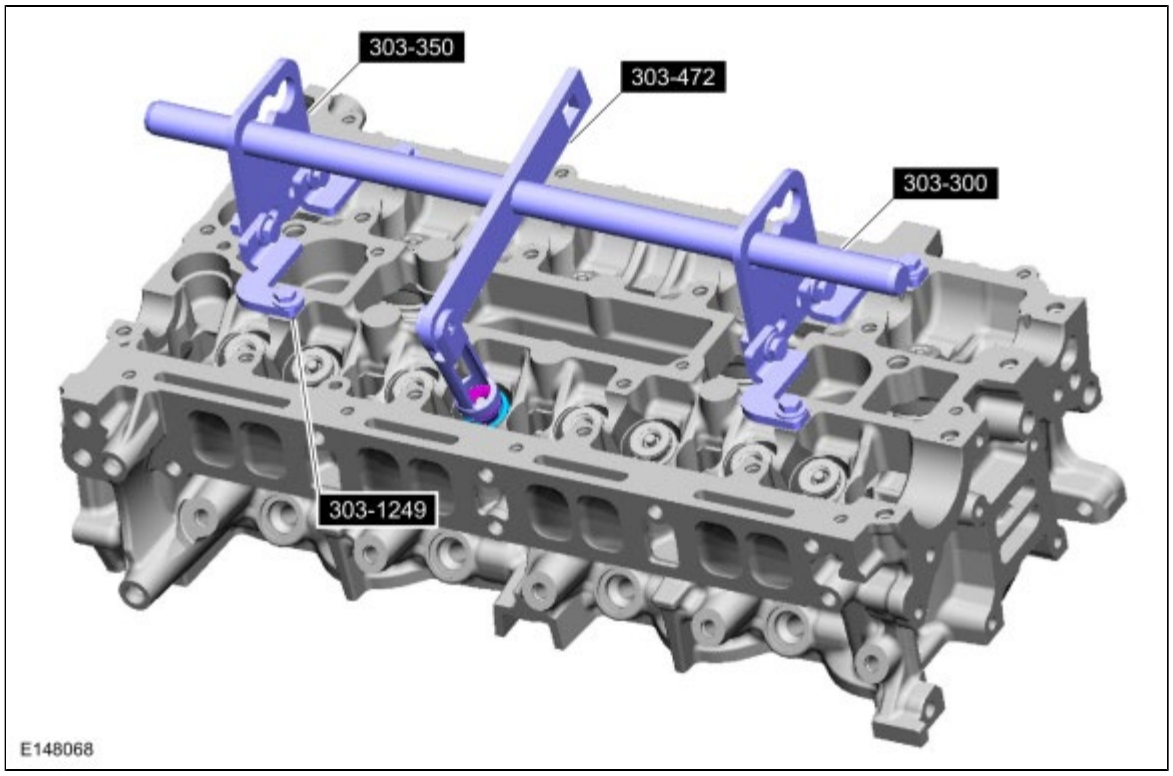

Installation

1. **NOTE:** *Using some multi-purpose grease and a small screwdriver will aid in the installation of the valve collet. Check the seating of the valve collet.*

   1. Install the valve spring, the valve spring retainer and the valve collet.
   2. Disconnect the compressed air supply.

3. Repeat the appropriate installation steps for all of the other cylinders.
   Special Tool(s) : 303-300 (T87C-6565-A) Set, Valve Spring Compressor , 303-350 (T89P-6565-A) Compressor, Valve Spring , 303-472 (T94P-6565-AH) Adapter, Valve Spring Compressor , 303-1249 Valve Spring Compressor
   Material : Multi-Purpose Grease / Motorcraft® XL-5 (aerosol), CRC® SL3151 (ESB-M1C93-B)

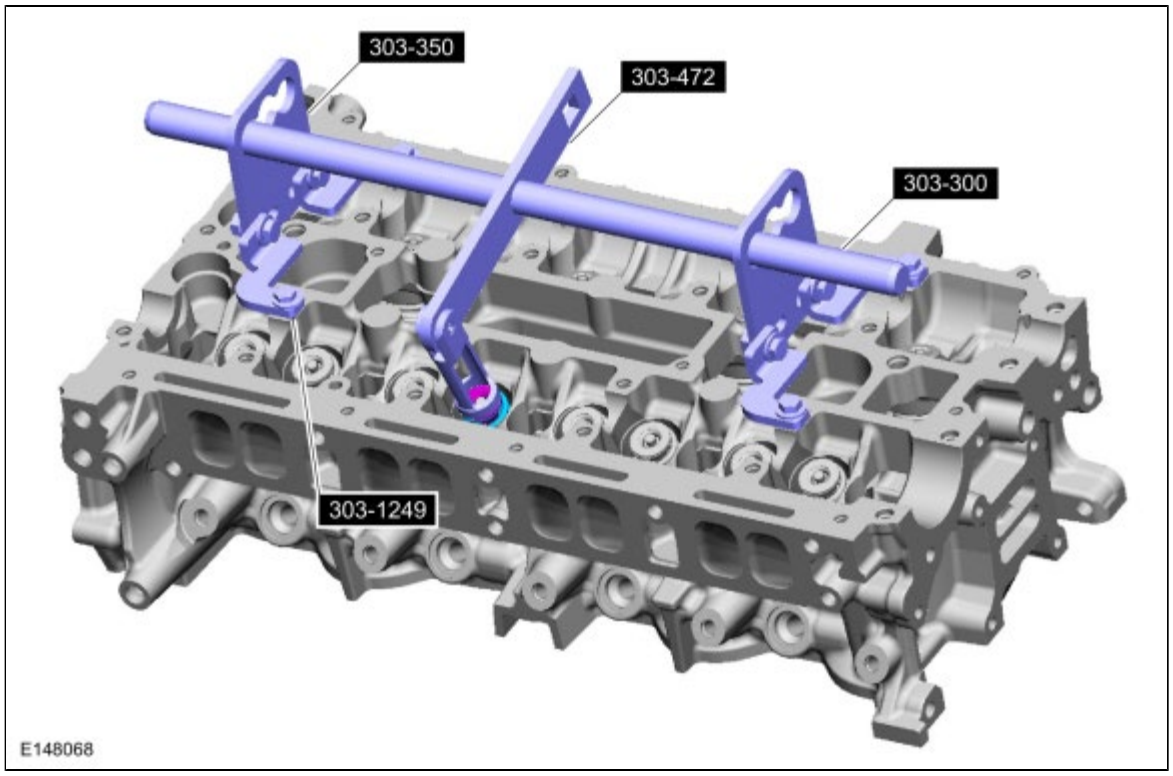

2. Install the following items:
   1. Refer to: Spark Plugs (303-07B Engine Ignition - 2.0L EcoBoost (184kW/250PS) - MI4, Removal and Installation).
   2. Refer to: Valve Tappets (303-01B Engine - 2.0L EcoBoost (184kW/250PS) - MI4, Removal and Installation).

Copyright © Ford Motor Company

Cylinder Head

Removal

NOTICE: Do not loosen or remove the crankshaft pulley bolt without first installing the special tools as instructed in this procedure. The crankshaft pulley and the crankshaft timing sprocket are not keyed to the crankshaft. The crankshaft, the crankshaft sprocket and the pulley are fitted together by friction, using diamond washers between the flange faces on each part. For that reason, the crankshaft sprocket is also unfastened if the pulley bolt is loosened. Before any repair requiring loosening or removal of the crankshaft pulley bolt, the crankshaft and camshafts must be locked in place by the special service tools, otherwise severe engine damage can occur.

NOTICE: During engine repair procedures, cleanliness is extremely important. Any foreign material, including any material created while cleaning gasket surfaces, that enters the oil passages, coolant passages or the oil pan can cause engine failure.

1. Refer to: Jacking and Lifting - Overview (100-02 Jacking and Lifting, Description and Operation).
2. Refer to: Fuel System Pressure Release (310-00B Fuel System - General Information, General Procedures).
3. Refer to: Turbocharger (303-04C Fuel Charging and Controls - Turbocharger - 2.0L EcoBoost (184kW/250PS) - MI4, Removal and Installation).
4. Discard the specified component. Follow local disposal regulations.

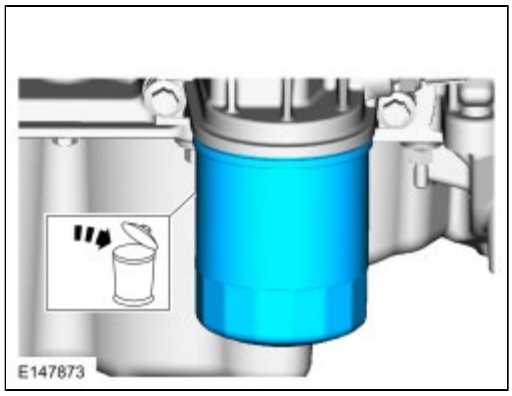

5. Remove the following items:
   1. Refer to: Fuel Injector (303-04B Fuel Charging and Controls - 2.0L EcoBoost (184kW/250PS) - MI4, Removal and Installation).
   2. Refer to: Valve Tappets (303-01B Engine - 2.0L EcoBoost (184kW/250PS) - MI4, Removal and Installation).
6.

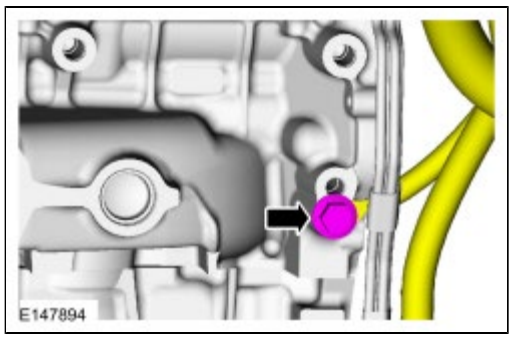

7.

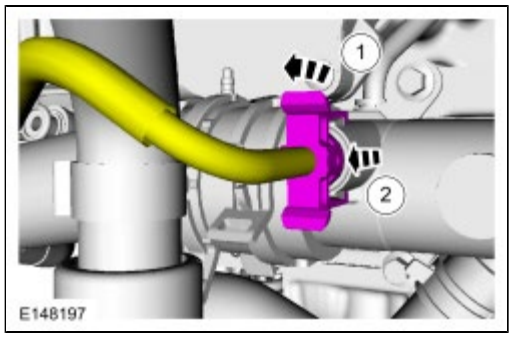

8.

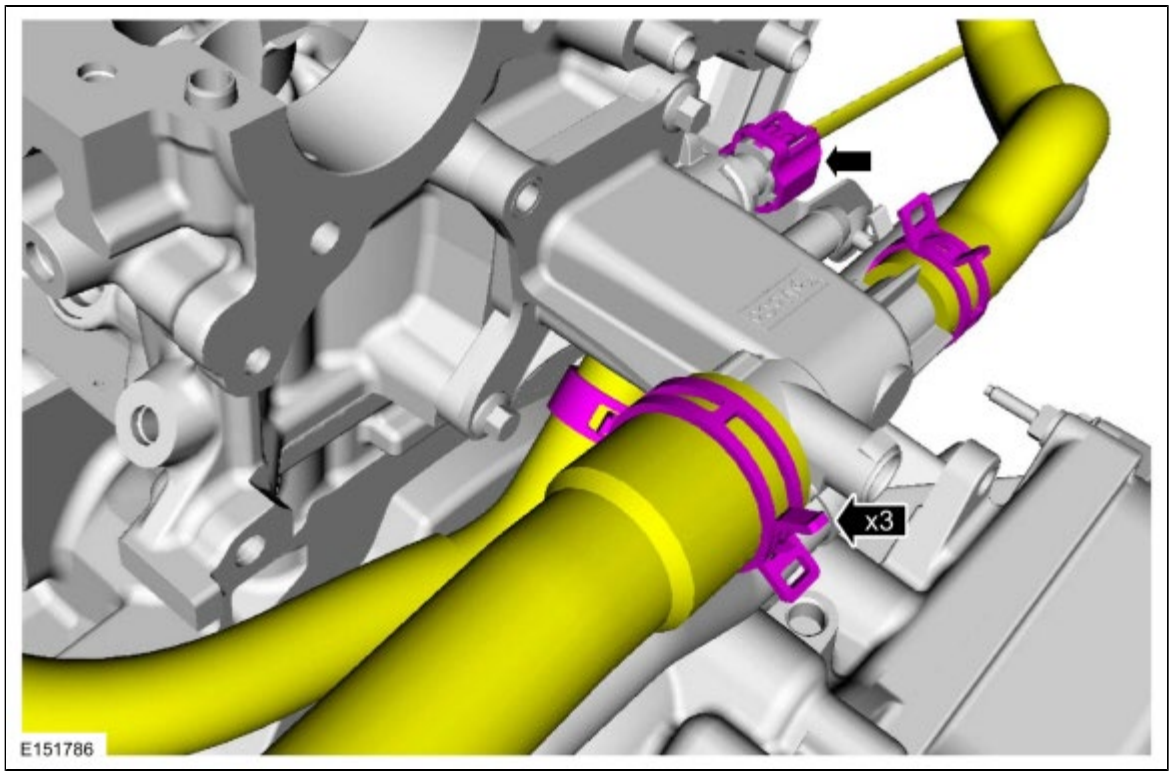

9.

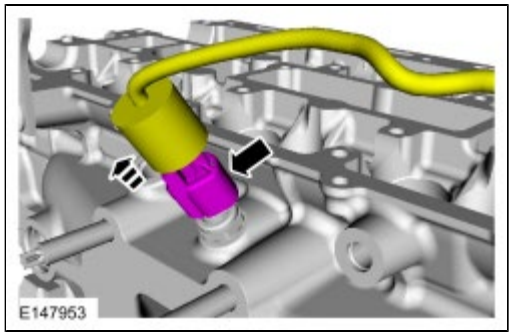

10. Discard the specified component. Follow local disposal regulations.

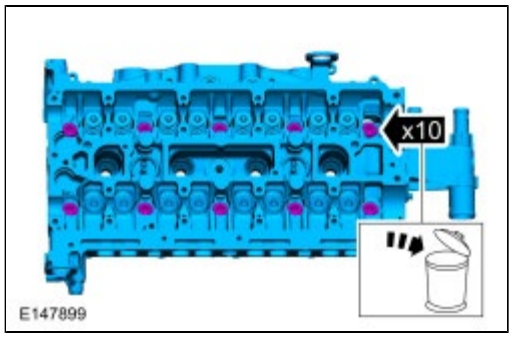

11. Discard the specified component. Follow local disposal regulations.

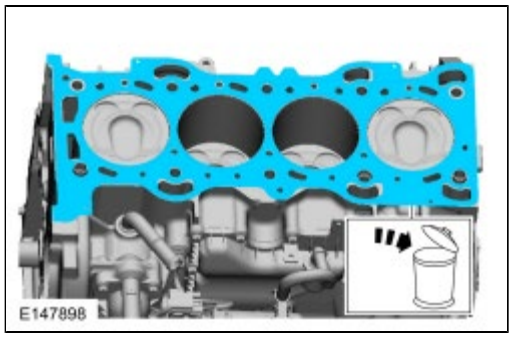

Installation

1. **NOTICE: Do not use metal scrapers, wire brushes, power abrasive discs or other abrasive means to clean the sealing surfaces. These tools cause scratches and gouges that make leak paths. Use a plastic scraping tool to remove all traces of the head gasket.**

   NOTE: *Observe all warnings or cautions and follow all application directions contained on the packaging of the metal surface prep.*

   NOTE: *Clean the cylinder head bolt holes in the cylinder block. Make sure all coolant, oil or other foreign material is removed.*

   Clean the specified component with the specified material.
   Material : Motorcraft® Metal Surface Prep / ZC-31-A

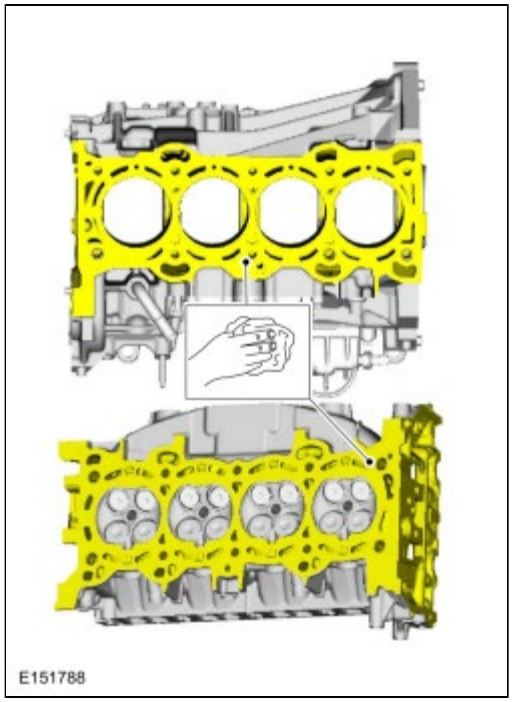

2. Refer to: Cylinder Head Distortion (303-00 Engine System - General Information, General Procedures).

3.

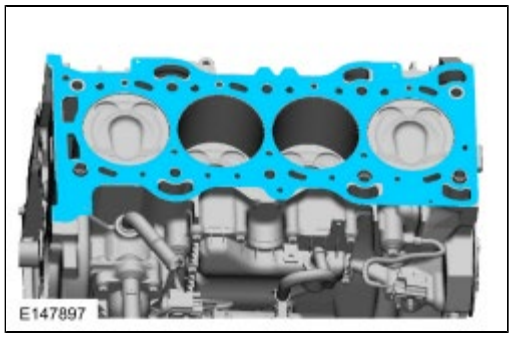

4. **NOTE:** *The cylinder head bolts are torque-to-yield and must not be reused. New cylinder head bolts must be installed.*

Torque :
Stage 1: 7 Nm
Stage 2: 15 Nm
Stage 3: 55 Nm
Stage 4: 90°
Stage 5: Tighten an additional 90°

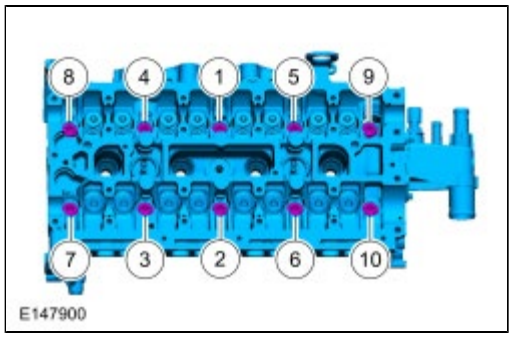

5.

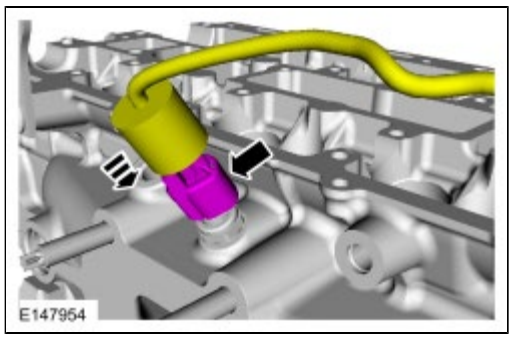

6.

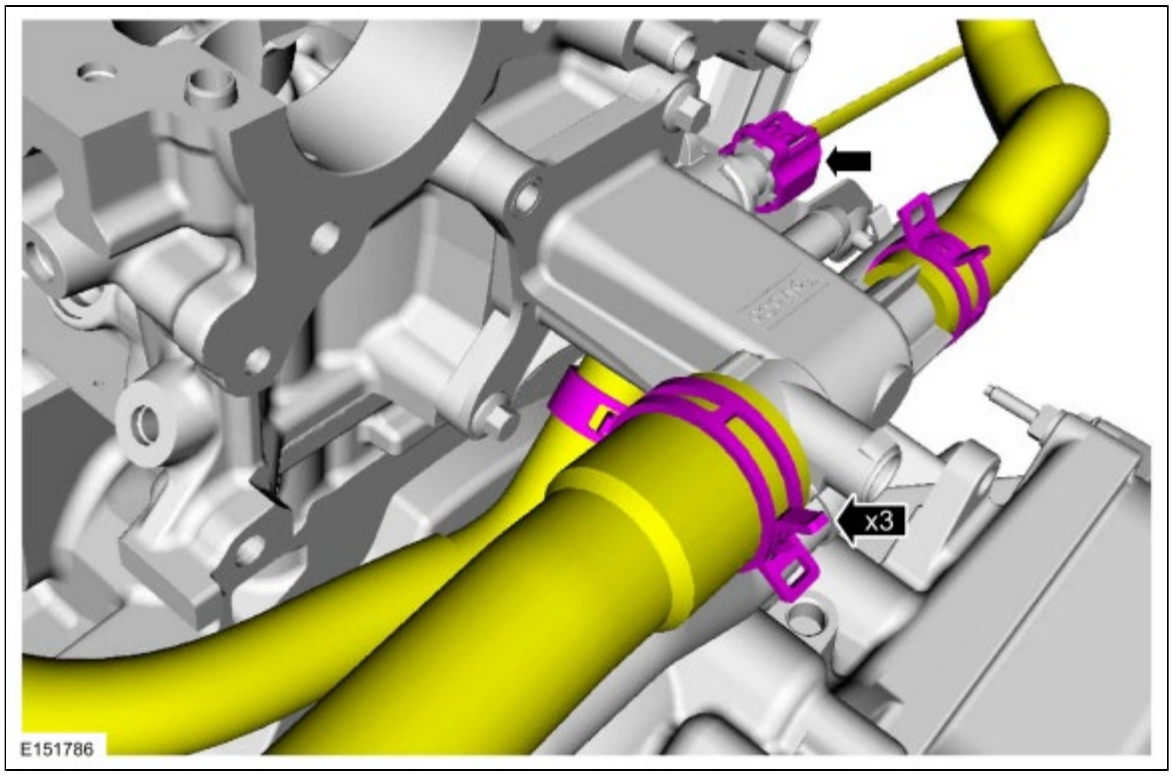

7.

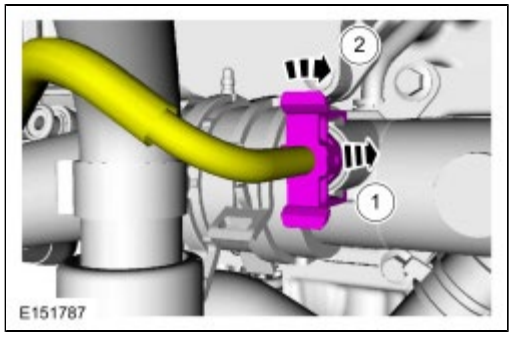

8. *Torque* : 20 Nm

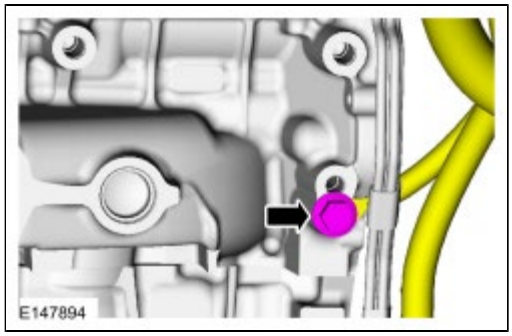

9. Install the following items:
    1. Refer to: Valve Tappets (303-01B Engine - 2.0L EcoBoost (184kW/250PS) - MI4, Removal and Installation).
    2. Refer to: Fuel Injector (303-04B Fuel Charging and Controls - 2.0L EcoBoost (184kW/250PS) - MI4, Removal and Installation).

10. *Torque* : 27 Nm

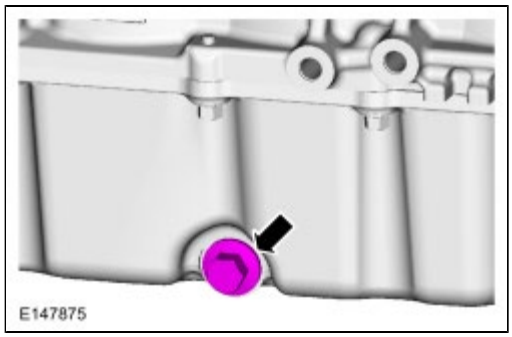

11. Apply the specified lubricant to the specified component.
    Material : Motorcraft® SAE 5W-30 Premium Synthetic Blend Motor Oil / XO-5W30-QSP (WSS-M2C946-A)
    Torque :
    Stage 1: 8 Nm
    Stage 2: 180°

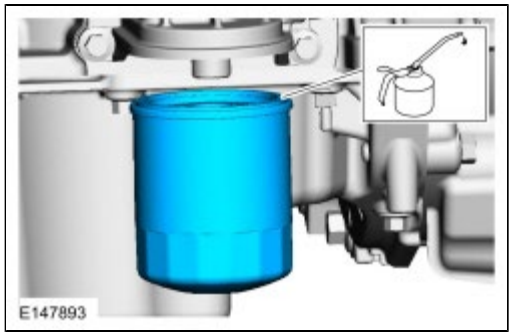

12. Refer to: Turbocharger (303-04C Fuel Charging and Controls - Turbocharger - 2.0L EcoBoost (184kW/250PS) - MI4, Removal and Installation).

13. Fill the engine with clean engine oil.
    Material : Motorcraft® SAE 5W-30 Premium Synthetic Blend Motor Oil / XO-5W30-QSP (WSS-M2C946-A)

Copyright © Ford Motor Company

Oil Pan

Removal

1. Refer to: Jacking and Lifting - Overview (100-02 Jacking and Lifting, Description and Operation).
2. 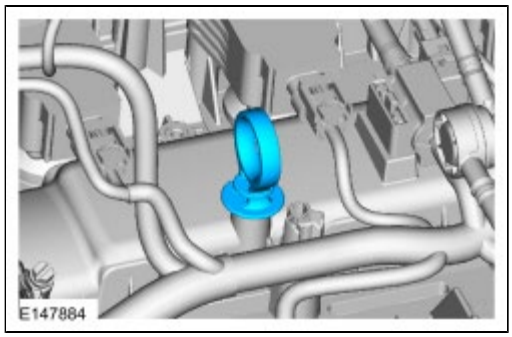

3. Remove the following items:
   1. Refer to: Air Cleaner (303-12B Intake Air Distribution and Filtering - 2.0L EcoBoost (184kW/250PS) - MI4, Removal and Installation).
   2. Refer to: Air Cleaner Outlet Pipe (303-12B Intake Air Distribution and Filtering - 2.0L EcoBoost (184kW/250PS) - MI4, Removal and Installation).
4. **NOTICE: To prevent damage to the transmission, do not loosen the transmission-to-engine fasteners more than 5 mm (0.19 in).**

   Loosen 5 mm (0.19 in).

   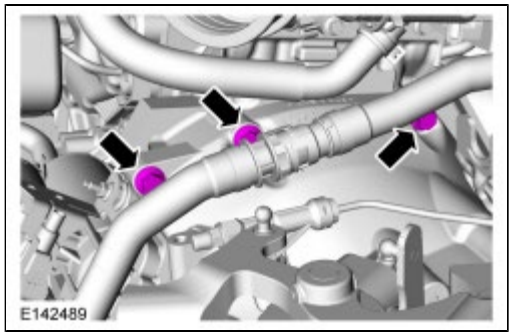

5.

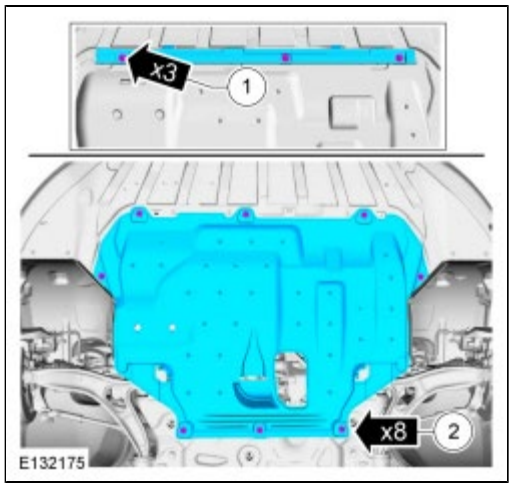

6. *Torque* : 27 Nm

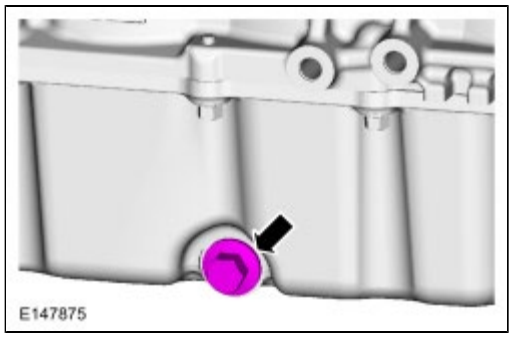

7. Refer to: Air Conditioning (A/C) Compressor Belt (303-05 Accessory Drive - 2.0L EcoBoost (184kW/250PS) - MI4) .

8.

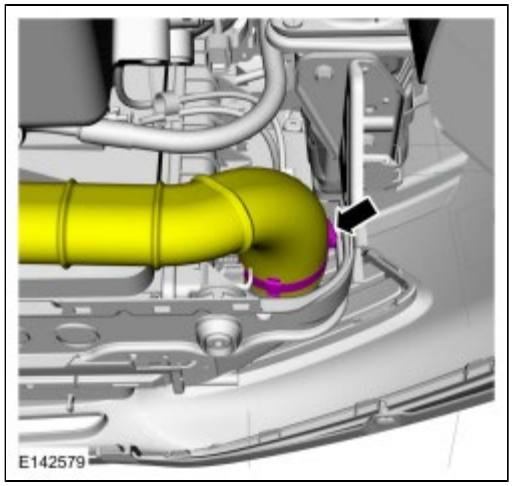

9.

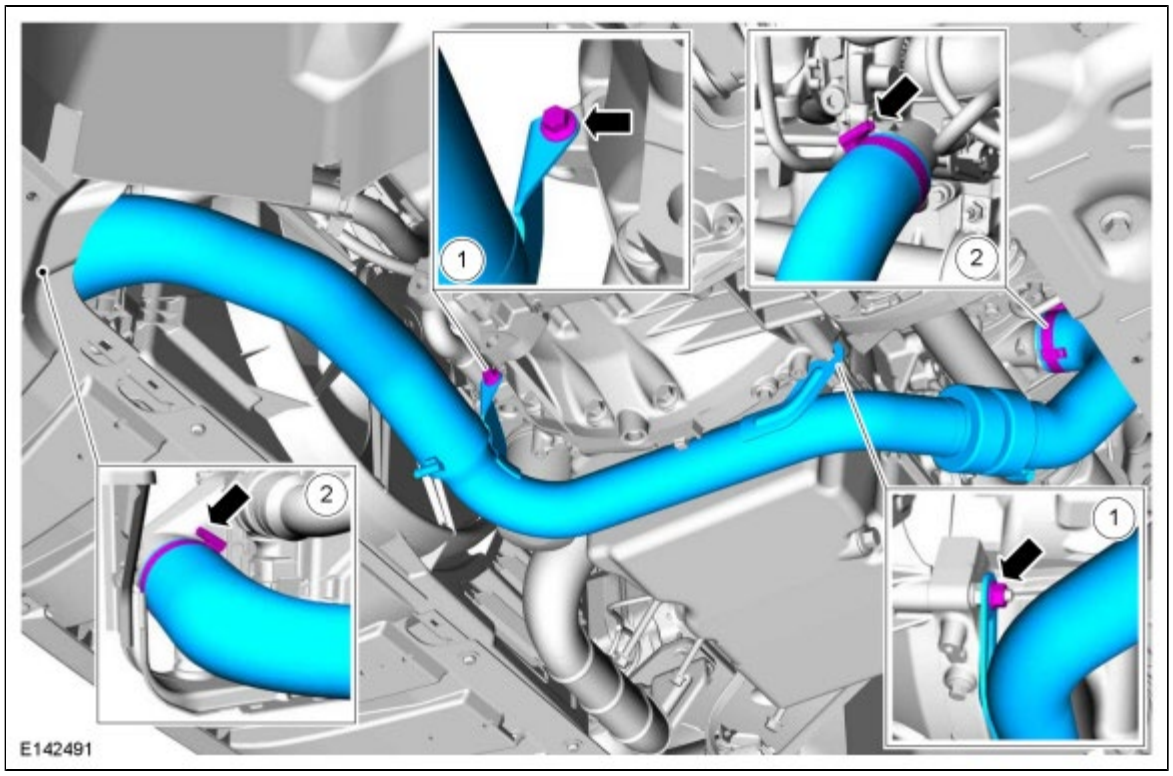

10.

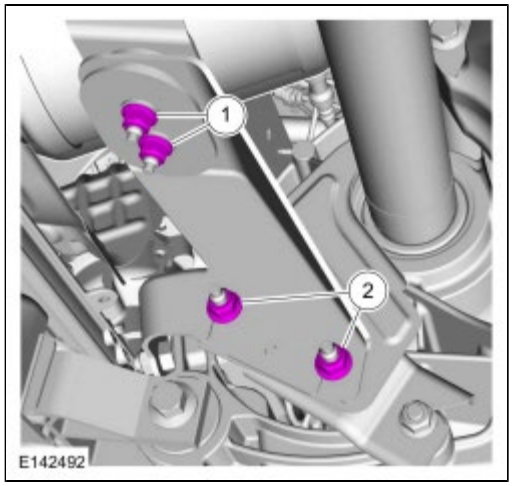

11.

3. If equipped.

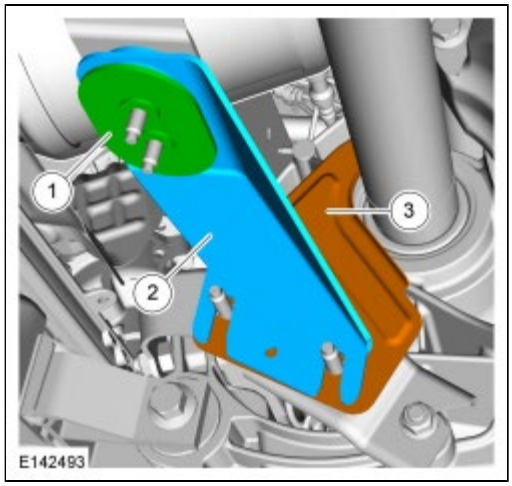

12.

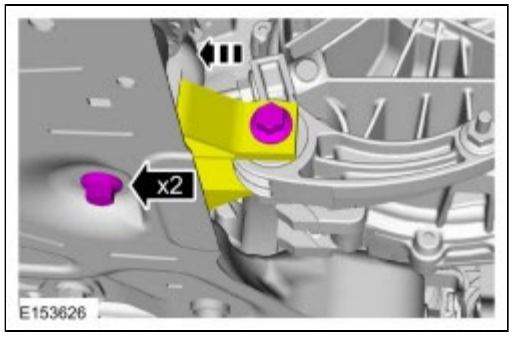

13. Relocate and support the component.

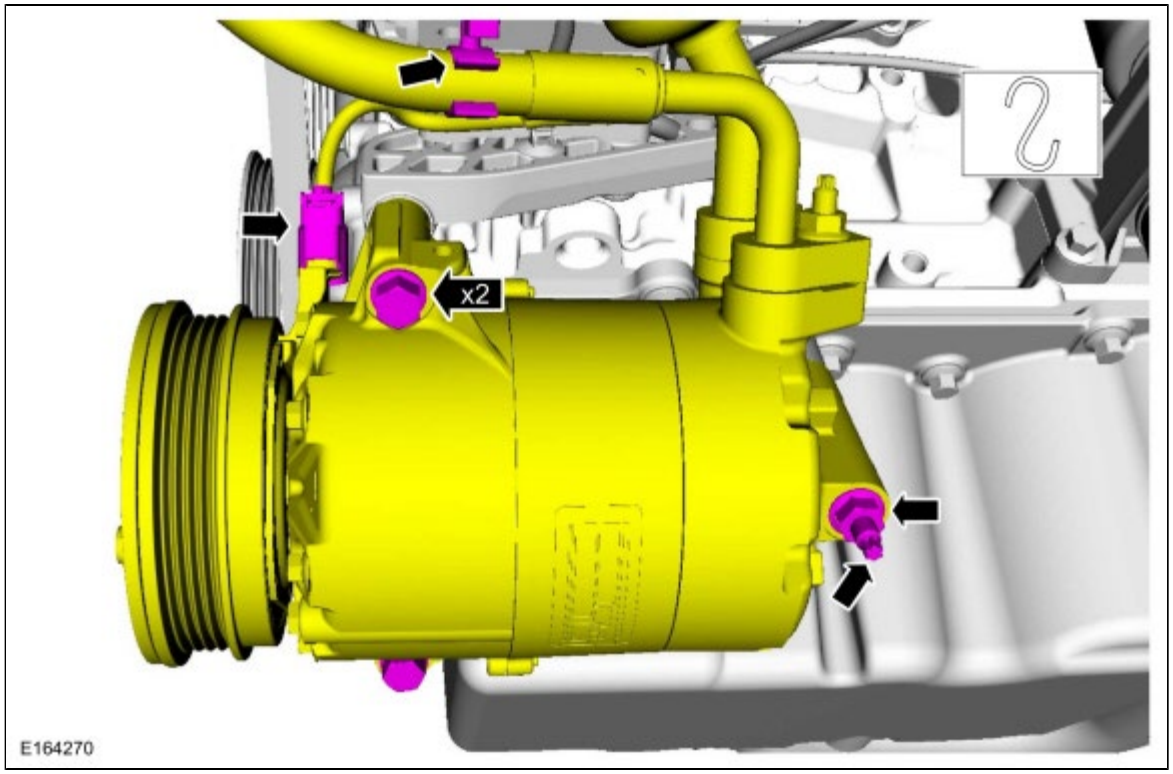

14. **NOTICE: To prevent damage to the transmission, do not loosen the engine-to-transmission fasteners more than 5 mm (0.19 in).**

    Loosen 5 mm (0.19 in).

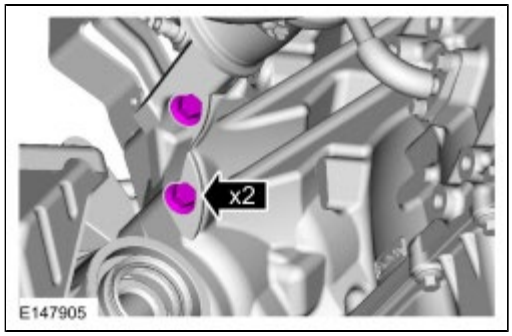

15. **NOTICE: To prevent damage to the transmission, do not loosen the engine-to-transmission fasteners more than 5 mm (0.19 in).**

    Loosen 5 mm (0.19 in).

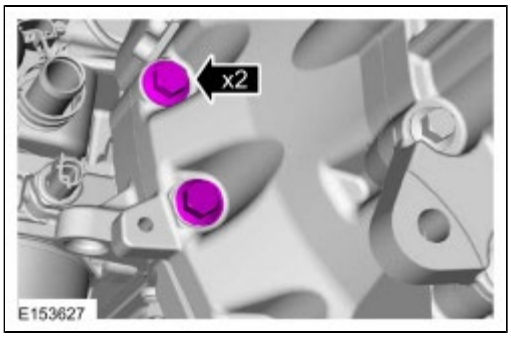

16.

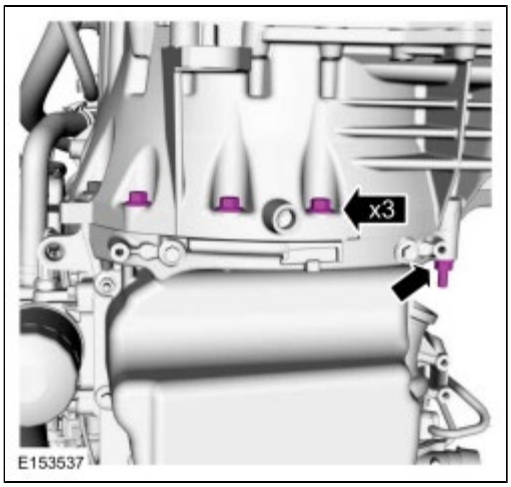

17.

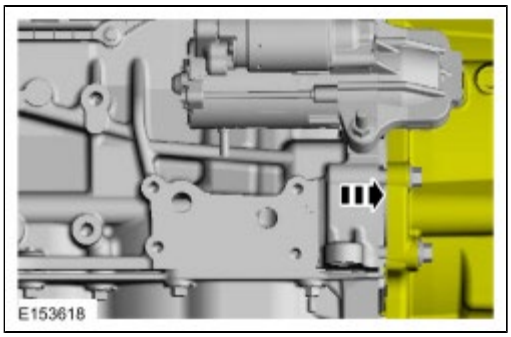

18.

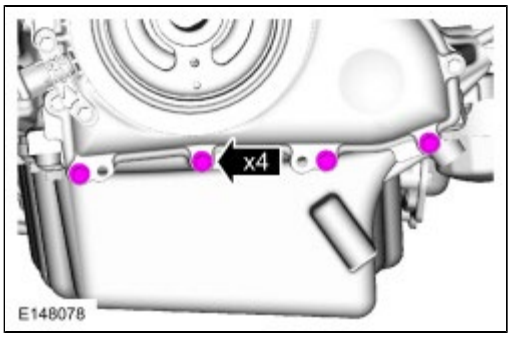

19.

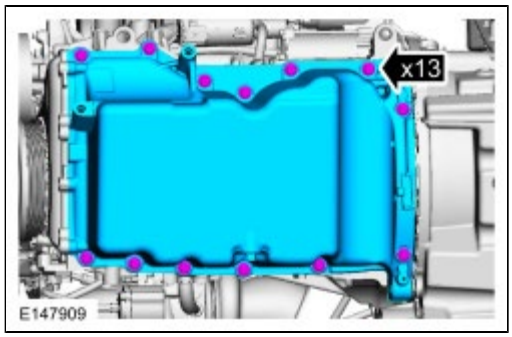

Installation

1. **NOTICE: Do not use metal scrapers, wire brushes, power abrasive discs or other abrasive means to clean the sealing surfaces. These tools cause scratches and gouges, which make leak paths. Use a plastic scraping tool to remove traces of sealant.**

   Plastic scraper.

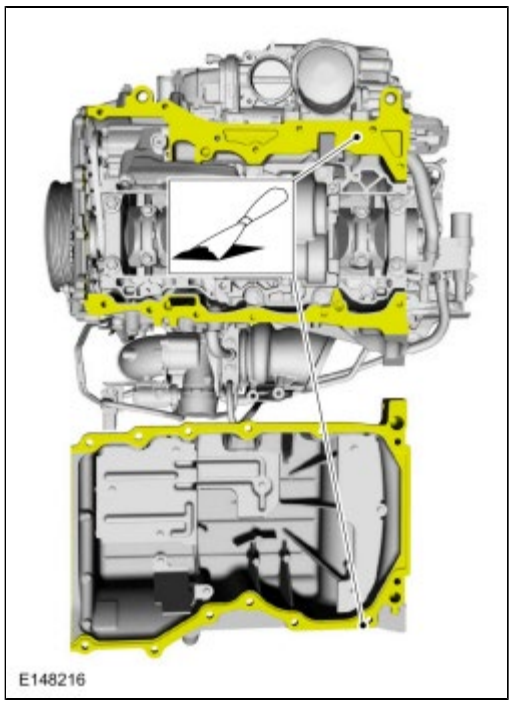

2. **NOTE:** *If the oil pan is not secured within 10 minutes of sealant application, the sealant must be removed and the sealing area cleaned with metal surface prep. Allow to dry until there is no sign of wetness, or 10 minutes, whichever is longer. Failure to follow this procedure can cause future oil leakage.*

   Apply a continuous bead of the specified diameter from the specified tube.
   Material : Silicone Gasket and Sealant / TA-30 (WSE-M4G323-A4)
   Material : Motorcraft® Metal Surface Prep / ZC-31-A

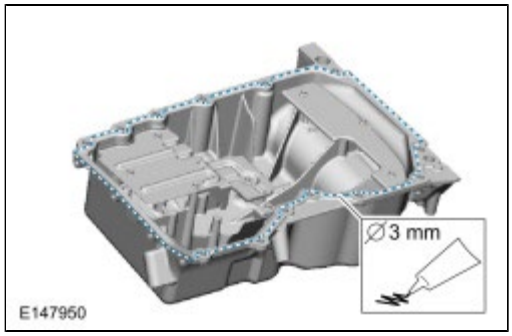

3. **NOTE:** *Only tighten the bolts finger tight at this stage.*

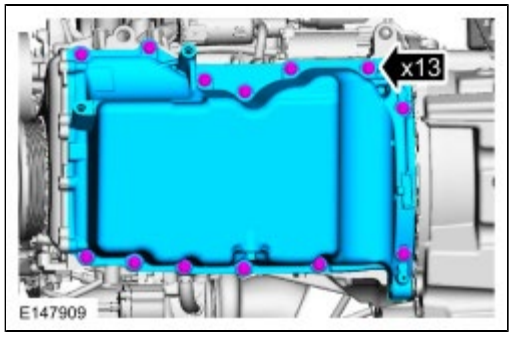

4. **NOTE:** *The engine front cover-to-oil pan fasteners must be tightened first to align the front surface of the oil pan flush with the front surface of the engine block.*

   Torque : 10 Nm

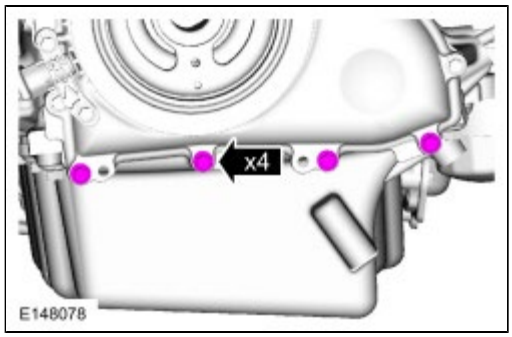

5. *Torque* : 20 Nm

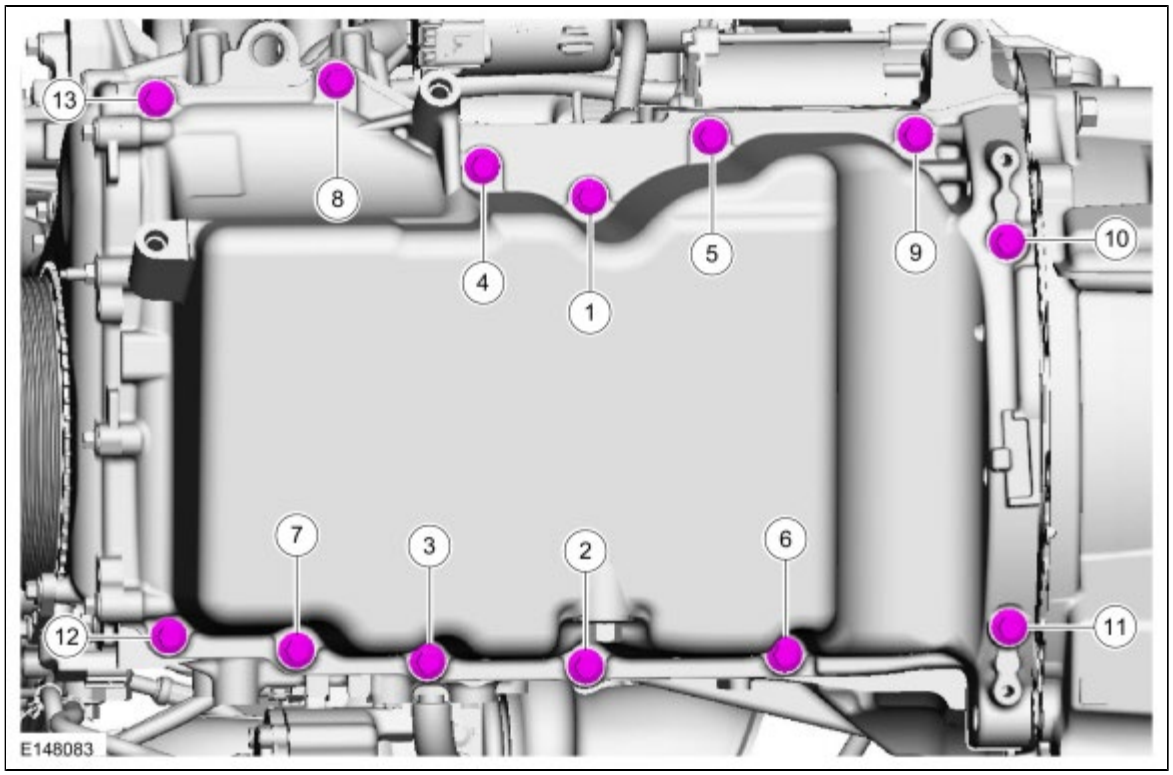

6. Alternate tightening the LH bellhousing-to-engine and RH engine-to-bellhousing lower bolts to draw the transaxle and engine together.
   Torque : 48 Nm

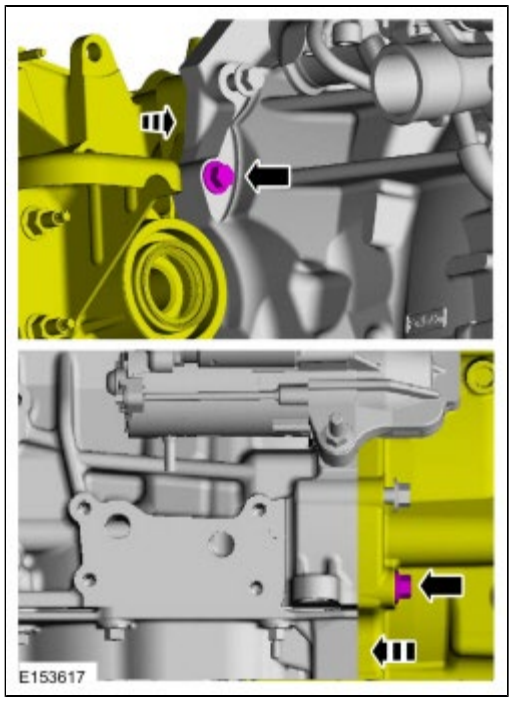

7. *Torque* : 48 Nm

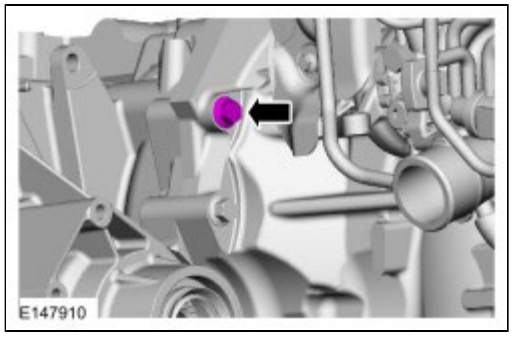

8. *Torque* : 48 Nm

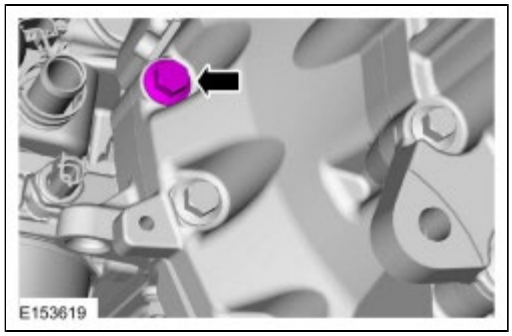

9. *Torque* : 48 Nm

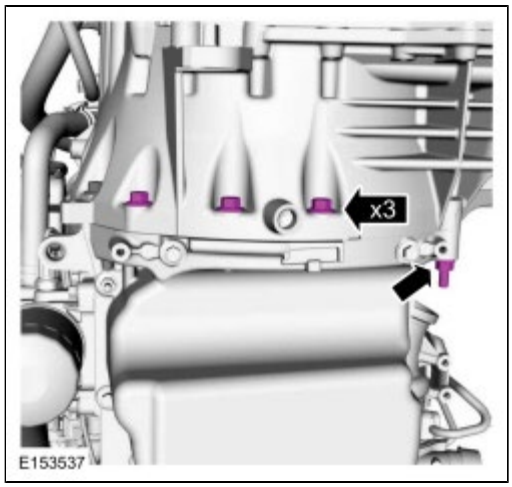

10.

1. *Torque* : 9 Nm
2. *Torque* : 25 Nm
3. *Torque* : 25 Nm

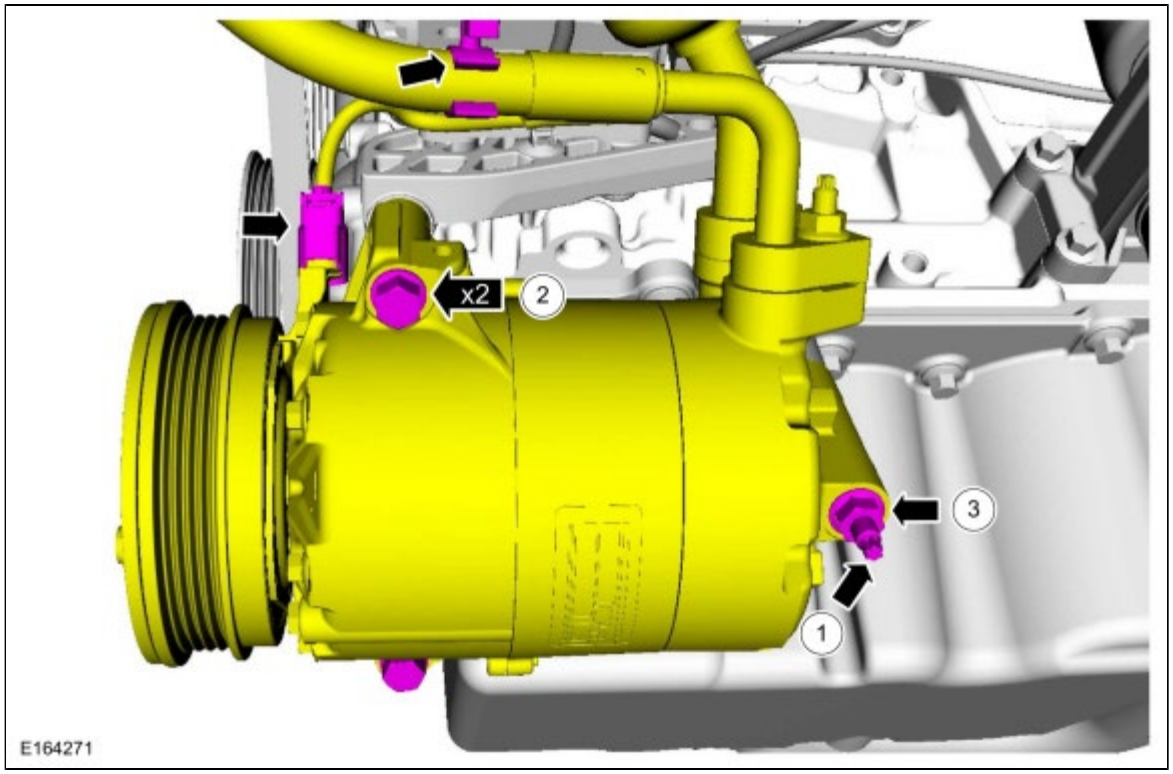

11.

1. *Torque* :
   Stage 1: 30 Nm
   Stage 2: 270°
2. *Torque* : 85 Nm

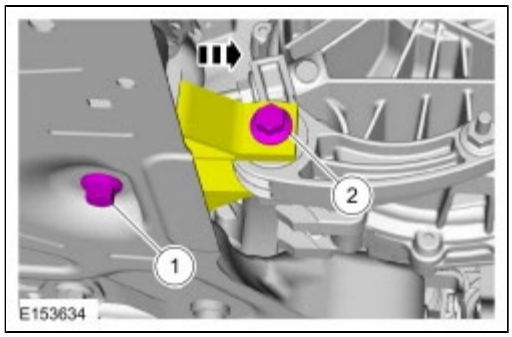

12.

1. If equipped.

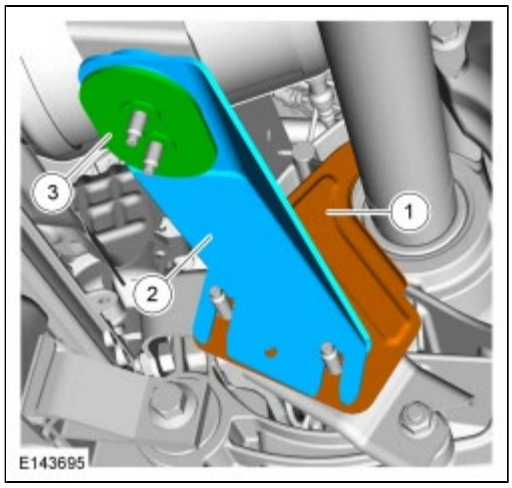

13.

1. *Torque* : 25 Nm
2. *Torque* : 24 Nm

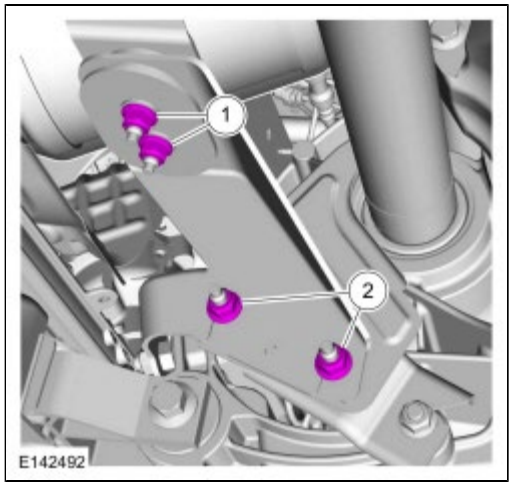

14.

1. *Torque* : 10 Nm

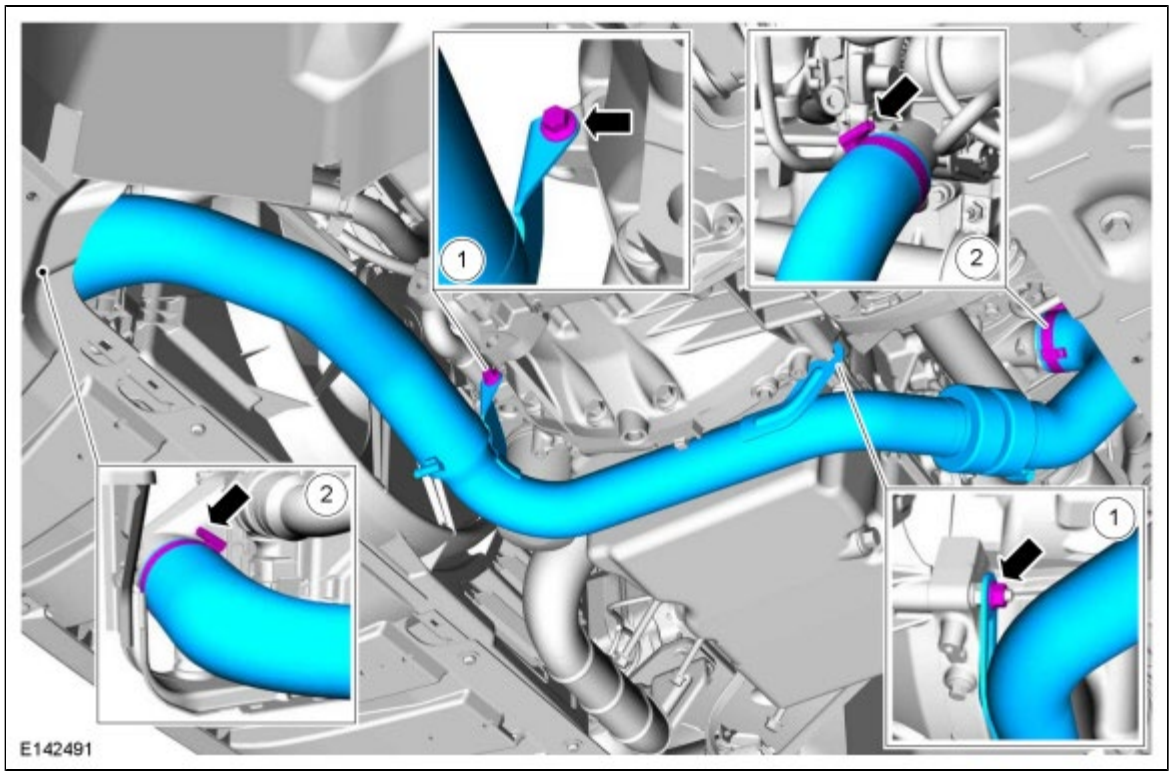

15.

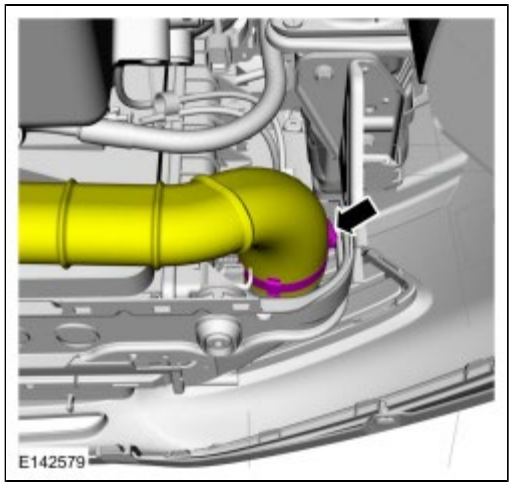

16. Refer to: Air Conditioning (A/C) Compressor Belt (303-05 Accessory Drive - 2.0L EcoBoost (184kW/250PS) - MI4) .

17.

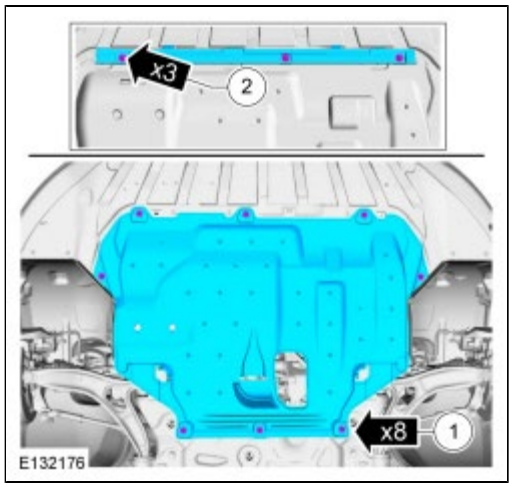

18. *Torque* : 48 Nm

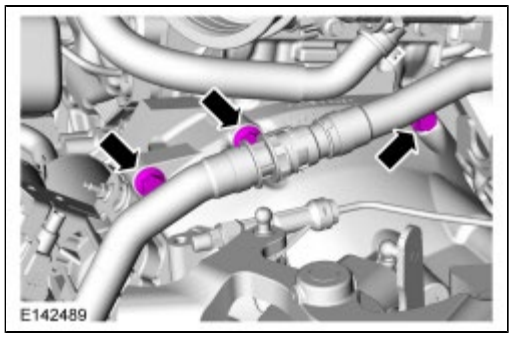

19. Install the following items:
    1. Refer to: Air Cleaner Outlet Pipe (303-12B Intake Air Distribution and Filtering - 2.0L EcoBoost (184kW/250PS) - MI4, Removal and Installation).
    2. Refer to: Air Cleaner (303-12B Intake Air Distribution and Filtering - 2.0L EcoBoost (184kW/250PS) - MI4, Removal and Installation).

20.

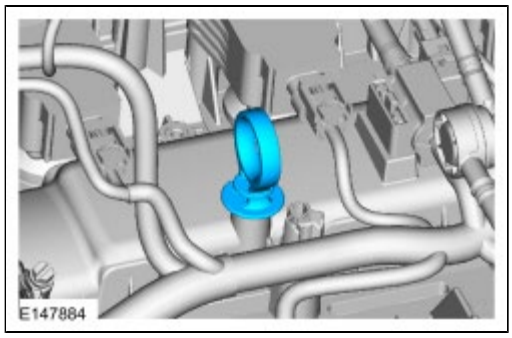

21. Fill the engine with clean engine oil.
    Material : Motorcraft® SAE 5W-30 Premium Synthetic Blend Motor Oil / XO-5W30-QSP (WSS-M2C946-A)

Copyright © Ford Motor Company

Oil Pump

Removal

1. Refer to: Jacking and Lifting - Overview (100-02 Jacking and Lifting, Description and Operation).
2. Refer to: Battery Disconnect and Connect (414-01 Battery, Mounting and Cables, General Procedures).
3. Refer to: Engine Front Cover (303-01B Engine - 2.0L EcoBoost (184kW/250PS) - MI4, Removal and Installation).
4. *Install Special Service Tool* : 303-F072 Support Bar, Engine

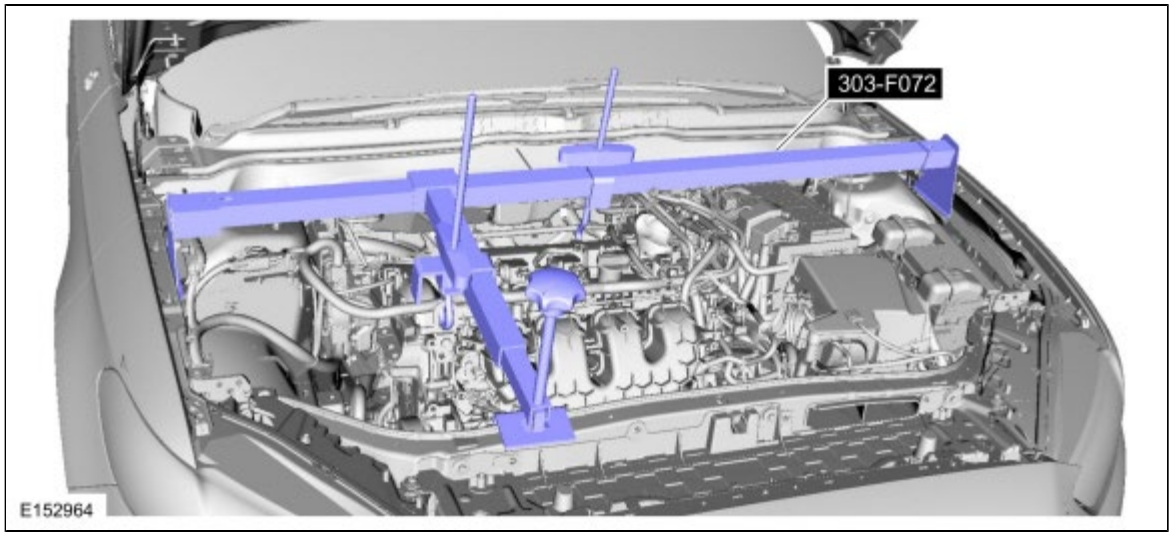

5.

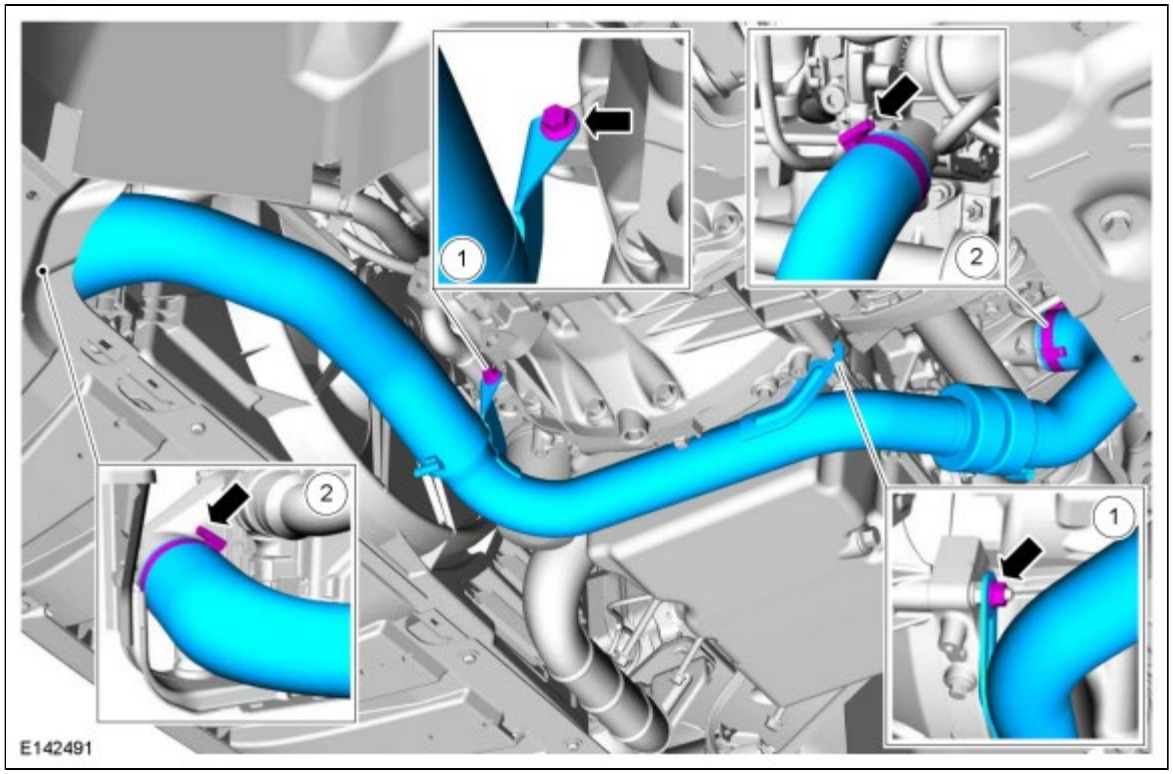

6.

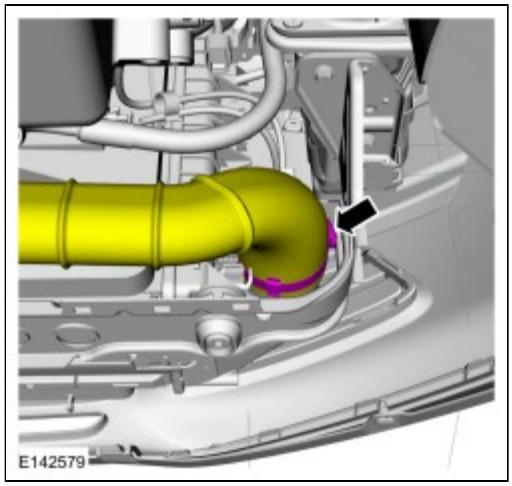

7. Relocate and support the component.

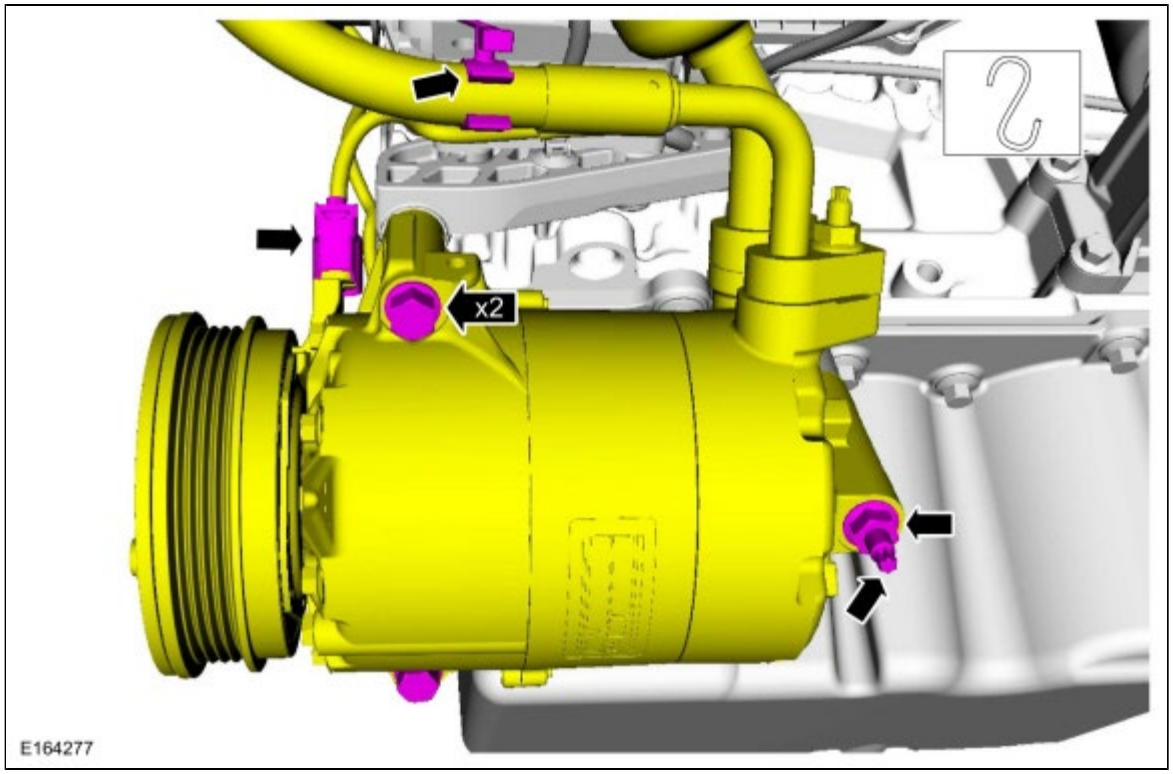

8. *Torque* : 27 Nm

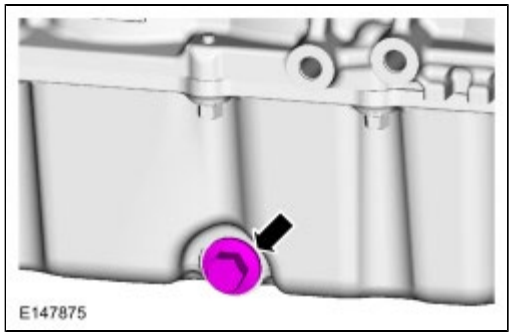

9.

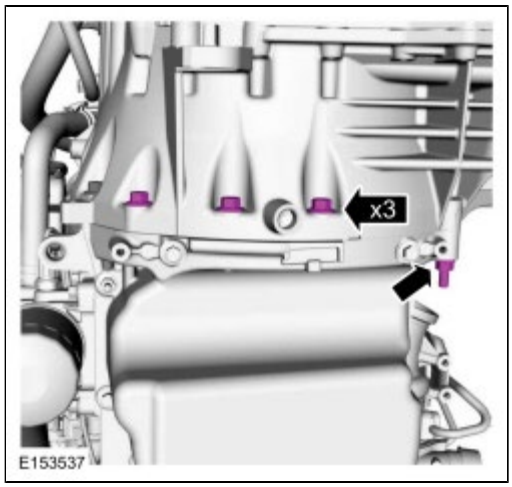

10.

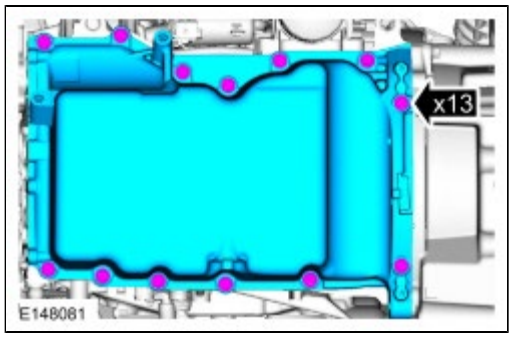

11. Discard the specified component. Follow local disposal regulations.

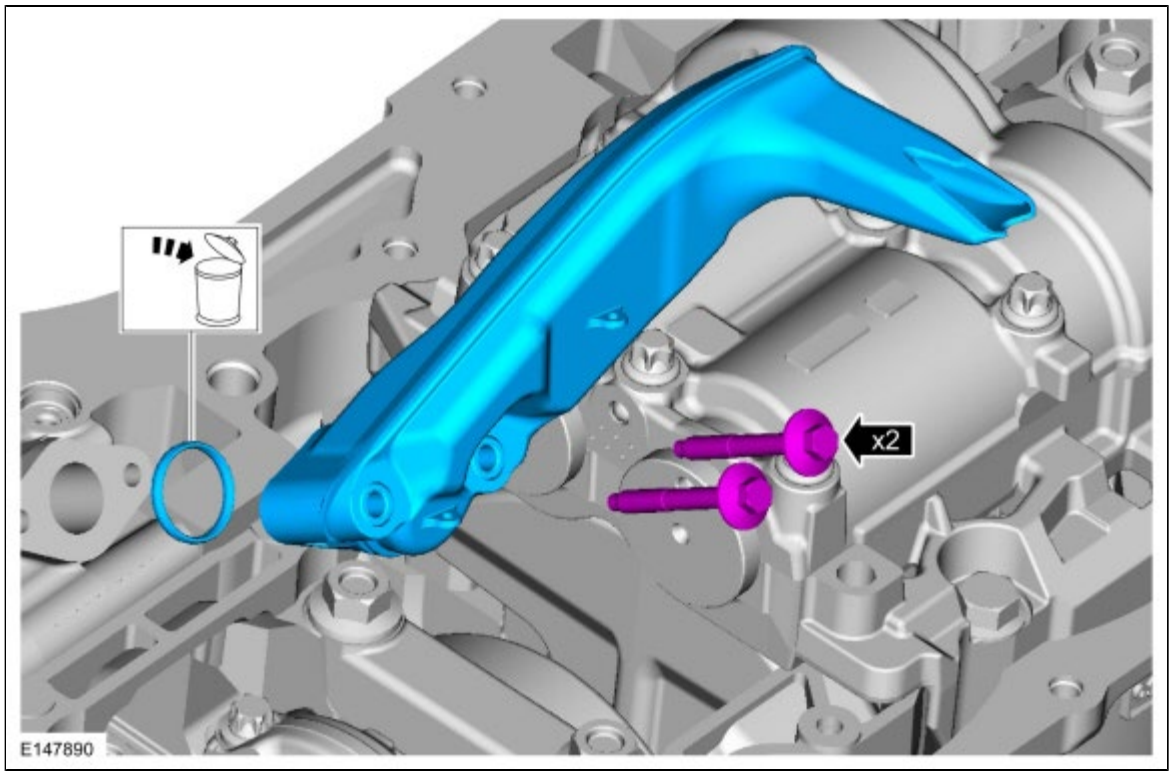

12. **WARNING: Take extra care when handling the compressed spring.**

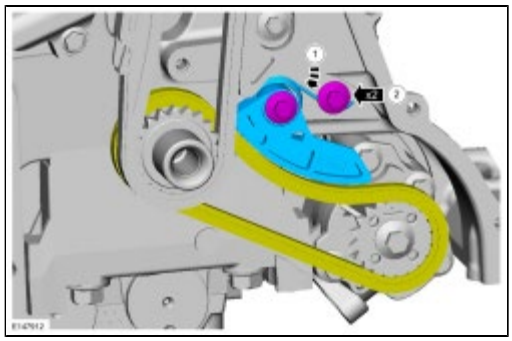

13.

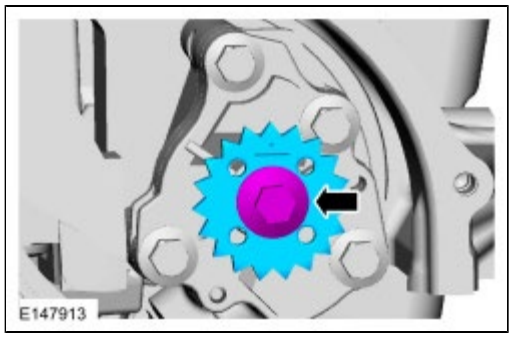

14.

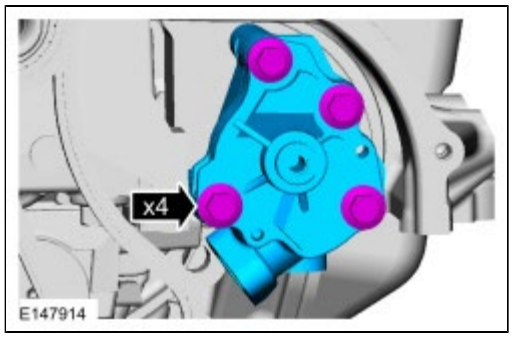

Installation

1. Clean the specified component with the specified material.
   Material : Motorcraft® Metal Surface Prep / ZC-31-A

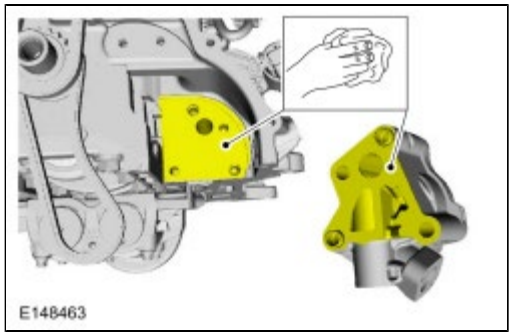

2. Clean the specified component with the specified material.
   Torque :
   Stage 1: 10 Nm
   Stage 2: 20 Nm

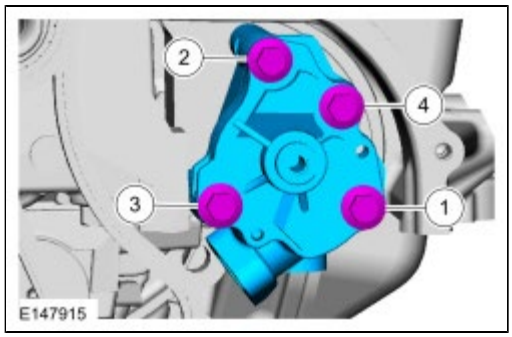

3. *Torque* : 25 Nm

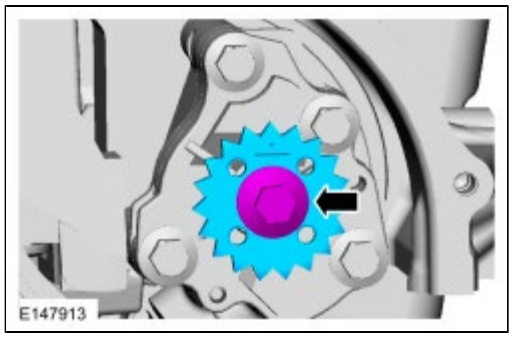

4. **WARNING: Take extra care when handling the compressed spring.**

   Torque : 10 Nm

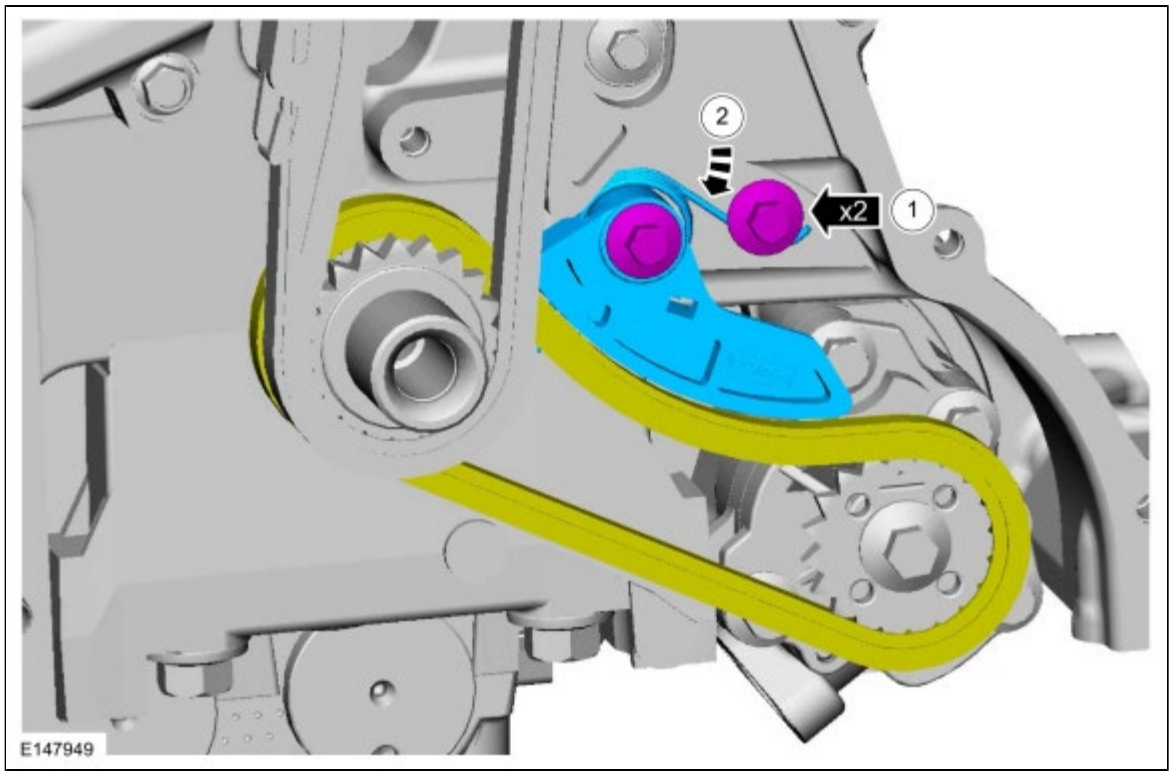

5. *Torque* : 10 Nm

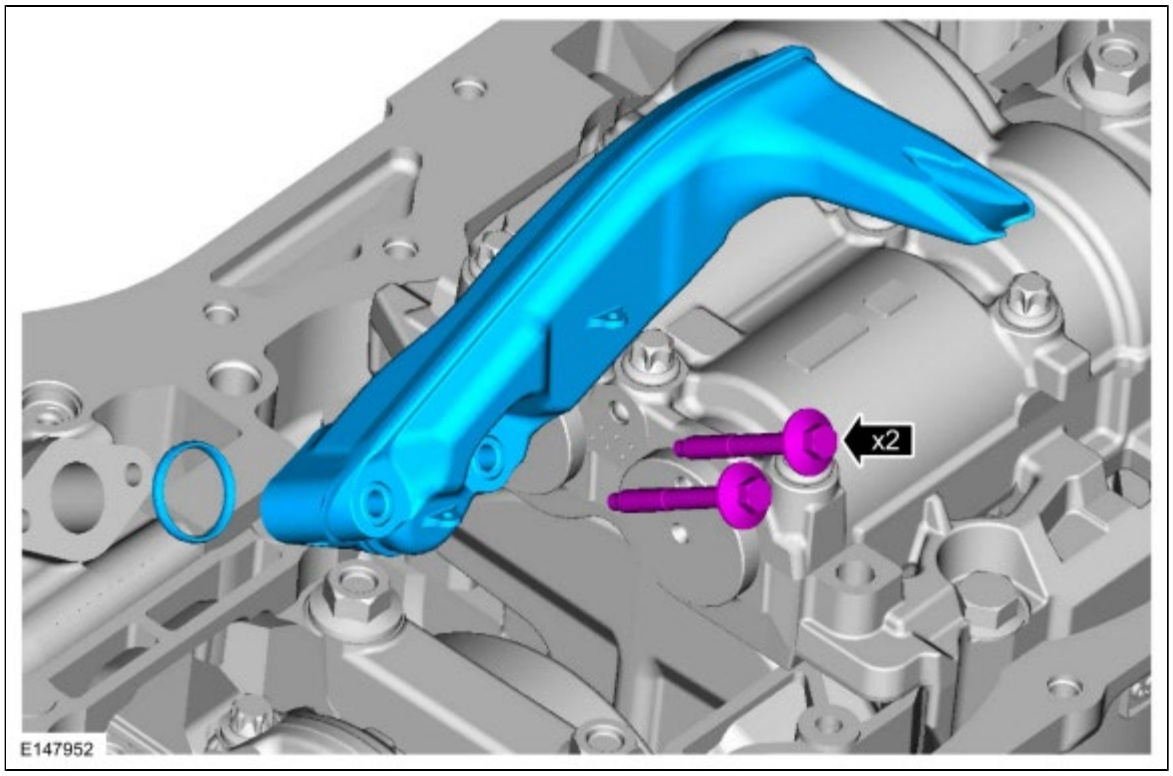

6. **NOTICE: Do not use metal scrapers, wire brushes, power abrasive discs or other abrasive means to clean the sealing surfaces. These tools cause scratches and gouges, which make leak paths. Use a plastic scraping tool to remove traces of sealant.**

   Plastic scraper.

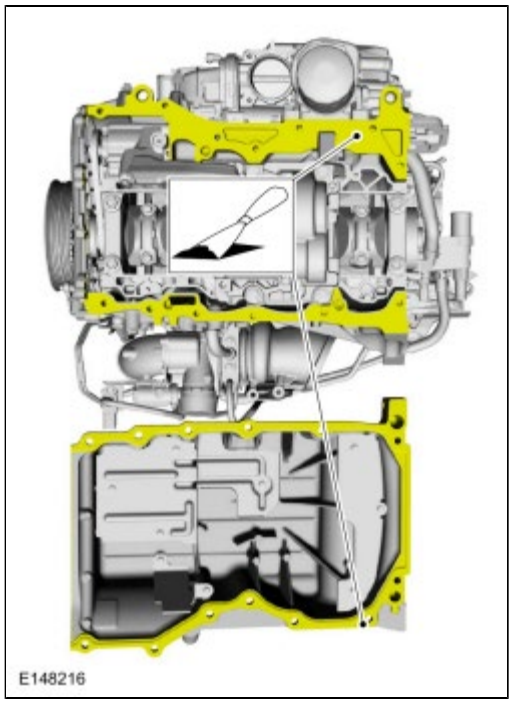

7. **NOTE:** *If the oil pan is not secured within 10 minutes of sealant application, the sealant must be removed and the sealing area cleaned with metal surface prep. Allow to dry until there is no sign of wetness, or 10 minutes, whichever is longer. Failure to follow this procedure can cause future oil leakage.*

   Apply a continuous bead of the specified diameter from the specified tube.
   Material : Silicone Gasket and Sealant / TA-30 (WSE-M4G323-A4)

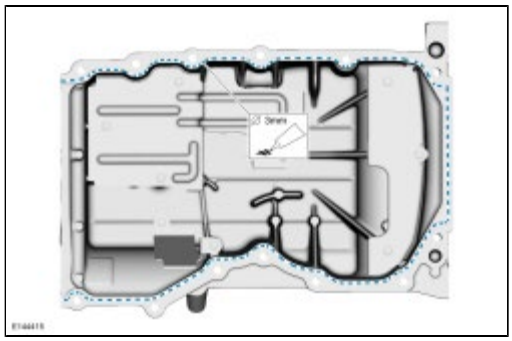

8. **NOTE:** *Only tighten the bolts finger tight at this stage.*

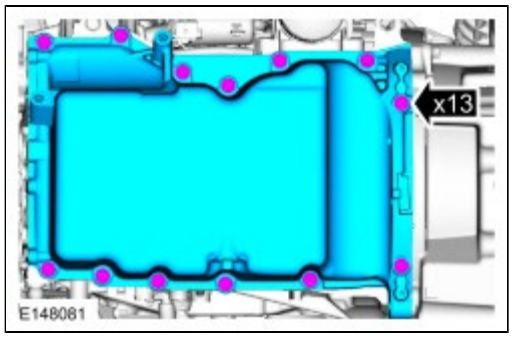

9. Align the front surface of the oil pan flush with the front surface of the engine block.
   General Equipment : Round-Ended Steel Rule

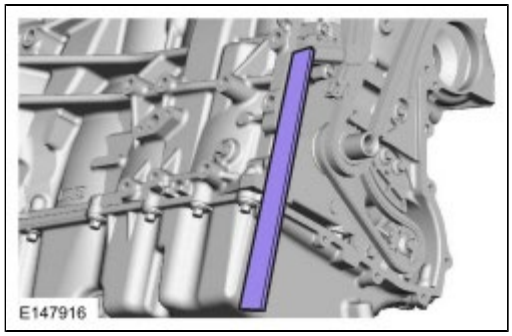

10. *Torque* : 20 Nm

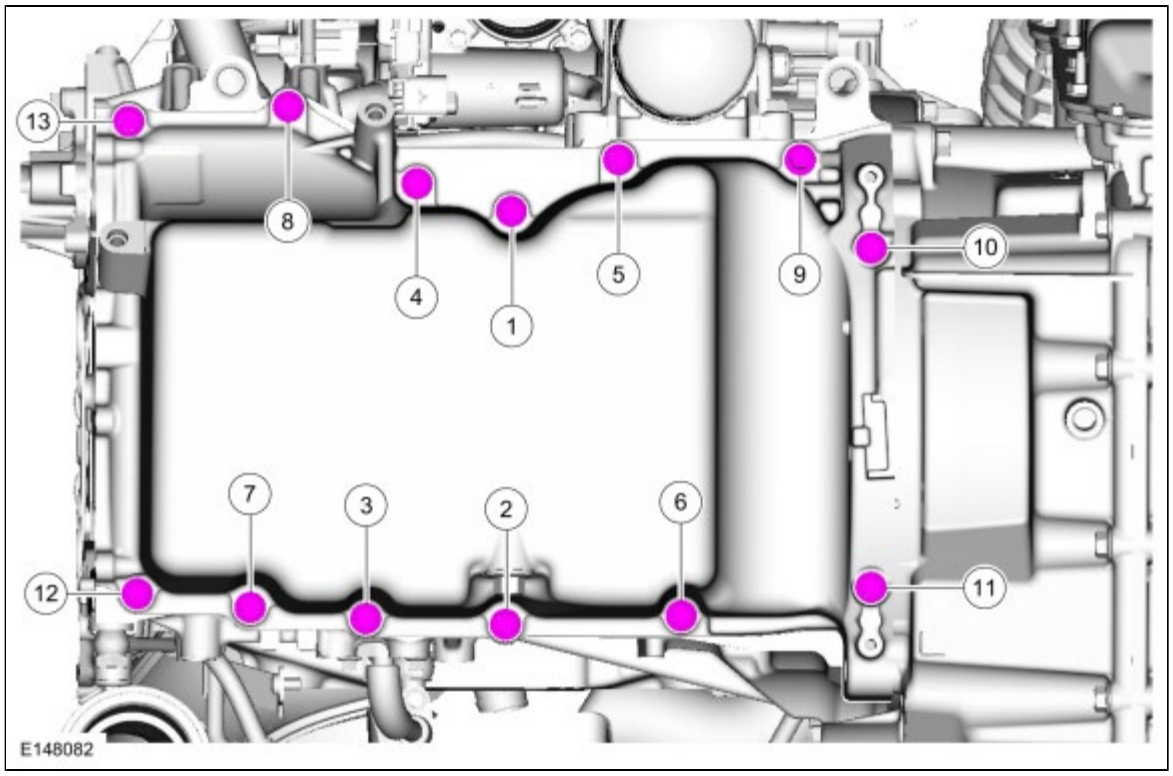

11. *Torque* : 48 Nm

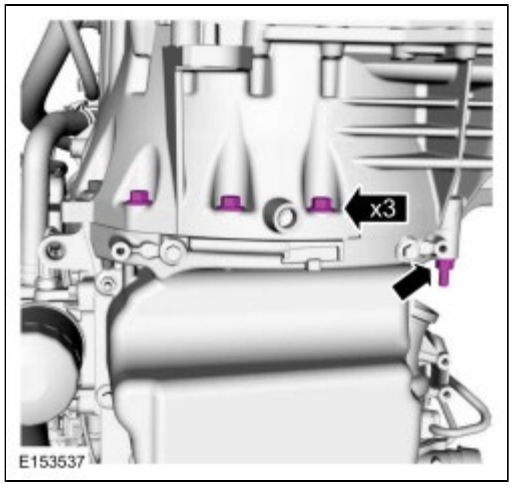

12.
    1. *Torque* : 9 Nm
    2. *Torque* : 25 Nm
    3. *Torque* : 25 Nm

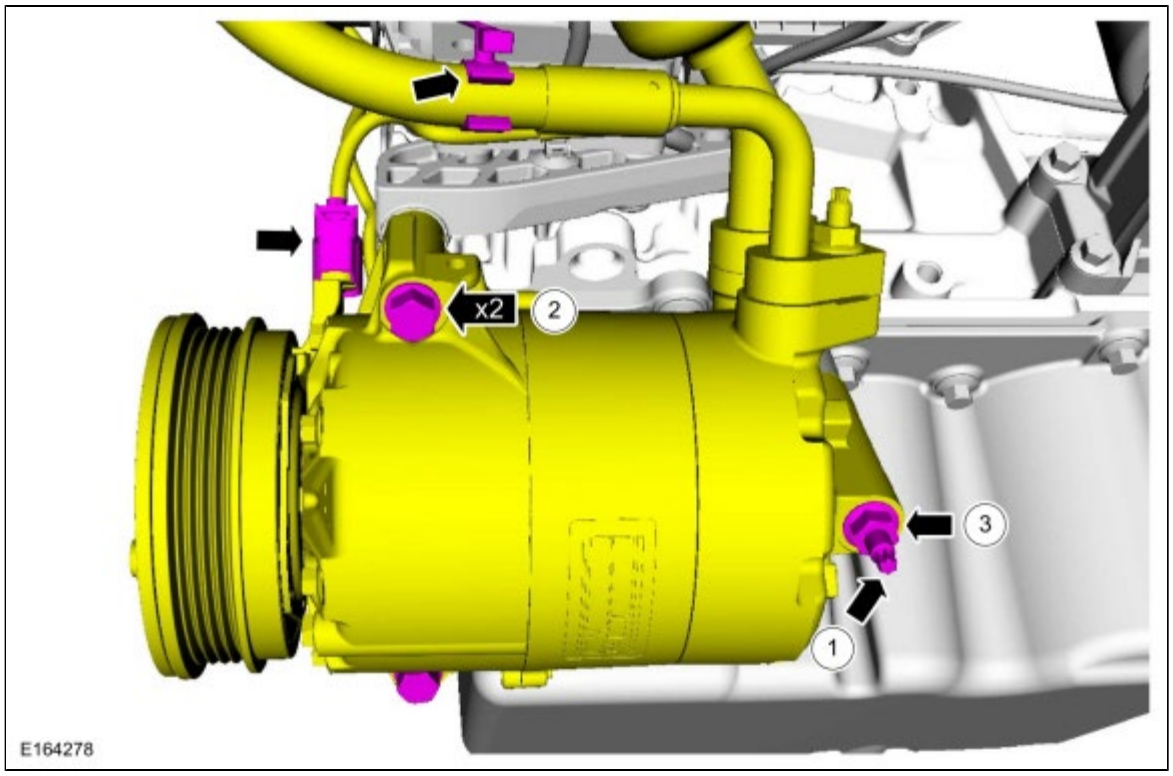

13.

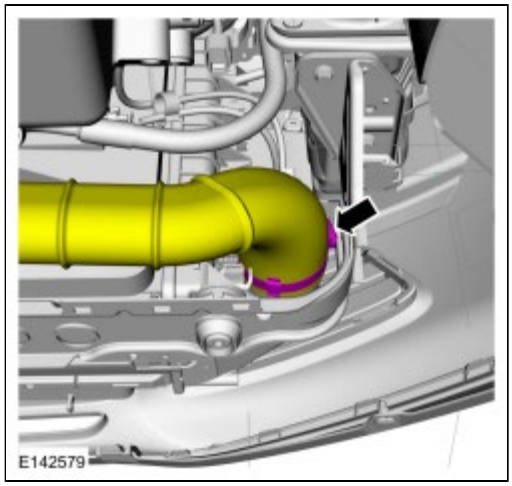

14.

1. *Torque* : 10 Nm

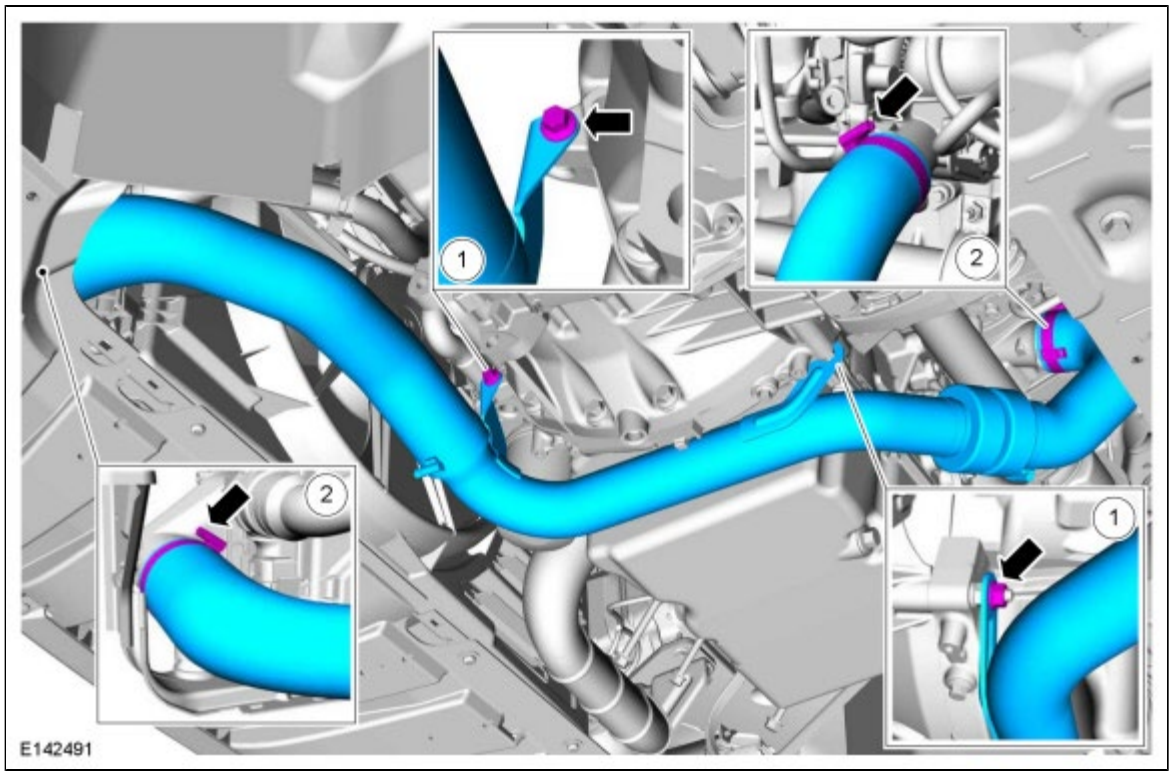

15. *General Equipment* : Trolley Jack
    General Equipment : Wooden Block

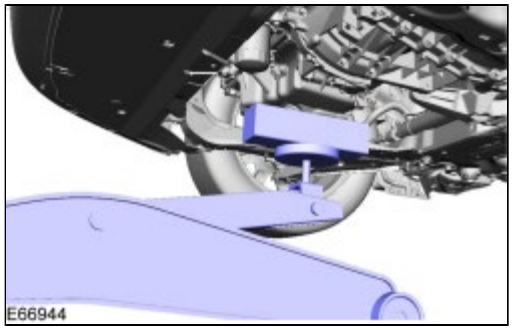

16. *Remove Special Service Tool* : 303-F072 Support Bar, Engine

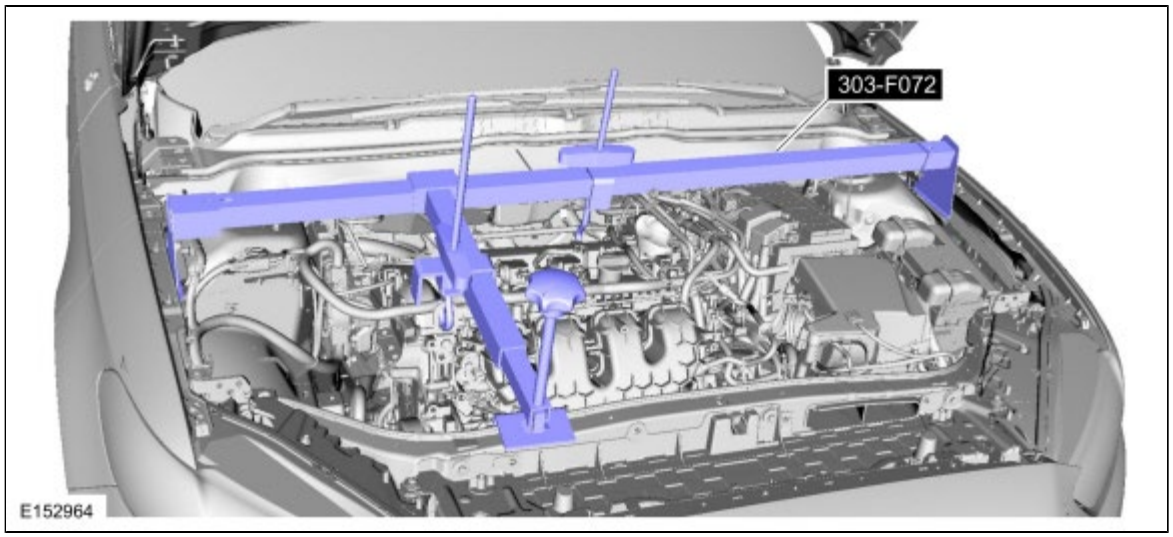

17. Refer to: Engine Front Cover (303-01B Engine - 2.0L EcoBoost (184kW/250PS) - MI4, Removal and Installation).

18. Refer to: Battery Disconnect and Connect (414-01 Battery, Mounting and Cables, General Procedures).

19. Fill the engine with clean engine oil.
    Material : Motorcraft® SAE 5W-30 Premium Synthetic Blend Motor Oil / XO-5W30-QSP (WSS-M2C946-A)

Copyright © Ford Motor Company

Oil Pump Screen and Pickup Tube

Removal

NOTE: *Removal steps in this procedure may contain installation details.*

1. Refer to: Jacking and Lifting - Overview (100-02 Jacking and Lifting, Description and Operation).
2. Refer to: Oil Pan (303-01B Engine - 2.0L EcoBoost (184kW/250PS) - MI4, Removal and Installation).
3. **NOTE:** *A new gasket must be installed.*

   Discard the specified component. Follow local disposal regulations.
   Torque : 10 Nm

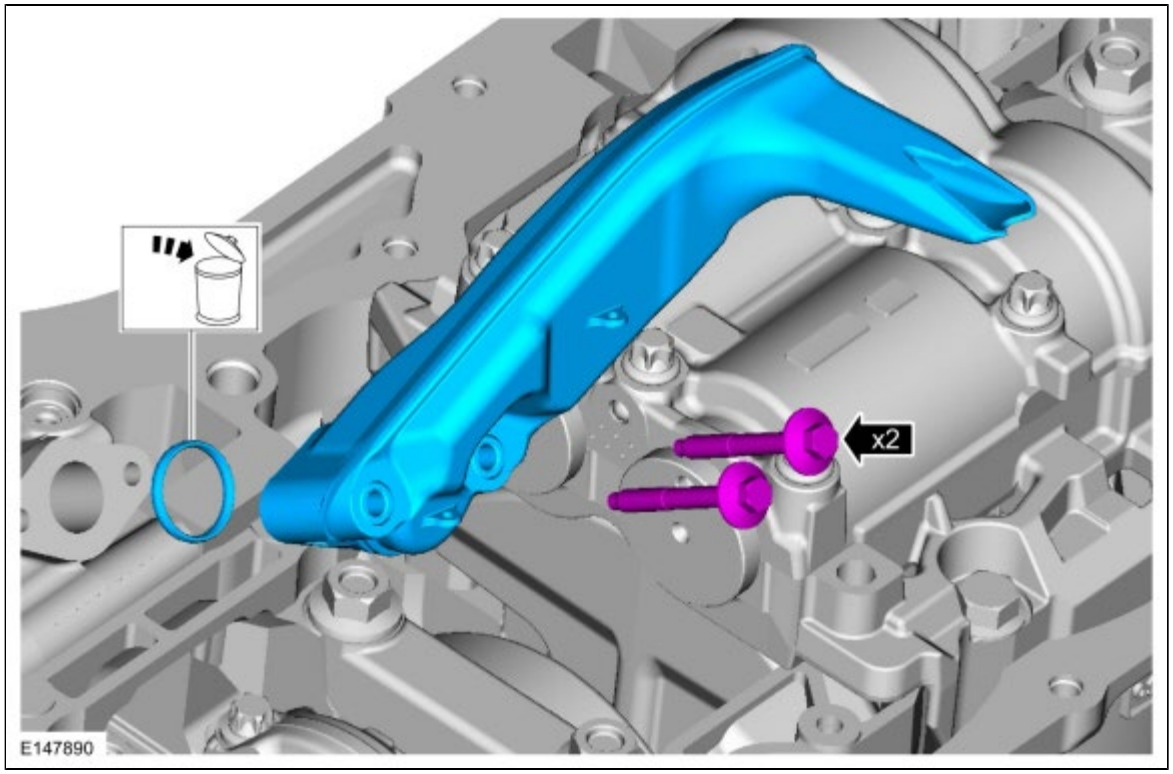

Installation

1. To install, reverse the removal procedure.

Copyright © Ford Motor Company

Oil Filter Adapter

Removal

NOTE: *Removal steps in this procedure may contain installation details.*

1. Refer to: Jacking and Lifting - Overview (100-02 Jacking and Lifting, Description and Operation).
2. 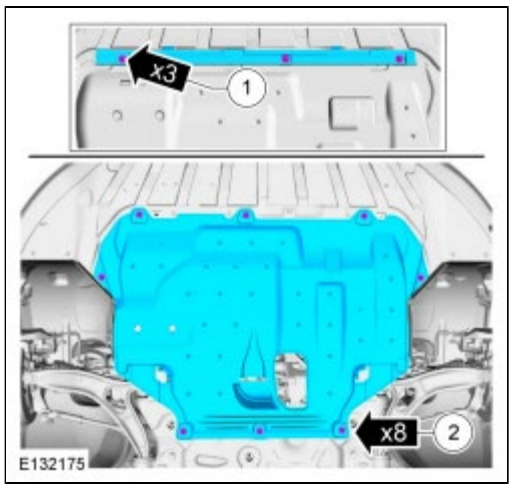

3.
   - Discard the specified component. Follow local disposal regulations.
   - Apply the specified lubricant to the specified component.
     Material : Motorcraft® SAE 5W-30 Premium Synthetic Blend Motor Oil / XO-5W30-QSP (WSS-M2C946-A)
     Torque :
     Stage 1: 8 Nm
     Stage 2: 180°

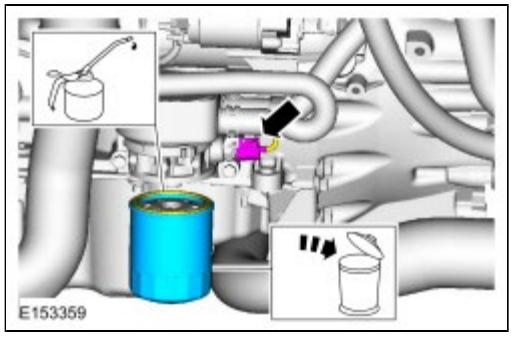

4. Discard the specified component. Follow local disposal regulations.
   Torque : 25 Nm

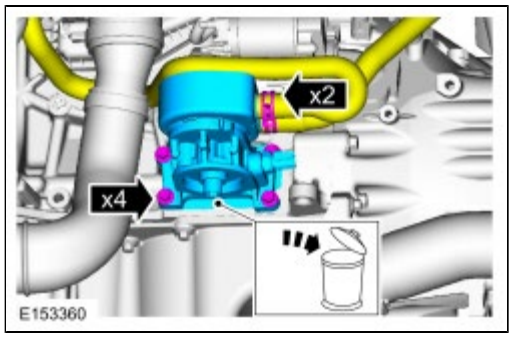

5. *General Equipment* : Vise
   General Equipment : Vise Jaw Protectors
   Torque :
   Stage 1: 23 Nm
   Stage 2: 75°
   Stage 3: Wait 5s
   Stage 4: 15°

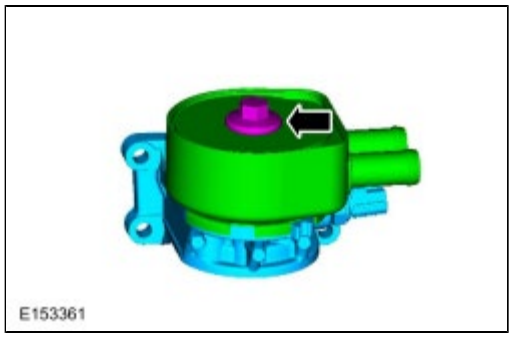

6. **NOTICE: If metal or aluminum material is present in the oil cooler, mechanical concerns exist. Failure to correct these concerns may cause engine failure.**

   Refer to: Engine (303-00 Engine System - General Information, Diagnosis and Testing).

Installation

1. To install, reverse the removal procedure.

Copyright © Ford Motor Company

Flywheel

Removal

1. Refer to: Jacking and Lifting - Overview (100-02 Jacking and Lifting, Description and Operation).
2. Refer to: Clutch Disc and Pressure Plate - Vehicles With: 6-Speed Manual Transmission - MMT6 (308-01 Clutch, Removal and Installation).
3. **NOTE:** *Do not reuse the flywheel bolts.*

   Discard the specified component. Follow local disposal regulations.
   Special Tool(s) : 303-103 (T74P-6375-A) Holding Tool, Flywheel

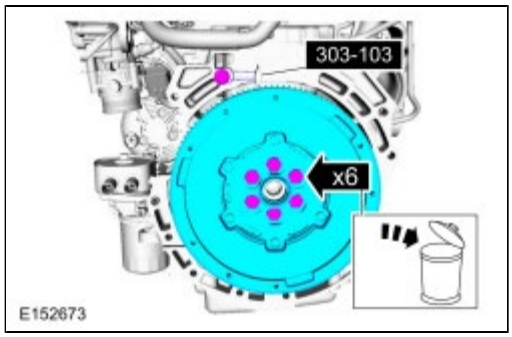

Installation

1. **NOTE:** *Special bolts are used for installation. Do not use standard bolts.*

   Special Tool(s) : 303-103 (T74P-6375-A) Holding Tool, Flywheel
   Torque :
   Stage 1: 50 Nm
   Stage 2: 80 Nm
   Stage 3: 112 Nm

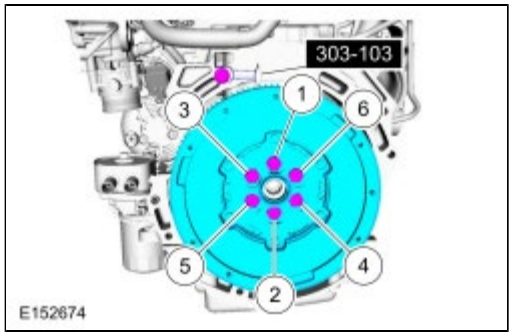

2. Refer to: Clutch Disc and Pressure Plate - Vehicles With: 6-Speed Manual Transmission - MMT6 (308-01 Clutch, Removal and Installation).
3. After completing the repairs, perform the Misfire Monitor Neutral Profile Correction procedure.

Copyright © Ford Motor Company

Crankshaft Rear Seal

Removal

1. Refer to: Jacking and Lifting - Overview (100-02 Jacking and Lifting, Description and Operation).
2. 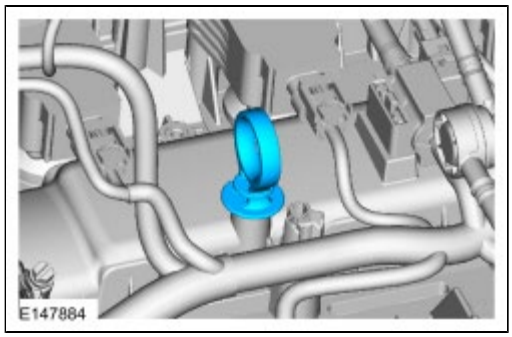

3. Remove the following items:
    1. Refer to: Air Conditioning (A/C) Compressor Belt (303-05 Accessory Drive - 2.0L EcoBoost (184kW/250PS) - MI4) .
    2. Refer to: Flywheel (303-01B Engine - 2.0L EcoBoost (184kW/250PS) - MI4, Removal and Installation).
4. 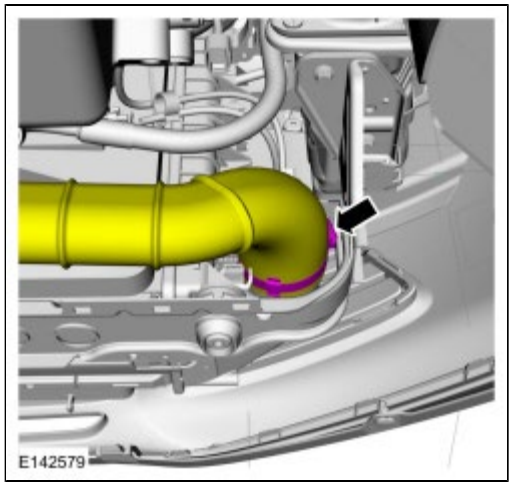

5. Relocate and support the component.

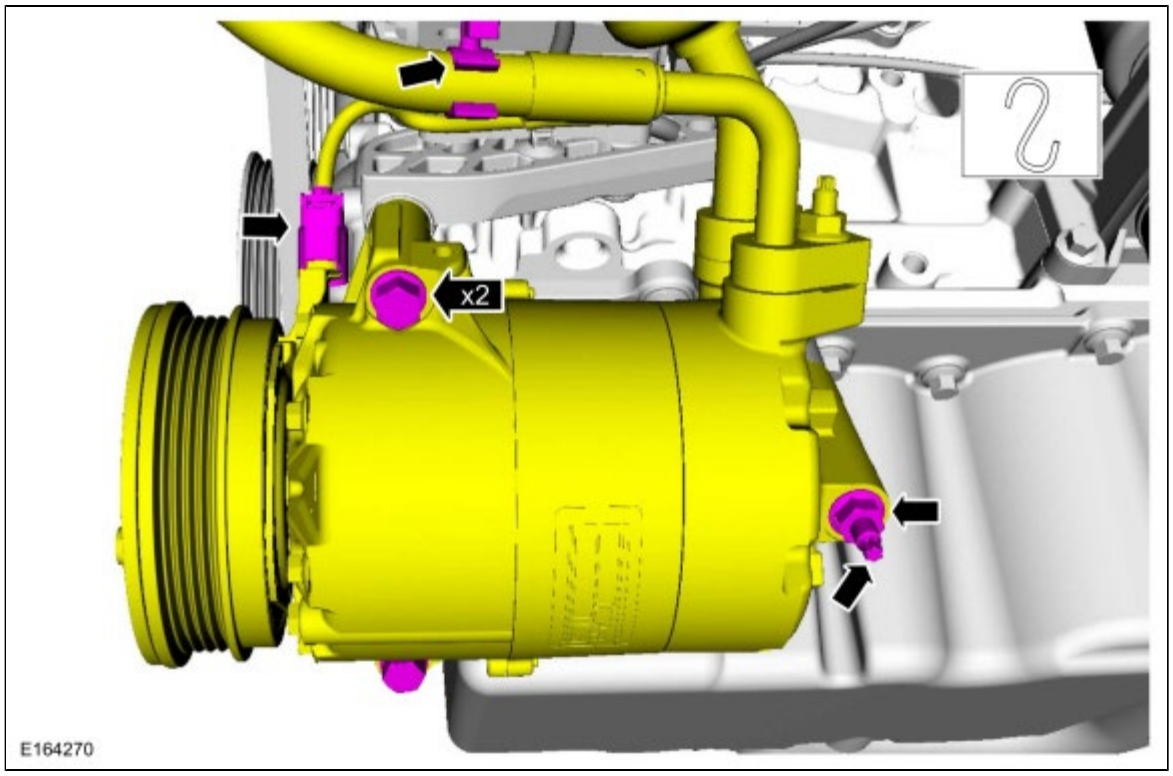

6. *Torque* : 27 Nm

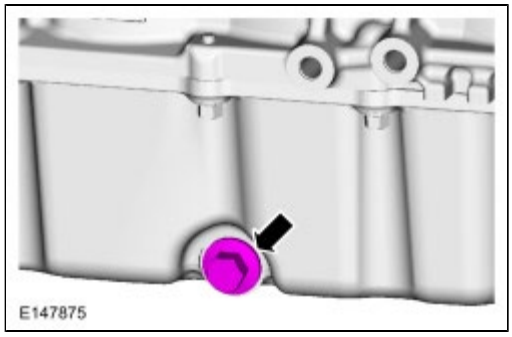

7. **NOTE:** *If the oil pan is not removed, damage to the rear oil seal retainer joint may occur.*

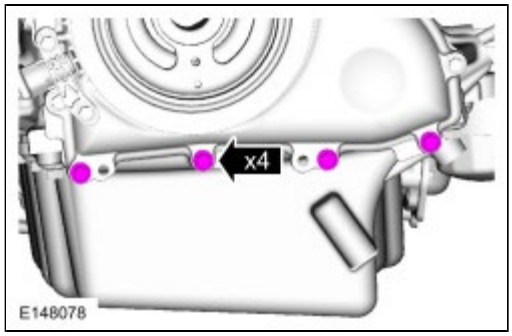

8.

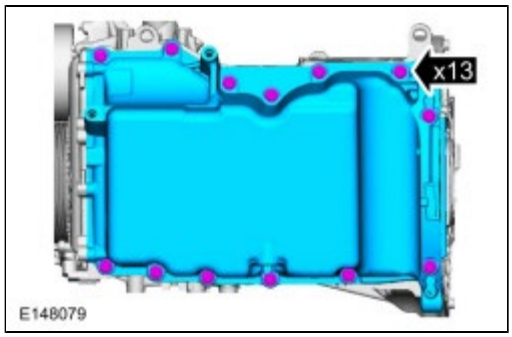

9. Discard the specified component. Follow local disposal regulations.

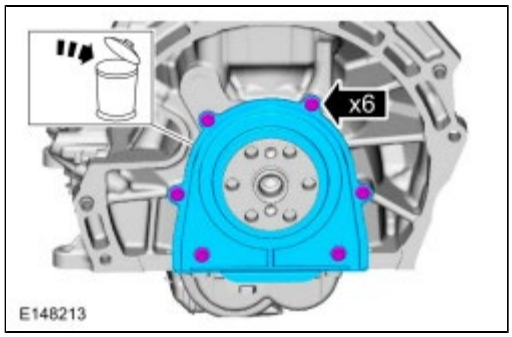

Installation

1. **NOTE:** *Do not use metal scrapers, wire brushes, power abrasive discs or other abrasive means to clean the sealing surfaces. These tools cause scratches and gouges, which make leak paths. Use a plastic scraping tool to remove traces of sealant.*

   Plastic scraper.

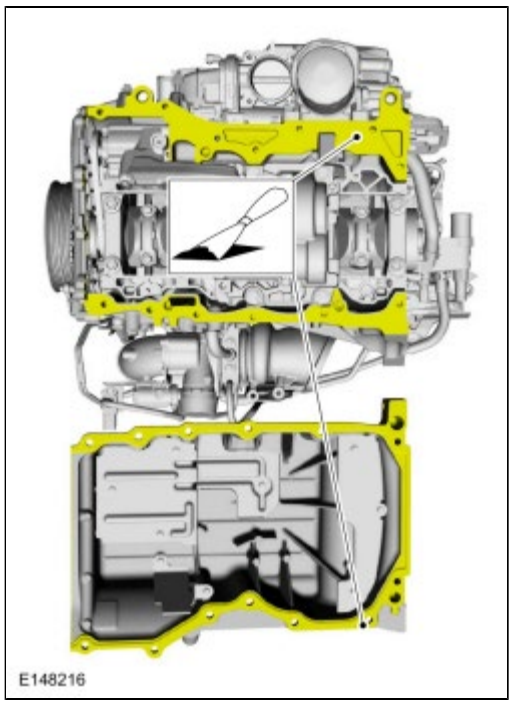

2. Tighten in the sequence shown.
   Special Tool(s) : 303-328 (T88P-6701-B1) Replacer, Rear Seal
   Torque : 10 Nm

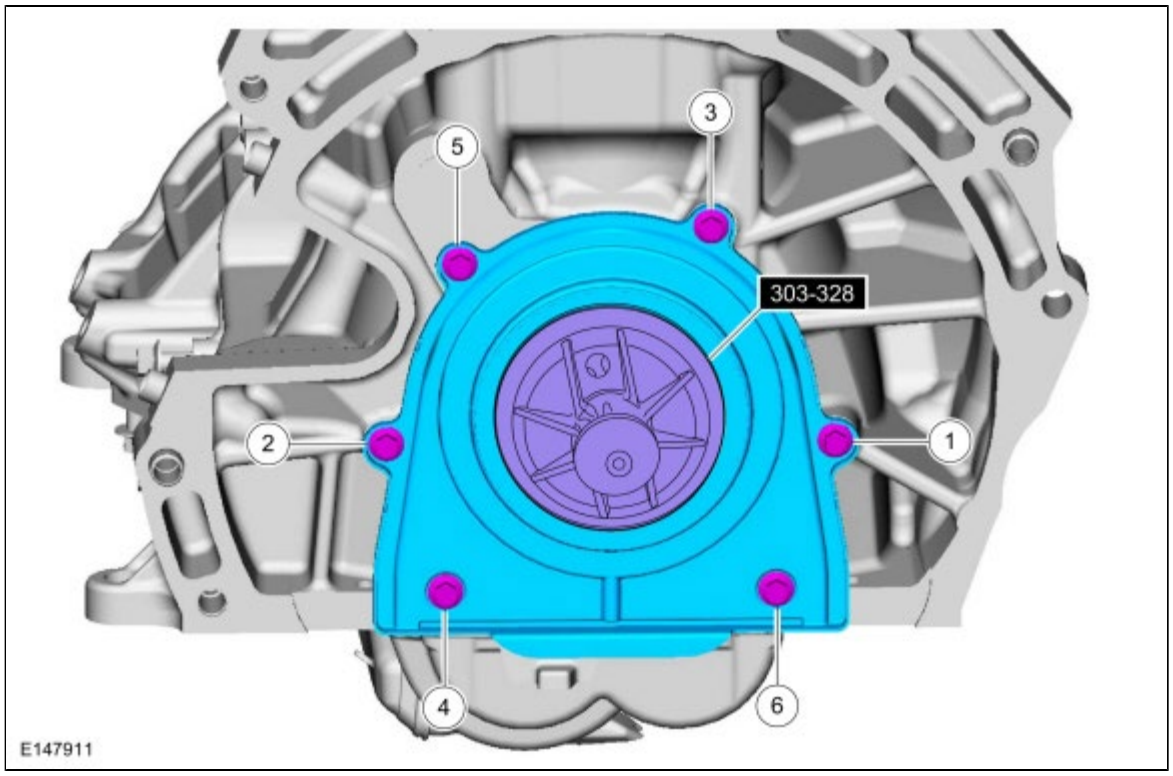

3. **NOTE:** *If the oil pan is not secured within 10 minutes of sealant application, the sealant must be removed and the sealing area cleaned with metal surface prep. Allow to dry until there is no sign of wetness, or 10 minutes, whichever is longer. Failure to follow this procedure can cause future oil leakage.*

   Apply a continuous bead of the specified diameter from the specified tube.
   Material : Motorcraft® Metal Surface Prep / ZC-31-A
   Material : Silicone Gasket and Sealant / TA-30 (WSE-M4G323-A4)

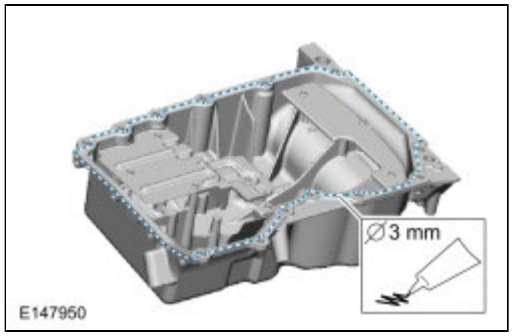

4. Tighten finger tight.

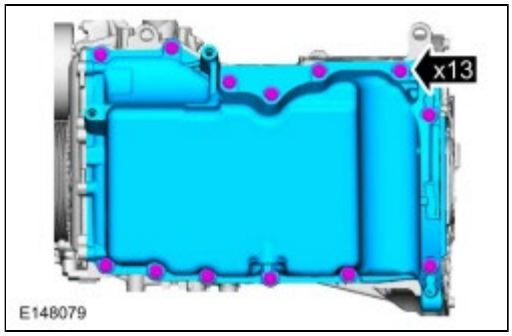

5. **NOTE:** *The engine front cover-to-oil pan bolts must be tightened first to align the front surface of the oil pan flush with the front surface of the engine block.*

   Torque : 10 Nm

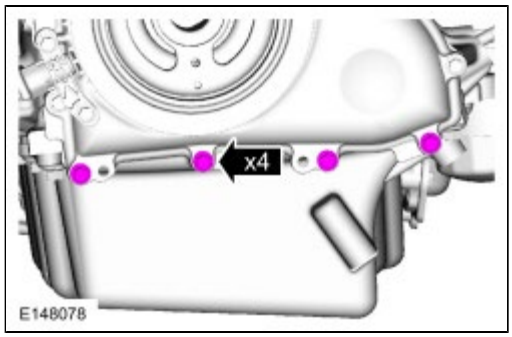

6. Tighten in the sequence shown.
   Torque : 20 Nm

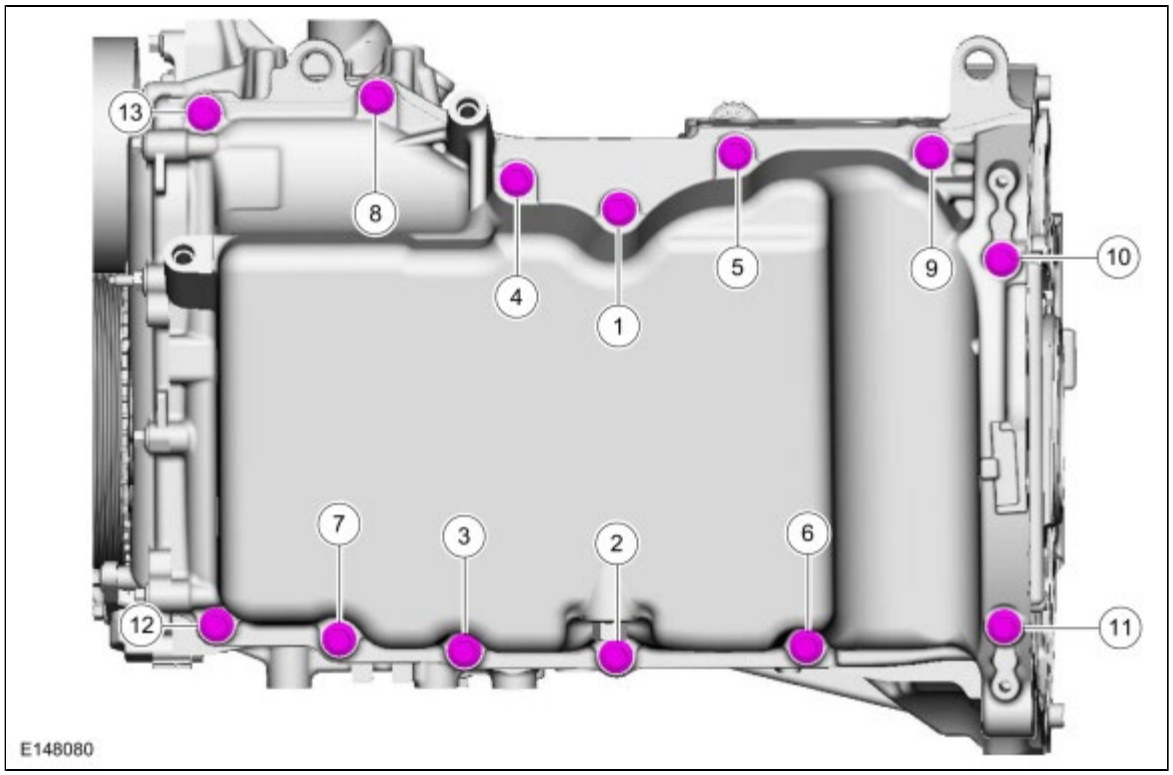

7.
   1. *Torque* : 9 Nm
   2. *Torque* : 25 Nm
   3. *Torque* : 25 Nm

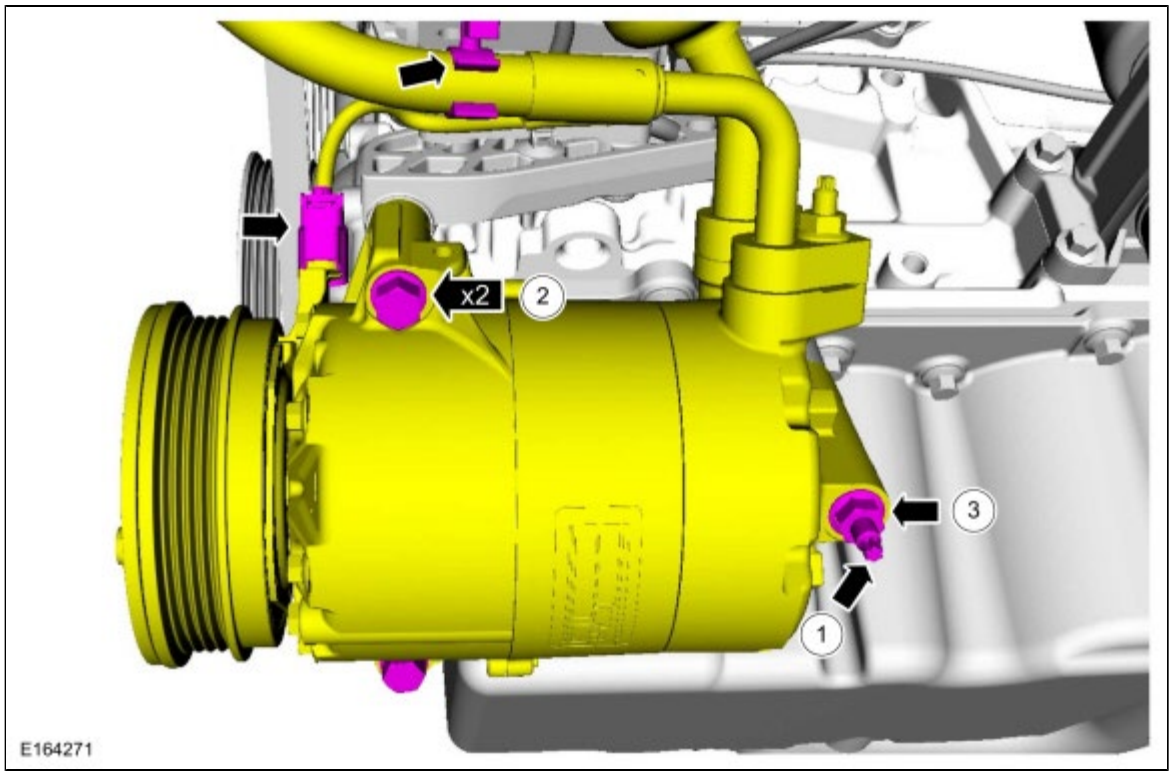

8.

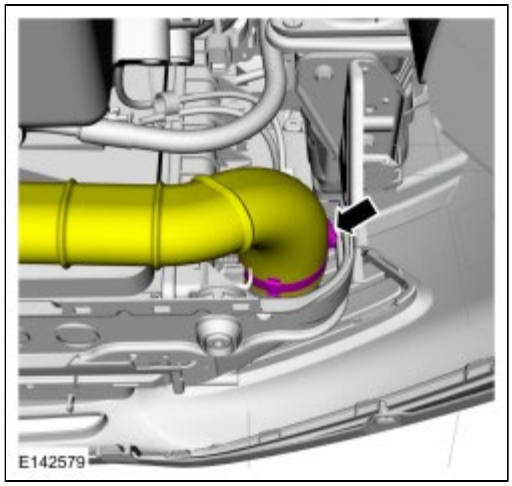

9. Install the following items:
    1. Refer to: Flywheel (303-01B Engine - 2.0L EcoBoost (184kW/250PS) - MI4, Removal and Installation).
    2. Refer to: Air Conditioning (A/C) Compressor Belt (303-05 Accessory Drive - 2.0L EcoBoost (184kW/250PS) - MI4) .

10.

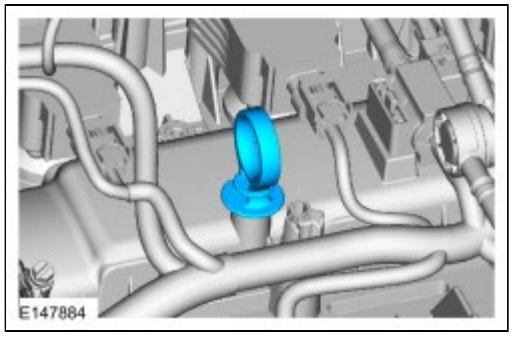

11. Fill the engine with clean engine oil.

Material : Motorcraft® SAE 5W-30 Premium Synthetic Blend Motor Oil / XO-5W30-QSP (WSS-M2C946-A)

Copyright © Ford Motor Company

Engine Mount

Removal

NOTE: *Removal steps in this procedure may contain installation details.*

1. Refer to: Jacking and Lifting - Overview (100-02 Jacking and Lifting, Description and Operation).
2. 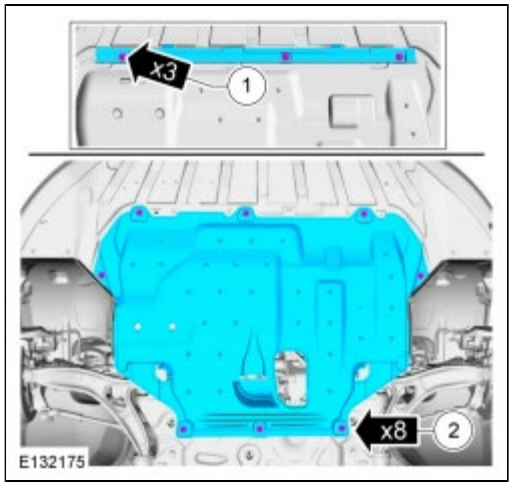

3. 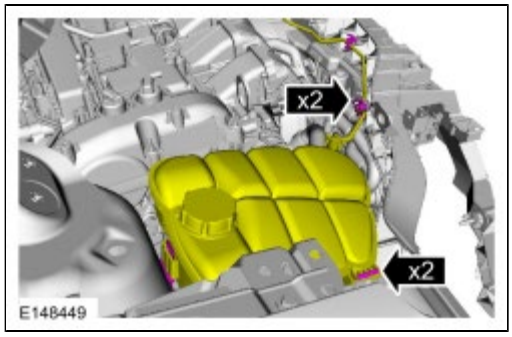

4. *General Equipment* : Trolley Jack
   General Equipment : Wooden Block
   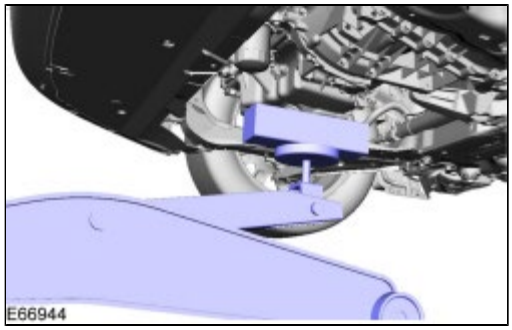

5.
   1. *Torque* : 80 Nm
   2. *Torque* : 90 Nm

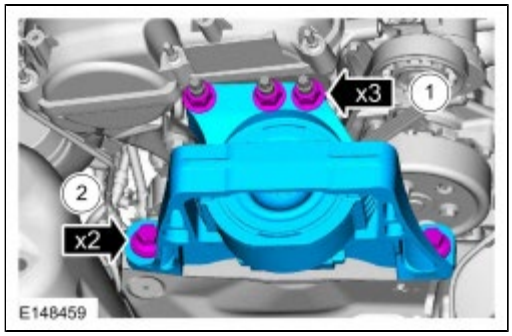

Installation

1. To install, reverse the removal procedure.

Copyright © Ford Motor Company

Variable Valve Timing (VVT) Unit

Removal

NOTICE: During engine repair procedures, cleanliness is extremely important. Any foreign material, including any material created while cleaning gasket surfaces, that enters the oil passages, coolant passages or the oil pan can cause engine failure.

1. Refer to: Timing Drive Components (303-01B Engine - 2.0L EcoBoost (184kW/250PS) - MI4, Removal and Installation).
2. 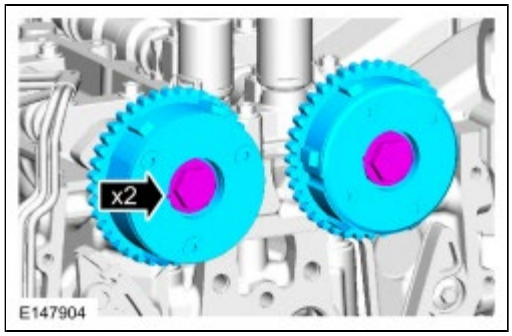

3. Discard the specified component. Follow local disposal regulations.

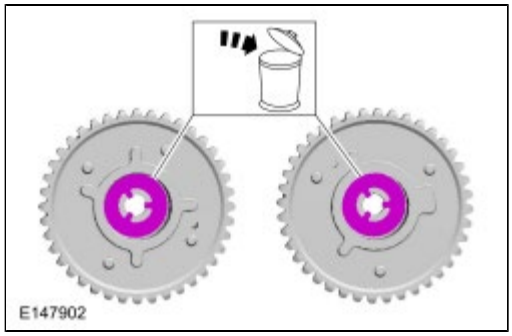

Installation

1. **NOTE:** *Do not reuse the washers, new washers must be installed.*

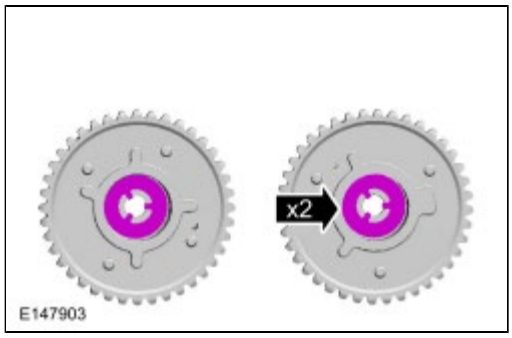

2. **NOTE:** *Do not tighten the bolts at this time. The bolts will be tightened during the timing drive component installation procedure.*

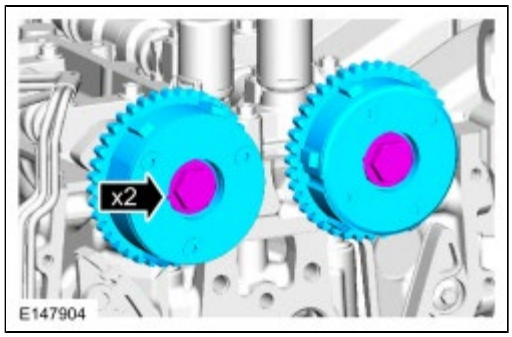

3. Refer to: Timing Drive Components (303-01B Engine - 2.0L EcoBoost (184kW/250PS) - MI4, Removal and Installation).

Copyright © Ford Motor Company

Valve Stem Seals

Removal

NOTE: *During engine repair procedures, cleanliness is extremely important. Any foreign material (including any material created while cleaning gasket surfaces) that enters the oil passages, coolant passages or the oil pan can cause engine failure.*

1. Refer to: Jacking and Lifting - Overview (100-02 Jacking and Lifting, Description and Operation).
2. Refer to: Valve Springs (303-01B Engine - 2.0L EcoBoost (184kW/250PS) - MI4, Removal and Installation).
3. Discard the specified component. Follow local disposal regulations.
   Special Tool(s) : 303-468 (T94P-6510-AH) Remover, Valve Stem Oil Seal , 307-005 (T59L-100-B) Slide Hammer

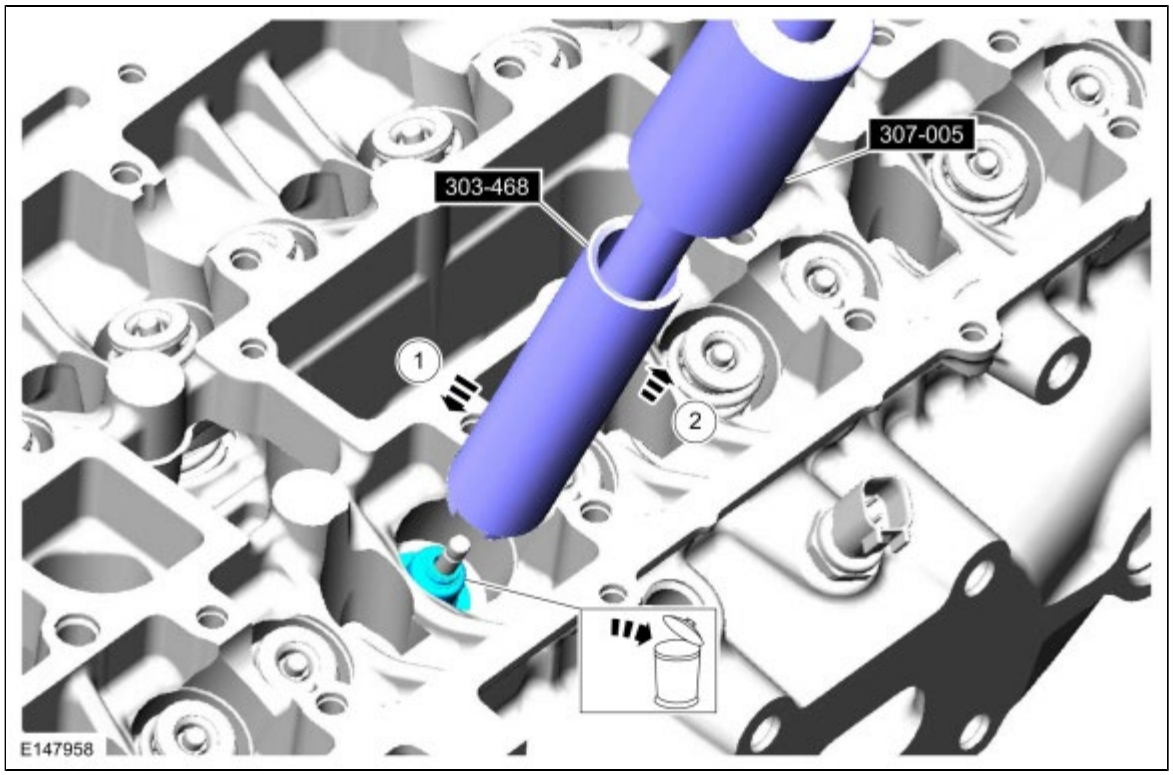

Installation

1. Apply the specified lubricant to the specified component.
   Special Tool(s) : 303-470 (T94P-6510-CH) Installer, Valve Stem Oil Seal
   Material : Motorcraft® SAE 5W-30 Premium Synthetic Blend Motor Oil / XO-5W30-QSP (WSS-M2C946-A)

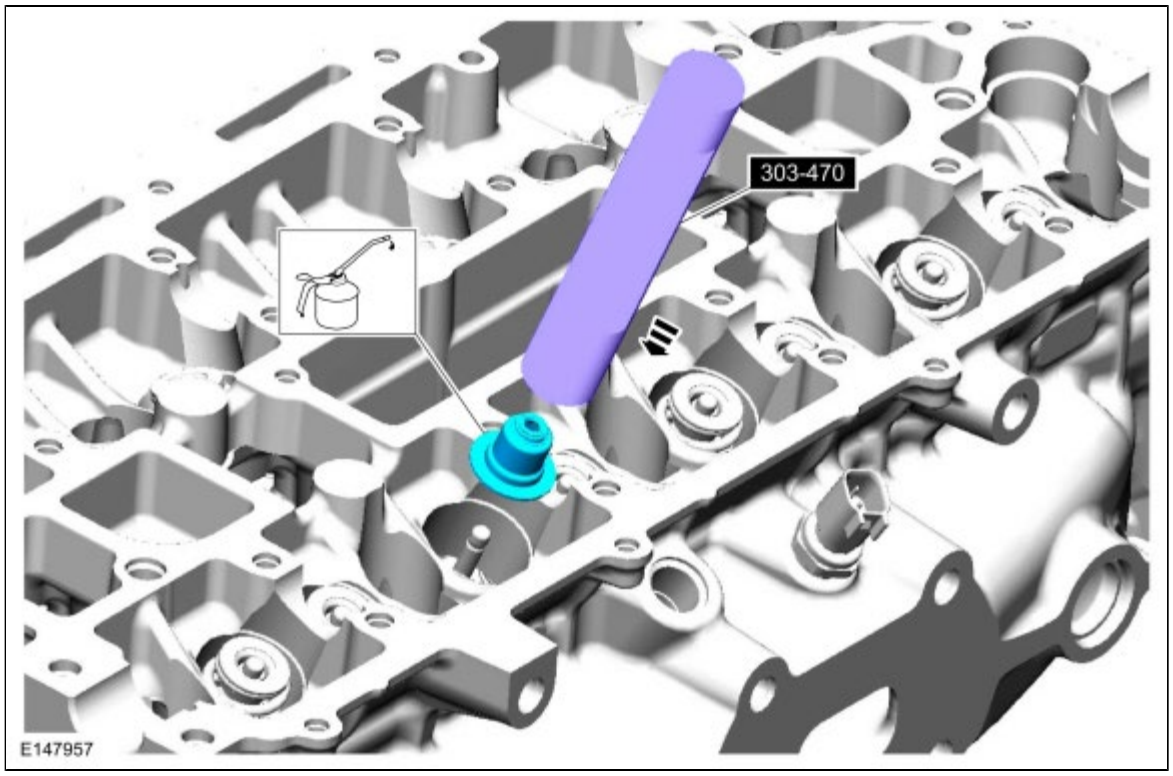

2. Refer to: Valve Springs (303-01B Engine - 2.0L EcoBoost (184kW/250PS) - MI4, Removal and Installation).

Copyright © Ford Motor Company

Oil Pressure Switch

Removal

NOTE: *Removal steps in this procedure may contain installation details.*

1. Refer to: Jacking and Lifting - Overview (100-02 Jacking and Lifting, Description and Operation).
2.

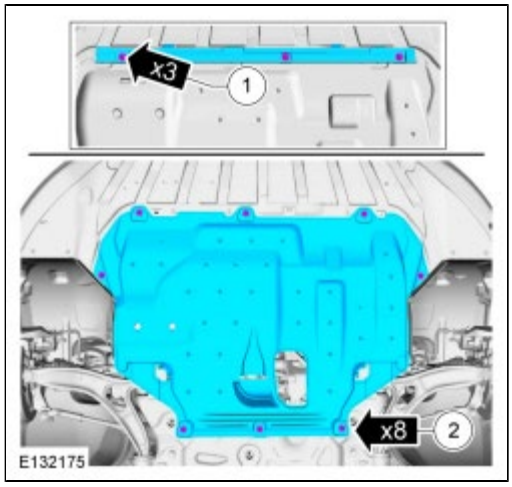

3. Apply the substance from the specified tube.
   Material : Thread Sealant with PTFE / TA-24 (WSK-M2G350-A2)
   Torque : 15 Nm

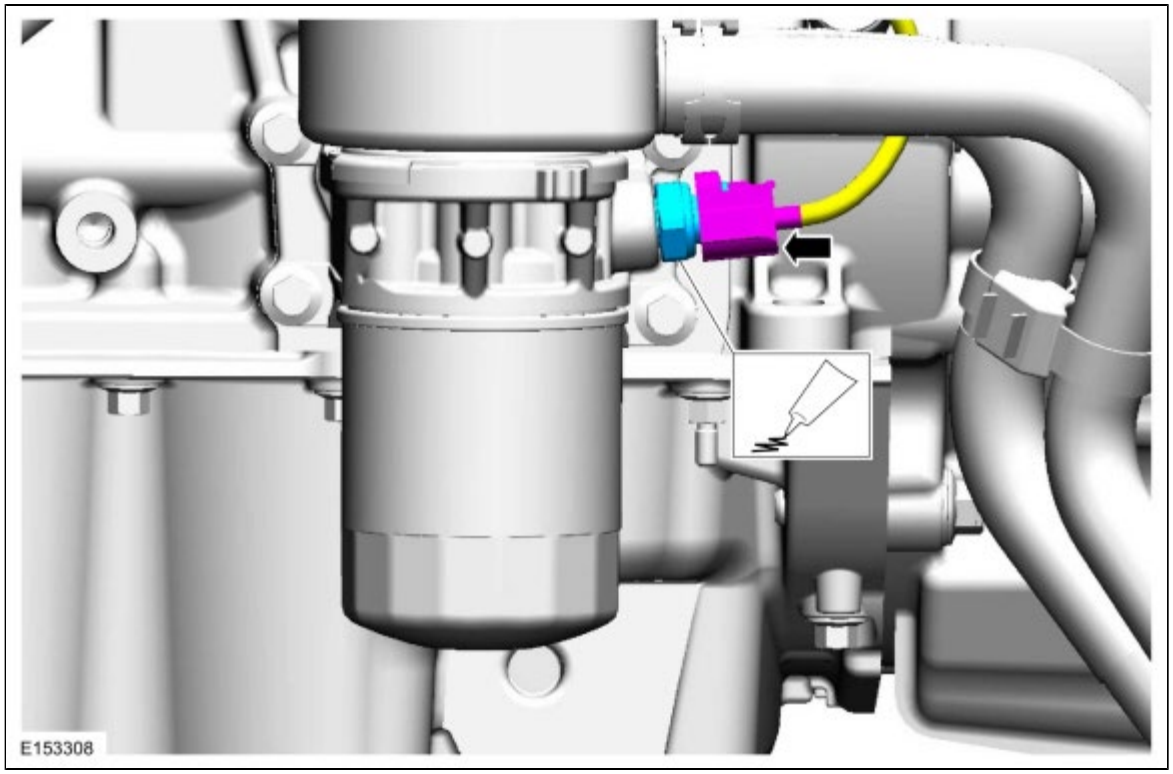

Installation

1. To install, reverse the removal procedure.

Copyright © Ford Motor Company