BODY BUILDER MANUAL

FOR

2016 CHEVROLET COLORADO/GMC CANYON

ELECTRICAL SECTION

Note to User:
As part of our mission to provide an up-to-date website that includes detailed Body Builder Manuals, Technical Bulletins, and Best Practice Manuals, we are now using sectional excerpts directly from the General Motors Service Information publications for our Electrical Body Builder Manuals.

You will note that the section numbers are non-sequential as we have provided only those that are believed to be the most pertinent to the Upfitter community and best suited to their needs.*

This new usage of the Service Information provides the opportunity for us to remain consistent with the changes that take place throughout the model year and to provide you updated information in a more timely fashion.

**** If you would like to have access to all of the electrical Service Information, please apply for a subscription from ACDelco at http://acdelcotechconnect.com/html/tss_tech_esi.jsp***

General Information

General Information

Introduction

Vehicle Certification, Tire Placard, Anti-Theft, and Service Parts ID Label

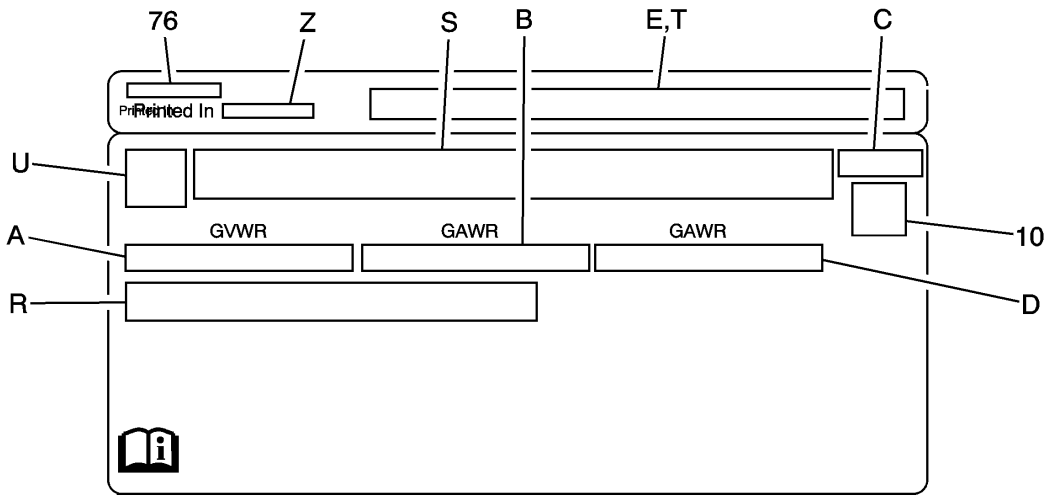

Vehicle Certification Label

Callout	Description
A	Maximum Gross Vehicle Weight (GVW) in Kilograms (Optional)
B	Maximum Gross Axle Weight – Front (GAWF) in Kilograms (Optional)
C	Final Date of Manufacture (Month and Year MM/YY) Date of manufacture callout C is to reflect the date that the vehicle is counted as built. In those cases where a replacement label is needed, the replacement label should reflect the actual build date not the date of replacement.
D	Maximum Gross Axle Weight – Rear (GAWR) in Kilograms (Optional)
E	Country Product Line (CPL) Number (Optional)
R	Vehicle Identification Number (VIN)
S	Name of Legal Entity (Manufacturer)
T	Current Sequence Number (CSN) (Optional)
U	Logo (Optional)
Z	Vendor to Supply Country of Origin of Blank Stock (When Required)
10	2D Bar Code (Datamatrix)
76	Pre-Printed Part Number Location (Optional) Part number location to print on waste portion of label stock.

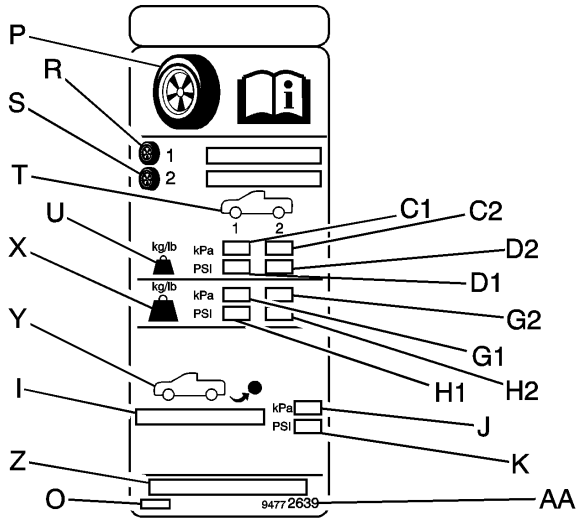

Tire Placard

Callout	Description
C1	Vehicle Normal Load Condition Front Tire Cold Inflation Pressure (kPa)
C2	Vehicle Normal Load Condition Rear Tire Cold Inflation Pressure (kPa)
D1	Vehicle Normal Load Condition Front Tire Cold Inflation Pressure (PSI)
D2	Vehicle Normal Load Condition Rear Tire Cold Inflation Pressure (PSI)
G1	Gross Vehicle Mass Load Condition Front Tire Cold Inflation Pressure (kPa)
G2	Gross Vehicle Mass Load Condition Rear Tire Cold Inflation Pressure (kPa)
H1	Gross Vehicle Mass Load Condition Front Tire Cold Inflation Pressure (PSI)
H2	Gross Vehicle Mass Load Condition Rear Tire Cold Inflation Pressure (PSI)
I	Spare Tire Size Designation and Service Description
J	Spare Tire Cold Inflation Pressure (kPa)
K	Spare Tire Cold Inflation Pressure (PSI)
O	Broadcast Code For Pre-Printed Label (Labels Printed Outside Vehicle Assembly Plant) May Be Optional
P	Generic Tire Picture
R	Front Tire Axle Position
S	Rear Tire Axle Position
T	Vehicle Profile With Axle Positions
U	Vehicle Normal Load Condition
X	Gross Vehicle Mass Load Condition
Y	Vehicle Profile For Spare Position

Z	Vehicle Identification Number (VIN) For Computer Generated Labels (Labels Printed Inside Vehicle Assembly Plant) May Be Optional
AA	Tire Placard Label Format Part Number

RPO Code List

RPO	Description
01U	PRIMARY COLOR-EXTERIOR, SPECIAL (02)
4AA	INTERIOR TRIM-JET BLACK
4D7	INTERIOR TRIM-JET BLACK/DK ASH
4DP	INTERIOR TRIM-COCOA / DUNE
4EE	INTERIOR TRIM-JET BLACK/DK GALVANIZED WITH ICED BLUE ACCENT
4GB	INTERIOR TRIM-JET BLACK/ COBALT RED
5G8	CALIBRATION-ACTIVATION 'ON', TOW/HAUL MODE
5JY	ACCESSORY-TONNEAU - RR COMPT - SOFT FOLDING
5K2	ACCESSORY-DECAL PACKAGE - BODY SIDE, DESIGN 1
5V4	ACCESSORY-EXTERIOR APPEARANCE PACKAGE 1
5VI	ACCESSORY-TIE DOWN RINGS - CARGO AREA
5W7	ACCESSORY-AIR FILTER - PERFORMANCE
5Y3	ACCESSORY-TOW BALL - TRAILER HITCH
5Y4	ACCESSORY-COVER - TRAILER HITCH TOW BALL
5YN	ACCESSORY-BADGE - INTERIOR TRIM, DESIGN 1
9B7	MIRROR AUX-O/S SPOT, CONVEX
9H3	FUEL TANK-76L, 20 GAL
9J4	BUMPER RR-(NONE)
A28	WINDOW RR-FULL WIDTH, SLIDING
AAQ	ADJUSTER PASS ST-POWER, 4 WAY
ACO	IDENTIFICATION-ACCESSORY CATALOG OFFERING
AH6	ADJUSTER FRT ST-SEAT, POWER, 4 WAY, VERT, DRIVER
AJ2	SEAT RR-FOLDING, JUMPSEAT
AKJ	WINDSHIELD STYLE-SHADE BAND

AL9	LUMBAR DRIVER-SEAT, POWER, 2 WAY
AM7	SEAT RR-FOLDING
AR7	SEAT-FRT BKT, STANDARD
AT9	LUMBAR PASSENGER-SEAT, POWER, 2 WAY
ATG	LOCK CONTROL, ENTRY-REMOTE ENTRY, STANDARD RANGE
ATZ	SEAT RR-NONE
AXG	WINDOW REG DRVR DR-POWER OPERATED, EXPRESS UP/DOWN
AY0	RESTRAINT SYSTEM-SEAT, INFLATABLE, DRIVER & PASS FRT, SEAT SIDE, ROOF SIDE
B30	COVERING FLOOR-CARPET
B34	COVERING FRT-FLOOR MATS, CARPETED INSERT
B35	COVERING REAR-FLOOR MATS, CARPETED INSERT
B38	COVERING FLOOR-VINYL, FRT & RR, FULL WIDTH
BAE	EQUIPMENT-SECURITY SYSTEM, IMMOBILIZATION
BJA	PARTS PKG-TRUCK APPLICATION VAR.1
BTV	REMOTE START-ENGINE
BW4	MOLDING B/S (OPEL)-EXTR, MLDG, SIDE WINDOW REVEAL, CHROME
BW5	MOLDING B/S (OPEL)-EXTR, MLDG, SIDE WINDOW REVEAL, BLACK
BW7	ORNAMENTATION-EXTR, PLR APLQ
BWN	STEPS-CORNER ASSIST, BUMPER
BYH	FOOT REST-DRIVER
C49	DEFOGGER-RR WINDOW, ELECTRIC
C67	HVAC SYSTEM-AIR CONDITIONER FRT, ELECTRONIC CONTROLS
C68	HVAC SYSTEM-AIR CONDITIONER FRT, AUTO, ELECTRONIC CONTROLS
C74	LAMP-INTR, ROOF, DUAL READING
CGN	LINER-PUBX, SPRAY ON
CV3	COUNTRY-MEXICO

D07	CONSOLE-FRT COMPT, FLOOR, CUSTOM
D31	MIRROR I/S R/V-TILT
D72	HANDLE O/S DOOR-BLACK
D75	HANDLE O/S DOOR-BODY COLOR
D87	HANDLE, REAR CLOSURE-O/S, L/GATE, R/CMPT, BLACK
DBI	MIRROR O/S-LH & RH, MANUAL CONTROL, MANUAL FOLDING
DD8	MIRROR I/S R/V-LT SENSITIVE
DEG	SUNSHADE-DRIVER, W/MIRROR, COVER, ILLUM, SLIDING, PASS, W/MIRROR, COVER, ILLUM,SLIDING
DK6	CONSOLE ROOF-INTERIOR
DL6	MIRROR O/S-LH & RH, REMOTE CONTROL, ELECTRIC, MANUAL FOLDING,COLOR
DL9	MIRROR O/S-LH & RH, REMOTE CONTROL, ELECTRIC, HEATED, CHROME
DLU	MIRROR I/S FRT VAN-SUNSHADE, DRIVER, W/O MIRROR, PASS, W/MIRROR & COVER
DNS	EQUIPMENT-SUPPLIER INSTALLED
E20	HANDLE O/S DOOR-CHROME
E25	ACCESSORY-ASSIST STEPS - TUBULAR - CHROME
E33	HANDLE-I/S, DR, GLOSSY CHROME
E49	HANDLE-I/S, DR, JET BLACK
E63	BODY EQUIPMENT-FLEETSIDE PICK-UP BOX
EF7	COUNTRY-UNITED STATES OF AMERICA (USA)
EN5	END GATE--LOCKING-
FE9	CERTIFICATION-EMISSION, FEDERAL
FHX	VEHICLE FUEL-DIESEL B20
FJW	VEHICLE FUEL-GASOLINE E15
FX3	RIDE AND HANDLING-AUTOMATIC ELECTRONIC CONTROLLED
G7C	PRIMARY COLOR-EXTERIOR, PULL ME OVER RED SOLID (130X)
G7J	PRIMARY COLOR-EXTERIOR, UNRIPENED GREEN MET (136X)

G7P	PRIMARY COLOR-EXTERIOR, TIN ROOF RUSTED MET (138X)
G7Z	PRIMARY COLOR-EXTERIOR, LASER BLUE MET (218M)
G80	AXLE POSITRACTION-LIMITED SLIP
GAN	PRIMARY COLOR-EXTERIOR, SWITCHBLADE SILVER MET (G) 636R
GAT	APPEARANCE PACKAGE-GMC "ALL TERRAIN"
GAZ	PRIMARY COLOR-EXTERIOR, SUMMIT WHITE (G) 8624
GBA	PRIMARY COLOR-EXTERIOR, BLACK (G) 8555
GBV	PRIMARY COLOR-EXTERIOR, CYBER GRAY MET (G) 637R
GCR	PRIMARY COLOR-EXTERIOR, INFERNO ORANGE MET (502Q)
GT5	AXLE REAR-4.10 RATIO
GU6	AXLE REAR-3.42 RATIO
GWX	PRIMARY COLOR-EXTERIOR, SUBTERRANEAN MET (105V)
H0K	INTERIOR TRIM CONFIG-LEATHER, LEVEL 3, COCOA / DUNE
H0U	INTERIOR TRIM CONFIG-CLOTH, LEVEL 2, JET BLACK
H2Q	INTERIOR TRIM CONFIG-VINYL, LEVEL 1, JET BLACK /DK ASH
H2R	INTERIOR TRIM CONFIG-CLOTH, LEVEL 1, JET BLACK/ DK ASH
H2S	INTERIOR TRIM CONFIG-CLOTH, LEVEL 2, JET BLACK / DK ASH
H2T	INTERIOR TRIM CONFIG-CLOTH, LEVEL 2, COCOA / DUNE
H2U	INTERIOR TRIM CONFIG-LEATHER, LEVEL 3, JET BLACK
H2V	INTERIOR TRIM CONFIG-LEATHER, LEVEL 3, JET BLACK / DK ASH
HH1	INTERIOR TRIM CONFIG-CLOTH, LEVEL 4, JET BLACK / DK GALVANIZED WITH ICED BLUE ACCENT
HJX	INTERIOR TRIM CONFIG-CLOTH, LEVEL 4, JET BLACK / COBALT RED
I16	ENGINEERING YEAR-2016

IO3	RADIO-INFOTAINMENT SYSTEM - BASE HMI
IO4	RADIO-INFOTAINMENT SYSTEM - BASE HMI, ENHANCED CONNECTIVITY
IO5	RADIO-INFOTAINMENT SYSTEM - UPLEVEL HMI, ENHANCED CONNECTIVITY
IO6	RADIO-INFOTAINMENT SYSTEM - UPLEVEL HMI, ENHANCED CONNECTIVITY, EMBEDDED NAVIGATION
JHD	CONTROL-HILL DESCENT, GEAR HOLD
JL1	CONTROL-INTEGRATED TRAILER BRAKE
JL9	BRAKE SYSTEM-PWR, FRT & RR DISC, ANTILOCK, FRT & RR WHL
K05	HEATER ENG-BLOCK
K34	CRUISE CONTROL-AUTOMATIC, ELECTRONIC
K40	ENGINE BRAKE-EXHAUST
KA1	HEATER SEAT FRT-DRVR & PASS
KG4	GENERATOR-150 AMP
KG9	GENERATOR-140 AMP
LCV	ENGINE-GAS, 4 CYL, 2.5L, L4, SIDI, DOHC, DCVCP, VVT, E85 MAX, E0-E100, ALUM
LFX	ENGINE-GAS, 6 CYL, 3.6L, SIDI, DOHC, VVT, E85 MAX, ALUM, GM
LWN	ENGINE-ENGINE DIESEL, 2.8L, DI, L4, DOHC, TURBO, XLDE
MCY	PORT, ELEK DEVICE-USB ONLY
MCZ	PORT, MULTI ELEK DEV-USB
MYB	TRANSMISSION-AUTO 6 SPD, 6L50
N30	STEERING WHEEL-DELUXE
N33	STEERING COLUMN-TILT TYPE
N37	STEERING COLUMN-TILT, TELESCOPING
N8D	TRANSMISSION-MAN 6 SPD, 85MM, 4.45 1ST, 2.56 2ND, 1.53 3RD, 1.00 4TH, 0.87 5TH, 0.76 6TH
NE1	CERTIFICATION-EMISSION, GEOGRAPHICALLY RESTRICTED REGISTRATION FOR VEHICLES UP TO 14,000 LBS GVW (USE 2003 MDL YR
NP5	STEERING WHEEL-LEATHER WRAPPED

NQ6	TRANSFER CASE-2 SPD, ACTIVE, PART TIME 4WD, L/H DROP, LOW RATIO 2.72:1
NQ7	TRANSFER CASE-2 SPD, SWITCH ACTIVATED, PART TIME 4WD, L/H DROP, LOW RATIO 2.72:1
NT7	EMISSION SYSTEM-FEDERAL, TIER 2
NU5	EMISSION SYSTEM-CALIFORNIA, BIN 4
NUF	EMISSION SYSTEM-CALIFORNIA, ULEV125
NW9	TRACTION CONTROL-ELECTRONIC
NY7	SHIELD-TRANSFER CASE
PPA	EQUIPMENT-ASSIST, OPEN & CLOSE, TAILGATE
PZX	WHEEL-18 X 8.5, J, ALUMINUM, DESIGN 2
Q5U	WHEEL-17 X 8.0, J, ALUMINUM, DESIGN 2
Q5W	WHEEL-17 X 8.0, J, ALUMINUM, DESIGN 1
QDC	TIRE SPARE-T175/90D18 LL 111M BW SPR
QHE	TIRE ALL-255/65R17 SL 110T BW AT
QHR	TIRE ALL-255/65R17 SL 110T BW ALS
QIA	TIRE ALL-265/60R18 SL 110T BW AL2
QJJ	TIRE ALL-265/70R16 SL 112T BW ALS
R1U	WHEEL-17 X 8.0, J, ALUMINUM, DESIGN 3
R28	WHEEL-17 X 8.0, J, ALUMINUM, DESIGN 4
RGO	ACCESSORY-TIRE ALL - 265/65R17 SL 112S BSL AT VAR 1
RIA	ACCESSORY-FLOOR LINER - CONTOURED
RS1	WHEEL-16 X 7.0, J, ALUMINUM, DESIGN 1
RS2	WHEEL-16 X 7.0, J, STEEL, DESIGN 1
RT5	WHEEL-18 X 8.5, J, ALUMINUM, DESIGN 1
RTX	WHEEL SPARE-18 X 4.5, B, ALUMINUM, DESIGN 1
RVG	ACCESSORY-ADAPTER - TRAILER HARNESS
RVP	ACCESSORY-ASSIST STEPS - REMOVABLE
RVS	ACCESSORY-ASSIST STEPS - TUBULAR - ROUND - BLACK
RVX	ACCESSORY-BALL MOUNT - TRAILER HITCH
RVY	ACCESSORY-PUBX CARGO DIVIDER

RW6	ACCESSORY-BED STORAGE BOX - FIXED FULL WIDTH - METAL
RWS	ACCESSORY-FLOOR MATS - CARPET
RXH	ACCESSORY-CENTER CAP - WHEEL - DESIGN 1
RXQ	ACCESSORY-CONVENIENCE NET - BED MOUNTED
RYT	ACCESSORY-FIRST AID KIT
RZW	ACCESSORY-HARNESS - TRAILER HITCH
S08	ACCESSORY-HIGHWAY SAFETY KIT
S0Y	ACCESSORY-LAMPS - CARGO AREA
S1K	WHEEL SPARE-16 X 7.0, J, STEEL, DESIGN 1
S3U	ACCESSORY-LAMP KIT - FRONT FOG
S3X	ACCESSORY-LAMPS - FRONT ROOF MOUNTED - OFF-ROAD
S41	ACCESSORY-LINER - WHEEL HOUSE
S42	ACCESSORY-LOAD STOPS - UTILITY RACK
S44	ACCESSORY-LOCKING PIN - TRAILER HITCH
S47	ACCESSORY-LUG NUTS
S52	ACCESSORY-MOLDED HOOD PROTECTOR - SMOKED
S6P	ACCESSORY-REMOTE START KIT
S6W	ACCESSORY-SEAT COVER - MUDDER (PROTECTIVE)
SA5	ACCESSORY-SHIELD - UNDERBODY
SAI	ACCESSORY-SILL PLATES - STAINLESS
SAO	ACCESSORY-SMOKERS PACKAGE
SBY	ACCESSORY-SPORT BAR - BED MOUNTED - DESIGN 1
SCZ	ACCESSORY-TAILGATE HANDLE - ALTERNATE FINISH - CHROME
SDE	ACCESSORY-TRAILER HITCH - REMOVABLE
SDI	ACCESSORY-TRIANGLE - REFLECTIVE
SDS	ACCESSORY-WEATHER DEFLECTORS - SIDE WINDOW - SMOKED
SE4	ACCESSORY-WHEEL - 18" - ALUMINUM - DESIGN 1

SE5	ACCESSORY-WHEEL - 18" - ALUMINUM - DESIGN 2
SE6	ACCESSORY-WHEEL - 18" - ALUMINUM - DESIGN 3
SE7	ACCESSORY-WHEEL - 18" - ALUMINUM - DESIGN 4
SF5	ACCESSORY-WHEEL FLARES - ALTERNATE DESIGN - MOLDED COLOR
SFE	ACCESSORY-WHEEL LOCKS
SG1	ACCESSORY-EMBLEM - EXTERIOR - DESIGN 2
SIE	ACCESSORY-PUBX TIERED STORAGE
SIZ	ACCESSORY-PUBX CARGO DIVIDER - ALTERNATE DESIGN
SKY	ACCESSORY-WHEEL - 18 X 8.5 - J - ALUMINUM - DESIGN 1
SL6	ACCESSORY-PUBX CARGO RAIL HOOKS
SL7	ACCESSORY-PUBX LADDER / UTILITY RACK STANCHIONS
SMY	ACCESSORY-WHEEL - 17 X 8.0 - J - ALUMINUM - DESIGN 1
T3C	HEADLAMP FUNCTION-PROJECTOR, LOW/HIGH BEAM (DO NOT USE AFTER '09 MAJOR PROGRAMS, USE HDL&HDL CONT&VCS FAM AS NEEDED)
T3U	LAMP FRT FOG-FRT FOG
T4A	HEADLAMPS-HALOGEN
T4Z	SHIFTER INTERLOCK-SEAT BELT ASSURANCE SYSTEM
TCA	LAMP-DOME, CENTER
TCK	DEFLECTOR-RR TIRE, AIR
TR0	LAMP-INTR, ROOF, RR, COURTESY & DUAL READING
U19	SPEEDOMETER-INST, KILO & MILES, KILO ODOMETER
U2K	DIGITAL AUDIO SYSTEM-S-BAND
U73	ANTENNA-FIXED, RADIO
UDC	DISPLAY INSTRUMENT-DRIVER INFO ENHANCED (ONE COLOR GRAPHIC)

UDD	DISPLAY INSTRUMENT-DRIVER INFO ENHANCED (MULTI COLOR STANDARD GRAPHIC)
UE1	COMMUNICATION SYSTEM-VEHICLE, ONSTAR
UEU	SENSOR INDICATOR-FORWARD COLLISION ALERT
UF2	LAMP-CARGO
UFL	LANE ACTIVE SAFETY-DEPARTURE WARNING
UIC	ACCESSORY-ACCY COMBINATION PKG 1
UID	ACCESSORY-ACCY COMBINATION PKG 2
UIE	ACCESSORY-ACCY COMBINATION PKG 3
UIG	ACCESSORY-ACCY COMBINATION PKG 4
UMN	SPEEDOMETER-INST, MILES & KILO, MILES ODOMETER
UQ3	SPEAKER SYSTEM-ENHANCED AUDIO
UQA	SPEAKER SYSTEM-PREMIUM AUDIO BRANDED WITH AMPLIFIER
US2	VEHICLE VIN-NON-SALEABLE, 0777 SERIES
USR	RECEPTACLE-USB
UTJ	THEFT DETERENT-ELECTRICAL, UNAUTHORIZED ENTRY
UVC	VISION-REAR VIEW, MONO, ANALOG
VAT	ACCESSORY-GRILLE / GRILLE INSERTS - ALTERNATE FINISH - CHROME
VAV	ACCESSORY-FLOOR MATS - ALL WEATHER
VBR	ACCESSORY-PUBX RUBBER MAT
VJH	BUMPER RR-CHROME
VJQ	HOOK-TOW, FRT
VK3	LICENSE PLATE FRONT-FRT MOUNTING PKG
VKU	ACCESSORY-MIRROR CAPS - CHROME
VKY	ACCESSORY-DOOR HANDLES - ALTERNATE FINISH - CHROME
VPB	ACCESSORY-TONNEAU - RR COMPT - VINYL W/ INTEGRAL CROSSBOW SUPPORTS
VQK	ACCESSORY-SPLASH GUARDS - CUSTOM MOLDED
VQY	ACCESSORY-TOW HOOKS - CHROME

VQZ	ACCESSORY-EXHAUST TIP - DESIGN 1
VT5	BUMPER RR-COLOR KEYED
VTG	ACCESSORY-INTERIOR TRIM KIT
VUK	ACCESSORY-TAILGATE LINER - PUBX
VV4	COMMUNICATION EQUIP-MOBILE INTERNET CONNECTIVITY
VYQ	ACCESSORY-STRIPE PACKAGE - HOOD AND FENDER - BLACK
VZX	ACCESSORY-PUBX BEDLINER
W03	ACCESSORY-HEATED SEATS
W1Y	CONTROL-STEERING WHEEL, RADIO, REDUNDANT CONTROLS
WBC	ACCESSORY-EXHAUST UPGRADE - DUAL MODE
WEN	PLANT CODE-WENTZVILLE, MO, USA
WMG	VIN MODEL YEAR-2016
WPD	SALES PACKAGE-SAFETY
X88	MARKET BRAND-CHEVROLET
XAJ	ACCESSORY-TIRE-265/60R18 SL 110T BW AL2 - VAR1
YF5	CERTIFICATION-EMISSION, CALIFORNIA
YM8	IDENTIFICATION-LIMITED PERSONALIZATION OPTION (LPO)
Z49	COUNTRY-CANADA
Z71	CHASSIS PACKAGE-"OFF ROAD"
Z82	TRAILER PROVISIONS-SPECIAL EQUIPMENT, H.D.
Z85	CHASSIS PACKAGE-INCREASED CAPACITY
Z88	MARKET BRAND-GMC
ZJJ	TIRE SPARE-265/70R16 SL 112T BW ALS
ZW9	BODY EQUIPMENT-BASE BODY OR CHASSIS
ZY1	COLOR COMBINATION-SOLID

Body Systems

Fixed and Moveable Windows

Schematic and Routing Diagrams

Moveable Window Schematics

Driver Door

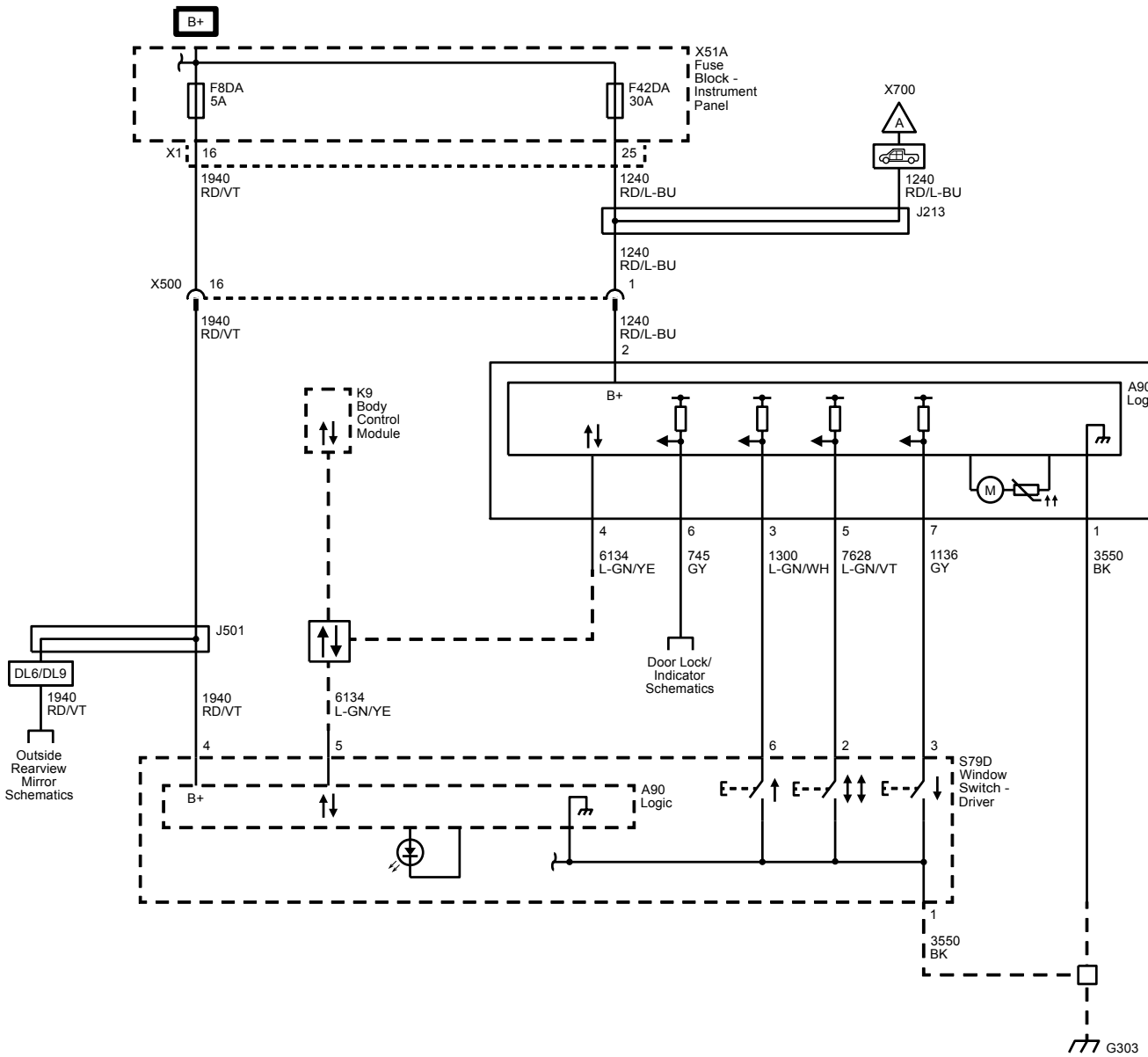

Passenger Door

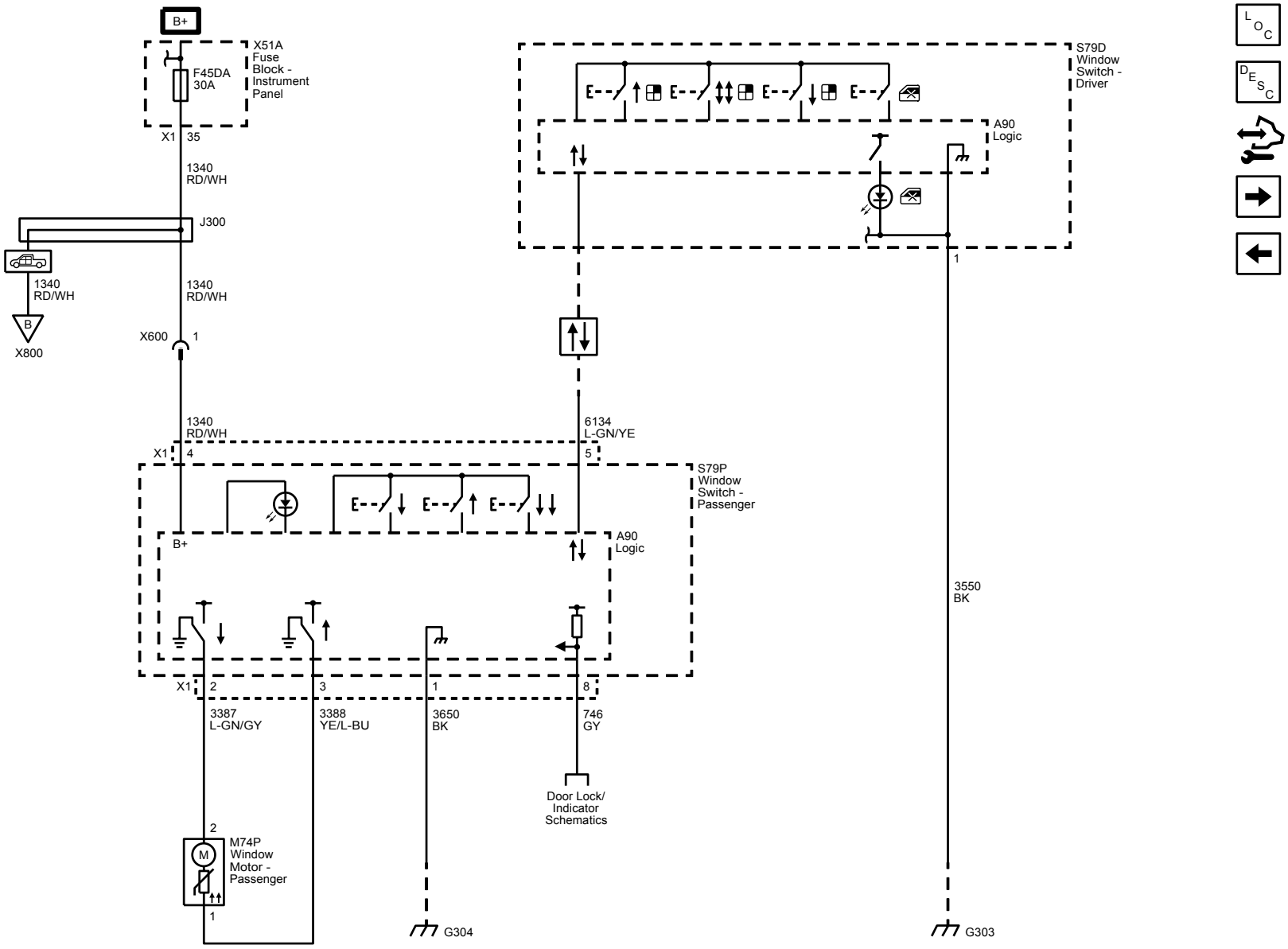

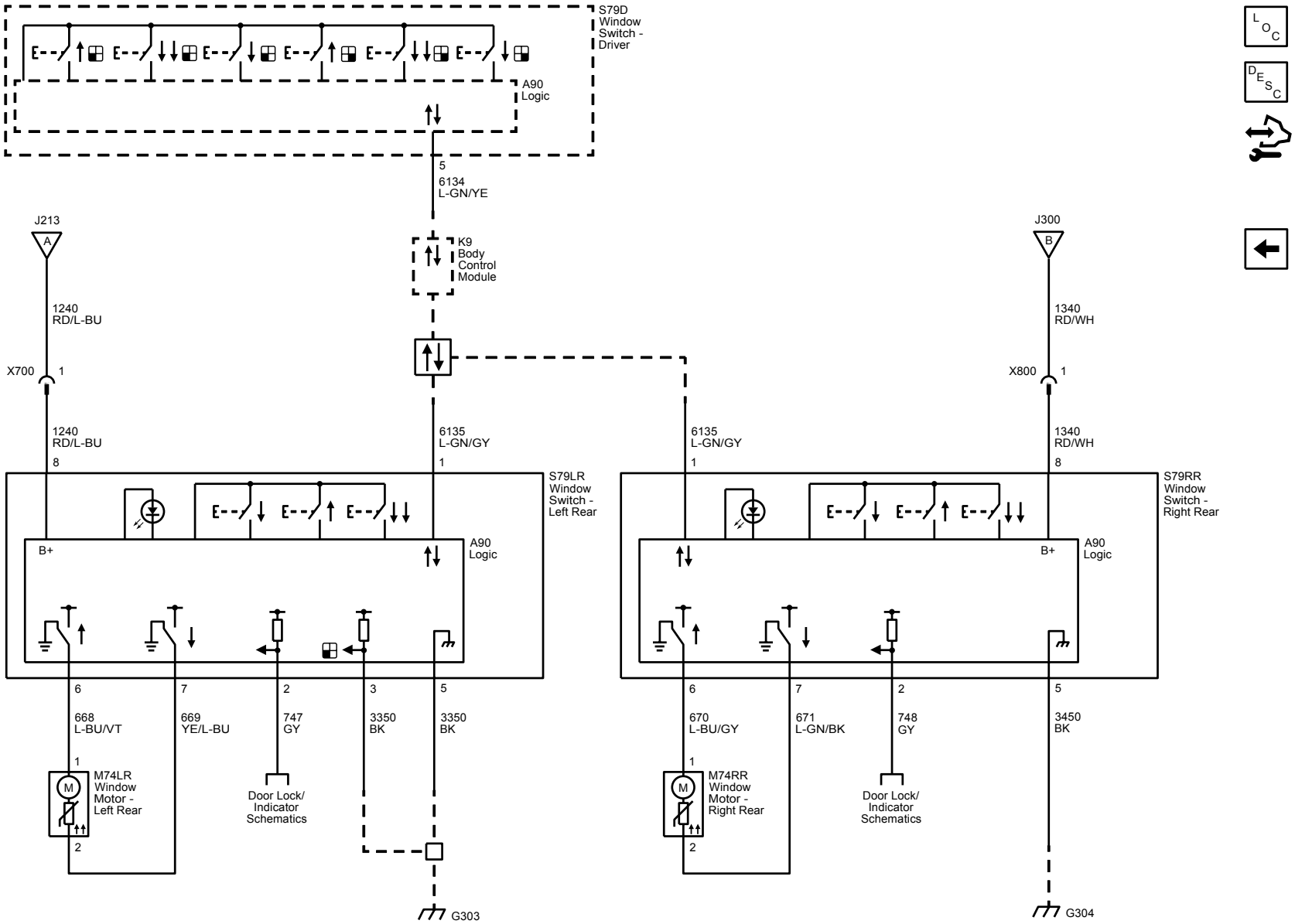
S79D
Window
Switch -
Driver
A90
Logic
5
6134
L-GN/YE
J213
A
1240
RD/L-BU
X700
1
1240
RD/L-BU
8
K9
Body
Control
Module
6135
L-GN/GY
1
J300
B
1340
RD/WH
X800
1
1340
RD/WH
8
6135
L-GN/GY
1
S79LR
Window
Switch -
Left Rear
B+
A90
Logic
S79RR
Window
Switch -
Right Rear
B+
A90
Logic
6
668
L-BU/VT
7
669
YE/L-BU
2
747
GY
3
3350
BK
5
3350
BK
6
670
L-BU/GY
7
671
L-GN/BK
2
748
GY
5
3450
BK
1
M74LR
Window
Motor -
Left Rear
2
M
Door Lock/
Indicator
Schematics
1
M74RR
Window
Motor -
Right Rear
2
M
Door Lock/
Indicator
Schematics
G303
G304

Defogger Schematics

Defogger (C49)

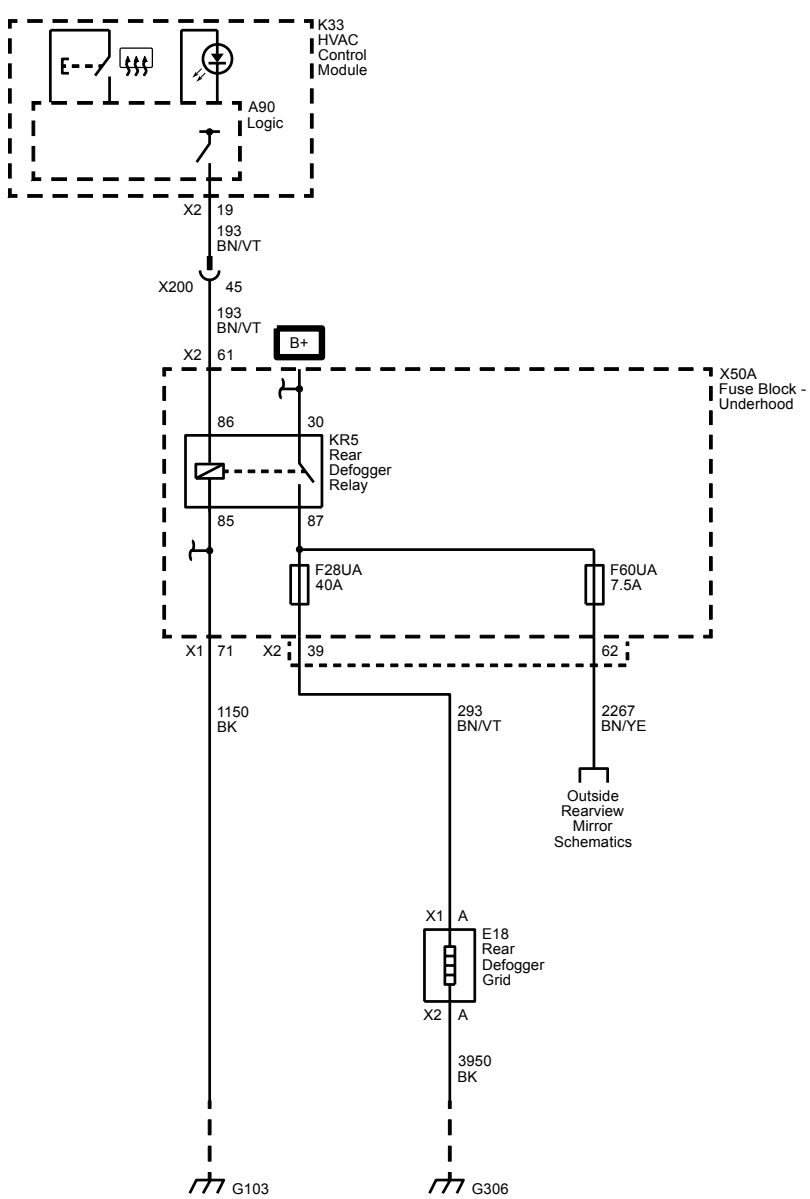

Description and Operation

Power Windows Description and Operation

Power Windows System Components

The power window system consists of the following components:

- Driver window switch
- Passenger window switch
- Left rear window switch
- Right rear window switch
- Right rear door latch
- Left rear door latch
- Window motors in each of the doors
- 30A Fuse
- Body control module (BCM)

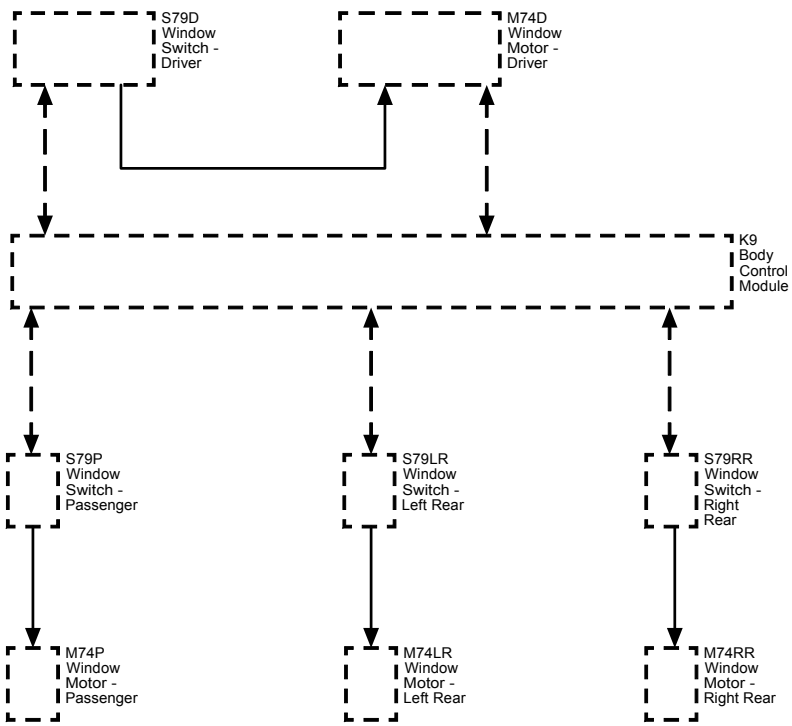

Driver Express Up and Express Down Power Window Motor

The driver door contains a window motor is smart motor that will detect excessive resistance while performing the express up function and automatically reverse direction to prevent injury to any occupants that may become trapped between the closing window and the door frame. The automatic reverse safety feature can be overridden by pulling and holding the window switch.

The logic circuit within the window motor monitors the up, down and express signal circuits which are normally equal to B+ voltage. When a switch is used on the driver window switch, the contacts close causing a voltage drop within the appropriate signal circuit. The driver window motor will detect the voltage drop and will command the window to move in the direction requested.

Passenger, Left Rear and Right Rear Express Down Window Motors

For the passenger, right rear and left rear doors, when their window switch is pressed in the down position, battery positive voltage is applied to their respective window motor control circuit and ground to the other window motor control circuit causing that window to open. When the individual window switch is pulled in the up position, voltage and ground is applied to the window motor in the opposite direction causing that window to close. The return path to ground is supplied through the inactive control circuit being normally grounded through the window switch.

Each passenger and rear window switch communicates to the BCM by a serial data circuit. When the driver wishes to control the passenger, left rear or right rear window, the driver will use the appropriate switch on the driver window switch. When this switch is used, a serial data message is sent to the BCM requesting a window motor command, the BCM will then send a serial data message to the appropriate door window switch which will then command that window to move in the direction requested.

Lockout Switch Feature

The driver power window switch contains a window lockout switch, when the driver presses the window lockout switch, a serial data message is sent to the BCM which will send a disable command to the rear window motors, the rear window motors will then ignore all voltage drops in the window motor control circuits caused by using the rear window switches. The rear windows will still function normally from the switches on the driver window switch.

Rear Window Defogger Description and Operation

Rear Window Defogger System Components

The rear window defogger system consists of the following components:

- HVAC control module
- Rear defogger relay
- Rear defogger grid
- 40A fuse

Rear Window Defogger Block Diagram

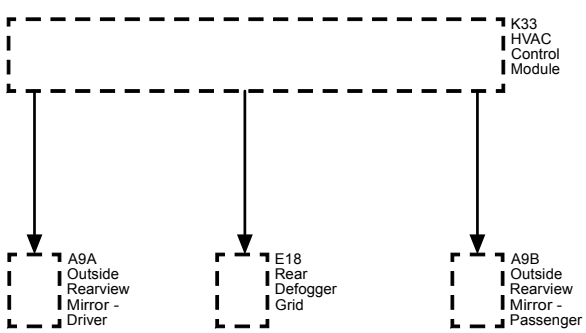

Rear Window Defogger Operation

The rear defog control system utilizes a single zone backlight design, driven with a single relay configuration. Additionally, up to two outside rear view mirrors can be heated if equipped. A switch for the customer to control the system is provided within the HVAC control module, also included in the HVAC control module is an indicator to inform the customer with the current state of the system. The system is only operational when engine is running or during remote start.

Pressing the heated rear window switch on the HVAC control module causes the HVAC control module to provide voltage to the coil side of the rear defogger relay, this will energize the relay causing the relay switch contacts to close allowing B+ voltage to flow through the rear defogger grid control circuit to the rear defogger grid.

When the rear heated window switch is pressed and the engine is running, the rear defog control system will remain active for 10 minutes. After the initial cycle has lapsed, pressing the switch again will continue rear window defogger operation, but the cycle will only last 5 minutes.

Horns

Schematic and Routing Diagrams

Horn Schematics

Horns

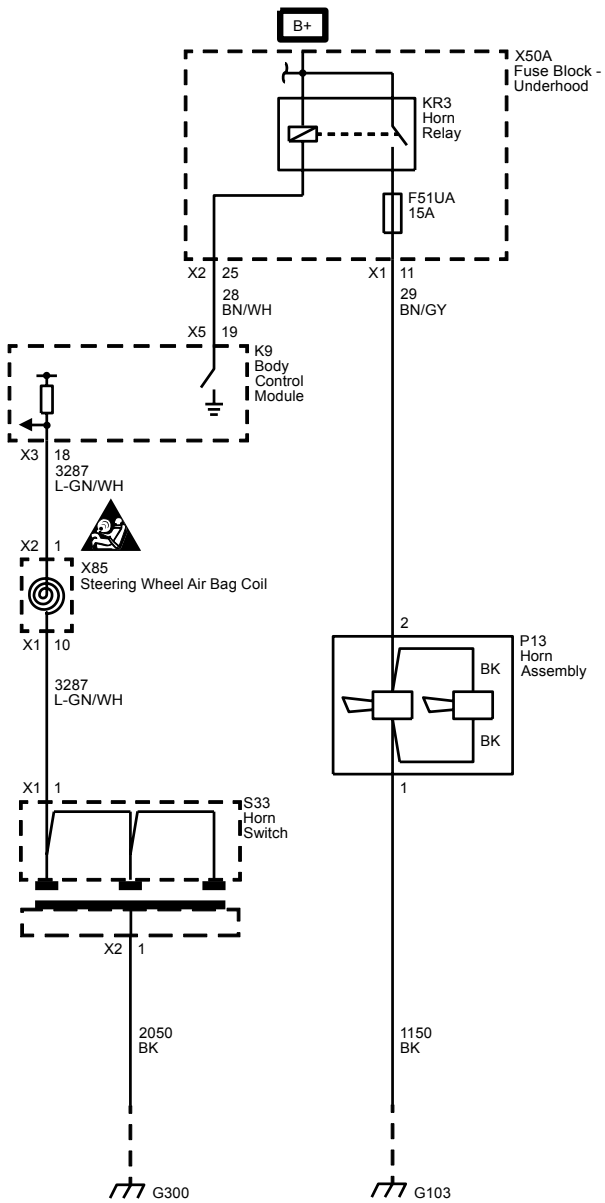

Description and Operation

Horns System Description and Operation

System Description

The horn system consists of the following components:

- HORN fuse
- Horn relay
- Horn switch
- Horn assembly
- Body control module (BCM)

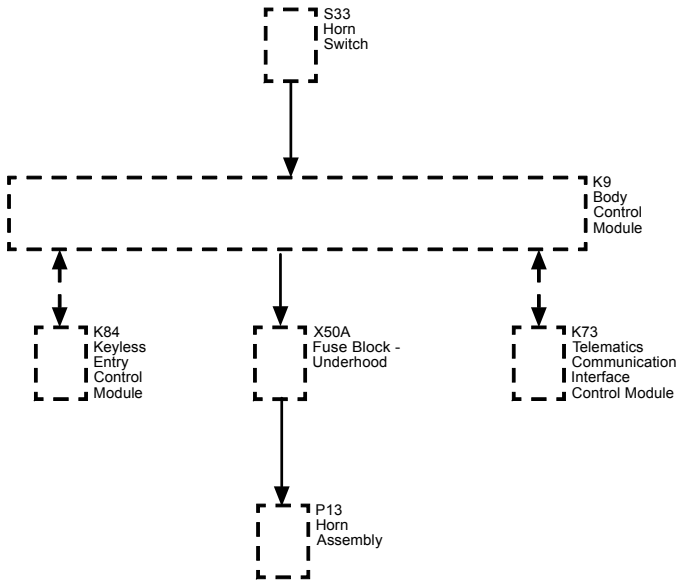

System Operation

The vehicle horn system is activated under the following conditions:

- When the horn switch is depressed
- The BCM commands the horns ON under any of the following conditions:
  - When the content theft deterrent system detects a vehicle intrusion—For further information refer to CELL Link Error - Link target cell (cell ID 149050) is invalid for this publication..
  - When the panic button is depressed on the remote control door lock transmitter—For further information refer to Keyless Entry System Description and Operation.
  - When the keyless entry system is used to lock the vehicle, a horn chirp may sound to notify the driver that the vehicle has been locked. The notification feature may be enabled or disabled through personalization. For further information refer to Keyless Entry System Description and Operation.
  - When the OnStar® system is used to sound the horns if equipped—For further information, refer to CELL Link Error - Link target cell (cell ID 149754) is invalid for this publication..

Circuit Operation

Battery positive voltage is applied at all times to the horn relay coil and the horn relay switch. Pressing either of the horn switches applies ground to the horn relay control circuit. The BCM may also apply ground to the horn relay control circuit as described above. When the horn relay control circuit is grounded, the horn relay is energized and battery positive voltage is applied to the horns through the horn control circuit. The horns sound as long as ground is applied to the horn relay control circuit.

Lighting

Schematic and Routing Diagrams

Headlights/Daytime Running Lights (DRL) Schematics

Controls

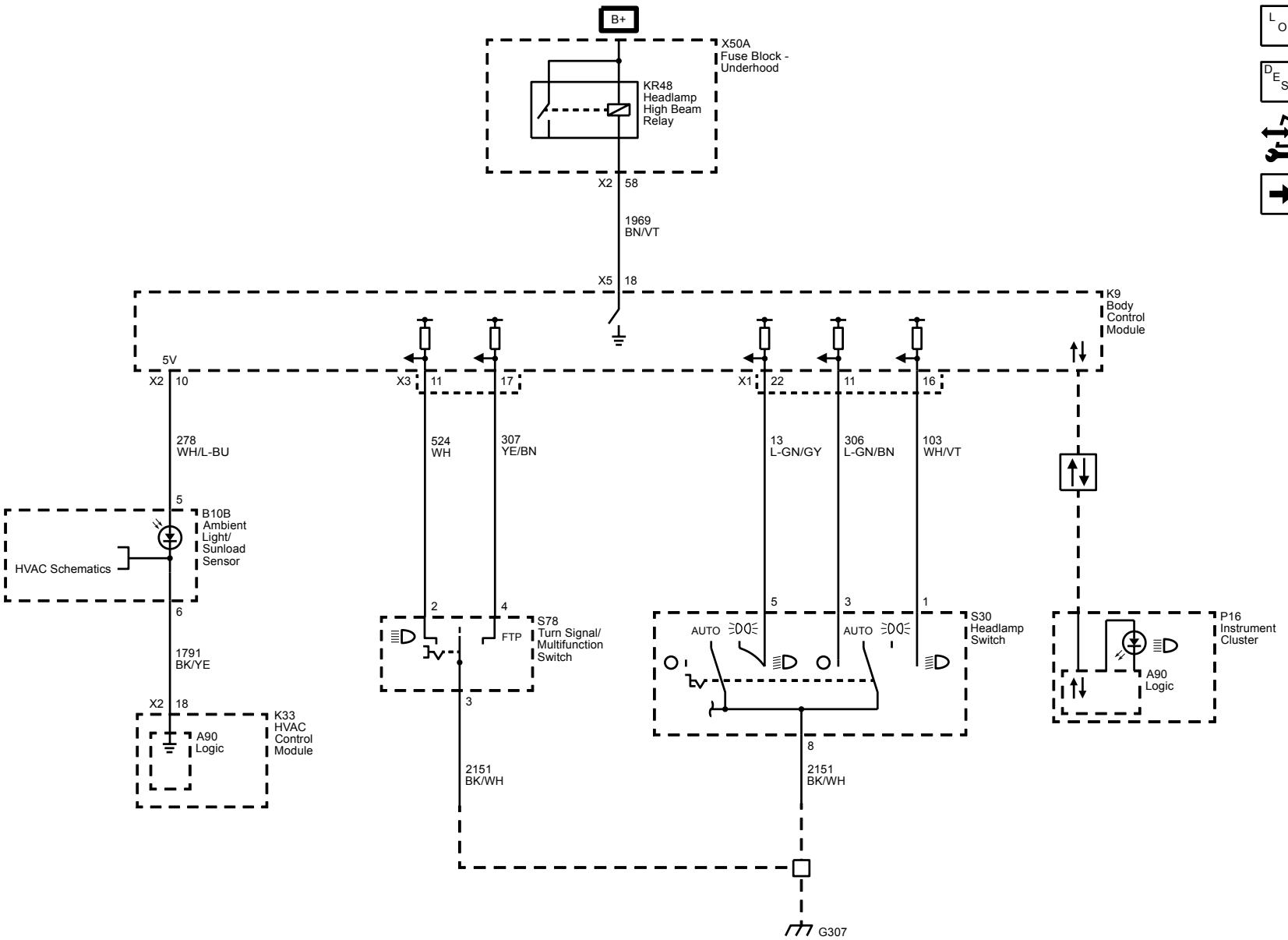

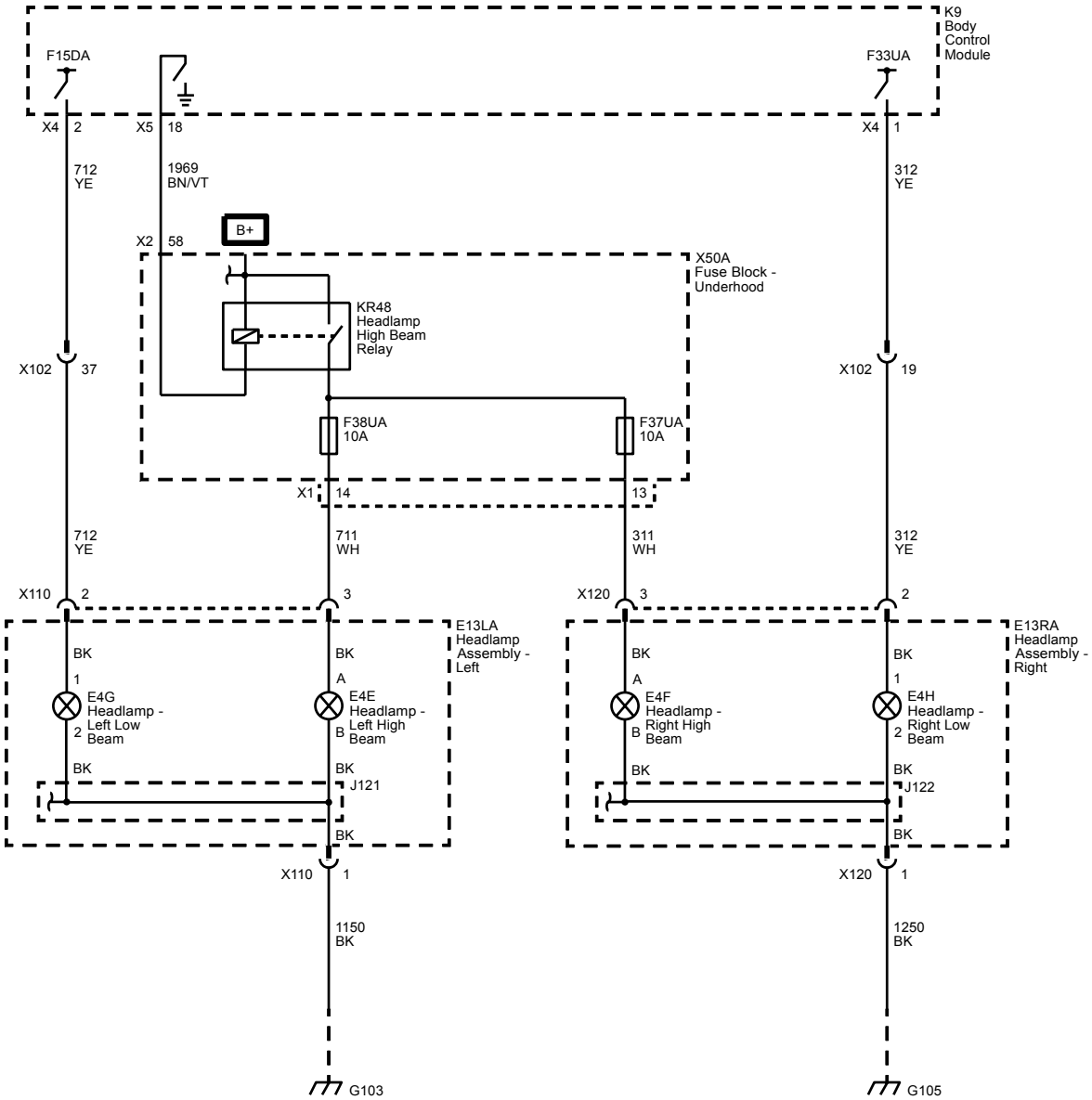
K9
Body
Control
Module
F15DA
F33UA
X4
2
X5
18
X4
1
712
YE
1969
BN/VT
312
YE
B+
X2
58
X50A
Fuse Block -
Underhood
KR48
Headlamp
High Beam
Relay
X102
37
X102
19
F38UA
10A
F37UA
10A
X1
14
13
712
YE
711
WH
311
WH
312
YE
X110
2
3
X120
3
2
E13LA
Headlamp
Assembly -
Left
E13RA
Headlamp
Assembly -
Right
BK
1
E4G
Headlamp -
Left Low
Beam
2
BK
A
E4E
Headlamp -
Left High
Beam
B
BK
A
E4F
Headlamp -
Right High
Beam
B
BK
1
E4H
Headlamp -
Right Low
Beam
2
BK
J121
BK
BK
J122
BK
X110
1
X120
1
1150
BK
1250
BK
G103
G105

Fog Lights Schematics

Fog Lamps (T3U)

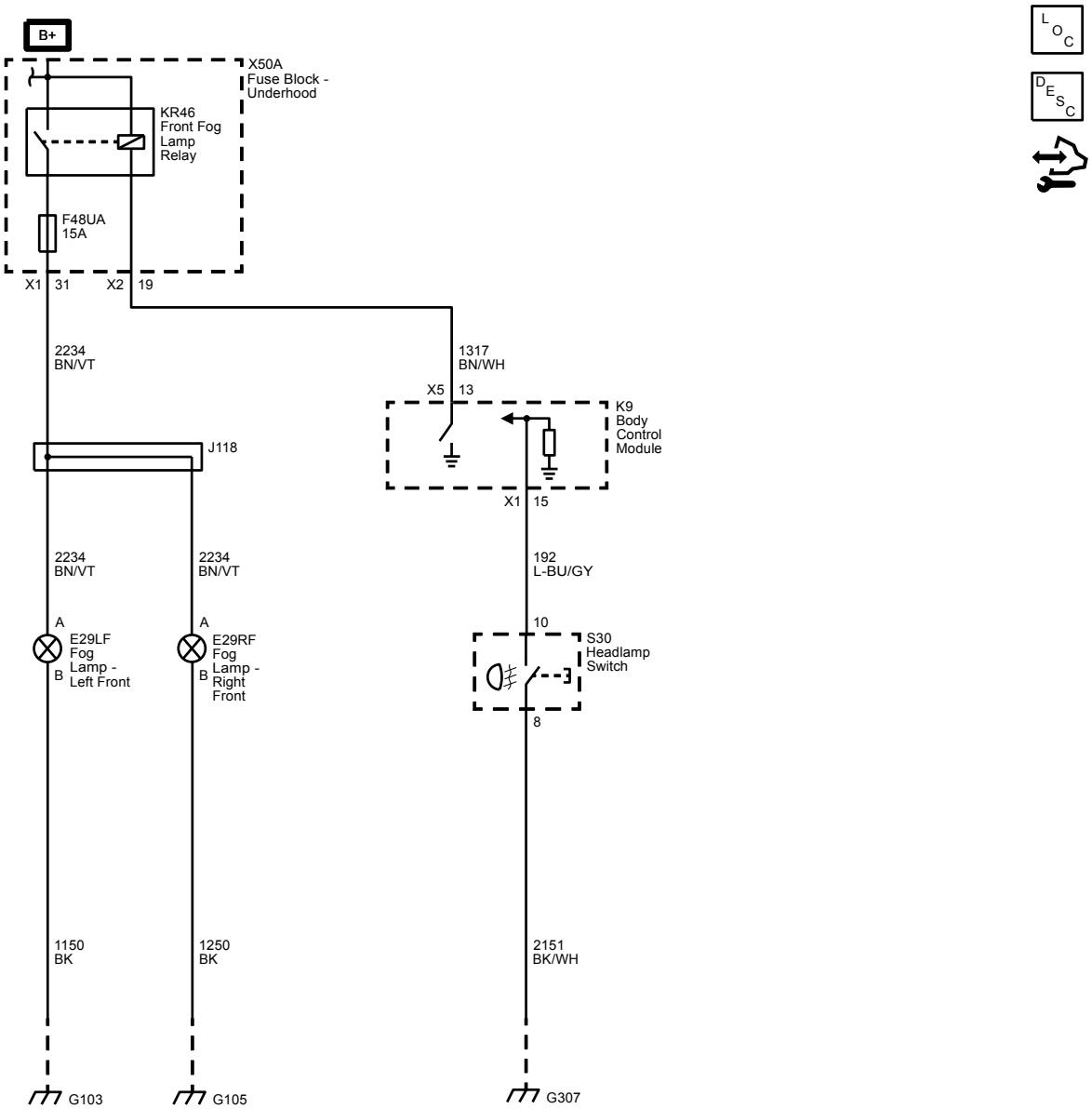

Controls and Indicators

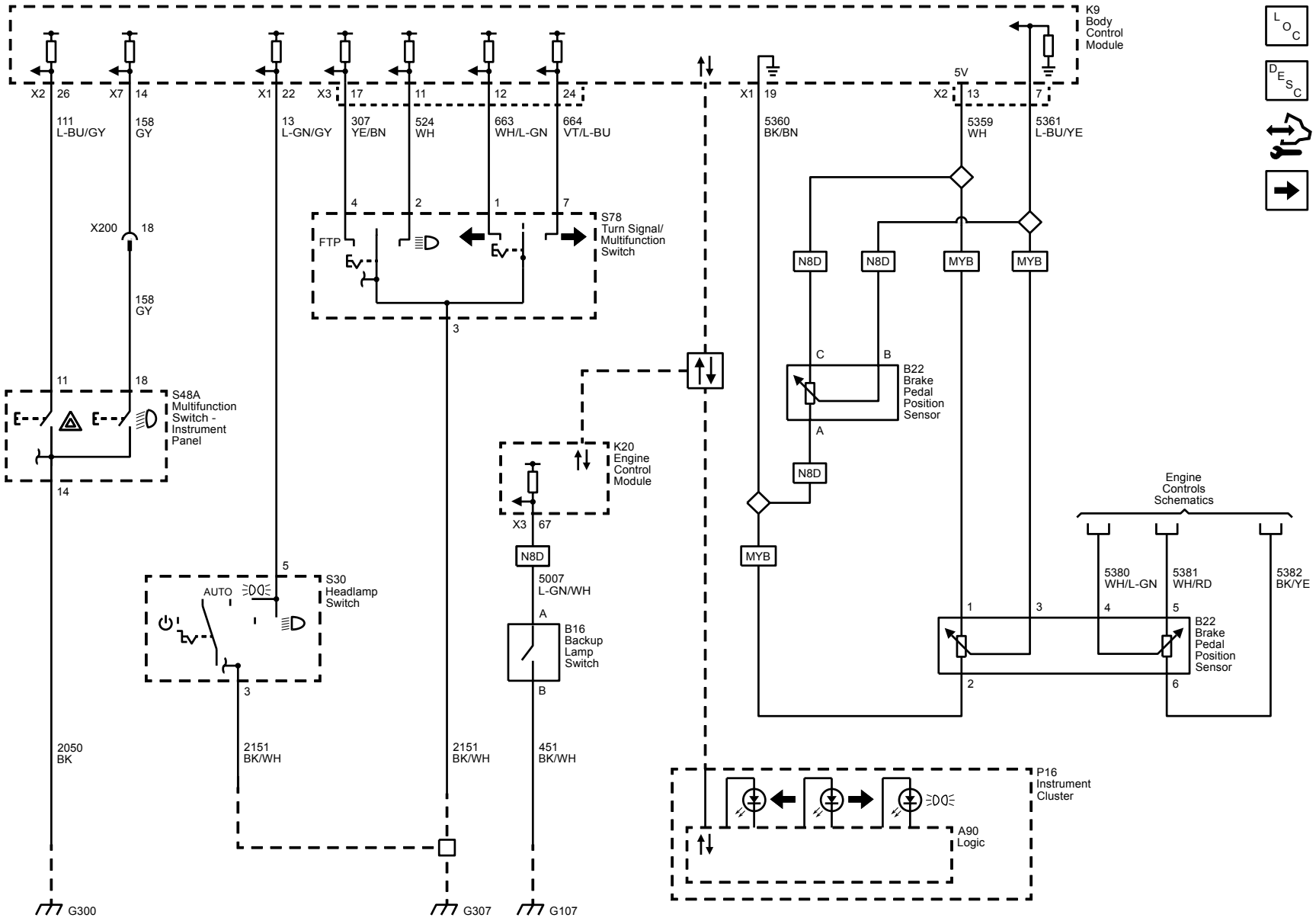

Park, Side Marker and Front Turn Lamps

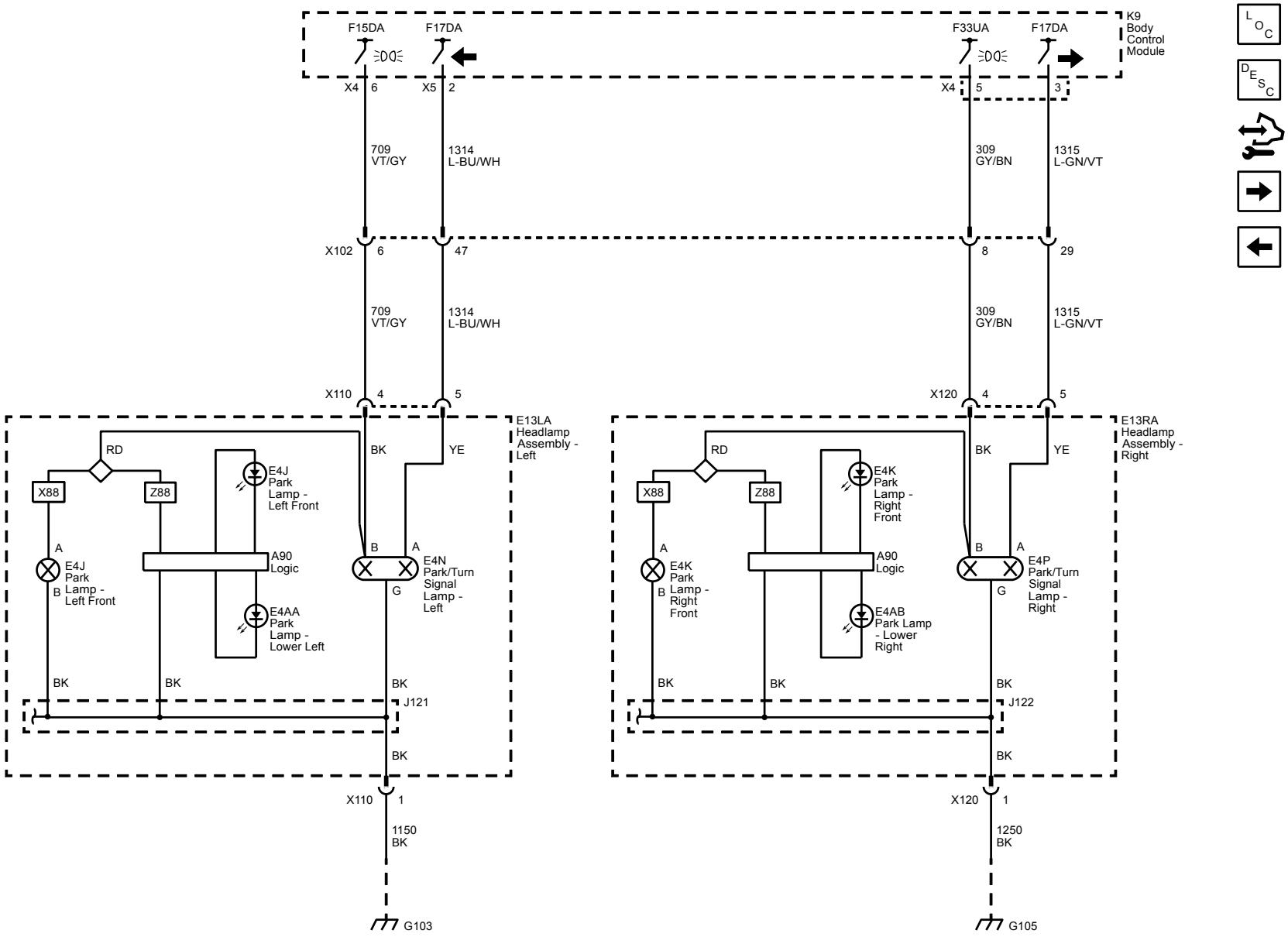

Tail Lamps

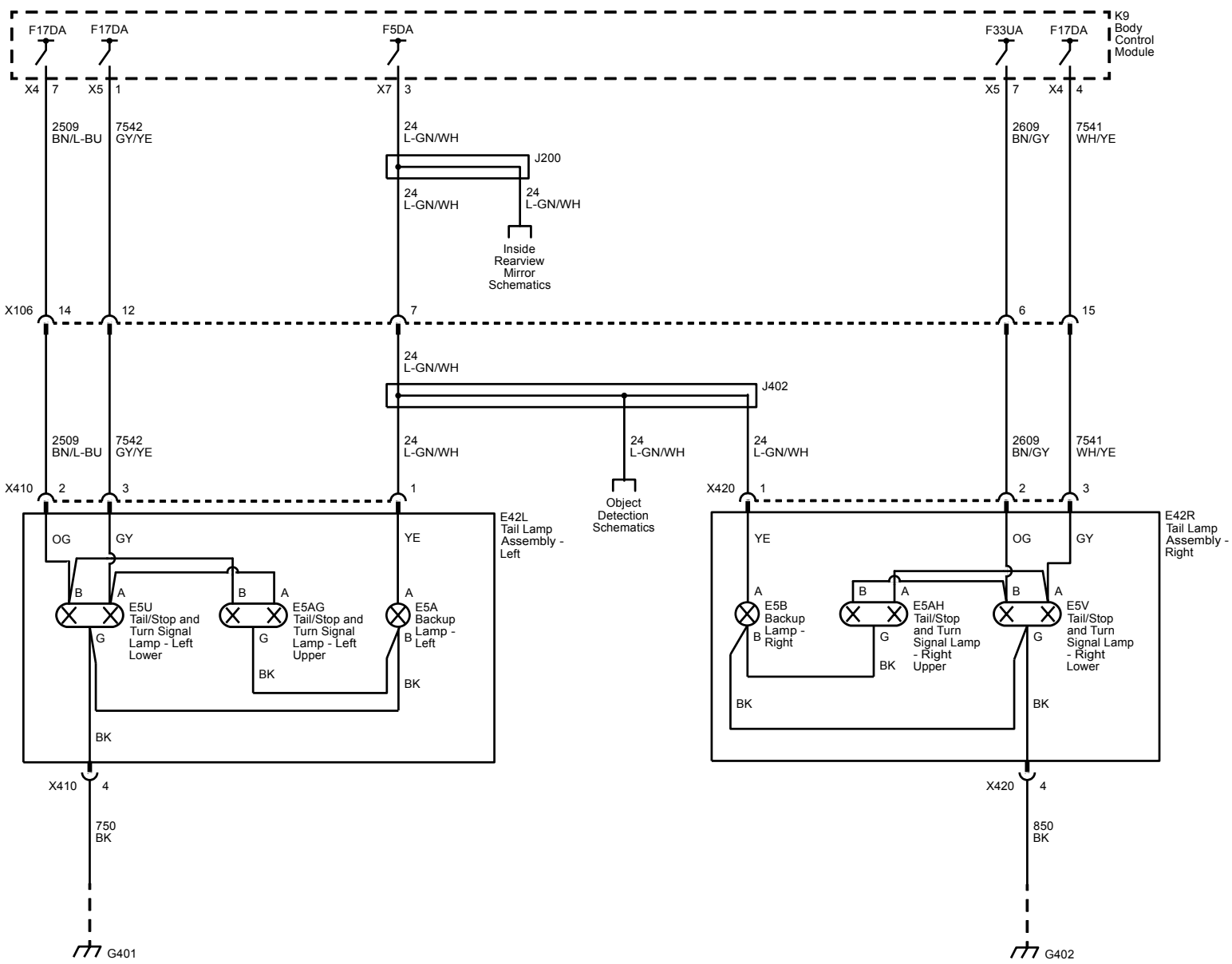
K9 Body Control Module
F17DA
F17DA
F5DA
F33UA
F17DA
X4 7
X5 1
X7 3
X5 7
X4 4
2509 BN/L-BU
7542 GY/YE
24 L-GN/WH
J200
24 L-GN/WH
24 L-GN/WH
Inside Rearview Mirror Schematics
2609 BN/GY
7541 WH/YE
X106 14
12
7
6
15
24 L-GN/WH
J402
2509 BN/L-BU
7542 GY/YE
24 L-GN/WH
24 L-GN/WH
24 L-GN/WH
2609 BN/GY
7541 WH/YE
X410 2
3
1
Object Detection Schematics
X420 1
2
3
E42L Tail Lamp Assembly - Left
OG
GY
YE
B
A
E5U Tail/Stop and Turn Signal Lamp - Left Lower
G
E5AG Tail/Stop and Turn Signal Lamp - Left Upper
BK
E5A Backup Lamp - Left
BK
BK
X410 4
750 BK
G401
E42R Tail Lamp Assembly - Right
YE
OG
GY
A
E5B Backup Lamp - Right
B
E5AH Tail/Stop and Turn Signal Lamp - Right Upper
BK
E5V Tail/Stop and Turn Signal Lamp - Right Lower
BK
BK
X420 4
850 BK
G402

CHMSL, Cargo, License Plate Lamps and Accessory Bed Lighting (S0Y)

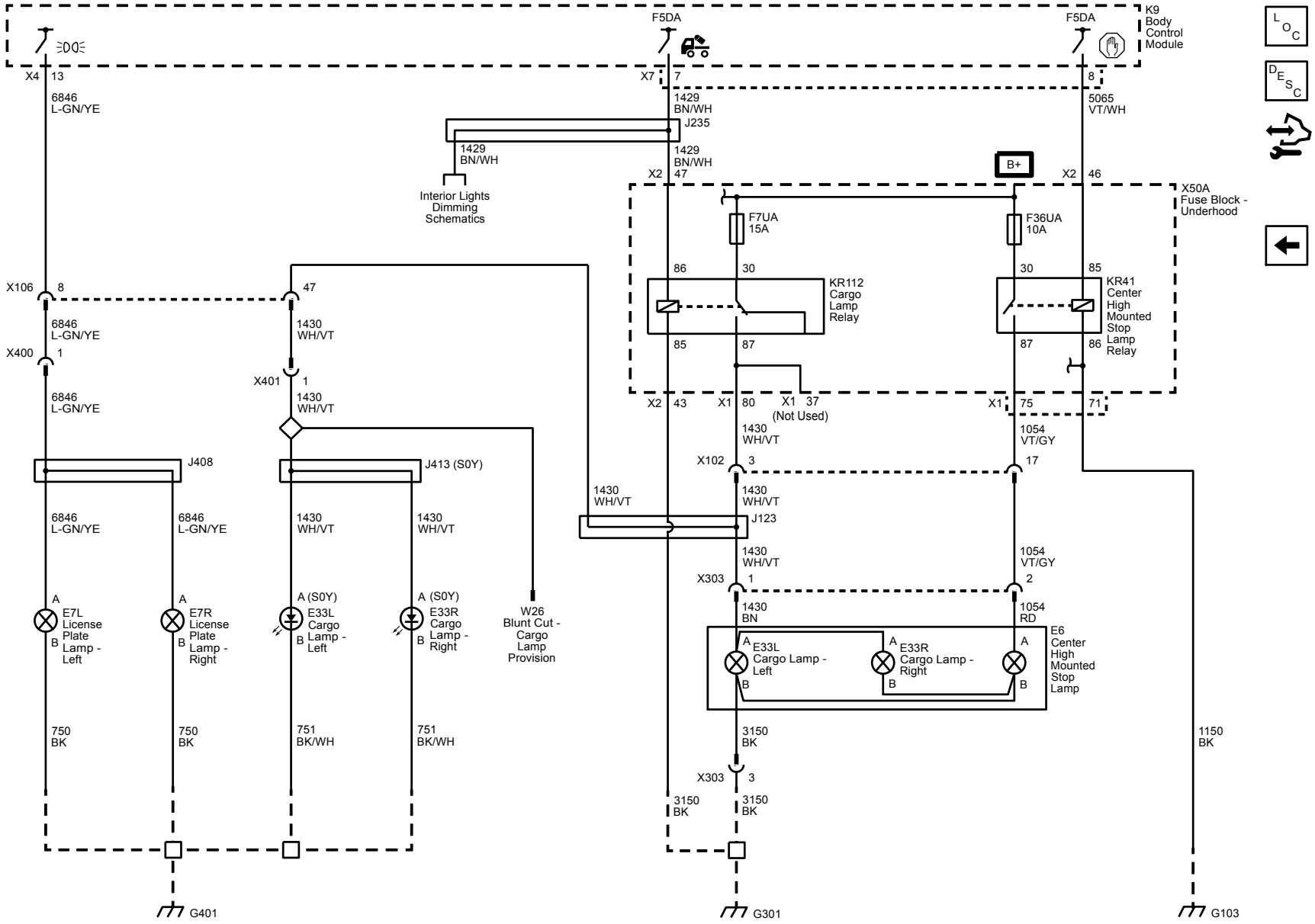

Dome Lamps (Except C74)

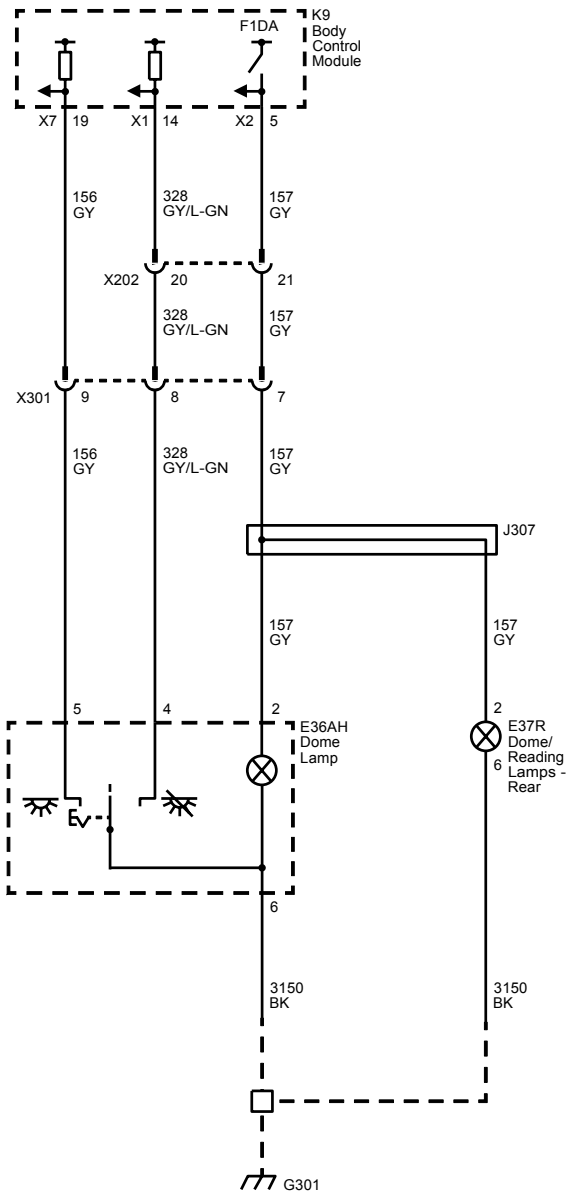

Dome/Reading, and Sunshades Lamps (C74/TR0/D6I)

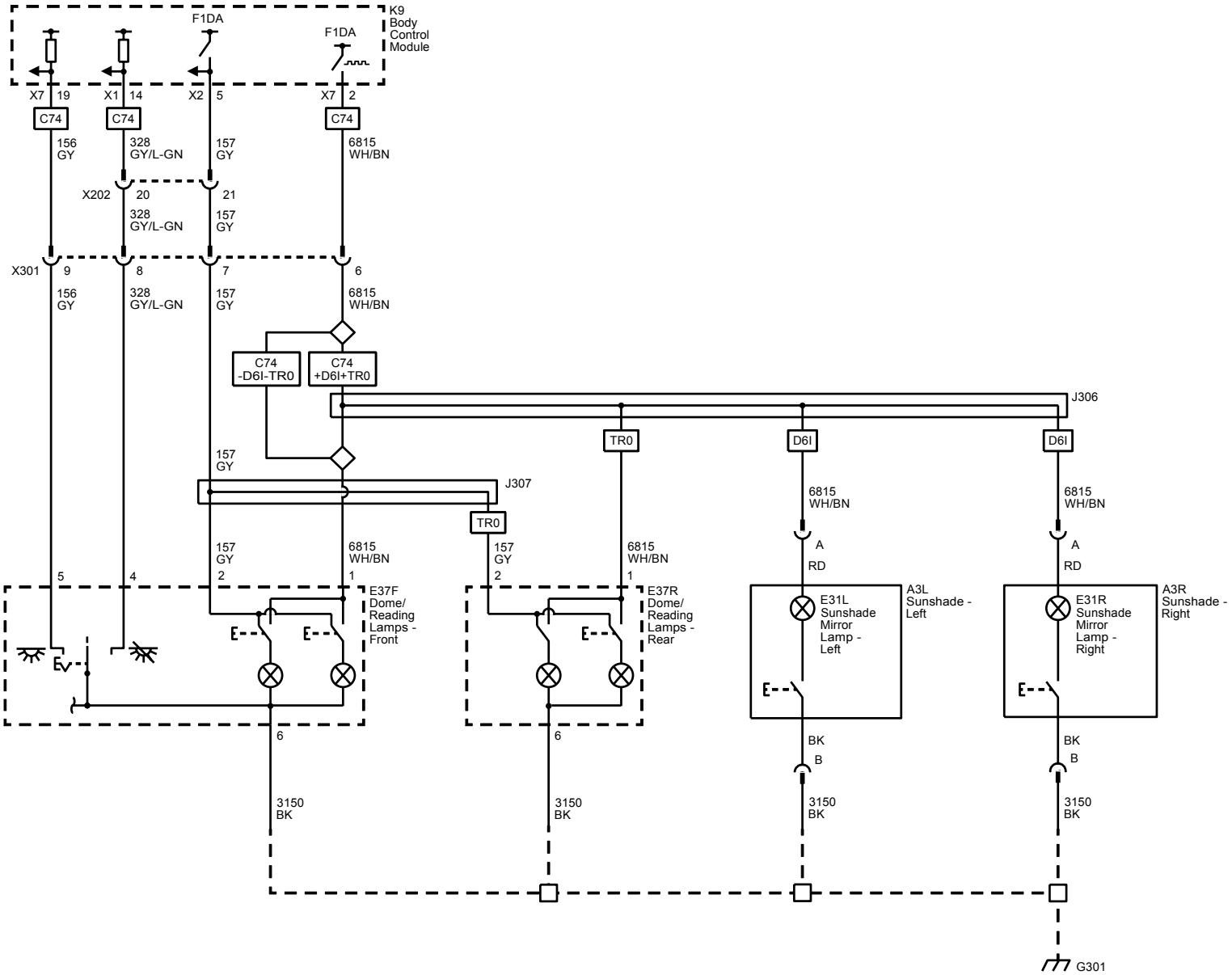

Interior Lights Dimming Schematics

Dimming Control (1 of 3)

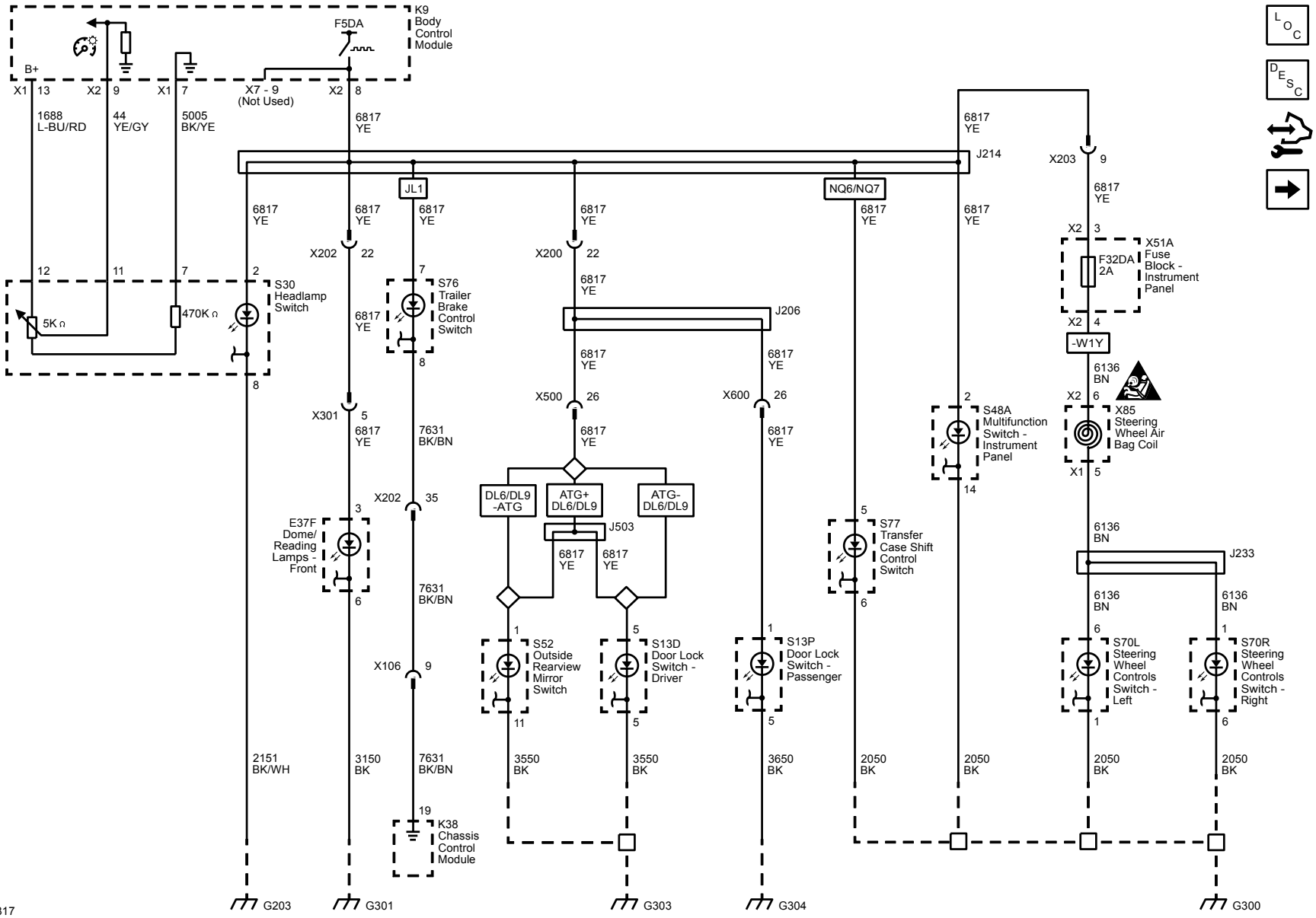

6817

Dimming Control (2 of 3)

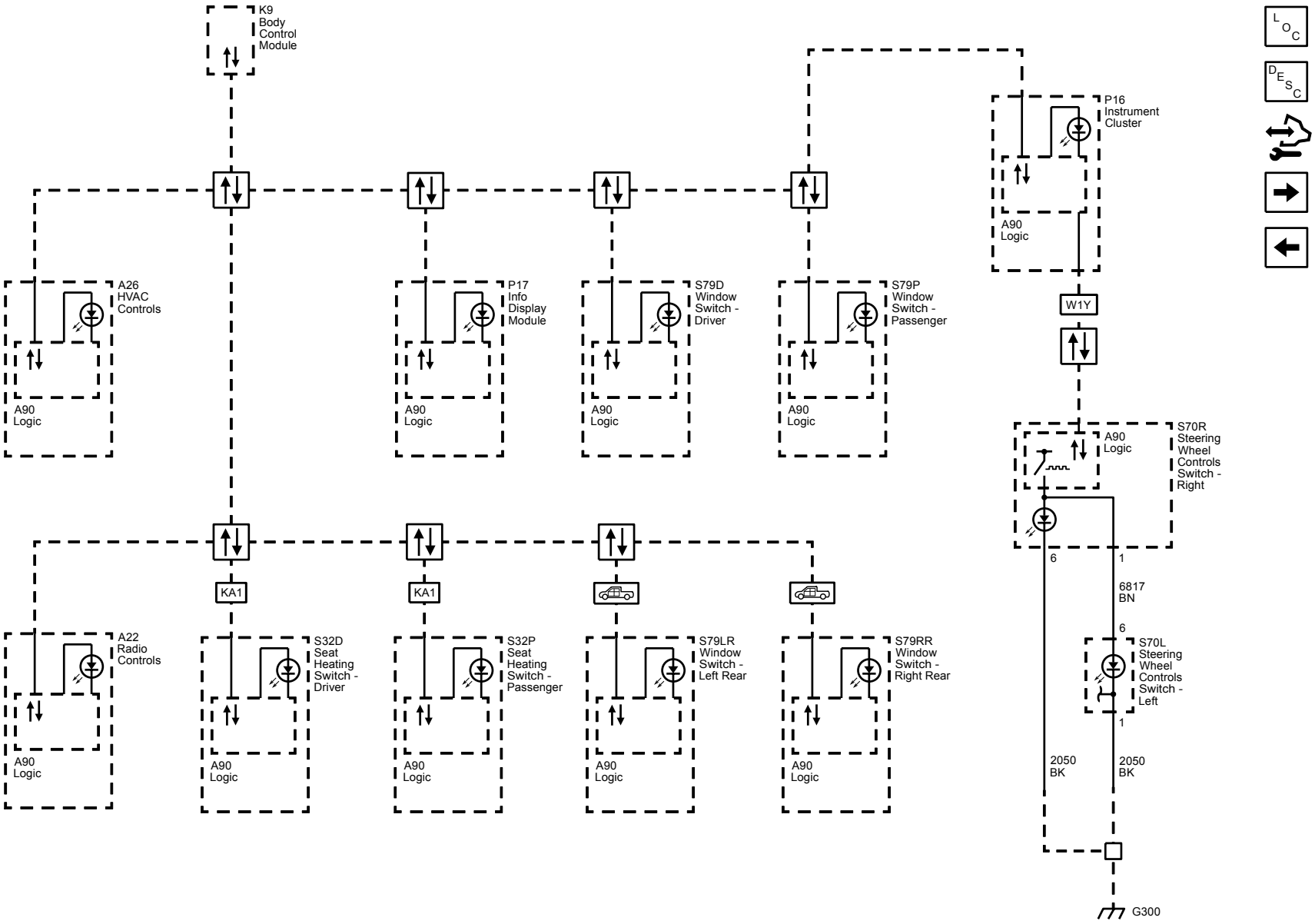

Dimming Control (3 of 3)

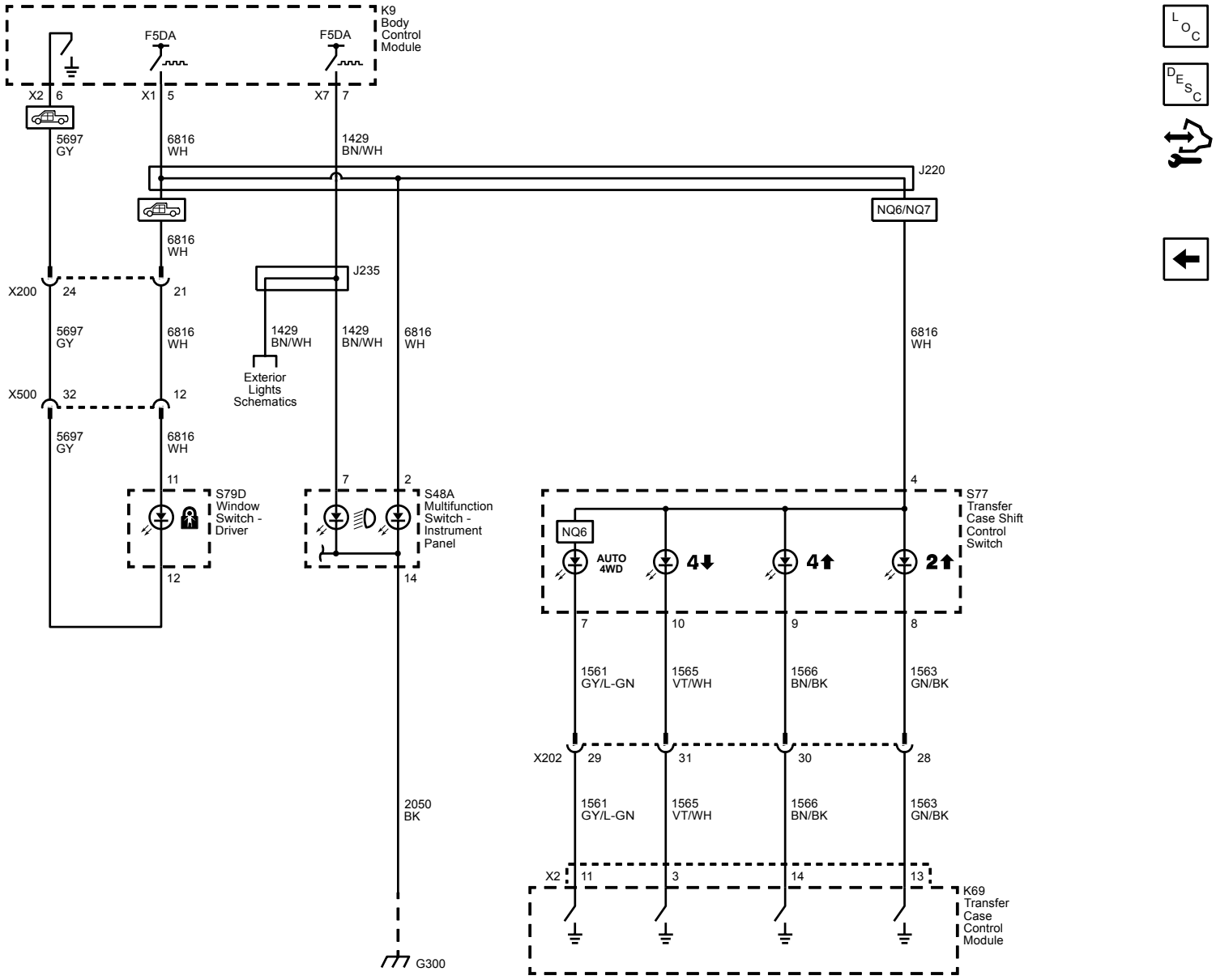

Description and Operation

Exterior Lighting Systems Description and Operation

The exterior lighting system consist of the following lamps:

- Backup lamps
- Daytime running lamps
- Hazard warning lamps
- Headlamps
- Park, tail, license, and marker lamps
- Stop lamps
- Turn signal lamps
- Trailer lighting

Low Beam Headlamps

The headlamps may be turned ON in 3 different ways:

- When the headlamp switch is placed in the ON position, for normal operation
- When the headlamp switch is placed in the AUTO position, for automatic lamp control
- When the headlamp switch is placed in the AUTO position, with the windshield wipers ON in daylight conditions, after a 6 second delay

The BCM will also command the low beam headlamps ON during daylight conditions when the following conditions are met:

- Headlamp switch in the AUTO position
- Windshield wipers ON
- Vehicle in any gear but PARK

When the BCM commands the low beam headlamps ON, the vehicle operator will notice the interior backlighting for the instrument cluster and the various switches with backlighting control will dim to the level of brightness selected by the instrument panel dimmer switch.

The body control module (BCM) monitors three signal circuits from the headlamp switch. When the headlamp switch is in the AUTO position, all three signal circuits are open. When placed in the AUTO position, the BCM monitors inputs from the ambient light sensor to determine if headlamps are required or if daytime running lamps will be activated based on outside lighting conditions. When the headlamp switch is placed in the OFF position, the headlamp switch headlamps OFF signal circuit is grounded, indicating to the BCM that the exterior lamps should be turned OFF. With the headlamp switch in the PARK position, the headlamp switch park lamps ON signal circuit is grounded, indicating that the park lamps have been requested. When the headlamp switch is placed in the HEADLAMP position, both the headlamp switch park lamps ON signal circuit and the headlamp switch headlamps ON signal circuit are grounded. The BCM responds to the inputs by illuminating the park lamps and headlamps. When the low beam headlamps are requested, the BCM applies B+ to both low beam headlamp control circuits illuminating the low beam headlamps.

High Beam Headlamps

When the low beam headlamps are ON and the turn signal/multifunction switch is placed in the high beam position, ground is applied to the BCM through the high beam signal circuit. The BCM responds to the high beam request by applying ground to the high beam relay control circuit which energizes the high beam relay. With the high beam relay energized, the switch contacts close allowing battery voltage to flow through the left and right high beam fuses to the high beam control circuits illuminating the left and right high beam headlamps.

Daytime Running Lamps

The daytime running lamps will illuminate continuously when the following conditions are met:

- The ignition is in the RUN or CRANK position
- The shift lever is out of the PARK position for vehicles equipped with automatic transmissions or the parking brake is released for vehicles with manual transmissions
- The low and high beam headlamps are OFF

The ambient light sensor is used to monitor outside lighting conditions. The ambient light sensor provides a voltage signal that will vary between 0.2 and 4.9 volts depending on outside lighting conditions. The body control module (BCM) provides a 5 V reference signal to the ambient light sensor and the HVAC control module provides a low reference ground. The BCM monitors the ambient light sensor signal circuit to determine if outside lighting conditions are correct for either daytime running lights or automatic lamp control when the headlamp switch is in the AUTO position. In daylight conditions the BCM will command the low beam headlamps ON. Any function or condition that turns on the headlamps will cancel daytime running lamps operation.

Flash to Pass

When the turn signal/multifunction switch is momentarily placed in the flash to pass position, ground is applied to the turn signal/multifunction switch. The turn signal/multifunction switch applies ground to the body control module (BCM) through the flash to pass switch signal circuit. The BCM responds to the flash to pass request by applying ground to the high beam relay control circuit. This energizes the high beam relay, closing the switch side contacts of the high beam relay, applying battery voltage to the left and right high beam fuses. Battery voltage is applied from the high beam fuses through the high beam control circuit to the high beam headlamp assemblies. This causes the high beam headlamps to illuminate at full brightness momentarily.

Hazard Lamps

The hazard flashers may be activated in any power mode. The hazard switch signal circuit is momentarily grounded when the hazard switch is pressed. The body control module (BCM) responds to the hazard switch signal input by supplying battery voltage to all four turn signal lamps in an ON and OFF duty cycle. When the hazard switch is activated, the BCM sends a serial data message to the instrument panel cluster requesting both turn signal indicators to be cycled ON and OFF.

The instrument panel dimmer switch controls the brightness of the interior backlighting components. When the instrument panel dimmer switch is placed in a desired brightness position, the body control module (BCM) receives a signal from the instrument panel dimmer switch and responds by applying a pulse width modulated voltage to the hazard switch light emitting diode (LED) backlighting control circuit illuminating the LED to the desired level of brightness.

Park, Tail, and License Lamps

When the headlamp switch is placed in the HEAD or PARK position, ground is applied to the park lamp switch ON signal circuit to the body control module (BCM). The BCM responds by applying voltage to the park lamps, tail lamps, and license lamps control circuits illuminating the park, tail, and license lamps.

Stop Lamps

The brake pedal position sensor is used to sense the action of the driver application of the brake pedal. The brake pedal position sensor provides an analog voltage signal that will increase as the brake pedal is applied. The body control module (BCM) provides a low reference signal and a 5 V reference voltage to the brake pedal position sensor. When the variable signal reaches a voltage threshold indicating the brakes have been applied, the BCM will apply battery voltage to the left and right stop lamp control circuits as well as the center high mounted stop lamp control circuit illuminating the left and right stop lamps and the center high mounted stop lamp.

Turn Signal Lamps

Ground is applied at all times to the turn signal/multifunction switch. The turn signal lamps may only be activated with the ignition switch in the ON or START positions. When the turn signal/multifunction switch is placed in either the TURN RIGHT or TURN LEFT position, ground is applied to the body control module (BCM) through either the right turn or left turn signal switch signal circuit. The BCM responds to the turn signal switch input by applying a pulsating voltage to the front and rear turn signal lamps through there respective control circuits. When a turn signal request is received by the BCM, a serial data message is sent to the instrument cluster requesting the respective turn signal indicator be pulsed ON and OFF.

Backup Lamps

Automatic Transmission

With the engine ON and the transmission in the REVERSE position, the transmission control module (TCM) sends a serial data message to the body control module (BCM). The message indicates that the gear selector is in the REVERSE position. The BCM applies battery voltage to the backup lamps control circuit illuminating the backup lamps. Once the driver moves the gear selector out of the REVERSE position, a message is sent by the TCM via serial data requesting the BCM to remove battery voltage from the backup lamps control circuit. The engine must be ON for the backup lamps to operate.

Manual Transmission

The engine control module (ECM) provides a signal circuit to the backup lamp switch which is permanently grounded. With the engine running and the transmission in the reverse position, the backup lamp switch signal circuit is pulled low and the ECM responds by sending a serial data message to the body control module (BCM). The message indicates that the gear selector is in the reverse position. The BCM applies battery voltage to the backup lamps control circuit illuminating the backup lamps. Once the driver moves the gear selector out of the reverse position, a message is sent by the ECM via serial data requesting the BCM to remove battery voltage from the backup lamps control circuit. The engine must be running for the backup lamps to operate. The engine must be running for the backup lamps to operate.

Trailer Lighting

Backup Lamps

For backup lamp operation, the trailer backup lamps relay is supplied with battery voltage at all times. With the engine running and the transmission in the reverse position, the transmission control module (TCM) sends a serial data message to the body control module (BCM). The message indicates that the gear selector is in the reverse position. The BCM responds to the backup lamp request by energizing the trailer backup lamps relay by applying battery voltage to the trailer backup lamps relay control circuit. When the trailer backup lamps relay is energized, the relay switch contacts close and battery voltage is applied through the backup lamp fuse to the trailer backup lamps control circuit which illuminates the trailer backup lamps. Once the driver moves the gear selector out of the reverse position, a message is sent by the TCM via serial data requesting the BCM to remove battery voltage from the trailer backup lamps relay control circuit.

Park Lamps

For trailer park lamp operation, the trailer park lamps relay is supplied with battery voltage at all times. When the headlamp switch is placed in the HEAD or PARK position, ground is applied to the park lamp switch ON signal circuit to the body control module (BCM). The BCM responds to the park lamp request by energizing the trailer park lamps relay by applying ground to the trailer park lamps relay control circuit. When the trailer park lamps relay is energized, the relay switch contacts close and battery voltage is applied through the trailer parks lamp fuse to the trailer park lamp control circuit which illuminates the trailer park lamps.

Stop Lamps

For trailer stop lamp operation, the left and right trailer stop/turn signal lamp relay's are supplied with battery voltage at all times. The brake pedal position sensor is used to sense the action of the driver application of the brake pedal. The brake pedal position sensor provides an analog voltage signal that will increase as the brake pedal is applied. The body control module (BCM) provides a low reference signal and a 5 V reference voltage to the brake pedal position sensor. When the variable signal reaches a voltage threshold indicating the brakes have been applied, the BCM energizes the left and right trailer stop/turn signal lamp relay's by applying ground to the left and right trailer stop/turn signal lamp relay control circuits. With the left and right trailer stop/turn signal lamp relay's energized, the relay switch contacts close and battery voltage is applied through the left and right trailer stop/turn signal fuse's to the trailer stop lamp control circuits which illuminates the trailer stop lamps.

Turn Signal Lamps

For trailer turn signal lamp operation, the left and right trailer stop/turn signal lamp relay's are supplied with battery voltage at all times. Ground is applied at all times to the turn signal/multifunction switch. The turn signal lamps may only be activated with the ignition switch in the ON or START positions. When the turn signal/multifunction switch is placed in either the TURN RIGHT or TURN LEFT position, ground is applied to the body control module (BCM) through either the right turn or left turn signal switch signal circuit. The BCM responds to the turn signal switch input by applying a pulsating ground to the left and right trailer stop/turn signal lamp relay control circuits energizing the relay's in an ON and OFF cycle. With the left and right trailer stop/turn signal lamp relay's energized, the relay switch contacts cycle ON and OFF applying battery voltage through the left and right trailer stop/turn signal fuse's to the trailer turn signal lamp control circuits which illuminates the trailer turn signal lamps in an ON and OFF cycle.

Battery Run Down Protection/Inadvertent Power

To provide battery run down protection, the exterior lamps will be deactivated automatically under certain conditions. The BCM monitors the state of the headlamp switch. If the park or headlamp switch is ON when the ignition switch is placed in either the CRANK or RUN position and then placed in the OFF position, the BCM initiates a 10 minute timer. At the end of the 10 minutes, the BCM will turn off the control power output to the park lamp controls as well as the headlamp relay coils, deactivating the exterior lamps. This feature will be cancelled if any power mode other than OFF becomes active. The BCM will disable battery run down protection if any of the following conditions exist. The park or headlamp switch is placed in the ON to OFF position, and back to the ON position during battery run down protection. The BCM determined that the park or headlamp switch was not active when the ignition was turned OFF.

Interior Lighting Systems Description and Operation

Interior Lamps

The interior lighting system consist of two groups. This first group includes lamps that may not be dimmed.

- Dome lamps
- Reading lamps
- Sunshade mirror lamps

Dome Lamps

The dome lamp switch has 3 positions: DOOR, OFF, and ON. The ON position provides a ground for continuous operation and the dome lamps will remain illuminated until the switch is placed in either the DOOR or OFF position. When in the DOOR position, the dome lamps operation is controlled by the body control module (BCM). When any door is opened, the door ajar switch contacts close and the BCM receives a door-open input. The BCM illuminates the dome lamps when any door is opened or a door lock/unlock request is activated with the key fob. After all doors have been closed, the dome lamps will remain illuminated approximately 3 seconds after the last door closes. When the driver places the dome lamp switch in the OFF position, the dome lamps will be disabled. In the event that the dome lamps were to remain illuminated for more than 10 minutes with the ignition switch in the OFF position and no doors opened, the BCM will deactivate the dome lamps control circuit to prevent total battery discharge. The dome lamps will turn OFF using the theater dimming feature when controlled by the BCM.

Reading Lamps

The inadvertent power supply voltage circuit from the BCM provides battery positive voltage to each reading lamp. When a reading lamp switch is activated, the switch contacts close providing a path to ground and the reading lamp illuminates. If the operator inadvertently leaves a reading lamp ON, the BCM will turn all interior lamps OFF after 10 minutes has passed since any switch activation has been detected by the BCM.

Sunshade Mirror Lamps

The inadvertent power supply voltage circuit from the BCM provides battery voltage to each set of sunshade mirror lamps. When the sunshade mirror cover is opened, a switch closes providing ground and the sunshade lamps illuminate. If the operator inadvertently leaves a sunshade mirror cover open with the lamps ON, the BCM will turn all interior lamps OFF after 10 minutes has passed since any switch activation has been detected by the BCM.

Keyless Entry Interior Illumination

When the operator uses the keyless entry transmitter in order to unlock the doors, the BCM receives a door-unlock signal. The BCM must receive inputs from various systems that indicate that the ignition switch is OFF, the courtesy lamp switch is OFF, and all doors are closed before the BCM will activate the interior lamps. After all doors have been closed, the courtesy lamps will turn OFF immediately if the ignition switch is turned to the ON position, the door locks are LOCKED, or approximately 20 seconds after the last door closes. The BCM will turn off the courtesy lamps through the theater dimming feature. The BCM keeps the courtesy lamps on for 40 seconds after an alarm event is completed.

Interior Lamps Dimming

The second group includes lamps which may be dimmed. This group may use a combination of light emitting diodes (LED), incandescent lamps, and pulse width modulation (PWM) illumination.

- Dome/reading lamps – front
- Dome/reading lamps – rear
- Door lock switch – driver
- Door lock switch – passenger
- Hazard switch
- Headlamp switch
- HVAC control head assembly
- Multifunction switch – instrument panel
- Outside rearview mirror switch
- Radio
- Steering wheel control switch – left
- Steering wheel control switch – right
- Sun roof switch
- Sun roof tilt switch
- Window switch – passenger

With the headlamp switch in the PARK or HEAD position, the park lamp switch signal circuit provides an input to the body control module (BCM). The BCM responds by applying voltage to the park lamps as well as the backlight dimming control circuits illuminating all components with interior backlighting. All interior backlighting turns ON at the dimming level indicated by the instrument panel dimmer switch. The instrument panel dimmer switch is a momentary type switch and utilizes a resistor ladder to increase and decrease the brightness of the interior backlighting components. The instrument panel dimmer switch provides a voltage signal to the BCM that will increase as the brightness of the lights are increased and decrease as the brightness of the lights are decreased. The BCM provides a low reference signal and a B+ circuit to the switch. When the instrument panel dimmer switch is held in the desired position, the dimmed voltage setting is applied from the instrument panel dimmer switch through the instrument panel dimmer switch signal circuit to the BCM. The BCM interprets the signal and applies a pulse width modulated (PWM) voltage through the backlighting control circuits illuminating the interior backlighting to the requested level of brightness.

The backlighting for the HVAC controls, instrument cluster, and radio controls are controlled by the BCM via serial data. When the instrument panel dimmer switch is operated to the desired backlighting setting, the BCM sends a serial data message to the HVAC control module, radio, and instrument cluster requesting the backlighting be adjusted to the desired level.

Battery Rundown Protection/Inadvertent Power

The BCM inadvertent power supply voltage circuit provides battery voltage to all of the interior courtesy lamps. In the event that any of these lamps were to remain illuminated for a period of more than 10 minutes with the ignition switch in the OFF position, the BCM will deactivate the inadvertent power supply voltage circuit to prevent total battery discharge. If the ignition switch is turned to any position other than OFF, or if a lamp switch is activated during this 10 minute period, the timer resets for another 10 minutes.

Mirrors

Schematic and Routing Diagrams

Inside Rearview Mirror Schematics

Auto-Dimming Mirror (DD8)

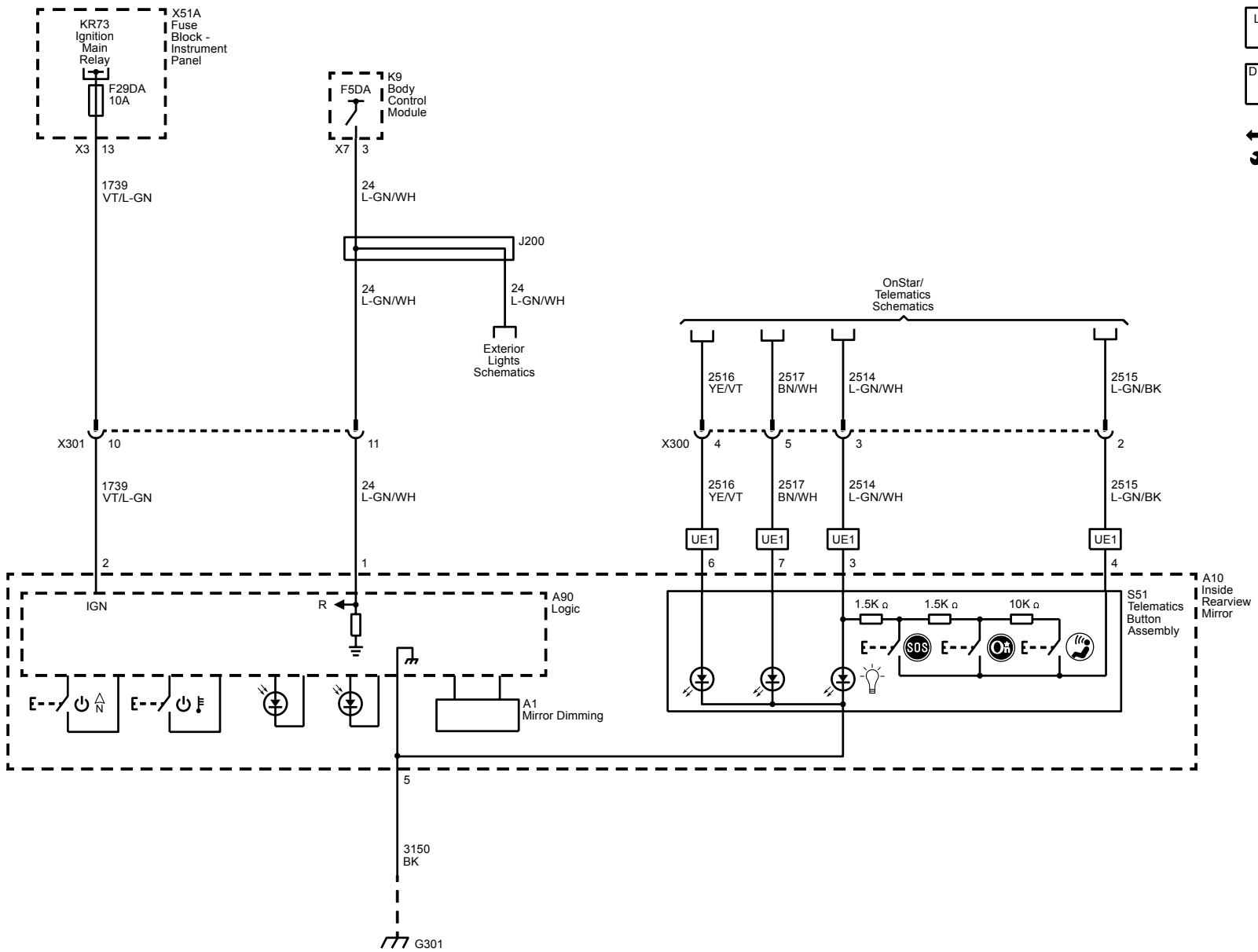

Outside Rearview Mirror Schematics

Driver and Passenger Position

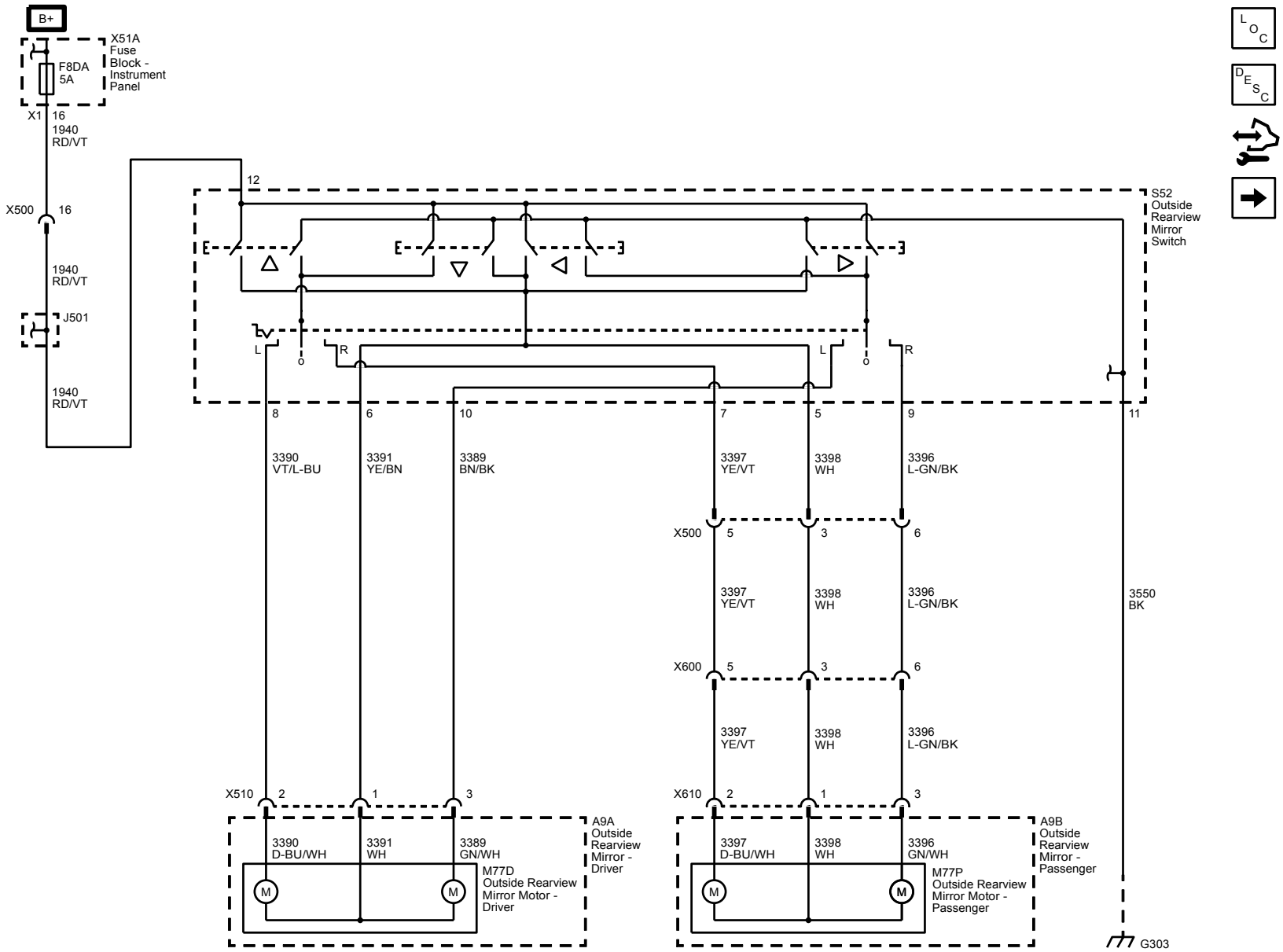

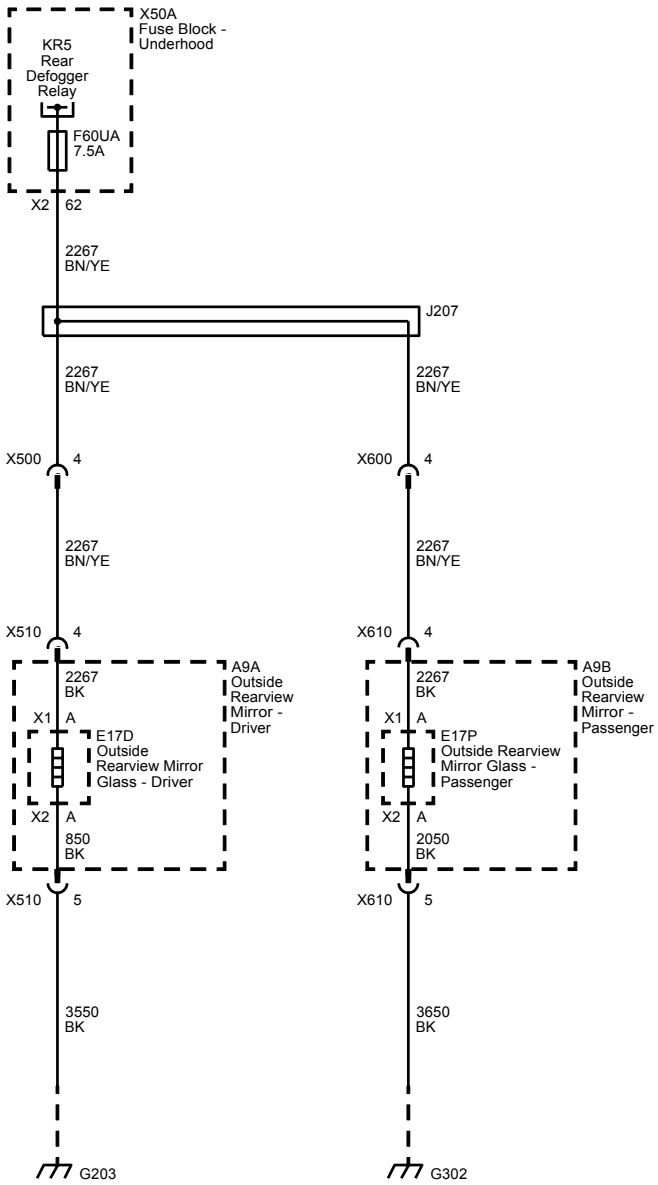
X50A
Fuse Block - Underhood
KR5
Rear Defogger Relay
F60UA
7.5A
X2
62
2267
BN/YE
J207
2267
BN/YE
2267
BN/YE
X500
4
X600
4
2267
BN/YE
2267
BN/YE
X510
4
X610
4
2267
BK
A9A
Outside Rearview Mirror - Driver
X1
A
E17D
Outside Rearview Mirror Glass - Driver
X2
A
850
BK
2267
BK
A9B
Outside Rearview Mirror - Passenger
X1
A
E17P
Outside Rearview Mirror Glass - Passenger
X2
A
2050
BK
X510
5
X610
5
3550
BK
3650
BK
G203
G302

Description and Operation

Automatic Day-Night Mirror Description and Operation

Inside Rearview Mirror with the Automatic Day-Night Feature System Operation

The inside rearview mirror uses 2 photocell sensors. One sensor is the headlight sensor, located on the face side of the mirror. The headlight sensor is used to determine light conditions present at the mirror face. The other sensor is the ambient light sensor, located on the rear of the mirror or windshield side. The ambient light sensor is used to determine the exterior light conditions. With a low exterior light condition detected, and a high light condition from behind of the car, at the headlight sensor, the inside rearview mirror will automatically darken the face of the mirror.

In the daytime, the mirror is in a normal state because of the high exterior light condition that is indicated by the ambient light sensor. With the gear selector lever in the REVERSE position, backup lamp supply voltage is supplied as an input to the inside rearview mirror. The mirror monitors this input to disable the automatic day-night feature. This allows the driver to see objects in the mirror clearly when backing up, even during the night.

Outside Mirror Description and Operation

Power Mirror System Components

The power mirror system consists of the following components:

- Outside rearview mirror switch
- Mirror selector switch
- Driver outside rearview mirror
- Passenger outside rearview mirror

Each of the outside rearview mirror contains two motors. The vertical motor operates the mirror in the up and down directions, and the horizontal motor operates the mirror in the left and right directions.

Power Mirros Without A45 Block Diagram

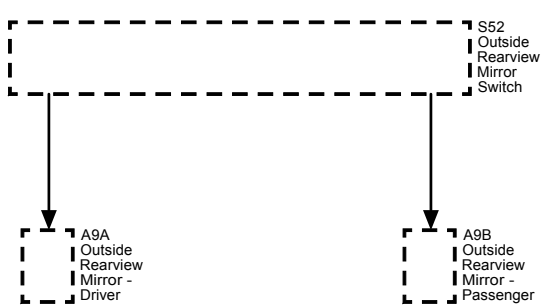

Power Mirror System Controls

The outside rearview mirror switch is a four position directional switch: Up, Down, Left and Right.

The mirror select switch is a three position switch: left, neutral/fold, and right.

Power Mirror System Operation

The outside rearview mirror switch receives battery voltage from the underhood fuse block The power mirror switch also receives a constant ground.

The four positions of the direction switch have dual switch contacts. Each of the contacts are connected to opposing sides of the appropriate power mirror motors through the selector switch. The selector switch completes these circuits depending on the position of the selector switch, L or R.

If the selector switch is placed in the L position and the up switch is pressed, battery voltage will be supplied to the left outside rearview mirror vertical motor through the left mirror motor vertical control circuit and ground through the left mirror motor common control circuit. If the down switch is pressed, battery voltage will be supplied to the left outside rearview mirror vertical motor through the left mirror motor common control circuit and ground through the left mirror motor vertical control circuit.

The remainder of the mirror functions operate in the same manner as described above. Placing the power mirror switch in opposing positions, left/right or up/down, will reverse the polarity to the mirror motor, reversing the direction of movement.

Heated Mirrors (If Equipped)

The heated mirrors are controlled through the rear defog relay. Whenever the rear window defogger is turned on battery voltage is supplied to the mirror heater elements through the left and right mirror heater element control circuits.

Vehicle Access

Schematic and Routing Diagrams

Door Lock/Indicator Schematics

Controls

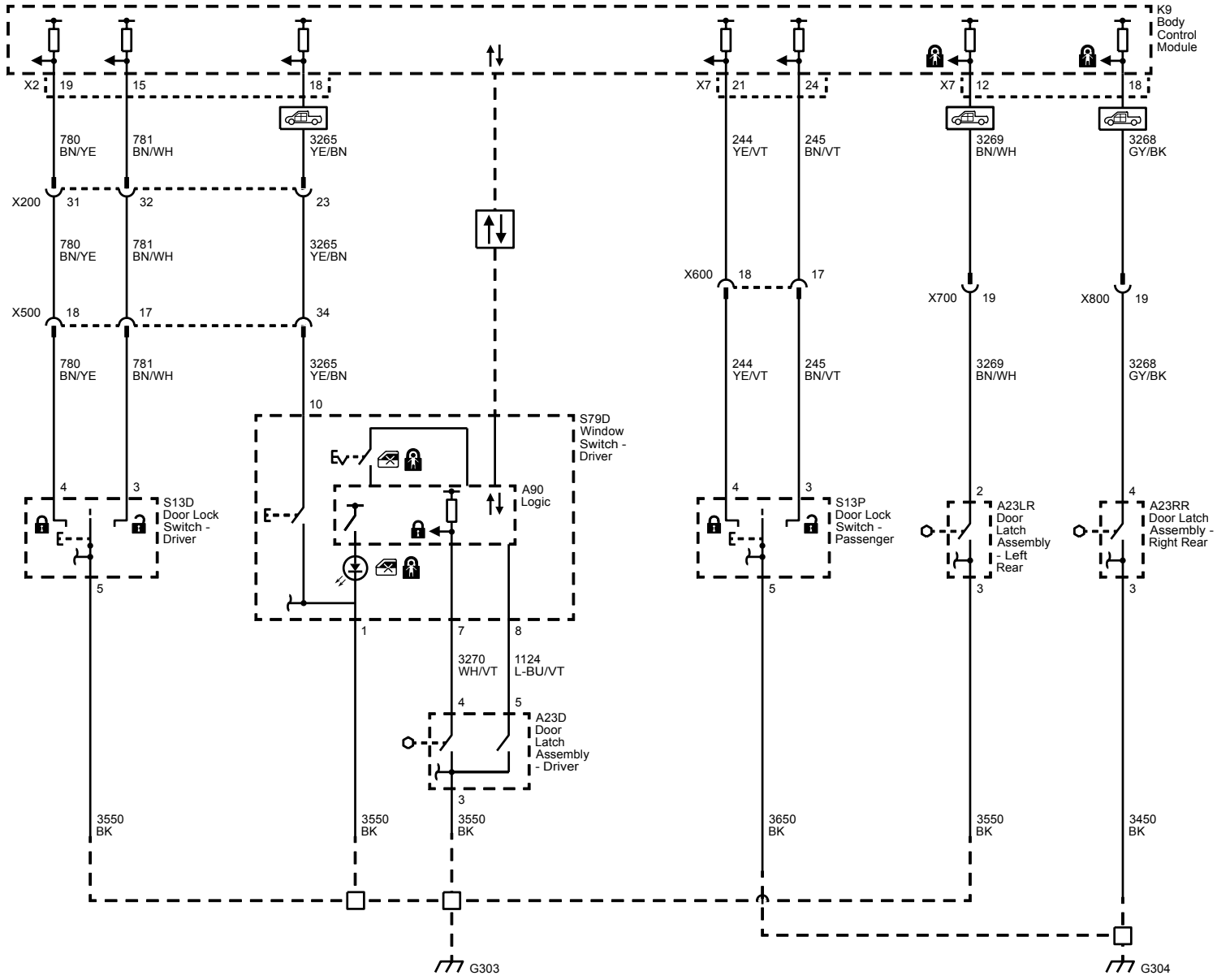

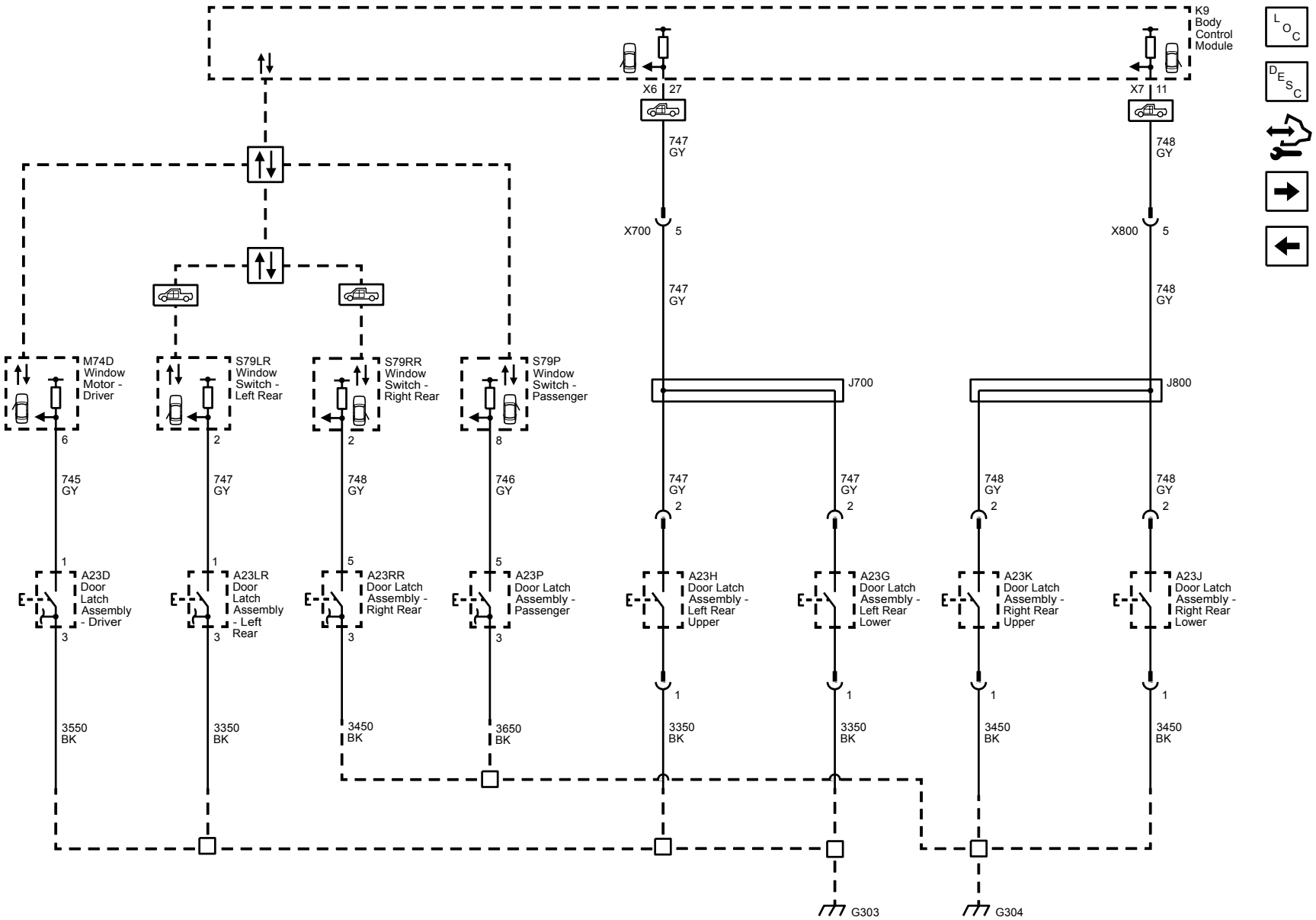
K9
Body
Control
Module
X6 27
X7 11
747
GY
748
GY
X700 5
X800 5
J700
J800
M74D
Window
Motor -
Driver
S79LR
Window
Switch -
Left Rear
S79RR
Window
Switch -
Right Rear
S79P
Window
Switch -
Passenger
745
GY
746
GY
A23D
Door
Latch
Assembly
- Driver
A23LR
Door
Latch
Assembly
- Left
Rear
A23RR
Door Latch
Assembly -
Right Rear
A23P
Door Latch
Assembly -
Passenger
A23H
Door Latch
Assembly -
Left Rear
Upper
A23G
Door Latch
Assembly -
Left Rear
Lower
A23K
Door Latch
Assembly -
Right Rear
Upper
A23J
Door Latch
Assembly -
Right Rear
Lower
3550
BK
3350
BK
3450
BK
3650
BK
G303
G304

Actuators

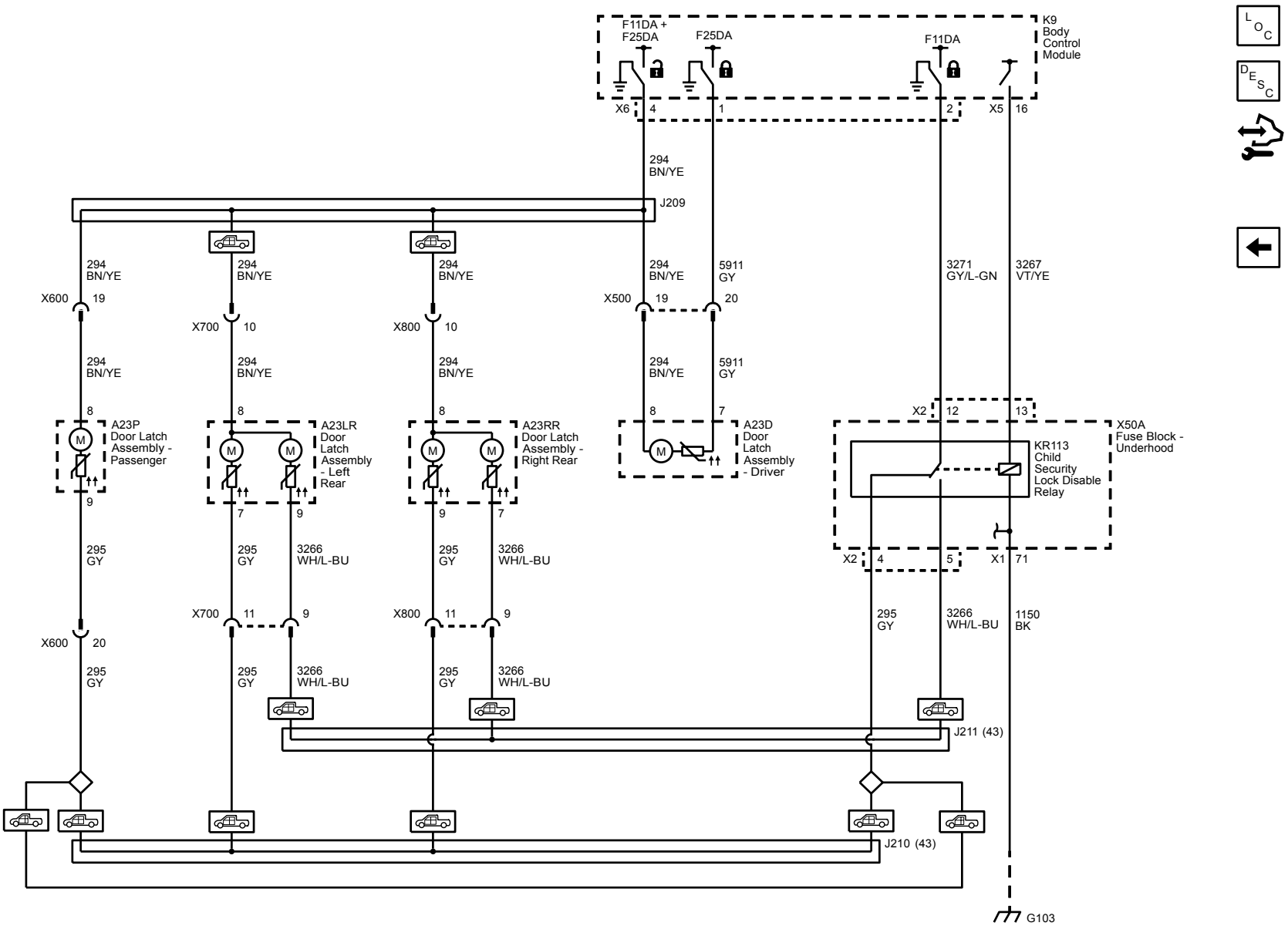
F11DA + F25DA
F25DA
F11DA
K9 Body Control Module
X6 4 1 2 X5 16
294 BN/YE
J209
294 BN/YE
5911 GY
3271 GY/L-GN
3267 VT/YE
X600 19
X700 10
X800 10
X500 19 20
8
A23P Door Latch Assembly - Passenger
A23LR Door Latch Assembly - Left Rear
A23RR Door Latch Assembly - Right Rear
A23D Door Latch Assembly - Driver
7 9
9 7
295 GY
3266 WH/L-BU
X700 11 9
X800 11 9
X600 20
X2 12 13
X50A Fuse Block - Underhood
KR113 Child Security Lock Disable Relay
X2 4 5 X1 71
1150 BK
J211 (43)
J210 (43)
G103

Description and Operation

Door Ajar Indicator Description and Operation

Door Ajar Indicator System Components

The door ajar indicator system consists of the following components:

- Body control module
- Instrument cluster
- Driver door latch
- Passenger door latch
- Left rear door latch
- Right rear door latch
- Driver window motor (AXG)
- Passenger window switch (AED)
- Left rear window switch (AEQ)
- Right rear window switch (AEQ)

Door Ajar System

Depending upon if the vehicle is a standard cab, extended cab or crew cab and/or is equipped with express up/down power windows or standard express down power windows or manual crank windows affects how the driver and passenger door ajar signal circuits are configured and monitored.

Door Ajar Indicator With AXG/AED/AEQ Block Diagram

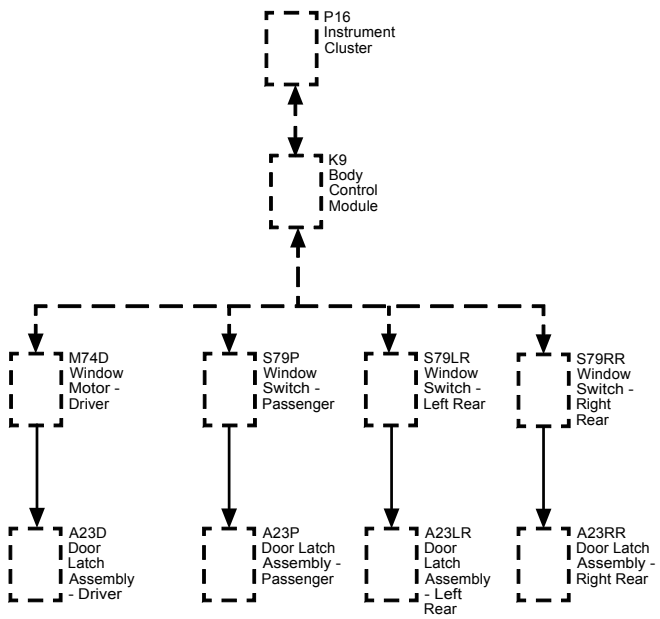

Driver Door Ajar (With AXG)

The driver window motor will provide a 12V signal to the driver door ajar switch within the door latch to indicate the status of the door. When the driver door is open, the contract within the ajar switch closes providing a ground part for the signal circuit. The driver window motor will detect the voltage drop in the ajar signal circuit and will send a serial data message to the body control module. The body control module will then send a message to the instrument cluster which will illuminate the door ajar icon.

Passenger and Rear Doors Ajar (With AED and AEQ)

The passenger and rear window switches provide a 12V signal to the respective door ajar switch within the door latch to indicate the status of the door. When the door is open, the contract within the ajar switch closes providing a

ground part for the signal circuit. The window switch will detect the voltage drop in the ajar signal circuit and will send a serial data message to the body control module. The body control module will then send a message to the instrument cluster which will illuminate the door ajar icon.

Door Ajar Indicator Block Diagram

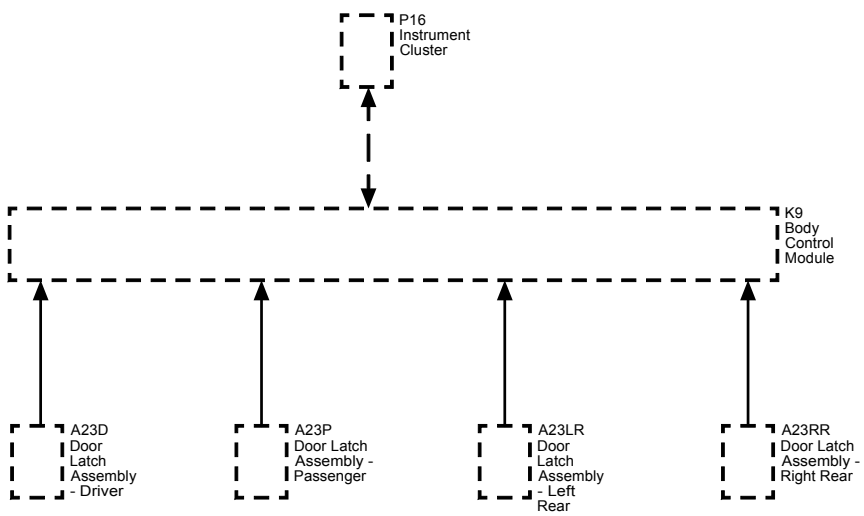

Driver, Passenger and Rear Doors Ajar (Without AXG, AED or AEQ)

The body control module provides a 12V signal to each door ajar switch within the door latch to indicate the status of the door. When the door is open, the contract within the ajar switch closes providing a ground part for the signal circuit. The body control module will detect the voltage drop in the ajar signal circuit and will send a message to the instrument cluster which will illuminate the door ajar icon

Power Door Locks Description and Operation

Door Lock System Components

The power door lock system consists of the following components:

- Driver door lock switch
- Driver door key cylinder switch (Part of the driver door latch assembly)
- Child door lockout switch (Part of the driver window switch)
- Passenger door lock switch
- Front door lock actuators
- Rear door lock actuators (Extended and crew cab models)
- Body control module (BCM)
- Remote control door lock receiver
- Keyless entry transmitter
- Underhood fuse block (Contains child security lock disable PCB relay)

Door Lock System Controls

The power door lock system can be controlled by any of the following:

- A door lock switch LOCK or UNLOCK activation
- A key cylinder switch unlock activation
- A keyless entry transmitter activation
- Pressing the driver door lock plunger flush with the door panel will lock all doors

Door Lock Operation

The BCM supplies a 12 volt signal to the lock and unlock signal circuits of the driver and passenger door lock switches. When the appropriate switch is pressed, a contact within the door lock switch closes providing a ground path for the signal circuit. The BCM will detect the voltage drop in the signal and will command the doors to perform the lock or unlock functions.

The driver door latch contains 2 internal switches and 2 signal circuits that are monitored by the BCM. One switch is controlled by the driver key cylinder switch, when the key is turned to the unlock position, a switch will close and the BCM will command the remaining doors to UNLOCK. The other switch is controlled by the driver door lock plunger, pressing the plunger flush with the door panel will close the switch, the switch will close and the BCM will command the remaining doors to LOCK

The BCM may also receive a LOCK or UNLOCK command from the remote control door lock receiver, refer to Keyless Entry System Description and Operation for information on the keyless entry system

The BCM, upon receipt of a lock switch lock or unlock signal, will supply voltage to the door lock actuator lock or unlock control circuits and ground to the other lock actuator control circuit, the doors will then lock or unlock as commanded.

The following three circuits are used to operate the lock:

- Driver door unlock
- Passenger doors unlock
- All doors lock

Power Door Child Lock Block Diagram

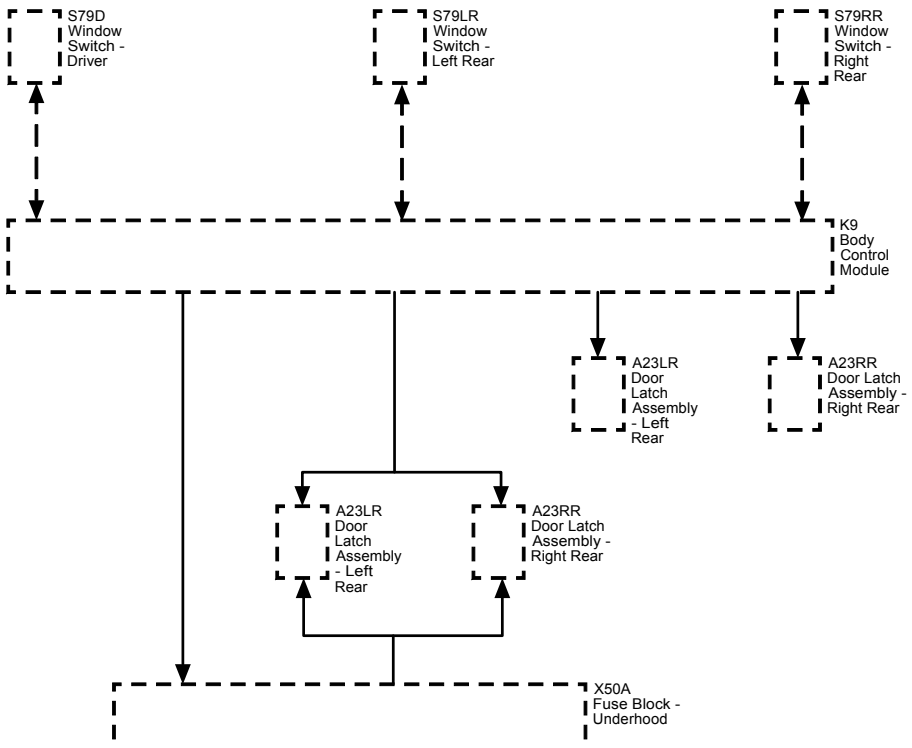

Child Security Lockout System Operation

The child door lockout switch on the driver window switch controls the child locks on the rear doors. The lockout switch is an input to the body control module and the body control module controls the door lock security relay.

When the body control module receives a command from the child door lockout switch, it will apply voltage to the child security lock disable relay coil, this will energize the relay and the contact within the relay will then direct the voltage to activate the left rear and right rear child locks and then isolate them from the normal door lock system to prevent the rear doors from being opened by using the interior rear door handles. An indicator will also illuminate to alert the driver that the child lockout system has been activated. Pushing the switch again will return normal function to the rear interior door handles and the indicator will go out.

The body control module monitors the voltage level of the child security motor status signal circuit, when the child locks have been activated, the contacts of the child security motor status switch (internal to the rear door latch) will close providing a ground path for the signal circuit pulling the voltage low. It is in this manner that the body control module is able to determine if the rear door latch has been successfully been locked out.

The body control module monitors the status of the child security lockout system, when the body control module detects a fault in the system, it will command the child lockout indicator to flash ON and OFF for 30 seconds to alert the driver that the child security lockout system may not be functioning properly.

The body control module will command the child lockout indicator to flash ON and OFF for the following reasons:

- An open/high resistance in either child security motor status signal circuit
- The body control module detects that one or both rear door latches have not activated and are not locked out
- The body control module detects a short to ground or an open/high resistance in the child security lock disable relay control circuit
- A malfunctioning child security lock disable relay
- An open/high resistance in the child security lock motor control circuit

Wipers and Washers

Schematic and Routing Diagrams

Wiper/Washer Schematics

Wiper/Washer Control

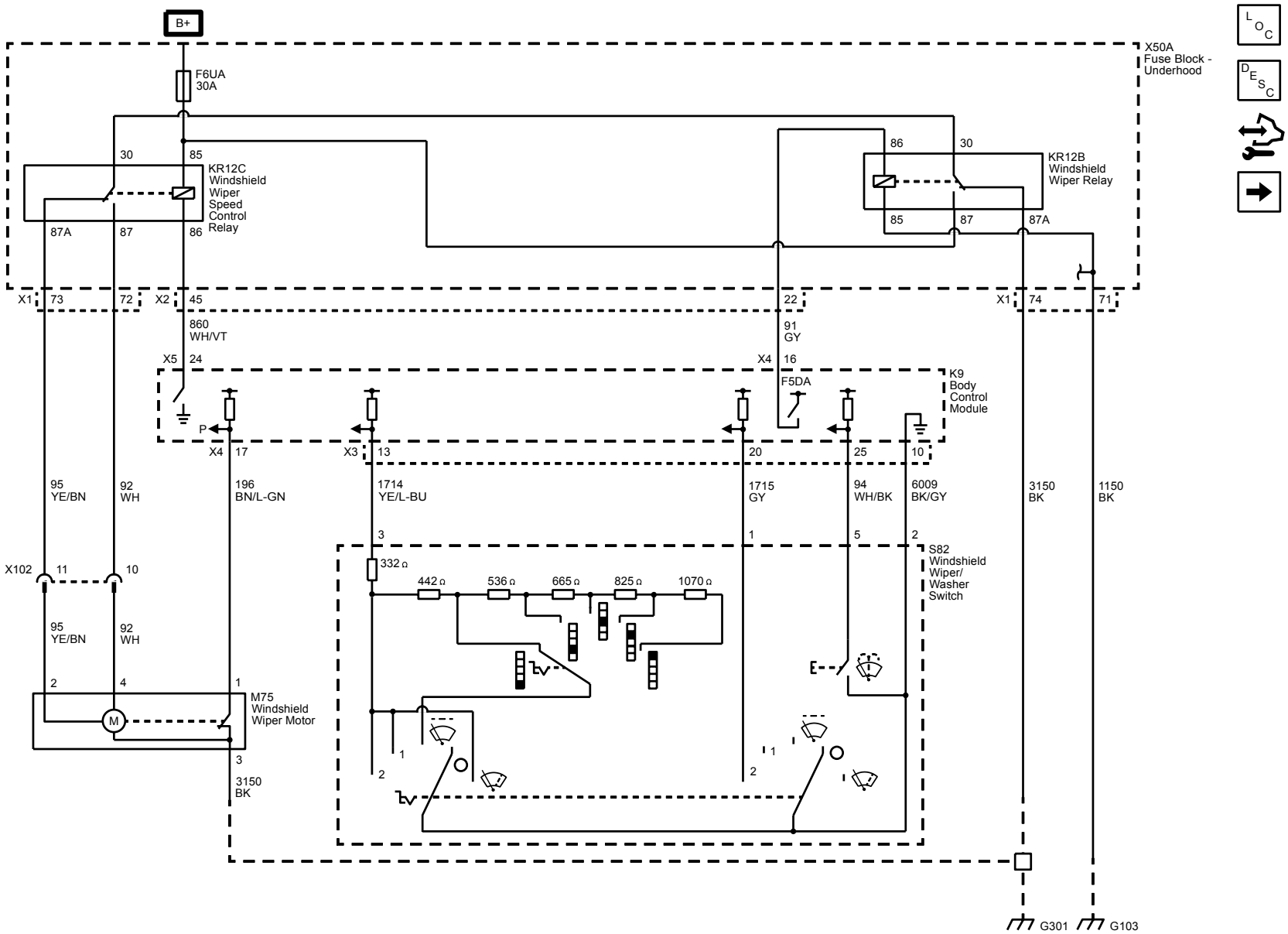

Washer Pump

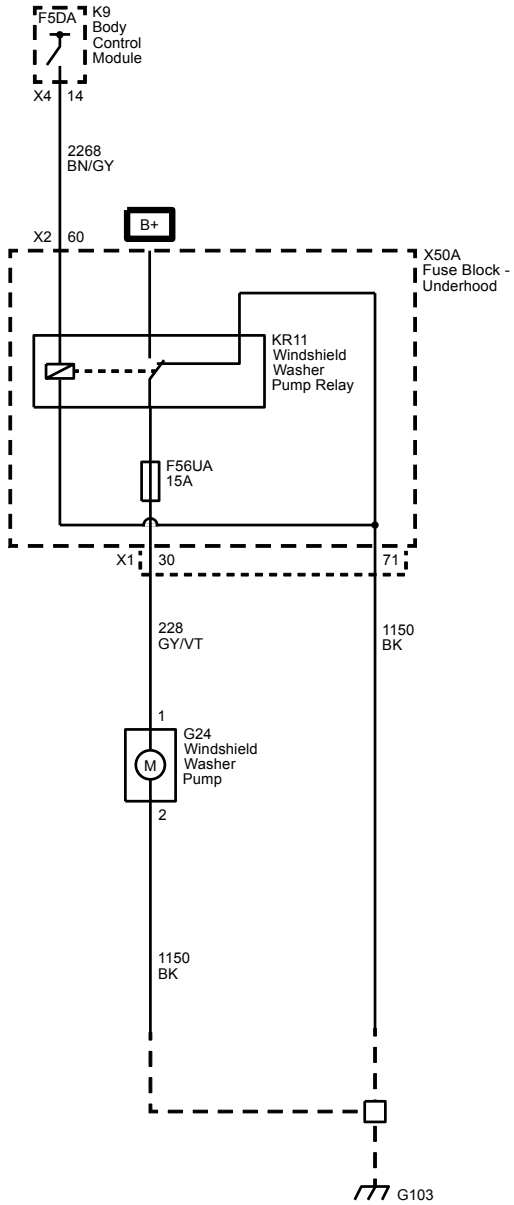
F5DA
K9
Body
Control
Module
X4
14
2268
BN/GY
B+
X2
60
X50A
Fuse Block -
Underhood
KR11
Windshield
Washer
Pump Relay
F56UA
15A
X1
30
71
228
GY/VT
1150
BK
1
M
G24
Windshield
Washer
Pump
2
1150
BK
G103

Description and Operation

Wiper/Washer System Description and Operation

Wiper/Washer System Components

The wiper/washer system consists of the following electrical components:

- Windshield Wiper Relay
- Windshield Wiper Speed Control Relay
- Windshield Washer Pump
- Windshield Washer Pump Relay
- Windshield Wiper Motor
- Windshield Wiper/Washer Switch
- Body Control Module (BCM)
- Underhood Fuse Block

Windshield Wiper System

The body control module (BCM) controls the wiper motor via two removable relays (Windshield Wiper Relay and Windshield Wiper Speed Control Relay). The BCM determines the wipe/wash system mode of operation by monitoring several signals from the Windshield Wiper/Washer Switch.

The BCM has 3 signal circuits, the first signal circuit is the Windshield Wiper Switch Low Reference, where the BCM provides a low reference signal to the Windshield Wiper/Washer Switch. Each input of the BCM provides a switched battery pull-up for each Windshield Wiper/Washer Switch output signal it receives.

The second signal circuit is the Windshield Wiper Switch Low Signal, and it consists of 6 resistors in the windshield wiper/washer switch configured as a resistor ladder network. The BCM monitors the voltage, and when high speed windshield wiper operation is requested, the windshield wiper control switch is connected to a different set of resistors into the circuit resulting in different voltages appearing on the BCM A/D input. To initiate low speed operation, the BCM only energizes the front wiper motor on/off relay. This allows battery voltage from the wiper fuse to be applied through the switched contacts of the wiper motor on/off relay, through the normally closed contacts of the wiper high/low speed relay, to the low speed control circuit of the windshield wiper motor.

The third signal circuit is the Windshield Wiper Switch High Signal, the BCM monitors the voltage, and when high speed windshield wiper operation is requested, the BCM continues to apply voltages to the windshield wiper relay control circuit and also applies ground to the windshield wiper speed control relay control circuit. This will cause the contacts in the windshield wiper speed control relay to close and apply B+ to the windshield wiper motor through the windshield wiper high speed control circuit, enabling high speed wiper operation.

Parking the wiper motor, the BCM monitors the park circuit until the park switch pulls the park circuit to ground. At this time, the BCM will immediately deactivate the wiper motor on/off relay. The relay contacts will switch back to their normally closed position and will apply ground to the wiper motor power inputs through the normally closed contacts of the wiper high/low relay. This deactivates and dynamically brakes the wiper motor in the park position. When the wiper switch is turned to the OFF position while the wiper motor is somewhere in mid-cycle, the BCM will continue to operate the motor until the wipers reach the park position. If the BCM is running the wiper motor and does not see a state transition of the park switch after 8 s, the wipers will stop immediately when the wiper switch is turned to OFF. If the ignition is turned OFF while the wipers are in mid-cycle, the wipers will stop immediately, regardless of position. The BCM will park the wipers next time the ignition is turned ON.

The windshield wiper system MIST operation is identical to LOW speed operation, except that the MIST switch is a press and release type switch. When the wiper switch is moved to the MIST position and released, low speed wiper motor operation is started and will continue until 1 cycle is complete. If the wiper switch is moved to the MIST position and held, the wiper motor will operate in the LOW speed mode until the switch is released.

Windshield wiper intermittent operation is a low speed wiper motor function with a variable delay interval between the wiper motor cycles. The duration of the delay is controlled by the front wiper control switch's intermittent 1 thru intermittent 5 settings. The wiper operation is as follows

1. The BCM will initiate a single wipe by activating its front wiper ON/OFF relay output.
2. At the completion of a single wipe, the BCM will park the wipers as described above.
3. The BCM will then pause the wipers in their park position for the time duration associated with intermittent delay switch setting.
4. When the delay time expires repeat Steps 1 and 3 until the system is turned off or taken out of intermittent mode. If the wiper switch is moved from a longer delay interval to a shorter delay interval, the BCM will command an immediate wipe cycle and reset the delay timer to the shorter delay interval.

Front Wiper Block Diagram

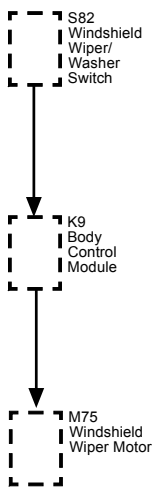

Windshield Washer System

The windshield washer system contains a windshield washer pump, a windshield washer pump relay, windshield wiper/washer switch. the windshield washer pump is controlled by the body control module (BCM) via a removable relay. When the washer switch is depressed, the BCM monitors the signal circuit by the washer request circuit. The BCM then applies voltage through a control circuit to the removable windshield washer pump relay. With the relay energized, fused battery voltage is applied through the switch contacts of the relay and the control circuit to activate the windshield washer pump.

Washers System Block Diagram

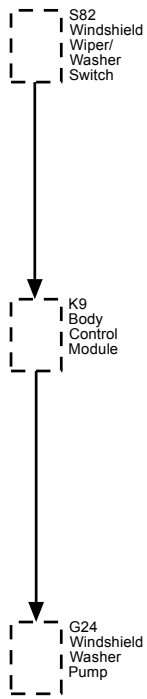

Brakes

Antilock Brake System

Schematic and Routing Diagrams

Antilock Brake System Schematics

Power, Ground, Serial Data, Traction Control and References

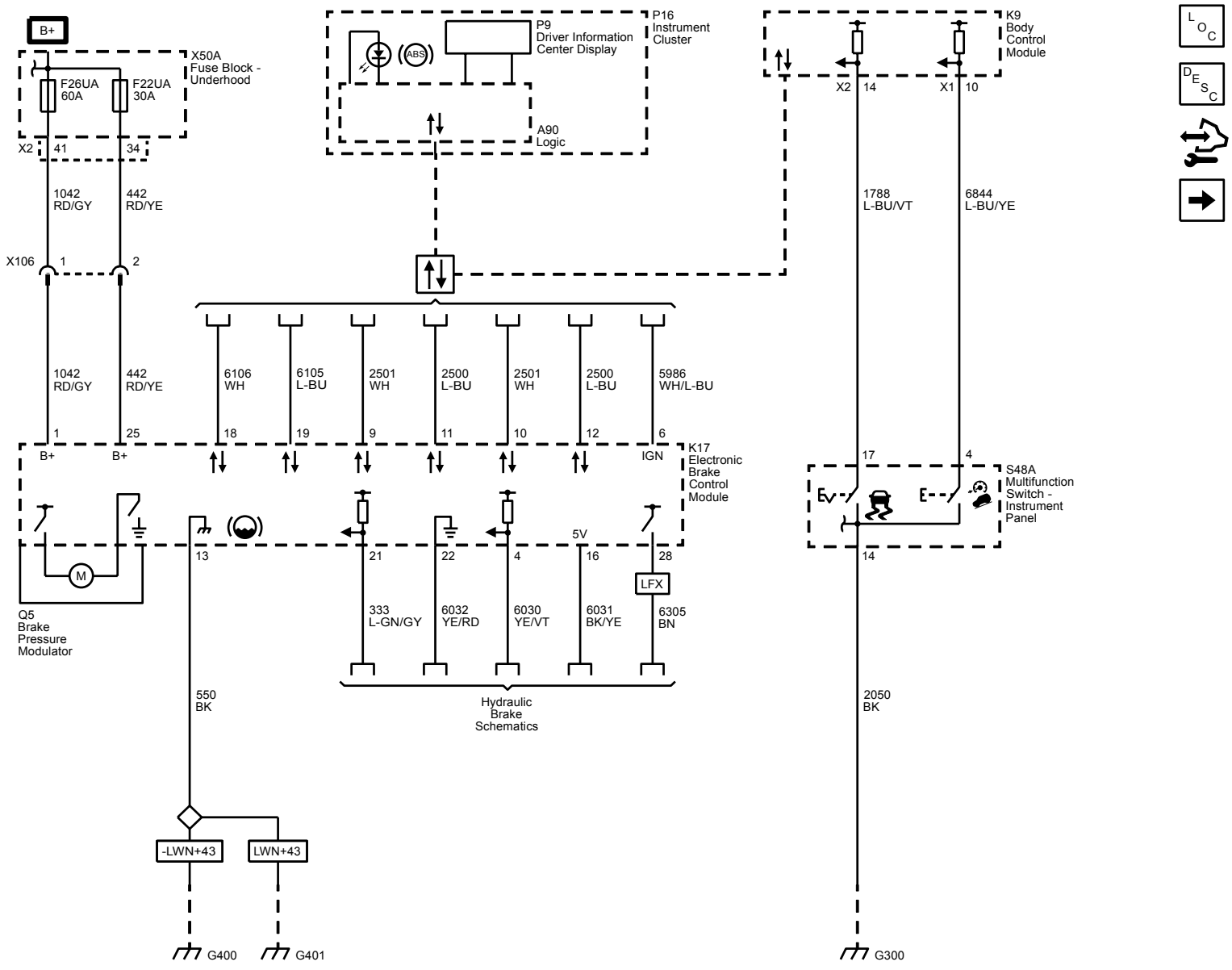

Wheel Speed Signals

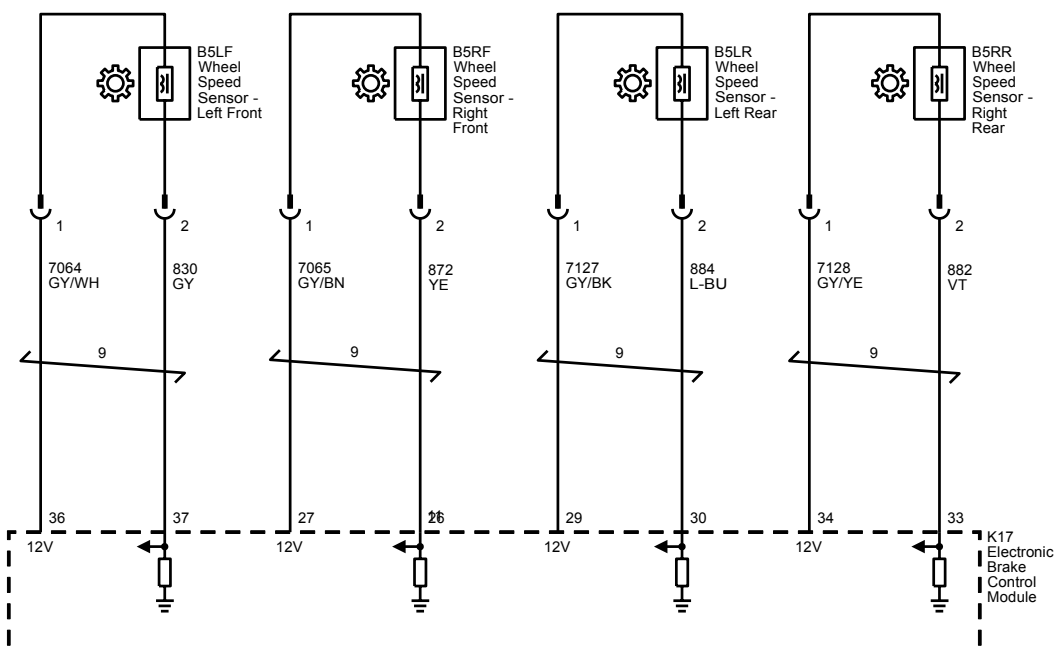

Description and Operation

ABS Description and Operation

ABS D&O Block Diagram

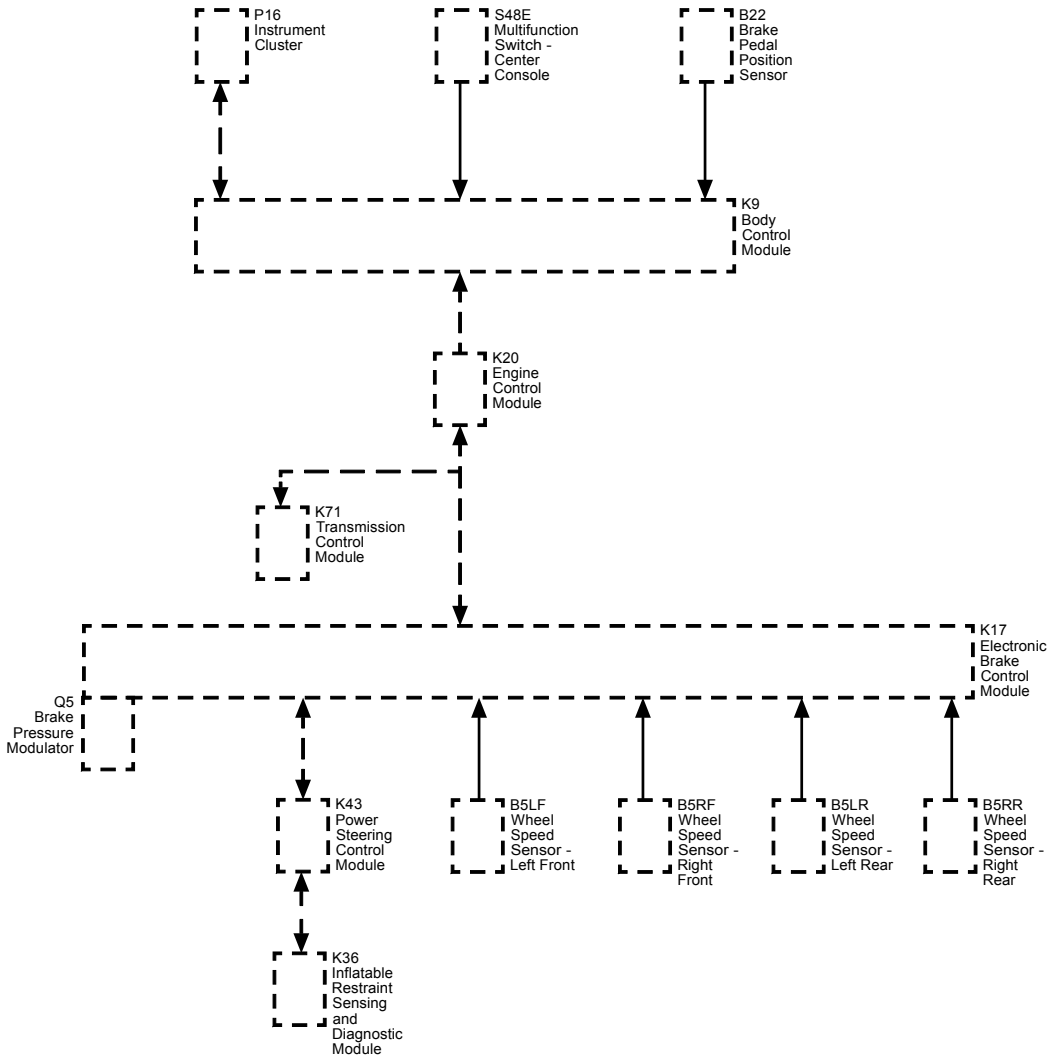

This vehicle is equipped with a Continental Teves Mk100 ABS, traction control, electronic stability control and a hydraulic brake system with diagonal brake circuit split.

The electronic brake control module and the brake pressure modulator is serviced separately. The brake pressure modulator uses a four circuit configuration to control hydraulic pressure to each wheel independently.

Depending on options, the following vehicle performance enhancement systems are provided.

- ABS
- Traction control
- Stability control
- Dynamic rear proportioning
- Hill hold start assist
- Hydraulic brake assist
- Intelligent brake assist
- Optimized hydraulic braking system

The following components are involved in the operation of the above systems:

- Electronic brake control—The electronic brake control module controls the system functions and detects failures. It supplies voltage to the solenoid valves and pump motor.
- Brake pressure modulator—The brake pressure modulator contains the following components:

  - Hydraulic pump with pump motor
  - Four isolation valves
  - Four dump valves
  - Two traction/stability control supply valves
  - Two traction/stability control isolation valves
  - Brake pressure sensor

- Multi-axis acceleration sensor—The yaw rate, lateral acceleration and longitudinal acceleration sensors are combined into one multi-axis acceleration sensor, internal to the inflatable restraint sensing and diagnostic module.
- Steering wheel angle sensor—This sensor measures the rotation angle, angle velocity and direction of the steering wheel, providing serial data message inputs to the electronic brake control module. The steering wheel angle sensor signal is used to calculate the intended driving direction. This sensor is internal to the electric power steering gear.
- Traction control switch—The traction control system is manually disabled or enabled by pressing the traction control switch.
- Traction/Stability control switch—The electronic stability control is manually disabled or enabled by pressing and holding the traction control switch for five seconds.
- Active wheel speed sensors—The electronic brake control module sends a signal voltage to each wheel speed sensor. As the wheel spins, the wheel speed sensor produces an alternating current square wave signal. The electronic brake control module uses the frequency of the square wave signal to calculate the wheel speed.

Power-Up-Self Test

The electronic brake control module is able to detect many malfunctions whenever the ignition is ON. However, certain failures cannot be detected unless active diagnostic tests are performed on the components. Shorted solenoid coil or motor windings, for example, cannot be detected until the components are commanded ON by the electronic brake control module. Therefore, a power-up self-test is performed to verify correct operation of system components. The electronic brake control module performs the first phase of the power-up self-test when the ignition is first turned ON. This phase consists of internal self-testing of the electronic brake control module along with electrical checks of system sensors and circuits.

Initialization Sequence

The initialization sequence cycles each solenoid valve and the pump motor, as well as the necessary relays, for approximately thirty milliseconds to check component operation. The electronic brake control module sets a DTC if any error is detected. The initialization sequence may be heard and felt while it is taking place, and is considered part of normal system operation. The active test is initiated by the electronic brake control module at the start of the ignition cycle and the speed of the fastest wheel exceeds 10 km/h (7 MPH).

ABS

When wheel slip is detected during a brake application, an ABS event occurs. During ABS braking, hydraulic pressure in the individual wheel circuits is controlled to prevent any wheel from slipping. A separate hydraulic line and specific solenoid valves are provided for each wheel. The ABS can decrease, hold, or increase hydraulic pressure to each wheel. The ABS does not, however, increase hydraulic pressure above the amount which is transmitted by the master cylinder during braking.

During ABS braking, a series of rapid pulsations is felt in the brake pedal. These pulsations are caused by the rapid changes in position of the individual solenoid valves as the electronic brake control module responds to wheel speed sensor inputs and attempts to prevent wheel slip. These pedal pulsations are present only during ABS braking and stop when normal braking is resumed or when the vehicle comes to a stop. A ticking or popping noise may also be heard as the solenoid valves cycle rapidly. During ABS braking on dry pavement, intermittent chirping noises may be heard as the tires approach slipping. These noises and pedal pulsations are considered normal during ABS operation.

Vehicles equipped with ABS may be stopped by applying normal force to the brake pedal. Brake pedal operation during normal braking is no different than that of previous non ABS systems. Maintaining a constant force on the brake pedal provides the shortest stopping distance while maintaining vehicle stability. The typical ABS activation sequence is as follows.

Pressure Hold

The electronic brake control module closes the isolation valve and keeps the dump valve closed in order to isolate the slipping wheel when wheel slip occurs. This holds the pressure steady on the brake so that the hydraulic pressure does not increase or decrease.

Pressure Decrease

If a pressure hold does not correct the wheel slip condition, a pressure decrease occurs. The electronic brake control module decreases the pressure to individual wheels during deceleration when wheel slip occurs. The isolation valve is closed and the dump valve is opened. The excess fluid is stored in the accumulator until the pump can return the fluid to the master cylinder or fluid reservoir.

Pressure Increase

After the wheel slip is corrected, a pressure increase occurs. The electronic brake control module increases the pressure to individual wheels during deceleration in order to reduce the speed of the wheel. The isolation valve is opened and the dump valve is closed. The increased pressure is delivered from the master cylinder.

Traction Control

When drive wheel slip is noted, the electronic brake control module will enter traction control mode.

First, the electronic brake control module requests the engine control module to reduce the amount of torque to the drive wheels via a serial data message. The engine control module reduces torque to the drive wheels and reports the amount of delivered torque.

If the engine torque reduction does not reduce drive wheel slip, the electronic brake control module will actively apply the brakes on the slipping drive wheel. During traction control braking, hydraulic pressure in each drive wheel circuit is controlled to prevent the drive wheels from slipping. The electronic brake control module commands the pump motor and appropriate solenoid valves ON and OFF to apply brake pressure to the slipping wheel.

Traction control can be manually disabled or enabled by pressing the traction control switch.

Stability Control

Stability control provides added stability during aggressive maneuvers. Yaw rate is the rate of rotation about the vehicle's vertical axis. The stability control is activated when the electronic brake control module determines that the desired yaw rate does not match the actual yaw rate as measured by the yaw rate sensor.

The desired yaw rate is calculated by the electronic brake control module using the following inputs:

- Steering wheel position

- Vehicle speed
- Lateral acceleration

The difference between the desired yaw rate and the actual yaw rate is the yaw rate error, which is a measurement of over steer or under steer. When a yaw rate error is detected, the electronic brake control module attempts to correct the vehicle's yaw motion by applying brake pressure to one or more of the wheels. The amount of brake pressure which is applied varies, depending on the correction required. The engine torque may be reduced also, if it is necessary to slow the vehicle while maintaining stability.

Stability control activations generally occur in turns during aggressive driving. When braking during stability control activation, the brake pedal may pulsate.

Stability control can be manually disabled or enabled by pressing and holding the traction control switch for five seconds.

Dynamic Rear Proportioning

The dynamic rear proportioning is a control system that replaces the mechanical proportioning valve. Under certain driving conditions the electronic brake control module will reduce the rear wheel brake pressure by commanding the appropriate solenoid valves ON and OFF.

Hill Hold Start Assist

The hill hold start assist allows the driver to launch the vehicle without a roll back while moving the foot from the brake pedal to the accelerator pedal. The electronic brake control module calculates the brake pressure, which is needed to hold the vehicle on an incline and locks that pressure for a certain time by commanding the appropriate solenoid valves ON and OFF when the brake pedal is released. Hill hold start assist is activated when the electronic brake control module determines that the driver wishes to move the vehicle up-hill, either backwards or forwards.

The following inputs are used for hill hold start assist feature:

- Accelerator pedal position
- Brake switch
- Brake pressure
- Clutch switch, if equipped
- Engine torque
- Longitudinal acceleration
- Reverse gear information
- Vehicle speed

Hydraulic Brake Assist

The hydraulic brake assist function is designed to support the driver in emergency braking situations.

The electronic brake control module receives inputs from the brake pressure sensor. When the electronic brake control module senses an emergency braking situation, it will actively increase the hydraulic brake pressure to a specific maximum by turning the pump motor ON.

Intelligent Brake Assist

The intelligent brake assist function is designed to provide limited braking to help prevent front and rear low speed collisions.

The electronic brake control module receives inputs from the brake pedal position sensor, wheel speed sensors, short range radar and ultrasonic sensors to detect a collision. When the electronic brake control module senses a possible collision, it will actively increase the hydraulic brake pressure to apply the brakes.

Optimized Hydraulic Braking System

With some engines the electronic brake control module monitors the vacuum in the brake booster with a vacuum sensor and controls a brake booster vacuum pump depending on vacuum sensor input. It also has a hydraulic brake boost feature which supplements the brake system to maintain consistent brake performance under conditions of low brake booster vacuum. Low brake booster vacuum conditions can include initial start up after the vehicle has been parked for several hours, very frequent brake stops, or high altitude driving. The hydraulic brake boost system activates only during a brake apply under low vacuum conditions. In this case the electronic brake control module will actively increase and control the hydraulic brake pressure by turning the pump motor ON and the appropriate solenoid valves ON and OFF. When hydraulic brake boost is active, a series of rapid pulsations is felt in the brake pedal.

Driver Information Indicators

Brake Warning Indicator

The instrument cluster turns the brake warning indicator ON when the following occurs:

- The instrument cluster performs the bulb check.
- The electronic brake control module detects a fault and sends a serial data message to the instrument cluster requesting illumination.
- The body control module detects that the park brake is engaged. The instrument cluster receives a serial data message from the body control module requesting illumination.

ABS Indicator

The instrument cluster turns the ABS indicator ON when the following occurs:

- The instrument cluster performs the bulb check.
- The electronic brake control module detects a malfunction which disables the ABS and sends a serial data message to the instrument cluster requesting illumination.

Traction/Stability Control Indicator

The instrument cluster turns the traction/stability control indicator ON when the following occurs:

- The instrument cluster performs the bulb check.
- The electronic brake control module detects a malfunction which disables the traction/stability control and sends a serial data message to the instrument cluster requesting illumination.
- The driver manually disables the traction/stability control by pressing and holding the traction control switch for five seconds. The electronic brake control module sends a serial data message to the instrument cluster requesting illumination.

Traction Control Off Indicator

The instrument cluster turns the traction control off indicator ON when the following occurs:

- The instrument cluster performs the bulb check.
- The driver manually disables the traction control by pressing the traction control switch. The electronic brake control module sends a serial data message to the instrument cluster requesting illumination.

Stability Control Off Indicator

The instrument cluster turns the stability control off indicator ON when the following occurs:

- The instrument cluster performs the bulb check.
- The electronic brake control module sends a serial data message to the instrument cluster requesting illumination.
- The driver manually disables the stability control by pressing and holding the traction control switch for five seconds. The electronic brake control module sends a serial data message to the instrument cluster requesting illumination.

Hill Descent Control Indicator

The instrument cluster turns the hill descent control indicator ON when the following occurs:

- The instrument cluster performs the bulb check.
- The driver manually enables or disables the hill descent control by pressing the hill descent control switch. The electronic brake control module sends a serial data message to the instrument cluster requesting illumination.

Trailer Brake Controls

Schematic and Routing Diagrams

Trailer Brake Control Schematics

Trailer Brake (JL1)

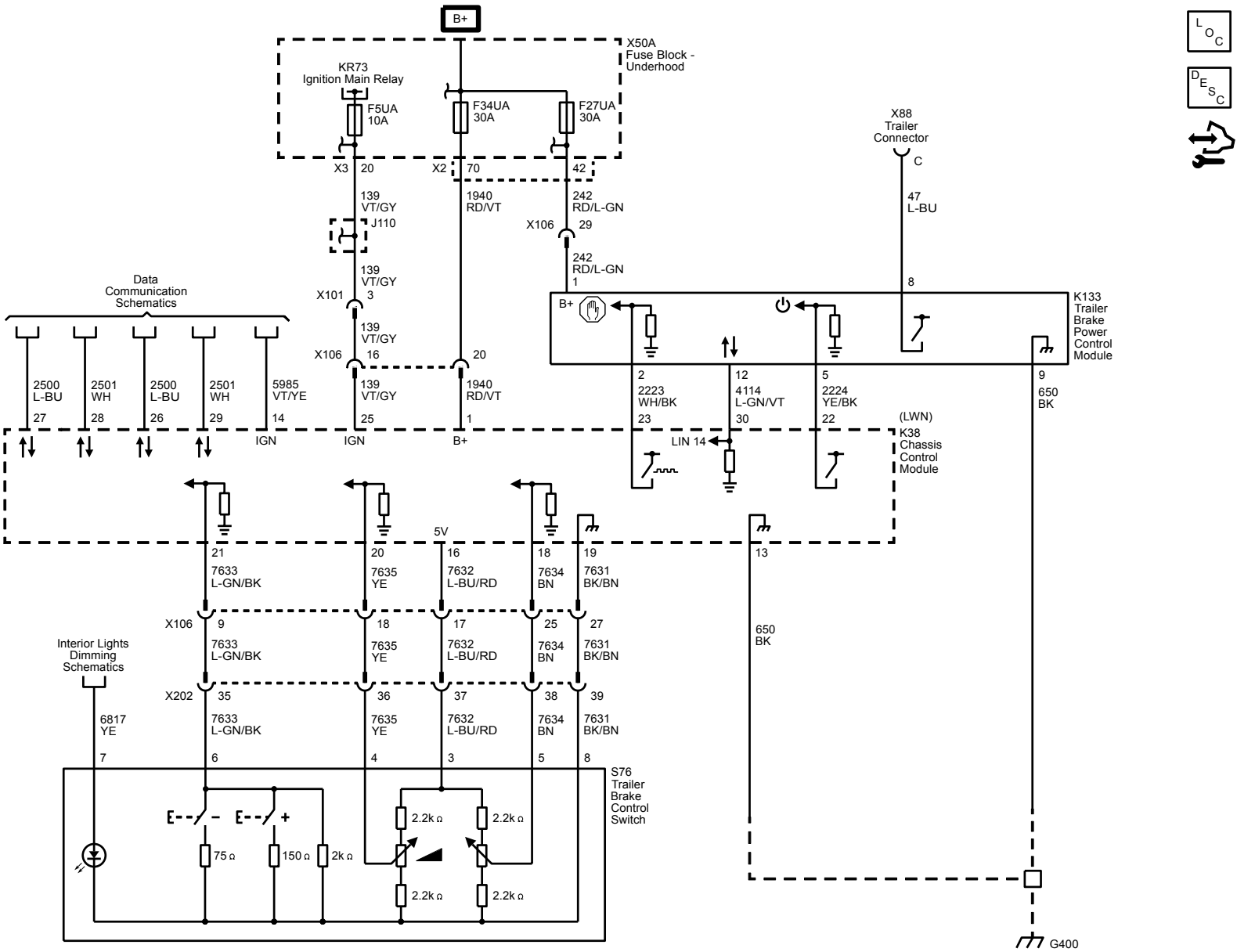

Description and Operation

Trailer Brake Controls Description and Operation

A trailer brake control system is used to control the amount of trailer braking power that is made available to trailers with brakes that require a controlled electrical output signal for actuation.

The power output to the trailer brakes is based on both the amount of braking being applied by the vehicle's brake system and on the type of trailer brakes detected.

The Trailer Brake Control System is compatible with two types of Trailer Brake Systems as listed below:

1. **Electric Brakes** A controlled electrical output signal energizes an electric-magnet/lever arm assembly that directly actuates the brake mechanism. The GDS name for this system is "Electromagnetic Brakes".
2. **Electric Over Hydraulic Brakes** A controlled electrical output signal energizes a remote, trailer mounted hydraulic pump to build brake pressure in a closed hydraulic system on the trailer. The hydraulic fluid pressure actuates the brake mechanism. The GDS name for this system is "Electrohydraulic Brakes".

Trailer Brake Output Versus Trailer Brake Type

- The trailer brake system characterizes the trailer brakes as either Electric Brake or Electric Over Hydraulic Brake automatically. This characterization may be affected by the number, type, and age of the trailer brake magnets, as well as any other devices installed on the trailer brakes (i.e. adapters for Electric Over Hydraulic brake functionality).
- The trailer brake system is fully operational with either characterization.
- Some features of the trailer brake system may be different based on the trailer brake type characterization. An example of this is at zero speed, where pressing the service brake pedal will produce output when the trailer brakes are characterized as Electric Brakes, but not when characterized as Electric Over Hydraulic Brakes.
- Sliding the manual trailer brake apply lever will produce output at zero speed for either characterization.

The user gain allows the driver to adjust the amount of trailer brake output to match the trailer load and road surface. The controller determines the desired trailer brake output and provides a control signal to the K133 Trailer Brake Power Control Module. The K133 Trailer Brake Power Control Module amplifies the signal and provides the output required to activate the Electric or Electric Over Hydraulic trailer brakes.

The trailer brake control can support up to a maximum of four axles with electric trailer brakes (8 brake magnets).

Connecting a trailer that is not compatible with the trailer brake system may result in reduced or complete loss of trailer braking. There may be an increase in stopping distance or trailer instability which could result in personal injury or damage to the vehicle, trailer or other property. An aftermarket controller may be available for use with trailers with surge or air trailer brake systems.

To determine the type of brakes on your trailer and the availability of controllers, check with your trailer manufacturer or dealer. Do not power up an aftermarket controller with the factory brake controller at the same time.

The vehicle is equipped with the following trailer braking components:

- K38 Chassis Control Module
- K133 Trailer Brake Power Control Module
- S76 Trailer Brake Control Panel
- Manual Trailer Brake Apply
- Trailer Gain Adjustment
- Trailer Brake Driver Information Center Display

Chassis Control Module

The K38 Chassis Control Module (CCM) is a serviceable GMLAN module. The chassis control module sends the low power commanded duty cycle signal to the trailer brake power control module. The trailer brake power control module amplifies the signal and provides an output that is required to drive the trailer brakes.

Trailer Brake Power Control Module

The K133 Trailer Brake Power Control Module (TBPM) is a solid state power switching module that supplies power to the trailer brakes at the input command duty cycle. Diagnostic messages are sent from the TBPM to the CCM on a dedicated LIN bus.

Trailer Brake Control Panel

The S76 Trailer Brake Control Panel contains the trailer gain and manual apply switches. It is located on the instrument panel to the left of the steering column. Refer to the instrument panel overview for more information on the location. The control panel and switches allows you to adjust the amount of output, referred to as trailer gain, available to the Electric or Electric Over Hydraulic brakes. It also allows you to manually apply the trailer brakes. The trailer brake control panel and switches are used along with the trailer brake display page on the driver information center to adjust and display power output to the trailer brakes.

Manual Trailer Brake Apply

The manual trailer brake apply lever is located on the S76 Trailer Brake Control Panel and is used to apply the trailer's Electric or Electric Over Hydraulic brakes independent of the vehicle's brakes. This lever is used in the trailer gain adjustment procedure to properly adjust the power output to the trailer brakes.

Sliding the lever to the left will apply only the trailer brakes. The power output to the trailer is indicated in the trailer brake display page in the Driver Information Center (DIC). If the vehicle's service brakes are applied while using the manual trailer brake apply lever, the trailer output power will be the greater of the two.

The trailer and the vehicle's brake lamps will come on when either the vehicle's braking or manual trailer brakes are applied.

Trailer Gain Adjustment

Trailer gain should be set for a specific trailering condition and must be adjusted any time vehicle loading, trailer loading or road surface conditions change. It is important to re-adjust trailer gain any time the tow vehicle, trailer loading or road surface conditions change or it you notice trailer wheel lock-up at any time while you are towing.

Setting the trailer gain properly is needed for the best trailer stopping performance. A trailer that is over-gained may result in locked trailer brakes. A trailer that is under-gained may result in not enough trailer braking. Both of these conditions may result in poor stopping and stability of the vehicle and trailer.

Trailer Gain Adjustment Procedure

- Adjust trailer gain in 0.5 step increments up to 10 gain setting by using the gain adjustment +/− buttons on the trailer brake control panel switch. Pressing and holding a gain button will cause the trailer gain to continuously increment or decrement. To turn the output to the trailer off, set the gain to zero.
- Drive the tow vehicle and trailer combination on a level surface representative of the towing condition and free of traffic at approximately 32–40 km/h (20–25 mph) and fully apply the manual trailer brake apply lever mechanism located on the trailer brake control panel switch. Adjusting the trailer gain at slower speeds may result in an incorrect gain setting.
- Adjust the trailer gain to just below the threshold of trailer wheel lock-up . Trailer wheel lock-up may not occur if towing a heavily loaded trailer. In this case, adjust the trailer gain to the highest allowable setting for the towing condition.

Hill Start Assist

The hill start assist allows the driver to launch the vehicle without a roll back when the driver is moving their foot from the brake pedal to the accelerator pedal. Refer to the hill start assist system in the anti-lock brake system description and operation document for more information.

Trailer Sway Control

The trailer sway control can detect the vehicle yaw instability, caused by an attached trailer. Refer to the trailer sway control system in the anti-lock brake system description and operation document for more information.

Driver Information Center Indicators and Messages

The following indicators are used to inform the driver of several different conditions:

Trailer Connected

This message will be briefly displayed when a trailer with Electric or Electric Over Hydraulic brakes is first connected to the vehicle. This message will automatically turn off in about ten seconds. The driver can also acknowledge this message before it automatically turns off.

Check Trailer Wiring

This message will be displayed if:

- The system detects that a trailer with Electric or Electric Over Hydraulic brakes is connected to the vehicle and then the trailer harness becomes disconnected from the vehicle.
- The trailer connection is recognized initially and then a disconnect occurs while the vehicle is stationary. This message will automatically turn off in about thirty seconds. This message will also turn off if the driver acknowledges this message off or if the trailer harness is reconnected.
- A disconnect of the trailer wiring harness occurs while the vehicle is moving. The Check Trailer Wiring message will continue until the ignition is turned off. The message will also turn off if the driver acknowledges this message off or it the trailer harness is re-connected or repairs are completed.
- There is an electrical fault in the wiring to the electric trailer brakes. The Check Trailer Wiring message will continue as long as there is an electrical fault in the trailer wiring. This message will also turn off if the driver acknowledges this message off.
- A poor connection at the 7–way connector may cause the Check Trailer Wiring message. Some aftermarket 7–way trailer side connector adapters or plugs may cause deformation or excessive wear to the vehicle's trailer terminals. It is recommended that you use an OEM or Pollak heavy duty 7–way trailer side connector adapter.

Service Trailer Brake System

This message will be displayed when there is a problem with the trailer brake control system. The trailer brake system may not be fully functional, or may not be functioning at all. The trailer brake system is designed to provide trailer braking, if possible, even when faults prevent it from being fully functional. This reduced functionality includes:

1. Providing trailer braking when the master cylinder pressure or brake pedal switch are faulted.
2. Providing trailer braking when hill start assist and trailer sway control communication is faulted.
3. Providing trailer braking when certain manual trailer brake apply lever faults are present.

These conditions should be repaired to allow the trailer brake system to be fully functional.

Trailer Gain and Output Display

This display menu can be accessed by scrolling through the DIC menu, or any time the trailer gain +/− button is depressed, or the manual trailer brake apply lever is actuated. The trailer output is displayed from 0 to full output and indicates the output power provided to the trailer brakes, relative to the gain setting.

After the electrical connection is made to a trailer equipped with electric brakes or electric over hydraulic brakes, the TRAILER CONNECTED message will be displayed momentarily on the DIC. The Trailer Brake Display Page can be selected on the DIC showing TRAILER GAIN and OUTPUT, after all vehicle related service messages are acknowledged by the driver. Depending on which instrument panel cluster is in the vehicle, the DIC may display dashed lines, a greyed out display, or it may be blank signifying a disconnected trailer or a trailer brake fault condition.

Engine/Propulsion

12 V Starting and Charging

Schematic and Routing Diagrams

Starting and Charging Schematics

Starting

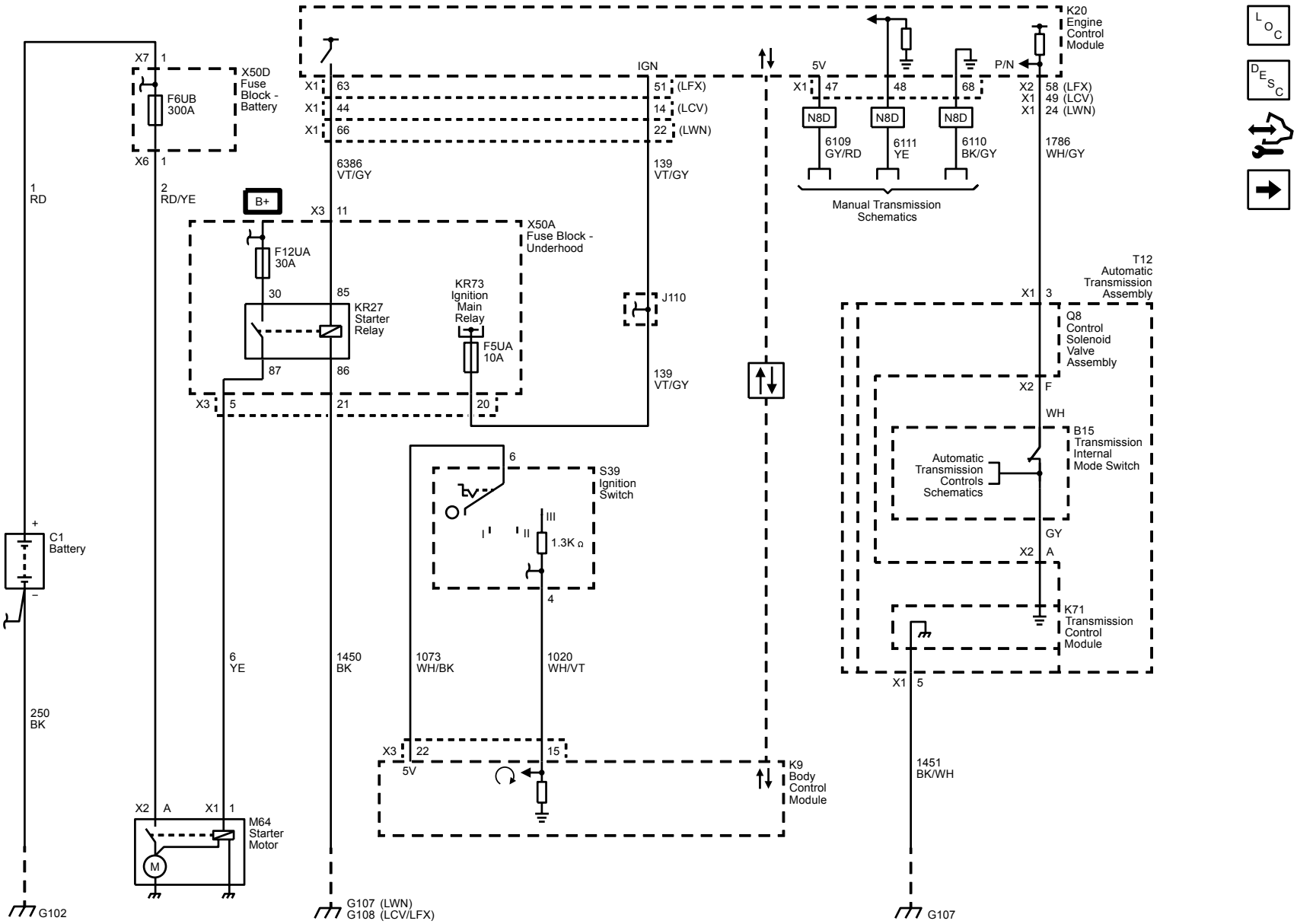

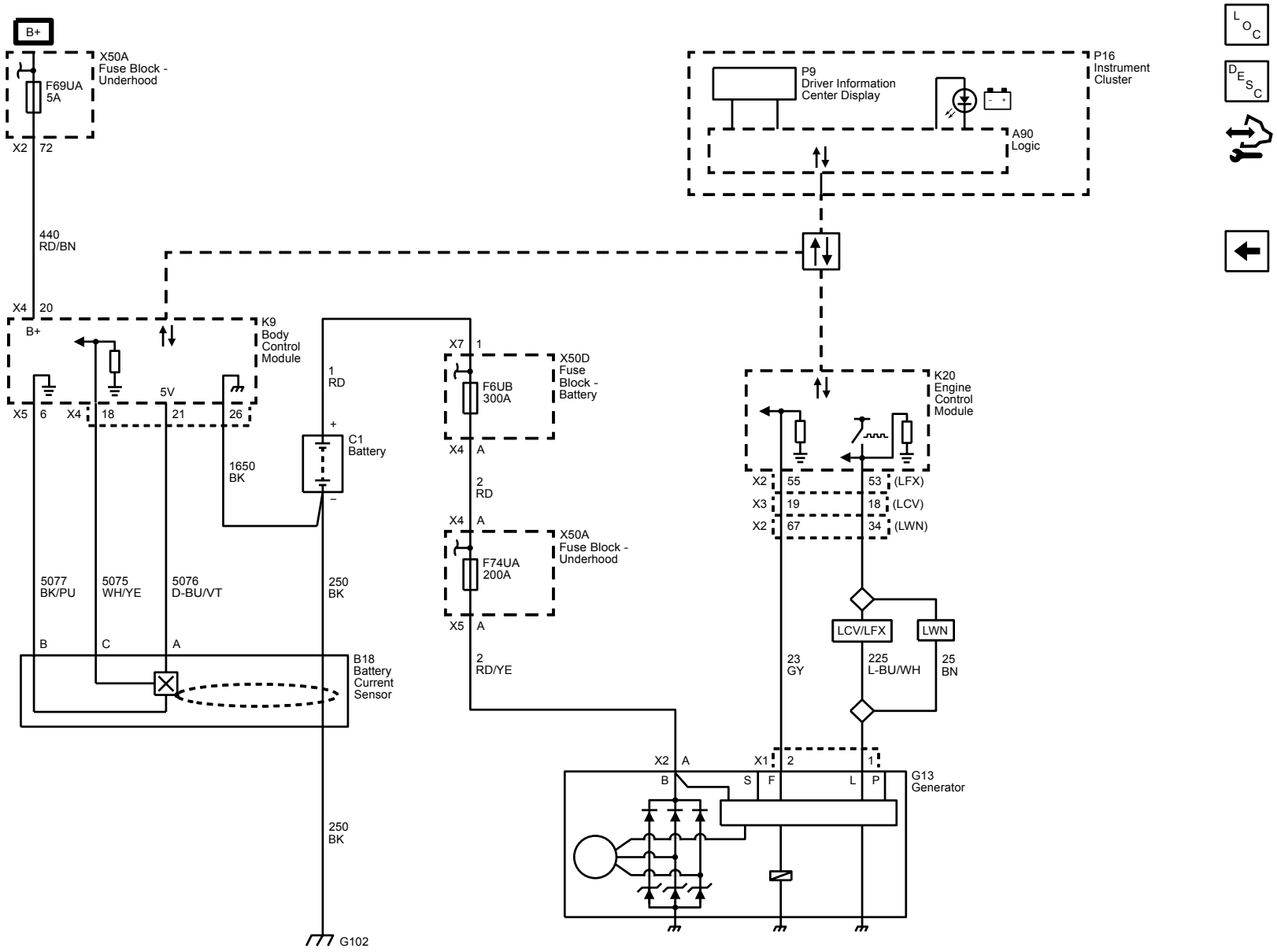
B+
X50A
Fuse Block -
Underhood
F69UA
5A
X2 72
440
RD/BN
X4 20
B+
K9
Body
Control
Module
X5 6
X4 18
5V
21
26
1650
BK
1
RD
+
C1
Battery
–
X7 1
X50D
Fuse
Block -
Battery
F6UB
300A
X4 A
2
RD
X4 A
X50A
Fuse Block -
Underhood
F74UA
200A
X5 A
2
RD/YE
P9
Driver Information
Center Display
A90
Logic
P16
Instrument
Cluster
K20
Engine
Control
Module
X2 55
X3 19
X2 67
53 (LFX)
18 (LCV)
34 (LWN)
LCV/LFX
LWN
23
GY
225
L-BU/WH
25
BN
5077
BK/PU
5075
WH/YE
5076
D-BU/VT
250
BK
B
C
A
B18
Battery
Current
Sensor
250
BK
G102
X2 A
B
X1 2
S
F
1
L
P
G13
Generator

Description and Operation

Battery Description and Operation

Warning: Batteries produce explosive gases, contain corrosive acid, and supply levels of electrical current high enough to cause burns. Therefore, to reduce the risk of personal injury when working near a battery:

- **Always shield your eyes and avoid leaning over the battery whenever possible.**
- **Do not expose the battery to open flames or sparks.**
- **Do not allow the battery electrolyte to contact the eyes or the skin. Flush immediately and thoroughly any contacted areas with water and get medical help.**
- **Follow each step of the jump starting procedure in order.**
- **Treat both the booster and the discharged batteries carefully when using the jumper cables.**

Batteries that are no longer wanted must be disposed of by an approved battery recycler and must never be thrown in the trash or sent to a landfill.

Batteries that are not part of the vehicle itself, not the battery under the hood, must only be transported on public streets for business purposes via approved hazardous material transportation procedures.

Battery storage, charging and testing facilities in repair shops must meet various requirements for ventilation, safety equipment, material segregation, etc.

The maintenance free battery is standard. There are no vent plugs in the cover. The battery is completely sealed except for 2 small vent holes in the side. These vent holes allow the small amount of gas that is produced in the battery to escape.

The battery has 3 functions as a major source of energy:

- Engine cranking
- Voltage stabilizer
- Alternate source of energy with generator overload

Battery Low Start Vehicle Message

The body control module (BCM) monitors battery positive voltage to determine battery state of charge. If one or more of the BCM battery positive voltage terminals measure less than approximately 11.6V compared to the BCM ground circuits, this message will display and four chimes may sound. Start the vehicle immediately. If the vehicle is not started and the battery continues to discharge, the climate controls, heated seats, and audio systems will shut off and the vehicle may require a jump start. These systems will function again after the vehicle is started.

Battery Ratings

A battery has 2 ratings:

- Cold cranking amperage
- Amperage hours

When a battery is replaced use a battery with similar ratings. See battery specification label on the original battery.

Amperage Hours

The amperage hour rating tells you how much amperage is available when discharged evenly over a 20 hour period. The amperage hour rating is cumulative, so in order to know how many constant amperage the battery will output for 20 h, you have to divide the amperage hour rating by 20. Example: If a battery has an amperage hour rating of 74, dividing by 20 = 3.75. Such a battery can carry a 3.75 A load for 20 hours before dropping to 10.5 V. (10.5 V is the fully discharged level, at which point the battery needs to be recharged.) A battery with an amperage hour rating of 55 will carry a 2.75 A load for 20 hours before dropping to 10.5 V.

Cold Cranking Amperage

The cold cranking amperage is an indication of the ability of the battery to crank the engine at cold temperatures. The cold cranking amperage rating is the minimum amperage the battery must maintain for 30 seconds at −18°C (0°F) while maintaining at least 7.2 V. See battery label for the cold cranking amperage rating of this battery.

Charging System Description and Operation

Electrical Power Management Overview

The electrical power management system is designed to monitor and control the charging system and send diagnostic messages to alert the driver of possible problems with the battery and generator. This electrical power management system primarily utilizes existing on-board computer capability to maximize the effectiveness of the generator, to manage the load, improve battery state-of-charge and life, and minimize the system's impact on fuel economy. The electrical power management system performs 3 functions:

- It monitors the battery voltage and estimates the battery condition.
- It takes corrective actions by boosting idle speeds, and adjusting the regulated voltage.
- It performs diagnostics and driver notification.

The battery condition is estimated during ignition-off and during ignition-on. During ignition-off the state-of-charge of the battery is determined by measuring the open-circuit voltage. The state-of-charge is a function of the acid concentration and the internal resistance of the battery, and is estimated by reading the battery open circuit voltage when the battery has been at rest for several hours.

The state-of-charge can be used as a diagnostic tool to tell the customer or the dealer the condition of the battery. Throughout ignition-on, the algorithm continuously estimates state-of-charge based on adjusted net amp hours, battery capacity, initial state-of-charge, and temperature.

While running, the battery degree of discharge is primarily determined by a battery current sensor, which is integrated to obtain net amp hours.

In addition, the electrical power management function is designed to perform regulated voltage control to improve battery state-of-charge, battery life, and fuel economy. This is accomplished by using knowledge of the battery state-of-charge and temperature to set the charging voltage to an optimum battery voltage level for recharging without detriment to battery life.

The Charging System Description and Operation is divided into 3 sections. The first section describes the charging system components and their integration into the electrical power management. The second section describes charging system operation. The third section describes the instrument panel cluster operation of the charge indicator, driver information center messages, and voltmeter operation.

Charging System Components

Generator

The generator is a serviceable component. If there is a diagnosed failure of the generator it must be replaced as an assembly. The engine drive belt drives the generator. When the rotor is spun it induces an alternating current (AC) into the stator windings. The AC voltage is then sent through a series of diodes for rectification. The rectified voltage has been converted into a direct current (DC) for use by the vehicles electrical system to maintain electrical loads and the battery charge. The voltage regulator integral to the generator controls the output of the generator. It is not serviceable. The voltage regulator controls the amount of current provided to the rotor. If the generator has field control circuit failure, the generator defaults to an output voltage of 13.8 V.

Body Control Module (BCM)

The body control module (BCM) is a GMLAN device. It communicates with the engine control module (ECM) and the instrument panel cluster for electrical power management (electrical power management) operation. The BCM determines the output of the generator and sends the information to the ECM for control of the generator turn on signal circuit. It monitors the generator field duty cycle signal circuit information sent from the ECM for control of the generator. It monitors a battery current sensor, the battery positive voltage circuit, and estimated battery temperature to determine battery state of charge. The BCM performs idle boost.

Battery Current Sensor

The battery current sensor is a serviceable component that is connected to the negative battery cable at the battery. The battery current sensor is a 3-wire hall effect current sensor. The battery current sensor monitors the battery current. It directly inputs to the BCM. It creates a 5 volt pulse width modulation (PWM) signal of 128 Hz with a duty cycle of 0–100 percent. Normal duty cycle is between 5–95 percent. Between 0–5 percent and 95–100 percent are for diagnostic purposes.

Engine Control Module (ECM)

When the engine is running, the generator turn-on signal is sent to the generator from the ECM, turning on the regulator. The generator's voltage regulator controls current to the rotor, thereby controlling the output voltage. The rotor current is proportional to the electrical pulse width supplied by the regulator. When the engine is started, the regulator senses generator rotation by detecting AC voltage at the stator through an internal wire. Once the engine is running, the regulator varies the field current by controlling the pulse width. This regulates the generator output voltage for proper battery charging and electrical system operation. The generator field duty terminal is connected internally to the voltage regulator and externally to the ECM. When the voltage regulator detects a charging system problem, it grounds this circuit to signal the ECM that a problem exists. The ECM monitors the generator field duty cycle signal circuit, and receives control decisions based on information from the BCM.

Instrument Panel Cluster

The instrument panel cluster provides the customer notification in case a concern with the charging system. There are 2 means of notification, a charge indicator and a driver information center message of SERVICE BATTERY CHARGING SYSTEM if equipped.

Charging System Block Diagram

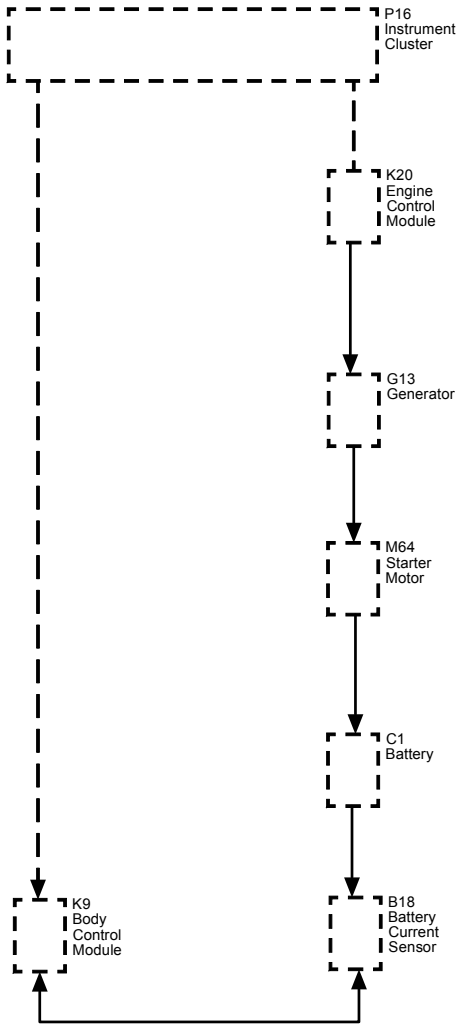

Charging System Operation

The purpose of the charging system is to maintain the battery charge and vehicle loads. There are 6 modes of operation and they include:

- Battery Sulfation Mode
- Charge Mode
- Fuel Economy Mode
- Head lamp Mode
- Start Up Mode
- Voltage Reduction Mode

The engine control module (ECM) controls the generator through the generator turn ON signal circuit. The ECM monitors the generator performance though the generator field duty cycle signal circuit. The signal is a pulse width modulation (PWM) signal of 128 Hz with a duty cycle of 0–100 percent. Normal duty cycle is between 5–95 percent. Between 0–5 percent and 95–100 percent are for diagnostic purposes. The following table shows the commanded duty cycle and output voltage of the generator:

Commanded Duty Cycle	Generator Output Voltage
10%	11 V
20%	11.56 V
30%	12.12 V

40%	12.68 V
50%	13.25 V
60%	13.81 V
70%	14.37 V
80%	14.94 V
90%	15.5 V

The generator provides a feedback signal of the generator voltage output through the generator field duty cycle signal circuit to the ECM. This information is sent to the body control module (BCM). The signal is PWM signal of 128 Hz with a duty cycle of 0–100 percent. Normal duty cycle is between 5–99 percent. Between 0–5 percent and 100 percent are for diagnostic purposes.

Battery Sulfation Mode

The BCM will enter this mode when the interpreted generator output voltage is less than 13.2 V for 45 minutes. When this condition exists the BCM will enter Charge Mode for 2–3 minutes. The BCM will then determine which mode to enter depending on voltage requirements.

Charge Mode

The BCM will enter Charge Mode when ever one of the following conditions are met.

- The wipers are ON for more than 3 seconds.
- GMLAN (Climate Control Voltage Boost Mode Request) is true, as sensed by the HVAC control head. High speed cooling fan, rear defogger and HVAC high speed blower operation can cause the BCM to enter the Charge Mode.
- The estimated battery temperature is less than 0°C (32°F).
- Battery State of Charge is less than 80 percent.
- Vehicle speed is greater than 145 km/h (90 mph)
- Current sensor fault exists.
- System voltage was determined to be below 12.56 V

When any one of these conditions is met, the system will set targeted generator output voltage to a charging voltage between 13.9–15.5 V, depending on the battery state of charge and estimated battery temperature.

Fuel Economy Mode

The BCM will enter Fuel Economy Mode when the estimated battery temperature is at least 0°C (32°F) but less than or equal to 80°C (176°F), the calculated battery current is less than 15 amperes and greater than −8 amperes, and the battery state-of-charge is greater than or equal to 80 percent. Its targeted generator output voltage is the open circuit voltage of the battery and can be between 12.5–13.1 V. The BCM will exit this mode and enter Charge Mode when any of the conditions described above are present.

Head lamp Mode

The BCM will enter Head lamp Mode when ever the head lamps are ON (high or low beams). Voltage will be regulated between 13.9–14.5 V.

Start Up Mode

When the engine is started the BCM sets a targeted generator output voltage of 14.5 V for 30 seconds.

Voltage Reduction Mode

The BCM will enter Voltage Reduction Mode when the calculated ambient air temperature is above 0°C (32°F). The calculated battery current is less than 1 ampere and greater than −7 amperes, and the generator field duty cycle is less than 99 percent. Its targeted generator output voltage is 12.9 V. The BCM will exit this mode once the criteria are met for Charge Mode.

Instrument Panel Cluster Operation

Charge Indicator Operation

The instrument panel cluster illuminates the charge indicator and displays a warning message in the driver information center if equipped, when the one or more of the following occurs:

- The engine control module (ECM) detects that the generator output is less than 11 V or greater than 16 V. The instrument panel cluster receives a GMLAN message from the ECM requesting illumination.
- The instrument panel cluster determines that the system voltage is less than 11 V or greater than 16 V for more than 30 seconds. The instrument panel cluster receives a GMLAN message from the body control module (BCM) indicating there is a system voltage range concern.
- The instrument panel cluster performs the displays test at the start of each ignition cycle. The indicator illuminates for approximately 3 seconds.

Display Message: BATTERY NOT CHARGING SERVICE CHARGING SYSTEM or SERVICE BATTERY CHARGING SYSTEM

The BCM and the ECM will send a serial data message to the driver information center for the BATTERY NOT CHARGING SERVICE CHARGING SYSTEM or SERVICE BATTERY CHARGING SYSTEM message to be displayed. It is commanded ON when a charging system DTC is a current DTC. The message is turned OFF when the conditions for clearing the DTC have been met.

Electrical Power Management Description and Operation

Electrical Power Management

The electrical power management is used to monitor and control the charging system and alert the driver of possible problems within the charging system. The electrical power management system makes the most efficient use of the generator output, improves the battery state-of-charge, extends battery life, and manages system electrical loads.

The load shed operation is a means of reducing electrical loads during a low voltage or low battery state-of-charge condition.

The idle boost operation is a means of improving generator performance during a low voltage or low battery state-of-charge condition.

Each electrical power management function, either idle boost or load shed, is activated in incremental steps. For example, idle boost 1 must be active before idle boost 2 can be active. The criteria used by the body control module (BCM) to regulate electrical power management are outlined below:

Electrical Power Management Block Diagram

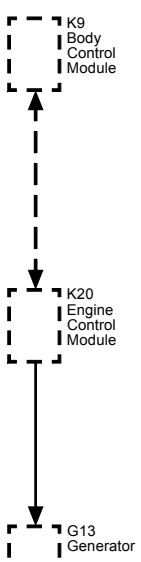

Idle Boost and Load Shed With Current Sensor

Function	Battery Temperature Calculation	Battery Voltage Calculation	Amp-Hour Calculation	Action Taken
Idle Boost 1 Start	Less Than −15°C (5°F)	Less Than 13 V	—	First level Idle boost requested
Idle Boost 1 Start	—	—	Battery has a net loss greater than 0.6 Ah	First level Idle boost requested
Idle Boost 1 Start	—	Less Than 11 V	—	First level Idle boost requested
Idle Boost 1 End	Greater Than −10°C (14°F)	Greater Than 12 V	Battery has a net loss less than 0.2 Ah	First level Idle boost request cancelled
Idle Boost 2 Start	—	—	Battery has a net loss greater than 1.6 Ah	Second level Idle boost requested
Idle Boost 2 Start	—	Less Than 11 V	—	Second level Idle boost requested

Idle Boost 2 End	—	Greater Than 12 V	Battery has a net loss less than 0.8 Ah	Second level Idle boost request cancelled
Load Shed 1 Start	—	—	Battery has a net loss of 4 Ah	Rear Defrost, Heated Mirrors, Heated Seats, HVAC cycled OFF for 20% of their cycle
Load Shed 1 Start	—	Less Than 11 V	—	Rear Defrost, Heated Mirrors, Heated Seats, HVAC cycled OFF for 20% of their cycle
Load Shed 1 End	—	Greater Than 12 V	Battery has a net loss of less than 2 Ah	Clear Load Shed 1
Idle Boost 3 Start	—	—	Battery has a net loss of 10 Ah	Third level Idle boost requested
Idle Boost 3 Start	—	Less Than 11 V	—	Third level Idle boost requested
Idle Boost 3 End	—	Greater Than 12 V	Battery has a net loss of less than 6.0 Ah	Third level Idle boost request cancelled
Load Shed 2 Start	—	—	Battery has a net loss greater than 12 Ah	Rear Defrost, Heated Mirrors, Heated Seats, HVAC cycled OFF for 50% of their cycle. The BATTERY SAVER ACTIVE message will be displayed on the DIC
Load Shed 2 Start	—	Less Than 11 V	—	Rear Defrost, Heated Mirrors, Heated Seats, HVAC cycled OFF for 50% of their cycle. The BATTERY SAVER ACTIVE message will be displayed on the DIC
Load Shed 2 End	—	Greater Than 12 V	Battery has a net loss of less than 8 Ah	Clear Load Shed 2
Load Shed 3 Start	—	Less Than 11.9 V	Battery has a net loss greater than 20 Ah	Rear Defrost, Heated Mirrors, Heated Seats, HVAC cycled OFF for 100% of their cycle. The BATTERY SAVER ACTIVE message will be displayed on the DIC
Load Shed 3 Start	—	Less Than 11 V	—	Rear Defrost, Heated Mirrors, Heated Seats, HVAC cycled OFF for 100% of their cycle. The BATTERY SAVER ACTIVE message will be displayed on the DIC
Load Shed 3 End	—	Greater Than 12.6 V	Battery has a net loss of less than 13 Ah	Clear Load Shed 3

Idle Boost and Load Shed Without Current Sensor (based on battery voltage)

Function	Battery Temperature Calculation	Battery Voltage Calculation	Action Taken
Idle Boost 1 Start	Less Than −15°C (5°F)	Less Than 13 V	First level Idle boost requested
Idle Boost 1 Start	—	Less Than 12.6 V	First level Idle boost requested
Idle Boost 1 End	Greater Than −15°C (5°F)	—	First level Idle boost request cancelled
Idle Boost 1 End	—	Greater Than 13 V	First level Idle boost request cancelled
Idle Boost 2 Start	—	Less Than 12.4 V	Second level Idle boost requested
Idle Boost 2 End	—	Greater Than 12.5 V	Second level Idle boost request cancelled
Load Shed 1 Start	—	Less Than 12.3 V	Rear Defrost, Heated Mirrors, Heated Seats, HVAC cycled OFF for 20% of their cycle
Load Shed 1 End	—	Greater Than 12.4 V	Clear Load Shed 1
Idle Boost 3 Start	—	Less Than 10 V	Third level Idle boost requested
Idle Boost 3 End	—	Greater Than 12.3 V	Third level Idle boost request cancelled
Load Shed 2 Start	—	Less Than 12.1 V	Rear Defrost, Heated Mirrors, Heated Seats, HVAC cycled OFF for 50% of their cycle. The BATTERY SAVER ACTIVE message will be displayed on the DIC
Load Shed 2 End	—	Greater Than 12.2 V	Clear Load Shed 2
Load Shed 3 Start	—	Less Than 11.9 V	Rear Defrost, Heated Mirrors, Heated Seats, HVAC cycled OFF for 100% of their cycle. The BATTERY SAVER ACTIVE message will be displayed on the DIC
Load Shed 3 End	—	Greater Than 12.0 V	Clear Load Shed 3

Starting System Description and Operation

The starter motors are non-repairable starter motors. They have pole pieces that are arranged around the armature. Both solenoid windings are energized. The pull-in winding circuit is completed to the ground through the starter motor. The windings work together magnetically to pull and hold in the plunger. The plunger moves the shift lever. This action causes the starter drive assembly to rotate on the armature shaft spline as it engages with the flywheel ring gear on the engine. Moving at the same time, the plunger also closes the solenoid switch contacts in the starter solenoid. Full battery voltage is applied directly to the starter motor and it cranks the engine.

As soon as the solenoid switch contacts close, current stops flowing thorough the pull-in winding because battery voltage is applied to both ends of the windings. The hold-in winding remains energized. Its magnetic field is strong enough to hold the plunger, shift lever, starter drive assembly, and solenoid switch contacts in place to continue cranking the engine. When the engine starts, pinion overrun protects the armature from excessive speed until the switch is opened.

When the ignition switch is released from the START position, the START relay opens and battery voltage is removed from the starter solenoid S terminal. Current flows from the motor contacts through both windings to the ground at the end of the hold-in winding. However, the direction of the current flow through the pull-in winding is now opposite the direction of the current flow when the winding was first energized.

The magnetic fields of the pull-in and hold-in windings now oppose one another. This action of the windings, along with the help of the return spring, causes the starter drive assembly to disengage and the solenoid switch contacts to open simultaneously. As soon as the contacts open, the starter circuit is turned off.

Circuit Description (Key Start)

When the ignition switch is placed in the Start position, a discrete signal is supplied to the body control module (BCM) notifying it that the ignition is in the Start position. The BCM then sends a message to the engine control module (ECM) notifying it that CRANK has been requested. The ECM verifies that the transmission is in Park or Neutral. If it is, the ECM then supplies 12 V to the control circuit of the crank relay. When this occurs, battery positive voltage is supplied through the switch side of the crank relay to the S terminal of the starter solenoid.

Starting System Block Diagram

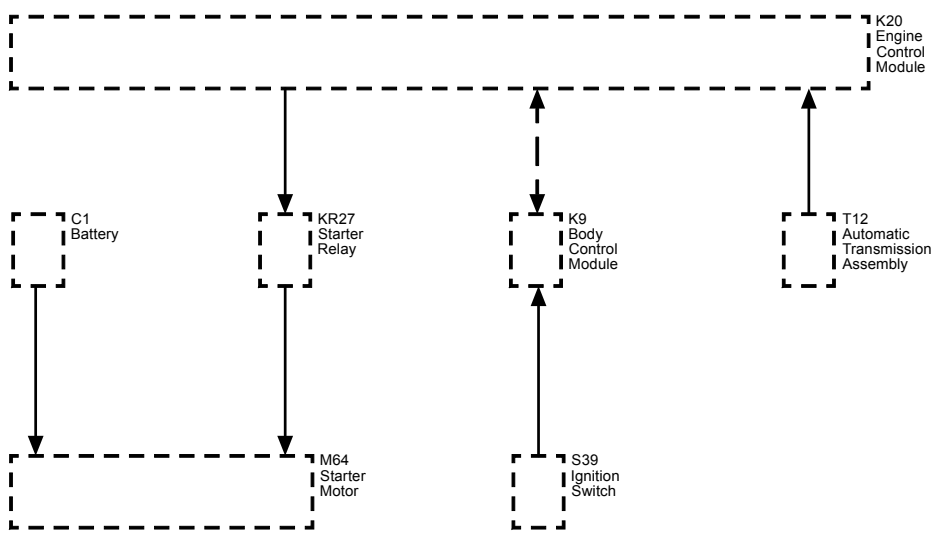

Cruise Control

Schematic and Routing Diagrams

Cruise Control Schematics

Cruise Control

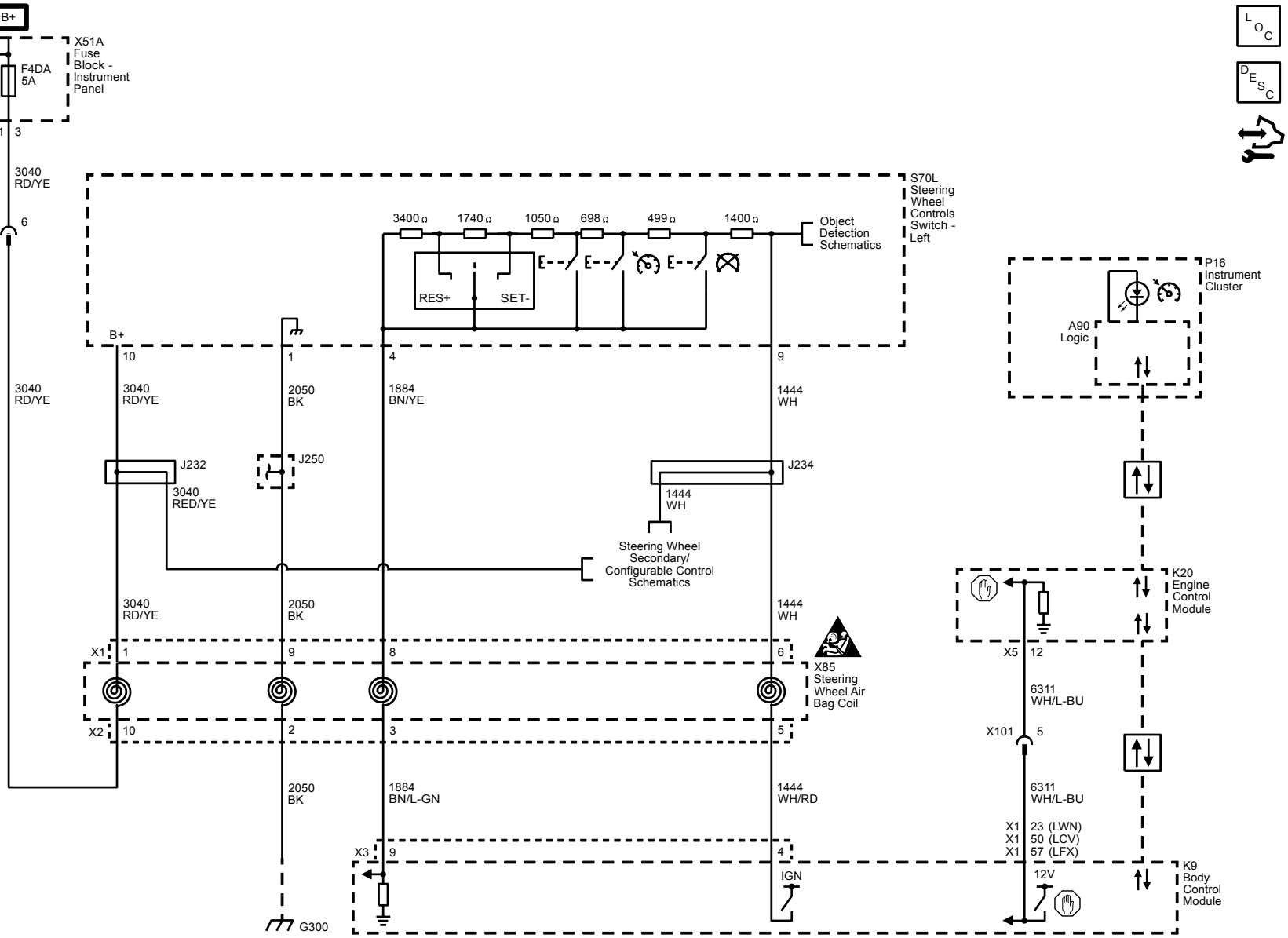

HVAC

Heating, Ventilation, and Air Conditioning

Description and Operation

Heating and Air Conditioning System Description and Operation

Engine Coolant

Engine coolant is the key element of the heating system. The engine thermostat controls the normal engine operating coolant temperature. Coolant pumped out of the engine enters the heater core through the inlet heater hose. The air flowing through the HVAC module absorbs the heat of the coolant flowing through the heater core. The coolant then exits the heater core through the heater outlet hose and returns back to the engine block.

A/C Cycle

Refrigerant is the key element in an air conditioning system. R-134a is presently the only approved refrigerant for this vehicle. R-134a is a very low temperature gas that can transfer the undesirable heat from the passenger compartment to the outside air.

The A/C compressor is belt driven and operates when the magnetic clutch is engaged. The compressor builds pressure in the A/C system. Compressing the refrigerant also adds heat to the refrigerant. The refrigerant is discharged from the compressor through the discharge hose, and forced to flow to the condenser and then through the balance of the A/C system. The A/C system is mechanically protected with the use of a high pressure relief valve. If the high pressure A/C switch were to fail or if the refrigerant system becomes restricted and refrigerant pressure continued to rise, the high pressure relief will pop open and release refrigerant from the system.

Compressed refrigerant enters the condenser in a high temperature, high pressure vapor state. As the refrigerant flows through the condenser, the heat of the refrigerant is transferred to the ambient air passing through the condenser. Cooling the refrigerant causes the refrigerant to condense and change from a vapor to a liquid state.

The condenser is located in front of the radiator for maximum heat transfer. The condenser is made of aluminum tubing and aluminum cooling fins, which allows rapid heat transfer for the refrigerant. The semi-cooled liquid refrigerant exits the condenser and flows through the liquid line, to the TXV.

The TXV is located at the evaporator inlet. The TXV is the dividing point for the high and the low pressure sides of the A/C system. As the refrigerant passes through the TXV, the refrigerant pressure is lowered. Due to the pressure differential on the liquid refrigerant, the refrigerant will begin to boil at the TXV. The TXV also meters the amount of liquid refrigerant that can flow into the evaporator.

Refrigerant exiting the TXV flows into the evaporator core in a low pressure, liquid state. Ambient air is drawn through the HVAC module and passes through the evaporator core. Warm and moist air will cause the liquid refrigerant to boil inside the evaporator core.

The boiling refrigerant absorbs heat from the ambient air and draws moisture onto the evaporator. The refrigerant exits the evaporator through the suction line and back to the compressor, in a vapor state. This completes the A/C cycle of heat removal. At the compressor, the refrigerant is compressed again and the cycle of heat removal is repeated.

The conditioned air is distributed through the HVAC module for passenger comfort. The moisture removed from the passenger compartment will also change form, or condense, and is discharged from the HVAC module as water.

HVAC - Automatic

Schematic and Routing Diagrams

HVAC Schematics

Power, Ground, Serial Data, HVAC and Blower Controls

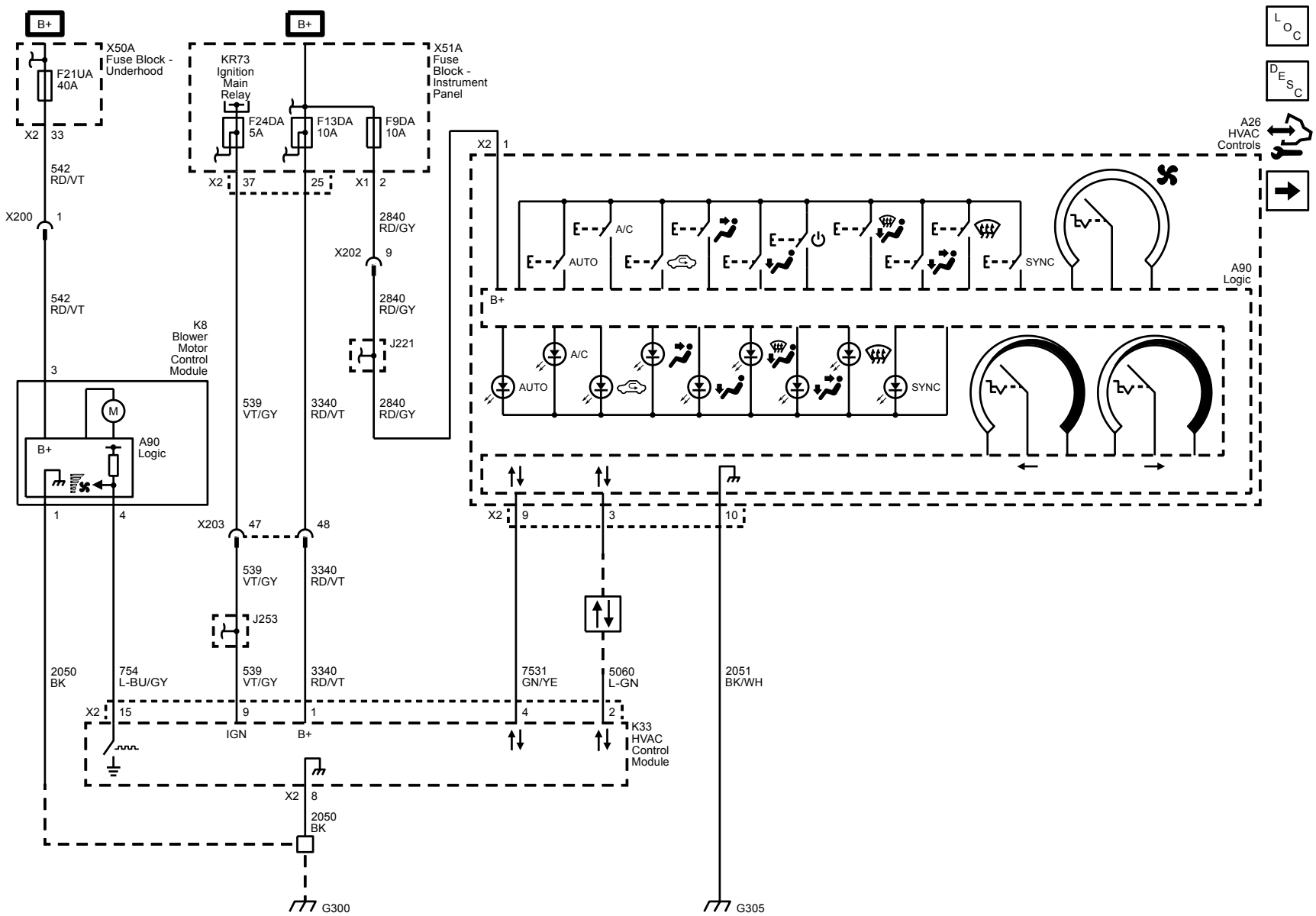

Moisture, Sunload, and Temperature Sensors

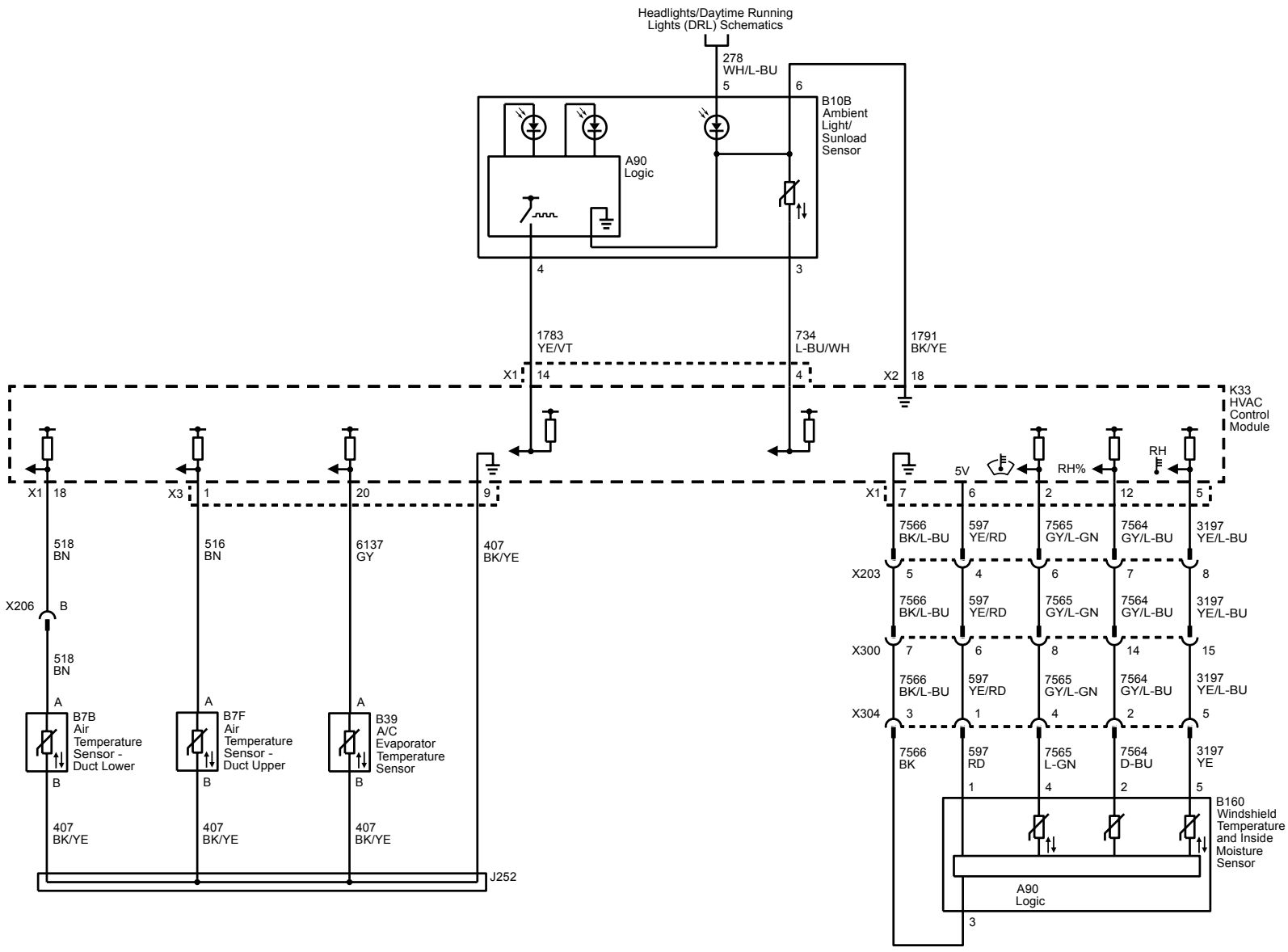

Mode and Temperature Control Actuators

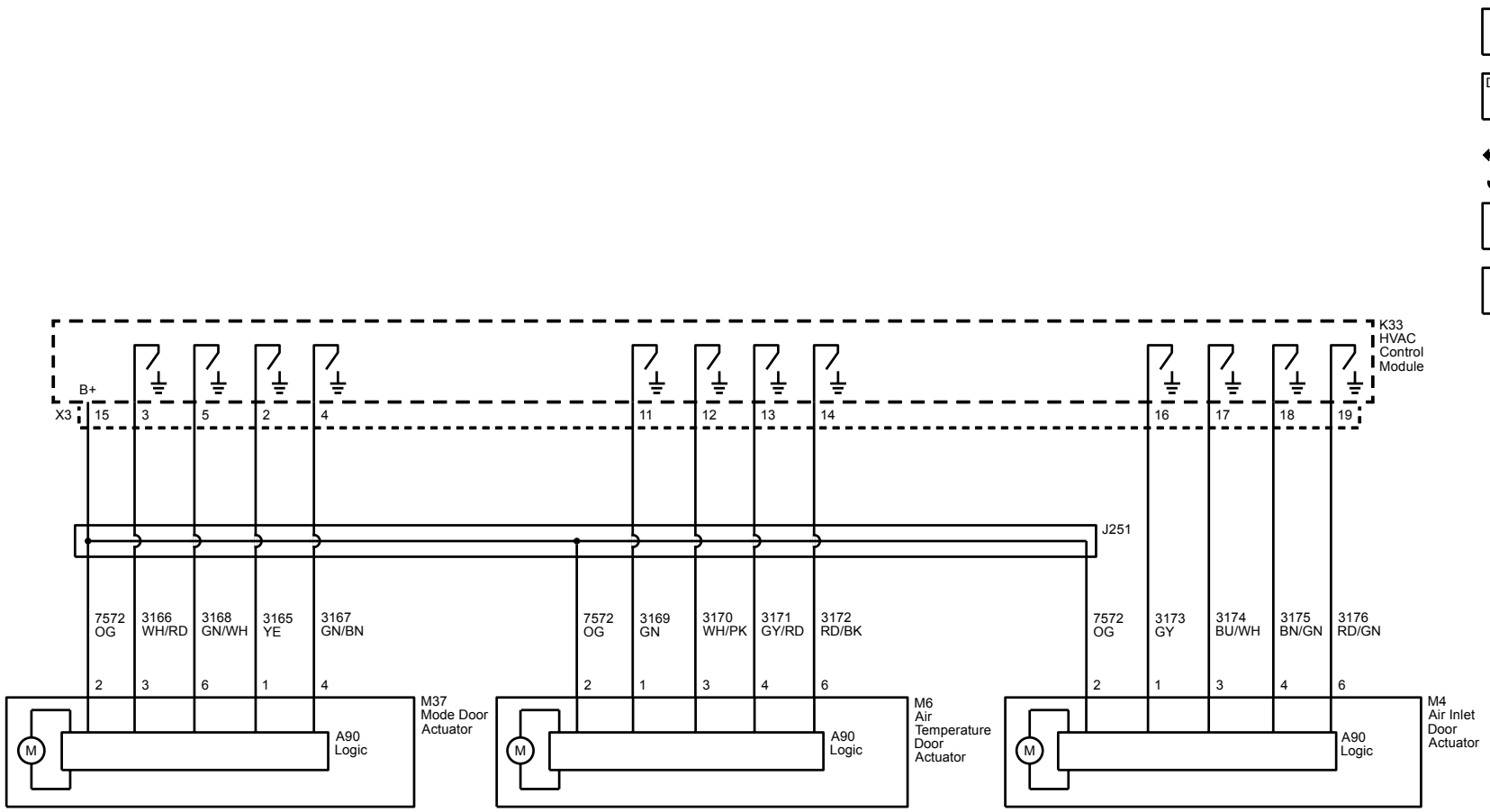

A/C Compressor Controls

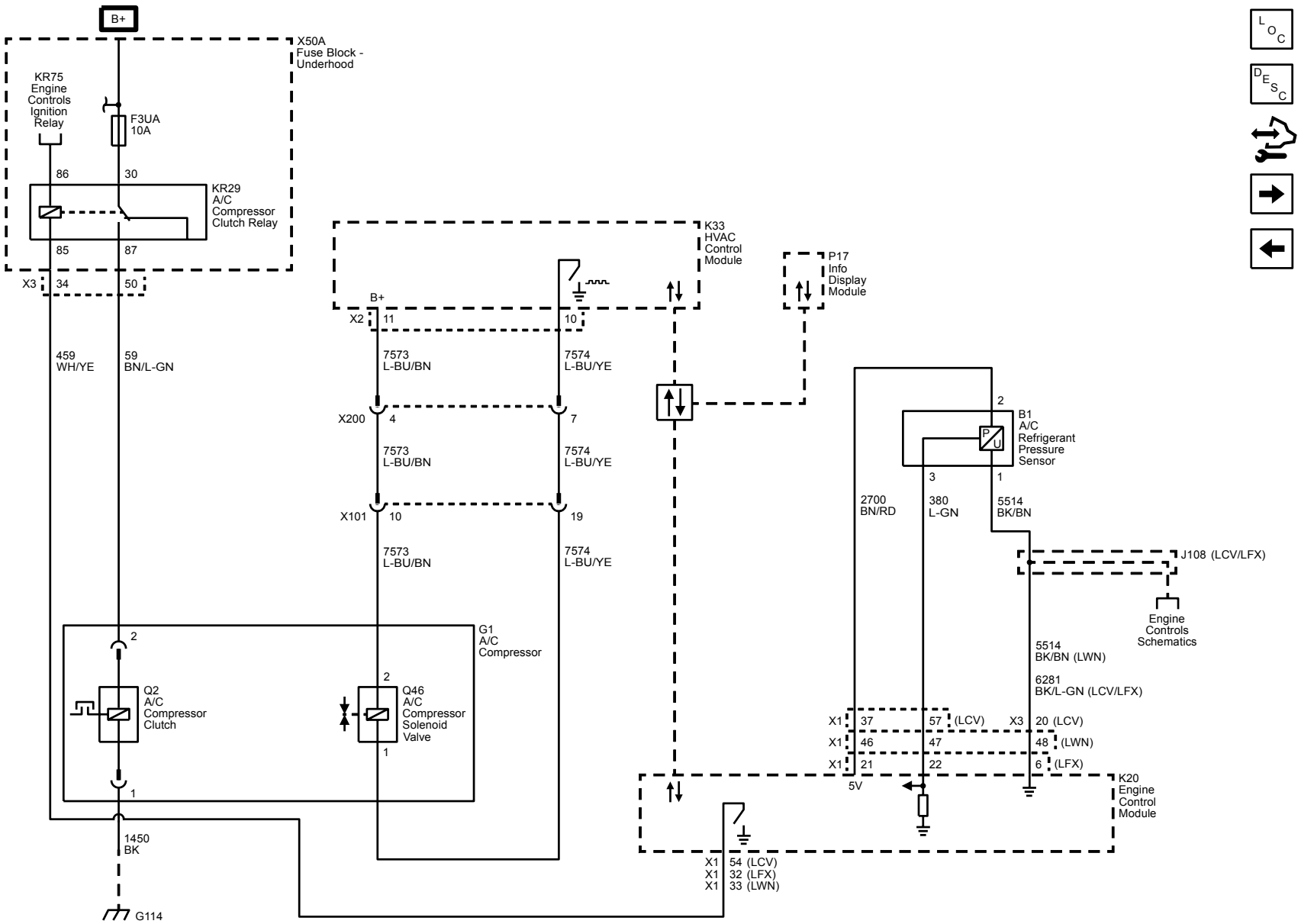

Auxiliary Heater (LWN)

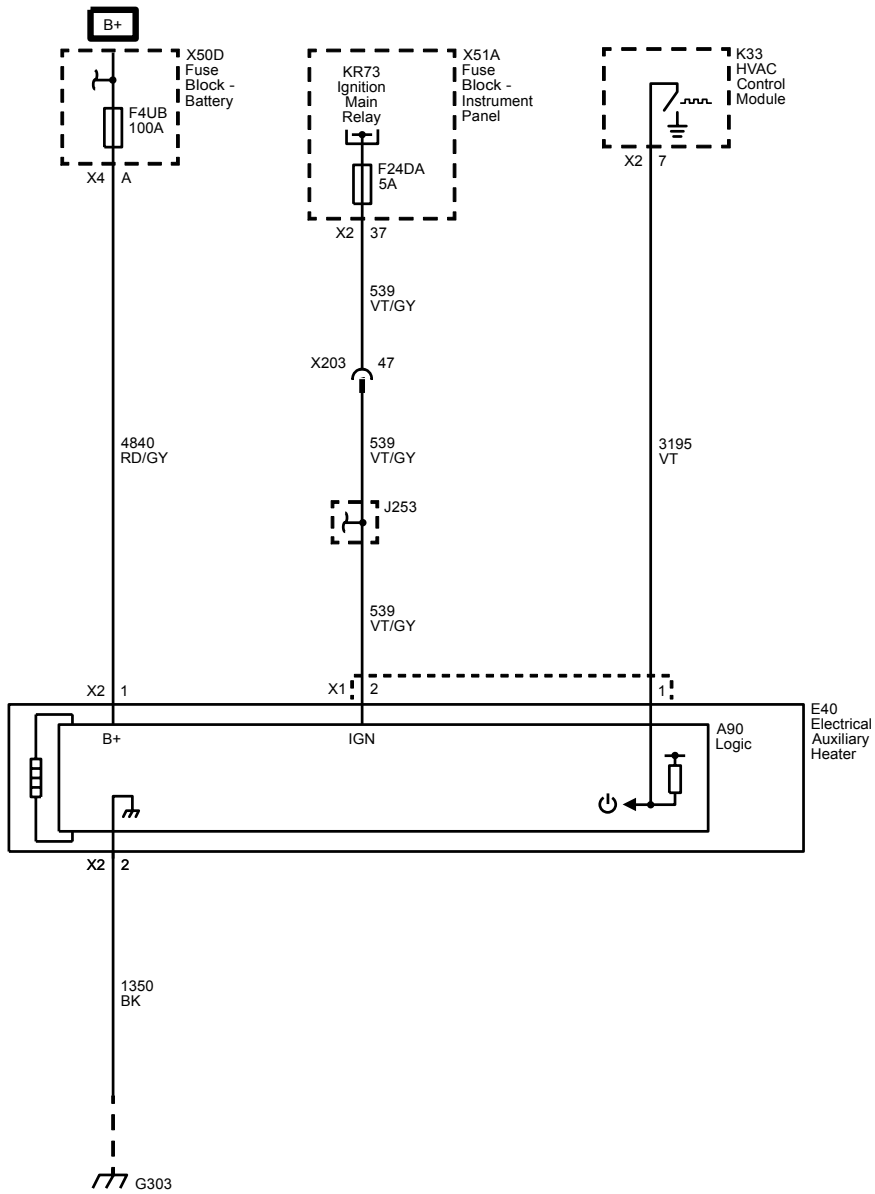

Description and Operation

Automatic HVAC Description and Operation

The air temperature and the air delivery description and operation are divided into eight areas:

- HVAC Control Components
- Air Speed
- Air Delivery
- Heating and A/C Operation
- Recirculation Operation
- Automatic Operation
- Engine Coolant
- A/C Cycle

HVAC Control Components

HVAC Control

The HVAC controls contains all buttons, switches, and dials which are required to control the functions of the HVAC system and serve as an interface between the operator and the HVAC control module. The selected values are passed to the HVAC control module via LIN-Bus.

HVAC Control Module

The HVAC control module is a GMLAN device that interfaces between the operator and the HVAC system to maintain and control desired air temperature and air distribution settings. The battery positive voltage circuit provides power that the HVAC control module uses for keep alive memory. If the battery positive voltage circuit loses power, all HVAC DTCs and settings will be erased from keep alive memory. The body control module (BCM), which is the vehicle mode master, provides a device ON-Signal. The HVAC control module provides blower, air delivery mode and air temperature settings.

The HVAC control module supports the following features:

Feature	Availability
Afterblow	Available if reprogrammed by the technician
Purge	Yes
Personalization	Yes
Actuator Calibration	Yes

Mode Actuator

The mode actuator is a 5-wire stepper motor. The HVAC control module supplies a 12 V reference voltage to the stepper motor and energizes the 4 stepper motor coils with a pulsed ground signal. The stepper motor puts the mode door into the calculated position in order to reach the selected position. The null point of the stepper motor will be calibrated, if the stepper motor is new. When the stepper motor is calibrated, the HVAC control module can drive the applicable coil to reach exactly the desired position of the mode door.

Air Temperature Actuator

The air temperature actuator is a 5-wire stepper motor. The HVAC control module supplies a 12 V reference voltage to the stepper motor and energizes the 4 stepper motor coils with a pulsed ground signal. The air temperature actuator puts the mixed air door into the calculated position, in order to reach the selected temperature of the temperature controls. The null point of the stepper motor will be calibrated, if the stepper motor is new. When the stepper motor is calibrated, the HVAC control module can drive the applicable coil to reach exactly the desired position of the air temperature door.

Recirculation Actuator

The recirculation actuator is a 5-wire stepper motor. The HVAC control module supplies a 12 V reference voltage to the stepper motor and energizes the 4 stepper motor coils with a pulsed ground signal. The stepper motor puts the recirculation door into the calculated position in order to reach the desired position. The null point of the stepper motor will be calibrated, if the stepper motor is new. When the stepper motor is calibrated, the HVAC control module can drive the applicable coil to reach exactly the desired position of the recirculation door.

Blower Motor and Module

The blower motor control processor controls the speed of the blower motor by increasing or decreasing the voltage drop on the ground side of the blower motor. The HVAC control module provides a low side pulse width modulation (PWM) signal to the blower motor control processor via the blower motor speed control circuit. As the requested blower speed increases, the HVAC control module increases the amount of time that the speed signal is modulated to ground. As the requested blower speed decreases, the HVAC control module decreases the amount of time that the signal is modulated to ground.

Evaporator Temperature Sensor

The evaporator temperature sensor is a 2-wire negative temperature coefficient thermistor. The sensor operates within a temperature range of −40 to +85°C (−40 to +185°F). The sensor is installed at the evaporator and measures its temperature. If the temperature drops under 3°C (38°F), the compressor will be switched off in order to prevent a frozen evaporator.

Duct Temperature Sensors

The air temperature sensors are 2-wire negative temperature coefficient thermistors. The sensors operate within atemperature range of −40 to +85°C (−40 to +185°F). The sensors are installed in the air distribution ducts and measurethe temperature of the air that streams from the ducts. The HVAC control module uses these values to calculate the desired Air temperature door position.

A/C Refrigerant Pressure Sensor

The A/C refrigerant pressure sensor is a 3-wire piezoelectric pressure transducer. The 5 V reference voltage, low reference, and signal circuits enable the sensor to operate. The A/C pressure signal can be between 0.2–4.8 V. When the A/C refrigerant pressure is low, the signal value is near 0 V. When the A/C refrigerant pressure is high, the signal value is near 5 V. The engine control module (ECM) converts the voltage signal to a pressure value. When pressure is too high or too low, the ECM will not allow the A/C compressor clutch to engage.

A/C Compressor

The A/C compressor uses a conventional belt driven magnetic clutch to engage and mechanically turn the compressor. When the A/C switch is pressed, the HVAC control module sends an A/C request message to the ECM via serial data. If specific criteria is met, the ECM then grounds the A/C compressor clutch relay control circuit, which will switch the A/C compressor clutch relay. With the relay contacts closed, battery voltage is supplied to the permanently grounded A/C compressor clutch. The A/C compressor clutch will then be activated.

This A/C system utilizes a variable displacement solenoid valve to alter the amount of displacement created by the turning of the compressor. The HVAC control module provides both battery voltage and a pulse width modulated ground to the variable displacement solenoid valve. When the A/C switch is pressed, the HVAC control module grounds the variable displacement solenoid using a (PWM) signal in order to determine the amount of compressor displacement. The performance of the A/C compressor is regulated based on the adjusted interior temperature.

Windshield Temperature and Inside Moisture Sensor

The windshield temperature and inside moisture sensor assembly provides information about:

- Relative humidity level at windshield (compartment side)
- Temperature of the windshield inside (compartment side)
- Temperature of the humidity sensor element

The relative humidity sensor measures the relative humidity of the compartment side of the windshield. It also detects the temperature of the windshield surface on the passenger compartment side. Both values are used as control inputs for the HVAC control module application to calculate the fog risk on windshield compartment side and ability to reduce fuel consumption by decreasing A/C compressor power to a minimum without causing any fog. The sensor will also enable partial recirculation mode in order to improve heat-up performance of the passenger compartment under cold ambient temperature conditions without the risk of mist build-up on the windshield. The humidity sensor element temperature sensor supplies the temperature of the humidity sensor element. It is only needed if the thermal contact between the humidity sensing element and the inside windshield surface is not sufficient.

Auxiliary Electric Heater (Diesel ONLY)

Models equipped with a diesel engine are also equipped with an auxiliary electric heater grid to provide faster cabin warm-ups in cold climates. The auxiliary heater grid is mounted in the low-center of the HVAC module, where heat is transferred from the grid to air which is directed to the floor outlet ducts.

The auxiliary heater is enabled only when the cabin temperature is set to MAX, the engine coolant temperature is less than 80°C (176°F), and the outside air temperature is below 12°C (54°F). When engine coolant temperature rises above 80°C (176°F), the temperature control is moved away from the MAX position, or the outside air temperature is above 12°C (54°F), the auxiliary electric heater is disabled, and cabin heat is managed only by the coolant-based heater core and temperature door position. If the auxiliary electric heater is activated and then turns off, it can actuate once again if the engine coolant temperature drops below 75°C (167°F), or the outside air temperature drops below 8°C (46°F).

The actual amount of heat output from the auxiliary electric heater can vary and is dependant upon internal overheating protection, battery state of charge, and other vehicle electrical load requirements.

Air Speed

The blower control switch is part of the HVAC controls. The selected value of the blower switch position is sent to the HVAC control module via LIN-Bus.

The HVAC control module provides a PWM signal to the blower motor control module in order to command the desired blower motor speed.

Air Delivery

The desired air distribution mode can be selected with the air distribution switches at the HVAC controls. The HVAC controls delivers the values to the HVAC control module via LIN-Bus. The HVAC control module controls the air distribution actuator so that it drives the flap to the calculated position. Depending on the position of the flap, air is distributed through various ducts leading to the outlets in the dash. Turning the mode flap to the defrost position, the HVAC control module will move the recirculation actuator to outside air, reducing window fogging. When defrost is selected, the blower motor will be activated, regardless of the coolant temperature. The HVAC control module enables a high volume of air delivered to the front defrost vents. A/C is available in all modes.

The rear window defogger does not affect the HVAC system.

Heating and A/C Operation

The purpose of the heating and A/C system is to provide heated and cooled air to the interior of the vehicle. The A/C system will also remove humidity from the interior and reduce windshield fogging. Regardless of the temperature setting, the following can affect the rate that the HVAC system can achieve the desired temperature:

- Recirculation actuator setting
- Difference between inside and desired temperature
- Blower motor speed setting
- Mode setting

This vehicle may be equipped with a low voltage positive temperature coefficient cabin air heater. This is an electrical grid heater located in the HVAC case consisting of three 330 W stages used to heat the passenger compartment under cold conditions. When max temperature is selected and the engine coolant has not yet reached a sufficient temperature, the cabin air heater will be cycled on by the HVAC control module. The HVAC control module will monitor conditions in order to determine when to reduce or turn off the electrical cabin air heater.

When the A/C switch is pressed, the HVAC controls sends a signal to the HVAC control module via LIN-Bus. The HVAC control module evaluates this signal and sends an A/C request signal to the ECM via CAN-Bus. The ECM checks all preconditions before releasing and if all conditions are met sends a release signal back to the HVAC control module.

The following conditions must be met in order to activate the A/C compressor:

- Battery voltage is between 9–18 V

- Engine coolant temperature is less than 124°C (255°F)
- Engine speed is greater than 600 RPM
- Engine speed is less than 5 500 RPM
- A/C high side pressure is between 269–2 929 kPa (39–425 PSI)
- Throttle position is less than 100%
- Evaporator temperature is greater than 3°C (38°F)
- ECM does not detect excessive torque load
- ECM does not detect insufficient idle quality
- The ambient temperature is above 1°C (34°F)

The A/C high side pressure sensor information is used by the ECM to determine the following:

- The A/C high side pressure
- An A/C system load on the engine
- An immoderate A/C high side pressure
- The heat load at the A/C condenser

The air streams into the passenger compartment through the heater core and the evaporator core. The air temperature actuator drives the mixed air flap to determine the path of the incoming air. If the interior temperature should be increased, the mixed air flap is put into the position in which more air streams through the heater core. If the interior temperature should be decreased, the mixed air flap is put into the position in which more air streams through the evaporator core.

Recirculation Operation

The recirculation switch is integrated into the HVAC controls. The selected recirculation switch position is sent to the HVAC control module via LIN-Bus. The HVAC control module controls the air intake through the air inlet actuator and recirculation actuator. In the recirculation mode the air inlet flap closes and the recirculation flap opens in order to circulate the air within the vehicle. In fresh air mode the air inlet flap opens and the recirculation flap is closed again in order to route outside air into the vehicle. Recirculation is only available if the defrost mode is not active. When the defrost mode is active, the recirculation actuator opens the recirculation flap and the air inlet actuator opens the air inlet flap and outside air is circulated to the windshield to reduce fogging.

Automatic Operation

In automatic operation, the HVAC control module maintains the comfort level inside of the vehicle by controlling the A/C compressor clutch, the blower motor, the air temperature actuators, mode actuator and recirculation actuator.

To put the HVAC system in automatic mode, the following is required:

1. The auto switch must be activated.
2. The air temperature switch must be in any other position than full hot or full cold position.

Once the desired temperature is reached, the blower motor, mode, recirculation and temperature actuators automatically adjust to maintain the temperature selected. The HVAC control module performs the following functions to maintain the desired air temperature:

- Monitors the following sensors:
  - Ambient air temperature sensor
  - Lower left air temperature sensor
  - Upper left air temperature sensor
  - Windshield temperature and inside moisture sensor
  - Ambient light/sunload sensor
  - Air quality sensor
- Regulate blower motor speed
- Position the air temperature actuator
- Position the mode actuator
- Position the recirculation actuator
- Request A/C operation

When the warmest position is selected in automatic operation the blower speed will increase gradually until the vehicle reaches normal operating temperature. When normal operating temperature is reached the blower stays on high speed and the air temperature actuators stays in the full heat position.

When the coldest position is selected in automatic operation the blower stays on high and the air temperature actuators stay in full cold position. The mode actuator remains in the panel position and the recirculation actuator will remain in the recirculation position.

Under cold ambient temperatures, the automatic HVAC system provides heat in the most efficient manner. The operator can select an extreme temperature setting but the system will not warm the vehicle any faster. Under warm ambient temperatures, the automatic HVAC system also provides air conditioning in the most efficient manner. Selecting an extreme cool temperature will not cool the vehicle any faster.

In automatic mode the values of the windshield temperature and inside moisture sensor are used as control inputs for the HVAC control module application to calculate the fog risk on the passenger compartment side of the windshield and ability to reduce fuel consumption by decreasing A/C compressor power to a minimum without causing any fog. The A/C compressor and the defrost mode are activated to prevent or remove fog on the passenger

compartment side of the windshield. The sensor will also enable partial recirculation mode in order to improve heat-up performance of the passenger compartment under cold ambient temperature conditions without the risk of mist build-up on the windshield.

Engine Coolant

Engine coolant is the essential element of the heating system. The thermostat controls the normal engine operating coolant temperature. The thermostat also creates a restriction for the cooling system that promotes a positive coolant flow and helps prevent cavitation.

Coolant enters the heater core through the inlet heater hose, in a pressurized state. The heater core is located inside the HVAC module. The ambient air drawn through the HVAC module absorbs the heat of the coolant flowing through the heater core. Heated air is distributed to the passenger compartment, through the HVAC module, for passenger comfort. Opening or closing the air temperature flap controls the amount of heat delivered to the passenger compartment. The coolant exits the heater core through the return heater hose and recirculates back to the engine cooling system.

A/C Cycle

Refrigerant is the key element in an air conditioning system. R-134a is presently the only Environmental Protection Agency approved refrigerant for automotive use. R-134a is a very low temperature gas that can transfer the undesirable heat and moisture from the passenger compartment to the outside air.

The compressor builds pressure on the vapor refrigerant. Compressing the refrigerant also adds heat to the refrigerant. The refrigerant is discharged from the compressor, through the discharge hose, and forced to flow to the condenser and then through the balance of the A/C system. The A/C system is mechanically protected with the use of a high pressure relief valve. If the A/C refrigerant pressure sensor fails or if the refrigerant system becomes restricted and refrigerant pressure continued to rise, the high pressure relief will pop open and release refrigerant from the system.

Compressed refrigerant enters the condenser in a high temperature, high pressure vapor state. As the refrigerant flows through the condenser, the heat of the refrigerant is transferred to the ambient air passing through the condenser. Cooling the refrigerant causes the refrigerant to condense and change from a vapor to a liquid state.

The condenser is located in front of the radiator for maximum heat transfer. The condenser is made of aluminum tubing and aluminum cooling fins, which allows rapid heat transfer for the refrigerant. The semi-cooled liquid refrigerant exits the condenser and flows to the Receiver/Dehydrator(R/D).

The R/D contains desiccant that absorbs moisture that may be in the refrigerant system. The R/D also acts as a storage vessel to ensure that a steady flow of liquid reaches the Thermal Expansion Valve. The refrigerant exits the R/D and flows through the liquid line to the Thermal Expansion Valve.

The Thermal Expansion Valve is located at the front of dash and attaches to the evaporator inlet and outlet pipes. The Thermal Expansion Valve is the dividing point for the high and the low pressure sides of the A/C system. As the refrigerant passes through the Thermal Expansion Valve, the pressure on the refrigerant is lowered. The Thermal Expansion Valve also meters the amount of liquid refrigerant that can flow into the evaporator.

Refrigerant exiting the Thermal Expansion Valve flows into the evaporator core in a low pressure, liquid state. Ambient air is drawn through the HVAC module and passes through the evaporator core. Warm and moist air will cause the liquid refrigerant boil inside of the evaporator core. The boiling refrigerant absorbs heat from the ambient air and draws moisture onto the evaporator. The refrigerant exits the evaporator through the suction line and back to the A/C compressor, in a vapor state, and completing the A/C cycle of heat removal. At the A/C compressor, the refrigerant is compressed again and the cycle of heat removal is repeated.

The conditioned air is distributed through the HVAC module for passenger comfort. The heat and moisture removed from the passenger compartment will also change form, or condense, and is discharged from the HVAC module as water.

HVAC - Manual

Schematic and Routing Diagrams

HVAC Schematics

Power, Ground, Serial Data, HVAC and Blower Controls

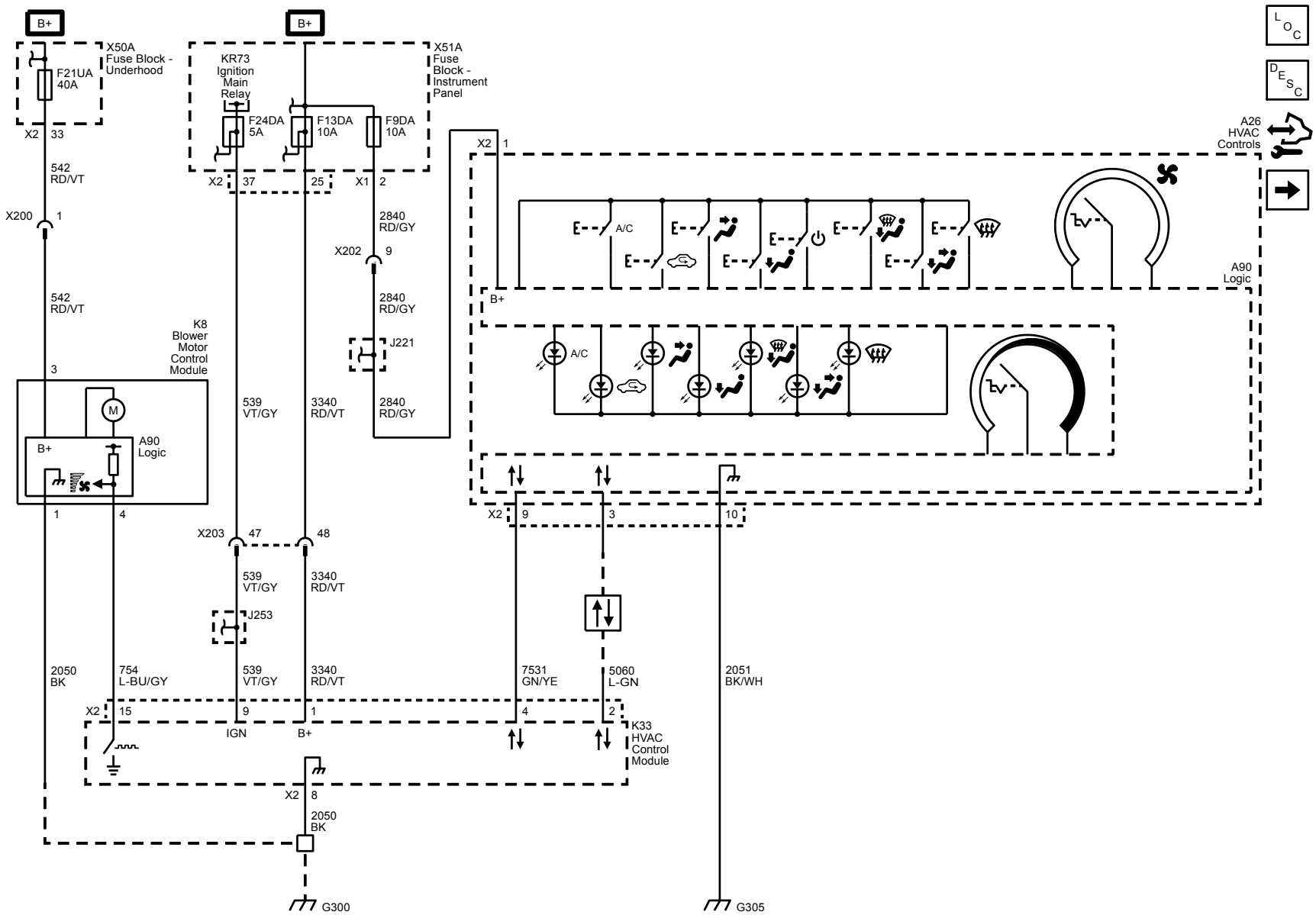

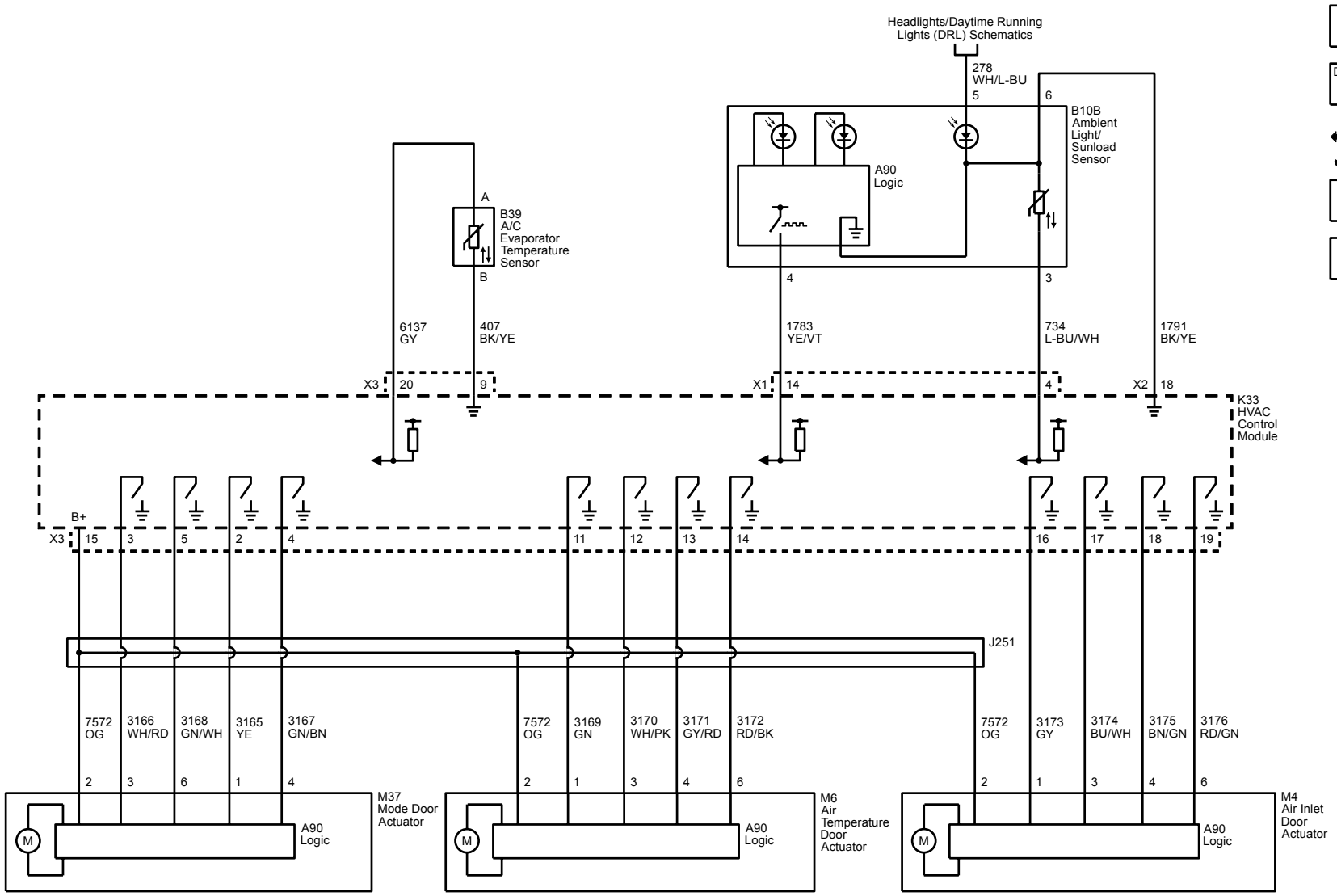
Headlights/Daytime Running Lights (DRL) Schematics
278 WH/L-BU
5
6
B10B Ambient Light/ Sunload Sensor
A90 Logic
4
3
A
B39 A/C Evaporator Temperature Sensor
B
6137 GY
407 BK/YE
1783 YE/VT
734 L-BU/WH
1791 BK/YE
X3 20 9
X1 14 4
X2 18
K33 HVAC Control Module
B+
X3 15 3 5 2 4 11 12 13 14 16 17 18 19
J251
7572 OG
3166 WH/RD
3168 GN/WH
3165 YE
3167 GN/BN
7572 OG
3169 GN
3170 WH/PK
3171 GY/RD
3172 RD/BK
7572 OG
3173 GY
3174 BU/WH
3175 BN/GN
3176 RD/GN
2 3 6 1 4
2 1 3 4 6
2 1 3 4 6
M
A90 Logic
M37 Mode Door Actuator
M6 Air Temperature Door Actuator
M4 Air Inlet Door Actuator

A/C Compressor Controls

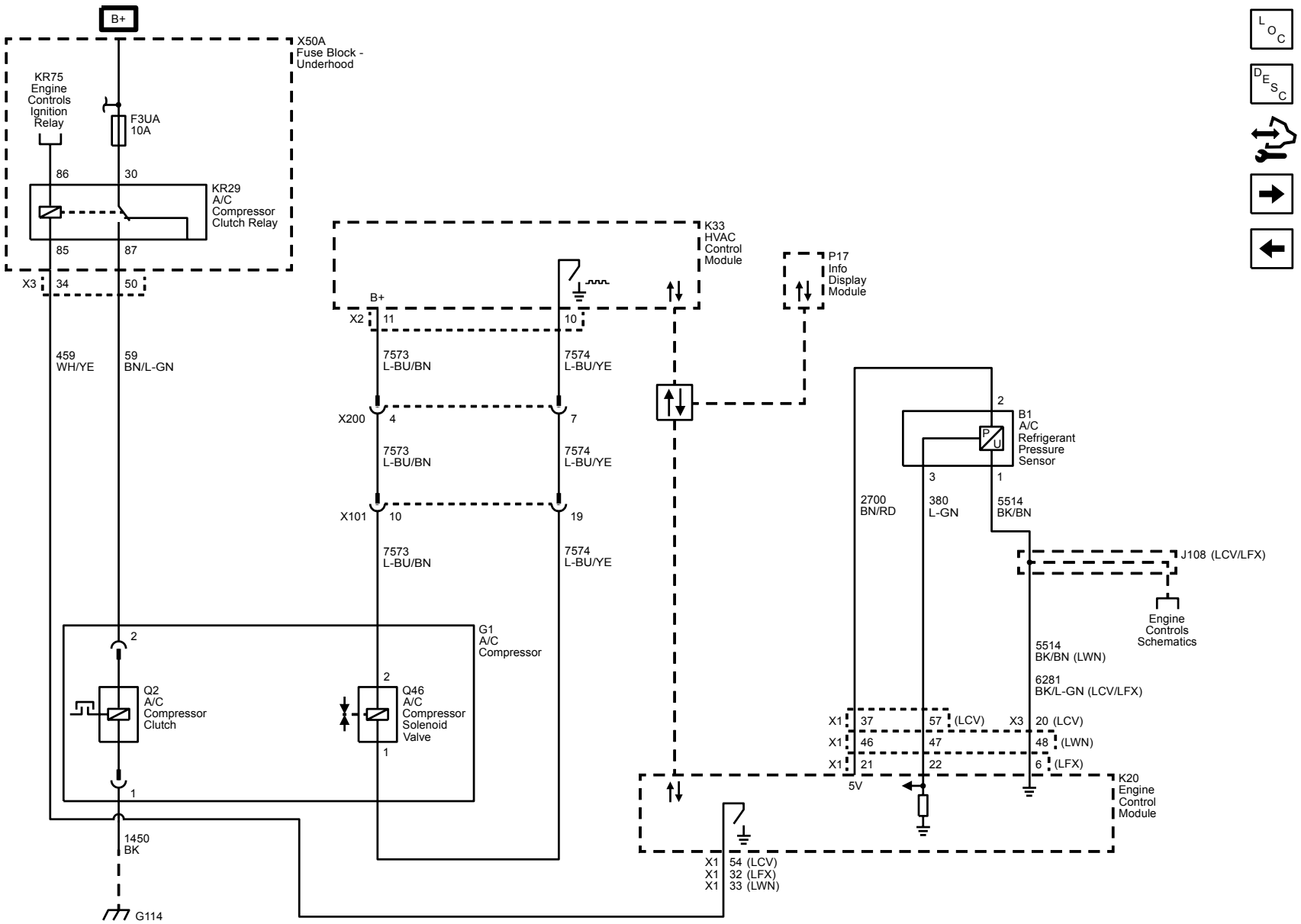

Auxiliary Heater (LWN)

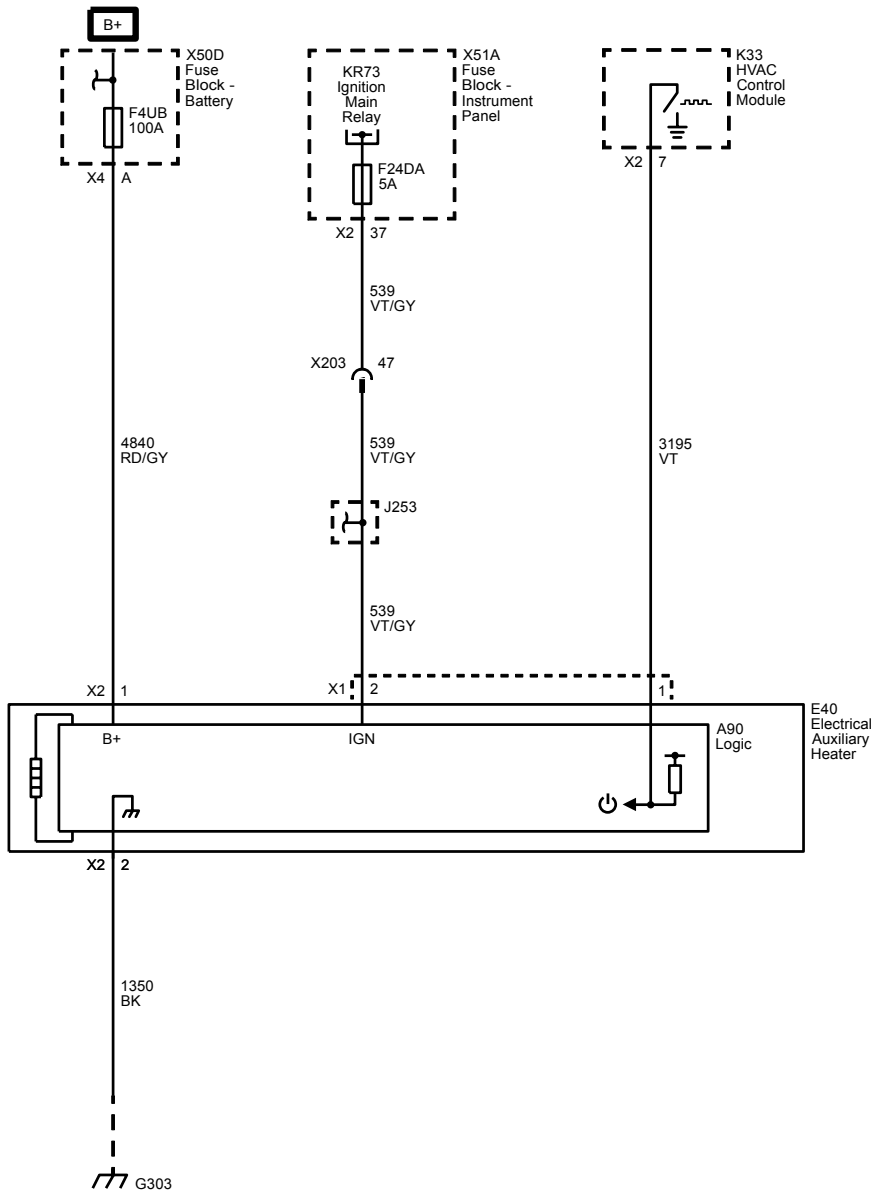

Description and Operation

Manual HVAC Description and Operation

The air temperature and the air delivery description and operation are divided into seven areas:

- HVAC Control Components
- Air Speed
- Air Delivery
- Heating and A/C Operation
- Recirculation Operation
- Engine Coolant
- A/C Cycle

HVAC Control Components

HVAC Controls

The HVAC controls contains all switches, which are required to control the functions of HVAC and serve as interface between the operator and the HVAC control module. The selected values are passed to the HVAC control module via LIN-Bus.

HVAC Control Module

The HVAC control module is a GMLAN device that interfaces between the operator and the HVAC system to maintain and control desired air temperature and air distribution settings. The battery positive voltage circuit provides power that the HVAC control module uses for keep alive memory. If the battery positive voltage circuit loses power, all HVAC DTCs and settings will be erased from keep alive memory. The body control module (BCM), which is the vehicle mode master, provides a device ON-Signal. The HVAC control module provides blower, air delivery mode and air temperature settings.

The HVAC control module supports the following features:

Feature	Availability
Afterblow	Available if reprogrammed by the technician
Personalization	Yes
Actuator Calibration	Yes

Mode Actuator

The mode actuator is a 5-wire stepper motor. The HVAC control module supplies a 12 V reference voltage to the stepper motor and energizes the 4 stepper motor coils with a pulsed ground signal. The stepper motor puts the mode flap into the calculated position in order to reach the selected position. The null point of the stepper motor will be calibrated, if the stepper motor is new. When the stepper motor is calibrated, the HVAC control module can drive the applicable coil to reach exactly the desired position of the flap.

Air Temperature Actuator

The air temperature actuator is a 5-wire stepper motor. The HVAC control module supplies a 12 V reference voltage to the stepper motor and energizes the 4 stepper motor coils with a pulsed ground signal. The air temperature actuator puts the mixed air flap into the calculated position, in order to reach the selected temperature of the temperature switch. The null point of the stepper motor will be calibrated, if the stepper motor is new. When the stepper motor is calibrated, the HVAC control module can drive the coil to reach exactly the desired position of the flap.

Recirculation Actuator

The recirculation actuator is a 5-wire stepper motor. The HVAC control module supplies a 12 V reference voltage to the stepper motor and energizes the 4 stepper motor coils with a pulsed ground signal. The stepper motor puts the recirculation flap into the calculated position in order to reach the desired position. The null point of the stepper motor will be calibrated, if the stepper motor is new. When the stepper motor is calibrated, the HVAC control module can drive the applicable coil to reach exactly the desired position of the flap.

Blower Motor

The blower motor speed control signal from the HVAC Control Module, battery positive and ground circuits enable the blower motor to operate. The blower motor control circuitry is integrated within the blower motor assembly. The HVAC Control Module provides a pulse width modulation (PWM) signal to the blower motor to request a specific motor speed. The blower motor translates the PWM signal and drives the motor accordingly. As the requested blower speed increases, the HVAC control module increases the amount of time that the speed signal is modulated to ground. As the requested blower speed decreases, the HVAC control module decreases the amount of time that the signal is modulated to ground.

Evaporator Temperature Sensor

The evaporator temperature sensor is a 2-wire negative temperature co-efficient thermistor. The sensor operates within a temperature range of −40 to +85°C (−40 to +185°F). The sensor is installed at the evaporator and measures its temperature. If the temperature drops under 3°C (38°F), the compressor will be switched off in order to prevent a frozen evaporator.

A/C Refrigerant Pressure Sensor

The A/C refrigerant pressure sensor is a 3-wire piezoelectric pressure transducer. The 5 V reference voltage, low reference, and signal circuits enable the sensor to operate. The A/C pressure signal can be between 0.2–4.8 V. When the A/C refrigerant pressure is low, the signal value is near 0 V. When the A/C refrigerant pressure is high, the signal value is near 5 V. The engine control module (ECM) converts the voltage signal to a pressure value. When pressure is too high or too low, the ECM will not allow the A/C compressor clutch to engage.

A/C Compressor

This A/C system uses a conventional clutch to engage and mechanically turn the compressor, and a variable displacement solenoid valve to alter the amount of displacement created by the turning of the compressor. The HVAC

control module provides both a constant battery voltage and a pulse width modulated ground to the variable displacement solenoid valve. When the A/C switch is pressed, the HVAC control module grounds the variable displacement solenoid valve using a (PWM) signal in order to determine the amount of compressor displacement. The performance of the A/C compressor is regulated according to adjusted interior temperature.

Auxiliary Electric Heater (Diesel ONLY)

Models equipped with a diesel engine are also equipped with an auxiliary electric heater grid to provide faster cabin warm-ups in cold climates. The auxiliary heater grid is mounted in the low-center of the HVAC module, where heat is transferred from the grid to air which is directed to the floor outlet ducts.

The auxiliary heater is enabled only when the cabin temperature is set to MAX, the engine coolant temperature is less than 80°C (176°F), and the outside air temperature is below 12°C (54°F). When engine coolant temperature rises above 80°C (176°F), the temperature control is moved away from the MAX position, or the outside air temperature is above 12°C (54°F), the auxiliary electric heater is disabled, and cabin heat is managed only by the coolant-based heater core and temperature door position. If the auxiliary electric heater is activated and then turns off, it can actuate once again if the engine coolant temperature drops below 75°C (167°F), or the outside air temperature drops below 8°C (46°F).

The actual amount of heat output from the auxiliary electric heater can vary and is dependant upon internal overheating protection, battery state of charge, and other vehicle electrical load requirements.

Air Speed

The blower control switch is part of the HVAC controls. The selected value of the blower switch position is sent to the HVAC control module via LIN-Bus.

The HVAC control module provides a PWM signal to the blower motor control module in order to command the desired blower motor speed.

Air Delivery

The desired air distribution mode can be selected with the air distribution switches at the HVAC controls. The HVAC controls delivers the values to the HVAC control module via LIN-Bus. The HVAC control module controls the air distribution actuator so that it drives the flap to the calculated position. Depending on the position of the flap, air is distributed through various ducts leading to the outlets in the dash. Turning the mode flap to the defrost position, the HVAC control module will move the recirculation actuator to outside air, reducing window fogging. When defrost is selected, the blower motor will be activated, regardless of the coolant temperature. The HVAC control module enables a high volume of air delivered to the front defrost vents. A/C is available in all modes.

The rear window defogger does not affect the HVAC system.

Heating and A/C Operation

The purpose of the heating and A/C system is to provide heated and cooled air to the interior of the vehicle. The A/C system will also remove humidity from the interior and reduce windshield fogging. Regardless of the temperature setting, the following can affect the rate that the HVAC system can achieve the desired temperature:

- Recirculation actuator setting
- Difference between inside and desired temperature
- Blower motor speed setting
- Mode setting

This vehicle may be equipped with a low voltage positive temperature coefficient cabin air heater. This is an electrical grid heater located in the HVAC case consisting of three 330 W stages used to heat the passenger compartment under cold conditions. When max temperature is selected and the engine coolant has not yet reached a sufficient temperature, the cabin air heater will be cycled on by the HVAC control module. The HVAC control module will monitor conditions in order to determine when to reduce or turn off the electrical cabin air heater.

When the A/C switch is pressed, the HVAC controls sends a signal to the HVAC control module via LIN-Bus. The HVAC control module evaluates this signal and sends an A/C request signal to the ECM via CAN-Bus. The ECM checks all preconditions before releasing and if all conditions are met sends a release signal back to the HVAC control module.

The following conditions must be met in order to activate the A/C compressor:

- Battery voltage is between 9–18 V
- Engine coolant temperature is less than 124°C (255°F)
- Engine speed is greater than 600 RPM
- Engine speed is less than 5 500 RPM
- A/C high side pressure is between 269–2 929 kPa (39–425 PSI)
- Throttle position is less than 100%
- Evaporator temperature is greater than 3°C (38°F)
- ECM does not detect excessive torque load
- ECM does not detect insufficient idle quality
- The ambient temperature is above 1°C (34°F)

The A/C high side pressure sensor information is used by the ECM to determine the following:

- The A/C high side pressure
- An A/C system load on the engine
- An immoderate A/C high side pressure
- The heat load at the A/C condenser

The air streams into the passenger compartment through the heater core and the evaporator core. The air temperature actuator drives the mixed air flap to determine the path of the incoming air. If the interior temperature should be increased, the mixed air flap is put into the position in which more air streams through the heater core. If the interior temperature should be decreased, the mixed air flap is put into the position in which more air streams through the evaporator core.

Recirculation Operation

The recirculation switch is integrated into the HVAC controls. The selected recirculation switch position is sent to the HVAC control module via LIN-Bus. The HVAC control module controls the air intake through the air inlet actuator and recirculation actuator. In the recirculation mode the air inlet flap closes and the recirculation flap opens in order to circulate the air within the vehicle. In fresh air mode the air inlet flap opens and the recirculation flap is closed again in order to route outside air into the vehicle. Recirculation is only available if the defrost mode is not active. When the defrost mode is active, the recirculation actuator opens the recirculation flap and the air inlet actuator opens the air inlet flap and outside air is circulated to the windshield to reduce fogging.

Engine Coolant

Engine coolant is the essential element of the heating system. The thermostat controls the normal engine operating coolant temperature. The thermostat also creates a restriction for the cooling system that promotes a positive coolant flow and helps prevent cavitation.

Coolant enters the heater core through the inlet heater hose, in a pressurized state. The heater core is located inside the HVAC module. The ambient air drawn through the HVAC module absorbs the heat of the coolant flowing through the heater core. Heated air is distributed to the passenger compartment, through the HVAC module, for passenger comfort. Opening or closing the air temperature flap controls the amount of heat delivered to the passenger compartment. The coolant exits the heater core through the return heater hose and recirculates back to the engine cooling system.

A/C Cycle

Refrigerant is the key element in an air conditioning system. R-134a is presently the only Environmental Protection Agency approved refrigerant for automotive use. R-134a is a very low temperature gas that can transfer the undesirable heat and moisture from the passenger compartment to the outside air.

The compressor builds pressure on the vapor refrigerant. Compressing the refrigerant also adds heat to the refrigerant. The refrigerant is discharged from the compressor, through the discharge hose, and forced to flow to the condenser and then through the balance of the A/C system. The A/C system is mechanically protected with the use of a high pressure relief valve. If the A/C refrigerant pressure sensor fails or if the refrigerant system becomes restricted and refrigerant pressure continued to rise, the high pressure relief will pop open and release refrigerant from the system.

Compressed refrigerant enters the condenser in a high temperature, high pressure vapor state. As the refrigerant flows through the condenser, the heat of the refrigerant is transferred to the ambient air passing through the condenser. Cooling the refrigerant causes the refrigerant to condense and change from a vapor to a liquid state.

The condenser is located in front of the radiator for maximum heat transfer. The condenser is made of aluminum tubing and aluminum cooling fins, which allows rapid heat transfer for the refrigerant. The semi-cooled liquid refrigerant exits the condenser and flows to the Receiver/Dehydrator(R/D).

The R/D contains desiccant that absorbs moisture that may be in the refrigerant system. The R/D also acts as a storage vessel to ensure that a steady flow of liquid reaches the Thermal Expansion Valve. The refrigerant exits the R/D and flows through the liquid line to the Thermal Expansion Valve.

The Thermal Expansion Valve is located at the front of dash and attaches to the evaporator inlet and outlet pipes. The Thermal Expansion Valve is the dividing point for the high and the low pressure sides of the A/C system. As the refrigerant passes through the Thermal Expansion Valve, the pressure on the refrigerant is lowered. The Thermal Expansion Valve also meters the amount of liquid refrigerant that can flow into the evaporator.

Refrigerant exiting the Thermal Expansion Valve flows into the evaporator core in a low pressure, liquid state. Ambient air is drawn through the HVAC module and passes through the evaporator core. Warm and moist air will cause the liquid refrigerant boil inside of the evaporator core. The boiling refrigerant absorbs heat from the ambient air and draws moisture onto the evaporator. The refrigerant exits the evaporator through the suction line and back to the A/C compressor, in a vapor state, and completing the A/C cycle of heat removal. At the A/C compressor, the refrigerant is compressed again and the cycle of heat removal is repeated.

The conditioned air is distributed through the HVAC module for passenger comfort. The heat and moisture removed from the passenger compartment will also change form, or condense, and is discharged from the HVAC module as water.

Power and Signal Distribution

Data Communications

Schematic and Routing Diagrams

Data Communication Schematics

Power, Ground, and Low Speed GMLAN

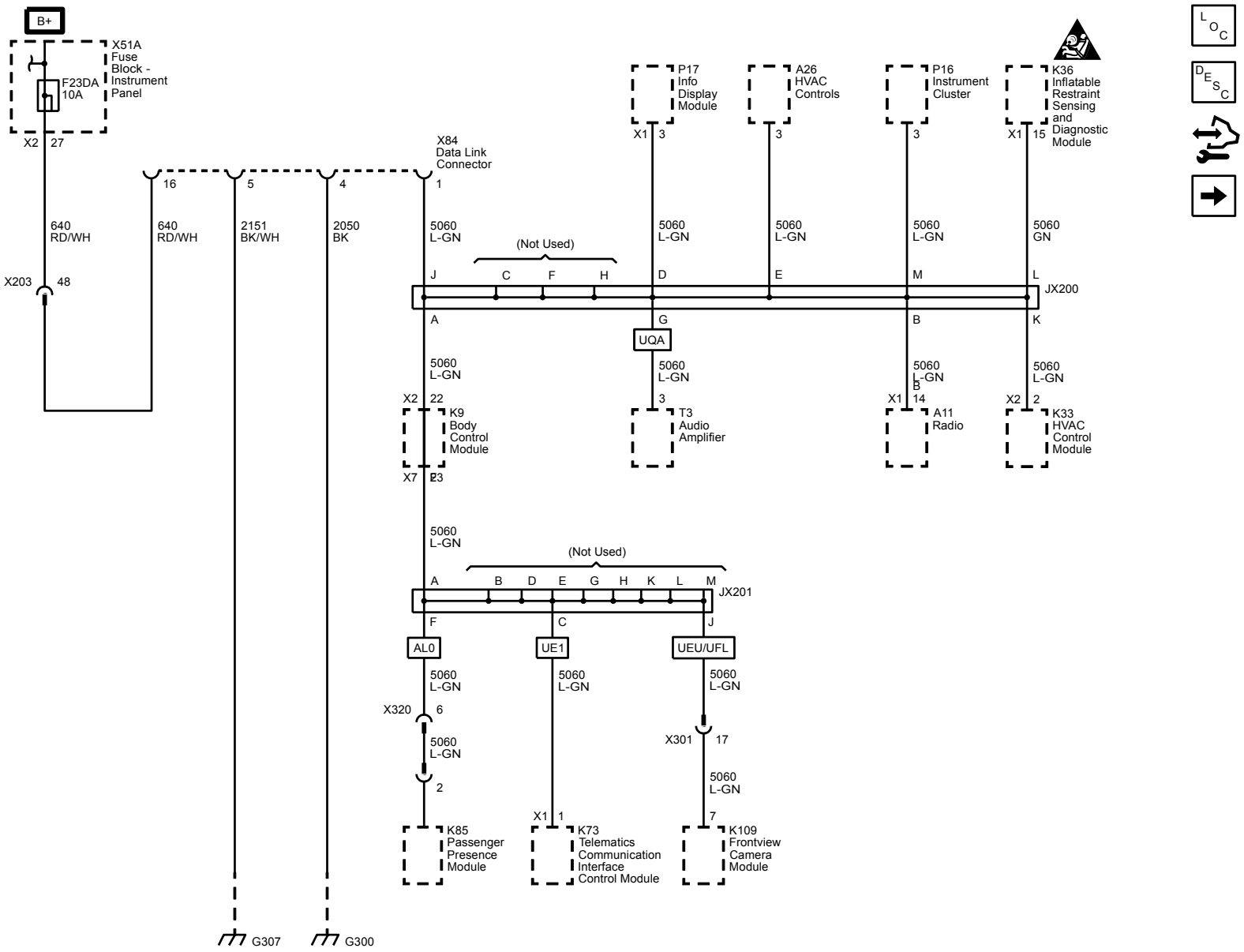

High Speed GMLAN

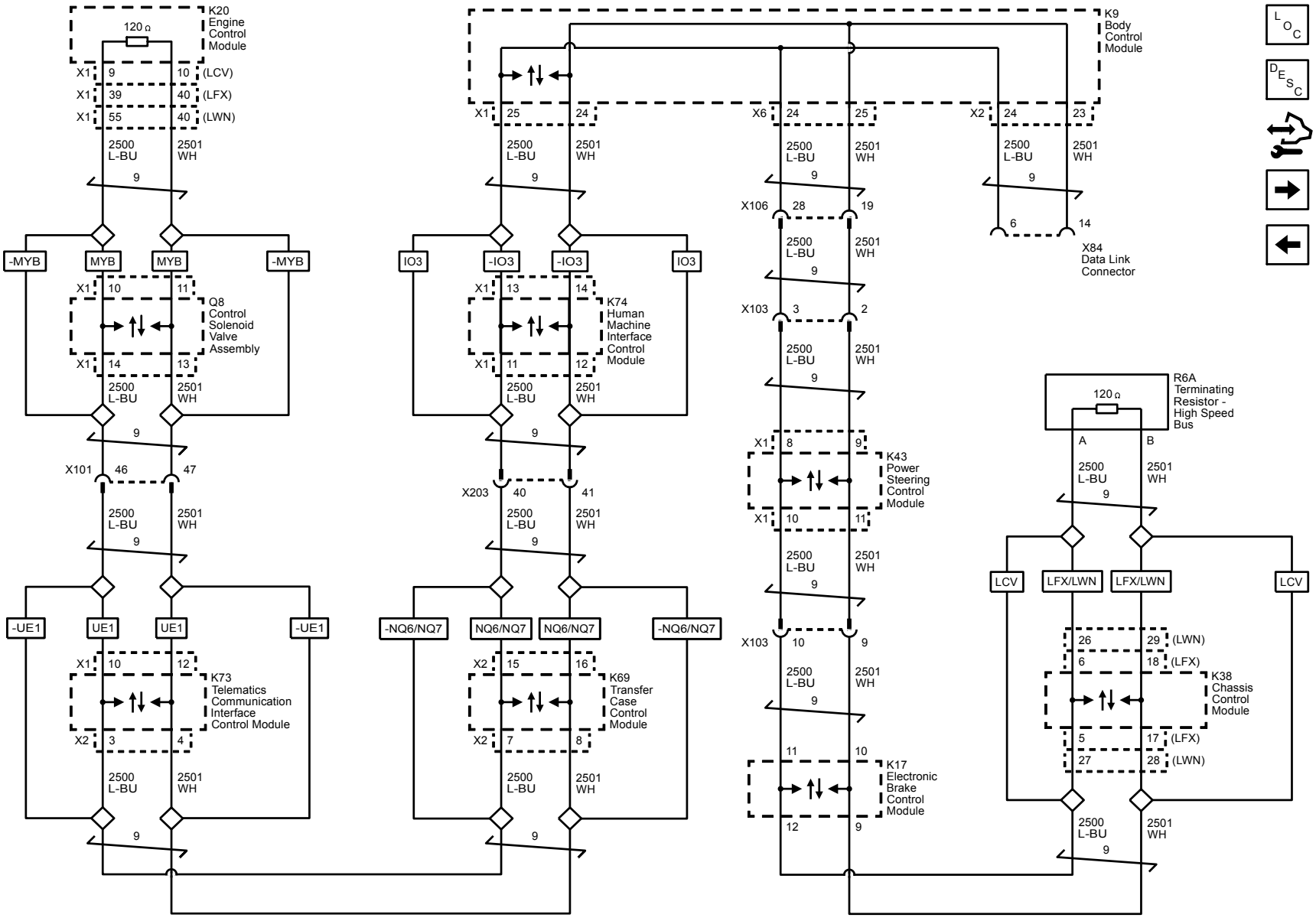

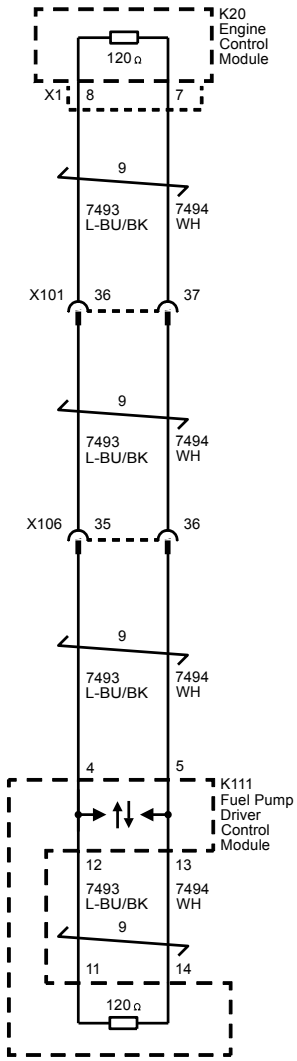
K20
Engine
Control
Module
120 Ω
X1
8
7
9
7493
L-BU/BK
7494
WH
X101
36
37
9
7493
L-BU/BK
7494
WH
X106
35
36
9
7493
L-BU/BK
7494
WH
4
5
K111
Fuel Pump
Driver
Control
Module
12
13
7493
L-BU/BK
7494
WH
9
11
14
120 Ω

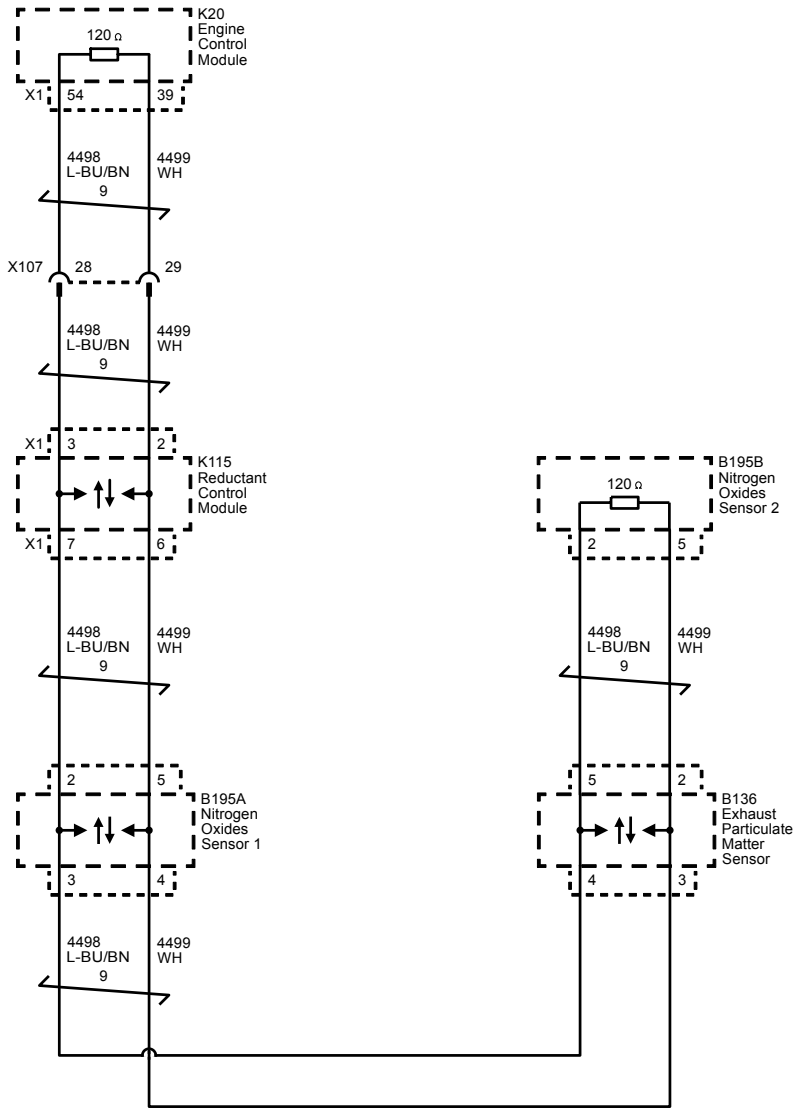
K20
Engine
Control
Module
120 Ω
X1
54
39
4498
L-BU/BN
9
4499
WH
X107
28
29
4498
L-BU/BN
9
4499
WH
X1
3
2
K115
Reductant
Control
Module
X1
7
6
4498
L-BU/BN
9
4499
WH
2
5
B195A
Nitrogen
Oxides
Sensor 1
3
4
4498
L-BU/BN
9
4499
WH
B195B
Nitrogen
Oxides
Sensor 2
120 Ω
2
5
4498
L-BU/BN
9
4499
WH
5
2
B136
Exhaust
Particulate
Matter
Sensor
4
3

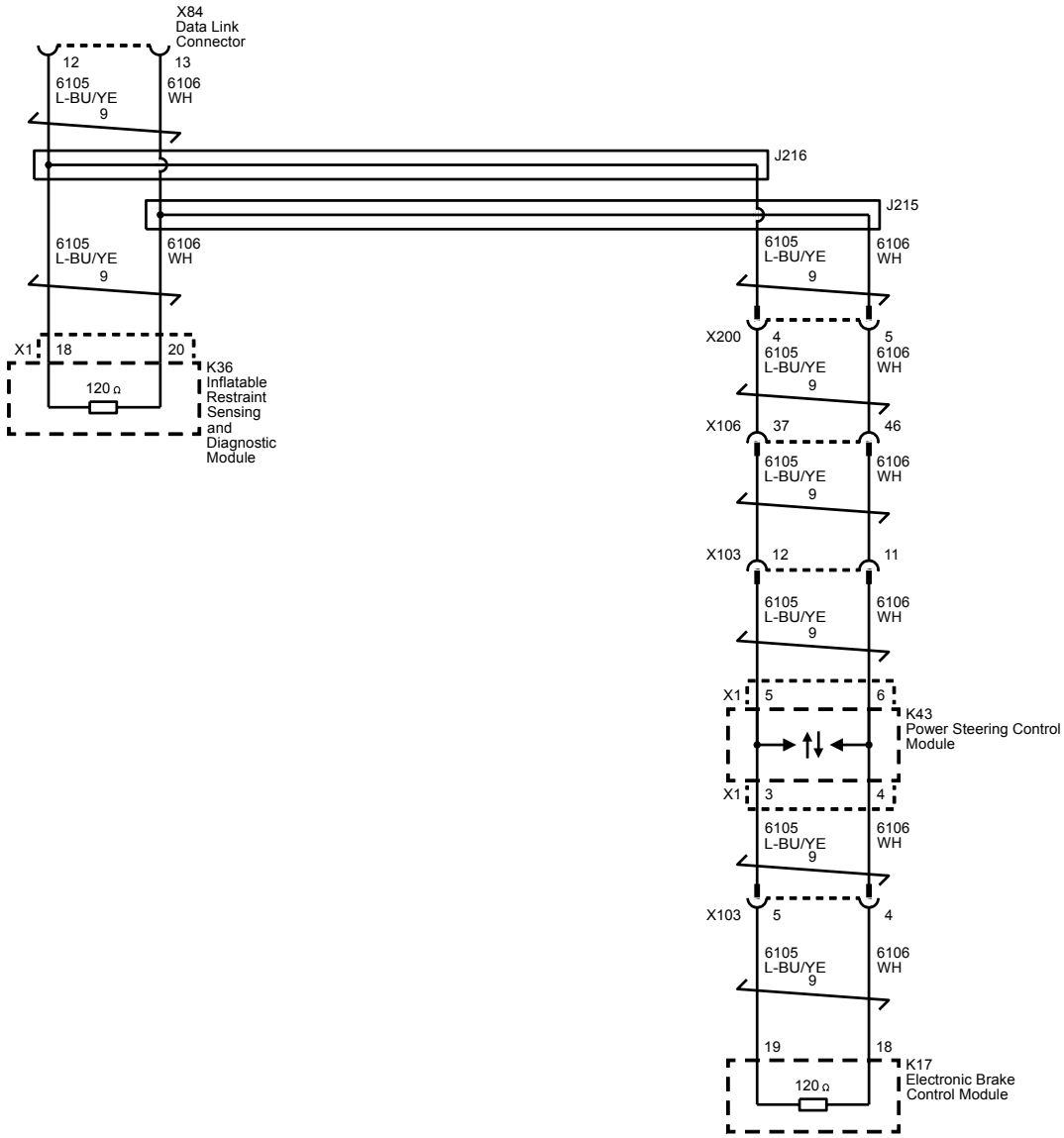
X84
Data Link
Connector
12
13
6105
L-BU/YE
9
6106
WH
J216
J215
X1
18
20
120 Ω
K36
Inflatable
Restraint
Sensing
and
Diagnostic
Module
X200
4
5
X106
37
46
X103
12
11
5
6
K43
Power Steering Control
Module
3
4
19
18
K17
Electronic Brake
Control Module

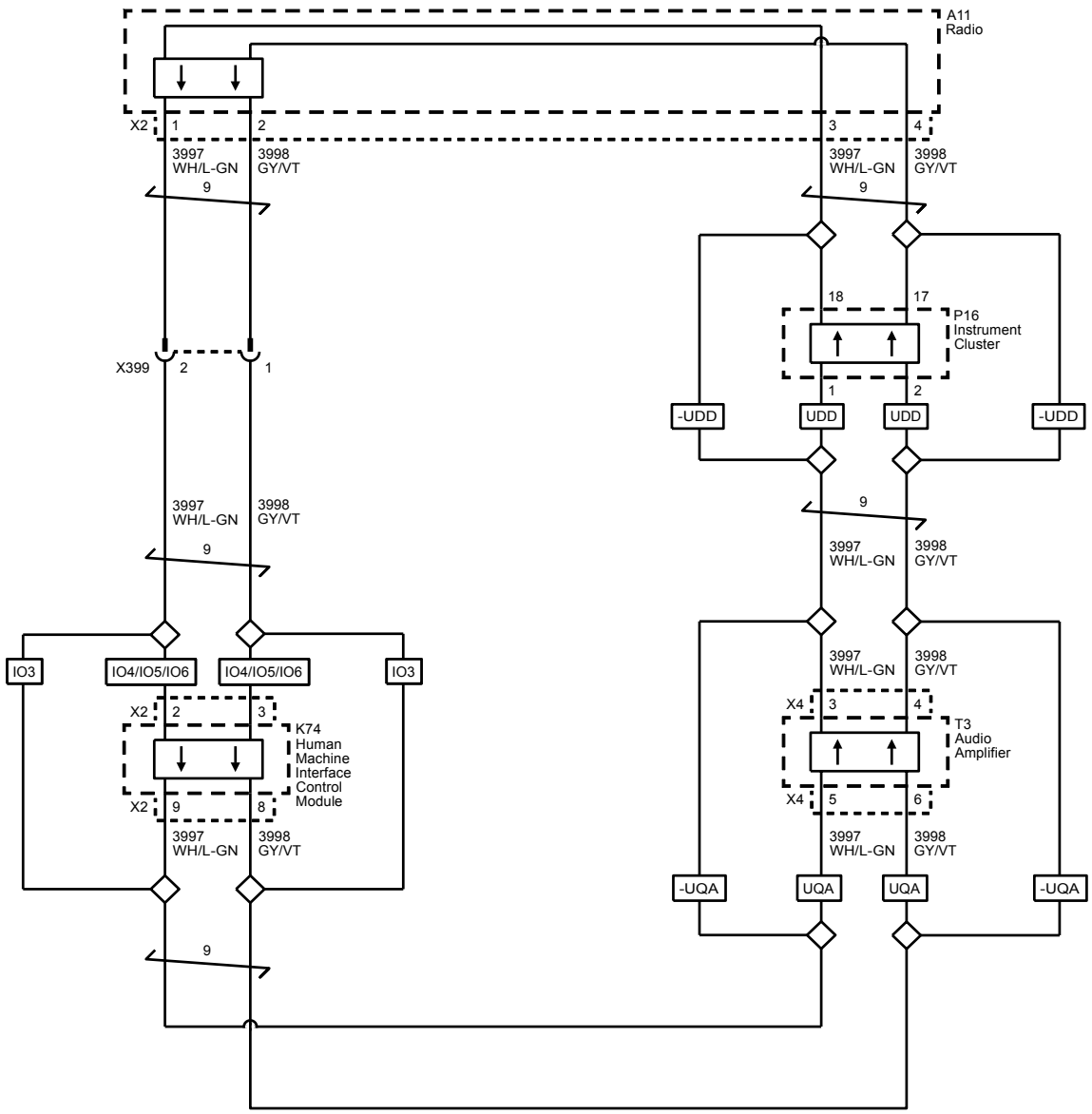
A11
Radio
X2
1
2
3997
WH/L-GN
3998
GY/VT
9
3
4
3997
WH/L-GN
3998
GY/VT
9
X399
2
1
18
17
P16
Instrument
Cluster
1
2
-UDD
UDD
UDD
-UDD
9
3997
WH/L-GN
3998
GY/VT
9
IO3
IO4/IO5/IO6
IO4/IO5/IO6
IO3
3997
WH/L-GN
3998
GY/VT
X2
2
3
K74
Human
Machine
Interface
Control
Module
X2
9
8
X4
3
4
T3
Audio
Amplifier
X4
5
6
3997
WH/L-GN
3998
GY/VT
3997
WH/L-GN
3998
GY/VT
-UQA
UQA
UQA
-UQA
9

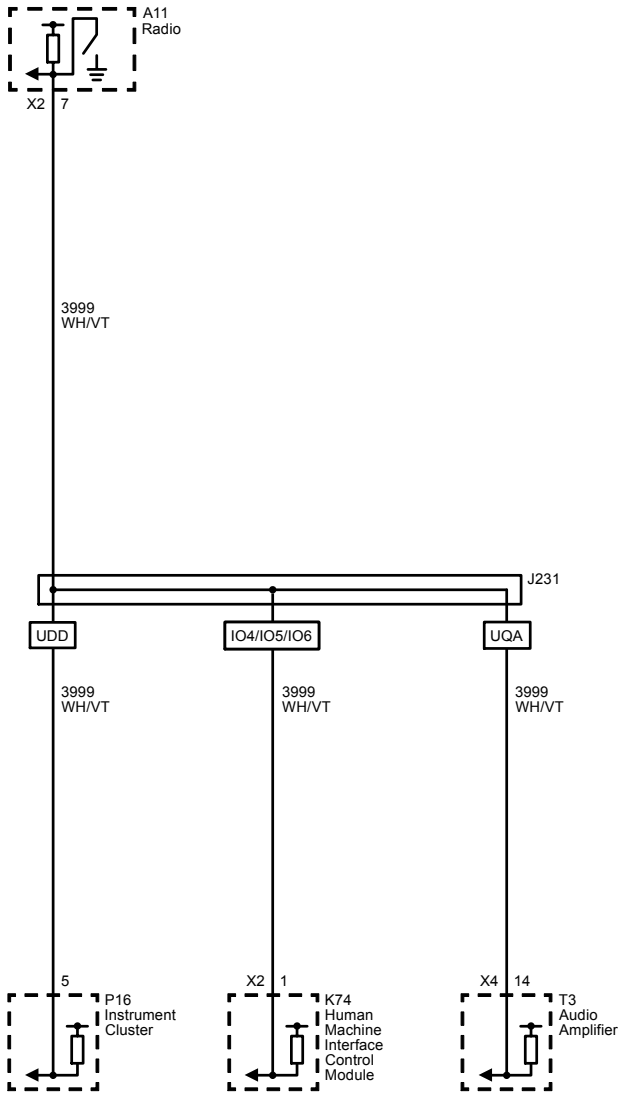
A11
Radio
X2
7
3999
WH/VT
J231
UDD
IO4/IO5/IO6
UQA
3999
WH/VT
3999
WH/VT
3999
WH/VT
5
P16
Instrument
Cluster
X2
1
K74
Human
Machine
Interface
Control
Module
X4
14
T3
Audio
Amplifier

Accessory Wakeup and Communications Enable

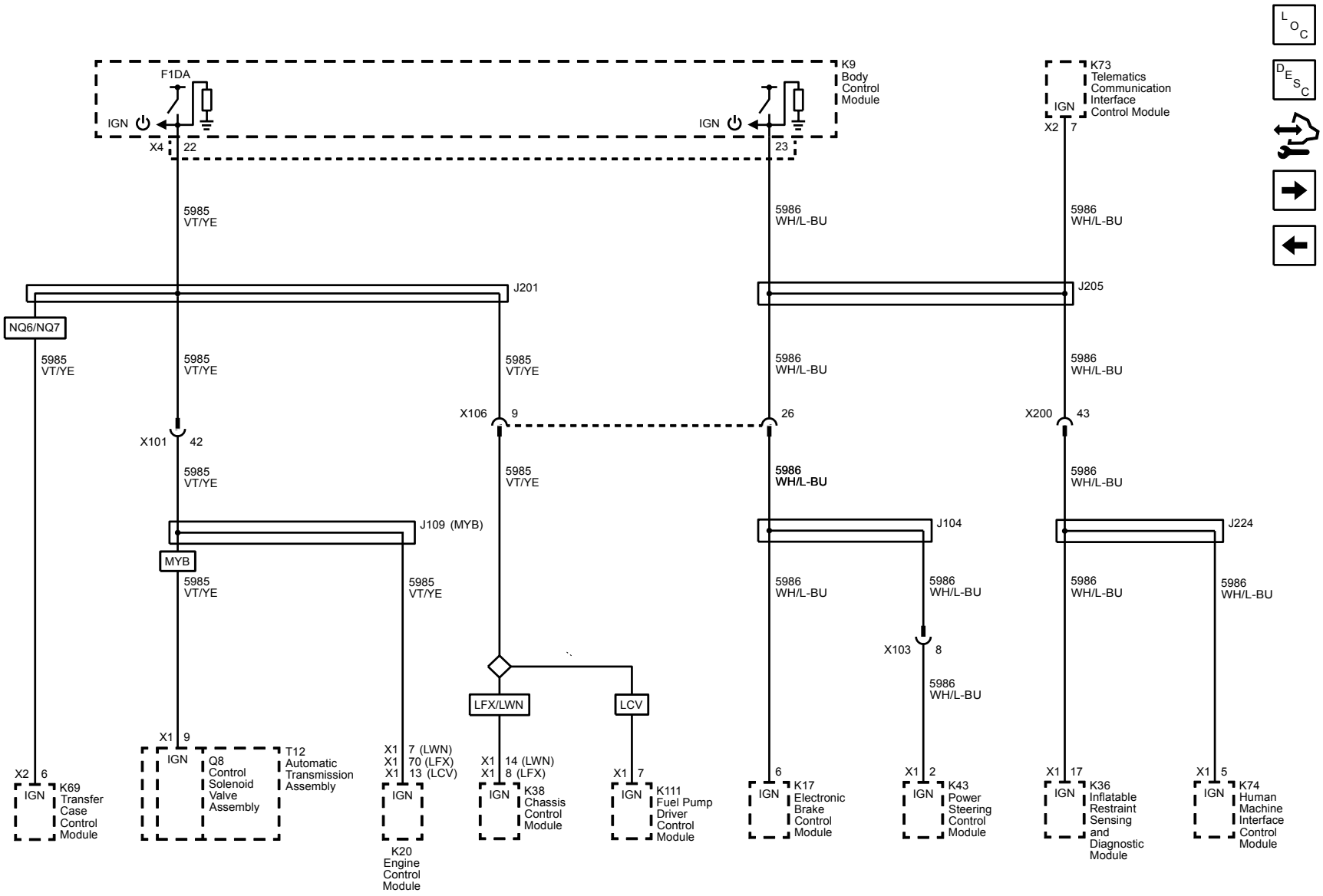

Linear Interconnect Network

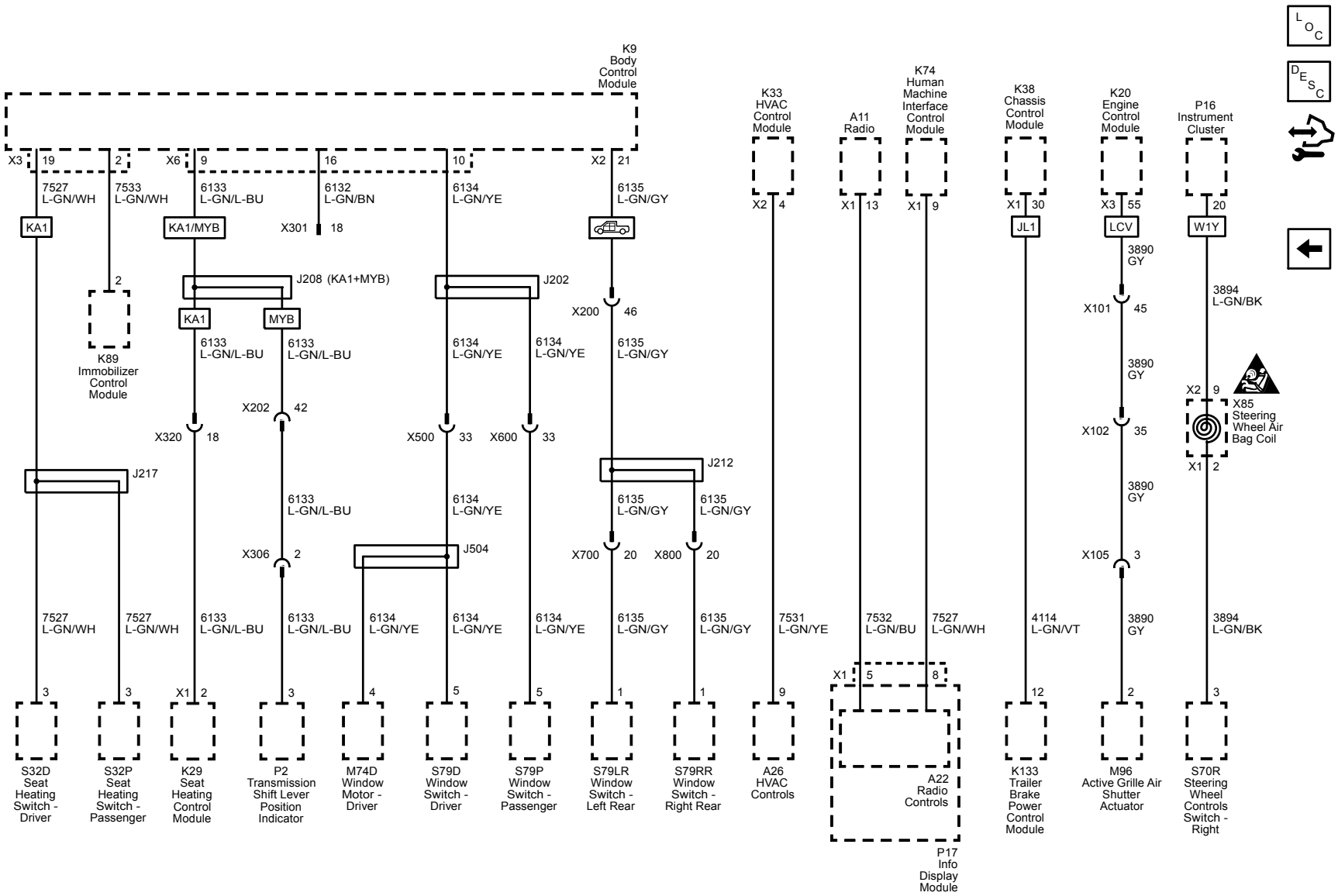

Power, Ground, and Serial Data

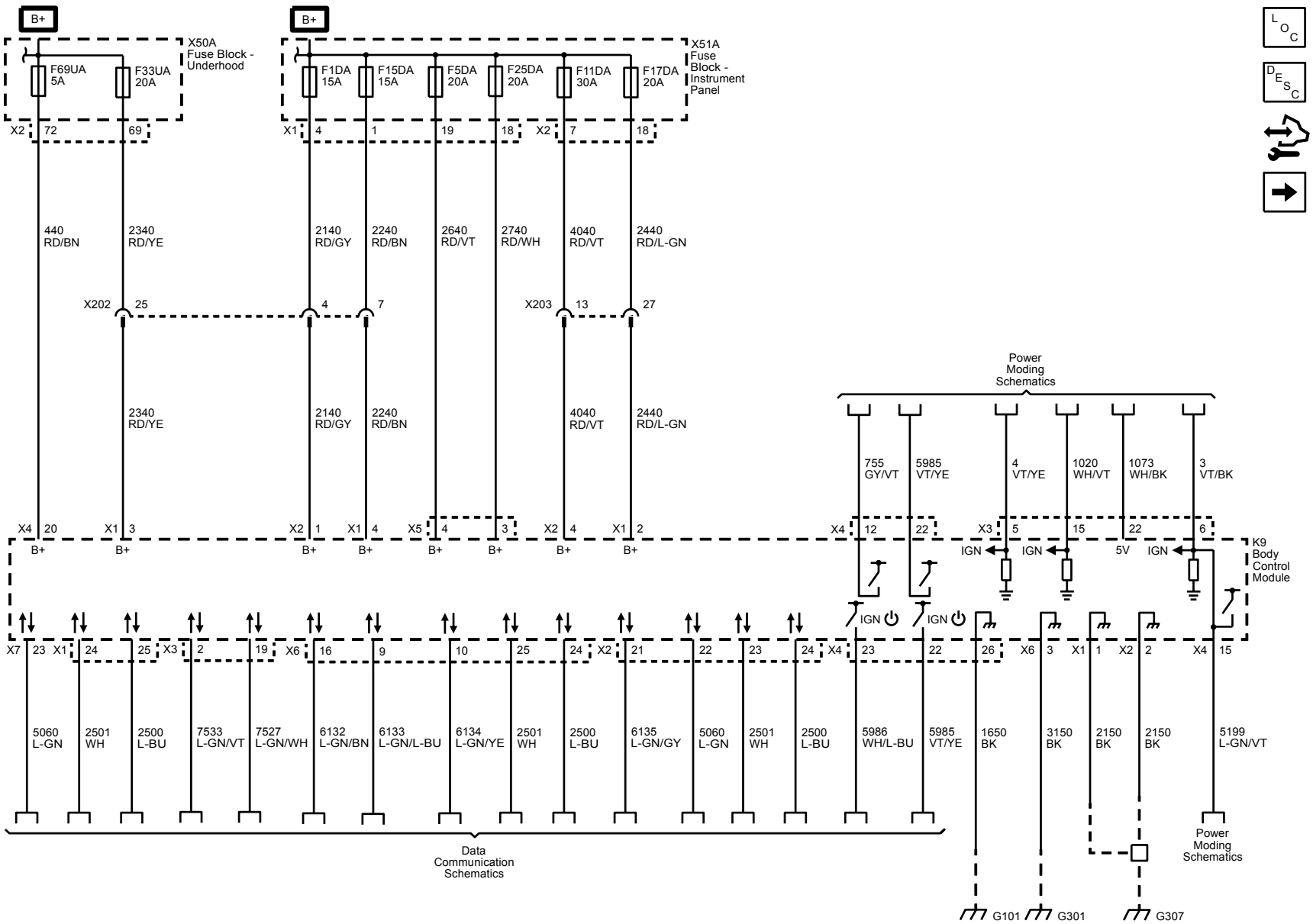

Subsystem References (1 of 3)

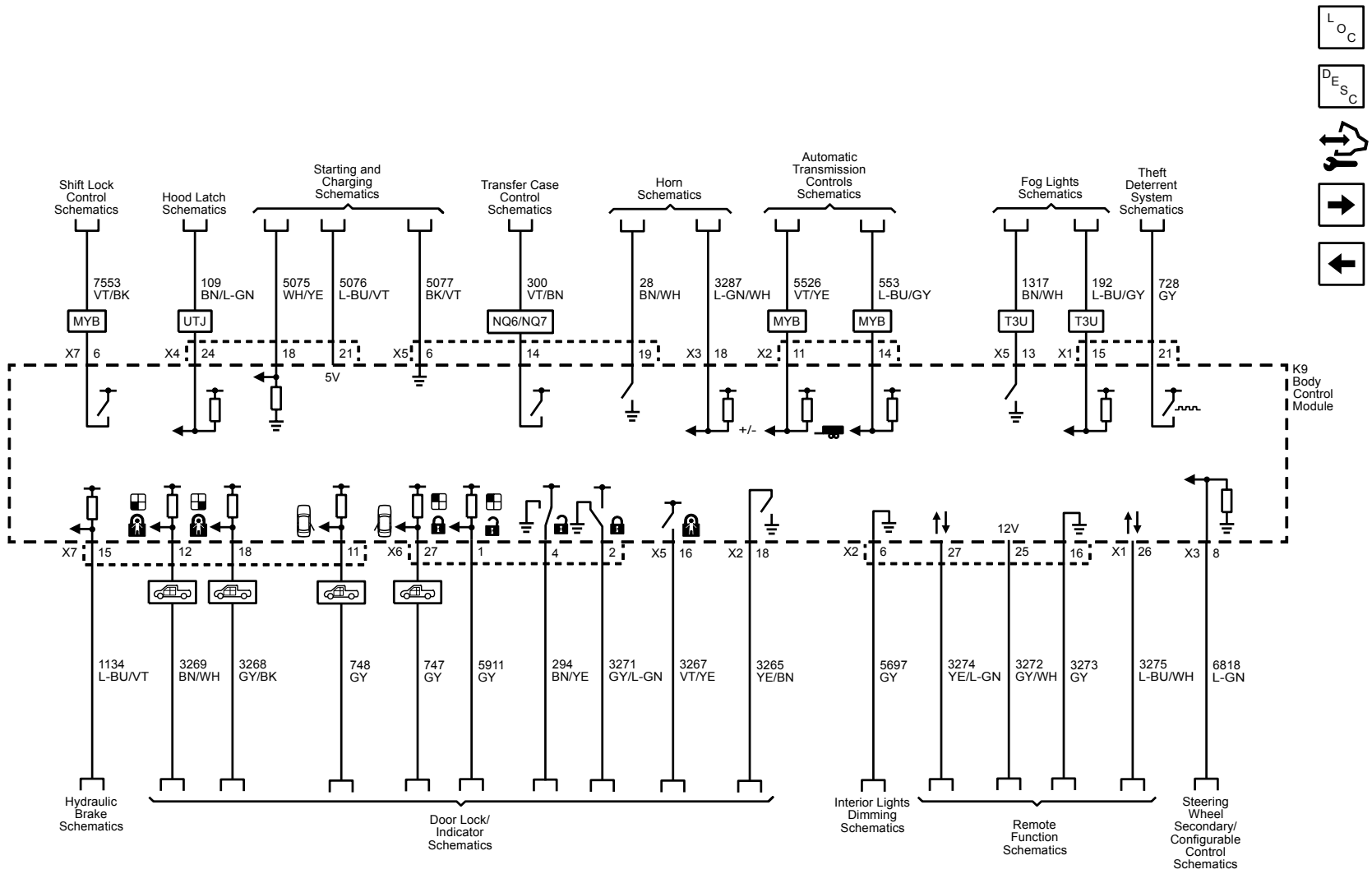

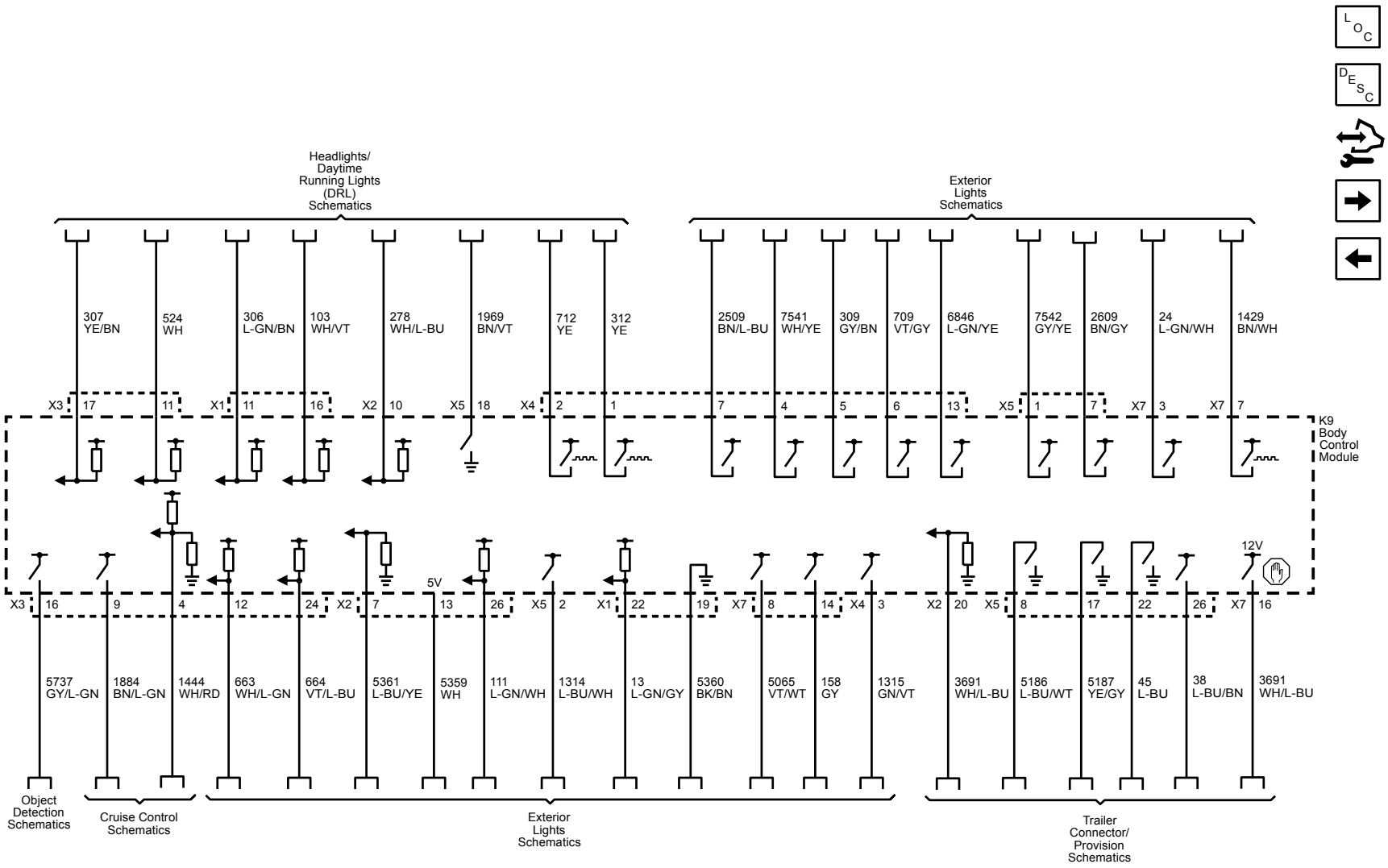
Headlights/ Daytime Running Lights (DRL) Schematics
Exterior Lights Schematics
307 YE/BN
524 WH
306 L-GN/BN
103 WH/VT
278 WH/L-BU
1969 BN/VT
712 YE
312 YE
2509 BN/L-BU
7541 WH/YE
309 GY/BN
709 VT/GY
6846 L-GN/YE
7542 GY/YE
2609 BN/GY
24 L-GN/WH
1429 BN/WH
X3 17 11 X1 11 16 X2 10 X5 18 X4 2 1 7 4 5 6 13 X5 1 7 X7 3 X7 7
K9 Body Control Module
5V
12V
X3 16 9 4 12 24 X2 7 13 26 X5 2 X1 22 19 X7 8 14 X4 3 X2 20 X5 8 17 22 26 X7 16
5737 GY/L-GN
1884 BN/L-GN
1444 WH/RD
663 WH/L-GN
664 VT/L-BU
5361 L-BU/YE
5359 WH
111 L-GN/WH
1314 L-BU/WH
13 L-GN/GY
5360 BK/BN
5065 VT/WT
158 GY
1315 GN/VT
3691 WH/L-BU
5186 L-BU/WT
5187 YE/GY
45 L-BU
38 L-BU/BN
3691 WH/L-BU
Object Detection Schematics
Cruise Control Schematics
Exterior Lights Schematics
Trailer Connector/ Provision Schematics

Subsystem References (3 of 3)

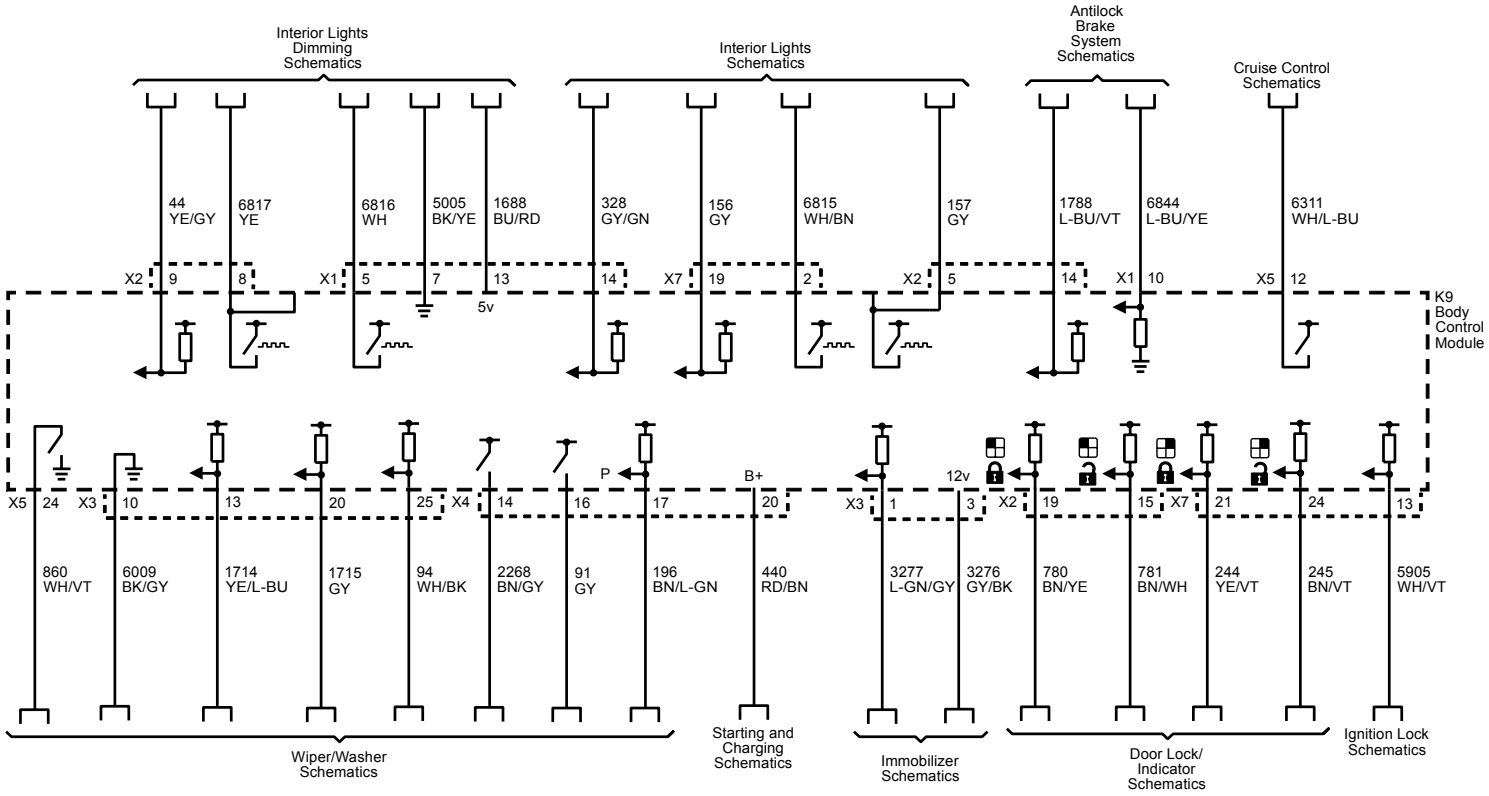

Description and Operation

Body Control System Description and Operation

The body control system consists of the body control module (BCM), communications, and various input and outputs. Some inputs, outputs and messages require other modules to interact with the BCM. The BCM also has discrete input and output terminals to control the vehicle's body functions. The BCM is wired to the high speed GMLAN serial data bus, low speed GMLAN serial data bus and Multiple LIN buses and acts as a gateway between them.

Power Mode Master

This vehicle body control module (BCM) functions as the power mode master (PMM). The ignition switch is a low current switch with multiple discrete ignition switch signals to the PMM for determining the power mode that will be sent over the serial data circuits to the other modules that need this information; the PMM will activate relays and other direct outputs of the PMM as needed. Refer to Power Mode Description and Operation for a complete description of power mode functions.

Gateway

The body control module (BCM) in this vehicle functions as a gateway or translator. The purpose of the gateway is to translate serial data messages between the GMLAN high speed bus and the GMLAN low speed bus for communication between the various modules. The gateway will interact with each network according to that network's transmission protocol.

All communication between the BCM and a scan tool is on the high speed GMLAN serial data circuits. A lost communication DTC typically is set in modules other than the module with a communication failure.

Body Control

The various body control module (BCM) input and output circuits are illustrated in the corresponding functional areas on the BCM electrical schematics. Refer to the Body Control System Schematics for more detailed information.

Data Link Communications Description and Operation

Note: This is an overview of different serial data buses used by GM devices to communicate with each others. Use Data Communication Schematics to find out which serial data buses are configured for a specific vehicle.

Circuit Description

There are many components in a vehicle that rely on information from other sources, transmit information to other sources, or both. Serial data communication networks provide a reliable, cost effective, way for various components of the vehicle to “talk” to one another and share information.

GM uses a number of different communication buses to insure the timely and efficient exchange of information between devices. When compared to each other, some of these buses are different in nature as far as speed, signal characteristics, and behavior. An example of this is the High Speed GMLAN and Low Speed GMLAN buses.

On the other hand, when other buses are compared to each other they have similar characteristics and simply operate in parallel. In this case they are used to group together components which have high interaction. Examples are the High Speed GMLAN, Powertrain Expansion, and Chassis Expansion buses. This allows them to communicate with each other on a bus with reduced message congestion insuring faster and the more timely exchange of information than if all vehicle devices were on a single bus.

The majority of information that exists within a given network generally stays local; however some information will have to be shared on other networks. Control modules designated as Gateway’s perform the function of transferring information between the various buses. A Gateway module is connected to at least 2 buses and will interact with each network according to its message strategy and transmission models.

GMLAN provides the capability for a receiving device to monitor message transmissions from other devices in order to determine if messages of interest are not being received. The primary purpose is to allow reasonable default values to be substituted for the information no longer being received. Additionally, a device may set a Diagnostic Trouble Code to indicate that the device it is expecting information from is no longer communicating.

High Speed GMLAN Circuit Description

A High Speed GMLAN Bus is used where data needs to be exchanged at a high enough rate to minimize the delay between the occurrence of a change in sensor value and the reception of this information by a control device using the information to adjust vehicle system performance.

The High Speed GMLAN serial data network consists of two twisted wires. One signal circuit is identified as GMLAN-High and the other signal circuit is identified as GMLAN-Low. At each end of the data bus there is a 120 Ω termination resistor between the GMLAN-High and GMLAN-Low circuits.

Data symbols (1’s and 0’s) are transmitted sequentially at a rate of 500 Kbit/s. The data to be transmitted over the bus is represented by the voltage difference between the GMLAN-High signal voltage and the GMLAN-Low signal voltage.

When the two wire bus is at rest the GMLAN-High and GMLAN-Low signal circuits are not being driven and this represents a logic “1”. In this state both signal circuits are at the same voltage of 2.5 V. The differential voltage is approximately 0 V.

When a logic “0” is to be transmitted, the GMLAN-High signal circuit is driven higher to about 3.5 V and the GMLAN-Low circuit is driven lower to about 1.5 V. The differential voltage becomes approximately 2.0 (+/- 0.5) V.

Chassis High Speed GMLAN Circuit Description

The GMLAN Chassis Expansion Bus is basically a copy of the High Speed GMLAN Bus except that its use is reserved for chassis components. This implementation splits message congestion between two parallel buses helping to insure timely message transmission and reception. Sometimes communication is required between the Chassis Expansion Bus and the primary High Speed GMLAN Bus. This is accomplished by using the K17 Electronic Brake Control Module (EBCM) as the Gateway module. Since the High Speed GMLAN Chassis Expansion Bus and primary High Speed GMLAN Bus operate in the same manner, the diagnostics for each are similar.

Powertrain High Speed GMLAN Circuit Description

The GMLAN Powertrain Expansion Bus is basically a copy of the High Speed GMLAN Bus except that its use is reserved for Powertrain components. The bus is optional based upon feature content. Sometimes communication is required between the Powertrain Expansion Bus and the primary High Speed GMLAN Bus. This is accomplished by using the K20 Engine Control Module (ECM) as the Gateway module. Since the High Speed GMLAN Powertrain Expansion Bus and the primary High Speed GMLAN Bus operate in the same manner, the diagnostics for each are similar.

Media Oriented Systems Transport (MOST) Circuit Description

The MOST Infotainment network is a dedicated high speed multimedia streaming data bus independent from GMLAN. The MOST bus will be configured in a physical hardwired loop with each device within the bus sends and receives data on an assigned MOST addresses in a set order. Each device on the MOST bus will be required to have twisted pair copper wires (2 transmit TX, 2 receive RX, and 1 electronic control line which is a 12 V wakeup signal line). The A11 Radio is the MOST Master and will monitor the bus for vehicle configuration, Infotainment data messages and errors on the bus. The MOST initialization consists of a short 100 ms low voltage pulse on the electronic control line (or MOST control line) connected to all devices contained on the MOST ring. This wakeup message once received by each device, will first respond with a generic device response. Once these initial responses on the MOST bus are reported successfully without error to the A11 Radio, the second data request will record the MOST device addresses, their functionality requirements and capabilities within. The A11 Radio will learn this information and also record the address node sequence on the MOST bus at this point. This node address list will now be stored within the A11 Radio as the MOST bus configuration (called “Last Working MOST ID of Node 1 – 9” on scan tool data display).

When MOST receive, transmit, or control line faults are detected, transmit/receive messages will not received as expected from the wakeup request. The A11 Radio and the K74 Human Machine Interface Control Module will then perform diagnostics to isolate these MOST faults. If the MOST control line is shorted low to 0 V for excess amount of time, the A11 Radio will set a U2098 DTC and K74 Human Machine Interface Control Module will set a U0029 02 DTC. At this point the MOST bus will be unable to communicate until the shorted MOST control line is repaired.

Once the shorted MOST control line diagnostics pass, the A11 Radio will attempt to resend the initial short pulse attempts up to 3 times on the MOST control line. If the expected responses are not received, the A11 Radio continues into a failure mode setting a U0028 DTC and will continue on to send one 300 ms long pulse, which will enable the furthest upstream transmitting device to become the surrogate MOST Master in this MOST fault/diagnostic mode. When the A11 Radio receives this new MOST Master identity, the surrogate MOST master device can be identified based on scan tool data parameter “Surrogate MOST Master Node Upstream Position”. The scan tool should be used to determine the MOST bus configuration and direction by utilizing the “Last Working MOST ID of Node 1 – 9” parameters from the A11 Radio data display. When a fault is present, it will indicate the newly enabled “Surrogate MOST Master Node Upstream Position” from the A11 Radio. This will assist in determining where the MOST bus/control is at fault. The MOST device upstream from the surrogate MOST master device, transmit, receive, or control lines will be the suspect areas for diagnostics at this point. These faults can be associated with any of the MOST transmit, receive, or control line twisted copper wires or possibly an internal device fault.

The K74 Human Machine Interface Control Module will set a U0029 00 DTC when it diagnoses a MOST bus not communicating properly after one attempt. When the DTC U0029 00 is set by the K74 Human Machine Interface Control Module without the corresponding DTC U0028 from the A11 Radio, it will be an indication of an intermittent wiring/device condition.

Low Speed GMLAN Circuit Description

Low Speed GMLAN Bus is used in applications where a high data rate is not required which allows for the use of less complex components. It is typically used for operator controlled functions where the response time requirements are slower than those required for dynamic vehicle control.

The Low Speed GMLAN Serial Data Network consists of a single wire, ground referenced bus with high side voltage drive. During on road vehicle operation data symbols (1’s and 0’s) are transmitted sequentially at the normal rate of 33.3 Kbit/s. For component programming only, a special high speed data mode of 83.3 Kbit/s may be used.

Unlike the high speed dual wire networks, the single wire low speed network does not use terminating resistors at either end of the network.

The data symbols to be transmitted over the bus are represented by different voltage signals on the bus. When the Low Speed GMLAN Bus is at rest and is not being driven, there is a low signal voltage of approximately 0.2 V. This represents a logic “1”. When a logic “0” is to be transmitted, the signal voltage is driven higher to around 4.0 V or higher.

Local Interconnect Network (LIN) Circuit Description

The Local Interconnect Network (LIN) Bus consists of a single wire with a transmission rate of 10.417 Kbit/s. This bus is used to exchange information between a master control module and other smart devices which provide supporting functionality. This type of configuration does not require the capacity or speed of either a High Speed GMLAN Bus or Low Speed GMLAN Bus and is thus relatively simpler.

The data symbols (1’s and 0’s) to be transmitted are represented by different voltage levels on the communication bus. When the LIN Bus is at rest and is not being driven, the signal is in a high voltage state of approximately Vbatt. This represents a logic “1”. When a logic “0” is to be transmitted, the signal voltage is driven low to about ground (0.0 V).

Communication Enable Circuit Description

Devices on High Speed GMLAN Bus enable or disable communication based on the voltage level of the communication enable circuit. When the circuit voltage is high (around 12 V), communications are enabled. When the circuit is low, communications are disabled.

Data Link Connector (DLC)

The X84 Data Link Connector (DLC) is a standardized 16-cavity connector. Connector design and location is dictated by an industry wide standard, and is required to provide the following:

- Terminal 1 Low speed GMLAN communications terminal
- Terminal 4 Scan tool power ground terminal
- Terminal 5 Common signal ground terminal
- Terminal 6 High speed GMLAN serial data bus (+) terminal
- Terminal 12 Chassis high speed GMLAN serial bus (+) terminal
- Terminal 13 Chassis high speed GMLAN serial bus (-) terminal
- Terminal 14 High speed GMLAN serial data bus (-) terminal
- Terminal 16 Scan tool power, battery positive voltage terminal

Serial Data Reference

The scan tool communicates over the various buses on the vehicle. When a scan tool is installed on a vehicle, the scan tool will try to communicate with every device that could be optioned into the vehicle. If an option is not installed on the vehicle, the scan tool will display No Comm (or Not Connected) for that optional device. In order to avert misdiagnoses of No Communication with a specific device, refer to CELL Link Error - Link target cell (cell ID 148085) is invalid for this publication. for a list of devices and the buses they communicate with. Use schematics and specific vehicle build RPO codes to determine optional devices.

Power Outlets

Schematic and Routing Diagrams

Cigar Lighter/Power Outlet Schematics

12-Volt DC Power Outlets

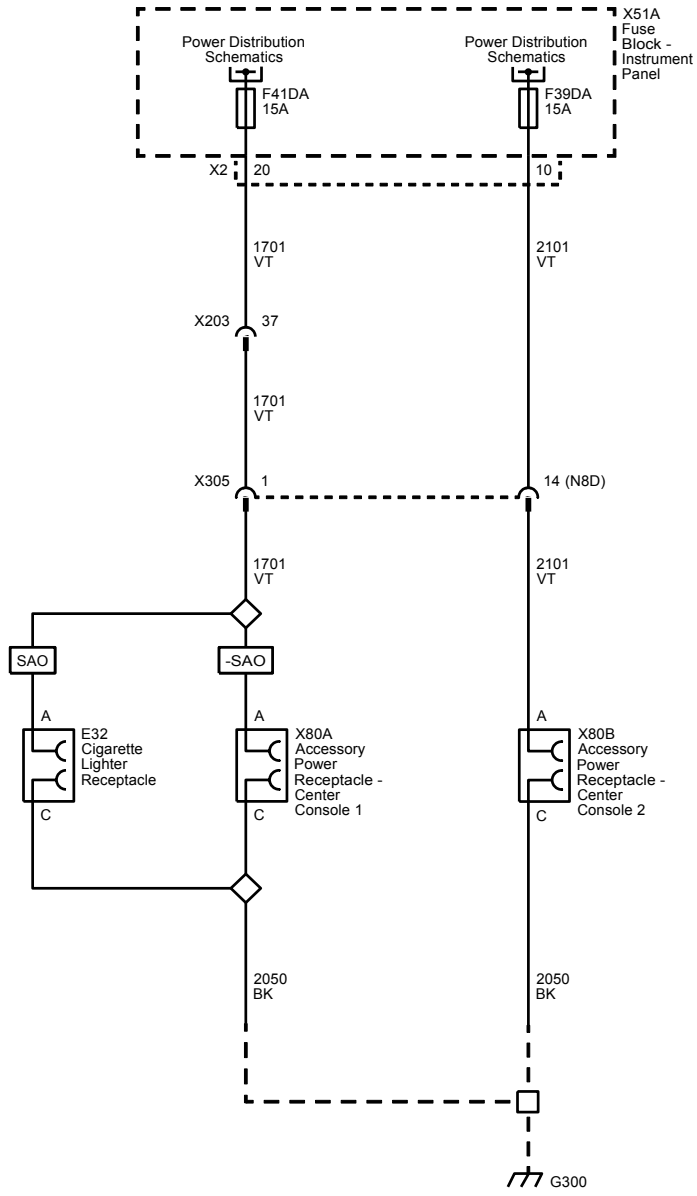

Description and Operation

Power Outlets Description and Operation

Power Outlet Receptacle Description and Operation

The vehicle is fitted with 12 V accessory power receptacles. The accessory power receptacles are controlled by an ignition operated relay. The accessory power receptacles are operational when the ignition is turned to either the On or the Accessories positions. The accessory power receptacles may be configured to be operational when the ignition is Off by changing the position of the 50A fuse from the F44DA position to the F40DA position in the instrument panel fuse block.

Wiring Systems and Power Management

Schematic and Routing Diagrams

Harness Routing Views

Forward Lamp Harness Routing - Left Engine Compartment

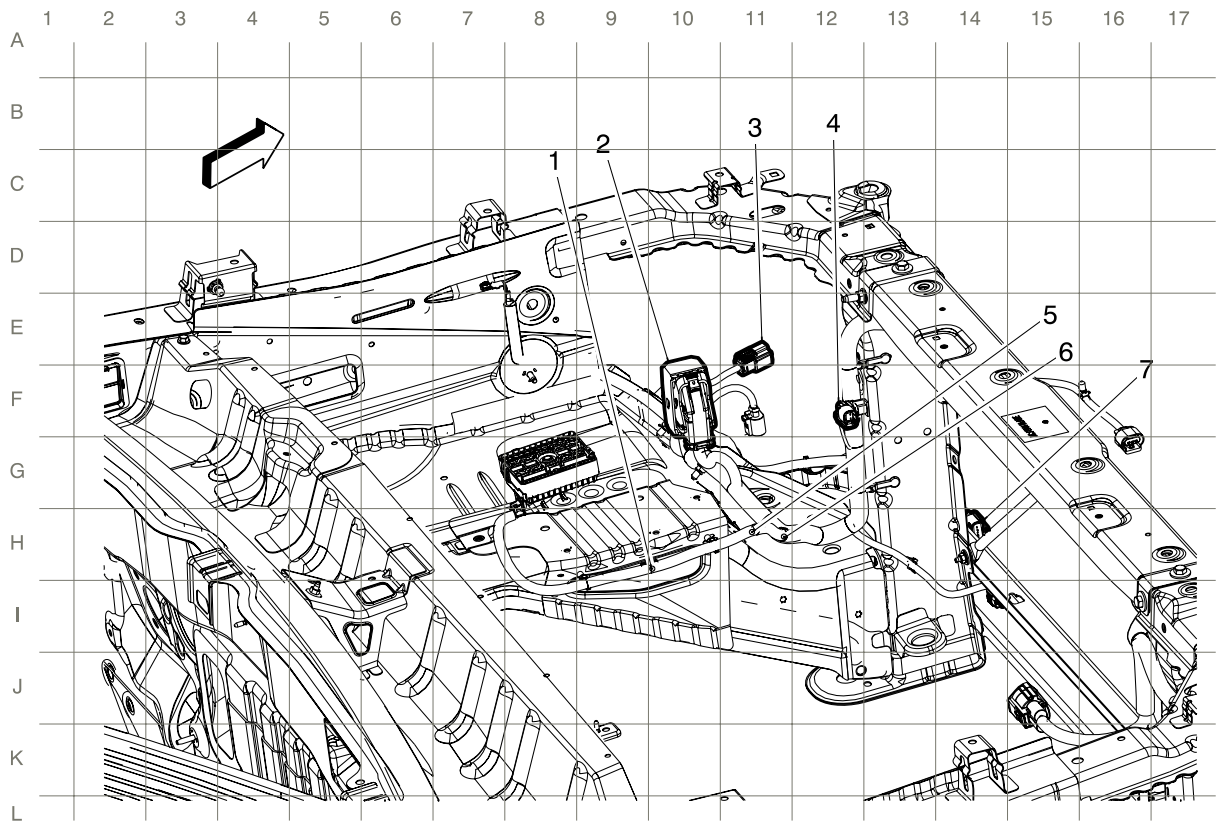

Items

1. J117
2. X102
3. X110
4. X104 (LCV)
5. J118
6. J119
7. X105

Forward Lamp Harness Routing - Left Engine Compartment (LWN)

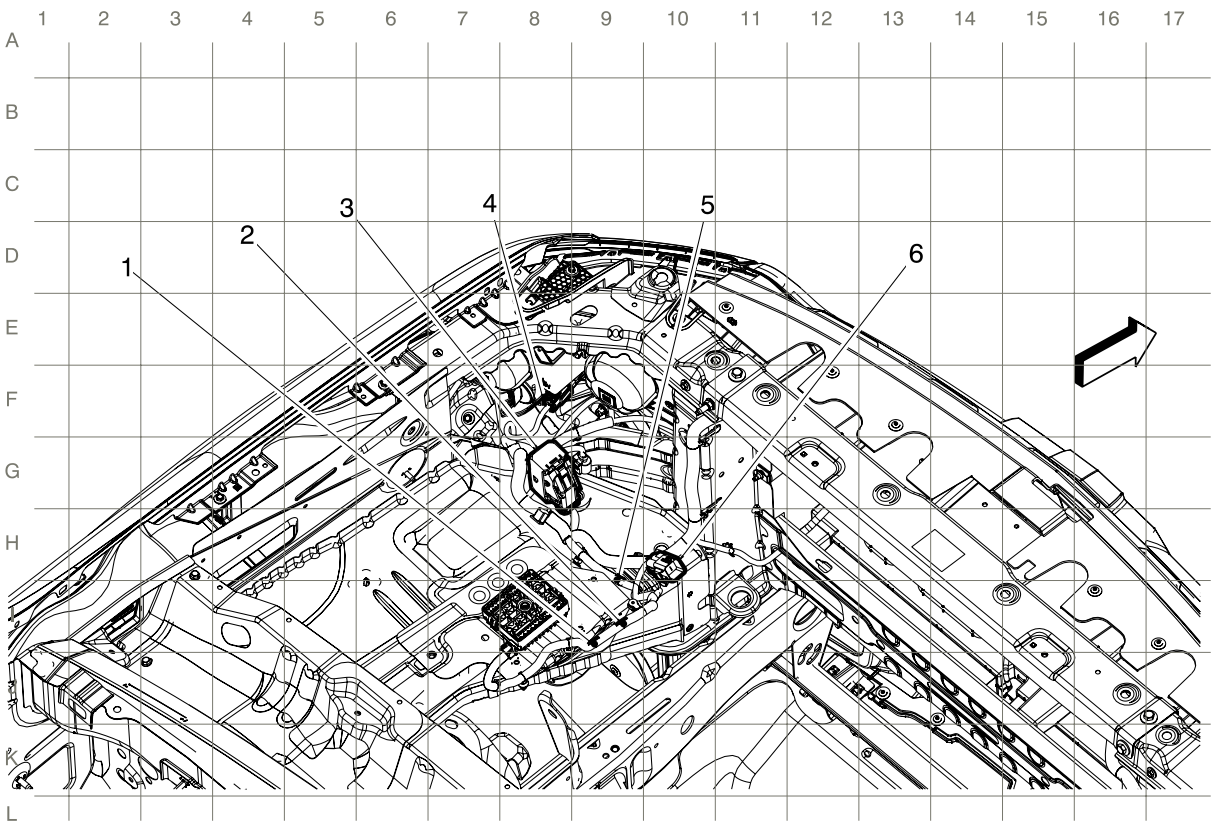

Items

1. J117
2. J118
3. X102
4. X110
5. J119
6. X109 (LWN)

Forward Lamp Harness Routing - Right Engine Compartment

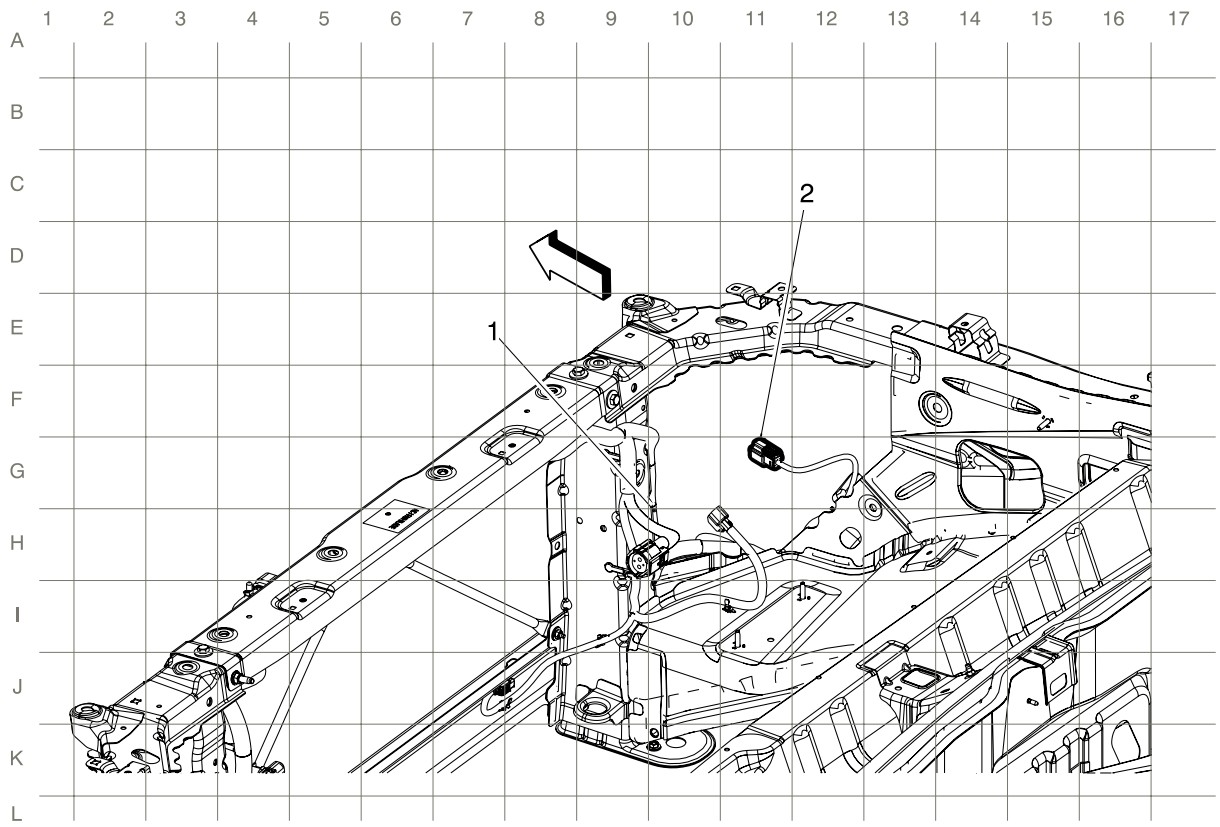

Items

1. J120
2. X120

Body Harness Routing - Left Engine Compartment (LCV/LFX)

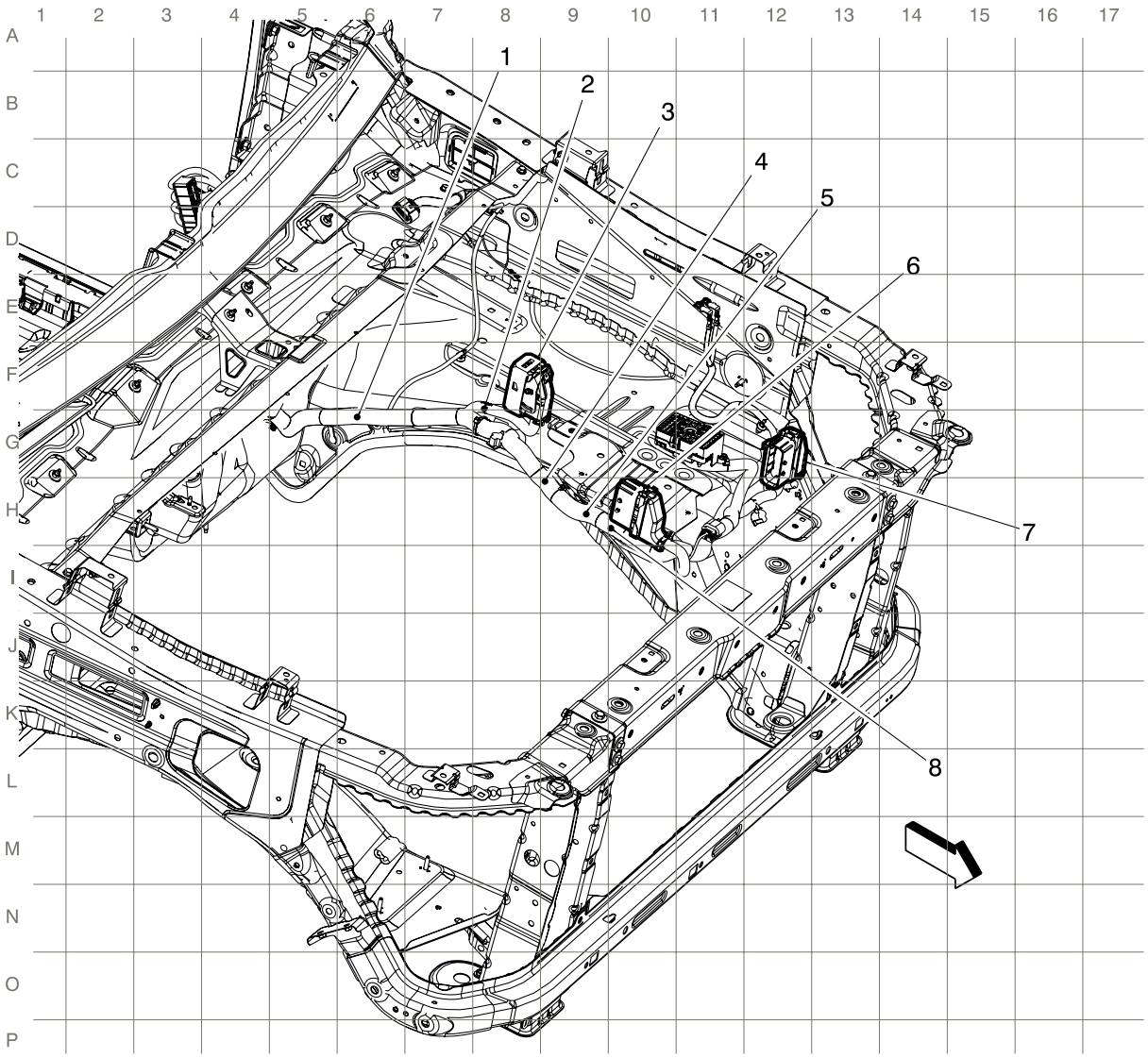

Items

1. J103
2. J102
3. X106
4. J123
5. J101
6. X101
7. X102
8. J100

Body Harness Routing - Left Engine Compartment (LWN)

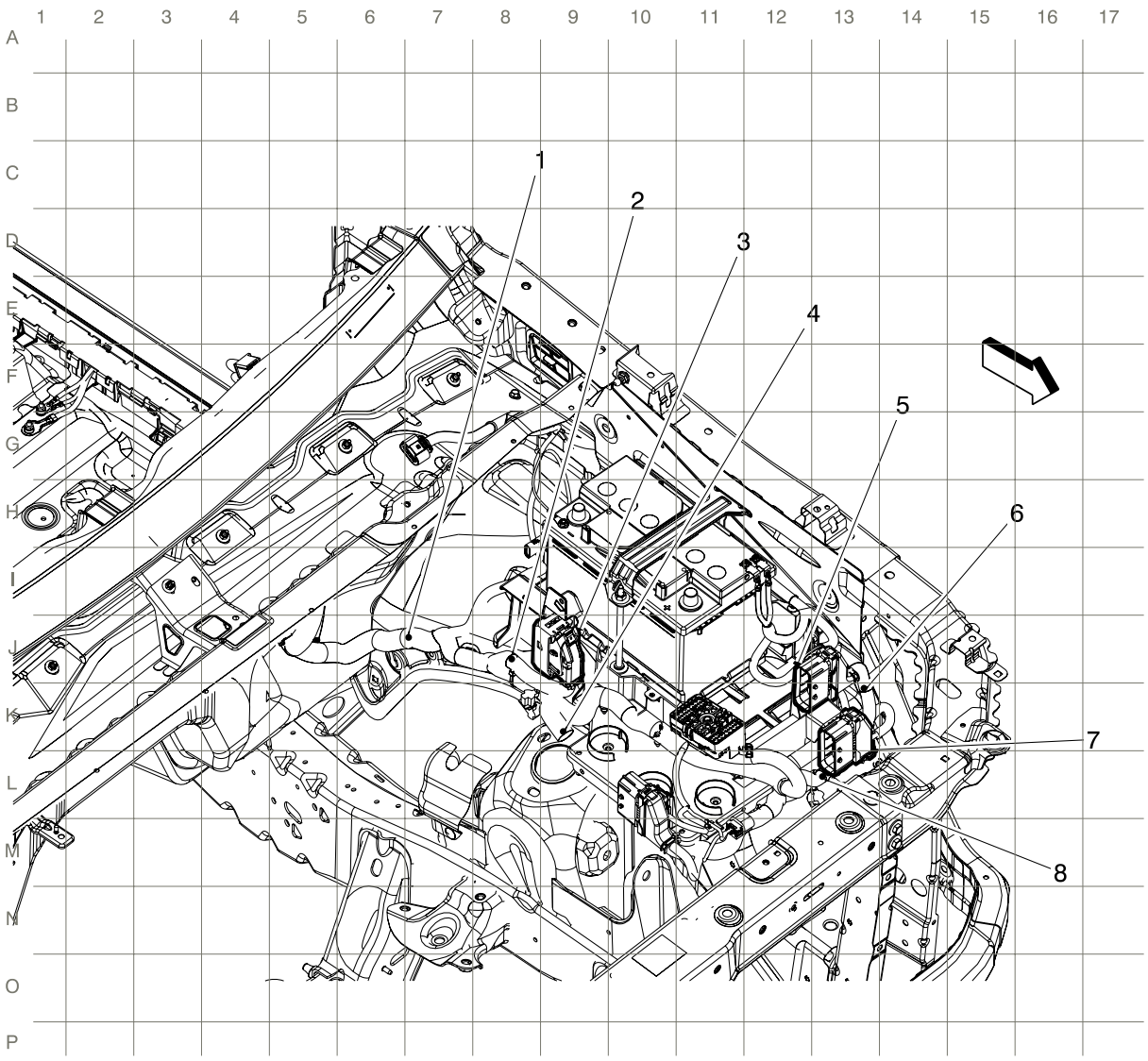

Items

1. J103
2. J102
3. X106
4. J123
5. X101
6. J101
7. X102
8. J100

Body Harness Routing - Center Engine Compartment

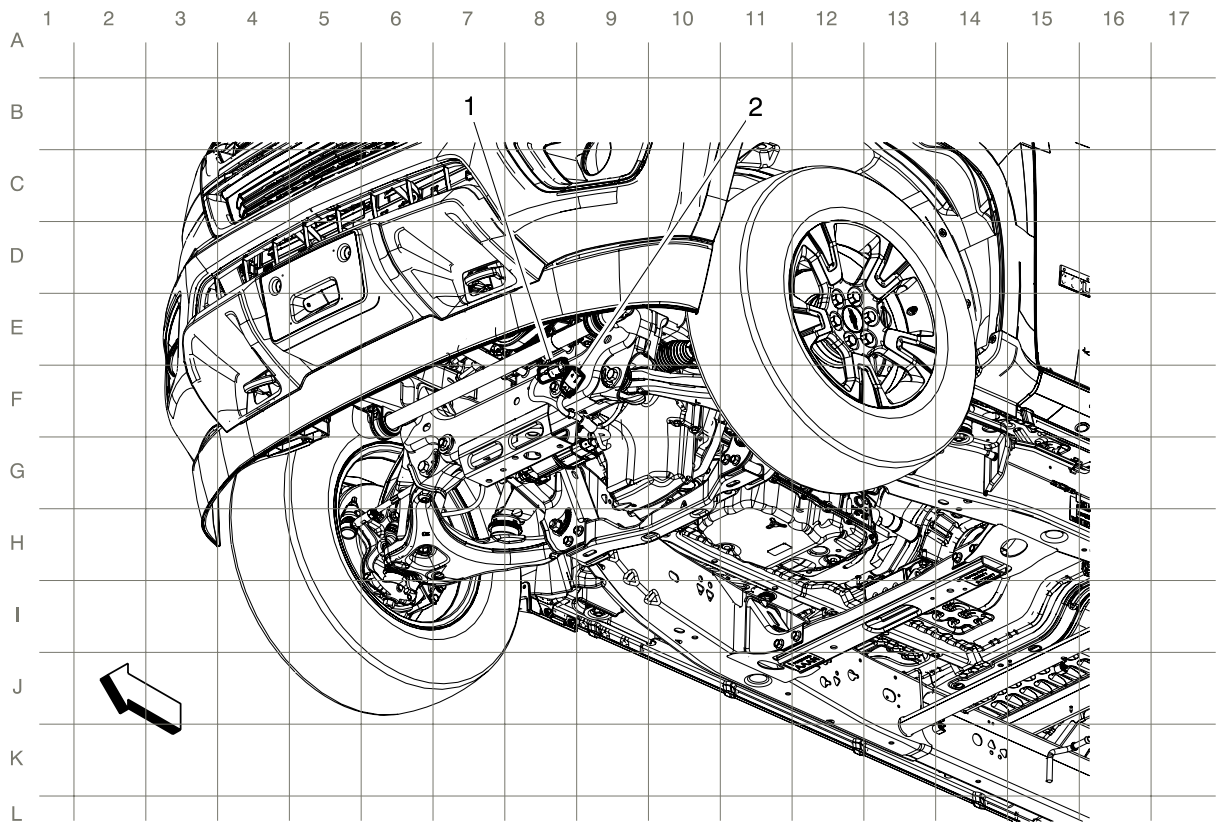

Items

1. X100
2. X103

Engine Harness Routing - Left Front (LCV)

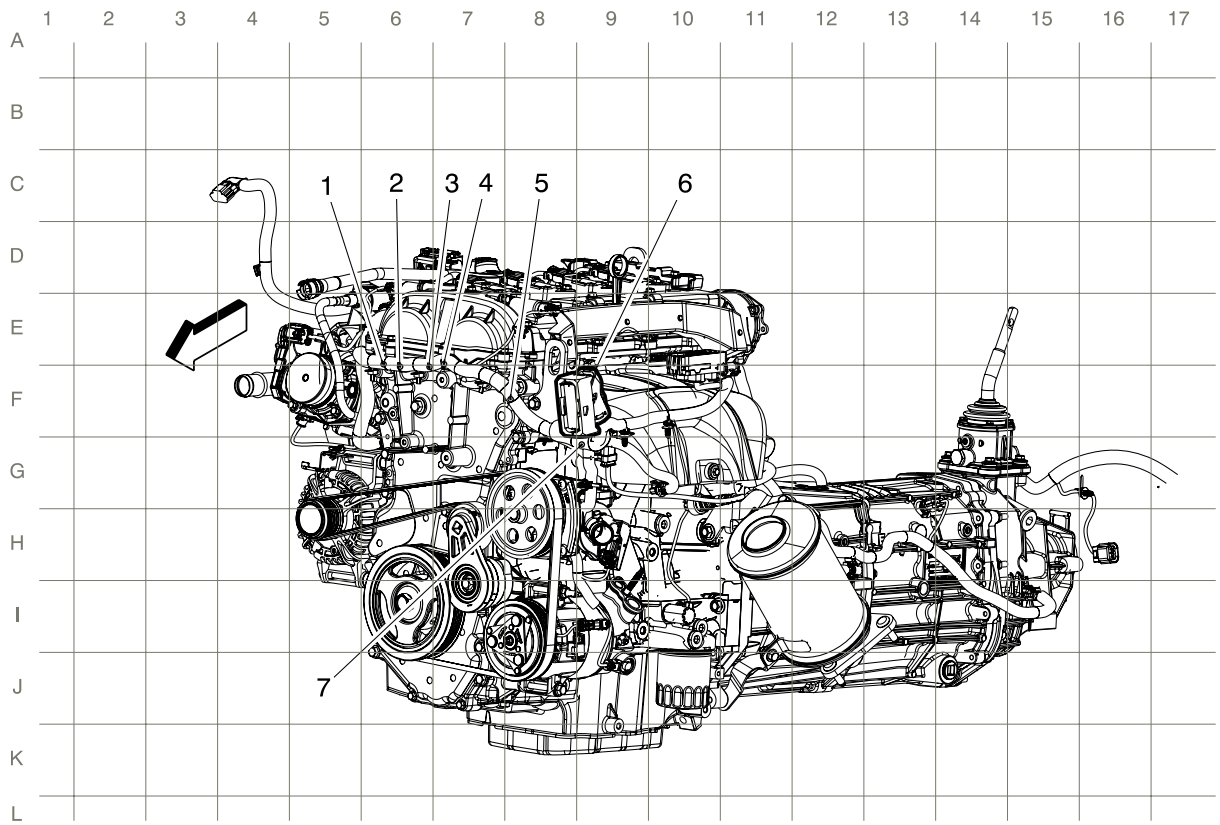

Items

1. J111
2. J109
3. J107
4. J110
5. J108 (LCV)
6. X101
7. J106

Engine Harness Routing - Right Front Top (LCV)

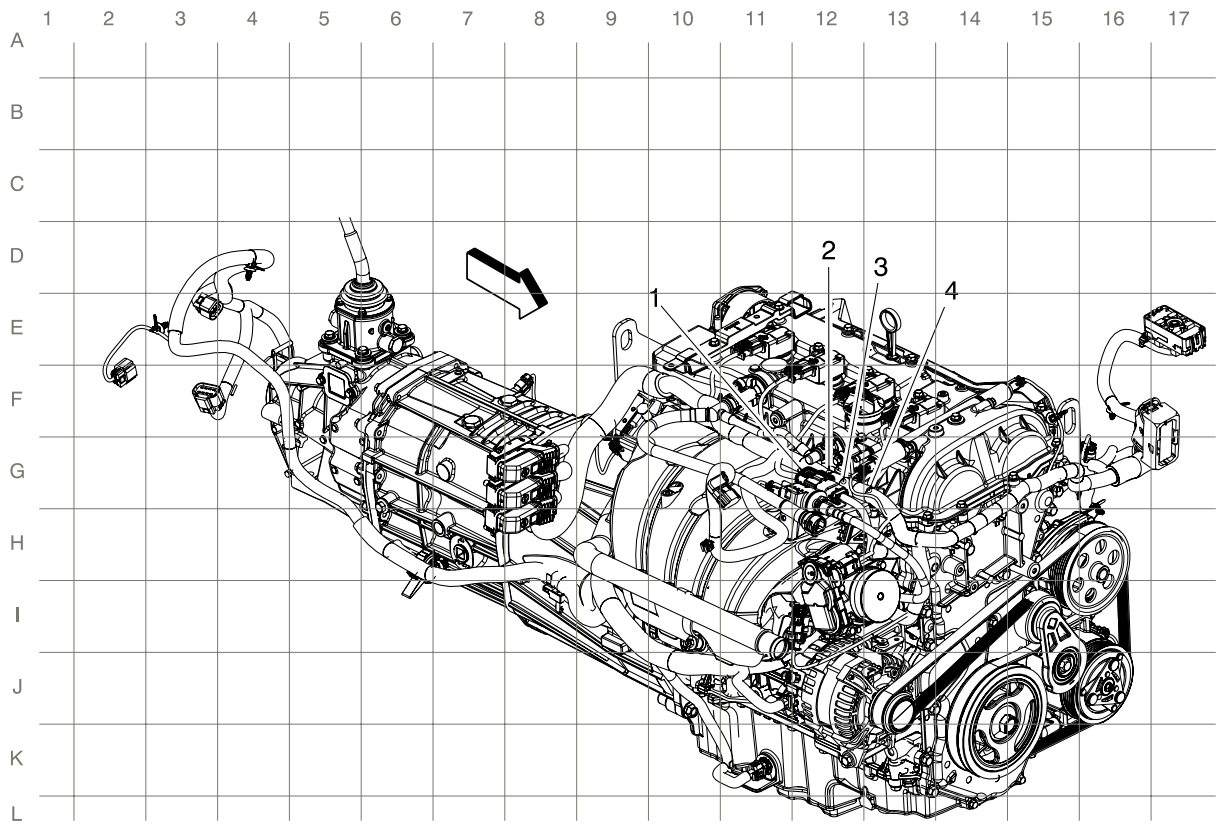

Items

1. X160
2. J112 (LCV)
3. J113
4. J114

Engine Harness Routing - Front (LFX)

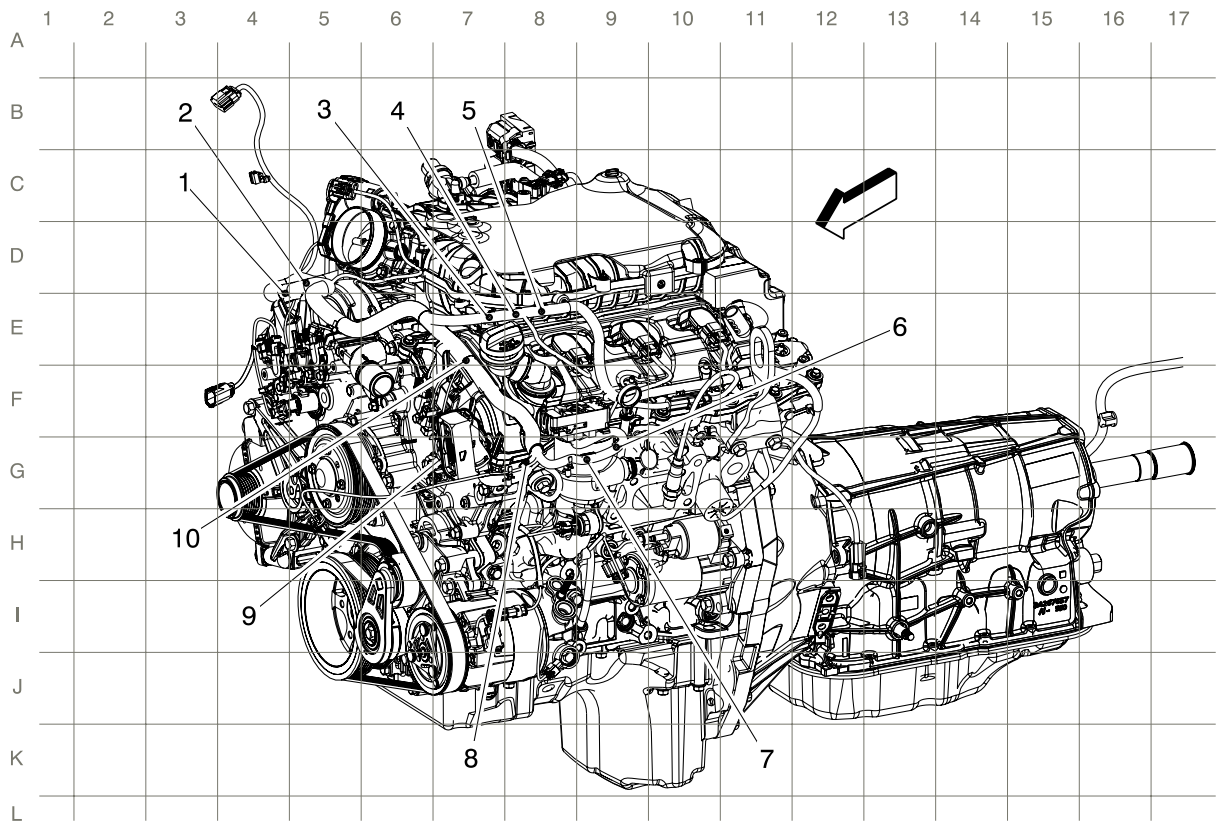

Items

1. J114
2. J110
3. J109
4. J111
5. J116 (LFX)
6. J113
7. J107
8. J106
9. X101
10. J115 (LFX)

Engine Harness Routing - Rear (LFX)

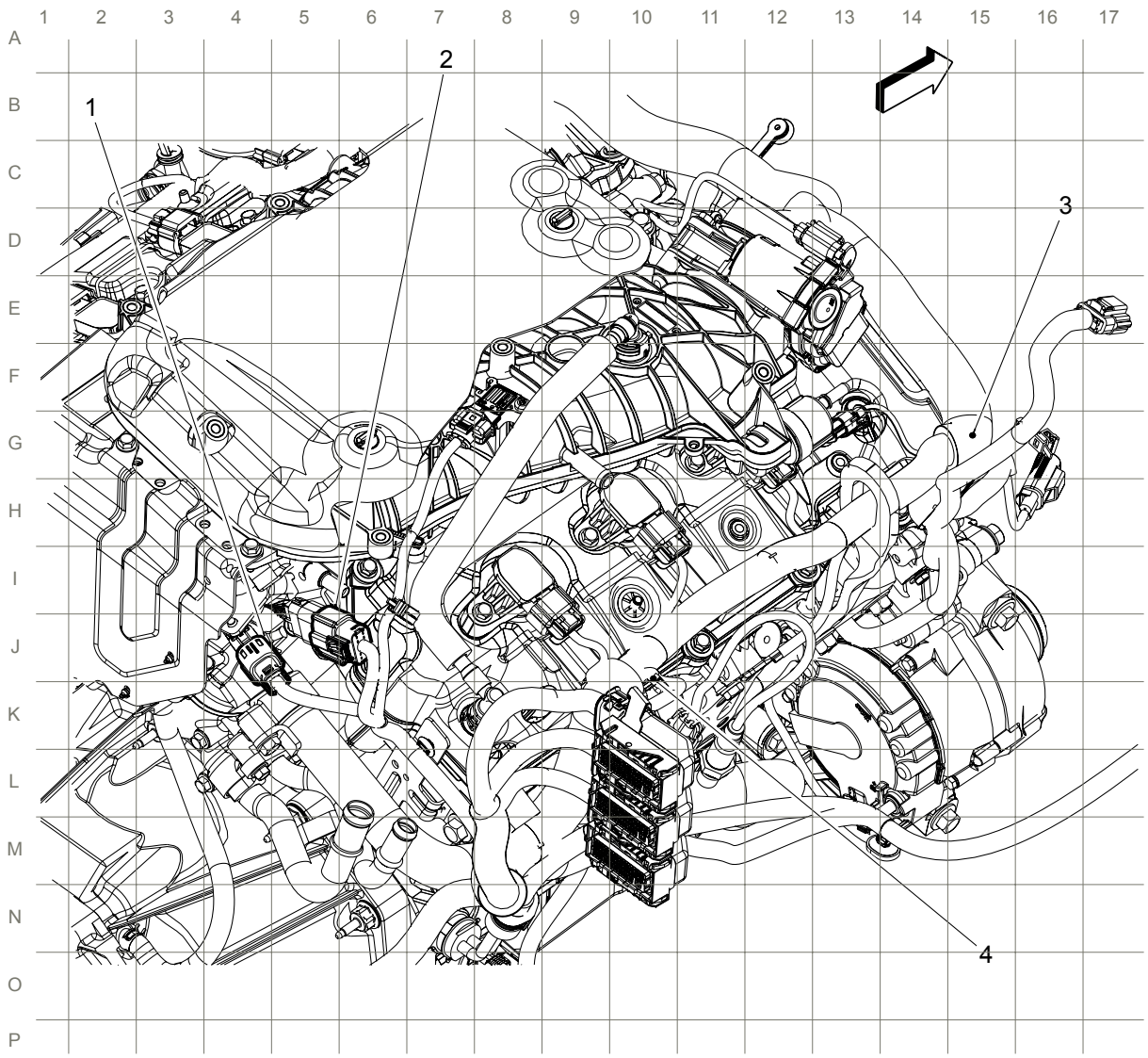

Items

1. X160
2. X161 (LFX)
3. J128
4. J129

Engine Harness Routing - Top (LWN)

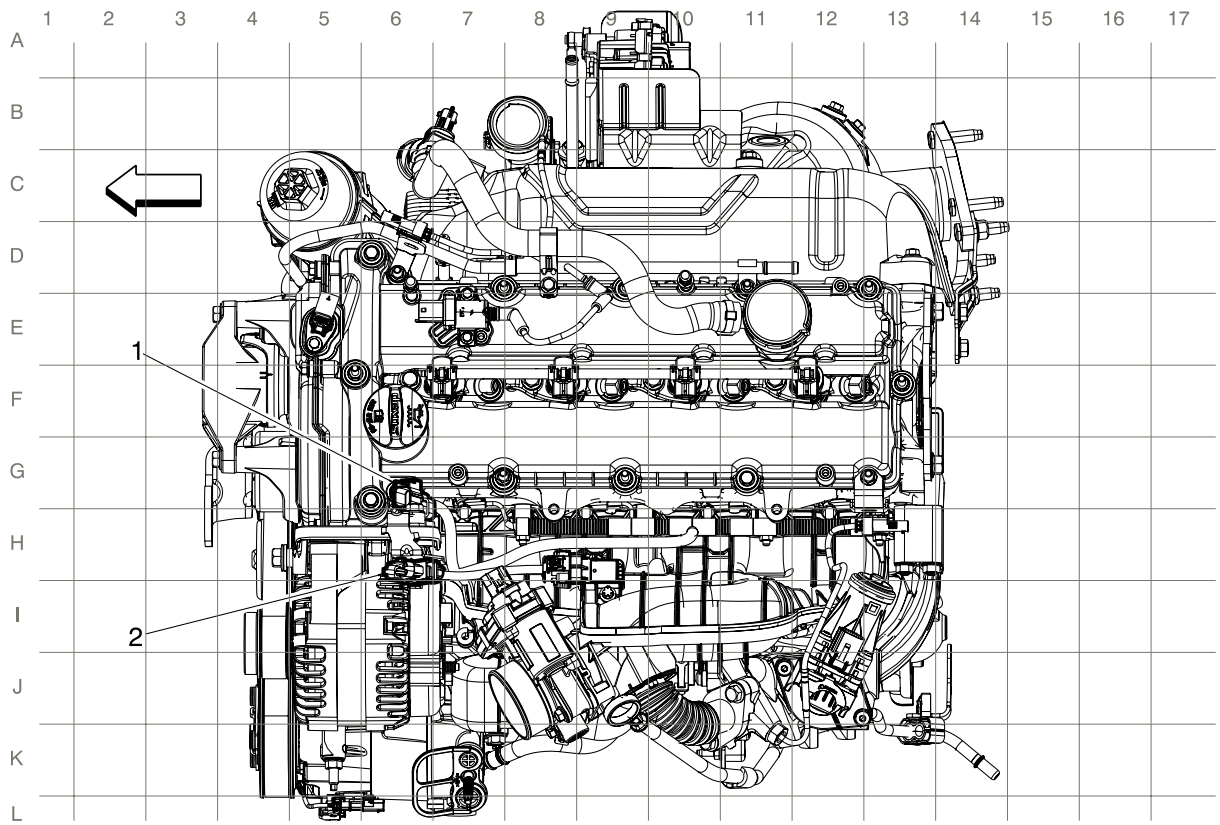

Items

1. X111 (LWN)
2. X112 (LWN)

Engine Harness Routing - Left Front (LWN)

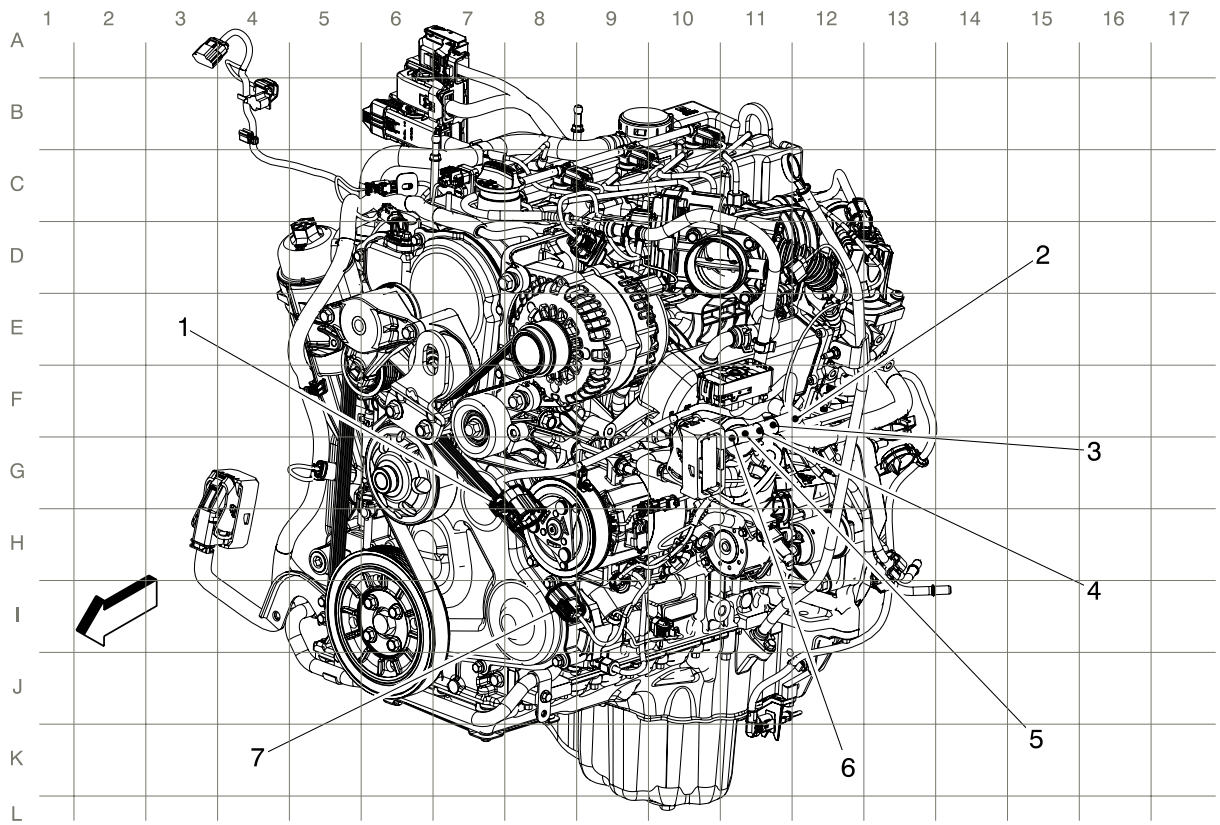

Items

1. X109 (LWN)
2. J127 (LWN)
3. J126 (LWN)
4. J125 (LWN)
5. J106
6. J110
7. X108 (LWN)

Engine Harness Routing - Right Rear (LCV)

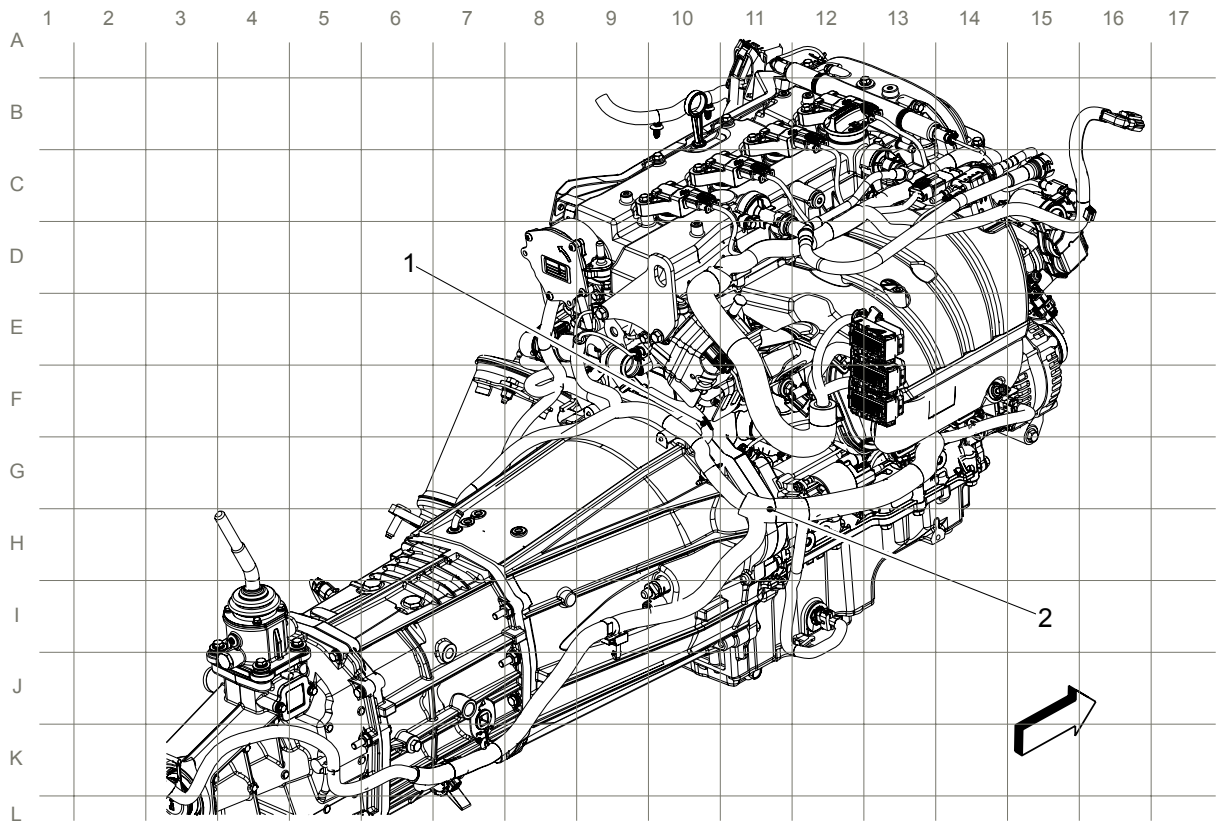

Items

1. J128
2. J129

Engine Harness Routing - Right Rear (LWN)

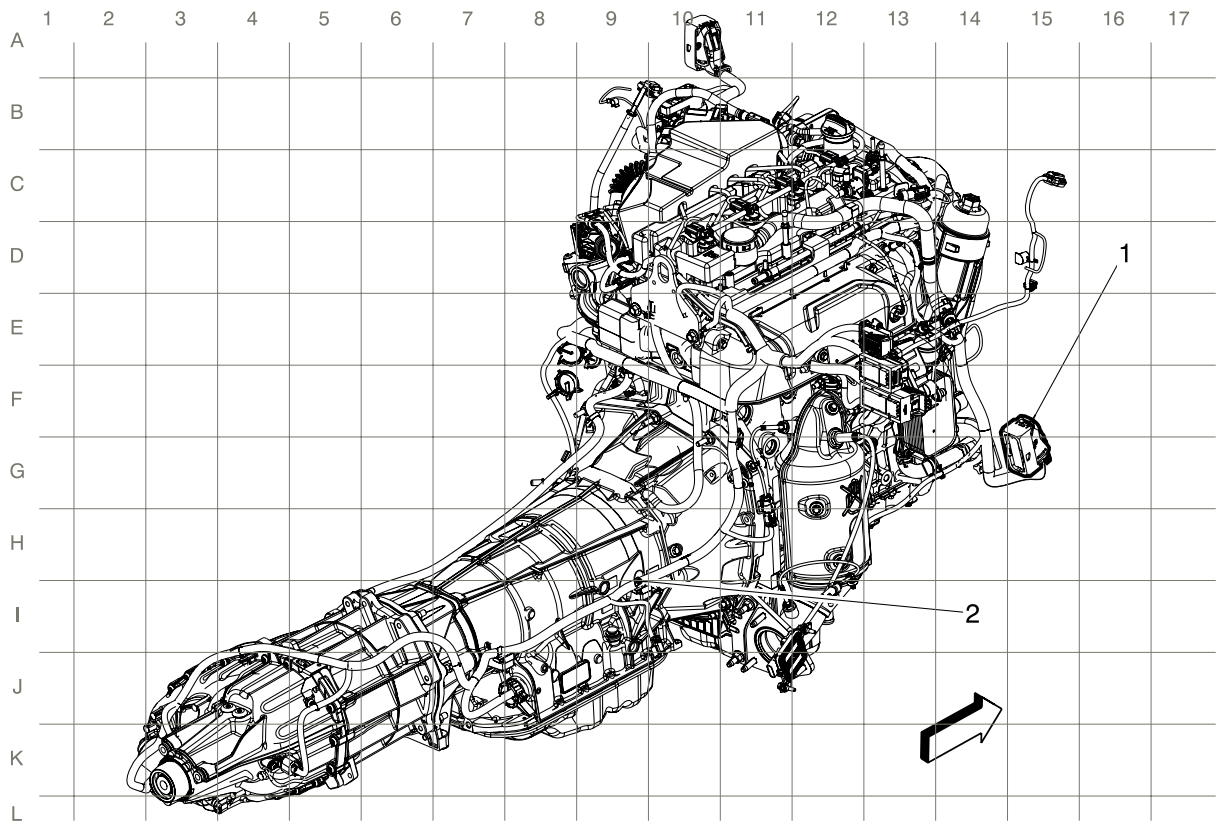

Items

1. X107 (LWN)
2. J109

Instrument Panel Harness Routing - Rear

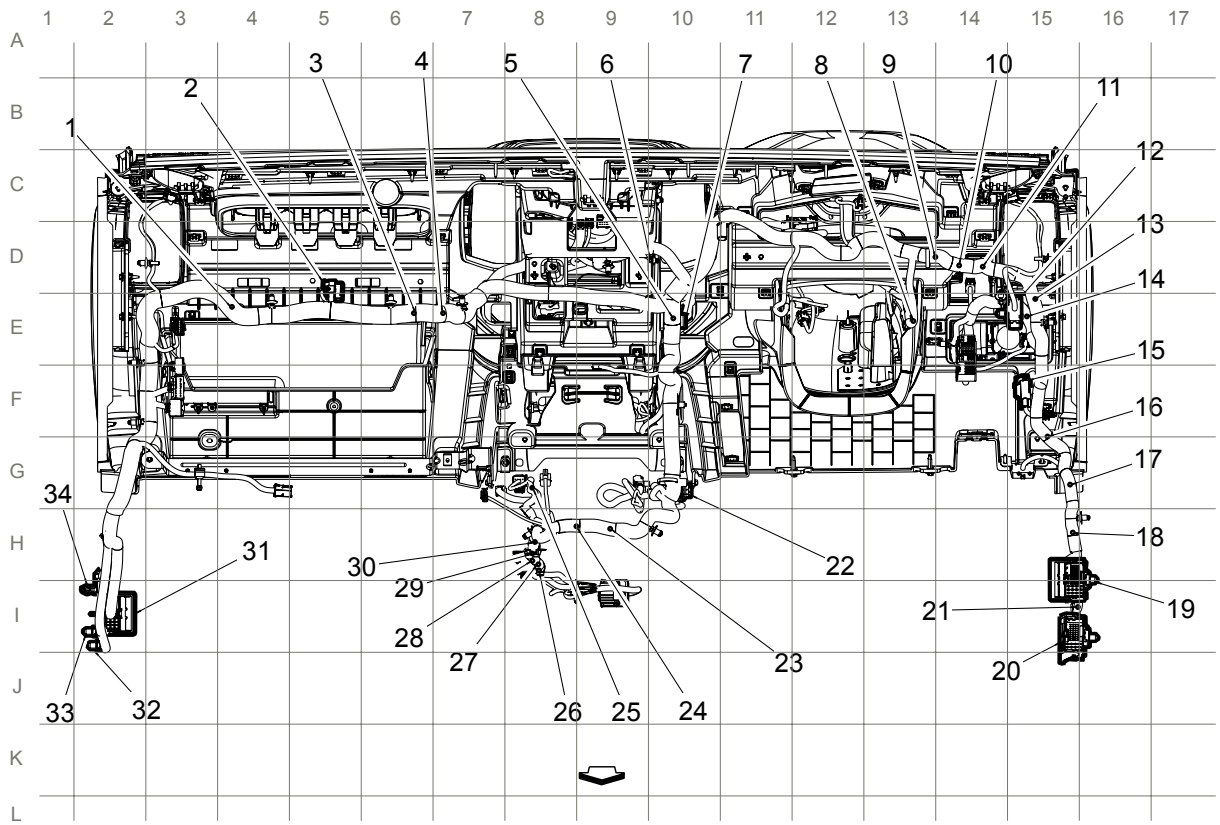

Items

1. J231
2. X207
3. J229 (UQ3)
4. J230 (UQ3)
5. J253 (LWN)
6. J237 (IO3/IO4+N8D)
7. X206 (C68)
8. J221
9. J219 (UQ3)
10. J218 (UQ3)
11. J220
12. JX200
13. J239
14. J217 (KA1)
15. X399

16. J214
17. J215
18. J216
19. X200
20. X202
21. J203
22. X305
23. J223
24. J222 (IO5/IO6)
25. J238 (IO3/IO4+N8D)
26. J228
27. J225
28. J227
29. J226 (IO4/IO5/IO6)
30. J224
31. X203
32. X220 (IO6)
33. X219 (Except U2M)
34. X218 (U2M)

Center Console Harness Routing

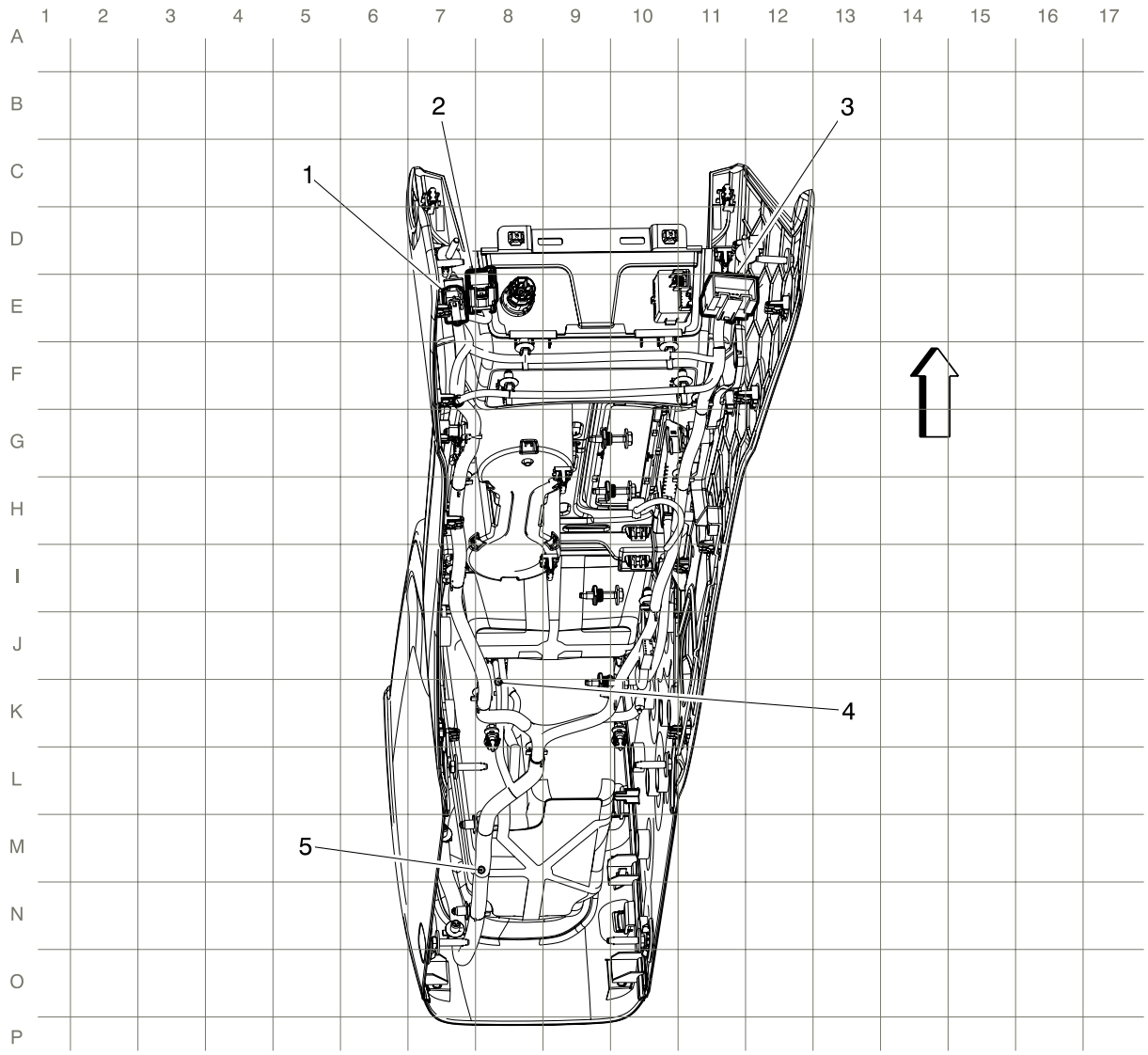

Items

1. X302
2. X306 (MYB)
3. X305
4. J304 (IO3 with N8D)
5. J305

Body Harness Routing - Left Front of Passenger Compartment (Extended Cab)

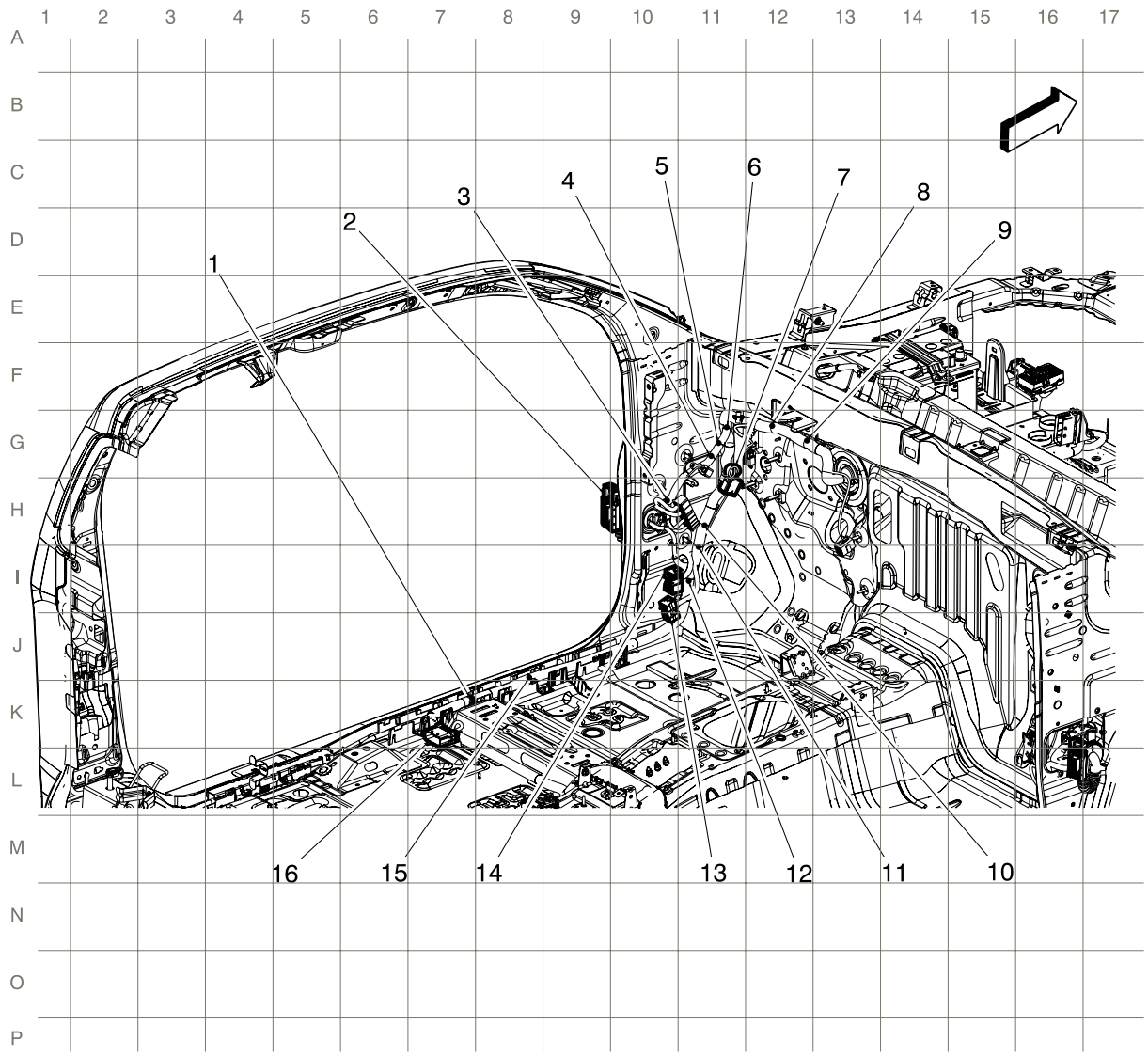

Items

1. J302 (Extended Cab)
2. X500
3. J204
4. J202
5. J205
6. J201
7. JX200
8. J235
9. J200
10. J208
11. J207

12. J206
13. X202
14. X200
15. J209
16. X310

Body Harness Routing - Left Rear of Passenger Compartment (Extended Cab)

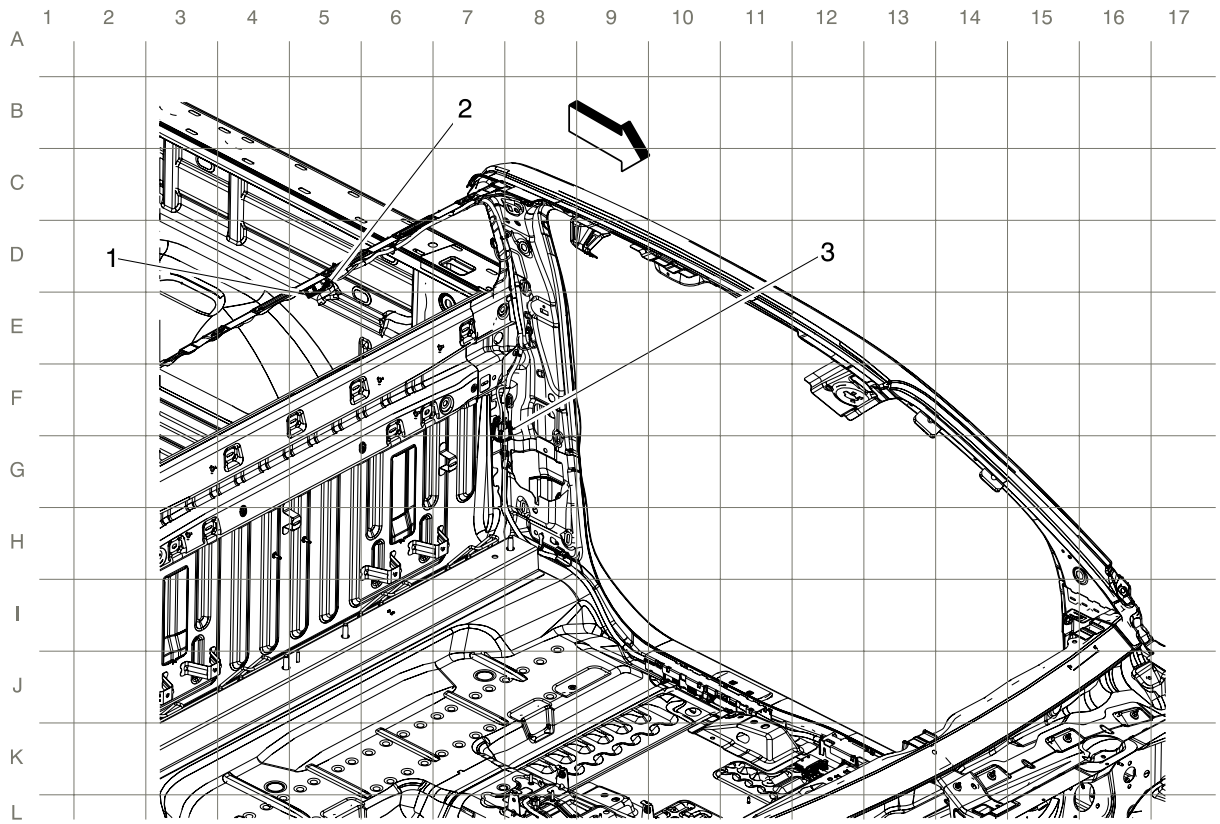

Items

1. X301
2. X303
3. X700

Body Harness Routing - Right Front of Passenger Compartment (Extended Cab)

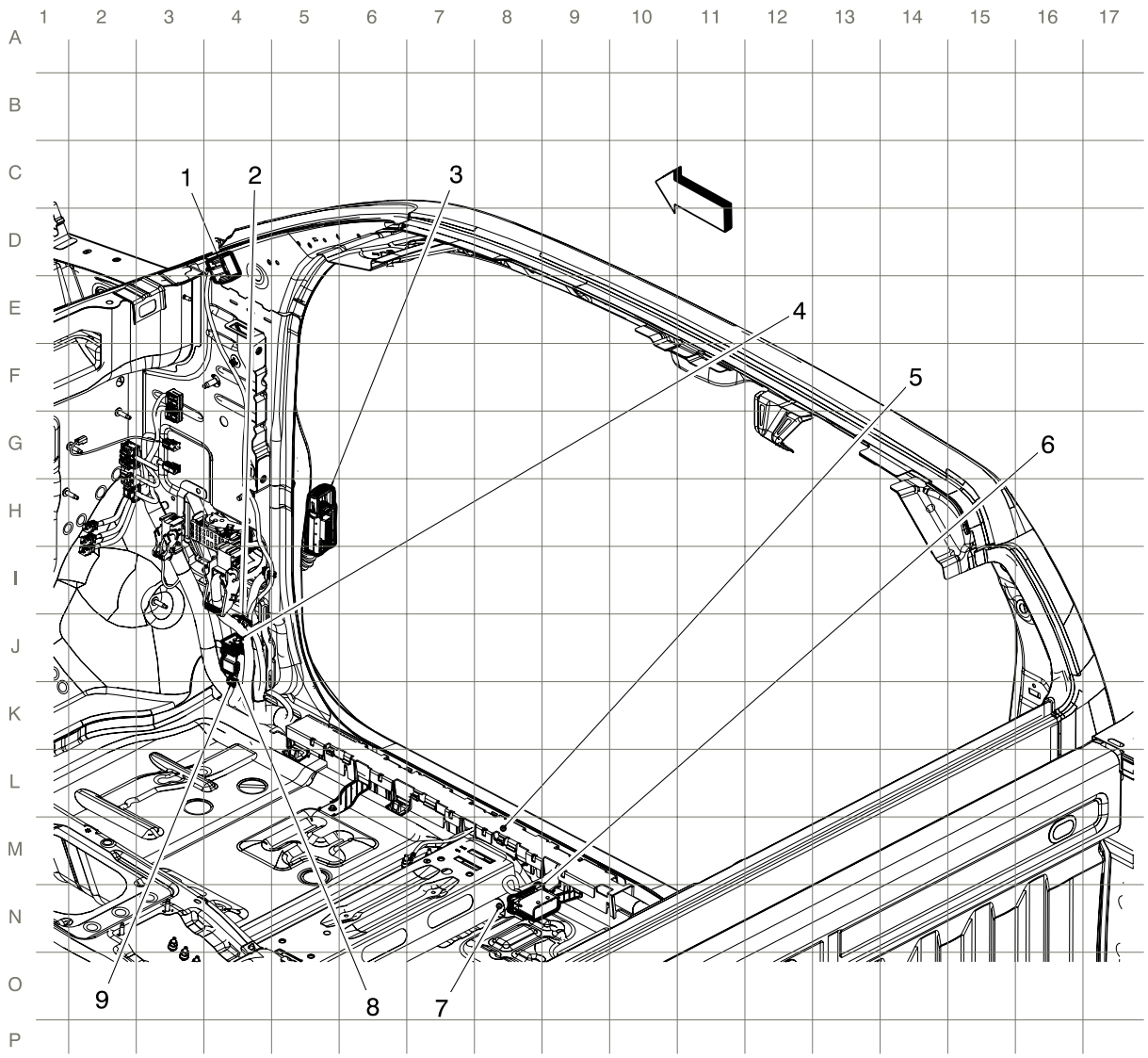

Items

1. X300
2. X218 (U2M)
3. X600
4. X203
5. J303 (Extended Cab)
6. X320
7. J301
8. X219 (Except U2M)
9. X220 (IO6)

Body Harness Routing - Right Rear of Passenger Compartment (Extended Cab)

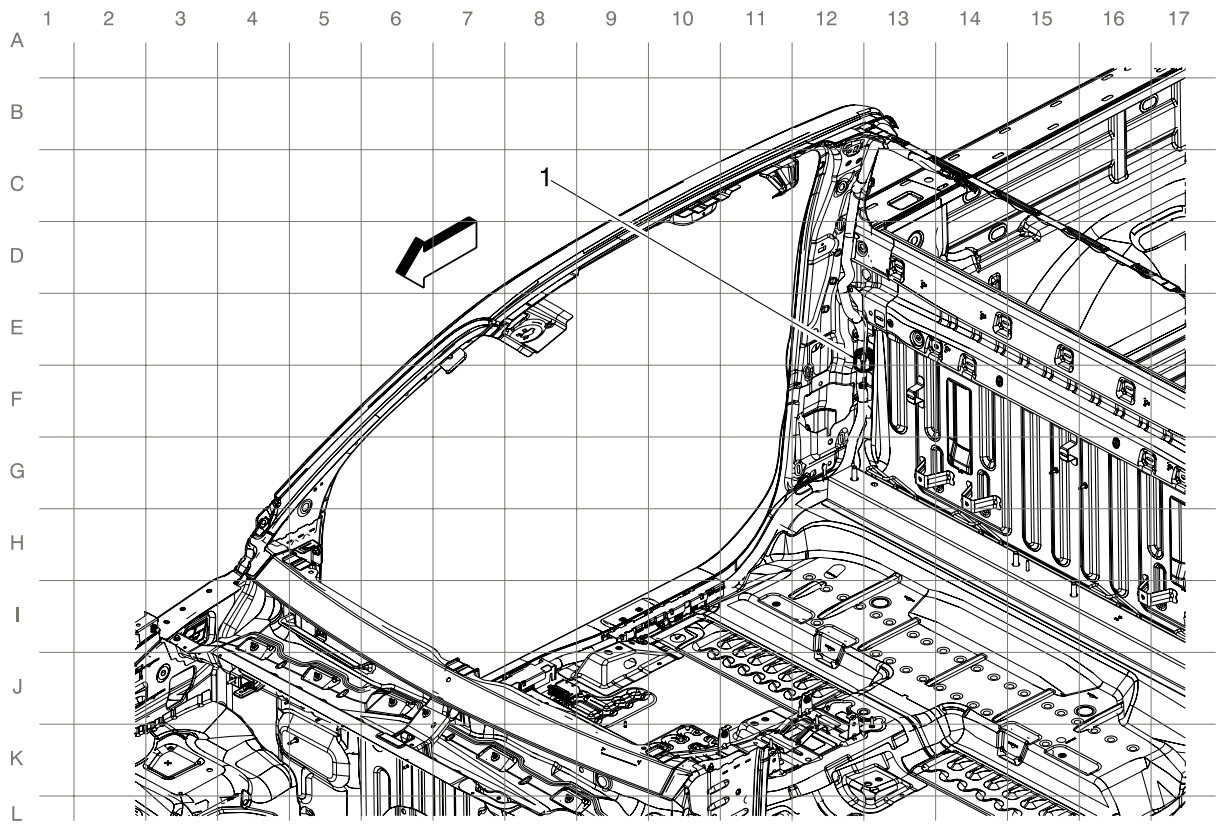

Items

1. X800

Body Harness Routing - Left Front of Passenger Compartment (Crew Cab)

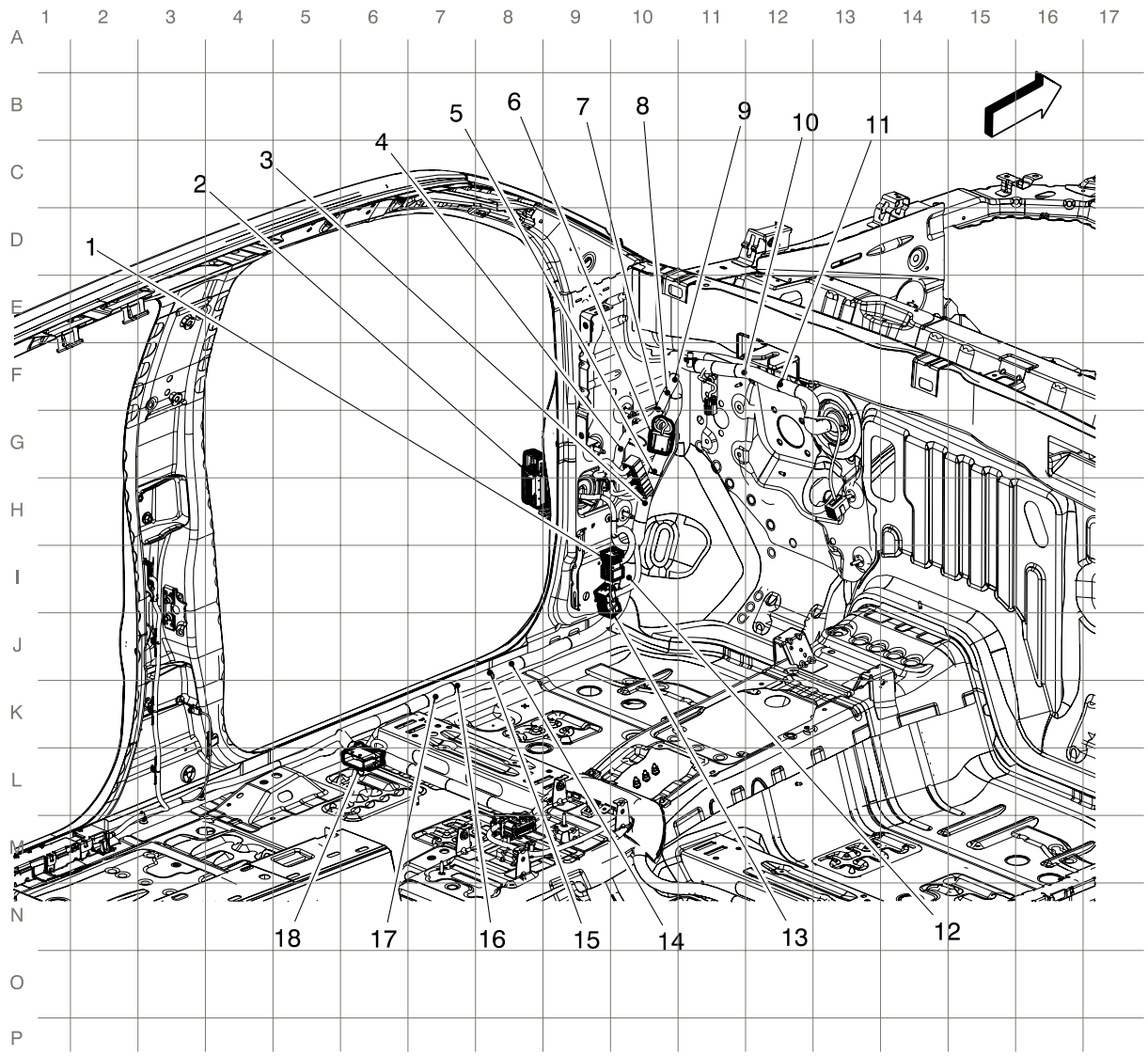

Items

1. X200
2. X500
3. J207
4. J204
5. J208
6. JX201
7. J202
8. J205
9. J201
10. J235
11. J200

12. J206
13. X202
14. J212 (Crew Cab)
15. J211 (Crew Cab)
16. J210 (Crew Cab)
17. J209
18. X310

Body Harness Routing - Left Rear of Passenger Compartment (Crew Cab)

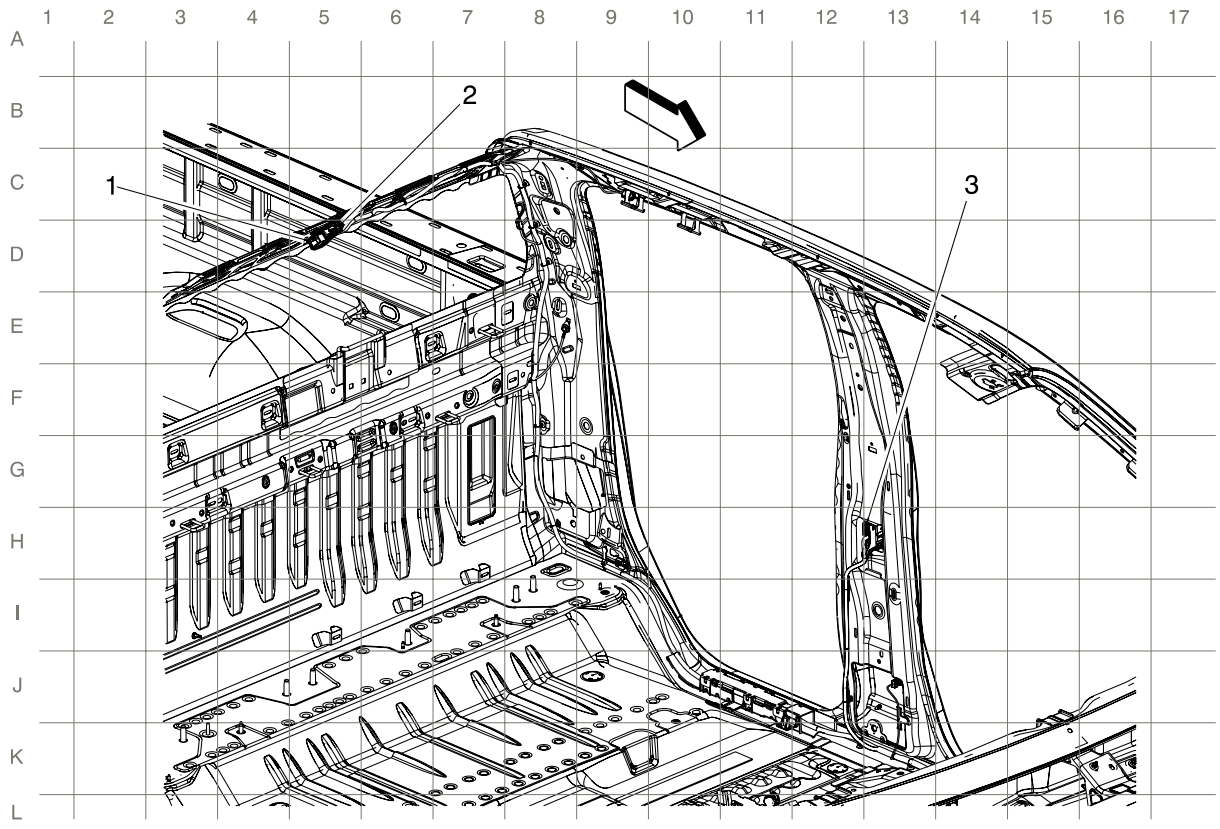

Items

1. X301
2. X303
3. X700

Body Harness Routing - Right Front of Passenger Compartment (Crew Cab)

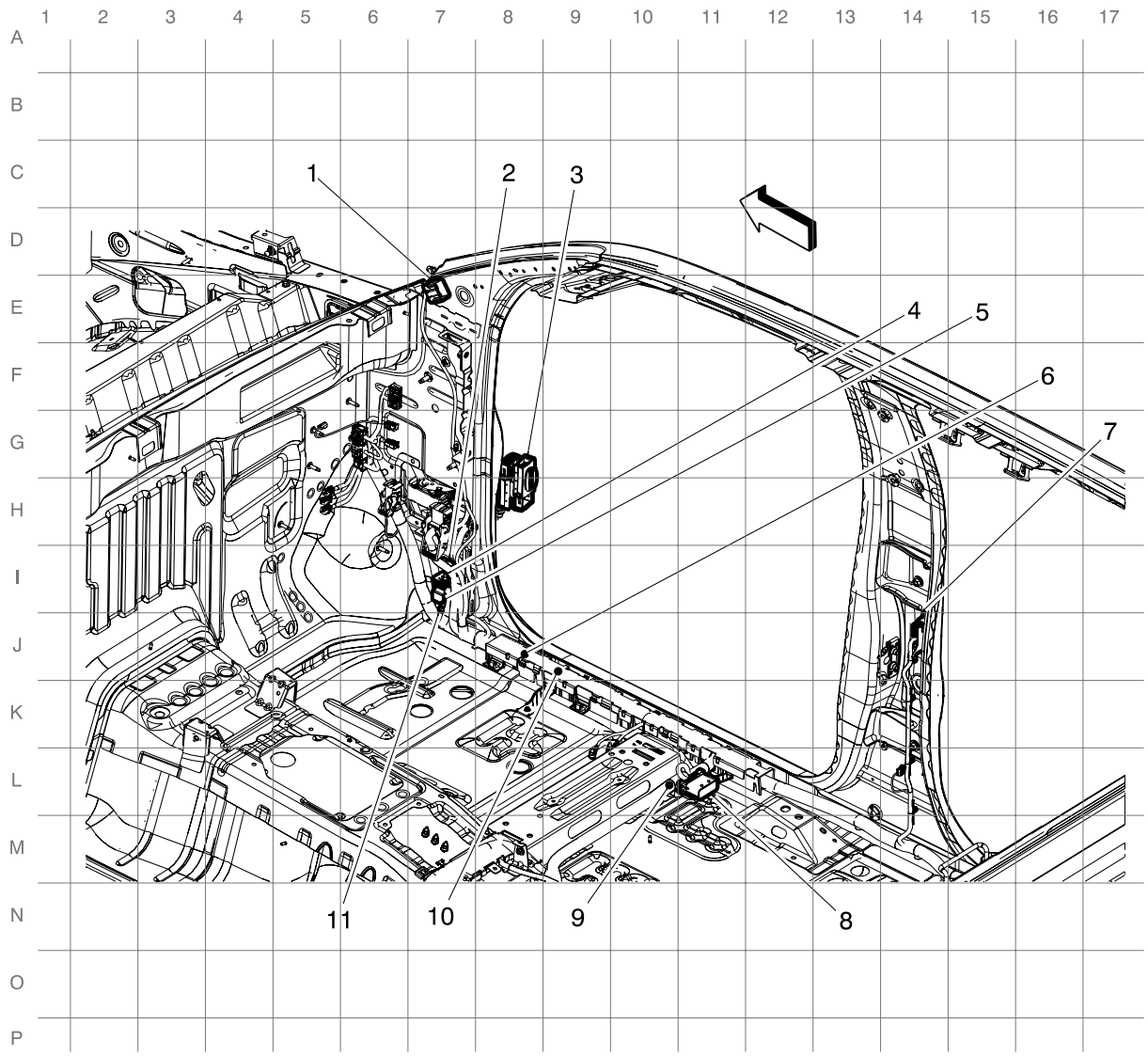

Items

1. X300
2. X218 (U2M)
3. X600
4. X203
5. X220 (IO6)
6. J213 (Crew Cab)
7. X800
8. X320
9. J301
10. J300 (Crew Cab)
11. X219 (Except U2M)

Driver Seat Harness Routing

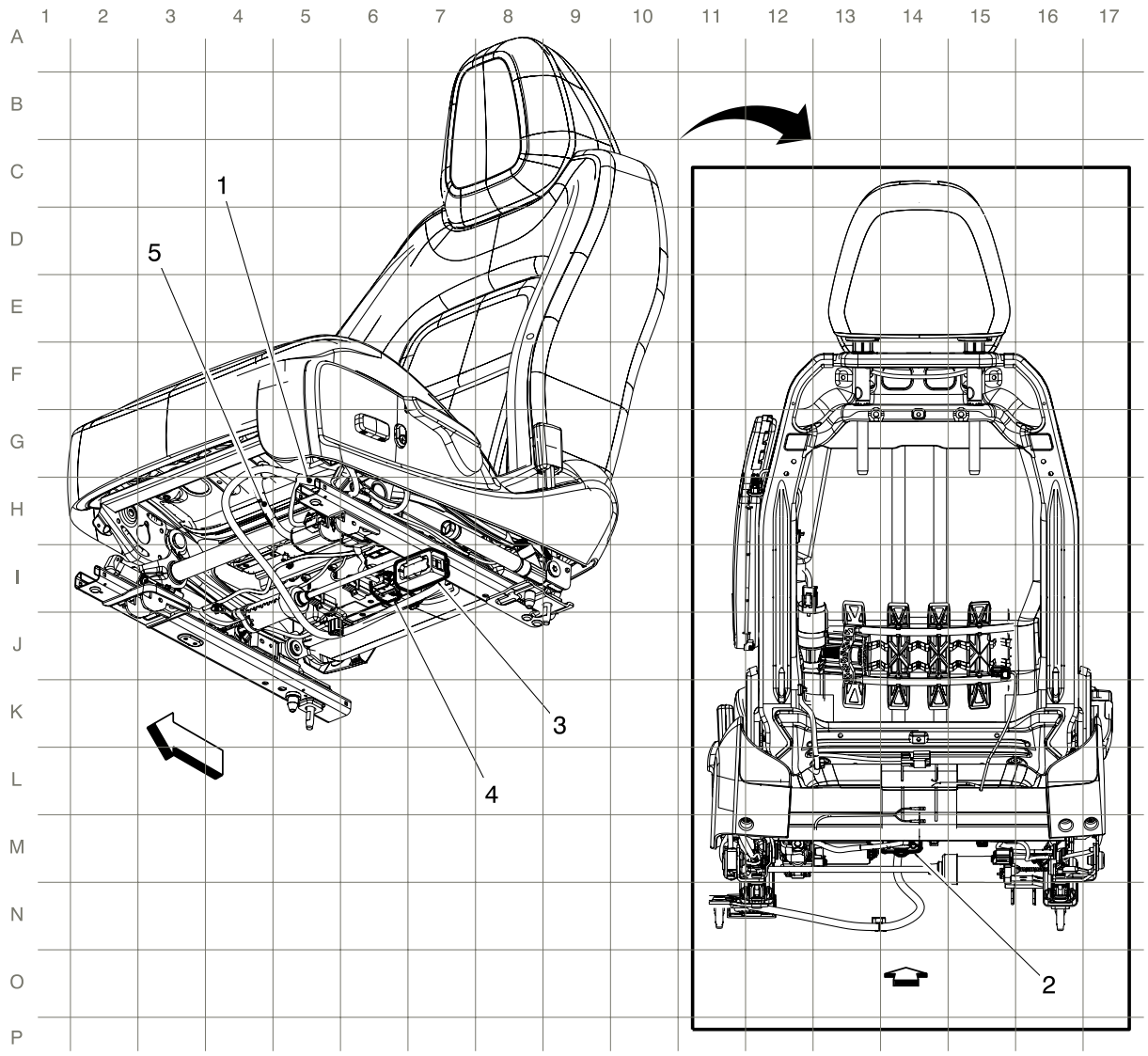

Items

1. J309 (AL9)
2. X311
3. X310
4. X311
5. J311 (AH6/AL9/KA1)

Passenger Seat Harness Routing

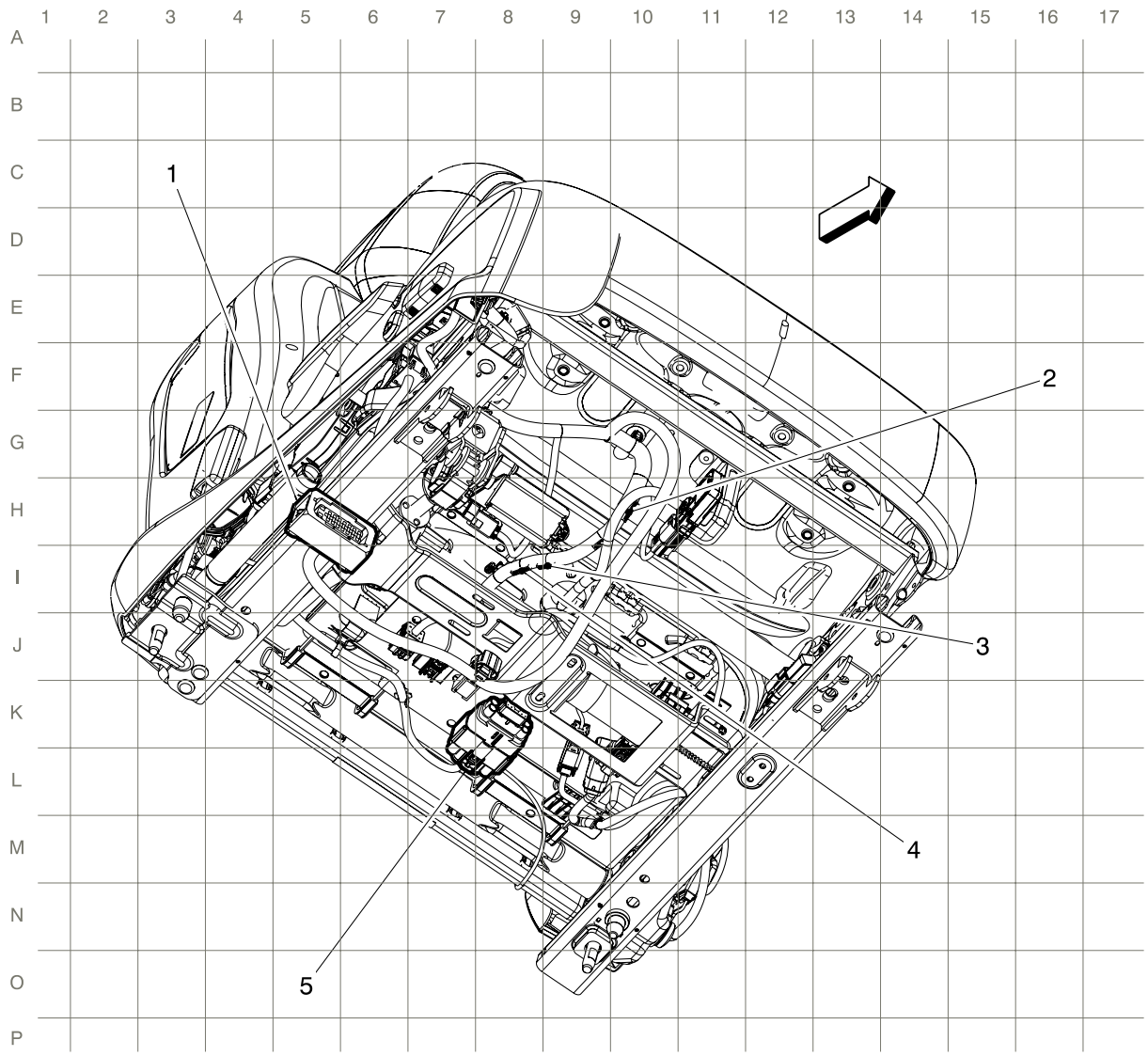

Items

1. X320
2. J310 (AT9)
3. J313 (AL0)
4. J312 (AAQ/AT9/KA1)
5. X321

Driver Door Harness Routing

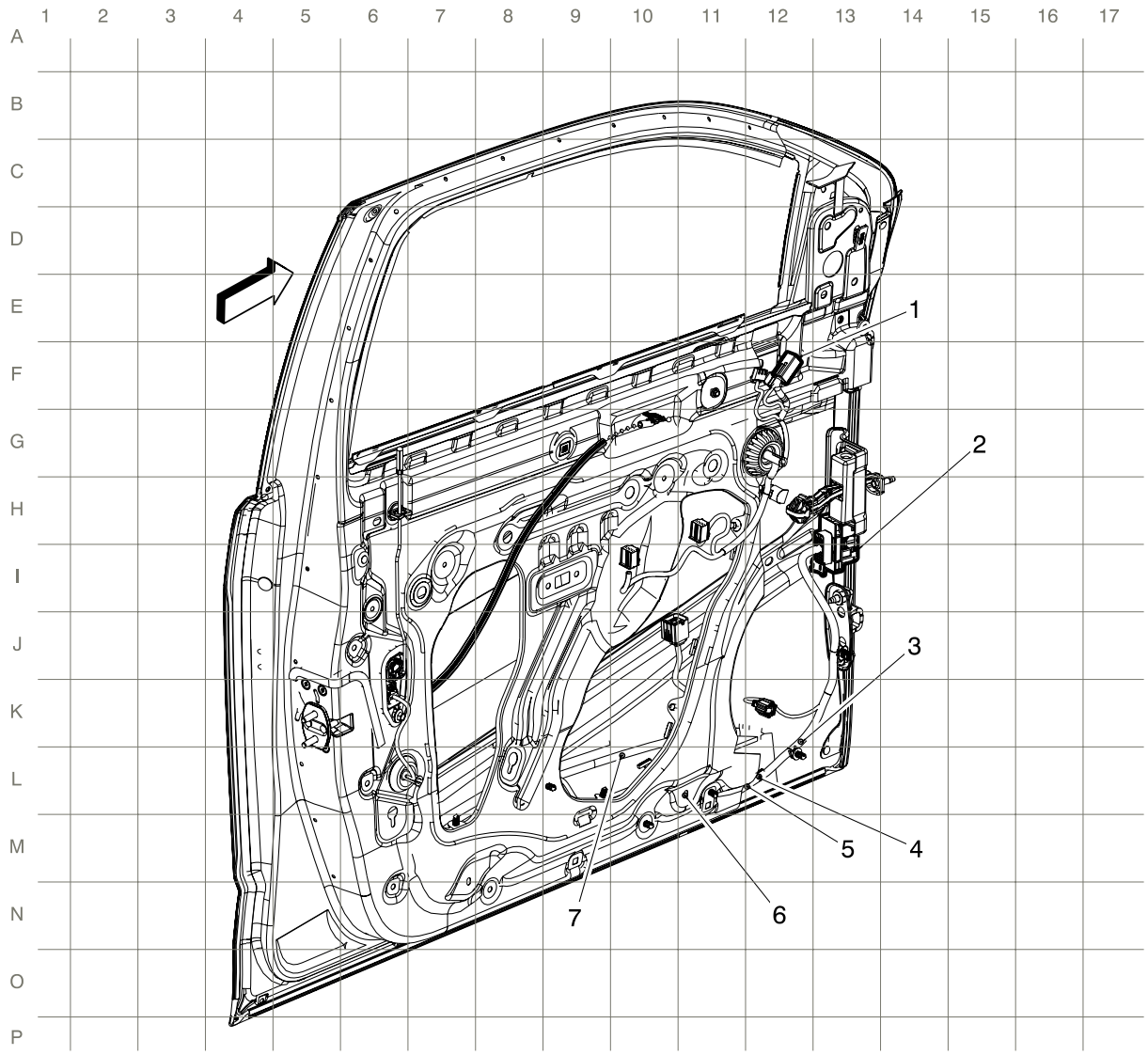

Items

1. X510
2. X500
3. J504
4. J505
5. J503
6. J501
7. J502

Passenger Door Harness Routing

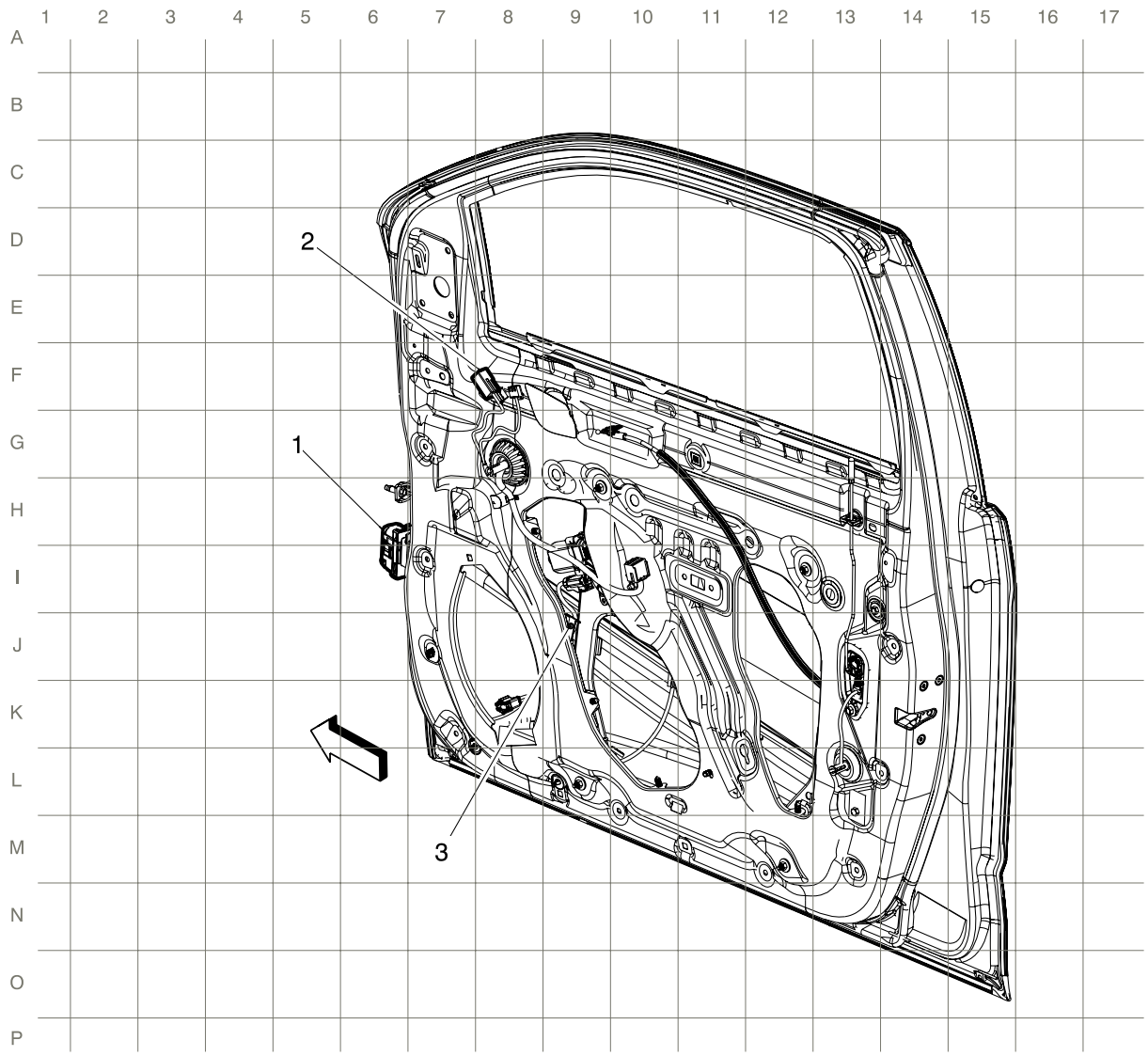

Items

1. X600
2. X610
3. J600

Left Rear Door Harness Routing (Crew Cab)

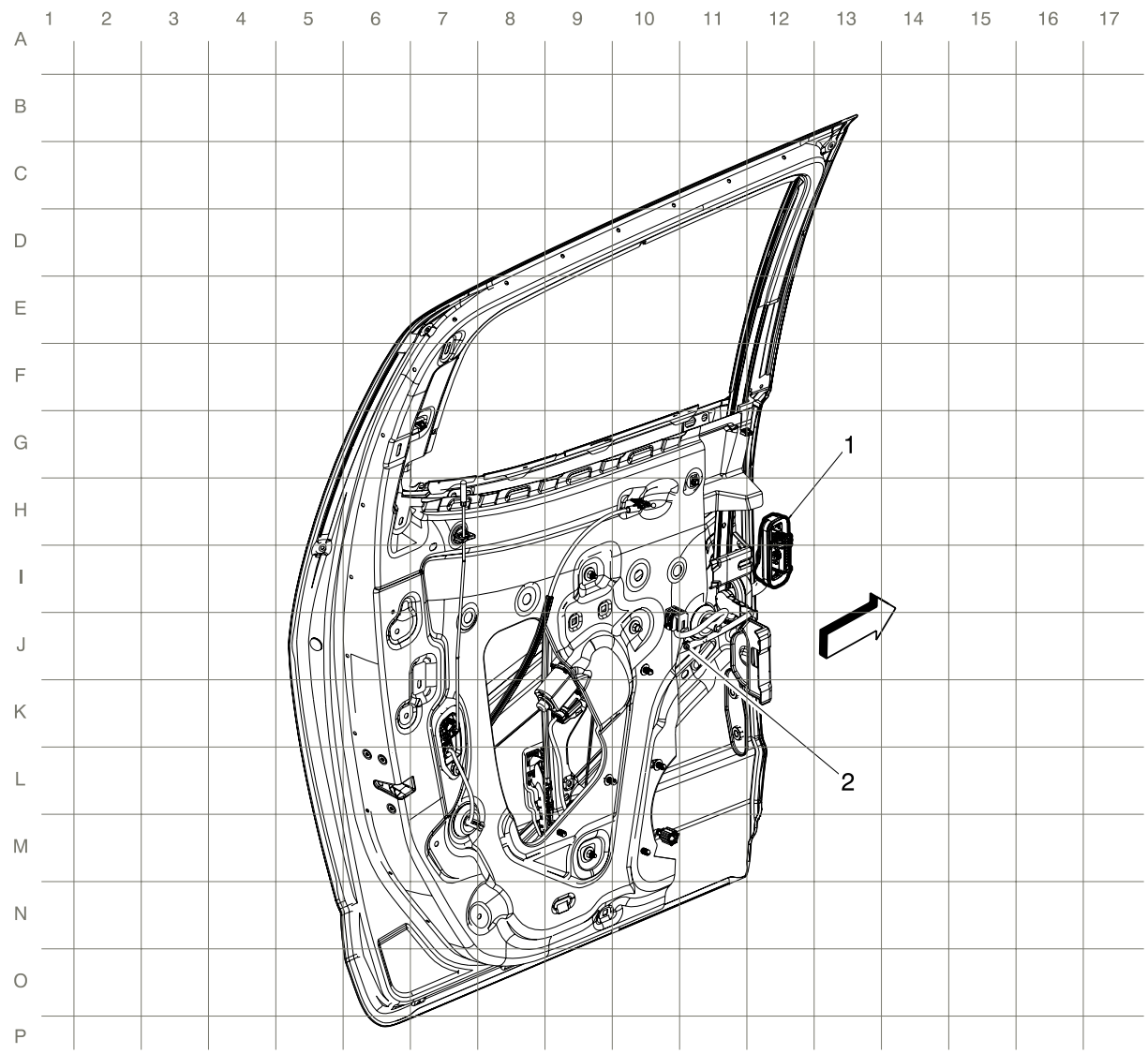

Items

1. X700
2. J701

Right Rear Door Harness Routing (Crew Cab)

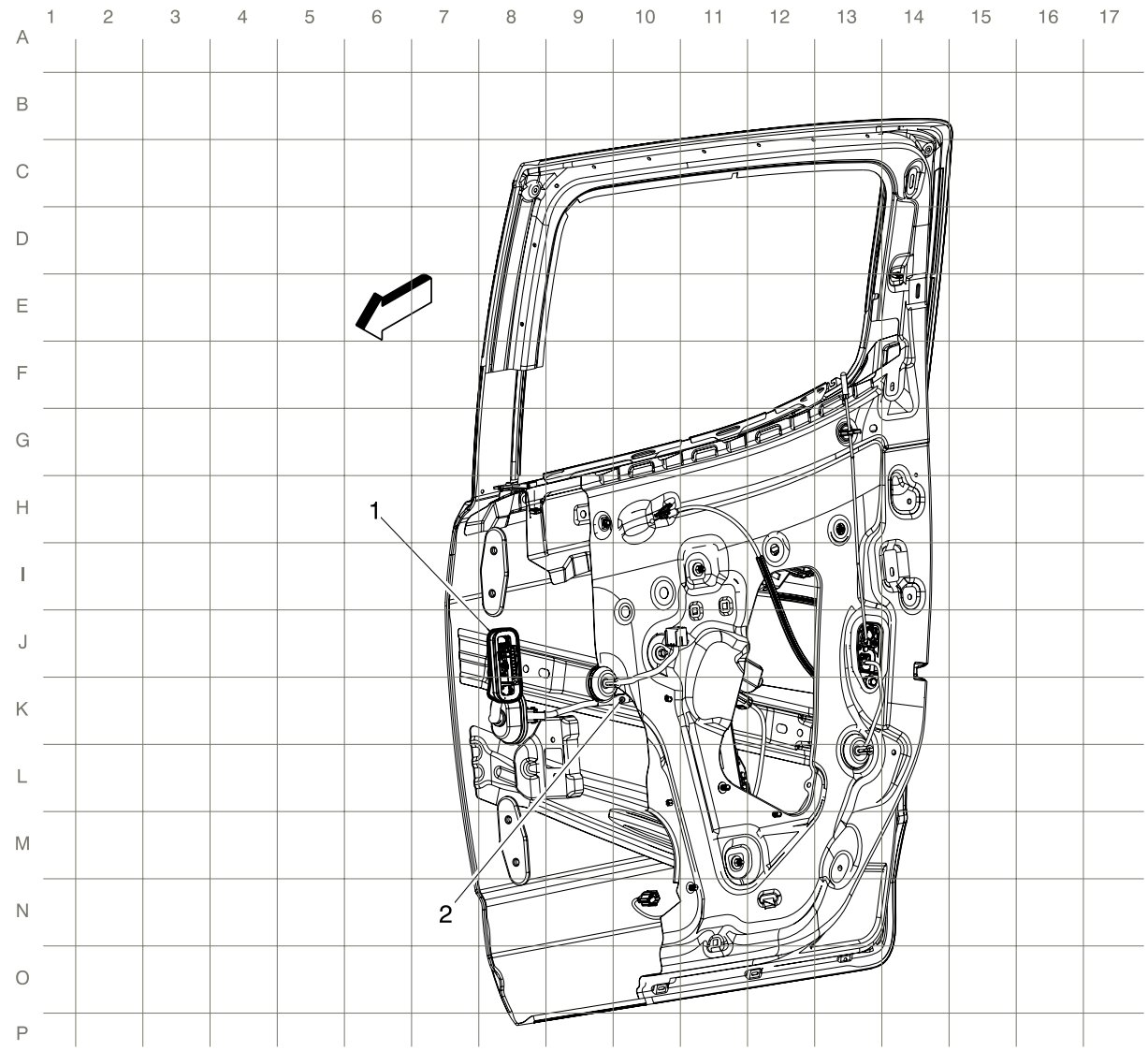

Items

1. X800
2. J801

Left Rear Door Harness Routing (Exended Cab)

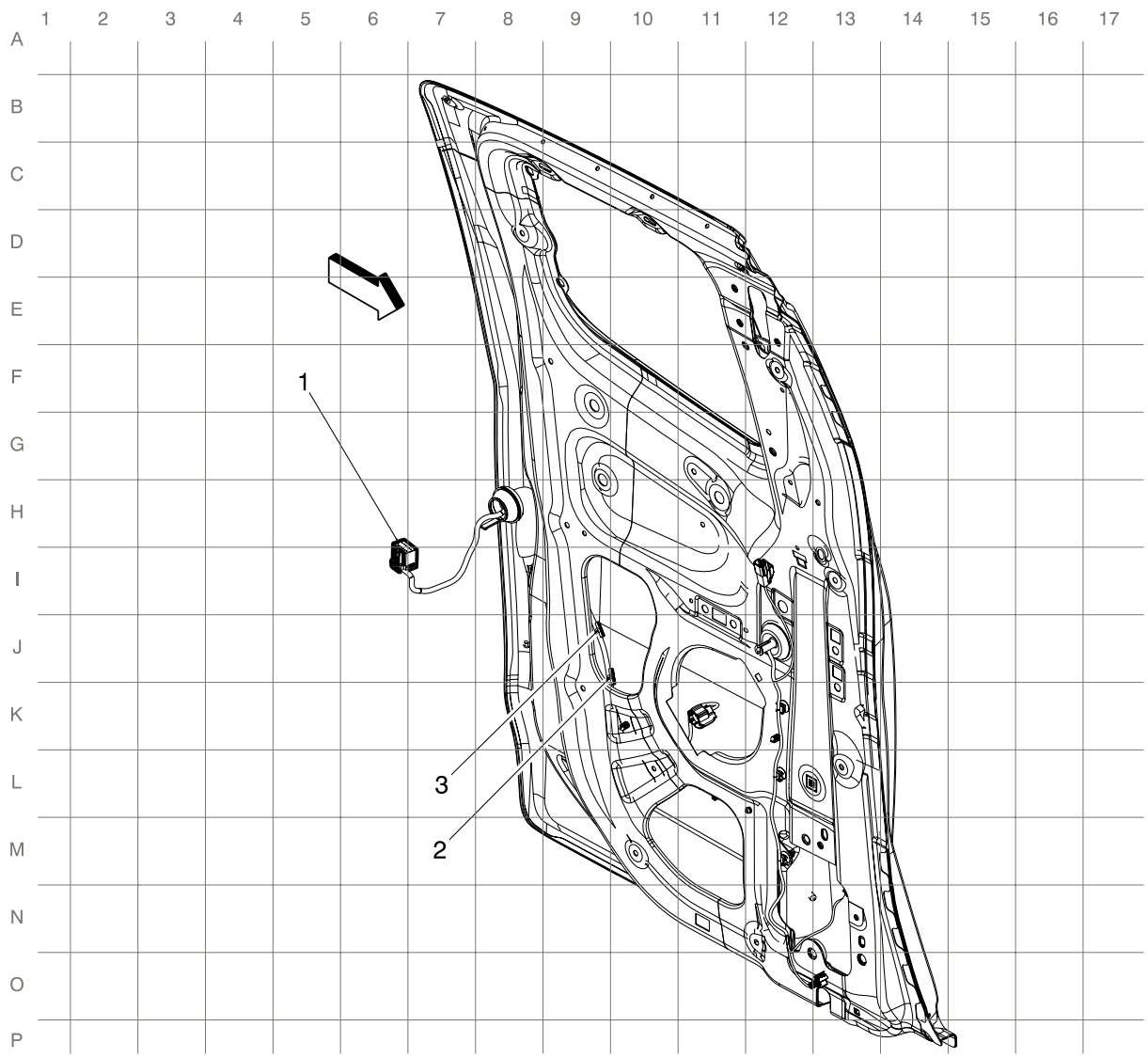

Items

1. X700
2. J701
3. J700 (Extended Cab)

Right Rear Door Harness Routing (Extended Cab)

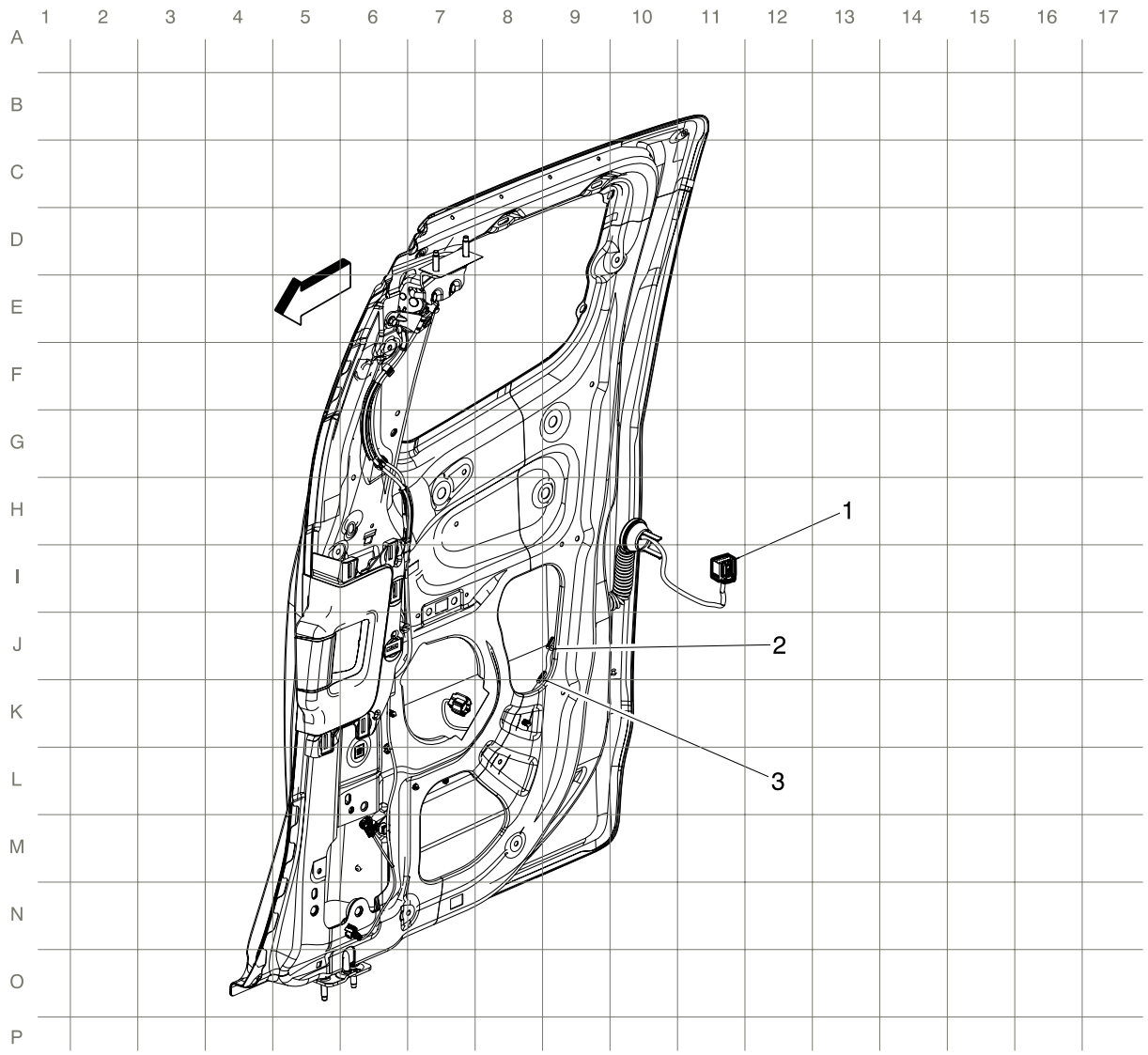

Items

1. X800
2. J800 (Extended Cab)
3. J801

Headliner Harness Routing (Crew Cab)

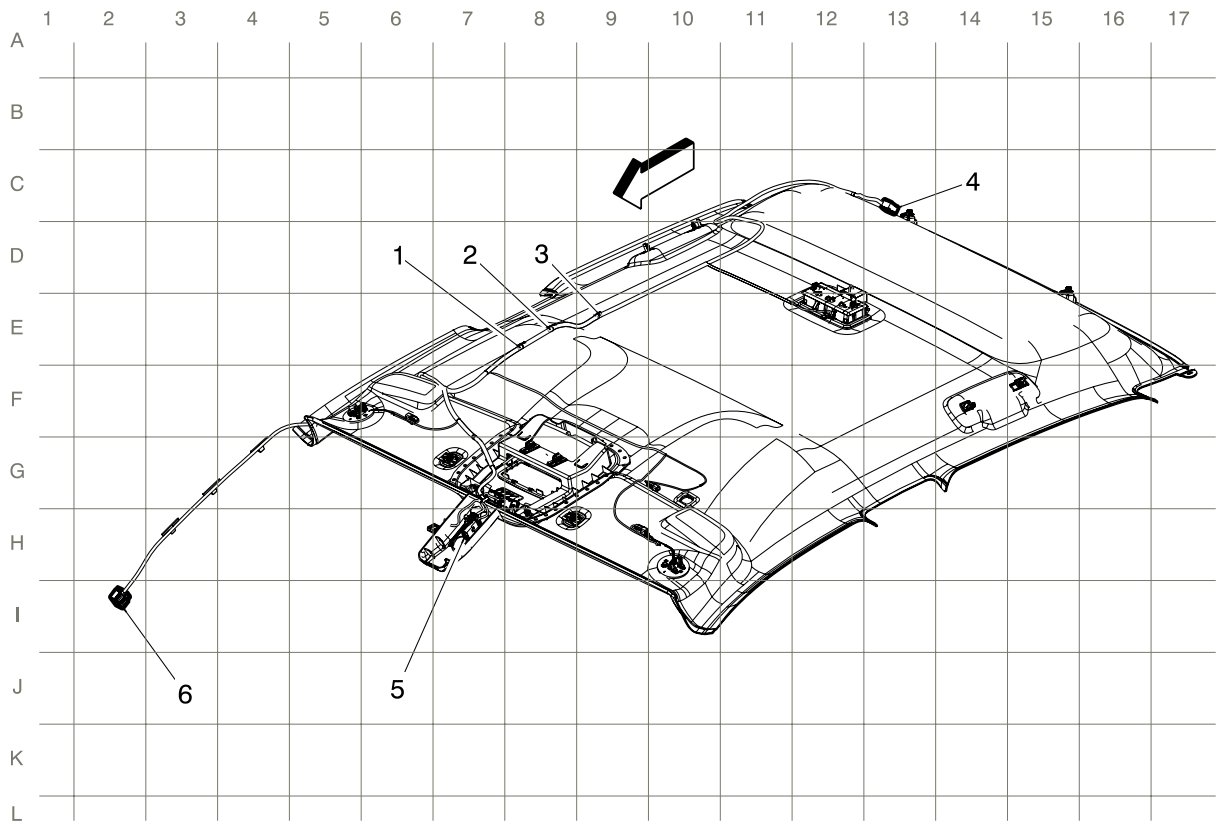

Items

1. J307
2. J306
3. J308
4. X301
5. X304 (C68)
6. X300

Headliner Harness Routing (Extended Cab)

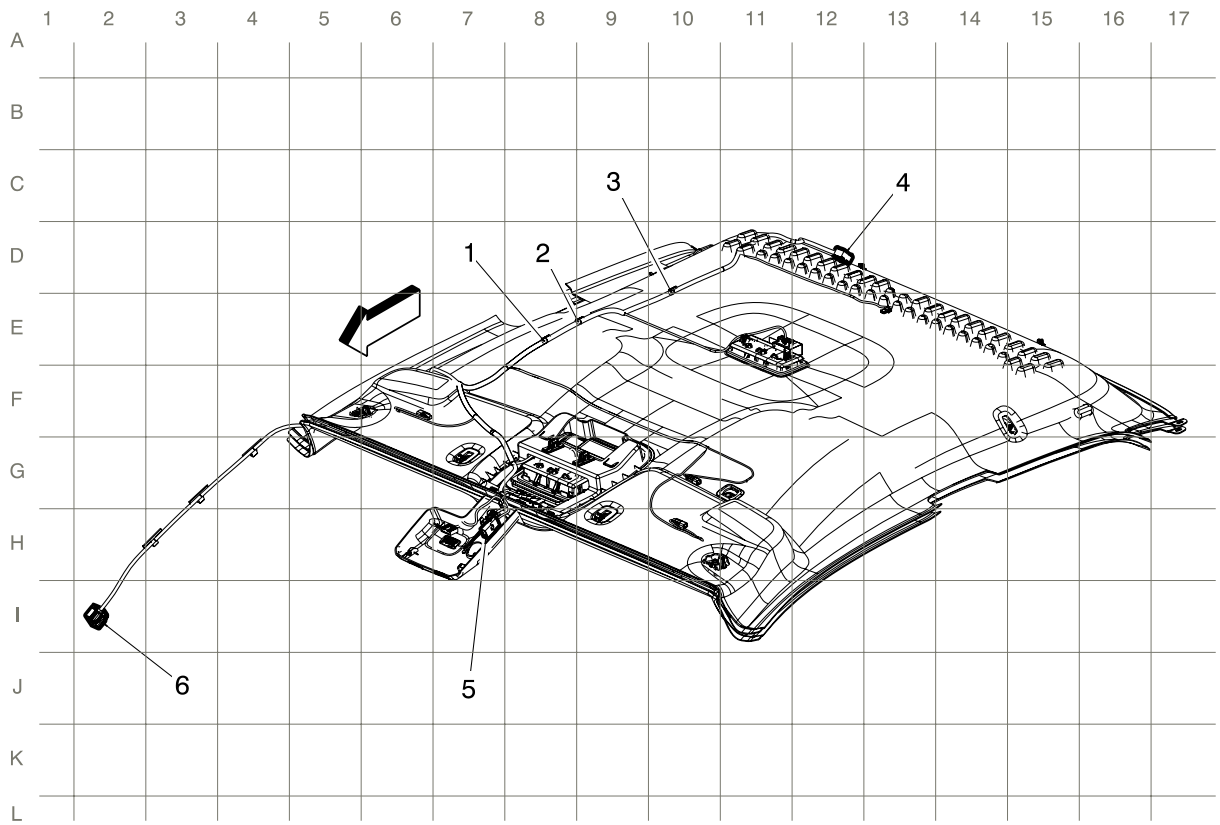

Items

1. J307
2. J306
3. J308
4. X301
5. X304 (C68)
6. X300

Chassis Harness Routing (Crew Cab)

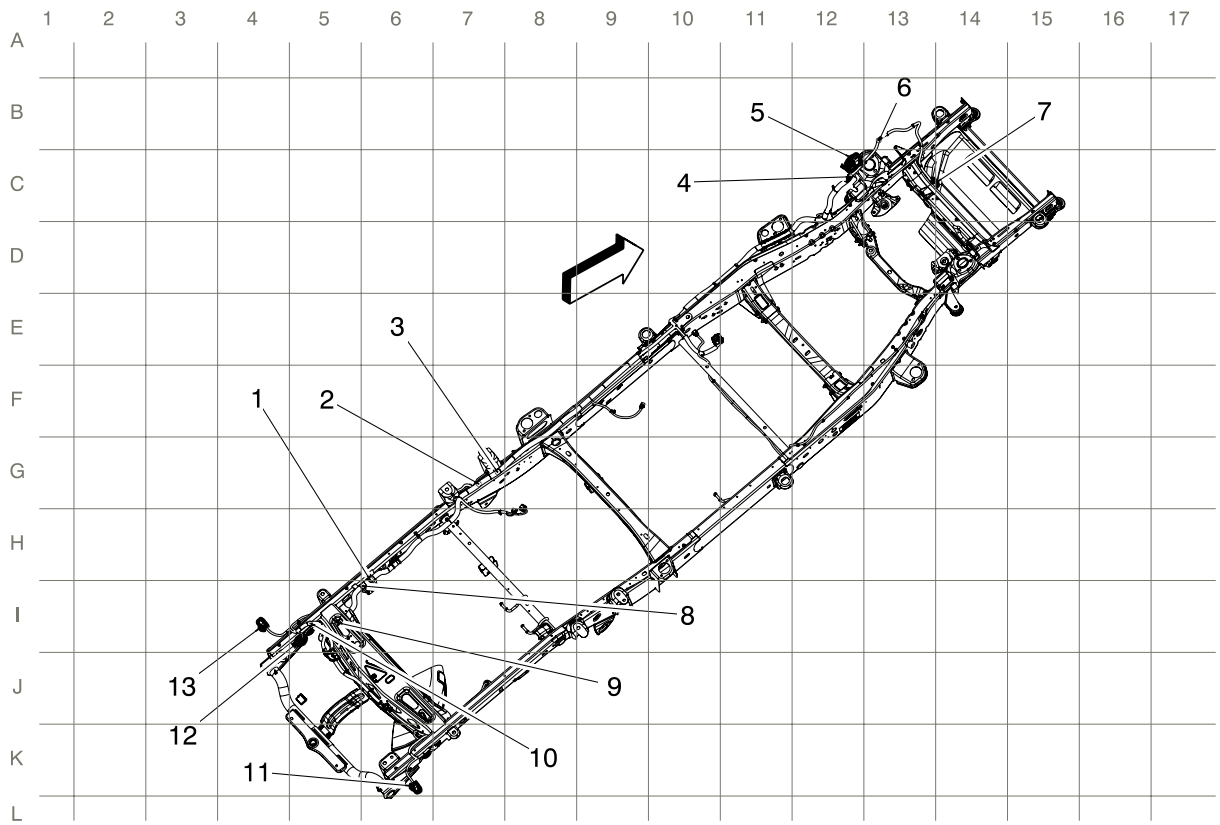

Items

1. J403 (LFX)
2. J404
3. J405 (LCV/LFX)
4. J105
5. X106
6. J104
7. X103
8. J401 (LCV/LFX)
9. J400
10. J402
11. X420
12. X400
13. X410

Chassis Harness Routing (Extended Cab)

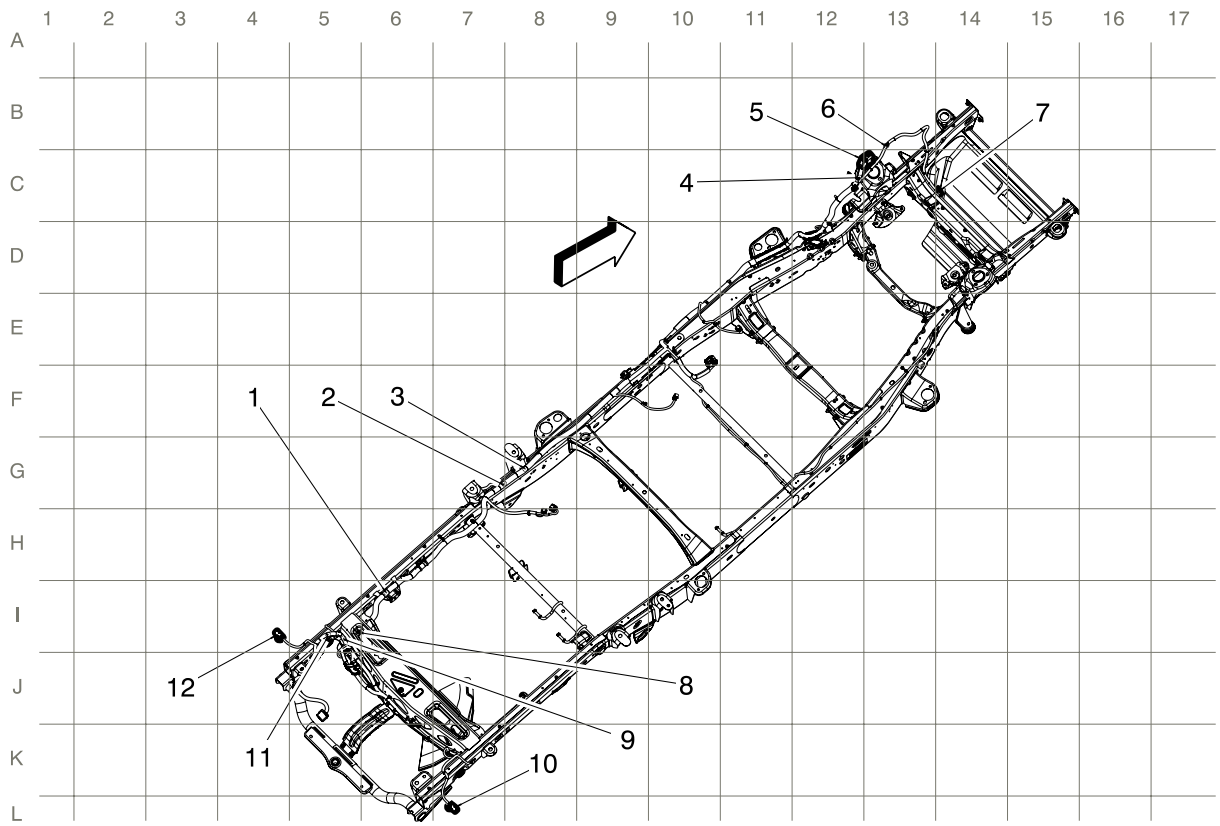

Items

1. J403 (LFX)
2. J404
3. J405 (LCV/LFX)
4. J104
5. X106
6. J105
7. X103
8. J401 (LCV/LFX)
9. J402
10. X420
11. J400
12. X410

Chassis Harness Routing (LWN)

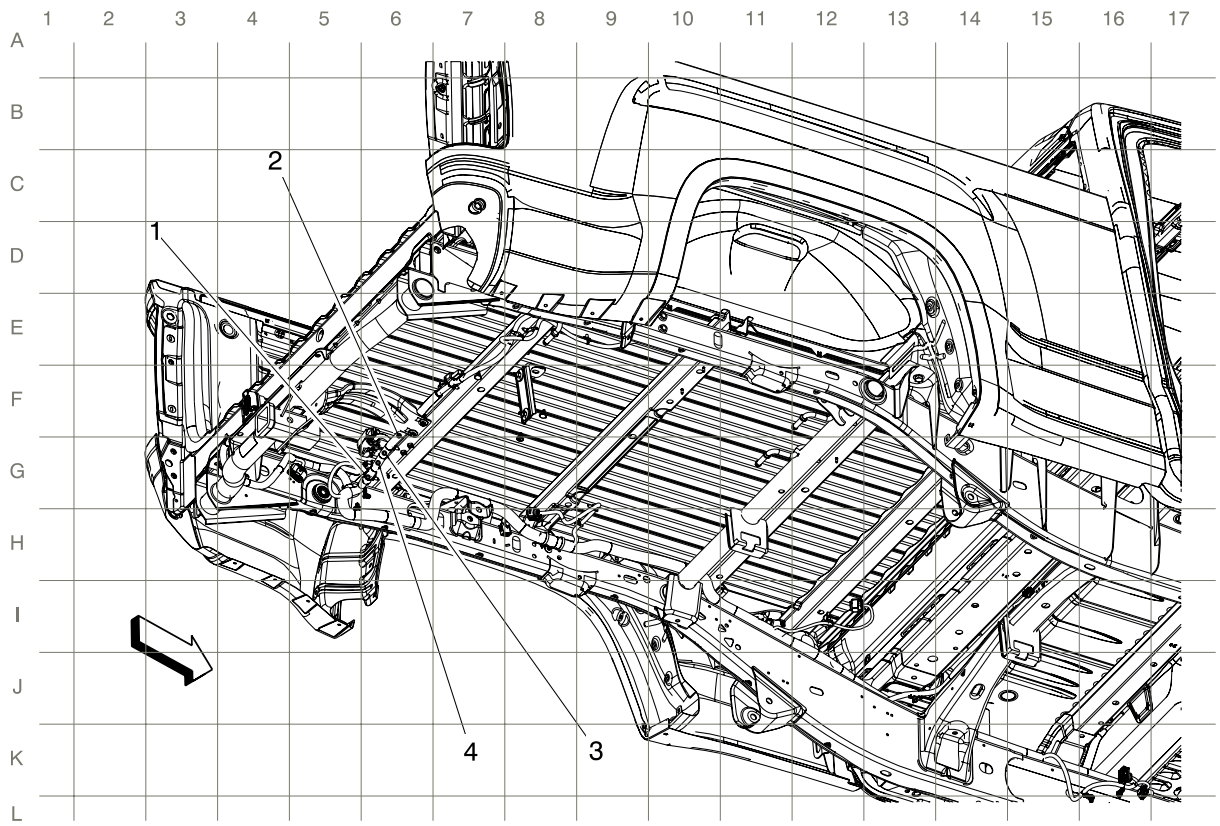

Items

1. J412 (Crew Cab with LWN)
2. J402
3. J410 (LWN)
4. J411 (Crew Cab with LWN)

Chassis Harness Routing (S0Y)

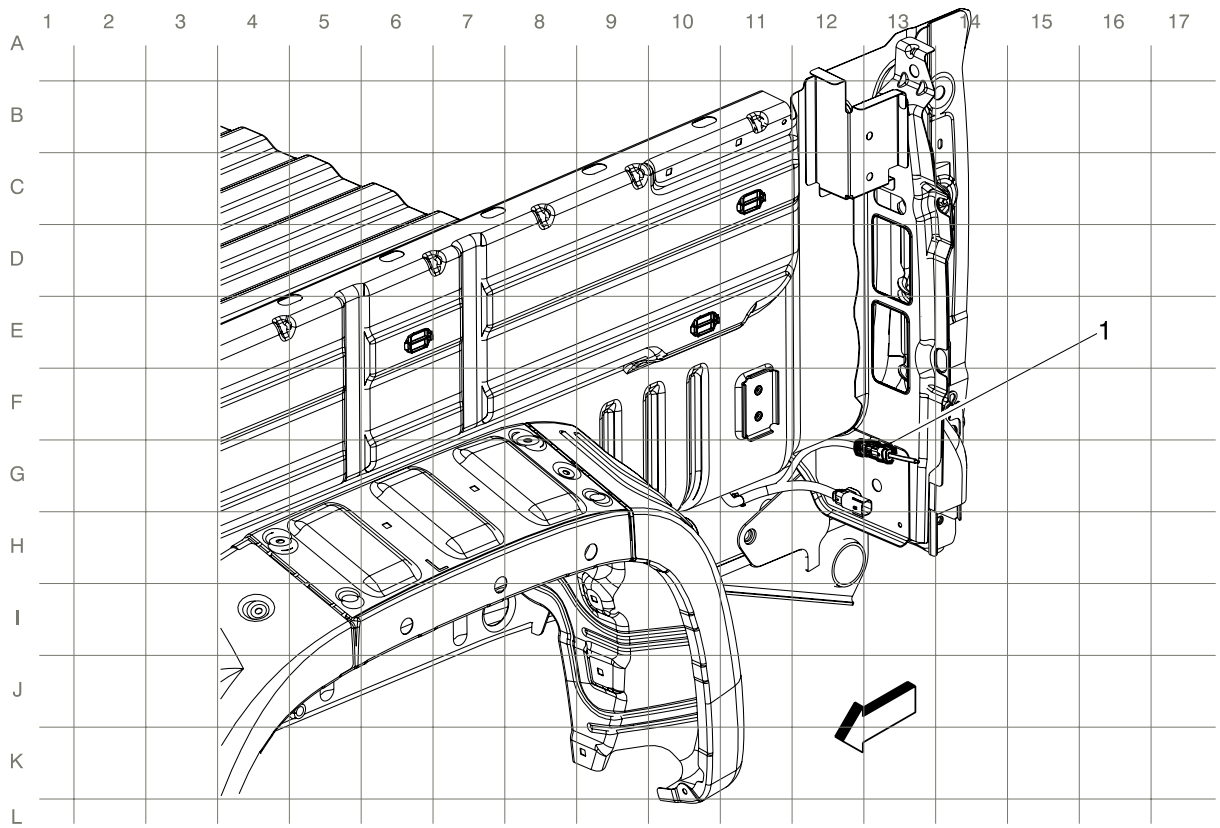

Items

1. X401 (S0Y)

Rear License Plate Harness Routing

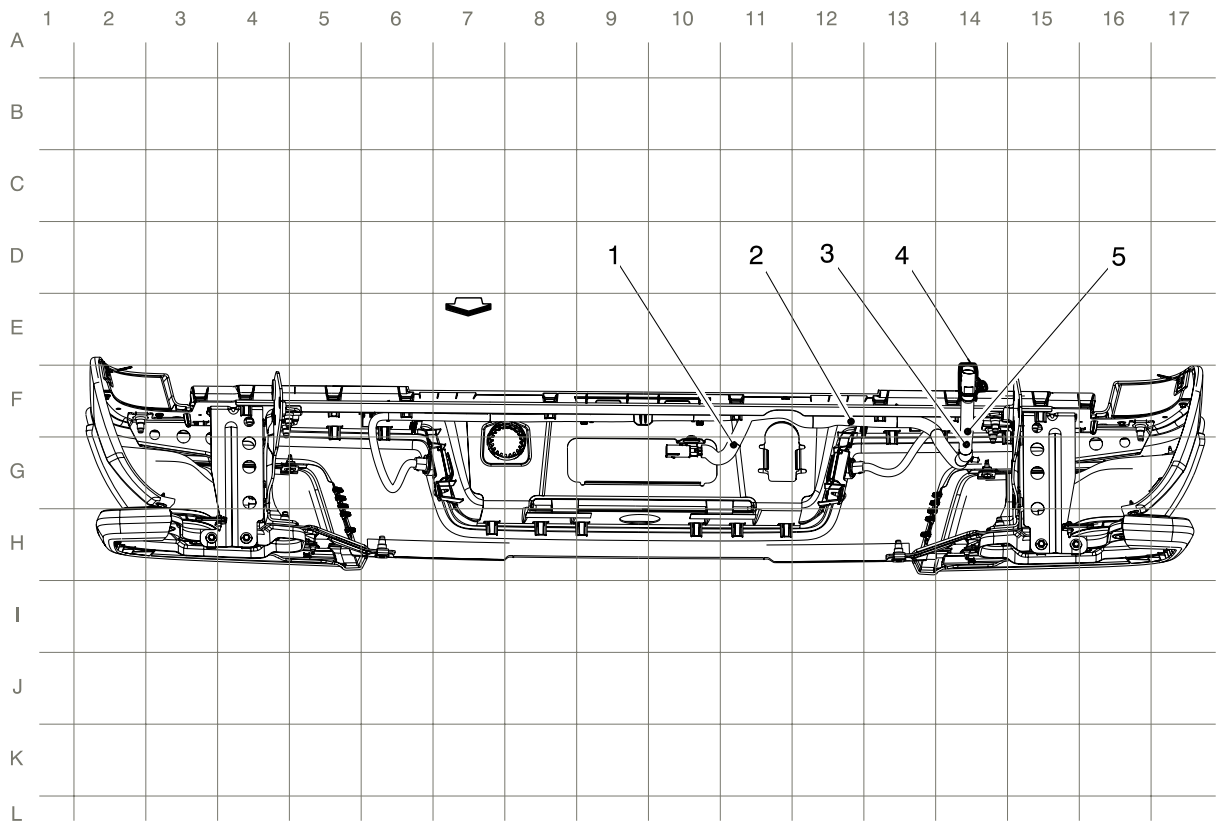

Items

1. J409
2. J408
3. J407
4. X400
5. J406

B+ Bus X50D Fuse Block - Battery

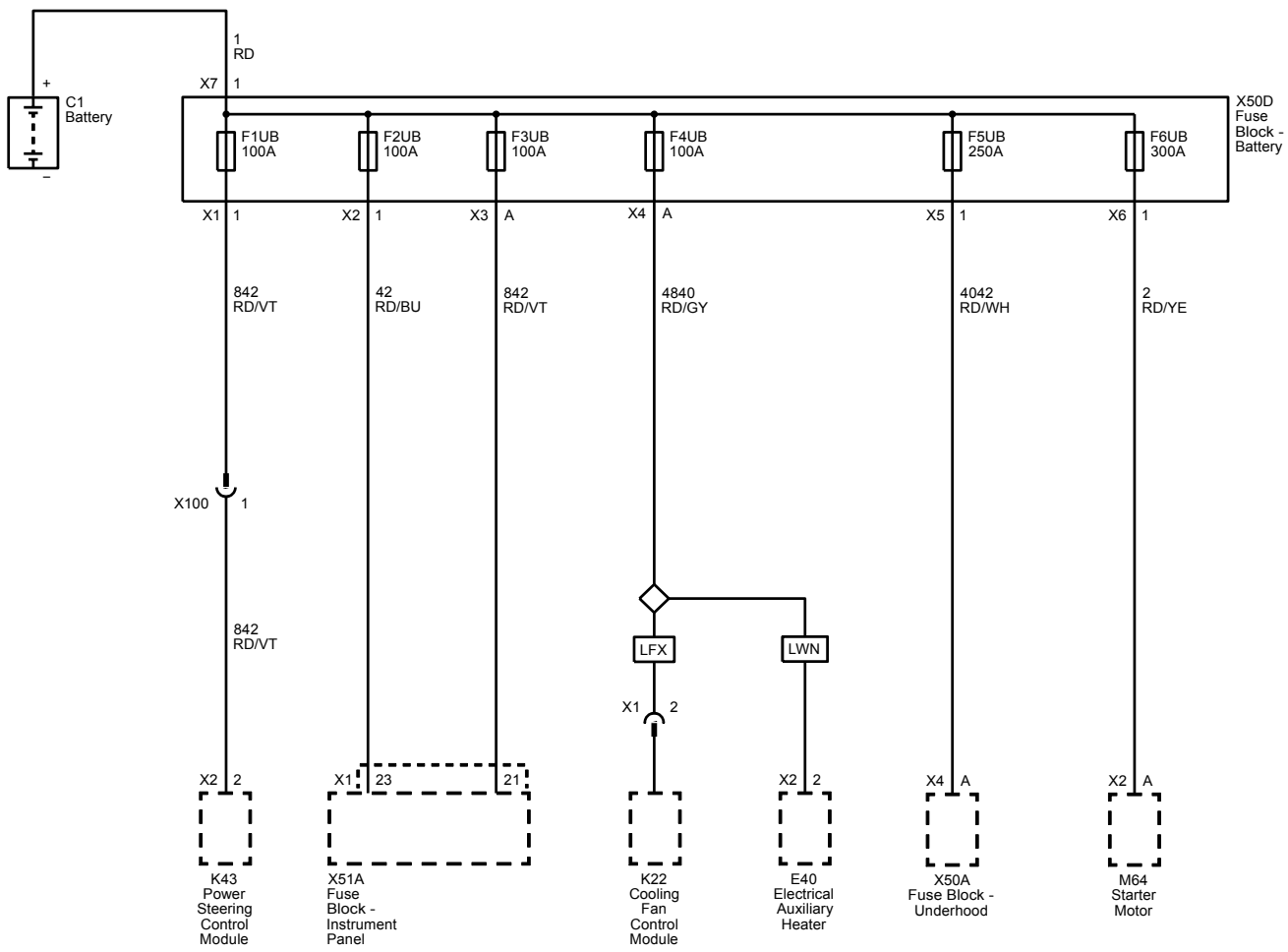

B+ Bus X50A Fuse Block - Underhood (1 of 2)

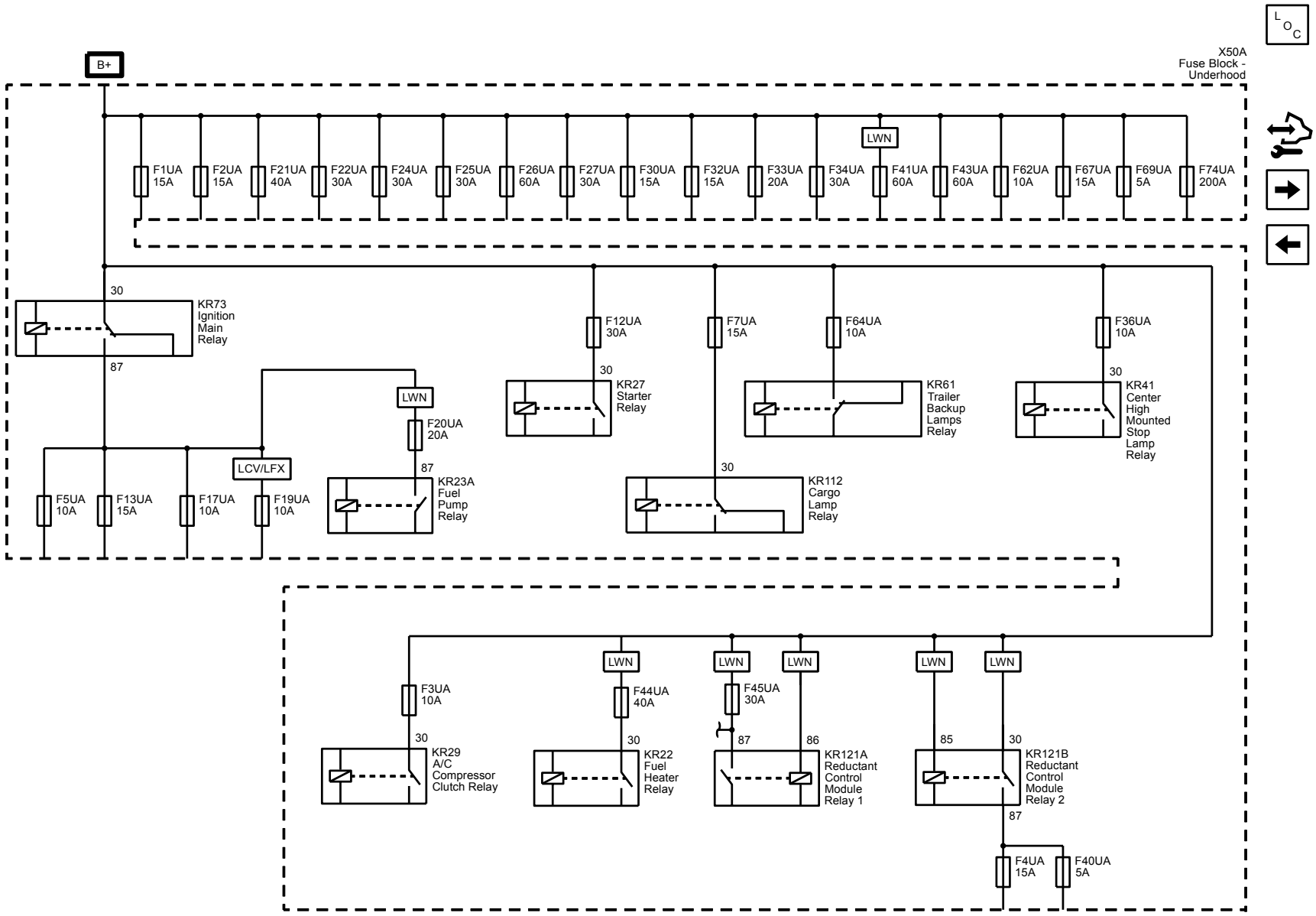

B+ Bus X50A Fuse Block - Underhood (2 of 2)

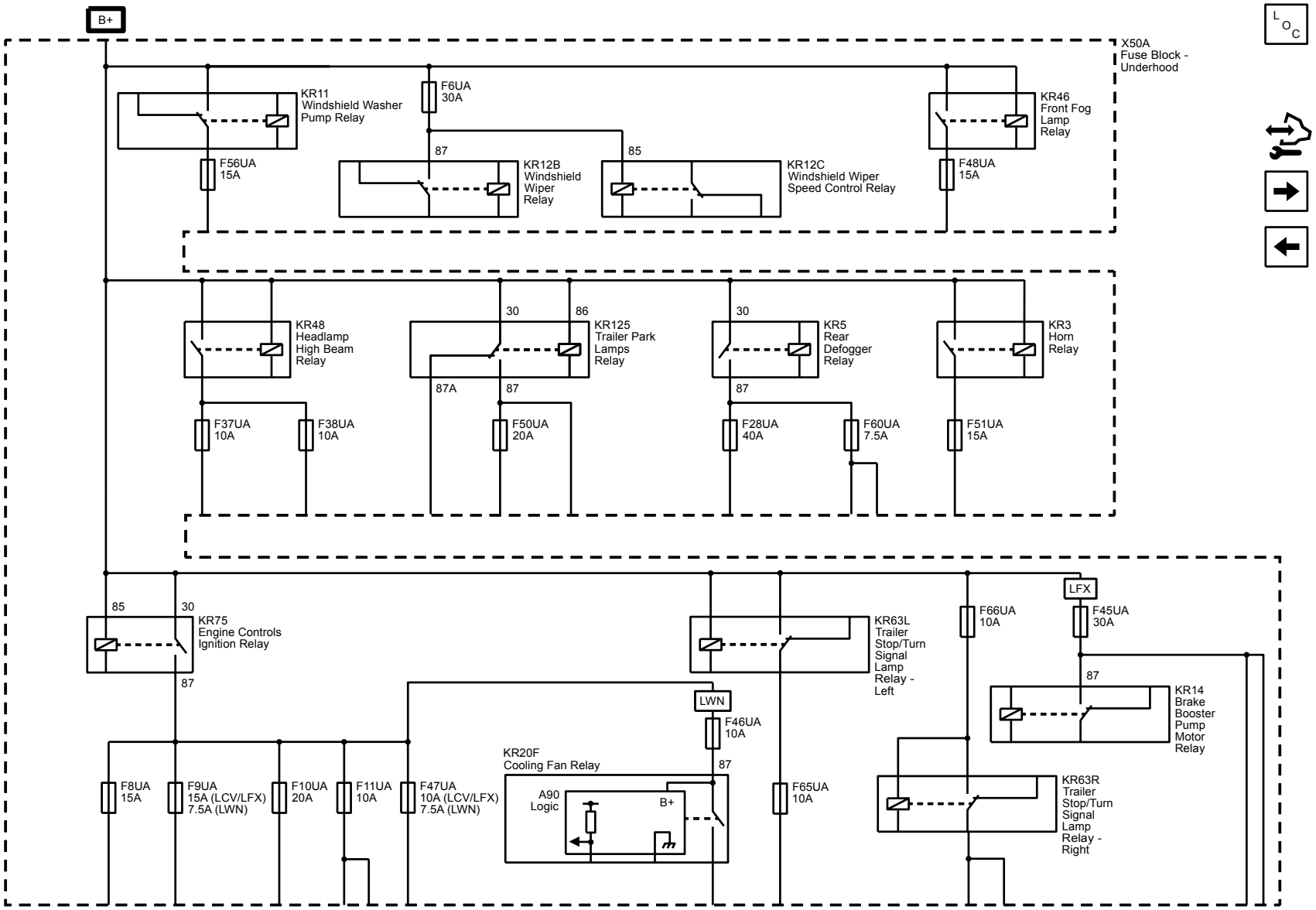

F1UA, F2UA, F21UA, F22UA, F24UA, F25UA, F26UA, F27UA, F30UA, and F32UA Fuses

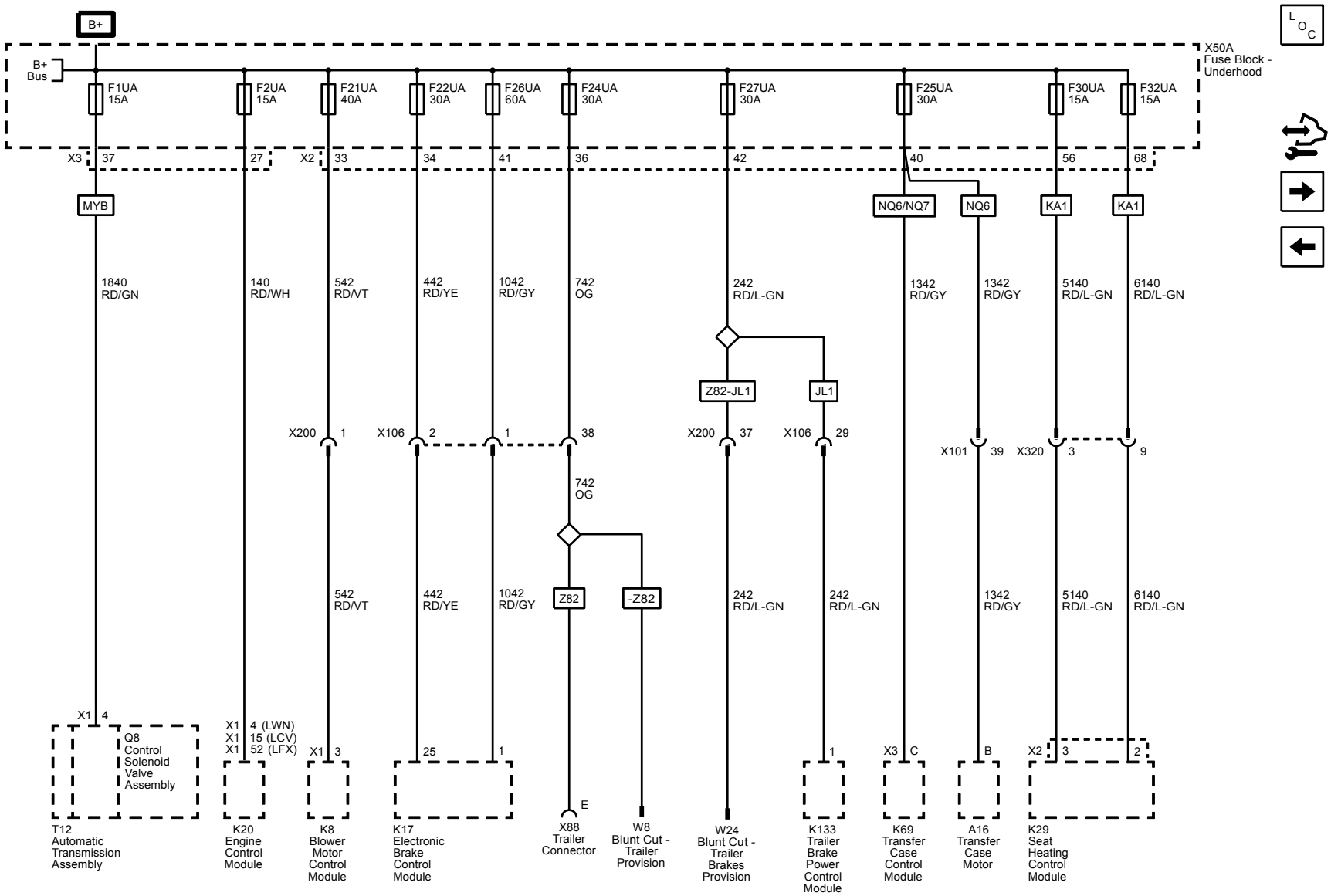

F3UA, F33UA, F34UA, F43UA, F62UA, F67UA, F69UA, and F74UA Fuses

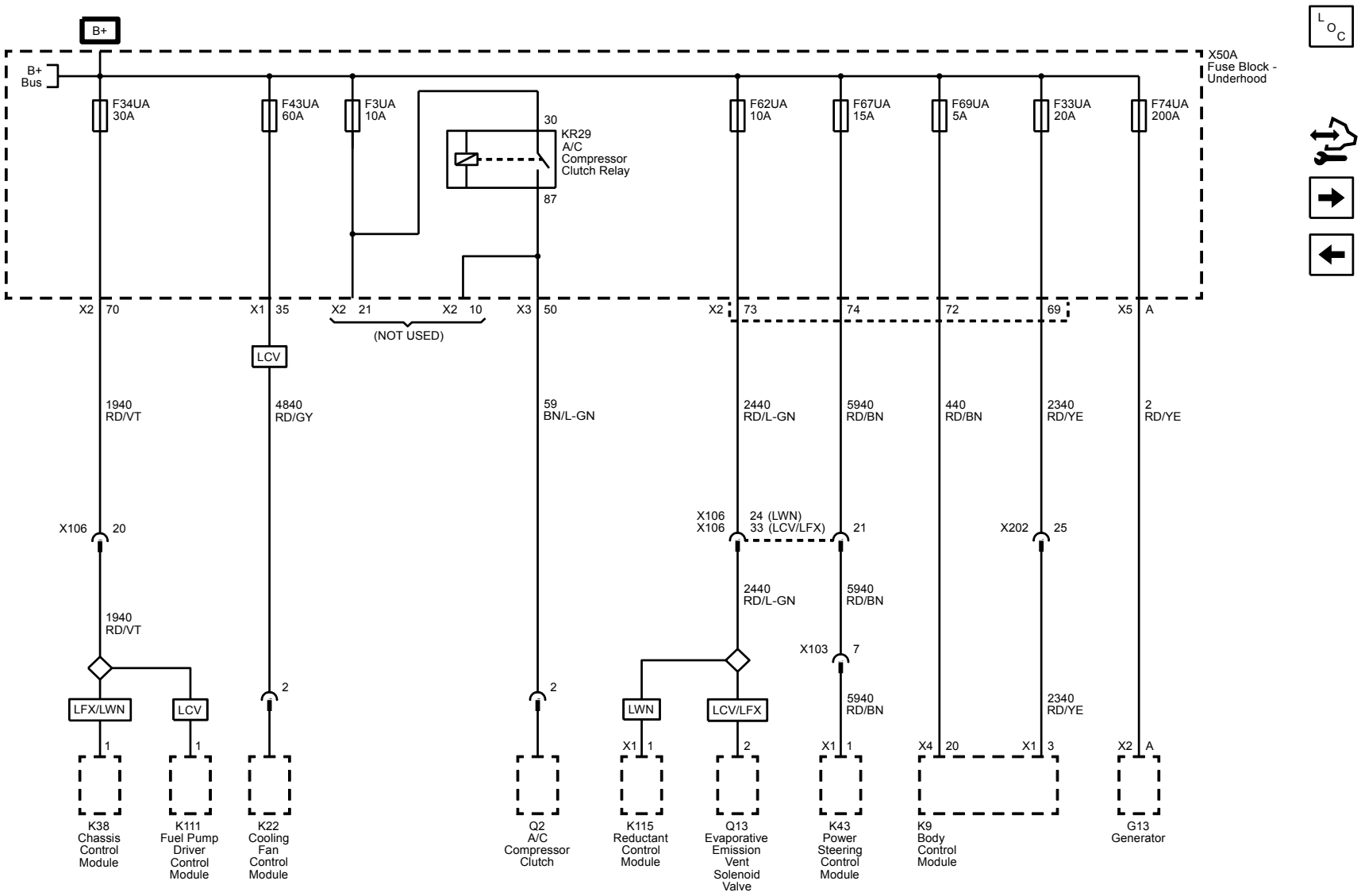

F4UA, F40UA, F41UA, and F45UA Fuses (LWN)

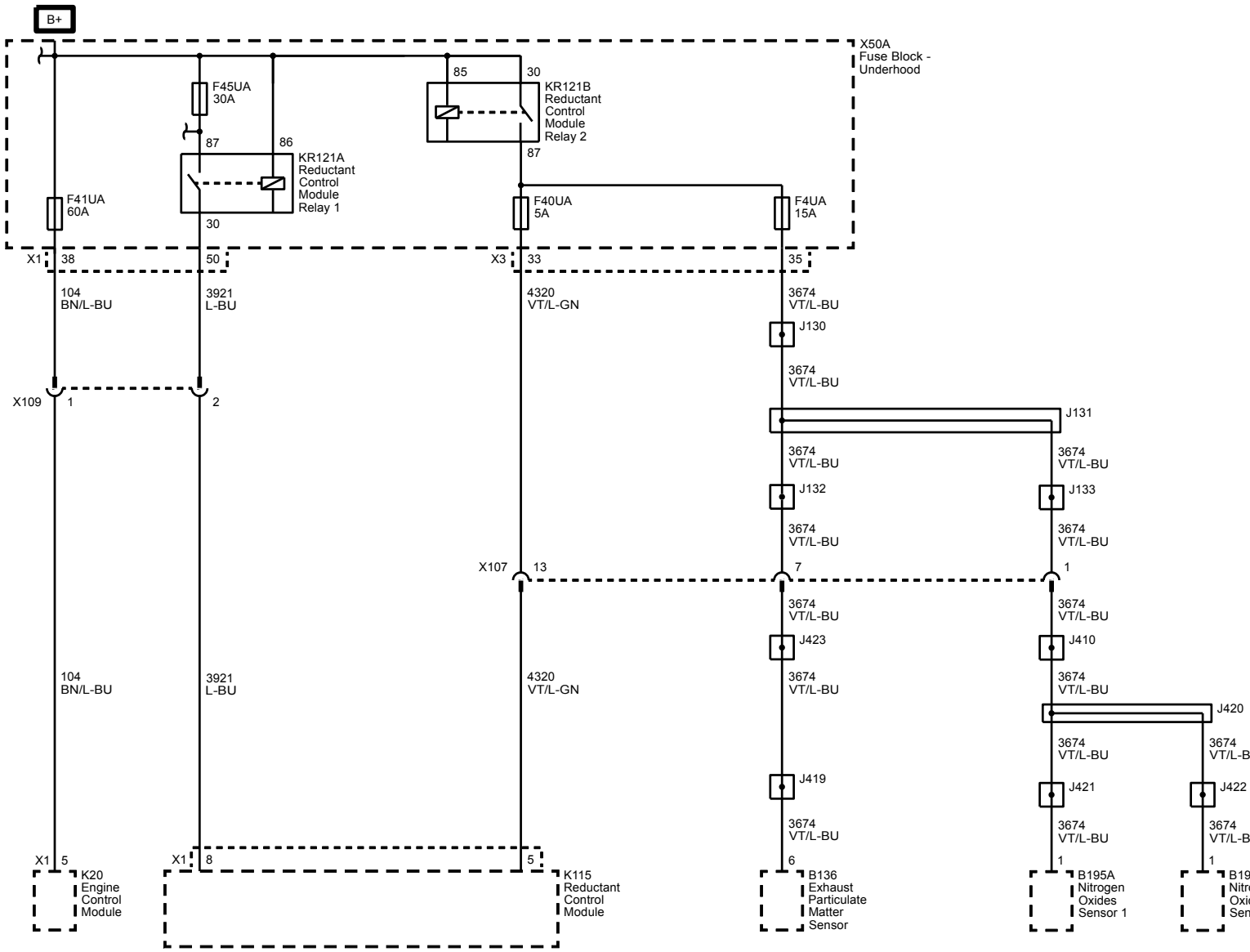

F5UA, F12UA, F13UA, F17UA, F19UA, and F20UA Fuses

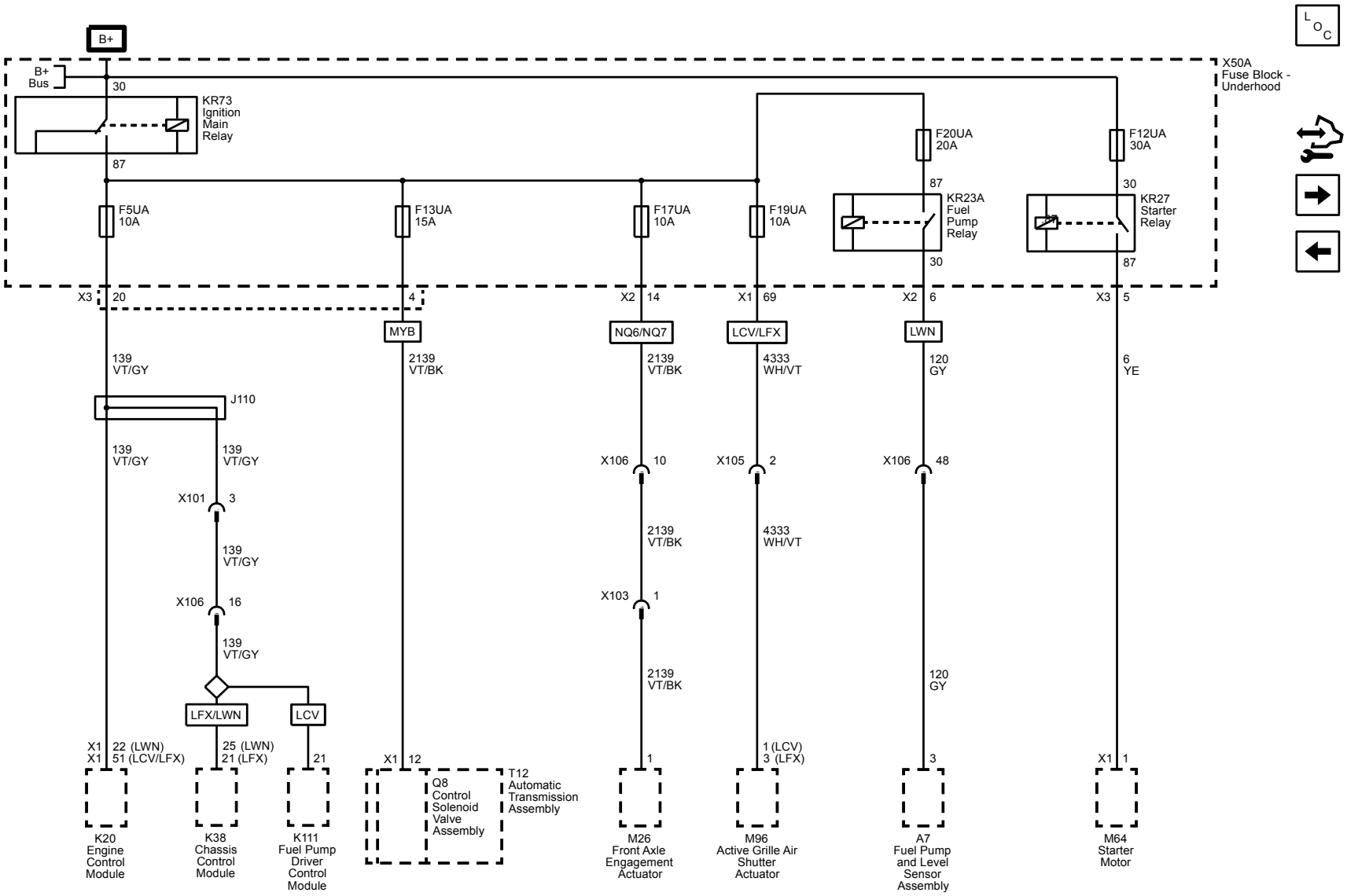

F7UA, F28UA, F36UA, F45UA, and F60UA Fuses

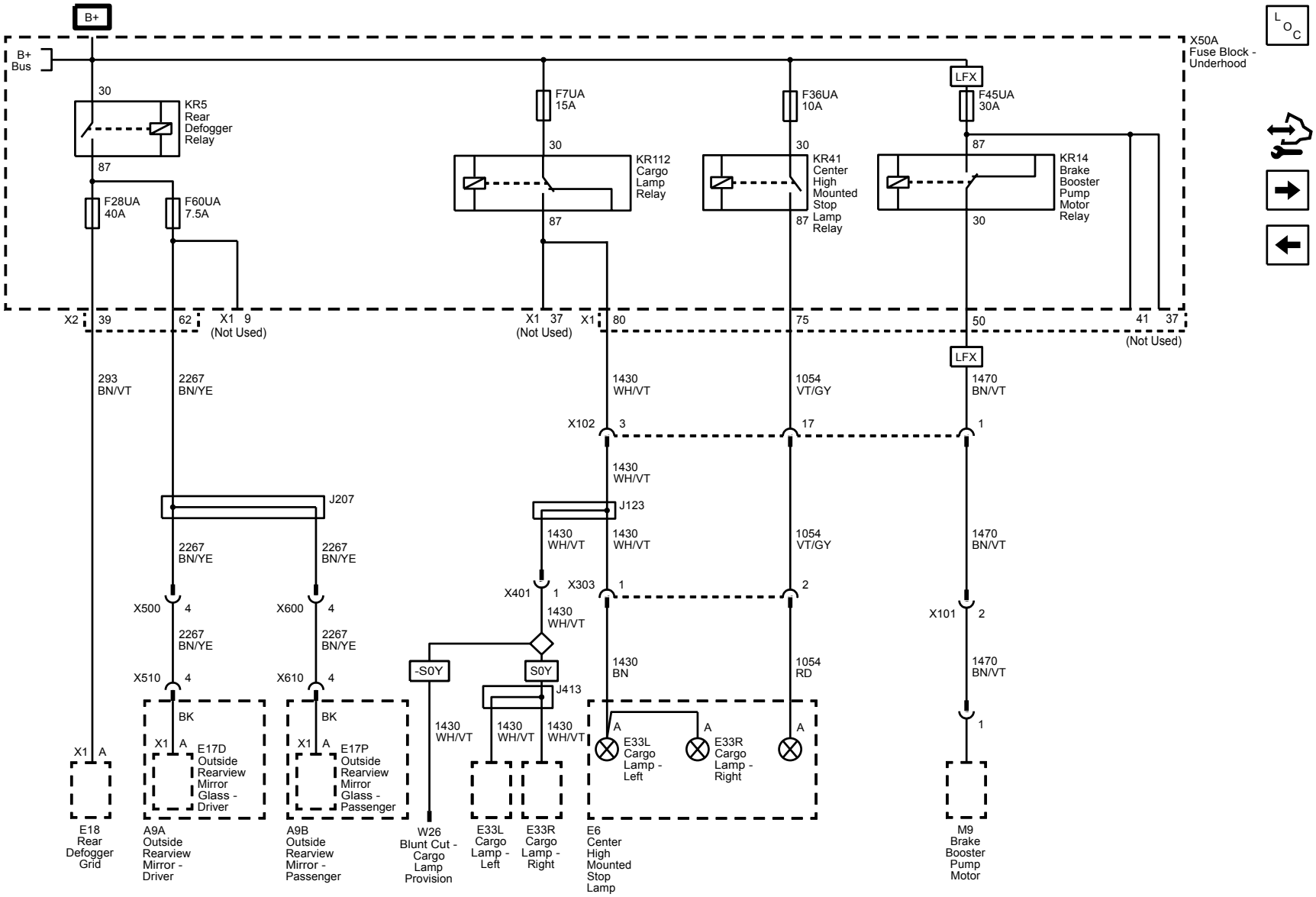

F8UA, F9UA, F10UA, F11UA, and F47UA Fuses (LCV/LFX/Gasoline)

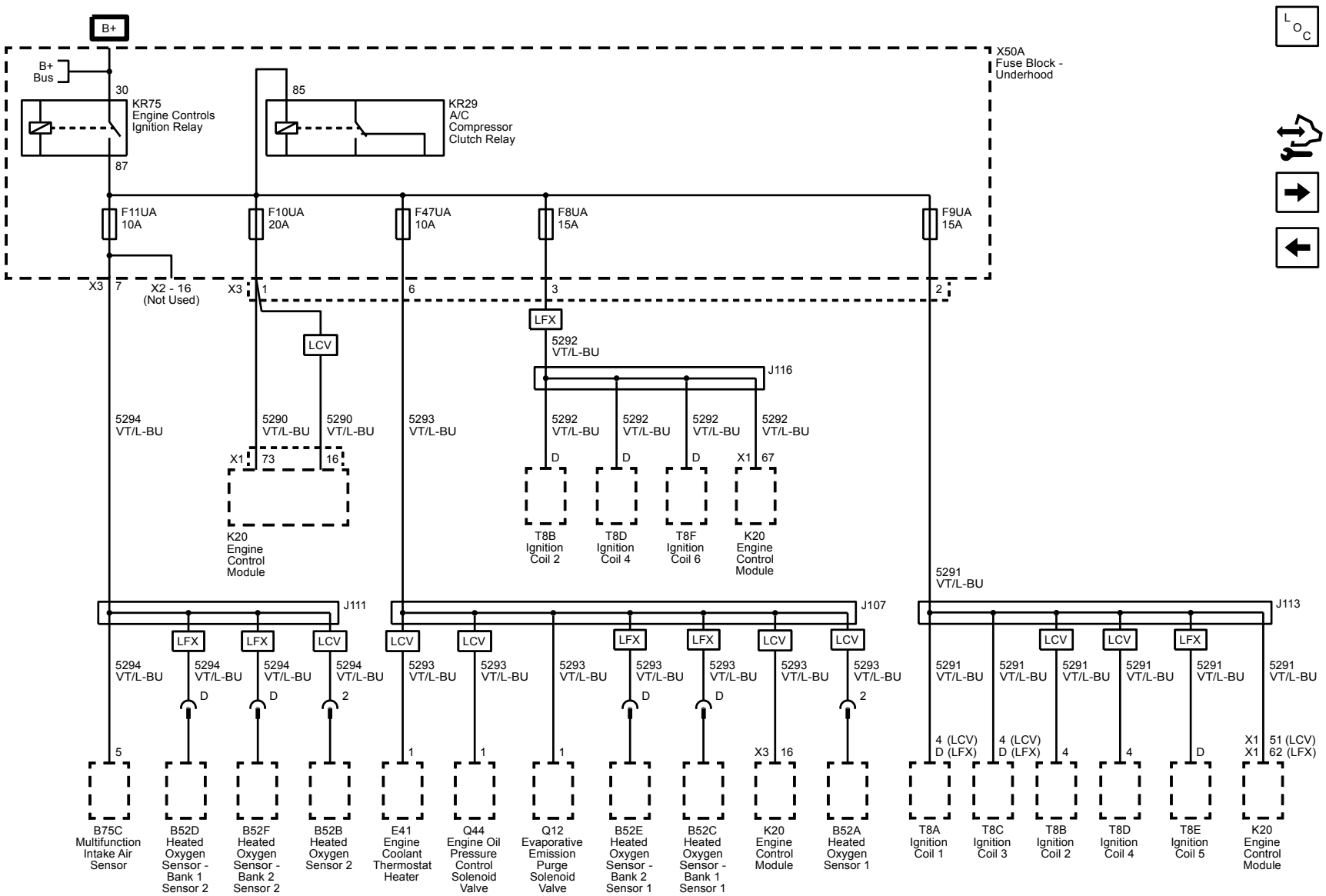

F8UA, F9UA, F10UA, F11UA, F46UA, and F47UA Fuses (LWN/Diesel)

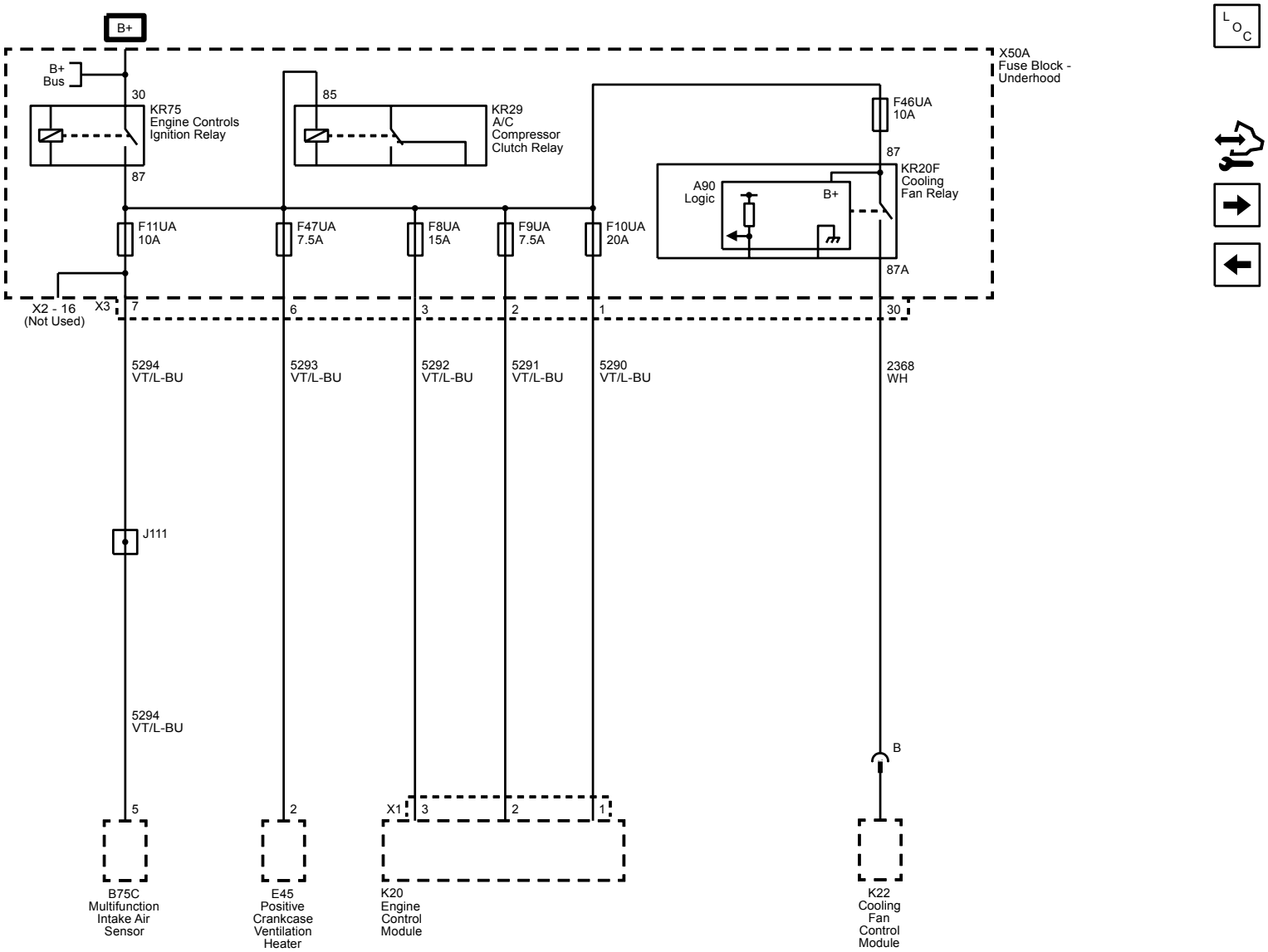

F37UA, F38UA, F48UA, F51UA, and F56UA Fuses

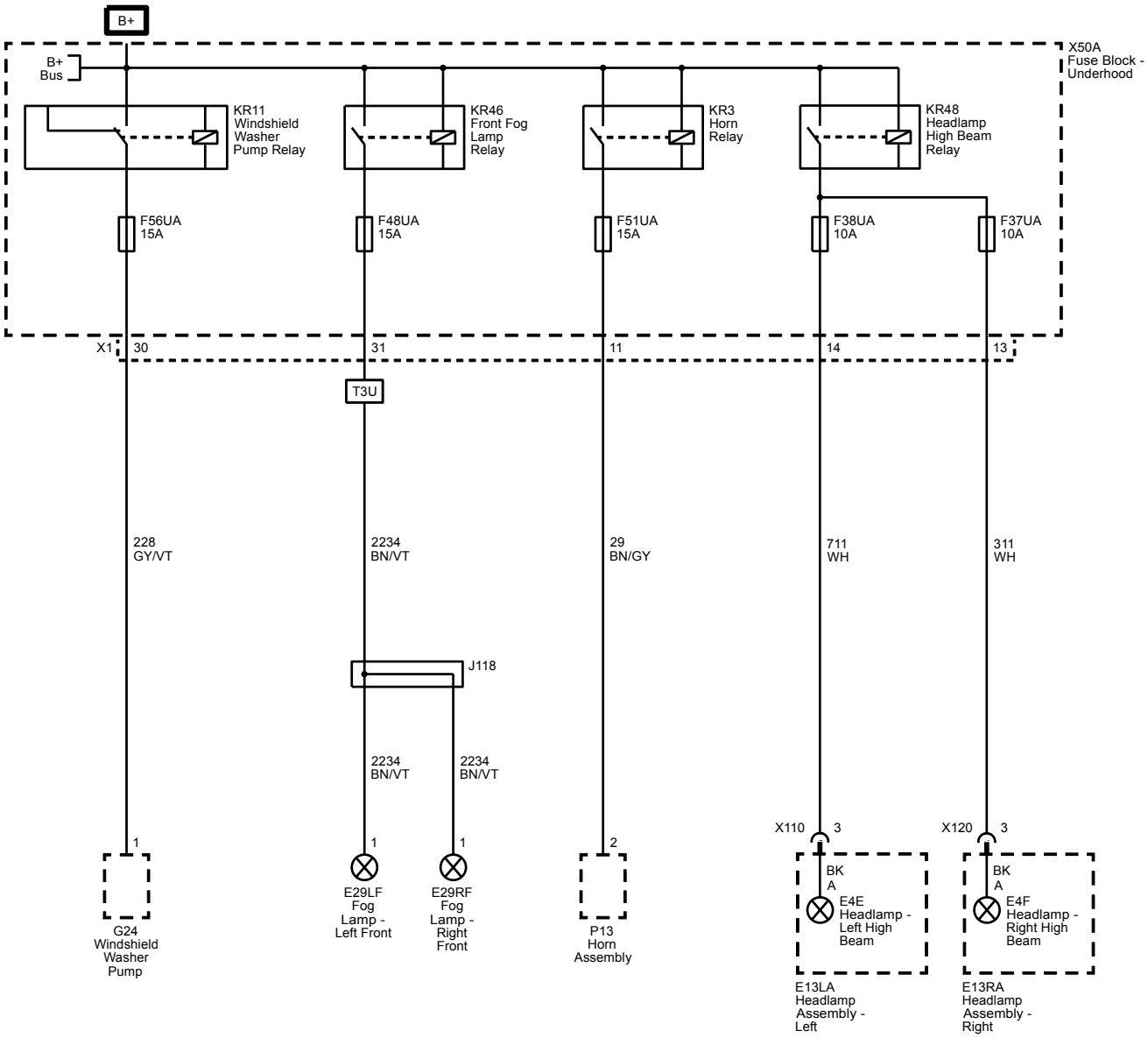

F50UA, F64UA, F65UA, and F66UA Fuses

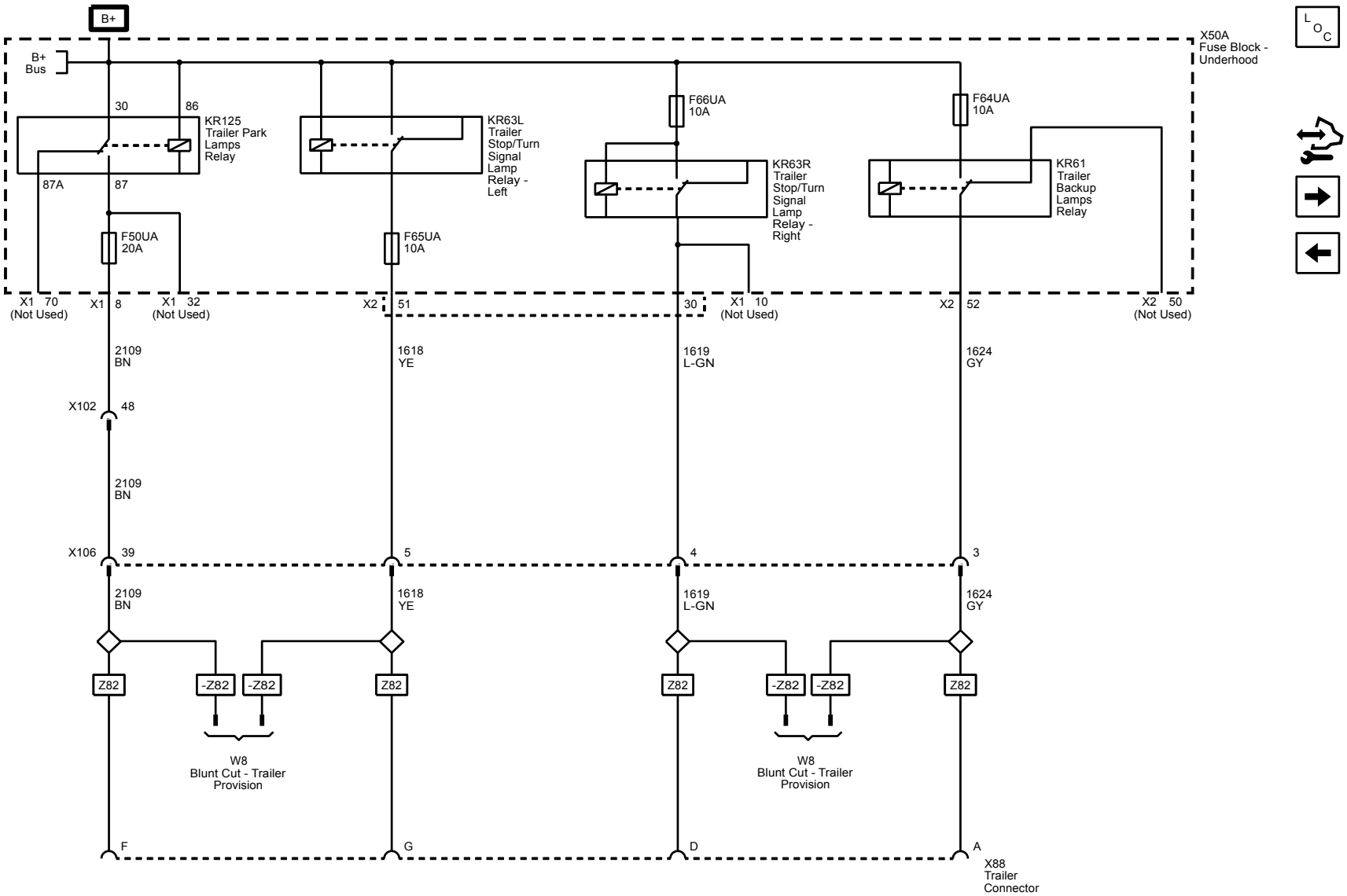

X51A Fuse Block - Instrument Panel Bussing

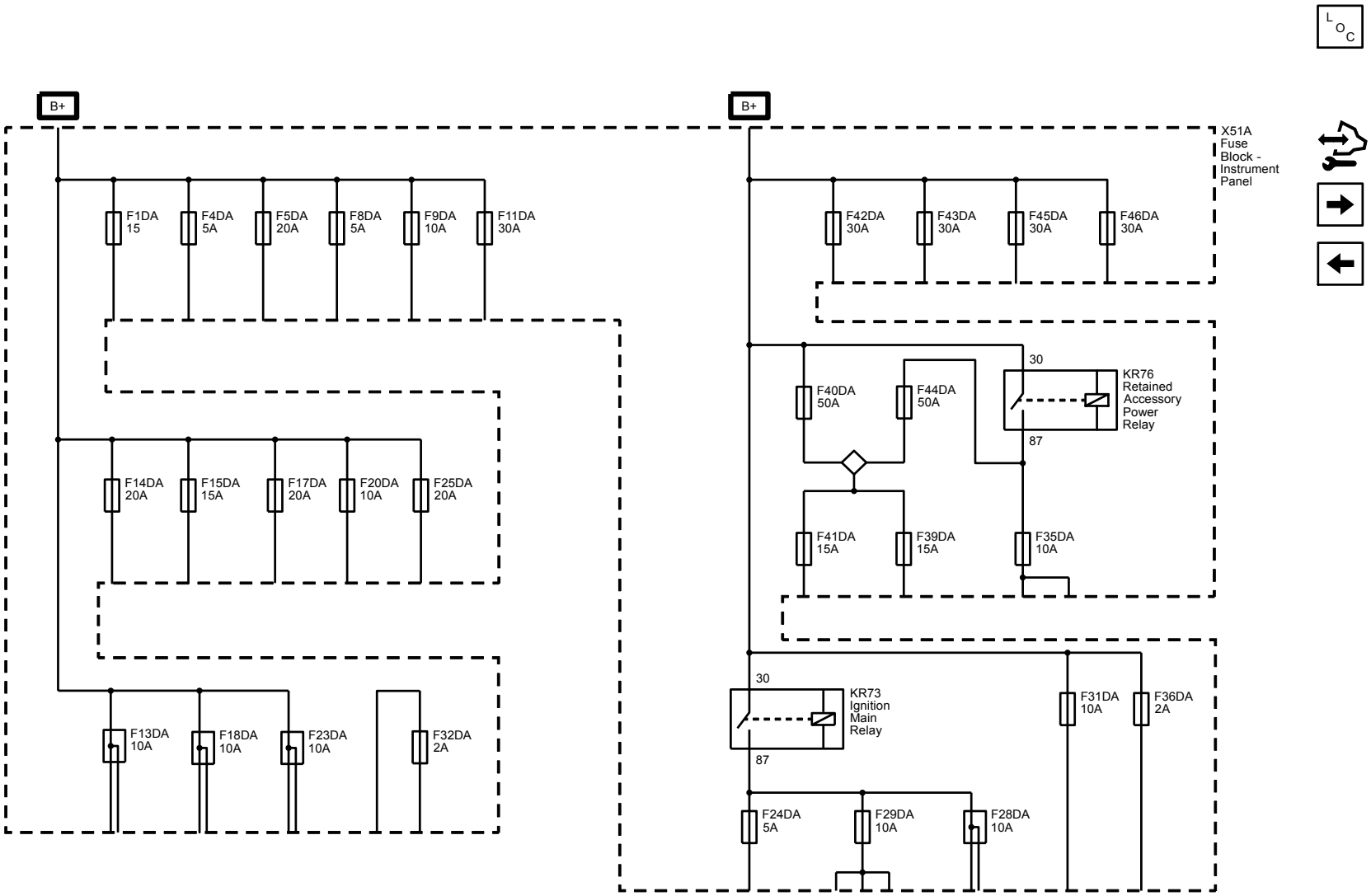

F1DA, F5DA, F9DA, F11DA, F14DA, F15DA, F17DA, F20DA, F25DA, and F32DA Fuses

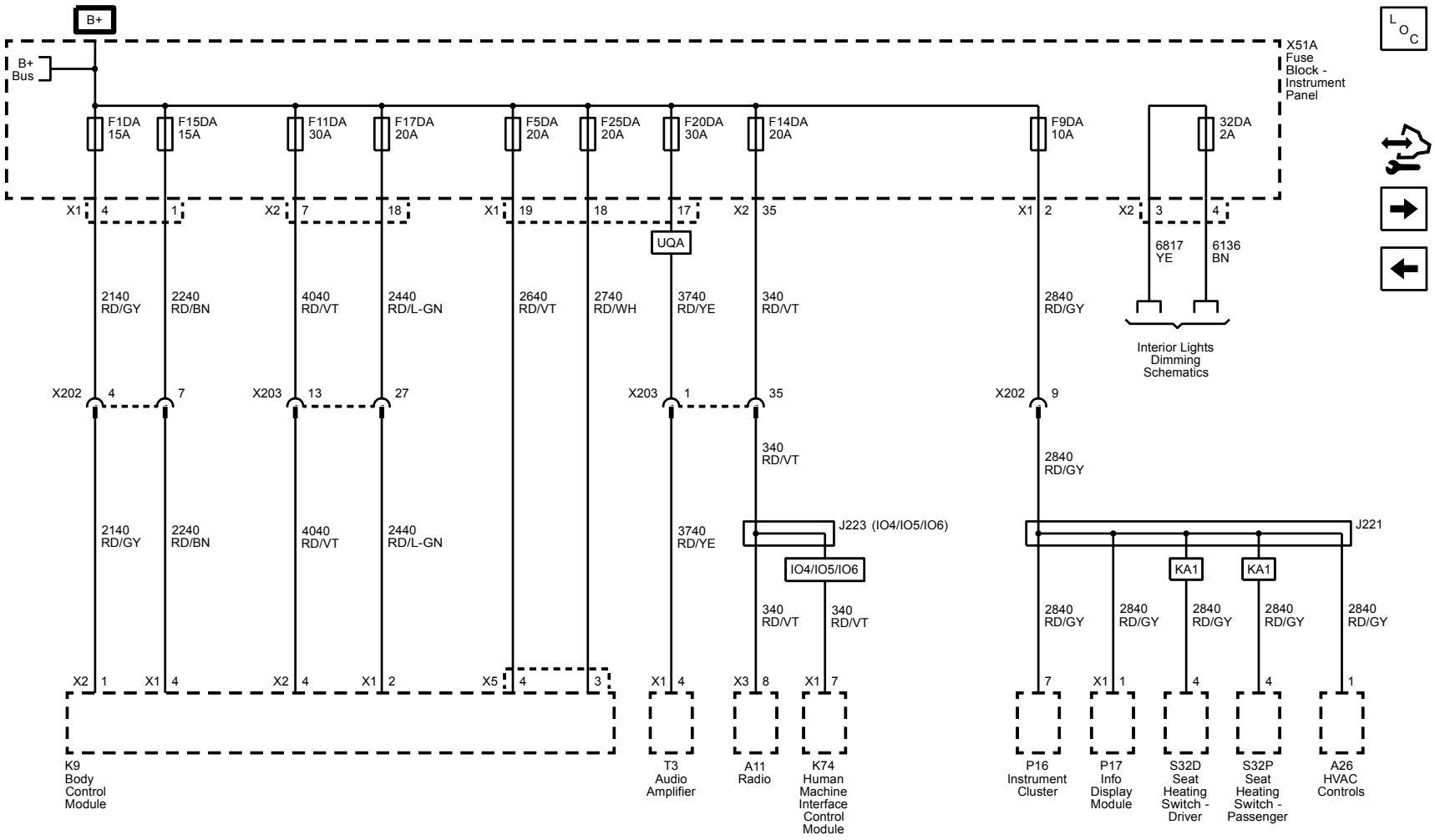

F4DA, F8DA, F13DA, F18DA, F23DA, and F32DA Fuses

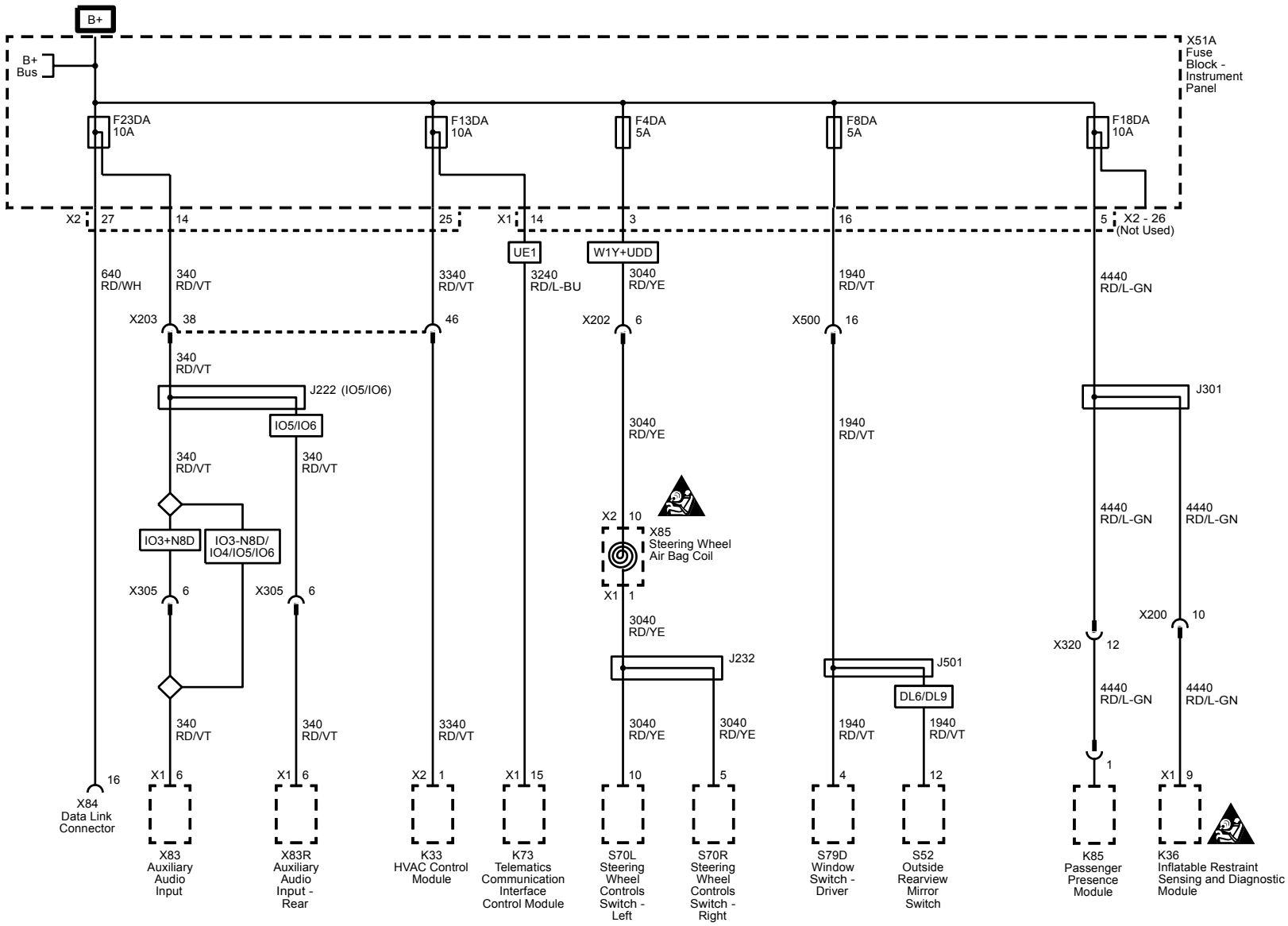

F24DA, F28DA, F29DA, F42DA, F43DA, and F46DA Fuses

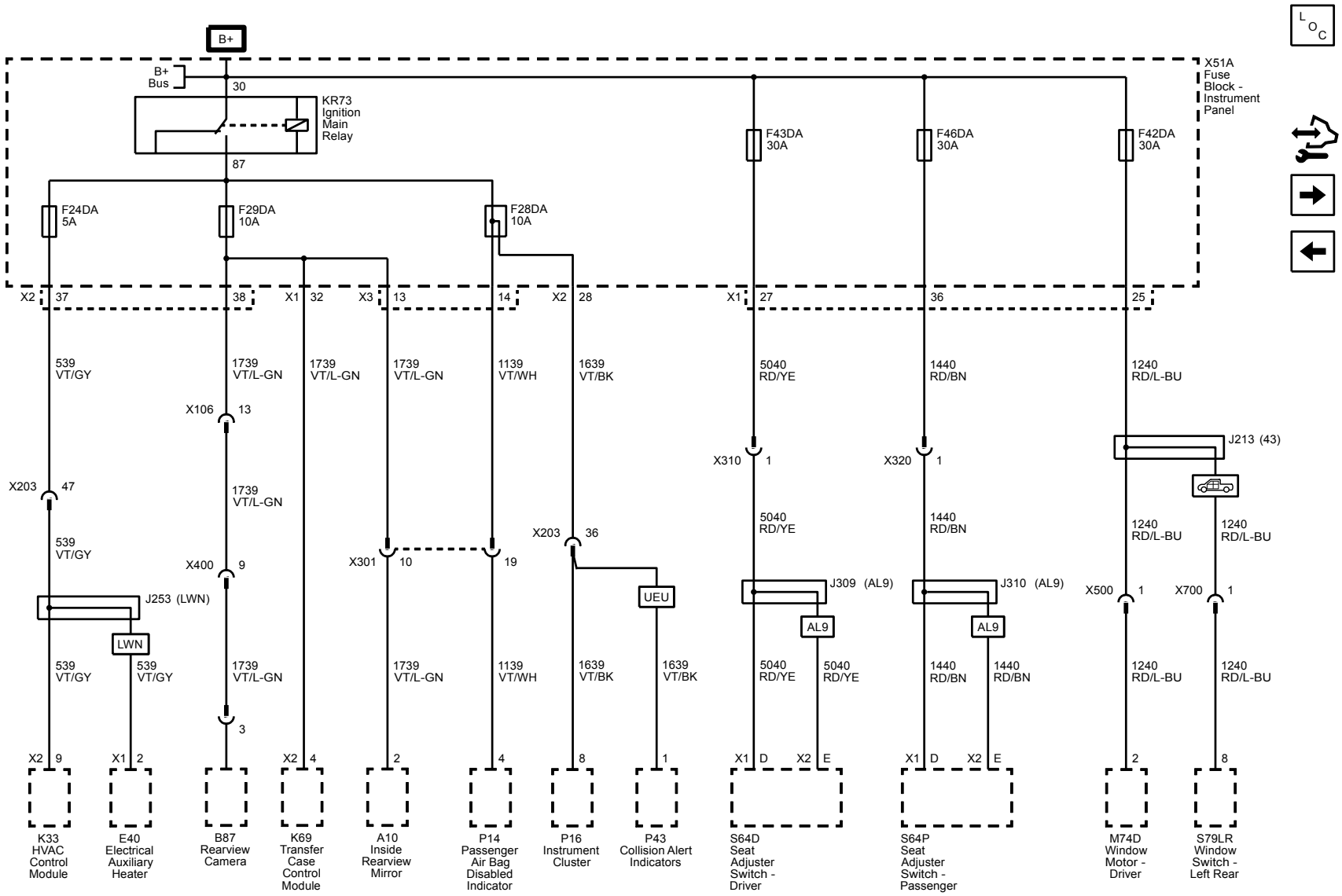

F31DA, F35DA, F36DA, F39DA, F40DA, F41DA, F44DA, and F45DA Fuses

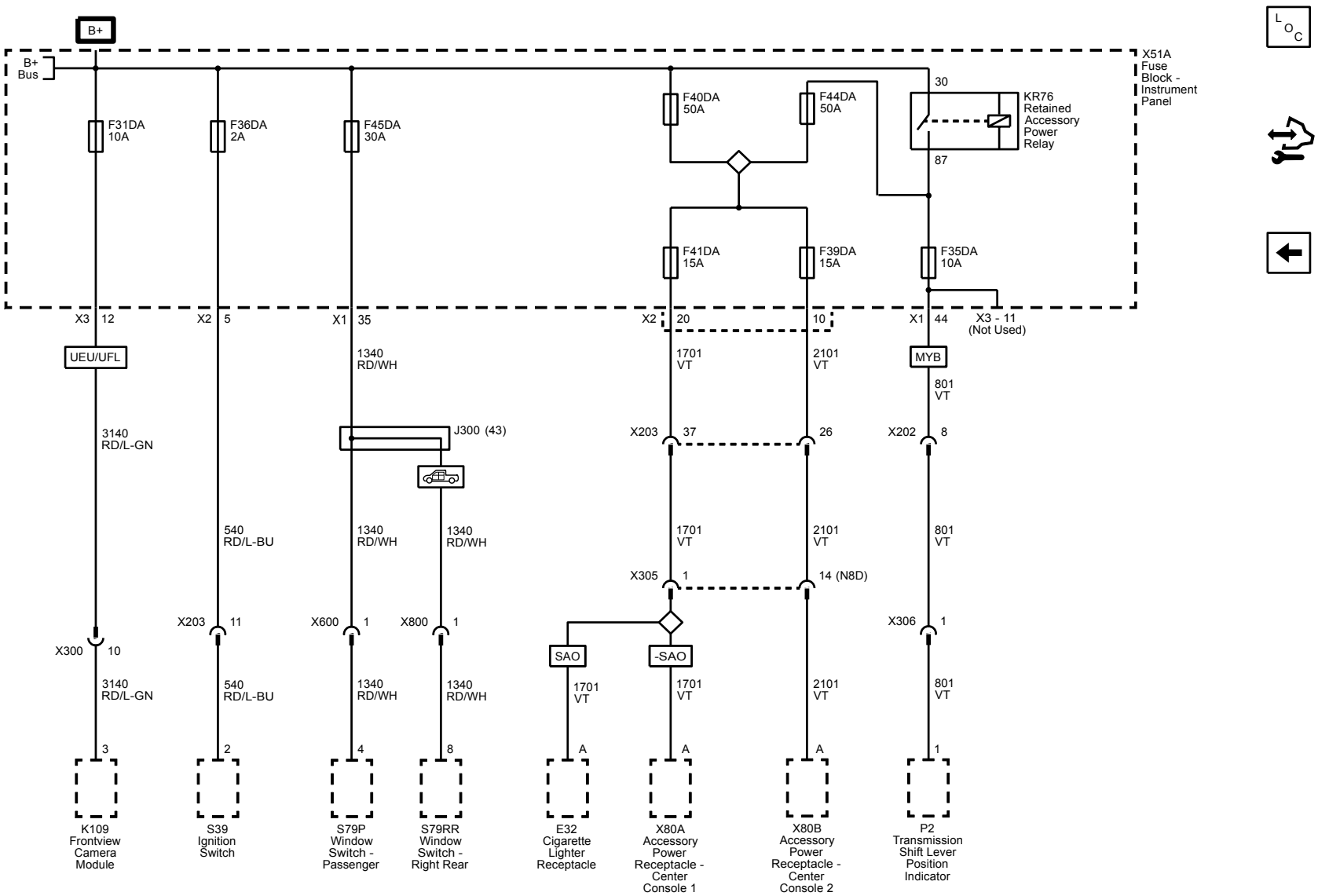

Ignition Switch

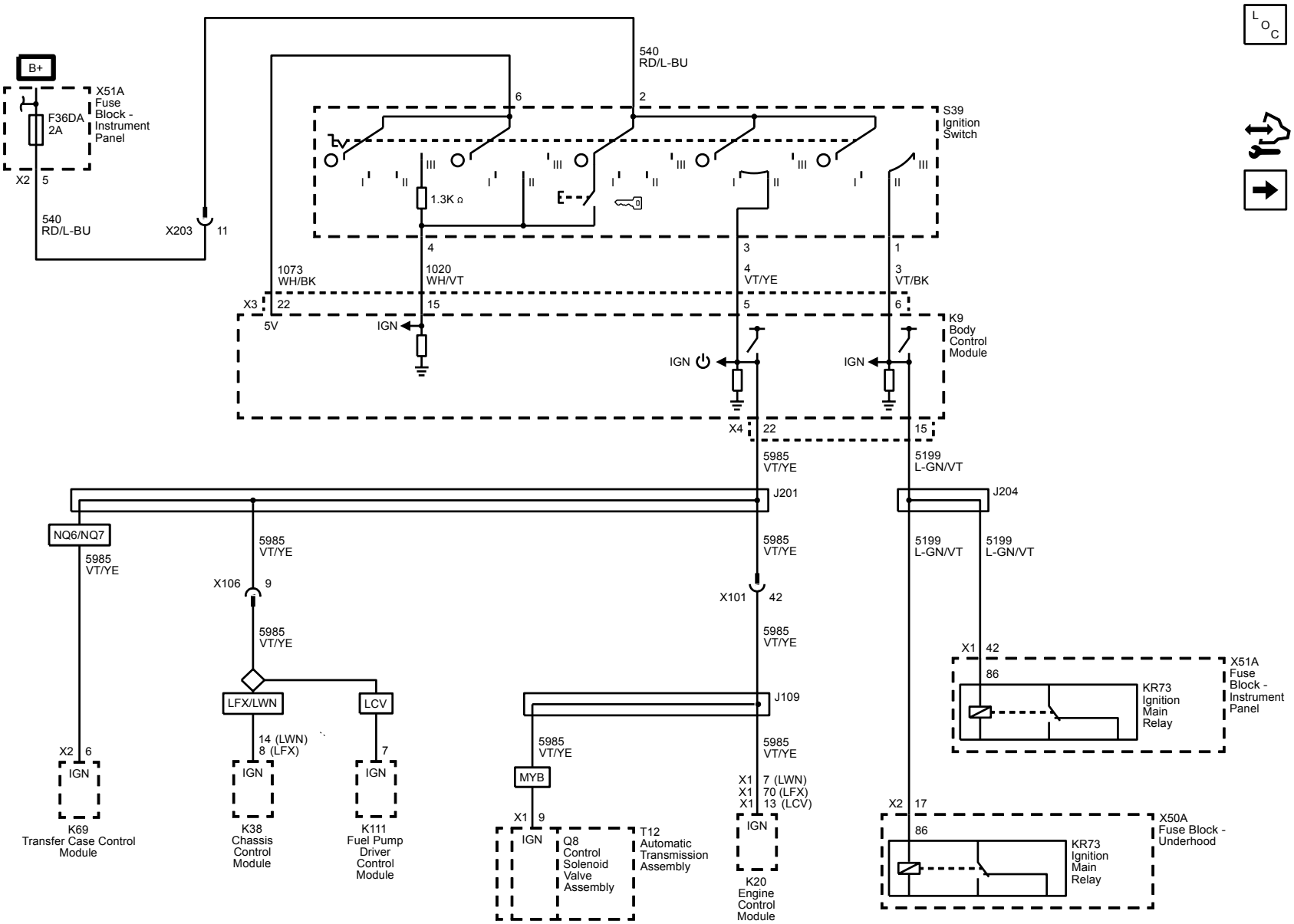

KR73 Ignition Main Relays and Accessory Power

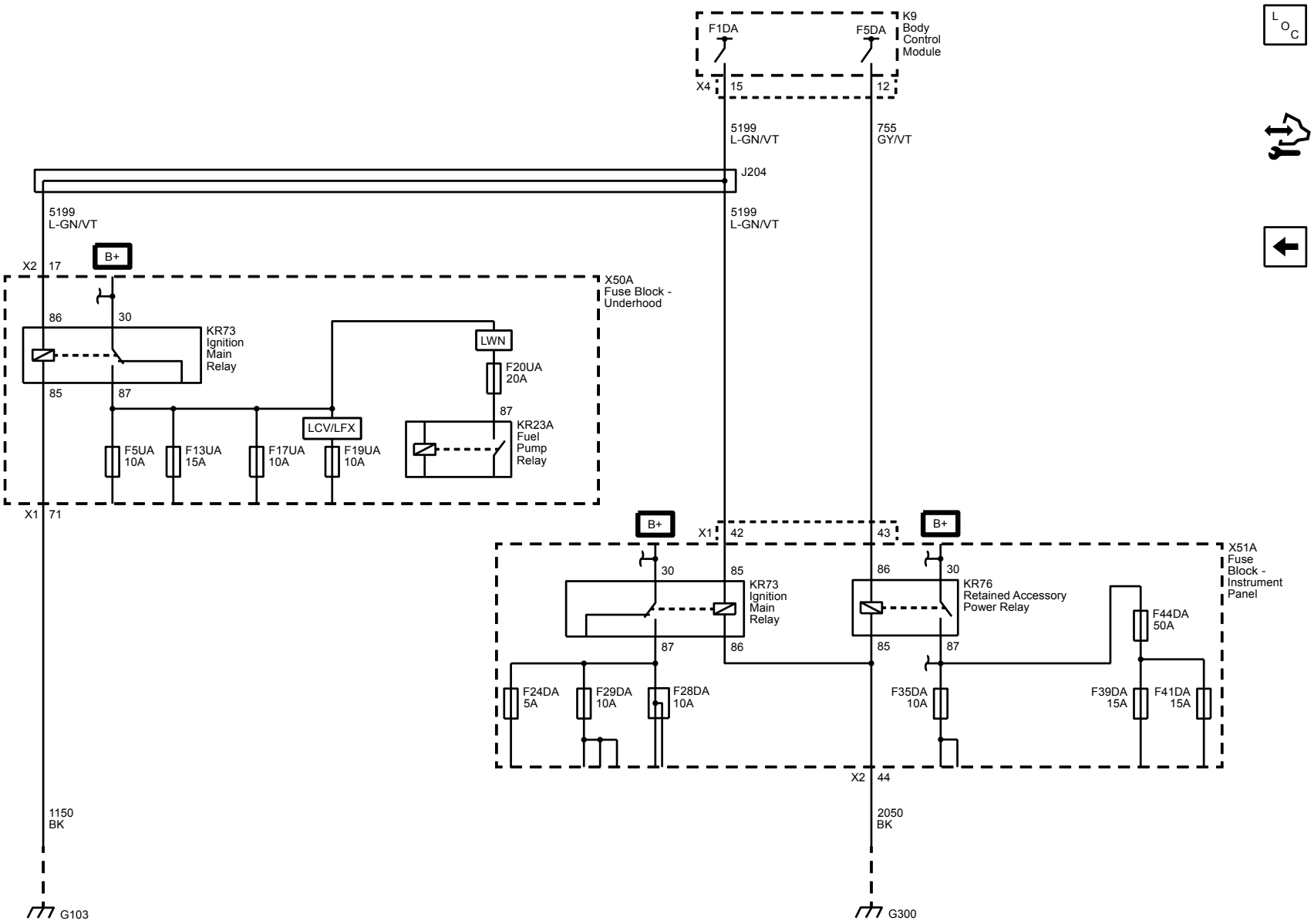

Key Capture, and Park Position Switch

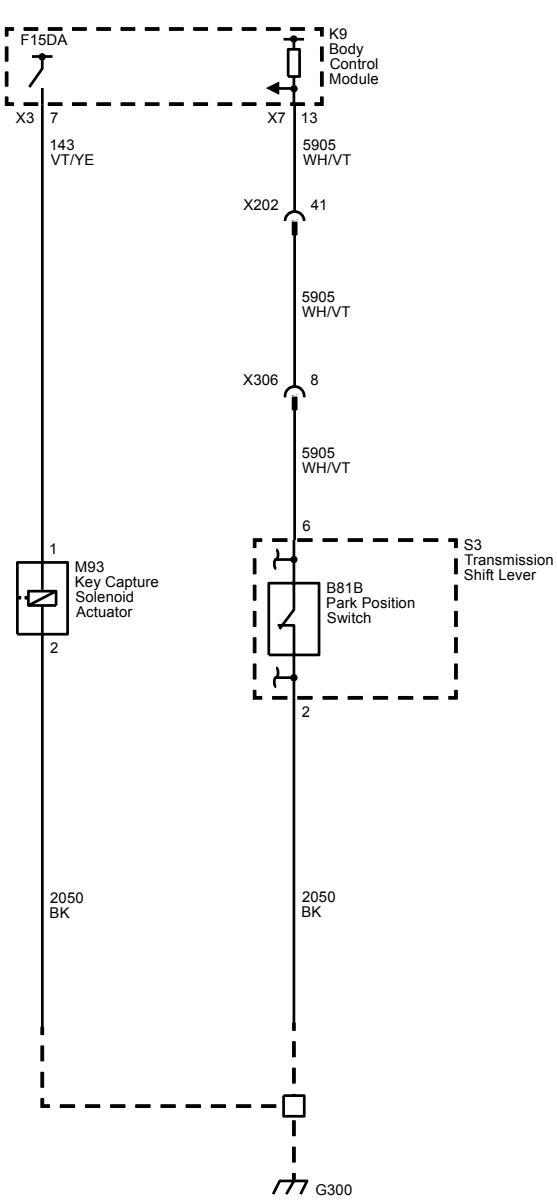

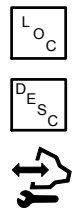

G100, G101, and G105

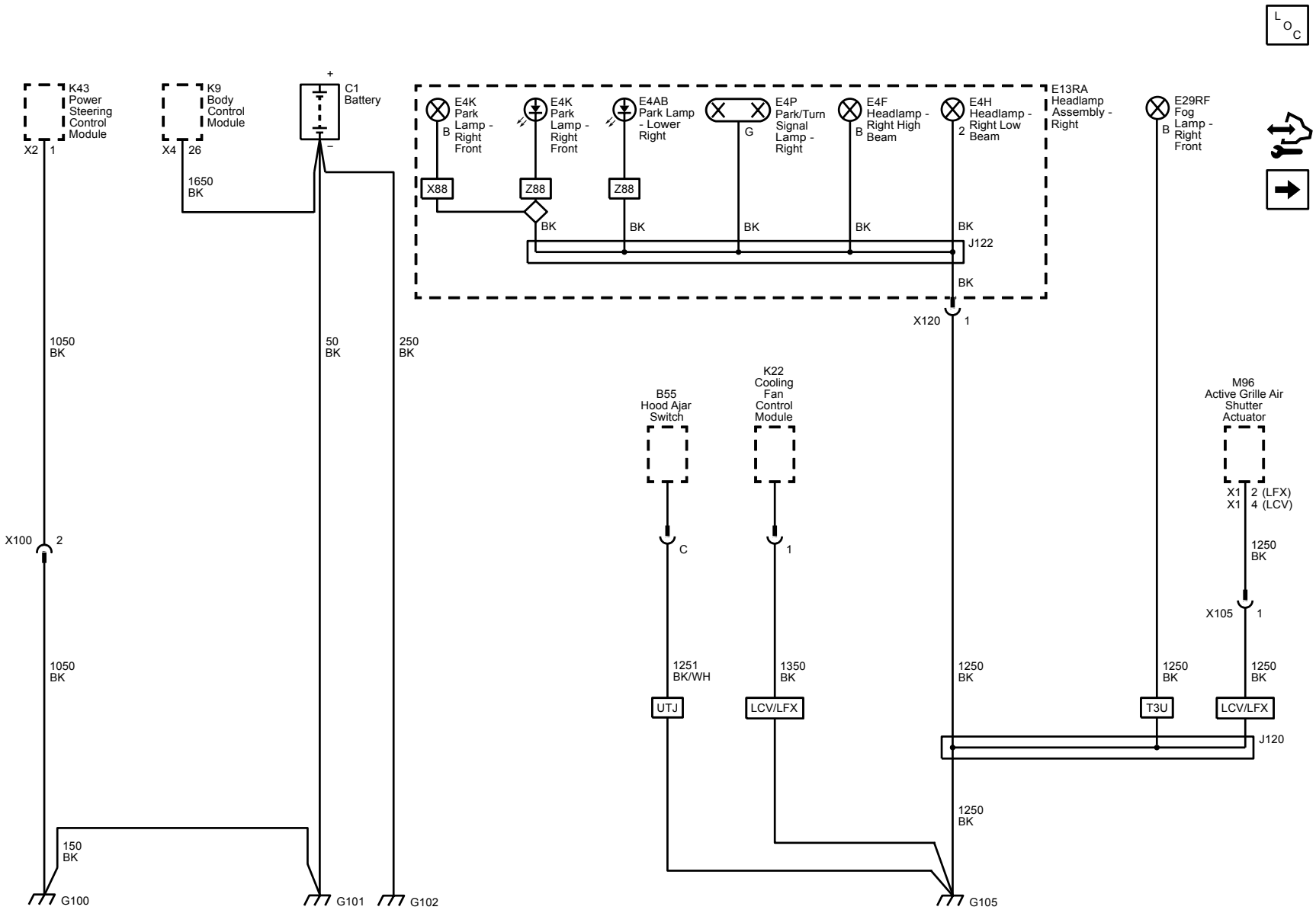

G103

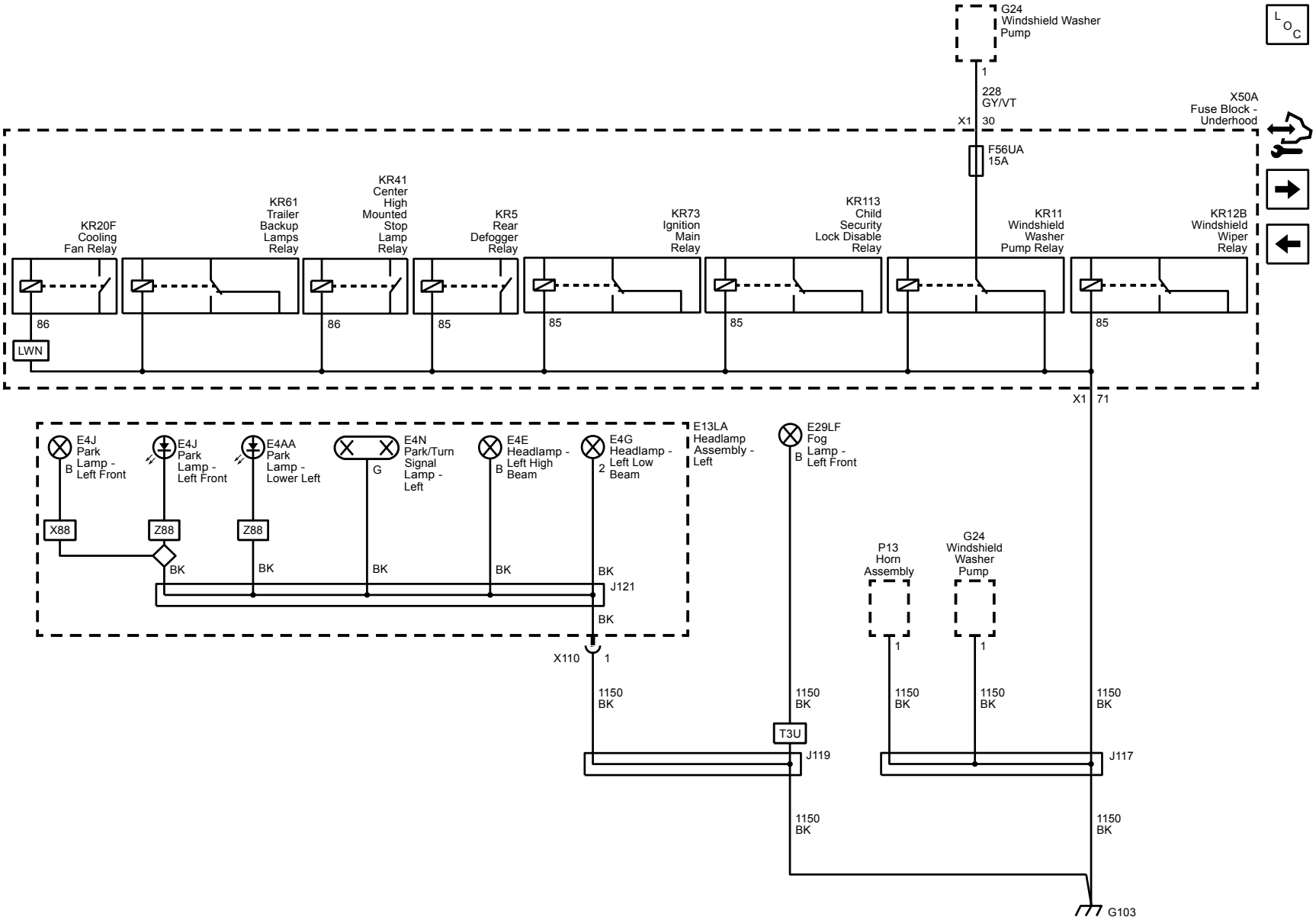
G24
Windshield Washer
Pump
L
O
C
1
228
GY/VT
X1
30
X50A
Fuse Block -
Underhood
F56UA
15A
KR20F
Cooling
Fan Relay
KR61
Trailer
Backup
Lamps
Relay
KR41
Center
High
Mounted
Stop
Lamp
Relay
KR5
Rear
Defogger
Relay
KR73
Ignition
Main
Relay
KR113
Child
Security
Lock Disable
Relay
KR11
Windshield
Washer
Pump Relay
KR12B
Windshield
Wiper
Relay
86
LWN
86
85
85
85
85
X1
71
E4J
Park
Lamp -
Left Front
B
E4J
Park
Lamp -
Left Front
E4AA
Park
Lamp -
Lower Left
E4N
Park/Turn
Signal
Lamp -
Left
G
E4E
Headlamp -
Left High
Beam
B
E4G
Headlamp -
Left Low
Beam
2
E13LA
Headlamp
Assembly -
Left
X88
Z88
Z88
BK
BK
BK
BK
BK
J121
BK
X110
1
1150
BK
E29LF
Fog
Lamp -
Left Front
B
P13
Horn
Assembly
G24
Windshield
Washer
Pump
1
1
1150
BK
1150
BK
1150
BK
1150
BK
1150
BK
T3U
J119
J117
1150
BK
1150
BK
G103

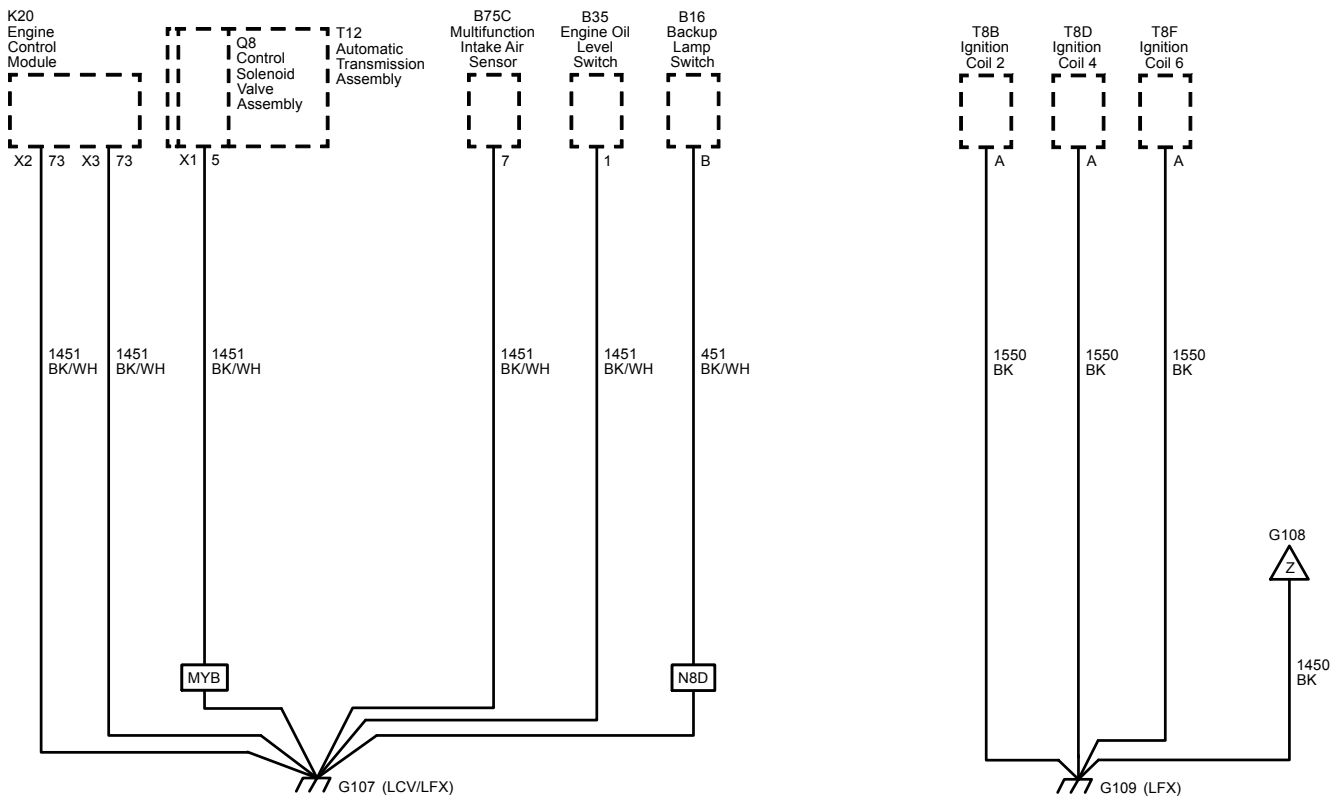
K20
Engine
Control
Module
X2
73
X3
73
Q8
Control
Solenoid
Valve
Assembly
T12
Automatic
Transmission
Assembly
X1
5
B75C
Multifunction
Intake Air
Sensor
7
B35
Engine Oil
Level
Switch
1
B16
Backup
Lamp
Switch
B
1451
BK/WH
1451
BK/WH
1451
BK/WH
1451
BK/WH
1451
BK/WH
451
BK/WH
MYB
N8D
G107 (LCV/LFX)
T8B
Ignition
Coil 2
A
T8D
Ignition
Coil 4
A
T8F
Ignition
Coil 6
A
1550
BK
1550
BK
1550
BK
G108
Z
1450
BK
G109 (LFX)

G107 (LWN)

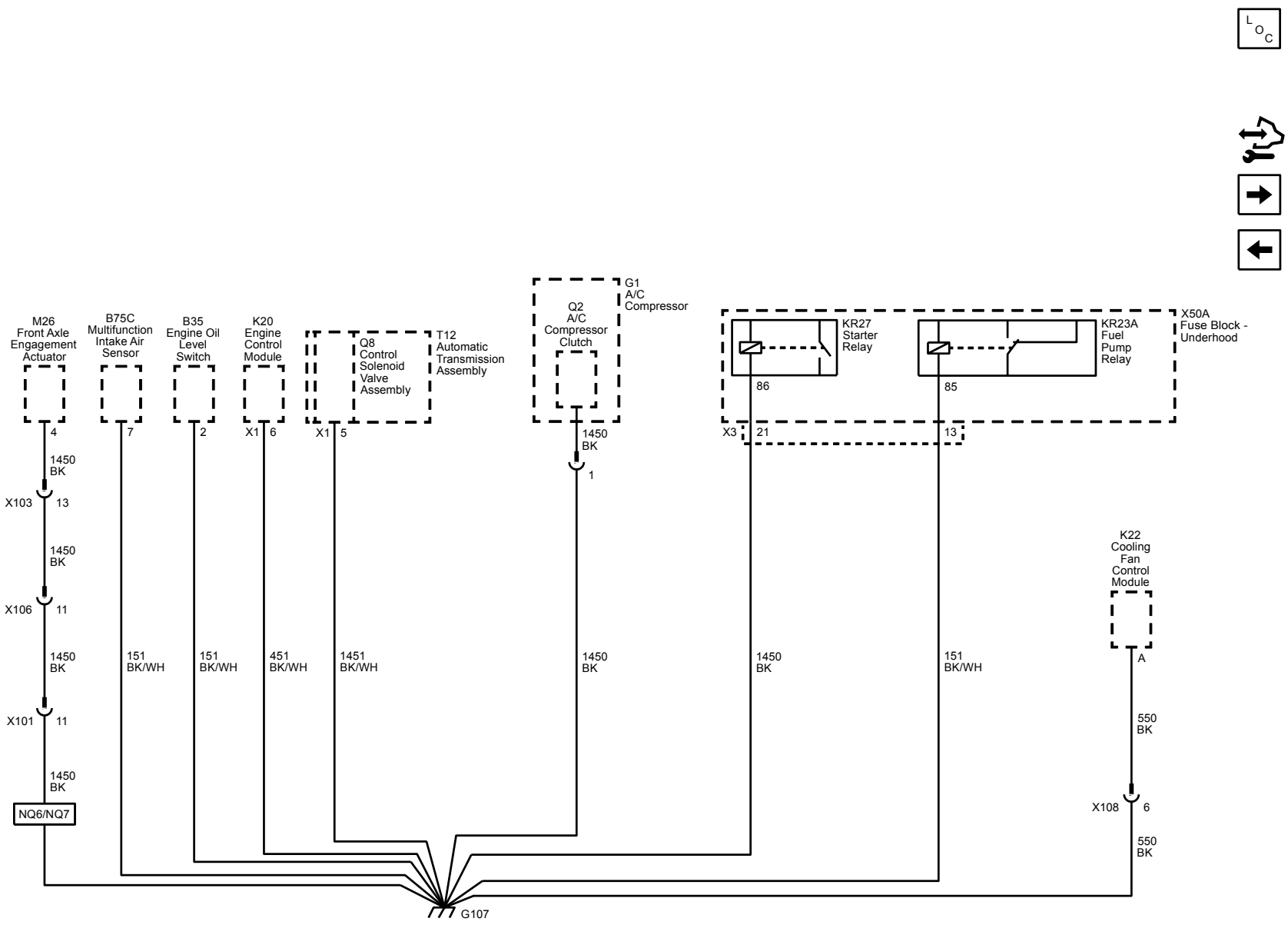
M26
Front Axle
Engagement
Actuator
B75C
Multifunction
Intake Air
Sensor
B35
Engine Oil
Level
Switch
K20
Engine
Control
Module
Q8
Control
Solenoid
Valve
Assembly
T12
Automatic
Transmission
Assembly
G1
A/C
Compressor
Q2
A/C
Compressor
Clutch
KR27
Starter
Relay
KR23A
Fuel
Pump
Relay
X50A
Fuse Block -
Underhood
K22
Cooling
Fan
Control
Module
4
7
2
X1 6
X1 5
1450
BK
X103
13
X106
11
X101
11
NQ6/NQ7
151
BK/WH
451
BK/WH
1451
BK/WH
1
86
85
X3
21
13
A
550
BK
X108
6
G107

G108 (LCV/LFX)

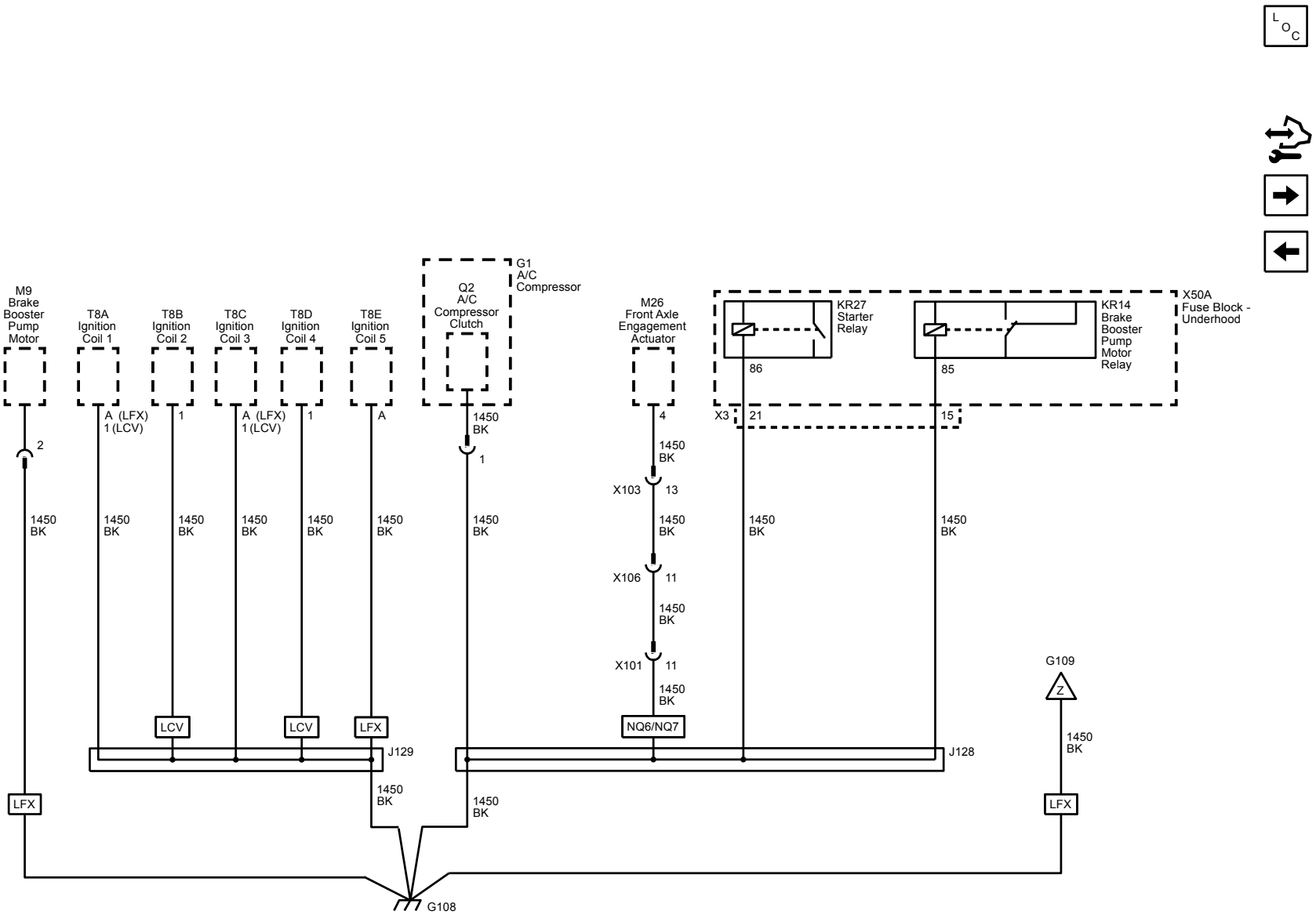
M9
Brake
Booster
Pump
Motor
T8A
Ignition
Coil 1
T8B
Ignition
Coil 2
T8C
Ignition
Coil 3
T8D
Ignition
Coil 4
T8E
Ignition
Coil 5
Q2
A/C
Compressor
Clutch
G1
A/C
Compressor
M26
Front Axle
Engagement
Actuator
KR27
Starter
Relay
KR14
Brake
Booster
Pump
Motor
Relay
X50A
Fuse Block -
Underhood
86
85
X3
21
15
A (LFX)
1 (LCV)
1
A (LFX)
1 (LCV)
1
A
1450
BK
2
4
1
X103
13
X106
11
X101
11
LCV
LCV
LFX
NQ6/NQ7
J129
J128
G109
Z
LFX
LFX
G108

G300

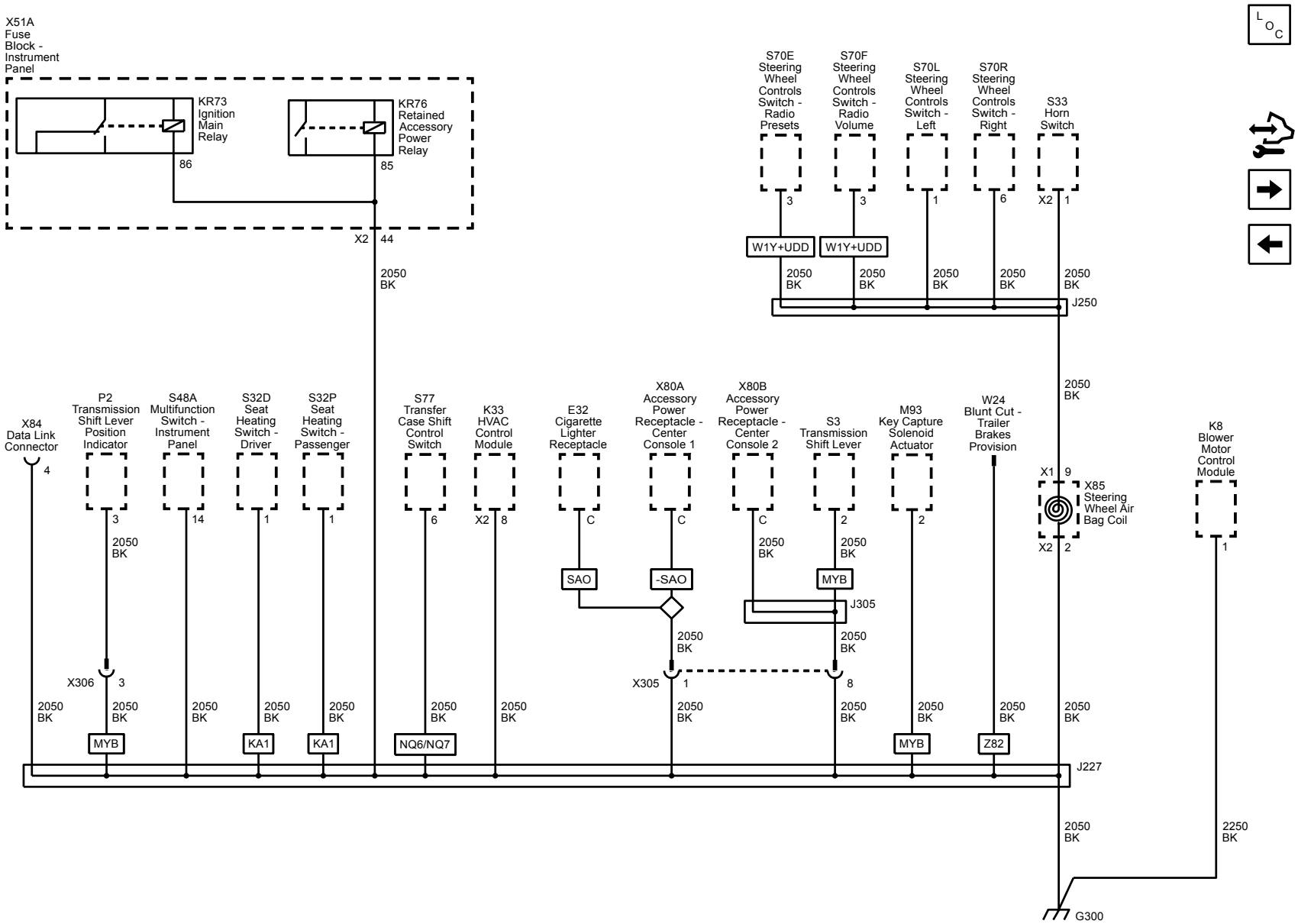
X51A
Fuse
Block -
Instrument
Panel
KR73
Ignition
Main
Relay
86
KR76
Retained
Accessory
Power
Relay
85
X2 44
2050
BK
S70E
Steering
Wheel
Controls
Switch -
Radio
Presets
S70F
Steering
Wheel
Controls
Switch -
Radio
Volume
S70L
Steering
Wheel
Controls
Switch -
Left
S70R
Steering
Wheel
Controls
Switch -
Right
S33
Horn
Switch
3
3
1
6
X2 1
W1Y+UDD
W1Y+UDD
J250
X84
Data Link
Connector
4
P2
Transmission
Shift Lever
Position
Indicator
S48A
Multifunction
Switch -
Instrument
Panel
S32D
Seat
Heating
Switch -
Driver
S32P
Seat
Heating
Switch -
Passenger
S77
Transfer
Case Shift
Control
Switch
K33
HVAC
Control
Module
E32
Cigarette
Lighter
Receptacle
X80A
Accessory
Power
Receptacle -
Center
Console 1
X80B
Accessory
Power
Receptacle -
Center
Console 2
S3
Transmission
Shift Lever
M93
Key Capture
Solenoid
Actuator
W24
Blunt Cut -
Trailer
Brakes
Provision
X1 9
X85
Steering
Wheel Air
Bag Coil
X2 2
K8
Blower
Motor
Control
Module
1
3
14
1
1
6
X2 8
C
C
C
2
2
SAO
-SAO
MYB
J305
X306 3
X305 1
8
MYB
KA1
KA1
NQ6/NQ7
MYB
Z82
J227
2250
BK
G300

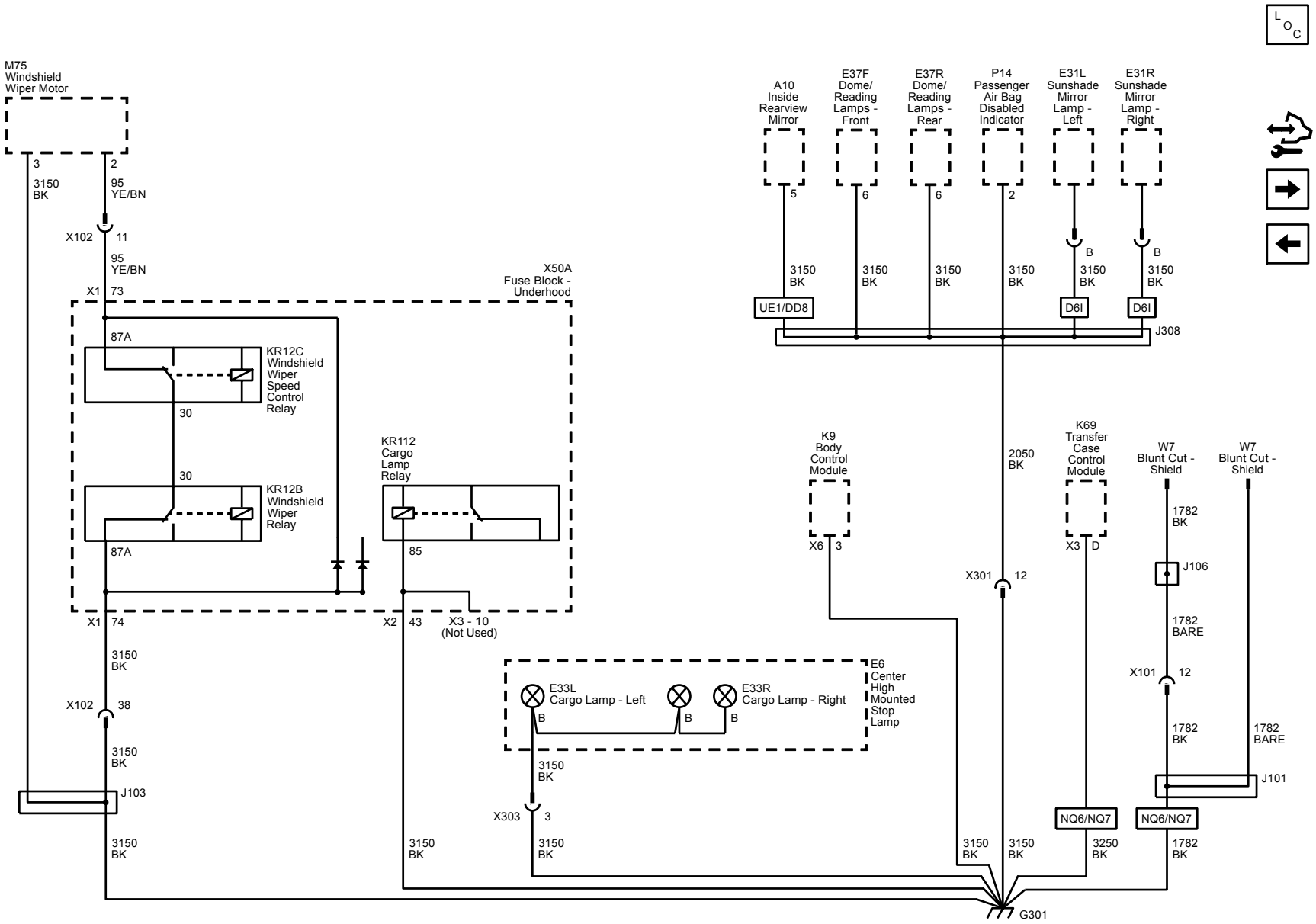
M75
Windshield
Wiper Motor
3
2
3150
BK
95
YE/BN
X102
11
95
YE/BN
X1
73
X50A
Fuse Block -
Underhood
87A
KR12C
Windshield
Wiper
Speed
Control
Relay
30
30
KR12B
Windshield
Wiper
Relay
87A
KR112
Cargo
Lamp
Relay
85
X1
74
X2
43
X3 - 10
(Not Used)
3150
BK
X102
38
3150
BK
J103
3150
BK
3150
BK
E6
Center
High
Mounted
Stop
Lamp
E33L
Cargo Lamp - Left
E33R
Cargo Lamp - Right
B
B
B
3150
BK
X303
3
3150
BK
3150
BK
A10
Inside
Rearview
Mirror
E37F
Dome/
Reading
Lamps -
Front
E37R
Dome/
Reading
Lamps -
Rear
P14
Passenger
Air Bag
Disabled
Indicator
E31L
Sunshade
Mirror
Lamp -
Left
E31R
Sunshade
Mirror
Lamp -
Right
5
6
6
2
B
B
3150
BK
3150
BK
3150
BK
3150
BK
3150
BK
3150
BK
UE1/DD8
D6I
D6I
J308
K9
Body
Control
Module
X6
3
2050
BK
X301
12
K69
Transfer
Case
Control
Module
X3
D
W7
Blunt Cut -
Shield
W7
Blunt Cut -
Shield
1782
BK
J106
1782
BARE
X101
12
1782
BK
1782
BARE
J101
NQ6/NQ7
NQ6/NQ7
3150
BK
3150
BK
3250
BK
1782
BK
G301

G302 and G305

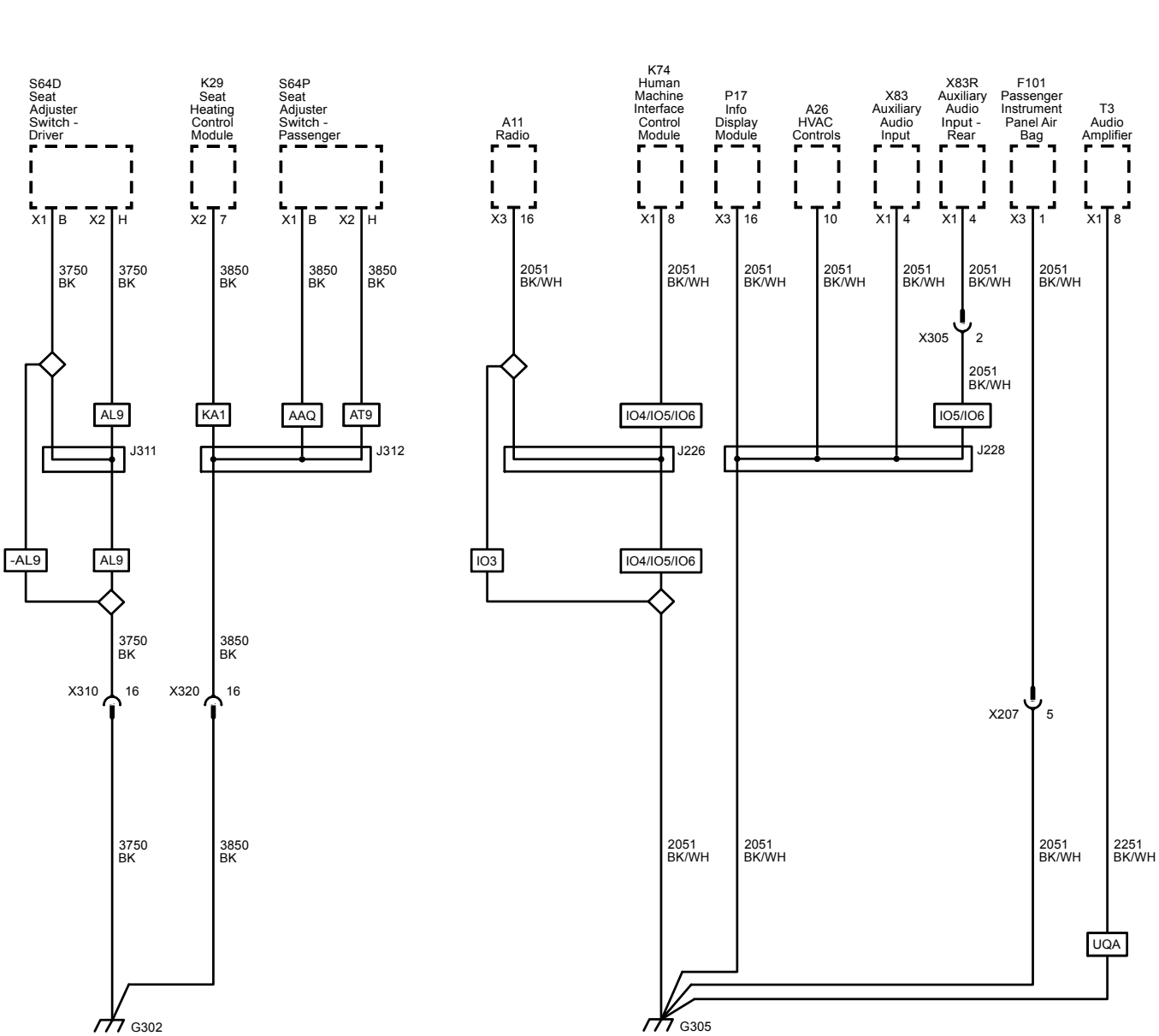

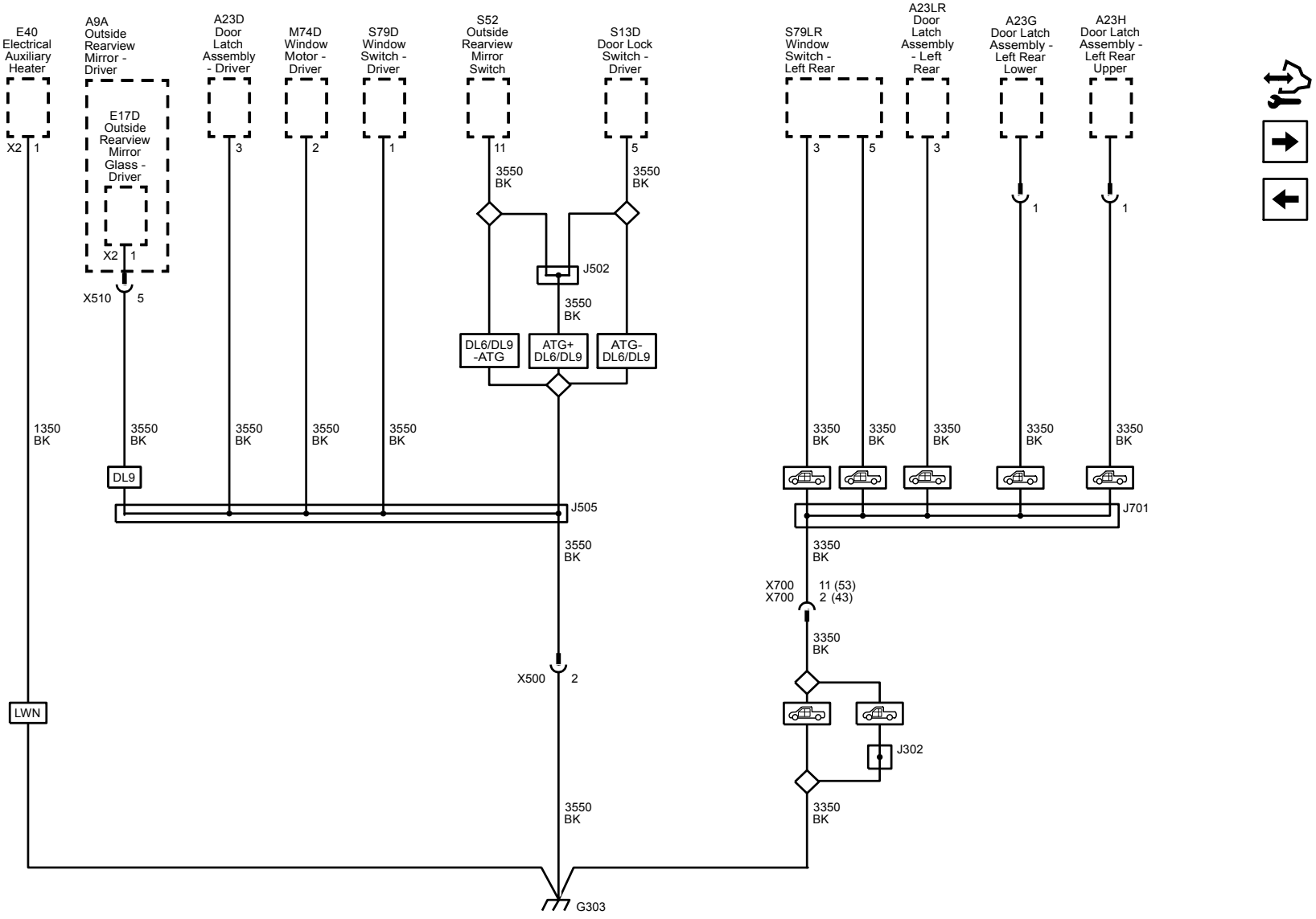
E40
Electrical
Auxiliary
Heater
A9A
Outside
Rearview
Mirror -
Driver
E17D
Outside
Rearview
Mirror
Glass -
Driver
A23D
Door
Latch
Assembly
- Driver
M74D
Window
Motor -
Driver
S79D
Window
Switch -
Driver
S52
Outside
Rearview
Mirror
Switch
S13D
Door Lock
Switch -
Driver
S79LR
Window
Switch -
Left Rear
A23LR
Door
Latch
Assembly
- Left
Rear
A23G
Door Latch
Assembly -
Left Rear
Lower
A23H
Door Latch
Assembly -
Left Rear
Upper
X2 1
X2 1
X510 5
3 2 1
11 5
3 5 3
1 1
3550 BK
3550 BK
J502
3550 BK
DL6/DL9 -ATG
ATG+ DL6/DL9
ATG- DL6/DL9
1350 BK
3550 BK
3550 BK
3550 BK
3550 BK
3350 BK
3350 BK
3350 BK
3350 BK
3350 BK
DL9
J505
J701
3550 BK
3350 BK
X700 11 (53)
X700 2 (43)
3350 BK
X500 2
J302
3550 BK
3350 BK
LWN
G303

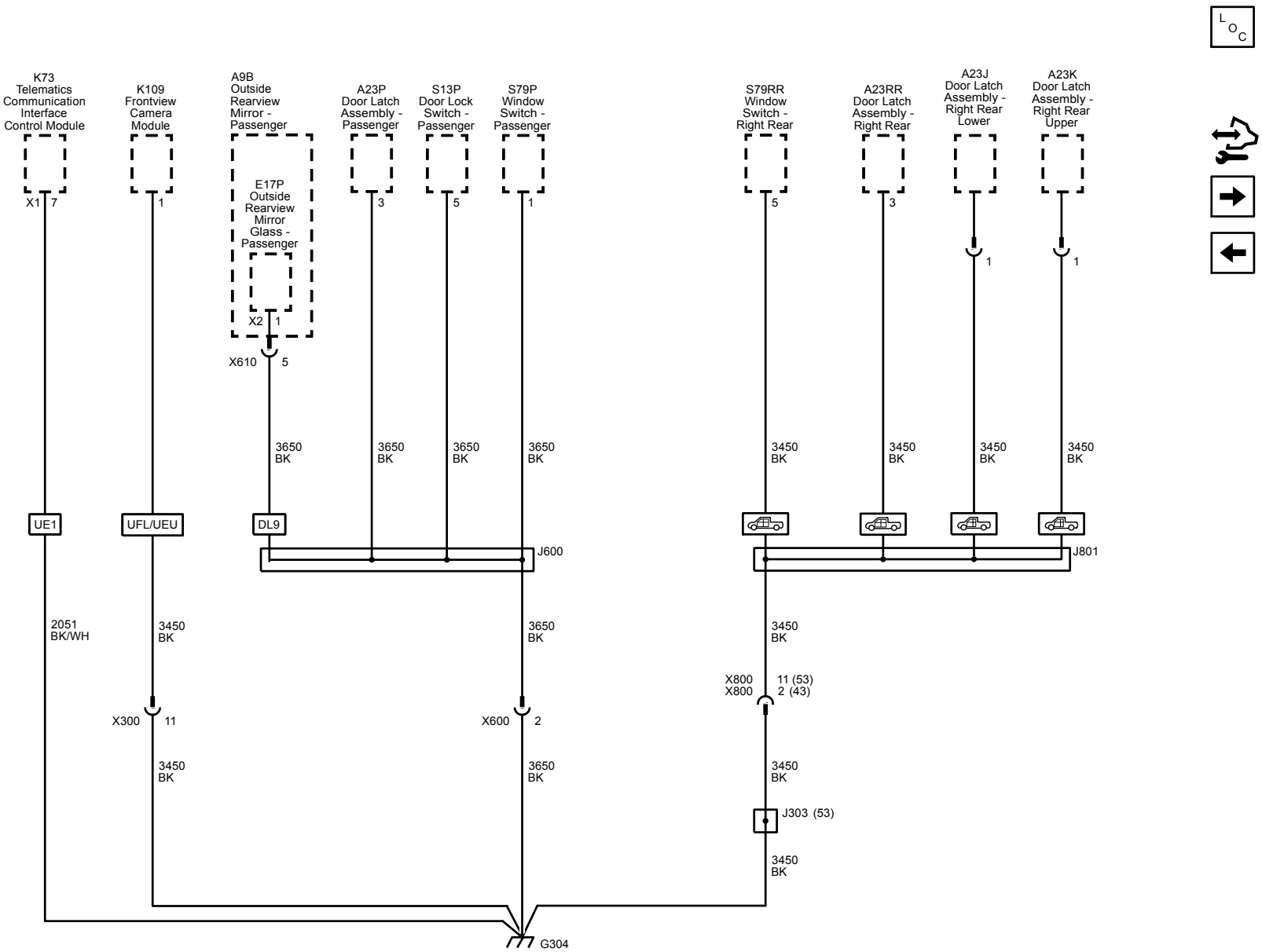
K73
Telematics
Communication
Interface
Control Module
X1 7
K109
Frontview
Camera
Module
1
A9B
Outside
Rearview
Mirror -
Passenger
E17P
Outside
Rearview
Mirror
Glass -
Passenger
X2 1
X610 5
A23P
Door Latch
Assembly -
Passenger
3
S13P
Door Lock
Switch -
Passenger
5
S79P
Window
Switch -
Passenger
1
S79RR
Window
Switch -
Right Rear
5
A23RR
Door Latch
Assembly -
Right Rear
3
A23J
Door Latch
Assembly -
Right Rear
Lower
1
A23K
Door Latch
Assembly -
Right Rear
Upper
1
3650
BK
3450
BK
UE1
UFL/UEU
DL9
J600
J801
2051
BK/WH
X300 11
X600 2
X800
X800
11 (53)
2 (43)
J303 (53)
G304

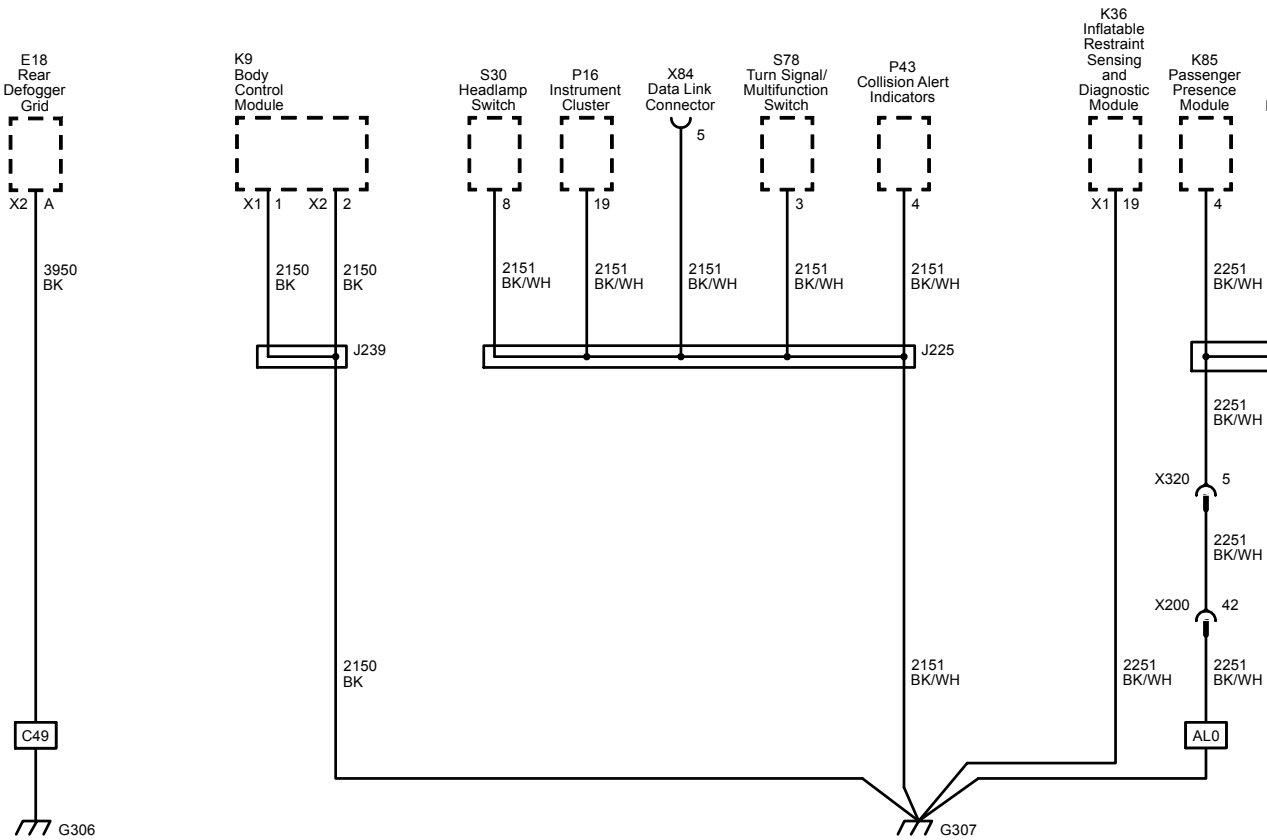
E18
Rear
Defogger
Grid
X2
A
3950
BK
C49
G306
K9
Body
Control
Module
X1
1
X2
2
2150
BK
2150
BK
J239
2150
BK
S30
Headlamp
Switch
P16
Instrument
Cluster
X84
Data Link
Connector
5
S78
Turn Signal/
Multifunction
Switch
P43
Collision Alert
Indicators
8
19
3
4
2151
BK/WH
2151
BK/WH
2151
BK/WH
2151
BK/WH
2151
BK/WH
J225
2151
BK/WH
G307
K36
Inflatable
Restraint
Sensing
and
Diagnostic
Module
X1
19
2251
BK/WH
K85
Passenger
Presence
Module
4
2251
BK/WH
J313
2251
BK/WH
X320
5
2251
BK/WH
X200
42
2251
BK/WH
B61P
Seat Belt
Tension
Sensor -
Passenger
2
2251
BK/WH
AL0

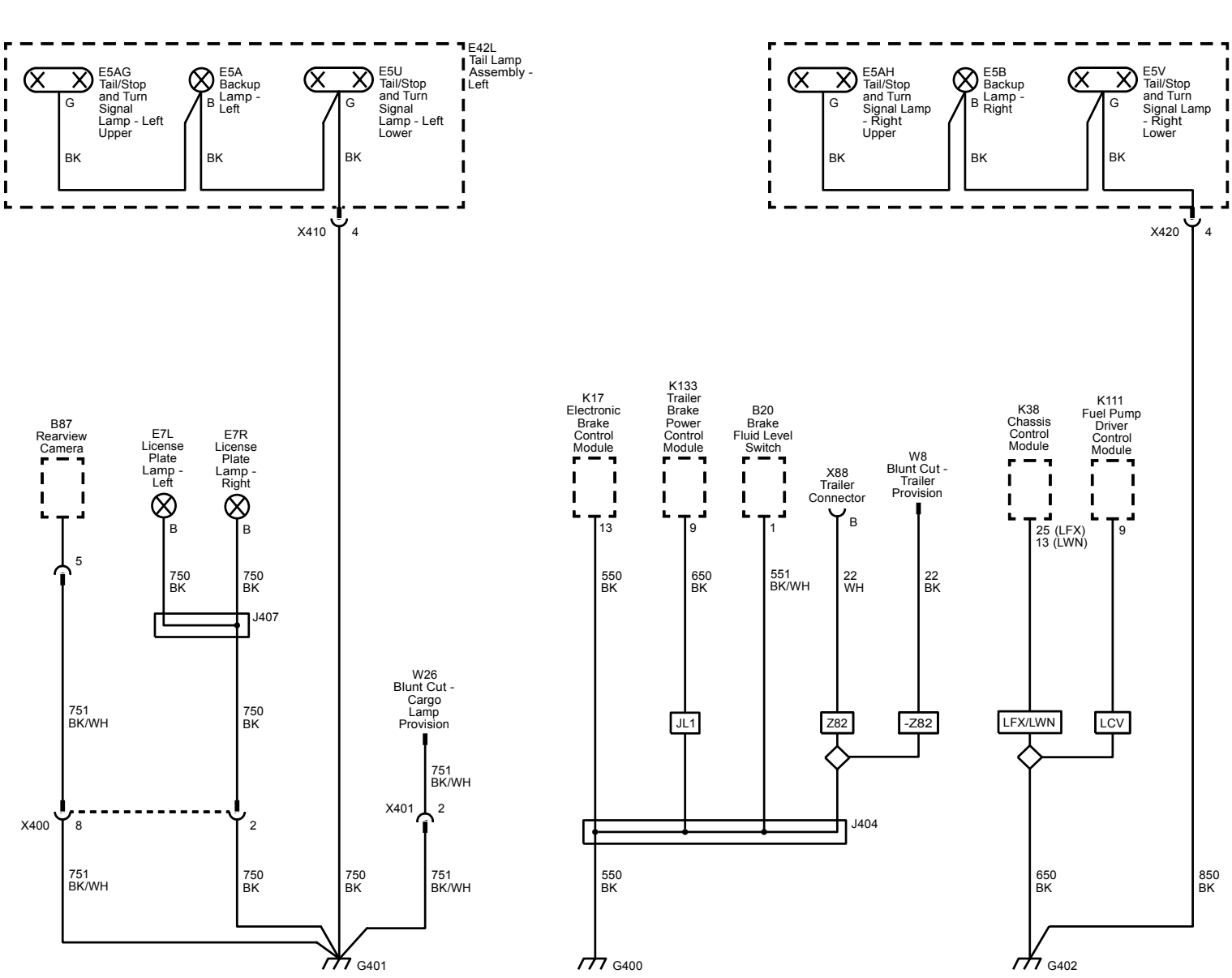
E42L
Tail Lamp
Assembly -
Left
E5AG
Tail/Stop
and Turn
Signal
Lamp - Left
Upper
E5A
Backup
Lamp -
Left
E5U
Tail/Stop
and Turn
Signal
Lamp - Left
Lower
G
B
G
BK
BK
BK
X410
4
E42R
Tail Lamp
Assembly -
Right
E5AH
Tail/Stop
and Turn
Signal Lamp
- Right
Upper
E5B
Backup
Lamp -
Right
E5V
Tail/Stop
and Turn
Signal Lamp
- Right
Lower
G
B
G
BK
BK
BK
X420
4
B87
Rearview
Camera
E7L
License
Plate
Lamp -
Left
E7R
License
Plate
Lamp -
Right
5
B
B
750
BK
750
BK
J407
751
BK/WH
750
BK
W26
Blunt Cut -
Cargo
Lamp
Provision
751
BK/WH
X400
8
2
X401
2
751
BK/WH
750
BK
750
BK
751
BK/WH
G401
K17
Electronic
Brake
Control
Module
K133
Trailer
Brake
Power
Control
Module
B20
Brake
Fluid Level
Switch
X88
Trailer
Connector
W8
Blunt Cut -
Trailer
Provision
13
9
1
B
550
BK
650
BK
551
BK/WH
22
WH
22
BK
JL1
Z82
-Z82
J404
550
BK
G400
K38
Chassis
Control
Module
K111
Fuel Pump
Driver
Control
Module
25 (LFX)
13 (LWN)
9
LFX/LWN
LCV
650
BK
850
BK
G402

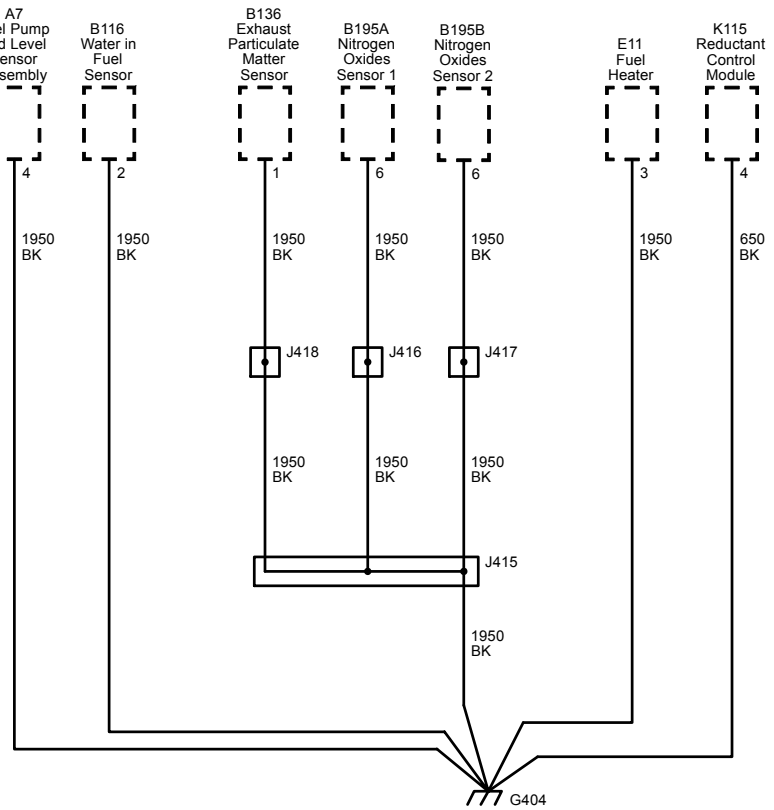
A7
Fuel Pump and Level Sensor Assembly
B116
Water in Fuel Sensor
B136
Exhaust Particulate Matter Sensor
B195A
Nitrogen Oxides Sensor 1
B195B
Nitrogen Oxides Sensor 2
E11
Fuel Heater
K115
Reductant Control Module
4
2
1
6
6
3
4
1950 BK
650 BK
J418
J416
J417
J415
G404

Trailer Connector/Provision Schematics

Trailer Connector Pins: A,D,F, and G

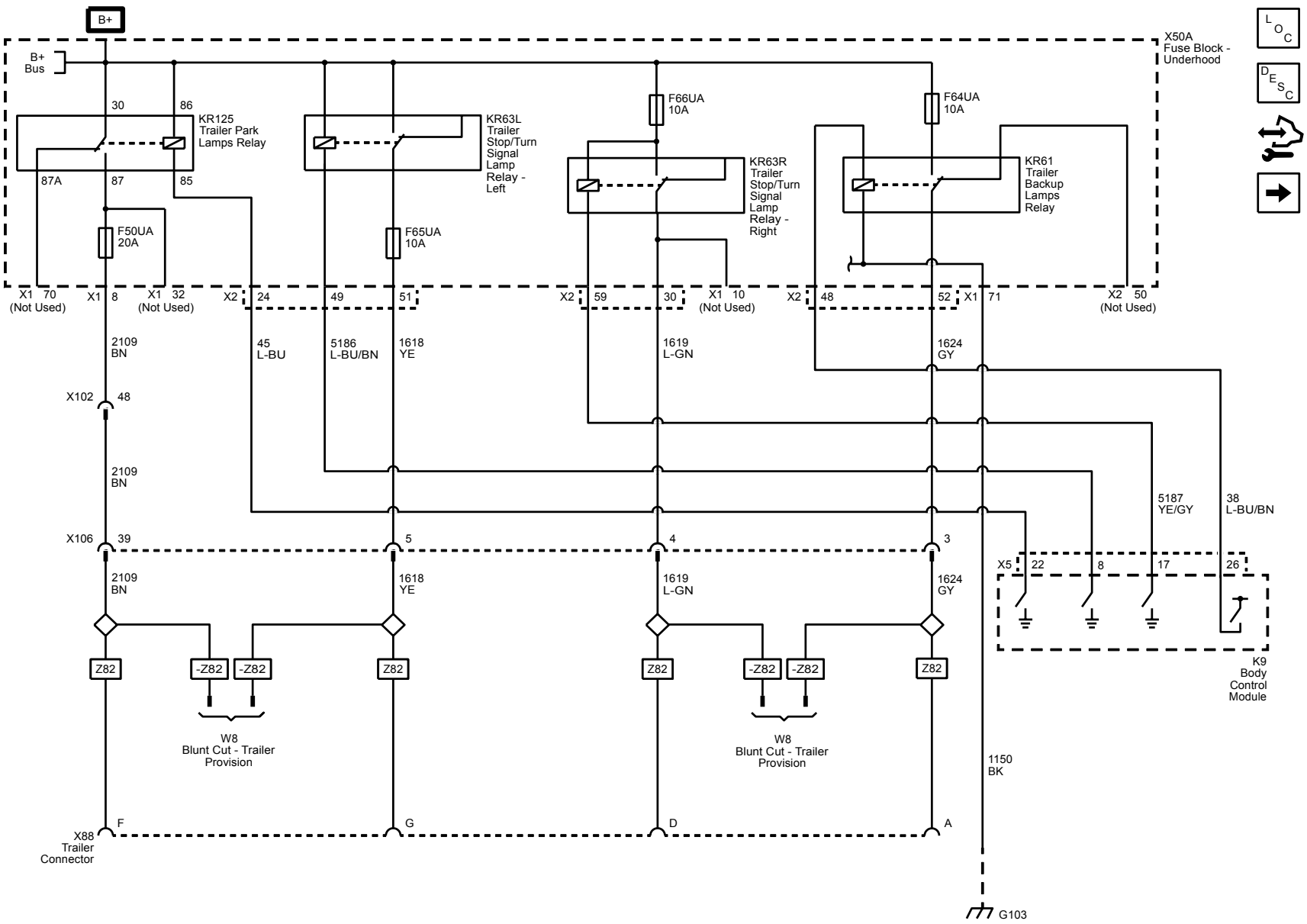

Trailer Connector Pins: B,C, E, and Trailer Brakes Provisions

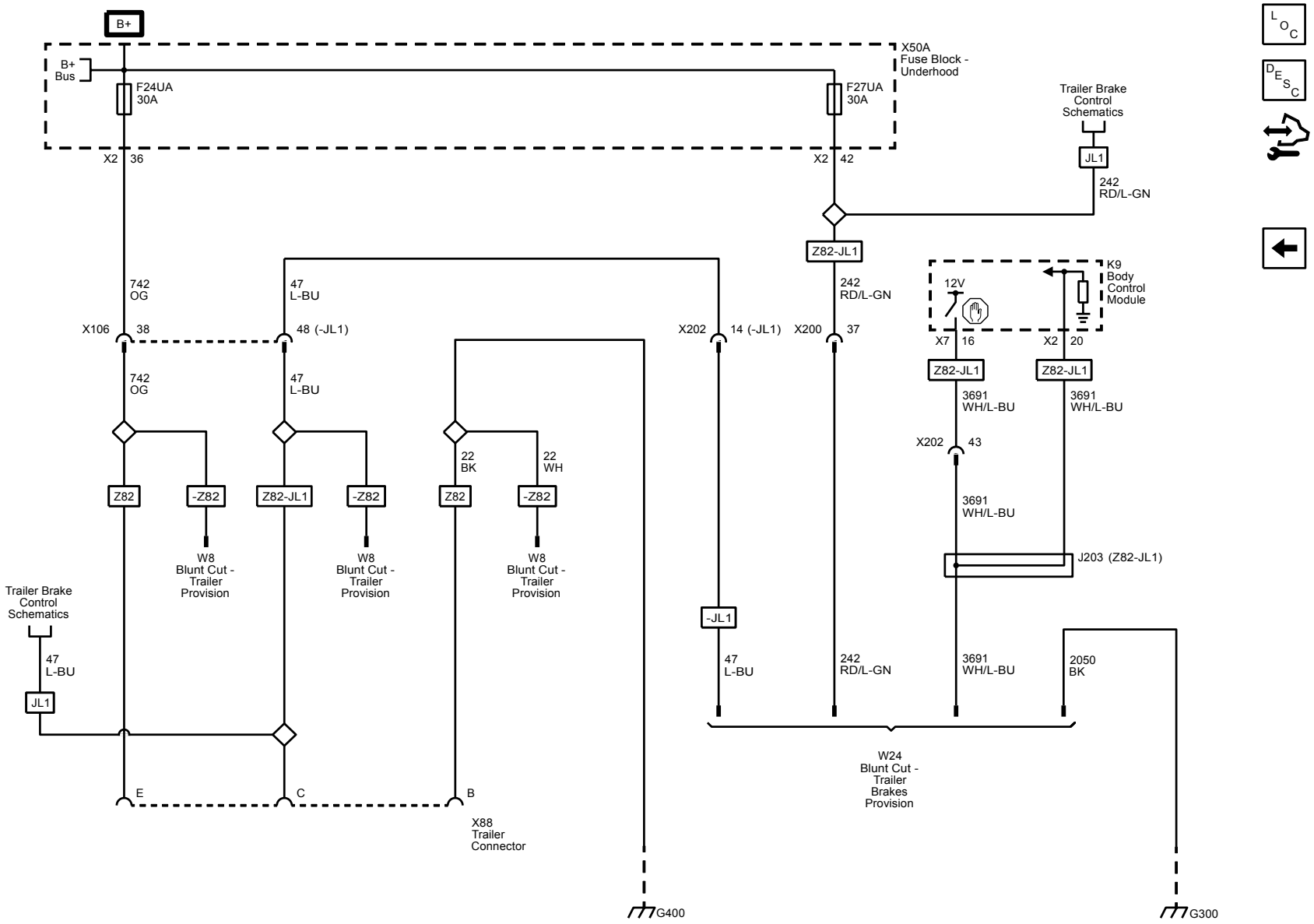

Component Locator

Master Electrical Component List

Master Electrical Component List

Code	Name	Option	Location	Locator View	Connector End View
A3L	Sunshade - Left	—	In the front of the passenger compartment, above the driver seat	—	—
A3R	Sunshade - Right	—	In the front of the passenger compartment, above the passenger seat	—	—
A7	Fuel Pump and Level Sensor Assembly	LCV/LFX	Under the vehicle, on top the fuel tank	*Underbody Components (2 of 3)*	*A7 Fuel Pump and Level Sensor Assembly (LCV/LFX)*
A7	Fuel Pump and Level Sensor Assembly	LWN	Under the vehicle, on top the fuel tank	*Underbody Components (2 of 3)*	*A7 Fuel Pump and Level Sensor Assembly (LWN)*
A9A	Outside Rearview Mirror - Driver	—	Outside the vehicle, at the front of the driver door	• *Front of Vehicle Components (Chevrolet/X88)* • *Front of Vehicle Components (GMC/Z88)*	—
A9B	Outside Rearview Mirror - Passenger	—	Outside the vehicle, at the front of the passenger door	• *Front of Vehicle Components (Chevrolet/X88)* • *Front of Vehicle Components (GMC/Z88)*	—
A10	Inside Rearview Mirror	—	In the passenger compartment, at the top center of the windshield, behind mirror	• *Headliner Components (Crew Cab)* • *Headliner Components (Extended Cab)*	*A10 Inside Rearview Mirror*
A11	Radio	—	In the passenger compartment, center of the instrument panel, behind the info display module	*Behind the Instrument Panel Components*	• *A11 Radio X1* • *A11 Radio X2* • *A11 Radio X3* • *A11 Radio X4* • *A11 Radio X6 (U2K)* • *A11 Radio X7 (IO3/IO4)* • *A11 Radio X8 (IO3)*
A16	Transfer Case Motor	NQ6/NQ7	On the underbody, mounted to the bottom rear of the transfer case	*Automatic Transmission Components (MYB with NQ6/NQ7)*	*A16 Transfer Case Motor (NQ6/NQ7)*
A22	Radio Controls	—	In the passenger compartment, at the center of the instrument panel, part of the info display module	*Front of the Instrument Panel Components*	—
A23D	Door Latch Assembly - Driver	—	In the passenger compartment, at the middle rear of the driver door	*Driver Door Components*	*A23D Door Latch Assembly - Driver*
A23G	Door Latch Assembly - Left Rear Lower	Extended Cab	In the passenger compartment, at the lower front of the left rear door	*Left Rear Door Components (Extended Cab)*	*A23G Door Latch Assembly - Left Rear Lower (Extended Cab)*
A23H	Door Latch Assembly - Left Rear Upper	Extended Cab	In the passenger compartment, at the upper front of the left rear door	*Left Rear Door Components (Extended Cab)*	*A23H Door Latch Assembly - Left Rear Upper (Extended Cab)*

A23J	Door Latch Assembly - Right Rear Lower	Extended Cab	In the passenger compartment, at the lower front of the right rear door	*Right Rear Door Components (Extended Cab)*	*A23J Door Latch Assembly - Right Rear Lower (Extended Cab)*
A23K	Door Latch Assembly - Right Rear Upper	Extended Cab	In the passenger compartment, at the upper front of the right rear door	*Right Rear Door Components (Extended Cab)*	*A23K Door Latch Assembly - Right Rear Upper (Extended Cab)*
A23LR	Door Latch Assembly - Left Rear	Crew Cab	In the passenger compartment, at the middle rear of the left rear door	*Left Rear Door Components (Crew Cab)*	*A23LR Door Latch Assembly - Left Rear (Crew Cab)*
A23P	Door Latch Assembly - Passenger	—	In the passenger compartment, at the middle rear of the passenger door	*Passenger Door Components*	*A23P Door Latch Assembly - Passenger*
A23RR	Door Latch Assembly - Right Rear	Crew Cab	In the passenger compartment, at the middle rear of the right rear door	*Right Rear Door Components (Crew Cab)*	*A23RR Door Latch Assembly - Right Rear (Crew Cab)*
A26	HVAC Controls	—	In the passenger compartment, at the middle center of the instrument panel, below the radio controls	*Front of the Instrument Panel Components*	*A26 HVAC Controls*
A39	Reductant Fluid Reservoir Assembly	LWN	Outside the vehicle, above the rear axle, mounted on the left frame rail	*Underbody Components (LWN) (5 of 6)*	• *A39 Reductant Fluid Reservoir Assembly X1 (LWN)* • *A39 Reductant Fluid Reservoir Assembly X2 (LWN)*
B1	A/C Refrigerant Pressure Sensor	LCV	In the front of the engine compartment, on the right side of the A/C compressor	*Left Front of the Engine Components (LCV)*	*B1 A/C Refrigerant Pressure Sensor*
B1	A/C Refrigerant Pressure Sensor	LFX	In the front of the engine compartment, on the front left side of the engine, on the A/C compressor high pressure line above the compressor	—	*B1 A/C Refrigerant Pressure Sensor*
B1	A/C Refrigerant Pressure Sensor	LWN	In the front of the engine compartment, on the front left side of the engine, on the A/C compressor high pressure line near the compressor	*Left Bottom of the Engine Components (LWN)*	*B1 A/C Refrigerant Pressure Sensor*
B5LF	Wheel Speed Sensor - Left Front	—	Outside the vehicle, in the left front hub assembly	• *Left Side of Engine Compartment Components (2 of 2)* • *Chassis Components (Crew Cab)*	*B5LF Wheel Speed Sensor - Left Front*
B5LR	Wheel Speed Sensor - Left Rear	—	Outside the vehicle, in the left rear hub assembly	• *Chassis Components (Crew Cab)* • *Underbody Components (2 of 3)*	*B5LR Wheel Speed Sensor - Left Rear*
B5RF	Wheel Speed Sensor - Right Front	—	Outside the vehicle, in the right front hub assembly	• *Right Front Wheel Well Component* • *Chassis Components (Crew Cab)*	*B5RF Wheel Speed Sensor - Right Front*
B5RR	Wheel Speed Sensor - Right Rear	—	Outside the vehicle, in the right rear hub assembly	• *Underbody Components (3 of 3)* • *Chassis Components (Crew Cab)*	*B5RR Wheel Speed Sensor - Right Rear*
B7B	Air Temperature Sensor - Duct Lower	C68	In the passenger compartment, in the floor vent of the front console	*HVAC Assembly Components*	*B7B Air Temperature Sensor - Duct Lower (C68)*
B7F	Air Temperature Sensor - Duct Upper	C68	In the passenger compartment, behind the instrument panel, on the upper left side of the HVAC module	*HVAC Assembly Components*	*B7F Air Temperature Sensor - Duct Upper (C68)*

B9	Ambient Air Temperature Sensor	—	Outside the vehicle, in the front, behind the bottom center of grille	• *Front of Vehicle Components (Chevrolet/X88)* • *Front of Vehicle Components (GMC/Z88)*	*B9 Ambient Air Temperature Sensor*
B10B	Ambient Light/Sunload Sensor	—	In the passenger compartment, at the top center of the instrument panel, in the defroster deflector	*Front of the Instrument Panel Components*	*B10B Ambient Light/Sunload Sensor*
B12A	Transmission Fluid Pressure Switch	MYB	Under the vehicle, inside the automatic transmission, part of the control solenoid valve assembly	—	—
B13	Transmission Fluid Temperature Sensor	MYB	Under the vehicle, inside the automatic transmission, part of the control solenoid valve assembly	—	—
B14A	Transmission Output Shaft Speed Sensor	MYB	Under the vehicle, internal to the transmission assembly	—	—
B14A	Transmission Output Shaft Speed Sensor	NQ6/NQ7	Under the vehicle, on the transfer case assembly	*Automatic Transmission Components (MYB with NQ6/NQ7)*	*B14A Transmission Output Shaft Speed Sensor (NQ6/NQ7)*
B14A	Transmission Output Shaft Speed Sensor	N8D	Under the vehicle, on the manual transmission assembly	*Manual Transmission Components (N8D)*	*B14A Transmission Output Shaft Speed Sensor (N8D)*
B14C	Transmission Input Shaft Speed Sensor	MYB	Under the vehicle, internal to the transmission assembly	—	—
B15	Transmission Internal Mode Switch	MYB	Under the vehicle, internal to the transmission assembly	—	—
B16	Backup Lamp Switch	N8D	In the engine compartment, on top of the transmission	*Manual Transmission Components (N8D)*	*B16 Backup Lamp Switch (N8D)*
B18	Battery Current Sensor	—	In the engine compartment, on the negative battery cable	*Left Side of Engine Compartment Components (1 of 2)*	*B18 Battery Current Sensor*
B19B	Brake Booster Vacuum Sensor	—	At the rear of the engine compartment, on the power brake booster vacuum check valve	*Left Side of Engine Compartment Components (2 of 2)*	*B19B Brake Booster Vacuum Sensor*
B20	Brake Fluid Level Switch	LCV/LFX	At the rear of the engine compartment, on the brake fluid reservoir	*Left Side of Engine Compartment Components (2 of 2)*	*B20 Brake Fluid Level Switch (LCV/LFX)*
B20	Brake Fluid Level Switch	LWN	At the rear of the engine compartment, on the brake fluid reservoir	*Left Side of Engine Compartment Components (2 of 2)*	*B20 Brake Fluid Level Switch (LWN)*
B22	Brake Pedal Position Sensor	MYB	In the passenger compartment, above the brake pedal assembly	*Below Left Side of the Instrument Panel Components (MYB)*	*B22 Brake Pedal Position Sensor (MYB)*
B22	Brake Pedal Position Sensor	N8D	In the passenger compartment, above the brake pedal assembly	*Below Left Side of the Instrument Panel Components (N8D)*	*B22 Brake Pedal Position Sensor (N8D)*
B23	Camshaft Position Sensor	LWN	In the engine compartment, front of engine, right of center, near intake manifold	*Right Bottom of Engine Components (LWN)*	*B23 Camshaft Position Sensor (LWN)*
B23A	Camshaft Position Sensor - Bank 1 Exhaust	LFX	In the engine compartment, near front, right of center, above of the bank 1 exhaust camshaft position actuator solenoid valve	*Left Front of the Engine Components (LFX)*	*B23A Camshaft Position Sensor - Bank 1 Exhaust (LFX)*
B23B	Camshaft Position Sensor - Bank 1 Intake	LFX	In the engine compartment, near front, right of center, left of the bank 1 intake camshaft position actuator solenoid valve	*Left Front of the Engine Components (LFX)*	*B23B Camshaft Position Sensor - Bank 1 Intake (LFX)*

B23C	Camshaft Position Sensor - Bank 2 Exhaust	LFX	In the engine compartment, near front, left of center, above of the bank 2 exhaust camshaft position actuator solenoid valve	*Left Front of the Engine Components (LFX)*	*B23C Camshaft Position Sensor - Bank 2 Exhaust (LFX)*
B23D	Camshaft Position Sensor - Bank 2 Intake	LFX	In the engine compartment, near front, left of center, right of the bank 2 intake camshaft position actuator solenoid valve	*Left Front of the Engine Components (LFX)*	*B23D Camshaft Position Sensor - Bank 2 Intake (LFX)*
B23E	Camshaft Position Sensor - Exhaust	LCV	In the engine compartment, rear left of center, mounted to cylinder head, on left side	*Left Front of the Engine Components (LCV)*	*B23E Camshaft Position Sensor - Exhaust (LCV)*
B23F	Camshaft Position Sensor - Intake	LCV	In the engine compartment, rear right of center, mounted to cylinder head, on right lower side	*Right Rear of Engine Components (LCV)*	*B23F Camshaft Position Sensor - Intake (LCV)*
B24	Cellular Phone Microphone	UE1	In the passenger compartment, in the front left of the headliner, near the driver sunshade	• *Headliner Components (Crew Cab)* • *Headliner Components (Extended Cab)*	*B24 Cellular Phone Microphone (UE1)*
B25B	Clutch Pedal Position Sensor	N8D	In the passenger compartment, under the driver side of the instrument panel, above the clutch pedal	*Below Left Side of the Instrument Panel Components (N8D)*	*B25B Clutch Pedal Position Sensor (N8D)*
B26	Crankshaft Position Sensor	LCV	In the engine compartment, right of center, near rear, mounted to right side of engine block	*Right Bottom of Engine Components (LCV)*	*B26 Crankshaft Position Sensor (LCV)*
B26	Crankshaft Position Sensor	LFX	In the engine compartment, right of center, mounted to right rear side of engine block	*Right Bottom of Engine Components (LFX)*	*B26 Crankshaft Position Sensor (LFX)*
B26	Crankshaft Position Sensor	LWN	In the engine compartment, left of center, near rear, mounted to lower left side of engine block	*Left Front of the Engine Components (LWN)*	*B26 Crankshaft Position Sensor (LWN)*
B34	Engine Coolant Temperature Sensor	LCV	In the engine compartment, rear center, mounted to coolant outlet at rear of cylinder head	*Right Rear of Engine Components (LCV)*	*B34 Engine Coolant Temperature Sensor (LCV)*
B34	Engine Coolant Temperature Sensor	LFX	In the engine compartment, left of center, near rear, mounted to bank 2 cylinder head, near exhaust pipe	*Left Front of the Engine Components (LFX)*	*B34 Engine Coolant Temperature Sensor (LFX)*
B34	Engine Coolant Temperature Sensor	LWN	In the engine compartment, left of center, mounted to left side of engine block, above the starter	*Left Side of Engine Components (LWN)*	*B34 Engine Coolant Temperature Sensor (LWN)*
B35	Engine Oil Level Switch	LCV	In the engine compartment, right of center, near middle, mounted to right side of oil pan	*Right Rear of Engine Components (LCV)*	*B35 Engine Oil Level Switch (LCV)*
B35	Engine Oil Level Switch	LFX	In the engine compartment, mounted to right side of oil pan above the drain plug	*Right Bottom of Engine Components (LFX)*	*B35 Engine Oil Level Switch (LFX)*
B35	Engine Oil Level Switch	LWN	In the engine compartment, mounted to right side of oil pan above the drain plug	*Right Bottom of Engine Components (LWN)*	*B35 Engine Oil Level Switch (LWN)*
B37B	Engine Oil Pressure Sensor	LCV	In the engine compartment, right of center, near middle, mounted to right side of engine block	*Right Bottom of Engine Components (LCV)*	*B37B Engine Oil Pressure Sensor (LCV)*
B37B	Engine Oil Pressure Sensor	LFX	In the engine compartment, left of center, near front, mounted to oil filter adapter	*Left Front of the Engine Components (LFX)*	*B37B Engine Oil Pressure Sensor (LFX)*
B37B	Engine Oil Pressure Sensor	LWN	In the engine compartment, right of center, near front, mounted to oil filter adapter	*Right Bottom of Engine Components (LWN)*	*B37B Engine Oil Pressure Sensor (LWN)*
B39	A/C Evaporator Temperature Sensor	—	In the passenger compartment, part of HVAC module, behind the instrument panel	*HVAC Assembly Components*	*B39 A/C Evaporator Temperature Sensor*

B46	Fuel Level Sensor	—	Under the vehicle, inside the fuel tank, part of the fuel pump and level sensor assembly	—	—
B47	Fuel Pressure Sensor	LCV/LFX	On the vehicle underbody, inboard left frame rail, on the fuel line, next to the electronic brake control module	• *Chassis Components (Crew Cab)* • *Chassis Underbody Components (Extended Cab)*	*B47 Fuel Pressure Sensor (LCV/LFX)*
B47B	Fuel Rail Pressure Sensor	LCV	In the engine compartment, middle, mounted to the fuel rail, below the intake manifold	*Right Top of Engine Components (LCV)*	*B47B Fuel Rail Pressure Sensor (LCV)*
B47B	Fuel Rail Pressure Sensor	LFX	In the engine compartment, rear of the engine, on fuel rail below the intake manifold	—	*B47B Fuel Rail Pressure Sensor (LFX)*
B47B	Fuel Rail Pressure Sensor	LWN	In the engine compartment, left rear of engine, on fuel rail	*Right Rear of Engine Components (LWN)*	*B47B Fuel Rail Pressure Sensor (LWN)*
B52A	Heated Oxygen Sensor 1	LCV	In the engine compartment, left of center, in the exhaust manifold	*Left Front of the Engine Components (LCV)*	*B52A Heated Oxygen Sensor 1 (LCV)*
B52B	Heated Oxygen Sensor 2	LCV	In the engine compartment, rear, left of center, mounted to catalytic converter, near transmission	*Left Front of the Engine Components (LCV)*	*B52B Heated Oxygen Sensor 2 (LCV)*
B52C	Heated Oxygen Sensor - Bank 1 Sensor 1	LFX	In the engine compartment, right of center, near rear, on exhaust pipe, before the catalytic converter	*Right Rear of Engine Components (LFX)*	*B52C Heated Oxygen Sensor - Bank 1 Sensor 1 (LFX)*
B52D	Heated Oxygen Sensor - Bank 1 Sensor 2	LFX	In the engine compartment, right of center, rear, on exhaust pipe, after the catalytic converter	*Right Rear of Engine Components (LFX)*	*B52D Heated Oxygen Sensor - Bank 1 Sensor 2 (LFX)*
B52E	Heated Oxygen Sensor - Bank 2 Sensor 1	LFX	In the engine compartment, left of center, near rear, on exhaust pipe, before the catalytic converter	*Left Front of the Engine Components (LFX)*	*B52E Heated Oxygen Sensor - Bank 2 Sensor 1 (LFX)*
B52F	Heated Oxygen Sensor - Bank 2 Sensor 2	LFX	In the engine compartment, left of center, rear, on exhaust pipe, after the catalytic converter	*Right Rear of Engine Components (LFX)*	*B52F Heated Oxygen Sensor - Bank 2 Sensor 2 (LFX)*
B55	Hood Ajar Switch	UTJ	In the front of the engine compartment, part of the hood latch	*Left Front of Engine Compartment Components*	*B55 Hood Ajar Switch (UTJ)*
B59L	Front Impact Sensor - Left	—	In the engine compartment, lower left front of the radiator support	*Left Front of Engine Compartment Components*	*B59L Front Impact Sensor - Left*
B59R	Front Impact Sensor - Right	—	In the engine compartment, lower right front of the radiator support	*Right Front of Engine Compartment Components*	*B59R Front Impact Sensor - Right*
B60	Passenger Presence Sensor	AL0	In the passenger compartment, under the passenger seat cushion, part of the passenger presence module	—	—
B61P	Seat Belt Tension Sensor - Passenger	AL0	In the passenger compartment, part of the passenger seat belt buckle	—	*B61P Seat Belt Tension Sensor - Passenger (AL0)*
B63LF	Side Impact Sensor - Left Front	—	In the driver door, behind the trim panel, toward the rear of the door	*Driver Door Components*	*B63LF Side Impact Sensor - Left Front*
B63LR	Side Impact Sensor - Left Rear	—	In the left rear door, behind the trim panel, toward the rear of the door	• *Left Passenger Components (Crew Cab)* • *Left Passenger Components (Extended Cab)*	*B63LR Side Impact Sensor - Left Rear*
B63RF	Side Impact Sensor - Right Front	—	In the passenger door, behind the trim panel, toward the rear of the door	*Passenger Door Components*	*B63RF Side Impact Sensor - Right Front*

B63RR	Side Impact Sensor - Right Rear	—	In the right rear door, behind the trim panel, toward the rear of the door	• *Right Passenger Components (Crew Cab)* • *Right Passenger Components (Extended Cab)*	*B63RR Side Impact Sensor - Right Rear*
B65	Intake Manifold Pressure and Air Temperature Sensor	LWN	In the engine compartment, left of center, mounted to top of intake manifold	*Top of Engine Components (LWN)*	*B65 Intake Manifold Pressure and Air Temperature Sensor (LWN)*
B68A	Knock Sensor 1	LCV	In the engine compartment, right of center, mounted to right side of engine block	*Right Bottom of Engine Components (LCV)*	*B68A Knock Sensor 1 (LCV)*
B68A	Knock Sensor 1	LFX	In the engine compartment, right of center, mounted to right side of engine block	*Right Bottom of Engine Components (LFX)*	*B68A Knock Sensor 1 (LFX)*
B68B	Knock Sensor 2	LCV	In the engine compartment, mounted to right side of engine block	*Right Bottom of Engine Components (LCV)*	*B68B Knock Sensor 2 (LCV)*
B68B	Knock Sensor 2	LFX	In the engine compartment, middle, mounted to left side of engine block	*Left Front of the Engine Components (LFX)*	*B68B Knock Sensor 2 (LFX)*
B74	Manifold Absolute Pressure Sensor	LCV	In the engine compartment, mounted to right side of intake manifold	*Right Bottom of Engine Components (LCV)*	*B74 Manifold Absolute Pressure Sensor*
B74	Manifold Absolute Pressure Sensor	LFX	In the engine compartment, mounted to top of intake manifold	*Right Rear of Engine Components (LFX)*	*B74 Manifold Absolute Pressure Sensor*
B75C	Multifunction Intake Air Sensor	LCV/LFX	Right side of the engine compartment, in the air intake duct	• *Right Rear of Engine Components (LCV)* • *Right Rear of Engine Components (LFX)*	*B75C Multifunction Intake Air Sensor*
B75C	Multifunction Intake Air Sensor	LWN	Right side of the engine compartment, in the air intake duct	*Right Rear of Engine Components (LWN)*	*B75C Multifunction Intake Air Sensor*
B80	Park Brake Switch	—	In the passenger compartment, at the left side of the Driver Footwell	• *Below Left Side of the Instrument Panel Components (MYB)* • *Below Left Side of the Instrument Panel Components (N8D)* • *Left Passenger Components (Crew Cab)*	*B80 Park Brake Switch*
B81B	Park Position Switch	MYB	In the passenger compartment, center near front, on shift lever within floor console	—	—
B87	Rearview Camera	—	In the lower center of the tailgate handle assembly	*Rear of Vehicle Components*	*B87 Rearview Camera*
B88D	Seat Belt Switch - Driver	—	In the passenger compartment, on the side of the driver seat cushion, part of the driver seat belt buckle	*Driver Seat Components*	*B88D Seat Belt Switch - Driver*
B88P	Seat Belt Switch - Passenger	—	In the passenger compartment, on the side of the passenger seat cushion, part of the passenger front seat belt buckle	*Passenger Seat Components*	*B88P Seat Belt Switch - Passenger*
B107	Accelerator Pedal Position Sensor	—	In the passenger compartment, on the driver floor board above the accelerator pedal	• *Below Left Side of the Instrument Panel Components (MYB)* • *Below Left Side of the Instrument Panel Components (N8D)*	*B107 Accelerator Pedal Position Sensor*

B116	Water in Fuel Sensor	LWN	On the underbody, along the inboard side of the left frame rail, mounted to the fuel filter assembly	*Underbody Components (LWN) (3 of 6)*	*B116 Water in Fuel Sensor (LWN)*
B130A	Exhaust Gas Recirculation Temperature Sensor 1	LWN	In the engine compartment, left rear of engine, attached to the cylinder head	*Right Rear of Engine Components (LWN)*	*B130A Exhaust Gas Recirculation Temperature Sensor 1 (LWN)*
B130B	Exhaust Gas Recirculation Temperature Sensor 2	LWN	In the engine compartment, right front of engine, attached to the exhaust manifold	*Right Rear of Engine Components (LWN)*	*B130B Exhaust Gas Recirculation Temperature Sensor 2 (LWN)*
B131A	Exhaust Temperature Sensor 1	LWN	In the engine compartment, right rear, mounted to the inlet side of the catalytic converter	*Right Rear of Engine Components (LWN)*	*B131A Exhaust Temperature Sensor 1 (LWN)*
B131B	Exhaust Temperature Sensor 2	LWN	In the engine compartment, right rear, mounted to the outlet side of the catalytic converter	*Right Rear of Engine Components (LWN)*	*B131B Exhaust Temperature Sensor 2 (LWN)*
B131C	Exhaust Temperature Sensor 3	LWN	On the underbody, right, mounted to the outlet side of the nitrogen oxides catalytic converter	*Underbody Components (LWN) (2 of 6)*	*B131C Exhaust Temperature Sensor 3 (LWN)*
B131D	Exhaust Temperature Sensor 4	LWN	On the underbody, inboard side of the right frame rail, mounted to the exhaust particulate filter	*Underbody Components (LWN) (2 of 6)*	*B131D Exhaust Temperature Sensor 4 (LWN)*
B131E	Exhaust Temperature Sensor 5	LWN	On the underbody, inboard side of the right frame rail, rear of the exhaust particulate filter, mounted to the exhaust pipe	*Underbody Components (LWN) (2 of 6)*	*B131E Exhaust Temperature Sensor 5 (LWN)*
B136	Exhaust Particulate Matter Sensor	LWN	On the underbody, mounted to the inboard side of the right frame rail, forward of the right rear shock	*Underbody Components (LWN) (4 of 6)*	*B136 Exhaust Particulate Matter Sensor (LWN)*
B137	Power Steering Shaft Torque Sensor	—	In the engine compartment, lower left, part of power steering rack assembly	—	*B137 Power Steering Shaft Torque Sensor*
B150	Fuel Tank Pressure Sensor	LCV/LFX	On the underbody, mounted to the fuel pump and level sensor assembly	• *Chassis Components (Crew Cab)* • *Underbody Components (2 of 3)*	*B150 Fuel Tank Pressure Sensor (LCV/LFX)*
B153D	Seat Belt Buckle - Driver	—	In the passenger compartment, at the inboard of the driver seat	—	—
B153P	Seat Belt Buckle - Passenger	—	In the passenger compartment, at the inboard of the passenger seat	—	—
B154	Diesel Particulate Filter Exhaust Differential Pressure Sensor	LWN	On the underbody, mounted to the underside side of the bed, above the right frame rail, forward of the right rear shock	*Underbody Components (LWN) (4 of 6)*	*B154 Diesel Particulate Filter Exhaust Differential Pressure Sensor (LWN)*
B160	Windshield Temperature and Inside Moisture Sensor	C68	In the passenger compartment, behind the inside rearview mirror, near the windshield	• *Headliner Components (Crew Cab)* • *Headliner Components (Extended Cab)*	*B160 Windshield Temperature and Inside Moisture Sensor (C68)*
B193A	Charge Air Cooler Inlet Temperature Sensor	LWN	In the engine compartment, right front of engine, attached to the charge air cooler inlet duct	*Right Rear of Engine Components (LWN)*	*B193A Charge Air Cooler Inlet Temperature Sensor (LWN)*
B193B	Charge Air Cooler Outlet Temperature Sensor	LWN	In the engine compartment, left front of engine, attached to the charge air cooler outlet duct	*Left Side of Engine Components (LWN)*	*B193B Charge Air Cooler Outlet Temperature Sensor (LWN)*
B194	Reductant Pressure Sensor	LWN	Internal to the reductant fluid reservoir assembly	—	—
B195A	Nitrogen Oxides Sensor 1	LWN	In the engine compartment, right rear, mounted near the top of the catalytic converter	*Right Rear of Engine Components (LWN)*	*B195A Nitrogen Oxides Sensor 1 (LWN)*
B195B	Nitrogen Oxides Sensor 2	LWN	On the underbody, right, mounted to the outlet side of the nitrogen oxides catalytic converter	*Underbody Components (LWN) (2 of 6)*	*B195B Nitrogen Oxides Sensor 2 (LWN)*

B203	Engine Coolant Radiator Temperature Sensor	LCV	In the engine compartment, lower left corner of radiator	*Radiator Assembly Components*	*B203 Engine Coolant Radiator Temperature Sensor (LCV)*
B213	Reductant Level Sensor	LWN	Internal to the reductant fluid reservoir assembly	—	—
B214	Reductant Temperature Sensor	LWN	Internal to the reductant fluid reservoir assembly	—	—
B227	Gear Position Sensor	NQ6	Under the vehicle, on the top rear of the transfer case	*Automatic Transmission Components (MYB with NQ6/NQ7)*	*B227 Gear Position Sensor (NQ6)*
C1	Battery	—	In the engine compartment, on the left side, near the underhood fuse block	*Left Side of Engine Compartment Components (1 of 2)*	*C1 Battery*
C3	Telematics Communication Interface Control Module Battery	UE1 with LWN	In the passenger compartment, right side of the instrument panel, behind the glove box, near the telematics communication interface control module	—	*C3 Telematics Communication Interface Control Module Battery (UE1 with LWN)*
E4AA	Park Lamp - Lower Left	Z88	Outside of the vehicle, front left, in the headlamp assembly	*Front of Vehicle Components (GMC/Z88)*	—
E4AB	Park Lamp - Lower Right	Z88	Outside of the vehicle, front right, in the headlamp assembly	*Front of Vehicle Components (GMC/Z88)*	—
E4E	Headlamp - Left High Beam	—	Outside of the vehicle, at the left front of the vehicle, in the headlamp assembly	• *Front of Vehicle Components (Chevrolet/X88)* • *Front of Vehicle Components (GMC/Z88)*	*E4E Headlamp - Left High Beam*
E4F	Headlamp - Right High Beam	—	Outside of the vehicle, at the right front of the vehicle, in the headlamp assembly	• *Front of Vehicle Components (Chevrolet/X88)* • *Front of Vehicle Components (GMC/Z88)*	*E4F Headlamp - Right High Beam*
E4G	Headlamp - Left Low Beam	—	Outside of the vehicle, at the left front of the vehicle, in the headlamp assembly	• *Front of Vehicle Components (Chevrolet/X88)* • *Front of Vehicle Components (GMC/Z88)*	*E4G Headlamp - Left Low Beam*
E4H	Headlamp - Right Low Beam	—	Outside of the vehicle, at the right front of the vehicle, in the headlamp assembly	• *Front of Vehicle Components (Chevrolet/X88)* • *Front of Vehicle Components (GMC/Z88)*	*E4H Headlamp - Right Low Beam*
E4J	Park Lamp - Left Front	X88	Outside of the vehicle, at the left front of the vehicle, in the headlamp assembly	*Front of Vehicle Components (Chevrolet/X88)*	*E4J Park Lamp - Left Front (X88)*
E4J	Park Lamp - Left Front	Z88	Outside of the vehicle, at the left front of the vehicle, in the headlamp assembly	*Front of Vehicle Components (GMC/Z88)*	—
E4K	Park Lamp - Right Front	X88	Outside of the vehicle, at the right front of the vehicle, in the headlamp assembly	*Front of Vehicle Components (Chevrolet/X88)*	*E4K Park Lamp - Right Front (X88)*
E4K	Park Lamp - Right Front	Z88	Outside of the vehicle, at the right front of the vehicle, in the headlamp assembly	*Front of Vehicle Components (GMC/Z88)*	—
E4N	Park/Turn Signal Lamp - Left	—	Outside of the vehicle, at the left front of the vehicle, in the headlamp assembly	• *Front of Vehicle Components (Chevrolet/X88)* • *Front of Vehicle Components (GMC/Z88)*	*E4N Park/Turn Signal Lamp - Left*

E4P	Park/Turn Signal Lamp - Right	—	Outside of the vehicle, at the right front of the vehicle, in the headlamp assembly	• *Front of Vehicle Components (Chevrolet/X88)* • *Front of Vehicle Components (GMC/Z88)*	*E4P Park/Turn Signal Lamp - Right*
E5A	Backup Lamp - Left	—	Outside of the vehicle, at the left rear corner of the vehicle, part of the left tail lamp assembly	*Rear of Vehicle Components*	*E5A Backup Lamp - Left*
E5AG	Tail/Stop and Turn Signal Lamp - Left Upper	—	Outside of the vehicle, at the left rear corner of the vehicle, part of the left tail lamp assembly	*Rear of Vehicle Components*	*E5AG Tail/Stop and Turn Signal Lamp - Left Upper*
E5AH	Tail/Stop and Turn Signal Lamp - Right Upper	—	Outside of the vehicle, at the right rear corner of the vehicle, part of the right tail lamp assembly	*Rear of Vehicle Components*	*E5AH Tail/Stop and Turn Signal Lamp - Right Upper*
E5B	Backup Lamp - Right	—	Outside of the vehicle, at the right rear corner of the vehicle, part of the right tail lamp assembly	*Rear of Vehicle Components*	*E5B Backup Lamp - Right*
E5U	Tail/Stop and Turn Signal Lamp - Left Lower	—	Outside of the vehicle, at the left rear corner of the vehicle, part of the left tail lamp assembly	*Rear of Vehicle Components*	*E5U Tail/Stop and Turn Signal Lamp - Left Lower*
E5V	Tail/Stop and Turn Signal Lamp - Right Lower	—	Outside of the vehicle, at the right rear corner of the vehicle, part of the right tail lamp assembly	*Rear of Vehicle Components*	*E5V Tail/Stop and Turn Signal Lamp - Right Lower*
E6	Center High Mounted Stop Lamp	—	Outside of the vehicle, at the rear center of the roof	*Rear of Vehicle Components*	*E6 Center High Mounted Stop Lamp*
E7L	License Plate Lamp - Left	—	Outside of the vehicle, at the rear center of the vehicle	*Rear of Vehicle Components*	*E7L License Plate Lamp - Left*
E7R	License Plate Lamp - Right	—	Outside of the vehicle, at the rear center of the vehicle	*Rear of Vehicle Components*	*E7R License Plate Lamp - Right*
E11	Fuel Heater	LWN	On the underbody, along the inboard side of the left frame rail, mounted to the fuel filter assembly	*Underbody Components (LWN) (3 of 6)*	*E11 Fuel Heater (LWN)*
E12A	Glow Plug 1	LWN	In the engine compartment, at the top left side of the engine at number 1 cylinder	*Top of Engine Components (LWN)*	*E12A Glow Plug 1 (LWN)*
E12B	Glow Plug 2	LWN	In the engine compartment, at the top left side of the engine at number 2 cylinder	*Top of Engine Components (LWN)*	*E12B Glow Plug 2 (LWN)*
E12C	Glow Plug 3	LWN	In the engine compartment, at the top left side of the engine at number 3 cylinder	*Top of Engine Components (LWN)*	*E12C Glow Plug 3 (LWN)*
E12D	Glow Plug 4	LWN	In the engine compartment, at the top left side of the engine at number 4 cylinder	*Top of Engine Components (LWN)*	*E12D Glow Plug 4 (LWN)*
E13LA	Headlamp Assembly - Left	—	Outside of the vehicle, at the front left of the vehicle	• *Front of Vehicle Components (Chevrolet/X88)* • *Front of Vehicle Components (GMC/Z88)*	—
E13RA	Headlamp Assembly - Right	—	Outside of the vehicle, at the front right of the vehicle	• *Front of Vehicle Components (Chevrolet/X88)* • *Front of Vehicle Components (GMC/Z88)*	—
E14A	Seat Heating Element - Driver Back	KA1	In the passenger compartment, in the driver seat back	*Driver Seat Components*	*E14A Seat Heating Element - Driver Back (KA1)*

E14B	Seat Heating Element - Driver Cushion	KA1	In the passenger compartment, in the driver seat cushion	*Driver Seat Components*	*E14B Seat Heating Element - Driver Cushion (KA1)*
E14C	Seat Heating Element - Passenger Back	KA1	In the passenger compartment, in the passenger seat back	*Passenger Seat Components*	*E14C Seat Heating Element - Passenger Back (KA1)*
E14D	Seat Heating Element - Passenger Cushion	KA1	In the passenger compartment, in the passenger seat cushion	*Passenger Seat Components*	*E14D Seat Heating Element - Passenger Cushion (KA1)*
E17D	Outside Rearview Mirror Glass - Driver	DL9	Outside of the vehicle, on the driver door, part of outside rearview mirror	—	• *E17D Outside Rearview Mirror Glass - Driver X1 (DL9)* • *E17D Outside Rearview Mirror Glass - Driver X2 (DL9)*
E17P	Outside Rearview Mirror Glass - Passenger	DL9	Outside of the vehicle, on the front passenger door, part of outside rearview mirror	—	• *E17P Outside Rearview Mirror Glass - Passenger X1 (DL9)* • *E17P Outside Rearview Mirror Glass - Passenger X2 (DL9)*
E18	Rear Defogger Grid	C49	In the passenger compartment, on the inside of the rear window	*Rear of Vehicle Components*	• *E18 Rear Defogger Grid X1* • *E18 Rear Defogger Grid X2*
E29LF	Fog Lamp - Left Front	T3U	At the left front corner of the vehicle, below the left headlamp assembly	*Front of Vehicle Components (Chevrolet/X88)*	*E29LF Fog Lamp - Left Front (T3U)*
E29RF	Fog Lamp - Right Front	T3U	At the right front corner of the vehicle, below the right headlamp assembly	*Front of Vehicle Components (Chevrolet/X88)*	*E29RF Fog Lamp - Right Front (T3U)*
E31L	Sunshade Mirror Lamp - Left	D6I	In the passenger compartment, part of the left sunshade	• *Headliner Components (Crew Cab)* • *Headliner Components (Extended Cab)*	*E31L Sunshade Mirror Lamp - Left (D6I)*
E31R	Sunshade Mirror Lamp - Right	D6I	In the passenger compartment, part of the right sunshade	• *Headliner Components (Crew Cab)* • *Headliner Components (Extended Cab)*	*E31R Sunshade Mirror Lamp - Right (D6I)*
E32	Cigarette Lighter Receptacle	SAO	In the passenger compartment, at the forward right on the center console. Dealer installed accessory replaces the accessory power receptacle - center console 1	—	*E32 Cigarette Lighter Receptacle (SAO)*
E33L	Cargo Lamp - Left	—	Outside of the vehicle, at the rear center of the roof, part of the center high mounted stop lamp	*Rear of Vehicle Components*	*E33L Cargo Lamp - Left*
E33L	Cargo Lamp - Left	S0Y	Outside of the vehicle, on top of the left bed rail	—	—
E33R	Cargo Lamp - Right	—	Outside of the vehicle, at the rear center of the roof, part of the center high mounted stop lamp	*Rear of Vehicle Components*	*E33R Cargo Lamp - Right*
E33R	Cargo Lamp - Right	S0Y	Outside of the vehicle, on top of the right bed rail	—	—
E36AH	Dome Lamp	—	In the passenger compartment, in the headliner, part of the headliner console	—	*E36AH Dome Lamp*
E37F	Dome/Reading Lamps - Front	C74	In the passenger compartment, in the headliner, part of the headliner console	• *Headliner Components (Crew Cab)* • *Headliner Components (Extended Cab)*	*E37F Dome/Reading Lamps - Front (C74)*

E37R	Dome/Reading Lamps - Rear	—	In the passenger compartment, on the roof, above the second row seating	• *Headliner Components (Crew Cab)* • *Headliner Components (Extended Cab)*	*E37R Dome/Reading Lamps - Rear*
E40	Electrical Auxiliary Heater	LWN	In the passenger compartment, center of instrument panel, attached to HVAC assembly	*HVAC Assembly Bottom Components (LWN)*	• *E40 Electrical Auxiliary Heater X1 (LWN)* • *E40 Electrical Auxiliary Heater X2 (LWN)*
E41	Engine Coolant Thermostat Heater	LCV	In the engine compartment, left front of the engine, on the thermostat housing	*Left Front of the Engine Components (LCV)*	*E41 Engine Coolant Thermostat Heater (LCV)*
E42L	Tail Lamp Assembly - Left	—	Outside of the vehicle, at the left rear corner of the vehicle	*Rear of Vehicle Components*	—
E42R	Tail Lamp Assembly - Right	—	Outside of the vehicle, at the right rear corner of the vehicle	*Rear of Vehicle Components*	—
E45	Positive Crankcase Ventilation Heater	LWN	In the engine compartment, front right of the engine, forward of the turbocharger	*Right Bottom of Engine Components (LWN)*	*E45 Positive Crankcase Ventilation Heater (LWN)*
E52	Reductant Line Heater	LWN	Internal to the reductant fluid reservoir assembly	—	—
E53	Reductant Tank Heater	LWN	Internal to the reductant fluid reservoir assembly	—	—
F101	Passenger Instrument Panel Air Bag	—	In the passenger compartment, at the top of the passenger side of the instrument panel	*Behind the Instrument Panel Components*	• *F101 Passenger Instrument Panel Air Bag X1* • *F101 Passenger Instrument Panel Air Bag X2* • *F101 Passenger Instrument Panel Air Bag X3*
F105L	Roof Rail Air Bag - Left	—	In the passenger compartment, along the left roof rail, above headliner at door openings	• *Left Passenger Components (Crew Cab)* • *Left Passenger Components (Extended Cab)*	• *F105L Roof Rail Air Bag - Left (Crew Cab)* • *F105L Roof Rail Air Bag - Left (Extended Cab)*
F105R	Roof Rail Air Bag - Right	—	In the passenger compartment, along the right roof rail, above headliner at door openings	• *Right Passenger Components (Crew Cab)* • *Right Passenger Components (Extended Cab)*	• *F105R Roof Rail Air Bag - Right (Crew Cab)* • *F105R Roof Rail Air Bag - Right (Extended Cab)*
F106D	Seat Side Air Bag - Driver	—	In the passenger compartment, on the left side of the left front seat back	*Driver Seat Components*	*F106D Seat Side Air Bag - Driver*
F106P	Seat Side Air Bag - Passenger	—	In the passenger compartment, on the right side of the right front seat back	*Passenger Seat Components*	*F106P Seat Side Air Bag - Passenger*
F107	Steering Wheel Air Bag	—	In the passenger compartment, in the center of the steering wheel	*Steering Column Components*	• *F107 Steering Wheel Air Bag X1* • *F107 Steering Wheel Air Bag X2*
F112D	Seat Belt Retractor Pretensioner - Driver	Crew Cab	In the passenger compartment, at the base of the left B-pillar	*Left Passenger Components (Crew Cab)*	*F112D Seat Belt Retractor Pretensioner - Driver (Crew Cab)*
F112D	Seat Belt Retractor Pretensioner - Driver	Extended Cab	In the passenger compartment, at the lower front of the left rear door	*Left Rear Door Components (Extended Cab)*	*F112D Seat Belt Retractor Pretensioner - Driver (Extended Cab)*

F112P	Seat Belt Retractor Pretensioner - Passenger	Crew Cab	In the passenger compartment, at the base of the right B-pillar	*Right Passenger Components (Crew Cab)*	*F112P Seat Belt Retractor Pretensioner - Passenger (Crew Cab)*
F112P	Seat Belt Retractor Pretensioner - Passenger	Extended Cab	In the passenger compartment, at the lower front of the right rear door	*Right Rear Door Components (Extended Cab)*	*F112P Seat Belt Retractor Pretensioner - Passenger (Extended Cab)*
F113D	Seat Belt Anchor Pretensioner - Driver	Crew Cab	In the passenger compartment, between driver seat and center console, attached to driver seat	*Driver Seat Components*	*F113D Seat Belt Anchor Pretensioner - Driver*
F113D	Seat Belt Anchor Pretensioner - Driver	Extended Cab	In the passenger compartment, at the lower front of the left rear door	*Left Rear Door Components (Extended Cab)*	*F113D Seat Belt Anchor Pretensioner - Driver*
F113P	Seat Belt Anchor Pretensioner - Passenger	Crew Cab	In the passenger compartment, between passenger seat and center console, attached to passenger seat	*Passenger Seat Components*	*F113P Seat Belt Anchor Pretensioner - Passenger*
F113P	Seat Belt Anchor Pretensioner - Passenger	Extended Cab	In the passenger compartment, at the lower front of the right rear door	*Right Rear Door Components (Extended Cab)*	*F113P Seat Belt Anchor Pretensioner - Passenger*
G1	A/C Compressor	—	In the engine compartment, mounted on the lower left front of the engine	• *Left Front of the Engine Components (LCV)* • *Left Front of the Engine Components (LFX)* • *Left Front of the Engine Components (LWN)*	*G1 A/C Compressor*
G10	Cooling Fan Motor	—	At the front of the engine compartment, in the center of the fan assembly, part of fan control module	—	—
G12	Fuel Pump	—	Under the vehicle, in the fuel tank, part of the fuel pump and level sensor assembly	—	—
G13	Generator	LCV	In the engine compartment, at the top left front of the engine	*Right Rear of Engine Components (LCV)*	• *G13 Generator X1* • *G13 Generator X2 (LCV)*
G13	Generator	LFX	In the engine compartment, bottom right side of the engine	*Right Rear of Engine Components (LFX)*	• *G13 Generator X1* • *G13 Generator X2 (LFX)*
G13	Generator	LWN	In the engine compartment, at the top left front of the engine	*Left Front of the Engine Components (LWN)*	• *G13 Generator X1* • *G13 Generator X2 (LWN)*
G18	High Pressure Fuel Pump	LCV	In the engine compartment, right of center, near rear, mounted to right side of cylinder head	*Right Rear of Engine Components (LCV)*	*G18 High Pressure Fuel Pump (LCV)*
G18	High Pressure Fuel Pump	LFX	In the engine compartment, left of center, rear, mounted to rear of bank 2 cylinder head	*Right Rear of Engine Components (LFX)*	*G18 High Pressure Fuel Pump (LFX)*
G24	Windshield Washer Pump	—	In the engine compartment, attached to the washer fluid reservoir	*Left Front of Engine Compartment Components*	*G24 Windshield Washer Pump*
G33	Reductant Pump	LWN	Internal to the reductant fluid reservoir assembly	—	—
K8	Blower Motor Control Module	—	In the passenger compartment, part of the blower motor	*HVAC Assembly Components*	*K8 Blower Motor Control Module*

K9	Body Control Module	—	In the passenger compartment, behind the left side of the instrument panel knee bolster	*Behind the Instrument Panel Components*	• *K9 Body Control Module X1* • *K9 Body Control Module X2* • *K9 Body Control Module X3* • *K9 Body Control Module X4* • *K9 Body Control Module X5* • *K9 Body Control Module X6* • *K9 Body Control Module X7*
K17	Electronic Brake Control Module	—	On vehicle underbody, driver side, under driver seat area on the frame	• *Chassis Components (Crew Cab)* • *Chassis Underbody Components (Extended Cab)*	*K17 Electronic Brake Control Module*
K20	Engine Control Module	—	In the engine compartment, to the right of the engine, under the coolant reservoir	*Right Rear of Engine Compartment Components*	• *K20 Engine Control Module X1 (LCV)* • *K20 Engine Control Module X1 (LFX)* • *K20 Engine Control Module X1 (LWN)* • *K20 Engine Control Module X2 (LCV)* • *K20 Engine Control Module X2 (LFX)* • *K20 Engine Control Module X2 (LWN)* • *K20 Engine Control Module X3 (LCV)* • *K20 Engine Control Module X3 (LFX)* • *K20 Engine Control Module X3 (LWN)*
K22	Cooling Fan Control Module	LCV/LFX	In the engine compartment, forward of the engine, near radiator	*Radiator Assembly Components*	*K22 Cooling Fan Control Module (LCV/LFX)*
K22	Cooling Fan Control Module	LWN	In the engine compartment, forward of the engine, near radiator	*Radiator Assembly Components*	—
K29	Seat Heating Control Module	KA1	In the passenger compartment, under the front of the passenger seat	*Passenger Seat Components*	• *K29 Seat Heating Control Module X1 (KA1)* • *K29 Seat Heating Control Module X2 (KA1)*
K33	HVAC Control Module	—	In the passenger compartment, center of the instrument panel, behind the multifunction instrument panel switch	*Behind the Instrument Panel Components*	• *K33 HVAC Control Module X1* • *K33 HVAC Control Module X2* • *K33 HVAC Control Module X3*
K36	Inflatable Restraint Sensing and Diagnostic Module	—	In the passenger compartment, under the center console	• *Left Passenger Components (Crew Cab)* • *Left Passenger Components (Extended Cab)*	• *K36 Inflatable Restraint Sensing and Diagnostic Module X1* • *K36 Inflatable Restraint Sensing and Diagnostic Module X2*
K38	Chassis Control Module	LFX	Under the vehicle, mounted to the bracket above the spare tire	• *Chassis Components (Crew Cab)* • *Underbody Components (2 of 3)*	*K38 Chassis Control Module (LFX)*

K38	Chassis Control Module	LWN	Under the vehicle, mounted to the bracket above the spare tire	• *Chassis Components (Crew Cab)* • *Underbody Components (2 of 3)*	*K38 Chassis Control Module (LWN)*
K43	Power Steering Control Module	—	On the underbody, lower front of engine compartment, on the power steering rack assembly	*Underbody Components (1 of 3)*	• *K43 Power Steering Control Module X1* • *K43 Power Steering Control Module X2* • *K43 Power Steering Control Module X3*
K69	Transfer Case Control Module	NQ6/NQ7	In the passenger compartment, under the instrument panel, behind glove box, right of the HVAC assembly	• *Right Passenger Components (Crew Cab)* • *Right Passenger Components (Extended Cab)*	• *K69 Transfer Case Control Module X1 (NQ6/NQ7)* • *K69 Transfer Case Control Module X2 (NQ6/NQ7)* • *K69 Transfer Case Control Module X3 (NQ6/NQ7)*
K71	Transmission Control Module	MYB	Underneath the vehicle, inside the automatic transmission assembly, part of the control solenoid valve	*Automatic Transmission Components (MYB with NQ6/NQ7)*	—
K73	Telematics Communication Interface Control Module	UE1	In the passenger compartment, above the right kick panel, behind the instrument panel I-beam	• *Right Passenger Components (Crew Cab)* • *Right Passenger Components (Extended Cab)*	• *K73 Telematics Communication Interface Control Module X1 (UE1)* • *K73 Telematics Communication Interface Control Module X2 (UE1)* • *K73 Telematics Communication Interface Control Module X5 (UE1)* • *K73 Telematics Communication Interface Control Module X7 (UE1)*
K74	Human Machine Interface Control Module	IO4/IO5/IO6	In the passenger compartment, center of the instrument panel, behind the HVAC controls	*Behind the Instrument Panel Components*	• *K74 Human Machine Interface Control Module X1 (IO4/IO5/IO6)* • *K74 Human Machine Interface Control Module X2 (IO4/IO5/IO6)* • *K74 Human Machine Interface Control Module X3 (IO4/IO5/IO6)* • *K74 Human Machine Interface Control Module X4 (IO5/IO6)* • *K74 Human Machine Interface Control Module X5 (IO4/IO5/IO6)* • *K74 Human Machine Interface Control Module X7 (IO6)*
K77	Remote Control Door Lock Receiver	—	In the passenger compartment, above the right rear of the headliner	• *Headliner Components (Crew Cab)* • *Headliner Components (Extended Cab)*	*K77 Remote Control Door Lock Receiver*
K85	Passenger Presence Module	AL0	In the passenger compartment, under the front of the front passenger seat cushion	*Passenger Seat Components*	*K85 Passenger Presence Module*
K89	Immobilizer Control Module	—	In the passenger compartment, on the steering column, near the key cylinder	*Front of the Instrument Panel Components*	*K89 Immobilizer Control Module*

K109	Frontview Camera Module	UEU/UFL	In the passenger compartment, behind the inside rearview mirror on the windshield	• *Headliner Components (Crew Cab)* • *Headliner Components (Extended Cab)*	*K109 Frontview Camera Module (UEU/UFL)*
K111	Fuel Pump Driver Control Module	LCV	Under the vehicle, mounted to the bracket above the spare tire	*Underbody Components (2 of 3)*	*K111 Fuel Pump Driver Control Module (LCV)*
K115	Reductant Control Module	LWN	Under the vehicle, Above and behind the rear axle, mounted to the reductant fluid reservoir assembly	*Underbody Components (LWN) (5 of 6)*	• *K115 Reductant Control Module X1 (LWN)* • *K115 Reductant Control Module X2 (LWN)*
K133	Trailer Brake Power Control Module	JL1	Under the vehicle, mounted to the bracket above the spare tire, between rear cross member and rear bumper	*Underbody Components (LWN) (6 of 6)*	*K133 Trailer Brake Power Control Module (JL1)*
M4	Air Inlet Door Actuator	—	In the passenger compartment, behind the instrument panel glove box	*HVAC Assembly Components*	*M4 Air Inlet Door Actuator*
M6	Air Temperature Door Actuator	—	In the passenger compartment, part of HVAC module, behind the instrument panel	*HVAC Assembly Components*	*M6 Air Temperature Door Actuator*
M7	Transmission Shift Lock Control Solenoid Actuator	MYB	In the passenger compartment, center near front, on the shift lever within floor console	—	—
M9	Brake Booster Pump Motor	LFX	In the engine compartment, near front, right of center, mounted to the front of bank 1 cylinder head	*Right Bottom of Engine Components (LFX)*	*M9 Brake Booster Pump Motor (LFX)*
M26	Front Axle Engagement Actuator	NQ6/NQ7	Under the vehicle, on the rear of the transfer case	*Underbody Components (1 of 3)*	*M26 Front Axle Engagement Actuator (NQ6/NQ7)*
M37	Mode Door Actuator	—	In the passenger compartment, behind the instrument panel, on the upper left side of the HVAC module	*HVAC Assembly Components*	*M37 Mode Door Actuator*
M38	Power Steering Motor	—	On the underbody, lower front of engine compartment, on the power steering rack assembly	*Underbody Components (1 of 3)*	—
M51D	Seat Horizontal Motor - Driver	—	In the passenger compartment, under the center of the driver seat, between the seat tracks	*Driver Seat Components*	*M51D Seat Horizontal Motor – Driver*
M51P	Seat Horizontal Motor - Passenger	AAQ	In the passenger compartment, under the center of the passenger seat, between the seat tracks	*Passenger Seat Components*	*M51P Seat Horizontal Motor - Passenger (AAQ)*
M52D	Seat Lumbar Support Horizontal Motor - Driver	AL9	In the passenger compartment, part of the driver seat back	*Driver Seat Back Components*	*M52D Seat Lumbar Support Horizontal Motor - Driver (AL9)*
M52P	Seat Lumbar Support Horizontal Motor - Passenger	AAQ	In the passenger compartment, part of the passenger seat back	*Passenger Seat Back Components*	*M52P Seat Lumbar Support Horizontal Motor - Passenger (AAQ)*
M55D	Seat Rear Vertical Motor - Driver	—	In the passenger compartment, under the front of the driver seat, next to the left seat track	*Driver Seat Components*	*M55D Seat Rear Vertical Motor - Driver*
M55P	Seat Rear Vertical Motor - Passenger	AAQ	In the passenger compartment, under the front of the passenger seat, next to the left seat track	*Passenger Seat Components*	*M55P Seat Rear Vertical Motor - Passenger (AAQ)*
M64	Starter Motor	LCV	In the engine compartment, lower right rear of the engine	*Right Rear of Engine Components (LCV)*	• *M64 Starter Motor X1 (LCV)* • *M64 Starter Motor X2 (LCV)*

M64	Starter Motor	LFX	In the engine compartment, lower left rear of the engine	*Left Front of the Engine Components (LFX)*	• *M64 Starter Motor X1 (LFX)* • *M64 Starter Motor X2 (LFX)*
M64	Starter Motor	LWN	In the engine compartment, lower left rear of the engine	*Left Front of the Engine Components (LWN)*	• *M64 Starter Motor X1 (LWN)* • *M64 Starter Motor X2 (LWN)*
M74D	Window Motor - Driver	—	In the passenger compartment, behind the driver door trim panel, at the center of the door	*Driver Door Components*	*M74D Window Motor - Driver*
M74LR	Window Motor - Left Rear	Crew Cab	In the passenger compartment, center of the left rear door, behind the door trim panel	*Left Rear Door Components (Crew Cab)*	*M74LR Window Motor - Left Rear (Crew Cab)*
M74P	Window Motor - Passenger	—	In the passenger compartment, behind the front passenger door trim panel, at the center of the door	*Passenger Door Components*	*M74P Window Motor - Passenger*
M74RR	Window Motor - Right Rear	Crew Cab	In the passenger compartment, center of the right rear door, behind the door trim panel	*Right Rear Door Components (Crew Cab)*	*M74RR Window Motor - Right Rear (Crew Cab)*
M75	Windshield Wiper Motor	—	At the left rear of the engine compartment, near the windshield	*Left Side of Engine Compartment Components (1 of 2)*	*M75 Windshield Wiper Motor*
M77D	Outside Rearview Mirror Motor - Driver	DL6/DL9	Outside of the vehicle, on driver door, in the driver door mirror	—	*M77D Outside Rearview Mirror Motor - Driver (DL6/DL9)*
M77P	Outside Rearview Mirror Motor - Passenger	DL6/DL9	Outside of the vehicle, on passenger door, in the passenger door mirror	—	*M77P Outside Rearview Mirror Motor - Passenger (DL6/DL9)*
M93	Key Capture Solenoid Actuator	MYB	In the passenger compartment, left front of instrument panel, attached to the right side of steering column	*Front of the Instrument Panel Components*	*M93 Key Capture Solenoid Actuator (MYB)*
M96	Active Grille Air Shutter Actuator	LCV	At front of the vehicle, center, behind upper grille	*Front of Engine Compartment Components*	*M96 Active Grille Air Shutter Actuator (LCV)*
M96	Active Grille Air Shutter Actuator	LFX	At front of the vehicle, center, behind upper grille	*Front of Engine Compartment Components*	*M96 Active Grille Air Shutter Actuator (LFX)*
M103	Turbocharger Vane Position Actuator	LWN	In the engine compartment, right side of engine, mounted to the exhaust manifold, forward of the catalytic converter	*Right Rear of Engine Components (LWN)*	*M103 Turbocharger Vane Position Actuator (LWN)*
P2	Transmission Shift Lever Position Indicator	MYB	In the passenger compartment, center, near front, at top of floor console, near the shift lever	*Center Console Components (MYB)*	*P2 Transmission Shift Lever Position Indicator (MYB)*
P7	Display	—	In the passenger compartment, front center, mounted to instrument panel, part of info display module	—	—
P9	Driver Information Center Display	—	In the passenger compartment, left center, mounted to instrument panel, part of instrument cluster	—	—
P13	Horn Assembly	—	In the engine compartment, lower left corner of the radiator support	*Right Front of Engine Compartment Components*	*P13 Horn Assembly*
P14	Passenger Air Bag Disabled Indicator	—	In the passenger compartment, center of the overhead console	• *Headliner Components (Crew Cab)* • *Headliner Components (Extended Cab)*	*P14 Passenger Air Bag Disabled Indicator*

P16	Instrument Cluster	—	In the passenger compartment, at the top of the driver side of the instrument panel, above the steering column	*Front of the Instrument Panel Components*	*P16 Instrument Cluster*
P17	Info Display Module	—	In the passenger compartment, at the top center of the instrument panel, above the radio controls	• *Behind the Instrument Panel Components* • *Front of the Instrument Panel Components*	• *P17 Info Display Module X1* • *P17 Info Display Module X3*
P19B	Speaker - Center Instrument Panel	UQA	In the passenger compartment, center of the instrument panel	*Front of the Instrument Panel Components*	*P19B Speaker - Center Instrument Panel (UQA)*
P19AG	Speaker - Left Front Door	—	In the passenger compartment, at the front of the left front door, behind the door trim panel	*Driver Door Components*	*P19AG Speaker - Left Front Door*
P19AH	Speaker - Right Front Door	—	In the passenger compartment, at the front of the right front door, behind the door trim panel	*Passenger Door Components*	*P19AH Speaker - Right Front Door*
P19AL	Speaker - Left Rear Door	—	In the passenger compartment, in the lower left rear door, behind the door panel	• *Left Rear Door Components (Crew Cab)* • *Left Rear Door Components (Extended Cab)*	*P19AL Speaker - Left Rear Door*
P19AM	Speaker - Right Rear Door	—	In the passenger compartment, in the lower right rear door, behind the door panel	• *Right Rear Door Components (Crew Cab)* • *Right Rear Door Components (Extended Cab)*	*P19AM Speaker - Right Rear Door*
P19H	Speaker - Left Front Tweeter	—	In the passenger compartment, in the upper left of the instrument panel	*Front of the Instrument Panel Components*	• *P19H Speaker - Left Front Tweeter (UQA)* • *P19H Speaker - Left Front Tweeter (UQ3)*
P19V	Speaker - Right Front Tweeter	—	In the passenger compartment, in the upper right of the instrument panel	*Front of the Instrument Panel Components*	• *P19V Speaker - Right Front Tweeter (UQA)* • *P19V Speaker - Right Front Tweeter (UQ3)*
P43	Collision Alert Indicators	UEU	In the passenger compartment, behind the upper left of the instrument panel, above the instrument cluster	*Behind the Instrument Panel Components*	*P43 Collision Alert Indicators (UEU)*
Q2	A/C Compressor Clutch	—	In the engine compartment, on the lower left front of the engine	• *Left Front of the Engine Components (LCV)* • *Left Front of the Engine Components (LFX)* • *Left Front of the Engine Components (LWN)*	*Q2 A/C Compressor Clutch*
Q5	Brake Pressure Modulator	—	In the engine compartment, right rear, behind strut tower, attached to the electronic brake control module	—	—
Q6A	Camshaft Position Actuator Solenoid Valve - Bank 1 Exhaust	LFX	In the engine compartment, near front, right of center, below of the bank 1 exhaust camshaft position sensor	*Left Front of the Engine Components (LFX)*	*Q6A Camshaft Position Actuator Solenoid Valve - Bank 1 Exhaust (LFX)*

Q6B	Camshaft Position Actuator Solenoid Valve - Bank 1 Intake	LFX	In the engine compartment, near front, right of center, between the bank 1 camshaft position sensors	*Left Front of the Engine Components (LFX)*	*Q6B Camshaft Position Actuator Solenoid Valve - Bank 1 Intake (LFX)*
Q6C	Camshaft Position Actuator Solenoid Valve - Bank 2 Exhaust	LFX	In the engine compartment, near front, left of center, below of the bank 2 exhaust camshaft position sensor	*Left Front of the Engine Components (LFX)*	*Q6C Camshaft Position Actuator Solenoid Valve - Bank 2 Exhaust (LFX)*
Q6D	Camshaft Position Actuator Solenoid Valve - Bank 2 Intake	LFX	In the engine compartment, near front, left of center, between the bank 2 camshaft position sensors	*Left Front of the Engine Components (LFX)*	*Q6D Camshaft Position Actuator Solenoid Valve - Bank 2 Intake (LFX)*
Q6E	Camshaft Position Actuator Solenoid Valve - Exhaust	LCV	In the engine compartment, front, left of center, mounted to camshaft cover on left side	*Left Front of the Engine Components (LCV)*	*Q6E Camshaft Position Actuator Solenoid Valve - Exhaust (LCV)*
Q6F	Camshaft Position Actuator Solenoid Valve - Intake	LCV	In the engine compartment, front, right of center, mounted to camshaft cover on right side	*Top of Engine Components (LCV)*	*Q6F Camshaft Position Actuator Solenoid Valve - Intake (LCV)*
Q8	Control Solenoid Valve Assembly	MYB	Underneath the vehicle, inside the automatic transmission assembly	*Automatic Transmission Components (MYB with NQ6/NQ7)*	• *Q8 Control Solenoid Valve Assembly X1 (MYB)* • *Q8 Control Solenoid Valve Assembly X2 (MYB)* • *Q8 Control Solenoid Valve Assembly X3 (MYB)*
Q12	Evaporative Emission Purge Solenoid Valve	LCV	In the engine compartment, right side, on the intake manifold cylinder 1	*Right Rear of Engine Components (LCV)*	*Q12 Evaporative Emission Purge Solenoid Valve (LCV)*
Q12	Evaporative Emission Purge Solenoid Valve	LFX	In the engine compartment, right side, top front of engine, near throttle body	*Right Rear of Engine Components (LFX)*	*Q12 Evaporative Emission Purge Solenoid Valve (LFX)*
Q13	Evaporative Emission Vent Solenoid Valve	—	On the underbody, at the top left side of the fuel tank on the evaporative emissions canister	*Chassis Components (Crew Cab)*	*Q13 Evaporative Emission Vent Solenoid Valve*
Q14	Exhaust Gas Recirculation Valve	LWN	In the engine compartment, right rear of engine, near intake manifold	*Left Front of the Engine Components (LWN)*	*Q14 Exhaust Gas Recirculation Valve (LWN)*
Q17A	Fuel Injector 1	LCV	In the engine compartment, right of center, near front, mounted to the cylinder head at cylinder 1	*Right Top of Engine Components (LCV)*	*Q17A Fuel Injector 1 (LCV)*
Q17A	Fuel Injector 1	LFX	In the engine compartment, near middle front, on the inboard side of bank 1 cylinder head, above cylinder 1	*Top of Engine Components (LFX)*	*Q17A Fuel Injector 1 (LFX)*
Q17A	Fuel Injector 1	LWN	In the engine compartment, right of center, near front, mounted to the cylinder head at cylinder 1	*Right Rear of Engine Components (LWN)*	*Q17A Fuel Injector 1 (LWN)*
Q17B	Fuel Injector 2	LCV	In the engine compartment, right of center, near middle, mounted to the cylinder head at cylinder 2	*Right Top of Engine Components (LCV)*	*Q17B Fuel Injector 2 (LCV)*
Q17B	Fuel Injector 2	LFX	In the engine compartment, near middle front, on the inboard side of bank 2 cylinder head, above cylinder 2	*Top of Engine Components (LFX)*	*Q17B Fuel Injector 2 (LFX)*
Q17B	Fuel Injector 2	LWN	In the engine compartment, right of center, near middle, mounted to the cylinder head at cylinder 2	*Right Rear of Engine Components (LWN)*	*Q17B Fuel Injector 2 (LWN)*
Q17C	Fuel Injector 3	LCV	In the engine compartment, right of center, near middle, mounted to the cylinder head at cylinder 3	*Right Top of Engine Components (LCV)*	*Q17C Fuel Injector 3 (LCV)*

Q17C	Fuel Injector 3	LFX	In the engine compartment, near middle, on the inboard side of bank 1 cylinder head, above cylinder 3	*Top of Engine Components (LFX)*	*Q17C Fuel Injector 3 (LFX)*
Q17C	Fuel Injector 3	LWN	In the engine compartment, right of center, near middle, mounted to the cylinder head at cylinder 3	*Right Rear of Engine Components (LWN)*	*Q17C Fuel Injector 3 (LWN)*
Q17D	Fuel Injector 4	LCV	In the engine compartment, right of center, near rear, mounted to the cylinder head at cylinder 4	*Right Top of Engine Components (LCV)*	*Q17D Fuel Injector 4 (LCV)*
Q17D	Fuel Injector 4	LFX	In the engine compartment, near middle, on the inboard side of bank 2 cylinder head, above cylinder 4	*Top of Engine Components (LFX)*	*Q17D Fuel Injector 4 (LFX)*
Q17D	Fuel Injector 4	LWN	In the engine compartment, right of center, near rear, mounted to the cylinder head at cylinder 4	*Right Rear of Engine Components (LWN)*	*Q17D Fuel Injector 4 (LWN)*
Q17E	Fuel Injector 5	LFX	In the engine compartment, near middle rear, on the inboard side of bank 1 cylinder head, above cylinder 5	*Top of Engine Components (LFX)*	*Q17E Fuel Injector 5 (LFX)*
Q17F	Fuel Injector 6	LFX	In the engine compartment, near middle rear, on the inboard side of bank 2 cylinder head, above cylinder 6	*Top of Engine Components (LFX)*	*Q17F Fuel Injector 6 (LFX)*
Q18A	Fuel Pressure Regulator 1	LWN	In the engine compartment, lower left of engine, attached to fuel injection pump	*Left Front of the Engine Components (LWN)*	*Q18A Fuel Pressure Regulator 1 (LWN)*
Q18B	Fuel Pressure Regulator 2	LWN	In the engine compartment, left of engine, between throttle body and cylinder head	*Left Front of the Engine Components (LWN)*	*Q18B Fuel Pressure Regulator 2 (LWN)*
Q27A	Pressure Control Solenoid Valve 1	MYB	Under the vehicle, inside the automatic transmission, part of the control solenoid valve assembly	—	—
Q27B	Pressure Control Solenoid Valve 2	MYB	Under the vehicle, inside the automatic transmission, part of the control solenoid valve assembly	—	—
Q27C	Pressure Control Solenoid Valve 3	MYB	Under the vehicle, inside the automatic transmission, part of the control solenoid valve assembly	—	—
Q27D	Pressure Control Solenoid Valve 4	MYB	Under the vehicle, inside the automatic transmission, part of the control solenoid valve assembly	—	—
Q27E	Pressure Control Solenoid Valve 5	MYB	Under the vehicle, inside the automatic transmission, part of the control solenoid valve assembly	—	—
Q32A	Shift Solenoid Valve 1	MYB	Under the vehicle, inside the automatic transmission, part of the control solenoid valve assembly	—	—
Q32B	Shift Solenoid Valve 2	MYB	Under the vehicle, inside the automatic transmission, part of the control solenoid valve assembly	—	—
Q38	Throttle Body	LCV	In the engine compartment, right of center, mounted to the right side of the intake manifold	*Top of Engine Components (LCV)*	*Q38 Throttle Body (LCV)*
Q38	Throttle Body	LFX	In the engine compartment, right of center, mounted to the right side of the intake manifold	*Left Front of the Engine Components (LFX)*	*Q38 Throttle Body (LFX)*

Q38	Throttle Body	LWN	In the engine compartment, top left of the engine, mounted to intake manifold	*Left Front of the Engine Components (LWN)*	*Q38 Throttle Body (LWN)*
Q39A	Torque Converter Clutch Pressure Control Solenoid Valve	MYB	Under the vehicle, inside the automatic transmission, part of the control solenoid valve assembly	—	—
Q44	Engine Oil Pressure Control Solenoid Valve	LCV	In the engine compartment, left of center, on the left rear of the engine block	*Right Rear of Engine Components (LCV)*	*Q44 Engine Oil Pressure Control Solenoid Valve (LCV)*
Q46	A/C Compressor Solenoid Valve	—	In the engine compartment, front, bottom left of the engine, internal to the A/C compressor	*Left Front of the Engine Components (LWN)*	*Q46 A/C Compressor Solenoid Valve*
Q47	Exhaust Gas Recirculation Cooler Bypass Solenoid Valve	LWN	In the engine compartment, top of cylinder head, near front of the engine, right of the oil filler neck	*Right Bottom of Engine Components (LWN)*	*Q47 Exhaust Gas Recirculation Cooler Bypass Solenoid Valve (LWN)*
Q61	Reductant Injector	LWN	On the underbody, right, mounted to the inlet side of the nitrogen oxides catalytic converter	*Underbody Components (LWN) (1 of 6)*	*Q61 Reductant Injector (LWN)*
Q67	Exhaust Aftertreatment Fuel Injector	LWN	On the underbody, center of vehicle, mounted to the inboard side of the right frame rail	*Underbody Components (LWN) (2 of 6)*	*Q67 Exhaust Aftertreatment Fuel Injector (LWN)*
R6A	Terminating Resistor - High Speed Bus	Crew Cab	Under the vehicle, rear right side, taped in the harness above the spare tire and across from the chassis control module	*Chassis Components (Crew Cab)*	*R6A Terminating Resistor - High Speed Bus*
R6A	Terminating Resistor - High Speed Bus	Extended Cab	Under the vehicle, left side, under second row seat, rear of vehicle, taped in the harness near the chassis control module	*Chassis Underbody Components (Extended Cab)*	*R6A Terminating Resistor - High Speed Bus*
R10	Cooling Fan Resistor	LWN	In the engine compartment, left front of engine, near underhood fuse block	*Left Bottom of the Engine Components (LWN)*	*R10 Cooling Fan Resistor (LWN)*
S2A	Transmission Manual Shift Switch - Up/Down	MYB	In the passenger compartment, part of the transmission shift lever	*Center Console Components (MYB)*	—
S3	Transmission Shift Lever	MYB	In the passenger compartment, center near front, within the floor console	*Center Console Components (MYB)*	*S3 Transmission Shift Lever (MYB)*
S13D	Door Lock Switch - Driver	ATG	On driver door, upper, forward of the release handle on the door trim	*Driver Door Components*	*S13D Door Lock Switch - Driver (ATG)*
S13P	Door Lock Switch - Passenger	ATG	On passenger door, upper, forward of the release handle on the door trim	*Passenger Door Components*	*S13P Door Lock Switch - Passenger (ATG)*
S30	Headlamp Switch	—	In the passenger compartment, left of the steering column	*Front of the Instrument Panel Components*	*S30 Headlamp Switch*
S32D	Seat Heating Switch - Driver	KA1	In the passenger compartment, at the lower center of the instrument panel, below the HVAC controls	*Front of the Instrument Panel Components*	*S32D Seat Heating Switch - Driver (KA1)*
S32P	Seat Heating Switch - Passenger	KA1	In the passenger compartment, at the lower center of the instrument panel, below the HVAC controls	*Front of the Instrument Panel Components*	*S32P Seat Heating Switch - Passenger (KA1)*
S33	Horn Switch	—	In the passenger compartment, in the center of the steering wheel, behind the driver side air bag	—	• *S33 Horn Switch X1* • *S33 Horn Switch X2*
S39	Ignition Switch	—	In the passenger compartment, behind the steering wheel, on the right side of the steering column	*Front of the Instrument Panel Components*	*S39 Ignition Switch*

S48A	Multifunction Switch - Instrument Panel	—	In the passenger compartment, in the center of the instrument panel, below the HVAC controls	*Front of the Instrument Panel Components*	*S48A Multifunction Switch - Instrument Panel*
S51	Telematics Button Assembly	UE1	In the passenger compartment, part of the inside rearview mirror	—	—
S52	Outside Rearview Mirror Switch	DL6/DL9	In the passenger compartment, on the driver door trim panel	*Driver Door Components*	*S52 Outside Rearview Mirror Switch (DL6/DL9)*
S64D	Seat Adjuster Switch - Driver	—	In the passenger compartment, mounted to the outboard side of the driver seat cushion	*Driver Seat Components*	• *S64D Seat Adjuster Switch – Driver X1* • *S64D Seat Adjuster Switch – Driver X2 (AL9)*
S64P	Seat Adjuster Switch - Passenger	AAQ	In the passenger compartment, mounted to the outboard side of the passenger seat cushion	*Passenger Seat Components*	• *S64P Seat Adjuster Switch - Passenger X1 (AAQ)* • *S64P Seat Adjuster Switch - Passenger X2 (AAQ)*
S70E	Steering Wheel Controls Switch - Radio Presets	UDD	In the passenger compartment, on the left rear side of the steering wheel	*Steering Column Components*	*S70E Steering Wheel Controls Switch - Radio Presets (UDD)*
S70F	Steering Wheel Controls Switch - Radio Volume	UDD	In the passenger compartment, on the right rear side of the steering wheel	*Steering Column Components*	*S70F Steering Wheel Controls Switch - Radio Volume (UDD)*
S70L	Steering Wheel Controls Switch - Left	—	In the passenger compartment, on the left side of the steering wheel	*Steering Column Components*	*S70L Steering Wheel Controls Switch - Left*
S70R	Steering Wheel Controls Switch - Right	—	In the passenger compartment, on the right side of the steering wheel	*Steering Column Components*	*S70R Steering Wheel Controls Switch - Right*
S76	Trailer Brake Control Switch	JL1	In the passenger compartment, left of the steering column	*Front of the Instrument Panel Components*	*S76 Trailer Brake Control Switch (JL1)*
S77	Transfer Case Shift Control Switch	NQ6/NQ7	In the passenger compartment, left of the steering column	*Front of the Instrument Panel Components*	*S77 Transfer Case Shift Control Switch (NQ6/NQ7)*
S78	Turn Signal/Multifunction Switch	—	In the passenger compartment, on the left side of the steering column	*Front of the Instrument Panel Components*	*S78 Turn Signal/Multifunction Switch*
S79D	Window Switch - Driver	—	In the passenger compartment, on the driver door trim panel, center of the door	*Driver Door Components*	*S79D Window Switch - Driver*
S79LR	Window Switch - Left Rear	Crew Cab	In the passenger compartment, at the center of the left rear door, on the door trim panel	*Left Rear Door Components (Crew Cab)*	*S79LR Window Switch - Left Rear (Crew Cab)*
S79P	Window Switch - Passenger	—	In the passenger compartment, on the passenger door trim panel, center of the door	*Passenger Door Components*	*S79P Window Switch - Passenger*
S79RR	Window Switch - Right Rear	Crew Cab	In the passenger compartment, at the center of the right rear door, on the door trim panel	*Right Rear Door Components (Crew Cab)*	*S79RR Window Switch - Right Rear (Crew Cab)*
S82	Windshield Wiper/Washer Switch	—	In the passenger compartment, on the right side of the steering column	*Front of the Instrument Panel Components*	*S82 Windshield Wiper/Washer Switch*
T3	Audio Amplifier	UQA	In the rear passenger compartment, mounted behind the glove box	*Behind the Instrument Panel Components*	• *T3 Audio Amplifier X1 (UQA)* • *T3 Audio Amplifier X2 (UQA)* • *T3 Audio Amplifier X3 (UQA)* • *T3 Audio Amplifier X4 (UQA)*

T4G	Cellular Phone, Navigation, and Digital Radio Antenna	UE1	Outside the vehicle, at the rear of the roof	*Rear of Vehicle Components*	*T4G Cellular Phone, Navigation, and Digital Radio Antenna (UE1)*
T4H	Digital Radio Antenna	U2M	Outside the vehicle, at the rear of the roof	—	*T4H Digital Radio Antenna (U2M)*
T4M	Radio Antenna	—	Outside the vehicle, at the rear of the roof	—	*T4M Radio Antenna*
T4S	Wireless Communication Antenna - Bluetooth	VV4	In the passenger compartment, right side of the instrument panel, behind the glove box, attached to the telematics communication interface control module	—	—
T8A	Ignition Coil 1	LCV	In the engine compartment, center near front, mounted to cylinder head, above cylinder 1	*Top of Engine Components (LCV)*	*T8A Ignition Coil 1 (LCV)*
T8A	Ignition Coil 1	LFX	In the engine compartment, right of center, near middle, above cylinder 1	*Top of Engine Components (LFX)*	*T8A Ignition Coil 1 (LFX)*
T8B	Ignition Coil 2	LCV	In the engine compartment, center near middle, mounted to cylinder head, above cylinder 2	*Top of Engine Components (LCV)*	*T8B Ignition Coil 2 (LCV)*
T8B	Ignition Coil 2	LFX	In the engine compartment, left of center, near middle, above cylinder 2	*Top of Engine Components (LFX)*	*T8B Ignition Coil 2 (LFX)*
T8C	Ignition Coil 3	LCV	In the engine compartment, center near middle, mounted to cylinder head, above cylinder 3	*Top of Engine Components (LCV)*	*T8C Ignition Coil 3 (LCV)*
T8C	Ignition Coil 3	LFX	In the engine compartment, right of center, near middle, above cylinder 3	*Top of Engine Components (LFX)*	*T8C Ignition Coil 3 (LFX)*
T8D	Ignition Coil 4	LCV	In the engine compartment, center near rear, mounted to cylinder head, above cylinder 4	*Top of Engine Components (LCV)*	*T8D Ignition Coil 4 (LCV)*
T8D	Ignition Coil 4	LFX	In the engine compartment, left of center, near middle, above cylinder 4	*Top of Engine Components (LFX)*	*T8D Ignition Coil 4 (LFX)*
T8E	Ignition Coil 5	LFX	In the engine compartment, right of center, near rear, above cylinder 5	*Top of Engine Components (LFX)*	*T8E Ignition Coil 5 (LFX)*
T8F	Ignition Coil 6	LFX	In the engine compartment, left of center, near rear, above cylinder 6	*Top of Engine Components (LFX)*	*T8F Ignition Coil 6 (LFX)*
T12	Automatic Transmission Assembly	MYB	In the engine compartment, underneath the first row seating, rear of the engine	—	—
T15	Navigation Antenna Signal Splitter	IO6	In the passenger compartment, above carpet in the right front footwell, near right front kick panel	• *Right Passenger Components (Crew Cab)* • *Right Passenger Components (Extended Cab)*	• *T15 Navigation Antenna Signal Splitter X1 (IO6)* • *T15 Navigation Antenna Signal Splitter X2 (IO6)* • *T15 Navigation Antenna Signal Splitter X3 (IO6)*
W8	Blunt Cut - Trailer Provision	—	Outside of the vehicle, at the rear, inboard of the left frame rail	—	—
W24	Blunt Cut - Trailer Brakes Provision	Z82	In the passenger compartment, behind the left front kick panel, taped to the harness next to X200 and X202	—	—
W26	Blunt Cut - Cargo Lamp Provision	S0Y	At rear of vehicle, in left tail lamp breakout	—	—
X50A	Fuse Block - Underhood	—	In the engine compartment, forward left of the engine, next to the battery	*Left Side of Engine Compartment Components (1 of 2)*	Electrical Center Identification Views

X50D	Fuse Block - Battery	—	In the engine compartment, left front, on top of the battery (+) post	*Left Side of Engine Compartment Components (1 of 2)*	Electrical Center Identification Views
X51A	Fuse Block - Instrument Panel	—	In the passenger compartment, below right side of the instrument panel, behind access cover on right front kick panel	• *Right Passenger Components (Crew Cab)* • *Right Passenger Components (Extended Cab)*	Electrical Center Identification Views
X80A	Accessory Power Receptacle - Center Console 1	—	In the passenger compartment, at the forward left of the center console	• *Center Console Components (N8D)* • *Front of the Instrument Panel Components*	*X80A Accessory Power Receptacle - Center Console 1*
X80B	Accessory Power Receptacle - Center Console 2	—	In the passenger compartment, at the rear of the center console	• *Center Console Components (MYB)* • *Center Console Components (N8D)*	*X80B Accessory Power Receptacle - Center Console 2*
X83	Auxiliary Audio Input	IO3/IO4 with N8D	In the passenger compartment, in the center console	*Center Console Components (N8D)*	• *X83 Auxiliary Audio Input X1* • *X83 Auxiliary Audio Input X2*
X83	Auxiliary Audio Input	IO4/IO5/IO6 with MYB	In the passenger compartment, in center of instrument panel, forward of the center floor console	*Front of the Instrument Panel Components*	• *X83 Auxiliary Audio Input X1* • *X83 Auxiliary Audio Input X2*
X83R	Auxiliary Audio Input - Rear	IO5/IO6	In the passenger compartment, at the rear of the center console	*Center Console Components (MYB)*	• *X83R Auxiliary Audio Input - Rear X1 (IO5/IO6)* • *X83R Auxiliary Audio Input - Rear X2 (IO5/IO6)* • *X83R Auxiliary Audio Input - Rear X3 (IO5/IO6)*
X84	Data Link Connector	—	In the passenger compartment, under the driver side of the instrument panel	—	*X84 Data Link Connector*
X85	Steering Wheel Air Bag Coil	—	In the passenger compartment, behind the steering wheel, in the upper steering column	*Steering Column Components*	• *X85 Steering Wheel Air Bag Coil X1* • *X85 Steering Wheel Air Bag Coil X2* • *X85 Steering Wheel Air Bag Coil X3*
X88	Trailer Connector	Z82	On the vehicle exterior, at the rear of the vehicle, left of the license plate	*Underbody Components (3 of 3)*	*X88 Trailer Connector (Z82)*
X92	USB Receptacle	IO5/IO6	In the passenger compartment, right front of the center console storage bin	*Center Console Components (MYB)*	*X92 USB Receptacle (IO5/IO6)*
X100	Power Steering Harness to Battery Harness (4 cavities)	—	Outside of the vehicle, left front of the front frame crossmember, next to X103	*Body Harness Routing - Center Engine Compartment*	*X100 Power Steering Harness to Battery Harness*
X101	Engine Harness to Body Harness (48 cavities)	—	In the engine compartment, left front of engine, near underhood fuse block	• *Body Harness Routing - Left Engine Compartment (LCV/LFX)* • *Engine Harness Routing - Left Front (LCV)* • *Engine Harness Routing - Front (LFX)* • *Body Harness Routing - Left Engine Compartment (LWN)*	• *X101 Engine Harness to Body Harness (LCV)* • *X101 Engine Harness to Body Harness (LFX)* • *X101 Engine Harness to Body Harness (LWN)*

X102	Forward Lamp Harness to Body Harness (48 cavities)	—	In the engine compartment, left front, at left headlamp assembly, in front of underhood fuse block	• *Body Harness Routing - Left Engine Compartment (LCV/LFX)* • *Forward Lamp Harness Routing - Left Engine Compartment* • *Body Harness Routing - Left Engine Compartment (LWN)* • *Forward Lamp Harness Routing - Left Engine Compartment (LWN)*	• *X102 Forward Lamp Harness to Body Harness (LCV/LFX)* • *X102 Forward Lamp Harness to Body Harness (LWN)*
X103	Chassis Harness to Power Steering Harness (16 cavities)	—	Outside of the vehicle, left front of the front frame crossmember, next to X100	*Body Harness Routing - Center Engine Compartment*	*X103 Chassis Harness to Power Steering Harness*
X104	Forward Lamp Harness to Forward Lamp Extension Harness (2 cavities)	LCV	In the engine compartment, left front, near left radiator support	*Forward Lamp Harness Routing - Left Engine Compartment*	*X104 Forward Lamp Harness to Forward Lamp Extension Harness (LCV)*
X105	Forward Lamp Harness to Ambient Temperature Sensor Extension Harness (6 cavities)	—	Outside of the vehicle, forward of left radiator support on front impact bar, below the left headlamp assembly	*Forward Lamp Harness Routing - Left Engine Compartment*	• *X105 Forward Lamp Harness to Ambient Temperature Sensor Extension Harness (LCV)* • *X105 Forward Lamp Harness to Ambient Temperature Sensor Extension Harness (LFX)* • *X105 Forward Lamp Harness to Ambient Temperature Sensor Extension Harness (LWN)*
X106	Body Harness to Chassis Harness (48 cavities)	—	In the engine compartment, left of engine, near battery, rear of the underhood fuse block	• *Body Harness Routing - Left Engine Compartment (LCV/LFX)* • *Body Harness Routing - Left Engine Compartment (LWN)*	• *X106 Body Harness to Chassis Harness (LCV/LFX)* • *X106 Body Harness to Chassis Harness (LWN)*
X107	Engine Harness to Chassis Harness (48 cavities)	LWN	In the engine compartment, right rear of engine, near	*Engine Harness Routing - Right Rear (LWN)*	*X107 Engine Harness to Chassis Harness (LWN)*
X108	Engine Harness to Cooling Fan Harness (6 cavities)	LWN	In the engine compartment, left of engine, near underhood fuse block	*Engine Harness Routing - Left Front (LWN)*	*X108 Engine Harness to Cooling Fan Harness (LWN)*
X109	Engine Harness to Forward Lamp Harness (4 cavities)	LWN	In the engine compartment, left of engine, near underhood fuse block	*Engine Harness Routing - Left Front (LWN)*	*X109 Engine Harness to Forward Lamp Harness (LWN)*
X110	Forward Lamp Harness to Headlamp - Left Harness (6 cavities)	—	In the engine compartment, at the rear of the left headlamp assembly	*Forward Lamp Harness Routing - Left Engine Compartment*	*X110 Forward Lamp Harness to Headlamp - Left Harness*
X111	Engine Harness to Glow Plug Harness (4 cavities)	LWN	In the engine compartment, above engine, left of the cylinder head	*Engine Harness Routing - Top (LWN)*	*X111 Engine Harness to Glow Plug Harness (LWN)*
X112	Engine Harness to Intake Manifold Pressure Harness (4 cavities)	LWN	In the engine compartment, above engine, left of the cylinder head	*Engine Harness Routing - Top (LWN)*	*X112 Engine Harness to Intake Manifold Pressure Harness (LWN)*
X120	Forward Lamp Harness to Headlamp - Right Harness (6 cavities)	—	In the engine compartment, at the rear of the right headlamp assembly	*Forward Lamp Harness Routing - Right Engine Compartment*	*X120 Forward Lamp Harness to Headlamp - Right Harness*
X160	Engine Harness to Fuel Injector Harness (12 cavities)	LCV	In the engine compartment, right of center, forward of middle, mounted to intake manifold	*Engine Harness Routing - Right Front Top (LCV)*	*X160 Engine Harness to Fuel Injector Harness (LCV)*
X160	Engine Harness to Fuel Injector - Odd Harness (6 cavities)	LFX	In the engine compartment, rear, right of center, behind bank 1 camshaft cover	*Engine Harness Routing - Rear (LFX)*	*X160 Engine Harness to Fuel Injector - Odd Harness (LFX)*

X161	Engine Harness to Fuel Injector - Even Harness (12 cavities)	LFX	In the engine compartment, rear, right of center, behind bank 1 camshaft cover	*Engine Harness Routing - Rear (LFX)*	*X161 Engine Harness to Fuel Injector - Even Harness (LFX)*
X200	Body Harness to Instrument Panel Harness (48 cavities)	—	In the passenger compartment, left side of the instrument panel, behind the left front kick panel, next to X202	• *Body Harness Routing - Left Front of Passenger Compartment (Crew Cab)* • *Body Harness Routing - Left Front of Passenger Compartment (Extended Cab)* • *Instrument Panel Harness Routing - Rear*	*X200 Body Harness to Instrument Panel Harness*
X202	Body Harness to Instrument Panel Harness (44 cavities)	—	In the passenger compartment, left side of the instrument panel, behind the left front kick panel, next to X200	• *Body Harness Routing - Left Front of Passenger Compartment (Crew Cab)* • *Body Harness Routing - Left Front of Passenger Compartment (Extended Cab)* • *Instrument Panel Harness Routing - Rear*	*X202 Body Harness to Instrument Panel Harness*
X203	Body Harness to Instrument Panel Harness (48 cavities)	—	In the passenger compartment, right side of the instrument panel, below instrument panel fuse block, behind right front kick panel	• *Body Harness Routing - Right Front of Passenger Compartment (Crew Cab)* • *Body Harness Routing - Right Front of Passenger Compartment (Extended Cab)* • *Instrument Panel Harness Routing - Rear*	*X203 Body Harness to Instrument Panel Harness*
X206	Instrument Panel Harness to HVAC Harness (2 cavities)	C68	In the passenger compartment, left of center, near left side of HVAC Assembly	*Instrument Panel Harness Routing - Rear*	*X206 Instrument Panel Harness to HVAC Harness (C68)*
X207	Instrument Panel Harness to Passenger Air Bag Extension Harness (6 cavities)	—	In the passenger compartment, at the top of the passenger side of the instrument panel, near passenger instrument panel air bag	*Instrument Panel Harness Routing - Rear*	*X207 Instrument Panel Harness to Passenger Air Bag Extension Harness*
X218	Instrument Panel COAX Harness to Body COAX Harness	U2M	In the passenger compartment, right side of the instrument panel, below instrument panel fuse block, behind right front kick panel	• *Body Harness Routing - Right Front of Passenger Compartment (Crew Cab)* • *Body Harness Routing - Right Front of Passenger Compartment (Extended Cab)*	*X218 Instrument Panel COAX Harness to Body COAX Harness*
X219	Instrument Panel COAX Harness to Body COAX Harness	Except U2M	In the passenger compartment, right side of the instrument panel, below instrument panel fuse block, behind right front kick panel	• *Body Harness Routing - Right Front of Passenger Compartment (Crew Cab)* • *Body Harness Routing - Right Front of Passenger Compartment (Extended Cab)*	*X219 Instrument Panel COAX Harness to Body COAX Harness*
X220	Instrument Panel COAX Harness to Body COAX Harness	IO6	In the passenger compartment, right side of the instrument panel, below instrument panel fuse block, behind right front kick panel	• *Body Harness Routing - Right Front of Passenger Compartment (Crew Cab)* • *Body Harness Routing - Right Front of Passenger Compartment (Extended Cab)* • *Instrument Panel Harness Routing - Rear*	*X220 Instrument Panel COAX Harness to Body COAX Harness*

X300	Headliner Harness to Body Harness (16 cavities)	—	In the passenger compartment , top right instrument panel, at the A-pillar	• *Body Harness Routing - Right Front of Passenger Compartment (Crew Cab)* • *Body Harness Routing - Right Front of Passenger Compartment (Extended Cab)* • *Headliner Harness Routing (Crew Cab)* • *Headliner Harness Routing (Extended Cab)*	*X300 Headliner Harness to Body Harness*
X301	Headliner Harness to Body Harness (22 cavities)	—	In the passenger compartment , rear of cab roof, at center high mounted stop lamp	• *Body Harness Routing - Left Rear of Passenger Compartment (Crew Cab)* • *Body Harness Routing - Left Rear of Passenger Compartment (Extended Cab)* • *Headliner Harness Routing (Crew Cab)* • *Headliner Harness Routing (Extended Cab)*	*X301 Headliner Harness to Body Harness*
X302	Floor Console USB Harness to Instrument Panel USB Harness	—	In the passenger compartment, right of center, under front of the center console	*Center Console Harness Routing*	*X302 Floor Console USB Harness to Instrument Panel USB Harness*
X303	Body Harness to CHMSL Harness (3 cavities)	—	In the passenger compartment , rear of cab roof, at center high mounted stop lamp	• *Body Harness Routing - Left Rear of Passenger Compartment (Crew Cab)* • *Body Harness Routing - Left Rear of Passenger Compartment (Extended Cab)*	*X303 Body Harness to CHMSL Harness*
X304	Windshield Sensor Harness to Headliner Harness (6 cavities)	C68	In the passenger compartment, behind the inside rearview mirror, near the windshield	• *Headliner Harness Routing (Crew Cab)* • *Headliner Harness Routing (Extended Cab)*	*X304 Windshield Sensor Harness to Headliner Harness (C68)*
X305	Instrument Panel Harness to Floor Console Harness (14 cavities)	—	In the passenger compartment, left of center, beneath the instrument panel, under front of the center console	• *Center Console Harness Routing* • *Instrument Panel Harness Routing - Rear*	*X305 Instrument Panel Harness to Floor Console Harness*
X306	Instrument Panel Harness to Floor Console Harness (8 cavities)	MYB	In the passenger compartment, right of center, under front of the center console	*Center Console Harness Routing*	*X306 Instrument Panel Harness to Floor Console Harness (MYB)*
X310	Driver Seat Cushion Harness to Body Harness (23 cavities)	—	In the passenger compartment, under the driver seat	• *Body Harness Routing - Left Front of Passenger Compartment (Crew Cab)* • *Body Harness Routing - Left Front of Passenger Compartment (Extended Cab)*	*X310 Driver Seat Cushion Harness to Body Harness*
X311	Driver Seat Back Harness to Driver Seat Cushion Harness (16 cavities)	—	In the passenger compartment, under the driver seat	*Driver Seat Harness Routing*	*X311 Driver Seat Back Harness to Driver Seat Cushion Harness*

X320	Passenger Seat Cushion Harness to Body Harness (23 cavities)	—	In the passenger compartment, under the passenger seat	• *Body Harness Routing - Right Front of Passenger Compartment (Crew Cab)* • *Body Harness Routing - Right Front of Passenger Compartment (Extended Cab)*	*X320 Passenger Seat Cushion Harness to Body Harness*
X321	Passenger Seat Back Harness to Passenger Seat Cushion Harness (16 cavities)	—	In the passenger compartment, under the passenger seat	*Passenger Seat Harness Routing*	*X321 Passenger Seat Back Harness to Passenger Seat Cushion Harness*
X399	Instrument Panel Harness to Instrument Panel Harness (2 cavities)	—	In the passenger compartment, below the lower left side of the instrument panel, taped to harness above the data link connector	*Instrument Panel Harness Routing - Rear*	*X399 Instrument Panel Harness to Instrument Panel Harness*
X400	Chassis Harness to License Lamp Harness (10 cavities)	—	Outside of vehicle, under left rear, inboard of the left frame rail, rearward of the left rear leaf spring mount	• *Chassis Harness Routing (Crew Cab)* • *Rear License Plate Harness Routing*	*X400 Chassis Harness to License Lamp Harness*
X401	Chassis Harness to Cargo Lamp Harness (2 cavities)	S0Y	At left rear of vehicle, between tail lamp assembly - left and body	*Chassis Harness Routing (S0Y)*	*X401 Chassis Harness to Cargo Lamp Harness (S0Y)*
X410	Tail Lamp - Left Harness to Chassis Harness (6 cavities)	—	At left rear of vehicle, between tail lamp assembly - left and body	• *Chassis Harness Routing (Crew Cab)* • *Chassis Harness Routing (Extended Cab)*	*X410 Tail Lamp - Left Harness to Chassis Harness*
X420	Tail Lamp - Right Harness to Chassis Harness (6 cavities)	—	At right rear of vehicle, between tail lamp assembly - right and body	• *Chassis Harness Routing (Crew Cab)* • *Chassis Harness Routing (Extended Cab)*	*X420 Tail Lamp - Right Harness to Chassis Harness*
X500	Body Harness to Driver Door Harness (34 cavities)	—	In the passenger compartment, left front, in the left front door opening, between hinges on door side	*Driver Door Harness Routing*	*X500 Body Harness to Driver Door Harness*
X510	Driver Outside Rearview Mirror Harness to Driver Door Harness (10 cavities)	—	At side of vehicle, front of the driver door, behind the door trim on the door	*Driver Door Harness Routing*	*X510 Driver Outside Rearview Mirror Harness to Driver Door Harness*
X600	Body Harness to Passenger Door Harness (34 cavities)	—	In the passenger compartment, right front, in the right front door opening, between hinges on door side	*Passenger Door Harness Routing*	*X600 Body Harness to Passenger Door Harness*
X610	Passenger Outside Rearview Mirror Harness to Passenger Door Harness (10 cavities)	—	At side of vehicle, front of the passenger door, behind the door trim on the door	*Passenger Door Harness Routing*	*X610 Passenger Outside Rearview Mirror Harness to Passenger Door Harness*
X700	Left Rear Door Harness to Body Harness (12 cavities)	Crew Cab	In the passenger compartment, behind the left B-pillar, near the middle	• *Body Harness Routing - Left Rear of Passenger Compartment (Crew Cab)* • *Left Rear Door Harness Routing (Crew Cab)*	*X700 Left Rear Door Harness to Body Harness (Crew Cab)*
X700	Left Rear Door Harness to Body Harness (20 cavities)	Extended Cab	In the passenger compartment, behind the left side rear trim panel	• *Body Harness Routing - Left Rear of Passenger Compartment (Extended Cab)* • *Left Rear Door Harness Routing (Exended Cab)*	*X700 Left Rear Door Harness to Body Harness (Extended Cab)*

X800	Right Rear Door Harness to Body Harness (12 cavities)	Crew Cab	In the passenger compartment, behind the right B-pillar, near the middle	• *Body Harness Routing - Right Front of Passenger Compartment (Crew Cab)* • *Right Rear Door Harness Routing (Crew Cab)*	*X800 Right Rear Door Harness to Body Harness (Crew Cab)*
X800	Right Rear Door Harness to Body Harness (20 cavities)	Extended Cab	In the passenger compartment, behind the right side rear trim panel	• *Body Harness Routing - Right Rear of Passenger Compartment (Extended Cab)* • *Right Rear Door Harness Routing (Extended Cab)*	*X800 Right Rear Door Harness to Body Harness (Extended Cab)*
G100	Battery Negative Harness	—	In the engine compartment, left of center, on left wheel liner, rearward of the left front tire	*G100 and G101*	—
G101	Battery Negative Harness	—	In the engine compartment, left of center, beneath engine on frame cross member	*G100 and G101*	—
G102	Battery Negative Harness	LCV	In the engine compartment, on the left front of the engine	*G102 (LCV)*	—
G102	Battery Negative Harness	LFX	In the engine compartment, on the left front of the engine	*G102 (LFX)*	—
G103	Forward Lamp Harness	LCV/LFX	In the engine compartment, beneath the left headlamp assembly, mounted to the radiator support	*G103 (LCV/LFX), G105 (LWN)*	—
G103	Forward Lamp Harness	LWN	In the engine compartment, beneath the right headlamp assembly, mounted to the radiator support	*G103 (LWN), G105 (LCV/LFX)*	—
G105	Forward Lamp Harness	LCV/LFX	In the engine compartment, beneath the right headlamp assembly, mounted to the radiator support	*G103 (LWN), G105 (LCV/LFX)*	—
G105	Forward Lamp Harness	LWN	In the engine compartment, beneath the left headlamp assembly, mounted to the radiator support	*G103 (LCV/LFX), G105 (LWN)*	—
G107	Engine Harness	LCV	In the engine compartment, on the right side of the engine block, below cylinder four	*G107 (LCV)*	—
G107	Engine Harness	LFX	In the engine compartment, on the right of the engine block, rearward of the generator	*G107 and G108 (LFX)*	—
G107	Engine Harness	LWN	In the engine compartment, on the right rear of the cylinder head	*G107 (LWN)*	—
G108	Engine Harness	LCV	In the engine compartment, on the rear center of the engine block	*G108 (LCV)*	—
G108	Engine Harness	LFX	In the engine compartment, on the right front of the engine block, below cylinder two	*G107 and G108 (LFX)*	—
G109	Engine Harness	LFX	In the engine compartment, on the left middle of the engine block, beneath cylinder one	*G109 (LFX)*	—
G300	Instrument Panel Harness	—	In the passenger compartment, center, beneath the floor console, rear of floor shifter	*G300, G305, and G307*	—
G301	Body harness	—	In the passenger compartment, under the driver seat on the floor pan	*G301 and G303*	—

G302	Body Harness	—	In the passenger compartment, under the passenger seat on the floor pan	*G302 and G304 (Crew Cab)*	—
G303	Body Harness	—	In the passenger compartment, under the driver seat on the floor pan	*G301 and G303*	—
G303	Body Harness	LWN	In the passenger compartment, under the driver seat on the floor pan	*G301 and G303 (LWN)*	—
G304	Body Harness	—	In the passenger compartment, under the passenger seat on the floor pan	*G302 and G304 (Crew Cab)*	—
G305	Instrument Panel Harness	—	In the passenger compartment, center, beneath the floor console, rear of floor shifter	*G300, G305, and G307*	—
G306	Body Harness	C49	In the passenger compartment, left rear, on upper left B-pillar	*G306 (Crew Cab)*	—
G307	Instrument Panel Harness	—	In the passenger compartment, center, beneath the floor console, rear of floor shifter	*G300, G305, and G307*	—
G400	Chassis Harness	—	Under vehicle, outboard of left frame rail, rearward of the fuel filler neck	• *G400 (Crew Cab)* • *G400 (Extended Cab)*	—
G401	Chassis Harness	LCV/LFX	Under vehicle, outboard of left frame rail, forward of the left leaf spring mount	• *G401 (Crew Cab)* • *G401 (Extended Cab)*	—
G401	Chassis Harness	LWN	Under vehicle, outboard of left frame rail, forward of the left leaf spring mount	*G401 and G404 (LWN)*	—
G402	Chassis Harness	—	Under vehicle, outboard of right frame rail, forward of the right leaf spring mount	• *G402 (Crew Cab)* • *G402 (Extended Cab)*	—
G404	Chassis Harness	LWN	Under vehicle, outboard of left frame rail, forward of the left leaf spring mount	*G401 and G404 (LWN)*	—
J100	Body Harness	NQ6	In engine compartment, approximately 10.7 cm (4.21 in) from battery current sensor breakout towards rear of vehicle	*Body Harness Routing - Left Engine Compartment (LCV/LFX)*	—
J100	Body Harness	NQ6 with LWN	In engine compartment, approximately 10.5 cm (4.13 in) from underhood fuse block X2 breakout towards X101/X102 breakouts	*Body Harness Routing - Left Engine Compartment (LWN)*	—
J101	Body Harness	NQ6/NQ7	In engine compartment, approximately 15.7 cm (6.18 in) from battery current sensor breakout towards rear of vehicle	*Body Harness Routing - Left Engine Compartment (LCV/LFX)*	—
J101	Body Harness	NQ6/NQ7 with LWN	In engine compartment, approximately 5.0 cm (1.97 in) into X101 breakout	*Body Harness Routing - Left Engine Compartment (LWN)*	—
J102	Body Harness	—	In engine compartment, approximately 4.0 cm (1.57 in) into X106 breakout	*Body Harness Routing - Left Engine Compartment (LCV/LFX)*	—
J102	Body Harness	LWN	In engine compartment, approximately 3.6 cm (1.42 in) into X106 breakout	*Body Harness Routing - Left Engine Compartment (LWN)*	—

J103	Body Harness	—	In engine compartment, approximately 12.5 cm (4.92 in) from battery ground breakout towards body grommet	• *Body Harness Routing - Left Front of Passenger Compartment (Crew Cab)* • *Body Harness Routing - Left Engine Compartment (LCV/LFX)*	—
J103	Body Harness	LWN	In engine compartment, approximately 5.9 cm (2.32 in) from windshield wiper motor breakout towards body grommet	*Body Harness Routing - Left Engine Compartment (LWN)*	—
J104	Chassis Harness	—	In engine compartment, approximately 30.7 cm (12.1 in) from X106 breakout towards front of vehicle	• *Chassis Harness Routing (Extended Cab)* • *Chassis Harness Routing (Crew Cab)*	—
J105	Chassis Harness	—	In engine compartment, approximately 5.4 cm (2.13 in) into X106 breakout	• *Chassis Harness Routing (Crew Cab)* • *Chassis Harness Routing (Extended Cab)*	—
J106	Engine Harness	LCV with NQ6/NQ7	In engine compartment, left front of engine, approximately 3 cm (1.81 in) from X101 breakout towards engine	*Engine Harness Routing - Left Front (LCV)*	—
J106	Engine Harness	LFX with NQ6/NQ7	In engine compartment, left front of engine, approximately 6.6 cm (2.60 in) into X101 breakout	*Engine Harness Routing - Front (LFX)*	—
J106	Engine Harness	LWN with NQ6/NQ7	In engine compartment, left of engine, approximately 17.7 cm (6.97 in) from underhood fuse block X3 breakout towards front of vehicle	*Engine Harness Routing - Left Front (LWN)*	—
J107	Engine Harness	LCV	In engine compartment, front of engine, approximately 5 cm (1.97 in) from camshaft position actuator solenoid valve exhaust breakout towards manifold absolute pressure sensor breakout	*Engine Harness Routing - Left Front (LCV)*	—
J107	Engine Harness	LFX	In engine compartment, left front of engine, approximately 12.9 cm (5.08 in) into fuse block underhood X3 breakout	*Engine Harness Routing - Front (LFX)*	—
J108	Engine Harness	LCV	In engine compartment, left front of engine, approximately 11.1 cm (4.37 in) from camshaft position actuator solenoid valve - exhaust breakout towards X101 breakout	*Engine Harness Routing - Left Front (LCV)*	—
J109	Engine Harness	LCV with MYB	In engine compartment, front of engine, approximately 10.9 cm (4.29 in) from camshaft position actuator solenoid valve - exhaust breakout towards manifold absolute pressure sensor breakout	*Engine Harness Routing - Left Front (LCV)*	—
J109	Engine Harness	LFX with MYB	In engine compartment, left front of engine, approximately 6.1 cm (2.40 in) from ignition coil 2 breakout towards rear of engine	*Engine Harness Routing - Front (LFX)*	—
J109	Engine Harness	LWN	Underneath vehicle, right front of transmission, approximately 16.6 cm (6.53 in) from reductant injector breakout towards front of vehicle	*Engine Harness Routing - Right Rear (LWN)*	—

J110	Engine Harness	LCV	In engine compartment, front of engine, approximately 2.5 cm (0.98 in) from camshaft position actuator solenoid valve - exhaust breakout towards manifold absolute pressure sensor breakout	*Engine Harness Routing - Left Front (LCV)*	—
J110	Engine Harness	LFX	In engine compartment, right front of engine, approximately 14 cm (5.51 in) from evaporative emission purge solenoid valve breakout towards throttle body	*Engine Harness Routing - Front (LFX)*	—
J110	Engine Harness	LWN	In engine compartment, left of engine, approximately 20.2 cm (7.95 in) from underhood fuse block X3 breakout towards front of vehicle	*Engine Harness Routing - Left Front (LWN)*	—
J111	Engine Harness	LCV	In engine compartment, front of engine, approximately 13.4 cm (5.28 in) from camshaft position actuator solenoid valve - exhaust breakout towards manifold absolute pressure sensor breakout	*Engine Harness Routing - Left Front (LCV)*	—
J111	Engine Harness	LFX	In engine compartment, left front of engine, approximately 2 cm (6.10 in) from ignition coil 2 breakout towards ignition coil 4 breakout	*Engine Harness Routing - Front (LFX)*	—
J112	Engine Harness	LCV	In engine compartment, right front of engine, approximately 5 cm (1.97 in) from ignition coil 1 breakout towards ignition coil 2 breakout	*Engine Harness Routing - Right Front Top (LCV)*	—
J113	Engine Harness	LCV	In engine compartment, right front of engine, approximately 2.5 cm (0.98 in) from ignition coil 1 breakout towards ignition coil 2 breakout	*Engine Harness Routing - Right Front Top (LCV)*	—
J113	Engine Harness	LFX	In engine compartment, left front of engine, approximately 15.5 cm (6.10 in) into fuse block underhood X3 breakout	*Engine Harness Routing - Front (LFX)*	—
J114	Engine Harness	LCV	In engine compartment, right front of engine, approximately 2.5 cm (0.98 in) from ignition coil 1 breakout towards camshaft position actuator solenoid valve - intake breakout	*Engine Harness Routing - Right Front Top (LCV)*	—
J114	Engine Harness	LFX	In engine compartment, right front of engine, approximately 6.1 cm (2.40 in) from evaporative emission purge solenoid valve breakout towards throttle body	*Engine Harness Routing - Front (LFX)*	—
J115	Engine Harness	LFX	In engine compartment, left front of engine, approximately 15.5 cm (6.10 in) from X101 breakout towards right side of engine, near oil fill cap	*Engine Harness Routing - Front (LFX)*	—
J116	Engine Harness	LFX	In engine compartment, left front of engine, approximately 2 cm (0.79 in) from ignition coil 2 breakout towards rear of engine	*Engine Harness Routing - Front (LFX)*	—
J117	Forward Lamp Harness	LCV/LFX	In engine compartment, approximately 7.8 cm (3.07 in) into underhood fuse block X1 breakout	*Forward Lamp Harness Routing - Left Engine Compartment*	—
J117	Forward Lamp Harness	LWN	In engine compartment, approximately 9.5 cm (3.74 in) into underhood fuse block X1 breakout	*Forward Lamp Harness Routing - Left Engine Compartment (LWN)*	—
J118	Forward Lamp Harness	T3U with LCV/LFX	In engine compartment, approximately 29.6 cm (11.7 in) into underhood fuse block X1 breakout	*Forward Lamp Harness Routing - Left Engine Compartment*	—

J118	Forward Lamp Harness	T3U with LWN	In engine compartment, approximately 29.2 cm (11.5 in) into underhood fuse block X1 breakout	*Forward Lamp Harness Routing - Left Engine Compartment (LWN)*	—
J119	Forward Lamp Harness	T3U with LCV/LFX	In engine compartment, approximately 15.6 cm (6.14 in) into underhood fuse block X1 breakout	*Forward Lamp Harness Routing - Left Engine Compartment*	—
J119	Forward Lamp Harness	T3U with LWN	In engine compartment, approximately 10.9 cm (4.29 in) into underhood fuse block X1 breakout	*Forward Lamp Harness Routing - Left Engine Compartment (LWN)*	—
J120	Forward Lamp Harness	—	In engine compartment, approximately 28.2 cm (11.7 in) from right fog lamp breakout towards cooling fan control module breakout	*Forward Lamp Harness Routing - Right Engine Compartment*	—
J121	Left Headlamp Harness	—	Outside of the vehicle, internal to the left headlamp assembly	—	—
J122	Right Headlamp Harness	—	Outside of the vehicle, internal to the right headlamp assembly	—	—
J123	Body Harness	LCV/LFX	In engine compartment, approximately 29.7 cm (11.7 in) from battery current sensor towards rear of vehicle	*Body Harness Routing - Left Engine Compartment (LCV/LFX)*	—
J123	Body Harness	LWN	In engine compartment, approximately 9.6 cm (3.78 in) from battery current sensor towards rear of vehicle	*Body Harness Routing - Left Engine Compartment (LWN)*	—
J125	Engine Harness	LWN	In engine compartment, left of engine, approximately 14.8 cm (5.83 in) from underhood fuse block X3 breakout towards front of vehicle	*Engine Harness Routing - Left Front (LWN)*	—
J126	Engine Harness	LWN	In engine compartment, left of engine, approximately 12.4 cm (4.88 in) from underhood fuse block X3 breakout towards front of vehicle	*Engine Harness Routing - Left Front (LWN)*	—
J127	Engine Harness	LWN	In engine compartment, left of engine, approximately 6 cm (2.36 in) from underhood fuse block X3 breakout towards front of vehicle	*Engine Harness Routing - Left Front (LWN)*	—
J128	Engine Harness	LCV	In engine compartment, left rear of engine, approximately 12 cm (4.72 in) from G108	*Engine Harness Routing - Right Rear (LCV)*	—
J128	Engine Harness	LFX	In engine compartment, right front of engine, approximately 3 cm (1.81 in) from evaporative emission purge solenoid valve breakout towards left side of engine	*Engine Harness Routing - Rear (LFX)*	—
J129	Engine Harness	LCV	In engine compartment, right front of engine, approximately 4.1 cm (1.61 in) from the engine oil level switch breakout towards the rear of vehicle	*Engine Harness Routing - Right Rear (LCV)*	—
J129	Engine Harness	LFX	In engine compartment, right front of engine, approximately 3 cm (1.81 in) into G108 breakout	*Engine Harness Routing - Rear (LFX)*	—
J130	Engine Harness	LWN	In engine compartment, left of engine, approximately 5 cm (1.97 in) from underhood fuse block X3 breakout towards X109 breakout	—	—
J131	Engine Harness	LWN	In engine compartment, left of engine, approximately 20.7 cm (8.15 in) from crankshaft position sensor breakout towards harness main bundle	—	—

J132	Engine Harness	LWN	In engine compartment, right of engine, approximately 5.7 cm (2.24 in) from engine oil pressure sensor breakout towards exhaust gas recirculation temperature sensor 2 breakout	—	—
J133	Engine Harness	LWN	In engine compartment, right of engine, approximately 6.0 cm (2.36 in) from engine oil pressure sensor breakout towards X107 breakout	—	—
J200	Body Harness	—	In passenger compartment, approximately 12.5 cm (4.92 in) from accelerator pedal position sensor breakout towards brake pedal position sensor breakout	*Body Harness Routing - Left Front of Passenger Compartment (Extended Cab)*	—
J201	Body Harness	—	In passenger compartment, approximately 15.6 cm (6.14 in) from park brake switch breakout towards main harness	• *Body Harness Routing - Left Front of Passenger Compartment (Crew Cab)* • *Body Harness Routing - Left Front of Passenger Compartment (Extended Cab)*	—
J202	Body Harness	—	In passenger compartment, approximately 8.2 cm (3.23 in) from park brake switch breakout towards main harness	• *Body Harness Routing - Left Front of Passenger Compartment (Crew Cab)* • *Body Harness Routing - Left Front of Passenger Compartment (Extended Cab)*	—
J203	Body Harness	—	In passenger compartment, approximately 4.1 cm (1.61 in) from park brake switch breakout towards body control module breakouts	• *Body Harness Routing - Left Front of Passenger Compartment (Crew Cab)* • *Body Harness Routing - Left Front of Passenger Compartment (Extended Cab)*	—
J204	Body Harness	—	In passenger compartment, approximately 8.1 cm (3.19 in) from park brake switch breakout towards body control module breakouts	• *Body Harness Routing - Left Front of Passenger Compartment (Crew Cab)* • *Body Harness Routing - Left Front of Passenger Compartment (Extended Cab)*	—
J205	Body Harness	—	In passenger compartment, approximately 11.9 cm (4.69 in) from park brake switch breakout towards main harness	• *Body Harness Routing - Left Front of Passenger Compartment (Crew Cab)* • *Body Harness Routing - Left Front of Passenger Compartment (Extended Cab)*	—
J206	Body Harness	—	In passenger compartment, approximately 4.1 cm (1.61 in) from X500 breakout towards G301 breakout	• *Body Harness Routing - Left Front of Passenger Compartment (Crew Cab)* • *Body Harness Routing - Left Front of Passenger Compartment (Extended Cab)*	—
J207	Body Harness	—	In passenger compartment, approximately 4.6 cm (1.81 in) from X500 breakout towards JX201 breakout	*Body Harness Routing - Left Front of Passenger Compartment (Crew Cab)*	—

J208	Body Harness	—	In passenger compartment, approximately 9.6 cm (3.78 in) from X500 breakout towards JX201 breakout	• *Body Harness Routing - Left Front of Passenger Compartment (Crew Cab)* • *Body Harness Routing - Left Front of Passenger Compartment (Extended Cab)*	—
J209	Body Harness	Crew Cab	In passenger compartment, approximately 5.0 cm (1.97 in) from G301 breakout towards front of vehicle	*Body Harness Routing - Left Front of Passenger Compartment (Crew Cab)*	—
J209	Body Harness	Extended Cab	In passenger compartment, approximately 12.3 cm (4.84 in) from G301 breakout towards front of vehicle	*Body Harness Routing - Left Front of Passenger Compartment (Extended Cab)*	—
J210	Body Harness	Crew Cab	In passenger compartment, approximately 1.23 cm (4.84 in) from G301 breakout towards front of vehicle	*Body Harness Routing - Left Front of Passenger Compartment (Crew Cab)*	—
J211	Body Harness	Crew Cab	In passenger compartment, approximately 22 cm (8.66 in) from G301 breakout towards front of vehicle	*Body Harness Routing - Left Front of Passenger Compartment (Crew Cab)*	—
J212	Body Harness	Crew Cab	In passenger compartment, approximately 30.2 cm (11.9 in) from G301 breakout towards front of vehicle	*Body Harness Routing - Left Front of Passenger Compartment (Crew Cab)*	—
J213	Body Harness	Crew Cab	In passenger compartment, under passenger door trim plate, approximately 12 cm (4.72 in) from antenna coaxial cable inline connector breakout towards rear of vehicle	*Body Harness Routing - Right Front of Passenger Compartment (Crew Cab)*	—
J214	Instrument Panel Harness	—	In passenger compartment, behind left side of instrument panel, approximately 8.8 cm (3.46 in) from data link connector breakout towards steering column	*Instrument Panel Harness Routing - Rear*	—
J215	Instrument Panel Harness	—	In passenger compartment, behind left side of instrument panel, approximately 2.5 cm (1.0 in) from data link connector breakout towards floor	*Instrument Panel Harness Routing - Rear*	—
J216	Instrument Panel Harness	—	In passenger compartment, behind left side of instrument panel, approximately 7.6 cm (2.99 in) from data link connector breakout towards floor	*Instrument Panel Harness Routing - Rear*	—
J217	Instrument Panel Harness	KA1	In passenger compartment, behind left side of instrument panel, near body control module, approximately 5.3 cm (2.09 in) into main harness bundle leading toward body control module X1 breakout	*Instrument Panel Harness Routing - Rear*	—
J218	Instrument Panel Harness	UQ3	In passenger compartment, behind left side of instrument panel, approximately 6.6 cm (2.60 in) from left front speaker breakout towards steering column	*Instrument Panel Harness Routing - Rear*	—
J219	Instrument Panel Harness	UQ3	In passenger compartment, behind left side of instrument panel, approximately 10 cm (3.94 in) from left front speaker breakout towards steering column	*Instrument Panel Harness Routing - Rear*	—
J220	Instrument Panel Harness	—	In passenger compartment, behind left side of instrument panel, approximately 3.2 cm (1.26 in) from left front speaker breakout towards steering column	*Instrument Panel Harness Routing - Rear*	—

J221	Instrument Panel Harness	—	In passenger compartment, behind left side of instrument panel, approximately 15.9 cm (6.26 in) into secondary bundle leading toward steering wheel air bag coil breakout	*Instrument Panel Harness Routing - Rear*	—
J222	Instrument Panel Harness	IO5/IO6	In passenger compartment, behind center of instrument panel, approximately 13 cm (5.12 in) from X305 breakout towards center console accessory power receptacle breakout	*Instrument Panel Harness Routing - Rear*	—
J223	Instrument Panel Harness	—	In passenger compartment, behind center of instrument panel, approximately 3.3 cm (1.30 in) from center console accessory power receptacle breakout towards X305 breakout	*Instrument Panel Harness Routing - Rear*	—
J224	Instrument Panel Harness	—	In passenger compartment, behind center of instrument panel, approximately 5.2 cm (2.05 in) from center console accessory power receptacle breakout towards G305 breakout under center floor console	*Instrument Panel Harness Routing - Rear*	—
J225	Instrument Panel Harness	—	In passenger compartment, behind center of instrument panel, approximately 29.6 cm (11.7 in) from center console accessory power receptacle breakout towards G305 breakout under center floor console	*Instrument Panel Harness Routing - Rear*	—
J226	Instrument Panel Harness	IO4/IO5/IO6	In passenger compartment, behind center of instrument panel, approximately 14.7 cm (5.79 in) from center console accessory power receptacle breakout towards G305 breakout under center floor console	*Instrument Panel Harness Routing - Rear*	—
J227	Instrument Panel Harness	—	In passenger compartment, behind center of instrument panel, approximately 24.4 cm (9.61 in) from center console accessory power receptacle breakout towards G305 breakout under center floor console	*Instrument Panel Harness Routing - Rear*	—
J228	Instrument Panel Harness	—	In passenger compartment, behind center of instrument panel, approximately 35.3 cm (13.9 in) from center console accessory power receptacle breakout towards G305 breakout under center floor console	*Instrument Panel Harness Routing - Rear*	—
J229	Instrument Panel Harness	UQ3	In passenger compartment, behind right side of instrument panel, approximately 4.5 cm (1.77 in) from passenger instrument panel air bag breakout towards radio X4 breakout	*Instrument Panel Harness Routing - Rear*	—
J230	Instrument Panel Harness	UQ3	In passenger compartment, behind right side of instrument panel, approximately 9 cm (3.54 in) from passenger instrument panel air bag breakout towards radio X4 breakout	*Instrument Panel Harness Routing - Rear*	—
J231	Instrument Panel Harness	—	In passenger compartment, behind right side of instrument panel, approximately 18 cm (3.54 in) from right front speaker breakout towards passenger instrument panel air bag breakout	*Instrument Panel Harness Routing - Rear*	—
J232	Steering Wheel Harness	—	In passenger compartment, in the steering wheel harness	—	—
J233	Steering Wheel Harness	—	In passenger compartment, in the steering wheel harness	—	—

J234	Steering Wheel Harness	—	In passenger compartment, in the steering wheel harness	—	—
J235	Body Harness	—	In passenger compartment, approximately 5 cm (1.97 in) from brake pedal position sensor breakout towards accelerator pedal position sensor breakout	• *Body Harness Routing - Left Front of Passenger Compartment (Crew Cab)* • *Body Harness Routing - Left Front of Passenger Compartment (Extended Cab)*	—
J236	Instrument Panel Harness	IO3/IO4+MYB	In passenger compartment, behind center of instrument panel, approximately 11.1 cm (4.37 in) into auxiliary audio input X1 breakout	—	—
J237	Instrument Panel Harness	IO3/IO4+N8D	In passenger compartment, behind center of instrument panel, approximately 4 cm (3.54 in) from radio X1 breakout towards left side of vehicle	*Instrument Panel Harness Routing - Rear*	—
J238	Instrument Panel Harness	IO3/IO4+N8D	In passenger compartment, behind center of instrument panel, approximately 16 cm (6.30 in) from X302 breakout	*Instrument Panel Harness Routing - Rear*	—
J239	Instrument Panel Harness	—	In passenger compartment, behind left side of instrument panel, approximately 5 cm (1.97 in) from splice pack JX200 breakout towards floor	—	—
J250	Steering Wheel Harness	—	In passenger compartment, in the steering wheel harness	—	—
J251	HVAC Harness	—	In passenger compartment, HVAC assembly harness	—	—
J252	HVAC Harness	—	In passenger compartment, HVAC assembly harness	—	—
J253	Instrument Panel Harness	LWN	In passenger compartment, behind center of instrument panel, approximately 35.3 cm (13.9 in) from	—	—
J300	Body Harness	Crew Cab	In passenger compartment, under passenger door trim plate, approximately 22 cm (8.66 in) from G304 breakout towards front of vehicle	*Body Harness Routing - Right Front of Passenger Compartment (Crew Cab)*	—
J301	Body Harness	—	In passenger compartment, under passenger seat, approximately 4.0 cm (1.57 in) from X320 breakout towards floor console	• *Body Harness Routing - Right Front of Passenger Compartment (Crew Cab)* • *Body Harness Routing - Right Front of Passenger Compartment (Extended Cab)*	—
J302	Body Harness	Extended Cab	In passenger compartment, under driver door trim plate, approximately 5 cm (1.97 in) from G303 breakout towards rear of vehicle	*Body Harness Routing - Left Front of Passenger Compartment (Extended Cab)*	—
J303	Body Harness	Extended Cab	In passenger compartment, under passenger door trim plate, approximately 5 cm (1.97 in) from G304 breakout towards rear of vehicle	*Body Harness Routing - Right Front of Passenger Compartment (Extended Cab)*	—
J304	Floor Console Harness	IO3 with N8D	In passenger compartment, under center floor console, approximately 12.3 cm (4.84 in) from X302 USB inline connector breakout towards rear of vehicle	*Center Console Harness Routing*	—

J305	Floor Console Harness	—	In passenger compartment, under center floor console, approximately 11.7 cm (4.61 in) from USB receptacle breakout towards rear of vehicle	*Center Console Harness Routing*	—
J306	Headliner Harness	—	In passenger compartment, above the headliner, approximately 20.3 cm (4.72 in) from the left sunshade mirror lamp breakout towards rear of vehicle	• *Headliner Harness Routing (Crew Cab)* • *Headliner Harness Routing (Extended Cab)*	—
J307	Headliner Harness	—	In passenger compartment, above the headliner, approximately 11.7 cm (4.61 in) from the left sunshade mirror lamp breakout towards rear of vehicle	• *Headliner Harness Routing (Crew Cab)* • *Headliner Harness Routing (Extended Cab)*	—
J308	Headliner Harness	Crew Cab	In passenger compartment, above the headliner, approximately 35.3 cm (13.9 in) from the left sunshade mirror lamp breakout towards rear of vehicle	*Headliner Harness Routing (Crew Cab)*	—
J308	Headliner Harness	Extended Cab	In passenger compartment, above the headliner, approximately 13.8 cm (4.61 in) from the rear dome lamp breakout towards rear of vehicle	*Headliner Harness Routing (Extended Cab)*	—
J309	Driver Seat Cushion Harness	AL9	In passenger compartment, under driver seat, approximately 11 cm (4.3 in) from X310 towards the seat adjuster switch	*Driver Seat Harness Routing*	—
J310	Passenger Seat Cushion Harness	AT9	In passenger compartment, under passenger seat, approximately 11 cm (4.3 in) from X320 towards the seat adjuster switch	*Passenger Seat Harness Routing*	—
J311	Driver Seat Cushion Harness	AH6/AL9/KA1	In passenger compartment, under driver seat, approximately 21.5 cm (8.5 in) from X311 towards X310	*Driver Seat Harness Routing*	—
J312	Passenger Seat Cushion Harness	AAQ/AT9/KA1	In passenger compartment, under passenger seat, approximately 17.5 cm (6.9 in) from X321 towards X320	*Passenger Seat Harness Routing*	—
J313	Passenger Seat Cushion Harness	AL0	In passenger compartment, under passenger seat, approximately 23.5 cm (9.3 in) from X321 towards X320	*Passenger Seat Harness Routing*	—
J314	Driver Seat Cushion Harness	—	In passenger compartment, under driver seat	—	—
J315	Driver Seat Cushion Harness	—	In passenger compartment, under driver seat	—	—
J316	Passenger Seat Cushion Harness	AAQ/AT9/KA1	In passenger compartment, under passenger seat	—	—
J400	Chassis Harness	—	Underneath the rear of vehicle, approximately 5.3 cm (2.09 in) from G401 breakout towards rear of vehicle	• *Chassis Harness Routing (Crew Cab)* • *Chassis Harness Routing (Extended Cab)*	—
J401	Chassis Harness	LCV/LFX	Underneath the rear of vehicle, approximately 13.5 cm (5.31 in) from chassis control module (LFX) or fuel pump driver control module (LCV) breakout towards front of vehicle	• *Chassis Harness Routing (Crew Cab)* • *Chassis Harness Routing (Extended Cab)*	—

J402	Chassis Harness	LCV/LFX	Underneath the rear of vehicle, approximately 6.1 cm (2.40 in) from chassis control module (LFX) or fuel pump driver control module (LCV) breakout towards left frame rail	• *Chassis Harness Routing (Crew Cab)* • *Chassis Harness Routing (Extended Cab)*	—
J402	Chassis Harness	LWN	Underneath the rear of vehicle, approximately 14.1 cm (5.50 in) from trailer brake power control module breakout towards left frame rail	*Chassis Harness Routing (LWN)*	—
J403	Chassis Harness	LFX	Underneath the rear of vehicle, approximately 18.5 cm (7.28 in) from left rear wheel speed sensor breakout towards front of vehicle	• *Chassis Harness Routing (Crew Cab)* • *Chassis Harness Routing (Extended Cab)*	—
J404	Chassis Harness	—	Underneath the rear of vehicle, approximately 6.2 cm (2.44 in) into G400 breakout	• *Chassis Harness Routing (Crew Cab)* • *Chassis Harness Routing (Extended Cab)*	—
J405	Chassis Harness	LCV/LFX	Underneath the rear of vehicle, approximately 20.1 cm (7.91 in) from G400 breakout towards front of vehicle	• *Chassis Harness Routing (Crew Cab)* • *Chassis Harness Routing (Extended Cab)*	—
J406	License Harness	—	At rear of vehicle, approximately 10 cm (3.94 in) from inline connector X400	*Rear License Plate Harness Routing*	—
J407	License Harness	—	At rear of vehicle, approximately 12.5 cm (4.92 in) from inline connector X400	*Rear License Plate Harness Routing*	—
J408	License Harness	—	At rear of vehicle, approximately 14.9 cm (5.87 in) from left license lamp breakout towards rear camera breakout	*Rear License Plate Harness Routing*	—
J409	License Harness	—	At rear of vehicle, approximately 4.8 cm (1.89 in) into rear camera breakout	*Rear License Plate Harness Routing*	—
J410	Chassis Harness	LWN	Underneath the rear of vehicle, approximately 41.2 cm (16.22 in) from the exhaust temperature sensor 2 breakout towards front of vehicle	*Chassis Harness Routing (LWN)*	—
J413	Chassis Harness	S0Y	At rear of vehicle, in left tail lamp breakout, present with accessory bed lighting kit installed	—	—
J414	Chassis Harness	S0Y	At rear of vehicle, in left tail lamp breakout, present with accessory bed lighting kit installed	—	—
J415	Chassis Harness	LWN	At rear of vehicle, approximately 10 cm (3.82 in) from the G401/G404 breakout towards trailer brake power control module	—	—
J416	Chassis Harness	LWN	At front of vehicle, approximately 3.3 cm (1.30 in) from the right front wheel speed sensor breakout towards nitrogen oxide sensor 1 breakout	—	—
J417	Chassis Harness	LWN	At middle of vehicle, approximately 26.9 cm (10.59 in) into the nitrogen oxide sensor 2 breakout	—	—
J418	Chassis Harness	LWN	At middle of vehicle, approximately 14 cm (5.51 in) from exhaust particulate matter sensor breakout towards exhaust temperature sensor 5 breakout	—	—

J419	Chassis Harness	LWN	At middle of vehicle, approximately 9.1 cm (3.58 in) from exhaust particulate matter sensor breakout towards exhaust temperature sensor 5 breakout	—	—
J420	Chassis Harness	LWN	Underneath the rear of vehicle, approximately 25.7 cm (10.12 in) from the exhaust temperature sensor 2 breakout towards front of vehicle	—	—
J421	Chassis Harness	LWN	Underneath the rear of vehicle, approximately 5 cm (1.97 in) from the exhaust temperature sensor 2 breakout towards front of vehicle	—	—
J422	Chassis Harness	LWN	At middle of vehicle, approximately 31.9 cm (12.56 in) into the nitrogen oxide sensor 2 breakout	—	—
J423	Chassis Harness	LWN	Underneath the rear of vehicle, approximately 36.2 cm (14.25 in) from the exhaust temperature sensor 2 breakout towards front of vehicle	—	—
J501	Driver Door Harness	—	In the driver door, approximately 7.9 cm (3.11 in) from window motor breakout towards front of vehicle	*Driver Door Harness Routing*	—
J502	Driver Door Harness	—	In the driver door, approximately 3.2 cm (1.26 in) from window motor breakout towards impact sensor breakout	*Driver Door Harness Routing*	—
J503	Driver Door Harness	—	In the driver door, approximately 21.3 cm (8.39 in) from window motor breakout towards front	*Driver Door Harness Routing*	—
J504	Driver Door Harness	—	In the driver door, approximately 15.4 cm (6.06 in) from speaker breakout towards rear of vehicle	*Driver Door Harness Routing*	—
J505	Driver Door Harness	—	In the driver door, approximately 31.5 cm (12.4 in) from speaker breakout towards rear of vehicle	*Driver Door Harness Routing*	—
J600	Passenger Door Harness	—	In the passenger door, approximately 18.2 cm (7.17 in) from window motor breakout towards front of vehicle	*Passenger Door Harness Routing*	—
J700	Left Rear Door Harness	Extended Cab	In the left rear door, near rear, approximately 15.9 cm (6.29 in) from speaker breakout towards rear of vehicle	*Left Rear Door Harness Routing (Exended Cab)*	—
J701	Left Rear Door Harness	Crew Cab	In the left rear door, near front, approximately 6.0 cm (2.36 in) from window switch — left rear breakout towards window motor	*Left Rear Door Harness Routing (Crew Cab)*	—
J701	Left Rear Door Harness	Extended Cab	In the left rear door, near rear, approximately 22 cm (8.66 in) from speaker breakout towards rear of vehicle	*Left Rear Door Harness Routing (Exended Cab)*	—
J800	Right Rear Door Harness	Extended Cab	In the right rear door, near rear, approximately 16.2 cm (6.38 in) from speaker breakout towards rear of vehicle	*Right Rear Door Harness Routing (Extended Cab)*	—
J801	Right Rear Door Harness	Crew Cab	In the right rear door, near front, approximately 6.0 cm (2.36 in) from window switch — right rear breakout towards window motor	*Right Rear Door Harness Routing (Crew Cab)*	—

J801	Right Rear Door Harness	Extended Cab	In the right rear door, near rear, approximately 23.3 cm (9.17 in) from speaker breakout towards rear of vehicle	*Right Rear Door Harness Routing (Extended Cab)*	—
JX200	Splice Pack - Instrument Panel	—	In the passenger compartment, under the instrument panel, left of the steering column and the body control module	*Instrument Panel Harness Routing - Rear*	*JX200 Splice Pack*
JX201	Splice Pack - Body	—	In the passenger compartment, under the instrument panel, behind the emergency brake assembly at carpet	*Body Harness Routing - Left Front of Passenger Compartment (Crew Cab)*	*JX201 Splice Pack*

Ground Views

G100 and G101

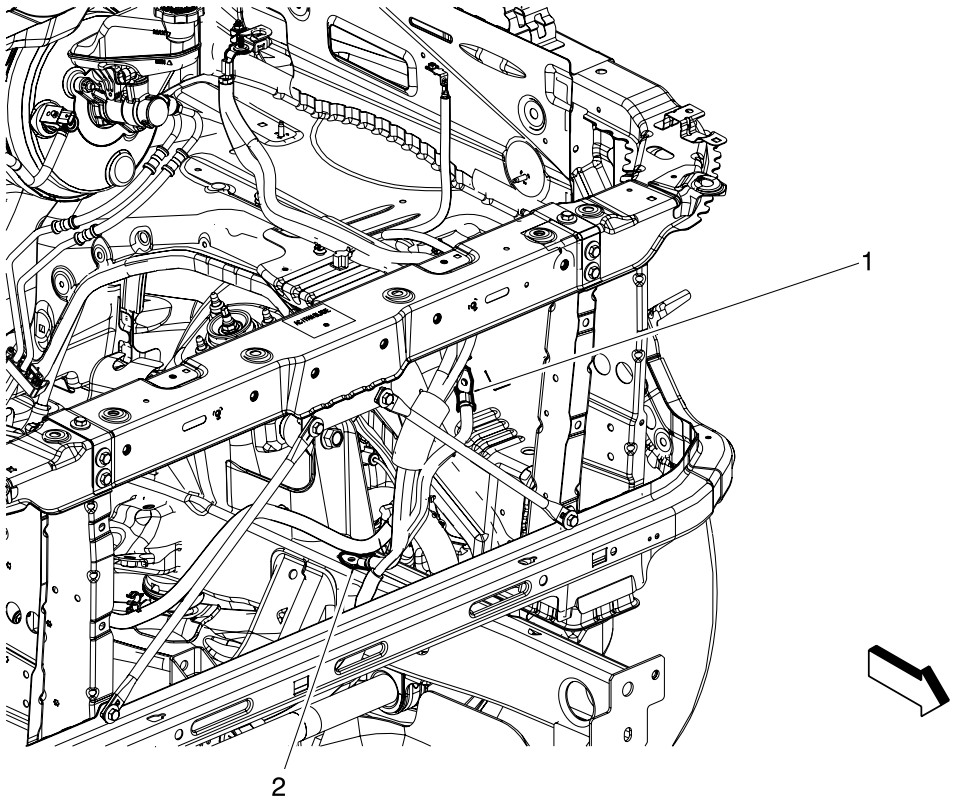

Items

1. G100
2. G101

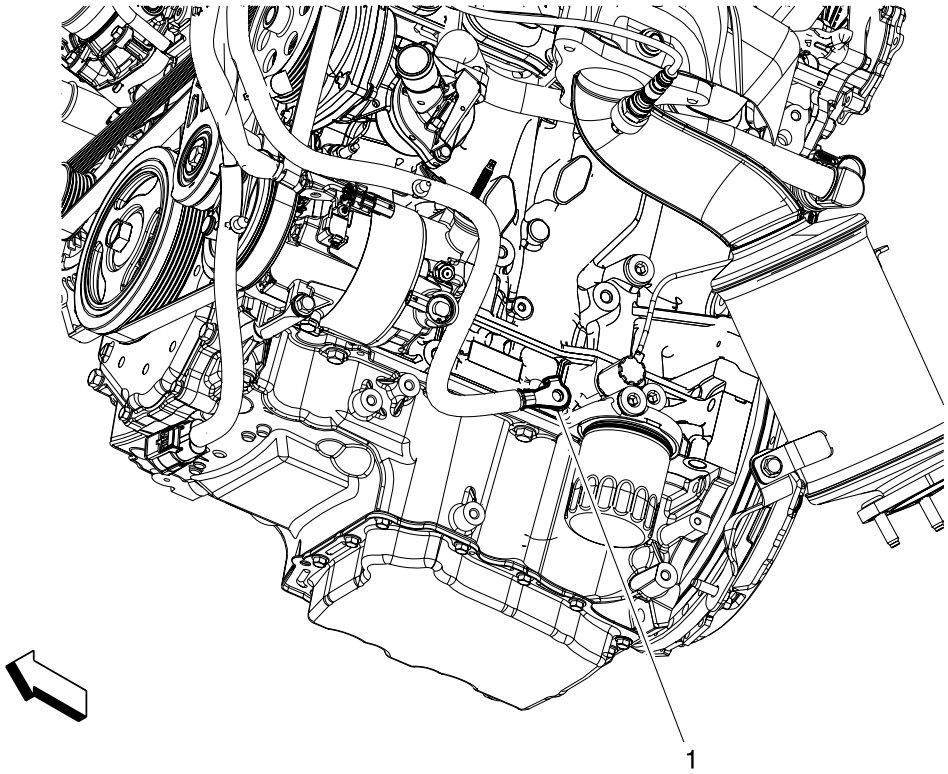

Items

1. G102

G102 (LFX)

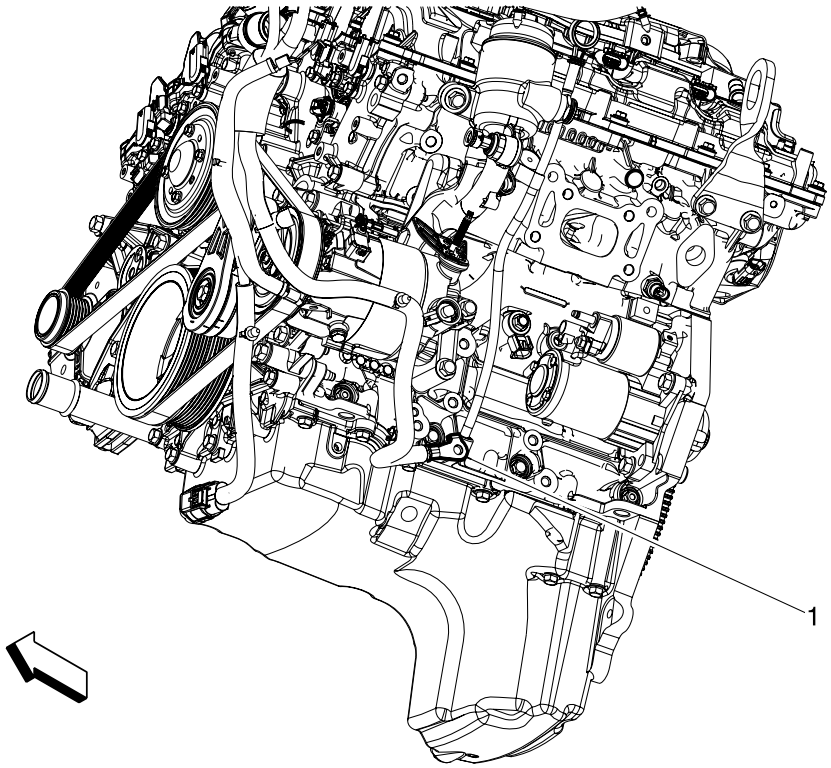

Items

1. G102

G103 (LCV/LFX), G105 (LWN)

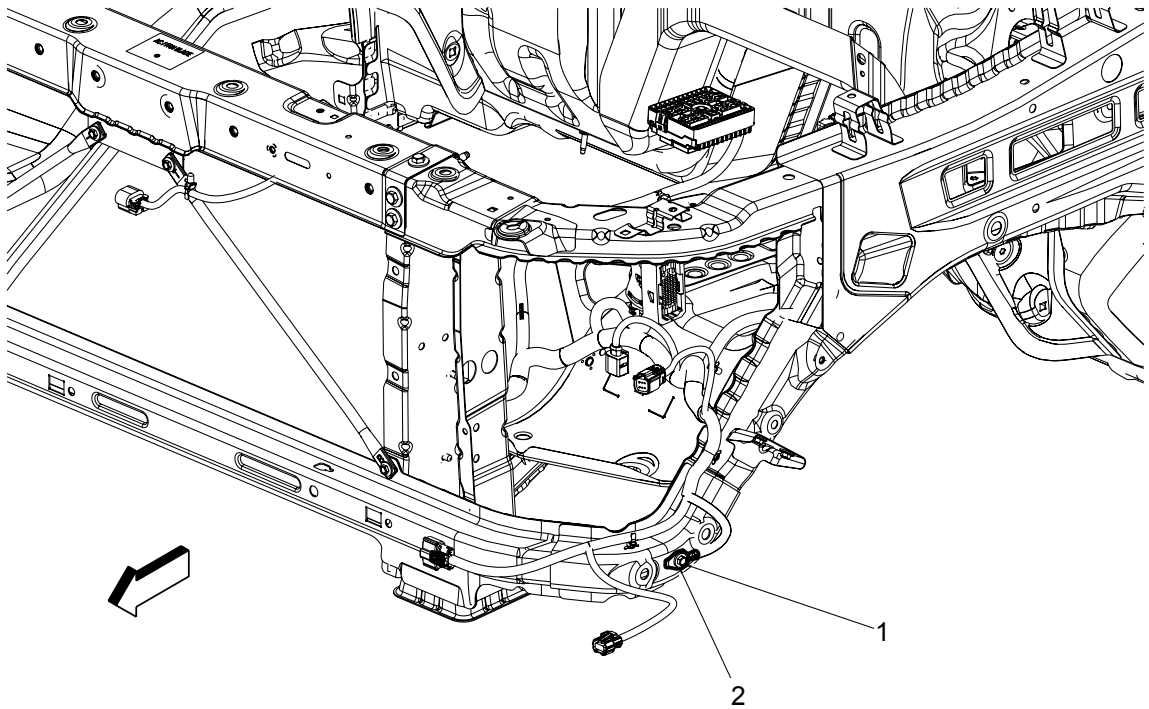

Items

1. G103
2. G105

G103 (LWN), G105 (LCV/LFX)

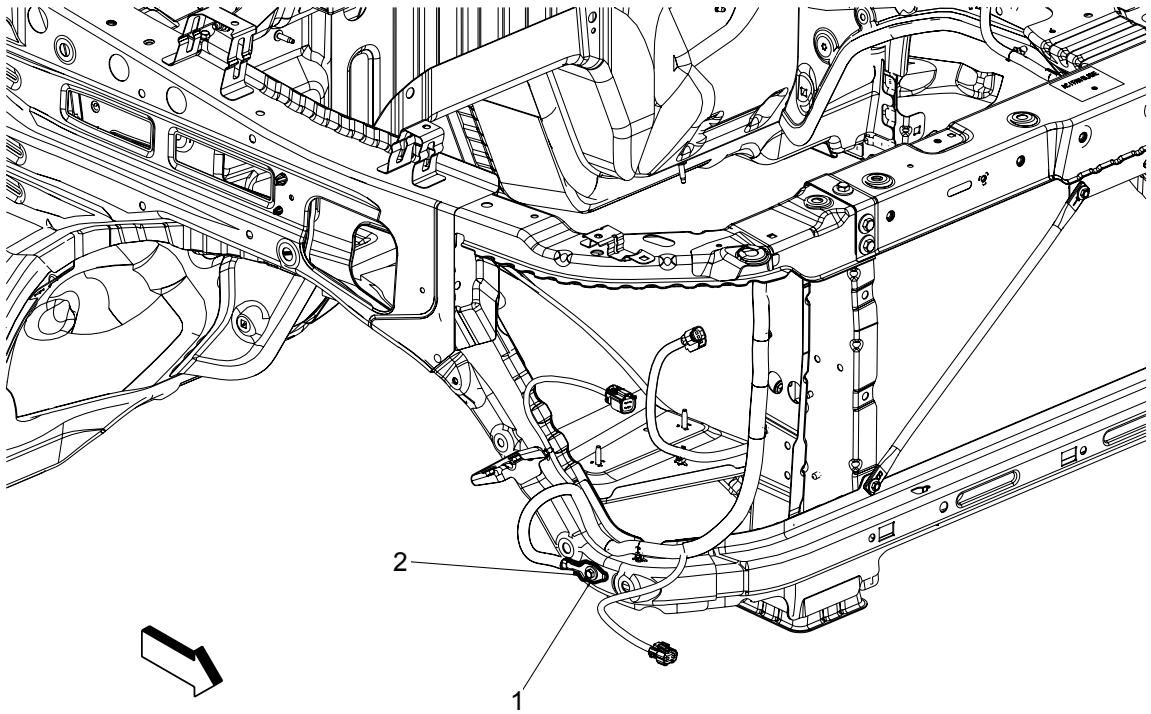

Items

1. G105
2. G103

G107 and G108 (LFX)

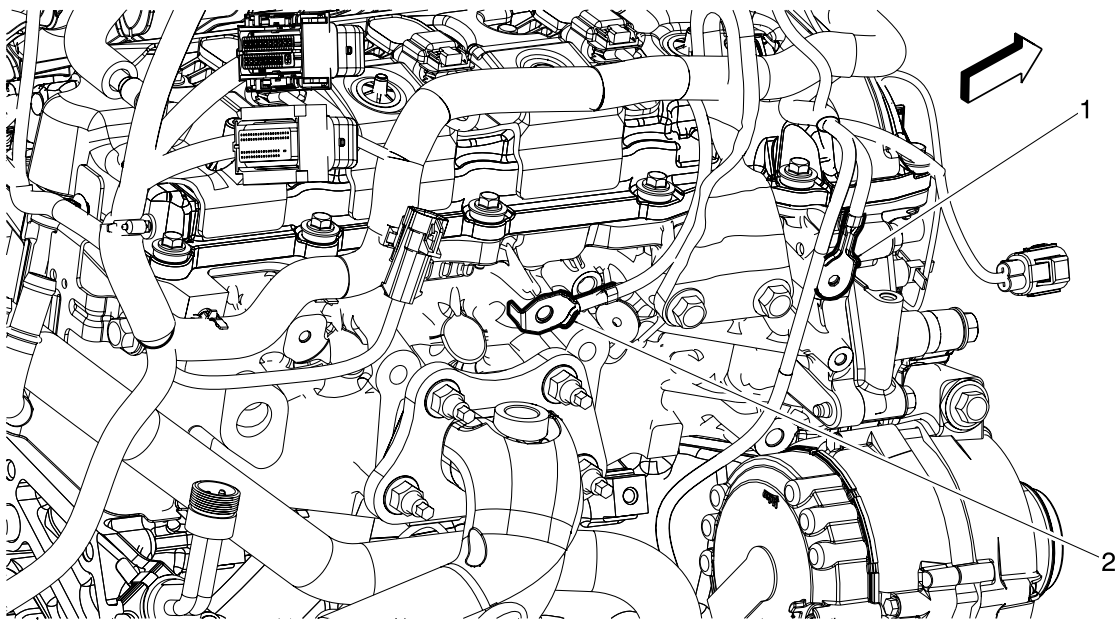

Items

1. G108
2. G107

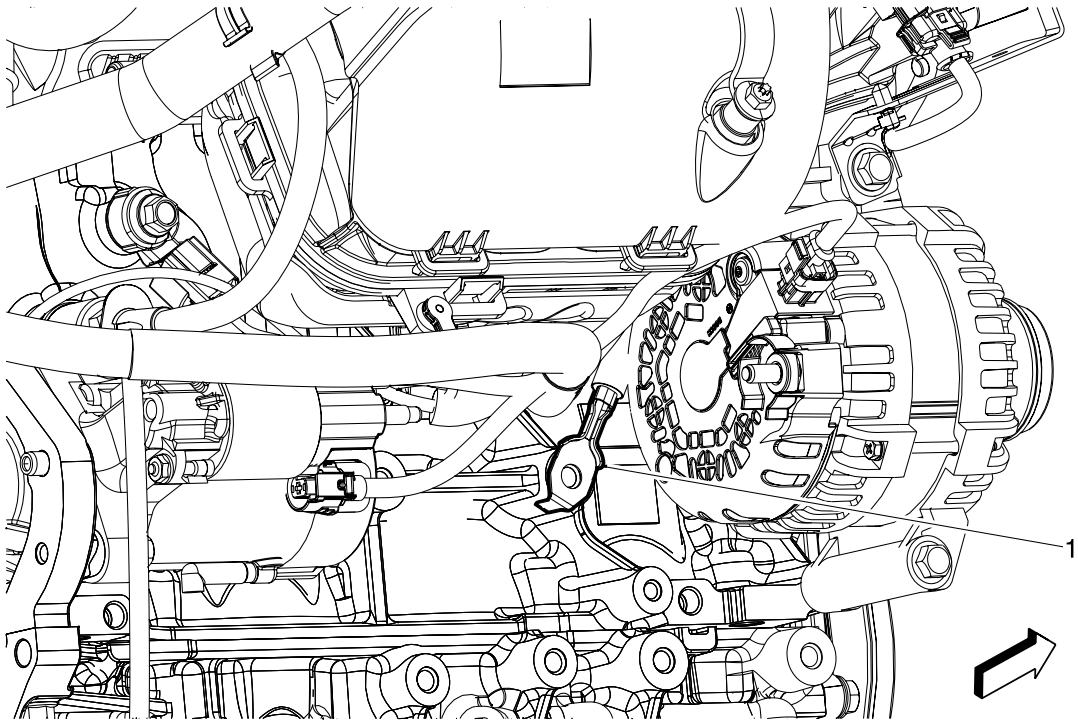

Items

1. G107

G107 (LWN)

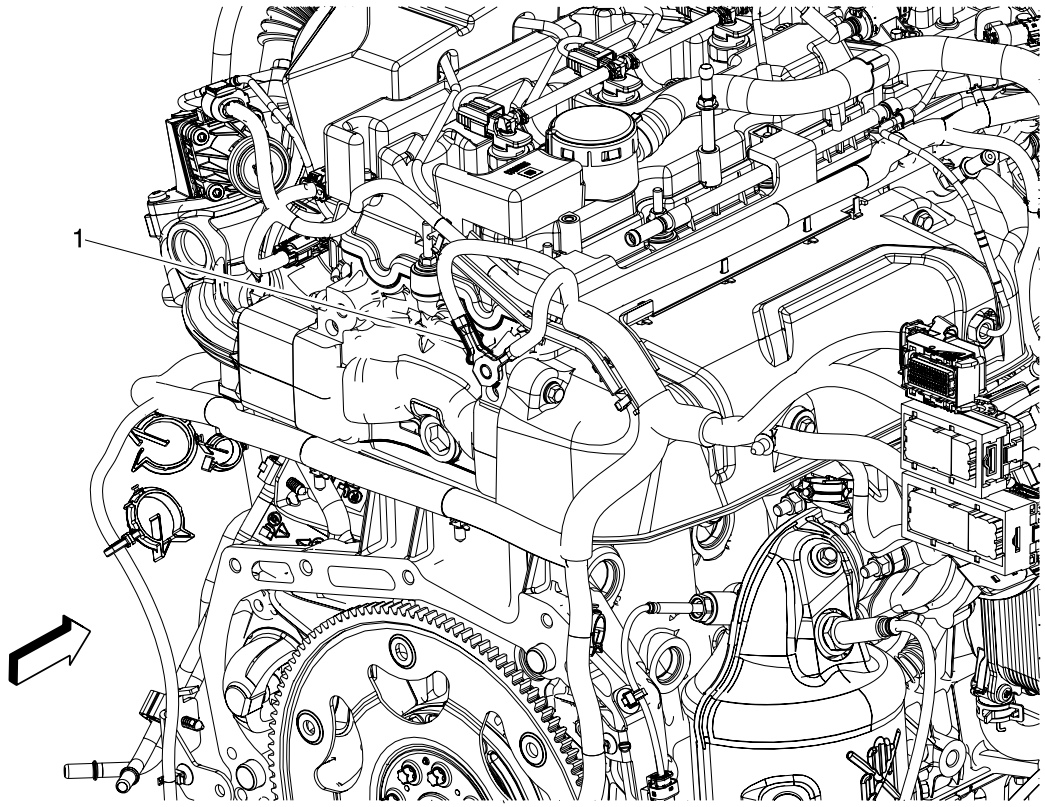

Items

1. G107

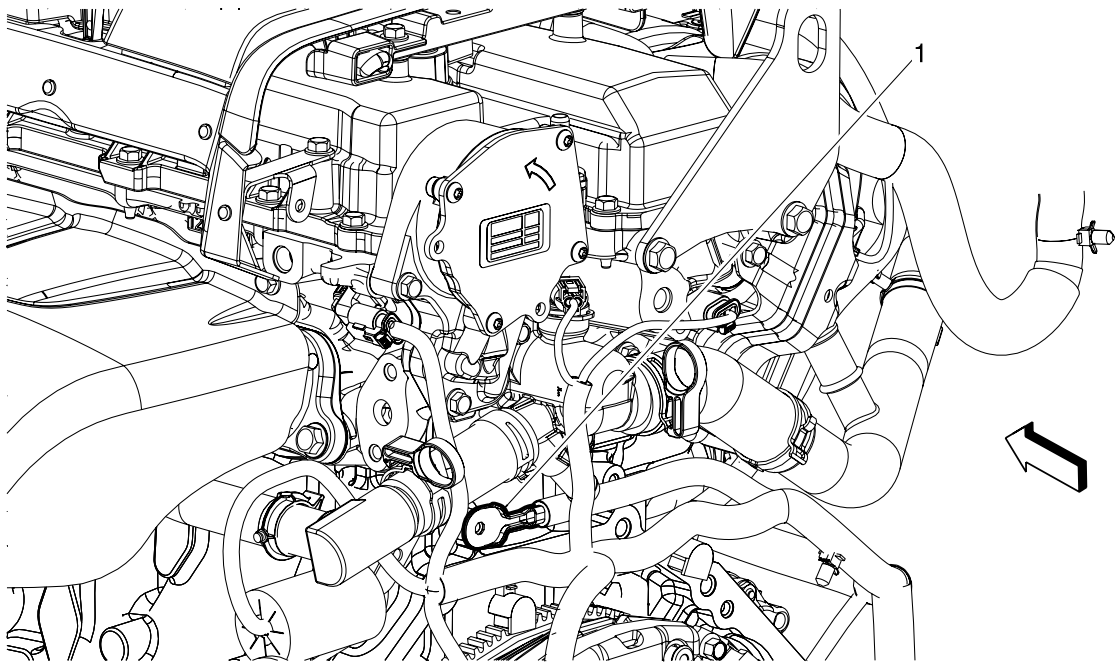

Items

1. G108

G109 (LFX)

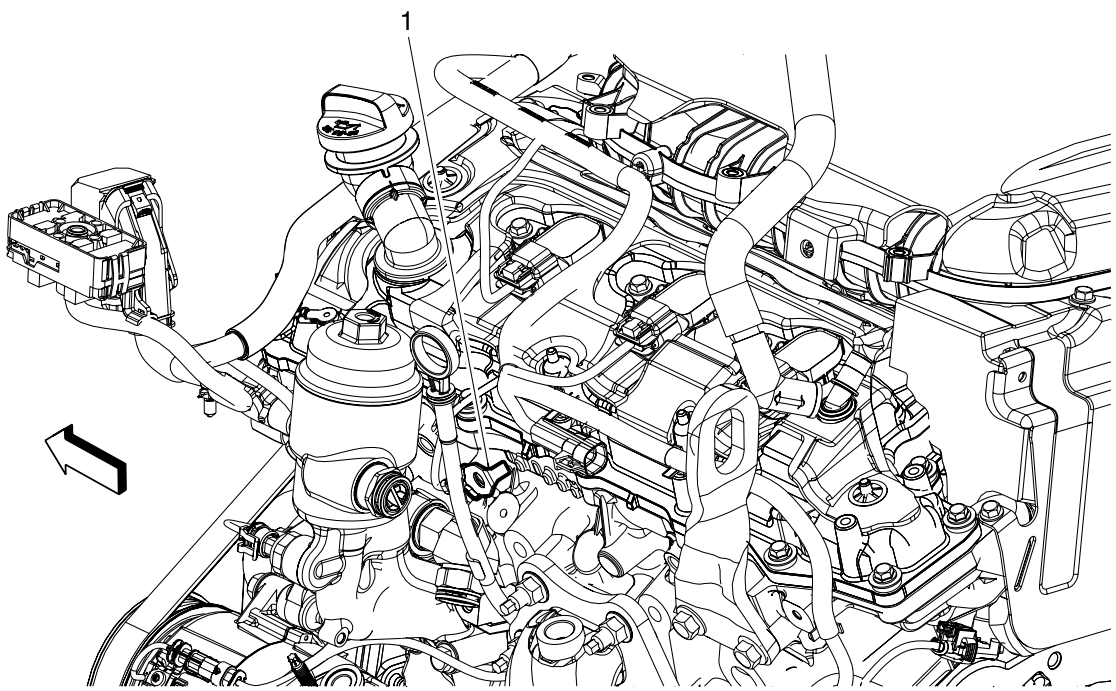

Items

1. G109 (LFX)

G300, G305, and G307

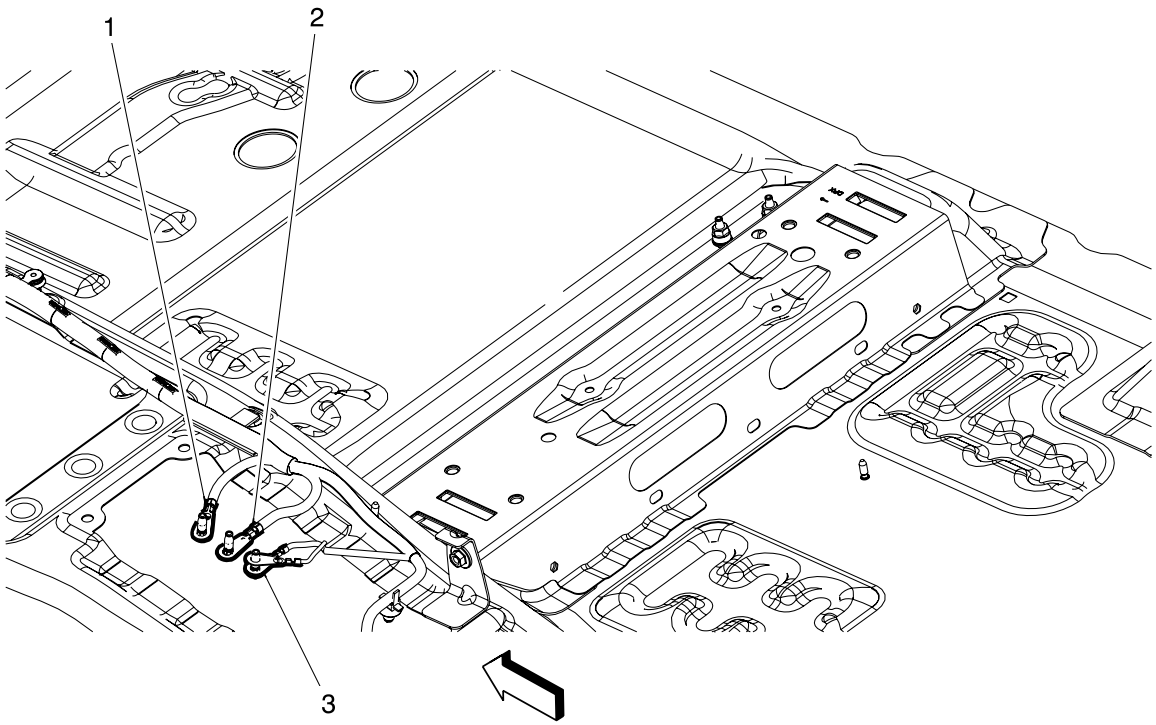

Items

1. G300
2. G305
3. G307

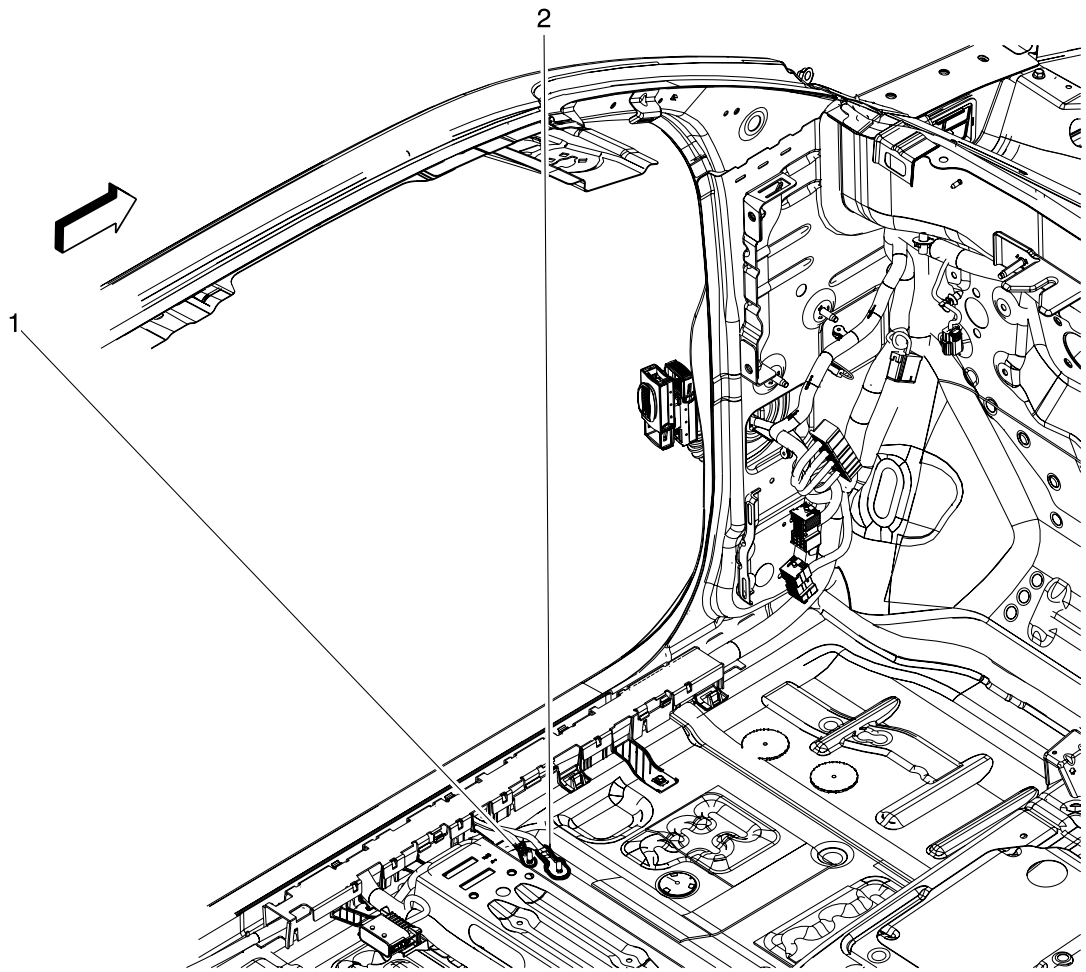

Items

1. G303
2. G301

G301 and G303 (LWN)

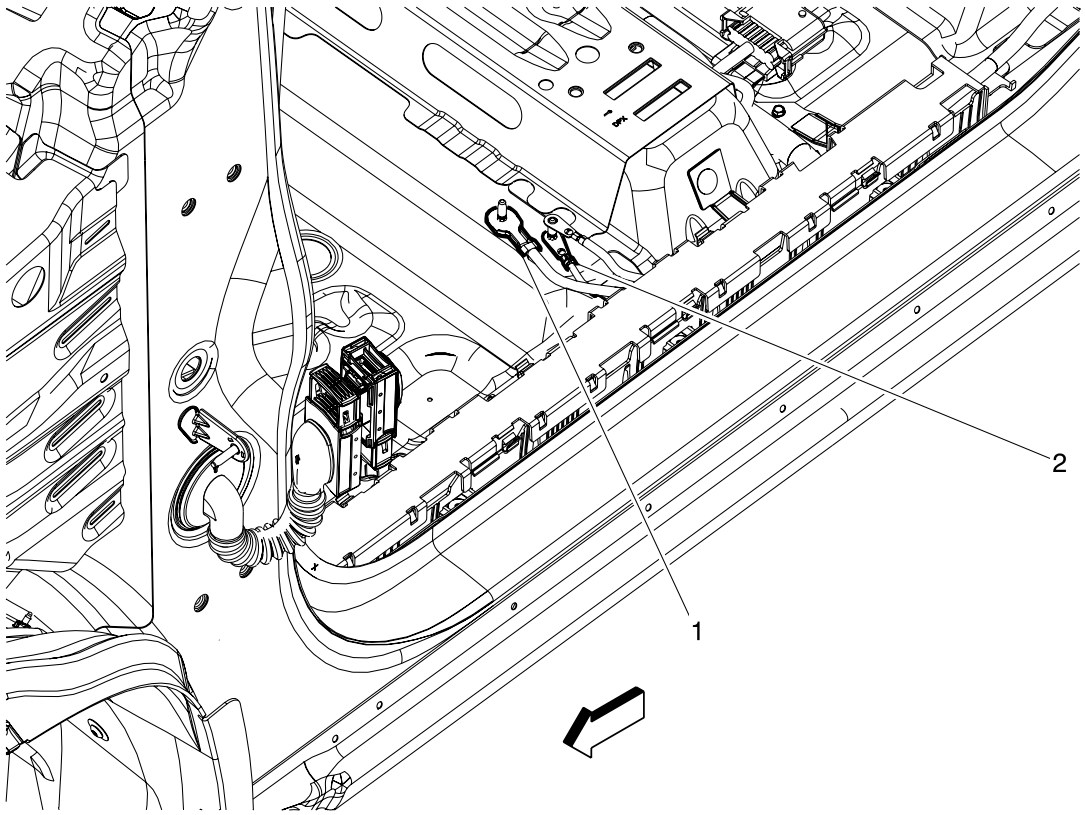

Items

1. G301
2. G303

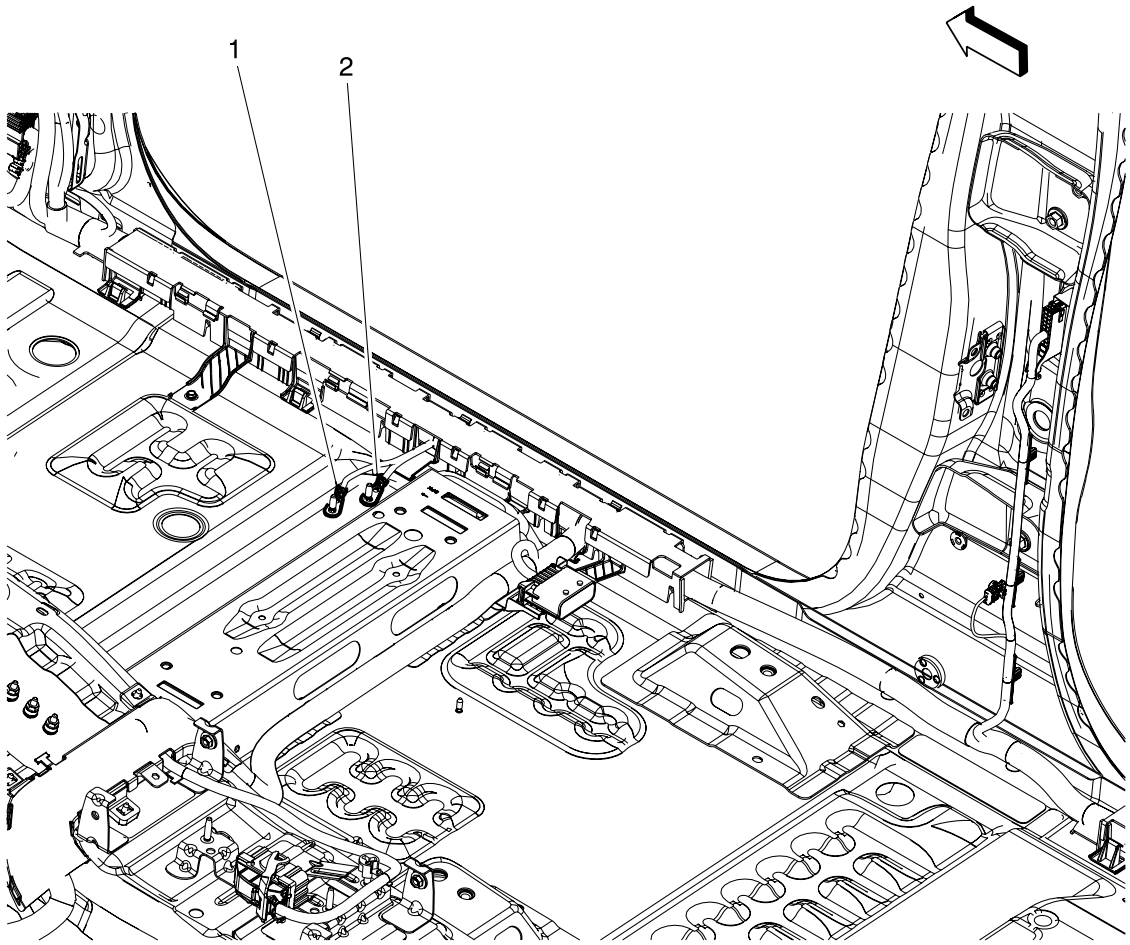

Items

1. G302
2. G304

G306 (Crew Cab)

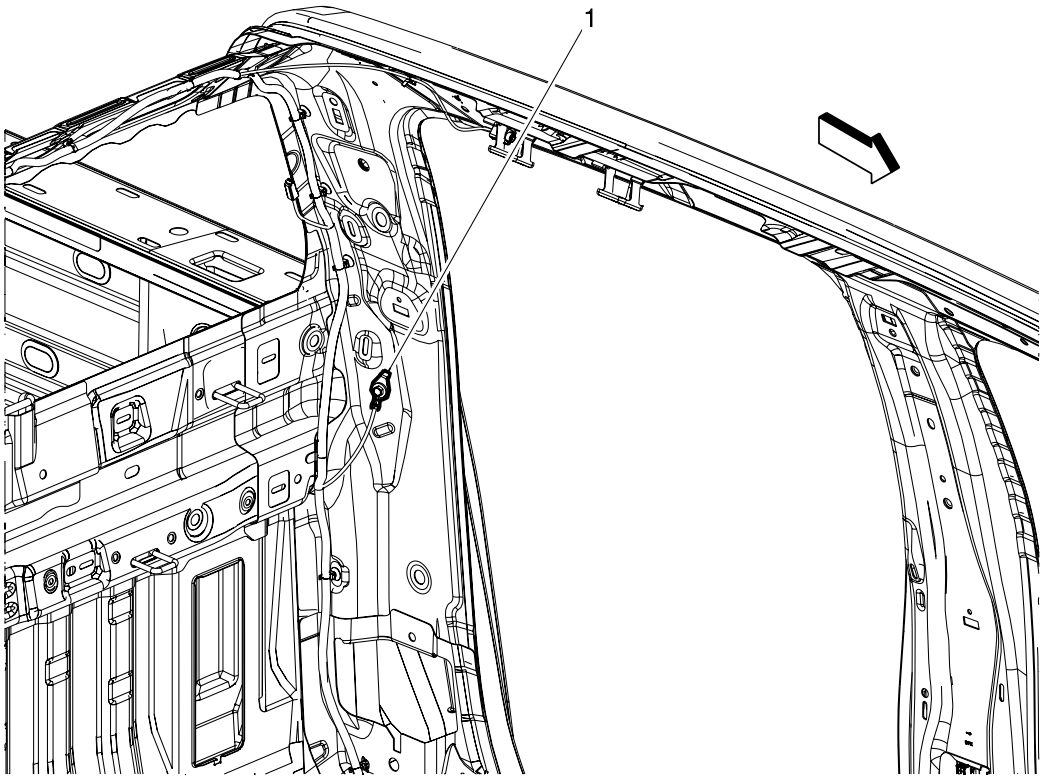

Items

1. G306 (C49)

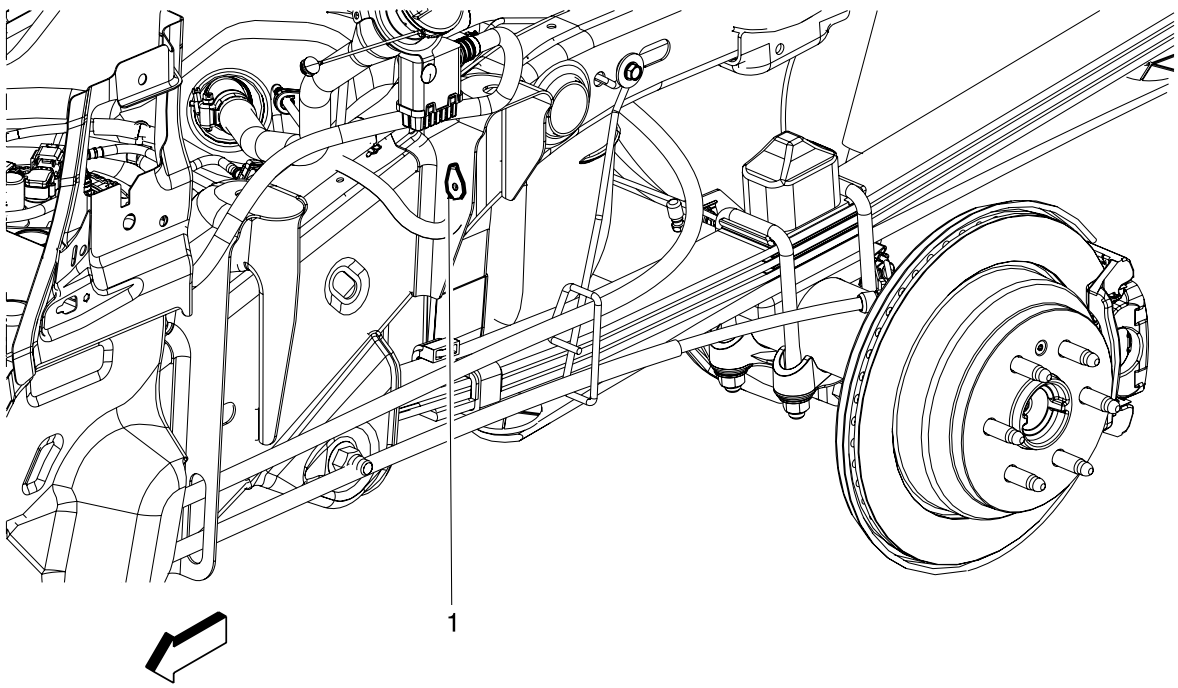

Items

1. G400

G400 (Extended Cab)

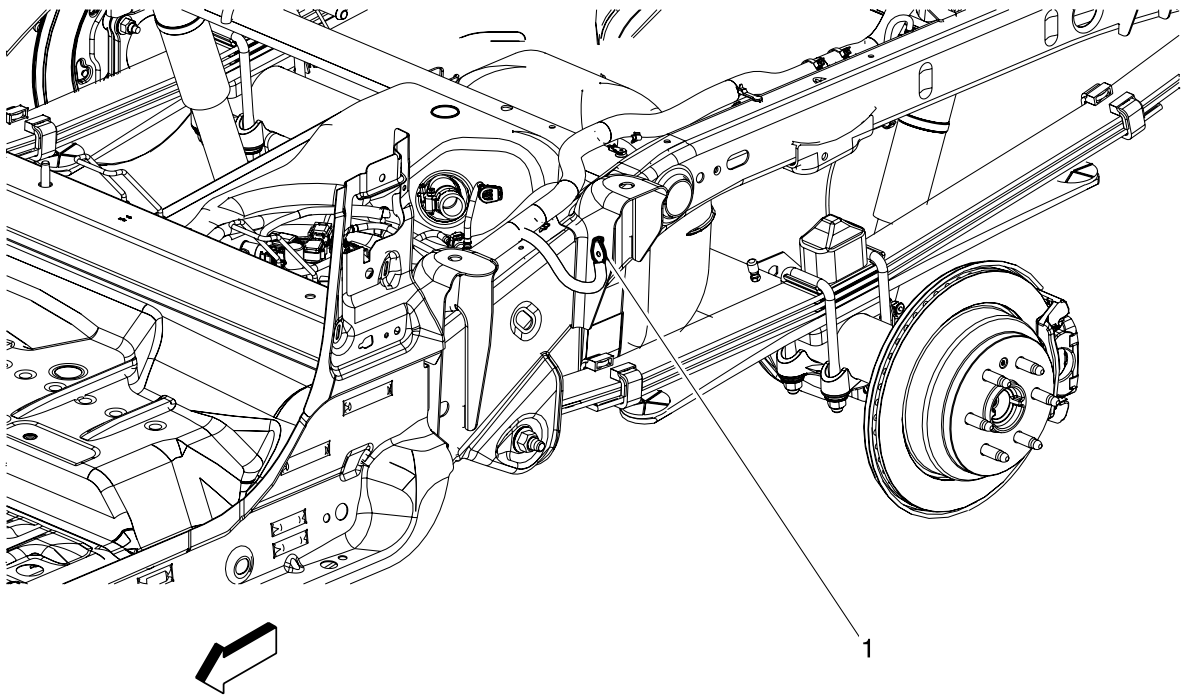

Items

1. G400

G401 (Crew Cab)

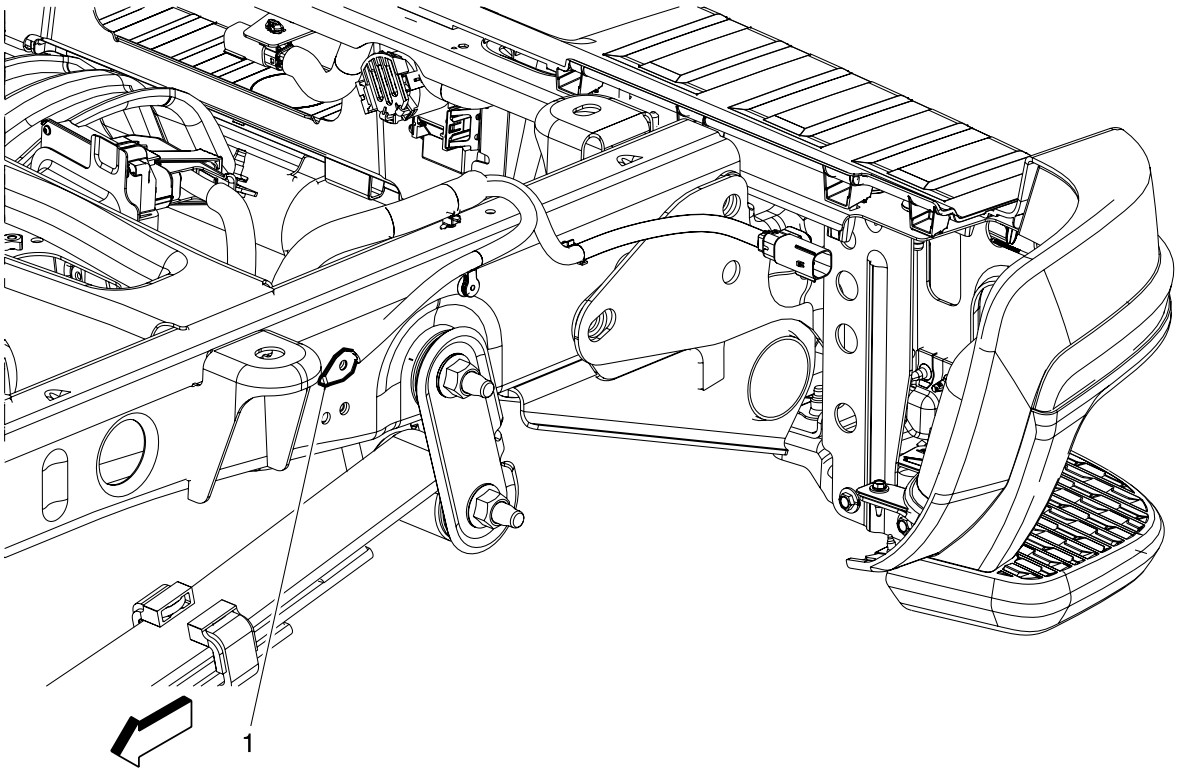

Items

1. G401

G401 (Extended Cab)

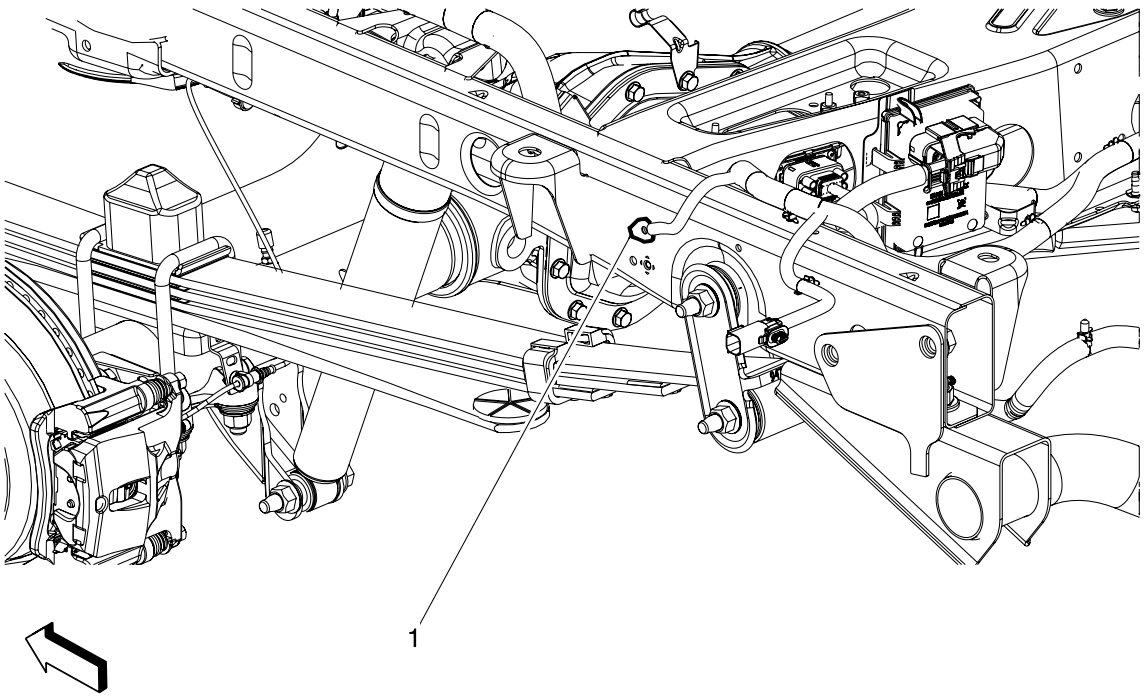

Items

1. G401

G401 and G404 (LWN)

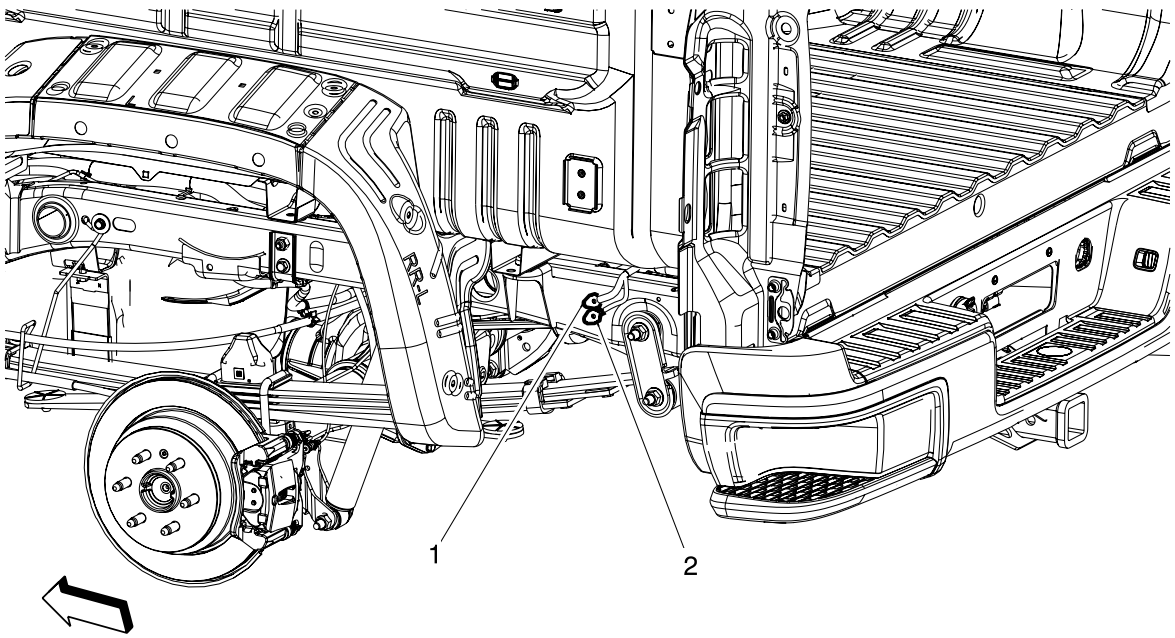

Items

1. G404 (LWN)
2. G401

G402 (Crew Cab)

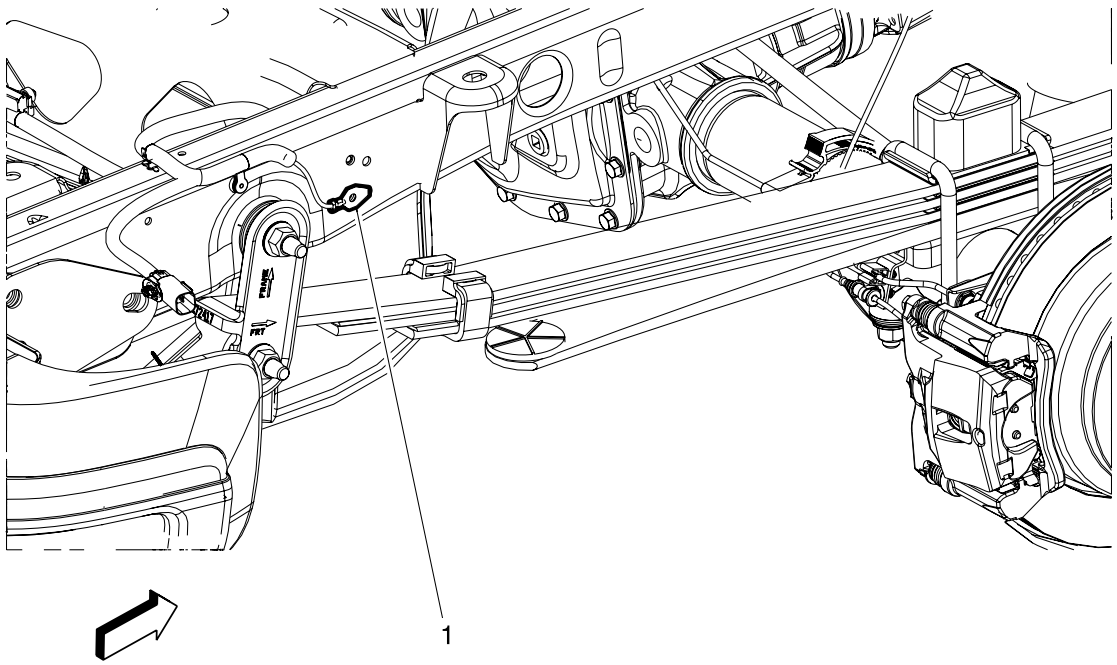

Items

1. G402

G402 (Extended Cab)

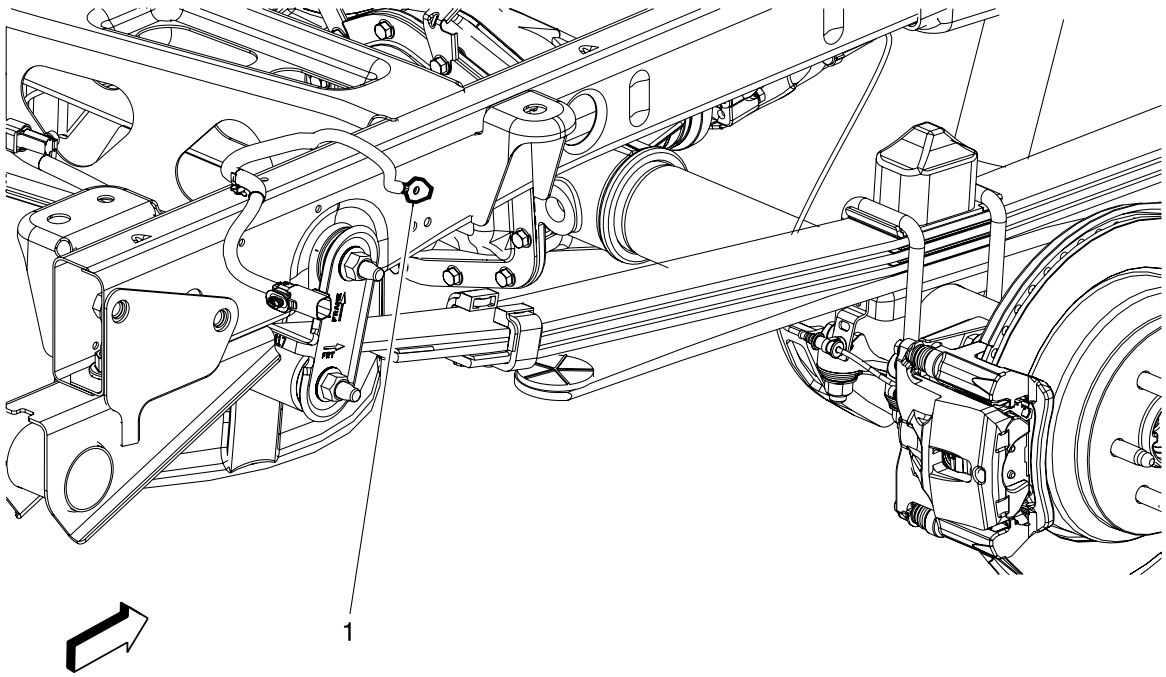

Items

1. G402

Electrical Center Identification Views

X50A Fuse Block - Underhood Label (LCV/LFX/Gasoline)

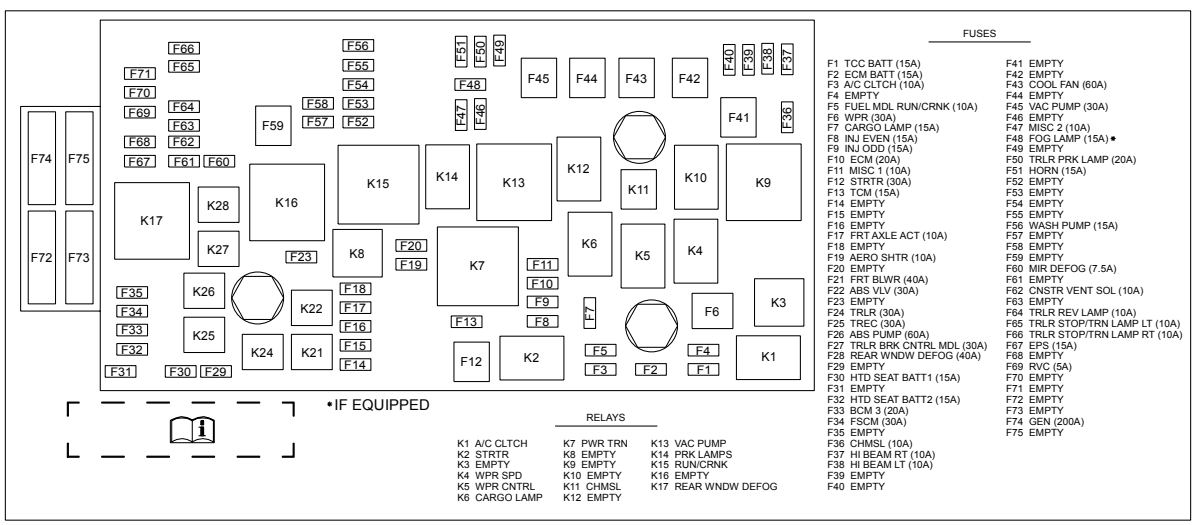

X50A Fuse Block - Underhood Label (LWN/Diesel)

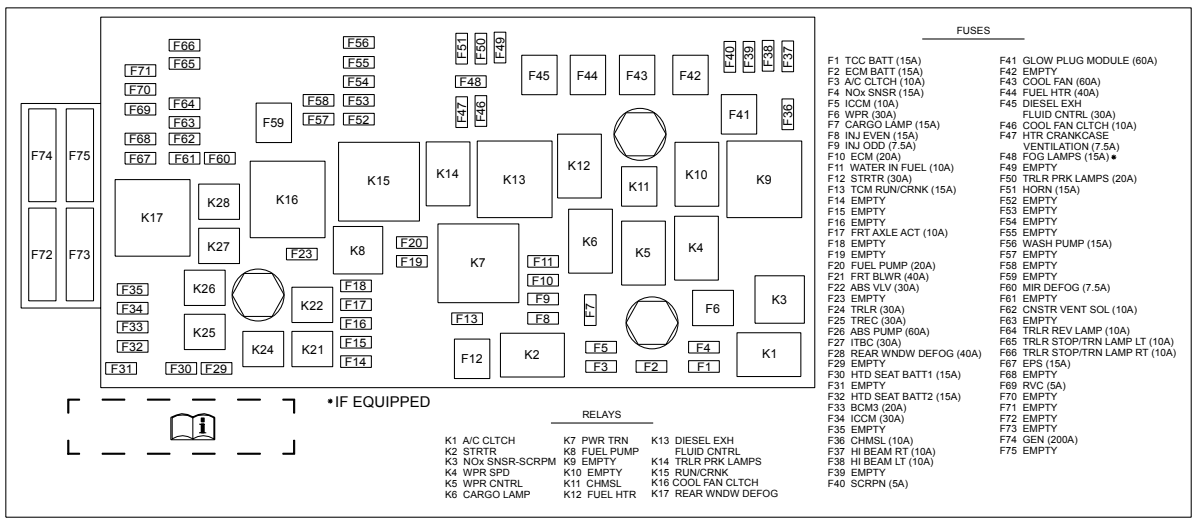

X50A Fuse Block - Underhood Top View (LCV/LFX/Gasoline)

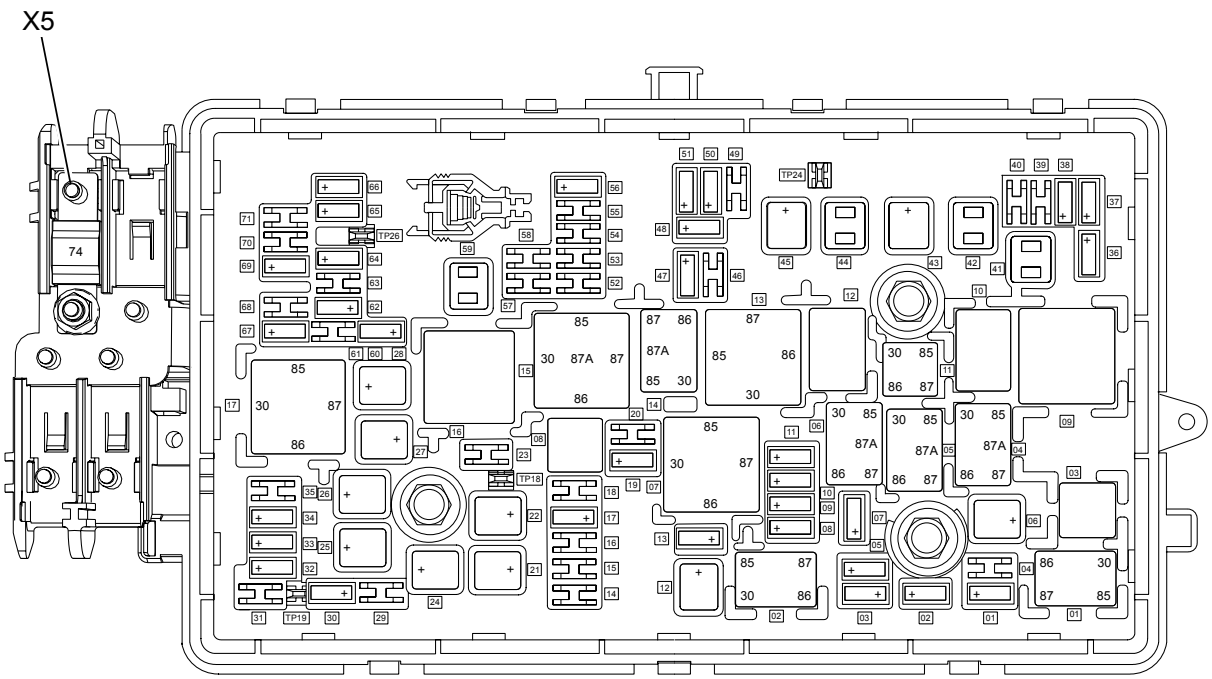

X50A Fuse Block – Underhood Usage

No.	Device Label Name	Device Assigned Name	Rating	Description
Fuses				
F1	TCM BATT	F1UA Fuse	15A	K71 Transmission Control Module (MYB), Q8 Control Solenoid Valve Assembly (MYB)
F2	ECM BATT	F2UA Fuse	15A	K20 Engine Control Module
F3	A/C CLTCH	F3UA Fuse	10A	KR29 A/C Compressor Clutch Relay, Q2 A/C Compressor Clutch
F4	EMPTY	F4UA Fuse	—	Not Used
F5	FUEL MDL RUN/CRNK	F5UA Fuse	10A	K20 Engine Control Module, K71 Transmission Control Module (MYB), Q8 Control Solenoid Valve Assembly (MYB)
F6	WPR	F6UA Fuse	30A	KR12B Windshield Wiper Relay, KR12C Windshield Wiper Speed Control Relay
F7	CARGO LAMP	F7UA Fuse	15A	KR112 Cargo Lamp Relay
F8	INJ EVEN	F8UA Fuse	15A	K20 Engine Control Module (LFX), T8B Ignition Coil 2 (LFX), T8D Ignition Coil 4 (LFX), T8F Ignition Coil 6 (LFX)

F9	INJ ODD	F9UA Fuse	15A	K20 Engine Control Module, T8A Ignition Coil 1 (LCV), T8B Ignition Coil 2 (LCV), T8C Ignition Coil 3 (LCV), T8D Ignition Coil 4 (LCV), T8A Ignition Coil 1 (LFX), T8C Ignition Coil 3 (LFX), T8E Ignition Coil 5 (LFX)
F10	ECM	F10UA Fuse	20A	K20 Engine Control Module
F11	MISC 1	F11UA Fuse	10A	B75C Multifunction Intake Air Sensor, B52B Heated Oxygen Sensor 2 (LCV), B52D Heated Oxygen Sensor - Bank 1 Sensor 2 (LFX), B52D Heated Oxygen Sensor - Bank 1 Sensor 2 (LFX)
F12	STRTR	F12UA Fuse	30A	KR27 Starter Relay
F13	TCM	F13UA Fuse	15A	Q8 Control Solenoid Valve Assembly (MYB), K71 Transmission Control Module (MYB)
F14	EMPTY	F14UA Fuse	—	Not Used
F15	EMPTY	F15UA Fuse	—	Spare Fuse
F16	EMPTY	F16UA Fuse	—	Not Used
F17	FRT AXLE ACT	F17UA Fuse	10A	M26 Front Axle Engagement Actuator (NQ6/NQ7)
F18	EMPTY	F18UA Fuse	—	Not Used
F19	AERO SHTR	F19UA Fuse	10A	M96 Active Grille Air Shutter Actuator
F20	EMPTY	F20UA Fuse	—	Not Used
F21	FRT BLWR	F21UA Fuse	40A	K8 Blower Motor Control Module
F22	ABS VLV	F22UA Fuse	30A	K17 Electronic Brake Control Module
F23	EMPTY	F23UA Fuse	—	Not Used
F24	TRLR	F24UA Fuse	30A	X88 Trailer Connector (Z82), W8 Blunt Cut - Trailer Provision
F25	TREC	F25UA Fuse	30A	A16 Transfer Case Motor (NQ6/NQ7), K69 Transfer Case Control Module (NQ6/NQ7)
F26	ABS PUMP	F26UA Fuse	60A	K17 Electronic Brake Control Module
F27	TRLR BRK CNTRL MDL	F27UA Fuse	30A	W24 Blunt Cut - Trailer Brakes Provision (Z82)
F28	REAR WNDW DEFOG	F28UA Fuse	40A	F63UA Fuse, E18 Rear Defogger Grid (C49)
F29	EMPTY	F29UA Fuse	—	Not Used
F30	HTD SEAT BATT1	F30UA Fuse	15A	K29 Seat Heating Control Module (KA1)
F31	EMPTY	F31UA Fuse	—	Not Used
F32	HTD SEAT BATT2	F32UA Fuse	15A	K29 Seat Heating Control Module (KA1)
F33	BCM 3	F33UA Fuse	20A	K9 Body Control Module
F34	FSCM	F34UA Fuse	30A	K111 Fuel Pump Driver Control Module (LCV), K38 Chassis Control Module (LFX)
F35	EMPTY	F35UA Fuse	—	Not Used
F36	CHMSL	F36UA Fuse	10A	KR41 Center High Mounted Stop Lamp Relay
F37	HI BEAM RT	F37UA Fuse	10A	E4F Headlamp – Right High Beam
F38	HI BEAM LT	F38UA Fuse	10A	E4E Headlamp – Left High Beam

F38	HI BEAM LT	F38UA Fuse	10A	E4E Headlamp – Left High Beam
F39	EMPTY	F39UA Fuse	—	Not Used
F40	EMPTY	F40UA Fuse	—	Not Used
F41	EMPTY	F41UA Fuse	—	Not Used
F42	EMPTY	F42UA Fuse	—	Not Used
F43	COOL FAN	F43UA Fuse	60A	K22 Cooling Fan Control Module
F44	EMPTY	F44UA Fuse	—	Not Used
F45	VAC PUMP	F45UA Fuse	30A	KR14 Brake Booster Pump Motor Relay (LFX)
F46	EMPTY	F46UA Fuse	—	Not Used
F47	MISC 2	F47UA Fuse	10A	Q12 Evaporative Emission Purge Solenoid Valve, E41 Engine Coolant Thermostat Heater (LCV), Q44 Engine Oil Pressure Control Solenoid Valve (LCV), K20 Engine Control Module (LCV), B52A Heated Oxygen Sensor 1 (LCV), B52C Heated Oxygen Sensor - Bank 1 Sensor 1 (LFX), B52E Heated Oxygen Sensor - Bank 2 Sensor 1 (LFX)
F48	FOG LAMP	F48UA Fuse	15A	E29LF Fog Lamp – Left Front (T3U), E29RF Fog Lamp – Right Front (T3U)
F49	EMPTY	F49UA Fuse	—	Not Used
F50	TRLR PRK LAMP	F50UA Fuse	20A	X88 Trailer Connector (Z82), W8 Blunt Cut - Trailer Provision
F51	HORN	F51UA Fuse	15A	P13 Horn Assembly
F52	EMPTY	F52UA Fuse	—	Not Used
F53	EMPTY	F53UA Fuse	—	Not Used
F54	EMPTY	F54UA Fuse	—	Not Used
F55	EMPTY	F55UA Fuse	—	Not Used
F56	WASH PUMP	F56UA Fuse	15A	G24 Windshield Washer Pump
F57	EMPTY	F57UA Fuse	—	Not Used
F58	EMPTY	F58UA Fuse	—	Not Used
F59	EMPTY	F59UA Fuse	—	Not Used
F60	MIR DEFOG	F60UA Fuse	7.5A	E17D Outside Rearview Mirror Glass – Driver (DL9), E17P Outside Rearview Mirror Glass – Passenger (DL9)
F61	EMPTY	F61UA Fuse	—	Not Used
F62	CNSTR VENT SOL	F62UA Fuse	10A	Q13 Evaporative Emission Vent Solenoid Valve
F63	EMPTY	F63UA Fuse	—	Not Used
F64	TRLR REV LAMP	F64UA Fuse	10A	KR61 Trailer Backup Lamps Relay
F65	TRLR STOP/TRN LAMP LT	F65UA Fuse	10A	X88 Trailer Connector (Z82), W8 Blunt Cut - Trailer Provision
F66	TRLR STOP/TRN LAMP RT	F66UA Fuse	10A	KR63R Trailer Stop/Turn Signal Lamp Relay - Right

F67	EPS	F67UA Fuse	15A	K43 Power Steering Control Module
F68	EMPTY	F68UA Fuse	—	Not Used
F69	RVC	F69UA Fuse	5A	K9 Body Control Module
F70	EMPTY	F70UA Fuse	—	Not Used
F71	EMPTY	F71UA Fuse	—	Not Used
F72	EMPTY	F72UB Fuse	—	Not Used
F73	EMPTY	F73UB Fuse	—	Not Used
F74	GEN	F74UB Fuse	200A	G13 Generator
F75	EMPTY	F75UB Fuse	—	Not Used
K1	A/C CLTCH	KR29 A/C Compressor Clutch Relay	—	Q2 A/C Compressor Clutch
K2	STRTR	KR27 Starter Relay	—	M64 Starter Motor
K3	EMPTY	—	—	Not Used
K4	WPR SPD	KR12C Windshield Wiper Speed Control Relay	—	M75 Windshield Wiper Motor
K5	WPR CNTRL	KR12B Windshield Wiper Relay	—	M75 Windshield Wiper Motor
K6	CARGO LAMP	KR112 Cargo Lamp Relay	—	E6 Center High Mounted Stop Lamp
K7	PWR TRN	KR75 Engine Controls Ignition Relay	—	F8UA, F9UA, F10UA, F11UA, F47UA Fuses, KR29 A/C Compressor Clutch Relay
K8	EMPTY	—	—	Not Used
K9	EMPTY	—	—	Not Used
K10	EMPTY	—	—	Not Used
K11	CHMSL	KR41 Center High Mounted Stop Lamp Relay	—	E6 Center High Mounted Stop Lamp
K12	EMPTY	—	—	Not Used
K13	VAC PUMP	KR14 Brake Booster Pump Motor Relay	—	M9 Brake Booster Pump Motor (LFX)
K14	PRK LAMPS	KR125 Trailer Park Lamps Relay	—	F50UA Fuse
K15	RUN/CRNK	KR73 Ignition Main Relay	—	F5UA, F13UA, F16UA, F17UA, F18UA, F19UA, F52UA, F53UA, F54UA, F57UA Fuses
K16	EMPTY	—	—	Not Used
K17	REAR WNDW DEFOG	KR5 Rear Defogger Relay	—	F28UA, F60UA, F63UA Fuses, E17D Outside Rearview Mirror Glass – Driver (DL9), E17P Outside Rearview Mirror Glass – Passenger (DL9), E18 Rear Defogger Grid (C49)
—	—	KR3 Horn Relay	—	F51UA Fuse

—	—	KR3 Horn Relay	—	F51UA Fuse
—	—	KR11 Windshield Washer Pump Relay	—	F56UA Fuse
—	—	KR46 Front Fog Lamp Relay	—	F48UA Fuse
—	—	KR48 Headlamp High Beam Relay	—	F37UA, F38UA Fuses
—	—	KR61 Trailer Backup Lamps Relay	—	X88 Trailer Connector (Z82), W8 Blunt Cut - Trailer Provision
—	—	KR63L Trailer Stop/Turn Signal Lamp Relay - Left	—	F65UA Fuse, X88 Trailer Connector (Z82), W8 Blunt Cut - Trailer Provision
—	—	KR63R Trailer Stop/Turn Signal Lamp Relay - Right	—	X88 Trailer Connector (Z82), W8 Blunt Cut - Trailer Provision
—	—	KR113 Child Security Lock Disable Relay	—	A23LR Door Latch Assembly - Left Rear, A23RR Door Latch Assembly - Right Rear, A23P Door Latch Assembly - Passenger
TP18	CKT 3271	TP18	—	—
TP19	—	TP19	—	Not Used
TP24	CKT 1619	TP24	—	—
TP26	CKT 1624	TP26	—	—

X50A Fuse Block - Underhood Top View (LWN/Diesel)

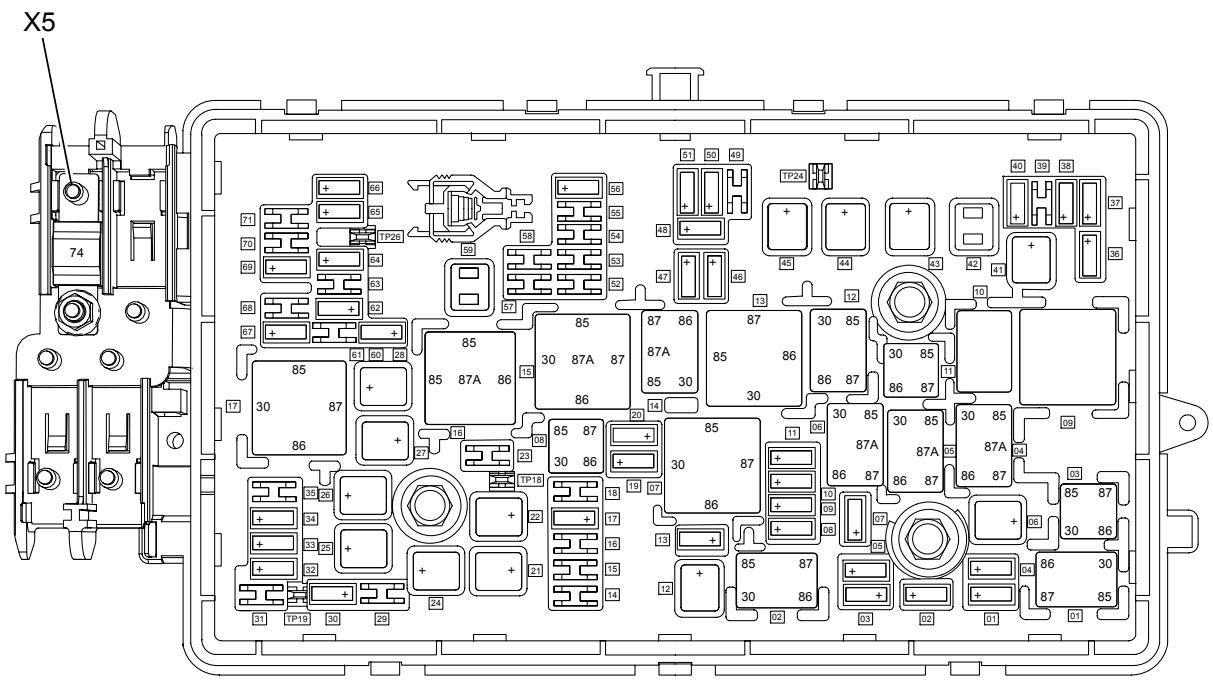

X50A Fuse Block – Underhood Usage

No.	Device Label Name	Device Assigned Name	Rating	Description
Fuses				
F1	TCM BATT	F1UA Fuse	15A	Q8 Control Solenoid Valve Assembly (MYB)
F2	ECM BATT	F2UA Fuse	15A	K20 Engine Control Module
F3	A/C CLTCH	F3UA Fuse	10A	KR29 A/C Compressor Clutch Relay, Q2 A/C Compressor Clutch
F4	NOx SNSR	F4UA Fuse	15A	B136 Exhaust Particulate Matter Sensor (LWN), B195A Nitrogen Oxides Sensor 1 (LWN), B195B Nitrogen Oxides Sensor 2 (LWN)
F5	ICCM	F5UA Fuse	10A	B116 Water in Fuel Sensor, K20 Engine Control Module, K71 Transmission Control Module (MYB), Q8 Control Solenoid Valve Assembly (MYB)
F6	WPR	F6UA Fuse	30A	KR12B Windshield Wiper Relay, KR12C Windshield Wiper Speed Control Relay
F7	CARGO LAMP	F7UA Fuse	15A	KR112 Cargo Lamp Relay
F8	INJ EVEN	F8UA Fuse	15A	K20 Engine Control Module

F9	INJ ODD	F9UA Fuse	7.5A	K20 Engine Control Module
F10	ECM	F10UA Fuse	20A	K20 Engine Control Module
F11	WATER IN FUEL	F11UA Fuse	10A	B75C Multifunction Intake Air Sensor
F12	STRTR	F12UA Fuse	30A	KR27 Starter Relay
F13	TCM RUN/CRNK	F13UA Fuse	15A	Q8 Control Solenoid Valve Assembly (MYB), K71 Transmission Control Module (MYB)
F14	EMPTY	F14UA Fuse	—	Not Used
F15	EMPTY	F15UA Fuse	—	Spare Fuse
F16	EMPTY	F16UA Fuse	—	Not Used
F17	FRT AXLE ACT	F17UA Fuse	10A	M26 Front Axle Engagement Actuator (NQ6/NQ7)
F18	EMPTY	F18UA Fuse	—	Not Used
F19	EMPTY	F19UA Fuse	—	Not Used
F20	FUEL PUMP	F20UA Fuse	20A	KR23A Fuel Pump Relay
F21	FRT BLWR	F21UA Fuse	40A	K8 Blower Motor Control Module
F22	ABS VLV	F22UA Fuse	30A	K17 Electronic Brake Control Module
F23	EMPTY	F23UA Fuse	—	Not Used
F24	TRLR	F24UA Fuse	30A	X88 Trailer Connector (Z82)
F25	TREC	F25UA Fuse	30A	A16 Transfer Case Motor (NQ6/NQ7), K69 Transfer Case Control Module (NQ6/NQ7)
F26	ABS PUMP	F26UA Fuse	60A	K17 Electronic Brake Control Module
F27	ITBC	F27UA Fuse	30A	K133 Trailer Brake Power Control Module
F28	REAR WNDW DEFOG	F28UA Fuse	40A	F63UA Fuse, E18 Rear Defogger Grid (C49)
F29	EMPTY	F29UA Fuse	—	Not Used
F30	HTD SEAT BATT1	F30UA Fuse	15A	K29 Seat Heating Control Module (KA1)
F31	EMPTY	F31UA Fuse	—	Not Used
F32	HTD SEAT BATT2	F32UA Fuse	15A	K29 Seat Heating Control Module (KA1)
F33	BCM 3	F33UA Fuse	20A	K9 Body Control Module
F34	ICCM	F34UA Fuse	30A	K38 Chassis Control Module
F35	EMPTY	F35UA Fuse	—	Not Used
F36	CHMSL	F36UA Fuse	10A	KR41 Center High Mounted Stop Lamp Relay
F37	HI BEAM RT	F37UA Fuse	10A	E4F Headlamp – Right High Beam
F38	HI BEAM LT	F38UA Fuse	10A	E4E Headlamp – Left High Beam
F39	EMPTY	F39UA Fuse	—	Not Used

F40	SCRPN	F40UA Fuse	5A	K115 Reductant Control Module
F41	GLOW PLUG MODULE	F41UA Fuse	60A	K20 Engine Control Module
F42	EMPTY	F42UA Fuse	—	Not Used
F43	COOL FAN	F43UA Fuse	60A	K22 Cooling Fan Control Module
F44	FUEL HTR	F44UA Fuse	40A	KR22 Fuel Heater Relay
F45	DIESEL EXH FLUID CNTRL	F45UA Fuse	30A	KR121A Reductant Control Module Relay 1
F46	COOL FAN CLTCH	F46UA Fuse	10A	KR20F Cooling Fan Relay
F47	HTR CRANKCASE VENTILATION	F47UA Fuse	7.5A	E45 Positive Crankcase Ventilation Heater
F48	FOG LAMPS	F48UA Fuse	15A	E29LF Fog Lamp – Left Front (T3U), E29RF Fog Lamp – Right Front (T3U)
F49	EMPTY	F49UA Fuse	—	Not Used
F50	TRLR PRK LAMPS	F50UA Fuse	20A	X88 Trailer Connector (Z82)
F51	HORN	F51UA Fuse	15A	P13 Horn Assembly
F52	EMPTY	F52UA Fuse	—	Not Used
F53	EMPTY	F53UA Fuse	—	Not Used
F54	EMPTY	F54UA Fuse	—	Not Used
F55	EMPTY	F55UA Fuse	—	Not Used
F56	WASH PUMP	F56UA Fuse	15A	G24 Windshield Washer Pump
F57	EMPTY	F57UA Fuse	—	Not Used
F58	EMPTY	F58UA Fuse	—	Not Used
F59	EMPTY	F59UA Fuse	—	Not Used
F60	MIR DEFOG	F60UA Fuse	7.5A	E17D Outside Rearview Mirror Glass – Driver (DL9), E17P Outside Rearview Mirror Glass – Passenger (DL9)
F61	EMPTY	F61UA Fuse	—	Not Used
F62	CNSTR VENT SOL	F62UA Fuse	10A	K115 Reductant Control Module
F63	EMPTY	F63UA Fuse	—	Not Used
F64	TRLR REV LAMP	F64UA Fuse	10A	KR61 Trailer Backup Lamps Relay
F65	TRLR STOP/TRN LAMP LT	F65UA Fuse	10A	X88 Trailer Connector (Z82)
F66	TRLR STOP/TRN LAMP RT	F66UA Fuse	10A	KR63R Trailer Stop/Turn Signal Lamp Relay - Right
F67	EPS	F67UA Fuse	15A	K43 Power Steering Control Module
F68	EMPTY	F68UA Fuse	—	Not Used

F69	RVC	F69UA Fuse	5A	K9 Body Control Module
F70	EMPTY	F70UA Fuse	—	Not Used
F71	EMPTY	F71UA Fuse	—	Not Used
F72	EMPTY	F72UB Fuse	—	Not Used
F73	EMPTY	F73UB Fuse	—	Not Used
F74	GEN	F74UB Fuse	200A	G13 Generator
F75	EMPTY	F75UB Fuse	—	Not Used
K1	A/C CLTCH	KR29 A/C Compressor Clutch Relay	—	Q2 A/C Compressor Clutch
K2	STRTR	KR27 Starter Relay	—	M64 Starter Motor
K3	NOx SNSR-SCRPM	KR121B Reductant Control Module Relay 2	—	F4UA, F44UA, B136 Exhaust Particulate Matter Sensor, B195A Nitrogen Oxides Sensor 1, B195B Nitrogen Oxides Sensor 2, K115 Reductant Control Module
K4	WPR SPD	KR12C Windshield Wiper Speed Control Relay	—	M75 Windshield Wiper Motor
K5	WPR CNTRL	KR12B Windshield Wiper Relay	—	M75 Windshield Wiper Motor
K6	CARGO LAMP	KR112 Cargo Lamp Relay	—	E6 Center High Mounted Stop Lamp
K7	PWR TRN	KR75 Engine Controls Ignition Relay	—	F8UA, F9UA, F10UA, F11UA, F47UA Fuses, KR29 A/C Compressor Clutch Relay
K8	FUEL PUMP	KR23A Fuel Pump Relay	—	A7 Fuel Pump and Level Sensor - Assembly
K9	EMPTY	—	—	Not Used
K10	EMPTY	—	—	Not Used
K11	CHMSL	KR41 Center High Mounted Stop Lamp Relay	—	E6 Center High Mounted Stop Lamp
K12	FUEL HTR	KR22 Fuel Heater Relay	—	E11B Fuel Heater/Temperature Sensor
K13	DIESEL EXH FLUID CNTRL	KR121A Reductant Control Module Relay 1	—	K115 Reductant Control Module
K14	PRK LAMPS	KR125 Trailer Park Lamps Relay	—	F50UA Fuse
K15	RUN/CRNK	KR73 Ignition Main Relay	—	F5UA, F13UA, F16UA, F17UA, F18UA, F19UA, F52UA, F53UA, F54UA, F57UA Fuses
K16	COOL FAN CLTCH	KR20F Cooling Fan Relay	—	K22 Cooling Fan Control Module
K17	REAR WNDW DEFOG	KR5 Rear Defogger Relay	—	F28UA, F60UA, F63UA Fuses, E17D Outside Rearview Mirror Glass – Driver (DL9), E17P Outside Rearview Mirror Glass – Passenger (DL9), E18 Rear Defogger Grid (C49)
—	—	KR3 Horn Relay	—	F51UA Fuse
—	—	KR11 Windshield Washer Pump Relay	—	F56UA Fuse

		Relay		
—	—	KR46 Front Fog Lamp Relay	—	F48UA Fuse
—	—	KR48 Headlamp High Beam Relay	—	F37UA, F38UA Fuses
—	—	KR61 Trailer Backup Lamps Relay	—	X88 Trailer Connector (Z82)
—	—	KR63L Trailer Stop/Turn Signal Lamp Relay - Left	—	F65UA Fuse, X88 Trailer Connector (Z82)
—	—	KR63R Trailer Stop/Turn Signal Lamp Relay - Right	—	X88 Trailer Connector (Z82)
—	—	KR113 Child Security Lock Disable Relay	—	A23LR Door Latch Assembly - Left Rear, A23RR Door Latch Assembly - Right Rear, A23P Door Latch Assembly - Passenger
TP18	CKT 3271	TP18	—	—
TP19	—	TP19	—	Not Used
TP24	CKT 1619	TP24	—	—
TP26	CKT 1624	TP26	—	—

X50A Fuse Block - Underhood Bottom View

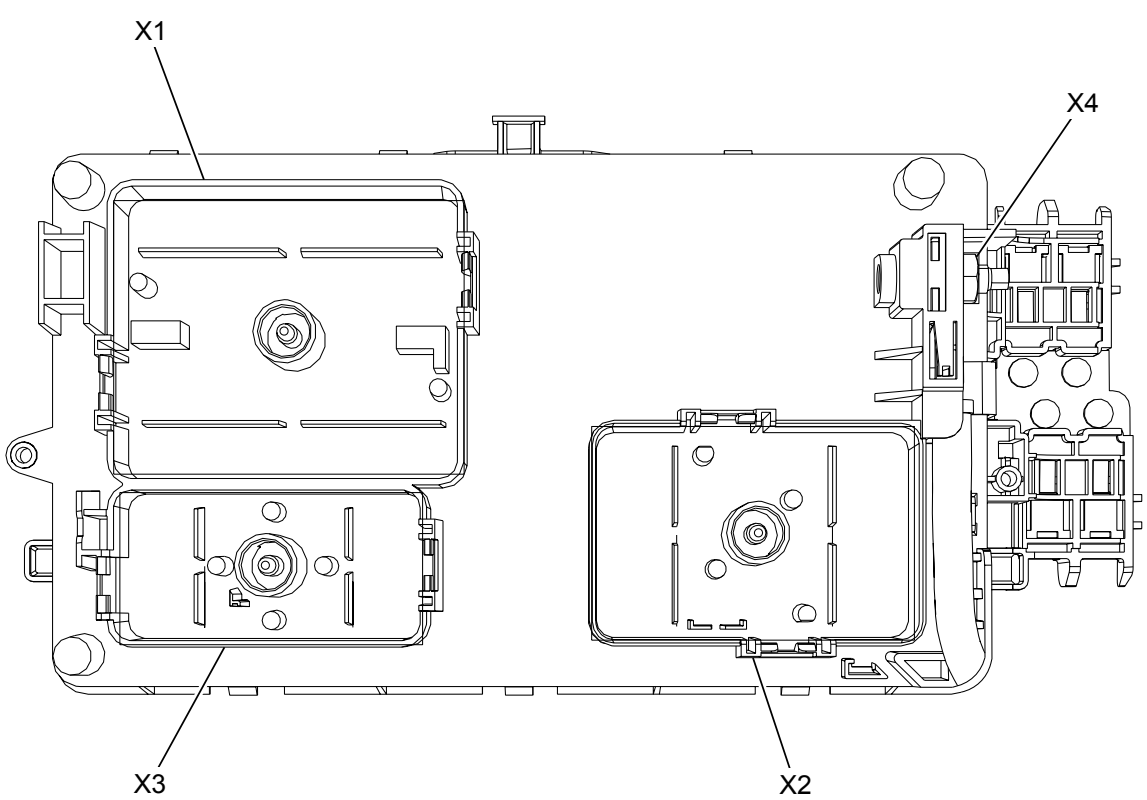

X50A Fuse Block - Underhood X1

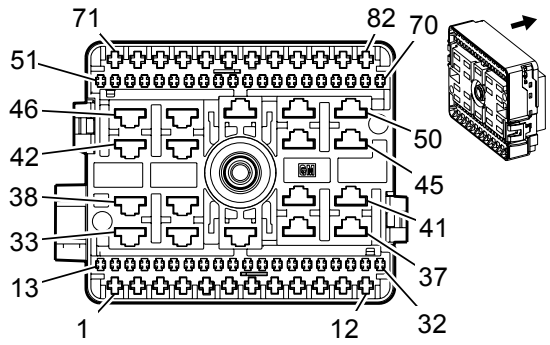

Connector Part Information

Harness Type: Forward Lamp

OEM Connector: 13262028

Service Connector: 13576528

Description: 82-Way F 1.5 DSQ, 2.8 Metri-Pack 800 Series (BK)

Terminal Part Information

Terminal Type ID	Terminated Lead	Diagnostic Test Probe	Terminal Removal Tool	Service Terminal	Tray	Core Crimp	Insulation Crimp
I	13327116	J-35616-35 (VT)	J-38125-36	Not Available	Not Available	Not Available	Not Available
II	13575491	J-35616-35 (VT)	J-38125-36	Not Available	Not Available	Not Available	Not Available
III	13575718	J-35616-44 (YE)	J-38125-558	12092445	16	G	G
IV	13575718	J-35616-44 (YE)	J-38125-558	12110127	2	F	G
V	13575718	J-35616-44 (YE)	J-38125-558	Not Available	Not Available	Not Available	Not Available
VI	13575774	J-35616-14 (GN)	J-38125-560	Not Available	Not Available	Not Available	Not Available
VII	13575780	J-35616-35 (VT)	J-38125-36	Not Available	Not Available	Not Available	Not Available
VIII	13579922	J-35616-44 (YE)	J-38125-558	12065915	20	A	D

X50A Fuse Block - Underhood X1

Pin	Size	Color	Circuit	Function	Terminal Type ID	Option
1 - 7	—	—	—	Not Occupied	—	—
8	1.5	BN	2109	Trailer Park Lamp Control	I	—
9 - 10	—	—	—	Not Occupied	—	—
11	0.75	BN/GY	29	Horn Control	VII	—
12	—	—	—	Not Occupied	—	—
13	0.75	WH	311	Right Headlamp High Beam Control	VI	—

14	0.5	WH	711	Left Headlamp High Beam Control	VI	—
15 - 29	—	—	—	Not Occupied	—	—
30	0.75	GY/VT	228	Windshield Washer Pump Control	VI	—
31	0.75	BN/VT	2234	Front Fog Lamp Control	VI	T3U
32 - 34	—	—	—	Not Occupied	—	—
35	6	RD/GY	4840	Battery Positive Voltage	V	—
36 - 37	—	—	—	Not Occupied	—	—
38	4	BN/L-BU	104	Glow Plug Control	III	LWN
39 - 40	—	—	—	Not Occupied	—	—
41	1.5	L-GN/L-BU	3889	DEF Power Module Relay Control	VIII	LWN
42 - 48	—	—	—	Not Occupied	—	—
49	2.5	L-BU/L-GN	7071	Heater Fuel Control	IV	LWN
50	2.5	BN/VT	1470	Brake Booster Pump Motor Control	IV	LFX
	4	L-BU	3921	DEF Heater Supply 1	III	LWN
51 - 67	—	—	—	Not Occupied	—	—
68	0.5	BN	6305	Brake Vacuum Switch Signal	VI	LFX
	1.5	L-GN/L-BU	3889	DEF Power Module Relay Control		LWN
69	0.5	WH/VT	4333	Aero Shutter Actuator Control	VI	LCV/LFX
70	—	—	—	Not Occupied	—	—
71	0.75	BK	1150	Ground	VII	—

72	1.5	WH	92	Windshield Wiper Motor High Speed Control	I	—
73	1.5	YE/BN	95	Windshield Wiper Motor Low Speed Control	I	—
74	1.5	BK	3150	Ground	I	—
75	0.35	VT/GY	1054	Stop Lamp Control	II	—
76 - 79	—	—	—	Not Occupied	—	—
80	0.75	WH/VT	1430	Exterior Courtesy Lamp Control	VII	S0Y
81 - 82	—	—	—	Not Occupied	—	—

X50A Fuse Block - Underhood X2

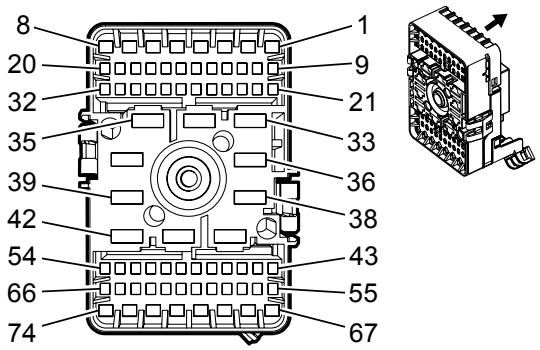

Connector Part Information

Harness Type: Body

OEM Connector: 13732284

Service Connector: 13576544

Description: 74-Way F 1.5 DSQ, 2.8 Metri-Pack 800 Series (BK)

Terminal Part Information

Terminal Type ID	Terminated Lead	Diagnostic Test Probe	Terminal Removal Tool	Service Terminal	Tray	Core Crimp	Insulation Crimp
I	13327116	J-35616-35 (VT)	J-38125-36	Not Available	Not Available	Not Available	Not Available
II	13575718	J-35616-44 (YE)	J-38125-558	12092445	16	G	G
III	13575718	J-35616-44 (YE)	J-38125-558	12110127	2	F	G
IV	13575718	J-35616-44 (YE)	J-38125-558	Not Available	Not Available	Not Available	Not Available
IV	13575718	J-35616-44 (YE)	J-38125-558	Not Available	Not Available	Not Available	Not Available
V	13575773	J-35616-14 (GN)	J-38125-560	Not Available	Not Available	Not Available	Not Available
VI	13575774	J-35616-14 (GN)	J-38125-560	Not Available	Not Available	Not Available	Not Available
VII	13575781	J-35616-35 (VT)	J-38125-36	Not Available	Not Available	Not Available	Not Available
VIII	13578869	J-35616-2A (GY)	J-38125-560	Not Available	Not Available	Not Available	Not Available
IX	19299860	J-35616-35 (VT)	J-38125-36	Not Available	Not Available	Not Available	Not Available

X50A Fuse Block - Underhood X2

Pin	Size	Color	Circuit	Function	Terminal Type ID	Option
1 - 3	—	—	—	Not Occupied	—	—
4	1.5	GY	295	Door Lock Actuator Lock Control	VII	CREW CAB
	0.75	GY	295		IX	EXTENDED CAB
5	1.5	WH/L-BU	3266	Child Security Lock Motor Lock Control	VII	CREW CAB

6	2.5	GY	120	Fuel Pump Control	I	—
7 - 11	—	—	—	Not Occupied	—	—
12	1.5	GY/L-GN	3271	Door Lock Control (2)	VIII	—
13	0.5	VT/YE	3267	Child Security Lock Relay Control	V	—
14	0.75	VT/BK	2139	Run/Crank Ignition 1 Voltage	VI	—
15 - 16	—	—	—	Not Occupied	—	—
17	0.5	L-GN/VT	5199	Run/Crank Relay Coil Control	V	—
18	—	—	—	Not Occupied	—	—
19	0.5	BN/WH	1317	Fog Lamp Relay Control	V	T3U
20 - 21	—	—	—	Not Occupied	—	—
22	0.5	GY	91	Windshield Wiper Motor Relay Coil Control	V	—
23	—	—	—	Not Occupied	—	—
24	0.5	L-BU	45	Park Lamp Relay Control	V	—
25	0.5	BN/WH	28	Horn Relay Control	V	—
26 - 29	—	—	—	Not Occupied	—	—
30	0.75	L-GN	1619	Right Rear Trailer Stop/Turn Lamp Control	VI	—
31 - 32	—	—	—	Not Occupied	—	—
33	2.5	RD/VT	542	Battery Positive Voltage	III	—
	2.5	RD/VT	542		IV	—
34	2.5	RD/YE	442	Battery Positive Voltage	IV	—

	2.5	RD/YE	442		III	—
35	—	—	—	Not Occupied	—	—
36	4	OG	742	Battery Positive Voltage	II	—
37 - 38	—	—	—	Not Occupied	—	—
39	2.5	BN/VT	293	Rear Defog Element Control	IV	—
	2.5	BN/VT	293		III	—
40	2.5	RD/GY	1342	Battery Positive Voltage	IV	—
	2.5	RD/GY	1342		III	—
41	4	RD/GY	1042	Battery Positive Voltage	II	—
42	2.5	RD/L-GN	242	Battery Positive Voltage	III	—
	2.5	RD/L-GN	242		IV	—
43	0.5	BK	3150	Ground	V	—
44	—	—	—	Not Occupied	—	—
45	0.5	WH/VT	860	Front Windshield Wiper Switch High Signal	V	—
46	0.5	VT/WH	5065	Stop Lamp Relay Coil Control	V	—
47	0.5	BN/WH	1429	Standing Lamp Relay Control	V	—
48	0.5	L-BU/BN	38	Backup Lamp Relay Control	V	—
49	0.5	L-BU/WH	5186	Left Trailer Turn Signal Lamp Control	V	—

50	—	—	—	Not Occupied	—	—
51	0.75	YE	1618	Left Rear Trailer Stop/Turn Lamp Control	VI	—
52	0.75	GY	1624	Trailer Backup Lamp Control	VI	—
53 - 55	—	—	—	Not Occupied	—	—
56	0.75	RD/L-GN	5140	Battery Positive Voltage	VI	—
57	—	—	—	Not Occupied	—	—
58	0.5	BN/VT	1969	Headlamp High Beam Relay Control	V	—
59	0.5	YE/GY	5187	Right Trailer Turn Signal Lamp Control	V	—
60	0.5	BN/GY	2268	Windshield Washer Relay Control	V	—
61	0.5	BN/VT	193	Rear Defog Relay Control	V	—
62	0.5	BN/YE	2267	Mirror Heating Element Control	V	DL9
63 - 67	—	—	—	Not Occupied	—	—
68	0.75	RD/L-GN	6140	Battery Positive Voltage	IX	—
69	2.5	RD/YE	2340	Battery Positive Voltage	I	—
70	2.5	RD/VT	1940	Battery Positive Voltage	I	—
71	—	—	—	Not Occupied	—	—
72	0.5	RD/BN	440	Battery Positive Voltage	IX	—
73	0.5	RD/L-GN	2440	Battery Positive Voltage	IX	—

74	0.5	RD/BN	5940	Battery Positive Voltage	IX	—

X50A Fuse Block - Underhood X3

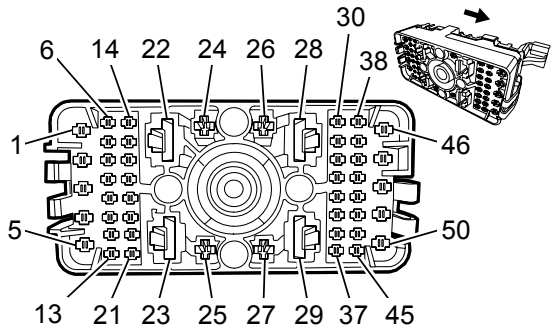

Connector Part Information

Harness Type: Engine

OEM Connector: 13732282

Service Connector: 13505902

Description: 50-Way F 1.5, 2.8 DSQ Metri-Pack 800 Series (BK)

Terminal Part Information

Terminal Type ID	Terminated Lead	Diagnostic Test Probe	Terminal Removal Tool	Service Terminal	Tray	Core Crimp	Insulation Crimp
I	13327116	J-35616-35 (VT)	J-38125-36	Not Available	Not Available	Not Available	Not Available
II	13575773	J-35616-14 (GN)	J-38125-560	Not Available	Not Available	Not Available	Not Available
III	13575774	J-35616-14 (GN)	J-38125-560	Not Available	Not Available	Not Available	Not Available
IV	13575781	J-35616-35 (VT)	J-38125-36	Not Available	Not Available	Not Available	Not Available
V	19299860	J-35616-35 (VT)	J-38125-36	Not Available	Not Available	Not Available	Not Available

X50A Fuse Block - Underhood X3

Pin	Size	Color	Circuit	Function	Terminal Type ID	Option
1	0.75	VT/L-BU	5290	Powertrain Main Relay Fused Supply (1)	I	LCV
	1	VT/L-BU	5290		I	LCV
	1	VT/L-BU	5290		V	LFX
	2.5	VT/L-BU	5290		IV	LWN
2	0.75	VT/L-BU	5291	Powertrain Main Relay Fused Supply (2)	V	—
3	0.75	VT/L-BU	5292	Powertrain Main Relay Fused Supply (3)	V	LFX
	1.5	VT/L-BU	5292		IV	LWN

4	0.5	VT/BK	2139	Run/Crank Ignition 1 Voltage	V	—
5	2.5 2	YE YE	6 6	Starter Solenoid Crank Ignition Voltage	IV	LCV/LFX LWN
6	0.5	VT/L-BU	5293	Powertrain Main Relay Fused Supply (4)	II	—
7	0.5 0.75	VT/L-BU VT/L-BU	5294 5294	Powertrain Main Relay Fused Supply (5)	II III	LCV/LFX LWN
8	—	—	—	Not Occupied	—	—
9	0.5	L-GN/GY	465	Fuel Pump Primary Relay Control	II	—
10	—	—	—	Not Occupied	—	—
11	0.5	VT/GY	6386	Starter Enable Relay (PPEI 3) Control	II	—
12	0.5	WH/BK	2366	Cooling Fan Control Relay Speed Signal	II	—
13	0.75	BK/WH	151	Signal Ground	III	—
14	—	—	—	Not Occupied	—	—
15	2.5 0.5	BK L-GN/L-BU	1450 3889	Ground DEF Power Module Relay Control	II	LFX LWN
16	—	—	—	Not Occupied	—	—
17	0.5	YE	5991	Powertrain Relay Coil Control	II	—
18 - 19	—	—	—	Not Occupied	—	—
20	0.75	VT/GY	139	Run/Crank Ignition 1 Voltage	III	—

21	0.5 0.5	BK BK	1450 1450	Ground	II III	LCV/LFX LWN
22 - 26	—	—	—	Not Occupied	—	—
27	0.5	RD/WH	140	Battery Positive Voltage	V	—
28 - 29	—	—	—	Not Occupied	—	—
30	0.5	WH	2368	Cooling Fan Control Signal	II	LWN
31 - 32	—	—	—	Not Occupied	—	—
33	0.5	VT/L-GN	4320	Selective Catalytic Reduction Power Module Wake Up Signal	II	LWN
34	0.5	WH/GY	459	A/C Compressor Clutch Relay Control	II	—
35	0.75	VT/L-BU	3674	Nox Sensor (1) Control	III	LWN
36	—	—	—	Not Occupied	—	—
37	0.75	RD/L-GN	1840	Battery Positive Voltage	III	—
38 - 39	—	—	—	Not Occupied	—	—
40	0.5	L-BU	3017	Fuel Heater Relay Control 1	II	LWN
41 - 48	—	—	—	Not Occupied	—	—
49	0.5	L-GN/L-BU	3889	DEF Power Module Relay Control	V	LWN
50	0.75	BN/L-GN	59	A/C Compressor Clutch Control	V	—

X50A Fuse Block - Underhood X4

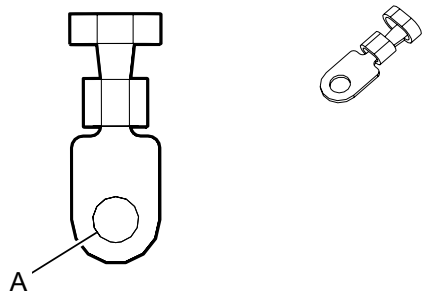

Connector Part Information

Harness Type: Fuse Block - Underhood

OEM Connector: 15327720

Service Connector: Service by Cable Assembly — See Part Catalog

Description: 1-Way Ring Terminal (NA)

Terminal Part Information

Terminal Type ID	Terminated Lead	Diagnostic Test Probe	Terminal Removal Tool	Service Terminal	Tray	Core Crimp	Insulation Crimp
I	Not Available	No Tool Required	Not Available	Not Available	Not Available	Not Available	Not Available

X50A Fuse Block - Underhood X4

Pin	Size	Color	Circuit	Function	Terminal Type ID	Option
A	35	RD/WH	4042	Battery Positive Voltage	I	—

X50A Fuse Block - Underhood X5

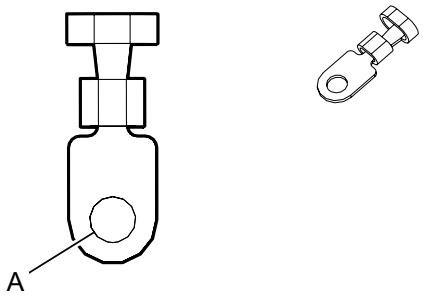

Connector Part Information

Harness Type: Fuse Block - Underhood

OEM Connector: ANJ76203

Service Connector: Service by Cable Assembly — See Part Catalog

Description: 1-Way Ring Terminal (NA)

Terminal Part Information

Terminal Type ID	Terminated Lead	Diagnostic Test Probe	Terminal Removal Tool	Service Terminal	Tray	Core Crimp	Insulation Crimp
I	Not Available	No Tool Required	Not Available	Not Available	Not Available	Not Available	Not Available

X50A Fuse Block - Underhood X5

Pin	Size	Color	Circuit	Function	Terminal Type ID	Option
A	25	RD/YE	2	Battery Positive Voltage	I	—

X50D Fuse Block - Battery Top View

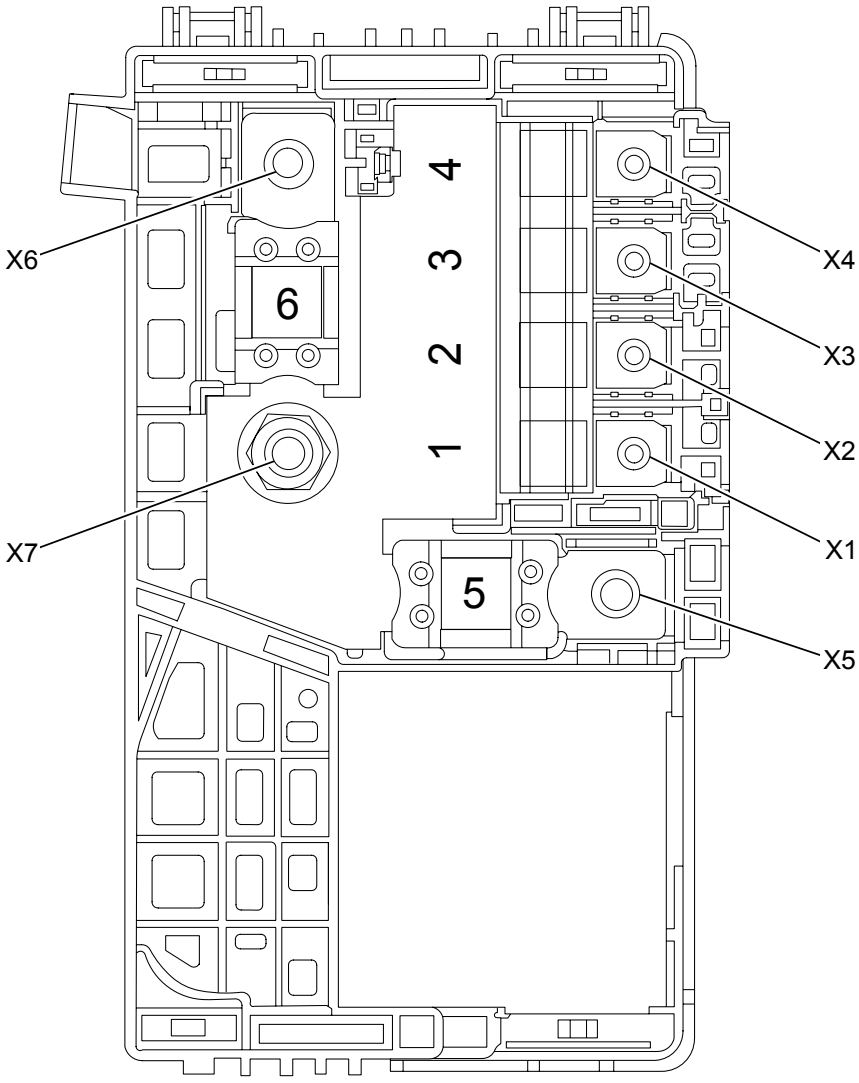

X50D Fuse Block - Battery Usage

No.	Device Label Name	Device Assigned Name	Rating	Description
1	—	F1UB	100A	K43 Power Steering Control Module
2	—	F2UB	100A	X51A Fuse Block – Instrument Panel
3	—	F3UB	100A	X51A Fuse Block – Instrument Panel
4	—	F4UB	100A	K22 Cooling Fan Control Module
5	—	F5UB	250A	X50A Fuse Block – Underhood
6	—	F6UB	300A	M64 Starter Motor

X50D Fuse Block - Battery X1

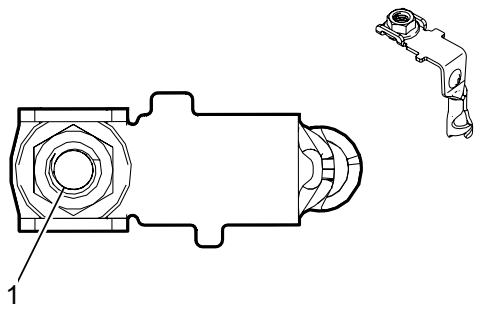

Connector Part Information

Harness Type: Fuse Block - Battery

OEM Connector: 13371977

Service Connector: Service by Cable Assembly — See Part Catalog

Description: 1-Way Ring Terminal (NA)

Terminal Part Information

Terminal Type ID	Terminated Lead	Diagnostic Test Probe	Terminal Removal Tool	Service Terminal	Tray	Core Crimp	Insulation Crimp
I	Not Available	No Tool Required	Not Available	Not Available	Not Available	Not Available	Not Available

X50D Fuse Block - Battery X1

Pin	Size	Color	Circuit	Function	Terminal Type ID	Option
1	10	RD/VT	842	Battery Positive Voltage	I	—

X50D Fuse Block - Battery X2

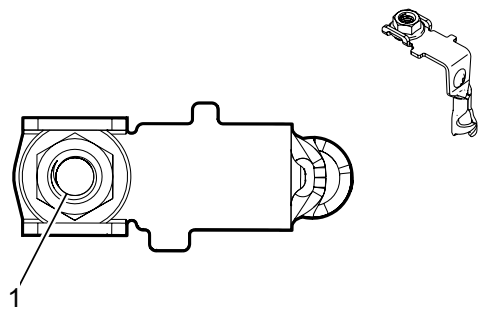

Connector Part Information

Harness Type: Body

OEM Connector: 13869259

Service Connector: Service by Cable Assembly - See Part Catalog

Description: 1-Way Ring Terminal

Terminal Part Information

Terminal Type ID	Terminated Lead	Diagnostic Test Probe	Terminal Removal Tool	Service Terminal	Tray	Core Crimp	Insulation Crimp
I	Not Required	No Tool Required	No Tool Required	Not Required	Not Required	Not Required	Not Required

X50D Fuse Block - Battery X2

Pin	Size	Color	Circuit	Function	Terminal Type ID	Option
1	10	RD/L-BU	42	Battery Positive Voltage	I	—

X50D Fuse Block - Battery X3

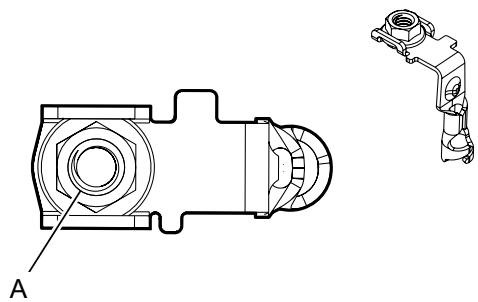

Connector Part Information

Harness Type: Body

OEM Connector: 13869260

Service Connector: Service by Cable Assembly - See Part Catalog

Description: 1-Way Ring Terminal

Terminal Part Information

Terminal Type ID	Terminated Lead	Diagnostic Test Probe	Terminal Removal Tool	Service Terminal	Tray	Core Crimp	Insulation Crimp
I	Not Required	No Tool Required	No Tool Required	Not Required	Not Required	Not Required	Not Required

X50D Fuse Block - Battery X3

Pin	Size	Color	Circuit	Function	Terminal Type ID	Option
A	10	RD/VT	842	Battery Positive Voltage	I	—

X50D Fuse Block - Battery X4

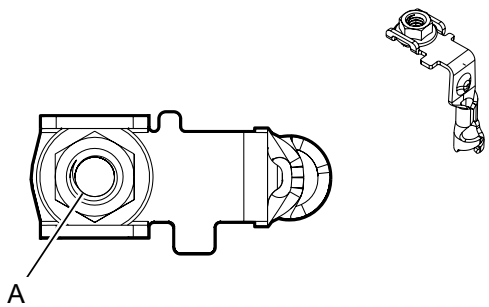

Connector Part Information

Harness Type: Forward Lamp

OEM Connector: 13869288

Service Connector: Service by Cable Assembly - See Part Catalog

Description: 1-Way Ring Terminal

Terminal Part Information

Terminal Type ID	Terminated Lead	Diagnostic Test Probe	Terminal Removal Tool	Service Terminal	Tray	Core Crimp	Insulation Crimp
I	Not Required	No Tool Required	No Tool Required	Not Required	Not Required	Not Required	Not Required

X50D Fuse Block - Battery X4

Pin	Size	Color	Circuit	Function	Terminal Type ID	Option
A	10	RD/GY	4840	Battery Positive Voltage	I	—

X50D Fuse Block - Battery X5

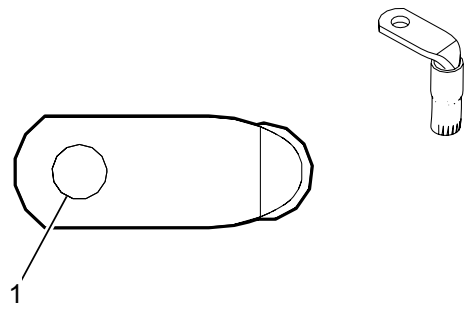

Connector Part Information

Harness Type: Fuse Block - Battery

OEM Connector: 13293547

Service Connector: Service by Cable Assembly — See Part Catalog

Description: 1-Way Ring Terminal (NA)

Terminal Part Information

Terminal Type ID	Terminated Lead	Diagnostic Test Probe	Terminal Removal Tool	Service Terminal	Tray	Core Crimp	Insulation Crimp
I	Not Available	No Tool Required	Not Available	Not Available	Not Available	Not Available	Not Available

X50D Fuse Block - Battery X5

Pin	Size	Color	Circuit	Function	Terminal Type ID	Option
1	35	RD/WH	4042	Battery Positive Voltage	I	—

X50D Fuse Block - Battery X6

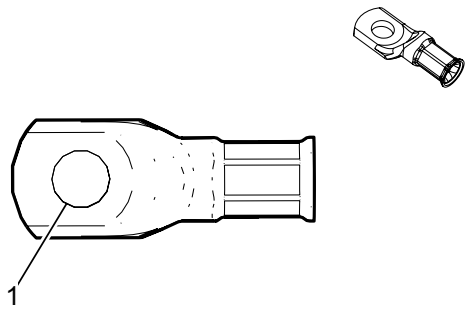

Connector Part Information

Harness Type: Fuse Block - Battery

OEM Connector: 10730988

Service Connector: Service by Cable Assembly — See Part Catalog

Description: 1-Way Ring Terminal (NA)

Terminal Part Information

Terminal Type ID	Terminated Lead	Diagnostic Test Probe	Terminal Removal Tool	Service Terminal	Tray	Core Crimp	Insulation Crimp
I	Not Available	No Tool Required	Not Available	Not Available	Not Available	Not Available	Not Available

X50D Fuse Block - Battery X6

Pin	Size	Color	Circuit	Function	Terminal Type ID	Option
1	35	RD	2	Battery Positive Voltage	I	—

X50D Fuse Block - Battery X7

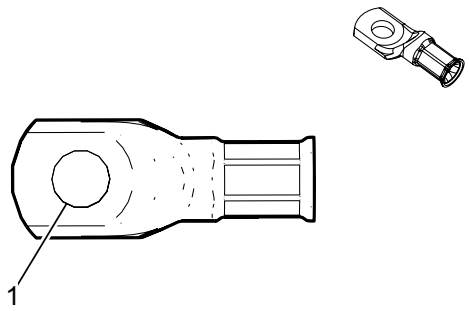

Connector Part Information

Harness Type: Fuse Block - Battery

OEM Connector: 13303048

Service Connector: Service by Cable Assembly — See Part Catalog

Description: 1-Way Ring Terminal (NA)

Terminal Part Information

Terminal Type ID	Terminated Lead	Diagnostic Test Probe	Terminal Removal Tool	Service Terminal	Tray	Core Crimp	Insulation Crimp
I	Not Available	No Tool Required	Not Available	Not Available	Not Available	Not Available	Not Available

X50D Fuse Block - Battery X7

Pin	Size	Color	Circuit	Function	Terminal Type ID	Option
1	35	RD	1	Battery Positive Voltage	I	—

X51A Fuse Block - Instrument Panel Label

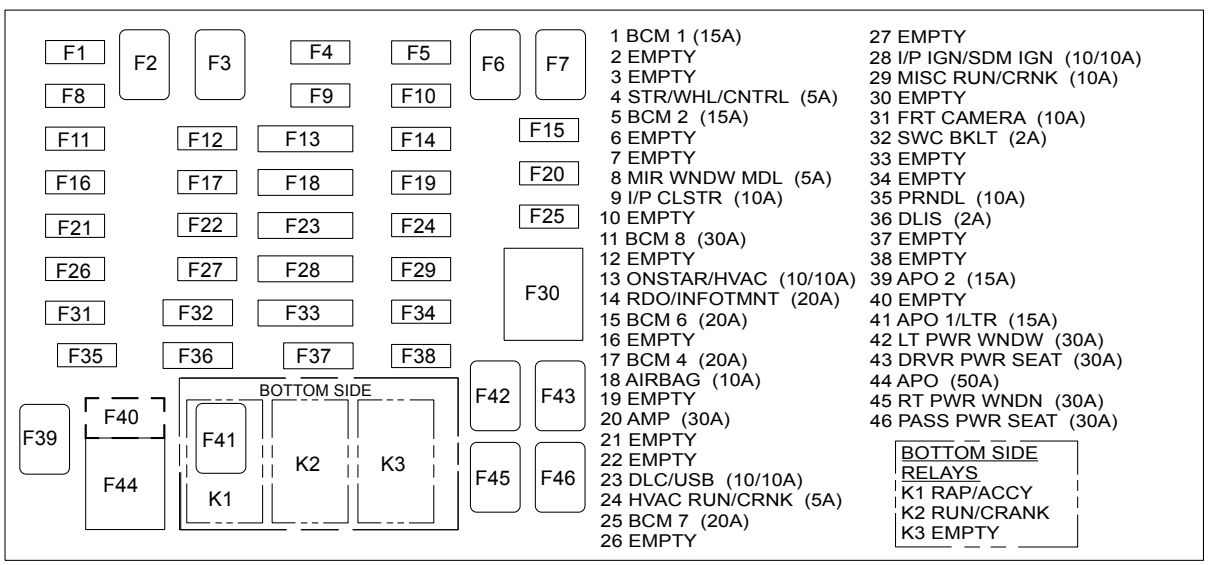

1 BCM 1 (15A)
2 EMPTY
3 EMPTY
4 STR/WHL/CNTRL (5A)
5 BCM 2 (15A)
6 EMPTY
7 EMPTY
8 MIR WNDW MDL (5A)
9 I/P CLSTR (10A)
10 EMPTY
11 BCM 8 (30A)
12 EMPTY
13 ONSTAR/HVAC (10/10A)
14 RDO/INFOTMNT (20A)
15 BCM 6 (20A)
16 EMPTY
17 BCM 4 (20A)
18 AIRBAG (10A)
19 EMPTY
20 AMP (30A)
21 EMPTY
22 EMPTY
23 DLC/USB (10/10A)
24 HVAC RUN/CRNK (5A)
25 BCM 7 (20A)
26 EMPTY
27 EMPTY
28 I/P IGN/SDM IGN (10/10A)
29 MISC RUN/CRNK (10A)
30 EMPTY
31 FRT CAMERA (10A)
32 SWC BKLT (2A)
33 EMPTY
34 EMPTY
35 PRNDL (10A)
36 DLIS (2A)
37 EMPTY
38 EMPTY
39 APO 2 (15A)
40 EMPTY
41 APO 1/LTR (15A)
42 LT PWR WNDW (30A)
43 DRVR PWR SEAT (30A)
44 APO (50A)
45 RT PWR WNDN (30A)
46 PASS PWR SEAT (30A)

BOTTOM SIDE RELAYS
K1 RAP/ACCY
K2 RUN/CRANK
K3 EMPTY

X51A Fuse Block - Instrument Panel Top View Fuses

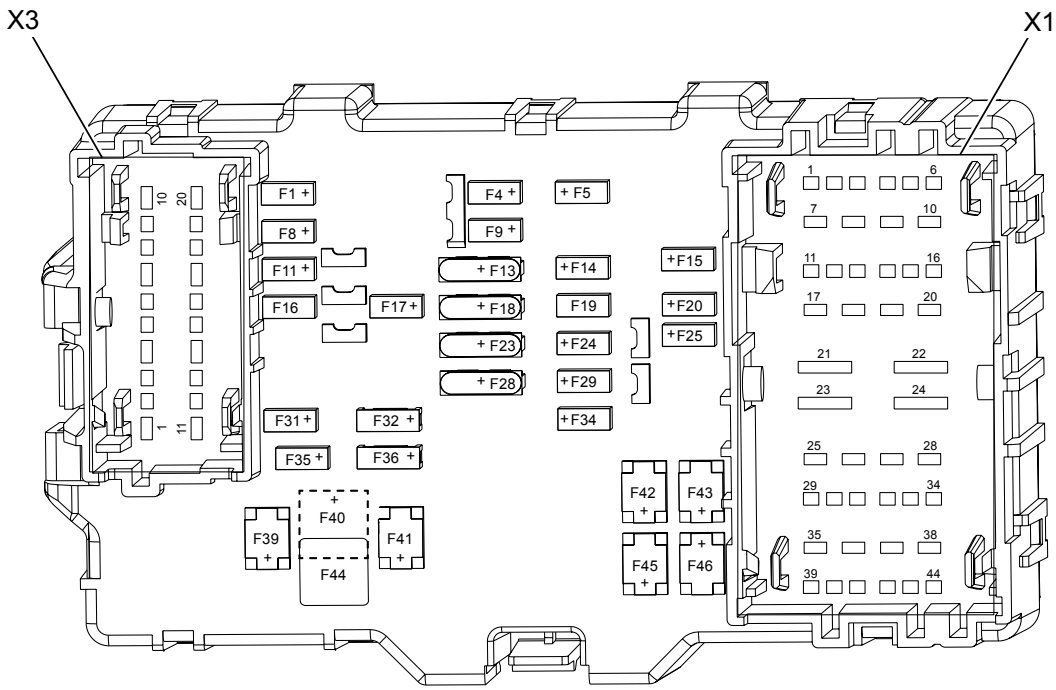

X51A Fuse Block – Instrument Panel Fuse Usage

No.	Device Label Name	Device Assigned Name	Rating	Description
F1	BCM 1	F1DA	15A	K9 Body Control Module
F2	EMPTY	F2DA	—	Not Used
F3	EMPTY	F3DA	—	Not Used
F4	STR/WHL/CNTRL	F4DA	5A	S70L Steering Wheel Controls Switch − Left, S70R Steering Wheel Controls Switch − Right
F5	BCM 2	F5DA	20A	K9 Body Control Module
F6	EMPTY	F6DA	—	Not Used
F7	EMPTY	F7DA	—	Not Used
F8	MIR WNDW MDL	F8DA	5A	S79D Window Switch − Driver, S52 Outside Rearview Mirror Switch (DL6/DL9)
F9	I/P CLSTR	F9DA	10A	P16 Instrument Cluster, P17 Info Display Module, S32D Seat Heating Switch − Driver (KA1), S32P Seat Heating Switch − Passenger (KA1), A26 HVAC Controls
F10	EMPTY	F10DA	—	Not Used
F11	BCM 8	F11DA	30A	K9 Body Control Module
F12	EMPTY	F12DA	—	Not Used
F13	ONSTAR/HVAC	F13DA	10A	K33 HVAC Control Module, K73 Telematics Communication Interface Control Module (UE1)
F14	RDO/INFOTMNT	F14DA	20A	A11 Radio, K74 Human Machine Interface Control Module (IO4/IO5/IO6)

F15	BCM 6	F15DA	15A	K9 Body Control Module
F16	EMPTY	F16DA	—	Not Used
F17	BCM 4	F17DA	20A	K9 Body Control Module
F18	AIRBAG	F18DA	10A	K85 Passenger Presence Module, K36 Inflatable Restraint Sensing and Diagnostic Module
F19	EMPTY	F19DA	—	Not Used
F20	AMP	F20DA	30A	T3 Audio Amplifier (UQA)
F21	EMPTY	F21DA	—	Not Used
F22	EMPTY	F22DA	—	Not Used
F23	DLC/USB	F23DA	10A	X84 Data Link Connector, X83 Auxiliary Audio Input, X83R Auxiliary Audio Input − Rear
F24	HVAC RUN/CRNK	F24DA	5A	E40 Electrical Auxiliary Heater (LWN), K33 HVAC Control Module
F25	BCM 7	F25DA	20A	K9 Body Control Module
F26	EMPTY	F26DA	—	Not Used
F27	EMPTY	F27DA	—	Not Used
F28	I/P IGN/SDM IGN	F28DA	10A	P14 Passenger Air Bag Disabled Indicator, P16 Instrument Cluster, and P43 Collision Alert Indicators (UEU)
F29	MISC RUN/CRNK	F29DA	10A	B87 Rearview Camera, K69 Transfer Case Control Module (NQ6/NQ7), A10 Inside Rearview Mirror
F30	EMPTY	F30DA	—	Not Used
F31	FRT CAMERA	F31DA	10A	K109 Frontview Camera Module (UEU/UFL)
F32	SWC BKLT	F32DA	2A	S48A Multifunction Switch - Instrument Panel, S77 Transfer Case Shift Control Switch (NQ6/NQ7), S30 Headlamp Switch, X85 Steering Wheel Air Bag Coil
F33	EMPTY	F33DA	—	Not Used
F34	EMPTY	F34DA	—	Not Used
F35	PRNDL	F35DA	10A	P2 Transmission Shift Lever Position Indicator (MYB)
F36	DLIS	F36DA	2A	S39 Ignition Switch
F37	EMPTY	F37DA	—	Not Used
F38	EMPTY	F38DA	—	Not Used
F39	APO 2	F39DA	15A	X80B Accessory Power Receptacle − Center Console 2
F40	EMPTY	F40DA	50A	F39DA, F41DA, X80A Accessory Power Receptacle − Center Console 1, X80B Accessory Power Receptacle − Center Console 2, E32 Cigarette Lighter Receptacle (SAO)
F41	APO 1/LTR	F41DA	15A	E32 Cigarette Lighter Receptacle (SAO), Accessory Power Receptacle − Center Console 1
F42	LT PWR WNDW	F42DA	30A	M74D Window Motor − Driver, S79LR Window Switch − Left Rear
F43	DRVR PWR SEAT	F43DA	30A	S64D Seat Adjuster Switch − Driver

F44	APO	F44DA	50A	F39DA, F41DA, X80A Accessory Power Receptacle − Center Console 1, X80B Accessory Power Receptacle − Center Console 2, E32 Cigarette Lighter Receptacle (SAO)
F45	RT PWR WNDW	F45DA	30A	S79P Window Switch − Passenger , S79RR Window Switch − Right Rear
F46	PASS PWR SEAT	F46DA	30A	S64P Seat Adjuster Switch − Passenger (AAQ)

X51A Fuse Block - Instrument Panel Bottom View Relays

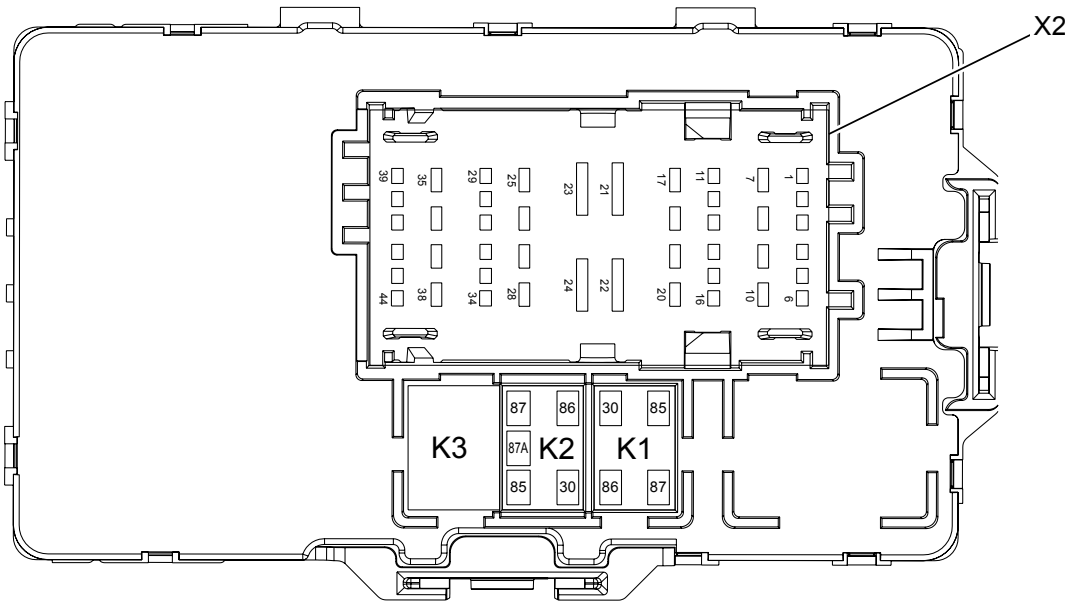

X51A Fuse Block - Instrument Panel Usage

No.	Device Label Name	Device Assigned Name	Rating	Description
Relays				
K1	K1	KR76 Retained Accessory Power Relay	—	F35DA, F44DA
K2	K2	KR73 Ignition Main Relay	—	F24DA, F28DA, F29DA
K3	K3	—	—	Not Used

X51A Fuse Block - Instrument Panel X1

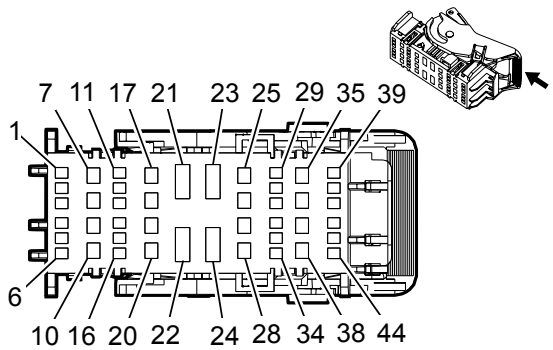

Connector Part Information

Harness Type: Body

OEM Connector: 13967687

Service Connector: 19329455

Description: 44-Way F 1.5, 2.8, 800 Metri-Pack Series (BK)

Terminal Part Information

Terminal Type ID	Terminated Lead	Diagnostic Test Probe	Terminal Removal Tool	Service Terminal	Tray	Core Crimp	Insulation Crimp
I	19301761	J-35616-35 (VT)	J-38125-12A	Not Available	Not Available	Not Available	Not Available
II	19301767	J-35616-2A (GY)	J-38125-560	Not Available	Not Available	Not Available	Not Available
II	19301767	J-35616-2A (GY)	J-38125-560	Not Available	Not Available	Not Available	Not Available
III	Not Required	J-35616-44 (YE)	No Tool Required	Not Available	Not Available	Not Available	Not Available

X51A Fuse Block - Instrument Panel X1

Pin	Size	Color	Circuit	Function	Terminal Type ID	Option
1	0.75	RD/BN	2240	Battery Positive Voltage	II	—
2	0.5	RD/GY	2840	Battery Positive Voltage	II	—
3	0.35	RD/YE	3040	Battery Positive Voltage	II	—
4	0.5	RD/GY	2140	Battery Positive Voltage	II	—
5	0.5	RD/L-GN	4440	Battery Positive Voltage	II	—
6 - 13	—	—	—	Not Occupied	—	—
14	0.35	RD/L-BU	3240	Battery Positive Voltage	II	—

15	—	—	—	Not Occupied	—	—
16	0.35	RD/VT	1940	Battery Positive Voltage	II	—
17	2.5	RD/YE	3740	Battery Positive Voltage	I	—
18	1.5	RD/WH	2740	Battery Positive Voltage	I	—
19	1.5	RD/VT	2640	Battery Positive Voltage	I	—
20	—	—	—	Not Occupied	—	—
21	10	RD/VT	842	Battery Positive Voltage	III	—
22	—	—	—	Not Occupied	—	—
23	10	RD/L-BU	42	Battery Positive Voltage	III	—
24	—	—	—	Not Occupied	—	—
25	2.5	RD/L-BU	1240	Battery Positive Voltage	I	—
26	—	—	—	Not Occupied	—	—
27	2.5	RD/YE	5040	Battery Positive Voltage	I	—
28 - 31	—	—	—	Not Occupied	—	—
32	0.35	VT/L-GN	1739	Run/Crank Ignition 1 Voltage	II	—
33 - 34	—	—	—	Not Occupied	—	—
35	2.5	RD/WH	1340	Battery Positive Voltage	I	—
36	2.5	RD/BN	1440	Battery Positive Voltage	I	—
37 - 41	—	—	—	Not Occupied	—	—
42	0.35	L-GN/VT	5199	Run/Crank Relay Coil Control	II	—

43	0.35	GY/VT	755	RAP Relay Coil Control	II	—
44	0.35	VT	801	Retained Accessory Power Fuse Control	II	MYB

X51A Fuse Block - Instrument Panel X2

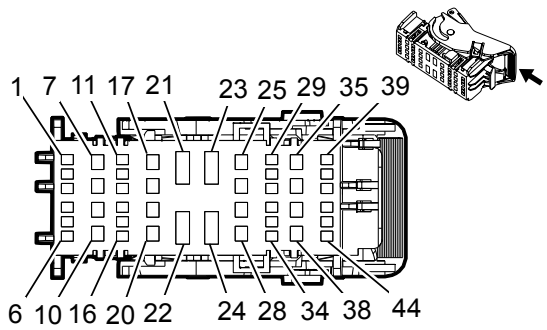

Connector Part Information

Harness Type: Body

OEM Connector: 13967688

Service Connector: 19329456

Description: 44-Way F 1.5, 2.8, 800 Metri-Pack Series (GY)

Terminal Part Information

Terminal Type ID	Terminated Lead	Diagnostic Test Probe	Terminal Removal Tool	Service Terminal	Tray	Core Crimp	Insulation Crimp
I	19300649	J-35616-35 (VT)	J-38125-12A	Not Available	Not Available	Not Available	Not Available
II	19301761	J-35616-35 (VT)	J-38125-11A	Not Available	Not Available	Not Available	Not Available
III	19301761	J-35616-35 (VT)	J-38125-12A	Not Available	Not Available	Not Available	Not Available
IV	19301767	J-35616-2A (GY)	J-38125-560	Not Available	Not Available	Not Available	Not Available
IV	19301767	J-35616-2A (GY)	J-38125-560	Not Available	Not Available	Not Available	Not Available

X51A Fuse Block - Instrument Panel X2

Pin	Size	Color	Circuit	Function	Terminal Type ID	Option
1 - 2	—	—	—	Not Occupied	—	—
3	0.35	YE	6817	LED Backlight Dimming Control	IV	—
4	0.35	BN	6136	Control	IV	—
5	0.5	RD/L-BU	540	Battery Positive Voltage	IV	—
6	—	—	—	Not Occupied	—	—
7	2.5	RD/VT	4040	Battery Positive Voltage	III	—
8 - 9	—	—	—	Not Occupied	—	—

10	1.5	VT	2101	Retained Accessory Power Fuse Ignition	III	—
11 - 13	—	—	—	Not Occupied	—	—
14	0.5	RD/VT	340	Battery Positive Voltage	IV	—
15 - 17	—	—	—	Not Occupied	—	—
18	2.5	RD/L-GN	2440	Battery Positive Voltage	III	—
19	—	—	—	Not Occupied	—	—
20	1.5	VT	1701	Retained Accessory Power Ignition	III	—
21 - 24	—	—	—	Not Occupied	—	—
25	0.5	RD/VT	3340	Battery Positive Voltage	I	—
26	—	—	—	Not Occupied	—	—
27	0.5	RD/WH	640	Battery Positive Voltage	I	—
28	0.5	VT/BK	1639	Run/Crank Ignition 1 Voltage	I	—
29 - 34	—	—	—	Not Occupied	—	—
35	1	RD/VT	340	Battery Positive Voltage	II	—
36	—	—	—	Not Occupied	—	—
37	0.35	VT/GY	539	Run/Crank Ignition 1 Voltage	I	—
38	0.5	VT/L-GN	1739	Run/Crank Ignition 1 Voltage	I	—
39 - 43	—	—	—	Not Occupied	—	—
44	0.75	BK	2050	Ground	IV	—

X51A Fuse Block - Instrument Panel X3 (LCV/LFX+N8D)

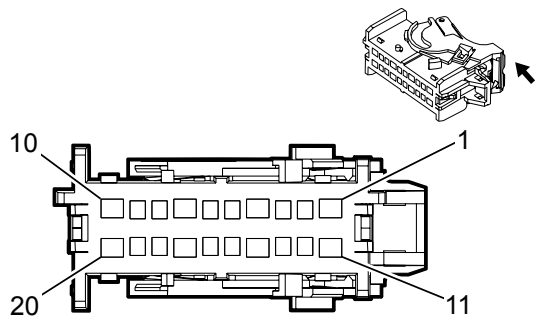

Connector Part Information

Harness Type: Body

OEM Connector: 15522322

Service Connector: 13597270

Description: 20-Way F 1.5, 2.8 Series (BK)

Terminal Part Information

Terminal Type ID	Terminated Lead	Diagnostic Test Probe	Terminal Removal Tool	Service Terminal	Tray	Core Crimp	Insulation Crimp
I	19300649	J-35616-35 (VT)	J-38125-12A	Not Available	Not Available	Not Available	Not Available
II	19301767	J-35616-2A (GY)	J-38125-560	Not Available	Not Available	Not Available	Not Available

X51A Fuse Block - Instrument Panel X3 (LCV/LFX+N8D)

Pin	Size	Color	Circuit	Function	Terminal Type ID	Option
1 - 11	—	—	—	Not Occupied	—	—
12	0.35	RD/L-GN	3140	Battery Positive Voltage	II	—
13	0.5	VT/L-GN	1739	Run/Crank Ignition 1 Voltage	II	—
14	0.35	VT/WH	1139	Run/Crank Ignition 1 Voltage	I	—
15 - 20	—	—	—	Not Occupied	—	—

X51A Fuse Block - Instrument Panel X3 (LCV/LFX-N8D)

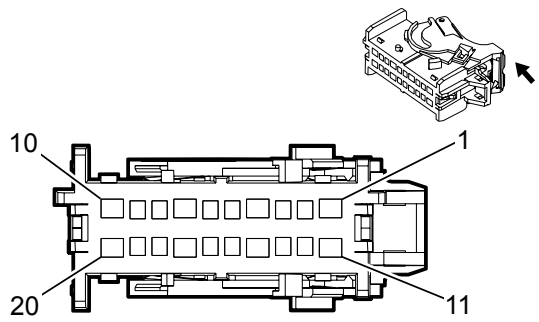

Connector Part Information

Harness Type: Body

OEM Connector: 15547106

Service Connector: Pending

Description: 20-Way F 1.5, 2.8 OCS Series (BK)

Terminal Part Information

Terminal Type ID	Terminated Lead	Diagnostic Test Probe	Terminal Removal Tool	Service Terminal	Tray	Core Crimp	Insulation Crimp
I		J-35616-2A (GY)	J-38125-560	Not Available	Not Available	Not Available	Not Available
II	Pending	Pending	Pending	Not Available	Not Available	Not Available	Not Available

X51A Fuse Block - Instrument Panel X3 (LCV/LFX-N8D)

Pin	Size	Color	Circuit	Function	Terminal Type ID	Option
1 - 11	—	—	—	Not Occupied	—	—
12	0.35	RD/L-GN	3140	Battery Positive Voltage	I	—
13	0.5	VT/L-GN	1739	Run/Crank Ignition 1 Voltage	I	—
14	0.35	VT/WH	1139	Run/Crank Ignition 1 Voltage	II	—
15 - 20	—	—	—	Not Occupied	—	—

X51A Fuse Block - Instrument Panel X3 (LWN)

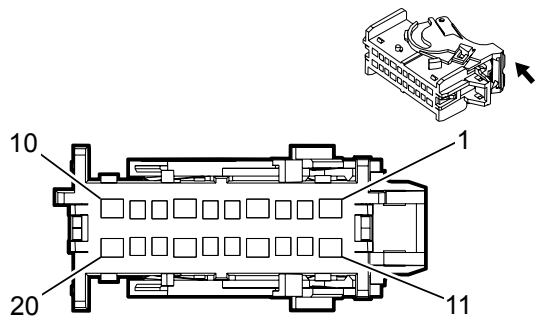

Connector Part Information

Harness Type: Body

OEM Connector: 15522322

Service Connector: 13597270

Description: 20-Way F 1.5, 2.8 Series (BK)

Terminal Part Information

Terminal Type ID	Terminated Lead	Diagnostic Test Probe	Terminal Removal Tool	Service Terminal	Tray	Core Crimp	Insulation Crimp
I	19300649	J-35616-35 (VT)	J-38125-12A	Not Available	Not Available	Not Available	Not Available
II	19301767	J-35616-2A (GY)	J-38125-560	Not Available	Not Available	Not Available	Not Available

X51A Fuse Block - Instrument Panel X3 (LWN)

Pin	Size	Color	Circuit	Function	Terminal Type ID	Option
1 - 11	—	—	—	Not Occupied	—	—
12	0.35	RD/L-GN	3140	Battery Positive Voltage	II	—
13	0.5	VT/L-GN	1739	Run/Crank Ignition 1 Voltage	II	—
14	0.35	VT/WH	1139	Run/Crank Ignition 1 Voltage	I	—
15 - 20	—	—	—	Not Occupied	—	—

Component Connector End Views

A7 Fuel Pump and Level Sensor Assembly (LCV/LFX)

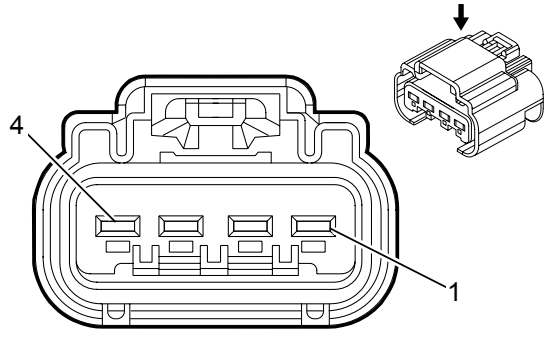

Connector Part Information

Harness Type: Chassis

OEM Connector: 13527865

Service Connector: 13587174

Description: 4-Way F 280 GT Series, Sealed (NA)

Terminal Part Information

Terminal Type ID	Terminated Lead	Diagnostic Test Probe	Terminal Removal Tool	Service Terminal	Tray	Core Crimp	Insulation Crimp
I	Not Required	J-35616-4A (PU)	Not Required	Not Required	Not Required	Not Required	Not Required
I	Not Required	J-35616-4A (PU)	Not Required	Not Required	Not Required	Not Required	Not Required

A7 Fuel Pump and Level Sensor Assembly (LCV/LFX)

Pin	Size	Color	Circuit	Function	Terminal Type ID	Option
1	2.5	GY	120	Fuel Pump Control	I	—
2	2.5	BK/L-GN	1580	Fuel Pump Low Reference	I	—
3	0.5	BK/L-GN	6281	Fuel Level Sensor Low Reference	I	—
4	0.5	L-BU/VT	1589	Primary Fuel Level Sensor Signal	I	—

A7 Fuel Pump and Level Sensor Assembly (LWN)

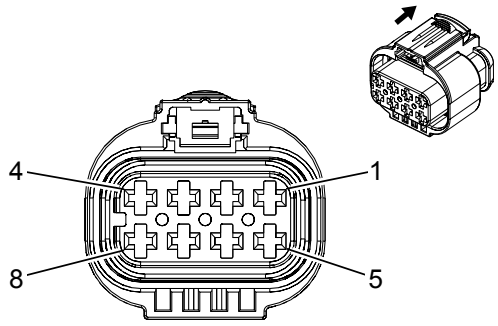

Connector Part Information

Harness Type: Chassis

OEM Connector: 2109441-2

Service Connector: 19330153

Description: 8-Way F 2.8 Series, Sealed (BK)

Terminal Part Information

Terminal Type ID	Terminated Lead	Diagnostic Test Probe	Terminal Removal Tool	Service Terminal	Tray	Core Crimp	Insulation Crimp
I	Not Required	J-35616-35 (VT)	Not Required	Not Required	Not Required	Not Required	Not Required
I	Not Required	J-35616-35 (VT)	Not Required	Not Required	Not Required	Not Required	Not Required

A7 Fuel Pump and Level Sensor Assembly (LWN)

Pin	Size	Color	Circuit	Function	Terminal Type ID	Option
1 - 2	—	—	—	Not Occupied	—	—
3	2.5	GY	120	Fuel Pump Control	I	—
4	2.5	BK	1950	Ground	I	—
5	0.5	L-BU/VT	1589	Primary Fuel Level Sensor Signal	I	—
6	0.5	BK/L-GN	6281	Fuel Level Sensor Low Reference	I	—
7 - 8	—	—	—	Not Occupied	—	—

A10 Inside Rearview Mirror

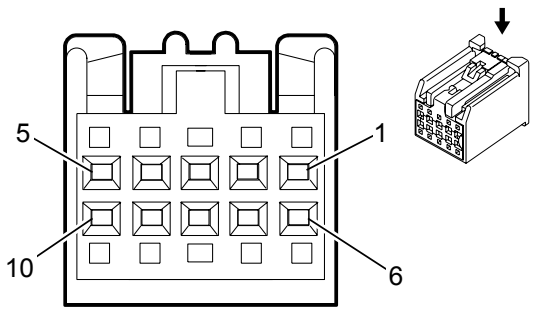

Connector Part Information

Harness Type: Headliner

OEM Connector: 13577390

Service Connector: 13577390

Description: 10-Way F 0.64 Kaizen Series (BK)

Terminal Part Information

Terminal Type ID	Terminated Lead	Diagnostic Test Probe	Terminal Removal Tool	Service Terminal	Tray	Core Crimp	Insulation Crimp
I	13575867	J-35616-64B (LT BU)	J-38125-215A	SAIT-A03T-M064	23	P	P

A10 Inside Rearview Mirror

Pin	Size	Color	Circuit	Function	Terminal Type ID	Option
1	0.5	L-GN/WH	24	Backup Lamp Control	I	—
2	0.5	VT/L-GN	1739	Run/Crank Ignition 1 Voltage	I	—
3	0.35	L-GN/WH	2514	Keypad Signal	I	—
4	0.35	L-GN/BK	2515	Keypad Control	I	—
5	0.5	BK	3150	Ground	I	—
6	0.35	YE/VT	2516	Keypad Green LED Control	I	—
7	0.35	BN/WH	2517	Keypad Red LED Control	I	—
8 - 10	—	—	—	Not Occupied	—	—

A11 Radio X1

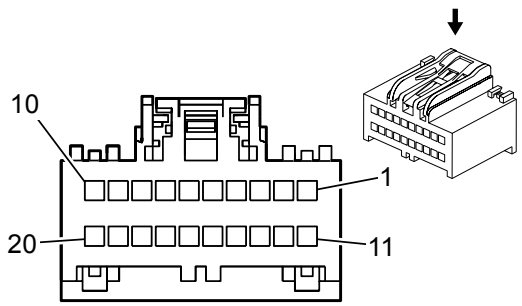

Connector Part Information

Harness Type: Instrument Panel

OEM Connector: 15126710

Service Connector: 15126710

Description: 20-Way F USCAR 64 Series (GY with WH Terminal Position Assurance)

Terminal Part Information

Terminal Type ID	Terminated Lead	Diagnostic Test Probe	Terminal Removal Tool	Service Terminal	Tray	Core Crimp	Insulation Crimp
I	13575845	J-35616-64B (LT BU)	J-38125-215A	SAIT-A03T-M064	23	P	P

A11 Radio X1

Pin	Size	Color	Circuit	Function	Terminal Type ID	Option
1 - 3	—	—	—	Not Occupied	—	—
4	0.35	WH/L-BU	6973	Camera Signal 2	I	—
5	0.35	GY/YE	6972	Camera Signal 2 +	I	—
6	0.5	BK	5842	Auxiliary Audio Screen (2)	I	IO4+MYB
	0.5	BARE	5842			IO5/IO6
7	0.35	L-BU	2060	Auxiliary Detection Signal	I	—
8	0.35	VT	5843	Auxiliary Audio Common Signal	I	—
9	0.35	GY	5839	Left Auxiliary Audio Signal (2)	I	—
10	0.35	L-GN	5841	Right Auxiliary Audio Signal (2)	I	—

10	0.35	L-GN	5841	Right Auxiliary Audio Signal (2)	I	—
11 - 12	—	—	—	Not Occupied	—	—
13	0.5	L-GN/L-BU	7532	Local Interconnect Network Serial Data Bus 10	I	—
14	0.5	L-GN	5060	Low Speed GMLAN Serial Data	I	—
15 - 18	—	—	—	Not Occupied	—	—
19	0.35	BK/YE	659	Cellular Telephone Voice Low Reference	I	—
20	0.35	YE	658	Cellular Telephone Voice Signal	I	—

A11 Radio X2

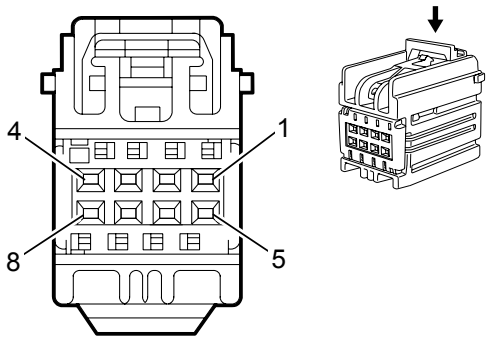

Connector Part Information

Harness Type: Instrument Panel

OEM Connector: 89047354

Service Connector: 19115653

Description: 8-Way F YESC Kaizen Series (L-GY)

Terminal Part Information

Terminal Type ID	Terminated Lead	Diagnostic Test Probe	Terminal Removal Tool	Service Terminal	Tray	Core Crimp	Insulation Crimp
I	Not Required	J-35616-64B (LT BU)	Not Required	Not Required	Not Required	Not Required	Not Required

A11 Radio X2

Pin	Size	Color	Circuit	Function	Terminal Type ID	Option
1	0.5	WH/L-GN	3997	MOST Serial Data (-)	I	—
2	0.5	GY/VT	3998	MOST Serial Data (+)	I	—
3	0.5	WH/L-GN	3997	MOST Serial Data (-)	I	—
4	0.5	GY/VT	3998	MOST Serial Data (+)	I	—
5 - 6	—	—	—	Not Occupied	—	—
7	0.35	WH/VT	3999	MOST Control	I	—
8	—	—	—	Not Occupied	—	—

A11 Radio X3

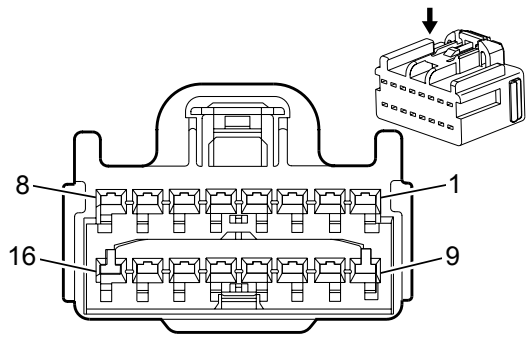

Connector Part Information

Harness Type: Instrument Panel

OEM Connector: 89047090

Service Connector: 89047090

Description: 16-Way F 1.5 Kaizen Series (GN)

Terminal Part Information

Terminal Type ID	Terminated Lead	Diagnostic Test Probe	Terminal Removal Tool	Service Terminal	Tray	Core Crimp	Insulation Crimp
I	13575829	J-35616-2A (GY)	J-38125-11A	Not Available	Not Available	Not Available	Not Available

A11 Radio X3

Pin	Size	Color	Circuit	Function	Terminal Type ID	Option
1	0.75	L-BU	201	Left Front Speaker Control (+) (1)	I	—
2	0.75	YE	200	Right Front Speaker Control (+) (1)	I	—
3	0.75	L-GN	199	Left Rear Speaker Control (+)	I	—
4	0.75	WH	46	Right Rear Speaker Control (+)	I	—
5 - 7	—	—	—	Not Occupied	—	—
8	1	RD/VT	340	Battery Positive Voltage	I	—
9	0.75	BN/L-BU	118	Left Front Speaker Signal (-) (1)	I	—
10	0.75	YE/BK	117	Right Front Speaker Signal (-) (1)	I	—

11	0.75	L-GN/BK	116	Left Rear Speaker Signal (-)	I	—
12	0.75	L-BU/BK	115	Right Rear Speaker Signal (-)	I	—
13 - 15	—	—	—	Not Occupied	—	—
16	1	BK/WH	2051	Signal Ground	I	—

A11 Radio X4

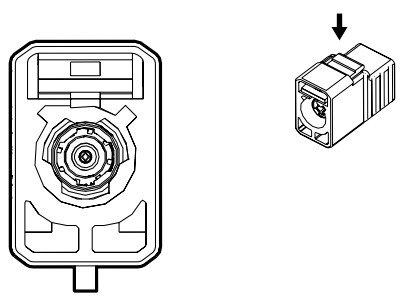

Connector Part Information

Harness Type: Instrument Panel COAX

OEM Connector: 13581701

Service Connector: Service by Cable Assembly - See Part Catalog

Description: 1-Way F COAX (BK)

Terminal Part Information

Terminal Type ID	Terminated Lead	Diagnostic Test Probe	Terminal Removal Tool	Service Terminal	Tray	Core Crimp	Insulation Crimp
I	Not Available	Not Available	Not Available	Not Available	Not Available	Not Available	Not Available

A11 Radio X4

Pin	Size	Color	Circuit	Function	Terminal Type ID	Option
-	-	COAX	-	(AM/FM) Antenna RF Signal	I	-

A11 Radio X6 (U2K)

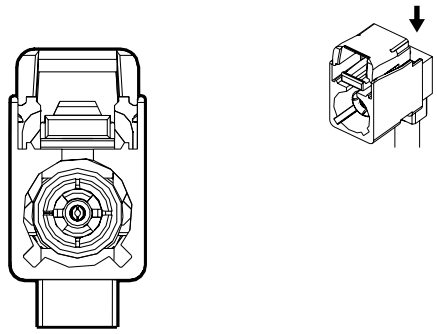

Connector Part Information

Harness Type: Instrument Panel COAX

OEM Connector: 13787218

Service Connector: Service by Cable Assembly - See Part Catalog

Description: 1-Way F COAX Type (CU)

Terminal Part Information

Terminal Type ID	Terminated Lead	Diagnostic Test Probe	Terminal Removal Tool	Service Terminal	Tray	Core Crimp	Insulation Crimp
I	Not Available	Not Available	Not Available	Not Available	Not Available	Not Available	Not Available

A11 Radio X6 (U2K)

Pin	Size	Color	Circuit	Function	Terminal Type ID	Option
-	-	COAX	-	Antenna XM Signal	I	-

A11 Radio X7 (IO3/IO4)

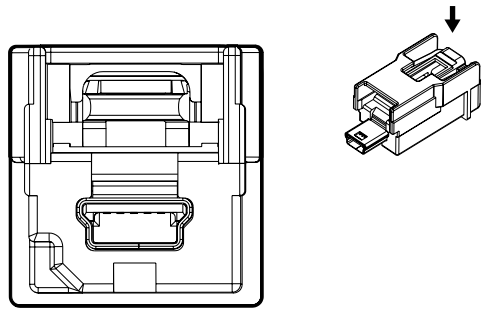

Connector Part Information

Harness Type: Instrument Panel LVDS

OEM Connector: 13581318

Service Connector: Service by Harness - See Part Catalog

Description: 5-Way M 2.0 Mini B USB Type (GY)

Terminal Part Information

Terminal Type ID	Terminated Lead	Diagnostic Test Probe	Terminal Removal Tool	Service Terminal	Tray	Core Crimp	Insulation Crimp
I	Not Available	Not Available	Not Available	Not Available	Not Available	Not Available	Not Available

A11 Radio X7 (IO3/IO4)

Pin	Size	Color	Circuit	Function	Terminal Type ID	Option
-	-	LVDS	-	(Navigation) Navigation Display Signal	I	-

A16 Transfer Case Motor (NQ6/NQ7)

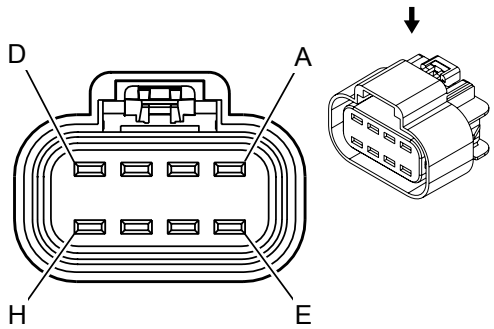

Connector Part Information

Harness Type: Engine

OEM Connector: 13538370

Service Connector: 19153749

Description: 8-Way F 280 GT 5.8 Series, Sealed (BK)

Terminal Part Information

Terminal Type ID	Terminated Lead	Diagnostic Test Probe	Terminal Removal Tool	Service Terminal	Tray	Core Crimp	Insulation Crimp
I	Not Required	J-35616-4A (PU)	Not Required	Not Required	Not Required	Not Required	Not Required
I	Not Required	J-35616-4A (PU)	Not Required	Not Required	Not Required	Not Required	Not Required

A16 Transfer Case Motor (NQ6/NQ7)

Pin	Size	Color	Circuit	Function	Terminal Type ID	Option
A	2.5	YE/GY	1552	Transfer Case Motor Clockwise Control	I	—
B	2.5	RD/GY	1342	Battery Positive Voltage	I	—
C	2.5	YE/BN	1569	Transfer Case Lock Solenoid Control	I	—
D	2.5	YE/VT	1553	Transfer Case Motor Counter Clockwise Control	I	—
E	0.5	L-BU/GY	7473	Incremental Encoder Impulse Signal	I	—
F	0.5	YE	7474	Incremental Encoder Direction Signal	I	—
G	0.5	WH/L-GN	7475	Incremental Encoder Sensor 8 Volt Reference	I	—

H	0.5	VT	7476	Incremental Encoder Sensor Low Reference	I	—

A23D Door Latch Assembly - Driver

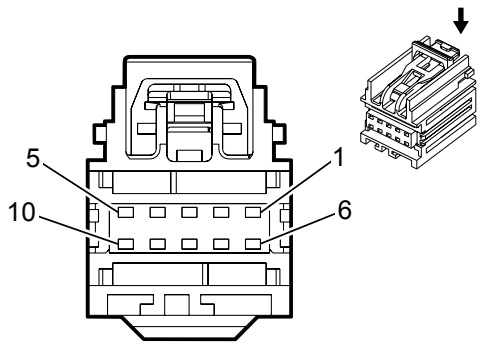

Connector Part Information

Harness Type: Driver Door

OEM Connector: 7283-9043-60

Service Connector: Service by Harness - See Part Catalog

Description: 10-Way F 0.64 YESC Kaizen Series (GN)

Terminal Part Information

Terminal Type ID	Terminated Lead	Diagnostic Test Probe	Terminal Removal Tool	Service Terminal	Tray	Core Crimp	Insulation Crimp
I	Not Required	J-35616-64B (LT BU)	Not Required	Not Required	Not Required	Not Required	Not Required
I	Not Required	J-35616-64B (LT BU)	Not Required	Not Required	Not Required	Not Required	Not Required

A23D Door Latch Assembly - Driver

Pin	Size	Color	Circuit	Function	Terminal Type ID	Option
1	0.35	GY	745	Left Front Door Ajar Switch Signal	I	—
2	—	—	—	Not Occupied	—	—
3	0.35	BK	3550	Ground	I	—
4	0.35	WH/VT	3270	Driver Door Lock Motor Status Signal	I	—
5	0.35	L-BU/VT	1124	Door Lock Key Switch Unlock Signal	I	—
6	—	—	—	Not Occupied	—	—
7	0.75	GY	5911	Door Lock Actuator Lock Control 2	I	—
8	0.75	BN/YE	294	Door Lock Actuator Unlock Control	I	—
9 - 10	—	—	—	Not Occupied	—	—

9 - 10	—	—	—	Not Occupied	—	—

A23G Door Latch Assembly - Left Rear Lower (Extended Cab)

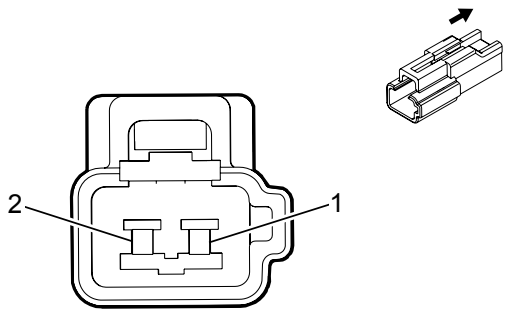

Connector Part Information

Harness Type: Left Rear Door

OEM Connector: 7282-6160

Service Connector: Service by Harness - See Part Catalog

Description: 2-Way M 090 Series (NA)

Terminal Part Information

Terminal Type ID	Terminated Lead	Diagnostic Test Probe	Terminal Removal Tool	Service Terminal	Tray	Core Crimp	Insulation Crimp
I	Not Required	J-35616-19 (BK)	Not Required	Not Required	Not Required	Not Required	Not Required

A23G Door Latch Assembly - Left Rear Lower (Extended Cab)

Pin	Size	Color	Circuit	Function	Terminal Type ID	Option
1	0.35	BK	3350	Ground	I	—
2	0.35	GY	747	Left Rear Door Ajar Switch Signal	I	—

A23H Door Latch Assembly - Left Rear Upper (Extended Cab)

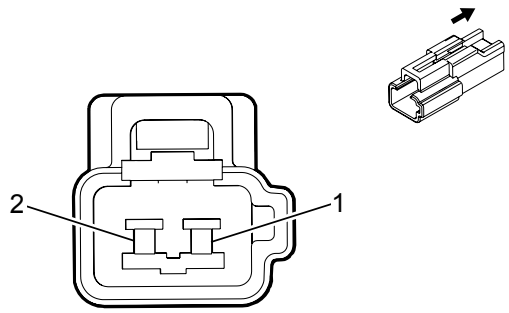

Connector Part Information

Harness Type: Left Rear Door

OEM Connector: 7282-6160

Service Connector: Service by Harness - See Part Catalog

Description: 2-Way M 090 Series (NA)

Terminal Part Information

Terminal Type ID	Terminated Lead	Diagnostic Test Probe	Terminal Removal Tool	Service Terminal	Tray	Core Crimp	Insulation Crimp
I	Not Required	J-35616-19 (BK)	Not Required	Not Required	Not Required	Not Required	Not Required

A23H Door Latch Assembly - Left Rear Upper (Extended Cab)

Pin	Size	Color	Circuit	Function	Terminal Type ID	Option
1	0.35	BK	3350	Ground	I	—
2	0.35	GY	747	Left Rear Door Ajar Switch Signal	I	—

A23J Door Latch Assembly - Right Rear Lower (Extended Cab)

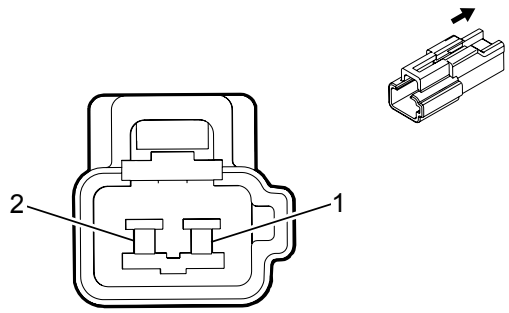

Connector Part Information

Harness Type: Right Rear Door

OEM Connector: 7282-6160

Service Connector: Service by Harness - See Part Catalog

Description: 2-Way M 090 Series (NA)

Terminal Part Information

Terminal Type ID	Terminated Lead	Diagnostic Test Probe	Terminal Removal Tool	Service Terminal	Tray	Core Crimp	Insulation Crimp
I	Not Required	J-35616-19 (BK)	Not Required	Not Required	Not Required	Not Required	Not Required

A23J Door Latch Assembly - Right Rear Lower (Extended Cab)

Pin	Size	Color	Circuit	Function	Terminal Type ID	Option
1	0.35	BK	3450	Ground	I	—
2	0.35	GY	748	Right Rear Door Ajar Switch Signal	I	—

A23K Door Latch Assembly - Right Rear Upper (Extended Cab)

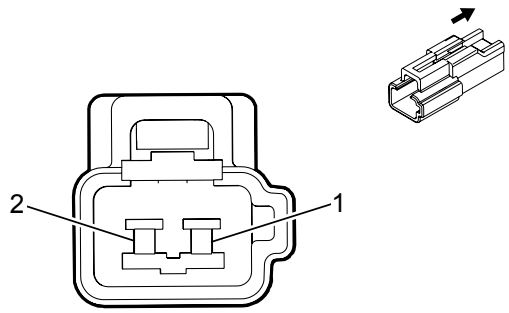

Connector Part Information

Harness Type: Right Rear Door

OEM Connector: 7282-6160

Service Connector: Service by Harness - See Part Catalog

Description: 2-Way M 090 Series (NA)

Terminal Part Information

Terminal Type ID	Terminated Lead	Diagnostic Test Probe	Terminal Removal Tool	Service Terminal	Tray	Core Crimp	Insulation Crimp
I	Not Required	J-35616-19 (BK)	Not Required	Not Required	Not Required	Not Required	Not Required

A23K Door Latch Assembly - Right Rear Upper (Extended Cab)

Pin	Size	Color	Circuit	Function	Terminal Type ID	Option
1	0.35	BK	3450	Ground	I	—
2	0.35	GY	748	Right Rear Door Ajar Switch Signal	I	—

A23LR Door Latch Assembly - Left Rear (Crew Cab)

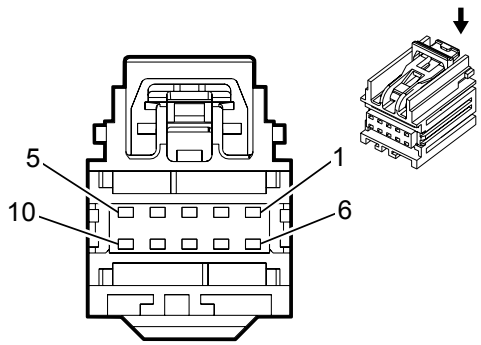

Connector Part Information

Harness Type: Left Rear Door

OEM Connector: 7283-9043-60

Service Connector: Service by Harness - See Part Catalog

Description: 10-Way F 0.64 YESC Kaizen Series (GN)

Terminal Part Information

Terminal Type ID	Terminated Lead	Diagnostic Test Probe	Terminal Removal Tool	Service Terminal	Tray	Core Crimp	Insulation Crimp
I	Not Required	J-35616-64B (LT BU)	Not Required	Not Required	Not Required	Not Required	Not Required
I	Not Required	J-35616-64B (LT BU)	Not Required	Not Required	Not Required	Not Required	Not Required

A23LR Door Latch Assembly - Left Rear (Crew Cab)

Pin	Size	Color	Circuit	Function	Terminal Type ID	Option
1	0.35	GY	747	Left Rear Door Ajar Switch Signal	I	—
2	0.35	BN/WH	3269	Child Security Lock Motor Status Signal Left Rear	I	—
3	0.35	BK	3350	Ground	I	—
4 - 6	—	—	—	Not Occupied	—	—
7	0.75	GY	295	Door Lock Actuator Lock Control	I	—
8	0.75	BN/YE	294	Door Lock Actuator Unlock Control	I	—
9	0.75	WH/L-BU	3266	Child Security Lock Motor Lock Control	I	—
10	—	—	—	Not Occupied	—	—

A23P Door Latch Assembly - Passenger

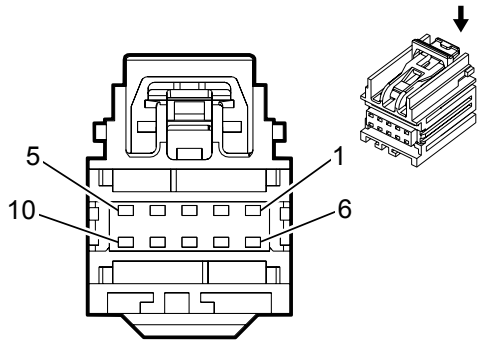

Connector Part Information

Harness Type: Passenger Door

OEM Connector: 7283-9043-60

Service Connector: Service by Harness - See Part Catalog

Description: 10-Way F 0.64 YESC Kaizen Series (GN)

Terminal Part Information

Terminal Type ID	Terminated Lead	Diagnostic Test Probe	Terminal Removal Tool	Service Terminal	Tray	Core Crimp	Insulation Crimp
I	Not Required	J-35616-64B (LT BU)	Not Required	Not Required	Not Required	Not Required	Not Required
I	Not Required	J-35616-64B (LT BU)	Not Required	Not Required	Not Required	Not Required	Not Required

A23P Door Latch Assembly - Passenger

Pin	Size	Color	Circuit	Function	Terminal Type ID	Option
1 - 2	—	—	—	Not Occupied	—	—
3	0.35	BK	3650	Ground	I	—
4	—	—	—	Not Occupied	—	—
5	0.35	GY	746	Right Front Door Ajar Switch Signal	I	—
6 - 7	—	—	—	Not Occupied	—	—
8	0.75	BN/YE	294	Door Lock Actuator Unlock Control	I	—
9	0.75	GY	295	Door Lock Actuator Lock Control	I	—
10	—	—	—	Not Occupied	—	—

A23RR Door Latch Assembly - Right Rear (Crew Cab)

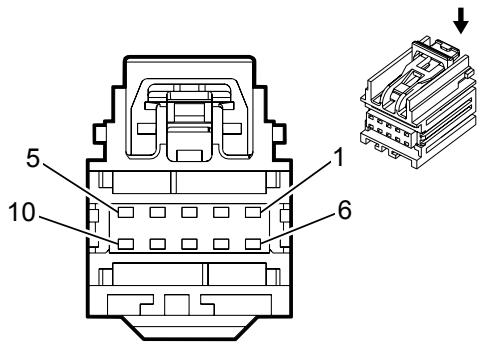

Connector Part Information

Harness Type: Right Rear Door

OEM Connector: 7283-9043-60

Service Connector: Service by Harness - See Part Catalog

Description: 10-Way F 0.64 YESC Kaizen Series (GN)

Terminal Part Information

Terminal Type ID	Terminated Lead	Diagnostic Test Probe	Terminal Removal Tool	Service Terminal	Tray	Core Crimp	Insulation Crimp
I	Not Required	J-35616-64B (LT BU)	Not Required	Not Required	Not Required	Not Required	Not Required
I	Not Required	J-35616-64B (LT BU)	Not Required	Not Required	Not Required	Not Required	Not Required

A23RR Door Latch Assembly - Right Rear (Crew Cab)

Pin	Size	Color	Circuit	Function	Terminal Type ID	Option
1 - 2	—	—	—	Not Occupied	—	—
3	0.35	BK	3450	Ground	I	—
4	0.35	GY/BK	3268	Child Security Lock Motor Status Signal Right Rear	I	—
5	0.35	GY	748	Right Rear Door Ajar Switch Signal	I	—
6	—	—	—	Not Occupied	—	—
7	0.75	WH/L-BU	3266	Child Security Lock Motor Lock Control	I	—
8	0.75	BN/YE	294	Door Lock Actuator Unlock Control	I	—
9	0.75	GY	295	Door Lock Actuator Lock Control	I	—
10	—	—	—	Not Occupied	—	—

10	—	—	—	Not Occupied	—	—

A26 HVAC Controls

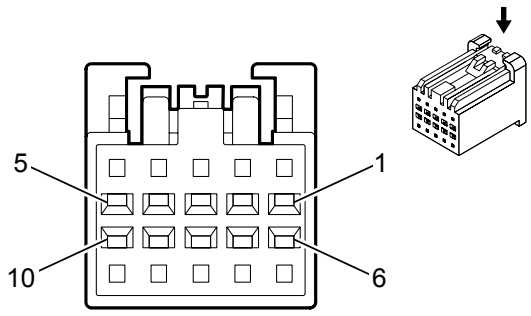

Connector Part Information

Harness Type: Instrument Panel

OEM Connector: 13581139

Service Connector: 13581139

Description: 10-Way F 0.64 Kaizen Series (GY)

Terminal Part Information

Terminal Type ID	Terminated Lead	Diagnostic Test Probe	Terminal Removal Tool	Service Terminal	Tray	Core Crimp	Insulation Crimp
I	13575867	J-35616-64B (LT BU)	J-38125-215A	SAIT-A03T-M064	23	P	P

A26 HVAC Controls

Pin	Size	Color	Circuit	Function	Terminal Type ID	Option
1	0.5	RD/GY	2840	Battery Positive Voltage	I	—
2	—	—	—	Not Occupied	—	—
3	0.35	L-GN	5060	Low Speed GMLAN Serial Data	I	—
4 - 8	—	—	—	Not Occupied	—	—
9	0.35	L-GN/YE	7531	Local Interconnect Network Serial Data Bus 9	I	—
10	0.35	BK/WH	2051	Signal Ground	I	—

A39 Reductant Fluid Reservoir Assembly X1 (LWN)

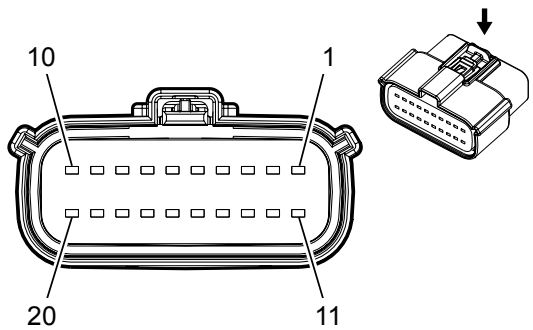

Connector Part Information

Harness Type: Reductant Assembly

OEM Connector: 33472-2006

Service Connector: Service by Harness - See Part Catalog

Description: 20-Way F 150 MX Series, Sealed (BK)

Terminal Part Information

Terminal Type ID	Terminated Lead	Diagnostic Test Probe	Terminal Removal Tool	Service Terminal	Tray	Core Crimp	Insulation Crimp
I	Not Required	J-35616-2A (GY)	No Tool Required	Not Required	Not Required	Not Required	Not Required
I	Not Required	J-35616-2A (GY)	No Tool Required	Not Required	Not Required	Not Required	Not Required
II	Not Required	Pending	No Tool Required	Not Required	Not Required	Not Required	Not Required

A39 Reductant Fluid Reservoir Assembly X1 (LWN)

Pin	Size	Color	Circuit	Function	Terminal Type ID	Option
1	1.0	BK	9015	PHASE C	I	—
2	1.0	YE/GY	9008	PHASE B	I	—
3	1.0	GY/WH	9007	PHASE A	I	—
4	1.0	BK/WH	9010	TANK HEAT-	I	—
5	1.0	BK	9014	PUMP GROUND	I	—
6	—	—	—	Not Used	II	—
7	1.0	GY/WH	9017	LINE HEAT +	I	—

8	—	—	—	Not Used	II	—
9	0.5	BK/WH	9001	T_SENS+	I	—
10	0.5	BK	9002	T_SENS-	I	—
11	1.0	GY/WH	9009	TANK HEAT+	I	—
12	0.5	BK	9005	P_SENS_5V	I	—
13	0.5	BK	9004	P_SENS_SIG	I	—
14	0.5	BK/WH	9003	P_SENS_GND	I	—
15	0.5	BK	9012	LEVEL SENSOR_QUAL 5V	I	—
16	0.5	BK	9013	LEVEL SENSOR SIGNAL	I	—
17	0.5	BK/WH	9006	LEVEL SENSOR_QUAL GND	I	—
18	0.5	BK	9011	Q SENSOR SIGNAL	I	—
19	—	—	—	Not Used	II	—
20	1.0	BK/WH	9016	LINE HEAT -	I	—

A39 Reductant Fluid Reservoir Assembly X2 (LWN)

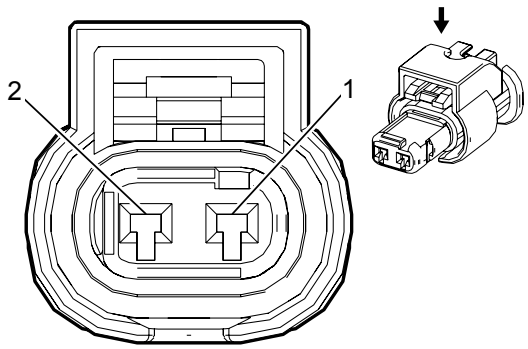

Connector Part Information

Harness Type: Reductant Assembly

OEM Connector: 1-1823608-5

Service Connector: Service by Harness - See Part Catalog

Description: 2-Way F 1.2 Multiple Contact Point Series, Sealed (BK with BK Inner Connector)

Terminal Part Information

Terminal Type ID	Terminated Lead	Diagnostic Test Probe	Terminal Removal Tool	Service Terminal	Tray	Core Crimp	Insulation Crimp
I	Not Required	J-35616-16 (LT GN)	No Tool Required	Not Required	Not Required	Not Required	Not Required

A39 Reductant Fluid Reservoir Assembly X2 (LWN)

Pin	Size	Color	Circuit	Function	Terminal Type ID	Option
1	1.0	BK/WH	9016	LINE HEAT -	I	—
2	1.0	GY/WH	9017	LINE HEAT +	I	—

B1 A/C Refrigerant Pressure Sensor

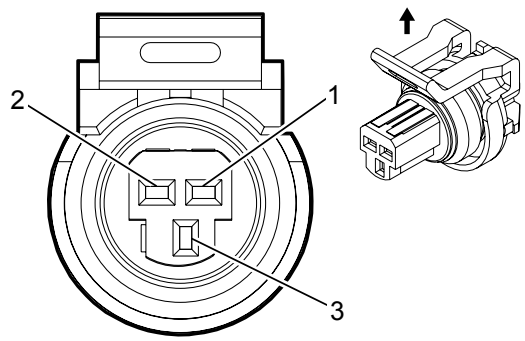

Connector Part Information

Harness Type: Engine

OEM Connector: 13532244

Service Connector: 88988301

Description: 3-Way F 150 GT Series, Sealed (BK)

Terminal Part Information

Terminal Type ID	Terminated Lead	Diagnostic Test Probe	Terminal Removal Tool	Service Terminal	Tray	Core Crimp	Insulation Crimp
I	Not Required	J-35616-14 (GN)	Not Required	Not Required	Not Required	Not Required	Not Required

B1 A/C Refrigerant Pressure Sensor

Pin	Size	Color	Circuit	Function	Terminal Type ID	Option
1	0.5	BK/BN	5514	A/C Refrigerant Pressure Sensor Low Reference	I	—
2	0.5	BN/RD	2700	A/C Pressure Sensor 5 Volt Reference	I	—
3	0.5	L-GN	380	A/C Refrigerant Pressure Sensor Signal	I	—

B5LF Wheel Speed Sensor - Left Front

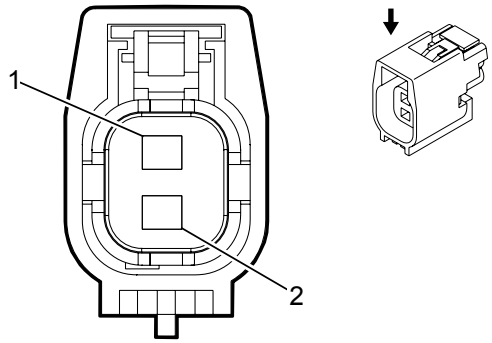

Connector Part Information

Harness Type: Chassis

OEM Connector: 7287-0973-30

Service Connector: 13586115

Description: 2-Way F 1.5 GT Series, Sealed (BK)

Terminal Part Information

Terminal Type ID	Terminated Lead	Diagnostic Test Probe	Terminal Removal Tool	Service Terminal	Tray	Core Crimp	Insulation Crimp
I	Not Required	J-35616-14 (GN)	Not Required	Not Required	Not Required	Not Required	Not Required
I	Not Required	J-35616-14 (GN)	Not Required	Not Required	Not Required	Not Required	Not Required

B5LF Wheel Speed Sensor - Left Front

Pin	Size	Color	Circuit	Function	Terminal Type ID	Option
1	0.5	GY/WH	7064	Wheel Speed Sensor Control Left Front	I	—
2	0.5	GY	830	Wheel Speed Sensor Signal Left Front	I	—

B5LR Wheel Speed Sensor - Left Rear

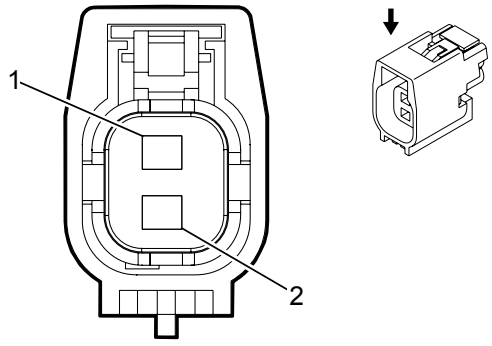

Connector Part Information

Harness Type: Chassis

OEM Connector: 7287-0973-30

Service Connector: 13586115

Description: 2-Way F 1.5 GT Series, Sealed (BK)

Terminal Part Information

Terminal Type ID	Terminated Lead	Diagnostic Test Probe	Terminal Removal Tool	Service Terminal	Tray	Core Crimp	Insulation Crimp
I	Not Required	J-35616-14 (GN)	Not Required	Not Required	Not Required	Not Required	Not Required
I	Not Required	J-35616-14 (GN)	Not Required	Not Required	Not Required	Not Required	Not Required

B5LR Wheel Speed Sensor - Left Rear

Pin	Size	Color	Circuit	Function	Terminal Type ID	Option
1	0.5	GY/BK	7127	Wheel Speed Sensor Control Left Rear	I	—
2	0.5	L-BU	884	Wheel Speed Sensor Signal Left Rear	I	—

B5RF Wheel Speed Sensor - Right Front

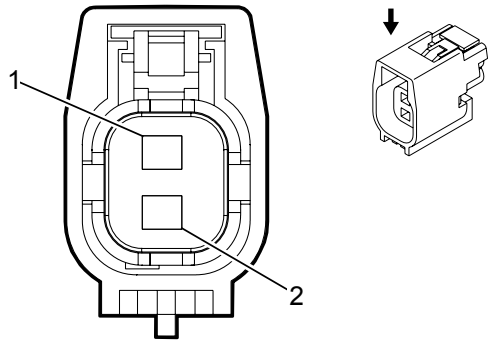

Connector Part Information

Harness Type: Chassis

OEM Connector: 7287-0973-30

Service Connector: 13586115

Description: 2-Way F 1.5 GT Series, Sealed (BK)

Terminal Part Information

Terminal Type ID	Terminated Lead	Diagnostic Test Probe	Terminal Removal Tool	Service Terminal	Tray	Core Crimp	Insulation Crimp
I	Not Required	J-35616-14 (GN)	Not Required	Not Required	Not Required	Not Required	Not Required
I	Not Required	J-35616-14 (GN)	Not Required	Not Required	Not Required	Not Required	Not Required

B5RF Wheel Speed Sensor - Right Front

Pin	Size	Color	Circuit	Function	Terminal Type ID	Option
1	0.5	GY/BN	7065	Wheel Speed Sensor Control Right Front	I	—
2	0.5	YE	872	Wheel Speed Sensor Signal Right Front	I	—

B5RR Wheel Speed Sensor - Right Rear

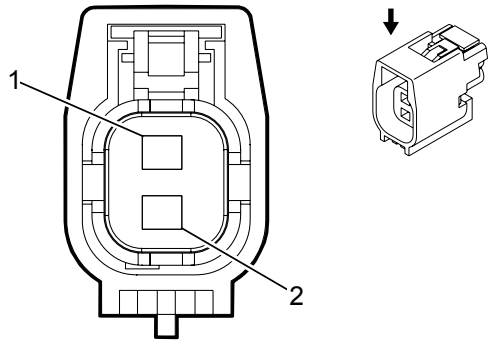

Connector Part Information

Harness Type: Chassis

OEM Connector: 7287-0973-30

Service Connector: 13586115

Description: 2-Way F 1.5 GT Series, Sealed (BK)

Terminal Part Information

Terminal Type ID	Terminated Lead	Diagnostic Test Probe	Terminal Removal Tool	Service Terminal	Tray	Core Crimp	Insulation Crimp
I	Not Required	J-35616-14 (GN)	Not Required	Not Required	Not Required	Not Required	Not Required
I	Not Required	J-35616-14 (GN)	Not Required	Not Required	Not Required	Not Required	Not Required

B5RR Wheel Speed Sensor - Right Rear

Pin	Size	Color	Circuit	Function	Terminal Type ID	Option
1	0.5	GY/YE	7128	Wheel Speed Sensor Control Right Rear	I	—
2	0.5	VT	882	Wheel Speed Sensor Signal Right Rear	I	—

B7B Air Temperature Sensor - Duct Lower (C68)

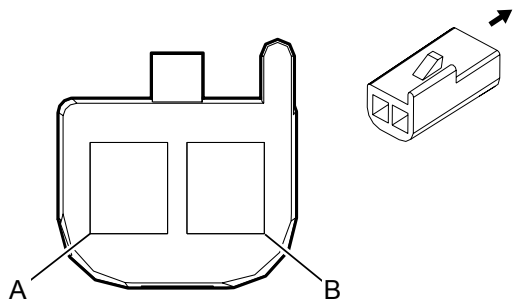

Connector Part Information

Harness Type: HVAC

OEM Connector: 12047662

Service Connector: 12085535

Description: 2-Way F 150 Metri Pack Series (BK)

Terminal Part Information

Terminal Type ID	Terminated Lead	Diagnostic Test Probe	Terminal Removal Tool	Service Terminal	Tray	Core Crimp	Insulation Crimp
I	13575464	J-35616-14 (GN)	J-38125-12A	15326030	2	E	C

B7B Air Temperature Sensor - Duct Lower (C68)

Pin	Size	Color	Circuit	Function	Terminal Type ID	Option
A	0.35	BN	518	Lower Left Air Temperature Sensor Signal	I	C68
B	0.35	BK/YE	407	Sensor Low Reference	I	C68

B7F Air Temperature Sensor - Duct Upper (C68)

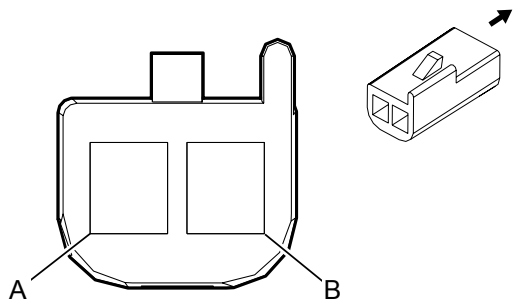

Connector Part Information

Harness Type: HVAC

OEM Connector: 12047662

Service Connector: 12085535

Description: 2-Way F 150 Metri Pack Series (BK)

Terminal Part Information

Terminal Type ID	Terminated Lead	Diagnostic Test Probe	Terminal Removal Tool	Service Terminal	Tray	Core Crimp	Insulation Crimp
I	13575464	J-35616-14 (GN)	J-38125-12A	15326030	2	E	C

B7F Air Temperature Sensor - Duct Upper (C68)

Pin	Size	Color	Circuit	Function	Terminal Type ID	Option
A	0.35	BN	516	Upper Left Air Temperature Sensor Signal	I	C68
B	0.35	BK/YE	407	Sensor Low Reference	I	C68

B9 Ambient Air Temperature Sensor

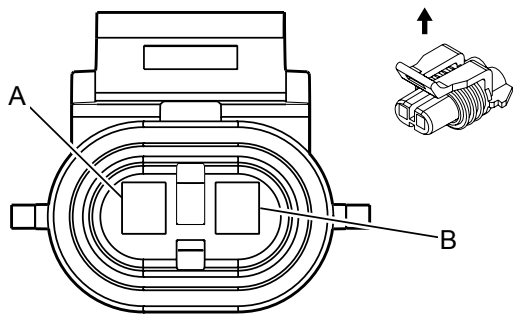

Connector Part Information

Harness Type: Forward Lamp

OEM Connector: 13543521

Service Connector: 12101856

Description: 2-Way F 150 Metri Pack Series, Sealed (BK)

Terminal Part Information

Terminal Type ID	Terminated Lead	Diagnostic Test Probe	Terminal Removal Tool	Service Terminal	Tray	Core Crimp	Insulation Crimp
I	Not Available	J-35616-14 (GN)	J-38125-12A	12048074	2	E	1

B9 Ambient Air Temperature Sensor

Pin	Size	Color	Circuit	Function	Terminal Type ID	Option
A	0.5	L-BU/GY	636	Outside Ambient Air Temperature Sensor Signal	I	-
B	0.5	BK/L-BU	61	Outside Ambient Temperature Sensor Low Reference	I	-

B10B Ambient Light/Sunload Sensor

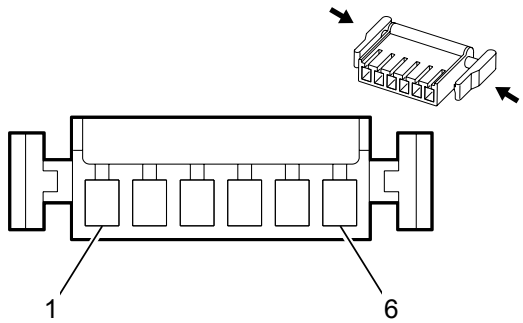

Connector Part Information

Harness Type: Instrument Panel

OEM Connector: 13726957

Service Connector: 13576539

Description: 6-Way F 0.64 Micro-Quadlock Series (BK)

Terminal Part Information

Terminal Type ID	Terminated Lead	Diagnostic Test Probe	Terminal Removal Tool	Service Terminal	Tray	Core Crimp	Insulation Crimp
I	Not Required	J-35616-64B (LT BU)	Not Required	Not Required	Not Required	Not Required	Not Required

B10B Ambient Light/Sunload Sensor

Pin	Size	Color	Circuit	Function	Terminal Type ID	Option
1	0.35	GY	728	Security Indicator Control	I	—
2	—	—	—	Not Occupied	—	—
3	0.35	L-BU/WH	734	Inside Air Temperature Sensor Signal	I	—
4	0.35	YE/VT	1783	Twilight Sentinel Delay Signal	I	—
5	0.35	WH/L-BU	278	Ambient Light Sensor Signal	I	—
6	0.35	BK/YE	1791	Air Temperature Door Control Low Reference	I	—

B14A Transmission Output Shaft Speed Sensor (N8D)

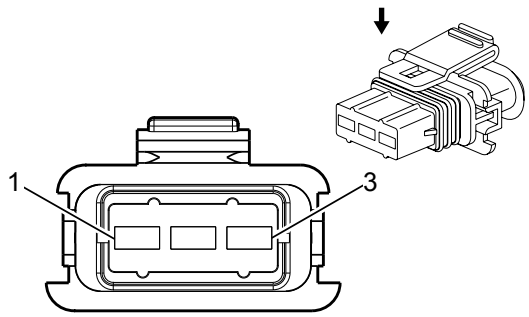

Connector Part Information

Harness Type: Engine

OEM Connector: 90508602

Service Connector: 19330658

Description: 3-Way F 2.8 Junior Power Timer Series, Sealed (BK)

Terminal Part Information

Terminal Type ID	Terminated Lead	Diagnostic Test Probe	Terminal Removal Tool	Service Terminal	Tray	Core Crimp	Insulation Crimp
I	Not Required	J-35616-35 (VT)	Not Required	Not Required	Not Required	Not Required	Not Required

B14A Transmission Output Shaft Speed Sensor (N8D)

Pin	Size	Color	Circuit	Function	Terminal Type ID	Option
1	0.5	BK/L-GN	822	Vehicle Speed Sensor Low Reference	I	—
2	0.5	VT/WH	821	Vehicle Speed Sensor Signal	I	—
3	0.5	L-BU/RD	1688	5 Volt Reference	I	—

B14A Transmission Output Shaft Speed Sensor (NQ6/NQ7)

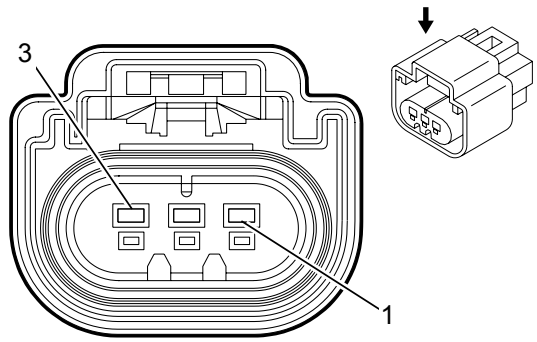

Connector Part Information

Harness Type: Engine

OEM Connector: 13511996

Service Connector: 13580873

Description: 3-Way F 150 GT Series, Sealed (GY)

Terminal Part Information

Terminal Type ID	Terminated Lead	Diagnostic Test Probe	Terminal Removal Tool	Service Terminal	Tray	Core Crimp	Insulation Crimp
I	Not Required	J-35616-14 (GN)	Not Required	Not Required	Not Required	Not Required	Not Required

B14A Transmission Output Shaft Speed Sensor (NQ6/NQ7)

Pin	Size	Color	Circuit	Function	Terminal Type ID	Option
1	0.5	L-BU/RD	1688	5 Volt Reference	I	—
2	0.5	VT/WH	821	Vehicle Speed Sensor Signal	I	—
3	0.5	BK/L-GN	822	Vehicle Speed Sensor Low Reference	I	—

B16 Backup Lamp Switch (N8D)

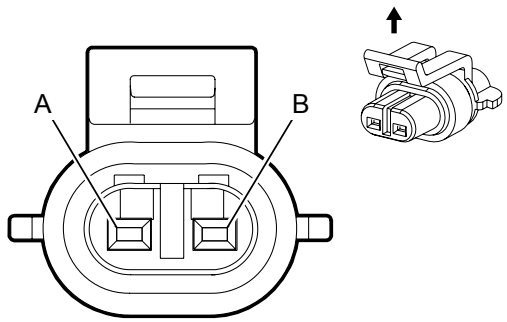

Connector Part Information

Harness Type: Engine

OEM Connector: 90346580

Service Connector: 13580106

Description: 2-Way F 150 Metri-Pack Series, Sealed (BK)

Terminal Part Information

Terminal Type ID	Terminated Lead	Diagnostic Test Probe	Terminal Removal Tool	Service Terminal	Tray	Core Crimp	Insulation Crimp
I	Not Required	J-35616-14 (GN)	Not Required	Not Required	Not Required	Not Required	Not Required

B16 Backup Lamp Switch (N8D)

Pin	Size	Color	Circuit	Function	Terminal Type ID	Option
A	0.5	L-GN/WH	5007	Reverse Switch Signal	I	—
B	0.5	BK/WH	451	Signal Ground	I	—

B18 Battery Current Sensor

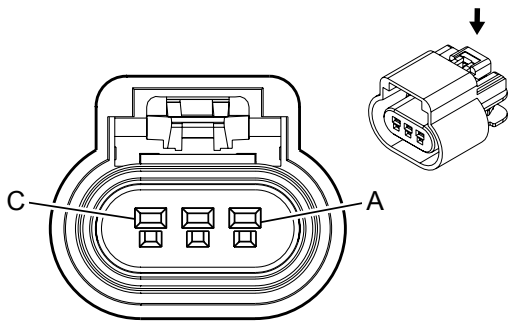

Connector Part Information

Harness Type: Body

OEM Connector: 13519047

Service Connector: 13580871

Description: 3-Way F 150 GT Series, Sealed (BK)

Terminal Part Information

Terminal Type ID	Terminated Lead	Diagnostic Test Probe	Terminal Removal Tool	Service Terminal	Tray	Core Crimp	Insulation Crimp
I	Not Required	J-35616-14 (GN)	Not Required	Not Required	Not Required	Not Required	Not Required

B18 Battery Current Sensor

Pin	Size	Color	Circuit	Function	Terminal Type ID	Option
A	0.5	L-BU/VT	5076	Current Sensor Control	I	—
B	0.5	BK/VT	5077	Current Sensor Low Reference	I	—
C	0.5	WH/YE	5075	Current Sensor Signal	I	—

B19B Brake Booster Vacuum Sensor

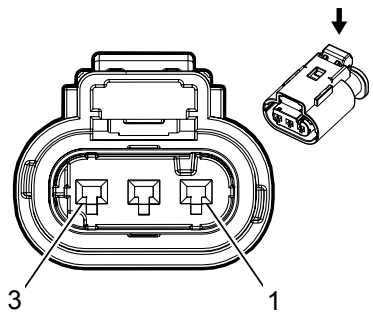

Connector Part Information

Harness Type: Chassis

OEM Connector: 13503570

Service Connector: 19299690

Description: 3-Way F 1.2 MLK Series, Sealed (BK)

Terminal Part Information

Terminal Type ID	Terminated Lead	Diagnostic Test Probe	Terminal Removal Tool	Service Terminal	Tray	Core Crimp	Insulation Crimp
I	Not Required	J-35616-16 (LT GN)	Not Required	Not Required	Not Required	Not Required	Not Required

B19B Brake Booster Vacuum Sensor

Pin	Size	Color	Circuit	Function	Terminal Type ID	Option
1	0.5	YE/VT	6030	Brake Vacuum Sensor Signal	I	—
2	0.5	BK/YE	6032	Brake Vacuum Sensor Low Reference	I	—
3	0.5	YE/RD	6031	Brake Vacuum Sensor 5 Volt Reference	I	—

B20 Brake Fluid Level Switch (LCV/LFX)

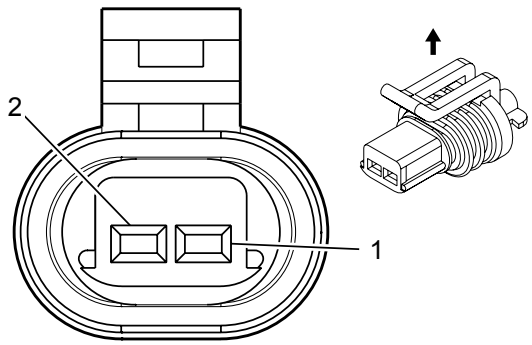

Connector Part Information

Harness Type: Chassis

OEM Connector: 15336024

Service Connector: 88987993

Description: 2-Way F 150 GT Series, Sealed (BK)

Terminal Part Information

Terminal Type ID	Terminated Lead	Diagnostic Test Probe	Terminal Removal Tool	Service Terminal	Tray	Core Crimp	Insulation Crimp
I	Not Required	J-35616-14 (GN)	Not Required	Not Required	Not Required	Not Required	Not Required

B20 Brake Fluid Level Switch (LCV/LFX)

Pin	Size	Color	Circuit	Function	Terminal Type ID	Option
1	0.5	BK/WH	551	Signal Ground	I	—
2	0.5	L-GN/GY	333	Brake Fluid Level Sensor Signal	I	—

B20 Brake Fluid Level Switch (LWN)

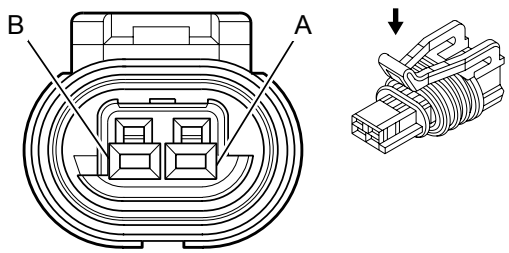

Connector Part Information

Harness Type: Chassis

OEM Connector: 15449028

Service Connector: 88987993

Description: 2-Way F 150 GT Series, Sealed (BK)

Terminal Part Information

Terminal Type ID	Terminated Lead	Diagnostic Test Probe	Terminal Removal Tool	Service Terminal	Tray	Core Crimp	Insulation Crimp
I	Not Required	J-35616-14 (GN)	Not Required	Not Required	Not Required	Not Required	Not Required

B20 Brake Fluid Level Switch (LWN)

Pin	Size	Color	Circuit	Function	Terminal Type ID	Option
A	0.5	BK/WH	551	Signal Ground	I	—
B	0.5	L-GN/GY	333	Brake Fluid Level Sensor Signal	I	—

B22 Brake Pedal Position Sensor (MYB)

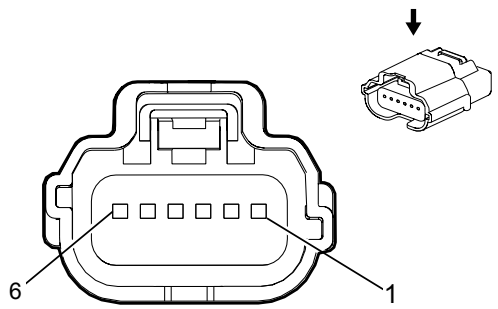

Connector Part Information

Harness Type: Body

OEM Connector: 31404-6810

Service Connector: 19304011

Description: 6-Way F 64 Series, Sealed (NA)

Terminal Part Information

Terminal Type ID	Terminated Lead	Diagnostic Test Probe	Terminal Removal Tool	Service Terminal	Tray	Core Crimp	Insulation Crimp
I	Not Required	J-35616-64B (LT BU)	Not Required	Not Required	Not Required	Not Required	Not Required

B22 Brake Pedal Position Sensor (MYB)

Pin	Size	Color	Circuit	Function	Terminal Type ID	Option
1	0.5	BK/BN	5360	Brake Apply Sensor Low Reference	I	—
2	0.5	WH	5359	Brake Apply Sensor Control	I	—
3	0.5	L-BU/YE	5361	Brake Apply Sensor Signal	I	—
4	0.5	WH/L-GN	5380	Brake Position Sensor Signal	I	—
5	0.5	BK/YE	5382	Brake Position Sensor Low Reference	I	—
6	0.5	WH/RD	5381	Brake Position Sensor 5 Volt Reference	I	—

B22 Brake Pedal Position Sensor (N8D)

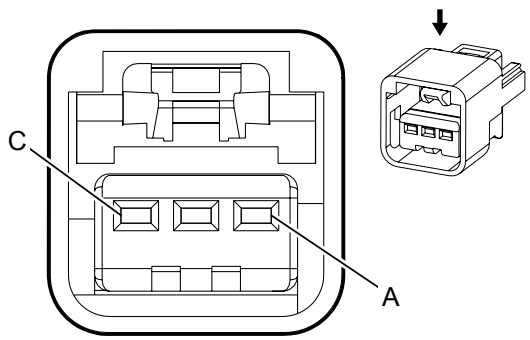

Connector Part Information

Harness Type: Body

OEM Connector: 15332132

Service Connector: 88953364

Description: 3-Way F 150 GT Series (BK)

Terminal Part Information

Terminal Type ID	Terminated Lead	Diagnostic Test Probe	Terminal Removal Tool	Service Terminal	Tray	Core Crimp	Insulation Crimp
I	Not Required	J-35616-14 (GN)	Not Required	Not Required	Not Required	Not Required	Not Required

B22 Brake Pedal Position Sensor (N8D)

Pin	Size	Color	Circuit	Function	Terminal Type ID	Option
A	0.5	WH	5359	Brake Apply Sensor Control	I	—
B	0.5	L-BU/YE	5361	Brake Apply Sensor Signal	I	—
C	0.5	BK/BN	5360	Brake Apply Sensor Low Reference	I	—

B23 Camshaft Position Sensor (LWN)

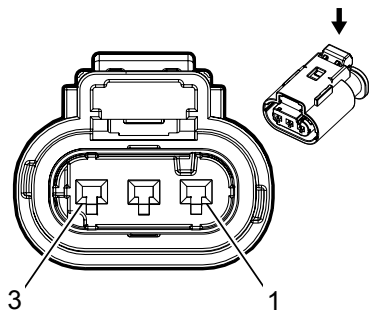

Connector Part Information

Harness Type: Engine

OEM Connector: 13503570

Service Connector: 19299690

Description: 3-Way F 1.2 MLK Series, Sealed (BK)

Terminal Part Information

Terminal Type ID	Terminated Lead	Diagnostic Test Probe	Terminal Removal Tool	Service Terminal	Tray	Core Crimp	Insulation Crimp
I	Not Required	J-35616-16 (LT GN)	Not Required	Not Required	Not Required	Not Required	Not Required

B23 Camshaft Position Sensor (LWN)

Pin	Size	Color	Circuit	Function	Terminal Type ID	Option
1	0.5	GY/L-BU	5300	Camshaft Position Intake Sensor Control (1)	I	—
2	0.5	BK/L-GN	5301	Camshaft Position Intake Sensor Low Reference (1)	I	—
3	0.5	YE/VT	5275	Camshaft Position Intake Sensor (1)	I	—

B23A Camshaft Position Sensor - Bank 1 Exhaust (LFX)

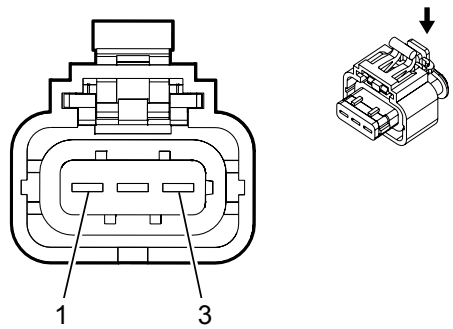

Connector Part Information

Harness Type: Engine

OEM Connector: 1928405528

Service Connector: 13384372

Description: 3-Way F 2.8 Series, Sealed (BK with BU Lock)

Terminal Part Information

Terminal Type ID	Terminated Lead	Diagnostic Test Probe	Terminal Removal Tool	Service Terminal	Tray	Core Crimp	Insulation Crimp
I	Not Required	J-35616-35 (VT)	Not Required	Not Required	Not Required	Not Required	Not Required

B23A Camshaft Position Sensor - Bank 1 Exhaust (LFX)

Pin	Size	Color	Circuit	Function	Terminal Type ID	Option
1	0.5	BK/GY	5296	Camshaft Position Exhaust Sensor Low Reference (1)	I	—
2	0.5	VT/BK	5273	Camshaft Position Exhaust Sensor (1)	I	—
3	0.5	GY/YE	5297	Camshaft Position Exhaust Sensor Control (1)	I	—

B23B Camshaft Position Sensor - Bank 1 Intake (LFX)

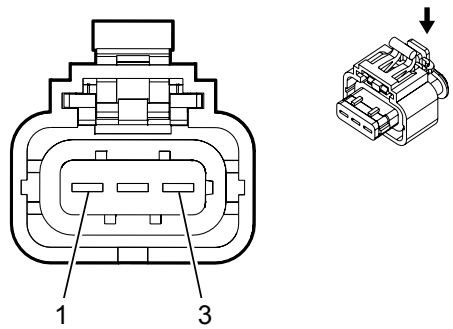

Connector Part Information

Harness Type: Engine

OEM Connector: 1928405528

Service Connector: 13384372

Description: 3-Way F 2.8 Series, Sealed (BK with BU Lock)

Terminal Part Information

Terminal Type ID	Terminated Lead	Diagnostic Test Probe	Terminal Removal Tool	Service Terminal	Tray	Core Crimp	Insulation Crimp
I	Not Required	J-35616-35 (VT)	Not Required	Not Required	Not Required	Not Required	Not Required

B23B Camshaft Position Sensor - Bank 1 Intake (LFX)

Pin	Size	Color	Circuit	Function	Terminal Type ID	Option
1	0.5	BK/L-GN	5301	Camshaft Position Intake Sensor Low Reference (1)	I	—
2	0.5	YE/VT	5275	Camshaft Position Intake Sensor (1)	I	—
3	0.5	GY/L-BU	5300	Camshaft Position Intake Sensor Control (1)	I	—

B23C Camshaft Position Sensor - Bank 2 Exhaust (LFX)

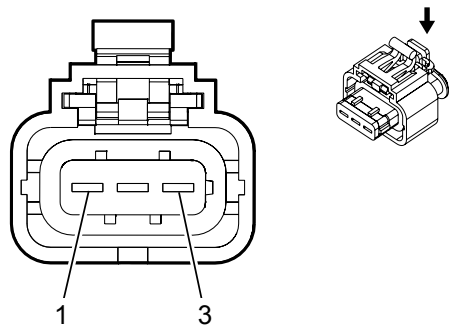

Connector Part Information

Harness Type: Engine

OEM Connector: 1928405528

Service Connector: 13384372

Description: 3-Way F 2.8 Series, Sealed (BK with BU Lock)

Terminal Part Information

Terminal Type ID	Terminated Lead	Diagnostic Test Probe	Terminal Removal Tool	Service Terminal	Tray	Core Crimp	Insulation Crimp
I	Not Required	J-35616-35 (VT)	Not Required	Not Required	Not Required	Not Required	Not Required

B23C Camshaft Position Sensor - Bank 2 Exhaust (LFX)

Pin	Size	Color	Circuit	Function	Terminal Type ID	Option
1	0.5	BK/BN	5299	Camshaft Position Exhaust Sensor Low Reference (2)	I	—
2	0.5	VT/L-BU	5274	Camshaft Position Exhaust Sensor (2)	I	—
3	0.5	L-GN/BN	5298	Camshaft Position Exhaust Sensor Control (2)	I	—

B23D Camshaft Position Sensor - Bank 2 Intake (LFX)

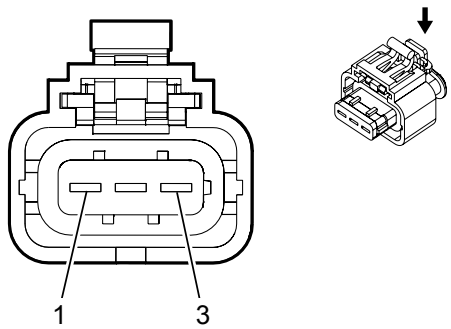

Connector Part Information

Harness Type: Engine

OEM Connector: 1928405528

Service Connector: 13384372

Description: 3-Way F 2.8 Series, Sealed (BK with BU Lock)

Terminal Part Information

Terminal Type ID	Terminated Lead	Diagnostic Test Probe	Terminal Removal Tool	Service Terminal	Tray	Core Crimp	Insulation Crimp
I	Not Required	J-35616-35 (VT)	Not Required	Not Required	Not Required	Not Required	Not Required

B23D Camshaft Position Sensor - Bank 2 Intake (LFX)

Pin	Size	Color	Circuit	Function	Terminal Type ID	Option
1	0.5	BK/VT	5303	Camshaft Position Intake Sensor Low Reference (2)	I	—
2	0.5	YE	5276	Camshaft Position Intake Sensor (2)	I	—
3	0.5	WH/L-BU	5302	Camshaft Position Intake Sensor Control (2)	I	—

B23E Camshaft Position Sensor - Exhaust (LCV)

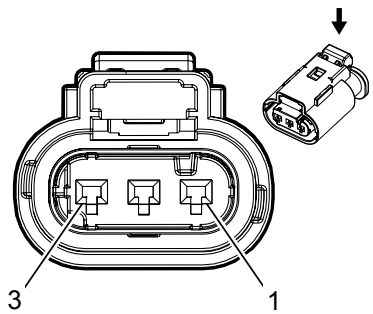

Connector Part Information

Harness Type: Engine

OEM Connector: 13503570

Service Connector: 19299690

Description: 3-Way F 1.2 MLK Series, Sealed (BK)

Terminal Part Information

Terminal Type ID	Terminated Lead	Diagnostic Test Probe	Terminal Removal Tool	Service Terminal	Tray	Core Crimp	Insulation Crimp
I	Not Required	J-35616-16 (LT GN)	Not Required	Not Required	Not Required	Not Required	Not Required

B23E Camshaft Position Sensor - Exhaust (LCV)

Pin	Size	Color	Circuit	Function	Terminal Type ID	Option
1	0.5	GY/YE	5297	Camshaft Position Exhaust Sensor Control (1)	I	—
2	0.5	BK/GY	5296	Camshaft Position Exhaust Sensor Low Reference (1)	I	—
3	0.5	VT/BK	5273	Camshaft Position Exhaust Sensor (1)	I	—

B23F Camshaft Position Sensor - Intake (LCV)

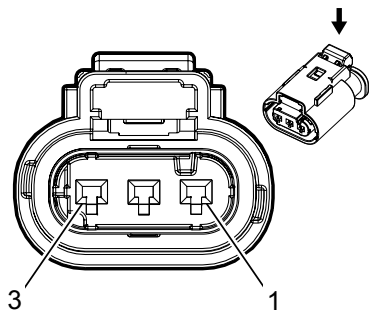

Connector Part Information

Harness Type: Engine

OEM Connector: 13503570

Service Connector: 19299690

Description: 3-Way F 1.2 MLK Series, Sealed (BK)

Terminal Part Information

Terminal Type ID	Terminated Lead	Diagnostic Test Probe	Terminal Removal Tool	Service Terminal	Tray	Core Crimp	Insulation Crimp
I	Not Required	J-35616-16 (LT GN)	Not Required	Not Required	Not Required	Not Required	Not Required

B23F Camshaft Position Sensor - Intake (LCV)

Pin	Size	Color	Circuit	Function	Terminal Type ID	Option
1	0.5	GY/L-BU	5300	Camshaft Position Intake Sensor Control (1)	I	—
2	0.5	BK/L-GN	5301	Camshaft Position Intake Sensor Low Reference (1)	I	—
3	0.5	YE/VT	5275	Camshaft Position Intake Sensor (1)	I	—

B24 Cellular Phone Microphone (UE1)

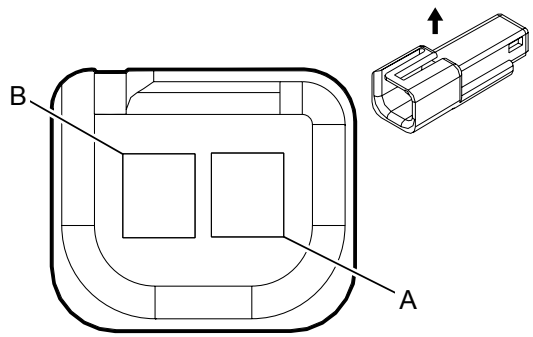

Connector Part Information

Harness Type: Headliner

OEM Connector: 12047663

Service Connector: 13584278

Description: 2-Way M 150 Metri-Pack Series (BK)

Terminal Part Information

Terminal Type ID	Terminated Lead	Diagnostic Test Probe	Terminal Removal Tool	Service Terminal	Tray	Core Crimp	Insulation Crimp
I	Not Required	J-35616-3 (GY)	Not Required	Not Required	Not Required	Not Required	Not Required

B24 Cellular Phone Microphone (UE1)

Pin	Size	Color	Circuit	Function	Terminal Type ID	Option
A	0.35	BK/BN	654	Cellular Telephone Microphone Low Reference	I	—
B	0.35	L-BU	655	Cellular Telephone Microphone Signal	I	—

B25B Clutch Pedal Position Sensor (N8D)

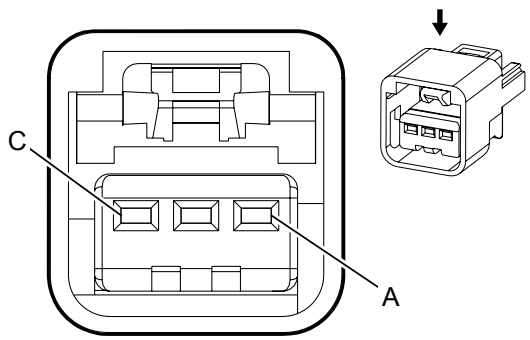

Connector Part Information

Harness Type: Body

OEM Connector: 15332132

Service Connector: 88953364

Description: 3-Way F 150 GT Series (BK)

Terminal Part Information

Terminal Type ID	Terminated Lead	Diagnostic Test Probe	Terminal Removal Tool	Service Terminal	Tray	Core Crimp	Insulation Crimp
I	Not Required	J-35616-14 (GN)	Not Required	Not Required	Not Required	Not Required	Not Required

B25B Clutch Pedal Position Sensor (N8D)

Pin	Size	Color	Circuit	Function	Terminal Type ID	Option
A	0.5	GY/RD	6109	Clutch Apply Sensor 5 Volt Reference	I	—
B	0.5	YE	6111	Clutch Apply Sensor Signal	I	—
C	0.5	BK/GY	6110	Clutch Apply Sensor Low Reference	I	—

B26 Crankshaft Position Sensor (LCV)

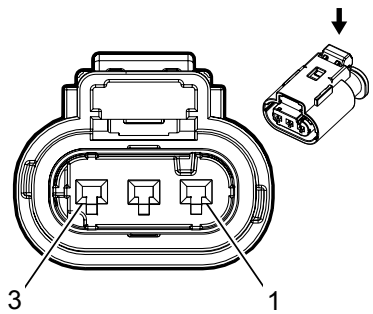

Connector Part Information

Harness Type: Engine

OEM Connector: 13503570

Service Connector: 19299690

Description: 3-Way F 1.2 MLK Series, Sealed (BK)

Terminal Part Information

Terminal Type ID	Terminated Lead	Diagnostic Test Probe	Terminal Removal Tool	Service Terminal	Tray	Core Crimp	Insulation Crimp
I	Not Required	J-35616-16 (LT GN)	Not Required	Not Required	Not Required	Not Required	Not Required

B26 Crankshaft Position Sensor (LCV)

Pin	Size	Color	Circuit	Function	Terminal Type ID	Option
1	0.5	VT/L-BU	6270	Crankshaft 60X Sensor 5 Volt Reference	I	—
2	0.5	BK/VT	6272	Crankshaft 60X Sensor Low Reference	I	—
3	0.5	L-GN	6271	Crankshaft 60X Sensor Signal	I	—

B26 Crankshaft Position Sensor (LFX)

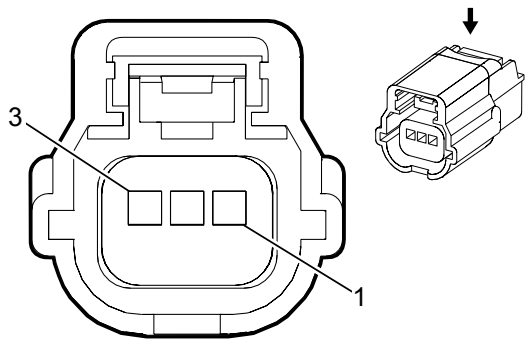

Connector Part Information

Harness Type: Engine

OEM Connector: 31403-3710

Service Connector: 88988337

Description: 3-Way F 0.64 Series, Sealed (BK)

Terminal Part Information

Terminal Type ID	Terminated Lead	Diagnostic Test Probe	Terminal Removal Tool	Service Terminal	Tray	Core Crimp	Insulation Crimp
I	Not Required	J-35616-64B (LT BU)	Not Required	Not Required	Not Required	Not Required	Not Required

B26 Crankshaft Position Sensor (LFX)

Pin	Size	Color	Circuit	Function	Terminal Type ID	Option
1	0.5	BK/VT	6272	Crankshaft 60X Sensor Low Reference	I	—
2	0.5	L-GN	6271	Crankshaft 60X Sensor Signal	I	—
3	0.5	VT/L-BU	6270	Crankshaft 60X Sensor 5 Volt Reference	I	—

B26 Crankshaft Position Sensor (LWN)

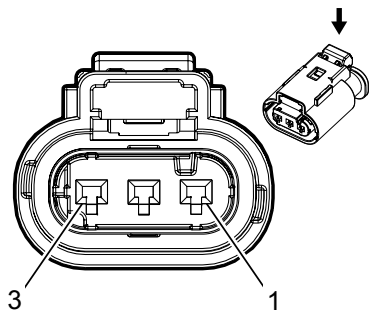

Connector Part Information

Harness Type: Engine

OEM Connector: 13503570

Service Connector: 19299690

Description: 3-Way F 1.2 MLK Series, Sealed (BK)

Terminal Part Information

Terminal Type ID	Terminated Lead	Diagnostic Test Probe	Terminal Removal Tool	Service Terminal	Tray	Core Crimp	Insulation Crimp
I	Not Required	J-35616-16 (LT GN)	Not Required	Not Required	Not Required	Not Required	Not Required

B26 Crankshaft Position Sensor (LWN)

Pin	Size	Color	Circuit	Function	Terminal Type ID	Option
1	0.5	VT/L-BU	6270	Crankshaft 60X Sensor 5 Volt Reference	I	—
2	0.5	BK/VT	6272	Crankshaft 60X Sensor Low Reference	I	—
3	0.5	L-GN	6271	Crankshaft 60X Sensor Signal	I	—

B34 Engine Coolant Temperature Sensor (LCV)

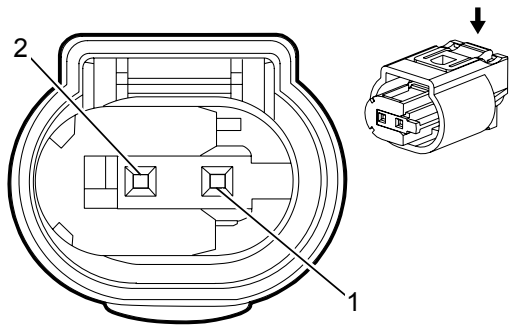

Connector Part Information

Harness Type: Engine

OEM Connector: 1-967644-1

Service Connector: 13576533

Description: 2-Way F 0.64 Micro-Quadlock Series, Sealed (BK with GN Terminal Position Assurance)

Terminal Part Information

Terminal Type ID	Terminated Lead	Diagnostic Test Probe	Terminal Removal Tool	Service Terminal	Tray	Core Crimp	Insulation Crimp
I	Not Required	J-35616-64B (LT BU)	Not Required	Not Required	Not Required	Not Required	Not Required

B34 Engine Coolant Temperature Sensor (LCV)

Pin	Size	Color	Circuit	Function	Terminal Type ID	Option
1	0.5	L-BU	410	Engine Coolant Temperature Sensor Signal	I	—
2	0.5	BK/BN	2761	Coolant Temperature Sensor Low Reference	I	—

B34 Engine Coolant Temperature Sensor (LFX)

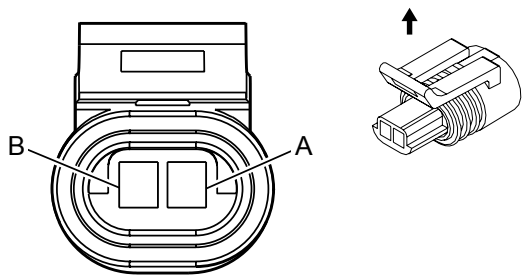

Connector Part Information

Harness Type: Engine

OEM Connector: 13584122

Service Connector: 13585857

Description: 2-Way F 150.2 Metri-Pack Series, Sealed, Pull To Seat (GY)

Terminal Part Information

Terminal Type ID	Terminated Lead	Diagnostic Test Probe	Terminal Removal Tool	Service Terminal	Tray	Core Crimp	Insulation Crimp
I	Not Required	J-35616-14 (GN)	Not Required	Not Required	Not Required	Not Required	Not Required

B34 Engine Coolant Temperature Sensor (LFX)

Pin	Size	Color	Circuit	Function	Terminal Type ID	Option
A	0.5	BK/BN	2761	Coolant Temperature Sensor Low Reference	I	—
B	0.5	L-BU	410	Engine Coolant Temperature Sensor Signal	I	—

B34 Engine Coolant Temperature Sensor (LWN)

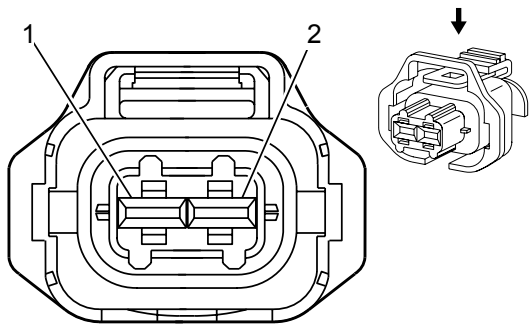

Connector Part Information

Harness Type: Engine

OEM Connector: 13115612

Service Connector: 88953309

Description: 2-Way F 2.8 Junior Power Timer Series, Sealed (BK)

Terminal Part Information

Terminal Type ID	Terminated Lead	Diagnostic Test Probe	Terminal Removal Tool	Service Terminal	Tray	Core Crimp	Insulation Crimp
I	Not Required	J-35616-35 (VT)	Not Required	Not Required	Not Required	Not Required	Not Required

B34 Engine Coolant Temperature Sensor (LWN)

Pin	Size	Color	Circuit	Function	Terminal Type ID	Option
1	0.5	L-BU	410	Engine Coolant Temperature Sensor Signal	I	—
2	0.5	BK/BN	2761	Coolant Temperature Sensor Low Reference	I	—

B35 Engine Oil Level Switch (LCV)

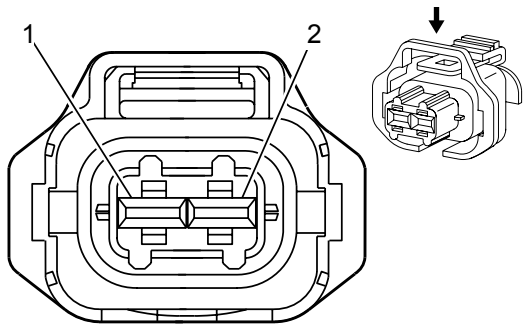

Connector Part Information

Harness Type: Engine

OEM Connector: 1928403874

Service Connector: 88988963

Description: 2-Way F Kompakt 2.8 Series, Sealed (BK)

Terminal Part Information

Terminal Type ID	Terminated Lead	Diagnostic Test Probe	Terminal Removal Tool	Service Terminal	Tray	Core Crimp	Insulation Crimp
I	Not Required	J-35616-35 (VT)	Not Required	Not Required	Not Required	Not Required	Not Required

B35 Engine Oil Level Switch (LCV)

Pin	Size	Color	Circuit	Function	Terminal Type ID	Option
1	0.5	BK/WH	1451	Signal Ground	I	—
2	0.5	BN/L-GN	1174	Oil Level Switch Signal	I	—

B35 Engine Oil Level Switch (LFX)

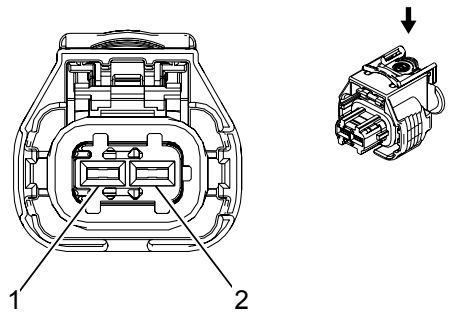

Connector Part Information

Harness Type: Engine

OEM Connector: 1928405521

Service Connector: 13384371

Description: 2-Way F 2.8 Series, Sealed (BK)

Terminal Part Information

Terminal Type ID	Terminated Lead	Diagnostic Test Probe	Terminal Removal Tool	Service Terminal	Tray	Core Crimp	Insulation Crimp
I	Not Required	J-35616-35 (VT)	Not Required	Not Required	Not Required	Not Required	Not Required

B35 Engine Oil Level Switch (LFX)

Pin	Size	Color	Circuit	Function	Terminal Type ID	Option
1	0.5	BK/WH	1451	Signal Ground	I	—
2	0.5	BN/L-GN	1174	Oil Level Switch Signal	I	—

B35 Engine Oil Level Switch (LWN)

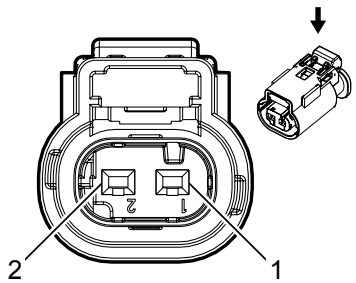

Connector Part Information

Harness Type: Engine

OEM Connector: 10010337

Service Connector: 13587326

Description: 2-Way F 1.2 MLK Series, Sealed (BK)

Terminal Part Information

Terminal Type ID	Terminated Lead	Diagnostic Test Probe	Terminal Removal Tool	Service Terminal	Tray	Core Crimp	Insulation Crimp
I	Not Required	J-35616-16 (LT GN)	Not Required	Not Required	Not Required	Not Required	Not Required

B35 Engine Oil Level Switch (LWN)

Pin	Size	Color	Circuit	Function	Terminal Type ID	Option
1	0.5	BN/L-GN	1174	Oil Level Switch Signal	I	—
2	0.75	BK/WH	151	Signal Ground	I	—

B37B Engine Oil Pressure Sensor (LCV)

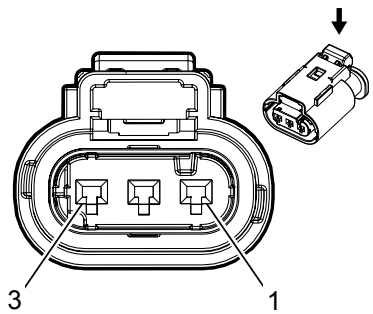

Connector Part Information

Harness Type: Engine

OEM Connector: 13503570

Service Connector: 19299690

Description: 3-Way F 1.2 MLK Series, Sealed (BK)

Terminal Part Information

Terminal Type ID	Terminated Lead	Diagnostic Test Probe	Terminal Removal Tool	Service Terminal	Tray	Core Crimp	Insulation Crimp
I	Not Required	J-35616-16 (LT GN)	Not Required	Not Required	Not Required	Not Required	Not Required

B37B Engine Oil Pressure Sensor (LCV)

Pin	Size	Color	Circuit	Function	Terminal Type ID	Option
1	0.5	YE/BN	331	Oil Pressure Sensor Signal	I	—
2	0.5	BK/VT	2755	Oil Pressure Sensor Low Reference	I	—
3	0.5	WH/RD	2705	Oil Pressure Sensor 5 Volt Reference	I	—

B37B Engine Oil Pressure Sensor (LFX)

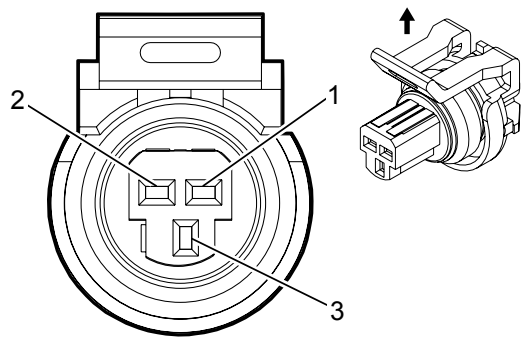

Connector Part Information

Harness Type: Engine

OEM Connector: 13532244

Service Connector: 88988301

Description: 3-Way F 150 GT Series, Sealed (BK)

Terminal Part Information

Terminal Type ID	Terminated Lead	Diagnostic Test Probe	Terminal Removal Tool	Service Terminal	Tray	Core Crimp	Insulation Crimp
I	Not Required	J-35616-14 (GN)	Not Required	Not Required	Not Required	Not Required	Not Required

B37B Engine Oil Pressure Sensor (LFX)

Pin	Size	Color	Circuit	Function	Terminal Type ID	Option
1	0.5	BK/VT	2755	Oil Pressure Sensor Low Reference	I	—
2	0.5	WH/RD	2705	Oil Pressure Sensor 5 Volt Reference	I	—
3	0.5	YE/BN	331	Oil Pressure Sensor Signal	I	—

B37B Engine Oil Pressure Sensor (LWN)

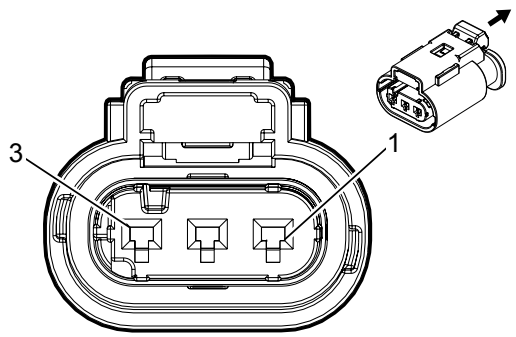

Connector Part Information

Harness Type: Engine

OEM Connector: 10010344

Service Connector: 19301717

Description: 3-Way F 1.2 MLK Series, Sealed (BK)

Terminal Part Information

Terminal Type ID	Terminated Lead	Diagnostic Test Probe	Terminal Removal Tool	Service Terminal	Tray	Core Crimp	Insulation Crimp
I	Not Required	J-35616-16 (LT GN)	Not Required	Not Required	Not Required	Not Required	Not Required

B37B Engine Oil Pressure Sensor (LWN)

Pin	Size	Color	Circuit	Function	Terminal Type ID	Option
1	0.5	YE/BN	331	Oil Pressure Sensor Signal	I	—
2	0.5	BK/VT	2755	Oil Pressure Sensor Low Reference	I	—
3	0.5	WH/RD	2705	Oil Pressure Sensor 5 Volt Reference	I	—

B39 A/C Evaporator Temperature Sensor

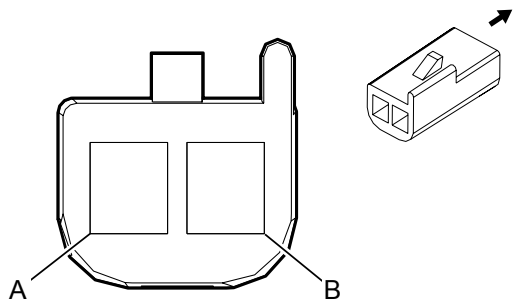

Connector Part Information

Harness Type: HVAC

OEM Connector: 12047662

Service Connector: 12085535

Description: 2-Way F 150 Metri Pack Series (BK)

Terminal Part Information

Terminal Type ID	Terminated Lead	Diagnostic Test Probe	Terminal Removal Tool	Service Terminal	Tray	Core Crimp	Insulation Crimp
I	13575464	J-35616-14 (GN)	J-38125-12A	15326030	2	E	C

B39 A/C Evaporator Temperature Sensor

Pin	Size	Color	Circuit	Function	Terminal Type ID	Option
A	0.35	GY	6137	EVAP Core Temperature Sensor Signal	I	-
B	0.35	BK/YE	407	Air Temperature Door Control Low Reference	I	-

B47 Fuel Pressure Sensor (LCV/LFX)

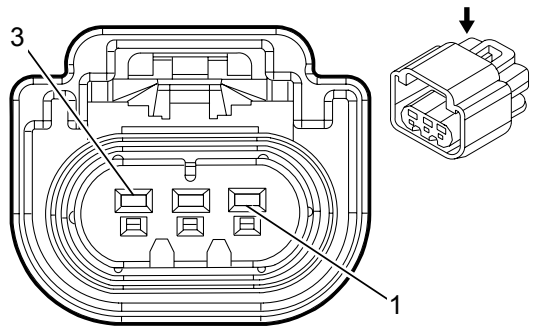

Connector Part Information

Harness Type: Chassis

OEM Connector: 13511131

Service Connector: 19168035

Description: 3-Way F 150 GT Series, Sealed (BK)

Terminal Part Information

Terminal Type ID	Terminated Lead	Diagnostic Test Probe	Terminal Removal Tool	Service Terminal	Tray	Core Crimp	Insulation Crimp
I	Not Required	J-35616-14 (GN)	Not Required	Not Required	Not Required	Not Required	Not Required

B47 Fuel Pressure Sensor (LCV/LFX)

Pin	Size	Color	Circuit	Function	Terminal Type ID	Option
1	0.5	L-BU/WH	7446	Fuel Line Pressure Sensor Signal	I	—
2	0.5	BK/YE	7447	Fuel Line Pressure Sensor Low Reference	I	—
3	0.5	BN/RD	7445	Fuel Line Pressure Sensor 5 Volt Reference	I	—

B47B Fuel Rail Pressure Sensor (LCV)

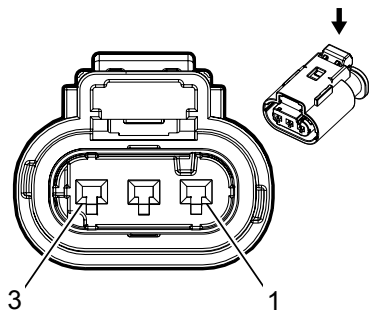

Connector Part Information

Harness Type: Fuel Rail

OEM Connector: 13503570

Service Connector: 19299690

Description: 3-Way F 1.2 MLK Series, Sealed (BK)

Terminal Part Information

Terminal Type ID	Terminated Lead	Diagnostic Test Probe	Terminal Removal Tool	Service Terminal	Tray	Core Crimp	Insulation Crimp
I	Not Available	Not Available	Not Available	Not Available	Not Available	Not Available	Not Available

B47B Fuel Rail Pressure Sensor (LCV)

Pin	Size	Color	Circuit	Function	Terminal Type ID	Option
1	0.5	BK/GN	2919	Fuel Rail Pressure Sensor Low Reference	I	-
2	0.5	BU/WH	2918	Fuel Rail Pressure Sensor Signal	I	-
3	0.5	BN/RD	2917	Fuel Rail Pressure Sensor (5) Volt Reference	I	-

B47B Fuel Rail Pressure Sensor (LFX)

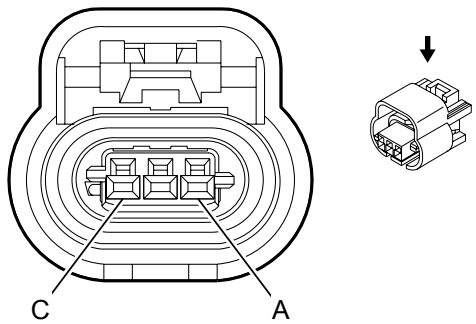

Connector Part Information

Harness Type: Bank 2 Fuel Rail

OEM Connector: 15336000

Service Connector: Service by Harness - See Part Catalog

Description: 3-Way F 150 GT Series, Sealed (BK)

Terminal Part Information

Terminal Type ID	Terminated Lead	Diagnostic Test Probe	Terminal Removal Tool	Service Terminal	Tray	Core Crimp	Insulation Crimp
I	Not Available	Not Available	Not Available	Not Available	Not Available	Not Available	Not Available

B47B Fuel Rail Pressure Sensor (LFX)

Pin	Size	Color	Circuit	Function	Terminal Type ID	Option
A	0.5	BN/RD	2917	Fuel Rail Pressure Sensor (5) Volt Reference	I	-
B	0.5	BU/WH	2918	Fuel Rail Pressure Sensor Signal	I	-
C	0.5	BK/GN	2919	Fuel Rail Pressure Sensor Low Reference	I	-

B47B Fuel Rail Pressure Sensor (LWN)

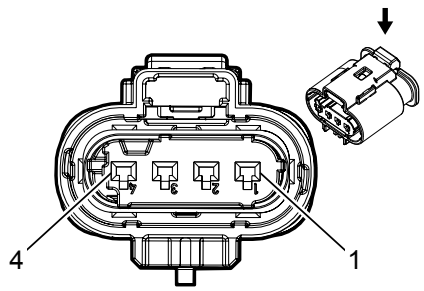

Connector Part Information

Harness Type: Engine

OEM Connector: 10010346

Service Connector: 13587299

Description: 4-Way F 1.2 MLK Series, Sealed (BK)

Terminal Part Information

Terminal Type ID	Terminated Lead	Diagnostic Test Probe	Terminal Removal Tool	Service Terminal	Tray	Core Crimp	Insulation Crimp
I	Not Required	J-35616-16 (LT GN)	Not Required	Not Required	Not Required	Not Required	Not Required

B47B Fuel Rail Pressure Sensor (LWN)

Pin	Size	Color	Circuit	Function	Terminal Type ID	Option
1	0.5	BN/RD	2917	Fuel Rail Pressure Sensor 5 Volt Reference	I	—
2	0.5	BN/YE	2161	Fuel Rail Pressure Sensor 2 Signal	I	—
3	0.5	BK/L-GN	2919	Fuel Rail Pressure Sensor Low Reference	I	—
4	0.5	L-BU/WH	2918	Fuel Rail Pressure Sensor Signal	I	—

B52A Heated Oxygen Sensor 1 (LCV)

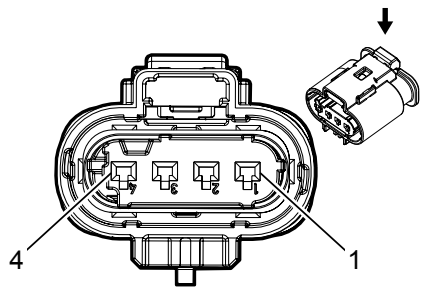

Connector Part Information

Harness Type: Engine

OEM Connector: 10010346

Service Connector: 13587299

Description: 4-Way F 1.2 MLK Series, Sealed (BK)

Terminal Part Information

Terminal Type ID	Terminated Lead	Diagnostic Test Probe	Terminal Removal Tool	Service Terminal	Tray	Core Crimp	Insulation Crimp
I	Not Required	J-35616-16 (LT GN)	Not Required	Not Required	Not Required	Not Required	Not Required

B52A Heated Oxygen Sensor 1 (LCV)

Pin	Size	Color	Circuit	Function	Terminal Type ID	Option
1	0.5	GY/WH	3113	Heated Oxygen Sensor Heater Low Control Bank 1 Sensor (1)	I	—
2	0.5	VT/L-BU	5293	Powertrain Main Relay Fused Supply (4)	I	—
3	0.5	WH/BK	3111	Heated Oxygen Sensor Low Signal Bank 1 Sensor (1)	I	—
4	0.5	VT/GY	3110	Heated Oxygen Sensor High Signal Bank 1 Sensor (1)	I	—

B52B Heated Oxygen Sensor 2 (LCV)

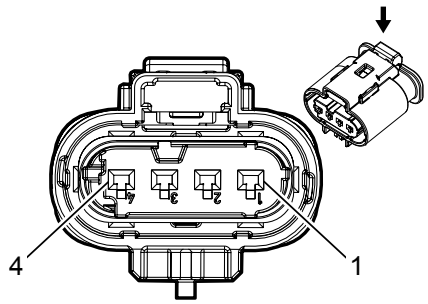

Connector Part Information

Harness Type: Engine

OEM Connector: 10010347

Service Connector: 13587298

Description: 4-Way F 1.2 MLK Series, Sealed (L-GY)

Terminal Part Information

Terminal Type ID	Terminated Lead	Diagnostic Test Probe	Terminal Removal Tool	Service Terminal	Tray	Core Crimp	Insulation Crimp
I	Not Required	J-35616-16 (LT GN)	Not Required	Not Required	Not Required	Not Required	Not Required

B52B Heated Oxygen Sensor 2 (LCV)

Pin	Size	Color	Circuit	Function	Terminal Type ID	Option
1	0.5	GY/WH	3122	Heated Oxygen Sensor Heater Low Control Bank 1 Sensor (2)	I	—
2	0.5	VT/L-BU	5294	Powertrain Main Relay Fused Supply (5)	I	—
3	0.5	WH/YE	3121	Heated Oxygen Sensor Low Signal Bank 1 Sensor (2)	I	—
4	0.5	VT/L-BU	3120	Heated Oxygen Sensor High Signal Bank 1 Sensor (2)	I	—

B52C Heated Oxygen Sensor - Bank 1 Sensor 1 (LFX)

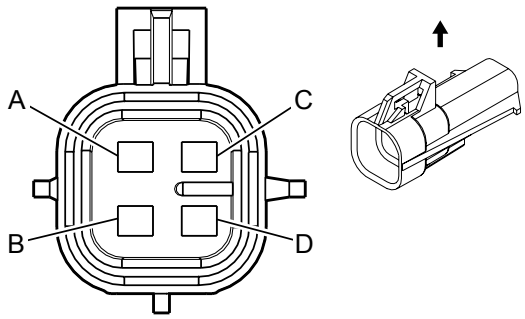

Connector Part Information

Harness Type: Engine

OEM Connector: 12160825

Service Connector: 15305801

Description: 4-Way M 150 Metri-Pack Series, Sealed (BK)

Terminal Part Information

Terminal Type ID	Terminated Lead	Diagnostic Test Probe	Terminal Removal Tool	Service Terminal	Tray	Core Crimp	Insulation Crimp
I	Not Required	J-35616-3 (GY)	Not Required	Not Required	Not Required	Not Required	Not Required

B52C Heated Oxygen Sensor - Bank 1 Sensor 1 (LFX)

Pin	Size	Color	Circuit	Function	Terminal Type ID	Option
A	0.5	WH/BK	3111	Heated Oxygen Sensor Low Signal Bank 1 Sensor (1)	I	—
B	0.5	VT/GY	3110	Heated Oxygen Sensor High Signal Bank 1 Sensor (1)	I	—
C	0.5	GY/WH	3113	Heated Oxygen Sensor Heater Low Control Bank 1 Sensor (1)	I	—
D	0.5	VT/L-BU	5293	Powertrain Main Relay Fused Supply (4)	I	—

B52D Heated Oxygen Sensor - Bank 1 Sensor 2 (LFX)

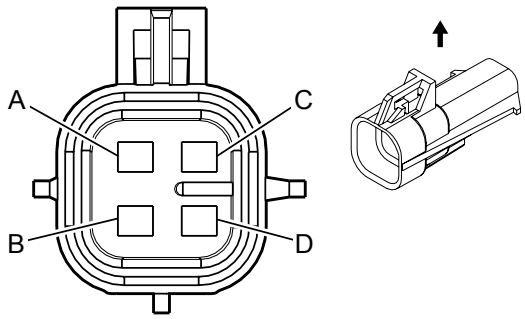

Connector Part Information

Harness Type: Engine

OEM Connector: 12160825

Service Connector: 15305801

Description: 4-Way M 150 Metri-Pack Series, Sealed (BK)

Terminal Part Information

Terminal Type ID	Terminated Lead	Diagnostic Test Probe	Terminal Removal Tool	Service Terminal	Tray	Core Crimp	Insulation Crimp
I	Not Required	J-35616-3 (GY)	Not Required	Not Required	Not Required	Not Required	Not Required

B52D Heated Oxygen Sensor - Bank 1 Sensor 2 (LFX)

Pin	Size	Color	Circuit	Function	Terminal Type ID	Option
A	0.5	WH/YE	3121	Heated Oxygen Sensor Low Signal Bank 1 Sensor (2)	I	—
B	0.5	VT/L-BU	3120	Heated Oxygen Sensor High Signal Bank 1 Sensor (2)	I	—
C	0.5	GY/WH	3122	Heated Oxygen Sensor Heater Low Control Bank 1 Sensor (2)	I	—
D	0.5	VT/L-BU	5294	Powertrain Main Relay Fused Supply (5)	I	—

B52E Heated Oxygen Sensor - Bank 2 Sensor 1 (LFX)

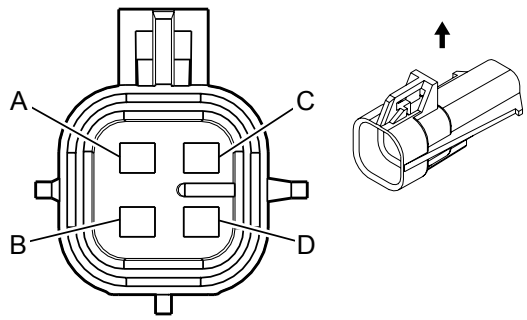

Connector Part Information

Harness Type: Engine

OEM Connector: 12160825

Service Connector: 15305801

Description: 4-Way M 150 Metri-Pack Series, Sealed (BK)

Terminal Part Information

Terminal Type ID	Terminated Lead	Diagnostic Test Probe	Terminal Removal Tool	Service Terminal	Tray	Core Crimp	Insulation Crimp
I	Not Required	J-35616-3 (GY)	Not Required	Not Required	Not Required	Not Required	Not Required

B52E Heated Oxygen Sensor - Bank 2 Sensor 1 (LFX)

Pin	Size	Color	Circuit	Function	Terminal Type ID	Option
A	0.5	YE/WH	3211	Heated Oxygen Sensor Low Signal Bank 2 Sensor (1)	I	—
B	0.5	VT/WH	3210	Heated Oxygen Sensor High Signal Bank 2 Sensor (1)	I	—
C	0.5	L-GN/YE	3212	Heated Oxygen Sensor Heater Low Control Bank 2 Sensor (1)	I	—
D	0.5	VT/L-BU	5293	Powertrain Main Relay Fused Supply (4)	I	—

B52F Heated Oxygen Sensor - Bank 2 Sensor 2 (LFX)

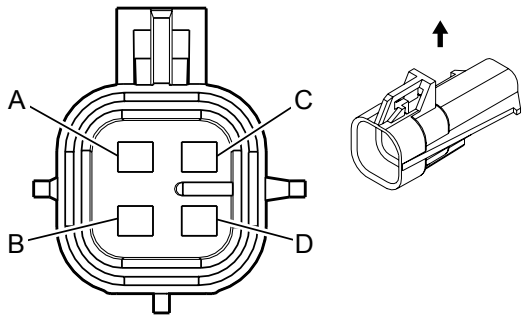

Connector Part Information

Harness Type: Engine

OEM Connector: 12160825

Service Connector: 15305801

Description: 4-Way M 150 Metri-Pack Series, Sealed (BK)

Terminal Part Information

Terminal Type ID	Terminated Lead	Diagnostic Test Probe	Terminal Removal Tool	Service Terminal	Tray	Core Crimp	Insulation Crimp
I	Not Required	J-35616-3 (GY)	Not Required	Not Required	Not Required	Not Required	Not Required

B52F Heated Oxygen Sensor - Bank 2 Sensor 2 (LFX)

Pin	Size	Color	Circuit	Function	Terminal Type ID	Option
A	0.5	YE/L-BU	3221	Heated Oxygen Sensor Low Signal Bank 2 Sensor (2)	I	—
B	0.5	VT/L-GN	3220	Heated Oxygen Sensor High Signal Bank 2 Sensor (2)	I	—
C	0.5	WH/BN	3223	Heated Oxygen Sensor Heater Low Control Bank 2 Sensor (2)	I	—
D	0.5	VT/L-BU	5294	Powertrain Main Relay Fused Supply (5)	I	—

B55 Hood Ajar Switch (UTJ)

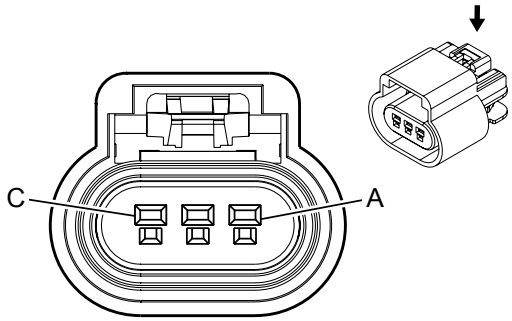

Connector Part Information

Harness Type: Forward Lamp

OEM Connector: 13519047

Service Connector: 13580871

Description: 3-Way F 150 GT Series, Sealed (BK)

Terminal Part Information

Terminal Type ID	Terminated Lead	Diagnostic Test Probe	Terminal Removal Tool	Service Terminal	Tray	Core Crimp	Insulation Crimp
I	Not Required	J-35616-14 (GN)	Not Required	Not Required	Not Required	Not Required	Not Required
I	Not Required	J-35616-14 (GN)	Not Required	Not Required	Not Required	Not Required	Not Required

B55 Hood Ajar Switch (UTJ)

Pin	Size	Color	Circuit	Function	Terminal Type ID	Option
A	—	—	—	Not Occupied	—	—
B	0.5	BN/L-GN	109	Hood Ajar Switch Signal	I	—
C	0.75	BK/WH	1251	Signal Ground	I	—

B59L Front Impact Sensor - Left

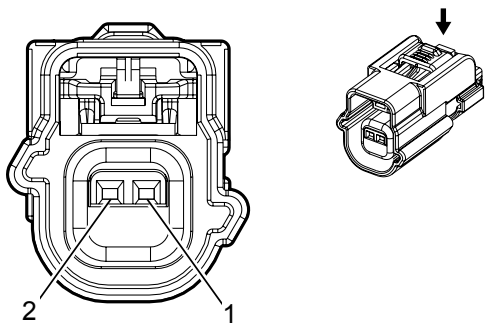

Connector Part Information

Harness Type: Forward Lamp

OEM Connector: 54390241

Service Connector: 19329742

Description: 2-Way F 0.64 Series, Sealed

Terminal Part Information

Terminal Type ID	Terminated Lead	Diagnostic Test Probe	Terminal Removal Tool	Service Terminal	Tray	Core Crimp	Insulation Crimp
I	Not Required	J-35616-64B (LT BU)	Not Required	Not Required	Not Required	Not Required	Not Required

B59L Front Impact Sensor - Left

Pin	Size	Color	Circuit	Function	Terminal Type ID	Option
1	0.5	OG/YE	354	Left Front Discriminating Sensor Signal	I	—
2	0.5	BK/OG	5045	Left Front Discriminating Sensor Low Reference	I	—

B59R Front Impact Sensor - Right

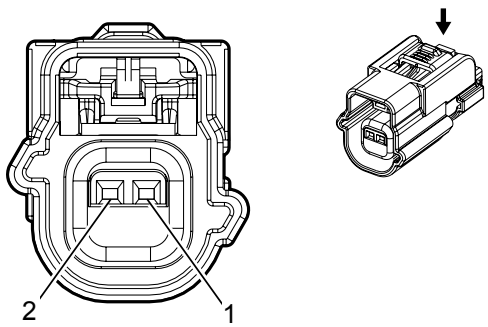

Connector Part Information

Harness Type: Forward Lamp

OEM Connector: 54390241

Service Connector: 19329742

Description: 2-Way F 0.64 Series, Sealed

Terminal Part Information

Terminal Type ID	Terminated Lead	Diagnostic Test Probe	Terminal Removal Tool	Service Terminal	Tray	Core Crimp	Insulation Crimp
I	Not Required	J-35616-64B (LT BU)	Not Required	Not Required	Not Required	Not Required	Not Required

B59R Front Impact Sensor - Right

Pin	Size	Color	Circuit	Function	Terminal Type ID	Option
1	0.5	OG/L-GN	1409	Right Front Discriminating Sensor Signal	I	—
2	0.5	BK/OG	5600	Right Front Discriminating Sensor Low Reference	I	—

B61P Seat Belt Tension Sensor - Passenger (AL0)

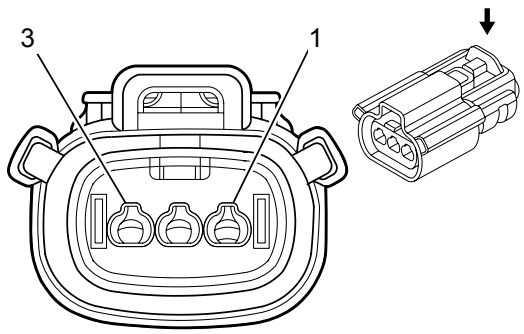

Connector Part Information

Harness Type: Passenger Seat Cushion

OEM Connector: 33471-0306

Service Connector: Service by Harness – See Part Catalog

Description: 3-Way F 1.5 Series, Sealed (BK)

Terminal Part Information

Terminal Type ID	Terminated Lead	Diagnostic Test Probe	Terminal Removal Tool	Service Terminal	Tray	Core Crimp	Insulation Crimp
I	Not Available	Not Available	Not Available	Not Available	Not Available	Not Available	Not Available

B61P Seat Belt Tension Sensor - Passenger (AL0)

Pin	Size	Color	Circuit	Function	Terminal Type ID	Option
1	0.35	L-BU/RD	5612	Passenger Seat Belt Tension Sensor Voltage Reference	I	-
2	0.35	BK/WH	2251	Signal Ground	I	-
3	0.35	VT/OG	5611	Passenger Seat Belt Tension Sensor Signal	I	-

B63LF Side Impact Sensor - Left Front

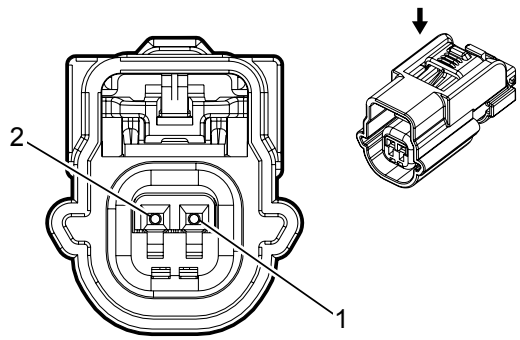

Connector Part Information

Harness Type: Driver Door

OEM Connector: 54390240

Service Connector: Service by Harness - See Part Catalog

Description: 2-Way F 0.64 Series, Sealed (L-GY)

Terminal Part Information

Terminal Type ID	Terminated Lead	Diagnostic Test Probe	Terminal Removal Tool	Service Terminal	Tray	Core Crimp	Insulation Crimp
I	Not Required	J-35616-64B (LT BU)	Not Required	Not Required	Not Required	Not Required	Not Required

B63LF Side Impact Sensor - Left Front

Pin	Size	Color	Circuit	Function	Terminal Type ID	Option
1	0.35	OG/L-GN	2132	Left Front Side Impact Sensing Module Signal	I	—
2	0.35	BK/OG	6628	Left Front Side Impact Sensing Module Low Reference	I	—

B63LR Side Impact Sensor - Left Rear

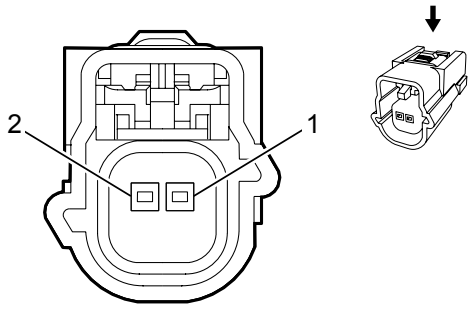

Connector Part Information

Harness Type: Body

OEM Connector: 54390242

Service Connector: 13585852

Description: 2-Way F 0.64 Series, Sealed (D-GY)

Terminal Part Information

Terminal Type ID	Terminated Lead	Diagnostic Test Probe	Terminal Removal Tool	Service Terminal	Tray	Core Crimp	Insulation Crimp
I	Not Required	J-35616-64B (LT BU)	Not Required	Not Required	Not Required	Not Required	Not Required
I	Not Required	J-35616-64B (LT BU)	Not Required	Not Required	Not Required	Not Required	Not Required

B63LR Side Impact Sensor - Left Rear

Pin	Size	Color	Circuit	Function	Terminal Type ID	Option
1	0.35	OG/L-BU	6620	Left Middle Side Impact Sensing Module Signal	I	—
2	0.35	BK/OG	6621	Left Middle Side Impact Sensing Module Low Reference	I	—

B63RF Side Impact Sensor - Right Front

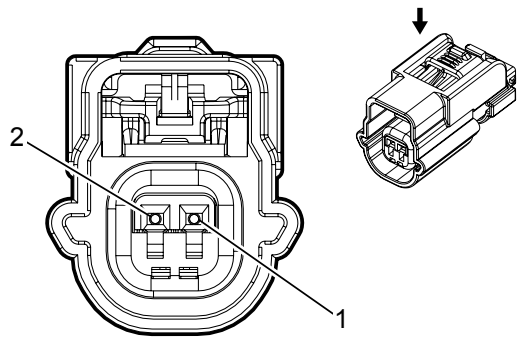

Connector Part Information

Harness Type: Passenger Door

OEM Connector: 54390240

Service Connector: Service by Harness - See Part Catalog

Description: 2-Way F 0.64 Series, Sealed (L-GY)

Terminal Part Information

Terminal Type ID	Terminated Lead	Diagnostic Test Probe	Terminal Removal Tool	Service Terminal	Tray	Core Crimp	Insulation Crimp
I	Not Required	J-35616-64B (LT BU)	Not Required	Not Required	Not Required	Not Required	Not Required

B63RF Side Impact Sensor - Right Front

Pin	Size	Color	Circuit	Function	Terminal Type ID	Option
1	0.35	BN/OG	2134	Right Front Side Impact Sensing Module Signal	I	—
2	0.35	BK/OG	6629	Right Front Side Impact Sensing Module Low Reference	I	—

B63RR Side Impact Sensor - Right Rear

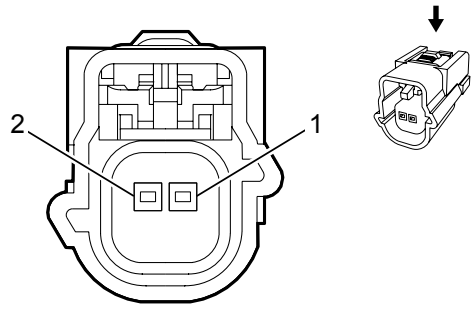

Connector Part Information

Harness Type: Body

OEM Connector: 54390242

Service Connector: 13585852

Description: 2-Way F 0.64 Series, Sealed (D-GY)

Terminal Part Information

Terminal Type ID	Terminated Lead	Diagnostic Test Probe	Terminal Removal Tool	Service Terminal	Tray	Core Crimp	Insulation Crimp
I	Not Required	J-35616-64B (LT BU)	Not Required	Not Required	Not Required	Not Required	Not Required
I	Not Required	J-35616-64B (LT BU)	Not Required	Not Required	Not Required	Not Required	Not Required

B63RR Side Impact Sensor - Right Rear

Pin	Size	Color	Circuit	Function	Terminal Type ID	Option
1	0.35	OG/VT	6624	Right Middle Side Impact Sensing Module Signal	I	—
2	0.35	BK/OG	6625	Right Middle Side Impact Sensing Module Low Reference	I	—

B65 Intake Manifold Pressure and Air Temperature Sensor (LWN)

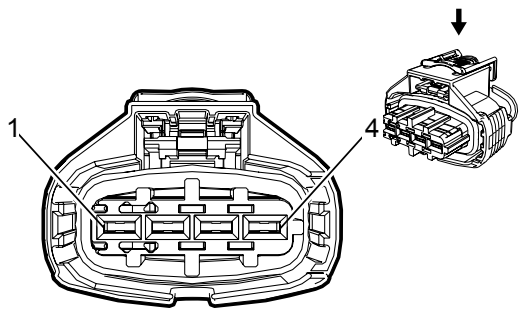

Connector Part Information

Harness Type: Intake Manifold Pressure

OEM Connector: 13343438

Service Connector: Service by Harness - See Part Catalog

Description: 4-Way F 2.8 Series, Sealed (BK)

Terminal Part Information

Terminal Type ID	Terminated Lead	Diagnostic Test Probe	Terminal Removal Tool	Service Terminal	Tray	Core Crimp	Insulation Crimp
I	Not Required	Pending	No Tool Required	Not Required	Not Required	Not Required	Not Required

B65 Intake Manifold Pressure and Air Temperature Sensor (LWN)

Pin	Size	Color	Circuit	Function	Terminal Type ID	Option
1	0.5	BK/L-GN	469	Manifold Absolute Pressure Sensor Low Reference	I	—
2	0.5	BN	7348	Induction Air Temperature Sensor 2 Signal	I	—
3	0.5	GY/RD	2704	Manifold Absolute Pressure Sensor 5 Volt Reference	I	—
4	0.5	L-GN/WH	432	Manifold Absolute Pressure Sensor Signal	I	—

B68A Knock Sensor 1 (LCV)

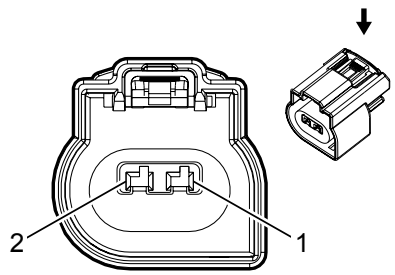

Connector Part Information

Harness Type: Engine

OEM Connector: 34752-0204

Service Connector: 19301207

Description: 2-Way F 150 MX Series, Sealed (BK)

Terminal Part Information

Terminal Type ID	Terminated Lead	Diagnostic Test Probe	Terminal Removal Tool	Service Terminal	Tray	Core Crimp	Insulation Crimp
I	Not Required	J-35616-2A (GY)	Not Required	Not Required	Not Required	Not Required	Not Required

B68A Knock Sensor 1 (LCV)

Pin	Size	Color	Circuit	Function	Terminal Type ID	Option
1	0.5	VT/GY	496	Knock Sensor Signal (1)	I	—
2	0.5	BK/YE	1716	Knock Sensor Low Reference (1)	I	—

B68A Knock Sensor 1 (LFX)

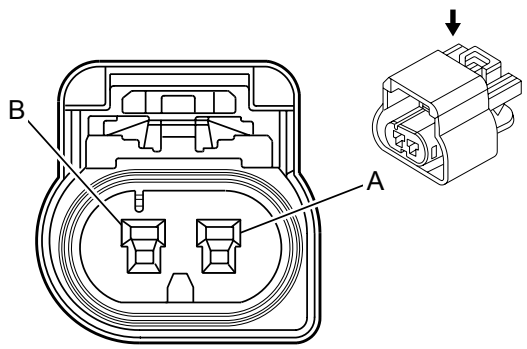

Connector Part Information

Harness Type: Engine

OEM Connector: 15374222

Service Connector: 13580877

Description: 2-Way F 150 GT Series, Sealed (NA)

Terminal Part Information

Terminal Type ID	Terminated Lead	Diagnostic Test Probe	Terminal Removal Tool	Service Terminal	Tray	Core Crimp	Insulation Crimp
I	Not Required	J-35616-14 (GN)	Not Required	Not Required	Not Required	Not Required	Not Required

B68A Knock Sensor 1 (LFX)

Pin	Size	Color	Circuit	Function	Terminal Type ID	Option
A	0.5	VT/GY	496	Knock Sensor Signal (1)	I	—
B	0.5	BK/YE	1716	Knock Sensor Low Reference (1)	I	—

B68B Knock Sensor 2 (LCV)

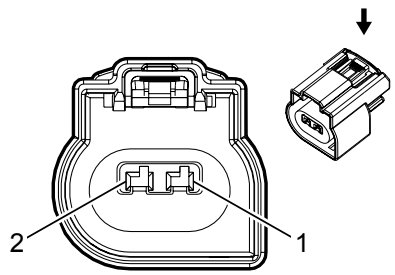

Connector Part Information

Harness Type: Engine

OEM Connector: 34752-0204

Service Connector: 19301207

Description: 2-Way F 150 MX Series, Sealed (BK)

Terminal Part Information

Terminal Type ID	Terminated Lead	Diagnostic Test Probe	Terminal Removal Tool	Service Terminal	Tray	Core Crimp	Insulation Crimp
I	Not Required	J-35616-2A (GY)	Not Required	Not Required	Not Required	Not Required	Not Required

B68B Knock Sensor 2 (LCV)

Pin	Size	Color	Circuit	Function	Terminal Type ID	Option
1	0.5	WH/GY	1876	Knock Sensor Signal (2)	I	—
2	0.5	BK/GY	2303	Knock Sensor Low Reference (2)	I	—

B68B Knock Sensor 2 (LFX)

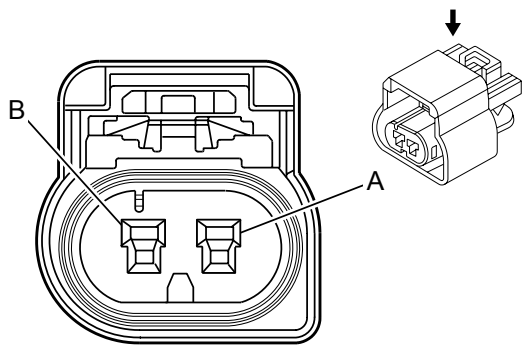

Connector Part Information

Harness Type: Engine

OEM Connector: 15374222

Service Connector: 13580877

Description: 2-Way F 150 GT Series, Sealed (NA)

Terminal Part Information

Terminal Type ID	Terminated Lead	Diagnostic Test Probe	Terminal Removal Tool	Service Terminal	Tray	Core Crimp	Insulation Crimp
I	Not Required	J-35616-14 (GN)	Not Required	Not Required	Not Required	Not Required	Not Required

B68B Knock Sensor 2 (LFX)

Pin	Size	Color	Circuit	Function	Terminal Type ID	Option
A	0.5	WH/GY	1876	Knock Sensor Signal (2)	I	—
B	0.5	BK/GY	2303	Knock Sensor Low Reference (2)	I	—

B74 Manifold Absolute Pressure Sensor

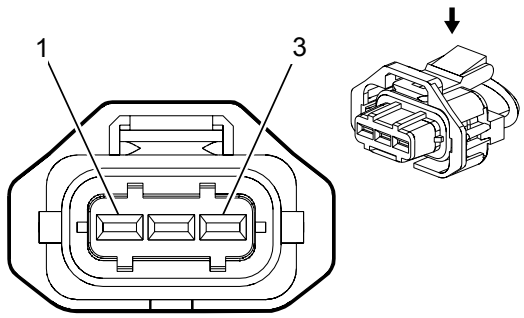

Connector Part Information

Harness Type: Engine

OEM Connector: 13145408

Service Connector: 13585850

Description: 3-Way F 2.8 Series, Sealed (BK)

Terminal Part Information

Terminal Type ID	Terminated Lead	Diagnostic Test Probe	Terminal Removal Tool	Service Terminal	Tray	Core Crimp	Insulation Crimp
I	Not Required	J-35616-35 (VT)	Not Required	Not Required	Not Required	Not Required	Not Required

B74 Manifold Absolute Pressure Sensor

Pin	Size	Color	Circuit	Function	Terminal Type ID	Option
1	0.5	GY/RD	2704	Manifold Absolute Pressure Sensor 5 Volt Reference	I	—
2	0.5	BK/L-GN	469	Manifold Absolute Pressure Sensor Low Reference	I	—
3	0.5	L-GN/WH	432	Manifold Absolute Pressure Sensor Signal	I	—

B75C Multifunction Intake Air Sensor

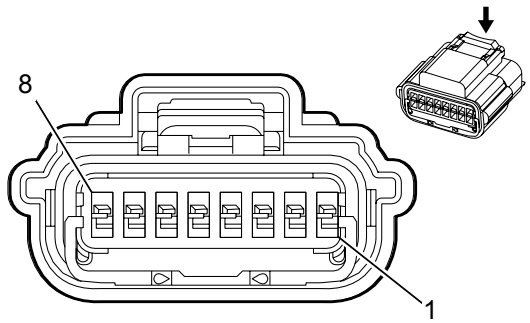

Connector Part Information

Harness Type: Engine

OEM Connector: ATSSPB-C08C-1AK

Service Connector: 13583440

Description: 8-Way F 0.64 Series, Sealed (BK)

Terminal Part Information

Terminal Type ID	Terminated Lead	Diagnostic Test Probe	Terminal Removal Tool	Service Terminal	Tray	Core Crimp	Insulation Crimp
I	Not Required	J-35616-64B (LT BU)	Not Required	Not Required	Not Required	Not Required	Not Required
I	Not Required	J-35616-64B (LT BU)	Not Required	Not Required	Not Required	Not Required	Not Required

B75C Multifunction Intake Air Sensor

Pin	Size	Color	Circuit	Function	Terminal Type ID	Option
1	0.5	WH/L-BU	6289	Induction Air Temperature Sensor Signal	I	—
2	0.5	WH/RD	3201	Throttle Inlet Absolute Pressure Sensor 5 Volt Reference	I	—
3	0.5	BK/BN	2761	Coolant Temperature Sensor Low Reference	I	LCV
	0.5	BK/VT	2760	Intake Air Temperature Sensor Low Reference		LFX/LWN
4	0.5	YE/WH	3200	Throttle Inlet Absolute Pressure Sensor Signal	I	—
5	0.5	VT/L-BU	5294	Powertrain Main Relay Fused Supply (5)	I	—
6	0.5	L-GN/WH	492	Mass Air Flow Sensor Signal	I	—
7	0.5	BK/WH	1451	Signal Ground	I	LCV/LFX

7	0.5	BK/WH	1451	Signal Ground	I	LCV/LFX
	0.75	BK/WH	151			LWN
8	0.5	BN/GY	4008	Humidity Sensor Signal	I	LCV/LWN
	0.5	GY/L-BU	7564			LFX

B80 Park Brake Switch

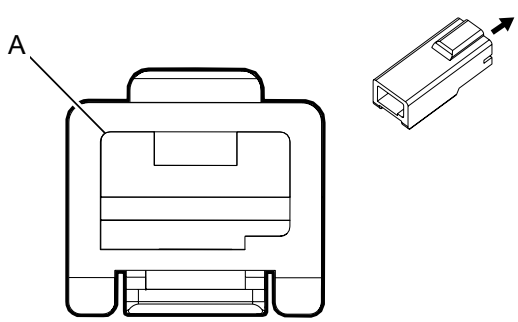

Connector Part Information

Harness Type: Body

OEM Connector: 13705266

Service Connector: 19301743

Description: 1-Way F 630 Metri-Pack Series (BK)

Terminal Part Information

Terminal Type ID	Terminated Lead	Diagnostic Test Probe	Terminal Removal Tool	Service Terminal	Tray	Core Crimp	Insulation Crimp
I	Not Required	J-35616-42 (RD)	Not Required	Not Required	Not Required	Not Required	Not Required

B80 Park Brake Switch

Pin	Size	Color	Circuit	Function	Terminal Type ID	Option
A	0.5	L-BU/VT	1134	Park Brake Switch Signal	I	—

B87 Rearview Camera

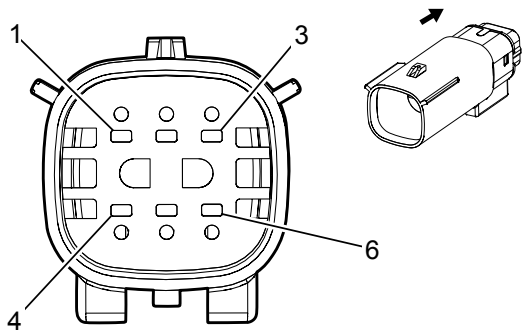

Connector Part Information

Harness Type: License Lamp

OEM Connector: 33482-0601

Service Connector: Service by Harness - See Part Catalog

Description: 6-Way M 150 MX Series, Sealed (BK)

Terminal Part Information

Terminal Type ID	Terminated Lead	Diagnostic Test Probe	Terminal Removal Tool	Service Terminal	Tray	Core Crimp	Insulation Crimp
I	Not Required	J-35616-3 (GY)	Not Required	Not Required	Not Required	Not Required	Not Required

B87 Rearview Camera

Pin	Size	Color	Circuit	Function	Terminal Type ID	Option
1	0.5	L-GN/WH	24	Backup Lamp Control	I	—
2	0.5	GY/YE	6972	Camera Signal 2 +	I	—
3	0.5	VT/L-GN	1739	Run/Crank Ignition 1 Voltage	I	—
4	0.5	L-GN	6974	Camera Low Reference	I	—
5	0.5	BK/WH	751	Signal Ground	I	—
6	0.5	WH/L-BU	6973	Camera Signal 2	I	—

B88D Seat Belt Switch - Driver

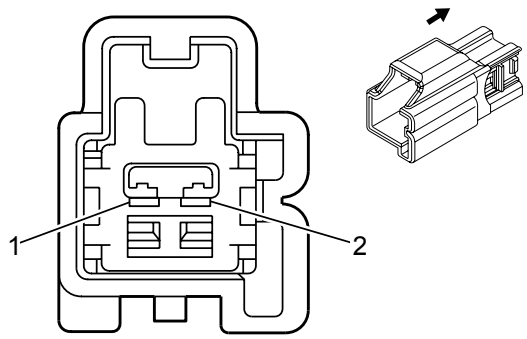

Connector Part Information

Harness Type: Driver Seat Cushion

OEM Connector: 7282-6443-40

Service Connector: 88988503

Description: 2-Way M 1.5 Series (L-GY)

Terminal Part Information

Terminal Type ID	Terminated Lead	Diagnostic Test Probe	Terminal Removal Tool	Service Terminal	Tray	Core Crimp	Insulation Crimp
I	13575816	J-35616-3 (GY)	J-38125-553	7114-4100-08	9	E	C

B88D Seat Belt Switch - Driver

Pin	Size	Color	Circuit	Function	Terminal Type ID	Option
1	0.35	BK/OG	1363	Driver Seat Belt Switch Low Reference	I	-
2	0.35	OG/BN	238	Driver Seat Belt Switch Signal	I	-

B88P Seat Belt Switch - Passenger

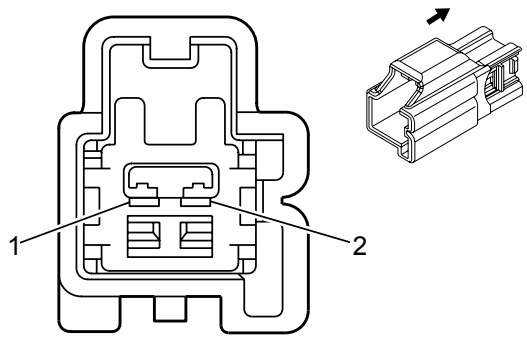

Connector Part Information

Harness Type: Passenger Seat Cushion

OEM Connector: 7282-6443-40

Service Connector: 88988503

Description: 2-Way M 1.5 Series (L-GY)

Terminal Part Information

Terminal Type ID	Terminated Lead	Diagnostic Test Probe	Terminal Removal Tool	Service Terminal	Tray	Core Crimp	Insulation Crimp
I	13575816	J-35616-3 (GY)	J-38125-553	7114-4100-08	9	E	C

B88P Seat Belt Switch - Passenger

Pin	Size	Color	Circuit	Function	Terminal Type ID	Option
1	0.35	BK/OG	1361	Passenger Seat Belt Switch Low Reference	I	-
2	0.35	OG/VT	1362	Passenger Seat Belt Switch Signal	I	-

B107 Accelerator Pedal Position Sensor

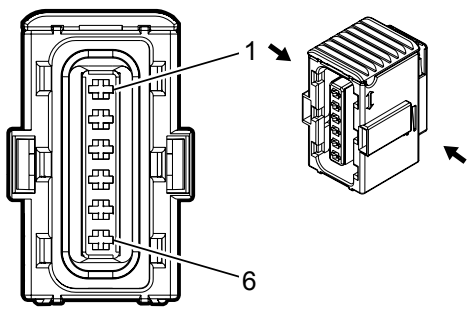

Connector Part Information

Harness Type: Body

OEM Connector: 9115133

Service Connector: 13580116

Description: 6-Way F 1.2 Timer Micro II Series, Sealed (BK)

Terminal Part Information

Terminal Type ID	Terminated Lead	Diagnostic Test Probe	Terminal Removal Tool	Service Terminal	Tray	Core Crimp	Insulation Crimp
I	Not Required	J-35616-14 (GN)	Not Required	Not Required	Not Required	Not Required	Not Required

B107 Accelerator Pedal Position Sensor

Pin	Size	Color	Circuit	Function	Terminal Type ID	Option
1	0.5	BN/RD	1274	Accelerator Pedal Position 5 Volt Reference (2)	I	—
2	0.5	WH/RD	1164	Accelerator Pedal Position 5 Volt Reference (1)	I	—
3	0.5	YE/WH	1161	Accelerator Pedal Position Signal (1)	I	—
4	0.5	BK/L-BU	1271	Accelerator Pedal Position Low Reference (1)	I	—
5	0.5	BK/VT	1272	Accelerator Pedal Position Low Reference (2)	I	—
6	0.5	L-GN/WH	1162	Accelerator Pedal Position Signal (2)	I	—

B116 Water in Fuel Sensor (LWN)

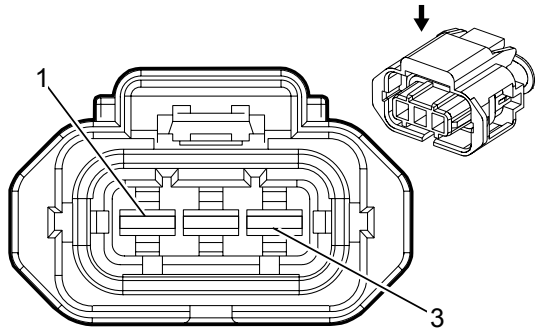

Connector Part Information

Harness Type: Chassis

OEM Connector: 15397338

Service Connector: 13585845

Description: 3-Way F 2.8 Junior Power Timer Series, Sealed (BK)

Terminal Part Information

Terminal Type ID	Terminated Lead	Diagnostic Test Probe	Terminal Removal Tool	Service Terminal	Tray	Core Crimp	Insulation Crimp
I	Not Required	J-35616-35 (VT)	Not Required	Not Required	Not Required	Not Required	Not Required
I	Not Required	J-35616-35 (VT)	Not Required	Not Required	Not Required	Not Required	Not Required

B116 Water in Fuel Sensor (LWN)

Pin	Size	Color	Circuit	Function	Terminal Type ID	Option
1	0.75	VT/GY	139	Run/Crank Ignition 1 Voltage	I	—
2	0.75	BK	1950	Ground	I	—
3	0.5	L-BU/YE	6861	Water In Fuel Sensor Signal	I	—

B130A Exhaust Gas Recirculation Temperature Sensor 1 (LWN)

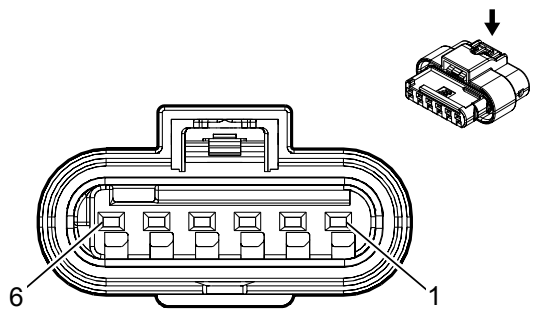

Connector Part Information

Harness Type: Chassis

OEM Connector: 2098559-5

Service Connector: 19329354

Description: 6-Way F 1.2 MCON-CB Series, Sealed (BN)

Terminal Part Information

Terminal Type ID	Terminated Lead	Diagnostic Test Probe	Terminal Removal Tool	Service Terminal	Tray	Core Crimp	Insulation Crimp
I	Not Required	J-35616-16 (LT GN)	Not Required	Not Required	Not Required	Not Required	Not Required

B130A Exhaust Gas Recirculation Temperature Sensor 1 (LWN)

Pin	Size	Color	Circuit	Function	Terminal Type ID	Option
1	0.5	VT/L-BU	3674	Nox Sensor (1) Control	I	—
2	0.5	L-BU/BN	4498	High Speed GMLAN Serial Data (+) (7)	I	—
3	0.5	L-BU/BN	4498	High Speed GMLAN Serial Data (+) (7)	I	—
4	0.5	WH	4499	High Speed GMLAN Serial Data (-) (7)	I	—
5	0.5	WH	4499	High Speed GMLAN Serial Data (-) (7)	I	—
6	0.5	BK	1950	Ground	I	—

B130B Exhaust Gas Recirculation Temperature Sensor 2 (LWN)

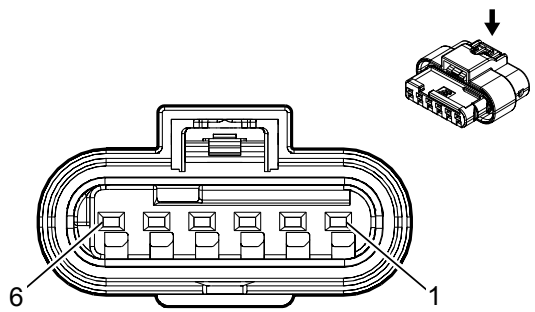

Connector Part Information

Harness Type: Chassis

OEM Connector: 2098559-6

Service Connector: 19332626

Description: 6-Way F 1.2 MCON-CB Series, Sealed (BN)

Terminal Part Information

Terminal Type ID	Terminated Lead	Diagnostic Test Probe	Terminal Removal Tool	Service Terminal	Tray	Core Crimp	Insulation Crimp
I	Not Required	J-35616-16 (LT GN)	Not Required	Not Required	Not Required	Not Required	Not Required

B130B Exhaust Gas Recirculation Temperature Sensor 2 (LWN)

Pin	Size	Color	Circuit	Function	Terminal Type ID	Option
1	0.5	VT/L-BU	3674	Nox Sensor (1) Control	I	—
2	0.5	L-BU/BN	4498	High Speed GMLAN Serial Data (+) (7)	I	—
3 - 4	—	—	—	Not Occupied	—	—
5	0.5	WH	4499	High Speed GMLAN Serial Data (-) (7)	I	—
6	0.5	BK	1950	Ground	I	—

B131A Exhaust Temperature Sensor 1 (LWN)

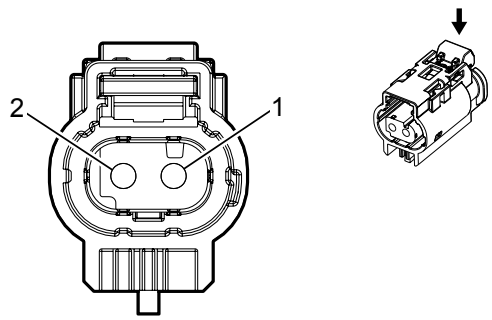

Connector Part Information

Harness Type: Engine

OEM Connector: 10094234

Service Connector: 19332719

Description: 2-Way F 1.2 MLK Series, Sealed (BK)

Terminal Part Information

Terminal Type ID	Terminated Lead	Diagnostic Test Probe	Terminal Removal Tool	Service Terminal	Tray	Core Crimp	Insulation Crimp
I	Not Required	J-35616-16 (LT GN)	Not Required	Not Required	Not Required	Not Required	Not Required

B131A Exhaust Temperature Sensor 1 (LWN)

Pin	Size	Color	Circuit	Function	Terminal Type ID	Option
1	0.5	BK/BN	6782	Exhaust Gas Temperature Sensor 1 Low Reference	I	—
2	0.5	L-BU/WH	5277	Exhaust Gas Temperature Sensor (1)	I	—

B131B Exhaust Temperature Sensor 2 (LWN)

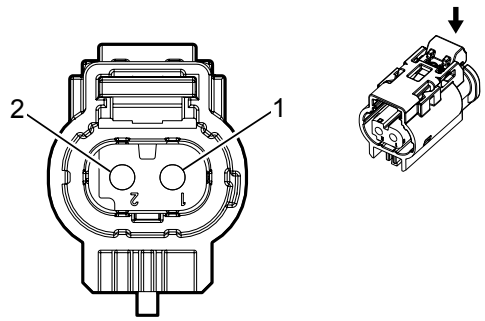

Connector Part Information

Harness Type: Chassis

OEM Connector: 10094236

Service Connector: 19332627

Description: 2-Way F 1.2 MLK Series, Sealed (GY)

Terminal Part Information

Terminal Type ID	Terminated Lead	Diagnostic Test Probe	Terminal Removal Tool	Service Terminal	Tray	Core Crimp	Insulation Crimp
I	Not Required	J-35616-16 (LT GN)	Not Required	Not Required	Not Required	Not Required	Not Required

B131B Exhaust Temperature Sensor 2 (LWN)

Pin	Size	Color	Circuit	Function	Terminal Type ID	Option
1	0.5	BK/L-BU	6783	Exhaust Gas Temperature Sensor 2 Low Reference	I	—
2	0.5	L-BU/L-GN	5377	Exhaust Gas Temperature Sensor (2)	I	—

B131C Exhaust Temperature Sensor 3 (LWN)

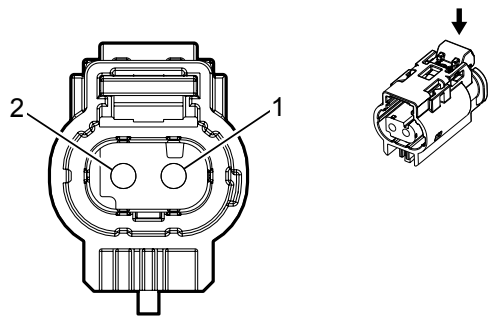

Connector Part Information

Harness Type: Chassis

OEM Connector: 10094237

Service Connector: 19332628

Description: 2-Way F 1.2 MLK Series, Sealed (GY)

Terminal Part Information

Terminal Type ID	Terminated Lead	Diagnostic Test Probe	Terminal Removal Tool	Service Terminal	Tray	Core Crimp	Insulation Crimp
I	Not Required	J-35616-16 (LT GN)	Not Required	Not Required	Not Required	Not Required	Not Required

B131C Exhaust Temperature Sensor 3 (LWN)

Pin	Size	Color	Circuit	Function	Terminal Type ID	Option
1	0.5	BK/L-GN	3657	Exhaust Gas Temperature Sensor 3 Low Reference	I	—
2	0.5	GY/L-GN	5378	Exhaust Gas Temperature Sensor (3)	I	—

B131D Exhaust Temperature Sensor 4 (LWN)

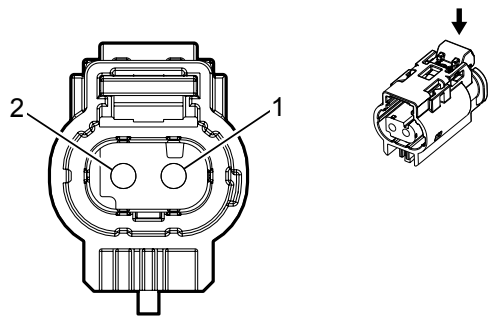

Connector Part Information

Harness Type: Chassis

OEM Connector: 10094234

Service Connector: 19332719

Description: 2-Way F 1.2 MLK Series, Sealed (BK)

Terminal Part Information

Terminal Type ID	Terminated Lead	Diagnostic Test Probe	Terminal Removal Tool	Service Terminal	Tray	Core Crimp	Insulation Crimp
I	Not Required	J-35616-16 (LT GN)	Not Required	Not Required	Not Required	Not Required	Not Required

B131D Exhaust Temperature Sensor 4 (LWN)

Pin	Size	Color	Circuit	Function	Terminal Type ID	Option
1	0.5	BK/GY	3659	Exhaust Gas Temperature Sensor 4 Low Reference	I	—
2	0.5	VT/BN	3658	Exhaust Gas Temperature Sensor 4 Signal	I	—

B131E Exhaust Temperature Sensor 5 (LWN)

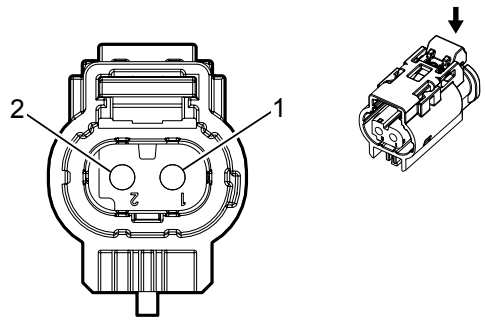

Connector Part Information

Harness Type: Chassis

OEM Connector: 10094236

Service Connector: 19332627

Description: 2-Way F 1.2 MLK Series, Sealed (GY)

Terminal Part Information

Terminal Type ID	Terminated Lead	Diagnostic Test Probe	Terminal Removal Tool	Service Terminal	Tray	Core Crimp	Insulation Crimp
I	Not Required	J-35616-16 (LT GN)	Not Required	Not Required	Not Required	Not Required	Not Required

B131E Exhaust Temperature Sensor 5 (LWN)

Pin	Size	Color	Circuit	Function	Terminal Type ID	Option
1	0.5	BK/VT	3661	Exhaust Gas Temperature Sensor 5 Low Reference	I	—
2	0.5	L-BU/GY	3660	Exhaust Gas Temperature Sensor 5 Signal	I	—

B136 Exhaust Particulate Matter Sensor (LWN)

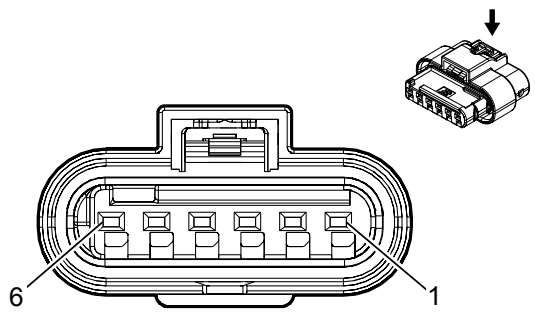

Connector Part Information

Harness Type: Chassis

OEM Connector: 2098559-5

Service Connector: 19329354

Description: 6-Way F 1.2 MCON-CB Series, Sealed (BN)

Terminal Part Information

Terminal Type ID	Terminated Lead	Diagnostic Test Probe	Terminal Removal Tool	Service Terminal	Tray	Core Crimp	Insulation Crimp
I	Not Required	J-35616-16 (LT GN)	Not Required	Not Required	Not Required	Not Required	Not Required

B136 Exhaust Particulate Matter Sensor (LWN)

Pin	Size	Color	Circuit	Function	Terminal Type ID	Option
1	0.5	BK	1950	Ground	I	—
2	0.5	WH	4499	High Speed GMLAN Serial Data (-) (7)	I	—
3	0.5	WH	4499	High Speed GMLAN Serial Data (-) (7)	I	—
4	0.5	L-BU/BN	4498	High Speed GMLAN Serial Data (+) (7)	I	—
5	0.5	L-BU/BN	4498	High Speed GMLAN Serial Data (+) (7)	I	—
6	0.5	VT/L-BU	3674	Nox Sensor (1) Control	I	—

B137 Power Steering Shaft Torque Sensor

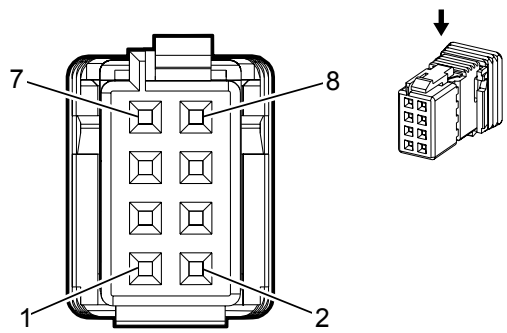

Connector Part Information

Harness Type: Power Steering Shaft Torque Sensor

OEM Connector: 965382-2

Service Connector: Service by Harness - See Part Catalog

Description: Micro-Power and Power Quad-Lock Series (D-BU)

Terminal Part Information

Terminal Type ID	Terminated Lead	Diagnostic Test Probe	Terminal Removal Tool	Service Terminal	Tray	Core Crimp	Insulation Crimp
I	Not Available	Not Available	Not Available	Not Available	Not Available	Not Available	Not Available

B137 Power Steering Shaft Torque Sensor

Pin	Size	Color	Circuit	Function	Terminal Type ID	Option
1	0.5	BN/RD	6631	Torque Input Sensor High Reference	I	-
2-3	-	-	-	Not Occupied	-	-
4	0.5	BK/BU	6632	Torque Input Sensor Low Reference	I	-
5	0.5	BN/RD	6631	Torque Input Sensor High Reference	I	-
6	0.5	BU/GY	6633	Torque Input Sensor Signal	I	-
7	0.5	BU/GY	6633	Torque Input Sensor Signal	I	-
8	0.5	BK/GY	6632	Torque Input Sensor Low Reference	I	-

B150 Fuel Tank Pressure Sensor (LCV/LFX)

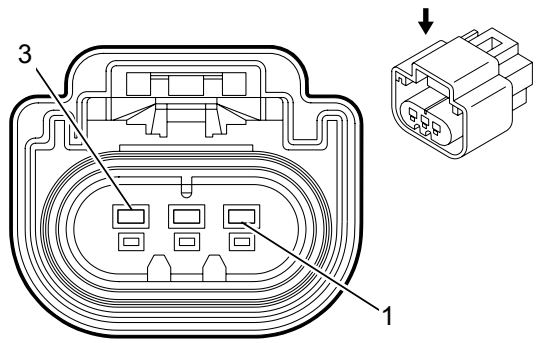

Connector Part Information

Harness Type: Chassis

OEM Connector: 13511996

Service Connector: 13580873

Description: 3-Way F 150 GT Series, Sealed (GY)

Terminal Part Information

Terminal Type ID	Terminated Lead	Diagnostic Test Probe	Terminal Removal Tool	Service Terminal	Tray	Core Crimp	Insulation Crimp
I	Not Required	J-35616-14 (GN)	Not Required	Not Required	Not Required	Not Required	Not Required

B150 Fuel Tank Pressure Sensor (LCV/LFX)

Pin	Size	Color	Circuit	Function	Terminal Type ID	Option
1	0.5	L-BU/WH	890	Fuel Tank Pressure Sensor Signal	I	—
2	0.5	BK/L-GN	6281	Fuel Level Sensor Low Reference	I	—
3	0.5	YE/RD	2709	Fuel Tank Pressure Sensor 5 Volt Reference	I	—

B154 Diesel Particulate Filter Exhaust Differential Pressure Sensor (LWN)

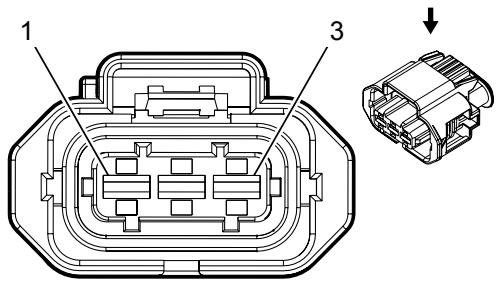

Connector Part Information

Harness Type: Chassis

OEM Connector: 1928405523

Service Connector: 13384360

Description: 3-Way F 2.8 Series, Sealed (BK with BU Lock)

Terminal Part Information

Terminal Type ID	Terminated Lead	Diagnostic Test Probe	Terminal Removal Tool	Service Terminal	Tray	Core Crimp	Insulation Crimp
I	Not Required	J-35616-35 (VT)	Not Required	Not Required	Not Required	Not Required	Not Required

B154 Diesel Particulate Filter Exhaust Differential Pressure Sensor (LWN)

Pin	Size	Color	Circuit	Function	Terminal Type ID	Option
1	0.5	WH/RD	6054	Exhaust Pressure Sensor 5 Volt Reference (1)	I	—
2	0.5	BK/YE	6055	Exhaust Pressure Sensor Low Reference (1)	I	—
3	0.5	L-BU	6053	Exhaust Pressure Sensor Signal (1)	I	—

B160 Windshield Temperature and Inside Moisture Sensor (C68)

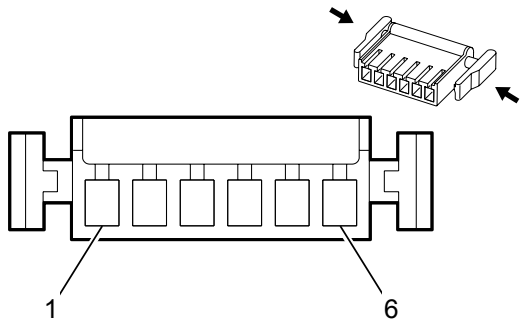

Connector Part Information

Harness Type: Windshield Sensor

OEM Connector: 13726957

Service Connector: Service by Harness - See Part Catalog

Description: 6-Way F 0.64 Micro Quadlock Series (BK)

Terminal Part Information

Terminal Type ID	Terminated Lead	Diagnostic Test Probe	Terminal Removal Tool	Service Terminal	Tray	Core Crimp	Insulation Crimp
I	Not Available	J-35616-64B (L-BU)	Not Available	Not Available	Not Available	Not Available	Not Available

B160 Windshield Temperature and Inside Moisture Sensor (C68)

Pin	Size	Color	Circuit	Function	Terminal Type ID	Option
1	0.35	RD	597	5 Volt Reference	I	-
2	0.35	D-BU	7564	Humidity Sensor Signal	I	-
3	0.35	BK	7566	Humidity/Windscreen Temp Sensor Low Reference	I	-
4	0.35	L-GN	7565	Windscreen Temp Sensor Signal	I	-
5	0.35	YE	3197	Humidity Temperature Sensor Signal	I	-
6	-	-	-	Not Occupied	-	-

B193A Charge Air Cooler Inlet Temperature Sensor (LWN)

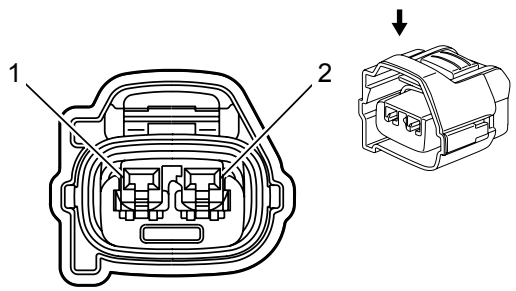

Connector Part Information

Harness Type: Engine

OEM Connector: 7283-7020-10

Service Connector: 13576415

Description: 2-Way F 090 Series, Sealed (D-GY)

Terminal Part Information

Terminal Type ID	Terminated Lead	Diagnostic Test Probe	Terminal Removal Tool	Service Terminal	Tray	Core Crimp	Insulation Crimp
I	Not Required	J-35616-18 (BK)	Not Required	Not Required	Not Required	Not Required	Not Required

B193A Charge Air Cooler Inlet Temperature Sensor (LWN)

Pin	Size	Color	Circuit	Function	Terminal Type ID	Option
1	0.5	L-GN	3683	Charge Air Cooler Inlet Temperature Sensor Signal	I	—
2	0.5	YE/BK	3682	Charge Air Cooler Inlet Temperature Sensor Low Reference	I	—

B193B Charge Air Cooler Outlet Temperature Sensor (LWN)

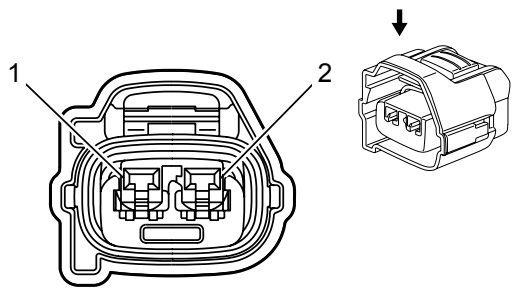

Connector Part Information

Harness Type: Engine

OEM Connector: 7283-7020-10

Service Connector: 13576415

Description: 2-Way F 090 Series, Sealed (D-GY)

Terminal Part Information

Terminal Type ID	Terminated Lead	Diagnostic Test Probe	Terminal Removal Tool	Service Terminal	Tray	Core Crimp	Insulation Crimp
I	Not Required	J-35616-18 (BK)	Not Required	Not Required	Not Required	Not Required	Not Required

B193B Charge Air Cooler Outlet Temperature Sensor (LWN)

Pin	Size	Color	Circuit	Function	Terminal Type ID	Option
1	0.5	BN	3681	Charge Air Cooler Outlet Temperature Sensor Signal	I	—
2	0.5	YE/L-BU	3680	Charge Air Cooler Outlet Temperature Sensor Low Reference	I	—

B195A Nitrogen Oxides Sensor 1 (LWN)

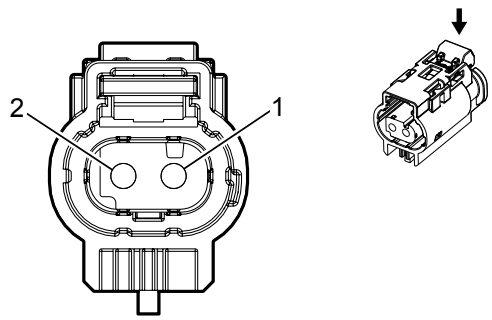

Connector Part Information

Harness Type: Engine

OEM Connector: 10094234

Service Connector: 19332719

Description: 2-Way F 1.2 MLK Series, Sealed (BK)

Terminal Part Information

Terminal Type ID	Terminated Lead	Diagnostic Test Probe	Terminal Removal Tool	Service Terminal	Tray	Core Crimp	Insulation Crimp
I	Not Required	J-35616-16 (LT GN)	Not Required	Not Required	Not Required	Not Required	Not Required

B195A Nitrogen Oxides Sensor 1 (LWN)

Pin	Size	Color	Circuit	Function	Terminal Type ID	Option
1	0.5	BK/L-BU	6274	Exhaust Gas Recirculation Temperature Sensor Low Reference	I	—
2	0.5	WH/BN	3237	Exhaust Gas Recirculation Temperature Sensor Signal	I	—

B195B Nitrogen Oxides Sensor 2 (LWN)

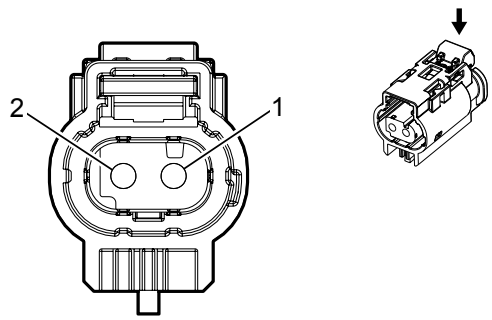

Connector Part Information

Harness Type: Engine

OEM Connector: 10094237

Service Connector: 19332628

Description: 2-Way F 1.2 MLK Series, Sealed (GY)

Terminal Part Information

Terminal Type ID	Terminated Lead	Diagnostic Test Probe	Terminal Removal Tool	Service Terminal	Tray	Core Crimp	Insulation Crimp
I	Not Required	J-35616-16 (LT GN)	Not Required	Not Required	Not Required	Not Required	Not Required

B195B Nitrogen Oxides Sensor 2 (LWN)

Pin	Size	Color	Circuit	Function	Terminal Type ID	Option
1	0.5	BK/YE	6275	Exhaust Gas Recirculation Temperature Sensor 2 Low Reference	I	—
2	0.5	YE/L-GN	3236	Exhaust Gas Recirculation Temperature Sensor 2 Signal	I	—

B203 Engine Coolant Radiator Temperature Sensor (LCV)

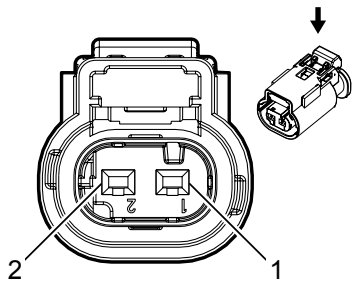

Connector Part Information

Harness Type: Forward Lamp Extension

OEM Connector: 10010337

Service Connector: Service by Harness - See Part Catalog

Description: 2-Way F 1.2 MLK Series, Sealed (BK)

Terminal Part Information

Terminal Type ID	Terminated Lead	Diagnostic Test Probe	Terminal Removal Tool	Service Terminal	Tray	Core Crimp	Insulation Crimp
I	Not Required	J-35616-16 (LT GN)	Not Required	Not Required	Not Required	Not Required	Not Required

B203 Engine Coolant Radiator Temperature Sensor (LCV)

Pin	Size	Color	Circuit	Function	Terminal Type ID	Option
1	0.5	YE/BK	3000	Coolant Temperature Sensor 2 Signal	I	—
2	0.5	BK/L-BU	6813	Coolant Temperature Sensor 2 Low Reference	I	—

B227 Gear Position Sensor (NQ6)

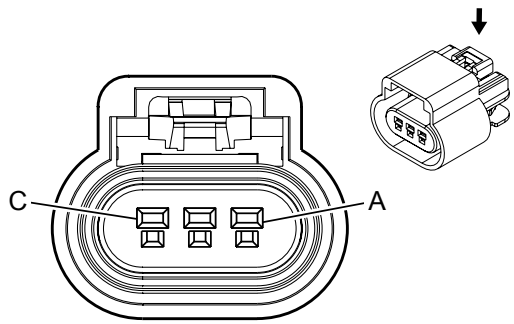

Connector Part Information

Harness Type: Engine

OEM Connector: 15326808

Service Connector: 13580871

Description: 3-Way F 150 GT Series, Sealed (BK)

Terminal Part Information

Terminal Type ID	Terminated Lead	Diagnostic Test Probe	Terminal Removal Tool	Service Terminal	Tray	Core Crimp	Insulation Crimp
I	Not Required	J-35616-14 (GN)	Not Required	Not Required	Not Required	Not Required	Not Required

B227 Gear Position Sensor (NQ6)

Pin	Size	Color	Circuit	Function	Terminal Type ID	Option
A	0.5	YE/BK	7478	Rotary Position Sensor Low Reference	I	—
B	0.5	WH/RD	7477	Rotary Position Sensor 5 Volt Reference	I	—
C	0.5	WH/L-GN	7479	Rotary Position Sensor Signal	I	—

C1 Battery

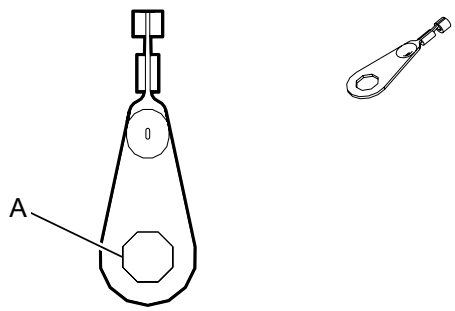

Connector Part Information

Harness Type: Body

OEM Connector: 13268280

Service Connector: Service by Cable Assembly - See Part Catalog

Description: 1-Way Ring Terminal

Terminal Part Information

Terminal Type ID	Terminated Lead	Diagnostic Test Probe	Terminal Removal Tool	Service Terminal	Tray	Core Crimp	Insulation Crimp
I	Not Required	No Tool Required	No Tool Required	Not Required	Not Required	Not Required	Not Required

C1 Battery

Pin	Size	Color	Circuit	Function	Terminal Type ID	Option
A	0.5	BK	1650	Ground	I	—

C3 Telematics Communication Interface Control Module Battery (UE1 with LWN)

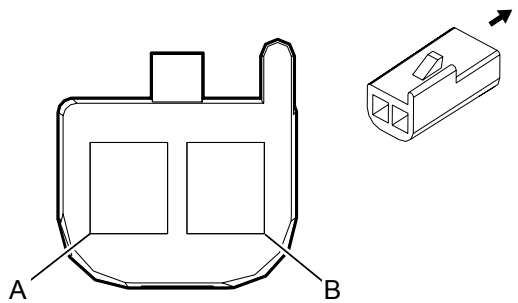

Connector Part Information

Harness Type: Body

OEM Connector: 12047662

Service Connector: 12085535

Description: 2-Way F 150 Metri-Pack Series (BK)

Terminal Part Information

Terminal Type ID	Terminated Lead	Diagnostic Test Probe	Terminal Removal Tool	Service Terminal	Tray	Core Crimp	Insulation Crimp
I	Not Required	J-35616-14 (GN)	Not Required	Not Required	Not Required	Not Required	Not Required

C3 Telematics Communication Interface Control Module Battery (UE1 with LWN)

Pin	Size	Color	Circuit	Function	Terminal Type ID	Option
A	0.5	YE/VT	5235	Battery Backup Control	I	—
B	0.5	BK/VT	5167	Battery Backup Low Reference	I	—

E4E Headlamp - Left High Beam

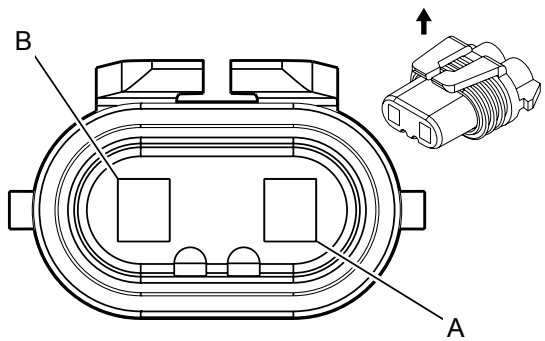

Connector Part Information

Harness Type: Left Front Headlamp Assembly

OEM Connector: 12059183

Service Connector: 12101898

Description: 2-Way F Metri-Pack 280 Series Sealed (BK)

Terminal Part Information

Terminal Type ID	Terminated Lead	Diagnostic Test Probe	Terminal Removal Tool	Service Terminal	Tray	Core Crimp	Insulation Crimp
I	13575418	J-35616-4A (PU)	J-38125-11A	12077411	2	2	5

E4E Headlamp - Left High Beam

Pin	Size	Color	Circuit	Function	Terminal Type ID	Option
A	1.5	BK	711	Left Headlamp High Beam Supply Voltage	I	-
B	1.5	BK	1150	Ground	I	-

E4F Headlamp - Right High Beam

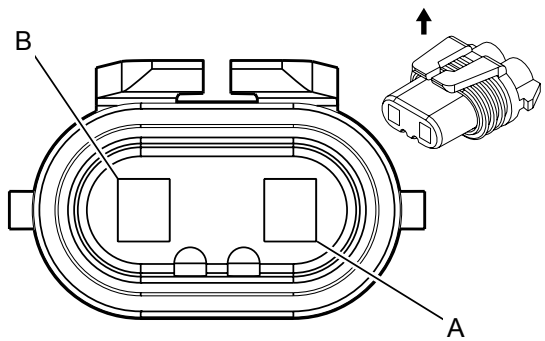

Connector Part Information

Harness Type: Right Front Headlamp Assembly

OEM Connector: 12059183

Service Connector: 12101898

Description: 2-Way F Metri-Pack 280 Series Sealed (BK)

Terminal Part Information

Terminal Type ID	Terminated Lead	Diagnostic Test Probe	Terminal Removal Tool	Service Terminal	Tray	Core Crimp	Insulation Crimp
I	13575418	J-35616-4A (PU)	J-38125-11A	12077411	2	2	5

E4F Headlamp - Right High Beam

Pin	Size	Color	Circuit	Function	Terminal Type ID	Option
A	1.5	BK	311	Right Headlamp High Beam Supply Voltage	I	-
B	1.5	BK	1250	Ground	I	-

E4G Headlamp - Left Low Beam

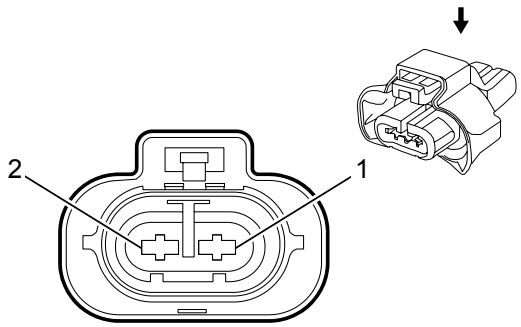

Connector Part Information

Harness Type: Left Front Headlamp Assembly

OEM Connector: Not Available

Service Connector: Service by Harness – See Part Catalog

Description: 2-Way F, Sealed (BK)

Terminal Part Information

Terminal Type ID	Terminated Lead	Diagnostic Test Probe	Terminal Removal Tool	Service Terminal	Tray	Core Crimp	Insulation Crimp
I	Service by Harness – See Part Catalog	Not Available	Not Available	Not Available	Not Available	Not Available	Not Available

E4G Headlamp - Left Low Beam

Pin	Size	Color	Circuit	Function	Terminal Type ID	Option
1	1.5	BK	712	Left Headlamp Low Beam Supply Voltage	I	-
2	1.5	BK	1150	Ground	I	-

E4H Headlamp - Right Low Beam

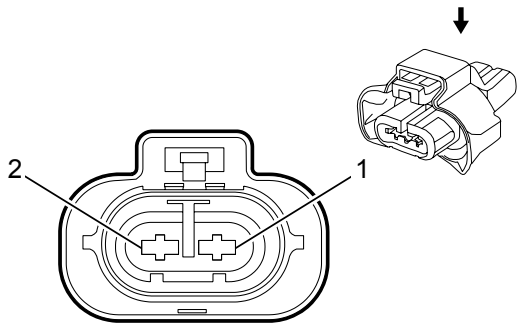

Connector Part Information

Harness Type: Right Front Headlamp Assembly

OEM Connector: Not Available

Service Connector: Service by Harness – See Part Catalog

Description: 2-Way F, Sealed (BK)

Terminal Part Information

Terminal Type ID	Terminated Lead	Diagnostic Test Probe	Terminal Removal Tool	Service Terminal	Tray	Core Crimp	Insulation Crimp
I	Service by Harness – See Part Catalog	Not Available	Not Available	Not Available	Not Available	Not Available	Not Available

E4H Headlamp - Right Low Beam

Pin	Size	Color	Circuit	Function	Terminal Type ID	Option
1	1.5	BK	312	Right Headlamp Low Beam Supply Voltage	I	-
2	1.5	BK	1250	Ground	I	-

E4J Park Lamp - Left Front (X88)

—

Connector Part Information

Harness Type: Left Front Headlamp Assembly

OEM Connector: Not Available

Service Connector: Not Available

Description: 2-Way F (NA)

Terminal Part Information

Terminal Type ID	Terminated Lead	Diagnostic Test Probe	Terminal Removal Tool	Service Terminal	Tray	Core Crimp	Insulation Crimp
I	Not Available	Not Available	Not Available	Not Available	Not Available	Not Available	Not Available

E4J Park Lamp - Left Front (X88)

Pin	Size	Color	Circuit	Function	Terminal Type ID	Option
A	0.75	RD	709	Left Park Lamp Supply Voltage	I	-
B	0.75	BK	1150	Ground	I	-

E4K Park Lamp - Right Front (X88)

—

Connector Part Information

Harness Type: Right Front Headlamp Assembly

OEM Connector: Not Available

Service Connector: Not Available

Description: 2-Way F (NA)

Terminal Part Information

Terminal Type ID	Terminated Lead	Diagnostic Test Probe	Terminal Removal Tool	Service Terminal	Tray	Core Crimp	Insulation Crimp
I	Not Available	Not Available	Not Available	Not Available	Not Available	Not Available	Not Available

E4K Park Lamp - Right Front (X88)

Pin	Size	Color	Circuit	Function	Terminal Type ID	Option
A	0.75	RD	309	Right Park Lamp Supply Voltage	I	-
B	0.75	BK	1150	Ground	I	-

E4N Park/Turn Signal Lamp - Left

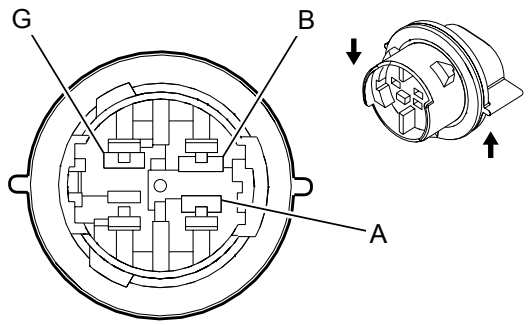

Connector Part Information

Harness Type: Left Front Headlamp Assembly

OEM Connector: 16530873

Service Connector: Service by Harness – See Part Catalog

Description: 3-Way F Lamp Socket Wedge Base W3 Right angle Sealed (GY)

Terminal Part Information

Terminal Type ID	Terminated Lead	Diagnostic Test Probe	Terminal Removal Tool	Service Terminal	Tray	Core Crimp	Insulation Crimp
I	Not Available	J-35616-4A (PU)	12180559-1	12066638	5	2	5

E4N Park/Turn Signal Lamp - Left

Pin	Size	Color	Circuit	Function	Terminal Type ID	Option
A	0.75	YE	1314	Left Front Turn Signal Lamp Supply Voltage	I	-
B	0.75	RD	709	Left Park Lamp Supply Voltage	I	-
	0.75	BK	709	Left Park Lamp Supply Voltage		-
G	0.75	BK	1150	Ground	I	-

E4P Park/Turn Signal Lamp - Right

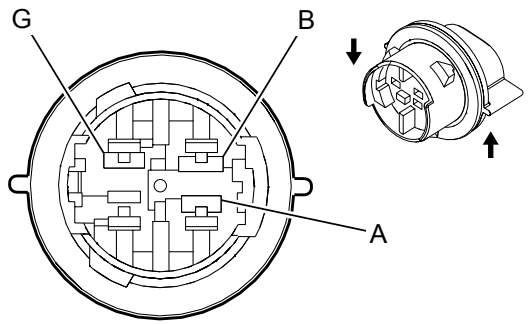

Connector Part Information

Harness Type: Right Front Headlamp Assembly

OEM Connector: 16530873

Service Connector: Service by Harness – See Part Catalog

Description: 3-Way F Lamp Socket Wedge Base W3 Right angle Sealed (GY)

Terminal Part Information

Terminal Type ID	Terminated Lead	Diagnostic Test Probe	Terminal Removal Tool	Service Terminal	Tray	Core Crimp	Insulation Crimp
I	Not Available	J-35616-4A (PU)	12180559-1	12066638	5	2	5

E4P Park/Turn Signal Lamp - Right

Pin	Size	Color	Circuit	Function	Terminal Type ID	Option
A	0.75	YE	1315	Right Front Turn Signal Lamp Supply Voltage	I	-
B	0.75	RD	309	Right Park Lamp Supply Voltage	I	-
	0.75	BK	309	Right Park Lamp Supply Voltage		-
G	0.75	BK	1250	Ground	I	-

E5A Backup Lamp - Left

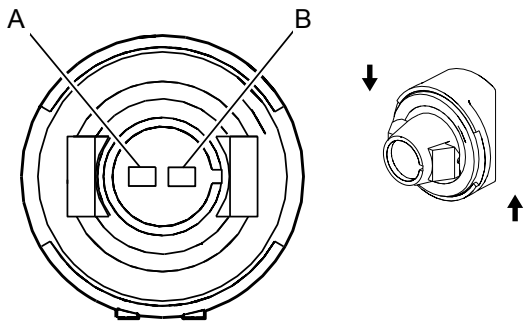

Connector Part Information

Harness Type: Left Tail Lamp

OEM Connector: 16530675

Service Connector: Service by Harness – See Part Catalog

Description: 2-Way F (L-GY)

Terminal Part Information

Terminal Type ID	Terminated Lead	Diagnostic Test Probe	Terminal Removal Tool	Service Terminal	Tray	Core Crimp	Insulation Crimp
I	Service by Harness – See Part Catalog	Not Available	Not Available	Not Available	Not Available	Not Available	Not Available

E5A Backup Lamp - Left

Pin	Size	Color	Circuit	Function	Terminal Type ID	Option
A	0.5	YE	24	Backup Lamp Supply Voltage	I	-
B	0.5	BK	750	Ground	I	-

E5AG Tail/Stop and Turn Signal Lamp - Left Upper

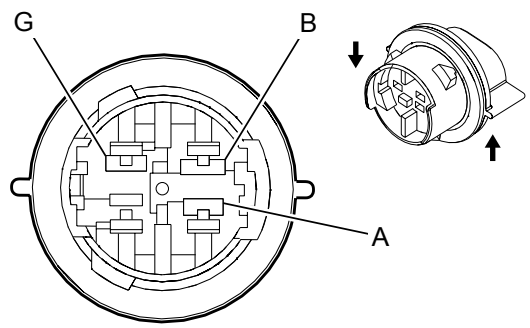

Connector Part Information

Harness Type: Left Tail Lamp

OEM Connector: 16530873

Service Connector: Service by Harness – See Part Catalog

Description: 3-Way F Lamp Socket Wedge Base W3 Right angle Sealed (GY)

Terminal Part Information

Terminal Type ID	Terminated Lead	Diagnostic Test Probe	Terminal Removal Tool	Service Terminal	Tray	Core Crimp	Insulation Crimp
I	Not Available	J-35616-4A (PU)	12180559-1	12066638	5	2	5

E5AG Tail/Stop and Turn Signal Lamp - Left Upper

Pin	Size	Color	Circuit	Function	Terminal Type ID	Option
A	0.75	GY	7542	Left Rear Stop Lamp Supply Voltage	I	-
B	0.75	OG	2509	Left Rear Park Lamp Supply Voltage	I	-
G	0.75	BK	750	Ground	I	-

E5AH Tail/Stop and Turn Signal Lamp - Right Upper

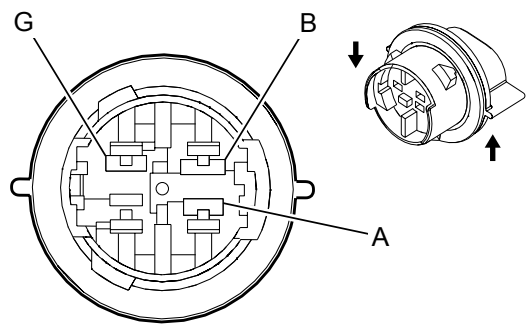

Connector Part Information

Harness Type: Right Tail Lamp

OEM Connector: 16530873

Service Connector: Service by Harness – See Part Catalog

Description: 3-Way F Lamp Socket Wedge Base W3 Right angle Sealed (GY)

Terminal Part Information

Terminal Type ID	Terminated Lead	Diagnostic Test Probe	Terminal Removal Tool	Service Terminal	Tray	Core Crimp	Insulation Crimp
I	Not Available	J-35616-4A (PU)	12180559-1	12066638	5	2	5

E5AH Tail/Stop and Turn Signal Lamp - Right Upper

Pin	Size	Color	Circuit	Function	Terminal Type ID	Option
A	0.75	GY	7541	Right Rear Stop Lamp Supply Voltage	I	-
B	0.75	OG	2609	Right Rear Park Lamp Supply Voltage	I	-
G	0.75	BK	850	Ground	I	-

E5B Backup Lamp - Right

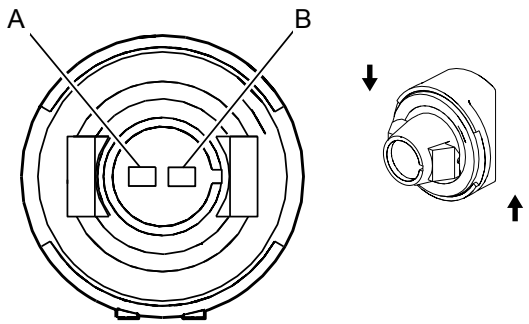

Connector Part Information

Harness Type: Right Tail Lamp

OEM Connector: 16530675

Service Connector: Service by Harness – See Part Catalog

Description: 2-Way F (L-GY)

Terminal Part Information

Terminal Type ID	Terminated Lead	Diagnostic Test Probe	Terminal Removal Tool	Service Terminal	Tray	Core Crimp	Insulation Crimp
I	Service by Harness – See Part Catalog	Not Available	Not Available	Not Available	Not Available	Not Available	Not Available

E5B Backup Lamp - Right

Pin	Size	Color	Circuit	Function	Terminal Type ID	Option
A	0.5	YE	24	Backup Lamp Supply Voltage	I	-
B	0.5	BK	850	Ground	I	-

E5U Tail/Stop and Turn Signal Lamp - Left Lower

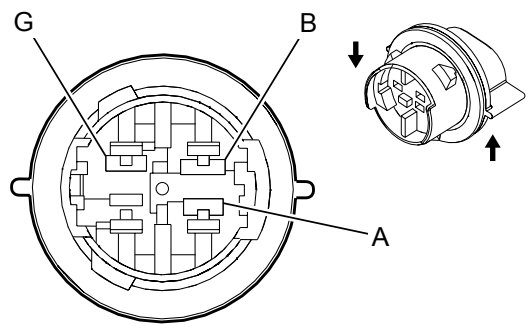

Connector Part Information

Harness Type: Left Tail Lamp

OEM Connector: 16530873

Service Connector: Service by Harness – See Part Catalog

Description: 3-Way F Lamp Socket Wedge Base W3 Right angle Sealed (GY)

Terminal Part Information

Terminal Type ID	Terminated Lead	Diagnostic Test Probe	Terminal Removal Tool	Service Terminal	Tray	Core Crimp	Insulation Crimp
I	Not Available	J-35616-4A (PU)	12180559-1	12066638	5	2	5

E5U Tail/Stop and Turn Signal Lamp - Left Lower

Pin	Size	Color	Circuit	Function	Terminal Type ID	Option
A	0.75	GY	7542	Left Rear Stop Lamp Supply Voltage	I	-
	0.75	GY	7542	Left Rear Stop Lamp Supply Voltage		-
B	0.75	OG	2509	Left Rear Park Lamp Supply Voltage	I	-
	0.75	OG	2509	Left Rear Park Lamp Supply Voltage		-
G	0.75	BK	750	Ground	I	-
	0.75	BK	750	Ground		-

E5V Tail/Stop and Turn Signal Lamp - Right Lower

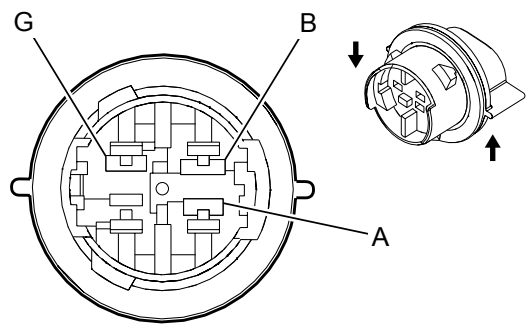

Connector Part Information

Harness Type: Right Tail Lamp

OEM Connector: 16530873

Service Connector: Service by Harness – See Part Catalog

Description: 3-Way F Lamp Socket Wedge Base W3 Right angle Sealed (GY)

Terminal Part Information

Terminal Type ID	Terminated Lead	Diagnostic Test Probe	Terminal Removal Tool	Service Terminal	Tray	Core Crimp	Insulation Crimp
I	Not Available	J-35616-4A (PU)	12180559-1	12066638	5	2	5

E5V Tail/Stop and Turn Signal Lamp - Right Lower

Pin	Size	Color	Circuit	Function	Terminal Type ID	Option
A	0.75	GY	7541	Right Rear Stop Lamp Supply Voltage	I	-
	0.75	GY	7541	Right Rear Stop Lamp Supply Voltage		-
B	0.75	OG	2609	Right Rear Park Lamp Supply Voltage	I	-
	0.75	OG	2609	Right Rear Park Lamp Supply Voltage		-
G	0.75	BK	850	Ground	I	-
	0.75	BK	850	Ground		-

E6 Center High Mounted Stop Lamp

—

Connector Part Information

Harness Type: CHMSL

OEM Connector: Not Available

Service Connector: Not Available

Description: 2-Way F (GY)

Terminal Part Information

Terminal Type ID	Terminated Lead	Diagnostic Test Probe	Terminal Removal Tool	Service Terminal	Tray	Core Crimp	Insulation Crimp
I	Not Available	Not Available	Not Available	Not Available	Not Available	Not Available	Not Available

E6 Center High Mounted Stop Lamp

Pin	Size	Color	Circuit	Function	Terminal Type ID	Option
A	0.75	RD	1054	Stop Lamp Supply Voltage	I	-
B	0.75	BK	3150	Ground	I	-
	0.75	BK	3150	Ground		-

E7L License Plate Lamp - Left

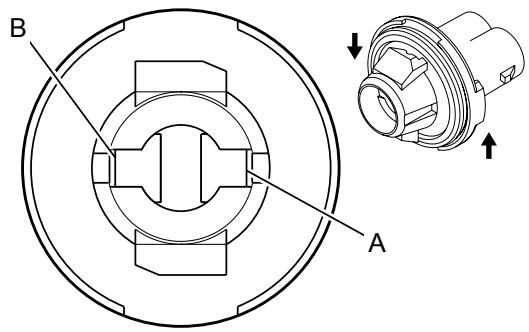

Connector Part Information

Harness Type: License Lamp

OEM Connector: 15324946

Service Connector: Service by Harness - See Part Catalog

Description: 2-Way F Lamp Socket Wedge Base W2 (D-GY)

Terminal Part Information

Terminal Type ID	Terminated Lead	Diagnostic Test Probe	Terminal Removal Tool	Service Terminal	Tray	Core Crimp	Insulation Crimp
I	Not Required	No Tool Required	Not Required	Not Required	Not Required	Not Required	Not Required

E7L License Plate Lamp - Left

Pin	Size	Color	Circuit	Function	Terminal Type ID	Option
A	0.5	L-GN/YE	6846	Rear License Lamp Control	I	—
B	0.5	BK	750	Ground	I	—

E7R License Plate Lamp - Right

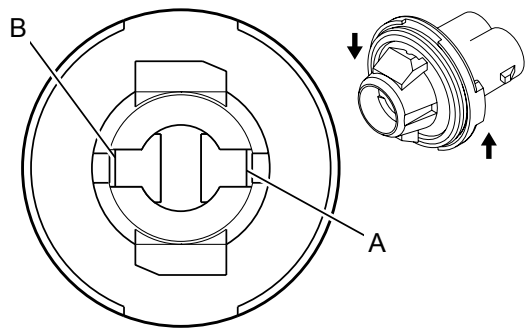

Connector Part Information

Harness Type: License Lamp

OEM Connector: 15324946

Service Connector: Service by Harness - See Part Catalog

Description: 2-Way F Lamp Socket Wedge Base W2 (D-GY)

Terminal Part Information

Terminal Type ID	Terminated Lead	Diagnostic Test Probe	Terminal Removal Tool	Service Terminal	Tray	Core Crimp	Insulation Crimp
I	Not Required	No Tool Required	Not Required	Not Required	Not Required	Not Required	Not Required

E7R License Plate Lamp - Right

Pin	Size	Color	Circuit	Function	Terminal Type ID	Option
A	0.5	L-GN/YE	6846	Rear License Lamp Control	I	—
B	0.5	BK	750	Ground	I	—

E11 Fuel Heater (LWN)

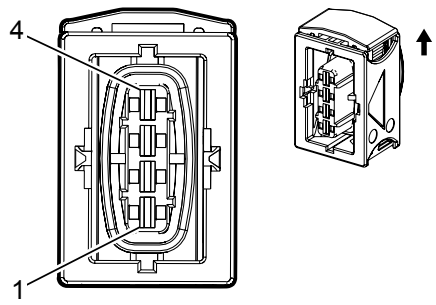

Connector Part Information

Harness Type: Chassis

OEM Connector: 15397339

Service Connector: 13384331

Description: 4-Way F Junior Power Timer 2.8 Series, Sealed (BK)

Terminal Part Information

Terminal Type ID	Terminated Lead	Diagnostic Test Probe	Terminal Removal Tool	Service Terminal	Tray	Core Crimp	Insulation Crimp
I	Not Required	J-35616-35 (VT)	Not Required	Not Required	Not Required	Not Required	Not Required
I	Not Required	J-35616-35 (VT)	Not Required	Not Required	Not Required	Not Required	Not Required

E11 Fuel Heater (LWN)

Pin	Size	Color	Circuit	Function	Terminal Type ID	Option
1	0.5	BN/GY	7072	Sensor Fuel Temperature 1 Signal	I	—
2	0.5	BN/WH	7073	Sensor Fuel Temperature 1 Low Reference	I	—
3	2.5	BK	1950	Ground	I	—
4	2.5	L-BU/L-GN	7071	Heater Fuel Control	I	—

E12A Glow Plug 1 (LWN)

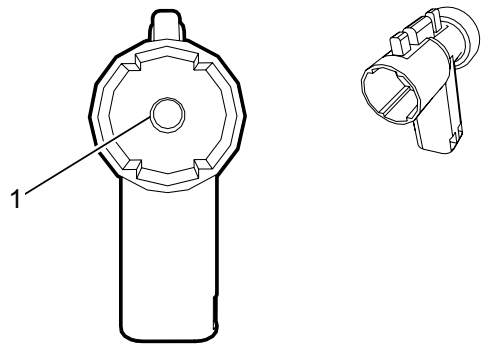

Connector Part Information

Harness Type: Glow Plug

OEM Connector: 1928404878

Service Connector: Service by Harness - See Part Catalog

Description: 1-Way F (BK)

Terminal Part Information

Terminal Type ID	Terminated Lead	Diagnostic Test Probe	Terminal Removal Tool	Service Terminal	Tray	Core Crimp	Insulation Crimp
I	Not Required	Pending	No Tool Required	Not Required	Not Required	Not Required	Not Required

E12A Glow Plug 1 (LWN)

Pin	Size	Color	Circuit	Function	Terminal Type ID	Option
1	1.5	GY/L-BU	1581	Glow Plug Control (1)	I	—

E12B Glow Plug 2 (LWN)

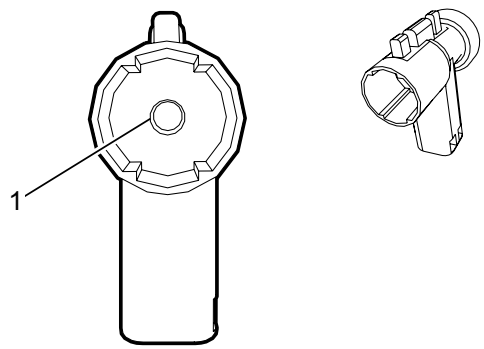

Connector Part Information

Harness Type: Glow Plug

OEM Connector: 1928404878

Service Connector: Service by Harness - See Part Catalog

Description: 1-Way F (BK)

Terminal Part Information

Terminal Type ID	Terminated Lead	Diagnostic Test Probe	Terminal Removal Tool	Service Terminal	Tray	Core Crimp	Insulation Crimp
I	Not Required	Pending	No Tool Required	Not Required	Not Required	Not Required	Not Required

E12B Glow Plug 2 (LWN)

Pin	Size	Color	Circuit	Function	Terminal Type ID	Option
1	1.5	GY/BN	1582	Glow Plug Control (2)	I	—

E12C Glow Plug 3 (LWN)

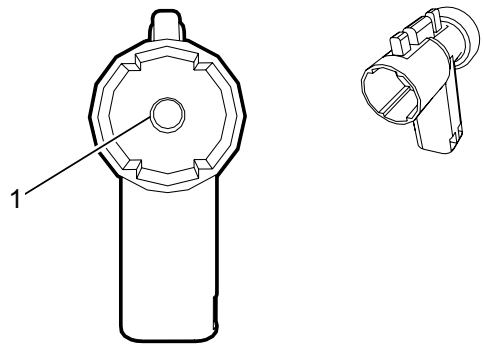

Connector Part Information

Harness Type: Glow Plug

OEM Connector: 1928404878

Service Connector: Service by Harness - See Part Catalog

Description: 1-Way F (BK)

Terminal Part Information

Terminal Type ID	Terminated Lead	Diagnostic Test Probe	Terminal Removal Tool	Service Terminal	Tray	Core Crimp	Insulation Crimp
I	Not Required	Pending	No Tool Required	Not Required	Not Required	Not Required	Not Required

E12C Glow Plug 3 (LWN)

Pin	Size	Color	Circuit	Function	Terminal Type ID	Option
1	1.5	GY/L-GN	1583	Glow Plug Control (3)	I	—

E12D Glow Plug 4 (LWN)

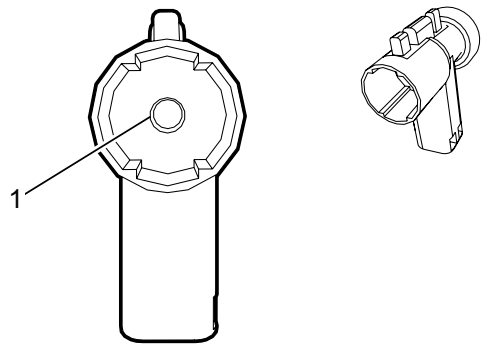

Connector Part Information

Harness Type: Glow Plug

OEM Connector: 1928404878

Service Connector: Service by Harness - See Part Catalog

Description: 1-Way F (BK)

Terminal Part Information

Terminal Type ID	Terminated Lead	Diagnostic Test Probe	Terminal Removal Tool	Service Terminal	Tray	Core Crimp	Insulation Crimp
I	Not Required	Pending	No Tool Required	Not Required	Not Required	Not Required	Not Required

E12D Glow Plug 4 (LWN)

Pin	Size	Color	Circuit	Function	Terminal Type ID	Option
1	1.5	GY/YE	1584	Glow Plug Control (4)	I	—

E14A Seat Heating Element - Driver Back (KA1)

Connector Part Information

Harness Type: Driver Seat Back

OEM Connector:

Service Connector: Service by Harness - See Part Catalog

Description: 4-Way F

Terminal Part Information

Terminal Type ID	Terminated Lead	Diagnostic Test Probe	Terminal Removal Tool	Service Terminal	Tray	Core Crimp	Insulation Crimp
I	Not Required	Pending	No Required	Not Required	Not Required	Not Required	Not Required

E14A Seat Heating Element - Driver Back (KA1)

Pin	Size	Color	Circuit	Function	Terminal Type ID	Option
1	0.75	BN	2432	Driver Heated Back Element Control	I	-
2	0.75	L-BU	2425	Driver Heated Back NTC Signal	I	-
3	0.75	BK/YE	2080	Driver Heated Seat NTC Low Reference	I	-
4	0.75	VT/BK	2424	Driver Heated Back Element Low Reference	I	-

E14B Seat Heating Element - Driver Cushion (KA1)

—

Connector Part Information

Harness Type: Driver Seat Cushion

OEM Connector:

Service Connector: Service by Harness - See Part Catalog

Description: 4-Way F

Terminal Part Information

Terminal Type ID	Terminated Lead	Diagnostic Test Probe	Terminal Removal Tool	Service Terminal	Tray	Core Crimp	Insulation Crimp
I	Not Required	Pending	No Required	Not Required	Not Required	Not Required	Not Required

E14B Seat Heating Element - Driver Cushion (KA1)

Pin	Size	Color	Circuit	Function	Terminal Type ID	Option
1	0.75	BN/VT	2077	Driver Heated Seat Element Control	I	-
2	0.75	YE/GY	2079	Driver Heated Seat NTC Signal	I	-
3	0.75	BK/YE	2080	Driver Heated Seat NTC Low Reference	I	-
4	0.75	VT/BK	2424	Driver Heated Back Element Low Reference	I	-

E14C Seat Heating Element - Passenger Back (KA1)

Connector Part Information

Harness Type: Passenger Seat Back

OEM Connector:

Service Connector: Service by Harness - See Part Catalog

Description: 4-Way F

Terminal Part Information

Terminal Type ID	Terminated Lead	Diagnostic Test Probe	Terminal Removal Tool	Service Terminal	Tray	Core Crimp	Insulation Crimp
I	Not Required	Pending	No Required	Not Required	Not Required	Not Required	Not Required

E14C Seat Heating Element - Passenger Back (KA1)

Pin	Size	Color	Circuit	Function	Terminal Type ID	Option
1	0.75	WH/BN	2481	Passenger Heated Back Element Control	I	-
2	0.75	WH/L-BU	2436	Passenger Heated Back NTC Signal	I	-
3	0.75	BK/L-GN	2482	Passenger Heated Back NTC Low Reference	I	-
4	0.75	GY/BK	2480	Passenger Heated Seat Element Low Reference	I	-

E14D Seat Heating Element - Passenger Cushion (KA1)

Connector Part Information

Harness Type: Passenger Seat Cushion

OEM Connector:

Service Connector: Service by Harness - See Part Catalog

Description: 4-Way F

Terminal Part Information

Terminal Type ID	Terminated Lead	Diagnostic Test Probe	Terminal Removal Tool	Service Terminal	Tray	Core Crimp	Insulation Crimp
I	Not Required	Pending	No Required	Not Required	Not Required	Not Required	Not Required

E14D Seat Heating Element - Passenger Cushion (KA1)

Pin	Size	Color	Circuit	Function	Terminal Type ID	Option
1	0.75	BN/L-BU	2479	Passenger Heated Seat Element Control	I	-
2	0.75	WH/GY	2434	Passenger Heated Seat NTC Signal	I	-
3	0.75	BK/GY	2435	Passenger Heated Seat NTC Low Reference	I	-
4	0.75	GY/BK	2480	Passenger Heated Seat Element Low Reference	I	-

E17D Outside Rearview Mirror Glass - Driver X1 (DL9)

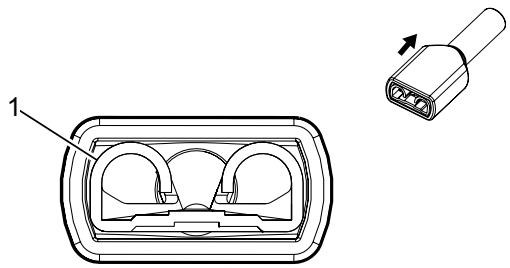

Connector Part Information

Harness Type: Outside Rearview Mirror - Driver

OEM Connector: 2–520272–2

Service Connector: Service by Component - See Part Catalog

Description: 1-Way F 250 Series Slide Spade Terminal (NA)

Terminal Part Information

Terminal Type ID	Terminated Lead	Diagnostic Test Probe	Terminal Removal Tool	Service Terminal	Tray	Core Crimp	Insulation Crimp
I	Not Available	Not Available	Not Available	Not Available	Not Available	Not Available	Not Available

E17D Outside Rearview Mirror Glass - Driver X1 (DL9)

Pin	Size	Color	Circuit	Function	Terminal Type ID	Option
1	0.5	BK	2267	Mirror Heating Element Supply Voltage	I	-

E17D Outside Rearview Mirror Glass - Driver X2 (DL9)

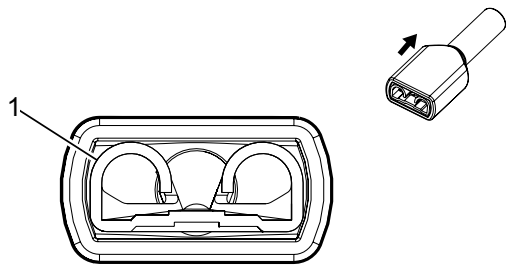

Connector Part Information

Harness Type: Outside Rearview Mirror - Driver

OEM Connector: 2–520272–2

Service Connector: Service by Component - See Part Catalog

Description: 1-Way F 250 Series Slide Spade Terminal (NA)

Terminal Part Information

Terminal Type ID	Terminated Lead	Diagnostic Test Probe	Terminal Removal Tool	Service Terminal	Tray	Core Crimp	Insulation Crimp
I	Not Available	Not Available	Not Available	Not Available	Not Available	Not Available	Not Available

E17D Outside Rearview Mirror Glass - Driver X2 (DL9)

Pin	Size	Color	Circuit	Function	Terminal Type ID	Option
1	0.5	BK	3550	Ground	I	-

E17P Outside Rearview Mirror Glass - Passenger X1 (DL9)

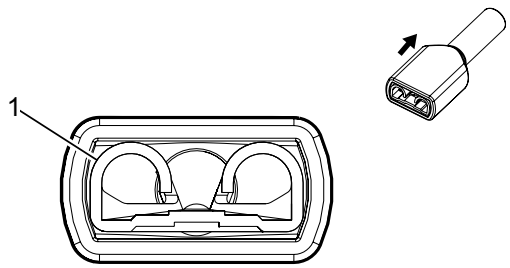

Connector Part Information

Harness Type: Outside Rearview Mirror - Passenger

OEM Connector: 2–520272–2

Service Connector: Service by Component - See Part Catalog

Description: 1-Way F 250 Series Slide Spade Terminal (NA)

Terminal Part Information

Terminal Type ID	Terminated Lead	Diagnostic Test Probe	Terminal Removal Tool	Service Terminal	Tray	Core Crimp	Insulation Crimp
I	Not Available	Not Available	Not Available	Not Available	Not Available	Not Available	Not Available

E17P Outside Rearview Mirror Glass - Passenger X1 (DL9)

Pin	Size	Color	Circuit	Function	Terminal Type ID	Option
1	0.5	BK	2267	Mirror Heating Element Supply Voltage	I	-

E17P Outside Rearview Mirror Glass - Passenger X2 (DL9)

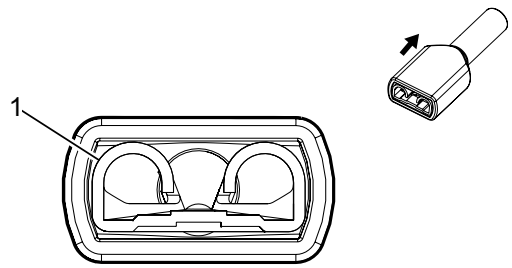

Connector Part Information

Harness Type: Outside Rearview Mirror - Passenger

OEM Connector: 2–520272–2

Service Connector: Service by Component - See Part Catalog

Description: 1-Way F 250 Series Slide Spade Terminal (NA)

Terminal Part Information

Terminal Type ID	Terminated Lead	Diagnostic Test Probe	Terminal Removal Tool	Service Terminal	Tray	Core Crimp	Insulation Crimp
I	Not Available	Not Available	Not Available	Not Available	Not Available	Not Available	Not Available

E17P Outside Rearview Mirror Glass - Passenger X2 (DL9)

Pin	Size	Color	Circuit	Function	Terminal Type ID	Option
1	0.5	BK	3650	Ground	I	-

E18 Rear Defogger Grid X1

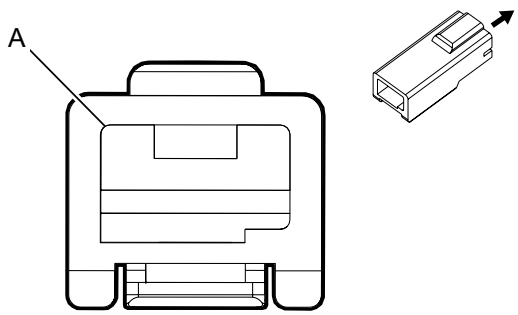

Connector Part Information

Harness Type: Body

OEM Connector: 13705266

Service Connector: 19301743

Description: 1-Way F 630 Metri-Pack Series (BK)

Terminal Part Information

Terminal Type ID	Terminated Lead	Diagnostic Test Probe	Terminal Removal Tool	Service Terminal	Tray	Core Crimp	Insulation Crimp
I	Not Required	J-35616-42 (RD)	Not Required	Not Required	Not Required	Not Required	Not Required

E18 Rear Defogger Grid X1

Pin	Size	Color	Circuit	Function	Terminal Type ID	Option
1	2.5	BN/VT	293	Rear Defog Element Control	I	—
A	2.5	BN/VT	293	Rear Defog Element Control	I	—

E18 Rear Defogger Grid X2

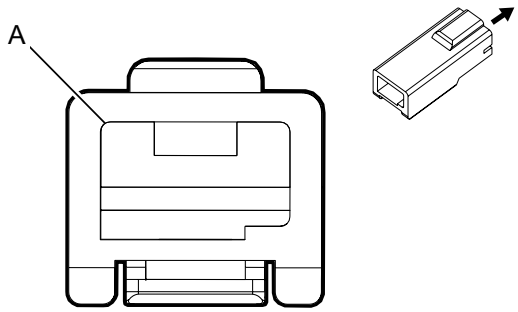

Connector Part Information

Harness Type: Body

OEM Connector: 13705266

Service Connector: 19301743

Description: 1-Way F 630 Metri-Pack Series (BK)

Terminal Part Information

Terminal Type ID	Terminated Lead	Diagnostic Test Probe	Terminal Removal Tool	Service Terminal	Tray	Core Crimp	Insulation Crimp
I	Not Required	J-35616-42 (RD)	Not Required	Not Required	Not Required	Not Required	Not Required

E18 Rear Defogger Grid X2

Pin	Size	Color	Circuit	Function	Terminal Type ID	Option
1	4	BK	3950	Ground	I	—
A	4	BK	3950	Ground	I	—

E29LF Fog Lamp - Left Front (T3U)

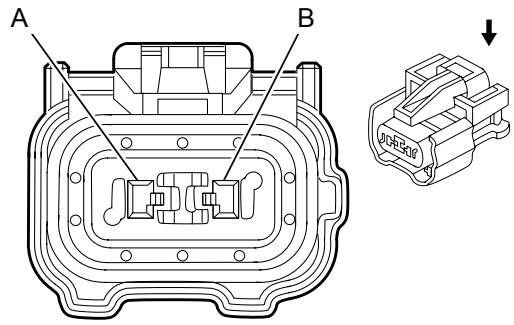

Connector Part Information

Harness Type: Forward Lamp

OEM Connector: 13513272

Service Connector: 19153187

Description: 2-Way F 150 GT Series, Sealed (NA)

Terminal Part Information

Terminal Type ID	Terminated Lead	Diagnostic Test Probe	Terminal Removal Tool	Service Terminal	Tray	Core Crimp	Insulation Crimp
I	Not Required	J-35616-14 (GN)	Not Required	Not Required	Not Required	Not Required	Not Required
II	Not Required	J-35616-2A (GY)	Not Required	Not Required	Not Required	Not Required	Not Required

E29LF Fog Lamp - Left Front (T3U)

Pin	Size	Color	Circuit	Function	Terminal Type ID	Option
A	0.75	BN/VT	2234	Front Fog Lamp Control	I	—
	0.75	BN/VT	2234		II	—
B	0.75	BK	1150	Ground	I	—
	0.75	BK	1150		II	—

E29RF Fog Lamp - Right Front (T3U)

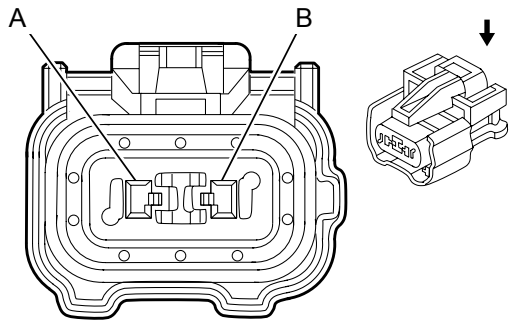

Connector Part Information

Harness Type: Forward Lamp

OEM Connector: 13513272

Service Connector: 19153187

Description: 2-Way F 150 GT Series, Sealed (NA)

Terminal Part Information

Terminal Type ID	Terminated Lead	Diagnostic Test Probe	Terminal Removal Tool	Service Terminal	Tray	Core Crimp	Insulation Crimp
I	Not Required	J-35616-14 (GN)	Not Required	Not Required	Not Required	Not Required	Not Required
II	Not Required	J-35616-2A (GY)	Not Required	Not Required	Not Required	Not Required	Not Required

E29RF Fog Lamp - Right Front (T3U)

Pin	Size	Color	Circuit	Function	Terminal Type ID	Option
A	0.75	BN/VT	2234	Front Fog Lamp Control	I	—
	0.75	BN/VT	2234		II	—
B	0.75	BK	1250	Ground	I	—
	0.75	BK	1250		II	—

E31L Sunshade Mirror Lamp - Left (D6I)

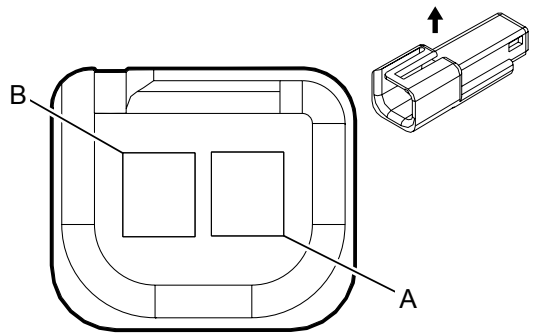

Connector Part Information

Harness Type: Headliner

OEM Connector: 12047663

Service Connector: 13584278

Description: 2-Way M 150 Metri-Pack Series (BK)

Terminal Part Information

Terminal Type ID	Terminated Lead	Diagnostic Test Probe	Terminal Removal Tool	Service Terminal	Tray	Core Crimp	Insulation Crimp
I	Not Required	J-35616-3 (GY)	Not Required	Not Required	Not Required	Not Required	Not Required

E31L Sunshade Mirror Lamp - Left (D6I)

Pin	Size	Color	Circuit	Function	Terminal Type ID	Option
A	0.5	WH/BN	6815	Inadvertent Power Control	I	—
B	0.5	BK	3150	Ground	I	—

E31R Sunshade Mirror Lamp - Right (D6I)

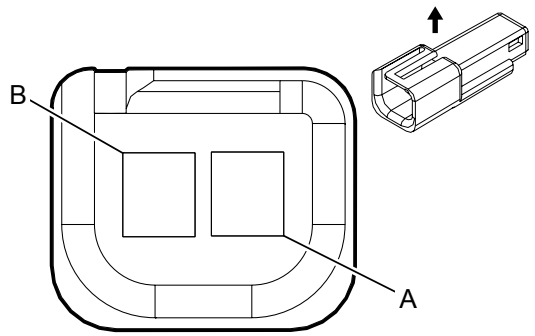

Connector Part Information

Harness Type: Headliner

OEM Connector: 12047663

Service Connector: 13584278

Description: 2-Way M 150 Metri-Pack Series (BK)

Terminal Part Information

Terminal Type ID	Terminated Lead	Diagnostic Test Probe	Terminal Removal Tool	Service Terminal	Tray	Core Crimp	Insulation Crimp
I	Not Required	J-35616-3 (GY)	Not Required	Not Required	Not Required	Not Required	Not Required

E31R Sunshade Mirror Lamp - Right (D6I)

Pin	Size	Color	Circuit	Function	Terminal Type ID	Option
A	0.5	WH/BN	6815	Inadvertent Power Control	I	—
B	0.5	BK	3150	Ground	I	—

E32 Cigarette Lighter Receptacle (SAO)

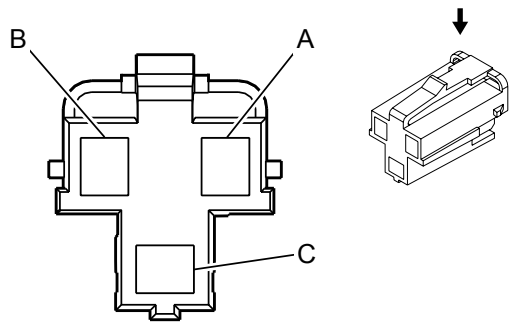

Connector Part Information

Harness Type: Instrument Panel

OEM Connector: 12176836

Service Connector: 19257374

Description: 3-Way F 280 Metri Pack Series (GY)

Terminal Part Information

Terminal Type ID	Terminated Lead	Diagnostic Test Probe	Terminal Removal Tool	Service Terminal	Tray	Core Crimp	Insulation Crimp
I	Not Available	J-35616-64B (L-BU)	Not Available	Not Available	Not Available	Not Available	Not Available

E32 Cigarette Lighter Receptacle (SAO)

Pin	Size	Color	Circuit	Function	Terminal Type ID	Option
A	1.5	VT	1701	Retained Accessory Power Fuse Supply Voltage	I	-
B	-	-	-	Not Occupied	-	-
C	1.5	BK	2050	Ground	I	-

E33L Cargo Lamp - Left

—

Connector Part Information

Harness Type: CHMSL

OEM Connector: Not Available

Service Connector: Not Available

Description: 2-Way F (GY)

Terminal Part Information

Terminal Type ID	Terminated Lead	Diagnostic Test Probe	Terminal Removal Tool	Service Terminal	Tray	Core Crimp	Insulation Crimp
I	Not Available	Not Available	Not Available	Not Available	Not Available	Not Available	Not Available

E33L Cargo Lamp - Left

Pin	Size	Color	Circuit	Function	Terminal Type ID	Option
A	0.75	BN	1430	Exterior Courtesy Lamp Supply Voltage	I	-
B	0.75	BK	3150	Ground	I	-

E33R Cargo Lamp - Right

—

Connector Part Information

Harness Type: CHMSL

OEM Connector: Not Available

Service Connector: Not Available

Description: 2-Way F (GY)

Terminal Part Information

Terminal Type ID	Terminated Lead	Diagnostic Test Probe	Terminal Removal Tool	Service Terminal	Tray	Core Crimp	Insulation Crimp
I	Not Available	Not Available	Not Available	Not Available	Not Available	Not Available	Not Available

E33R Cargo Lamp - Right

Pin	Size	Color	Circuit	Function	Terminal Type ID	Option
A	0.75	BN	1430	Exterior Courtesy Lamp Supply Voltage	I	-
	0.75	BN	1430			-
B	0.75	BK	3150	Ground	I	-
	0.75	BK	3150			-

E37F Dome/Reading Lamps - Front (C74)

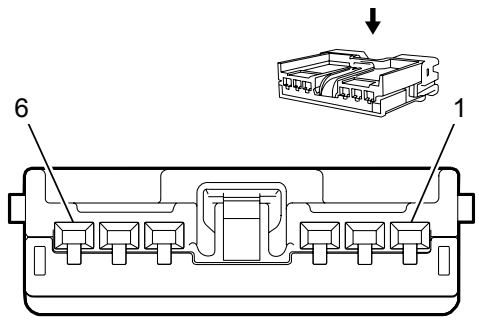

Connector Part Information

Harness Type: Headliner

OEM Connector: 6098-5985

Service Connector: 13576538

Description: 6-Way F 1.5 Series (BK)

Terminal Part Information

Terminal Type ID	Terminated Lead	Diagnostic Test Probe	Terminal Removal Tool	Service Terminal	Tray	Core Crimp	Insulation Crimp
I	Not Required	J-35616-2A (GY)	Not Required	Not Required	Not Required	Not Required	Not Required

E37F Dome/Reading Lamps - Front (C74)

Pin	Size	Color	Circuit	Function	Terminal Type ID	Option
1	0.5	WH/BN	6815	Inadvertent Power Control	I	—
2	0.5	GY	157	Interior Lamp Control	I	—
3	0.5	YE	6817	LED Backlight Dimming Control	I	—
4	0.35	GY/L-GN	328	Interior Lamp Defeat Switch Signal	I	—
5	0.35	GY	156	Courtesy Lamp Switch Signal	I	—
6	0.5	BK	3150	Ground	I	—

E37R Dome/Reading Lamps - Rear

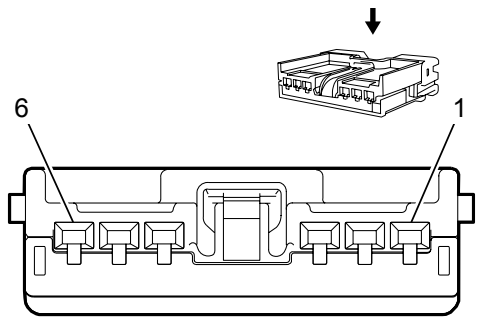

Connector Part Information

Harness Type: Headliner

OEM Connector: 6098-5985

Service Connector: 13576538

Description: 6-Way F 1.5 Series (BK)

Terminal Part Information

Terminal Type ID	Terminated Lead	Diagnostic Test Probe	Terminal Removal Tool	Service Terminal	Tray	Core Crimp	Insulation Crimp
I	Not Required	J-35616-2A (GY)	Not Required	Not Required	Not Required	Not Required	Not Required

E37R Dome/Reading Lamps - Rear

Pin	Size	Color	Circuit	Function	Terminal Type ID	Option
1	0.5	WH/BN	6815	Inadvertent Power Control	I	—
2	0.5	GY	157	Interior Lamp Control	I	—
3 - 5	—	—	—	Not Occupied	—	—
6	0.5	BK	3150	Ground	I	—

E40 Electrical Auxiliary Heater X1 (LWN)

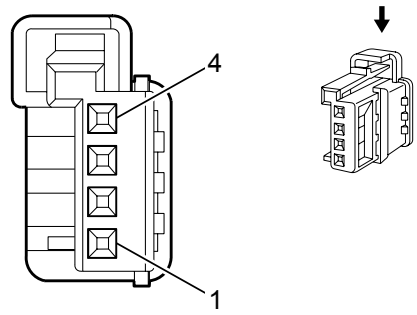

Connector Part Information

Harness Type: Instrument Panel

OEM Connector: 13216377

Service Connector: 13584096

Description: 4-Way F 0.64 Micro Quadlok Series (BK)

Terminal Part Information

Terminal Type ID	Terminated Lead	Diagnostic Test Probe	Terminal Removal Tool	Service Terminal	Tray	Core Crimp	Insulation Crimp
I	Not Required	J-35616-64B (LT BU)	Not Required	Not Required	Not Required	Not Required	Not Required
I	Not Required	J-35616-64B (LT BU)	Not Required	Not Required	Not Required	Not Required	Not Required

E40 Electrical Auxiliary Heater X1 (LWN)

Pin	Size	Color	Circuit	Function	Terminal Type ID	Option
1	0.5	VT	3195	Auxiliary Heater Control	I	—
2	0.35	VT/GY	539	Run/Crank Ignition 1 Voltage	I	—
3 - 4	—	—	—	Not Occupied	—	—

E40 Electrical Auxiliary Heater X2 (LWN)

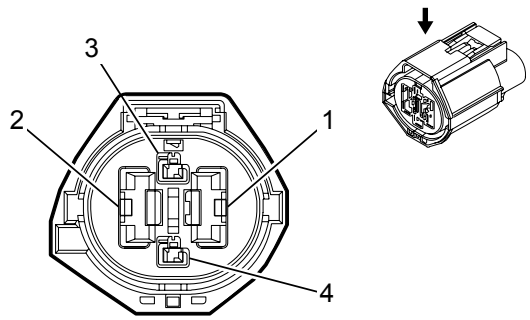

Connector Part Information

Harness Type: Body

OEM Connector: 7287-1405-80

Service Connector: Service by Harness - See Part Catalog

Description: 4-Way F 1.5, 9.5 Series, Sealed (BN)

Terminal Part Information

Terminal Type ID	Terminated Lead	Diagnostic Test Probe	Terminal Removal Tool	Service Terminal	Tray	Core Crimp	Insulation Crimp
I	Not Required	J-35616-42 (RD)	Not Required	Not Required	Not Required	Not Required	Not Required

E40 Electrical Auxiliary Heater X2 (LWN)

Pin	Size	Color	Circuit	Function	Terminal Type ID	Option
1	10	BK	1350	Ground	I	—
2	10	RD/GY	4840	Battery Positive Voltage	I	—
3 - 4	—	—	—	Not Occupied	—	—

E41 Engine Coolant Thermostat Heater (LCV)

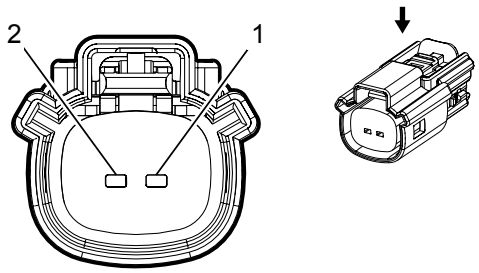

Connector Part Information

Harness Type: Engine

OEM Connector: 33471-0206

Service Connector: 13577534

Description: 2-Way F 1.5 Series, Sealed (BK)

Terminal Part Information

Terminal Type ID	Terminated Lead	Diagnostic Test Probe	Terminal Removal Tool	Service Terminal	Tray	Core Crimp	Insulation Crimp
I	Not Required	J-35616-2A (GY)	Not Required	Not Required	Not Required	Not Required	Not Required

E41 Engine Coolant Thermostat Heater (LCV)

Pin	Size	Color	Circuit	Function	Terminal Type ID	Option
1	0.5	VT/L-BU	5293	Powertrain Main Relay Fused Supply (4)	I	—
2	0.5	L-BU	6814	Thermostat Engine Cool Control	I	—

E45 Positive Crankcase Ventilation Heater (LWN)

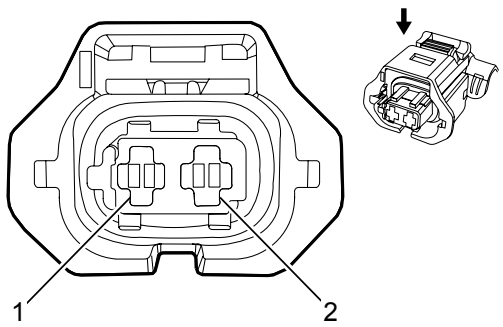

Connector Part Information

Harness Type: Engine

OEM Connector: 13595623

Service Connector: 13355762

Description: 2-Way F ATS 2.8 Series, Sealed (BK)

Terminal Part Information

Terminal Type ID	Terminated Lead	Diagnostic Test Probe	Terminal Removal Tool	Service Terminal	Tray	Core Crimp	Insulation Crimp
I	Not Required	J-35616-4A (PU)	Not Required	Not Required	Not Required	Not Required	Not Required

E45 Positive Crankcase Ventilation Heater (LWN)

Pin	Size	Color	Circuit	Function	Terminal Type ID	Option
1	0.5	YE/L-BU	1497	Crankcase Ventilation (Blowby) Heater Control Signal	I	—
2	0.5	VT/L-BU	5293	Powertrain Main Relay Fused Supply (4)	I	—

F101 Passenger Instrument Panel Air Bag X1

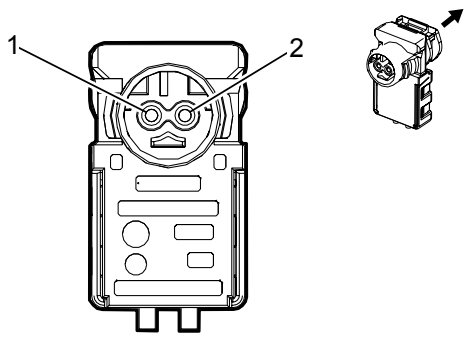

Connector Part Information

Harness Type: Instrument Panel Air Bag

OEM Connector: 13580454

Service Connector: Service by Component Assembly – See Part Catalog

Description: 2-Way F AK-2 Series (L-GN with YE cover)

Terminal Part Information

Terminal Type ID	Terminated Lead	Diagnostic Test Probe	Terminal Removal Tool	Service Terminal	Tray	Core Crimp	Insulation Crimp
I	Service by Component Assembly – See Part Catalog	J-35616-64B (LT BU)	Not Available	Not Available	Not Available	Not Available	Not Available

F101 Passenger Instrument Panel Air Bag X1

Pin	Size	Color	Circuit	Function	Terminal Type ID	Option
1	0.35	YE/OG	3025	Passenger IP Module Stage 1 High Control	I	-
2	0.35	OG/WH	3024	Passenger IP Module Stage 1 Low Control	I	-

F101 Passenger Instrument Panel Air Bag X2

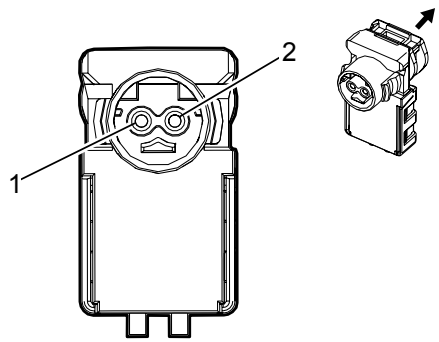

Connector Part Information

Harness Type: Instrument Panel Air Bag

OEM Connector: 13580453

Service Connector: Service by Component Assembly – See Part Catalog

Description: 2-Way F AK-2 Series (YE with YE cover)

Terminal Part Information

Terminal Type ID	Terminated Lead	Diagnostic Test Probe	Terminal Removal Tool	Service Terminal	Tray	Core Crimp	Insulation Crimp
I	Service by Component Assembly – See Part Catalog	J-35616-64B (LT BU)	Not Available	Not Available	Not Available	Not Available	Not Available

F101 Passenger Instrument Panel Air Bag X2

Pin	Size	Color	Circuit	Function	Terminal Type ID	Option
1	0.35	GY	3027	Passenger IP Module Stage 2 High Control	I	-
2	0.35	OG/VT	3026	Passenger IP Module Stage 2 Low Control	I	-

F101 Passenger Instrument Panel Air Bag X3

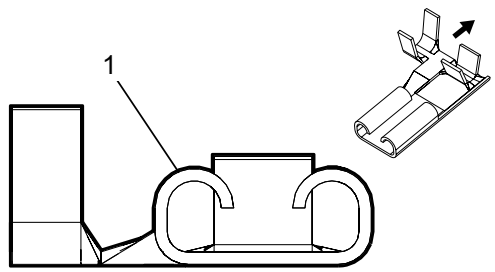

Connector Part Information

Harness Type: Instrument Panel Air Bag

OEM Connector: Not Available

Service Connector: Service by Harness — See Part Catalog

Description: 1-Way F 250 Lance Series (NA)

Terminal Part Information

Terminal Type ID	Terminated Lead	Diagnostic Test Probe	Terminal Removal Tool	Service Terminal	Tray	Core Crimp	Insulation Crimp
I	Service by Harness — See Part Catalog	Not Available	Not Available	Not Available	Not Available	Not Available	Not Available

F101 Passenger Instrument Panel Air Bag X3

Pin	Size	Color	Circuit	Function	Terminal Type ID	Option
1	0.5	BK/WH	2051	Ground	I	—

F105L Roof Rail Air Bag - Left (Crew Cab)

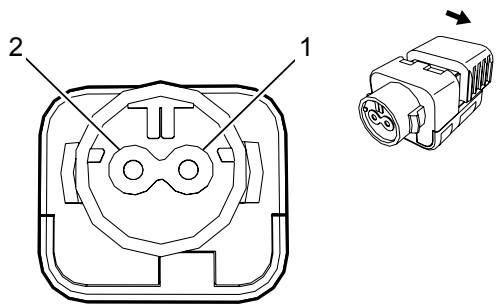

Connector Part Information

Harness Type: Body

OEM Connector: 19153419

Service Connector: 19300405

Description: 2-Way F FPB 180-1 Series (BK with YE Cover)

Terminal Part Information

Terminal Type ID	Terminated Lead	Diagnostic Test Probe	Terminal Removal Tool	Service Terminal	Tray	Core Crimp	Insulation Crimp
I	Not Required	J-53616-64B (LT BU)	Not Required	Not Required	Not Required	Not Required	Not Required

F105L Roof Rail Air Bag - Left (Crew Cab)

Pin	Size	Color	Circuit	Function	Terminal Type ID	Option
1	0.5	OG/L-GN	5019	Left Front Head Curtain Module High Control	I	—
2	0.5	VT/OG	5020	Left Front Head Curtain Module Low Control	I	—

F105L Roof Rail Air Bag - Left (Extended Cab)

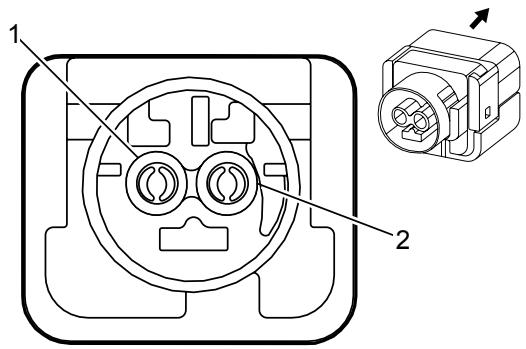

Connector Part Information

Harness Type: Body

OEM Connector: 19178108

Service Connector: 19300405

Description: 2-Way F FPB 180-1 Series (BK with YE cover)

Terminal Part Information

Terminal Type ID	Terminated Lead	Diagnostic Test Probe	Terminal Removal Tool	Service Terminal	Tray	Core Crimp	Insulation Crimp
I	Not Required	J-53616-64B (LT BU)	Not Required	Not Required	Not Required	Not Required	Not Required

F105L Roof Rail Air Bag - Left (Extended Cab)

Pin	Size	Color	Circuit	Function	Terminal Type ID	Option
1	0.5	OG/L-GN	5019	Left Front Head Curtain Module High Control	I	—
2	0.5	VT/OG	5020	Left Front Head Curtain Module Low Control	I	—

F105R Roof Rail Air Bag - Right (Crew Cab)

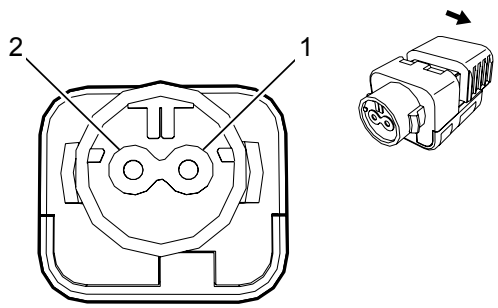

Connector Part Information

Harness Type: Body

OEM Connector: 19153419

Service Connector: 19300405

Description: 2-Way F FPB 180-1 Series (BK with YE Cover)

Terminal Part Information

Terminal Type ID	Terminated Lead	Diagnostic Test Probe	Terminal Removal Tool	Service Terminal	Tray	Core Crimp	Insulation Crimp
I	Not Required	J-53616-64B (LT BU)	Not Required	Not Required	Not Required	Not Required	Not Required

F105R Roof Rail Air Bag - Right (Crew Cab)

Pin	Size	Color	Circuit	Function	Terminal Type ID	Option
1	0.5	OG/GY	5021	Right Front Head Curtain Module High Control	I	—
2	0.5	WH/OG	5022	Right Front Head Curtain Module Low Control	I	—

F105R Roof Rail Air Bag - Right (Extended Cab)

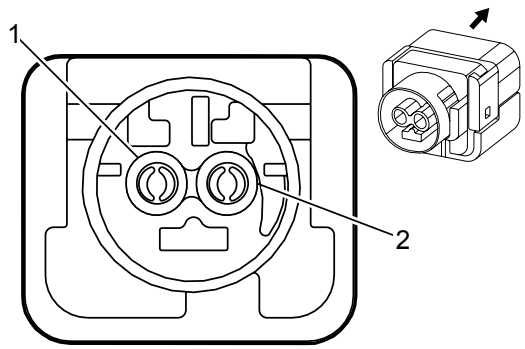

Connector Part Information

Harness Type: Body

OEM Connector: 19178108

Service Connector: 19300405

Description: 2-Way F FPB 180-1 Series (BK with YE cover)

Terminal Part Information

Terminal Type ID	Terminated Lead	Diagnostic Test Probe	Terminal Removal Tool	Service Terminal	Tray	Core Crimp	Insulation Crimp
I	Not Required	J-53616-64B (LT BU)	Not Required	Not Required	Not Required	Not Required	Not Required

F105R Roof Rail Air Bag - Right (Extended Cab)

Pin	Size	Color	Circuit	Function	Terminal Type ID	Option
1	0.5	OG/GY	5021	Right Front Head Curtain Module High Control	I	—
2	0.5	WH/OG	5022	Right Front Head Curtain Module Low Control	I	—

F106D Seat Side Air Bag - Driver

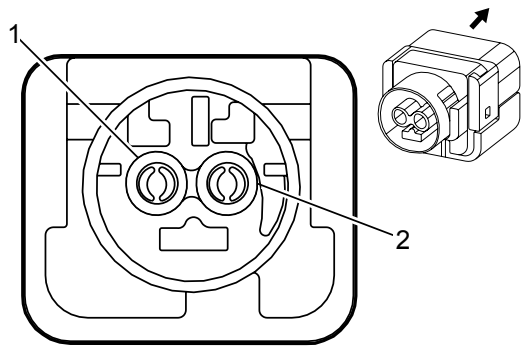

Connector Part Information

Harness Type: Driver Seat Back

OEM Connector: PPI0001142

Service Connector: 19300405

Description: 2-Way F FPB 180 1 Series (BK with YE cover)

Terminal Part Information

Terminal Type ID	Terminated Lead	Diagnostic Test Probe	Terminal Removal Tool	Service Terminal	Tray	Core Crimp	Insulation Crimp
I	Not Available	Not Available	Not Available	Not Available	Not Available	Not Available	Not Available

F106D Seat Side Air Bag - Driver

Pin	Size	Color	Circuit	Function	Terminal Type ID	Option
1	0.5	OG/L-BU	3068	Driver Side Impact Module High Control	I	-
2	0.5	L-GN/OG	3069	Driver Side Impact Module Low Control	I	-

F106P Seat Side Air Bag - Passenger

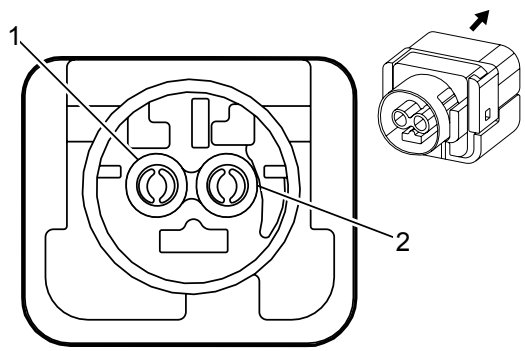

Connector Part Information

Harness Type: Passenger Seat Back

OEM Connector: PPI0001142

Service Connector: 19300405

Description: 2-Way F FPB 180 1 Series (BK with YE cover)

Terminal Part Information

Terminal Type ID	Terminated Lead	Diagnostic Test Probe	Terminal Removal Tool	Service Terminal	Tray	Core Crimp	Insulation Crimp
I	Not Available	Not Available	Not Available	Not Available	Not Available	Not Available	Not Available

F106P Seat Side Air Bag - Passenger

Pin	Size	Color	Circuit	Function	Terminal Type ID	Option
1	0.5	OG/GY	3066	Passenger Side Impact Module High Control	I	-
2	0.5	BN/OG	3067	Passenger Side Impact Module Low Control	I	-

F107 Steering Wheel Air Bag X1

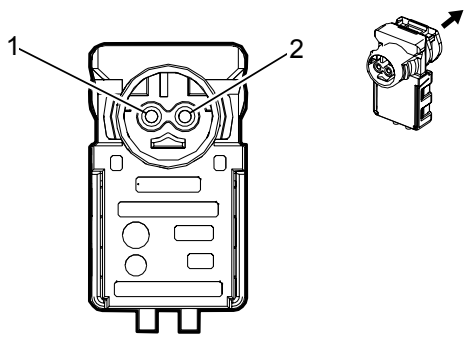

Connector Part Information

Harness Type: Steering Wheel Air Bag Coil

OEM Connector: 13580454

Service Connector: Service by Component Assembly – See Part Catalog

Description: 2-Way F AK-2 Series (L-GN with YE cover)

Terminal Part Information

Terminal Type ID	Terminated Lead	Diagnostic Test Probe	Terminal Removal Tool	Service Terminal	Tray	Core Crimp	Insulation Crimp
I	Service by Component Assembly – See Part Catalog	Not Available	Not Available	Not Available	Not Available	Not Available	Not Available

F107 Steering Wheel Air Bag X1

Pin	Size	Color	Circuit	Function	Terminal Type ID	Option
1	0.50	TN	3020	Steering Wheel Module – Stage 1 – Low Control	I	-
2	0.50	BN	3021	Steering Wheel Module – Stage 1 – High Control	I	-

F107 Steering Wheel Air Bag X2

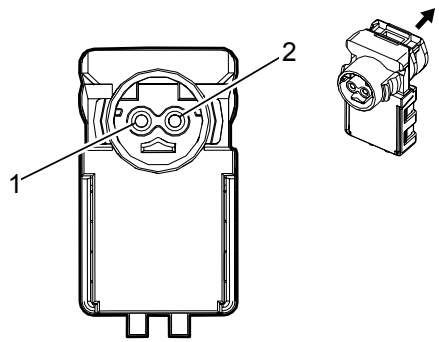

Connector Part Information

Harness Type: Steering Wheel Air Bag Coil

OEM Connector: 13580453

Service Connector: Service by Component Assembly – See Part Catalog

Description: 2-Way F AK-2 Series (YE with YE cover)

Terminal Part Information

Terminal Type ID	Terminated Lead	Diagnostic Test Probe	Terminal Removal Tool	Service Terminal	Tray	Core Crimp	Insulation Crimp
I	Service by Component Assembly – See Part Catalog	Not Available	Not Available	Not Available	Not Available	Not Available	Not Available

F107 Steering Wheel Air Bag X2

Pin	Size	Color	Circuit	Function	Terminal Type ID	Option
1	0.35	WH	3022	Steering Wheel Module – Stage 2 – Low Control	I	-
2	0.35	PK	3023	Steering Wheel Module – Stage 2 – High Control	I	-

F112D Seat Belt Retractor Pretensioner - Driver (Crew Cab)

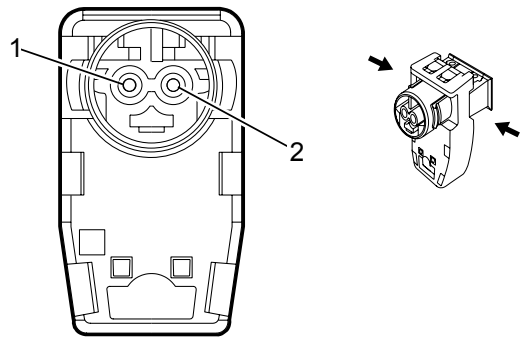

Connector Part Information

Harness Type: Body

OEM Connector: 19178105

Service Connector: 19180245

Description: 2-Way F 0.64 Series, Sealed (BK with YE cover)

Terminal Part Information

Terminal Type ID	Terminated Lead	Diagnostic Test Probe	Terminal Removal Tool	Service Terminal	Tray	Core Crimp	Insulation Crimp
I	Not Required	J-53616-64B (LT BU)	Not Required	Not Required	Not Required	Not Required	Not Required

F112D Seat Belt Retractor Pretensioner - Driver (Crew Cab)

Pin	Size	Color	Circuit	Function	Terminal Type ID	Option
1	0.35	OG/WH	3477	Driver Seat Belt Retractor Pretensioner High Control	I	—
	0.5	OG/WH	3477			—
2	0.35	GY/OG	3478	Driver Seat Belt Retractor Pretensioner Low Control	I	—
	0.5	GY/OG	3478			—

F112D Seat Belt Retractor Pretensioner - Driver (Extended Cab)

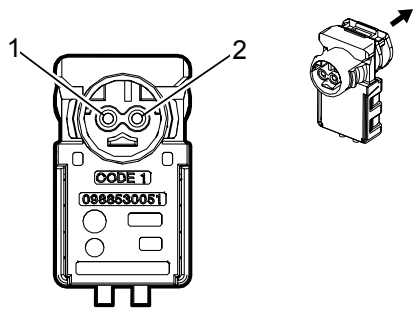

Connector Part Information

Harness Type: Left Rear Door

OEM Connector: 13580455

Service Connector: Service by Harness - See Part Catalog

Description: 2-Way F AK-2 Series (BK)

Terminal Part Information

Terminal Type ID	Terminated Lead	Diagnostic Test Probe	Terminal Removal Tool	Service Terminal	Tray	Core Crimp	Insulation Crimp
I	Not Required	J-35616-64 (LT BU)	Not Required	Not Required	Not Required	Not Required	Not Required

F112D Seat Belt Retractor Pretensioner - Driver (Extended Cab)

Pin	Size	Color	Circuit	Function	Terminal Type ID	Option
1	0.35	OG/WH	3477	Driver Seat Belt Retractor Pretensioner High Control	I	—
2	0.35	GY/OG	3478	Driver Seat Belt Retractor Pretensioner Low Control	I	—

F112P Seat Belt Retractor Pretensioner - Passenger (Crew Cab)

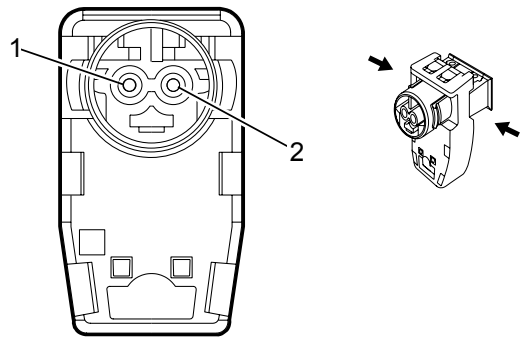

Connector Part Information

Harness Type: Body

OEM Connector: 19178105

Service Connector: 19180245

Description: 2-Way F 0.64 Series, Sealed (BK with YE cover)

Terminal Part Information

Terminal Type ID	Terminated Lead	Diagnostic Test Probe	Terminal Removal Tool	Service Terminal	Tray	Core Crimp	Insulation Crimp
I	Not Required	J-53616-64B (LT BU)	Not Required	Not Required	Not Required	Not Required	Not Required

F112P Seat Belt Retractor Pretensioner - Passenger (Crew Cab)

Pin	Size	Color	Circuit	Function	Terminal Type ID	Option
1	0.35	OG/L-GN	3475	Passenger Seat Belt Retractor Pretensioner High Control	I	—
	0.5	OG/L-GN	3475			—
2	0.35	WH/OG	3476	Passenger Seat Belt Retractor Pretensioner Low Control	I	—
	0.5	WH/OG	3476			—

F112P Seat Belt Retractor Pretensioner - Passenger (Extended Cab)

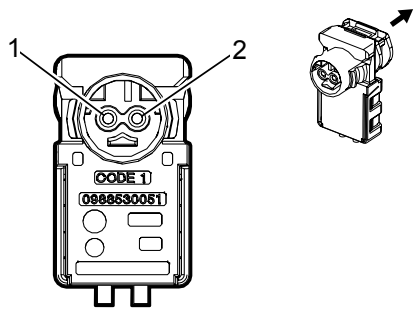

Connector Part Information

Harness Type: Right Rear Door

OEM Connector: 13580455

Service Connector: Service by Harness - See Part Catalog

Description: 2-Way F AK-2 Series (BK)

Terminal Part Information

Terminal Type ID	Terminated Lead	Diagnostic Test Probe	Terminal Removal Tool	Service Terminal	Tray	Core Crimp	Insulation Crimp
I	Not Required	J-35616-64 (LT BU)	Not Required	Not Required	Not Required	Not Required	Not Required

F112P Seat Belt Retractor Pretensioner - Passenger (Extended Cab)

Pin	Size	Color	Circuit	Function	Terminal Type ID	Option
1	0.5	OG/L-GN	3475	Passenger Seat Belt Retractor Pretensioner High Control	I	—
2	0.5	WH/OG	3476	Passenger Seat Belt Retractor Pretensioner Low Control	I	—

F113D Seat Belt Anchor Pretensioner - Driver

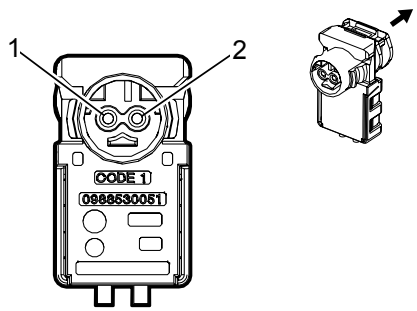

Connector Part Information

Harness Type: Left Rear Door

OEM Connector: 13580455

Service Connector: Service by Harness - See Part Catalog

Description: 2-Way F AK-2 Series (BK)

Terminal Part Information

Terminal Type ID	Terminated Lead	Diagnostic Test Probe	Terminal Removal Tool	Service Terminal	Tray	Core Crimp	Insulation Crimp
I	Not Required	J-35616-64 (LT BU)	Not Required	Not Required	Not Required	Not Required	Not Required

F113D Seat Belt Anchor Pretensioner - Driver

Pin	Size	Color	Circuit	Function	Terminal Type ID	Option
1	0.35	OG/YE	3481	Driver Seat Belt Anchor Pretensioner High Control	I	—
2	0.35	YE/OG	3482	Driver Seat Belt Anchor Pretensioner Low Control	I	—

F113P Seat Belt Anchor Pretensioner - Passenger

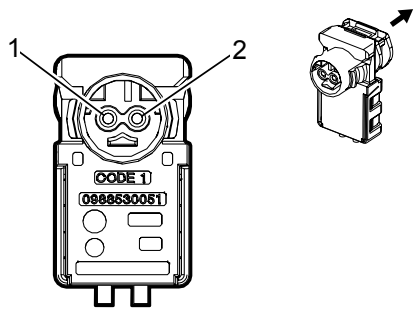

Connector Part Information

Harness Type: Right Rear Door

OEM Connector: 13580455

Service Connector: Service by Harness - See Part Catalog

Description: 2-Way F AK-2 Series (BK)

Terminal Part Information

Terminal Type ID	Terminated Lead	Diagnostic Test Probe	Terminal Removal Tool	Service Terminal	Tray	Core Crimp	Insulation Crimp
I	Not Required	J-35616-64 (LT BU)	Not Required	Not Required	Not Required	Not Required	Not Required

F113P Seat Belt Anchor Pretensioner - Passenger

Pin	Size	Color	Circuit	Function	Terminal Type ID	Option
1	0.5	OG/BN	3479	Passenger Seat Belt Anchor Pretensioner High Control	I	—
2	0.5	GY/OG	3480	Passenger Seat Belt Anchor Pretensioner Low Control	I	—

G13 Generator X1

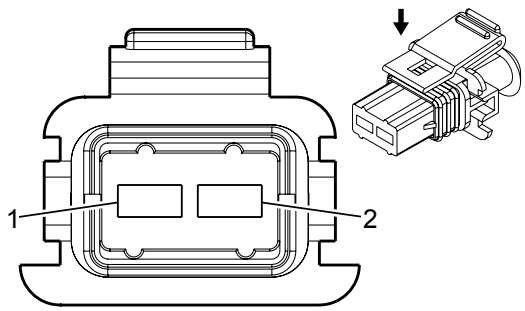

Connector Part Information

Harness Type: Engine

OEM Connector: 12186308

Service Connector: 13585849

Description: 2-Way F Junior Power Timer Series, Sealed (BK)

Terminal Part Information

Terminal Type ID	Terminated Lead	Diagnostic Test Probe	Terminal Removal Tool	Service Terminal	Tray	Core Crimp	Insulation Crimp
I	Not Required	J-35616-35 (VT)	Not Required	Not Required	Not Required	Not Required	Not Required

G13 Generator X1

Pin	Size	Color	Circuit	Function	Terminal Type ID	Option
1	0.5	L-BU/WH	225	Generator Turn On Signal	I	LCV/LFX
	0.5	BN	25	Charge Indicator Control		LWN
2	0.5	GY	23	Generator Field Duty Cycle Signal	I	—

G13 Generator X2 (LCV)

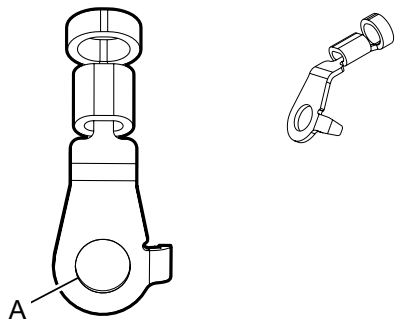

Connector Part Information

Harness Type: Fuse Block - Generator

OEM Connector: BBS00488

Service Connector: Service by Cable Assembly — See Part Catalog

Description: 1-Way Ring Terminal (NA)

Terminal Part Information

Terminal Type ID	Terminated Lead	Diagnostic Test Probe	Terminal Removal Tool	Service Terminal	Tray	Core Crimp	Insulation Crimp
I	Not Available	No Tool Required	Not Available	Not Available	Not Available	Not Available	Not Available

G13 Generator X2 (LCV)

Pin	Size	Color	Circuit	Function	Terminal Type ID	Option
A	2	RD/YE	25	Battery Positive Voltage	I	—

G13 Generator X2 (LFX)

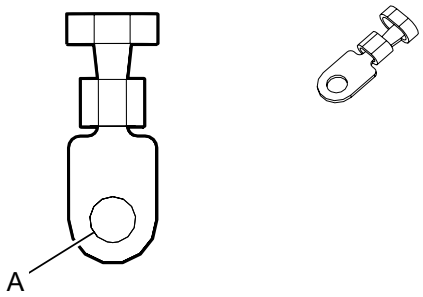

Connector Part Information

Harness Type: Fuse Block - Generator

OEM Connector: 15327720

Service Connector: Service by Cable Assembly — See Part Catalog

Description: 1-Way Ring Terminal (NA)

Terminal Part Information

Terminal Type ID	Terminated Lead	Diagnostic Test Probe	Terminal Removal Tool	Service Terminal	Tray	Core Crimp	Insulation Crimp
I	Not Available	No Tool Required	Not Available	Not Available	Not Available	Not Available	Not Available

G13 Generator X2 (LFX)

Pin	Size	Color	Circuit	Function	Terminal Type ID	Option
A	2	RD/YE	25	Battery Positive Voltage	I	—

G13 Generator X2 (LWN)

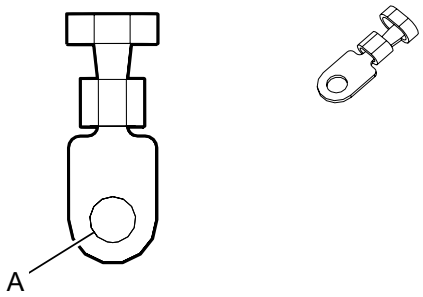

Connector Part Information

Harness Type: Fuse Block - Generator

OEM Connector: 15327720

Service Connector: Service by Cable Assembly — See Part Catalog

Description: 1-Way Ring Terminal (NA)

Terminal Part Information

Terminal Type ID	Terminated Lead	Diagnostic Test Probe	Terminal Removal Tool	Service Terminal	Tray	Core Crimp	Insulation Crimp
I	Not Available	No Tool Required	Not Available	Not Available	Not Available	Not Available	Not Available

G13 Generator X2 (LWN)

Pin	Size	Color	Circuit	Function	Terminal Type ID	Option
A	2	RD/YE	25	Battery Positive Voltage	I	—

G18 High Pressure Fuel Pump (LCV)

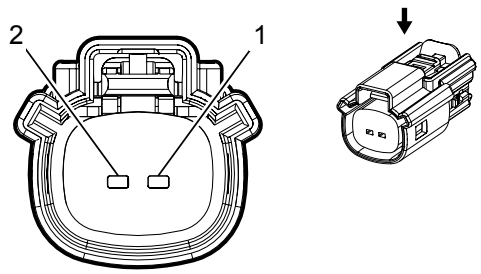

Connector Part Information

Harness Type: Engine

OEM Connector: 33471-0206

Service Connector: 13577534

Description: 2-Way F 1.5 Series, Sealed (BK)

Terminal Part Information

Terminal Type ID	Terminated Lead	Diagnostic Test Probe	Terminal Removal Tool	Service Terminal	Tray	Core Crimp	Insulation Crimp
I	Not Required	J-35616-2A (GY)	Not Required	Not Required	Not Required	Not Required	Not Required

G18 High Pressure Fuel Pump (LCV)

Pin	Size	Color	Circuit	Function	Terminal Type ID	Option
1	0.5	YE	7301	High Pressure Fuel Pump Actuator High - Control	I	—
2	0.5	VT/BK	7300	High Pressure Fuel Pump Actuator Low - Control	I	—

G18 High Pressure Fuel Pump (LFX)

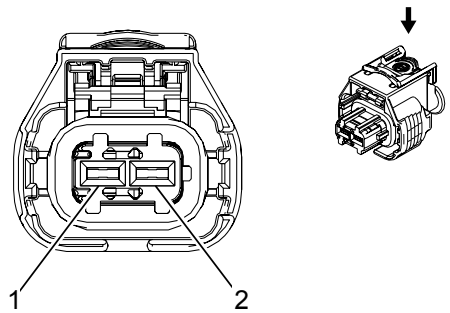

Connector Part Information

Harness Type: Engine

OEM Connector: 1928405521

Service Connector: 13384371

Description: 2-Way F 2.8 Series, Sealed (BK)

Terminal Part Information

Terminal Type ID	Terminated Lead	Diagnostic Test Probe	Terminal Removal Tool	Service Terminal	Tray	Core Crimp	Insulation Crimp
I	Not Required	J-35616-35 (VT)	Not Required	Not Required	Not Required	Not Required	Not Required

G18 High Pressure Fuel Pump (LFX)

Pin	Size	Color	Circuit	Function	Terminal Type ID	Option
1	0.5	VT/BK	7300	High Pressure Fuel Pump Actuator Low - Control	I	—
2	0.5	YE	7301	High Pressure Fuel Pump Actuator High - Control	I	—

G24 Windshield Washer Pump

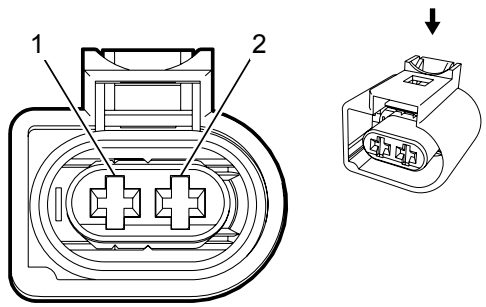

Connector Part Information

Harness Type: Forward Lamp

OEM Connector: 1-1355200-1

Service Connector: 13576532

Description: 2-Way F 2.8 MDK5 Series, Sealed (BK)

Terminal Part Information

Terminal Type ID	Terminated Lead	Diagnostic Test Probe	Terminal Removal Tool	Service Terminal	Tray	Core Crimp	Insulation Crimp
I	Not Required	J-35616-35 (VT)	Not Required	Not Required	Not Required	Not Required	Not Required

G24 Windshield Washer Pump

Pin	Size	Color	Circuit	Function	Terminal Type ID	Option
1	0.75	GY/VT	228	Windshield Washer Pump Control	I	—
2	0.75	BK	1150	Ground	I	—

K8 Blower Motor Control Module

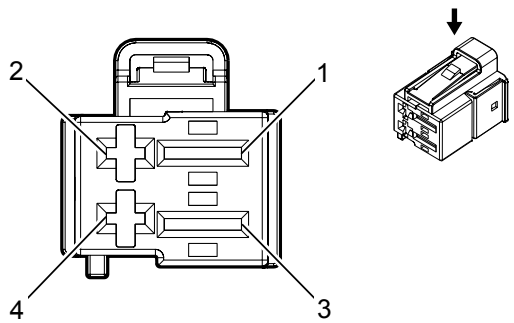

Connector Part Information

Harness Type: Instrument Panel

OEM Connector: 1-1418507-2

Service Connector: 19329746

Description: 4-Way F 2.8, 6.3 Multiple Contact Point Series (BK)

Terminal Part Information

Terminal Type ID	Terminated Lead	Diagnostic Test Probe	Terminal Removal Tool	Service Terminal	Tray	Core Crimp	Insulation Crimp
I	Not Required	J-35616-35 (VT)	Not Required	Not Required	Not Required	Not Required	Not Required
II	Not Required	J-35616-40 (BU)	Not Required	Not Required	Not Required	Not Required	Not Required
II	Not Required	J-35616-40 (BU)	Not Required	Not Required	Not Required	Not Required	Not Required

K8 Blower Motor Control Module

Pin	Size	Color	Circuit	Function	Terminal Type ID	Option
1	5	BK	2250	Ground	II	—
2	—	—	—	Not Occupied	—	—
3	2.5	RD/VT	542	Battery Positive Voltage	II	—
4	0.35	L-BU/GY	754	Blower Motor Speed Control	I	—

K9 Body Control Module X1

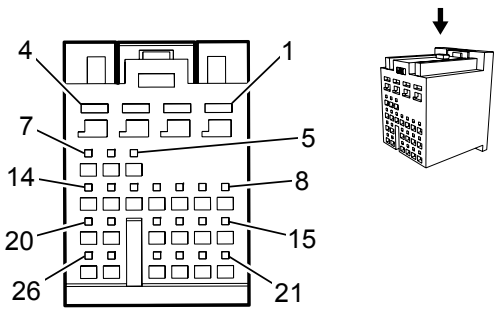

Connector Part Information

Harness Type: Instrument Panel

OEM Connector: 19151262

Service Connector: 19151262

Description: 26-Way F 0.64, 2.8 Series (WH)

Terminal Part Information

Terminal Type ID	Terminated Lead	Diagnostic Test Probe	Terminal Removal Tool	Service Terminal	Tray	Core Crimp	Insulation Crimp
I	13575560	J-35616-35 (VT)	J-38125-12A	SNAC-A081T-M2.8	15	A	D
II	13575870	J-35616-64B (LT BU)	J-38125-12A	SNAC3-A021T-M0.64	12	J	J
III	13575871	J-35616-35 (VT)	J-38125-12A	SNAC-A061T-M2.8	14	E	A

K9 Body Control Module X1

Pin	Size	Color	Circuit	Function	Terminal Type ID	Option
1	0.75	BK	2150	Ground	III	—
2	2.5	RD/L-GN	2440	Battery Positive Voltage	I	—
3	2.5	RD/YE	2340	Battery Positive Voltage	I	—
4	0.75	RD/BN	2240	Battery Positive Voltage	III	—
5	0.35	WH	6816	Indicator Dimming Control	II	—
6	—	—	—	Not Occupied	—	—
7	0.35	BK/YE	5005	Instrument Panel Lamp Dimmer Switch Low Reference	II	—
8 - 9	—	—	—	Not Occupied	—	—

8 - 9	—	—	—	Not Occupied	—	—
10	0.35	L-BU/YE	6844	ABS/TCS Hill Descent Control Switch Signal	II	—
11	0.35	L-GN/BN	306	Headlamp Switch Headlamps Off Signal Control	II	—
12	—	—	—	Not Occupied	—	—
13	0.35	L-BU/RD	1688	5 Volt Reference	II	—
14	0.35	GY/L-GN	328	Interior Lamp Defeat Switch Signal	II	—
15	0.35	L-BU/GY	192	Front Fog Lamp Switch Signal	II	T3U
16	0.35	WH/VT	103	Headlamp Switch On Signal	II	—
17 - 18	—	—	—	Not Occupied	—	—
19	0.35	BK/BN	5360	Brake Apply Sensor Low Reference	II	—
20	—	—	—	Not Occupied	—	—
21	0.35	GY	728	Security Indicator Control	II	—
22	0.35	L-GN/GY	13	Headlamp Switch Park Lamp Signal	II	—
23	—	—	—	Not Occupied	—	—
24	0.5	WH	2501	High Speed GMLAN Serial Data (-) (1)	II	—
25	0.5	L-BU	2500	High Speed GMLAN Serial Data (+) (1)	II	—
26	0.35	L-BU/WH	3275	Remote Function Actuator Receive Signal	II	—

K9 Body Control Module X2

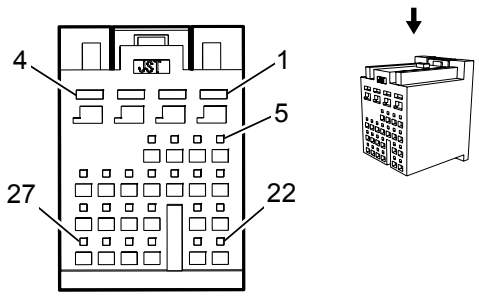

Connector Part Information

Harness Type: Instrument Panel

OEM Connector: 19151266

Service Connector: 19151266

Description: 27-Way F 0.64 2.8 Series (L-BU)

Terminal Part Information

Terminal Type ID	Terminated Lead	Diagnostic Test Probe	Terminal Removal Tool	Service Terminal	Tray	Core Crimp	Insulation Crimp
I	13575560	J-35616-35 (VT)	J-38125-12A	SNAC-A081T-M2.8	15	A	D
II	13575870	J-35616-64B (LT BU)	J-38125-12A	SNAC3-A021T-M0.64	12	J	J
III	13575871	J-35616-35 (VT)	J-38125-12A	SNAC-A061T-M2.8	14	E	A

K9 Body Control Module X2

Pin	Size	Color	Circuit	Function	Terminal Type ID	Option
1	0.5	RD/GY	2140	Battery Positive Voltage	III	—
2	0.75	BK	2150	Ground	III	—
3	—	—	—	Not Occupied	—	—
4	2.5	RD/VT	4040	Battery Positive Voltage	I	—
5	0.5	GY	157	Interior Lamp Control	II	—
6	0.35	GY	5697	Child Lockout Indicator Control	II	CREW CAB
7	0.35	L-BU/YE	5361	Brake Apply Sensor Signal	II	—

8	0.5	YE	6817	LED Backlight Dimming Control	II	—
9	0.35	YE/GY	44	Instrument Panel Lamp Dimmer Switch Signal	II	—
10	0.35	WH/L-BU	278	Ambient Light Sensor Signal	II	—
11	0.35	VT/YE	5526	Tap Up/Tap Down Switch Signal	II	MYB
12	—	—	—	Not Occupied	—	—
13	0.35	WH	5359	Brake Apply Sensor Control	II	—
14	0.35	L-BU/VT	1788	Traction Control Switch Signal (1)	II	MYB
15	0.35	BN/WH	781	Driver Door Lock Switch Unlock Signal	II	—
16	0.35	GY	3273	Remote Function Actuator Low Reference	II	—
17	—	—	—	Not Occupied	—	—
18	0.35	YE/BN	3265	Child Security Lock Switch Signal	II	CREW CAB
19	0.35	BN/YE	780	Driver Door Lock Switch Lock Signal	II	—
20	0.5	WH/L-BU	3691	Trailer Brake Apply Signal	II	Z82
21	0.5	L-GN/GY	6135	Local Interconnect Network Serial Data Bus 4	II	CREW CAB
22	0.5	L-GN	5060	Low Speed GMLAN Serial Data	II	—
23	0.35	WH	2501	High Speed GMLAN Serial Data (-) (1)	II	—
24	0.35	L-BU	2500	High Speed GMLAN Serial Data (+) (1)	II	—

25	0.35	GY/WH	3272	Remote Function Actuator Control	II	—
26	0.35	L-GN/WH	111	Hazard Switch Signal	II	—
27	0.35	YE/L-GN	3274	Remote Function Actuator Transmit Signal	II	—

K9 Body Control Module X3

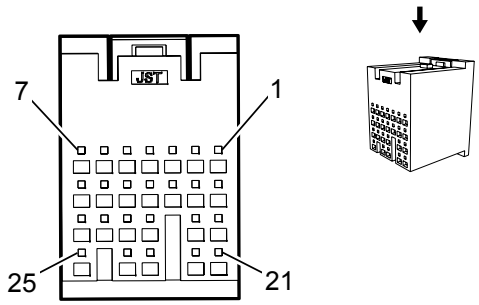

Connector Part Information

Harness Type: Instrument Panel

OEM Connector: 19151261

Service Connector: 19151261

Description: 25-Way F 0.64 Series (L-GN)

Terminal Part Information

Terminal Type ID	Terminated Lead	Diagnostic Test Probe	Terminal Removal Tool	Service Terminal	Tray	Core Crimp	Insulation Crimp
I	13575870	J-35616-64B (LT BU)	J-38125-12A	SNAC3-A021T-M0.64	12	J	J

K9 Body Control Module X3

Pin	Size	Color	Circuit	Function	Terminal Type ID	Option
1	0.35	L-GN/GY	3277	Vehicle Anti-Theft System Immobilizer Low Reference	I	—
2	0.35	L-GN/VT	7533	Local Interconnect Network Serial Data Bus 11	I	—
3	0.35	GY/BK	3276	Vehicle Anti-Theft System Immobilizer Control	I	—
4	0.35	WH/RD	1444	12 Volt Reference	I	UEU/UFL
5	0.5	VT/YE	4	Accessory Ignition Voltage	I	—
6	0.5	VT/BK	3	Run/Crank Ignition 1 Voltage	I	—
7	0.35	VT/YE	143	Accessory Ignition Voltage	I	MYB
8	0.35	L-GN	6818	Steering Wheel Resistor Ladder Signal 1	I	—

9	0.35	BN/L-GN	1884	Cruise Control Set/Coast/Resume/Accelerate Switch Signal	I	—
10	0.35	BK/GY	6009	Windshield Wiper Switch Low Reference	I	—
11	0.35	WH	524	Headlamp Dimmer Switch High Beam Signal	I	—
12	0.35	WH/L-GN	663	Hazard Switch Left Turn Signal	I	—
13	0.35	YE/L-BU	1714	Windshield Wiper Switch Low Signal	I	—
14	0.35	L-BU/GY	553	Shift Select Switch Performance Signal	I	—
15	0.5	WH/VT	1020	Off/Run/Crank Ignition Voltage	I	—
16	0.35	GY/L-GN	5737	Adaptive Cruise Control Gap Up/Down Switch Signal	I	UEU/UFL
17	0.35	YE/BN	307	Headlamp Switch Flash To Pass Signal	I	—
18	0.35	L-GN/WH	3287	Horn Switch Signal	I	—
19	0.5	L-GN/WH	7527	Local Interconnect Network Serial Data Bus 5	I	KA1
20	0.35	GY	1715	Windshield Wiper Switch High Signal	I	—
21	—	—	—	Not Occupied	—	—
22	0.5	WH/BK	1073	Ignition Key Resistor Signal	I	—
23	—	—	—	Not Occupied	—	—
24	0.35	VT/L-BU	664	Hazard Switch Right Turn Signal	I	—
25	0.35	WH/BK	94	Windshield Washer Switch Signal	I	—

K9 Body Control Module X4

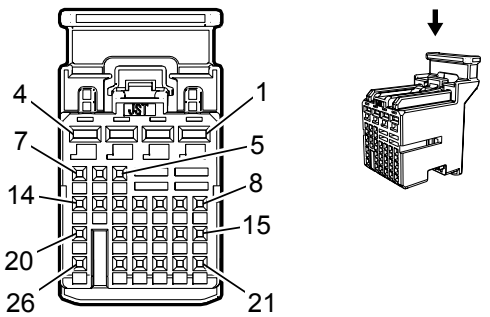

Connector Part Information

Harness Type: Body

OEM Connector: HIT2PB-26-D-K

Service Connector: 19151263

Description: 26-Way F 0.64 2.8 Series (BK)

Terminal Part Information

Terminal Type ID	Terminated Lead	Diagnostic Test Probe	Terminal Removal Tool	Service Terminal	Tray	Core Crimp	Insulation Crimp
I	13575870	J-35616-64B (LT BU)	J-38125-12A	SNAC3-A021T-M0.64	12	J	J
II	13575871	J-35616-35 (VT)	J-38125-12A	SNAC-A061T-M2.8	14	C	A
III	13575871	J-35616-35 (VT)	J-38125-12A	SNAC-A061T-M2.8	14	E	A

K9 Body Control Module X4

Pin	Size	Color	Circuit	Function	Terminal Type ID	Option
1	1.5	YE	312	Right Headlamp Low Beam Control	II	—
2	1.5	YE	712	Left Headlamp Low Beam Control	II	—
3	0.75	L-GN/VT	1315	Right Front Turn Signal Lamp Control	III	—
4	1.5	WH/YE	7541	Right Rear Stop Lamp Control	II	—
5	0.5	GY/BN	309	Right Park Lamp Control	I	—
6	0.5	VT/GY	709	Left Park Lamp Control	I	—
7	0.5	BN/L-BU	2509	Left Rear Park Lamp Control	I	—

8 - 11	—	—	—	Not Occupied	—	—
12	0.35	GY/VT	755	RAP Relay Coil Control	I	—
13	0.5	L-GN/YE	6846	Rear License Lamp Control	I	—
14	0.5	BN/GY	2268	Windshield Washer Relay Control	I	—
15	0.35	L-GN/VT	5199	Run/Crank Relay Coil Control	I	—
16	0.5	GY	91	Windshield Wiper Motor Relay Coil Control	I	—
17	0.5	BN/L-GN	196	Windshield Wiper Motor Park Switch Signal	I	—
18	0.5	WH/YE	5075	Current Sensor Signal	I	—
19	—	—	—	Not Occupied	—	—
20	0.5	RD/BN	440	Battery Positive Voltage	I	—
21	0.5	L-BU/VT	5076	Current Sensor Control	I	—
22	0.35	VT/YE	5985	Accessory Wakeup Serial Data	I	—
23	0.5	WH/L-BU	5986	Serial Data Communication Enable	I	—
24	0.5	BN/L-GN	109	Hood Ajar Switch Signal	I	—
25	—	—	—	Not Occupied	—	—
26	0.5	BK	1650	Ground	I	—

K9 Body Control Module X5

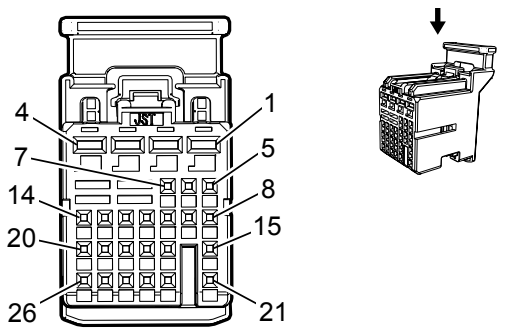

Connector Part Information

Harness Type: Body

OEM Connector: HIT2PB-26-E-N

Service Connector: 19151264

Description: 26-Way F 0.64 2.8 Series (BN)

Terminal Part Information

Terminal Type ID	Terminated Lead	Diagnostic Test Probe	Terminal Removal Tool	Service Terminal	Tray	Core Crimp	Insulation Crimp
I	13575870	J-35616-64B (LT BU)	J-38125-12A	SNAC3-A021T-M0.64	12	J	J
II	13575871	J-35616-35 (VT)	J-38125-12A	SNAC-A061T-M2.8	14	C	A
III	13575871	J-35616-35 (VT)	J-38125-12A	SNAC-A061T-M2.8	14	E	A

K9 Body Control Module X5

Pin	Size	Color	Circuit	Function	Terminal Type ID	Option
1	1.5	GY/YE	7542	Left Rear Stop Lamp Control	II	—
2	0.75	L-BU/WH	1314	Left Front Turn Signal Lamp Control	III	—
3	1.5	RD/WH	2740	Battery Positive Voltage	II	—
4	1.5	RD/VT	2640	Battery Positive Voltage	II	—
5	—	—	—	Not Occupied	—	—
6	0.5	BK/VT	5077	Current Sensor Low Reference	I	—
7	0.5	BN/GY	2609	Right Rear Park Lamp Control	I	—

8	0.5	L-BU/WH	5186	Left Trailer Turn Signal Lamp Control	I	—
9 - 11	—	—	—	Not Occupied	—	—
12	0.5	WH/L-BU	6311	Cruise/ETC/TCC Brake Signal	I	Z82+JL1, -Z82
	0.35	WH/L-BU	6311			Z82-JL1
13	0.5	BN/WH	1317	Fog Lamp Relay Control	I	T3U
14	0.5	VT/BN	300	Run Ignition 3 Voltage	I	NQ6/NQ7
15	—	—	—	Not Occupied	—	—
16	0.5	VT/YE	3267	Child Security Lock Relay Control	I	—
17	0.5	YE/GY	5187	Right Trailer Turn Signal Lamp Control	I	—
18	0.5	BN/VT	1969	Headlamp High Beam Relay Control	I	—
19	0.5	BN/WH	28	Horn Relay Control	I	—
20 - 21	—	—	—	Not Occupied	—	—
22	0.5	L-BU	45	Park Lamp Relay Control	I	—
23	—	—	—	Not Occupied	—	—
24	0.5	WH/VT	860	Front Windshield Wiper Switch High Signal	I	—
25	—	—	—	Not Occupied	—	—
26	0.5	L-BU/BN	38	Backup Lamp Relay Control	I	—

K9 Body Control Module X6

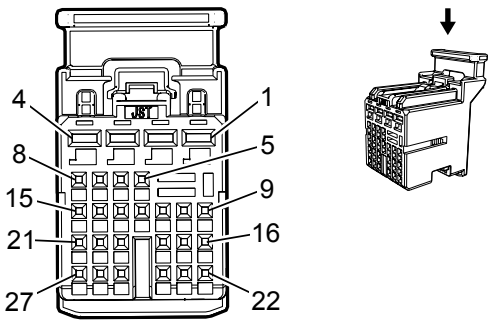

Connector Part Information

Harness Type: Body

OEM Connector: HIT2PB-27-F-PK

Service Connector: 19151267

Description: 27-Way F 0.64 2.8 Series (PK)

Terminal Part Information

Terminal Type ID	Terminated Lead	Diagnostic Test Probe	Terminal Removal Tool	Service Terminal	Tray	Core Crimp	Insulation Crimp
I	13575870	J-35616-64B (LT BU)	J-38125-12A	SNAC3-A021T-M0.64	12	J	J
II	13575871	J-35616-35 (VT)	J-38125-12A	SNAC-A061T-M2.8	14	C	A
III	13575871	J-35616-35 (VT)	J-38125-12A	SNAC-A061T-M2.8	14	E	A

K9 Body Control Module X6

Pin	Size	Color	Circuit	Function	Terminal Type ID	Option
1	0.75	GY	5911	Door Lock Actuator Lock Control 2	III	—
2	1.5	GY/L-GN	3271	Door Lock Control (2)	II	—
3	1.5	BK	3150	Ground	II	—
4	1.5	BN/YE	294	Door Lock Actuator Unlock Control	II	CREW CAB
	0.75	BN/YE	294		III	EXTENDED CAB
5 - 8	—	—	—	Not Occupied	—	—
9	0.5	L-GN/L-BU	6133	Local Interconnect Network Serial Data Bus 2	I	KA1 OR MYB
10	0.5	L-GN/YE	6134	Local Interconnect Network Serial Data Bus 3	I	—

10	0.5	L-GN/YE	6134	Local Interconnect Network Serial Data Bus 3	I	—
11 - 15	—	—	—	Not Occupied	—	—
16	0.5	L-GN/BN	6132	Local Interconnect Network Serial Data Bus 1	I	—
17 - 23	—	—	—	Not Occupied	—	—
24	0.5	L-BU	2500	High Speed GMLAN Serial Data (+) (1)	I	—
25	0.5	WH	2501	High Speed GMLAN Serial Data (-) (1)	I	—
26	—	—	—	Not Occupied	—	—
27	0.35	GY	747	Left Rear Door Ajar Switch Signal	I	EXTENDED CAB

K9 Body Control Module X7

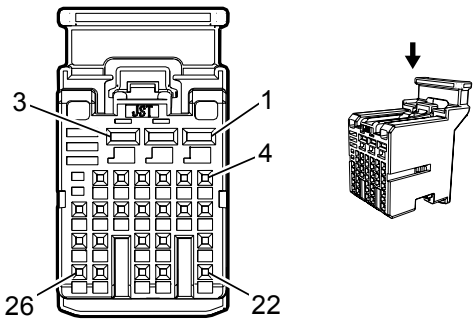

Connector Part Information

Harness Type: Body

OEM Connector: HIT2PB-26-G-H

Service Connector: 19151265

Description: 26-Way F 0.64 2.8 Series (GY)

Terminal Part Information

Terminal Type ID	Terminated Lead	Diagnostic Test Probe	Terminal Removal Tool	Service Terminal	Tray	Core Crimp	Insulation Crimp
I	13575870	J-35616-64B (LT BU)	J-38125-12A	SNAC3-A021T-M0.64	12	J	J
II	13575871	J-35616-35 (VT)	J-38125-12A	SNAC-A061T-M2.8	14	E	A

K9 Body Control Module X7

Pin	Size	Color	Circuit	Function	Terminal Type ID	Option
1	—	—	—	Not Occupied	—	—
2	0.75	WH/BN	6815	Inadvertent Power Control	II	C74
3	0.75	L-GN/WH	24	Backup Lamp Control	II	—
4 - 5	—	—	—	Not Occupied	—	—
6	0.5	VT/BK	7553	Park Lock Solenoid Control	I	MYB
7	0.5	BN/WH	1429	Standing Lamp Relay Control	I	—
8	0.5	VT/WH	5065	Stop Lamp Relay Coil Control	I	—
9 - 10	—	—	—	Not Occupied	—	—
11	0.35	GY	748	Right Rear Door Ajar Switch Signal	I	EXTENDED CAB

12	0.35	BN/WH	3269	Child Security Lock Motor Status Signal Left Rear	I	CREW CAB
13	0.5	WH/VT	5905	Key Capture/Column Lock Shift Position Signal	I	MYB
14	0.5	GY	158	Cargo Lamp Switch Signal	I	—
15	0.5	L-BU/VT	1134	Park Brake Switch Signal	I	—
16	0.5	WH/L-BU	3691	Trailer Brake Apply Signal	I	Z82-JL1
17	—	—	—	Not Occupied	—	—
18	0.35	GY/BK	3268	Child Security Lock Motor Status Signal Right Rear	I	CREW CAB
19	0.35	GY	156	Courtesy Lamp Switch Signal	I	—
20	—	—	—	Not Occupied	—	—
21	0.35	YE/VT	244	Passenger Door Lock Switch Lock Control	I	—
22	—	—	—	Not Occupied	—	—
23	0.5	L-GN	5060	Low Speed GMLAN Serial Data	I	—
24	0.35	BN/VT	245	Passenger Door Lock Switch Unlock Control	I	—
25 - 26	—	—	—	Not Occupied	—	—

K17 Electronic Brake Control Module

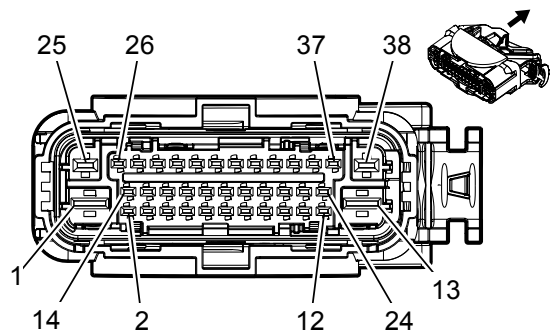

Connector Part Information

Harness Type: Chassis

OEM Connector: 1928405629

Service Connector: 19299780

Description: 38-Way F 1.5, 2.8, 4.8 Series, Sealed

Terminal Part Information

Terminal Type ID	Terminated Lead	Diagnostic Test Probe	Terminal Removal Tool	Service Terminal	Tray	Core Crimp	Insulation Crimp
I	13578852	J-35616-40 (BU)	J-38125-561	Not Available	Not Available	Not Available	Not Available
II	13578853	J-35616-35 (VT)	J-38125-561	Not Available	Not Available	Not Available	Not Available
III	13584537	J-35616-14 (GN)	J-38125-560	Not Available	Not Available	Not Available	Not Available
IV	19300650	J-35616-43 (RD)	J-38125-557	Not Available	Not Available	Not Available	Not Available

K17 Electronic Brake Control Module

Pin	Size	Color	Circuit	Function	Terminal Type ID	Option
1	4	RD/GY	1042	Battery Positive Voltage	IV	—
2 - 3	—	—	—	Not Occupied	—	—
4	0.5	YE/VT	6030	Brake Vacuum Sensor Signal	III	—
5	—	—	—	Not Occupied	—	—
6	0.5	WH/L-BU	5986	Serial Data Communication Enable	III	—
7 - 8	—	—	—	Not Occupied	—	—
9	0.5	WH	2501	High Speed GMLAN Serial Data (-) (1)	III	—
10	0.5	WH	2501	High Speed GMLAN Serial Data (-) (1)	III	—

11	0.5	L-BU	2500	High Speed GMLAN Serial Data (+) (1)	III	—
12	0.5	L-BU	2500	High Speed GMLAN Serial Data (+) (1)	III	—
13	4	BK	550	Ground	I	—
14 - 15	—	—	—	Not Occupied	—	—
16	0.5	YE/RD	6031	Brake Vacuum Sensor 5 Volt Reference	III	—
17	—	—	—	Not Occupied	—	—
18	0.5	WH	6106	High Speed GMLAN Serial Data (-) (2)	III	—
19	0.5	L-BU/YE	6105	High Speed GMLAN Serial Data (+) (2)	III	—
20	—	—	—	Not Occupied	—	—
21	0.5	L-GN/GY	333	Brake Fluid Level Sensor Signal	III	—
22	0.5	BK/YE	6032	Brake Vacuum Sensor Low Reference	III	—
23 - 24	—	—	—	Not Occupied	—	—
25	2.5	RD/YE	442	Battery Positive Voltage	II	—
26	0.5	YE	872	Wheel Speed Sensor Signal Right Front	III	—
27	0.5	GY/BN	7065	Wheel Speed Sensor Control Right Front	III	—
28	0.5	BN	6305	Brake Vacuum Switch Signal	III	LFX
29	0.5	GY/BK	7127	Wheel Speed Sensor Control Left Rear	III	—
30	0.5	L-BU	884	Wheel Speed Sensor Signal Left Rear	III	—

31 - 32	—	—	—	Not Occupied	—	—
33	0.5	VT	882	Wheel Speed Sensor Signal Right Rear	III	—
34	0.5	GY/YE	7128	Wheel Speed Sensor Control Right Rear	III	—
35	—	—	—	Not Occupied	—	—
36	0.5	GY/WH	7064	Wheel Speed Sensor Control Left Front	III	—
37	0.5	GY	830	Wheel Speed Sensor Signal Left Front	III	—
38	—	—	—	Not Occupied	—	—

K20 Engine Control Module X1 (LCV)

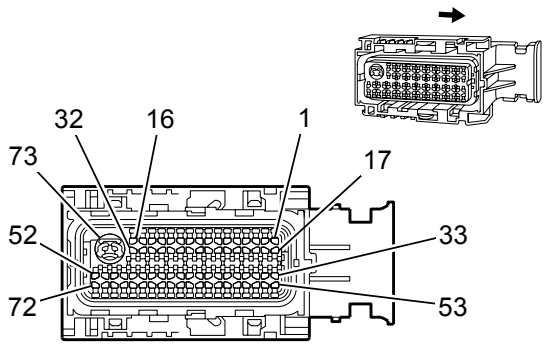

Connector Part Information

Harness Type: Engine

OEM Connector: 34566-0303

Service Connector: 13574782

Description: 73-Way F 0.64, 2.8 Series, Sealed (BK with BU Terminal Position Assurance)

Terminal Part Information

Terminal Type ID	Terminated Lead	Diagnostic Test Probe	Terminal Removal Tool	Service Terminal	Tray	Core Crimp	Insulation Crimp
I	13575812	J-35616-64B (LT BU)	J-38125-213	Not Available	Not Available	Not Available	Not Available
II	13579769	J-35616-35 (VT)	J-38125-11A	7116-4151-02	19	C	1

K20 Engine Control Module X1 (LCV)

Pin	Size	Color	Circuit	Function	Terminal Type ID	Option
1 - 6	—	—	—	Not Occupied	—	—
7	0.5	WH	7494	High Speed GMLAN Serial Data (-)(3)	I	—
8	0.5	L-BU/YE	7493	High Speed GMLAN Serial Data (+)(3)	I	—
9	0.5	L-BU	2500	High Speed GMLAN Serial Data (+) (1)	I	—
10	0.5	WH	2501	High Speed GMLAN Serial Data (-) (1)	I	—
11	0.5	BN/RD	1274	Accelerator Pedal Position 5 Volt Reference (2)	I	—
12	0.5	WH/RD	1164	Accelerator Pedal Position 5 Volt Reference (1)	I	—
13	0.5	VT/YE	5985	Accessory Wakeup Serial Data	I	—

14	0.5	VT/GY	139	Run/Crank Ignition 1 Voltage	I	—
15	0.5	RD/WH	140	Battery Positive Voltage	I	—
16	0.75	VT/L-BU	5290	Powertrain Main Relay Fused Supply (1)	I	—
17 - 24	—	—	—	Not Occupied	—	—
25	0.5	BK/YE	5382	Brake Position Sensor Low Reference	I	—
26	0.5	BK/GY	6110	Clutch Apply Sensor Low Reference	I	N8D
27	0.5	BK/VT	1272	Accelerator Pedal Position Low Reference (2)	I	—
28	0.5	BK/L-BU	1271	Accelerator Pedal Position Low Reference (1)	I	—
29 - 32	—	—	—	Not Occupied	—	—
33	0.5	L-GN/WH	1162	Accelerator Pedal Position Signal (2)	I	—
34	0.5	L-GN/WH	492	Mass Air Flow Sensor Signal	I	—
35 - 36	—	—	—	Not Occupied	—	—
37	0.5	BN/RD	2700	A/C Pressure Sensor 5 Volt Reference	I	—
38 - 40	—	—	—	Not Occupied	—	—
41	0.5	WH/RD	5381	Brake Position Sensor 5 Volt Reference	I	—
42	0.5	GY/RD	6109	Clutch Apply Sensor 5 Volt Reference	I	N8D
43	—	—	—	Not Occupied	—	—
44	0.5	VT/GY	6386	Starter Enable Relay (PPEI 3) Control	I	—

45	0.5	YE/WH	1161	Accelerator Pedal Position Signal (1)	I	—
46	0.5	YE/BK	3000	Coolant Temperature Sensor 2 Signal	I	—
47	0.5	L-BU/GY	636	Outside Ambient Air Temperature Sensor Signal	I	—
48	0.5	WH/L-BU	6289	Induction Air Temperature Sensor Signal	I	—
49	0.5	WH/GY	1786	Transmission Park/Neutral Signal (1)	I	MYB
50	0.5	WH/L-BU	6311	Cruise/ETC/TCC Brake Signal	I	—
51	0.75	VT/L-BU	5291	Powertrain Main Relay Fused Supply (2)	I	—
52	0.5	WH/BK	2366	Cooling Fan Control Relay Speed Signal	I	—
53	—	—	—	Not Occupied	—	—
54	0.5	WH/GY	459	A/C Compressor Clutch Relay Control	I	—
55 - 56	—	—	—	Not Occupied	—	—
57	0.5	L-GN	380	A/C Refrigerant Pressure Sensor Signal	I	—
58 - 59	—	—	—	Not Occupied	—	—
60	0.5	BN/GY	4008	Humidity Sensor Signal	I	—
61	0.5	WH/L-GN	5380	Brake Position Sensor Signal	I	—
62	0.5	YE	6111	Clutch Apply Sensor Signal	I	N8D
63	—	—	—	Not Occupied	—	—
64	0.5	GY	5660	Fuel Pump Controller Data Out Signal	I	—

65	0.5	WH	1310	EVAP Canister Vent Solenoid Control	I	—
66	—	—	—	Not Occupied	—	—
67	0.5	YE	5991	Powertrain Relay Coil Control	I	—
68	—	—	—	Not Occupied	—	—
69	0.5	L-BU	6814	Thermostat Engine Cool Control	I	—
70	—	—	—	Not Occupied	—	—
71	0.5	BN/WH	419	Check Engine Indicator Control	I	—
72	—	—	—	Not Occupied	—	—
73	1	VT/L-BU	5290	Powertrain Main Relay Fused Supply (1)	II	—

K20 Engine Control Module X1 (LFX)

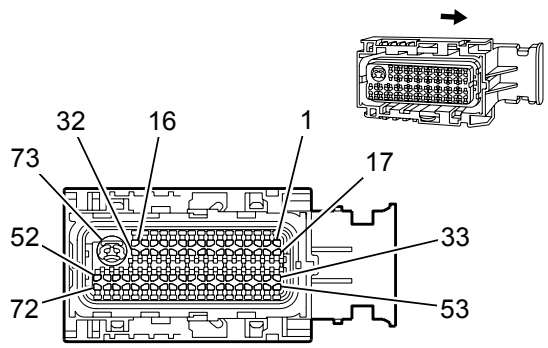

Connector Part Information

Harness Type: Engine

OEM Connector: 34566-0303

Service Connector: 13574782

Description: 73-Way F 0.64, 2.8 Series, Sealed (BK with BU Terminal Position Assurance)

Terminal Part Information

Terminal Type ID	Terminated Lead	Diagnostic Test Probe	Terminal Removal Tool	Service Terminal	Tray	Core Crimp	Insulation Crimp
I	13575812	J-35616-64B (LT BU)	J-38125-213	Not Available	Not Available	Not Available	Not Available
II	13579769	J-35616-35 (VT)	J-38125-11A	7116-4151-02	19	C	1

K20 Engine Control Module X1 (LFX)

Pin	Size	Color	Circuit	Function	Terminal Type ID	Option
1 - 3	—	—	—	Not Occupied	—	—
4	0.5	YE/WH	3200	Throttle Inlet Absolute Pressure Sensor Signal	I	—
5	0.5	WH/RD	3201	Throttle Inlet Absolute Pressure Sensor 5 Volt Reference	I	—
6	0.5	L-GN	380	A/C Refrigerant Pressure Sensor Signal	I	—
7 - 8	—	—	—	Not Occupied	—	—
9	0.5	L-BU/WH	890	Fuel Tank Pressure Sensor Signal	I	—
10	0.5	YE/RD	2709	Fuel Tank Pressure Sensor 5 Volt Reference	I	—
11 - 12	—	—	—	Not Occupied	—	—
13	0.5	L-BU/GY	636	Outside Ambient Air Temperature Sensor Signal	I	—

14	0.5	WH/RD	1164	Accelerator Pedal Position 5 Volt Reference (1)	I	—
15	0.5	YE/WH	1161	Accelerator Pedal Position Signal (1)	I	—
16 - 20	—	—	—	Not Occupied	—	—
21	0.5	BN/RD	2700	A/C Pressure Sensor 5 Volt Reference	I	—
22	0.5	BK/BN	5514	A/C Refrigerant Pressure Sensor Low Reference	I	—
23 - 24	—	—	—	Not Occupied	—	—
25	0.5	L-BU/VT	1589	Primary Fuel Level Sensor Signal	I	—
26	0.5	BK/L-GN	6281	Fuel Level Sensor Low Reference	I	—
27 - 29	—	—	—	Not Occupied	—	—
30	0.5	BK/L-BU	1271	Accelerator Pedal Position Low Reference (1)	I	—
31	—	—	—	Not Occupied	—	—
32	0.5	WH/GY	459	A/C Compressor Clutch Relay Control	I	—
33	0.5	BN/RD	1274	Accelerator Pedal Position 5 Volt Reference (2)	I	—
34	0.5	L-GN/WH	1162	Accelerator Pedal Position Signal (2)	I	—
35 - 38	—	—	—	Not Occupied	—	—
39	0.5	L-BU	2500	High Speed GMLAN Serial Data (+) (1)	I	—
40	0.5	WH	2501	High Speed GMLAN Serial Data (-) (1)	I	—
41 - 43	—	—	—	Not Occupied	—	—
44	0.5	GY	5660	Fuel Pump Controller Data Out Signal	I	—

45	—	—	—	Not Occupied	—	—
46	0.5	BN/WH	419	Check Engine Indicator Control	I	—
47	0.5	WH/RD	5381	Brake Position Sensor 5 Volt Reference	I	—
48	0.5	WH/L-GN	5380	Brake Position Sensor Signal	I	—
49 - 50	—	—	—	Not Occupied	—	—
51	0.5	VT/GY	139	Run/Crank Ignition 1 Voltage	I	—
52	0.5	RD/WH	140	Battery Positive Voltage	I	—
53	0.5	BK/VT	1272	Accelerator Pedal Position Low Reference (2)	I	—
54 - 56	—	—	—	Not Occupied	—	—
57	0.5	WH/L-BU	6311	Cruise/ETC/TCC Brake Signal	I	—
58	—	—	—	Not Occupied	—	—
59	0.5	WH/BK	2366	Cooling Fan Control Relay Speed Signal	I	—
60 - 61	—	—	—	Not Occupied	—	—
62	0.75	VT/L-BU	5291	Powertrain Main Relay Fused Supply (2)	I	—
63	0.5	VT/GY	6386	Starter Enable Relay (PPEI 3) Control	I	—
64 - 65	—	—	—	Not Occupied	—	—
66	0.5	WH	1310	EVAP Canister Vent Solenoid Control	I	—
67	0.75	VT/L-BU	5292	Powertrain Main Relay Fused Supply (3)	I	—
68	0.5	BK/YE	5382	Brake Position Sensor Low Reference	I	—

69	—	—	—	Not Occupied	—	—
70	0.5	VT/YE	5985	Accessory Wakeup Serial Data	I	—
71	—	—	—	Not Occupied	—	—
72	0.5	YE	5991	Powertrain Relay Coil Control	I	—
73	1	VT/L-BU	5290	Powertrain Main Relay Fused Supply (1)	II	—

K20 Engine Control Module X1 (LWN)

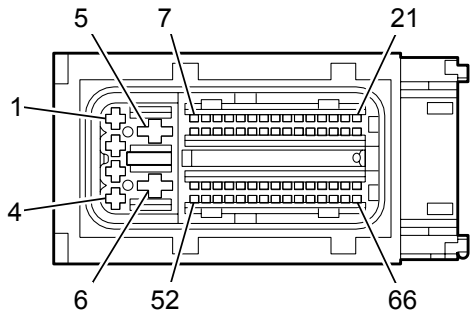

Connector Part Information

Harness Type: Engine

OEM Connector: 13647470

Service Connector: 19332707

Description: 66-Way F 0.64, 2.8, 6.3 Series, Sealed

Terminal Part Information

Terminal Type ID	Terminated Lead	Diagnostic Test Probe	Terminal Removal Tool	Service Terminal	Tray	Core Crimp	Insulation Crimp
I	13579752	J-35616-4A (PU)	J-38125-36	4-964286-1	4	E	1
II	13584448	J-35616-64B (LT BU)	J-38125-12A	1719532-5	2	J	J
III	13584529	J-35616-42 (RD)	J-38125-11A	Not Available	Not Available	Not Available	Not Available
IV	13584530	J-35616-4A (PU)	J-38125-36	4-964273-1	9	C	5
V	13584530	J-35616-4A (PU)	J-38125-36	4-964273-1	9	E	1
VI	13584530	J-35616-4A (PU)	J-38125-36	4-964286-1	4	E	1

K20 Engine Control Module X1 (LWN)

Pin	Size	Color	Circuit	Function	Terminal Type ID	Option
1	2.5	VT/L-BU	5290	Powertrain Main Relay Fused Supply (1)	IV	—
2	0.75	VT/L-BU	5291	Powertrain Main Relay Fused Supply (2)	I	—
3	1.5	VT/L-BU	5292	Powertrain Main Relay Fused Supply (3)	V	—
4	0.5	RD/WH	140	Battery Positive Voltage	VI	—
5	6	BN/L-BU	104	Glow Plug Control	III	—

6	6	BK/WH	451	Signal Ground	III	—
7	0.5	VT/YE	5985	Accessory Wakeup Serial Data	II	—
8 - 10	—	—	—	Not Occupied	—	—
11	0.5	L-BU/YE	6861	Water In Fuel Sensor Signal	II	—
12	—	—	—	Not Occupied	—	—
13	0.5	WH/RD	1164	Accelerator Pedal Position 5 Volt Reference (1)	II	—
14	0.5	BN/RD	1274	Accelerator Pedal Position 5 Volt Reference (2)	II	—
15	0.5	L-GN/WH	1162	Accelerator Pedal Position Signal (2)	II	—
16	0.5	BK/VT	1272	Accelerator Pedal Position Low Reference (2)	II	—
17	0.5	WH/BK	2366	Cooling Fan Control Relay Speed Signal	II	—
18	0.5	BN/WH	419	Check Engine Indicator Control	II	—
19	0.5	L-GN/BN	507	Wait To Start Indicator Control	II	—
20	—	—	—	Not Occupied	—	—
21	0.5	YE	2928	Fuel Metering Valve High Control	II	—
22	0.5	VT/GY	139	Run/Crank Ignition 1 Voltage	II	—
23	0.5	WH/L-BU	6311	Cruise/ETC/TCC Brake Signal	II	—
24	0.5	WH/GY	1786	Transmission Park/Neutral Signal (1)	II	MYB
25	0.5	L-GN/WH	492	Mass Air Flow Sensor Signal	II	—

26	0.5	L-BU/VT	2364	Cooling Fan Speed Signal	II	—
27	0.5	BK/L-BU	1271	Accelerator Pedal Position Low Reference (1)	II	—
28	0.5	YE/WH	1161	Accelerator Pedal Position Signal (1)	II	—
29	0.5	L-BU/RD	1688	5 Volt Reference	II	NQ6/NQ7
30	0.5	VT/WH	821	Vehicle Speed Sensor Signal	II	NQ6/NQ7
31	0.5	BK/L-GN	822	Vehicle Speed Sensor Low Reference	II	NQ6/NQ7
32	—	—	—	Not Occupied	—	—
33	0.5	WH/GY	459	A/C Compressor Clutch Relay Control	II	—
34 - 35	—	—	—	Not Occupied	—	—
36	0.5	BN/BK	2929	Fuel Metering Valve Low Control	II	—
37 - 38	—	—	—	Not Occupied	—	—
39	0.5	WH	4499	High Speed GMLAN Serial Data (-) (7)	II	—
40	0.5	WH	2501	High Speed GMLAN Serial Data (-) (1)	II	—
41 - 42	—	—	—	Not Occupied	—	—
43	0.5	BK/YE	5382	Brake Position Sensor Low Reference	II	—
44	0.5	WH/RD	5381	Brake Position Sensor 5 Volt Reference	II	—
45	0.5	WH/L-BU	6289	Induction Air Temperature Sensor Signal	II	—
46	0.5	BN/RD	2700	A/C Pressure Sensor 5 Volt Reference	II	—

47	0.5	L-GN	380	A/C Refrigerant Pressure Sensor Signal	II	—
48	0.5	BK/BN	5514	A/C Refrigerant Pressure Sensor Low Reference	II	—
49	—	—	—	Not Occupied	—	—
50	0.5	L-GN/GY	465	Fuel Pump Primary Relay Control	II	—
51	0.5	YE	5991	Powertrain Relay Coil Control	II	—
52 - 53	—	—	—	Not Occupied	—	—
54	0.5	L-BU/BN	4498	High Speed GMLAN Serial Data (+) (7)	II	—
55	0.5	L-BU	2500	High Speed GMLAN Serial Data (+) (1)	II	—
56 - 58	—	—	—	Not Occupied	—	—
59	0.5	WH/L-GN	5380	Brake Position Sensor Signal	II	—
60	0.5	BK/VT	2760	Intake Air Temperature Sensor Low Reference	II	—
61 - 63	—	—	—	Not Occupied	—	—
64	0.5	VT/BN	2927	Hydrocarbon Injector Low Control	II	—
65	—	—	—	Not Occupied	—	—
66	0.5	VT/GY	6386	Starter Enable Relay (PPEI 3) Control	II	—

K20 Engine Control Module X2 (LCV)

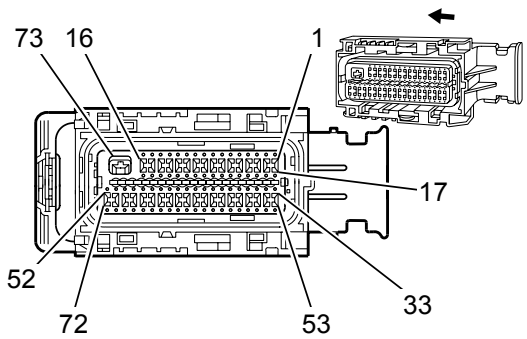

Connector Part Information

Harness Type: Engine

OEM Connector: 34566-0103

Service Connector: 88988931

Description: 73-Way F 0.64, 2.8 Series, Sealed (BK with BK Terminal Position Assurance)

Terminal Part Information

Terminal Type ID	Terminated Lead	Diagnostic Test Probe	Terminal Removal Tool	Service Terminal	Tray	Core Crimp	Insulation Crimp
I	13575812	J-35616-64B (LT BU)	J-38125-213	Not Available	Not Available	Not Available	Not Available
II	13579770	J-35616-35 (VT)	J-38125-11A	7116-4152-02	20	A	5

K20 Engine Control Module X2 (LCV)

Pin	Size	Color	Circuit	Function	Terminal Type ID	Option
1	—	—	—	Not Occupied	—	—
2	0.5	L-BU	410	Engine Coolant Temperature Sensor Signal	I	—
3	—	—	—	Not Occupied	—	—
4	0.5	BN/RD	7445	Fuel Line Pressure Sensor 5 Volt Reference	I	—
5	0.5	GY/RD	2704	Manifold Absolute Pressure Sensor 5 Volt Reference	I	—
6	0.5	GY/YE	5297	Camshaft Position Exhaust Sensor Control (1)	I	—
7	0.5	GY/L-BU	5300	Camshaft Position Intake Sensor Control (1)	I	—
8	—	—	—	Not Occupied	—	—
9	0.5	BN/RD	2917	Fuel Rail Pressure Sensor 5 Volt Reference	I	—

10 - 11	—	—	—	Not Occupied	—	—
12	0.5	BN/RD	2701	Throttle Position Sensor 5 Volt Reference	I	—
13	0.5	L-BU/WH	3630	Throttle Position Sensor (SENT1) Signal	I	—
14	0.5	WH/RD	2705	Oil Pressure Sensor 5 Volt Reference	I	—
15	0.5	VT/L-BU	6270	Crankshaft 60X Sensor 5 Volt Reference	I	—
16 - 19	—	—	—	Not Occupied	—	—
20	0.5	L-BU/WH	7446	Fuel Line Pressure Sensor Signal	I	—
21	0.5	BK/L-GN	469	Manifold Absolute Pressure Sensor Low Reference	I	—
22	0.5	BK/GY	5296	Camshaft Position Exhaust Sensor Low Reference (1)	I	—
23	0.5	BK/L-GN	5301	Camshaft Position Intake Sensor Low Reference (1)	I	—
24	—	—	—	Not Occupied	—	—
25	0.5	BK/L-GN	2919	Fuel Rail Pressure Sensor Low Reference	I	—
26	0.5	L-BU/WH	2918	Fuel Rail Pressure Sensor Signal	I	—
27	—	—	—	Not Occupied	—	—
28	0.5	BK/BN	2752	Throttle Position Sensor Low Reference	I	—
29	0.5	YE/BN	331	Oil Pressure Sensor Signal	I	—
30	0.5	BK/VT	2755	Oil Pressure Sensor Low Reference	I	—
31	0.5	BK/VT	6272	Crankshaft 60X Sensor Low Reference	I	—

32	—	—	—	Not Occupied	—	—
33	0.5	WH/BK	3111	Heated Oxygen Sensor Low Signal Bank 1 Sensor (1)	I	—
34	0.5	WH/YE	3121	Heated Oxygen Sensor Low Signal Bank 1 Sensor (2)	I	—
35	—	—	—	Not Occupied	—	—
36	0.5	BK/VT	6754	Cam Phaser X Low Reference	I	—
37	0.5	BK/BN	6753	Cam Phaser W Low Reference	I	—
38	0.5	VT/BK	5273	Camshaft Position Exhaust Sensor (1)	I	—
39	0.5	YE/VT	5275	Camshaft Position Intake Sensor (1)	I	—
40	0.5	L-GN	6271	Crankshaft 60X Sensor Signal	I	—
41 - 42	—	—	—	Not Occupied	—	—
43	0.5	BK/BN	2761	Coolant Temperature Sensor Low Reference	I	—
44	0.5	BK/L-BU	2129	Ignition Control Low Reference Bank 1	I	—
45	0.5	L-GN/L-BU	2123	Ignition Control (3)	I	—
46	0.5	L-BU/VT	2121	Ignition Control (1)	I	—
47	—	—	—	Not Occupied	—	—
48	0.75	L-BU	4802	Direct Fuel Injector (DFI) High Voltage Control Cylinder 2	I	—
49	0.75	GY/L-BU	4804	Direct Fuel Injector (DFI) High Voltage Control Cylinder 4	I	—
50	0.75	L-GN	4803	Direct Fuel Injector (DFI) High Voltage Control Cylinder 3	I	—

51	0.75	BN	4801	Direct Fuel Injector (DFI) High Voltage Control Cylinder 1	I	—
52	0.5	YE	581	Throttle Actuator Control Open	I	—
53	0.5	VT/GY	3110	Heated Oxygen Sensor High Signal Bank 1 Sensor (1)	I	—
54	0.5	VT/L-BU	3120	Heated Oxygen Sensor High Signal Bank 1 Sensor (2)	I	—
55	—	—	—	Not Occupied	—	—
56	0.5	GY/L-BU	5282	Camshaft Phaser Exhaust Solenoid (1)	I	—
57	0.5	VT/BN	5284	Camshaft Phaser Intake Solenoid (1)	I	—
58 - 59	—	—	—	Not Occupied	—	—
60	0.5	GY/WH	3122	Heated Oxygen Sensor Heater Low Control Bank 1 Sensor (2)	I	—
61	0.5	GY/WH	3113	Heated Oxygen Sensor Heater Low Control Bank 1 Sensor (1)	I	—
62 - 63	—	—	—	Not Occupied	—	—
64	0.5	L-BU	179	Oil Pump Command Signal	I	—
65	0.5	L-BU/WH	2122	Ignition Control (2)	I	—
66	0.5	YE/L-BU	2124	Ignition Control (4)	I	—
67	—	—	—	Not Occupied	—	—
68	0.75	L-BU/GY	4902	Direct Fuel Injector (DFI) High Voltage Supply Cylinder 2	I	—
69	0.75	L-BU/WH	4904	Direct Fuel Injector (DFI) High Voltage Supply Cylinder 4	I	—
70	0.75	L-GN/GY	4903	Direct Fuel Injector (DFI) High Voltage Supply Cylinder 3	I	—

71	0.75	BN/WH	4901	Direct Fuel Injector (DFI) High Voltage Supply Cylinder 1	I	—
72	0.5	BN/WH	582	Throttle Actuator Control Close	I	—
73	2.5	BK/WH	1451	Signal Ground	II	—

K20 Engine Control Module X2 (LFX)

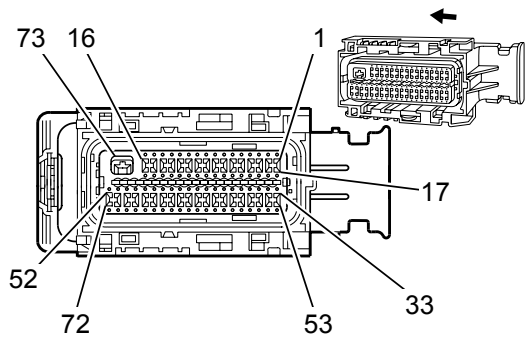

Connector Part Information

Harness Type: Engine

OEM Connector: 34566-0103

Service Connector: 88988931

Description: 73-Way F 0.64, 2.8 Series, Sealed (BK with BK Terminal Position Assurance)

Terminal Part Information

Terminal Type ID	Terminated Lead	Diagnostic Test Probe	Terminal Removal Tool	Service Terminal	Tray	Core Crimp	Insulation Crimp
I	13575812	J-35616-64B (LT BU)	J-38125-213	Not Available	Not Available	Not Available	Not Available
II	13579770	J-35616-35 (VT)	J-38125-11A	7116-4152-02	20	A	5

K20 Engine Control Module X2 (LFX)

Pin	Size	Color	Circuit	Function	Terminal Type ID	Option
1 - 2	—	—	—	Not Occupied	—	—
3	0.5	BK/L-GN	2919	Fuel Rail Pressure Sensor Low Reference	I	—
4	—	—	—	Not Occupied	—	—
5	0.5	L-BU/RD	1688	5 Volt Reference	I	NQ6/NQ7
6 - 7	—	—	—	Not Occupied	—	—
8	0.5	VT/WH	821	Vehicle Speed Sensor Signal	I	NQ6/NQ7
9	—	—	—	Not Occupied	—	—
10	0.5	VT/GY	3110	Heated Oxygen Sensor High Signal Bank 1 Sensor (1)	I	—
11	0.5	VT/WH	3210	Heated Oxygen Sensor High Signal Bank 2 Sensor (1)	I	—

12	0.5	VT/L-BU	3120	Heated Oxygen Sensor High Signal Bank 1 Sensor (2)	I	—
13	0.5	VT/L-GN	3220	Heated Oxygen Sensor High Signal Bank 2 Sensor (2)	I	—
14	—	—	—	Not Occupied	—	—
15	0.5	GY/L-BU	7564	Humidity Sensor Signal	I	—
16	0.5	BN/WH	582	Throttle Actuator Control Close	I	—
17	—	—	—	Not Occupied	—	—
18	0.5	BN/RD	2917	Fuel Rail Pressure Sensor 5 Volt Reference	I	—
19	0.5	L-BU/WH	2918	Fuel Rail Pressure Sensor Signal	I	—
20	—	—	—	Not Occupied	—	—
21	0.5	BK/L-GN	822	Vehicle Speed Sensor Low Reference	I	NQ6/NQ7
22 - 25	—	—	—	Not Occupied	—	—
26	0.5	WH/BK	3111	Heated Oxygen Sensor Low Signal Bank 1 Sensor (1)	I	—
27	0.5	YE/WH	3211	Heated Oxygen Sensor Low Signal Bank 2 Sensor (1)	I	—
28	0.5	WH/YE	3121	Heated Oxygen Sensor Low Signal Bank 1 Sensor (2)	I	—
29	0.5	YE/L-BU	3221	Heated Oxygen Sensor Low Signal Bank 2 Sensor (2)	I	—
30 - 31	—	—	—	Not Occupied	—	—
32	0.5	YE	581	Throttle Actuator Control Open	I	—
33	—	—	—	Not Occupied	—	—
34	0.5	BN/RD	2701	Throttle Position Sensor 5 Volt Reference	I	—
35	—	—	—	Not Occupied	—	—

35	—	—	—	Not Occupied	—	—
36	0.5	VT/GY	496	Knock Sensor Signal (1)	I	—
37	0.5	WH/GY	1876	Knock Sensor Signal (2)	I	—
38 - 40	—	—	—	Not Occupied	—	—
41	0.5	GY/WH	3113	Heated Oxygen Sensor Heater Low Control Bank 1 Sensor (1)	I	—
42	0.5	GY/WH	3122	Heated Oxygen Sensor Heater Low Control Bank 1 Sensor (2)	I	—
43	0.5	L-GN/WH	432	Manifold Absolute Pressure Sensor Signal	I	—
44	0.5	GY/RD	2704	Manifold Absolute Pressure Sensor 5 Volt Reference	I	—
45 - 48	—	—	—	Not Occupied	—	—
49	0.5	WH/L-BU	6289	Induction Air Temperature Sensor Signal	I	—
50	—	—	—	Not Occupied	—	—
51	0.5	L-GN/L-BU	428	EVAP Canister Purge Solenoid Control	I	—
52	0.5	L-GN/WH	492	Mass Air Flow Sensor Signal	I	—
53	0.5	L-BU/WH	225	Generator Turn On Signal	I	—
54	0.5	BK/BN	2752	Throttle Position Sensor Low Reference	I	—
55	0.5	GY	23	Generator Field Duty Cycle Signal	I	—
56	0.5	BK/YE	1716	Knock Sensor Low Reference (1)	I	—
57	0.5	BK/GY	2303	Knock Sensor Low Reference (2)	I	—

58	0.5	WH/GY	1786	Transmission Park/Neutral Signal (1)	I	MYB
59	—	—	—	Not Occupied	—	—
60	0.5	BN/L-GN	1174	Oil Level Switch Signal	I	—
61	0.5	L-GN/YE	3212	Heated Oxygen Sensor Heater Low Control Bank 2 Sensor (1)	I	—
62	0.5	WH/BN	3223	Heated Oxygen Sensor Heater Low Control Bank 2 Sensor (2)	I	—
63	0.5	BK/L-GN	469	Manifold Absolute Pressure Sensor Low Reference	I	—
64	—	—	—	Not Occupied	—	—
65	0.5	BK/L-BU	61	Outside Ambient Temperature Sensor Low Reference	I	—
66 - 68	—	—	—	Not Occupied	—	—
69	0.5	BK/VT	2760	Intake Air Temperature Sensor Low Reference	I	—
70	0.5	L-BU/WH	3630	Throttle Position Sensor (SENT1) Signal	I	—
71 - 72	—	—	—	Not Occupied	—	—
73	2.5	BK/WH	1451	Signal Ground	II	—

K20 Engine Control Module X2 (LWN)

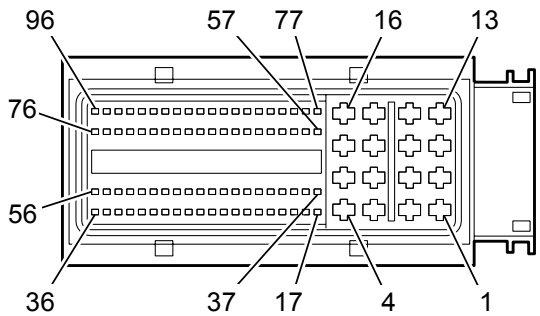

Connector Part Information

Harness Type: Engine

OEM Connector: 13647524

Service Connector: 13407086

Description: 96-Way F 0.64 MTS-B, 2.8 ATS Series, Sealed (BK)

Terminal Part Information

Terminal Type ID	Terminated Lead	Diagnostic Test Probe	Terminal Removal Tool	Service Terminal	Tray	Core Crimp	Insulation Crimp
I	13584448	J-35616-64B (LT BU)	J-38125-12A	1719532-5	2	J	J
II	13584530	J-35616-4A (PU)	J-38125-36	4-964273-1	9	C	5
III	13584530	J-35616-4A (PU)	J-38125-36	4-964273-1	9	E	1

K20 Engine Control Module X2 (LWN)

Pin	Size	Color	Circuit	Function	Terminal Type ID	Option
1	1.5	L-BU/GY	4902	Direct Fuel Injector (DFI) High Voltage Supply Cylinder 2	III	—
2	1.5	L-GN/GY	4903	Direct Fuel Injector (DFI) High Voltage Supply Cylinder 3	III	—
3	1.5	L-BU/WH	4904	Direct Fuel Injector (DFI) High Voltage Supply Cylinder 4	III	—
4	1.5	BN/WH	4901	Direct Fuel Injector (DFI) High Voltage Supply Cylinder 1	III	—
5	1.5	L-BU	4802	Direct Fuel Injector (DFI) High Voltage Control Cylinder 2	III	—
6	1.5	L-GN	4803	Direct Fuel Injector (DFI) High Voltage Control Cylinder 3	III	—
7	1.5	GY/L-BU	4804	Direct Fuel Injector (DFI) High Voltage Control Cylinder 4	III	—

8	1.5	BN	4801	Direct Fuel Injector (DFI) High Voltage Control Cylinder 1	III	—
9 - 12	—	—	—	Not Occupied	—	—
13	2	GY/BN	1582	Glow Plug Control (2)	II	—
14	2	GY/YE	1584	Glow Plug Control (4)	II	—
15	2	GY/L-GN	1583	Glow Plug Control (3)	II	—
16	2	GY/L-BU	1581	Glow Plug Control (1)	II	—
17	0.5	BK/VT	2755	Oil Pressure Sensor Low Reference	I	—
18	0.5	YE/BN	331	Oil Pressure Sensor Signal	I	—
19	0.5	WH/RD	2705	Oil Pressure Sensor 5 Volt Reference	I	—
20 - 25	—	—	—	Not Occupied	—	—
26	0.5	BN	7348	Induction Air Temperature Sensor 2 Signal	I	—
27	0.5	BN/GY	7072	Sensor Fuel Temperature 1 Signal	I	—
28 - 29	—	—	—	Not Occupied	—	—
30	0.5	L-BU	410	Engine Coolant Temperature Sensor Signal	I	—
31	0.5	BN	3681	Charge Air Cooler Outlet Temperature Sensor Signal	I	—
32	0.5	L-GN	3683	Charge Air Cooler Inlet Temperature Sensor Signal	I	—
33	—	—	—	Not Occupied	—	—
34	0.5	BN	25	Charge Indicator Control	I	—

35 - 37	—	—	—	Not Occupied	—	—
38	0.5	BN/YE	2161	Fuel Rail Pressure Sensor 2 Signal	I	—
39	—	—	—	Not Occupied	—	—
40	0.5	GY/L-BU	5300	Camshaft Position Intake Sensor Control (1)	I	—
41	0.5	YE/VT	5275	Camshaft Position Intake Sensor (1)	I	—
42	0.5	BK/L-GN	5301	Camshaft Position Intake Sensor Low Reference (1)	I	—
43	0.5	BN/RD	2701	Throttle Position Sensor 5 Volt Reference	I	—
44	0.5	L-BU/WH	3630	Throttle Position Sensor (SENT1) Signal	I	—
45	0.5	BK/BN	2752	Throttle Position Sensor Low Reference	I	—
46	—	—	—	Not Occupied	—	—
47	0.5	BN/WH	7073	Sensor Fuel Temperature 1 Low Reference	I	—
48 - 49	—	—	—	Not Occupied	—	—
50	0.5	BK/BN	2761	Coolant Temperature Sensor Low Reference	I	—
51	0.5	YE/L-BU	3680	Charge Air Cooler Outlet Temperature Sensor Low Reference	I	—
52	0.5	YE/BK	3682	Charge Air Cooler Inlet Temperature Sensor Low Reference	I	—
53 - 55	—	—	—	Not Occupied	—	—
56	0.5	BN/L-BU	2926	Hydrocarbon Injector High Control	I	—
57	0.5	BK/BN	2753	Exhaust Gas Recirculation Sensor Low Reference	I	—

58	0.5	BN/WH	5763	Exhaust Gas Recirculation Valve Sensor Signal	I	—
59	0.5	L-BU/RD	5047	Exhaust Gas Recirculation 5 Volt Reference (1)	I	—
60	0.5	BK/BN	6141	Cooling Fan Speed Low Reference	I	—
61	—	—	—	Not Occupied	—	—
62	0.5	GY/RD	2365	Cooling Fan Speed 5 Volt Reference	I	—
63 - 66	—	—	—	Not Occupied	—	—
67	0.5	GY	23	Generator Field Duty Cycle Signal	I	—
68	—	—	—	Not Occupied	—	—
69	0.5	BK/L-GN	2919	Fuel Rail Pressure Sensor Low Reference	I	—
70	0.5	VT/BK	5746	Exhaust Gas Recirculation Valve Motor Low Signal	I	—
71	0.5	WH/VT	5764	Exhaust Gas Recirculation Valve Motor High Signal	I	—
72	0.5	GY/L-BU	5930	Variable Nozzle Turbo Solenoid High Signal	I	—
73	0.5	WH/BK	5931	Variable Nozzle Turbo Solenoid Low Signal	I	—
74 - 75	—	—	—	Not Occupied	—	—
76	0.5	BK/YE	2834	Fuel Rail Pressure Solenoid Low Reference	I	—
77 - 79	—	—	—	Not Occupied	—	—
80	0.5	BK/L-GN	469	Manifold Absolute Pressure Sensor Low Reference	I	—
81	0.5	L-GN/WH	432	Manifold Absolute Pressure Sensor Signal	I	—
82	0.5	GY/RD	2704	Manifold Absolute Pressure Sensor 5 Volt Reference	I	—

83	0.5	VT/L-BU	6270	Crankshaft 60X Sensor 5 Volt Reference	I	—
84	0.5	L-GN	6271	Crankshaft 60X Sensor Signal	I	—
85	0.5	BK/VT	6272	Crankshaft 60X Sensor Low Reference	I	—
86	0.5	BN/L-GN	1174	Oil Level Switch Signal	I	—
87	—	—	—	Not Occupied	—	—
88	0.5	L-BU/WH	2918	Fuel Rail Pressure Sensor Signal	I	—
89	0.5	BN/RD	2917	Fuel Rail Pressure Sensor 5 Volt Reference	I	—
90	0.5	BN/WH	582	Throttle Actuator Control Close	I	—
91	0.5	YE	581	Throttle Actuator Control Open	I	—
92 - 93	—	—	—	Not Occupied	—	—
94	0.5	YE/L-BU	3231	Exhaust Gas Recirculation Cooler Bypass Solenoid Control	I	—
95	0.5	GY/L-BU	3230	Exhaust Gas Recirculation Cooler Bypass Solenoid Control	I	—
96	0.5	L-BU/WH	2530	Fuel Rail Pressure Solenoid Control	I	—

K20 Engine Control Module X3 (LCV)

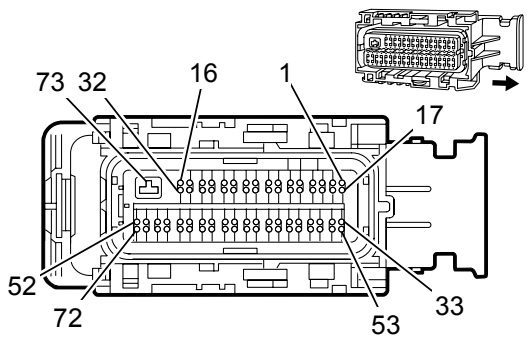

Connector Part Information

Harness Type: Engine

OEM Connector: 34566-0203

Service Connector: 88988372

Description: 73-Way F 0.64, 2.8 Series, Sealed (BK with GY Terminal Position Assurance)

Terminal Part Information

Terminal Type ID	Terminated Lead	Diagnostic Test Probe	Terminal Removal Tool	Service Terminal	Tray	Core Crimp	Insulation Crimp
I	13575812	J-35616-64B (LT BU)	J-38125-213	Not Available	Not Available	Not Available	Not Available
II	13579770	J-35616-35 (VT)	J-38125-11A	7116-4152-02	20	A	5

K20 Engine Control Module X3 (LCV)

Pin	Size	Color	Circuit	Function	Terminal Type ID	Option
1 - 3	—	—	—	Not Occupied	—	—
4	0.5	L-GN/L-BU	428	EVAP Canister Purge Solenoid Control	I	—
5 - 7	—	—	—	Not Occupied	—	—
8	0.5	YE/RD	2709	Fuel Tank Pressure Sensor 5 Volt Reference	I	—
9 - 10	—	—	—	Not Occupied	—	—
11	0.5	L-BU/RD	1688	5 Volt Reference	I	N8D OR NQ6/NQ7
12 - 13	—	—	—	Not Occupied	—	—
14	0.5	WH/RD	3201	Throttle Inlet Absolute Pressure Sensor 5 Volt Reference	I	—
15	—	—	—	Not Occupied	—	—
16	0.5	VT/L-BU	5293	Powertrain Main Relay Fused Supply (4)	I	—

17	—	—	—	Not Occupied	—	—
18	0.5	L-BU/WH	225	Generator Turn On Signal	I	—
19	0.5	GY	23	Generator Field Duty Cycle Signal	I	—
20	0.5	BK/L-GN	6281	Fuel Level Sensor Low Reference	I	—
21 - 26	—	—	—	Not Occupied	—	—
27	0.5	BK/L-GN	822	Vehicle Speed Sensor Low Reference	I	N8D OR NQ6/NQ7
28 - 39	—	—	—	Not Occupied	—	—
40	0.5	L-GN/WH	432	Manifold Absolute Pressure Sensor Signal	I	—
41	0.5	BN/L-GN	1174	Oil Level Switch Signal	I	—
42	—	—	—	Not Occupied	—	—
43	0.5	L-BU/VT	1589	Primary Fuel Level Sensor Signal	I	—
44 - 45	—	—	—	Not Occupied	—	—
46	0.5	YE/WH	3200	Throttle Inlet Absolute Pressure Sensor Signal	I	—
47 - 51	—	—	—	Not Occupied	—	—
52	0.5	VT/BK	7300	High Pressure Fuel Pump Actuator Low - Control	I	—
53 - 54	—	—	—	Not Occupied	—	—
55	0.5	GY	3890	Aero Shutter Control 2	I	—
56 - 58	—	—	—	Not Occupied	—	—
59	0.5	BK/GY	2303	Knock Sensor Low Reference (2)	I	—
60	0.5	WH/GY	1876	Knock Sensor Signal (2)	I	—

61	0.5	BK/YE	1716	Knock Sensor Low Reference (1)	I	—
62	0.5	VT/GY	496	Knock Sensor Signal (1)	I	—
63	0.5	VT/WH	821	Vehicle Speed Sensor Signal	I	N8D OR NQ6/NQ7
64 - 66	—	—	—	Not Occupied	—	—
67	0.5	L-GN/WH	5007	Reverse Switch Signal	I	N8D
68	0.5	L-BU/WH	890	Fuel Tank Pressure Sensor Signal	I	—
69 - 71	—	—	—	Not Occupied	—	—
72	0.5	YE	7301	High Pressure Fuel Pump Actuator High - Control	I	—
73	2.5	BK/WH	1451	Signal Ground	II	—

K20 Engine Control Module X3 (LFX)

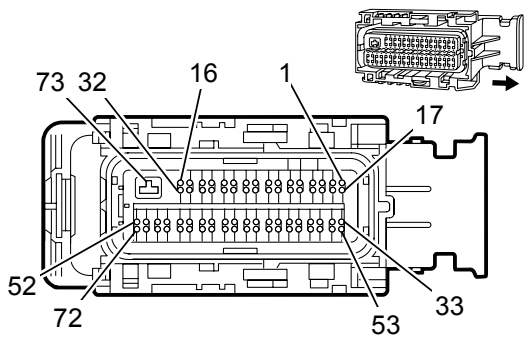

Connector Part Information

Harness Type: Engine

OEM Connector: 34566-0203

Service Connector: 88988372

Description: 73-Way F 0.64, 2.8 Series, Sealed (BK with GY Terminal Position Assurance)

Terminal Part Information

Terminal Type ID	Terminated Lead	Diagnostic Test Probe	Terminal Removal Tool	Service Terminal	Tray	Core Crimp	Insulation Crimp
I	13575812	J-35616-64B (LT BU)	J-38125-213	Not Available	Not Available	Not Available	Not Available
II	13579770	J-35616-35 (VT)	J-38125-11A	7116-4152-02	20	A	5

K20 Engine Control Module X3 (LFX)

Pin	Size	Color	Circuit	Function	Terminal Type ID	Option
1	0.5	YE/BN	331	Oil Pressure Sensor Signal	I	—
2	0.5	WH/RD	2705	Oil Pressure Sensor 5 Volt Reference	I	—
3 - 7	—	—	—	Not Occupied	—	—
8	0.5	L-BU	410	Engine Coolant Temperature Sensor Signal	I	—
9	—	—	—	Not Occupied	—	—
10	0.5	VT/L-BU	6270	Crankshaft 60X Sensor 5 Volt Reference	I	—
11 - 12	—	—	—	Not Occupied	—	—
13	0.5	BN/L-BU	2126	Ignition Control (6)	I	—
14	0.5	L-BU/GY	2125	Ignition Control (5)	I	—

15	0.5	BK/GY	2130	Ignition Control Low Reference Bank 2	I	—
16	0.5	YE	7301	High Pressure Fuel Pump Actuator High - Control	I	—
17	0.5	BK/VT	2755	Oil Pressure Sensor Low Reference	I	—
18 - 23	—	—	—	Not Occupied	—	—
24	0.5	BK/BN	2761	Coolant Temperature Sensor Low Reference	I	—
25	0.5	BK/VT	6272	Crankshaft 60X Sensor Low Reference	I	—
26	0.5	L-GN	6271	Crankshaft 60X Sensor Signal	I	—
27	0.5	YE/L-BU	2124	Ignition Control (4)	I	—
28	0.5	L-GN/L-BU	2123	Ignition Control (3)	I	—
29	0.5	L-BU/WH	2122	Ignition Control (2)	I	—
30	0.5	L-BU/VT	2121	Ignition Control (1)	I	—
31	0.5	BK/L-BU	2129	Ignition Control Low Reference Bank 1	I	—
32	0.5	VT/BK	7300	High Pressure Fuel Pump Actuator Low - Control	I	—
33	0.5	YE/VT	5275	Camshaft Position Intake Sensor (1)	I	—
34	0.5	GY/L-BU	5300	Camshaft Position Intake Sensor Control (1)	I	—
35	0.5	VT/BK	5273	Camshaft Position Exhaust Sensor (1)	I	—

36	0.5	YE	5276	Camshaft Position Intake Sensor (2)	I	—
37	0.5	WH/L-BU	5302	Camshaft Position Intake Sensor Control (2)	I	—
38	0.5	VT/L-BU	5274	Camshaft Position Exhaust Sensor (2)	I	—
39	0.5	VT/BN	5284	Camshaft Phaser Intake Solenoid (1)	I	—
40	0.5	GY/L-BU	5282	Camshaft Phaser Exhaust Solenoid (1)	I	—
41	0.5	L-GN	5272	Camshaft Phaser Intake Solenoid (2)	I	—
42	0.5	L-GN/BN	5283	Camshaft Phaser Exhaust Solenoid (2)	I	—
43 - 45	—	—	—	Not Occupied	—	—
46	0.75	GY/L-BU	4804	Direct Fuel Injector (DFI) High Voltage Control Cylinder 4	I	—
47	0.75	WH/L-GN	4805	Direct Fuel Injector (DFI) High Voltage Control Cylinder 5	I	—
48	0.75	L-BU	4802	Direct Fuel Injector (DFI) High Voltage Control Cylinder 2	I	—
49	—	—	—	Not Occupied	—	—
50	0.75	L-GN	4803	Direct Fuel Injector (DFI) High Voltage Control Cylinder 3	I	—
51	0.75	VT/L-GN	4806	Direct Fuel Injector (DFI) High Voltage Control Cylinder 6	I	—
52	0.75	BN	4801	Direct Fuel Injector (DFI) High Voltage Control Cylinder 1	I	—
53	0.5	BK/L-GN	5301	Camshaft Position Intake Sensor Low Reference (1)	I	—
54	0.5	GY/YE	5297	Camshaft Position Exhaust Sensor Control (1)	I	—

55	0.5	BK/GY	5296	Camshaft Position Exhaust Sensor Low Reference (1)	I	—
56	0.5	BK/VT	5303	Camshaft Position Intake Sensor Low Reference (2)	I	—
57	0.5	L-GN/BN	5298	Camshaft Position Exhaust Sensor Control (2)	I	—
58	0.5	BK/BN	5299	Camshaft Position Exhaust Sensor Low Reference (2)	I	—
59	0.5	BK/BN	6753	Cam Phaser W Low Reference	I	—
60	0.5	BK/VT	6754	Cam Phaser X Low Reference	I	—
61	0.5	BK/L-BU	6755	Cam Phaser Y Low Reference	I	—
62	0.5	BK/GY	6756	Cam Phaser Z Low Reference	I	—
63 - 65	—	—	—	Not Occupied	—	—
66	0.75	L-BU/WH	4904	Direct Fuel Injector (DFI) High Voltage Supply Cylinder 4	I	—
67	0.75	L-GN/WH	4905	Direct Fuel Injector (DFI) High Voltage Supply Cylinder 5	I	—
68	0.75	L-BU/GY	4902	Direct Fuel Injector (DFI) High Voltage Supply Cylinder 2	I	—
69	—	—	—	Not Occupied	—	—
70	0.75	L-GN/GY	4903	Direct Fuel Injector (DFI) High Voltage Supply Cylinder 3	I	—
71	0.75	VT/GY	4906	Direct Fuel Injector (DFI) High Voltage Supply Cylinder 6	I	—
72	0.75	BN/WH	4901	Direct Fuel Injector (DFI) High Voltage Supply Cylinder 1	I	—
73	2.5	BK/WH	1451	Signal Ground	II	—

K20 Engine Control Module X3 (LWN)

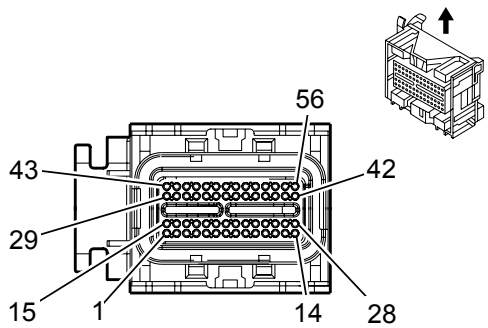

Connector Part Information

Harness Type: Engine

OEM Connector: 34576-0703

Service Connector: 88988373

Description: 56-Way F 0.64 Series, Sealed (BU with BU Terminal Position Assurance)

Terminal Part Information

Terminal Type ID	Terminated Lead	Diagnostic Test Probe	Terminal Removal Tool	Service Terminal	Tray	Core Crimp	Insulation Crimp
I	19301532	J-35616-64B (LT BU)	J-38125-213	Not Available	Not Available	Not Available	Not Available

K20 Engine Control Module X3 (LWN)

Pin	Size	Color	Circuit	Function	Terminal Type ID	Option
1	0.5	BN/WH	3100	DEF Dosing Valve Low Control	I	—
2	—	—	—	Not Occupied	—	—
3	0.5	BK/L-GN	6281	Fuel Level Sensor Low Reference	I	—
4 - 5	—	—	—	Not Occupied	—	—
6	0.5	YE/WH	3200	Throttle Inlet Absolute Pressure Sensor Signal	I	—
7	0.5	WH/RD	3201	Throttle Inlet Absolute Pressure Sensor 5 Volt Reference	I	—
8	0.5	BK/L-BU	61	Outside Ambient Temperature Sensor Low Reference	I	—
9	0.5	BK/VT	3661	Exhaust Gas Temperature Sensor 5 Low Reference	I	—
10	0.5	BK/L-BU	6274	Exhaust Gas Recirculation Temperature Sensor Low Reference	I	—

11	0.5	BK/GY	3659	Exhaust Gas Temperature Sensor 4 Low Reference	I	—
12	0.5	BK/L-GN	3657	Exhaust Gas Temperature Sensor 3 Low Reference	I	—
13	0.5	BK/L-BU	6783	Exhaust Gas Temperature Sensor 2 Low Reference	I	—
14	0.5	L-BU/WH	5277	Exhaust Gas Temperature Sensor (1)	I	—
15	0.5	BN	3099	DEF Dosing Valve High Control	I	—
16 - 17	—	—	—	Not Occupied	—	—
18	0.5	L-BU/VT	1589	Primary Fuel Level Sensor Signal	I	—
19	0.5	BK/YE	6275	Exhaust Gas Recirculation Temperature Sensor 2 Low Reference	I	—
20	0.5	YE/L-GN	3236	Exhaust Gas Recirculation Temperature Sensor 2 Signal	I	—
21	0.5	GY/RD	5928	Variable Nozzle Turbo Position Sensor 5 Volt Reference	I	—
22	0.5	L-BU/GY	636	Outside Ambient Air Temperature Sensor Signal	I	—
23	0.5	L-BU/GY	3660	Exhaust Gas Temperature Sensor 5 Signal	I	—
24	0.5	WH/BN	3237	Exhaust Gas Recirculation Temperature Sensor Signal	I	—
25	0.5	VT/BN	3658	Exhaust Gas Temperature Sensor 4 Signal	I	—
26	0.5	GY/L-GN	5378	Exhaust Gas Temperature Sensor (3)	I	—
27	0.5	BK/BN	6782	Exhaust Gas Temperature Sensor 1 Low Reference	I	—

28	0.5	L-BU/L-GN	5377	Exhaust Gas Temperature Sensor (2)	I	—
29	—	—	—	Not Occupied	—	—
30	0.5	YE/L-BU	1497	Crankcase Ventilation (Blowby) Heater Control Signal	I	—
31	—	—	—	Not Occupied	—	—
32	0.5	BN/GY	4008	Humidity Sensor Signal	I	—
33	0.5	BK/BN	5929	Variable Nozzle Turbo Position Sensor Low Reference	I	—
34 - 42	—	—	—	Not Occupied	—	—
43	0.5	L-GN/L-BU	3889	DEF Power Module Relay Control	I	—
44	—	—	—	Not Occupied	—	—
45	0.5	L-BU	3017	Fuel Heater Relay Control 1	I	—
46	0.5	VT/YE	5947	Variable Nozzle Turbo Position Sensor Signal	I	—
47 - 49	—	—	—	Not Occupied	—	—
50	0.5	WH/RD	6054	Exhaust Pressure Sensor 5 Volt Reference (1)	I	—
51	0.5	L-BU	6053	Exhaust Pressure Sensor Signal (1)	I	—
52	0.5	BK/YE	6055	Exhaust Pressure Sensor Low Reference (1)	I	—
53 - 56	—	—	—	Not Occupied	—	—

K22 Cooling Fan Control Module (LCV/LFX)

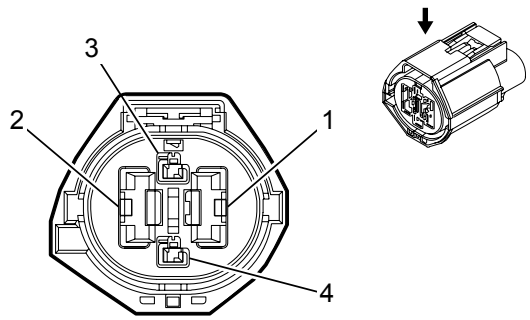

Connector Part Information

Harness Type: Forward Lamp

OEM Connector: 7287-1404-10

Service Connector: 19181808

Description: 4-Way F 1.5, 9.5 Series, Sealed (D-GY)

Terminal Part Information

Terminal Type ID	Terminated Lead	Diagnostic Test Probe	Terminal Removal Tool	Service Terminal	Tray	Core Crimp	Insulation Crimp
I	Not Required	J-35616-22 (RD)	Not Required	Not Required	Not Required	Not Required	Not Required
II	Not Required	J-35616-2A (GY)	Not Required	Not Required	Not Required	Not Required	Not Required
III	Not Required	J-35616-42 (RD)	Not Required	Not Required	Not Required	Not Required	Not Required

K22 Cooling Fan Control Module (LCV/LFX)

Pin	Size	Color	Circuit	Function	Terminal Type ID	Option
1	6	BK	1350	Ground	I	LCV
	10	BK	1350		III	LFX
2	6	RD/GY	4840	Battery Positive Voltage	I	LCV
	10	RD/GY	4840		III	LFX
3	—	—	—	Not Occupied	—	—
4	0.5	WH/BK	2366	Cooling Fan Control Relay Speed Signal	II	—

K29 Seat Heating Control Module X1 (KA1)

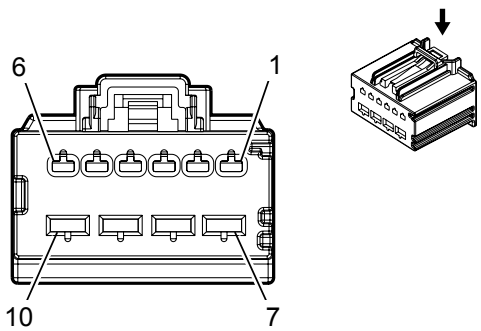

Connector Part Information

Harness Type: Passenger Seat Cushion

OEM Connector: 13582823

Service Connector: Service by Harness - See Part Catalog

Description: 10-Way F 1.5, 2.8 Series (BK)

Terminal Part Information

Terminal Type ID	Terminated Lead	Diagnostic Test Probe	Terminal Removal Tool	Service Terminal	Tray	Core Crimp	Insulation Crimp
I	Not Required	Pending	No Required	Not Required	Not Required	Not Required	Not Required

K29 Seat Heating Control Module X1 (KA1)

Pin	Size	Color	Circuit	Function	Terminal Type ID	Option
1	0.75	WH/BN	2481	Passenger Heated Back Element Control	I	-
2	0.75	BN/L-BU	2479	Passenger Heated Seat Element Control	I	-
3	0.75	GY/BK	2480	Passenger Heated Seat Element Low Reference	I	-
4	0.75	VT/BK	2424	Driver Heated Back Element Low Reference	I	-
5	0.75	BN	2432	Driver Heated Back Element Control	I	-
6	0.75	BN/VT	2077	Driver Heated Seat Element Control	I	-
7	0.75	RD/L-GN	6140	Battery Positive Voltage	I	-
8	0.75	BK	3850	Ground	I	-

9	-	-	-	Not Occupied	-	-
10	0.75	RD/L-GN	5140	Battery Positive Voltage	I	-

K29 Seat Heating Control Module X2 (KA1)

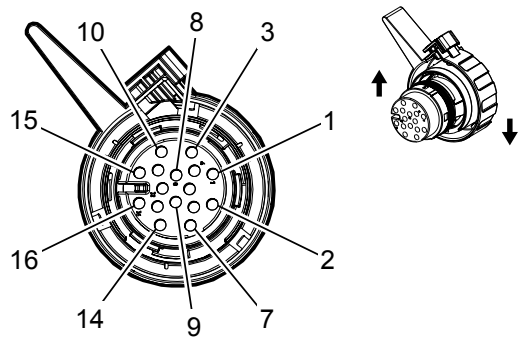

Connector Part Information

Harness Type: Engine

OEM Connector: 9430734

Service Connector: 19303772

Description: 16-Way F 1.5 Series, Sealed (BK)

Terminal Part Information

Terminal Type ID	Terminated Lead	Diagnostic Test Probe	Terminal Removal Tool	Service Terminal	Tray	Core Crimp	Insulation Crimp
I	13578934	J-35616-66 (YE)	J-38125-28	2 21 24 47220 0	17	E	1

K29 Seat Heating Control Module X2 (KA1)

Pin	Size	Color	Circuit	Function	Terminal Type ID	Option
1 - 2	—	—	—	Not Occupied	—	—
3	0.5	WH/GY	1786	Transmission Park/Neutral Signal (1)	I	—
4	0.75	RD/L-GN	1840	Battery Positive Voltage	I	—
5	0.75	BK/WH	1451	Signal Ground	I	—
6 - 8	—	—	—	Not Occupied	—	—
9	0.5	VT/YE	5985	Accessory Wakeup Serial Data	I	—
10	0.5	L-BU	2500	High Speed GMLAN Serial Data (+) (1)	I	—
11	0.5	WH	2501	High Speed GMLAN Serial Data (-) (1)	I	—
12	0.5	VT/BK	2139	Run/Crank Ignition 1 Voltage	I	—

13	0.5	WH	2501	High Speed GMLAN Serial Data (-) (1)	I	—
14	0.5	L-BU	2500	High Speed GMLAN Serial Data (+) (1)	I	—
15 - 16	—	—	—	Not Occupied	—	—

K33 HVAC Control Module X1

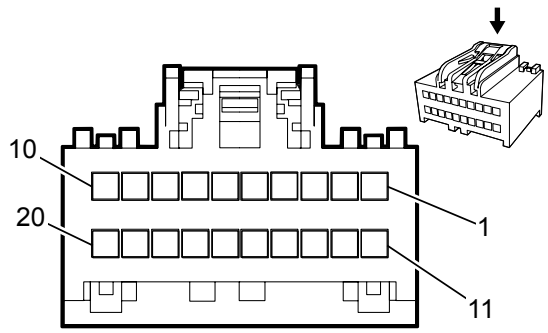

Connector Part Information

Harness Type: Instrument Panel

OEM Connector: 19153728

Service Connector: 13576644

Description: 20-Way F 0.64 Series (GN with WH Terminal Position Assurance)

Terminal Part Information

Terminal Type ID	Terminated Lead	Diagnostic Test Probe	Terminal Removal Tool	Service Terminal	Tray	Core Crimp	Insulation Crimp
I	13575845	J-35616-64B (LT BU)	J-38125-215A	SAIT-A03T-M064	23	P	P

K33 HVAC Control Module X1

Pin	Size	Color	Circuit	Function	Terminal Type ID	Option
1	—	—	—	Not Occupied	—	—
2	0.35	GY/L-GN	7565	Windscreen Temp Sensor Signal	I	C68
3	—	—	—	Not Occupied	—	—
4	0.35	L-BU/WH	734	Inside Air Temperature Sensor Signal	I	—
5	0.35	YE/L-BU	3197	Humidity Temperature Sensor Signal	I	C68
6	0.35	YE/RD	597	5 Volt Reference	I	C68
7	0.35	BK/L-BU	7566	Humidity/Windscreen Temp Sensor Low Reference	I	C68
8 - 11	—	—	—	Not Occupied	—	—
12	0.35	GY/L-BU	7564	Humidity Sensor Signal	I	C68
13	—	—	—	Not Occupied	—	—

13	—	—	—	Not Occupied	—	—
14	0.35	YE/VT	1783	Twilight Sentinel Delay Signal	I	—
15 - 17	—	—	—	Not Occupied	—	—
18	0.5	BN	518	Lower Left Air Temperature Sensor Signal	I	C68
19 - 20	—	—	—	Not Occupied	—	—

K33 HVAC Control Module X2

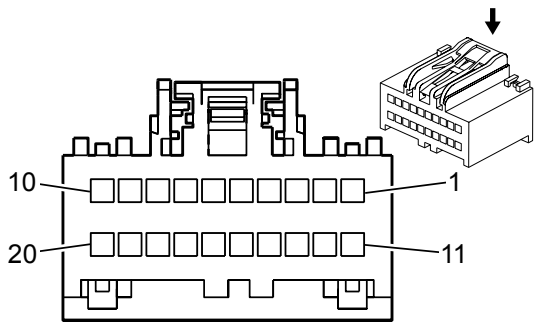

Connector Part Information

Harness Type: Instrument Panel

OEM Connector: 15126709

Service Connector: 15126709

Description: 20-Way F USCAR 64 Series (BN with WH Terminal Position Assurance)

Terminal Part Information

Terminal Type ID	Terminated Lead	Diagnostic Test Probe	Terminal Removal Tool	Service Terminal	Tray	Core Crimp	Insulation Crimp
I	13575867	J-35616-64B (LT BU)	J-38125-215A	SAIT-A03T-M064	23	P	P

K33 HVAC Control Module X2

Pin	Size	Color	Circuit	Function	Terminal Type ID	Option
1	0.5	RD/VT	3340	Battery Positive Voltage	I	—
2	0.35	L-GN	5060	Low Speed GMLAN Serial Data	I	—
3	—	—	—	Not Occupied	—	—
4	0.35	L-GN/YE	7531	Local Interconnect Network Serial Data Bus 9	I	—
5 - 6	—	—	—	Not Occupied	—	—
7	0.5	VT	3195	Auxiliary Heater Control	I	LWN
8	0.5	BK	2050	Ground	I	—
9	0.35	VT/GY	539	Run/Crank Ignition 1 Voltage	I	—
10	0.5	L-BU/YE	7574	Electric Variable Displacement Control	I	—

11	0.5	L-BU/BN	7573	Electric Variable Displacement Supply	I	—
12 - 14	—	—	—	Not Occupied	—	—
15	0.35	L-BU/GY	754	Blower Motor Speed Control	I	—
16 - 17	—	—	—	Not Occupied	—	—
18	0.35	BK/YE	1791	Air Temperature Door Control Low Reference	I	—
19	0.35	BN/VT	193	Rear Defog Relay Control	I	—
20	—	—	—	Not Occupied	—	—

K33 HVAC Control Module X3

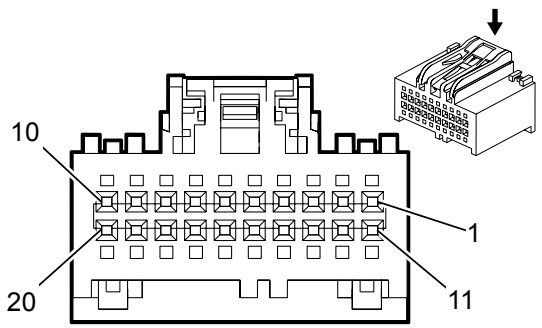

Connector Part Information

Harness Type: HVAC

OEM Connector: 15126711

Service Connector: 15126711

Description: 20-Way F 0.64 Series (BK)

Terminal Part Information

Terminal Type ID	Terminated Lead	Diagnostic Test Probe	Terminal Removal Tool	Service Terminal	Tray	Core Crimp	Insulation Crimp
I	13327119	J-35616-64B (L-BU)	J-38125-215A	SAIT-A03T-M064	14	P	P

K33 HVAC Control Module X3

Pin	Size	Color	Circuit	Function	Terminal Type ID	Option
1	0.35	BN	516	Upper Left Air Temperature Sensor Signal	I	-
2	0.35	YE	3165	Mode Door Stepper Motor Control (1)	I	-
3	0.35	WH/RD	3166	Mode Door Stepper Motor Control (2)	I	-
4	0.35	GY/BN	3167	Mode Door Stepper Motor Control (3)	I	-
5	0.35	L-GN/WH	3168	Mode Door Stepper Motor Control (4)	I	-
6-8	-	-	-	Not Occupied	-	-
9	0.35	BK/YE	407	Low Reference	I	-
10	-	-	-	Not Occupied	-	-
11	0.35	D-GN	3169	Temp Door Stepper Motor Control (1)	I	-
12	0.35	WH/RD	3170	Temp Door Stepper Motor Control (2)	I	-
13	0.35	GY/RD	3171	Temp Door Stepper Motor Control (3)	I	-
14	0.35	RD/BK	3172	Temp Door Stepper Motor Control (4)	I	-
15	0.8	BK	7572	HVAC Motor Supply Voltage	I	-
16	0.35	GY	3173	Air Inlet Door Stepper Motor Control (1)	I	-
17	0.35	D-BU/WH	3174	Air Inlet Door Stepper Motor Control (2)	I	-

18	0.35	BN/L-GN	3175	Air Inlet Door Stepper Motor Control (3)	I	-
19	0.35	RD/L-GN	3176	Air Inlet Door Stepper Motor Control (4)	I	-
20	0.35	GY	6137	EVAP Core Temperature Sensor Signal	I	-

K36 Inflatable Restraint Sensing and Diagnostic Module X1

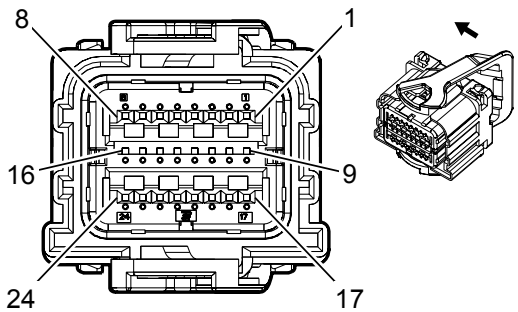

Connector Part Information

Harness Type: Instrument Panel

OEM Connector: 13579298

Service Connector: 19299778

Description: 24-Way F 0.64 Series, Sealed (YE)

Terminal Part Information

Terminal Type ID	Terminated Lead	Diagnostic Test Probe	Terminal Removal Tool	Service Terminal	Tray	Core Crimp	Insulation Crimp
I	19328872	J-35616-64B (LT BU)	J-38125-11A	Not Available	Not Available	Not Available	Not Available

K36 Inflatable Restraint Sensing and Diagnostic Module X1

Pin	Size	Color	Circuit	Function	Terminal Type ID	Option
1	0.35	OG/L-GN	3023	Steering Wheel Module Stage 2 High Control	I	—
2	0.35	WH/OG	3022	Steering Wheel Module Stage 2 Low Control	I	—
3	0.35	BN/OG	3020	Steering Wheel Module Stage 1 Low Control	I	—
4	0.35	OG/VT	3021	Steering Wheel Module Stage 1 High Control	I	—
5	0.35	YE/OG	3025	Passenger IP Module Stage 1 High Control	I	—
6	0.35	OG/WH	3024	Passenger IP Module Stage 1 Low Control	I	—
7	0.35	OG/VT	3026	Passenger IP Module Stage 2 Low Control	I	—
8	0.35	GY/OG	3027	Passenger IP Module Stage 2 High Control	I	—

9	0.5	RD/L-GN	4440	Battery Positive Voltage	I	—
10	0.35	VT/WH	5234	Passenger Seat Belt Indicator Control	I	—
11	0.35	L-BU	2307	Passenger Air Bag On Indicator Control	I	—
12	0.35	L-GN	2308	Passenger Air Bag Off Indicator Control	I	—
13 - 14	—	—	—	Not Occupied	—	—
15	0.5	L-GN	5060	Low Speed GMLAN Serial Data	I	—
16	—	—	—	Not Occupied	—	—
17	0.5	WH/L-BU	5986	Serial Data Communication Enable	I	—
18	0.5	L-BU/YE	6105	High Speed GMLAN Serial Data (+) (2)	I	—
19	0.5	BK/WH	2251	Signal Ground	I	—
20	0.5	WH	6106	High Speed GMLAN Serial Data (-) (2)	I	—
21 - 24	—	—	—	Not Occupied	—	—

K36 Inflatable Restraint Sensing and Diagnostic Module X2

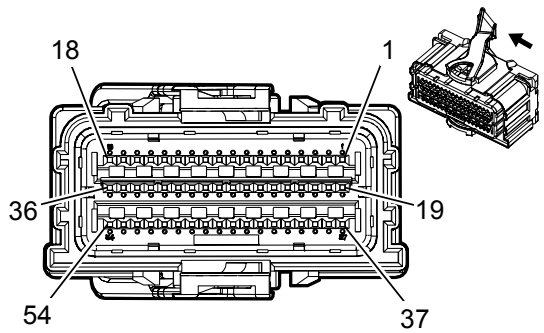

Connector Part Information

Harness Type: Body

OEM Connector: 2098922-9

Service Connector: 19301526

Description: 54-Way F 0.64 Series, Sealed (YE)

Terminal Part Information

Terminal Type ID	Terminated Lead	Diagnostic Test Probe	Terminal Removal Tool	Service Terminal	Tray	Core Crimp	Insulation Crimp
I	19328872	J-35616-64B (LT BU)	J-38125-11A	Not Available	Not Available	Not Available	Not Available

K36 Inflatable Restraint Sensing and Diagnostic Module X2

Pin	Size	Color	Circuit	Function	Terminal Type ID	Option
1 - 8	—	—	—	Not Occupied	—	—
9	0.35	OG/YE	3481	Driver Seat Belt Anchor Pretensioner High Control	I	—
10	0.35	YE/OG	3482	Driver Seat Belt Anchor Pretensioner Low Control	I	—
11	0.35	GY/OG	3480	Passenger Seat Belt Anchor Pretensioner Low Control	I	—
12	0.35	OG/BN	3479	Passenger Seat Belt Anchor Pretensioner High Control	I	—
13	0.35	OG/L-BU	3068	Driver Side Impact Module High Control	I	—
14	0.35	L-GN/OG	3069	Driver Side Impact Module Low Control	I	—
15	0.35	BN/OG	3067	Passenger Side Impact Module Low Control	I	—

16	0.35	OG/GY	3066	Passenger Side Impact Module High Control	I	—
17	0.5	OG/L-GN	5019	Left Front Head Curtain Module High Control	I	—
18	0.5	VT/OG	5020	Left Front Head Curtain Module Low Control	I	—
19	0.35	OG/L-GN	2132	Left Front Side Impact Sensing Module Signal	I	—
20	0.35	BK/OG	6628	Left Front Side Impact Sensing Module Low Reference	I	—
21	0.35	BK/OG	6629	Right Front Side Impact Sensing Module Low Reference	I	—
22	0.35	BN/OG	2134	Right Front Side Impact Sensing Module Signal	I	—
23	0.5	OG/YE	354	Left Front Discriminating Sensor Signal	I	—
24	0.5	BK/OG	5045	Left Front Discriminating Sensor Low Reference	I	—
25	0.5	BK/OG	5600	Right Front Discriminating Sensor Low Reference	I	—
26	0.5	OG/L-GN	1409	Right Front Discriminating Sensor Signal	I	—
27	0.35	OG/L-BU	6620	Left Middle Side Impact Sensing Module Signal	I	—
28	0.35	BK/OG	6621	Left Middle Side Impact Sensing Module Low Reference	I	—
29	0.35	BK/OG	6625	Right Middle Side Impact Sensing Module Low Reference	I	—
30	0.35	OG/VT	6624	Right Middle Side Impact Sensing Module Signal	I	—
31 - 36	—	—	—	Not Occupied	—	—
37	0.35	OG/WH	3477	Driver Seat Belt Retractor Pretensioner High Control	I	—

	0.5	OG/WH	3477			—
38	0.35	GY/OG	3478	Driver Seat Belt Retractor Pretensioner Low Control	I	—
	0.5	GY/OG	3478			—
39	0.35	WH/OG	3476	Passenger Seat Belt Retractor Pretensioner Low Control	I	—
	0.5	WH/OG	3476			—
40	0.35	OG/L-GN	3475	Passenger Seat Belt Retractor Pretensioner High Control	I	—
	0.5	OG/L-GN	3475			—
41	0.35	OG/BN	238	Driver Seat Belt Switch Signal	I	—
42	—	—	—	Not Occupied	—	—
43	0.35	BK/OG	1363	Driver Seat Belt Switch Low Reference	I	—
44	0.35	BK/OG	1361	Passenger Seat Belt Switch Low Reference	I	—
45	0.35	OG/VT	1362	Passenger Seat Belt Switch Signal	I	—
46 - 52	—	—	—	Not Occupied	—	—
53	0.5	OG/GY	5021	Right Front Head Curtain Module High Control	I	—
54	0.5	WH/OG	5022	Right Front Head Curtain Module Low Control	I	—

K38 Chassis Control Module (LFX)

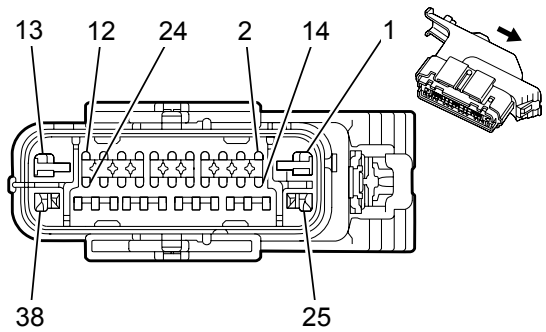

Connector Part Information

Harness Type: Chassis

OEM Connector: 89047375

Service Connector: 19178089

Description: 38-Way F 0.64, 280 GT Series, Sealed (BK)

Terminal Part Information

Terminal Type ID	Terminated Lead	Diagnostic Test Probe	Terminal Removal Tool	Service Terminal	Tray	Core Crimp	Insulation Crimp
I	13576407	J-35616-4A (PU)	J-38125-553	15304720	15	4	5
II	13578924	J-35616-64B (LT BU)	J-38125-215A	SAITS-A03T-M064	24	9	9
III	13579766	J-35616-64B (LT BU)	J-38125-215A	Not Available	Not Available	Not Available	Not Available
IV	13579766	J-35616-64B (LT BU)	J-38125-215A	SAITS-A03T-M064	24	9	9

K38 Chassis Control Module (LFX)

Pin	Size	Color	Circuit	Function	Terminal Type ID	Option
1	2.5	RD/VT	1940	Battery Positive Voltage	I	—
2	—	—	—	Not Occupied	—	—
3	0.5	BN	3891	Aero Shutter Control	II	—
4	—	—	—	Not Occupied	—	—
5	0.5	L-BU	2500	High Speed GMLAN Serial Data (+) (1)	II	—
6	0.5	L-BU	2500	High Speed GMLAN Serial Data (+) (1)	II	—
7	—	—	—	Not Occupied	—	—
8	0.5	VT/YE	5985	Accessory Wakeup Serial Data	II	—

9	—	—	—	Not Occupied	—	—
10	0.5	L-BU/WH	7446	Fuel Line Pressure Sensor Signal	II	—
11	—	—	—	Not Occupied	—	—
12	0.5	BN	3891	Aero Shutter Control	II	—
13	2.5	GY	120	Fuel Pump Control	I	—
14 - 16	—	—	—	Not Occupied	—	—
17	0.5	WH	2501	High Speed GMLAN Serial Data (-) (1)	II	—
18	0.5	WH	2501	High Speed GMLAN Serial Data (-) (1)	II	—
19	—	—	—	Not Occupied	—	—
20	0.5	GY	5660	Fuel Pump Controller Data Out Signal	II	—
21	0.75	VT/GY	139	Run/Crank Ignition 1 Voltage	III	—
	0.75	VT/GY	139		IV	—
22	0.5	BN/RD	7445	Fuel Line Pressure Sensor 5 Volt Reference	II	—
23	0.5	BK/YE	7447	Fuel Line Pressure Sensor Low Reference	II	—
24	0.5	BK	7444	Fuel System Control Module Shield Ground	II	—
25	2.5	BK	650	Ground	I	—
26 - 37	—	—	—	Not Occupied	—	—
38	2.5	BK/L-GN	1580	Fuel Pump Low Reference	I	—

K38 Chassis Control Module (LWN)

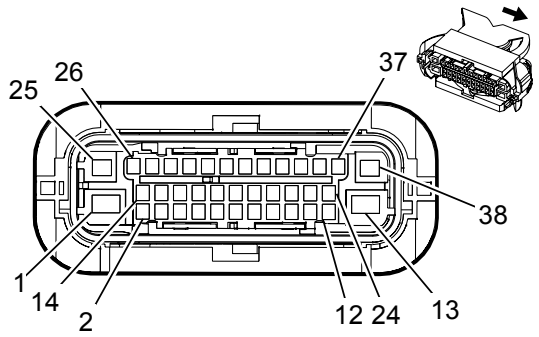

Connector Part Information

Harness Type: Chassis

OEM Connector: 15498534

Service Connector: 19329924

Description: 38-Way F 1.5 CTS, 2.8 MCP, 4.8 MCP Series, Sealed (BK)

Terminal Part Information

Terminal Type ID	Terminated Lead	Diagnostic Test Probe	Terminal Removal Tool	Service Terminal	Tray	Core Crimp	Insulation Crimp
I	13578924	J-35616-64B (LT BU)	J-38125-215A	SAITS-A03T-M064	24	9	9
II	13579921	J-35616-40 (BU)	J-38125-556	1241408-1	4	A	B
III	13582180	J-35616-14 (GN)	J-38125-560	1241374-1	6	E	2
IV	19119381	J-35616-14 (GN)	J-38125-215A	Not Available	Not Available	Not Available	Not Available
V	19119772	J-35616-35 (VT)	J-38125-557	1241388-1	7	E	C
VI	seal or plug	No Tool Required	Pending	Not Available	4	Not Available	Not Available

K38 Chassis Control Module (LWN)

Pin	Size	Color	Circuit	Function	Terminal Type ID	Option
1	2.5	RD/VT	1940	Battery Positive Voltage	II	—
2 - 12	—	—	—	Not Occupied	—	—
13	2.5	BK	650	Ground	II	—
14	0.5	VT/YE	5985	Accessory Wakeup Serial Data	IV	—
15	—	—	—	Not Occupied	—	—
16	0.5	L-BU/RD	7632	Integrated Trailer Brake Controller Switch 5 Volt Reference	IV	—
17	—	—	—	Not Occupied	—	—

17	—	—	—	Not Occupied	—	—
18	0.5	BN	7634	Integrated Trailer Brake Controller Redundant Manual Apply Signal	IV	—
19	0.5	BK/BN	7631	Integrated Trailer Brake Controller Switch Low Reference	IV	—
20	0.5	YE	7635	Integrated Trailer Brake Controller Manual Apply Signal	IV	—
21	0.5	L-GN/BK	7633	Integrated Trailer Brake Controller User Gain Signal	IV	—
22	0.5	YE/BK	2224	Trailer Brake Enable Signal	IV	—
23	0.5	WH/BK	2223	Trailer Brake Control Signal	IV	—
24	—	—	—	Not Occupied	—	—
25	0.75	VT/GY	139	Run/Crank Ignition 1 Voltage	V	—
26	0.5	L-BU	2500	High Speed GMLAN Serial Data (+) (1)	VI	CREW CAB
	0.5	L-BU	2500		I	EXTENDED CAB
27	0.5	L-BU	2500	High Speed GMLAN Serial Data (+) (1)	I	—
28	0.5	WH	2501	High Speed GMLAN Serial Data (-) (1)	I	—
29	0.5	WH	2501	High Speed GMLAN Serial Data (-) (1)	IV	—
30	0.5	L-GN/VT	4114	Local Interconnect Network Serial Data Bus 14	III	CREW CAB
	0.5	L-GN/VT	4114		IV	EXTENDED CAB
31 - 38	—	—	—	Not Occupied	—	—

K43 Power Steering Control Module X1

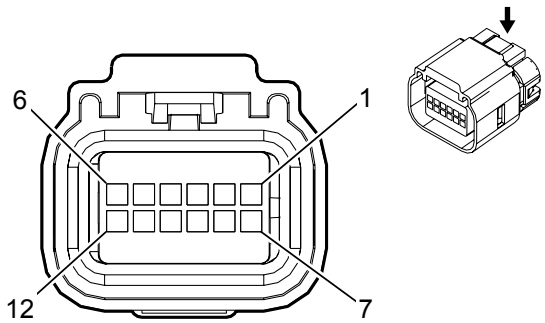

Connector Part Information

Harness Type: Power Steering

OEM Connector: 13678638

Service Connector: Service by Harness - See Part Catalog

Description: 12-Way F 1.2 OCS Series, Sealed (BK)

Terminal Part Information

Terminal Type ID	Terminated Lead	Diagnostic Test Probe	Terminal Removal Tool	Service Terminal	Tray	Core Crimp	Insulation Crimp
I	Not Required	J-35616-64B (LT BU)	Not Required	Not Required	Not Required	Not Required	Not Required

K43 Power Steering Control Module X1

Pin	Size	Color	Circuit	Function	Terminal Type ID	Option
1	0.5	RD/BN	5940	Battery Positive Voltage	I	—
2	0.5	WH/L-BU	5986	Serial Data Communication Enable	I	—
3	0.5	L-BU/YE	6105	High Speed GMLAN Serial Data (+) (2)	I	—
4	0.5	WH	6106	High Speed GMLAN Serial Data (-) (2)	I	—
5	0.5	L-BU/YE	6105	High Speed GMLAN Serial Data (+) (2)	I	—
6	0.5	WH	6106	High Speed GMLAN Serial Data (-) (2)	I	—
7	0.5	BK	—	—	I	—
8	0.5	L-BU	2500	High Speed GMLAN Serial Data (+) (1)	I	—

9	0.5	WH	2501	High Speed GMLAN Serial Data (-) (1)	I	—
10	0.5	L-BU	2500	High Speed GMLAN Serial Data (+) (1)	I	—
11	0.5	WH	2501	High Speed GMLAN Serial Data (-) (1)	I	—
12	0.5	BK	—	—	I	—

K43 Power Steering Control Module X2

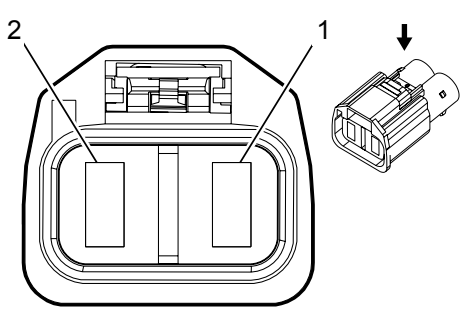

Connector Part Information

Harness Type: Power Steering

OEM Connector: 7287-1990-30

Service Connector: Service by Harness - See Part Catalog

Description: 2-Way F 9.5 Series, Sealed (BK)

Terminal Part Information

Terminal Type ID	Terminated Lead	Diagnostic Test Probe	Terminal Removal Tool	Service Terminal	Tray	Core Crimp	Insulation Crimp
I	Not Required	J-35616-42 (RD)	Not Required	Not Required	Not Required	Not Required	Not Required

K43 Power Steering Control Module X2

Pin	Size	Color	Circuit	Function	Terminal Type ID	Option
1	10	BK	1050	Ground	I	—
2	10	RD/VT	842	Battery Positive Voltage	I	—

K43 Power Steering Control Module X3

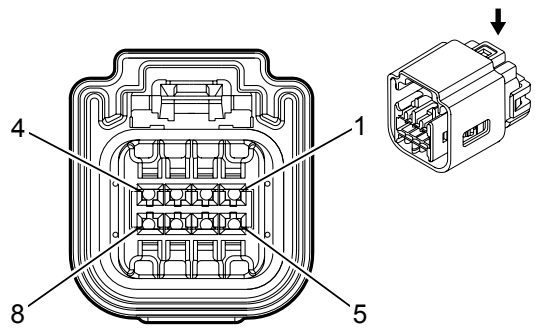

Connector Part Information

Harness Type: Power Steering Shaft Torque Sensor

OEM Connector: 13572498

Service Connector: Service by Harness - See Part Catalog

Description: 8-Way F 1.2 OCS Series, Sealed (BK)

Terminal Part Information

Terminal Type ID	Terminated Lead	Diagnostic Test Probe	Terminal Removal Tool	Service Terminal	Tray	Core Crimp	Insulation Crimp
I	Not Available	Not Available	Not Available	Not Available	Not Available	Not Available	Not Available

K43 Power Steering Control Module X3

Pin	Size	Color	Circuit	Function	Terminal Type ID	Option
1	-	-	-	Not Occupied	-	-
2	0.5	BN/RD	6631	Torque Input Sensor High Reference	I	—
3	0.5	BU/GY	6633	Torque Input Sensor Signal	I	—
4	0.5	BK/BU	6632	Torque Input Sensor Low Reference	I	—
5	-	-	-	Not Occupied	-	-
6	0.5	BN/RD	6631	Torque Input Sensor High Reference	I	—
7	0.5	BU/GY	6633	Torque Input Sensor Signal	I	—
8	0.5	BK/BU	6632	Torque Input Sensor Low Reference	I	—

K69 Transfer Case Control Module X1 (NQ6/NQ7)

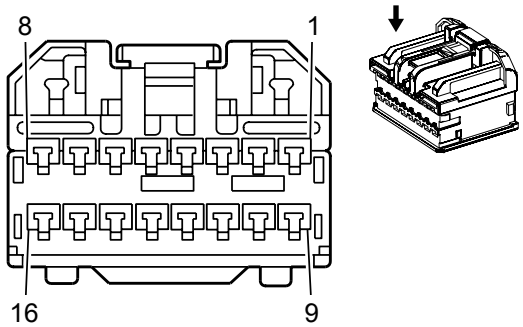

Connector Part Information

Harness Type: Body

OEM Connector: 6098-5237

Service Connector: 88988778

Description: 16-Way F 1.5 Series (GY)

Terminal Part Information

Terminal Type ID	Terminated Lead	Diagnostic Test Probe	Terminal Removal Tool	Service Terminal	Tray	Core Crimp	Insulation Crimp
I	13575579	J-35616-2A (GY)	J-38125-553	8240-0127	13	E	C
II	13575580	J-35616-2A (GY)	J-38125-553	8240-0128	14	C	A

K69 Transfer Case Control Module X1 (NQ6/NQ7)

Pin	Size	Color	Circuit	Function	Terminal Type ID	Option
1	0.5	YE/BK	7478	Rotary Position Sensor Low Reference	I	NQ6
2	0.5	WH/L-GN	7479	Rotary Position Sensor Signal	I	NQ6
3	0.5	YE	7474	Incremental Encoder Direction Signal	I	—
4	0.5	GY/BK	1570	Front Axle Actuator Control	I	—
5	0.5	L-BU/GY	7473	Incremental Encoder Impulse Signal	I	—
6	0.35	GY/RD	6029	Four Wheel Drive Mode Switch 5 Volt Reference	I	—
7	0.35	L-BU/YE	1693	Four Wheel Drive Switch Signal	I	—
8	—	—	—	Not Occupied	—	—

8	—	—	—	Not Occupied	—	—
9	0.5	WH/RD	7477	Rotary Position Sensor 5 Volt Reference	I	NQ6
10	0.5	WH/L-GN	7475	Incremental Encoder Sensor 8 Volt Reference	I	—
11	0.5	VT	7476	Incremental Encoder Sensor Low Reference	I	—
12	0.5	YE/WH	1695	Four Wheel Drive Wheel Lock Indicator Control	I	—
13	1	YE/BN	1569	Transfer Case Lock Solenoid Control	II	NQ6
14 - 16	—	—	—	Not Occupied	—	—

K69 Transfer Case Control Module X2 (NQ6/NQ7)

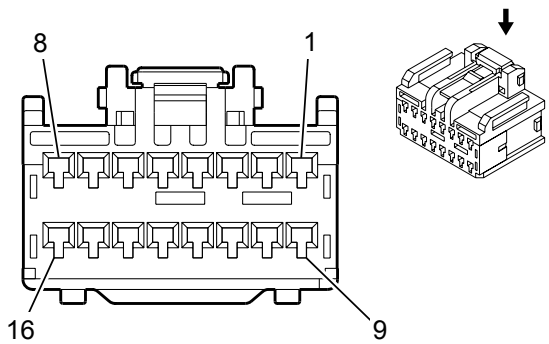

Connector Part Information

Harness Type: Body

OEM Connector: 6098-4611

Service Connector: 15134091

Description: 16-Way F 1.5 Series (BK)

Terminal Part Information

Terminal Type ID	Terminated Lead	Diagnostic Test Probe	Terminal Removal Tool	Service Terminal	Tray	Core Crimp	Insulation Crimp
I	13575579	J-35616-2A (GY)	J-38125-553	8240-0127	13	E	C

K69 Transfer Case Control Module X2 (NQ6/NQ7)

Pin	Size	Color	Circuit	Function	Terminal Type ID	Option
1 - 2	—	—	—	Not Occupied	—	—
3	0.35	VT/WH	1565	4 LO Indicator Control	I	—
4	0.35	VT/L-GN	1739	Run/Crank Ignition 1 Voltage	I	—
5	—	—	—	Not Occupied	—	—
6	0.35	VT/YE	5985	Accessory Wakeup Serial Data	I	—
7	0.5	L-BU	2500	High Speed GMLAN Serial Data (+) (1)	I	—
8	0.5	WH	2501	High Speed GMLAN Serial Data (-) (1)	I	—
9 - 10	—	—	—	Not Occupied	—	—
11	0.35	GY/L-GN	1561	AWD Indicator Control	I	NQ6

12	0.35	BN	1560	Neutral Indicator Control	I	—
13	0.35	L-GN/BK	1563	2 HI Indicator Control	I	—
14	0.35	BN/BK	1566	4 HI Indicator Control	I	—
15	0.5	L-BU	2500	High Speed GMLAN Serial Data (+) (1)	I	—
16	0.5	WH	2501	High Speed GMLAN Serial Data (-) (1)	I	—

K69 Transfer Case Control Module X3 (NQ6/NQ7)

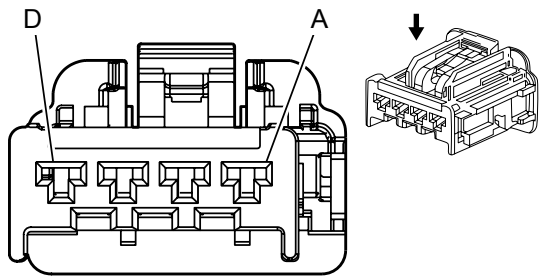

Connector Part Information

Harness Type: Body

OEM Connector: 15466671

Service Connector: 19149301

Description: 4-Way F 280 GT Series (L-GY)

Terminal Part Information

Terminal Type ID	Terminated Lead	Diagnostic Test Probe	Terminal Removal Tool	Service Terminal	Tray	Core Crimp	Insulation Crimp
I	Not Required	J-35616-4A (PU)	Not Required	Not Required	Not Required	Not Required	Not Required

K69 Transfer Case Control Module X3 (NQ6/NQ7)

Pin	Size	Color	Circuit	Function	Terminal Type ID	Option
A	2.5	YE/VT	1553	Transfer Case Motor Counter Clockwise Control	I	—
B	2.5	YE/GY	1552	Transfer Case Motor Clockwise Control	I	—
C	2.5	RD/GY	1342	Battery Positive Voltage	I	—
D	2.5	BK	3250	Ground	I	—

K73 Telematics Communication Interface Control Module X1 (UE1)

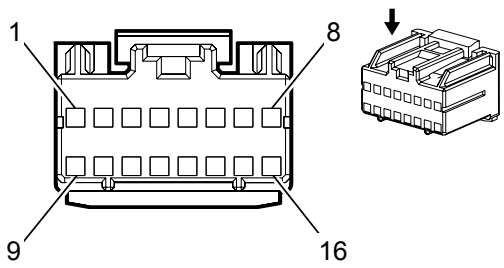

Connector Part Information

Harness Type: Body

OEM Connector: 1456601-1

Service Connector: 19153138

Description: 16-Way F Multilock 040 II Series (WH)

Terminal Part Information

Terminal Type ID	Terminated Lead	Diagnostic Test Probe	Terminal Removal Tool	Service Terminal	Tray	Core Crimp	Insulation Crimp
I	13575546	J-35616-16 (LT GN)	J-38125-559	15445905	8	J	J
II	13575740	J-35616-16 (LT GN)	J-38125-559	15445905	8	J	J

K73 Telematics Communication Interface Control Module X1 (UE1)

Pin	Size	Color	Circuit	Function	Terminal Type ID	Option
1	0.5	L-GN	5060	Low Speed GMLAN Serial Data	II	—
2	0.35	BN/WH	2517	Keypad Red LED Control	I	—
3	0.35	YE/VT	2516	Keypad Green LED Control	I	—
4 - 5	—	—	—	Not Occupied	—	—
6	0.35	L-GN/BK	2515	Keypad Control	I	—
7	0.5	BK/WH	2051	Signal Ground	II	—
8 - 9	—	—	—	Not Occupied	—	—
10	0.5	L-BU	2500	High Speed GMLAN Serial Data (+) (1)	II	—

11	0.35	L-GN/WH	2514	Keypad Signal	I	—
12	0.5	WH	2501	High Speed GMLAN Serial Data (-) (1)	II	—
13	0.5	BK/VT	5167	Battery Backup Low Reference	II	LWN
14	0.5	YE/VT	5235	Battery Backup Control	II	LWN
15	0.35	RD/L-BU	3240	Battery Positive Voltage	I	—
16	—	—	—	Not Occupied	—	—

K73 Telematics Communication Interface Control Module X2 (UE1)

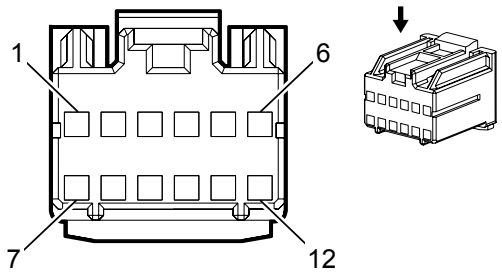

Connector Part Information

Harness Type: Body

OEM Connector: 1456599-1

Service Connector: 88952886

Description: 12-Way F Multilock 040 II Series (WH)

Terminal Part Information

Terminal Type ID	Terminated Lead	Diagnostic Test Probe	Terminal Removal Tool	Service Terminal	Tray	Core Crimp	Insulation Crimp
I	13575546	J-35616-16 (LT GN)	J-38125-559	15445905	8	J	J
II	13575740	J-35616-16 (LT GN)	J-38125-559	15445905	8	J	J

K73 Telematics Communication Interface Control Module X2 (UE1)

Pin	Size	Color	Circuit	Function	Terminal Type ID	Option
1	0.35	YE	658	Cellular Telephone Voice Signal	I	—
2	0.35	BK/YE	659	Cellular Telephone Voice Low Reference	I	—
3	0.5	L-BU	2500	High Speed GMLAN Serial Data (+) (1)	II	—
4	0.5	WH	2501	High Speed GMLAN Serial Data (-) (1)	II	—
5	0.5	BARE	1792	Low Reference	II	—
6	0.35	GY/YE	5149	Voice Recognition Audio Signal	I	—
7	0.35	WH/L-BU	5986	Serial Data Communication Enable	I	—

8	0.35	BARE	514	Low Reference	I	—
9	0.35	L-BU	655	Cellular Telephone Microphone Signal	I	—
10	0.35	BK/BN	654	Cellular Telephone Microphone Low Reference	I	—
11	—	—	—	Not Occupied	—	—
12	0.35	BK/GY	5152	Voice Recognition Audio Low Reference	I	—

K73 Telematics Communication Interface Control Module X5 (UE1)

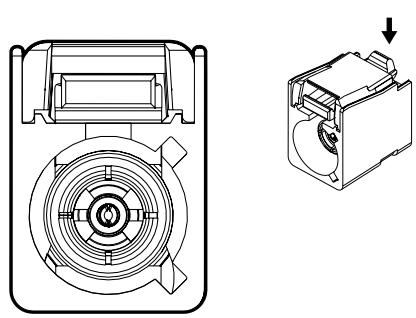

Connector Part Information

Harness Type: Body COAX

OEM Connector: COAX

Service Connector: Service by Cable Assembly — See Part Catalog

Description: 1-Way F Coax Type (VT)

Terminal Part Information

Terminal Type ID	Terminated Lead	Diagnostic Test Probe	Terminal Removal Tool	Service Terminal	Tray	Core Crimp	Insulation Crimp
I	Not Available	Not Available	Not Available	Not Available	Not Available	Not Available	Not Available

K73 Telematics Communication Interface Control Module X5 (UE1)

Pin	Size	Color	Circuit	Function	Terminal Type ID	Option
-	-	COAX	-	(GPS/Cell) Coaxial Antenna Cell/GPS combined Signal	I	-

K73 Telematics Communication Interface Control Module X7 (UE1)

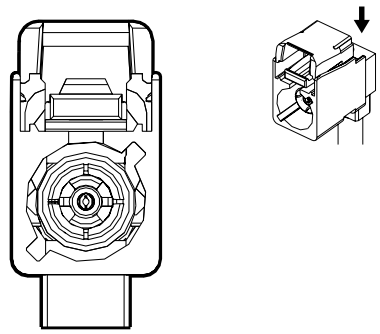

Connector Part Information

Harness Type: Body COAX

OEM Connector: COAX

Service Connector: Service by Cable Assembly — See Part Catalog

Description: 1-Way F Coax Type (BN)

Terminal Part Information

Terminal Type ID	Terminated Lead	Diagnostic Test Probe	Terminal Removal Tool	Service Terminal	Tray	Core Crimp	Insulation Crimp
I	Not Available	Not Available	Not Available	Not Available	Not Available	Not Available	Not Available

K73 Telematics Communication Interface Control Module X7 (UE1)

Pin	Size	Color	Circuit	Function	Terminal Type ID	Option
-	-	COAX	-	(GPS/Cell) Coaxial Antenna Cell/GPS combined Signal	I	-

K74 Human Machine Interface Control Module X1 (IO4/IO5/IO6)

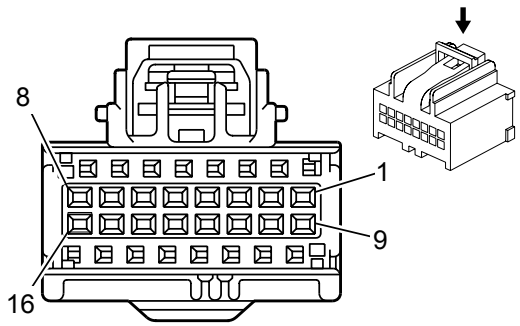

Connector Part Information

Harness Type: Instrument Panel

OEM Connector: 15136073

Service Connector: 15136073

Description: 16-Way F 0.64 Kaizen Series (BK)

Terminal Part Information

Terminal Type ID	Terminated Lead	Diagnostic Test Probe	Terminal Removal Tool	Service Terminal	Tray	Core Crimp	Insulation Crimp
I	13575845	J-35616-64B (LT BU)	J-38125-215A	SAIT-A03T-M064	23	P	P
I	13575845	J-35616-64B (LT BU)	J-38125-215A	SAIT-A03T-M064	23	P	P

K74 Human Machine Interface Control Module X1 (IO4/IO5/IO6)

Pin	Size	Color	Circuit	Function	Terminal Type ID	Option
1	0.35	GY/YE	5149	Voice Recognition Audio Signal	I	—
2	0.35	BK/GY	5152	Voice Recognition Audio Low Reference	I	—
3 - 4	—	—	—	Not Occupied	—	—
5	0.35	WH/L-BU	5986	Serial Data Communication Enable	I	—
6	—	—	—	Not Occupied	—	—
7	0.75	RD/VT	340	Battery Positive Voltage	I	—
8	0.75	BK/WH	2051	Signal Ground	I	—
9	0.5	L-GN/WH	7527	Local Interconnect Network Serial Data Bus 5	I	—
10	—	—	—	Not Occupied	—	—

10	—	—	—	Not Occupied	—	—
11	0.5	L-BU	2500	High Speed GMLAN Serial Data (+) (1)	I	—
12	0.5	WH	2501	High Speed GMLAN Serial Data (-) (1)	I	—
13	0.5	L-BU	2500	High Speed GMLAN Serial Data (+) (1)	I	—
14	0.5	WH	2501	High Speed GMLAN Serial Data (-) (1)	I	—
15 - 16	—	—	—	Not Occupied	—	—

K74 Human Machine Interface Control Module X2 (IO4/IO5/IO6)

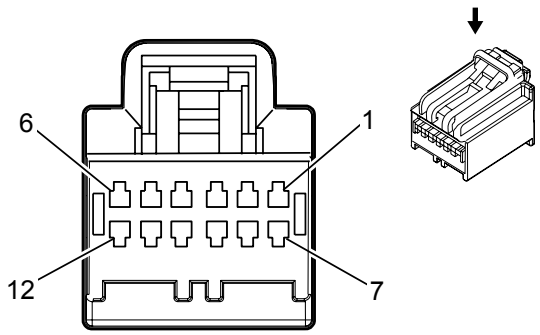

Connector Part Information

Harness Type: Instrument Panel

OEM Connector: 19151154

Service Connector: 19151154

Description: 12-Way F 64 Series, Sealed (GY)

Terminal Part Information

Terminal Type ID	Terminated Lead	Diagnostic Test Probe	Terminal Removal Tool	Service Terminal	Tray	Core Crimp	Insulation Crimp
I	13575845	J-35616-64B (LT BU)	J-38125-215A	SAIT-A03T-M064	23	P	P

K74 Human Machine Interface Control Module X2 (IO4/IO5/IO6)

Pin	Size	Color	Circuit	Function	Terminal Type ID	Option
1	0.35	WH/VT	3999	MOST Control	I	—
2	0.5	WH/L-GN	3997	MOST Serial Data (-)	I	—
3	0.5	GY/VT	3998	MOST Serial Data (+)	I	—
4	—	—	—	Not Occupied	—	—
5	0.35	GY/YE	6972	Camera Signal 2 +	I	—
6	0.35	WH/L-BU	6973	Camera Signal 2	I	—
7	—	—	—	Not Occupied	—	—
8	0.5	GY/VT	3998	MOST Serial Data (+)	I	—
9	0.5	WH/L-GN	3997	MOST Serial Data (-)	I	—

10 - 12	—	—	—	Not Occupied	—	—

K74 Human Machine Interface Control Module X3 (IO4/IO5/IO6)

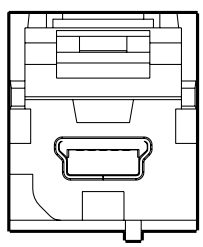

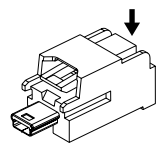

Connector Part Information

Harness Type: Instrument Panel USB

OEM Connector: 13868839

Service Connector: Service by Cable Assembly — See Parts Catalog

Description: 5-Way F USB Type (GN)

Terminal Part Information

Terminal Type ID	Terminated Lead	Diagnostic Test Probe	Terminal Removal Tool	Service Terminal	Tray	Core Crimp	Insulation Crimp
I	Not Available	Not Available	Not Available	Not Available	Not Available	Not Available	Not Available

K74 Human Machine Interface Control Module X3 (IO4/IO5/IO6)

Pin	Size	Color	Circuit	Function	Terminal Type ID	Option
—	—	USB	—	USB Serial Data	I	—

K74 Human Machine Interface Control Module X4 (IO5/IO6)

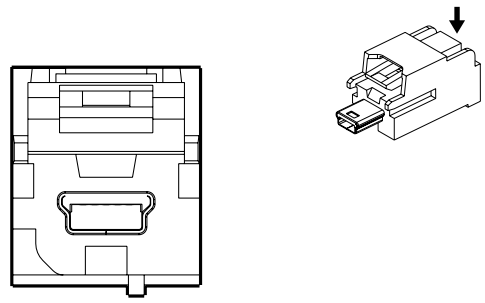

Connector Part Information

Harness Type: Instrument Panel USB

OEM Connector: 13868839

Service Connector: Service by Cable Assembly — See Parts Catalog

Description: 5-Way F USB Type (GN)

Terminal Part Information

Terminal Type ID	Terminated Lead	Diagnostic Test Probe	Terminal Removal Tool	Service Terminal	Tray	Core Crimp	Insulation Crimp
I	Not Available	Not Available	Not Available	Not Available	Not Available	Not Available	Not Available

K74 Human Machine Interface Control Module X4 (IO5/IO6)

Pin	Size	Color	Circuit	Function	Terminal Type ID	Option
—	—	USB	—	USB Serial Data	I	—

K74 Human Machine Interface Control Module X5 (IO4/IO5/IO6)

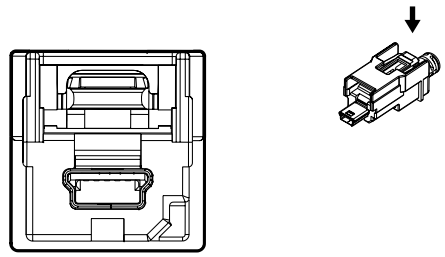

Connector Part Information

Harness Type: Instrument Panel LVDS

OEM Connector: RSD-111014-152

Service Connector: Service by Cable Assembly — See Part Catalog

Description: 5-Way M 2.0 Mini B USB Type (BK)

Terminal Part Information

Terminal Type ID	Terminated Lead	Diagnostic Test Probe	Terminal Removal Tool	Service Terminal	Tray	Core Crimp	Insulation Crimp
I	Not Available	Not Available	Not Available	Not Available	Not Available	Not Available	Not Available

K74 Human Machine Interface Control Module X5 (IO4/IO5/IO6)

Pin	Size	Color	Circuit	Function	Terminal Type ID	Option
-	-	LVDS	-	(Navigation) Navigation Display Signal	I	-

K74 Human Machine Interface Control Module X7 (IO6)

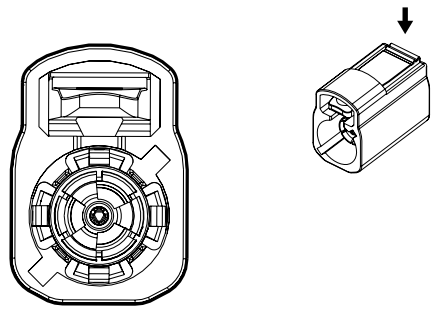

Connector Part Information

Harness Type: Instrument Panel COAX

OEM Connector: 13746743

Service Connector: Service by Cable Assembly — See Parts Catalog

Description: 1-Way F Coax Type (BU)

Terminal Part Information

Terminal Type ID	Terminated Lead	Diagnostic Test Probe	Terminal Removal Tool	Service Terminal	Tray	Core Crimp	Insulation Crimp
I	Not Available	Not Available	Not Available	Not Available	Not Available	Not Available	Not Available

K74 Human Machine Interface Control Module X7 (IO6)

Pin	Size	Color	Circuit	Function	Terminal Type ID	Option
—	—	COAX	—	Coaxial Antenna GPS Signal	I	—

K77 Remote Control Door Lock Receiver

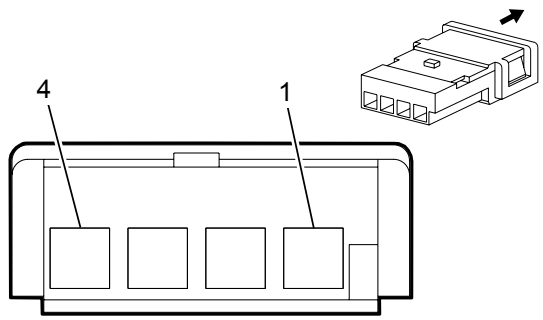

Connector Part Information

Harness Type: Headliner

OEM Connector: 968943-1

Service Connector: 13576534

Description: 4-Way F 0.64 Micro-Quadlock Series (BK)

Terminal Part Information

Terminal Type ID	Terminated Lead	Diagnostic Test Probe	Terminal Removal Tool	Service Terminal	Tray	Core Crimp	Insulation Crimp
I	Not Required	J-35616-64B (LT BU)	Not Required	Not Required	Not Required	Not Required	Not Required

K77 Remote Control Door Lock Receiver

Pin	Size	Color	Circuit	Function	Terminal Type ID	Option
1	0.35	GY	3273	Remote Function Actuator Low Reference	I	—
2	0.35	YE/L-GN	3274	Remote Function Actuator Transmit Signal	I	—
3	0.35	L-BU/WH	3275	Remote Function Actuator Receive Signal	I	—
4	0.35	GY/WH	3272	Remote Function Actuator Control	I	—

K85 Passenger Presence Module

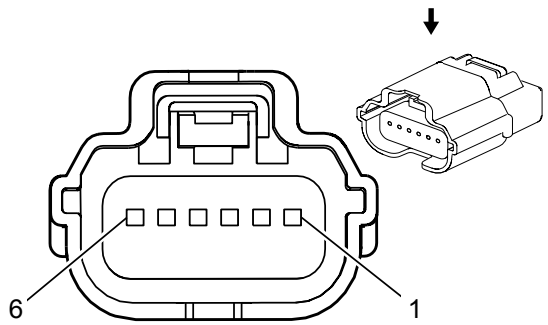

Connector Part Information

Harness Type: Passenger Seat Cushion

OEM Connector: 31404-6132

Service Connector: Service by Harness – See Part Catalog

Description: 6-Way F 0.64 Series, Sealed (BK)

Terminal Part Information

Terminal Type ID	Terminated Lead	Diagnostic Test Probe	Terminal Removal Tool	Service Terminal	Tray	Core Crimp	Insulation Crimp
I	13575299	J-35616-64B (L-BU)	J-38125-215A	Not Available	Not Available	P	P

K85 Passenger Presence Module

Pin	Size	Color	Circuit	Function	Terminal Type ID	Option
1	0.35	RD/L-GN	4440	Battery Positive Voltage	I	-
2	0.35	L-GN	5060	Low Speed GMLAN Serial Data	I	-
3	-	-	-	Not Occupied	-	-
4	0.35	BK/WH	2251	Signal Ground	I	-
5	0.35	L-BU/RD	5612	Passenger Seat Belt Tension Sensor Voltage Reference	I	-
6	0.35	VT/OG	5611	Passenger Seat Belt Tension Sensor Signal	I	-

K89 Immobilizer Control Module

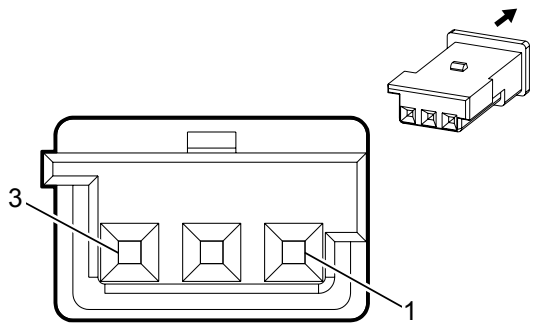

Connector Part Information

Harness Type: Instrument Panel

OEM Connector: 19153569

Service Connector: 13576530

Description: 3-Way F Micro-Quadlock Series (PU)

Terminal Part Information

Terminal Type ID	Terminated Lead	Diagnostic Test Probe	Terminal Removal Tool	Service Terminal	Tray	Core Crimp	Insulation Crimp
I	Not Required	J-35616-64B (LT BU)	Not Required	Not Required	Not Required	Not Required	Not Required

K89 Immobilizer Control Module

Pin	Size	Color	Circuit	Function	Terminal Type ID	Option
1	0.35	L-GN/GY	3277	Vehicle Anti-Theft System Immobilizer Low Reference	I	—
2	0.35	L-GN/VT	7533	Local Interconnect Network Serial Data Bus 11	I	—
3	0.35	GY/BK	3276	Vehicle Anti-Theft System Immobilizer Control	I	—

K109 Frontview Camera Module (UEU/UFL)

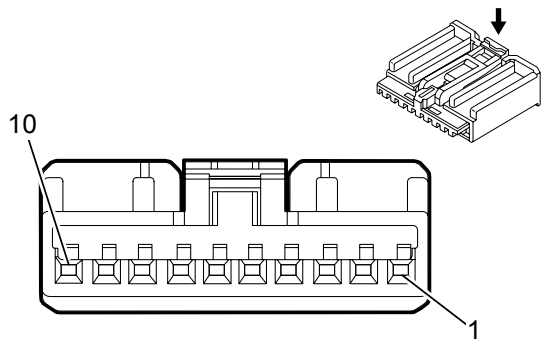

Connector Part Information

Harness Type: Headliner

OEM Connector: AIT2PB-10-1AK

Service Connector: 13576634

Description: 10-Way F 0.64 Kaizen Series (BK)

Terminal Part Information

Terminal Type ID	Terminated Lead	Diagnostic Test Probe	Terminal Removal Tool	Service Terminal	Tray	Core Crimp	Insulation Crimp
I	13575867	J-35616-64B (LT BU)	J-38125-215A	SAIT-A03T-M064	23	P	P

K109 Frontview Camera Module (UEU/UFL)

Pin	Size	Color	Circuit	Function	Terminal Type ID	Option
1	0.35	BK	3450	Ground	I	—
2	—	—	—	Not Occupied	—	—
3	0.35	RD/L-GN	3140	Battery Positive Voltage	I	—
4	0.35	WH	3152	Lane Departure Warning Indicator Control	I	—
5 - 6	—	—	—	Not Occupied	—	—
7	0.5	L-GN	5060	Low Speed GMLAN Serial Data	I	—
8 - 9	—	—	—	Not Occupied	—	—
10	0.35	GY/WH	3153	Lane Departure Warning Disable Switch Signal	I	—

K111 Fuel Pump Driver Control Module (LCV)

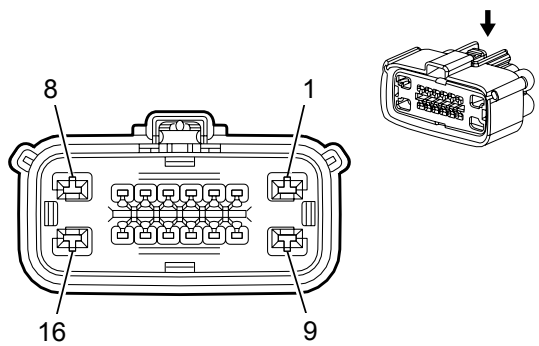

Connector Part Information

Harness Type: Chassis

OEM Connector: 33476-4003

Service Connector: 13587961

Description: 16-Way F 1.5, 2.8 Series, Sealed (BK)

Terminal Part Information

Terminal Type ID	Terminated Lead	Diagnostic Test Probe	Terminal Removal Tool	Service Terminal	Tray	Core Crimp	Insulation Crimp
I	13505803	J-35616-35 (VT)	J-38125-12A	1326030-8	13	4	D
II	13575868	J-35616-2A (GY)	J-38125-217	Not Available	Not Available	Not Available	Not Available
III	19300635	J-35616-2A (GY)	J-38125-217	Not Available	Not Available	Not Available	Not Available

K111 Fuel Pump Driver Control Module (LCV)

Pin	Size	Color	Circuit	Function	Terminal Type ID	Option
1	2.5	RD/VT	1940	Battery Positive Voltage	I	—
2	0.5	GY	5660	Fuel Pump Controller Data Out Signal	II	—
3	—	—	—	Not Occupied	—	—
4	0.5	L-BU/BK	7493	High Speed GMLAN Serial Data (+)(3)	II	—
5	0.5	WH	7494	High Speed GMLAN Serial Data (-)(3)	II	—
6	0.75	VT/GY	139	Run/Crank Ignition 1 Voltage	III	—
7	0.5	VT/YE	5985	Accessory Wakeup Serial Data	II	—

8	2.5	GY	120	Fuel Pump Control	I	—
9	2.5	BK	650	Ground	I	—
10 - 14	—	—	—	Not Occupied	—	—
15	0.5	BK	7444	Fuel System Control Module Shield Ground	II	—
16	2.5	BK/L-GN	1580	Fuel Pump Low Reference	I	—

K115 Reductant Control Module X1 (LWN)

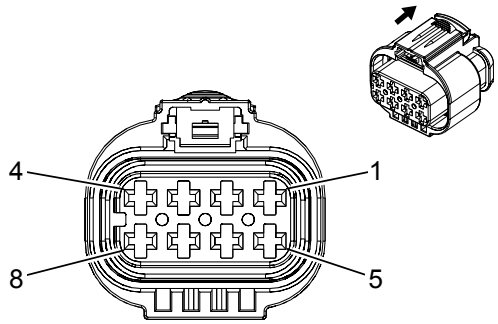

Connector Part Information

Harness Type: Chassis

OEM Connector: 2109441-2

Service Connector: 19330153

Description: 8-Way F 2.8 Series, Sealed (BK)

Terminal Part Information

Terminal Type ID	Terminated Lead	Diagnostic Test Probe	Terminal Removal Tool	Service Terminal	Tray	Core Crimp	Insulation Crimp
I	Not Required	J-35616-35 (VT)	Not Required	Not Required	Not Required	Not Required	Not Required
I	Not Required	J-35616-35 (VT)	Not Required	Not Required	Not Required	Not Required	Not Required

K115 Reductant Control Module X1 (LWN)

Pin	Size	Color	Circuit	Function	Terminal Type ID	Option
1	0.5	RD/L-GN	2440	Battery Positive Voltage	I	—
2	0.5	WH	4499	High Speed GMLAN Serial Data (-) (7)	I	—
3	0.5	L-BU/BN	4498	High Speed GMLAN Serial Data (+) (7)	I	—
4	2.5	BK	650	Ground	I	—
5	0.5	VT/L-GN	4320	Selective Catalytic Reduction Power Module Wake Up Signal	I	—
6	0.5	WH	4499	High Speed GMLAN Serial Data (-) (7)	I	—
7	0.5	L-BU/BN	4498	High Speed GMLAN Serial Data (+) (7)	I	—

8	4	L-BU	3921	DEF Heater Supply 1	I	—

K115 Reductant Control Module X2 (LWN)

—

Connector Part Information

Harness Type: Reductant Assembly

OEM Connector: 805-587-541

Service Connector: Service by Harness - See Part Catalog

Description: 16-Way F

Terminal Part Information

Terminal Type ID	Terminated Lead	Diagnostic Test Probe	Terminal Removal Tool	Service Terminal	Tray	Core Crimp	Insulation Crimp
I	Not Required	J-35616-16 (LT GN)	No Tool Required	Not Required	Not Required	Not Required	Not Required
I	Not Required	J-35616-16 (LT GN)	No Tool Required	Not Required	Not Required	Not Required	Not Required
II	Not Required	Pending	No Tool Required	Not Required	Not Required	Not Required	Not Required

K115 Reductant Control Module X2 (LWN)

Pin	Size	Color	Circuit	Function	Terminal Type ID	Option
1	0.5	BK/WH	9001	T_SENS+	I	—
2	0.5	BK	9002	T_SENS-	I	—
3	0.5	BK/WH	9003	P_SENS_GND	I	—
4	0.5	BK	9004	P_SENS_SIG	I	—
5	0.5	BK	9005	P_SENS_5V	I	—
6	0.5	BK/WH	9006	LEVEL SENSOR_QUAL GND	I	—
7	1.0	GY/WH	9007	PHASE A	I	—
8	1.0	YE/GY	9008	PHASE B	I	—
9	1.0	GY/WH	9009	TANK HEAT+	I	—
10	—	—	—	Not Occupied	II	—

11	1.0	BK/WH	9010	TANK HEAT-	I	—
12	0.5	BK	9011	Q SENSOR SIGNAL	I	—
13	0.5	BK	9012	LEVEL SENSOR_QUAL 5V	I	—
14	0.5	BK	9013	LEVEL SENSOR SIGNAL	I	—
15	1.0	BK	9014	PUMP GROUND	I	—
16	1.0	BK	9015	PHASE C	I	—

K133 Trailer Brake Power Control Module (JL1)

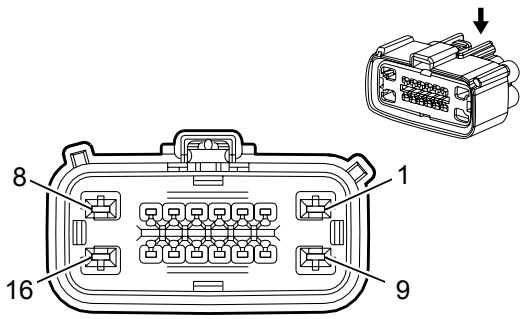

Connector Part Information

Harness Type: Chassis

OEM Connector: 33476-2170

Service Connector: 19329472

Description: 16-Way F 1.5, 2.8 Series, Sealed (D-GY)

Terminal Part Information

Terminal Type ID	Terminated Lead	Diagnostic Test Probe	Terminal Removal Tool	Service Terminal	Tray	Core Crimp	Insulation Crimp
I	13505803	J-35616-35 (VT)	J-38125-12A	1326030-8	13	4	D
II	19300635	J-35616-2A (GY)	J-38125-217	Not Available	Not Available	Not Available	Not Available

K133 Trailer Brake Power Control Module (JL1)

Pin	Size	Color	Circuit	Function	Terminal Type ID	Option
1	2.5	RD/L-GN	242	Battery Positive Voltage	I	—
2	0.5	WH/BK	2223	Trailer Brake Control Signal	II	—
3 - 4	—	—	—	Not Occupied	—	—
5	0.5	YE/BK	2224	Trailer Brake Enable Signal	II	—
6 - 7	—	—	—	Not Occupied	—	—
8	2.5	L-BU	47	Trailer Auxiliary Control	I	—
9	2.5	BK	650	Ground	I	—
10 - 11	—	—	—	Not Occupied	—	—
12	0.5	L-GN/VT	4114	Local Interconnect Network Serial Data Bus 14	II	—

13 - 16	—	—	—	Not Occupied	—	—

M4 Air Inlet Door Actuator

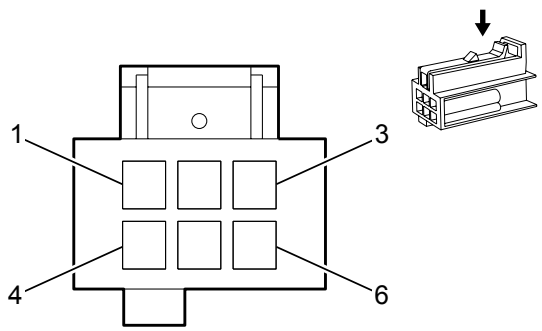

Connector Part Information

Harness Type: HVAC

OEM Connector: 965413-1

Service Connector: Service by Harness – See Part Catalog

Description: 6-Way F 0.64 Micro-Quadlock Series (BK)

Terminal Part Information

Terminal Type ID	Terminated Lead	Diagnostic Test Probe	Terminal Removal Tool	Service Terminal	Tray	Core Crimp	Insulation Crimp
I	Not Available	Not Available	Not Available	Not Available	Not Available	Not Available	Not Available

M4 Air Inlet Door Actuator

Pin	Size	Color	Circuit	Function	Terminal Type ID	Option
1	0.35	GY	3173	Air Inlet Door Stepper Motor Control (1)	I	-
2	0.35	BK	7572	HVAC Motor Supply Voltage	I	-
3	0.35	L-BU/WH	3174	Air Inlet Door Stepper Motor Control (2)	I	-
4	0.35	BN/L-GN	3175	Air Inlet Door Stepper Motor Control (3)	I	-
5	-	-	-	Not Occupied	-	-
6	0.35	RD/L-GN	3176	Air Inlet Door Stepper Motor Control (4)	I	-

M6 Air Temperature Door Actuator

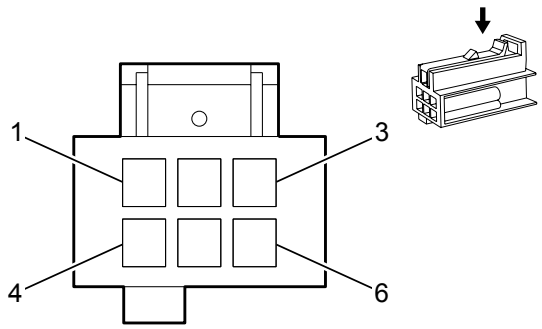

Connector Part Information

Harness Type: HVAC

OEM Connector: 965413-1

Service Connector: Service by Harness – See Part Catalog

Description: 6-Way F 0.64 Micro-Quadlock Series (BK)

Terminal Part Information

Terminal Type ID	Terminated Lead	Diagnostic Test Probe	Terminal Removal Tool	Service Terminal	Tray	Core Crimp	Insulation Crimp
I	Not Available	Not Available	Not Available	Not Available	Not Available	Not Available	Not Available

M6 Air Temperature Door Actuator

Pin	Size	Color	Circuit	Function	Terminal Type ID	Option
1	0.35	L-GN	3169	Temp Door Stepper Motor Control (1)	I	-
2	0.35	BK	7572	HVAC Motor Supply Voltage	I	-
3	0.35	WH/PK	3170	Temp Door Stepper Motor Control (2)	I	-
4	0.35	GY/RD	3171	Temp Door Stepper Motor Control (3)	I	-
5	-	-	-	Not Occupied	-	-
6	0.35	RD/BK	3172	Temp Door Stepper Motor Control (4)	I	-

M9 Brake Booster Pump Motor (LFX)

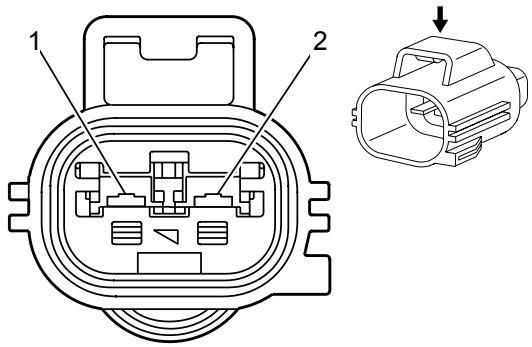

Connector Part Information

Harness Type: Engine

OEM Connector: 7282-5575-10

Service Connector: 19115602

Description: 2-Way M 2.8 Series, Sealed (D-GY)

Terminal Part Information

Terminal Type ID	Terminated Lead	Diagnostic Test Probe	Terminal Removal Tool	Service Terminal	Tray	Core Crimp	Insulation Crimp
I	Not Required	J-35616-5 (PU)	Not Required	Not Required	Not Required	Not Required	Not Required

M9 Brake Booster Pump Motor (LFX)

Pin	Size	Color	Circuit	Function	Terminal Type ID	Option
1	2.5	BN/VT	1470	Brake Booster Pump Motor Control	I	—
2	2.5	BK	1450	Ground	I	—

M26 Front Axle Engagement Actuator (NQ6/NQ7)

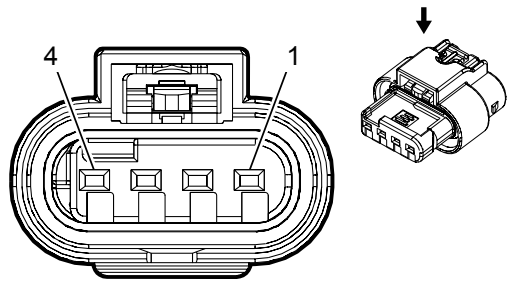

Connector Part Information

Harness Type: Power Steering

OEM Connector: 1-1456426-5

Service Connector: Service by Harness - See Part Catalog

Description: 4-Way F 1.2 Multiple Contact Point Series, Sealed (BK)

Terminal Part Information

Terminal Type ID	Terminated Lead	Diagnostic Test Probe	Terminal Removal Tool	Service Terminal	Tray	Core Crimp	Insulation Crimp
I	Not Required	J-35616-16 (LT GN)	Not Required	Not Required	Not Required	Not Required	Not Required

M26 Front Axle Engagement Actuator (NQ6/NQ7)

Pin	Size	Color	Circuit	Function	Terminal Type ID	Option
1	0.75	VT/BK	2139	Run/Crank Ignition 1 Voltage	I	—
2	0.5	GY/BK	1570	Front Axle Actuator Control	I	—
3	0.5	YE/WH	1695	Four Wheel Drive Wheel Lock Indicator Control	I	—
4	0.75	BK	1450	Ground	I	—

M37 Mode Door Actuator

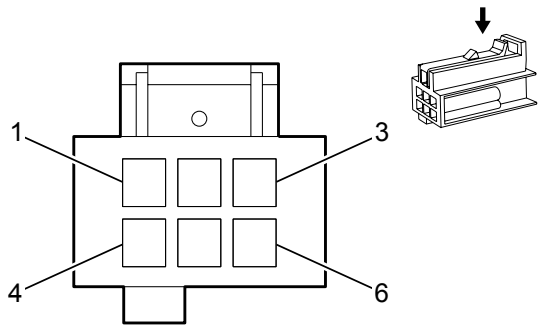

Connector Part Information

Harness Type: HVAC

OEM Connector: 965413-1

Service Connector: Service by Harness – See Part Catalog

Description: 6-Way F 0.64 Micro-Quadlock Series (BK)

Terminal Part Information

Terminal Type ID	Terminated Lead	Diagnostic Test Probe	Terminal Removal Tool	Service Terminal	Tray	Core Crimp	Insulation Crimp
I	Not Available	Not Available	Not Available	Not Available	Not Available	Not Available	Not Available

M37 Mode Door Actuator

Pin	Size	Color	Circuit	Function	Terminal Type ID	Option
1	0.35	YE	3165	Mode Door Stepper Motor Control (1)	I	-
2	0.35	BK	7572	HVAC Motor Supply Voltage	I	-
3	0.35	WH/RD	3166	Mode Door Stepper Motor Control (2)	I	-
4	0.35	GY/BN	3167	Mode Door Stepper Motor Control (3)	I	-
5	-	-	-	Not Occupied	-	-
6	0.35	L-GN/WH	3168	Mode Door Stepper Motor Control (4)	I	-

M51D Seat Horizontal Motor – Driver

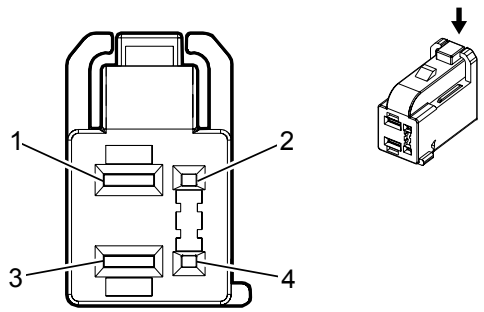

Connector Part Information

Harness Type: Driver Seat Cushion

OEM Connector: 3-023-66-52

Service Connector: Service by Harness - See Part Catalog

Description: 4-Way F 0.64, 2.8 Series (BN)

Terminal Part Information

Terminal Type ID	Terminated Lead	Diagnostic Test Probe	Terminal Removal Tool	Service Terminal	Tray	Core Crimp	Insulation Crimp
I	Not Available	Not Available	Not Available	Not Available	Not Available	Not Available	Not Available

M51D Seat Horizontal Motor – Driver

Pin	Size	Color	Circuit	Function	Terminal Type ID	Option
1	1.5	GY/L-GN	284	Driver Power Seat Horizontal Motor Rearward Control	I	-
2	-	-	-	Not Occupied	-	-
3	1.5	YE/L-BU	285	Driver Power Seat Horizontal Motor Forward Control	I	-
4	-	-	-	Not Occupied	-	-

M51P Seat Horizontal Motor - Passenger (AAQ)

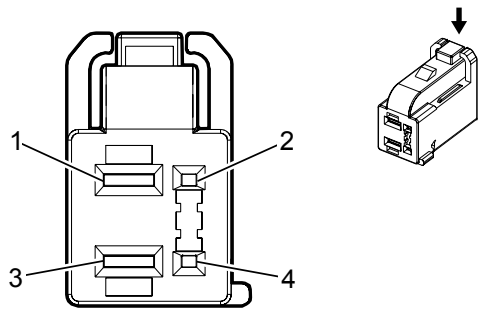

Connector Part Information

Harness Type: Passenger Seat Cushion

OEM Connector: 3-023-66-52

Service Connector: Service by Harness - See Part Catalog

Description: 4-Way F 0.64, 2.8 Series (BN)

Terminal Part Information

Terminal Type ID	Terminated Lead	Diagnostic Test Probe	Terminal Removal Tool	Service Terminal	Tray	Core Crimp	Insulation Crimp
I	Not Available	Not Available	Not Available	Not Available	Not Available	Not Available	Not Available

M51P Seat Horizontal Motor - Passenger (AAQ)

Pin	Size	Color	Circuit	Function	Terminal Type ID	Option
1	1.5	YE/WH	296	Passenger Power Seat Horizontal Motor Forward Control	I	-
2	-	-	-	Not Occupied	-	-
3	1.5	YE/L-BU	290	Passenger Power Seat Horizontal Motor Rearward Control	I	-
4	-	-	-	Not Occupied	-	-

M52D Seat Lumbar Support Horizontal Motor - Driver (AL9)

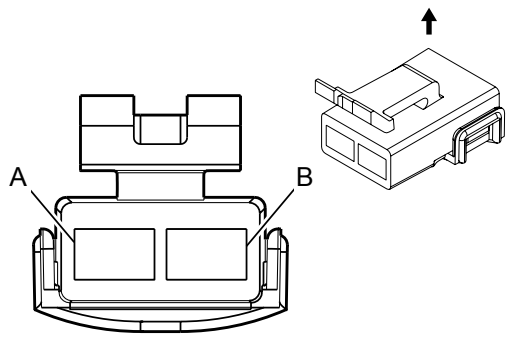

Connector Part Information

Harness Type: Driver Seat Back

OEM Connector: 12020556

Service Connector: 12101820

Description: 2-Way F 480 Metri-Pack Series (BK)

Terminal Part Information

Terminal Type ID	Terminated Lead	Diagnostic Test Probe	Terminal Removal Tool	Service Terminal	Tray	Core Crimp	Insulation Crimp
I	Not Available	Not Available	Not Available	Not Available	Not Available	Not Available	Not Available

M52D Seat Lumbar Support Horizontal Motor - Driver (AL9)

Pin	Size	Color	Circuit	Function	Terminal Type ID	Option
A	1.5	VT	610	Driver Power Seat Lumbar Motor Rearward Control	I	-
B	1.5	L-BU	611	Driver Power Seat Lumbar Motor Forward Control	I	-

M52P Seat Lumbar Support Horizontal Motor - Passenger (AAQ)

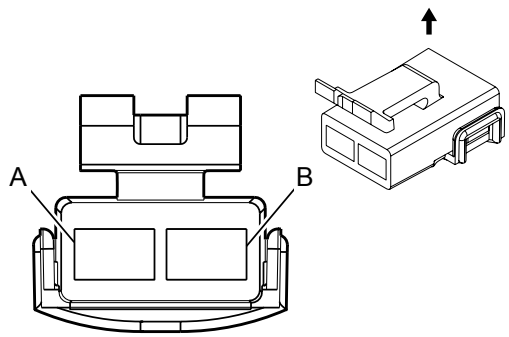

Connector Part Information

Harness Type: Passenger Seat Back

OEM Connector: 12020556

Service Connector: 12101820

Description: 2-Way F 480 Metri-Pack Series (BK)

Terminal Part Information

Terminal Type ID	Terminated Lead	Diagnostic Test Probe	Terminal Removal Tool	Service Terminal	Tray	Core Crimp	Insulation Crimp
I	Not Available	Not Available	Not Available	Not Available	Not Available	Not Available	Not Available

M52P Seat Lumbar Support Horizontal Motor - Passenger (AAQ)

Pin	Size	Color	Circuit	Function	Terminal Type ID	Option
A	1.5	VT	210	Passenger Power Seat Lumbar Motor Rearward Control	I	-
B	1.5	L-BU	211	Passenger Power Seat Lumbar Motor Forward Control	I	-

M55D Seat Rear Vertical Motor - Driver

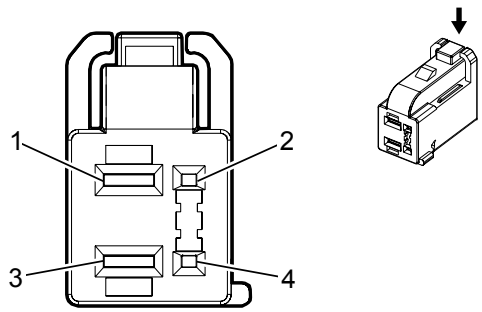

Connector Part Information

Harness Type: Driver Seat Cushion

OEM Connector: 3-023-66-52

Service Connector: Service by Harness - See Part Catalog

Description: 4-Way F 0.64, 2.8 Series (BN)

Terminal Part Information

Terminal Type ID	Terminated Lead	Diagnostic Test Probe	Terminal Removal Tool	Service Terminal	Tray	Core Crimp	Insulation Crimp
I	Not Available	Not Available	Not Available	Not Available	Not Available	Not Available	Not Available

M55D Seat Rear Vertical Motor - Driver

Pin	Size	Color	Circuit	Function	Terminal Type ID	Option
1	1.5	GY/L-BU	283	Driver Power Seat Rear Vertical Motor Down Control	I	-
2	-	-	-	Not Occupied	-	-
3	1.5	YE	282	Driver Power Seat Rear Vertical Motor Up Control	I	-
4	-	-	-	Not Occupied	-	-

M55P Seat Rear Vertical Motor - Passenger (AAQ)

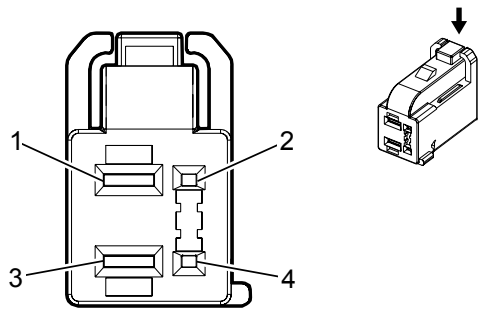

Connector Part Information

Harness Type: Passenger Seat Cushion

OEM Connector: 3-023-66-52

Service Connector: Service by Harness - See Part Catalog

Description: 4-Way F 0.64, 2.8 Series (BN)

Terminal Part Information

Terminal Type ID	Terminated Lead	Diagnostic Test Probe	Terminal Removal Tool	Service Terminal	Tray	Core Crimp	Insulation Crimp
I	Not Available	Not Available	Not Available	Not Available	Not Available	Not Available	Not Available

M55P Seat Rear Vertical Motor - Passenger (AAQ)

Pin	Size	Color	Circuit	Function	Terminal Type ID	Option
1	1.5	L-GN/WH	288	Passenger Power Seat Rear Vertical Motor Up Control	I	-
2	-	-	-	Not Occupied	-	-
3	1.5	L-BU/WH	289	Passenger Power Seat Rear Vertical Motor Down Control	I	-
4	-	-	-	Not Occupied	-	-

M64 Starter Motor X1 (LCV)

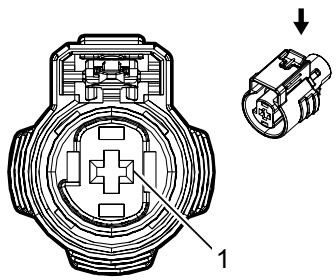

Connector Part Information

Harness Type: Engine

OEM Connector: 2098198-9

Service Connector: 19300471

Description: 1-Way F 2.8 MCP Series, Sealed (BK)

Terminal Part Information

Terminal Type ID	Terminated Lead	Diagnostic Test Probe	Terminal Removal Tool	Service Terminal	Tray	Core Crimp	Insulation Crimp
I	Not Required	J-35616-35 (VT)	Not Required	Not Required	Not Required	Not Required	Not Required

M64 Starter Motor X1 (LCV)

Pin	Size	Color	Circuit	Function	Terminal Type ID	Option
1	2.5	YE	6	Starter Solenoid Crank Ignition Voltage	I	—

M64 Starter Motor X1 (LFX)

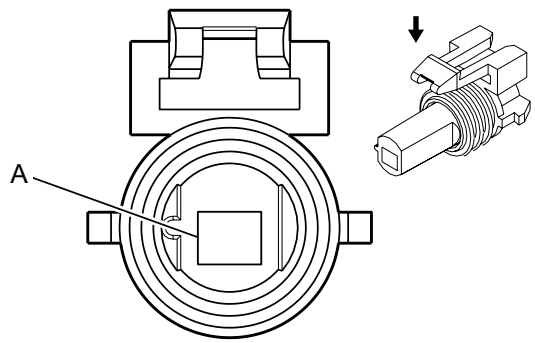

Connector Part Information

Harness Type: Engine

OEM Connector: 12089916

Service Connector: 13584479

Description: 1-Way F 280 Metri-Pack Series, Sealed (GY)

Terminal Part Information

Terminal Type ID	Terminated Lead	Diagnostic Test Probe	Terminal Removal Tool	Service Terminal	Tray	Core Crimp	Insulation Crimp
I	Not Required	J-35616-4A (PU)	Not Required	Not Required	Not Required	Not Required	Not Required

M64 Starter Motor X1 (LFX)

Pin	Size	Color	Circuit	Function	Terminal Type ID	Option
A	2.5	YE	6	Starter Solenoid Crank Ignition Voltage	I	—

M64 Starter Motor X1 (LWN)

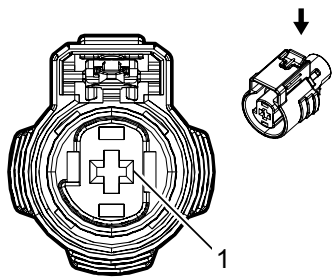

Connector Part Information

Harness Type: Engine

OEM Connector: 2098198-5

Service Connector: 19300471

Description: 1-Way F 2.8 MCP Series, Sealed (BK)

Terminal Part Information

Terminal Type ID	Terminated Lead	Diagnostic Test Probe	Terminal Removal Tool	Service Terminal	Tray	Core Crimp	Insulation Crimp
I	Not Required	J-35616-35 (VT)	Not Required	Not Required	Not Required	Not Required	Not Required

M64 Starter Motor X1 (LWN)

Pin	Size	Color	Circuit	Function	Terminal Type ID	Option
1	2	YE	6	Starter Solenoid Crank Ignition Voltage	I	—

M64 Starter Motor X2 (LCV)

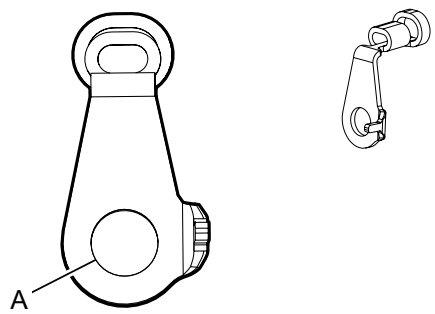

Connector Part Information

Harness Type: Fuse Block - Starter Motor

OEM Connector: ANJ76210

Service Connector: Service by Cable Assembly – See Part Catalog

Description: 1-Way Ring Terminal

Terminal Part Information

Terminal Type ID	Terminated Lead	Diagnostic Test Probe	Terminal Removal Tool	Service Terminal	Tray	Core Crimp	Insulation Crimp
I	Not Available	No Tool Required	No Tool Required	Not Available	Not Available	Not Available	Not Available

M64 Starter Motor X2 (LCV)

Pin	Size	Color	Circuit	Function	Terminal Type ID	Option
A	35	RD/YE	2	Battery Positive Voltage	I	-

M64 Starter Motor X2 (LFX)

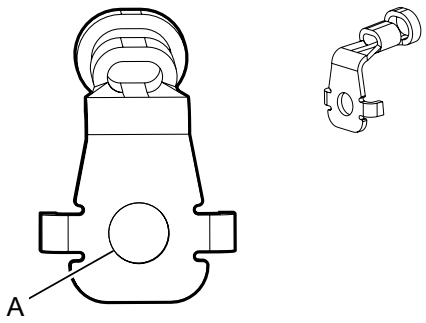

Connector Part Information

Harness Type: Fuse Block - Starter Motor

OEM Connector: ANJ75626

Service Connector: Service by Cable Assembly – See Part Catalog

Description: 1-Way Ring Terminal

Terminal Part Information

Terminal Type ID	Terminated Lead	Diagnostic Test Probe	Terminal Removal Tool	Service Terminal	Tray	Core Crimp	Insulation Crimp
I	Not Available	No Tool Required	No Tool Required	Not Available	Not Available	Not Available	Not Available

M64 Starter Motor X2 (LFX)

Pin	Size	Color	Circuit	Function	Terminal Type ID	Option
A	35	RD/YE	2	Battery Positive Voltage	I	-

M64 Starter Motor X2 (LWN)

—

Connector Part Information

Harness Type: Fuse Block - Starter Motor

OEM Connector: BBS17174

Service Connector: vice by Cable Assembly – See Part Catalog

Description: 1-Way

Terminal Part Information

Terminal Type ID	Terminated Lead	Diagnostic Test Probe	Terminal Removal Tool	Service Terminal	Tray	Core Crimp	Insulation Crimp
I	Not Required	Pending	No Tool Required	Not Required	Not Required	Not Required	Not Required

M64 Starter Motor X2 (LWN)

Pin	Size	Color	Circuit	Function	Terminal Type ID	Option
1	35	RD/YE	2	Battery Positive Voltage	I	-

M74D Window Motor - Driver

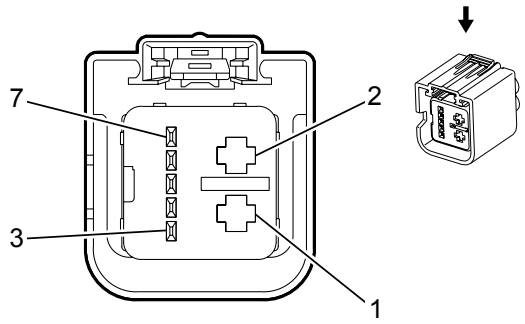

Connector Part Information

Harness Type: Driver Door

OEM Connector: 1732115-1

Service Connector: Service by Harness - See Part Catalog

Description: 7-Way F 0.64, 2.8 Kaizen Timer Series, Sealed (BK)

Terminal Part Information

Terminal Type ID	Terminated Lead	Diagnostic Test Probe	Terminal Removal Tool	Service Terminal	Tray	Core Crimp	Insulation Crimp
I	Not Required	J-35616-4A (PU)	Not Required	Not Required	Not Required	Not Required	Not Required
II	Not Required	J-35616-64B (LT BU)	Not Required	Not Required	Not Required	Not Required	Not Required

M74D Window Motor - Driver

Pin	Size	Color	Circuit	Function	Terminal Type ID	Option
1	2.5	BK	3550	Ground	I	—
2	2.5	RD/L-BU	1240	Battery Positive Voltage	I	—
3	0.35	L-GN/WH	1300	Power Window Master Switch Left Front Up Signal	II	—
4	0.5	L-GN/YE	6134	Local Interconnect Network Serial Data Bus 3	II	—
5	0.35	L-GN/VT	7628	Power Window Motor Left Front Express Control	II	—
6	0.35	GY	745	Left Front Door Ajar Switch Signal	II	—
7	0.35	GY	1136	Power Window Master Switch Left Front Down Signal	II	—

M74LR Window Motor - Left Rear (Crew Cab)

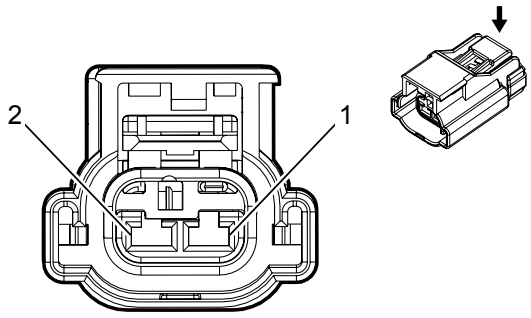

Connector Part Information

Harness Type: Left Rear Door

OEM Connector: 54200220N

Service Connector: Service by Harness - See Part Catalog

Description: 2-Way F 2.8 Series, Sealed (BK)

Terminal Part Information

Terminal Type ID	Terminated Lead	Diagnostic Test Probe	Terminal Removal Tool	Service Terminal	Tray	Core Crimp	Insulation Crimp
I	Not Required	J-35616-64B (LT BU)	Not Required	Not Required	Not Required	Not Required	Not Required

M74LR Window Motor - Left Rear (Crew Cab)

Pin	Size	Color	Circuit	Function	Terminal Type ID	Option
1	2.5	L-BU/VT	668	Power Window Motor Left Rear Up Control	I	—
2	2.5	YE/L-BU	669	Power Window Motor Left Rear Down Control	I	—

M74P Window Motor - Passenger

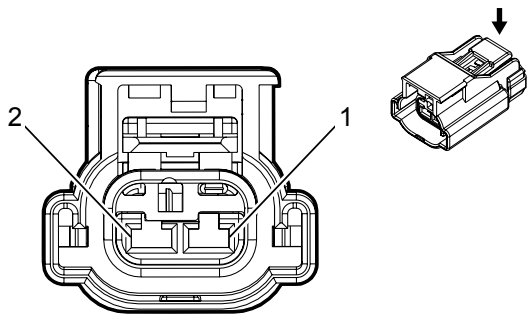

Connector Part Information

Harness Type: Passenger Door

OEM Connector: 54200220N

Service Connector: Service by Harness - See Part Catalog

Description: 2-Way F 2.8 Series, Sealed (BK)

Terminal Part Information

Terminal Type ID	Terminated Lead	Diagnostic Test Probe	Terminal Removal Tool	Service Terminal	Tray	Core Crimp	Insulation Crimp
I	Not Required	J-35616-64B (LT BU)	Not Required	Not Required	Not Required	Not Required	Not Required

M74P Window Motor - Passenger

Pin	Size	Color	Circuit	Function	Terminal Type ID	Option
1	2.5	YE/L-BU	3388	Power Window Motor Passenger Down Control	I	—
2	2.5	L-GN/GY	3387	Power Window Motor Passenger Up Control	I	—

M74RR Window Motor - Right Rear (Crew Cab)

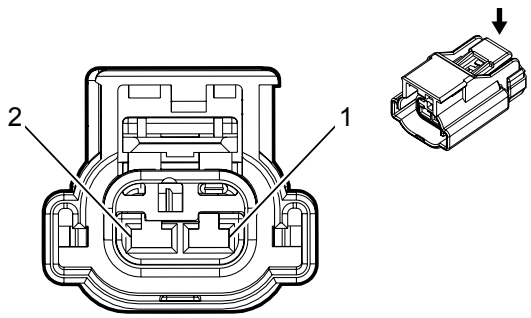

Connector Part Information

Harness Type: Right Rear Door

OEM Connector: 54200220N

Service Connector: Service by Harness - See Part Catalog

Description: 2-Way F 2.8 Series, Sealed (BK)

Terminal Part Information

Terminal Type ID	Terminated Lead	Diagnostic Test Probe	Terminal Removal Tool	Service Terminal	Tray	Core Crimp	Insulation Crimp
I	Not Required	J-35616-64B (LT BU)	Not Required	Not Required	Not Required	Not Required	Not Required

M74RR Window Motor - Right Rear (Crew Cab)

Pin	Size	Color	Circuit	Function	Terminal Type ID	Option
1	2.5	L-BU/GY	670	Power Window Motor Right Rear Up Control	I	—
2	2.5	L-GN/BK	671	Power Window Motor Right Rear Down Control	I	—

M75 Windshield Wiper Motor

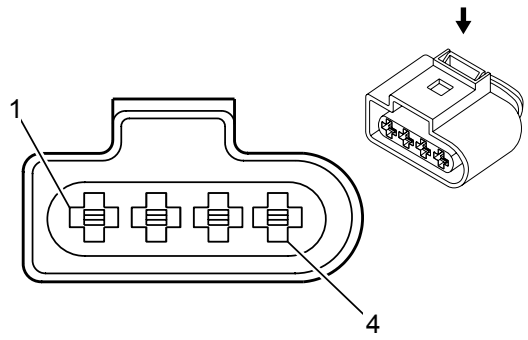

Connector Part Information

Harness Type: Body

OEM Connector: 42122100

Service Connector: 13578531

Description: 4-Way F 2. 8 Junior Power Timer Series, Sealed (BK)

Terminal Part Information

Terminal Type ID	Terminated Lead	Diagnostic Test Probe	Terminal Removal Tool	Service Terminal	Tray	Core Crimp	Insulation Crimp
I	Not Required	J-35616-4A (PU)	Not Required	Not Required	Not Required	Not Required	Not Required
I	Not Required	J-35616-4A (PU)	Not Required	Not Required	Not Required	Not Required	Not Required

M75 Windshield Wiper Motor

Pin	Size	Color	Circuit	Function	Terminal Type ID	Option
1	0.5	BN/L-GN	196	Windshield Wiper Motor Park Switch Signal	I	—
2	1.5	YE/BN	95	Windshield Wiper Motor Low Speed Control	I	—
3	1.5	BK	3150	Ground	I	—
4	1.5	WH	92	Windshield Wiper Motor High Speed Control	I	—

M77D Outside Rearview Mirror Motor - Driver (DL6/DL9)

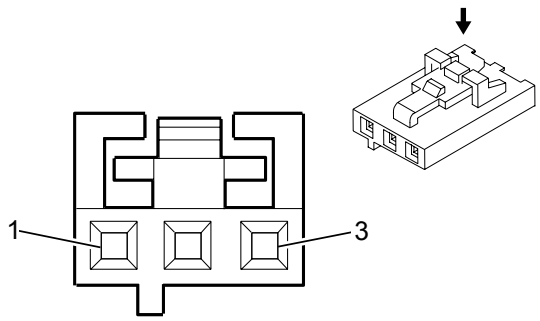

Connector Part Information

Harness Type: Outside Rearview Mirror - Driver

OEM Connector: 50-57-9403

Service Connector: 21019417

Description: 3-Way F 0.64 SL Series (BK)

Terminal Part Information

Terminal Type ID	Terminated Lead	Diagnostic Test Probe	Terminal Removal Tool	Service Terminal	Tray	Core Crimp	Insulation Crimp
I	Not Available	Not Available	Not Available	Not Available	Not Available	Not Available	Not Available

M77D Outside Rearview Mirror Motor - Driver (DL6/DL9)

Pin	Size	Color	Circuit	Function	Terminal Type ID	Option
1	0.32	GN/WH	3389	Driver Mirror Motor Right (+) Left (-) Control	I	-
2	0.32	WH	3391	Driver Mirror Motor Common Control	I	-
3	0.32	D-BU/WH	3390	Driver Mirror Motor Up (+) Down (-) Control	I	-

M77P Outside Rearview Mirror Motor - Passenger (DL6/DL9)

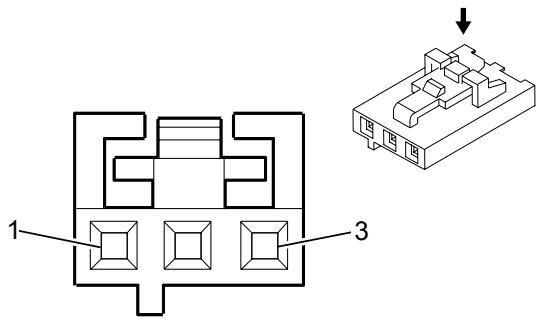

Connector Part Information

Harness Type: Outside Rearview Mirror - Passenger

OEM Connector: 50-57-9403

Service Connector: 21019417

Description: 3-Way F 0.64 SL Series (BK)

Terminal Part Information

Terminal Type ID	Terminated Lead	Diagnostic Test Probe	Terminal Removal Tool	Service Terminal	Tray	Core Crimp	Insulation Crimp
I	Not Available	Not Available	Not Available	Not Available	Not Available	Not Available	Not Available

M77P Outside Rearview Mirror Motor - Passenger (DL6/DL9)

Pin	Size	Color	Circuit	Function	Terminal Type ID	Option
1	0.32	GN/WH	3397	Co-Driver Mirror Motor Up (+) Down (-) Control	I	-
2	0.32	WH	3398	Co-Driver Mirror Motor Common Control	I	-
3	0.32	D-BU/WH	3396	Co-Driver Mirror Motor Right (+) Left (-) Control	I	-

M93 Key Capture Solenoid Actuator (MYB)

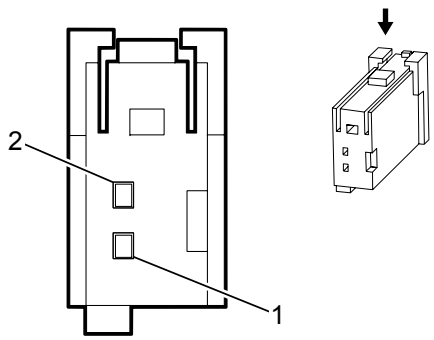

Connector Part Information

Harness Type: Instrument Panel

OEM Connector: 19115645

Service Connector: 13314093

Description: 2-Way F 0.64 Series (BK)

Terminal Part Information

Terminal Type ID	Terminated Lead	Diagnostic Test Probe	Terminal Removal Tool	Service Terminal	Tray	Core Crimp	Insulation Crimp
I	Not Required	J-35616-64B (LT BU)	Not Required	Not Required	Not Required	Not Required	Not Required

M93 Key Capture Solenoid Actuator (MYB)

Pin	Size	Color	Circuit	Function	Terminal Type ID	Option
1	0.35	VT/YE	143	Accessory Ignition Voltage	I	—
2	0.35	BK	2050	Ground	I	—

M96 Active Grille Air Shutter Actuator (LCV)

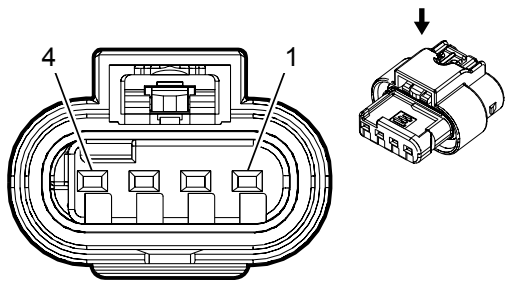

Connector Part Information

Harness Type: Jumper Harness

OEM Connector: 13576420

Service Connector: Service by Harness - See Part Catalog

Description: 4-Way F 1.2 MCP Series, Sealed (BK)

Terminal Part Information

Terminal Type ID	Terminated Lead	Diagnostic Test Probe	Terminal Removal Tool	Service Terminal	Tray	Core Crimp	Insulation Crimp
I	Not Available	J-35616-35 (VT)	Not Available	Not Available	Not Available	Not Available	Not Available

M96 Active Grille Air Shutter Actuator (LCV)

Pin	Size	Color	Circuit	Function	Terminal Type ID	Option
1	0.5	WH/VT	4333	Aero Shutter Actuator Supply Voltage	I	-
2	0.5	GY	3890	Aero Shutter Control	I	-
3	-	-	-	Not Occupied	-	-
4	0.5	BK	1250	Ground	I	-

M96 Active Grille Air Shutter Actuator (LFX)

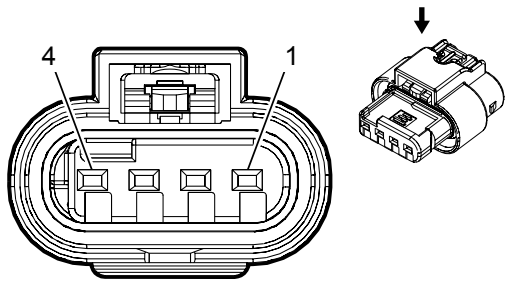

Connector Part Information

Harness Type: Jumper Harness

OEM Connector: 13576420

Service Connector: Service by Harness - See Part Catalog

Description: 4-Way F 1.2 MCP Series, Sealed (BK)

Terminal Part Information

Terminal Type ID	Terminated Lead	Diagnostic Test Probe	Terminal Removal Tool	Service Terminal	Tray	Core Crimp	Insulation Crimp
I	Not Available	J-35616-35 (VT)	Not Available	Not Available	Not Available	Not Available	Not Available

M96 Active Grille Air Shutter Actuator (LFX)

Pin	Size	Color	Circuit	Function	Terminal Type ID	Option
1	0.5	BN	3891	Aero Shutter Control	I	-
2	0.5	BK	1250	Ground	I	-
3	0.5	WH/VT	4333	Aero Shutter Actuator Supply Voltage	I	-
4	-	-	-	Not Occupied	-	-

M103 Turbocharger Vane Position Actuator (LWN)

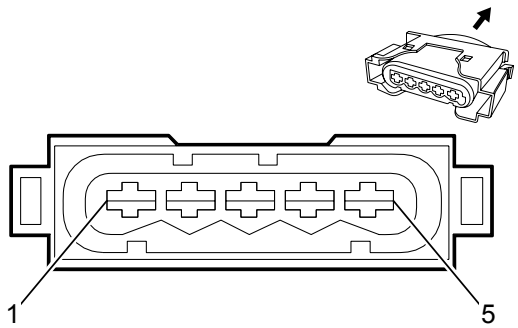

Connector Part Information

Harness Type: Engine

OEM Connector: 09-4415-81

Service Connector: 19329390

Description: 5-Way F 2.8 SLK Series (BK)

Terminal Part Information

Terminal Type ID	Terminated Lead	Diagnostic Test Probe	Terminal Removal Tool	Service Terminal	Tray	Core Crimp	Insulation Crimp
I	Not Required	J-35616-35 (VT)	Not Required	Not Required	Not Required	Not Required	Not Required

M103 Turbocharger Vane Position Actuator (LWN)

Pin	Size	Color	Circuit	Function	Terminal Type ID	Option
1	0.5	GY/L-BU	5930	Variable Nozzle Turbo Solenoid High Signal	I	—
2	0.5	WH/BK	5931	Variable Nozzle Turbo Solenoid Low Signal	I	—
3	0.5	BK/BN	5929	Variable Nozzle Turbo Position Sensor Low Reference	I	—
4	0.5	VT/YE	5947	Variable Nozzle Turbo Position Sensor Signal	I	—
5	0.5	GY/RD	5928	Variable Nozzle Turbo Position Sensor 5 Volt Reference	I	—

P2 Transmission Shift Lever Position Indicator (MYB)

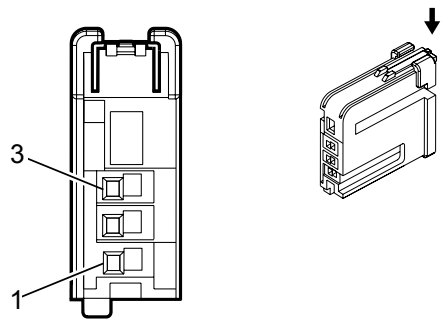

Connector Part Information

Harness Type: Floor Console

OEM Connector: AIT2PB-03B-1AK

Service Connector: Service by Harness - See Part Catalog

Description: 3-Way F 0.64 Series (BK)

Terminal Part Information

Terminal Type ID	Terminated Lead	Diagnostic Test Probe	Terminal Removal Tool	Service Terminal	Tray	Core Crimp	Insulation Crimp
I	Not Required	J-35616-64B (LT BU)	Not Required	Not Required	Not Required	Not Required	Not Required

P2 Transmission Shift Lever Position Indicator (MYB)

Pin	Size	Color	Circuit	Function	Terminal Type ID	Option
1	0.35	VT	801	Retained Accessory Power Fuse Control	I	—
2	0.5	L-GN/L-BU	6133	Local Interconnect Network Serial Data Bus 2	I	—
3	0.35	BK	2050	Ground	I	—

P13 Horn Assembly

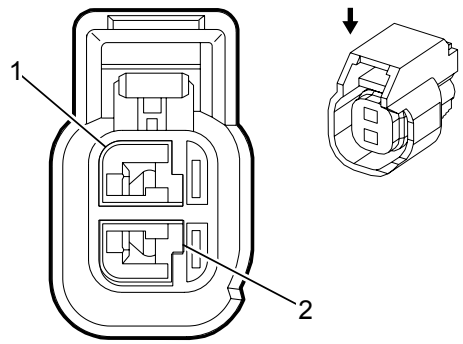

Connector Part Information

Harness Type: Forward Lamp

OEM Connector: 88988857

Service Connector: 13585854

Description: 2-Way F 150 GT Series, Sealed (BK)

Terminal Part Information

Terminal Type ID	Terminated Lead	Diagnostic Test Probe	Terminal Removal Tool	Service Terminal	Tray	Core Crimp	Insulation Crimp
I	Not Required	J-35616-14 (GN)	Not Required	Not Required	Not Required	Not Required	Not Required

P13 Horn Assembly

Pin	Size	Color	Circuit	Function	Terminal Type ID	Option
1	1	BK	1150	Ground	I	—
2	0.75	BN/GY	29	Horn Control	I	—

P14 Passenger Air Bag Disabled Indicator

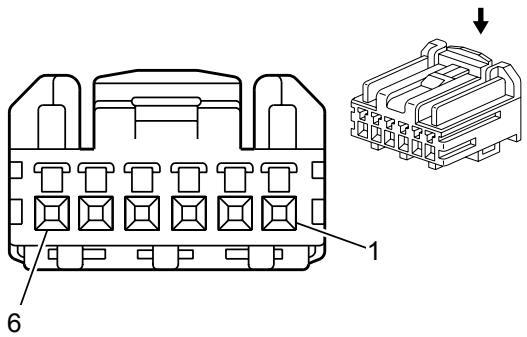

Connector Part Information

Harness Type: Headliner

OEM Connector: HCMPB-C06-S

Service Connector: 19153174

Description: 6-Way F 0.64 HCM Series (NA)

Terminal Part Information

Terminal Type ID	Terminated Lead	Diagnostic Test Probe	Terminal Removal Tool	Service Terminal	Tray	Core Crimp	Insulation Crimp
I	Not Required	J-35616-64B (LT BU)	Not Required	Not Required	Not Required	Not Required	Not Required

P14 Passenger Air Bag Disabled Indicator

Pin	Size	Color	Circuit	Function	Terminal Type ID	Option
1	0.35	L-BU	2307	Passenger Air Bag On Indicator Control	I	—
2	0.5	BK	3150	Ground	I	—
3	0.35	L-GN	2308	Passenger Air Bag Off Indicator Control	I	—
4	0.35	VT/WH	1139	Run/Crank Ignition 1 Voltage	I	—
5	0.35	VT/WH	5234	Passenger Seat Belt Indicator Control	I	—
6	—	—	—	Not Occupied	—	—

P16 Instrument Cluster

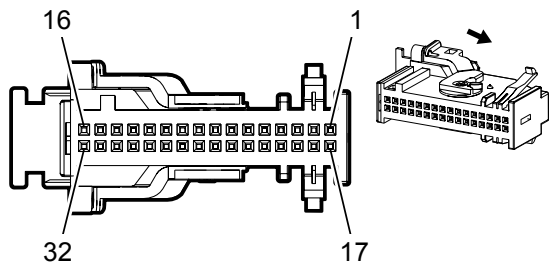

Connector Part Information

Harness Type: Instrument Panel

OEM Connector: 90587345

Service Connector: 88988405

Description: 32-Way F 0.64 Micro Quadlok Series (BK)

Terminal Part Information

Terminal Type ID	Terminated Lead	Diagnostic Test Probe	Terminal Removal Tool	Service Terminal	Tray	Core Crimp	Insulation Crimp
I	13575584	J-35616-64B (LT BU)	J-38125-12A	Not Available	Not Available	Not Available	Not Available
II	13575859	J-35616-64B (LT BU)	J-38125-12A	Not Available	Not Available	Not Available	Not Available

P16 Instrument Cluster

Pin	Size	Color	Circuit	Function	Terminal Type ID	Option
1	0.5	WH/L-GN	3997	MOST Serial Data (-)	II	UDD
2	0.5	GY/VT	3998	MOST Serial Data (+)	II	UDD
3	0.5	L-GN	5060	Low Speed GMLAN Serial Data	II	—
4	—	—	—	Not Occupied	—	—
5	0.35	WH/VT	3999	MOST Control	I	UDD
6	—	—	—	Not Occupied	—	—
7	0.5	RD/GY	2840	Battery Positive Voltage	II	—
8	0.5	VT/BK	1639	Run/Crank Ignition 1 Voltage	II	—

9	0.35	GY/L-BU	893	Driver Information Center Select Menu Switch Signal	I	UDC
10 - 11	—	—	—	Not Occupied	—	—
12	0.35	GY/YE	3885	Forward Collision Alert LED Control	I	UEU
13	0.35	BK/BN	897	Driver Information Center Switch Low Reference	I	UDC
14	0.35	L-GN/WH	1358	Driver Information Center Switch Signal	I	UDC
15	—	—	—	Not Occupied	—	—
16	0.35	BN/WH	419	Check Engine Indicator Control	I	—
17	0.5	GY/VT	3998	MOST Serial Data (+)	II	UDD
18	0.5	WH/L-GN	3997	MOST Serial Data (-)	II	UDD
19	0.5	BK/WH	2151	Signal Ground	II	—
20	0.5	L-GN/BK	3894	Local Interconnect Network Serial data Bus 12	II	W1Y
21 - 29	—	—	—	Not Occupied	—	—
30	0.35	WH/L-GN	3535	Reflected LED Display Dimming Control	I	UEU
31	—	—	—	Not Occupied	—	—
32	0.35	L-GN/BN	507	Wait To Start Indicator Control	I	—

P17 Info Display Module X1

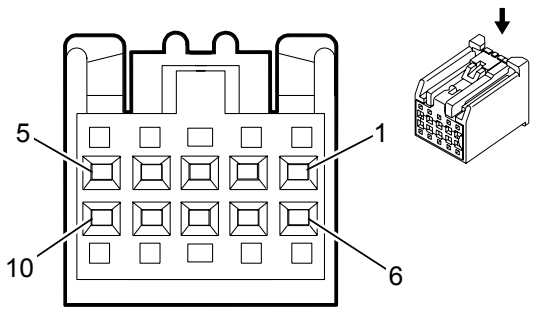

Connector Part Information

Harness Type: Instrument Panel

OEM Connector: 13577390

Service Connector: 13577390

Description: 10-Way F 0.64 Kaizen Series (BK)

Terminal Part Information

Terminal Type ID	Terminated Lead	Diagnostic Test Probe	Terminal Removal Tool	Service Terminal	Tray	Core Crimp	Insulation Crimp
I	13575867	J-35616-64B (LT BU)	J-38125-215A	SAIT-A03T-M064	23	P	P

P17 Info Display Module X1

Pin	Size	Color	Circuit	Function	Terminal Type ID	Option
1	0.5	RD/GY	2840	Battery Positive Voltage	I	—
2	—	—	—	Not Occupied	—	—
3	0.5	L-GN	5060	Low Speed GMLAN Serial Data	I	—
4	—	—	—	Not Occupied	—	—
5	0.5	L-GN/L-BU	7532	Local Interconnect Network Serial Data Bus 10	I	—
6 - 7	—	—	—	Not Occupied	—	—
8	0.5	L-GN/WH	7527	Local Interconnect Network Serial Data Bus 5	I	—
9	—	—	—	Not Occupied	—	—
10	0.35	BK/WH	2051	Signal Ground	I	—

P17 Info Display Module X3

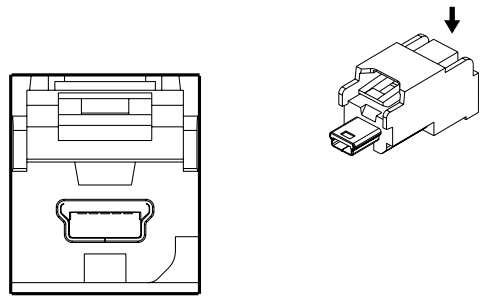

Connector Part Information

Harness Type: Instrument Panel LVDS

OEM Connector: 13576692

Service Connector: Service by Harness - See Part Catalog

Description: 5-Way M 2.0 Mini B USB Type (BKY)

Terminal Part Information

Terminal Type ID	Terminated Lead	Diagnostic Test Probe	Terminal Removal Tool	Service Terminal	Tray	Core Crimp	Insulation Crimp
I	Not Available	Not Available	Not Available	Not Available	Not Available	Not Available	Not Available

P17 Info Display Module X3

Pin	Size	Color	Circuit	Function	Terminal Type ID	Option
-	-	LVDS	-	(Navigation) Navigation Display Signal	I	-

P19AG Speaker - Left Front Door

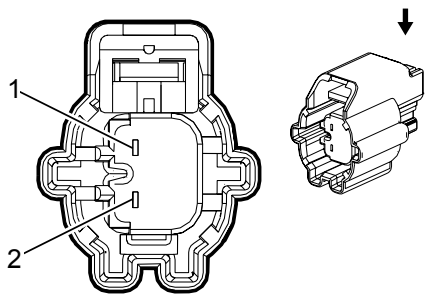

Connector Part Information

Harness Type: Driver Door

OEM Connector: R63461-005

Service Connector: Service by Harness - See Part Catalog

Description: 2-Way F 150 GT Series (BK)

Terminal Part Information

Terminal Type ID	Terminated Lead	Diagnostic Test Probe	Terminal Removal Tool	Service Terminal	Tray	Core Crimp	Insulation Crimp
I	Not Required	J-35616-14 (GN)	Not Required	Not Required	Not Required	Not Required	Not Required

P19AG Speaker - Left Front Door

Pin	Size	Color	Circuit	Function	Terminal Type ID	Option
1	1	BN/L-BU	118	Left Front Speaker Signal (-) (1)	I	—
2	1	L-BU	201	Left Front Speaker Control (+) (1)	I	—

P19AH Speaker - Right Front Door

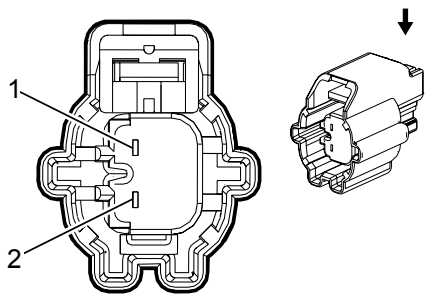

Connector Part Information

Harness Type: Passenger Door

OEM Connector: R63461-005

Service Connector: Service by Harness - See Part Catalog

Description: 2-Way F 150 GT Series (BK)

Terminal Part Information

Terminal Type ID	Terminated Lead	Diagnostic Test Probe	Terminal Removal Tool	Service Terminal	Tray	Core Crimp	Insulation Crimp
I	Not Required	J-35616-14 (GN)	Not Required	Not Required	Not Required	Not Required	Not Required

P19AH Speaker - Right Front Door

Pin	Size	Color	Circuit	Function	Terminal Type ID	Option
1	1	YE/BK	117	Right Front Speaker Signal (-) (1)	I	—
2	1	YE	200	Right Front Speaker Control (+) (1)	I	—

P19AL Speaker - Left Rear Door

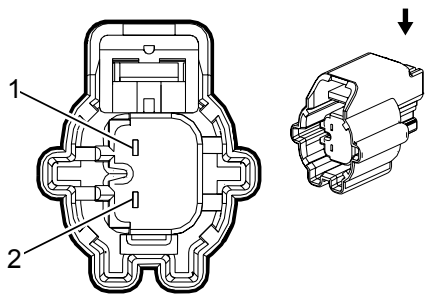

Connector Part Information

Harness Type: Left Rear Door

OEM Connector: R63461-005

Service Connector: Service by Harness - See Part Catalog

Description: 2-Way F 150 GT Series (BK)

Terminal Part Information

Terminal Type ID	Terminated Lead	Diagnostic Test Probe	Terminal Removal Tool	Service Terminal	Tray	Core Crimp	Insulation Crimp
I	Not Required	J-35616-14 (GN)	Not Required	Not Required	Not Required	Not Required	Not Required

P19AL Speaker - Left Rear Door

Pin	Size	Color	Circuit	Function	Terminal Type ID	Option
1	1	L-GN/BK	116	Left Rear Speaker Signal (-)	I	—
2	1	L-GN	199	Left Rear Speaker Control (+)	I	—

P19AM Speaker - Right Rear Door

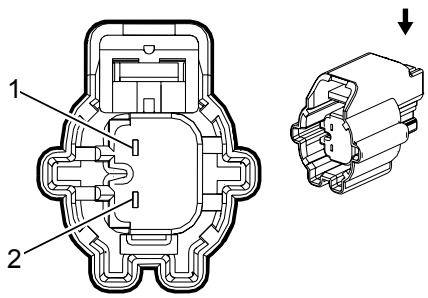

Connector Part Information

Harness Type: Right Rear Door

OEM Connector: R63461-005

Service Connector: Service by Harness - See Part Catalog

Description: 2-Way F 150 GT Series (BK)

Terminal Part Information

Terminal Type ID	Terminated Lead	Diagnostic Test Probe	Terminal Removal Tool	Service Terminal	Tray	Core Crimp	Insulation Crimp
I	Not Required	J-35616-14 (GN)	Not Required	Not Required	Not Required	Not Required	Not Required

P19AM Speaker - Right Rear Door

Pin	Size	Color	Circuit	Function	Terminal Type ID	Option
1	1	L-BU/BK	115	Right Rear Speaker Signal (-)	I	—
2	1	WH	46	Right Rear Speaker Control (+)	I	—

P19B Speaker - Center Instrument Panel (UQA)

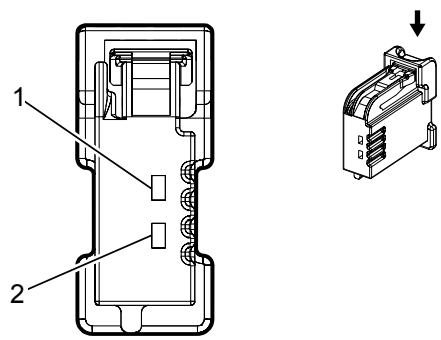

Connector Part Information

Harness Type: Instrument Panel

OEM Connector: 19150056

Service Connector: 13314097

Description: 2-Way F 1.5 Series (GY)

Terminal Part Information

Terminal Type ID	Terminated Lead	Diagnostic Test Probe	Terminal Removal Tool	Service Terminal	Tray	Core Crimp	Insulation Crimp
I	Not Required	J-35616-2A (GY)	Not Required	Not Required	Not Required	Not Required	Not Required

P19B Speaker - Center Instrument Panel (UQA)

Pin	Size	Color	Circuit	Function	Terminal Type ID	Option
1	0.75	L-BU/YE	1960	Front Center Speaker (-) Low Reference	I	—
2	0.75	YE/WH	1860	Front Center Speaker Control (+)	I	—

P19H Speaker - Left Front Tweeter (UQ3)

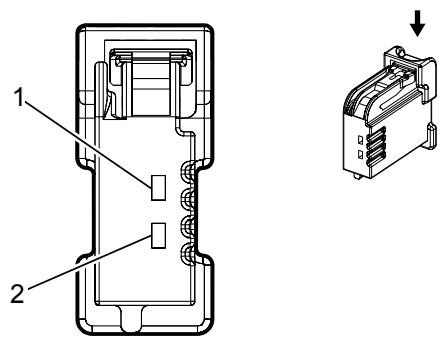

Connector Part Information

Harness Type: Instrument Panel

OEM Connector: 19150056

Service Connector: 13314097

Description: 2-Way F 1.5 Series (GY)

Terminal Part Information

Terminal Type ID	Terminated Lead	Diagnostic Test Probe	Terminal Removal Tool	Service Terminal	Tray	Core Crimp	Insulation Crimp
I	Not Required	J-35616-2A (GY)	Not Required	Not Required	Not Required	Not Required	Not Required

P19H Speaker - Left Front Tweeter (UQ3)

Pin	Size	Color	Circuit	Function	Terminal Type ID	Option
1	0.75	BN/L-BU	118	Left Front Speaker Signal (-) (1)	I	—
2	0.75	L-BU	201	Left Front Speaker Control (+) (1)	I	—

P19H Speaker - Left Front Tweeter (UQA)

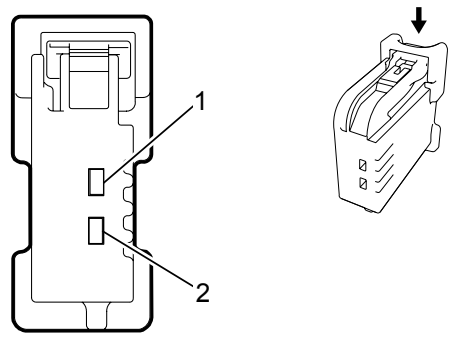

Connector Part Information

Harness Type: Instrument Panel

OEM Connector: 19115613

Service Connector: 13584097

Description: 2-Way F 1.5 Series (BK)

Terminal Part Information

Terminal Type ID	Terminated Lead	Diagnostic Test Probe	Terminal Removal Tool	Service Terminal	Tray	Core Crimp	Insulation Crimp
I	Not Required	J-35616-2A (GY)	Not Required	Not Required	Not Required	Not Required	Not Required

P19H Speaker - Left Front Tweeter (UQA)

Pin	Size	Color	Circuit	Function	Terminal Type ID	Option
1	0.75	BN/L-BU	118	Left Front Speaker Signal (-) (1)	I	—
2	0.75	L-BU	201	Left Front Speaker Control (+) (1)	I	—

P19V Speaker - Right Front Tweeter (UQ3)

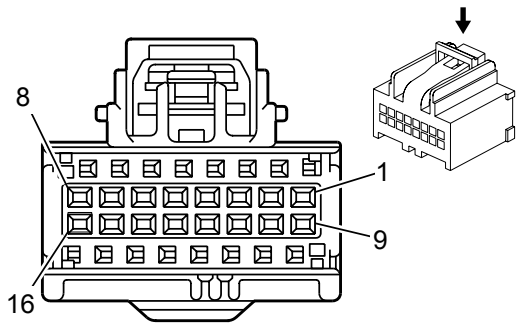

Connector Part Information

Harness Type: Instrument Panel

OEM Connector: 15136073

Service Connector: 15136073

Description: 16-Way F 0.64 Kaizen Series (BK)

Terminal Part Information

Terminal Type ID	Terminated Lead	Diagnostic Test Probe	Terminal Removal Tool	Service Terminal	Tray	Core Crimp	Insulation Crimp
I	13575791	J-35616-2A (GY)	J-38125-553	12191812	11	C	A

P19V Speaker - Right Front Tweeter (UQ3)

Pin	Size	Color	Circuit	Function	Terminal Type ID	Option
1	0.75	YE/BK	117	Right Front Speaker Signal (-) (1)	I	—
2	0.75	YE	200	Right Front Speaker Control (+) (1)	I	—
3 - 16	—	—	—	Not Occupied	—	—

P19V Speaker - Right Front Tweeter (UQA)

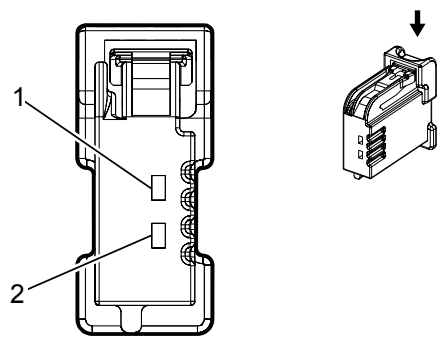

Connector Part Information

Harness Type: Instrument Panel

OEM Connector: 19150056

Service Connector: 13314097

Description: 2-Way F 1.5 Series (GY)

Terminal Part Information

Terminal Type ID	Terminated Lead	Diagnostic Test Probe	Terminal Removal Tool	Service Terminal	Tray	Core Crimp	Insulation Crimp
I	Not Required	J-35616-2A (GY)	Not Required	Not Required	Not Required	Not Required	Not Required

P19V Speaker - Right Front Tweeter (UQA)

Pin	Size	Color	Circuit	Function	Terminal Type ID	Option
1	0.75	YE/BK	117	Right Front Speaker Signal (-) (1)	I	—
2	0.75	YE	200	Right Front Speaker Control (+) (1)	I	—

P43 Collision Alert Indicators (UEU)

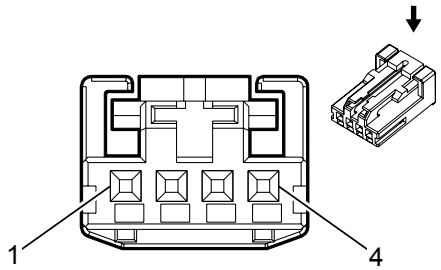

Connector Part Information

Harness Type: Instrument Panel

OEM Connector: 936119-1

Service Connector: 13587297

Description: 4-Way F 0.64 Micro-Quadlock Series (BK)

Terminal Part Information

Terminal Type ID	Terminated Lead	Diagnostic Test Probe	Terminal Removal Tool	Service Terminal	Tray	Core Crimp	Insulation Crimp
I	Not Required	J-35616-64B (LT BU)	Not Required	Not Required	Not Required	Not Required	Not Required
I	Not Required	J-35616-64B (LT BU)	Not Required	Not Required	Not Required	Not Required	Not Required

P43 Collision Alert Indicators (UEU)

Pin	Size	Color	Circuit	Function	Terminal Type ID	Option
1	0.5	VT/BK	1639	Run/Crank Ignition 1 Voltage	I	—
2	0.35	GY/YE	3885	Forward Collision Alert LED Control	I	—
3	0.35	WH/L-GN	3535	Reflected LED Display Dimming Control	I	—
4	0.5	BK/WH	2151	Signal Ground	I	—

Q2 A/C Compressor Clutch

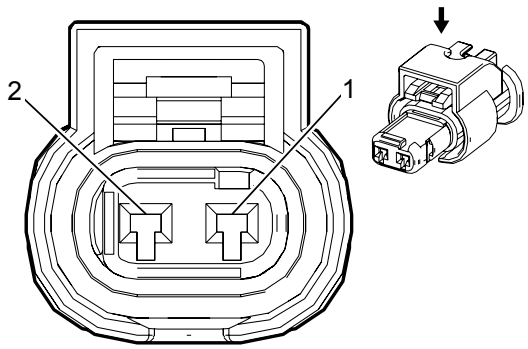

Connector Part Information

Harness Type: Engine

OEM Connector: 1-1823608-5

Service Connector: 19329415

Description: 2-Way F 1.2 Multiple Contact Point Series, Sealed (BK with BK Inner Connector)

Terminal Part Information

Terminal Type ID	Terminated Lead	Diagnostic Test Probe	Terminal Removal Tool	Service Terminal	Tray	Core Crimp	Insulation Crimp
I	Not Required	J-35616-16 (LT GN)	Not Required	Not Required	Not Required	Not Required	Not Required

Q2 A/C Compressor Clutch

Pin	Size	Color	Circuit	Function	Terminal Type ID	Option
1	0.75	BK	1450	Ground	I	—
2	0.75	BN/L-GN	59	A/C Compressor Clutch Control	I	—

Q6A Camshaft Position Actuator Solenoid Valve - Bank 1 Exhaust (LFX)

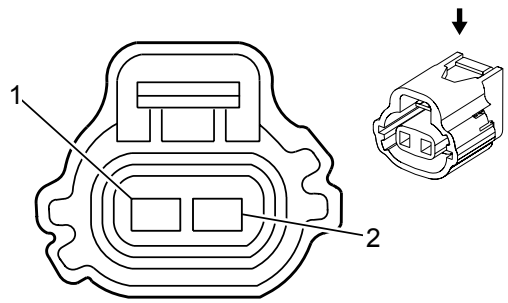

Connector Part Information

Harness Type: Engine

OEM Connector: 7283-7526-30

Service Connector: 89047244

Description: 2-Way F 090 Series, Sealed (BK)

Terminal Part Information

Terminal Type ID	Terminated Lead	Diagnostic Test Probe	Terminal Removal Tool	Service Terminal	Tray	Core Crimp	Insulation Crimp
I	Not Required	J-35616-18 (BK)	Not Required	Not Required	Not Required	Not Required	Not Required

Q6A Camshaft Position Actuator Solenoid Valve - Bank 1 Exhaust (LFX)

Pin	Size	Color	Circuit	Function	Terminal Type ID	Option
1	0.5	GY/L-BU	5282	Camshaft Phaser Exhaust Solenoid (1)	I	—
2	0.5	BK/VT	6754	Cam Phaser X Low Reference	I	—

Q6B Camshaft Position Actuator Solenoid Valve - Bank 1 Intake (LFX)

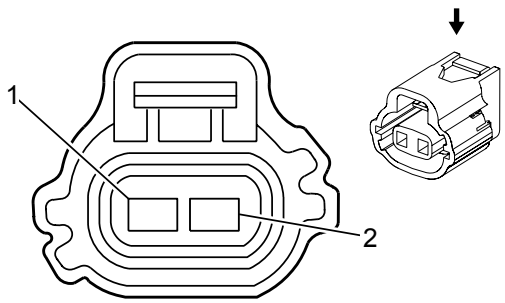

Connector Part Information

Harness Type: Engine

OEM Connector: 7283-7526-30

Service Connector: 89047244

Description: 2-Way F 090 Series, Sealed (BK)

Terminal Part Information

Terminal Type ID	Terminated Lead	Diagnostic Test Probe	Terminal Removal Tool	Service Terminal	Tray	Core Crimp	Insulation Crimp
I	Not Required	J-35616-18 (BK)	Not Required	Not Required	Not Required	Not Required	Not Required

Q6B Camshaft Position Actuator Solenoid Valve - Bank 1 Intake (LFX)

Pin	Size	Color	Circuit	Function	Terminal Type ID	Option
1	0.5	VT/BN	5284	Camshaft Phaser Intake Solenoid (1)	I	—
2	0.5	BK/BN	6753	Cam Phaser W Low Reference	I	—

Q6C Camshaft Position Actuator Solenoid Valve - Bank 2 Exhaust (LFX)

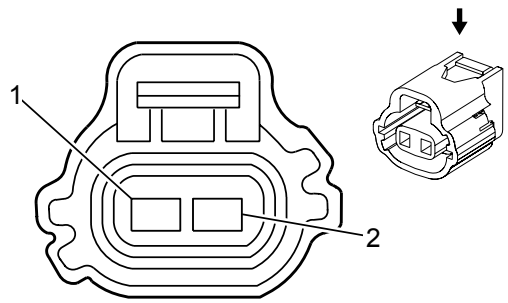

Connector Part Information

Harness Type: Engine

OEM Connector: 7283-7526-30

Service Connector: 89047244

Description: 2-Way F 090 Series, Sealed (BK)

Terminal Part Information

Terminal Type ID	Terminated Lead	Diagnostic Test Probe	Terminal Removal Tool	Service Terminal	Tray	Core Crimp	Insulation Crimp
I	Not Required	J-35616-18 (BK)	Not Required	Not Required	Not Required	Not Required	Not Required

Q6C Camshaft Position Actuator Solenoid Valve - Bank 2 Exhaust (LFX)

Pin	Size	Color	Circuit	Function	Terminal Type ID	Option
1	0.5	L-GN/BN	5283	Camshaft Phaser Exhaust Solenoid (2)	I	—
2	0.5	BK/GY	6756	Cam Phaser Z Low Reference	I	—

Q6D Camshaft Position Actuator Solenoid Valve - Bank 2 Intake (LFX)

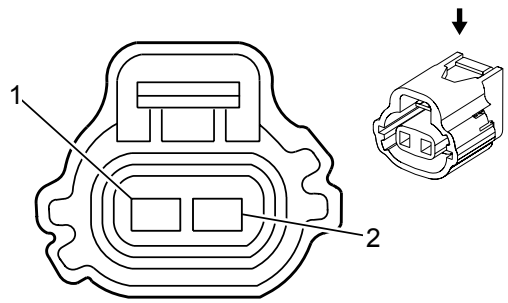

Connector Part Information

Harness Type: Engine

OEM Connector: 7283-7526-30

Service Connector: 89047244

Description: 2-Way F 090 Series, Sealed (BK)

Terminal Part Information

Terminal Type ID	Terminated Lead	Diagnostic Test Probe	Terminal Removal Tool	Service Terminal	Tray	Core Crimp	Insulation Crimp
I	Not Required	J-35616-18 (BK)	Not Required	Not Required	Not Required	Not Required	Not Required

Q6D Camshaft Position Actuator Solenoid Valve - Bank 2 Intake (LFX)

Pin	Size	Color	Circuit	Function	Terminal Type ID	Option
1	0.5	L-GN	5272	Camshaft Phaser Intake Solenoid (2)	I	—
2	0.5	BK/L-BU	6755	Cam Phaser Y Low Reference	I	—

Q6E Camshaft Position Actuator Solenoid Valve - Exhaust (LCV)

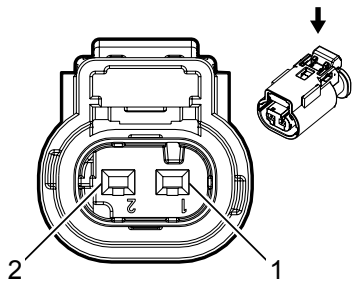

Connector Part Information

Harness Type: Engine

OEM Connector: 10010337

Service Connector: 13587326

Description: 2-Way F 1.2 MLK Series, Sealed (BK)

Terminal Part Information

Terminal Type ID	Terminated Lead	Diagnostic Test Probe	Terminal Removal Tool	Service Terminal	Tray	Core Crimp	Insulation Crimp
I	Not Required	J-35616-16 (LT GN)	Not Required	Not Required	Not Required	Not Required	Not Required

Q6E Camshaft Position Actuator Solenoid Valve - Exhaust (LCV)

Pin	Size	Color	Circuit	Function	Terminal Type ID	Option
1	0.5	GY/L-BU	5282	Camshaft Phaser Exhaust Solenoid (1)	I	—
2	0.5	BK/VT	6754	Cam Phaser X Low Reference	I	—

Q6F Camshaft Position Actuator Solenoid Valve - Intake (LCV)

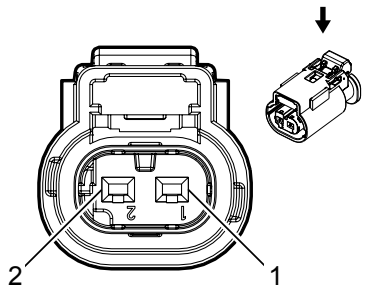

Connector Part Information

Harness Type: Engine

OEM Connector: 10010338

Service Connector: 13587325

Description: 2-Way F 1.2 MLK Series, Sealed (L-GY)

Terminal Part Information

Terminal Type ID	Terminated Lead	Diagnostic Test Probe	Terminal Removal Tool	Service Terminal	Tray	Core Crimp	Insulation Crimp
I	Not Required	J-35616-16 (LT GN)	Not Required	Not Required	Not Required	Not Required	Not Required

Q6F Camshaft Position Actuator Solenoid Valve - Intake (LCV)

Pin	Size	Color	Circuit	Function	Terminal Type ID	Option
1	0.5	VT/BN	5284	Camshaft Phaser Intake Solenoid (1)	I	—
2	0.5	BK/BN	6753	Cam Phaser W Low Reference	I	—

Q8 Control Solenoid Valve Assembly X1 (MYB)

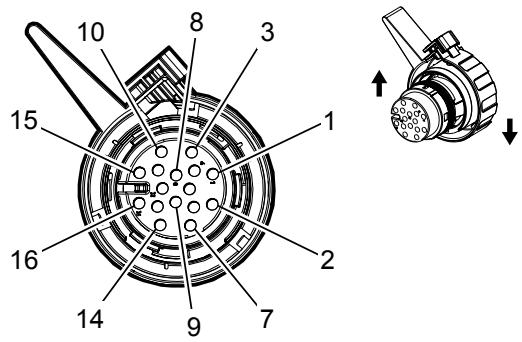

Connector Part Information

Harness Type: Engine

OEM Connector: 9430734

Service Connector: 19303772

Description: 16-Way F 1.5 Series, Sealed (BK)

Terminal Part Information

Terminal Type ID	Terminated Lead	Diagnostic Test Probe	Terminal Removal Tool	Service Terminal	Tray	Core Crimp	Insulation Crimp
I	13578934	J-35616-66 (YE)	J-38125-28	2 21 24 47220 0	17	E	1
II	13578934	J-35616-66 (YE)	J-38125-28	Not Available	Not Available	Not Available	Not Available

Q8 Control Solenoid Valve Assembly X1 (MYB)

Pin	Size	Color	Circuit	Function	Terminal Type ID	Option
1 - 2	—	—	—	Not Occupied	—	—
3	0.5	WH/GY	1786	Transmission Park/Neutral Signal (1)	I	LCV/LFX
	0.5	WH/GY	1786		II	LWN
4	0.75	RD/L-GN	1840	Battery Positive Voltage	I	LCV/LFX
	0.75	RD/L-GN	1840		II	LWN
5	0.75	BK/WH	1451	Signal Ground	I	LCV/LFX
	0.75	BK/WH	1451		II	LWN
6 - 8	—	—	—	Not Occupied	—	—
9	0.5	VT/YE	5985	Accessory Wakeup Serial Data	I	LCV/LFX

	0.5	VT/YE	5985		II	LWN
10	0.5	L-BU	2500	High Speed GMLAN Serial Data (+) (1)	I	LCV/LFX
	0.5	L-BU	2500		II	LWN
11	0.5	WH	2501	High Speed GMLAN Serial Data (-) (1)	I	LCV/LFX
	0.5	WH	2501		II	LWN
12	0.5	VT/BK	2139	Run/Crank Ignition 1 Voltage	I	LCV/LFX
	0.5	VT/BK	2139		II	LWN
13	0.5	WH	2501	High Speed GMLAN Serial Data (-) (1)	I	LCV/LFX
	0.5	WH	2501		II	LWN
14	0.5	L-BU	2500	High Speed GMLAN Serial Data (+) (1)	I	LCV/LFX
	0.5	L-BU	2500		II	LWN
15 - 16	—	—	—	Not Occupied	—	—

Q8 Control Solenoid Valve Assembly X2 (MYB)

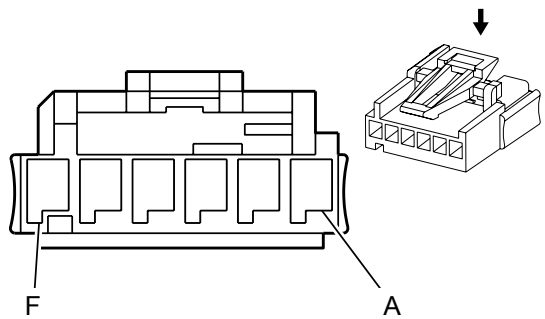

Connector Part Information

Harness Type: Transmission

OEM Connector: 15336500

Service Connector: 89046635

Description: 6-Way F Metri Pack 150.2 Series (GN)

Terminal Part Information

Terminal Type ID	Terminated Lead	Diagnostic Test Probe	Terminal Removal Tool	Service Terminal	Tray	Core Crimp	Insulation Crimp
I	Service by Harness – See Part Catalog	Not Available	Not Available	Not Available	Not Available	Not Available	Not Available

Q8 Control Solenoid Valve Assembly X2 (MYB)

Pin	Size	Color	Circuit	Function	Terminal Type ID	Option
A	0.35	GY	—	Ground	I	-
B	0.35	BK	—	Transmission Range Switch Signal P	I	-
C	0.35	YE	—	Transmission Range Switch Signal C	I	-
D	0.35	RD	—	Transmission Range Switch Signal B	I	-
E	0.35	GN	—	Transmission Range Switch Signal A	I	-
F	0.35	WH	—	Park/Neutral Switch Signal	I	-

Q8 Control Solenoid Valve Assembly X3 (MYB)

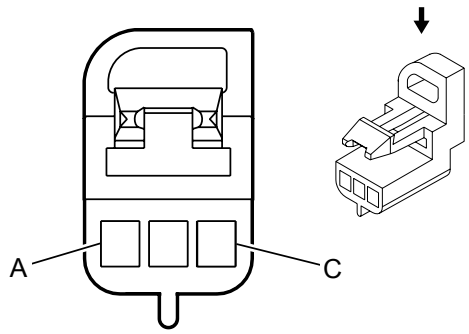

Connector Part Information

Harness Type: Transmission

OEM Connector: 13539487

Service Connector: Service by Harness – See Part Catalog

Description: 3-Way F Metri Pack 150 Series (BK)

Terminal Part Information

Terminal Type ID	Terminated Lead	Diagnostic Test Probe	Terminal Removal Tool	Service Terminal	Tray	Core Crimp	Insulation Crimp
I	Service by Harness – See Part Catalog	Not Available	Not Available	Not Available	Not Available	Not Available	Not Available

Q8 Control Solenoid Valve Assembly X3 (MYB)

Pin	Size	Color	Circuit	Function	Terminal Type ID	Option
A	0.35	GN	—	Input Speed Sensor (ISS) Signal	I	-
B	0.35	RD	—	ISS/OSS Supply Voltage	I	-
C	0.35	BK	—	Output Speed Sensor (OSS) Signal	I	-

Q12 Evaporative Emission Purge Solenoid Valve (LCV)

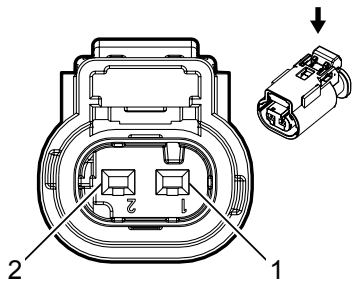

Connector Part Information

Harness Type: Engine

OEM Connector: 10010337

Service Connector: 13587326

Description: 2-Way F 1.2 MLK Series, Sealed (BK)

Terminal Part Information

Terminal Type ID	Terminated Lead	Diagnostic Test Probe	Terminal Removal Tool	Service Terminal	Tray	Core Crimp	Insulation Crimp
I	Not Required	J-35616-16 (LT GN)	Not Required	Not Required	Not Required	Not Required	Not Required

Q12 Evaporative Emission Purge Solenoid Valve (LCV)

Pin	Size	Color	Circuit	Function	Terminal Type ID	Option
1	0.5	VT/L-BU	5293	Powertrain Main Relay Fused Supply (4)	I	—
2	0.5	L-GN/L-BU	428	EVAP Canister Purge Solenoid Control	I	—

Q12 Evaporative Emission Purge Solenoid Valve (LFX)

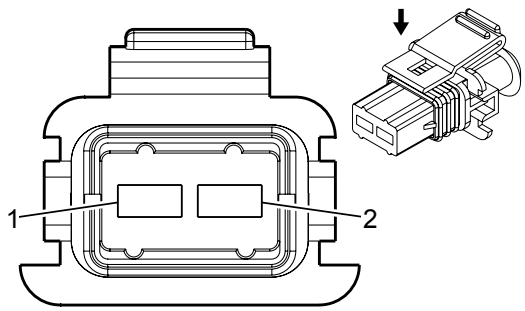

Connector Part Information

Harness Type: Engine

OEM Connector: 12186308

Service Connector: 13585849

Description: 2-Way F Junior Power Timer Series, Sealed (BK)

Terminal Part Information

Terminal Type ID	Terminated Lead	Diagnostic Test Probe	Terminal Removal Tool	Service Terminal	Tray	Core Crimp	Insulation Crimp
I	Not Required	J-35616-35 (VT)	Not Required	Not Required	Not Required	Not Required	Not Required

Q12 Evaporative Emission Purge Solenoid Valve (LFX)

Pin	Size	Color	Circuit	Function	Terminal Type ID	Option
1	0.5	VT/L-BU	5293	Powertrain Main Relay Fused Supply (4)	I	—
2	0.5	L-GN/L-BU	428	EVAP Canister Purge Solenoid Control	I	—

Q13 Evaporative Emission Vent Solenoid Valve

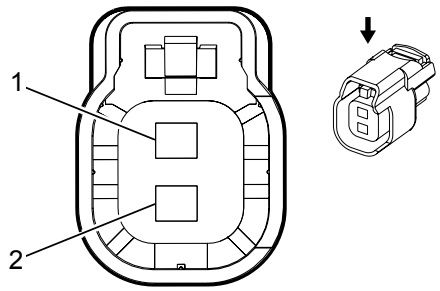

Connector Part Information

Harness Type: Chassis

OEM Connector: 34062-0028

Service Connector: 13579002

Description: 2-Way F 1.5 Series, Sealed (BK)

Terminal Part Information

Terminal Type ID	Terminated Lead	Diagnostic Test Probe	Terminal Removal Tool	Service Terminal	Tray	Core Crimp	Insulation Crimp
I	Not Required	J-35616-2A (GY)	Not Required	Not Required	Not Required	Not Required	Not Required

Q13 Evaporative Emission Vent Solenoid Valve

Pin	Size	Color	Circuit	Function	Terminal Type ID	Option
1	0.5	WH	1310	EVAP Canister Vent Solenoid Control	I	—
2	0.5	RD/L-GN	2440	Battery Positive Voltage	I	—

Q14 Exhaust Gas Recirculation Valve (LWN)

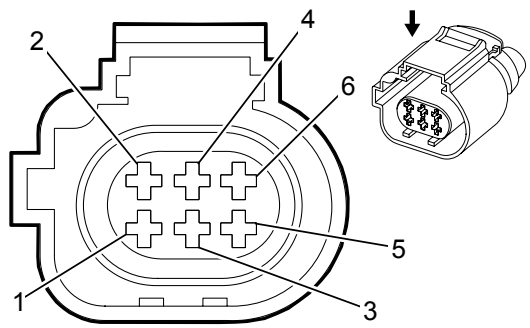

Connector Part Information

Harness Type: Engine

OEM Connector: 284716-3

Service Connector: 13586128

Description: 6-Way F 1.6 Micro Timer Series, Sealed (BN)

Terminal Part Information

Terminal Type ID	Terminated Lead	Diagnostic Test Probe	Terminal Removal Tool	Service Terminal	Tray	Core Crimp	Insulation Crimp
I	Not Required	J-35616-14 (GN)	Not Required	Not Required	Not Required	Not Required	Not Required

Q14 Exhaust Gas Recirculation Valve (LWN)

Pin	Size	Color	Circuit	Function	Terminal Type ID	Option
1	0.5	WH/VT	5764	Exhaust Gas Recirculation Valve Motor High Signal	I	—
2	0.5	BN/WH	5763	Exhaust Gas Recirculation Valve Sensor Signal	I	—
3	—	—	—	Not Occupied	—	—
4	0.5	BK/BN	2753	Exhaust Gas Recirculation Sensor Low Reference	I	—
5	0.5	VT/BK	5746	Exhaust Gas Recirculation Valve Motor Low Signal	I	—
6	0.5	L-BU/RD	5047	Exhaust Gas Recirculation 5 Volt Reference (1)	I	—

Q17A Fuel Injector 1 (LCV)

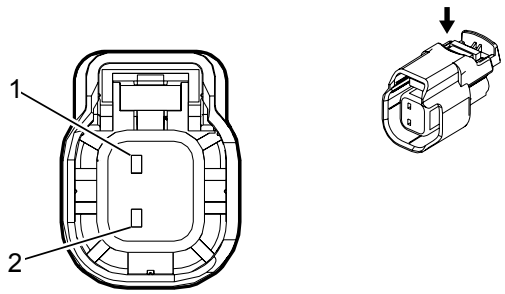

Connector Part Information

Harness Type: Fuel Rail

OEM Connector: 13503508

Service Connector: Service by Harness – See Part Catalog

Description: 2-Way F 1.5 Series Sealed (BK)

Terminal Part Information

Terminal Type ID	Terminated Lead	Diagnostic Test Probe	Terminal Removal Tool	Service Terminal	Tray	Core Crimp	Insulation Crimp
I	Not Available	Not Available	Not Available	Not Available	Not Available	Not Available	Not Available

Q17A Fuel Injector 1 (LCV)

Pin	Size	Color	Circuit	Function	Terminal Type ID	Option
1	0.75	BN	4801	Direct Fuel Injector (DFI) High Voltage Control Cylinder 1	I	-
2	0.75	BN/WH	4901	Direct Fuel Injector (DFI) High Voltage Supply Cylinder 1	I	-

Q17A Fuel Injector 1 (LFX)

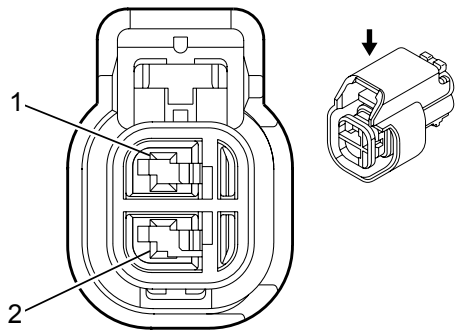

Connector Part Information

Harness Type: Bank 1 Fuel Rail

OEM Connector: E-2157

Service Connector: Service by Harness - See Part Catalog

Description: 2-Way F 1.5 Series, Sealed (BK)

Terminal Part Information

Terminal Type ID	Terminated Lead	Diagnostic Test Probe	Terminal Removal Tool	Service Terminal	Tray	Core Crimp	Insulation Crimp
I	Not Available	Not Available	Not Available	Not Available	Not Available	Not Available	Not Available

Q17A Fuel Injector 1 (LFX)

Pin	Size	Color	Circuit	Function	Terminal Type ID	Option
1	0.5	BN	4801	Direct Fuel Injector (DFI) High Voltage Control Cylinder 1	I	-
2	0.5	BN/WH	4901	Direct Fuel Injector (DFI) High Voltage Supply Cylinder 1	I	-

Q17A Fuel Injector 1 (LWN)

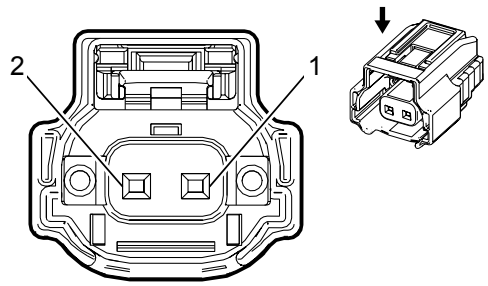

Connector Part Information

Harness Type: Engine

OEM Connector: 6189-7138

Service Connector: 13407097

Description: 2-Way F (BK)

Terminal Part Information

Terminal Type ID	Terminated Lead	Diagnostic Test Probe	Terminal Removal Tool	Service Terminal	Tray	Core Crimp	Insulation Crimp
I	Not Required	J-35616-18 (BK)	Not Required	Not Required	Not Required	Not Required	Not Required

Q17A Fuel Injector 1 (LWN)

Pin	Size	Color	Circuit	Function	Terminal Type ID	Option
1	1.5	BN/WH	4901	Direct Fuel Injector (DFI) High Voltage Supply Cylinder 1	I	—
2	1.5	BN	4801	Direct Fuel Injector (DFI) High Voltage Control Cylinder 1	I	—

Q17B Fuel Injector 2 (LCV)

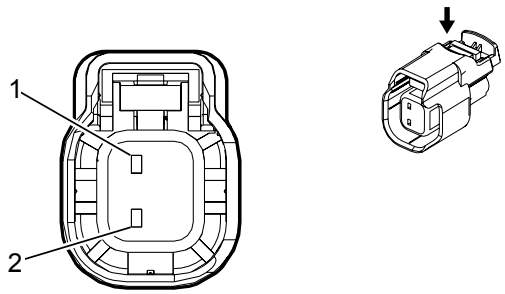

Connector Part Information

Harness Type: Fuel Rail

OEM Connector: 13503508

Service Connector: Service by Harness – See Part Catalog

Description: 2-Way F 1.5 Series Sealed (BK)

Terminal Part Information

Terminal Type ID	Terminated Lead	Diagnostic Test Probe	Terminal Removal Tool	Service Terminal	Tray	Core Crimp	Insulation Crimp
I	Not Available	Not Available	Not Available	Not Available	Not Available	Not Available	Not Available

Q17B Fuel Injector 2 (LCV)

Pin	Size	Color	Circuit	Function	Terminal Type ID	Option
1	0.75	BU	4802	Direct Fuel Injector (DFI) High Voltage Control Cylinder 2	I	-
2	0.75	BU/GY	4902	Direct Fuel Injector (DFI) High Voltage Supply Cylinder 2	I	-

Q17B Fuel Injector 2 (LFX)

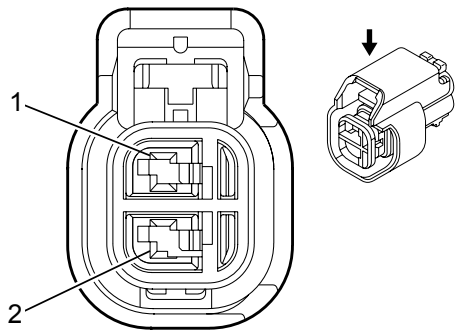

Connector Part Information

Harness Type: Bank 2 Fuel Rail

OEM Connector: E-2157

Service Connector: Service by Harness - See Part Catalog

Description: 2-Way F 1.5 Series, Sealed (BK)

Terminal Part Information

Terminal Type ID	Terminated Lead	Diagnostic Test Probe	Terminal Removal Tool	Service Terminal	Tray	Core Crimp	Insulation Crimp
I	Not Available	Not Available	Not Available	Not Available	Not Available	Not Available	Not Available

Q17B Fuel Injector 2 (LFX)

Pin	Size	Color	Circuit	Function	Terminal Type ID	Option
1	0.5	BU	4802	Direct Fuel Injector (DFI) High Voltage Control Cylinder 2	I	-
2	0.5	BU/GY	4902	Direct Fuel Injector (DFI) High Voltage Supply Cylinder 2	I	-

Q17B Fuel Injector 2 (LWN)

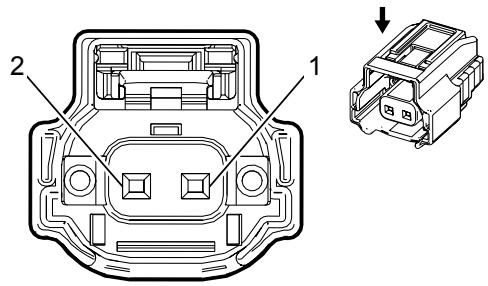

Connector Part Information

Harness Type: Engine

OEM Connector: 6189-7138

Service Connector: 13407097

Description: 2-Way F (BK)

Terminal Part Information

Terminal Type ID	Terminated Lead	Diagnostic Test Probe	Terminal Removal Tool	Service Terminal	Tray	Core Crimp	Insulation Crimp
I	Not Required	J-35616-18 (BK)	Not Required	Not Required	Not Required	Not Required	Not Required

Q17B Fuel Injector 2 (LWN)

Pin	Size	Color	Circuit	Function	Terminal Type ID	Option
1	1.5	L-BU/GY	4902	Direct Fuel Injector (DFI) High Voltage Supply Cylinder 2	I	—
2	1.5	L-BU	4802	Direct Fuel Injector (DFI) High Voltage Control Cylinder 2	I	—

Q17C Fuel Injector 3 (LCV)

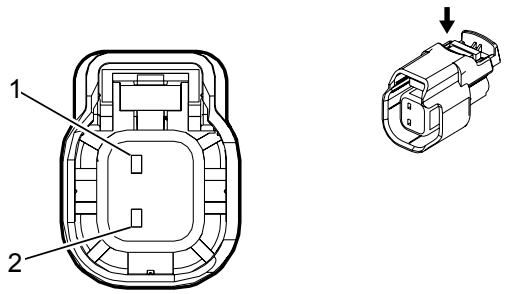

Connector Part Information

Harness Type: Fuel Rail

OEM Connector: 13503508

Service Connector: Service by Harness – See Part Catalog

Description: 2-Way F 1.5 Series Sealed (BK)

Terminal Part Information

Terminal Type ID	Terminated Lead	Diagnostic Test Probe	Terminal Removal Tool	Service Terminal	Tray	Core Crimp	Insulation Crimp
I	Not Available	Not Available	Not Available	Not Available	Not Available	Not Available	Not Available

Q17C Fuel Injector 3 (LCV)

Pin	Size	Color	Circuit	Function	Terminal Type ID	Option
1	0.75	GN	4803	Direct Fuel Injector (DFI) High Voltage Control Cylinder 3	I	-
2	0.75	GN/GY	4903	Direct Fuel Injector (DFI) High Voltage Supply Cylinder 3	I	-

Q17C Fuel Injector 3 (LFX)

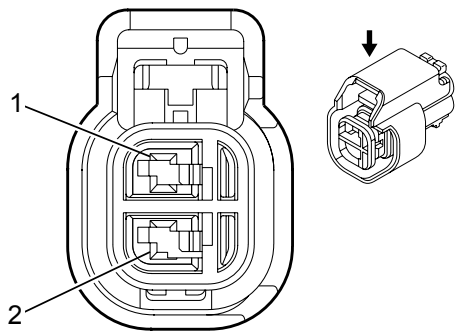

Connector Part Information

Harness Type: Bank 1 Fuel Rail

OEM Connector: E-2157

Service Connector: Service by Harness - See Part Catalog

Description: 2-Way F 1.5 Series, Sealed (BK)

Terminal Part Information

Terminal Type ID	Terminated Lead	Diagnostic Test Probe	Terminal Removal Tool	Service Terminal	Tray	Core Crimp	Insulation Crimp
I	Not Available	Not Available	Not Available	Not Available	Not Available	Not Available	Not Available

Q17C Fuel Injector 3 (LFX)

Pin	Size	Color	Circuit	Function	Terminal Type ID	Option
1	0.5	GN	4803	Direct Fuel Injector (DFI) High Voltage Control Cylinder 3	I	-
2	0.5	GN/GY	4903	Direct Fuel Injector (DFI) High Voltage Supply Cylinder 3	I	-

Q17C Fuel Injector 3 (LWN)

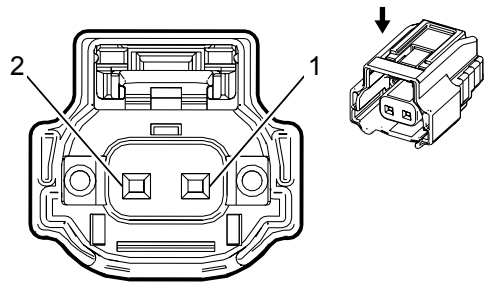

Connector Part Information

Harness Type: Engine

OEM Connector: 6189-7138

Service Connector: 13407097

Description: 2-Way F (BK)

Terminal Part Information

Terminal Type ID	Terminated Lead	Diagnostic Test Probe	Terminal Removal Tool	Service Terminal	Tray	Core Crimp	Insulation Crimp
I	Not Required	J-35616-18 (BK)	Not Required	Not Required	Not Required	Not Required	Not Required

Q17C Fuel Injector 3 (LWN)

Pin	Size	Color	Circuit	Function	Terminal Type ID	Option
1	1.5	L-GN/GY	4903	Direct Fuel Injector (DFI) High Voltage Supply Cylinder 3	I	—
2	1.5	L-GN	4803	Direct Fuel Injector (DFI) High Voltage Control Cylinder 3	I	—

Q17D Fuel Injector 4 (LCV)

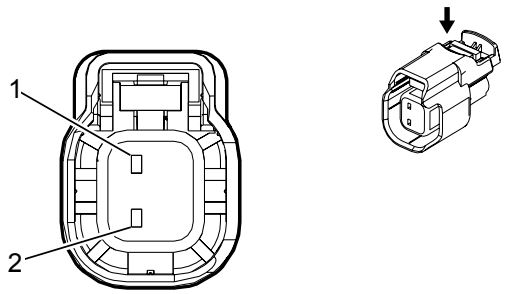

Connector Part Information

Harness Type: Fuel Rail

OEM Connector: 13503508

Service Connector: Service by Harness – See Part Catalog

Description: 2-Way F 1.5 Series Sealed (BK)

Terminal Part Information

Terminal Type ID	Terminated Lead	Diagnostic Test Probe	Terminal Removal Tool	Service Terminal	Tray	Core Crimp	Insulation Crimp
I	Not Available	Not Available	Not Available	Not Available	Not Available	Not Available	Not Available

Q17D Fuel Injector 4 (LCV)

Pin	Size	Color	Circuit	Function	Terminal Type ID	Option
1	0.75	GY/BU	4804	Direct Fuel Injector (DFI) High Voltage Control Cylinder 4	I	-
2	0.75	BU/WH	4904	Direct Fuel Injector (DFI) High Voltage Supply Cylinder 4	I	-

Q17D Fuel Injector 4 (LFX)

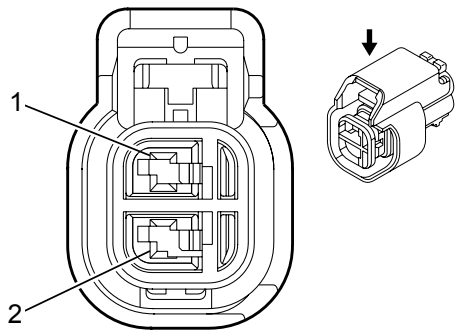

Connector Part Information

Harness Type: Bank 2 Fuel Rail

OEM Connector: E-2157

Service Connector: Service by Harness - See Part Catalog

Description: 2-Way F 1.5 Series, Sealed (BK)

Terminal Part Information

Terminal Type ID	Terminated Lead	Diagnostic Test Probe	Terminal Removal Tool	Service Terminal	Tray	Core Crimp	Insulation Crimp
I	Not Available	Not Available	Not Available	Not Available	Not Available	Not Available	Not Available

Q17D Fuel Injector 4 (LFX)

Pin	Size	Color	Circuit	Function	Terminal Type ID	Option
1	0.5	GY/BU	4804	Direct Fuel Injector (DFI) High Voltage Control Cylinder 4	I	-
2	0.5	BU/WH	4904	Direct Fuel Injector (DFI) High Voltage Supply Cylinder 4	I	-

Q17D Fuel Injector 4 (LWN)

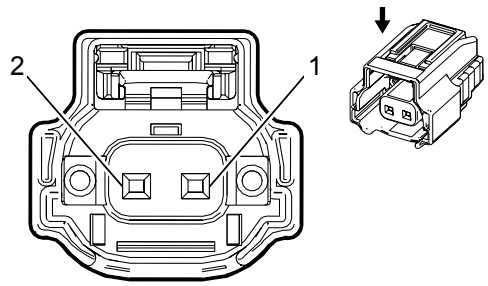

Connector Part Information

Harness Type: Engine

OEM Connector: 6189-7138

Service Connector: 13407097

Description: 2-Way F (BK)

Terminal Part Information

Terminal Type ID	Terminated Lead	Diagnostic Test Probe	Terminal Removal Tool	Service Terminal	Tray	Core Crimp	Insulation Crimp
I	Not Required	J-35616-18 (BK)	Not Required	Not Required	Not Required	Not Required	Not Required

Q17D Fuel Injector 4 (LWN)

Pin	Size	Color	Circuit	Function	Terminal Type ID	Option
1	1.5	L-BU/WH	4904	Direct Fuel Injector (DFI) High Voltage Supply Cylinder 4	I	—
2	1.5	GY/L-BU	4804	Direct Fuel Injector (DFI) High Voltage Control Cylinder 4	I	—

Q17E Fuel Injector 5 (LFX)

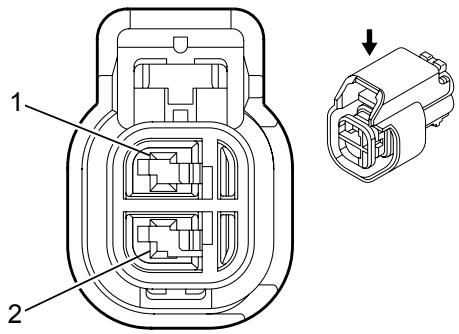

Connector Part Information

Harness Type: Bank 1 Fuel Rail

OEM Connector: E-2157

Service Connector: Service by Harness - See Part Catalog

Description: 2-Way F 1.5 Series, Sealed (BK)

Terminal Part Information

Terminal Type ID	Terminated Lead	Diagnostic Test Probe	Terminal Removal Tool	Service Terminal	Tray	Core Crimp	Insulation Crimp
I	Not Available	Not Available	Not Available	Not Available	Not Available	Not Available	Not Available

Q17E Fuel Injector 5 (LFX)

Pin	Size	Color	Circuit	Function	Terminal Type ID	Option
1	0.5	WH/GN	4805	Direct Fuel Injector (DFI) High Voltage Control Cylinder 5	I	-
2	0.5	GN/WH	4905	Direct Fuel Injector (DFI) High Voltage Supply Cylinder 5	I	-

Q17F Fuel Injector 6 (LFX)

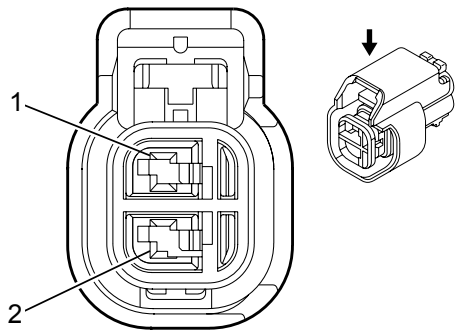

Connector Part Information

Harness Type: Bank 2 Fuel Rail

OEM Connector: E-2157

Service Connector: Service by Harness - See Part Catalog

Description: 2-Way F 1.5 Series, Sealed (BK)

Terminal Part Information

Terminal Type ID	Terminated Lead	Diagnostic Test Probe	Terminal Removal Tool	Service Terminal	Tray	Core Crimp	Insulation Crimp
I	Not Available	Not Available	Not Available	Not Available	Not Available	Not Available	Not Available

Q17F Fuel Injector 6 (LFX)

Pin	Size	Color	Circuit	Function	Terminal Type ID	Option
1	0.5	VT/GN	4806	Direct Fuel Injector (DFI) High Voltage Control Cylinder 6	I	-
2	0.5	VT/GY	4906	Direct Fuel Injector (DFI) High Voltage Supply Cylinder 6	I	-

Q18A Fuel Pressure Regulator 1 (LWN)

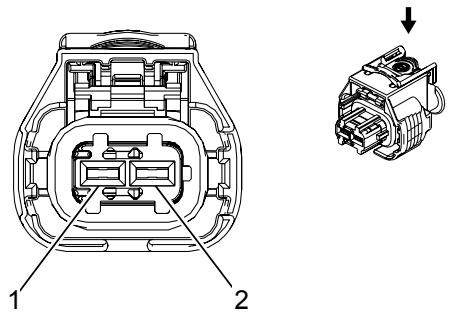

Connector Part Information

Harness Type: Engine

OEM Connector: 1928405521

Service Connector: 13384371

Description: 2-Way F 2.8 Series, Sealed (BK)

Terminal Part Information

Terminal Type ID	Terminated Lead	Diagnostic Test Probe	Terminal Removal Tool	Service Terminal	Tray	Core Crimp	Insulation Crimp
I	Not Required	J-35616-35 (VT)	Not Required	Not Required	Not Required	Not Required	Not Required

Q18A Fuel Pressure Regulator 1 (LWN)

Pin	Size	Color	Circuit	Function	Terminal Type ID	Option
1	0.5	YE	2928	Fuel Metering Valve High Control	I	—
2	0.5	BN/BK	2929	Fuel Metering Valve Low Control	I	—

Q18B Fuel Pressure Regulator 2 (LWN)

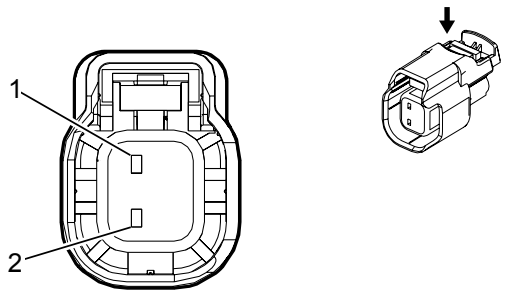

Connector Part Information

Harness Type: Engine

OEM Connector: 13580239

Service Connector: 13580239

Description: 2-Way F 1.5 Series, Sealed (BK)

Terminal Part Information

Terminal Type ID	Terminated Lead	Diagnostic Test Probe	Terminal Removal Tool	Service Terminal	Tray	Core Crimp	Insulation Crimp
I	Not Required	J-35616-2A (GY)	Not Required	Not Required	Not Required	Not Required	Not Required

Q18B Fuel Pressure Regulator 2 (LWN)

Pin	Size	Color	Circuit	Function	Terminal Type ID	Option
1	0.5	L-BU/WH	2530	Fuel Rail Pressure Solenoid Control	I	—
2	0.5	BK/YE	2834	Fuel Rail Pressure Solenoid Low Reference	I	—

Q38 Throttle Body (LCV)

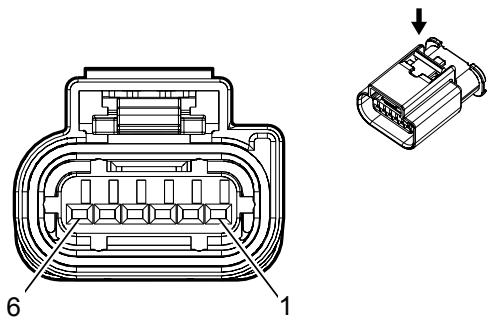

Connector Part Information

Harness Type: Engine

OEM Connector: 2138387-5

Service Connector: 19329736

Description: 6-Way F 1.2 Series, Sealed (BK)

Terminal Part Information

Terminal Type ID	Terminated Lead	Diagnostic Test Probe	Terminal Removal Tool	Service Terminal	Tray	Core Crimp	Insulation Crimp
I	Not Required	J-35616-16 (LT GN)	Not Required	Not Required	Not Required	Not Required	Not Required

Q38 Throttle Body (LCV)

Pin	Size	Color	Circuit	Function	Terminal Type ID	Option
1	0.5	YE	581	Throttle Actuator Control Open	I	—
2	0.5	BN/WH	582	Throttle Actuator Control Close	I	—
3	0.5	L-BU/WH	3630	Throttle Position Sensor (SENT1) Signal	I	—
4	0.5	BK/BN	2752	Throttle Position Sensor Low Reference	I	—
5	0.5	BN/RD	2701	Throttle Position Sensor 5 Volt Reference	I	—
6	—	—	—	Not Occupied	—	—

Q38 Throttle Body (LFX)

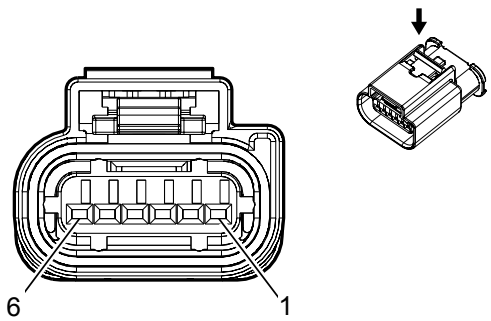

Connector Part Information

Harness Type: Engine

OEM Connector: 2138387-5

Service Connector: 19329736

Description: 6-Way F 1.2 Series, Sealed (BK)

Terminal Part Information

Terminal Type ID	Terminated Lead	Diagnostic Test Probe	Terminal Removal Tool	Service Terminal	Tray	Core Crimp	Insulation Crimp
I	Not Required	J-35616-16 (LT GN)	Not Required	Not Required	Not Required	Not Required	Not Required

Q38 Throttle Body (LFX)

Pin	Size	Color	Circuit	Function	Terminal Type ID	Option
1	0.5	YE	581	Throttle Actuator Control Open	I	—
2	0.5	BN/WH	582	Throttle Actuator Control Close	I	—
3	0.5	L-BU/WH	3630	Throttle Position Sensor (SENT1) Signal	I	—
4	0.5	BK/BN	2752	Throttle Position Sensor Low Reference	I	—
5	0.5	BN/RD	2701	Throttle Position Sensor 5 Volt Reference	I	—
6	—	—	—	Not Occupied	—	—

Q38 Throttle Body (LWN)

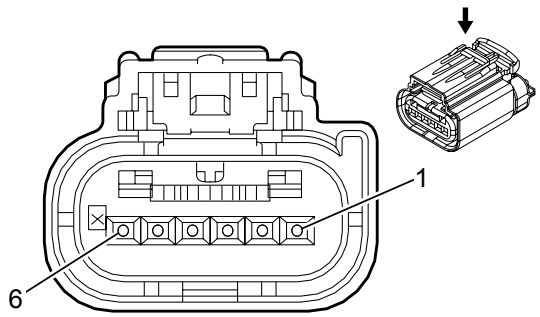

Connector Part Information

Harness Type: Engine

OEM Connector: 1-1438153-3

Service Connector: 13581267

Description: 6-Way F 0.64 GET Series, Sealed (BK)

Terminal Part Information

Terminal Type ID	Terminated Lead	Diagnostic Test Probe	Terminal Removal Tool	Service Terminal	Tray	Core Crimp	Insulation Crimp
I	Not Required	J-35616-64B (LT BU)	Not Required	Not Required	Not Required	Not Required	Not Required

Q38 Throttle Body (LWN)

Pin	Size	Color	Circuit	Function	Terminal Type ID	Option
1	0.5	YE	581	Throttle Actuator Control Open	I	—
2	0.5	BN/WH	582	Throttle Actuator Control Close	I	—
3	0.5	L-BU/WH	3630	Throttle Position Sensor (SENT1) Signal	I	—
4	0.5	BK/BN	2752	Throttle Position Sensor Low Reference	I	—
5	0.5	BN/RD	2701	Throttle Position Sensor 5 Volt Reference	I	—
6	—	—	—	Not Occupied	—	—

Q44 Engine Oil Pressure Control Solenoid Valve (LCV)

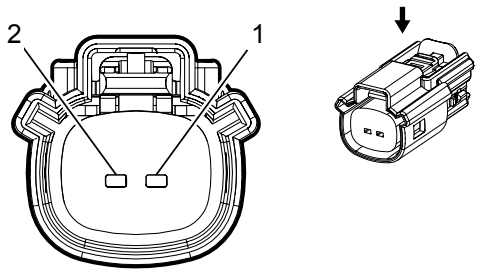

Connector Part Information

Harness Type: Engine

OEM Connector: 33471-0206

Service Connector: 13577534

Description: 2-Way F 1.5 Series, Sealed (BK)

Terminal Part Information

Terminal Type ID	Terminated Lead	Diagnostic Test Probe	Terminal Removal Tool	Service Terminal	Tray	Core Crimp	Insulation Crimp
I	Not Required	J-35616-2A (GY)	Not Required	Not Required	Not Required	Not Required	Not Required

Q44 Engine Oil Pressure Control Solenoid Valve (LCV)

Pin	Size	Color	Circuit	Function	Terminal Type ID	Option
1	0.5	VT/L-BU	5293	Powertrain Main Relay Fused Supply (4)	I	—
2	0.5	L-BU	179	Oil Pump Command Signal	I	—

Q46 A/C Compressor Solenoid Valve

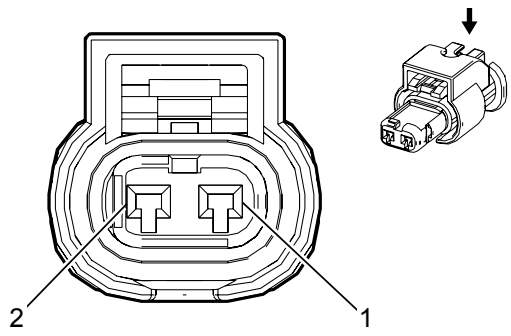

Connector Part Information

Harness Type: Engine

OEM Connector: 2-1823608-5

Service Connector: 19299928

Description: 2-Way F 1.2 Multiple Contact Point Series, Sealed (BK with NA Inner Connector)

Terminal Part Information

Terminal Type ID	Terminated Lead	Diagnostic Test Probe	Terminal Removal Tool	Service Terminal	Tray	Core Crimp	Insulation Crimp
I	Not Required	J-35616-16 (LT GN)	Not Required	Not Required	Not Required	Not Required	Not Required
I	Not Required	J-35616-16 (LT GN)	Not Required	Not Required	Not Required	Not Required	Not Required

Q46 A/C Compressor Solenoid Valve

Pin	Size	Color	Circuit	Function	Terminal Type ID	Option
1	0.75	L-BU/YE	7574	Electric Variable Displacement Control	I	—
2	0.75	L-BU/BN	7573	Electric Variable Displacement Supply	I	—

Q47 Exhaust Gas Recirculation Cooler Bypass Solenoid Valve (LWN)

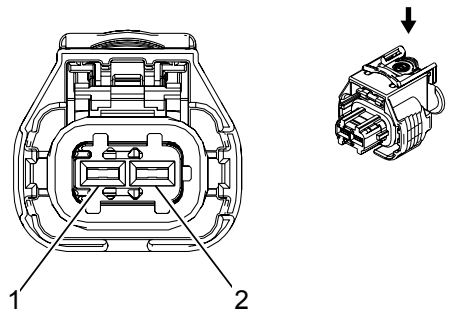

Connector Part Information

Harness Type: Engine

OEM Connector: 1928405521

Service Connector: 13384371

Description: 2-Way F 2.8 Series, Sealed (BK)

Terminal Part Information

Terminal Type ID	Terminated Lead	Diagnostic Test Probe	Terminal Removal Tool	Service Terminal	Tray	Core Crimp	Insulation Crimp
I	Not Required	J-35616-64B (LT BU)	Not Required	Not Required	Not Required	Not Required	Not Required

Q47 Exhaust Gas Recirculation Cooler Bypass Solenoid Valve (LWN)

Pin	Size	Color	Circuit	Function	Terminal Type ID	Option
1	0.5	YE/L-BU	3231	Exhaust Gas Recirculation Cooler Bypass Solenoid Control	I	—
2	0.5	GY/L-BU	3230	Exhaust Gas Recirculation Cooler Bypass Solenoid Control	I	—

Q61 Reductant Injector (LWN)

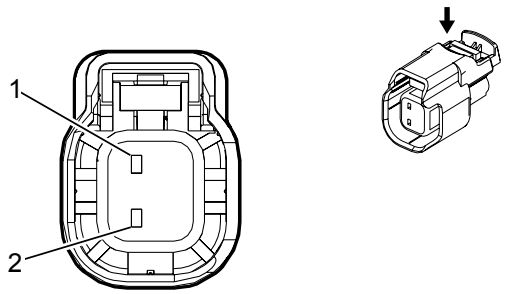

Connector Part Information

Harness Type: Engine

OEM Connector: 13580239

Service Connector: 13580239

Description: 2-Way F 1.5 Series, Sealed (BK)

Terminal Part Information

Terminal Type ID	Terminated Lead	Diagnostic Test Probe	Terminal Removal Tool	Service Terminal	Tray	Core Crimp	Insulation Crimp
I	Not Required	J-35616-2A (GY)	Not Required	Not Required	Not Required	Not Required	Not Required

Q61 Reductant Injector (LWN)

Pin	Size	Color	Circuit	Function	Terminal Type ID	Option
1	0.5	BN/WH	3100	DEF Dosing Valve Low Control	I	—
2	0.5	BN	3099	DEF Dosing Valve High Control	I	—

Q67 Exhaust Aftertreatment Fuel Injector (LWN)

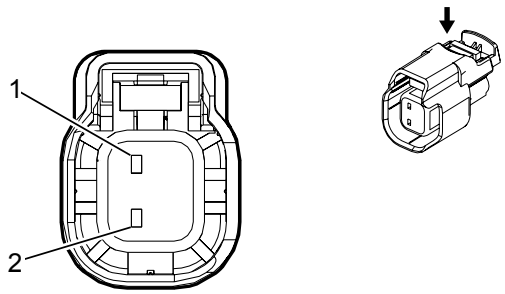

Connector Part Information

Harness Type: Chassis

OEM Connector: 34062-0025

Service Connector: 13580230

Description: 2-Way F 1.5 Series, Sealed (BK)

Terminal Part Information

Terminal Type ID	Terminated Lead	Diagnostic Test Probe	Terminal Removal Tool	Service Terminal	Tray	Core Crimp	Insulation Crimp
I	Not Required	J-35616-2A (GY)	Not Required	Not Required	Not Required	Not Required	Not Required

Q67 Exhaust Aftertreatment Fuel Injector (LWN)

Pin	Size	Color	Circuit	Function	Terminal Type ID	Option
1	0.5	VT/BN	2927	Hydrocarbon Injector Low Control	I	—
2	0.5	BN/L-BU	2926	Hydrocarbon Injector High Control	I	—

R6A Terminating Resistor - High Speed Bus

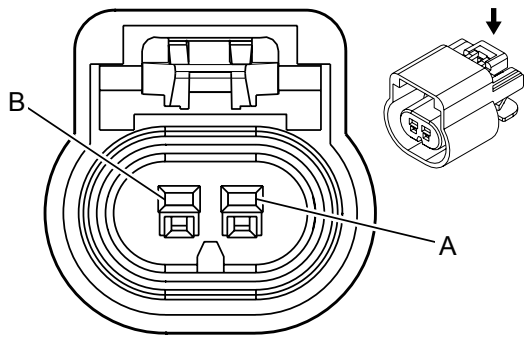

Connector Part Information

Harness Type: Chassis

OEM Connector: 13510085

Service Connector: 13580114

Description: 2-Way F 150 GT Series, Sealed (BK)

Terminal Part Information

Terminal Type ID	Terminated Lead	Diagnostic Test Probe	Terminal Removal Tool	Service Terminal	Tray	Core Crimp	Insulation Crimp
I	Not Required	J-35616-14 (GN)	Not Required	Not Required	Not Required	Not Required	Not Required

R6A Terminating Resistor - High Speed Bus

Pin	Size	Color	Circuit	Function	Terminal Type ID	Option
A	0.5	L-BU	2500	High Speed GMLAN Serial Data (+) (1)	I	—
B	0.5	WH	2501	High Speed GMLAN Serial Data (-) (1)	I	—

R10 Cooling Fan Resistor (LWN)

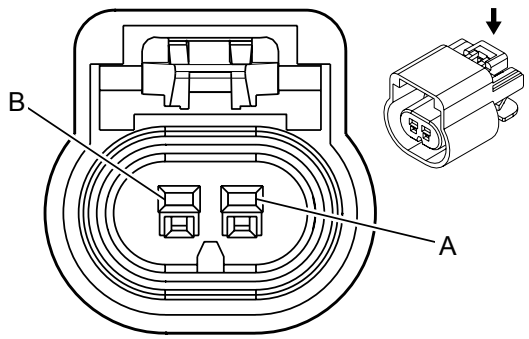

Connector Part Information

Harness Type: Engine

OEM Connector: 13510085

Service Connector: 13580114

Description: 2-Way F 150 GT Series, Sealed (BK)

Terminal Part Information

Terminal Type ID	Terminated Lead	Diagnostic Test Probe	Terminal Removal Tool	Service Terminal	Tray	Core Crimp	Insulation Crimp
I	Not Required	J-35616-14 (GN)	Not Required	Not Required	Not Required	Not Required	Not Required

R10 Cooling Fan Resistor (LWN)

Pin	Size	Color	Circuit	Function	Terminal Type ID	Option
A	0.5	GY/RD	2365	Cooling Fan Speed 5 Volt Reference	I	—
B	0.5	L-BU/VT	2364	Cooling Fan Speed Signal	I	—

S3 Transmission Shift Lever (MYB)

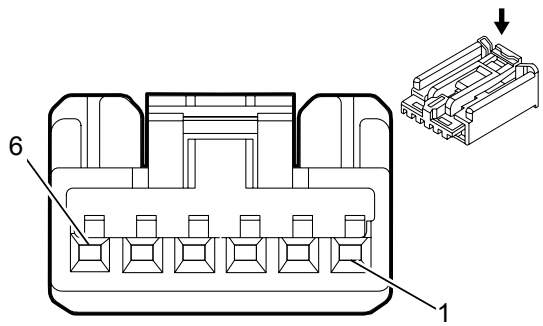

Connector Part Information

Harness Type: Floor Console

OEM Connector: AIT2PB-06-1AK

Service Connector: Service by Harness - See Part Catalog

Description: 6-Way F 0.64 Kaizen Series (BK)

Terminal Part Information

Terminal Type ID	Terminated Lead	Diagnostic Test Probe	Terminal Removal Tool	Service Terminal	Tray	Core Crimp	Insulation Crimp
I	Not Required	J-35616-64B (LT BU)	Not Required	Not Required	Not Required	Not Required	Not Required

S3 Transmission Shift Lever (MYB)

Pin	Size	Color	Circuit	Function	Terminal Type ID	Option
1	—	—	—	Not Occupied	—	—
2	0.5	BK	2050	Ground	I	—
3	0.35	VT/YE	5526	Tap Up/Tap Down Switch Signal	I	—
4	0.5	VT/BK	7553	Park Lock Solenoid Control	I	—
5	—	—	—	Not Occupied	—	—
6	0.5	WH/VT	5905	Key Capture/Column Lock Shift Position Signal	I	—

S13D Door Lock Switch - Driver (ATG)

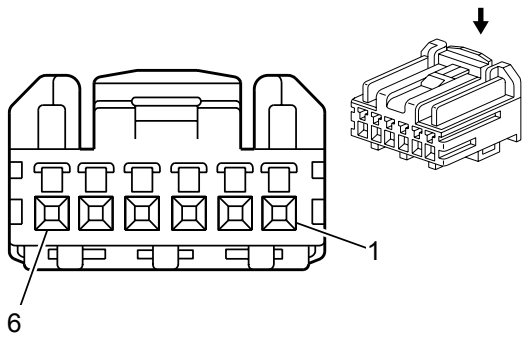

Connector Part Information

Harness Type: Driver Door

OEM Connector: HCMPB-C06-K

Service Connector: Service by Harness - See Part Catalog

Description: 6-Way F 0.64 HCM Series (BK)

Terminal Part Information

Terminal Type ID	Terminated Lead	Diagnostic Test Probe	Terminal Removal Tool	Service Terminal	Tray	Core Crimp	Insulation Crimp
I	Not Required	J-35616-64B (LT BU)	Not Required	Not Required	Not Required	Not Required	Not Required

S13D Door Lock Switch - Driver (ATG)

Pin	Size	Color	Circuit	Function	Terminal Type ID	Option
1	—	—	—	Not Occupied	—	—
2	0.35	YE	6817	LED Backlight Dimming Control	I	—
3	0.35	BN/WH	781	Driver Door Lock Switch Unlock Signal	I	—
4	0.35	BN/YE	780	Driver Door Lock Switch Lock Signal	I	—
5	0.5	BK	3550	Ground	I	—
6	—	—	—	Not Occupied	—	—

S13P Door Lock Switch - Passenger (ATG)

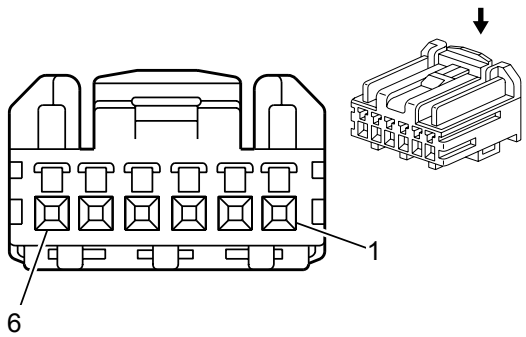

Connector Part Information

Harness Type: Passenger Door

OEM Connector: HCMPB-C06-K

Service Connector: Service by Harness - See Part Catalog

Description: 6-Way F 0.64 HCM Series (BK)

Terminal Part Information

Terminal Type ID	Terminated Lead	Diagnostic Test Probe	Terminal Removal Tool	Service Terminal	Tray	Core Crimp	Insulation Crimp
I	Not Required	J-35616-64B (LT BU)	Not Required	Not Required	Not Required	Not Required	Not Required

S13P Door Lock Switch - Passenger (ATG)

Pin	Size	Color	Circuit	Function	Terminal Type ID	Option
1	—	—	—	Not Occupied	—	—
2	0.35	YE	6817	LED Backlight Dimming Control	I	—
3	0.35	BN/VT	245	Passenger Door Lock Switch Unlock Control	I	—
4	0.35	YE/VT	244	Passenger Door Lock Switch Lock Control	I	—
5	0.35	BK	3650	Ground	I	—
6	—	—	—	Not Occupied	—	—

S30 Headlamp Switch

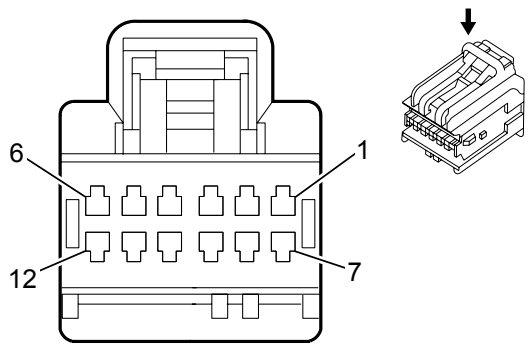

Connector Part Information

Harness Type: Instrument Panel

OEM Connector: 89047364

Service Connector: 89047364

Description: 12-Way F 0.64 Series (BK)

Terminal Part Information

Terminal Type ID	Terminated Lead	Diagnostic Test Probe	Terminal Removal Tool	Service Terminal	Tray	Core Crimp	Insulation Crimp
I	13575845	J-35616-64B (LT BU)	J-38125-215A	SAIT-A03T-M064	23	P	P

S30 Headlamp Switch

Pin	Size	Color	Circuit	Function	Terminal Type ID	Option
1	0.35	WH/VT	103	Headlamp Switch On Signal	I	—
2	0.5	YE	6817	LED Backlight Dimming Control	I	—
3	0.35	L-GN/BN	306	Headlamp Switch Headlamps Off Signal Control	I	—
4	—	—	—	Not Occupied	—	—
5	0.35	L-GN/GY	13	Headlamp Switch Park Lamp Signal	I	—
6	—	—	—	Not Occupied	—	—
7	0.35	BK/YE	5005	Instrument Panel Lamp Dimmer Switch Low Reference	I	—
8	0.35	BK/WH	2151	Signal Ground	I	—
9	—	—	—	Not Occupied	—	—

10	0.35	L-BU/GY	192	Front Fog Lamp Switch Signal	I	T3U
11	0.35	YE/GY	44	Instrument Panel Lamp Dimmer Switch Signal	I	—
12	0.35	L-BU/RD	1688	5 Volt Reference	I	—

S32D Seat Heating Switch - Driver (KA1)

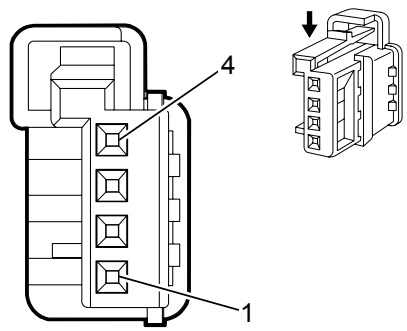

Connector Part Information

Harness Type: Instrument Panel

OEM Connector: 13271139

Service Connector: 13576536

Description: 4-Way F 0.64 Micro-Quadlock Series (WH)

Terminal Part Information

Terminal Type ID	Terminated Lead	Diagnostic Test Probe	Terminal Removal Tool	Service Terminal	Tray	Core Crimp	Insulation Crimp
I	Not Required	J-35616-64B (LT BU)	Not Required	Not Required	Not Required	Not Required	Not Required
I	Not Required	J-35616-64B (LT BU)	Not Required	Not Required	Not Required	Not Required	Not Required

S32D Seat Heating Switch - Driver (KA1)

Pin	Size	Color	Circuit	Function	Terminal Type ID	Option
1	0.35	BK	2050	Ground	I	—
2	—	—	—	Not Occupied	—	—
3	0.5	L-GN/WH	7527	Local Interconnect Network Serial Data Bus 5	I	—
4	0.5	RD/GY	2840	Battery Positive Voltage	I	—

S32P Seat Heating Switch - Passenger (KA1)

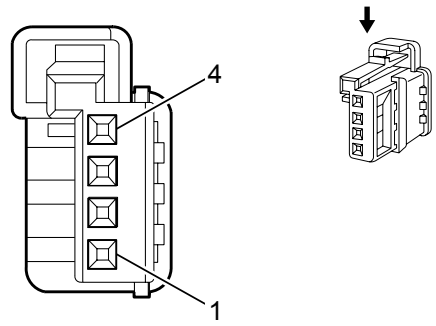

Connector Part Information

Harness Type: Instrument Panel

OEM Connector: 13580946

Service Connector: 13587956

Description: 4-Way F 0.64 Micro Quadlok Series (BN)

Terminal Part Information

Terminal Type ID	Terminated Lead	Diagnostic Test Probe	Terminal Removal Tool	Service Terminal	Tray	Core Crimp	Insulation Crimp
I	Not Required	J-35616-64B (LT BU)	Not Required	Not Required	Not Required	Not Required	Not Required
I	Not Required	J-35616-64B (LT BU)	Not Required	Not Required	Not Required	Not Required	Not Required

S32P Seat Heating Switch - Passenger (KA1)

Pin	Size	Color	Circuit	Function	Terminal Type ID	Option
1	0.35	BK	2050	Ground	I	—
2	—	—	—	Not Occupied	—	—
3	0.5	L-GN/WH	7527	Local Interconnect Network Serial Data Bus 5	I	—
4	0.5	RD/GY	2840	Battery Positive Voltage	I	—

S33 Horn Switch X1

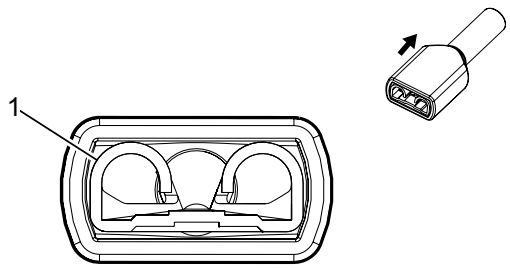

Connector Part Information

Harness Type: Steering Wheel

OEM Connector: 2–520272–2

Service Connector: Service by Component - See Part Catalog

Description: 1-Way F Slide Spade Terminal (NA)

Terminal Part Information

Terminal Type ID	Terminated Lead	Diagnostic Test Probe	Terminal Removal Tool	Service Terminal	Tray	Core Crimp	Insulation Crimp
I	Not Available	Not Available	Not Available	Not Available	Not Available	Not Available	Not Available

S33 Horn Switch X1

Pin	Size	Color	Circuit	Function	Terminal Type ID	Option
1	0.35	L-GN	3287	Horn Switch Signal	I	-

S33 Horn Switch X2

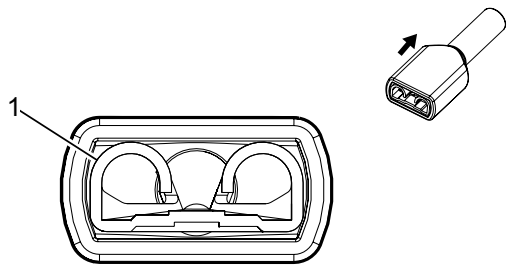

Connector Part Information

Harness Type: Steering Wheel

OEM Connector: 2–520272–2

Service Connector: Service by Component - See Part Catalog

Description: 1-Way F Slide Spade Terminal (NA)

Terminal Part Information

Terminal Type ID	Terminated Lead	Diagnostic Test Probe	Terminal Removal Tool	Service Terminal	Tray	Core Crimp	Insulation Crimp
I	Not Available	Not Available	Not Available	Not Available	Not Available	Not Available	Not Available

S33 Horn Switch X2

Pin	Size	Color	Circuit	Function	Terminal Type ID	Option
1	0.35	BK	2050	Ground	I	-

S39 Ignition Switch

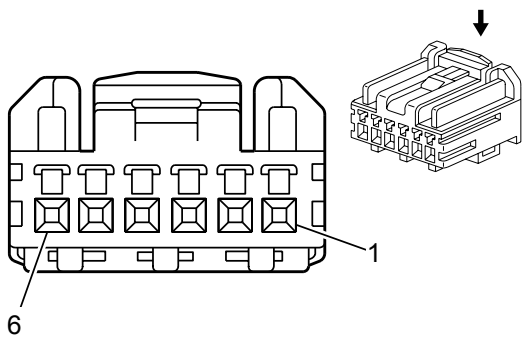

Connector Part Information

Harness Type: Instrument Panel

OEM Connector: 19153361

Service Connector: 19153174

Description: 6-Way F 0.64 HCM Series (BK)

Terminal Part Information

Terminal Type ID	Terminated Lead	Diagnostic Test Probe	Terminal Removal Tool	Service Terminal	Tray	Core Crimp	Insulation Crimp
I	Not Required	J-35616-64B (LT BU)	Not Required	Not Required	Not Required	Not Required	Not Required

S39 Ignition Switch

Pin	Size	Color	Circuit	Function	Terminal Type ID	Option
1	0.5	VT/BK	3	Run/Crank Ignition 1 Voltage	I	—
2	0.5	RD/L-BU	540	Battery Positive Voltage	I	—
3	0.5	VT/YE	4	Accessory Ignition Voltage	I	—
4	0.5	WH/VT	1020	Off/Run/Crank Ignition Voltage	I	—
5	—	—	—	Not Occupied	—	—
6	0.5	WH/BK	1073	Ignition Key Resistor Signal	I	—

S48A Multifunction Switch - Instrument Panel

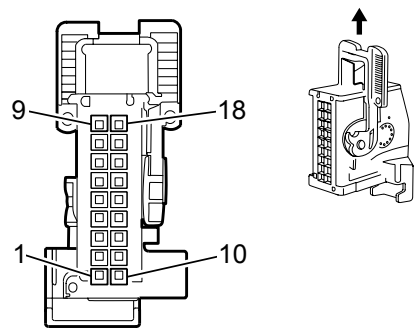

Connector Part Information

Harness Type: Instrument Panel

OEM Connector: 1379102-1

Service Connector: 13504129

Description: 18-Way F Micro-Quadlock Series (BK)

Terminal Part Information

Terminal Type ID	Terminated Lead	Diagnostic Test Probe	Terminal Removal Tool	Service Terminal	Tray	Core Crimp	Insulation Crimp
I	19329754	J-35616-16 (LT GN)	J-38616-12A	Not Available	Not Available	Not Available	Not Available

S48A Multifunction Switch - Instrument Panel

Pin	Size	Color	Circuit	Function	Terminal Type ID	Option
1	0.35	YE	6817	LED Backlight Dimming Control	I	—
2	0.35	WH	6816	Indicator Dimming Control	I	—
3	—	—	—	Not Occupied	—	—
4	0.35	L-BU/YE	6844	ABS/TCS Hill Descent Control Switch Signal	I	—
5	0.35	WH	3152	Lane Departure Warning Indicator Control	I	UEU/UFL
6	—	—	—	Not Occupied	—	—
7	0.5	BN/WH	1429	Standing Lamp Relay Control	I	—
8	0.35	GY/WH	3153	Lane Departure Warning Disable Switch Signal	I	UEU/UFL
9	—	—	—	Not Occupied	—	—

10	0.35	L-GN/WH	111	Hazard Switch Signal	I	—
11	0.35	L-BU/GY	553	Shift Select Switch Performance Signal	I	MYB
12 - 13	—	—	—	Not Occupied	—	—
14	0.35	BK	2050	Ground	I	—
15 - 16	—	—	—	Not Occupied	—	—
17	0.35	L-BU/VT	1788	Traction Control Switch Signal (1)	I	—
18	0.35	GY	158	Cargo Lamp Switch Signal	I	—

S52 Outside Rearview Mirror Switch (DL6/DL9)

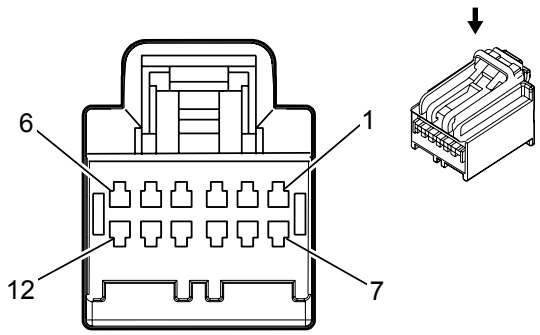

Connector Part Information

Harness Type: Driver Door

OEM Connector: 31410-1121

Service Connector: Service by Harness - See Part Catalog

Description: 12-Way F 64 Series, Sealed (GY)

Terminal Part Information

Terminal Type ID	Terminated Lead	Diagnostic Test Probe	Terminal Removal Tool	Service Terminal	Tray	Core Crimp	Insulation Crimp
I	Not Required	J-35616-64B (LT BU)	Not Required	Not Required	Not Required	Not Required	Not Required

S52 Outside Rearview Mirror Switch (DL6/DL9)

Pin	Size	Color	Circuit	Function	Terminal Type ID	Option
1	0.35	YE	6817	LED Backlight Dimming Control	I	—
2 - 4	—	—	—	Not Occupied	—	—
5	0.35	WH	3398	Passenger Mirror Motor Common Control	I	—
6	0.35	YE/BN	3391	Driver Mirror Motor Common Control	I	—
7	0.35	YE/VT	3397	Passenger Mirror Motor Up (+) Down (-) Control	I	—
8	0.35	VT/L-BU	3390	Driver Mirror Motor Up (+) Down (-) Control	I	—
9	0.35	L-GN/BK	3396	Passenger Mirror Motor Right (+) Left (-) Control	I	—
10	0.35	BN/BK	3389	Driver Mirror Motor Right (+) Left (-) Control	I	—

11	0.5	BK	3550	Ground	I	—
12	0.35	RD/VT	1940	Battery Positive Voltage	I	—

S64D Seat Adjuster Switch – Driver X1

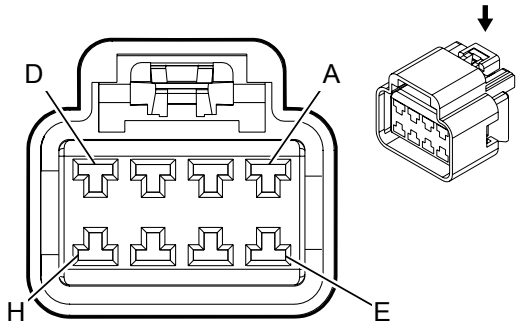

Connector Part Information

Harness Type: Driver Seat Cushion

OEM Connector: 15326924

Service Connector: 13587188

Description: 8-Way F 280 GT Series (BK)

Terminal Part Information

Terminal Type ID	Terminated Lead	Diagnostic Test Probe	Terminal Removal Tool	Service Terminal	Tray	Core Crimp	Insulation Crimp
I	13580074	Not Available	Not Available	Not Available	Not Available	Not Available	Not Available

S64D Seat Adjuster Switch – Driver X1

Pin	Size	Color	Circuit	Function	Terminal Type ID	Option
A	1.5	YE	282	Driver Power Seat Rear Vertical Motor Up Control	I	-
B	2.5	BK	3750	Ground	I	-
C	1.5	YE/L-BU	285	Driver Power Seat Horizontal Motor Forward Control	I	-
D	2.5	RD/YE	5040	Battery Positive Voltage	I	-
E	-	-	-	Not Occupied	-	-
F	1.5	GY/L_GN	284	Driver Power Seat Horizontal Motor Rearward Control	I	-
G	-	-	-	Not Occupied	-	-
H	1.5	GY/L-BU	283	Driver Power Seat Rear Vertical Motor Down Control	I	-

S64D Seat Adjuster Switch – Driver X2 (AL9)

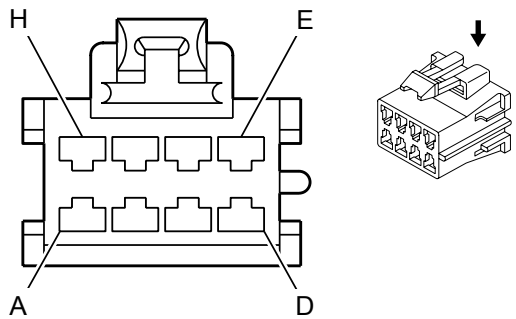

Connector Part Information

Harness Type: Driver Seat Cushion

OEM Connector: 12089287

Service Connector: 15306189

Description: 8-Way F 280 Metri-Pack Series (NA)

Terminal Part Information

Terminal Type ID	Terminated Lead	Diagnostic Test Probe	Terminal Removal Tool	Service Terminal	Tray	Core Crimp	Insulation Crimp
I	Service by Harness – See Part Catalog	J-35616-4A (PU)	J-38125-11A	12066214	2	A	B
II	Service by Harness – See Part Catalog	J-35616-4A (PU)	J-38125-11A	12015858	4	F	G

S64D Seat Adjuster Switch – Driver X2 (AL9)

Pin	Size	Color	Circuit	Function	Terminal Type ID	Option
A	1.5	VT	610	Driver Power Seat Lumbar Motor Rearward Control	I	-
B-C	-	-	-	Not Occupied	-	-
D	1.5	L-BU	611	Driver Power Seat Lumbar Motor Forward Control	I	-
E	2.5	RD/BN	5040	Battery Positive Voltage	II	-
F-G	-	-	-	Not Occupied	-	-
H	2.5	BK	3750	Ground	II	-

S64P Seat Adjuster Switch - Passenger X1 (AAQ)

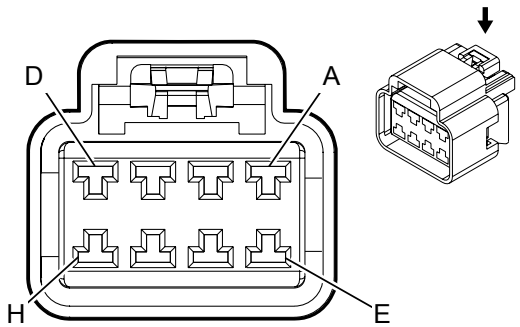

Connector Part Information

Harness Type: Passenger Seat Cushion

OEM Connector: 15326924

Service Connector: 13587188

Description: 8-Way F 280 GT Series (BK)

Terminal Part Information

Terminal Type ID	Terminated Lead	Diagnostic Test Probe	Terminal Removal Tool	Service Terminal	Tray	Core Crimp	Insulation Crimp
I	13580074	Not Available	Not Available	Not Available	Not Available	Not Available	Not Available

S64P Seat Adjuster Switch - Passenger X1 (AAQ)

Pin	Size	Color	Circuit	Function	Terminal Type ID	Option
A	1.5	L-BU/WH	289	Passenger Power Seat Rear Vertical Motor Down Control	I	-
B	2.5	BK	3850	Ground	I	-
C	1.5	YE/WH	296	Passenger Power Seat Horizontal Motor Forward Control Control	I	-
D	2.5	RD/BN	1440	Battery Positive Voltage	I	-
E	-	-	-	Not Occupied	-	-
F	1.5	YE/L-BU	290	Passenger Power Seat Horizontal Motor Rearward Control	I	-
G	-	-	-	Not Occupied	-	-
H	1.5	L-GN/WH	288	Passenger Power Seat Rear Vertical Motor Up Control	I	-

S64P Seat Adjuster Switch - Passenger X2 (AAQ)

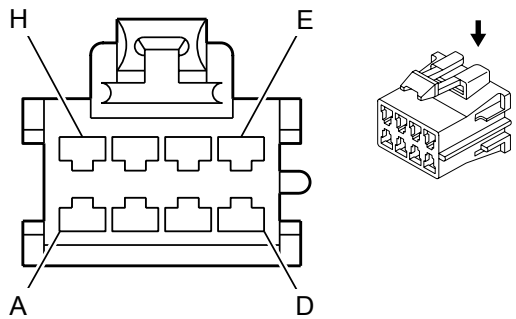

Connector Part Information

Harness Type: Passenger Seat Cushion

OEM Connector: 12089287

Service Connector: 15306189

Description: 8-Way F 280 Metri-Pack Series (NA)

Terminal Part Information

Terminal Type ID	Terminated Lead	Diagnostic Test Probe	Terminal Removal Tool	Service Terminal	Tray	Core Crimp	Insulation Crimp
I	Service by Harness – See Part Catalog	J-35616-4A (PU)	J-38125-11A	12066214	2	A	B
II	Service by Harness – See Part Catalog	J-35616-4A (PU)	J-38125-11A	12015858	4	F	G

S64P Seat Adjuster Switch - Passenger X2 (AAQ)

Pin	Size	Color	Circuit	Function	Terminal Type ID	Option
A	1.5	VT	210	Passenger Power Seat Lumbar Motor Rearward Control	I	-
B-C	-	-	-	Not Occupied	-	-
D	1.5	L-BU	211	Passenger Power Seat Lumbar Motor Forward Control	I	-
E	2.5	RD/BN	1440	Battery Positive Voltage	II	-
F-G	-	-	-	Not Occupied	-	-
H	2.5	BK	3850	Ground	II	-

S70E Steering Wheel Controls Switch - Radio Presets (UDD)

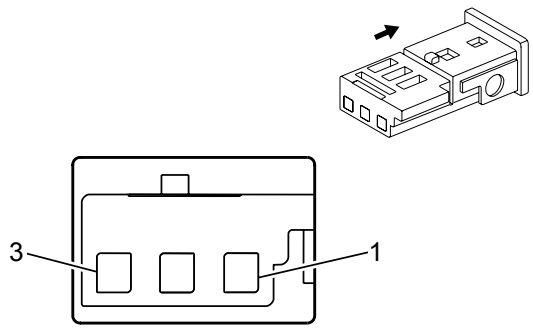

Connector Part Information

Harness Type: Steering Wheel

OEM Connector: 13153088

Service Connector: 13314078

Description: 3-Way F 0.64 Micro-Quadlock Series (BK)

Terminal Part Information

Terminal Type ID	Terminated Lead	Diagnostic Test Probe	Terminal Removal Tool	Service Terminal	Tray	Core Crimp	Insulation Crimp
I	Not Available	J-35616-64B (L-BU)	Not Available	Not Available	Not Available	Not Available	Not Available

S70E Steering Wheel Controls Switch - Radio Presets (UDD)

Pin	Size	Color	Circuit	Function	Terminal Type ID	Option
1	0.35	WH/YE	4313	Radio Favorite Forward Signal	I	-
2	0.35	YE/RD	4312	Radio Favorite Back Signal	I	-
3	0.35	BK	2050	Ground	I	-

S70F Steering Wheel Controls Switch - Radio Volume (UDD)

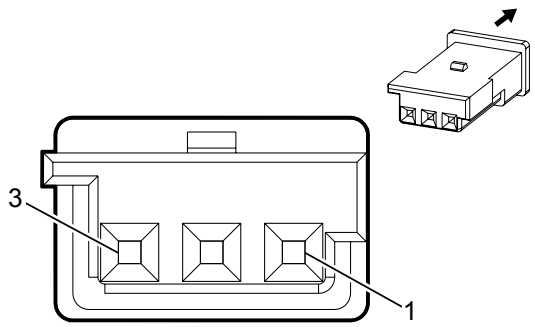

Connector Part Information

Harness Type: Steering Wheel

OEM Connector: 19153569

Service Connector: 13576530

Description: 3-Way F Micro-Quadlock Series (PU)

Terminal Part Information

Terminal Type ID	Terminated Lead	Diagnostic Test Probe	Terminal Removal Tool	Service Terminal	Tray	Core Crimp	Insulation Crimp
I	Not Available	J-35616-64B (L-BU)	Not Available	Not Available	Not Available	Not Available	Not Available

S70F Steering Wheel Controls Switch - Radio Volume (UDD)

Pin	Size	Color	Circuit	Function	Terminal Type ID	Option
1	0.35	RD	4315	Radio Volume Up Signal	I	-
2	0.35	GY/BN	4314	Radio Volume Down Signal	I	-
3	0.35	BK	2050	Ground	I	-

S70L Steering Wheel Controls Switch - Left

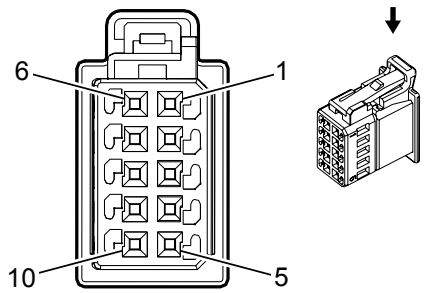

Connector Part Information

Harness Type: Steering Wheel

OEM Connector: 13582766

Service Connector: 19299776

Description: 10-Way F 0.64 MQS Series (BK)

Terminal Part Information

Terminal Type ID	Terminated Lead	Diagnostic Test Probe	Terminal Removal Tool	Service Terminal	Tray	Core Crimp	Insulation Crimp
I	Not Available	J-35616-64B (L-BU)	Not Available	Not Available	Not Available	Not Available	Not Available

S70L Steering Wheel Controls Switch - Left

Pin	Size	Color	Circuit	Function	Terminal Type ID	Option
1	0.35	BK	2050	Ground	I	-
2	-	-	-	Not Occupied	-	-
3	0.35	GY/OG	5737	Adaptive Cruise Control Gap Up/Down Switch Signal	I	UEU
4	0.35	BN/YE	1884	Cruise Control Set/Coast/Resume/Accelerate Switch Signal	I	-
5	-	-	-	Not Occupied	-	-
6	0.35 0.35	BN YE	6136 6817	Supply Voltage LED Backlight Dimming Control	I	UDC UDD
7-8	-	-	-	Not Occupied	-	-
9	0.35	WH	1444	12 Volt Reference	I	-
10	0.35	RD/YE	3040	Battery Positive Voltage	I	-

S70R Steering Wheel Controls Switch - Right

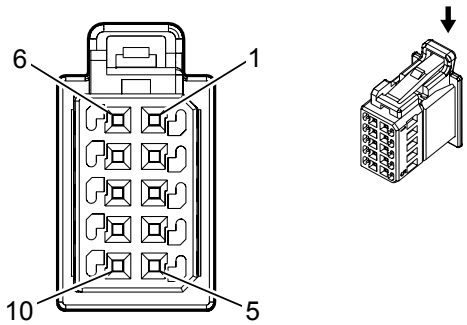

Connector Part Information

Harness Type: Steering Wheel

OEM Connector: 13582767

Service Connector: Service by Harness - See Part Catalog

Description: 10-Way F 0.64 Micro-Quadlock Series (BK)

Terminal Part Information

Terminal Type ID	Terminated Lead	Diagnostic Test Probe	Terminal Removal Tool	Service Terminal	Tray	Core Crimp	Insulation Crimp
I	Not Available	J-35616-64B (L-BU)	Not Available	Not Available	Not Available	Not Available	Not Available

S70R Steering Wheel Controls Switch - Right

Pin	Size	Color	Circuit	Function	Terminal Type ID	Option
1	0.35 0.35	BN YE	6136 6817	Supply Voltage LED Backlight Dimming Control	I	UDC UDD
2	0.35	WH/RD	1444	12 Volt Reference	I	UDC
3	0.35	L-GN/BK	3894	Local Interconnect Network Bus 12	I	UDD
4	0.35	L-GN	6818	Steering Wheel Resistor Ladder Signal #1	I	UDC
5	0.35	RD/YE	3040	Battery Positive Voltage	I	-
6	0.35	BK	2050	Ground	I	-
7	.75	RD	4315	Radio Volume Up Signal	I	UDD
8	0.75	GY/BN	4314	Radio Volume Down Signal	I	UDD
9	0.35	WH/YE	4313	Radio Favorite Forward Signal	I	UDD
10	0.35	YE/RD	4312	Radio Favorite Back Signal	I	UDD

S76 Trailer Brake Control Switch (JL1)

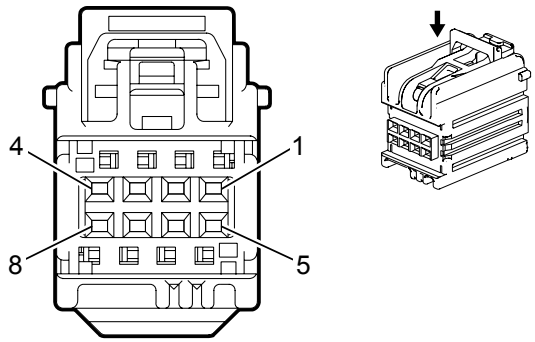

Connector Part Information

Harness Type: Instrument Panel

OEM Connector: 89047352

Service Connector: 13576542

Description: 8-Way F YESC Kaizen Series (BK)

Terminal Part Information

Terminal Type ID	Terminated Lead	Diagnostic Test Probe	Terminal Removal Tool	Service Terminal	Tray	Core Crimp	Insulation Crimp
I	Not Required	J-35616-64B (LT BU)	Not Required	Not Required	Not Required	Not Required	Not Required

S76 Trailer Brake Control Switch (JL1)

Pin	Size	Color	Circuit	Function	Terminal Type ID	Option
1 - 2	—	—	—	Not Occupied	—	—
3	0.5	L-BU/RD	7632	Integrated Trailer Brake Controller Switch 5 Volt Reference	I	—
4	0.5	YE	7635	Integrated Trailer Brake Controller Manual Apply Signal	I	—
5	0.5	BN	7634	Integrated Trailer Brake Controller Redundant Manual Apply Signal	I	—
6	0.5	L-GN/BK	7633	Integrated Trailer Brake Controller User Gain Signal	I	—
7	0.35	YE	6817	LED Backlight Dimming Control	I	—
8	0.5	BK/BN	7631	Integrated Trailer Brake Controller Switch Low Reference	I	—

S77 Transfer Case Shift Control Switch (NQ6/NQ7)

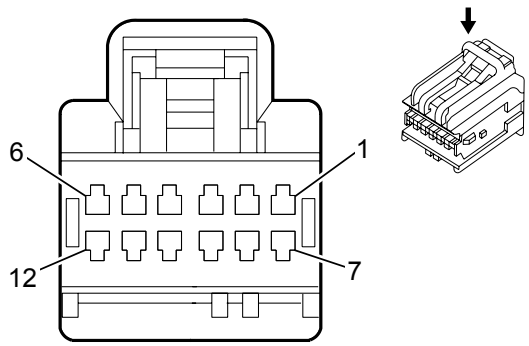

Connector Part Information

Harness Type: Instrument Panel

OEM Connector: 89047364

Service Connector: 89047364

Description: 12-Way F 0.64 Series (BK)

Terminal Part Information

Terminal Type ID	Terminated Lead	Diagnostic Test Probe	Terminal Removal Tool	Service Terminal	Tray	Core Crimp	Insulation Crimp
I	13575845	J-35616-64B (LT BU)	J-38125-215A	SAIT-A03T-M064	23	P	P

S77 Transfer Case Shift Control Switch (NQ6/NQ7)

Pin	Size	Color	Circuit	Function	Terminal Type ID	Option
1	—	—	—	Not Occupied	—	—
2	0.5	VT/BN	300	Run Ignition 3 Voltage	I	—
3	0.35	BN	1560	Neutral Indicator Control	I	—
4	0.35	WH	6816	Indicator Dimming Control	I	—
5	0.35	YE	6817	LED Backlight Dimming Control	I	—
6	0.5	BK	2050	Ground	I	—
7	0.35	GY/L-GN	1561	AWD Indicator Control	I	NQ6
8	0.35	L-GN/BK	1563	2 HI Indicator Control	I	—

9	0.35	BN/BK	1566	4 HI Indicator Control	I	—
10	0.35	VT/WH	1565	4 LO Indicator Control	I	—
11	0.35	GY/RD	6029	Four Wheel Drive Mode Switch 5 Volt Reference	I	—
12	0.35	L-BU/YE	1693	Four Wheel Drive Switch Signal	I	—

S78 Turn Signal/Multifunction Switch

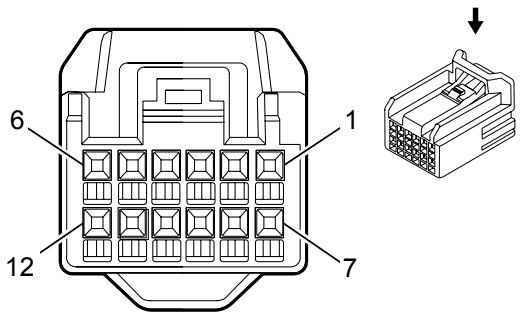

Connector Part Information

Harness Type: Instrument Panel

OEM Connector: 19167197

Service Connector: 13576635

Description: 12-Way F 0.64 Series (BK)

Terminal Part Information

Terminal Type ID	Terminated Lead	Diagnostic Test Probe	Terminal Removal Tool	Service Terminal	Tray	Core Crimp	Insulation Crimp
I	13575870	J-35616-64B (LT BU)	J-38125-12A	SNAC3-A021T-M0.64	12	J	J

S78 Turn Signal/Multifunction Switch

Pin	Size	Color	Circuit	Function	Terminal Type ID	Option
1	0.35	WH/L-GN	663	Hazard Switch Left Turn Signal	I	—
2	0.35	WH	524	Headlamp Dimmer Switch High Beam Signal	I	—
3	0.35	BK/WH	2151	Signal Ground	I	—
4	0.35	YE/BN	307	Headlamp Switch Flash To Pass Signal	I	—
5	0.35	GY/L-BU	893	Driver Information Center Select Menu Switch Signal	I	—
6	0.35	BK/BN	897	Driver Information Center Switch Low Reference	I	—
7	0.35	VT/L-BU	664	Hazard Switch Right Turn Signal	I	—
8 - 11	—	—	—	Not Occupied	—	—

12	0.35	L-GN/WH	1358	Driver Information Center Switch Signal	I	—

S79D Window Switch - Driver

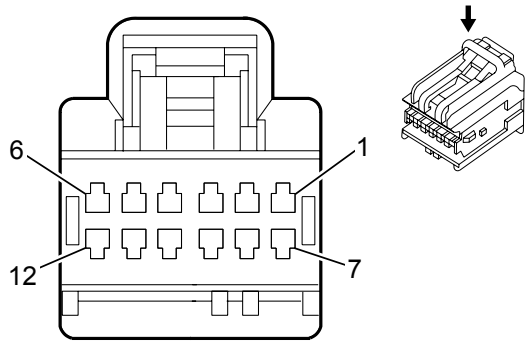

Connector Part Information

Harness Type: Driver Door

OEM Connector: 31410-1120

Service Connector: Service by Harness - See Part Catalog

Description: 12-Way F 0.64 Series, Sealed (BK)

Terminal Part Information

Terminal Type ID	Terminated Lead	Diagnostic Test Probe	Terminal Removal Tool	Service Terminal	Tray	Core Crimp	Insulation Crimp
I	Not Required	J-35616-64B (LT BU)	Not Required	Not Required	Not Required	Not Required	Not Required
I	Not Required	J-35616-64B (LT BU)	Not Required	Not Required	Not Required	Not Required	Not Required

S79D Window Switch - Driver

Pin	Size	Color	Circuit	Function	Terminal Type ID	Option
1	0.75	BK	3550	Ground	I	—
2	0.35	L-GN/VT	7628	Power Window Motor Left Front Express Control	I	—
3	0.35	GY	1136	Power Window Master Switch Left Front Down Signal	I	—
4	0.5	RD/VT	1940	Battery Positive Voltage	I	—
5	0.5	L-GN/YE	6134	Local Interconnect Network Serial Data Bus 3	I	—
6	0.35	L-GN/WH	1300	Power Window Master Switch Left Front Up Signal	I	—
7	0.35	WH/VT	3270	Driver Door Lock Motor Status Signal	I	—

8	0.35	L-BU/VT	1124	Door Lock Key Switch Unlock Signal	I	—
9	—	—	—	Not Occupied	—	—
10	0.35	YE/BN	3265	Child Security Lock Switch Signal	I	—
11	0.35	WH	6816	Indicator Dimming Control	I	—
12	0.35	GY	5697	Child Lockout Indicator Control	I	—

S79LR Window Switch - Left Rear (Crew Cab)

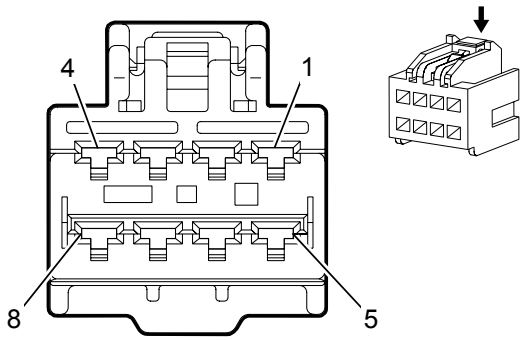

Connector Part Information

Harness Type: Left Rear Door

OEM Connector: 6098-4713

Service Connector: Service by Harness - See Part Catalog

Description: 8-Way F 2.8 Series (BK)

Terminal Part Information

Terminal Type ID	Terminated Lead	Diagnostic Test Probe	Terminal Removal Tool	Service Terminal	Tray	Core Crimp	Insulation Crimp
I	Not Required	J-35616-35 (VT)	Not Required	Not Required	Not Required	Not Required	Not Required
I	Not Required	J-35616-35 (VT)	Not Required	Not Required	Not Required	Not Required	Not Required

S79LR Window Switch - Left Rear (Crew Cab)

Pin	Size	Color	Circuit	Function	Terminal Type ID	Option
1	0.5	L-GN/GY	6135	Local Interconnect Network Serial Data Bus 4	I	—
2	0.35	GY	747	Left Rear Door Ajar Switch Signal	I	—
3	0.35	BK	3350	Ground	I	—
4	—	—	—	Not Occupied	—	—
5	2.5	BK	3350	Ground	I	—
6	2.5	L-BU/VT	668	Power Window Motor Left Rear Up Control	I	—
7	2.5	YE/L-BU	669	Power Window Motor Left Rear Down Control	I	—
8	2.5	RD/L-BU	1240	Battery Positive Voltage	I	—

S79P Window Switch - Passenger

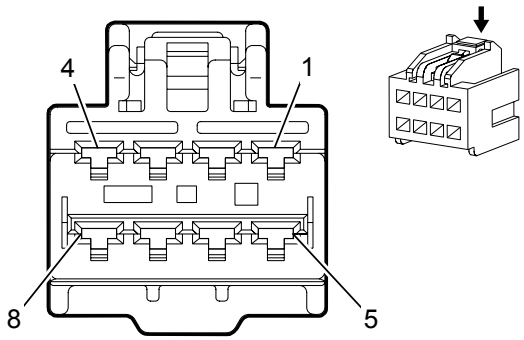

Connector Part Information

Harness Type: Passenger Door

OEM Connector: 6098-4713

Service Connector: Service by Harness - See Part Catalog

Description: 8-Way F 2.8 Series (BK)

Terminal Part Information

Terminal Type ID	Terminated Lead	Diagnostic Test Probe	Terminal Removal Tool	Service Terminal	Tray	Core Crimp	Insulation Crimp
I	Not Required	J-35616-35 (VT)	Not Required	Not Required	Not Required	Not Required	Not Required
I	Not Required	J-35616-35 (VT)	Not Required	Not Required	Not Required	Not Required	Not Required

S79P Window Switch - Passenger

Pin	Size	Color	Circuit	Function	Terminal Type ID	Option
1	2.5	BK	3650	Ground	I	—
2	2.5	L-GN/GY	3387	Power Window Motor Passenger Up Control	I	—
3	2.5	YE/L-BU	3388	Power Window Motor Passenger Down Control	I	—
4	2.5	RD/WH	1340	Battery Positive Voltage	I	—
5	0.5	L-GN/YE	6134	Local Interconnect Network Serial Data Bus 3	I	—
6 - 7	—	—	—	Not Occupied	—	—
8	0.35	GY	746	Right Front Door Ajar Switch Signal	I	—

S79RR Window Switch - Right Rear (Crew Cab)

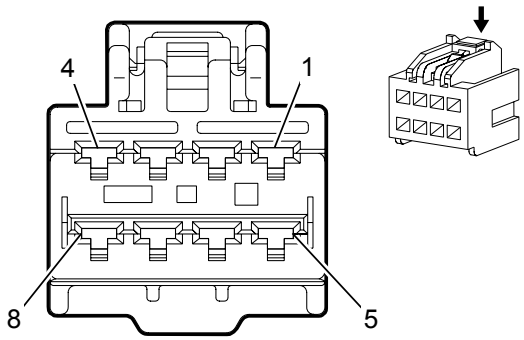

Connector Part Information

Harness Type: Right Rear Door

OEM Connector: 6098-4713

Service Connector: Service by Harness - See Part Catalog

Description: 8-Way F 2.8 Series (BK)

Terminal Part Information

Terminal Type ID	Terminated Lead	Diagnostic Test Probe	Terminal Removal Tool	Service Terminal	Tray	Core Crimp	Insulation Crimp
I	Not Required	J-35616-35 (VT)	Not Required	Not Required	Not Required	Not Required	Not Required
I	Not Required	J-35616-35 (VT)	Not Required	Not Required	Not Required	Not Required	Not Required

S79RR Window Switch - Right Rear (Crew Cab)

Pin	Size	Color	Circuit	Function	Terminal Type ID	Option
1	0.5	L-GN/GY	6135	Local Interconnect Network Serial Data Bus 4	I	—
2	0.35	GY	748	Right Rear Door Ajar Switch Signal	I	—
3 - 4	—	—	—	Not Occupied	—	—
5	2.5	BK	3450	Ground	I	—
6	2.5	L-BU/GY	670	Power Window Motor Right Rear Up Control	I	—
7	2.5	L-GN/BK	671	Power Window Motor Right Rear Down Control	I	—
8	2.5	RD/WH	1340	Battery Positive Voltage	I	—

S82 Windshield Wiper/Washer Switch

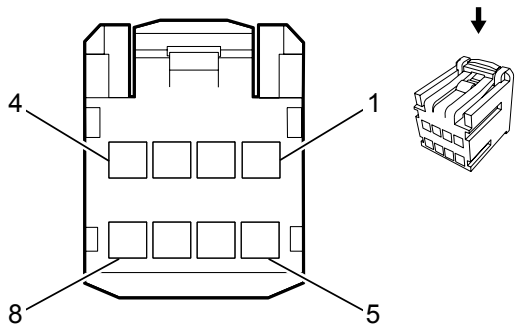

Connector Part Information

Harness Type: Instrument Panel

OEM Connector: 19153437

Service Connector: 13576541

Description: 8-Way F 1.2 HCM Series (BK)

Terminal Part Information

Terminal Type ID	Terminated Lead	Diagnostic Test Probe	Terminal Removal Tool	Service Terminal	Tray	Core Crimp	Insulation Crimp
I	Not Required	J-35616-64B (LT BU)	Not Required	Not Required	Not Required	Not Required	Not Required

S82 Windshield Wiper/Washer Switch

Pin	Size	Color	Circuit	Function	Terminal Type ID	Option
1	0.35	GY	1715	Windshield Wiper Switch High Signal	I	—
2	0.35	BK/GY	6009	Windshield Wiper Switch Low Reference	I	—
3	0.35	YE/L-BU	1714	Windshield Wiper Switch Low Signal	I	—
4	—	—	—	Not Occupied	—	—
5	0.35	WH/BK	94	Windshield Washer Switch Signal	I	—
6 - 8	—	—	—	Not Occupied	—	—

T3 Audio Amplifier X1 (UQA)

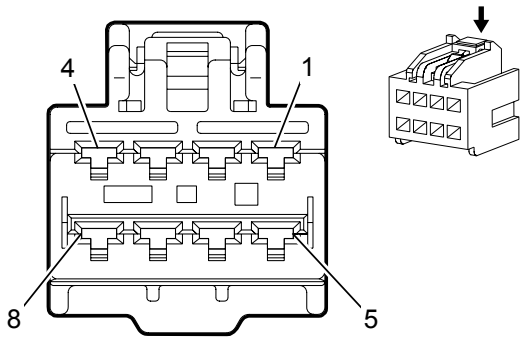

Connector Part Information

Harness Type: Instrument Panel

OEM Connector: 15134093

Service Connector: 13580111

Description: 8-Way F 2.8 Series (BK)

Terminal Part Information

Terminal Type ID	Terminated Lead	Diagnostic Test Probe	Terminal Removal Tool	Service Terminal	Tray	Core Crimp	Insulation Crimp
I	Not Required	J-35616-35 (VT)	Not Required	Not Required	Not Required	Not Required	Not Required
I	Not Required	J-35616-35 (VT)	Not Required	Not Required	Not Required	Not Required	Not Required

T3 Audio Amplifier X1 (UQA)

Pin	Size	Color	Circuit	Function	Terminal Type ID	Option
1	1	YE	200	Right Front Speaker Control (+) (1)	I	—
2	—	—	—	Not Occupied	—	—
3	1	L-BU	201	Left Front Speaker Control (+) (1)	I	—
4	2.5	RD/YE	3740	Battery Positive Voltage	I	—
5	1	YE/BK	117	Right Front Speaker Signal (-) (1)	I	—
6	—	—	—	Not Occupied	—	—
7	1	BN/L-BU	118	Left Front Speaker Signal (-) (1)	I	—
8	2.5	BK/WH	2251	Signal Ground	I	—

T3 Audio Amplifier X2 (UQA)

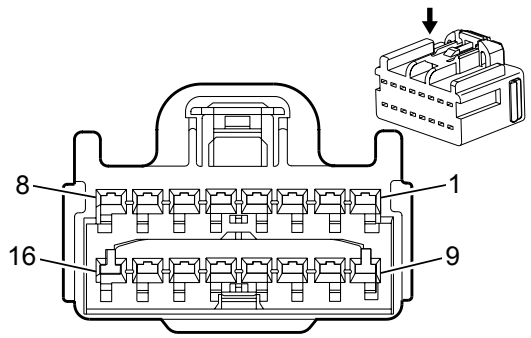

Connector Part Information

Harness Type: Instrument Panel

OEM Connector: 89047090

Service Connector: 89047090

Description: 16-Way F 1.5 Kaizen Series (GN)

Terminal Part Information

Terminal Type ID	Terminated Lead	Diagnostic Test Probe	Terminal Removal Tool	Service Terminal	Tray	Core Crimp	Insulation Crimp
I	13575829	J-35616-2A (GY)	J-38125-11A	Not Available	Not Available	Not Available	Not Available

T3 Audio Amplifier X2 (UQA)

Pin	Size	Color	Circuit	Function	Terminal Type ID	Option
1 - 2	—	—	—	Not Occupied	—	—
3	0.75	YE/WH	1860	Front Center Speaker Control (+)	I	—
4	0.75	YE	200	Right Front Speaker Control (+) (1)	I	—
5	0.75	L-BU	201	Left Front Speaker Control (+) (1)	I	—
6	1	WH	46	Right Rear Speaker Control (+)	I	—
7	1	L-GN	199	Left Rear Speaker Control (+)	I	—
8 - 10	—	—	—	Not Occupied	—	—
11	0.75	L-BU/YE	1960	Front Center Speaker (-) Low Reference	I	—
12	0.75	YE/BK	117	Right Front Speaker Signal (-) (1)	I	—

13	0.75	BN/L-BU	118	Left Front Speaker Signal (-) (1)	I	—
14	1	L-BU/BK	115	Right Rear Speaker Signal (-)	I	—
15	1	L-GN/BK	116	Left Rear Speaker Signal (-)	I	—
16	—	—	—	Not Occupied	—	—

T3 Audio Amplifier X3 (UQA)

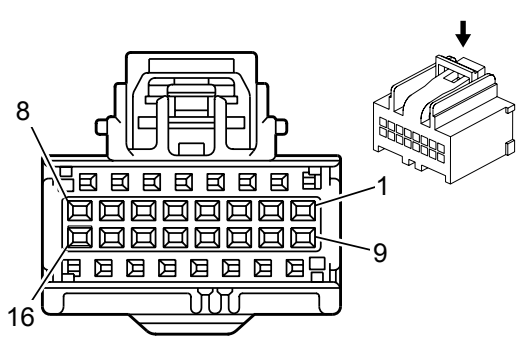

Connector Part Information

Harness Type: Instrument Panel

OEM Connector: 15136073

Service Connector: 15136073

Description: 16-Way F 0.64 Kaizen Series (BK)

Terminal Part Information

Terminal Type ID	Terminated Lead	Diagnostic Test Probe	Terminal Removal Tool	Service Terminal	Tray	Core Crimp	Insulation Crimp
I	13575845	J-35616-64B (LT BU)	J-38125-215A	SAIT-A03T-M064	23	P	P

T3 Audio Amplifier X3 (UQA)

Pin	Size	Color	Circuit	Function	Terminal Type ID	Option
1	0.75	L-GN	5060	Low Speed GMLAN Serial Data	I	—
2 - 16	—	—	—	Not Occupied	—	—

T3 Audio Amplifier X4 (UQA)

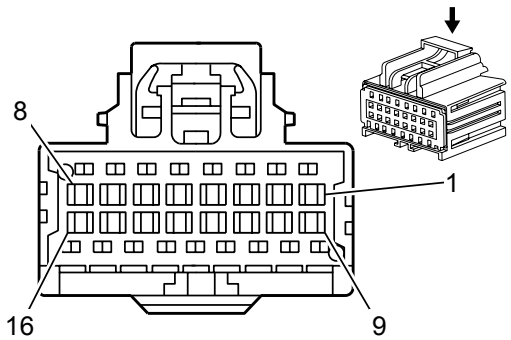

Connector Part Information

Harness Type: Instrument Panel

OEM Connector: 15136074

Service Connector: 15136074

Description: 16-Way F 0.64 Kaizen Series (BN)

Terminal Part Information

Terminal Type ID	Terminated Lead	Diagnostic Test Probe	Terminal Removal Tool	Service Terminal	Tray	Core Crimp	Insulation Crimp
I	13575845	J-35616-64B (LT BU)	J-38125-215A	SAIT-A03T-M064	23	P	P

T3 Audio Amplifier X4 (UQA)

Pin	Size	Color	Circuit	Function	Terminal Type ID	Option
1 - 2	—	—	—	Not Occupied	—	—
3	0.5	WH/L-GN	3997	MOST Serial Data (-)	I	—
4	0.5	GY/VT	3998	MOST Serial Data (+)	I	—
5	0.5	WH/L-GN	3997	MOST Serial Data (-)	I	—
6	0.5	GY/VT	3998	MOST Serial Data (+)	I	—
7 - 13	—	—	—	Not Occupied	—	—
14	0.35	WH/VT	3999	MOST Control	I	—
15 - 16	—	—	—	Not Occupied	—	—

T4G Cellular Phone, Navigation, and Digital Radio Antenna (UE1)

—

Connector Part Information

Harness Type: Body COAX

OEM Connector: COAX

Service Connector: Service by Cable Assembly — See Part Catalog

Description: 2-Way F Coax Type (VT)

Terminal Part Information

Terminal Type ID	Terminated Lead	Diagnostic Test Probe	Terminal Removal Tool	Service Terminal	Tray	Core Crimp	Insulation Crimp
I	Not Available	Not Available	Not Available	Not Available	Not Available	Not Available	Not Available

T4G Cellular Phone, Navigation, and Digital Radio Antenna (UE1)

Pin	Size	Color	Circuit	Function	Terminal Type ID	Option
-	-	COAX	-	(GPS/Cell) Coaxial Antenna Cell/GPS combined Signal	I	-

T4H Digital Radio Antenna (U2M)

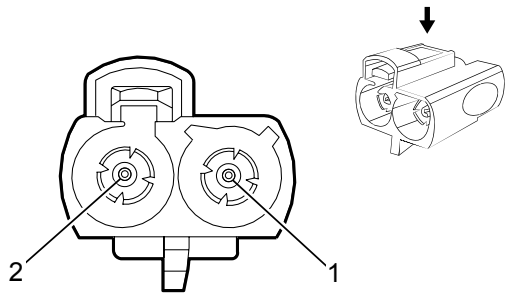

Connector Part Information

Harness Type: Body COAX

OEM Connector: COAX

Service Connector: Service by Cable Assembly — See Part Catalog

Description: 2-Way F Coax Type (BK)

Terminal Part Information

Terminal Type ID	Terminated Lead	Diagnostic Test Probe	Terminal Removal Tool	Service Terminal	Tray	Core Crimp	Insulation Crimp
I	Not Available	Not Available	Not Available	Not Available	Not Available	Not Available	Not Available

T4H Digital Radio Antenna (U2M)

Pin	Size	Color	Circuit	Function	Terminal Type ID	Option
-	-	COAX	-	(XM +/-HD) Coaxial Antenna XM Signal	I	-

T4M Radio Antenna

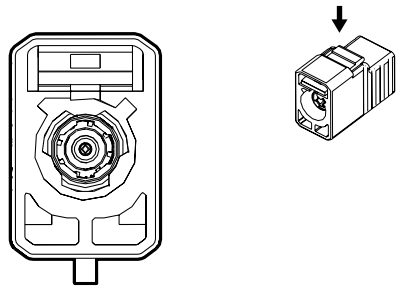

Connector Part Information

Harness Type: Body COAX

OEM Connector: 13581685

Service Connector: Service by Cable Assembly - See Part Catalog

Description: 2-Way F Coax Type (BK)

Terminal Part Information

Terminal Type ID	Terminated Lead	Diagnostic Test Probe	Terminal Removal Tool	Service Terminal	Tray	Core Crimp	Insulation Crimp
I	Not Available	Not Available	Not Available	Not Available	Not Available	Not Available	Not Available

T4M Radio Antenna

Pin	Size	Color	Circuit	Function	Terminal Type ID	Option
-	-	COAX	-	(AM/FM) Antenna RF Signal	I	-

T8A Ignition Coil 1 (LCV)

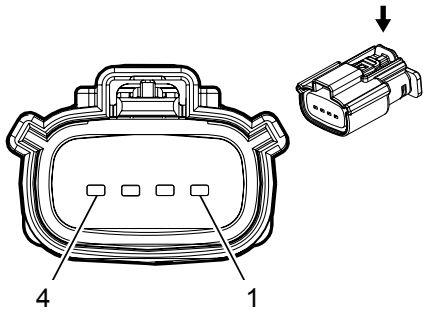

Connector Part Information

Harness Type: Engine

OEM Connector: 33471-0461

Service Connector: 19299695

Description: 4-Way F 1.5 Series, Sealed (BK)

Terminal Part Information

Terminal Type ID	Terminated Lead	Diagnostic Test Probe	Terminal Removal Tool	Service Terminal	Tray	Core Crimp	Insulation Crimp
I	Not Required	J-35616-2A (GY)	Not Required	Not Required	Not Required	Not Required	Not Required
I	Not Required	J-35616-2A (GY)	Not Required	Not Required	Not Required	Not Required	Not Required

T8A Ignition Coil 1 (LCV)

Pin	Size	Color	Circuit	Function	Terminal Type ID	Option
1	1	BK	1450	Ground	I	—
2	0.5	BK/L-BU	2129	Ignition Control Low Reference Bank 1	I	—
3	0.5	L-BU/VT	2121	Ignition Control (1)	I	—
4	1	VT/L-BU	5291	Powertrain Main Relay Fused Supply (2)	I	—

T8A Ignition Coil 1 (LFX)

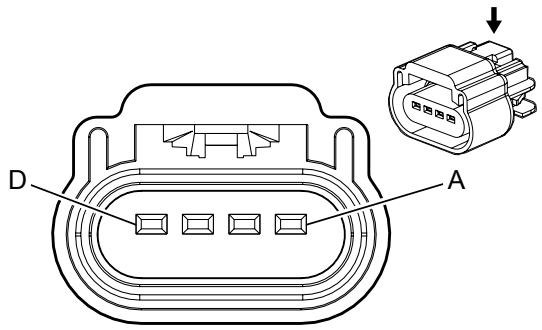

Connector Part Information

Harness Type: Engine

OEM Connector: 15466325

Service Connector: 13585847

Description: 4-Way F 150 GT Series, Sealed (BK)

Terminal Part Information

Terminal Type ID	Terminated Lead	Diagnostic Test Probe	Terminal Removal Tool	Service Terminal	Tray	Core Crimp	Insulation Crimp
I	Not Required	J-35616-14 (GN)	Not Required	Not Required	Not Required	Not Required	Not Required
I	Not Required	J-35616-14 (GN)	Not Required	Not Required	Not Required	Not Required	Not Required

T8A Ignition Coil 1 (LFX)

Pin	Size	Color	Circuit	Function	Terminal Type ID	Option
A	1	BK	1450	Ground	I	—
B	0.5	BK/L-BU	2129	Ignition Control Low Reference Bank 1	I	—
C	0.5	L-BU/VT	2121	Ignition Control (1)	I	—
D	1	VT/L-BU	5291	Powertrain Main Relay Fused Supply (2)	I	—

T8B Ignition Coil 2 (LCV)

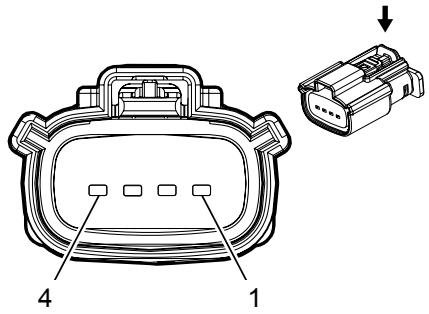

Connector Part Information

Harness Type: Engine

OEM Connector: 33471-0461

Service Connector: 19299695

Description: 4-Way F 1.5 Series, Sealed (BK)

Terminal Part Information

Terminal Type ID	Terminated Lead	Diagnostic Test Probe	Terminal Removal Tool	Service Terminal	Tray	Core Crimp	Insulation Crimp
I	Not Required	J-35616-2A (GY)	Not Required	Not Required	Not Required	Not Required	Not Required
I	Not Required	J-35616-2A (GY)	Not Required	Not Required	Not Required	Not Required	Not Required

T8B Ignition Coil 2 (LCV)

Pin	Size	Color	Circuit	Function	Terminal Type ID	Option
1	1	BK	1450	Ground	I	—
2	0.5	BK/L-BU	2129	Ignition Control Low Reference Bank 1	I	—
3	0.5	L-BU/WH	2122	Ignition Control (2)	I	—
4	1	VT/L-BU	5291	Powertrain Main Relay Fused Supply (2)	I	—

T8B Ignition Coil 2 (LFX)

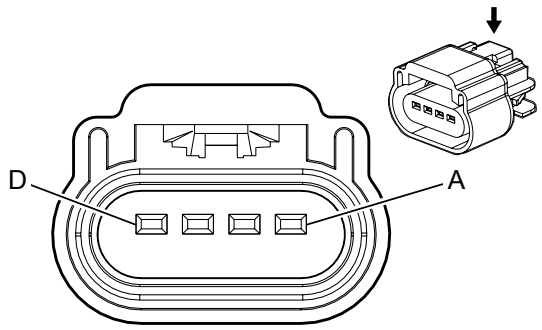

Connector Part Information

Harness Type: Engine

OEM Connector: 15466325

Service Connector: 13585847

Description: 4-Way F 150 GT Series, Sealed (BK)

Terminal Part Information

Terminal Type ID	Terminated Lead	Diagnostic Test Probe	Terminal Removal Tool	Service Terminal	Tray	Core Crimp	Insulation Crimp
I	Not Required	J-35616-14 (GN)	Not Required	Not Required	Not Required	Not Required	Not Required
I	Not Required	J-35616-14 (GN)	Not Required	Not Required	Not Required	Not Required	Not Required

T8B Ignition Coil 2 (LFX)

Pin	Size	Color	Circuit	Function	Terminal Type ID	Option
A	1	BK	1550	Ground	I	—
B	0.5	BK/GY	2130	Ignition Control Low Reference Bank 2	I	—
C	0.5	L-BU/WH	2122	Ignition Control (2)	I	—
D	1	VT/L-BU	5292	Powertrain Main Relay Fused Supply (3)	I	—

T8C Ignition Coil 3 (LCV)

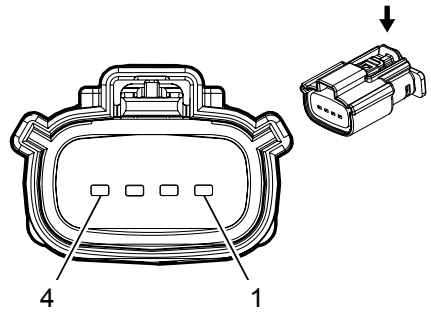

Connector Part Information

Harness Type: Engine

OEM Connector: 33471-0461

Service Connector: 19299695

Description: 4-Way F 1.5 Series, Sealed (BK)

Terminal Part Information

Terminal Type ID	Terminated Lead	Diagnostic Test Probe	Terminal Removal Tool	Service Terminal	Tray	Core Crimp	Insulation Crimp
I	Not Required	J-35616-2A (GY)	Not Required	Not Required	Not Required	Not Required	Not Required
I	Not Required	J-35616-2A (GY)	Not Required	Not Required	Not Required	Not Required	Not Required

T8C Ignition Coil 3 (LCV)

Pin	Size	Color	Circuit	Function	Terminal Type ID	Option
1	1	BK	1450	Ground	I	—
2	0.5	BK/L-BU	2129	Ignition Control Low Reference Bank 1	I	—
3	0.5	L-GN/L-BU	2123	Ignition Control (3)	I	—
4	1	VT/L-BU	5291	Powertrain Main Relay Fused Supply (2)	I	—

T8C Ignition Coil 3 (LFX)

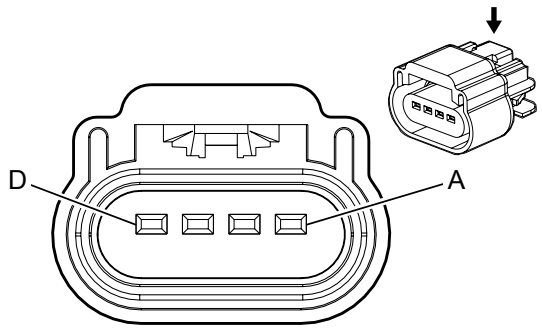

Connector Part Information

Harness Type: Engine

OEM Connector: 15466325

Service Connector: 13585847

Description: 4-Way F 150 GT Series, Sealed (BK)

Terminal Part Information

Terminal Type ID	Terminated Lead	Diagnostic Test Probe	Terminal Removal Tool	Service Terminal	Tray	Core Crimp	Insulation Crimp
I	Not Required	J-35616-14 (GN)	Not Required	Not Required	Not Required	Not Required	Not Required
I	Not Required	J-35616-14 (GN)	Not Required	Not Required	Not Required	Not Required	Not Required

T8C Ignition Coil 3 (LFX)

Pin	Size	Color	Circuit	Function	Terminal Type ID	Option
A	1	BK	1450	Ground	I	—
B	0.5	BK/L-BU	2129	Ignition Control Low Reference Bank 1	I	—
C	0.5	L-GN/L-BU	2123	Ignition Control (3)	I	—
D	1	VT/L-BU	5291	Powertrain Main Relay Fused Supply (2)	I	—

T8D Ignition Coil 4 (LCV)

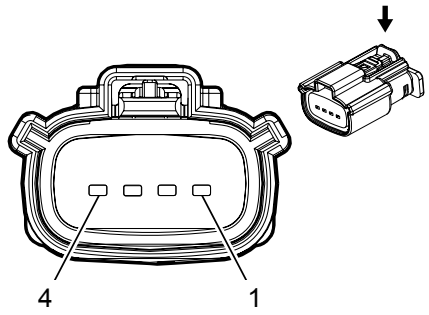

Connector Part Information

Harness Type: Engine

OEM Connector: 33471-0461

Service Connector: 19299695

Description: 4-Way F 1.5 Series, Sealed (BK)

Terminal Part Information

Terminal Type ID	Terminated Lead	Diagnostic Test Probe	Terminal Removal Tool	Service Terminal	Tray	Core Crimp	Insulation Crimp
I	Not Required	J-35616-2A (GY)	Not Required	Not Required	Not Required	Not Required	Not Required
I	Not Required	J-35616-2A (GY)	Not Required	Not Required	Not Required	Not Required	Not Required

T8D Ignition Coil 4 (LCV)

Pin	Size	Color	Circuit	Function	Terminal Type ID	Option
1	1	BK	1450	Ground	I	—
2	0.5	BK/L-BU	2129	Ignition Control Low Reference Bank 1	I	—
3	0.5	YE/L-BU	2124	Ignition Control (4)	I	—
4	1	VT/L-BU	5291	Powertrain Main Relay Fused Supply (2)	I	—

T8D Ignition Coil 4 (LFX)

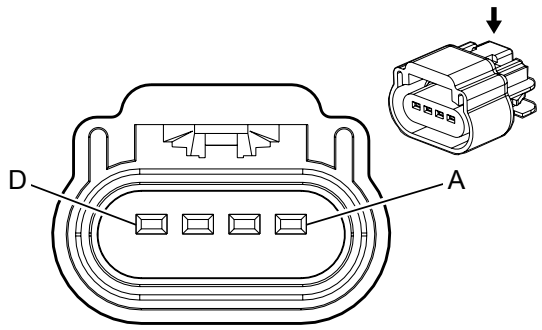

Connector Part Information

Harness Type: Engine

OEM Connector: 15466325

Service Connector: 13585847

Description: 4-Way F 150 GT Series, Sealed (BK)

Terminal Part Information

Terminal Type ID	Terminated Lead	Diagnostic Test Probe	Terminal Removal Tool	Service Terminal	Tray	Core Crimp	Insulation Crimp
I	Not Required	J-35616-14 (GN)	Not Required	Not Required	Not Required	Not Required	Not Required
I	Not Required	J-35616-14 (GN)	Not Required	Not Required	Not Required	Not Required	Not Required

T8D Ignition Coil 4 (LFX)

Pin	Size	Color	Circuit	Function	Terminal Type ID	Option
A	1	BK	1550	Ground	I	—
B	0.5	BK/GY	2130	Ignition Control Low Reference Bank 2	I	—
C	0.5	YE/L-BU	2124	Ignition Control (4)	I	—
D	1	VT/L-BU	5292	Powertrain Main Relay Fused Supply (3)	I	—

T8E Ignition Coil 5 (LFX)

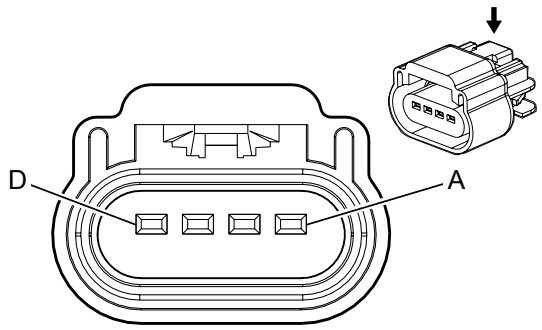

Connector Part Information

Harness Type: Engine

OEM Connector: 15466325

Service Connector: 13585847

Description: 4-Way F 150 GT Series, Sealed (BK)

Terminal Part Information

Terminal Type ID	Terminated Lead	Diagnostic Test Probe	Terminal Removal Tool	Service Terminal	Tray	Core Crimp	Insulation Crimp
I	Not Required	J-35616-14 (GN)	Not Required	Not Required	Not Required	Not Required	Not Required
I	Not Required	J-35616-14 (GN)	Not Required	Not Required	Not Required	Not Required	Not Required

T8E Ignition Coil 5 (LFX)

Pin	Size	Color	Circuit	Function	Terminal Type ID	Option
A	1	BK	1450	Ground	I	—
B	0.5	BK/L-BU	2129	Ignition Control Low Reference Bank 1	I	—
C	0.5	L-BU/GY	2125	Ignition Control (5)	I	—
D	1	VT/L-BU	5291	Powertrain Main Relay Fused Supply (2)	I	—

T8F Ignition Coil 6 (LFX)

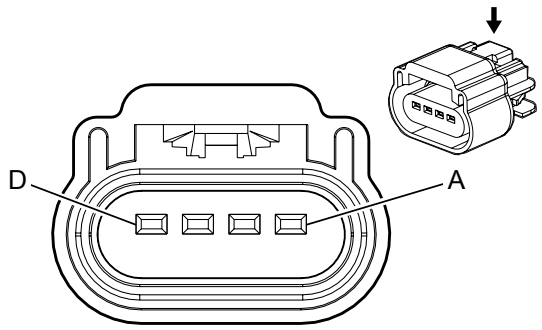

Connector Part Information

Harness Type: Engine

OEM Connector: 15466325

Service Connector: 13585847

Description: 4-Way F 150 GT Series, Sealed (BK)

Terminal Part Information

Terminal Type ID	Terminated Lead	Diagnostic Test Probe	Terminal Removal Tool	Service Terminal	Tray	Core Crimp	Insulation Crimp
I	Not Required	J-35616-14 (GN)	Not Required	Not Required	Not Required	Not Required	Not Required
I	Not Required	J-35616-14 (GN)	Not Required	Not Required	Not Required	Not Required	Not Required

T8F Ignition Coil 6 (LFX)

Pin	Size	Color	Circuit	Function	Terminal Type ID	Option
A	1	BK	1550	Ground	I	—
B	0.5	BK/GY	2130	Ignition Control Low Reference Bank 2	I	—
C	0.5	BN/L-BU	2126	Ignition Control (6)	I	—
D	1	VT/L-BU	5292	Powertrain Main Relay Fused Supply (3)	I	—

T15 Navigation Antenna Signal Splitter X1 (IO6)

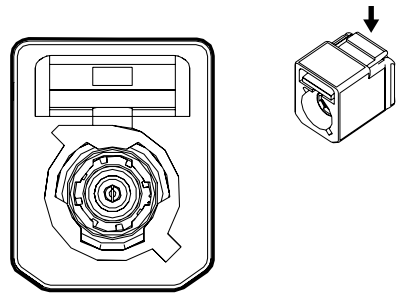

Connector Part Information

Harness Type: Body COAX

OEM Connector: COAX

Service Connector: Service by Cable Assembly — See Part Catalog

Description: 1-Way F Coax Type (GY)

Terminal Part Information

Terminal Type ID	Terminated Lead	Diagnostic Test Probe	Terminal Removal Tool	Service Terminal	Tray	Core Crimp	Insulation Crimp
I	Not Available	Not Available	Not Available	Not Available	Not Available	Not Available	Not Available

T15 Navigation Antenna Signal Splitter X1 (IO6)

Pin	Size	Color	Circuit	Function	Terminal Type ID	Option
-	-	COAX	-	(GPS/Cell) Coaxial Antenna Cell/GPS combined Signal	I	-

T15 Navigation Antenna Signal Splitter X2 (IO6)

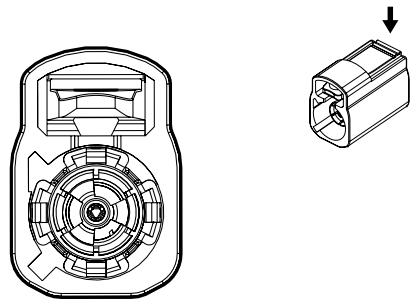

Connector Part Information

Harness Type: Body COAX

OEM Connector: COAX

Service Connector: Service by Cable Assembly — See Part Catalog

Description: 1-Way F Coax Type (VT)

Terminal Part Information

Terminal Type ID	Terminated Lead	Diagnostic Test Probe	Terminal Removal Tool	Service Terminal	Tray	Core Crimp	Insulation Crimp
I	Not Available	Not Available	Not Available	Not Available	Not Available	Not Available	Not Available

T15 Navigation Antenna Signal Splitter X2 (IO6)

Pin	Size	Color	Circuit	Function	Terminal Type ID	Option
-	-	COAX	-	(GPS/Cell) Coaxial Antenna Cell/GPS combined Signal	I	-

T15 Navigation Antenna Signal Splitter X3 (IO6)

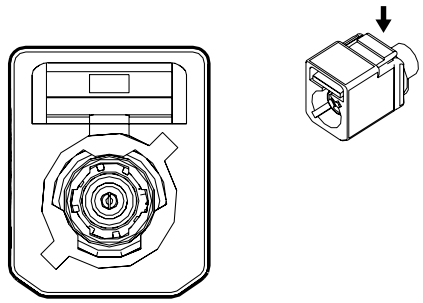

Connector Part Information

Harness Type: Body COAX

OEM Connector: COAX

Service Connector: Service by Cable Assembly — See Part Catalog

Description: 1-Way F Coax Type (BU)

Terminal Part Information

Terminal Type ID	Terminated Lead	Diagnostic Test Probe	Terminal Removal Tool	Service Terminal	Tray	Core Crimp	Insulation Crimp
I	Not Available	Not Available	Not Available	Not Available	Not Available	Not Available	Not Available

T15 Navigation Antenna Signal Splitter X3 (IO6)

Pin	Size	Color	Circuit	Function	Terminal Type ID	Option
-	-	COAX	-	(GPS only) Coaxial Antenna GPS Signal	I	-

X80A Accessory Power Receptacle - Center Console 1

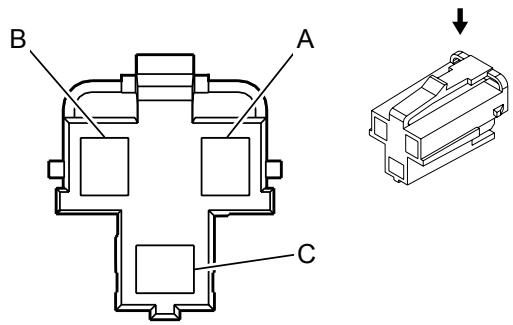

Connector Part Information

Harness Type: Instrument Panel

OEM Connector: 12176836

Service Connector: 19257374

Description: 3-Way F 280 Metri-Pack Series (GY)

Terminal Part Information

Terminal Type ID	Terminated Lead	Diagnostic Test Probe	Terminal Removal Tool	Service Terminal	Tray	Core Crimp	Insulation Crimp
I	Not Required	J-35616-4A (PU)	Not Required	Not Required	Not Required	Not Required	Not Required

X80A Accessory Power Receptacle - Center Console 1

Pin	Size	Color	Circuit	Function	Terminal Type ID	Option
A	1.5	VT	1701	Retained Accessory Power Ignition	I	—
B	—	—	—	Not Occupied	—	—
C	1.5	BK	2050	Ground	I	—

X80B Accessory Power Receptacle - Center Console 2

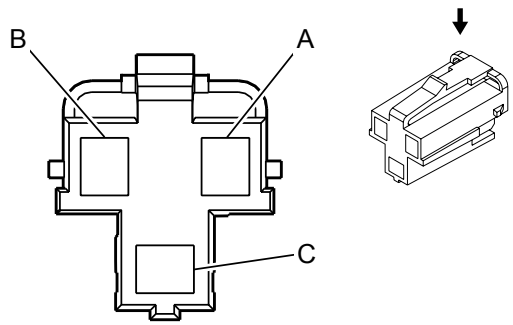

Connector Part Information

Harness Type: Floor Console

OEM Connector: 12176836

Service Connector: Service by Harness - See Part Catalog

Description: 3-Way F 280 Metri-Pack Series (GY)

Terminal Part Information

Terminal Type ID	Terminated Lead	Diagnostic Test Probe	Terminal Removal Tool	Service Terminal	Tray	Core Crimp	Insulation Crimp
I	Not Required	J-35616-4A (PU)	Not Required	Not Required	Not Required	Not Required	Not Required

X80B Accessory Power Receptacle - Center Console 2

Pin	Size	Color	Circuit	Function	Terminal Type ID	Option
A	1.5	VT	2101	Retained Accessory Power Fuse Ignition	I	—
B	—	—	—	Not Occupied	—	—
C	1.5	BK	2050	Ground	I	—

X83 Auxiliary Audio Input X1

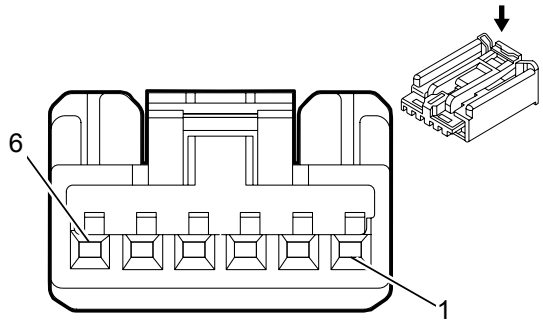

Connector Part Information

Harness Type: Instrument Panel

OEM Connector: 15269798

Service Connector: 19167753

Description: 6-Way F 0.64 Kaizen Series (BK)

Harness Type: Console

OEM Connector: AIT2PB-06-1AK

Service Connector: Service by Harness - See Part Catalog

Description: 6-Way F 0.64 Kaizen Series (BK)

Terminal Part Information

Terminal Type ID	Terminated Lead	Diagnostic Test Probe	Terminal Removal Tool	Service Terminal	Tray	Core Crimp	Insulation Crimp
I	Not Required	J-35616-64B (LT BU)	No Tool Required	Not Required	Not Required	Not Required	Not Required
II	Not Required	J-35616-64B (LT BU)	Not Required	Not Required	Not Required	Not Required	Not Required

X83 Auxiliary Audio Input X1

Pin	Size	Color	Circuit	Function	Terminal Type ID	Option
1	0.35	GY	5839	Left Auxiliary Audio Signal (2)	I	IO3
	0.35	GY	5839		II	IO4/IO5/IO6
2	0.35	L-GN	5841	Right Auxiliary Audio Signal (2)	I	IO3
	0.35	L-GN	5841		II	IO4/IO5/IO6
3	0.35	VT	5843	Auxiliary Audio Common Signal	I	IO3
	0.35	VT	5843		II	IO4/IO5/IO6
4	0.35	BK/WH	2051	Signal Ground	I	IO3

	0.35	BK/WH	2051		II	IO4/IO5/IO6
5	0.35	L-BU	2060	Auxiliary Detection Signal	I	IO3
	0.35	L-BU	2060		II	IO4/IO5/IO6
6	0.5	RD/VT	340	Battery Positive Voltage	I	IO3
	0.5	RD/VT	340		II	IO4/IO5/IO6

X83 Auxiliary Audio Input X2

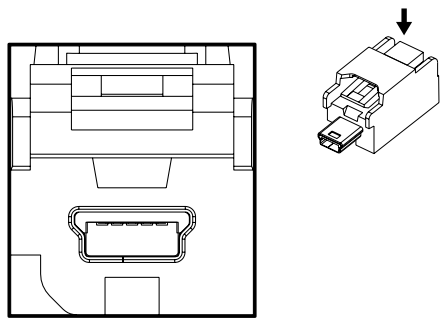

Connector Part Information

Harness Type: Console USB

OEM Connector: 13584747

Service Connector: Service by Cable Assembly — See Part Catalog

Description: 5-Way M 2.0 Mini B USB Type (GY)

Terminal Part Information

Terminal Type ID	Terminated Lead	Diagnostic Test Probe	Terminal Removal Tool	Service Terminal	Tray	Core Crimp	Insulation Crimp
I	Not Available	Not Available	Not Available	Not Available	Not Available	Not Available	Not Available

X83 Auxiliary Audio Input X2

Pin	Size	Color	Circuit	Function	Terminal Type ID	Option
—	—	USB	—	USB Serial Data	I	—

X83R Auxiliary Audio Input - Rear X1 (IO5/IO6)

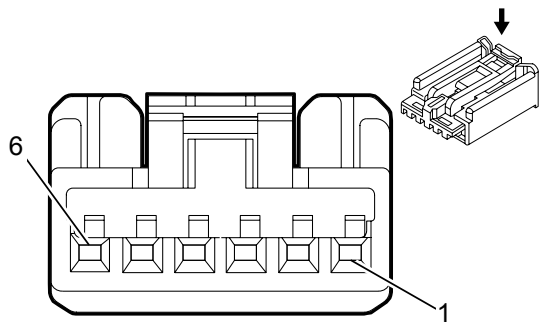

Connector Part Information

Harness Type: Floor Console

OEM Connector: AIT2PB-06-1AK

Service Connector: Service by Harness - See Part Catalog

Description: 6-Way F 0.64 Kaizen Series (BK)

Terminal Part Information

Terminal Type ID	Terminated Lead	Diagnostic Test Probe	Terminal Removal Tool	Service Terminal	Tray	Core Crimp	Insulation Crimp
I	Not Required	J-35616-64B (LT BU)	Not Required	Not Required	Not Required	Not Required	Not Required

X83R Auxiliary Audio Input - Rear X1 (IO5/IO6)

Pin	Size	Color	Circuit	Function	Terminal Type ID	Option
1 - 3	—	—	—	Not Occupied	—	—
4	0.35	BK/WH	2051	Signal Ground	I	—
5	—	—	—	Not Occupied	—	—
6	0.5	RD/VT	340	Battery Positive Voltage	I	—

X83R Auxiliary Audio Input - Rear X2 (IO5/IO6)

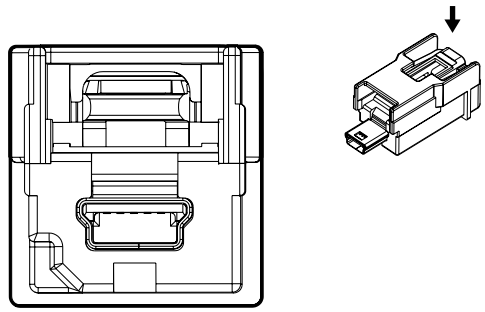

Connector Part Information

Harness Type: Console USB

OEM Connector: 13580213

Service Connector: Service by Cable Assembly — See Part Catalog

Description: 5-Way F 2.0 Mini B USB Type (BK)

Terminal Part Information

Terminal Type ID	Terminated Lead	Diagnostic Test Probe	Terminal Removal Tool	Service Terminal	Tray	Core Crimp	Insulation Crimp
I	Not Available	Not Available	Not Available	Not Available	Not Available	Not Available	Not Available

X83R Auxiliary Audio Input - Rear X2 (IO5/IO6)

Pin	Size	Color	Circuit	Function	Terminal Type ID	Option
-	-	USB	-	USB Serial Data	I	-

X83R Auxiliary Audio Input - Rear X3 (IO5/IO6)

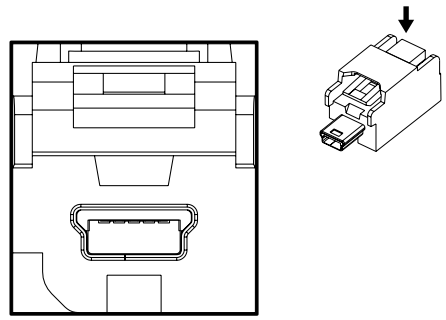

Connector Part Information

Harness Type: Console USB

OEM Connector: 13580212

Service Connector: Service by Cable Assembly — See Part Catalog

Description: 5-Way M 2.0 Mini B USB Type (GY)

Terminal Part Information

Terminal Type ID	Terminated Lead	Diagnostic Test Probe	Terminal Removal Tool	Service Terminal	Tray	Core Crimp	Insulation Crimp
I	Not Available	Not Available	Not Available	Not Available	Not Available	Not Available	Not Available

X83R Auxiliary Audio Input - Rear X3 (IO5/IO6)

Pin	Size	Color	Circuit	Function	Terminal Type ID	Option
-	-	USB	-	USB Serial Data	I	-

X84 Data Link Connector

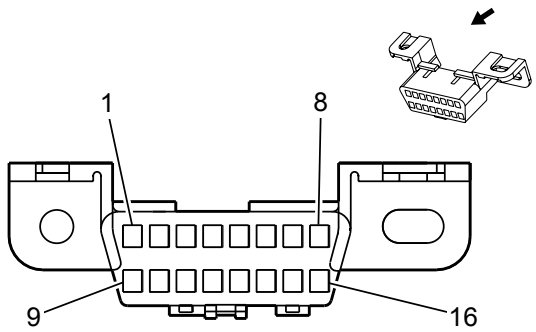

Connector Part Information

Harness Type: Instrument Panel

OEM Connector: 12110250

Service Connector: 12110250

Description: 16-Way F 150 Metri-Pack Series (BK)

Terminal Part Information

Terminal Type ID	Terminated Lead	Diagnostic Test Probe	Terminal Removal Tool	Service Terminal	Tray	Core Crimp	Insulation Crimp
I	13575724	J-35616-14 (GN)	J-38125-12A	12129484	4	E	C
II	13575725	J-35616-14 (GN)	J-38125-12A	12129484	4	E	A

X84 Data Link Connector

Pin	Size	Color	Circuit	Function	Terminal Type ID	Option
1	0.5	L-GN	5060	Low Speed GMLAN Serial Data	I	—
2 - 3	—	—	—	Not Occupied	—	—
4	0.5	BK	2050	Ground	I	—
5	0.75	BK/WH	2151	Signal Ground	II	—
6	0.35	L-BU	2500	High Speed GMLAN Serial Data (+) (1)	I	—
7 - 11	—	—	—	Not Occupied	—	—
12	0.5	L-BU/YE	6105	High Speed GMLAN Serial Data (+) (2)	I	—
13	0.5	WH	6106	High Speed GMLAN Serial Data (-) (2)	I	—

14	0.35	WH	2501	High Speed GMLAN Serial Data (-) (1)	I	—
15	—	—	—	Not Occupied	—	—
16	0.5	RD/WH	640	Battery Positive Voltage	I	—

X85 Steering Wheel Air Bag Coil X1

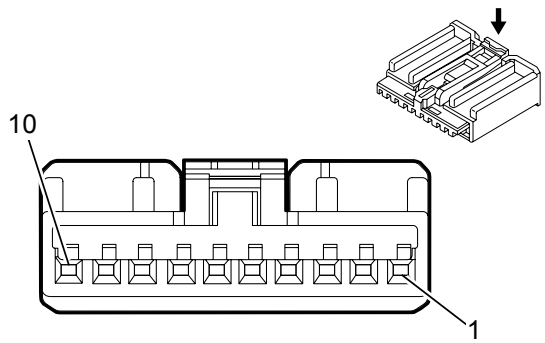

Connector Part Information

Harness Type: Steering Wheel

OEM Connector: 15269795

Service Connector: 13576634

Description: 10-Way F 0.64 Kaizen Series (BK)

Terminal Part Information

Terminal Type ID	Terminated Lead	Diagnostic Test Probe	Terminal Removal Tool	Service Terminal	Tray	Core Crimp	Insulation Crimp
I	13575867	J-35616-64B (L-BU)	J-38125-215A	Not Available	Not Available	Not Available	Not Available

X85 Steering Wheel Air Bag Coil X1

Pin	Size	Color	Circuit	Function	Terminal Type ID	Option
1	0.35	RD/YE	3040	Battery Positive Voltage	I	-
2	0.5	L-GN/BK	3894	Local Interconnect Network Bus 12	I	W1Y
3	-	-	-	Not Occupied	-	-
4	0.35	GY/OG	5737	Adaptive Cruise Control Gap Up/Down Switch Signal	I	UEU
5	0.35	BN	6136	Supply Voltage	I	-
6	0.35	WH	1444	12 Volt Reference	I	-
7	0.35	L-GN	6818	Steering Wheel Resistor Ladder Signal #1	I	Except W1Y
8	0.35	BN/YE	1884	Cruise Control Set/Coast/Resume/Accelerate Switch	I	-
9	0.5	BK	2050	Ground	I	-
10	0.35	L-GN/WH	3287	Horn Switch Signal	I	-

X85 Steering Wheel Air Bag Coil X2

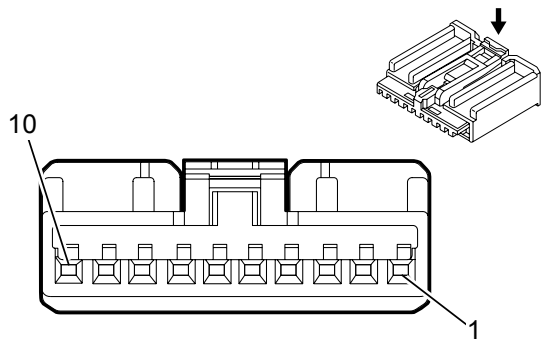

Connector Part Information

Harness Type: Instrument Panel

OEM Connector: 15269795

Service Connector: 13576634

Description: 10-Way F 0.64 Kaizen Series (BK)

Terminal Part Information

Terminal Type ID	Terminated Lead	Diagnostic Test Probe	Terminal Removal Tool	Service Terminal	Tray	Core Crimp	Insulation Crimp
I	13575867	J-35616-64B (LT BU)	J-38125-215A	SAIT-A03T-M064	23	P	P

X85 Steering Wheel Air Bag Coil X2

Pin	Size	Color	Circuit	Function	Terminal Type ID	Option
1	0.35	L-GN/WH	3287	Horn Switch Signal	I	—
2	0.5	BK	2050	Ground	I	—
3	0.35	BN/L-GN	1884	Cruise Control Set/Coast/Resume/Accelerate Switch Signal	I	—
4	0.35	L-GN	6818	Steering Wheel Resistor Ladder Signal 1	I	—
5	0.35	WH/RD	1444	12 Volt Reference	I	—
6	0.35	BN	6136	Control	I	—
7	0.35	GY/L-GN	5737	Adaptive Cruise Control Gap Up/Down Switch Signal	I	UEU
8	—	—	—	Not Occupied	—	—

9	0.5	L-GN/BK	3894	Local Interconnect Network Serial data Bus 12	I	—
10	0.35	RD/YE	3040	Battery Positive Voltage	I	—

X85 Steering Wheel Air Bag Coil X3

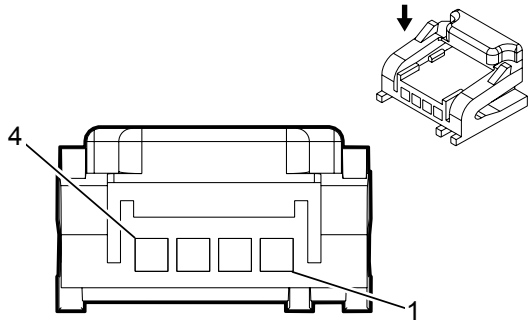

Connector Part Information

Harness Type: Instrument Panel

OEM Connector: 22710637

Service Connector: 13580115

Description: 4-Way F 0.64 Micro-Pack Series (YE)

Terminal Part Information

Terminal Type ID	Terminated Lead	Diagnostic Test Probe	Terminal Removal Tool	Service Terminal	Tray	Core Crimp	Insulation Crimp
I	Not Required	J-35616-64B (LT BU)	Not Required	Not Required	Not Required	Not Required	Not Required

X85 Steering Wheel Air Bag Coil X3

Pin	Size	Color	Circuit	Function	Terminal Type ID	Option
1	0.35	WH/OG	3022	Steering Wheel Module Stage 2 Low Control	I	—
2	0.35	OG/L-GN	3023	Steering Wheel Module Stage 2 High Control	I	—
3	0.35	BN/OG	3020	Steering Wheel Module Stage 1 Low Control	I	—
4	0.35	OG/VT	3021	Steering Wheel Module Stage 1 High Control	I	—

X88 Trailer Connector (Z82)

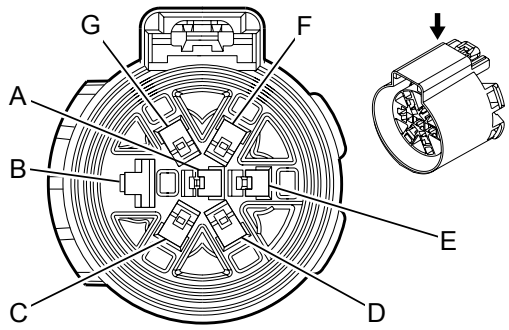

Connector Part Information

Harness Type: Chassis

OEM Connector: 13857223

Service Connector: 13583927

Description: 7-Way F 280 Metri-Pack, 630 Series, Sealed (BK)

Terminal Part Information

Terminal Type ID	Terminated Lead	Diagnostic Test Probe	Terminal Removal Tool	Service Terminal	Tray	Core Crimp	Insulation Crimp
I	Not Required	J-35616-42 (RD)	Not Required	Not Required	Not Required	Not Required	Not Required
II	Not Required	J-35616-4A (PU)	Not Required	Not Required	Not Required	Not Required	Not Required
II	Not Required	J-35616-4A (PU)	Not Required	Not Required	Not Required	Not Required	Not Required
II	Not Required	J-35616-4A (PU)	Not Required	Not Required	Not Required	Not Required	Not Required
II	Not Required	J-35616-4A (PU)	Not Required	Not Required	Not Required	Not Required	Not Required

X88 Trailer Connector (Z82)

Pin	Size	Color	Circuit	Function	Terminal Type ID	Option
A	0.75	GY	1624	Trailer Backup Lamp Control	II	—
B	6	BK	22	Trailer Ground	I	—
C	2.5	L-BU	47	Trailer Auxiliary Control	II	—
D	0.75	L-GN	1619	Right Rear Trailer Stop/Turn Lamp Control	II	—
E	4	OG	742	Battery Positive Voltage	II	—
F	1.5	BN	2109	Trailer Park Lamp Control	II	—

G	0.75	YE	1618	Left Rear Trailer Stop/Turn Lamp Control	II	—

X92 USB Receptacle (IO5/IO6)

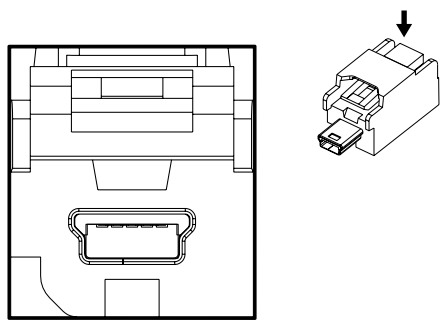

Connector Part Information

Harness Type: Console USB

OEM Connector: 13584747

Service Connector: Service by Cable Assembly — See Part Catalog

Description: 5-Way M 2.0 Mini B USB Type (GY)

Terminal Part Information

Terminal Type ID	Terminated Lead	Diagnostic Test Probe	Terminal Removal Tool	Service Terminal	Tray	Core Crimp	Insulation Crimp
I	Not Available	Not Available	Not Available	Not Available	Not Available	Not Available	Not Available

X92 USB Receptacle (IO5/IO6)

Pin	Size	Color	Circuit	Function	Terminal Type ID	Option
-	-	USB	-	USB Serial Data	I	-

Splice Pack Connector End Views

JX200 Splice Pack

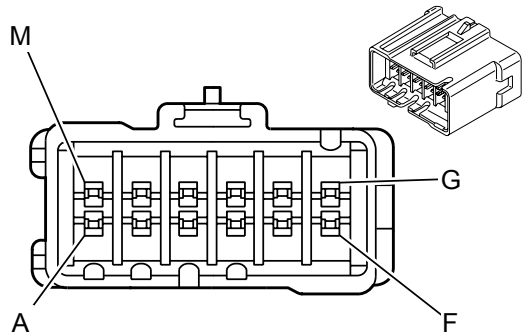

Connector Part Information

Harness Type: Instrument Panel

OEM Connector: 15305291

Service Connector: 15305291

Description: 12-Way F 280 Metri-Pack Series (BK)

Terminal Part Information

Terminal Type ID	Terminated Lead	Diagnostic Test Probe	Terminal Removal Tool	Service Terminal	Tray	Core Crimp	Insulation Crimp
I	13575721	J-35616-4A (PU)	J-38125-553	12110844	13	C	A
II	13575721	J-35616-4A (PU)	J-38125-553	12110844	13	E	4
III	13575721	J-35616-4A (PU)	J-38125-553	12110844	13	E	A

JX200 Splice Pack

Pin	Size	Color	Circuit	Function	Terminal Type ID	Option
A	0.5	L-GN	5060	Low Speed GMLAN Serial Data	III	—
B	0.75	L-GN	5060	Low Speed GMLAN Serial Data	I	—
C	—	—	—	Not Occupied	—	—
D	0.5	L-GN	5060	Low Speed GMLAN Serial Data	III	—
E	0.35	L-GN	5060	Low Speed GMLAN Serial Data	II	—
F	—	—	—	Not Occupied	—	—
G	0.5	L-GN	5060	Low Speed GMLAN Serial Data	III	UQA
H	—	—	—	Not Occupied	—	—

J	0.5	L-GN	5060	Low Speed GMLAN Serial Data	III	—
K	0.35	L-GN	5060	Low Speed GMLAN Serial Data	II	—
L	0.5	L-GN	5060	Low Speed GMLAN Serial Data	III	—
M	0.5	L-GN	5060	Low Speed GMLAN Serial Data	III	—

JX201 Splice Pack

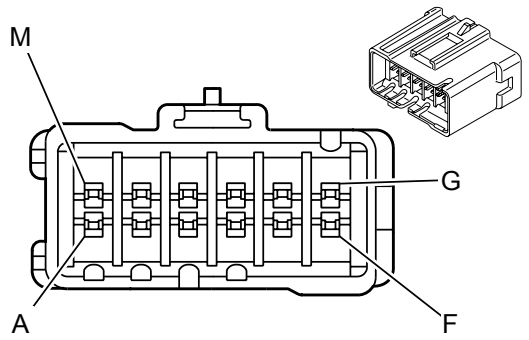

Connector Part Information

Harness Type: Body

OEM Connector: 15305291

Service Connector: 15305291

Description: 12-Way F 280 Metri-Pack Series (BK)

Terminal Part Information

Terminal Type ID	Terminated Lead	Diagnostic Test Probe	Terminal Removal Tool	Service Terminal	Tray	Core Crimp	Insulation Crimp
I	13575721	J-35616-4A (PU)	J-38125-553	12110844	13	E	4
II	13575721	J-35616-4A (PU)	J-38125-553	12110844	13	E	A

JX201 Splice Pack

Pin	Size	Color	Circuit	Function	Terminal Type ID	Option
A	0.5	L-GN	5060	Low Speed GMLAN Serial Data	II	—
B	—	—	—	Not Occupied	—	—
C	0.5	L-GN	5060	Low Speed GMLAN Serial Data	II	—
D - E	—	—	—	Not Occupied	—	—
F	0.35	L-GN	5060	Low Speed GMLAN Serial Data	I	—
G - H	—	—	—	Not Occupied	—	—
J	0.5	L-GN	5060	Low Speed GMLAN Serial Data	II	—
K - M	—	—	—	Not Occupied	—	—

Inline Harness Connector End Views

X100 Power Steering Harness to Battery Harness

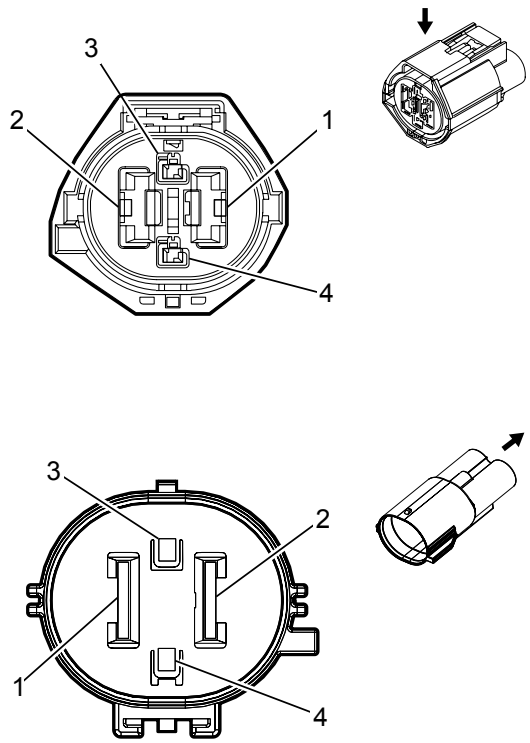

Connector Part Information

Harness Type: Battery

OEM Connector: Not Available

Service Connector: Service by Harness - See Part Catalog

Description: 4-Way F

Connector Part Information

Harness Type: Power Steering

OEM Connector: 7286-1399-80

Service Connector: Service by Harness - See Part Catalog

Description: 4-Way M 1.5, 9.5 Series, Sealed (BN)

Terminal Part Information

Terminal Type ID	Terminated Lead	Diagnostic Test Probe	Terminal Removal Tool	Service Terminal	Tray	Core Crimp	Insulation Crimp
I	Not Required	Pending	No Tool Required	Not Required	Not Required	Not Required	Not Required
II	Not Required	J-35616-43 (RD)	Not Required	Not Required	Not Required	Not Required	Not Required

X100 Power Steering Harness to Battery Harness

Pin	Size	Color	Circuit	Terminal Type ID	Option	Function	Pin	Size	Color	Circuit	Terminal Type ID	Option
1	10	RD/VT	842	I	—	Battery Positive Voltage	1	10	RD/VT	842	II	—
2	10	BK	1050	I	—	Ground	2	10	BK	1050	II	—

3 - 4	—	—	—	—	—	—	3 - 4	—	—	—	—	—

X101 Engine Harness to Body Harness (LCV)

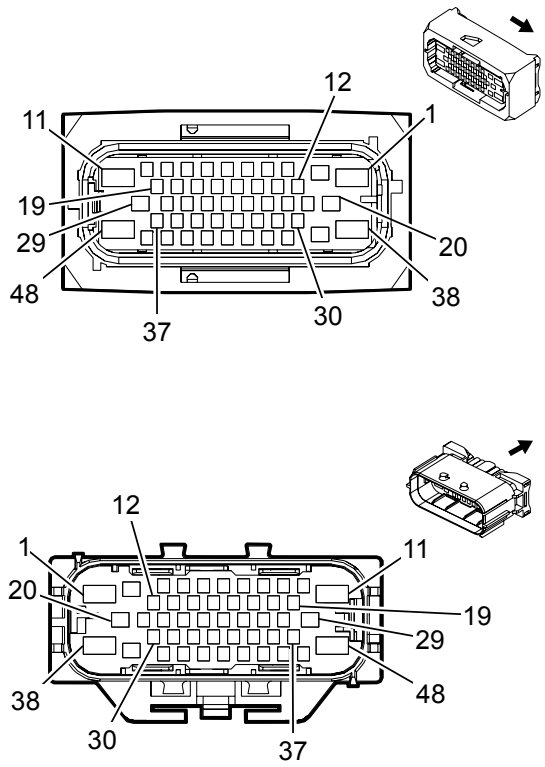

Connector Part Information

Harness Type: Engine

OEM Connector: 15509585

Service Connector: 19329744

Description: 48-Way F 1.5 MCP, 2.8 JPT, 6.3 MCP Series, Sealed (BK)

Connector Part Information

Harness Type: Body

OEM Connector: Not Available

Service Connector: Service by Harness - See Part Catalog

Description: 48-Way M

Terminal Part Information

Terminal Type ID	Terminated Lead	Diagnostic Test Probe	Terminal Removal Tool	Service Terminal	Tray	Core Crimp	Insulation Crimp
I	13579921	J-35616-40 (BU)	J-38125-556	1241408-1	4	A	B
II	13579921	J-35616-40 (BU)	J-38125-556	Not Available	Not Available	Not Available	Not Available
III	13580821	J-35616-4A (PU)	J-38125-36	Not Available	Not Available	Not Available	Not Available
IV	13580830	J-35616-4A (PU)	J-38125-36	Not Available	Not Available	Not Available	Not Available
V	19119381	J-35616-14 (GN)	J-38125-215A	Not Available	Not Available	Not Available	Not Available
VI	Not Required	Pending	No Tool Required	Not Required	Not Required	Not Required	Not Required

X101 Engine Harness to Body Harness (LCV)

Pin	Size	Color	Circuit	Terminal Type ID	Option	Function	Pin	Size	Color	Circuit	Terminal Type ID	Option
		YE/VT	1553	I	—	Transfer Case Motor			YE/VT	1553	VI	—

1	2.5					Counter Clockwise Control	1	2.5				
2	—	—	—	—	—	Not Occupied	2	—	—	—	—	—
3	0.75	VT/GY	139	V	—	Run/Crank Ignition 1 Voltage	3	0.75	VT/GY	139	VI	—
4	0.5	WH/L-GN	7475	V	—	Incremental Encoder Sensor 8 Volt Reference	4	0.5	WH/L-GN	7475	VI	—
5	0.5	WH/L-BU	6311	V	—	Cruise/ETC/TCC Brake Signal	5	0.5	WH/L-BU	6311	VI	—
6	0.5	BK/VT	1272	V	—	Accelerator Pedal Position Low Reference (2)	6	0.5	BK/VT	1272	VI	—
7	0.5	BN/WH	419	V	—	Check Engine Indicator Control	7	0.5	BN/WH	419	VI	—
8	0.5	BN/RD	1274	V	—	Accelerator Pedal Position 5 Volt Reference (2)	8	0.5	BN/RD	1274	VI	—
9	0.5	YE	7474	V	—	Incremental Encoder Direction Signal	9	0.5	YE	7474	VI	—
10	0.75	L-BU/BN	7573	V	—	Electric Variable Displacement Supply	10	0.75	L-BU/BN	7573	VI	—
11	0.75	BK	1450	II	—	Ground	11	0.75	BK	1450	VI	—
12	0.5	BK	1782	V	—	Low Reference	12	0.5	BK	1782	VI	—

13	0.5	GY	5660	V	—	Fuel Pump Controller Data Out Signal	13	0.5	GY	5660	VI	—
14	0.5	WH/BK	2366	V	—	Cooling Fan Control Relay Speed Signal	14	0.5	WH/BK	2366	VI	—
15	0.5	L-BU/WH	890	V	—	Fuel Tank Pressure Sensor Signal	15	0.5	L-BU/WH	890	VI	—
16	0.5	YE/RD	2709	V	—	Fuel Tank Pressure Sensor 5 Volt Reference	16	0.5	YE/RD	2709	VI	—
17	0.5	BK/L-GN	6281	V	—	Fuel Level Sensor Low Reference	17	0.5	BK/L-GN	6281	VI	—
18	0.5	L-BU/VT	1589	V	—	Primary Fuel Level Sensor Signal	18	0.5	L-BU/VT	1589	VI	—
19	0.75	L-BU/YE	7574	V	—	Electric Variable Displacement Control	19	0.75	L-BU/YE	7574	VI	—
20	2.5	YE/BN	1569	III	—	Transfer Case Lock Solenoid Control	20	2.5	YE/BN	1569	VI	—
21	0.5	BK/YE	7447	V	—	Fuel Line Pressure Sensor Low Reference	21	0.5	BK/YE	7447	VI	—
22	0.5	L-BU/GY	7473	V	—	Incremental Encoder Impulse Signal	22	0.5	L-BU/GY	7473	VI	—
23	0.5	L-GN/WH	1162	V	—	Accelerator Pedal Position Signal (2)	23	0.5	L-GN/WH	1162	VI	—

24	0.5	BK/L-BU	1271	V	—	Accelerator Pedal Position Low Reference (1)	24	0.5	BK/L-BU	1271	VI	—
25	0.5	WH/RD	1164	V	—	Accelerator Pedal Position 5 Volt Reference (1)	25	0.5	WH/RD	1164	VI	—
26	0.5	WH	1310	V	—	EVAP Canister Vent Solenoid Control	26	0.5	WH	1310	VI	—
27	0.5	WH/RD	7477	V	—	Rotary Position Sensor 5 Volt Reference	27	0.5	WH/RD	7477	VI	—
28	0.5	WH/L-GN	7479	V	—	Rotary Position Sensor Signal	28	0.5	WH/L-GN	7479	VI	—
29	0.5	YE/BK	7478	IV	—	Rotary Position Sensor Low Reference	29	0.5	YE/BK	7478	VI	—
30	0.5	BK/L-BU	61	V	—	Outside Ambient Temperature Sensor Low Reference	30	0.5	BK/L-BU	61	VI	—
31	0.5	L-BU/GY	636	V	—	Outside Ambient Air Temperature Sensor Signal	31	0.5	L-BU/GY	636	VI	—
32	0.5	YE/WH	1161	V	—	Accelerator Pedal Position Signal (1)	32	0.5	YE/WH	1161	VI	—
33	0.5	BK/GY	6110	V	—	Clutch Apply Sensor Low Reference	33	0.5	BK/GY	6110	VI	—
34	0.5	YE	6111	V	—	Clutch Apply Sensor Signal	34	0.5	YE	6111	VI	—

35	0.5 0.5	WH/RD GY/RD	5381 6109	V	—	—	Brake Position Sensor 5 Volt Reference Clutch Apply Sensor 5 Volt Reference	35	0.5 0.5	WH/RD GY/RD	5381 6109	VI	— —
36	0.5	L-BU/YE	7493	V	—	High Speed GMLAN Serial Data (+)(3)		36	0.5	L-BU/YE	7493	VI	—
37	0.5	WH	7494	V	—	High Speed GMLAN Serial Data (-)(3)		37	0.5	WH	7494	VI	—
38	2.5	YE/GY	1552	I	—	Transfer Case Motor Clockwise Control		38	2.5	YE/GY	1552	VI	—
39	2.5	RD/GY	1342	III	—	Battery Positive Voltage		39	2.5	RD/GY	1342	VI	—
40	0.5	BK/L-BU	6813	V	—	Coolant Temperature Sensor 2 Low Reference		40	0.5	BK/L-BU	6813	VI	—
41	0.5	YE/BK	3000	V	—	Coolant Temperature Sensor 2 Signal		41	0.5	YE/BK	3000	VI	—
42	0.5	VT/YE	5985	V	—	Accessory Wakeup Serial Data		42	0.5	VT/YE	5985	VI	—
43	0.5	VT	7476	V	—	Incremental Encoder Sensor Low Reference		43	0.5	VT	7476	VI	—
44	0.5	L-BU/WH	7446	V	—	Fuel Line Pressure Sensor Signal		44	0.5	L-BU/WH	7446	VI	—

45	0.5	GY	3890	V	—	Aero Shutter Control 2	45	0.5	GY	3890	VI	—
46	0.5	L-BU	2500	V	—	High Speed GMLAN Serial Data (+) (1)	46	0.5	L-BU	2500	VI	—
47	0.5	WH	2501	V	—	High Speed GMLAN Serial Data (-) (1)	47	0.5	WH	2501	VI	—
48	0.5	BN/RD	7445	II	—	Fuel Line Pressure Sensor 5 Volt Reference	48	0.5	BN/RD	7445	VI	—

X101 Engine Harness to Body Harness (LFX)

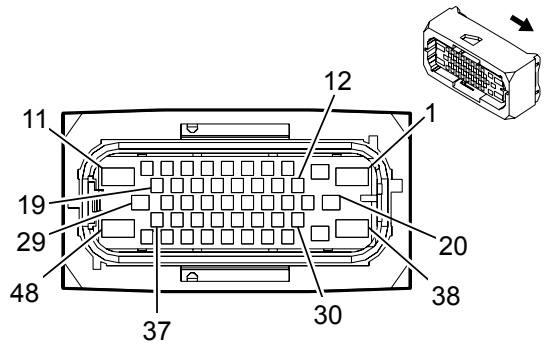

—

Connector Part Information

Harness Type: Engine

OEM Connector: 15509585

Service Connector: 19329744

Description: 48-Way F 1.5 MCP, 2.8 JPT, 6.3 MCP Series, Sealed (BK)

Connector Part Information

Harness Type: Body

OEM Connector: Not Available

Service Connector: Service by Harness - See Part Catalog

Description: 48-Way M

Terminal Part Information

Terminal Type ID	Terminated Lead	Diagnostic Test Probe	Terminal Removal Tool	Service Terminal	Tray	Core Crimp	Insulation Crimp
I	13580829	J-35616-4A (PU)	J-38125-36	Not Available	Not Available	Not Available	Not Available
I	13580829	J-35616-4A (PU)	J-38125-36	Not Available	Not Available	Not Available	Not Available
I	13580829	J-35616-4A (PU)	J-38125-36	Not Available	Not Available	Not Available	Not Available
I	13580829	J-35616-4A (PU)	J-38125-36	Not Available	Not Available	Not Available	Not Available
I	13580829	J-35616-4A (PU)	J-38125-36	Not Available	Not Available	Not Available	Not Available
II	Not Required	Pending	No Tool Required	Not Required	Not Required	Not Required	Not Required

X101 Engine Harness to Body Harness (LFX)

Pin	Size	Color	Circuit	Terminal Type ID	Option	Function	Pin	Size	Color	Circuit	Terminal Type ID	Option
1	2.5	YE/VT	1553	I	—	Transfer Case Motor Counter Clockwise Control	1	2.5	YE/VT	1553	II	—
2	2.5	BN/VT	1470	I	—	Brake Booster Pump Motor Control	2	2.5	BN/VT	1470	II	—
3	0.75	VT/GY	139	I	—	Run/Crank Ignition 1 Voltage	3	0.75	VT/GY	139	II	—

3	0.75					Voltage	3	0.75				
4	0.5	WH/L-GN	7475	I	—	Incremental Encoder Sensor 8 Volt Reference	4	0.5	WH/L-GN	7475	II	—
5	0.5	WH/L-BU	6311	I	—	Cruise/ETC/TCC Brake Signal	5	0.5	WH/L-BU	6311	II	—
6	0.5	BK/VT	1272	I	—	Accelerator Pedal Position Low Reference (2)	6	0.5	BK/VT	1272	II	—
7	0.5	BN/WH	419	I	—	Check Engine Indicator Control	7	0.5	BN/WH	419	II	—
8	0.5	BN/RD	1274	I	—	Accelerator Pedal Position 5 Volt Reference (2)	8	0.5	BN/RD	1274	II	—
9	0.5	YE	7474	I	—	Incremental Encoder Direction Signal	9	0.5	YE	7474	II	—
10	0.75	L-BU/BN	7573	I	—	Electric Variable Displacement Supply	10	0.75	L-BU/BN	7573	II	—
11	0.75	BK	1450	I	—	Ground	11	0.75	BK	1450	II	—
12	0.5	BK	1782	I	—	Low Reference	12	0.5	BK	1782	II	—
13	0.5	GY	5660	I	—	Fuel Pump Controller Data Out Signal	13	0.5	GY	5660	II	—
14	0.5	WH/BK	2366	I	—	Cooling Fan Control Relay Speed Signal	14	0.5	WH/BK	2366	II	—

14	0.5					Relay Speed Signal	14	0.5				
15	0.5	L-BU/WH	890	I	—	Fuel Tank Pressure Sensor Signal	15	0.5	L-BU/WH	890	II	—
16	0.5	YE/RD	2709	I	—	Fuel Tank Pressure Sensor 5 Volt Reference	16	0.5	YE/RD	2709	II	—
17	0.5	BK/L-GN	6281	I	—	Fuel Level Sensor Low Reference	17	0.5	BK/L-GN	6281	II	—
18	0.5	L-BU/VT	1589	I	—	Primary Fuel Level Sensor Signal	18	0.5	L-BU/VT	1589	II	—
19	0.75	L-BU/YE	7574	I	—	Electric Variable Displacement Control	19	0.75	L-BU/YE	7574	II	—
20	2.5	YE/BN	1569	I	—	Transfer Case Lock Solenoid Control	20	2.5	YE/BN	1569	II	—
21	—	—	—	—	—	Not Occupied	21	—	—	—	—	—
22	0.5	L-BU/GY	7473	I	—	Incremental Encoder Impulse Signal	22	0.5	L-BU/GY	7473	II	—
23	0.5	L-GN/WH	1162	I	—	Accelerator Pedal Position Signal (2)	23	0.5	L-GN/WH	1162	II	—
24	0.5	BK/L-BU	1271	I	—	Accelerator Pedal Position Low Reference (1)	24	0.5	BK/L-BU	1271	II	—
25	0.5	WH/RD	1164	I	—	Accelerator Pedal Position 5 Volt Reference (1)	25	0.5	WH/RD	1164	II	—

26	0.5	WH	1310	I	—	EVAP Canister Vent Solenoid Control	26	0.5	WH	1310	II	—
27	0.5	WH/RD	7477	I	—	Rotary Position Sensor 5 Volt Reference	27	0.5	WH/RD	7477	II	—
28	0.5	WH/L-GN	7479	I	—	Rotary Position Sensor Signal	28	0.5	WH/L-GN	7479	II	—
29	0.5	YE/BK	7478	I	—	Rotary Position Sensor Low Reference	29	0.5	YE/BK	7478	II	—
30	0.5	BK/L-BU	61	I	—	Outside Ambient Temperature Sensor Low Reference	30	0.5	BK/L-BU	61	II	—
31	0.5	L-BU/GY	636	I	—	Outside Ambient Air Temperature Sensor Signal	31	0.5	L-BU/GY	636	II	—
32	0.5	YE/WH	1161	I	—	Accelerator Pedal Position Signal (1)	32	0.5	YE/WH	1161	II	—
33	0.5	BK/YE	5382	I	—	Brake Position Sensor Low Reference	33	0.5	BK/YE	5382	II	—
34	0.5	WH/L-GN	5380	I	—	Brake Position Sensor Signal	34	0.5	WH/L-GN	5380	II	—
35	0.5	WH/RD	5381	I	—	Brake Position Sensor 5 Volt Reference	35	0.5	WH/RD	5381	II	—
36 - 37	—	—	—	—	—	Not Occupied	36 - 37	—	—	—	—	—
38	2.5	YE/GY	1552	I	—	Transfer Case Motor Clockwise Control	38	2.5	YE/GY	1552	II	—

39	2.5	RD/GY	1342	I	—	Battery Positive Voltage	39	2.5	RD/GY	1342	II	—
40 - 41	—	—	—	—	—	Not Occupied	40 - 41	—	—	—	—	—
42	0.5	VT/YE	5985	I	—	Accessory Wakeup Serial Data	42	0.5	VT/YE	5985	II	—
43	0.5	VT	7476	I	—	Incremental Encoder Sensor Low Reference	43	0.5	VT	7476	II	—
44 - 45	—	—	—	—	—	Not Occupied	44 - 45	—	—	—	—	—
46	0.5	L-BU	2500	I	—	High Speed GMLAN Serial Data (+) (1)	46	0.5	L-BU	2500	II	—
47	0.5	WH	2501	I	—	High Speed GMLAN Serial Data (-) (1)	47	0.5	WH	2501	II	—
48	—	—	—	—	—	—	48	—	—	—	—	—

X101 Engine Harness to Body Harness (LWN)

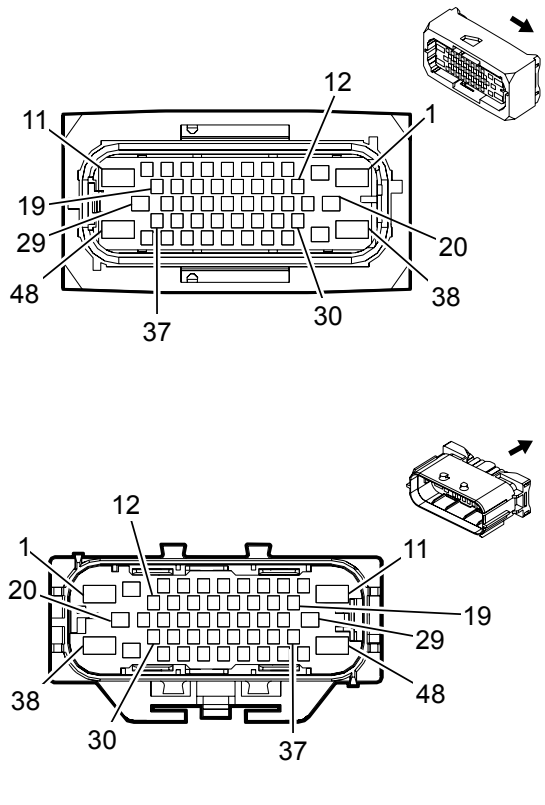

Connector Part Information

Harness Type: Engine

OEM Connector: 13586845

Service Connector: 19329744

Description: 48-Way F 1.5 MCP, 2.8 JPT, 6.3 MCP Series, Sealed (BK)

Connector Part Information

Harness Type: Body

OEM Connector: 15513438

Service Connector: 19329745

Description: 48-Way M 1.6, 2.8, 5.8 Series, Sealed (BK)

Terminal Part Information

Terminal Type ID	Terminated Lead	Diagnostic Test Probe	Terminal Removal Tool	Service Terminal	Tray	Core Crimp	Insulation Crimp
I	13579921	J-35616-40 (BU)	J-38125-556	1241408-1	4	A	B
II	13579921	J-35616-40 (BU)	J-38125-556	Not Available	Not Available	Not Available	Not Available
III	13580829	J-35616-4A (PU)	J-38125-36	Not Available	Not Available	Not Available	Not Available
IV	13580830	J-35616-4A (PU)	J-38125-36	Not Available	Not Available	Not Available	Not Available
V	19119381	J-35616-14 (GN)	J-38125-215A	Not Available	Not Available	Not Available	Not Available
VI	13575380	J-35616-3 (GY)	J-38125-560	Not Available	Not Available	Not Available	Not Available
VII	13578881	J-35616-5 (PU)	J-38125-36	Not Available	Not Available	Not Available	Not Available
VIII	13581368	J-35616-5 (PU)	J-38125-36	Not Available	Not Available	Not Available	Not Available
IX	19119926	J-35616-42 (RD)	J-38125-36	Not Available	Not Available	Not Available	Not Available
X	19301750	J-35616-42 (RD)	J-38125-36	Not Available	Not Available	Not Available	Not Available

X	[illegible]	[illegible]	[illegible]	Not Available	Not Available	Not Available	Not Available					

X101 Engine Harness to Body Harness (LWN)

Pin	Size	Color	Circuit	Terminal Type ID	Option	Function	Pin	Size	Color	Circuit	Terminal Type ID	Option
1	2.5	YE/VT	1553	I	—	Transfer Case Motor Counter Clockwise Control	1	2.5	YE/VT	1553	IX	—
2	—	—	—	—	—	Not Occupied	2	—	—	—	—	—
3	0.75	VT/GY	139	V	—	Run/Crank Ignition 1 Voltage	3	0.75	VT/GY	139	VI	—
4	0.5	WH/L-GN	7475	V	—	Incremental Encoder Sensor 8 Volt Reference	4	0.5	WH/L-GN	7475	VI	—
5	0.5	WH/L-BU	6311	V	—	Cruise/ETC/TCC Brake Signal	5	0.5	WH/L-BU	6311	VI	—
6	0.5	BK/VT	1272	V	—	Accelerator Pedal Position Low Reference (2)	6	0.5	BK/VT	1272	VI	—
7	0.5	BN/WH	419	V	—	Check Engine Indicator Control	7	0.5	BN/WH	419	VI	—
8	0.5	BN/RD	1274	V	—	Accelerator Pedal Position 5 Volt Reference (2)	8	0.5	BN/RD	1274	VI	—
9	0.5	YE	7474	V	—	Incremental Encoder Direction Signal	9	0.5	YE	7474	VI	—
10	0.75	L-BU/BN	7573	V	—	Electric Variable Displacement Supply	10	0.5	L-BU/BN	7573	VI	—
11	0.75	BK	1450	II	—	Ground	11	0.75	BK	1450	X	—

12	0.5	BK	1782	V	—	Low Reference	12	0.5	BK	1782	VI	—
13 - 16	—	—	—	—	—	Not Occupied	13 - 16	—	—	—	—	—
17	0.5	BK/L-GN	6281	V	—	Fuel Level Sensor Low Reference	17	0.5	BK/L-GN	6281	VI	—
18	0.5	L-BU/VT	1589	V	—	Primary Fuel Level Sensor Signal	18	0.5	L-BU/VT	1589	VI	—
19	0.75	L-BU/YE	7574	V	—	Electric Variable Displacement Control	19	0.5	L-BU/YE	7574	VI	—
20	2.5	YE/BN	1569	III	—	Transfer Case Lock Solenoid Control	20	2.5	YE/BN	1569	VII	—
21	0.5	L-GN/BN	507	V	—	Wait To Start Indicator Control	21	0.5	L-GN/BN	507	VI	—
22	0.5	L-BU/GY	7473	V	—	Incremental Encoder Impulse Signal	22	0.5	L-BU/GY	7473	VI	—
23	0.5	L-GN/WH	1162	V	—	Accelerator Pedal Position Signal (2)	23	0.5	L-GN/WH	1162	VI	—
24	0.5	BK/L-BU	1271	V	—	Accelerator Pedal Position Low Reference (1)	24	0.5	BK/L-BU	1271	VI	—
25	0.5	WH/RD	1164	V	—	Accelerator Pedal Position 5 Volt Reference (1)	25	0.5	WH/RD	1164	VI	—
26	—	—	—	—	—	Not Occupied	26	—	—	—	—	—

27	0.5	WH/RD	7477	V	—	Rotary Position Sensor 5 Volt Reference	27	0.5	WH/RD	7477	VI	—
28	0.5	WH/L-GN	7479	V	—	Rotary Position Sensor Signal	28	0.5	WH/L-GN	7479	VI	—
29	0.5	YE/BK	7478	IV	—	Rotary Position Sensor Low Reference	29	0.5	YE/BK	7478	VIII	—
30	0.5	BK/L-BU	61	V	—	Outside Ambient Temperature Sensor Low Reference	30	0.5	BK/L-BU	61	VI	—
31	0.5	L-BU/GY	636	V	—	Outside Ambient Air Temperature Sensor Signal	31	0.5	L-BU/GY	636	VI	—
32	0.5	YE/WH	1161	V	—	Accelerator Pedal Position Signal (1)	32	0.5	YE/WH	1161	VI	—
33	0.5	BK/YE	5382	V	—	Brake Position Sensor Low Reference	33	0.5	BK/YE	5382	VI	—
34	0.5	WH/L-GN	5380	V	—	Brake Position Sensor Signal	34	0.5	WH/L-GN	5380	VI	—
35	0.5	WH/RD	5381	V	—	Brake Position Sensor 5 Volt Reference	35	0.5	WH/RD	5381	VI	—
36 - 37	—	—	—	—	—	Not Occupied	36 - 37	—	—	—	—	—
38	2.5	YE/GY	1552	I	—	Transfer Case Motor Clockwise Control	38	2.5	YE/GY	1552	IX	—
39	2.5	RD/GY	1342	III	—	Battery Positive Voltage	39	2.5	RD/GY	1342	VII	—

40 - 41	—	—	—	—	—	Not Occupied	40 - 41	—	—	—	—	—
42	0.5	VT/YE	5985	V	—	Accessory Wakeup Serial Data	42	0.5	VT/YE	5985	VI	—
43	0.5	VT	7476	V	—	Incremental Encoder Sensor Low Reference	43	0.5	VT	7476	VI	—
44 - 45	—	—	—	—	—	Not Occupied	44 - 45	—	—	—	—	—
46	0.5	L-BU	2500	V	—	High Speed GMLAN Serial Data (+) (1)	46	0.5	L-BU	2500	VI	—
47	0.5	WH	2501	V	—	High Speed GMLAN Serial Data (-) (1)	47	0.5	WH	2501	VI	—
48	—	—	—	—	—	—	48	—	—	—	—	—

X102 Forward Lamp Harness to Body Harness (LCV/LFX)

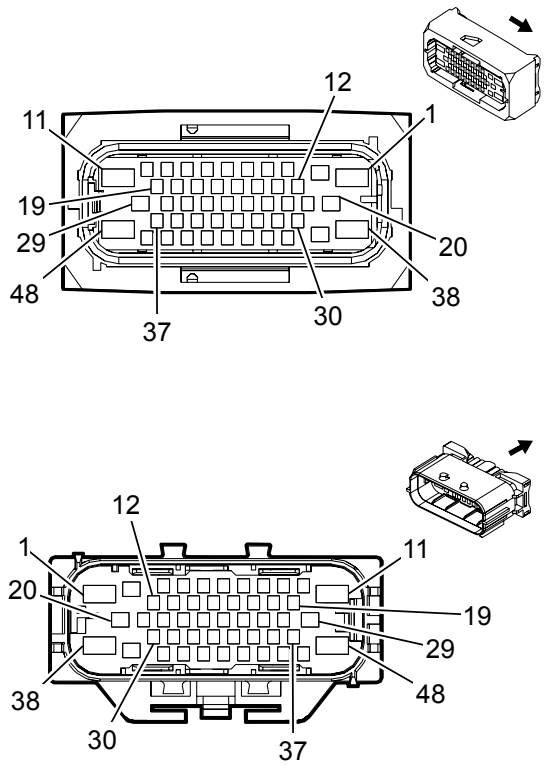

Connector Part Information

Harness Type: Forward Lamp

OEM Connector: 15509588

Service Connector: 19329766

Description: 48-Way F 1.5 MCP, 2.8 JPT, 6.3 MCP Series, Sealed (YE)

Connector Part Information

Harness Type: Body

OEM Connector: 15513436

Service Connector: 19301796

Description: 48-Way M 1.6, 2.8, 5.8 Series, Sealed (BK)

Terminal Part Information

Terminal Type ID	Terminated Lead	Diagnostic Test Probe	Terminal Removal Tool	Service Terminal	Tray	Core Crimp	Insulation Crimp
I	13575359	J-35616-14 (GN)	J-38125-215A	Not Available	Not Available	Not Available	Not Available
II	13579921	J-35616-40 (BU)	J-38125-556	1241408-1	4	A	B
III	13579921	J-35616-40 (BU)	J-38125-556	1241408-1	4	C	A
IV	13580830	J-35616-4A (PU)	J-38125-36	Not Available	Not Available	Not Available	Not Available
V	19119381	J-35616-14 (GN)	J-38125-215A	Not Available	Not Available	Not Available	Not Available
V	19119381	J-35616-14 (GN)	J-38125-215A	Not Available	Not Available	Not Available	Not Available
VI	19329757	J-35616-14 (GN)	J-38125-215A	Not Available	Not Available	Not Available	Not Available
VII	13575380	J-35616-3 (GY)	J-38125-560	Not Available	Not Available	Not Available	Not Available
VIII	13578882	J-35616-3 (GY)	J-38125-560	Not Available	Not Available	Not Available	Not Available
IX	13579985	J-35616-3 (GY)	J-38125-560	Not Available	Not Available	Not Available	Not Available

IX	[illegible]	[illegible]	[illegible]	Not Available	Not Available	Not Available	Not Available
X	13581368	J-35616-5 (PU)	J-38125-36	Not Available	Not Available	Not Available	Not Available
XI	19119926	J-35616-42 (RD)	J-38125-36	Not Available	Not Available	Not Available	Not Available
XII	19331731	J-35616-3 (GY)	J-38125-560	Not Available	Not Available	Not Available	Not Available

X102 Forward Lamp Harness to Body Harness (LCV/LFX)

Pin	Size	Color	Circuit	Terminal Type ID	Option	Function	Pin	Size	Color	Circuit	Terminal Type ID	Option
1	2.5	BN/VT	1470	II	—	Brake Booster Pump Motor Control	1	2.5	BN/VT	1470	XI	—
2	—	—	—	—	—	Not Occupied	2	—	—	—	—	—
3	0.75	WH/VT	1430	V	—	Exterior Courtesy Lamp Control	3	0.75	WH/VT	1430	VII	—
4 - 5	—	—	—	—	—	Not Occupied	4 - 5	—	—	—	—	—
6	0.75	VT/GY	709	V	—	Left Park Lamp Control	6	0.5	VT/GY	709	VII	—
7	—	—	—	—	—	Not Occupied	7	—	—	—	—	—
8	0.75	GY/BN	309	V	—	Right Park Lamp Control	8	0.5	GY/BN	309	VII	—
9	—	—	—	—	—	Not Occupied	9	—	—	—	—	—
10	1.5	WH	92	I	—	Windshield Wiper Motor High Speed Control	10	1.5	WH	92	XII	—
11	1.5	YE/BN	95	III	—	Windshield Wiper Motor Low Speed Control	11	1.5	YE/BN	95	XI	—
12	—	—	—	—	—	Not Occupied	12	—	—	—	—	—
13	0.5	OG/YE	354	VI	—	Left Front Discriminating Sensor Signal	13	0.5	OG/YE	354	IX	—

14	0.5	BK/OG	5045	VI	—	Left Front Discriminating Sensor Low Reference	14	0.5	BK/OG	5045	IX	—
15	0.5	BN/L-GN	109	V	—	Hood Ajar Switch Signal	15	0.5	BN/L-GN	109	VII	—
16	—	—	—	—	—	Not Occupied	16	—	—	—	—	—
17	0.35	VT/GY	1054	V	—	Stop Lamp Control	17	0.35	VT/GY	1054	VIII	—
18	—	—	—	—	—	Not Occupied	18	—	—	—	—	—
19	1.5	YE	312	I	—	Right Headlamp Low Beam Control	19	1.5	YE	312	XII	—
20	—	—	—	—	—	Not Occupied	20	—	—	—	—	—
21	0.5	OG/L-GN	1409	VI	—	Right Front Discriminating Sensor Signal	21	0.5	OG/L-GN	1409	IX	—
22	0.5	BK/OG	5600	VI	—	Right Front Discriminating Sensor Low Reference	22	0.5	BK/OG	5600	IX	—
23	—	—	—	—	—	Not Occupied	23	—	—	—	—	—
24	0.5	WH/BK	2366	V	—	Cooling Fan Control Relay Speed Signal	24	0.5	WH/BK	2366	VII	—
25	—	—	—	—	—	Not Occupied	25	—	—	—	—	—
26	0.5	L-BU/GY	636	V	—	Outside Ambient Air Temperature Sensor Signal	26	0.5	L-BU/GY	636	VII	—
27	0.5	BK/L-BU	61	V	—	Outside Ambient Temperature Sensor Low Reference	27	0.5	BK/L-BU	61	VII	—
28	—	—	—	—	—	Not Occupied	28	—	—	—	—	—

29	0.75	L-GN/VT	1315	IV	—	Right Front Turn Signal Lamp Control	29	0.75	L-GN/VT	1315	X	—
30	—	—	—	—	—	Not Occupied	30	—	—	—	—	—
31	0.5	BN	6305	V	—	Brake Vacuum Switch Signal	31	0.5	BN	6305	VII	—
32 - 33	—	—	—	—	—	Not Occupied	32 - 33	—	—	—	—	—
34	0.5	BN	3891	V	—	Aero Shutter Control	34	0.5	BN	3891	VII	—
35	0.5	GY	3890	V	—	Aero Shutter Control 2	35	0.5	GY	3890	VII	—
36	—	—	—	—	—	Not Occupied	36	—	—	—	—	—
37	1.5	YE	712	I	—	Left Headlamp Low Beam Control	37	1.5	YE	712	XII	—
38	1.5	BK	3150	III	—	Ground	38	1.5	BK	3150	XI	—
39 - 43	—	—	—	—	—	Not Occupied	39 - 43	—	—	—	—	—
44	0.5	YE/BK	3000	V	—	Coolant Temperature Sensor 2 Signal	44	0.5	YE/BK	3000	VII	—
45	0.5	BK/L-BU	6813	V	—	Coolant Temperature Sensor 2 Low Reference	45	0.5	BK/L-BU	6813	VII	—
46	—	—	—	—	—	Not Occupied	46	—	—	—	—	—
47	0.75	L-BU/WH	1314	V	—	Left Front Turn Signal Lamp Control	47	0.75	L-BU/WH	1314	VII	—
48	1.5	BN	2109	III	—	Trailer Park Lamp Control	48	1.5	BN	2109	XI	—

48	1.5					Control	48	1.5				

X102 Forward Lamp Harness to Body Harness (LWN)

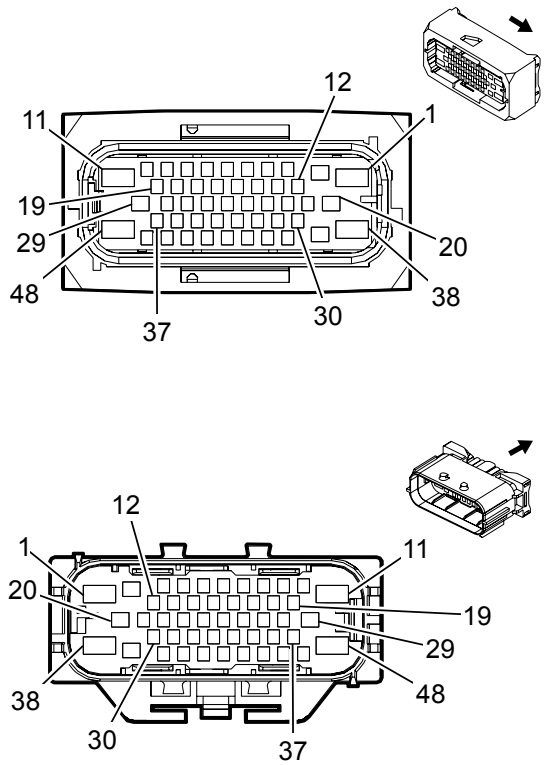

Connector Part Information

Harness Type: Forward Lamp

OEM Connector: 13586843

Service Connector: 15936060

Description: 48-Way F 1.5 MCP, 2.8 JPT, 6.3 MCP Series, Sealed (YE)

Connector Part Information

Harness Type: Body

OEM Connector: 15513436

Service Connector: 19301796

Description: 48-Way M 1.6, 2.8, 5.8 Series, Sealed (BK)

Terminal Part Information

Terminal Type ID	Terminated Lead	Diagnostic Test Probe	Terminal Removal Tool	Service Terminal	Tray	Core Crimp	Insulation Crimp
I	13575359	J-35616-14 (GN)	J-38125-215A	Not Available	Not Available	Not Available	Not Available
II	13579921	J-35616-40 (BU)	J-38125-556	1241408-1	4	C	A
III	13580830	J-35616-4A (PU)	J-38125-36	Not Available	Not Available	Not Available	Not Available
IV	19119381	J-35616-14 (GN)	J-38125-215A	Not Available	Not Available	Not Available	Not Available
IV	19119381	J-35616-14 (GN)	J-38125-215A	Not Available	Not Available	Not Available	Not Available
V	19329757	J-35616-14 (GN)	J-38125-215A	Not Available	Not Available	Not Available	Not Available
VI	13575380	J-35616-3 (GY)	J-38125-560	Not Available	Not Available	Not Available	Not Available
VII	13578882	J-35616-3 (GY)	J-38125-560	Not Available	Not Available	Not Available	Not Available
VIII	13579985	J-35616-3 (GY)	J-38125-560	Not Available	Not Available	Not Available	Not Available
IX	13581368	J-35616-5 (PU)	J-38125-36	Not Available	Not Available	Not Available	Not Available

IX	[illegible]	[illegible]	[illegible]	[illegible]	[illegible]	[illegible]
X	19119926	J-35616-42 (RD)	J-38125-36	Not Available	Not Available	Not Available	Not Available
XI	19331731	J-35616-3 (GY)	J-38125-560	Not Available	Not Available	Not Available	Not Available

X102 Forward Lamp Harness to Body Harness (LWN)

Pin	Size	Color	Circuit	Terminal Type ID	Option	Function	Pin	Size	Color	Circuit	Terminal Type ID	Option
1 - 2	—	—	—	—	—	Not Occupied	1 - 2	—	—	—	—	—
3	0.75	WH/VT	1430	IV	—	Exterior Courtesy Lamp Control	3	0.75	WH/VT	1430	VI	—
4 - 5	—	—	—	—	—	Not Occupied	4 - 5	—	—	—	—	—
6	0.75	VT/GY	709	IV	—	Left Park Lamp Control	6	0.5	VT/GY	709	VI	—
7	—	—	—	—	—	Not Occupied	7	—	—	—	—	—
8	0.75	GY/BN	309	IV	—	Right Park Lamp Control	8	0.5	GY/BN	309	VI	—
9	—	—	—	—	—	Not Occupied	9	—	—	—	—	—
10	1.5	WH	92	I	—	Windshield Wiper Motor High Speed Control	10	1.5	WH	92	XI	—
11	1.5	YE/BN	95	II	—	Windshield Wiper Motor Low Speed Control	11	1.5	YE/BN	95	X	—
12	—	—	—	—	—	Not Occupied	12	—	—	—	—	—
13	0.5	OG/YE	354	V	—	Left Front Discriminating Sensor Signal	13	0.5	OG/YE	354	VIII	—
14	0.5	BK/OG	5045	V	—	Left Front Discriminating Sensor Low Reference	14	0.5	BK/OG	5045	VIII	—
15	0.5	BN/L-GN	109	IV	—	Hood Ajar Switch Signal	15	0.5	BN/L-GN	109	VI	—

16	—	—	—	—	—	Not Occupied	16	—	—	—	—	—
17	0.35	VT/GY	1054	IV	—	Stop Lamp Control	17	0.35	VT/GY	1054	VII	—
18	—	—	—	—	—	Not Occupied	18	—	—	—	—	—
19	1.5	YE	312	I	—	Right Headlamp Low Beam Control	19	1.5	YE	312	XI	—
20	—	—	—	—	—	Not Occupied	20	—	—	—	—	—
21	0.5	OG/L-GN	1409	V	—	Right Front Discriminating Sensor Signal	21	0.5	OG/L-GN	1409	VIII	—
22	0.5	BK/OG	5600	V	—	Right Front Discriminating Sensor Low Reference	22	0.5	BK/OG	5600	VIII	—
23 - 25	—	—	—	—	—	Not Occupied	23 - 25	—	—	—	—	—
26	0.5	L-BU/GY	636	IV	—	Outside Ambient Air Temperature Sensor Signal	26	0.5	L-BU/GY	636	VI	—
27	0.5	BK/L-BU	61	IV	—	Outside Ambient Temperature Sensor Low Reference	27	0.5	BK/L-BU	61	VI	—
28	—	—	—	—	—	Not Occupied	28	—	—	—	—	—
29	0.75	L-GN/VT	1315	III	—	Right Front Turn Signal Lamp Control	29	0.75	L-GN/VT	1315	IX	—
30 - 36	—	—	—	—	—	Not Occupied	30 - 36	—	—	—	—	—
37	1.5	YE	712	I	—	Left Headlamp Low Beam Control	37	1.5	YE	712	XI	—
38	1.5	BK	3150	II	—	Ground	38	1.5	BK	3150	X	—

39 - 46	—	—	—	—	—	Not Occupied	39 - 46	—	—	—	—	—
47	0.75	L-BU/WH	1314	IV	—	Left Front Turn Signal Lamp Control	47	0.75	L-BU/WH	1314	VI	—
48	1.5	BN	2109	II	—	Trailer Park Lamp Control	48	1.5	BN	2109	X	—

X103 Chassis Harness to Power Steering Harness

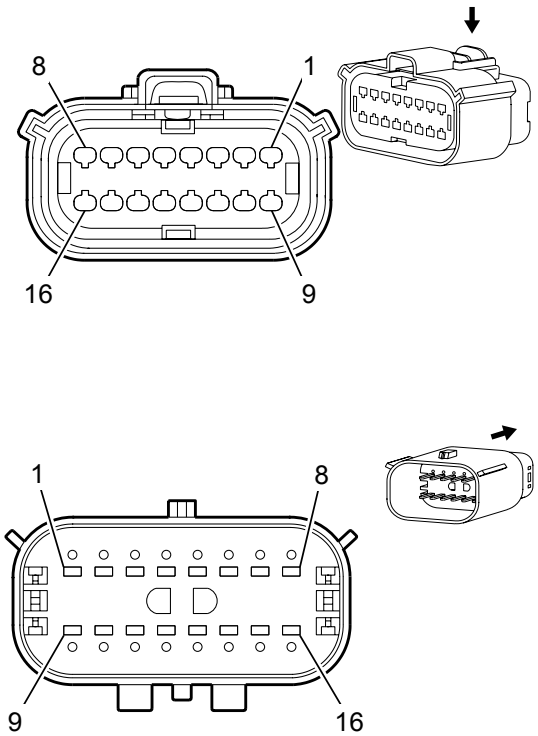

Connector Part Information

Harness Type: Chassis

OEM Connector: 33472-1606

Service Connector: 13584788

Description: 16-Way F 150 MX Series, Sealed (BK)

Connector Part Information

Harness Type: Power Steering

OEM Connector: 13503544

Service Connector: Service by Harness - See Part Catalog

Description: 16-Way M 150 MX Series, Sealed (BK)

Terminal Part Information

Terminal Type ID	Terminated Lead	Diagnostic Test Probe	Terminal Removal Tool	Service Terminal	Tray	Core Crimp	Insulation Crimp
I	13575868	J-35616-2A (GY)	J-38125-217	Not Available	Not Available	Not Available	Not Available
II	19300635	J-35616-2A (GY)	J-38125-217	Not Available	Not Available	Not Available	Not Available
III	Not Required	J-35616-3 (GY)	Not Required	Not Required	Not Required	Not Required	Not Required

X103 Chassis Harness to Power Steering Harness

Pin	Size	Color	Circuit	Terminal Type ID	Option	Function	Pin	Size	Color	Circuit	Terminal Type ID	Option
1	0.75	VT/BK	2139	II	—	Run/Crank Ignition 1 Voltage	1	0.75	VT/BK	2139	III	—
2	0.5	WH	2501	I	—	High Speed GMLAN	2	0.5	WH	2501	III	—

2	0.5					Serial Data (-) (1)	2	0.5				
3	0.5	L-BU	2500	I	—	High Speed GMLAN Serial Data (+) (1)	3	0.5	L-BU	2500	III	—
4	0.5	WH	6106	I	—	High Speed GMLAN Serial Data (-) (2)	4	0.5	WH	6106	III	—
5	0.5	L-BU/YE	6105	I	—	High Speed GMLAN Serial Data (+) (2)	5	0.5	L-BU/YE	6105	III	—
6	0.5	GY/BK	1570	I	—	Front Axle Actuator Control	6	0.5	GY/BK	1570	III	—
7	0.5	RD/BN	5940	I	—	Battery Positive Voltage	7	0.5	RD/BN	5940	III	—
8	0.5	WH/L-BU	5986	I	—	Serial Data Communication Enable	8	0.5	WH/L-BU	5986	III	—
9	0.5	WH	2501	I	—	High Speed GMLAN Serial Data (-) (1)	9	0.5	WH	2501	III	—
10	0.5	L-BU	2500	I	—	High Speed GMLAN Serial Data (+) (1)	10	0.5	L-BU	2500	III	—
11	0.5	WH	6106	I	—	High Speed GMLAN Serial Data (-) (2)	11	0.5	WH	6106	III	—
12	0.5	L-BU/YE	6105	I	—	High Speed GMLAN Serial Data (+) (2)	12	0.5	L-BU/YE	6105	III	—
		BK	1450	II	—	Ground			BK	1450	III	—

13	0.75						13	0.75				
14	0.5	YE/WH	1695	I	—	Four Wheel Drive Wheel Lock Indicator Control	14	0.5	YE/WH	1695	III	—
15 - 16	—	—	—	—	—	—	15 - 16	—	—	—	—	—

X104 Forward Lamp Harness to Forward Lamp Extension Harness (LCV)

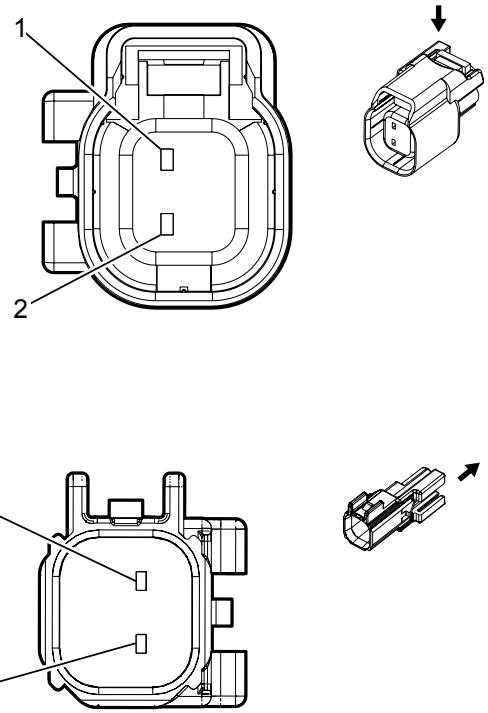

Connector Part Information

Harness Type: Forward Lamp

OEM Connector: 34062-0038

Service Connector: 19329741

Description: 2-Way F 1.5 Series, Sealed (BK)

Connector Part Information

Harness Type: Forward Lamp Extension

OEM Connector: 34675-0001

Service Connector: Service by Harness - See Part Catalog

Description: 2-Way M 1.5 Series, Sealed (BK)

Terminal Part Information

Terminal Type ID	Terminated Lead	Diagnostic Test Probe	Terminal Removal Tool	Service Terminal	Tray	Core Crimp	Insulation Crimp
I	Not Required	J-35616-2A (GY)	Not Required	Not Required	Not Required	Not Required	Not Required
II	Not Required	J-35616-3 (GY)	Not Required	Not Required	Not Required	Not Required	Not Required

X104 Forward Lamp Harness to Forward Lamp Extension Harness (LCV)

Pin	Size	Color	Circuit	Terminal Type ID	Option	Function	Pin	Size	Color	Circuit	Terminal Type ID	Option
1	0.5	YE/BK	3000	I	—	Coolant Temperature Sensor 2 Signal	1	0.5	YE/BK	3000	II	—
2	0.5	BK/L-BU	6813	I	—	Coolant Temperature Sensor 2 Low Reference	2	0.5	BK/L-BU	6813	II	—

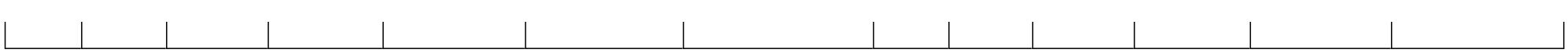

X105 Forward Lamp Harness to Ambient Temperature Sensor Extension Harness (LCV)

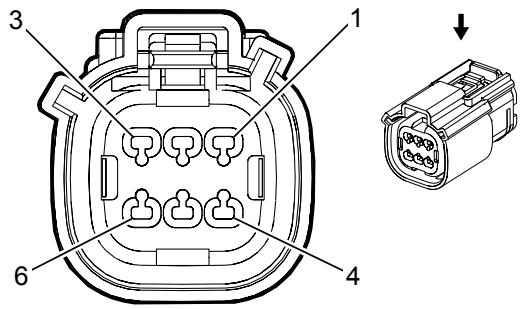

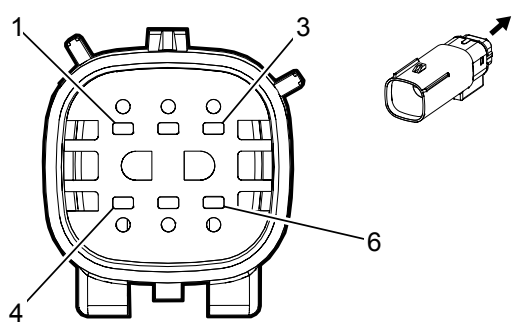

Connector Part Information

Harness Type: Forward Lamp

OEM Connector: 33472-0607

Service Connector: 19301527

Description: 6-Way F 150 MX Series, Sealed (GY)

Connector Part Information

Harness Type: Ambient Temperature Sensor Extension

OEM Connector: 13503536

Service Connector: Service by Harness - See Part Catalog

Description: 6-Way M 150 MX Series, Sealed (GY)

Terminal Part Information

Terminal Type ID	Terminated Lead	Diagnostic Test Probe	Terminal Removal Tool	Service Terminal	Tray	Core Crimp	Insulation Crimp
I	Not Required	J-35616-2A (GY)	Not Required	Not Required	Not Required	Not Required	Not Required
I	Not Required	J-35616-2A (GY)	Not Required	Not Required	Not Required	Not Required	Not Required
II	Not Required	Pending	No Tool Required	Not Required	Not Required	Not Required	Not Required

X105 Forward Lamp Harness to Ambient Temperature Sensor Extension Harness (LCV)

Pin	Size	Color	Circuit	Terminal Type ID	Option	Function	Pin	Size	Color	Circuit	Terminal Type ID	Option
1	0.75	BK	1250	I	—	Ground	1	0.75	BK	1250	II	—
2	0.5	WH/VT	4333	I	—	Aero Shutter Actuator	2	0.5	WH/VT	4333	II	—

2	0.5					Control	2	0.5				
3	0.5	GY	3890	I	—	Aero Shutter Control 2	3	0.5	GY	3890	II	—
4	—	—	—	—	—	Not Occupied	4	—	—	—	—	—
5	0.5	L-BU/GY	636	I	—	Outside Ambient Air Temperature Sensor Signal	5	0.5	L-BU/GY	636	II	—
6	0.5	BK/L-BU	61	I	—	Outside Ambient Temperature Sensor Low Reference	6	0.5	BK/L-BU	61	II	—

X105 Forward Lamp Harness to Ambient Temperature Sensor Extension Harness (LFX)

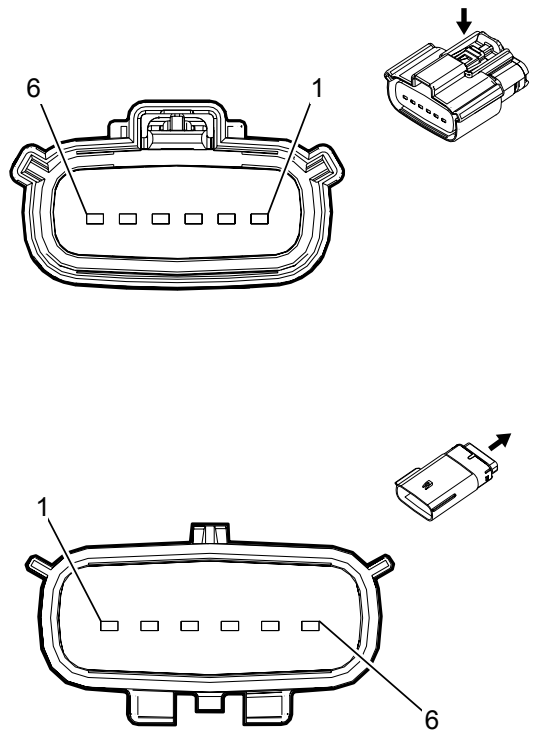

Connector Part Information

Harness Type: Forward Lamp

OEM Connector: 33471-0606

Service Connector: 19303226

Description: 6-Way F 1.5 Series, Sealed (BK)

Connector Part Information

Harness Type: Ambient Temperature Sensor Extension

OEM Connector: 13504374

Service Connector: Service by Harness - See Part Catalog

Description: 6-Way M 1.5 MX Series, Sealed (BK)

Terminal Part Information

Terminal Type ID	Terminated Lead	Diagnostic Test Probe	Terminal Removal Tool	Service Terminal	Tray	Core Crimp	Insulation Crimp
I	Not Required	J-35616-2A (GY)	Not Required	Not Required	Not Required	Not Required	Not Required
I	Not Required	J-35616-2A (GY)	Not Required	Not Required	Not Required	Not Required	Not Required
II	Not Required	Pending	No Tool Required	Not Required	Not Required	Not Required	Not Required

X105 Forward Lamp Harness to Ambient Temperature Sensor Extension Harness (LFX)

Pin	Size	Color	Circuit	Terminal Type ID	Option	Function	Pin	Size	Color	Circuit	Terminal Type ID	Option
1	0.75	BK	1250	I	—	Ground	1	0.75	BK	1250	II	—
2	0.5	WH/VT	4333	I	—	Aero Shutter Actuator	2	0.5	WH/VT	4333	II	—

2	0.5					Control	2	0.5				
3	0.5	BN	3891	I	—	Aero Shutter Control	3	0.5	BN	3891	II	—
4	—	—	—	—	—	Not Occupied	4	—	—	—	—	—
5	0.5	L-BU/GY	636	I	—	Outside Ambient Air Temperature Sensor Signal	5	0.5	L-BU/GY	636	II	—
6	0.5	BK/L-BU	61	I	—	Outside Ambient Temperature Sensor Low Reference	6	0.5	BK/L-BU	61	II	—

X105 Forward Lamp Harness to Ambient Temperature Sensor Extension Harness (LWN)

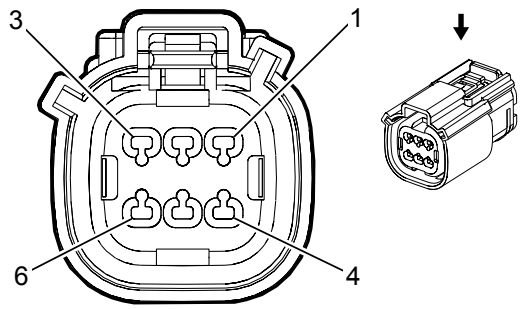

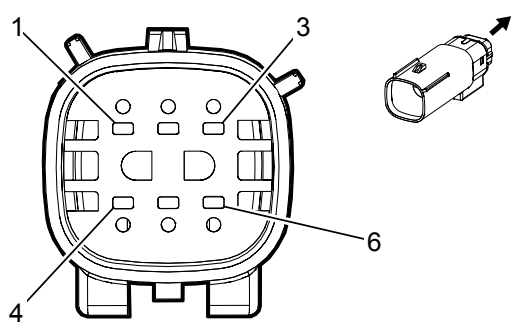

Connector Part Information

Harness Type: Forward Lamp

OEM Connector: 33472-0607

Service Connector: 19301527

Description: 6-Way F 150 MX Series, Sealed (GY)

Connector Part Information

Harness Type: Ambient Temperature Sensor Extension

OEM Connector: 13503536

Service Connector: Service by Harness - See Part Catalog

Description: 6-Way M 150 MX Series, Sealed (GY)

Terminal Part Information

Terminal Type ID	Terminated Lead	Diagnostic Test Probe	Terminal Removal Tool	Service Terminal	Tray	Core Crimp	Insulation Crimp
I	Not Required	J-35616-2A (GY)	Not Required	Not Required	Not Required	Not Required	Not Required
II	Not Required	Pending	No Tool Required	Not Required	Not Required	Not Required	Not Required

X105 Forward Lamp Harness to Ambient Temperature Sensor Extension Harness (LWN)

Pin	Size	Color	Circuit	Terminal Type ID	Option	Function	Pin	Size	Color	Circuit	Terminal Type ID	Option
1 - 4	—	—	—	—	—	Not Occupied	1 - 4	—	—	—	—	—
5	0.5	L-BU/GY	636	I	—	Outside Ambient Air Temperature Sensor Signal	5	0.5	L-BU/GY	636	II	—
6	0.5	BK/L-BU	61	I	—	Outside Ambient	6	0.5	BK/L-BU	61	II	—

6	0.5					Temperature Sensor Low Reference	6	0.5				

X106 Body Harness to Chassis Harness (LCV/LFX)

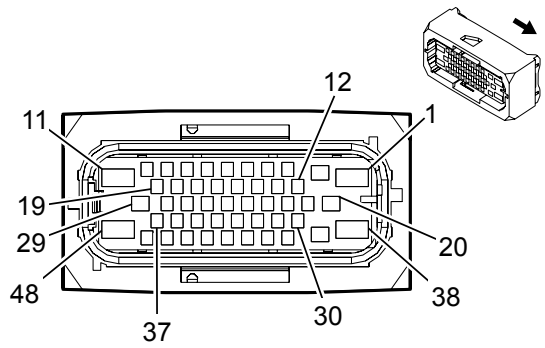

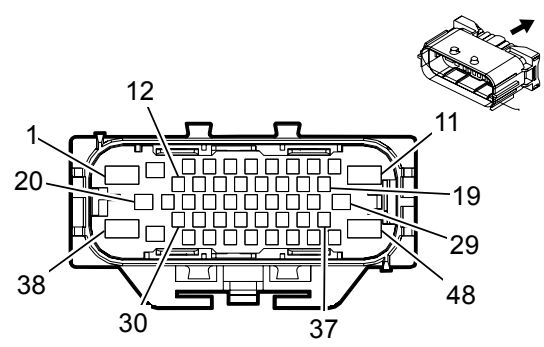

Connector Part Information

Harness Type: Body

OEM Connector: 15509587

Service Connector: 19119963

Description: 48-Way F 1.5 MCP, 2.8 JPT, 6.3 MCP Series, Sealed (GY)

Connector Part Information

Harness Type: Chassis

OEM Connector: 15513437

Service Connector: 13586850

Description: 48-Way M 1.6, 2.8, 5.8 Series, Sealed (GY)

Terminal Part Information

Terminal Type ID	Terminated Lead	Diagnostic Test Probe	Terminal Removal Tool	Service Terminal	Tray	Core Crimp	Insulation Crimp
I	13575359	J-35616-14 (GN)	J-38125-215A	Not Available	Not Available	Not Available	Not Available
II	13579921	J-35616-40 (BU)	J-38125-556	1241408-1	4	A	B
III	13579921	J-35616-40 (BU)	J-38125-556	1241408-1	4	B	G
IV	13579921	J-35616-40 (BU)	J-38125-556	Not Available	Not Available	Not Available	Not Available
V	13580821	J-35616-4A (PU)	J-38125-36	Not Available	Not Available	Not Available	Not Available
VI	19119381	J-35616-14 (GN)	J-38125-215A	Not Available	Not Available	Not Available	Not Available
VII	13575380	J-35616-3 (GY)	J-38125-560	Not Available	Not Available	Not Available	Not Available
VIII	13578881	J-35616-5 (PU)	J-38125-36	Not Available	Not Available	Not Available	Not Available
IX	19119926	J-35616-42 (RD)	J-38125-36	Not Available	Not Available	Not Available	Not Available
X	19300650	J-35616-43 (RD)	J-38125-557	Not Available	Not Available	Not Available	Not Available

XI	19301750	J-35616-42 (RD)	J-38125-36	Not Available	Not Available	Not Available	Not Available
XII	19331731	J-35616-3 (GY)	J-38125-560	Not Available	Not Available	Not Available	Not Available

X106 Body Harness to Chassis Harness (LCV/LFX)

Pin	Size	Color	Circuit	Terminal Type ID	Option	Function	Pin	Size	Color	Circuit	Terminal Type ID	Option
1	4	RD/GY	1042	III	—	Battery Positive Voltage	1	4	RD/GY	1042	X	—
2	2.5	RD/YE	442	V	—	Battery Positive Voltage	2	2.5	RD/YE	442	VIII	—
3	0.75	GY	1624	VI	—	Trailer Backup Lamp Control	3	0.75	GY	1624	VII	—
4	0.75	L-GN	1619	VI	—	Right Rear Trailer Stop/Turn Lamp Control	4	0.75	L-GN	1619	VII	—
5	0.75	YE	1618	VI	—	Left Rear Trailer Stop/Turn Lamp Control	5	0.75	YE	1618	VII	—
6	0.5	BN/GY	2609	VI	—	Right Rear Park Lamp Control	6	1.5	BN/GY	2609	XII	—
7	0.5	L-GN/WH	24	VI	—	Backup Lamp Control	7	0.5	L-GN/WH	24	VII	—
8	0.5	L-GN/YE	6846	VI	—	Rear License Lamp Control	8	0.5	L-GN/YE	6846	VII	—
9	0.5	VT/YE	5985	VI	—	Accessory Wakeup Serial Data	9	0.5	VT/YE	5985	VII	—
		VT/BK	2139	VI	—	Run/Crank Ignition 1			VT/BK	2139	VII	—

10	0.75	VT/BK	2139	VI	—	Run/Crank Ignition 1 Voltage	10	0.75	VT/BK	2139	VII	—
11	0.75	BK	1450	IV	—	Ground	11	0.75	BK	1450	XI	—
12	1.5	GY/YE	7542	I	—	Left Rear Stop Lamp Control	12	1.5	GY/YE	7542	XII	—
13	0.5	VT/L-GN	1739	VI	—	Run/Crank Ignition 1 Voltage	13	0.5	VT/L-GN	1739	VII	—
14	0.5	BN/L-BU	2509	VI	—	Left Rear Park Lamp Control	14	1.5	BN/L-BU	2509	XII	—
15	1.5	WH/YE	7541	I	—	Right Rear Stop Lamp Control	15	1.5	WH/YE	7541	XII	—
16	0.75	VT/GY	139	VI	—	Run/Crank Ignition 1 Voltage	16	0.75	VT/GY	139	VII	—
17	0.5	BN	3891	VI	—	Aero Shutter Control	17	0.5	BN	3891	VII	—
18	—	—	—	—	—	Not Occupied	18	—	—	—	—	—
19	0.5	WH	2501	VI	—	High Speed GMLAN Serial Data (-) (1)	19	0.5	WH	2501	VII	—
20	2.5	RD/VT	1940	V	—	Battery Positive Voltage	20	2.5	RD/VT	1940	VIII	—
21	0.5	RD/BN	5940	VI	—	Battery Positive Voltage	21	0.5	RD/BN	5940	VII	—

22	0.5	BN	6305	VI	—	Brake Vacuum Switch Signal	22	0.5	BN	6305	VII	—
23	0.5	L-BU/WH	890	VI	—	Fuel Tank Pressure Sensor Signal	23	0.5	L-BU/WH	890	VII	—
24	0.5	YE/RD	2709	VI	—	Fuel Tank Pressure Sensor 5 Volt Reference	24	0.5	YE/RD	2709	VII	—
25	0.5	BK/L-GN	6281	VI	—	Fuel Level Sensor Low Reference	25	0.5	BK/L-GN	6281	VII	—
26	0.5	WH/L-BU	5986	VI	—	Serial Data Communication Enable	26	0.5	WH/L-BU	5986	VII	—
27	0.5	GY	5660	VI	—	Fuel Pump Controller Data Out Signal	27	0.5	GY	5660	VII	—
28	0.5	L-BU	2500	VI	—	High Speed GMLAN Serial Data (+) (1)	28	0.5	L-BU	2500	VII	—
29	—	—	—	—	—	Not Occupied	29	—	—	—	—	—
30	0.5	GY/BK	1570	VI	—	Front Axle Actuator Control	30	0.5	GY/BK	1570	VII	—
31	0.5	YE/WH	1695	VI	—	Four Wheel Drive Wheel Lock Indicator Control	31	0.5	YE/WH	1695	VII	—
32	0.5	L-BU/VT	1589	VI	—	Primary Fuel Level Sensor Signal	32	0.5	L-BU/VT	1589	VII	—
33	0.5	RD/L-GN	2440	VI	—	Battery Positive Voltage	33	0.5	RD/L-GN	2440	VII	—

34	0.5	WH	1310	VI	—	EVAP Canister Vent Solenoid Control	34	0.5	WH	1310	VII	—
35	0.5	L-BU/BK	7493	VI	—	High Speed GMLAN Serial Data (+)(3)	35	0.5	L-BU/BK	7493	VII	—
36	0.5	WH	7494	VI	—	High Speed GMLAN Serial Data (-)(3)	36	0.5	WH	7494	VII	—
37	0.5	L-BU/YE	6105	VI	—	High Speed GMLAN Serial Data (+) (2)	37	0.5	L-BU/YE	6105	VII	—
38	4	OG	742	III	—	Battery Positive Voltage	38	4	OG	742	X	—
39	1.5	BN	2109	V	—	Trailer Park Lamp Control	39	1.5	BN	2109	VIII	—
40	0.5	L-GN	6974	VI	—	Camera Low Reference	40	0.5	L-GN	6974	VII	—
41	0.5	GY/YE	6972	VI	—	Camera Signal 2 +	41	0.5	GY/YE	6972	VII	—
42	0.5	WH/L-BU	6973	VI	—	Camera Signal 2	42	0.5	WH/L-BU	6973	VII	—
43	0.5	BK/YE	7447	VI	—	Fuel Line Pressure Sensor Low Reference	43	0.5	BK/YE	7447	VII	—
44	0.5	L-BU/WH	7446	VI	—	Fuel Line Pressure Sensor Signal	44	0.5	L-BU/WH	7446	VII	—

45	0.5	BN/RD	7445	VI	—	Fuel Line Pressure Sensor 5 Volt Reference	45	0.5	BN/RD	7445	VII	—
46	0.5	WH	6106	VI	—	High Speed GMLAN Serial Data (-) (2)	46	0.5	WH	6106	VII	—
47	0.75	WH/VT	1430	VI	—	Exterior Courtesy Lamp Control	47	0.75	WH/VT	1430	VII	—
48	2.5	L-BU	47	II	—	Trailer Auxiliary Control	48	2.5	L-BU	47	IX	—

X106 Body Harness to Chassis Harness (LWN)

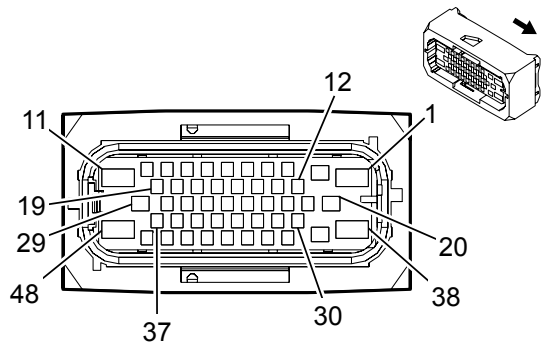

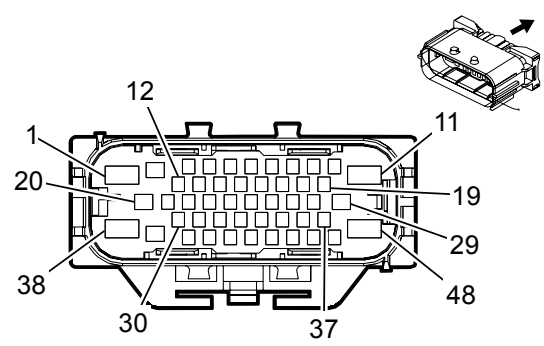

Connector Part Information

Harness Type: Body

OEM Connector: 15509587

Service Connector: 19119963

Description: 48-Way F 1.5 MCP, 2.8 JPT, 6.3 MCP Series, Sealed (GY)

Connector Part Information

Harness Type: Chassis

OEM Connector: 13937617

Service Connector: 13586850

Description: 48-Way M 1.6, 2.8, 5.8 Series, Sealed (GY)

Terminal Part Information

Terminal Type ID	Terminated Lead	Diagnostic Test Probe	Terminal Removal Tool	Service Terminal	Tray	Core Crimp	Insulation Crimp
I		J-35616-14 (GN)	J-38125-215A	Not Available	Not Available	Not Available	Not Available
I		J-35616-14 (GN)	J-38125-215A	Not Available	Not Available	Not Available	Not Available
II		J-35616-40 (BU)	J-38125-556	1241408-1	4	A	B
III		J-35616-40 (BU)	J-38125-556	1241408-1	4	B	G
IV		J-35616-40 (BU)	J-38125-556	1241408-1	4	Not Available	Not Available
V	N/A	J-35616-4A (PU)	J-38125-36	964280-2	22	Not Available	Not Available
VI	13575380	J-35616-3 (GY)	J-38125-560	Not Available	Not Available	Not Available	Not Available
VII	13578881	J-35616-5 (PU)	J-38125-36	Not Available	Not Available	Not Available	Not Available
VIII	19119926	J-35616-42 (RD)	J-38125-36	Not Available	Not Available	Not Available	Not Available
IX	19300650	J-35616-43 (RD)	J-38125-557	Not Available	Not Available	Not Available	Not Available

IX	19300650	J-35616-43 (RD)	J-38125-557	Not Available	Not Available	Not Available	Not Available
X	19301750	J-35616-42 (RD)	J-38125-36	Not Available	Not Available	Not Available	Not Available
XI	19331731	J-35616-3 (GY)	J-38125-560	Not Available	Not Available	Not Available	Not Available

X106 Body Harness to Chassis Harness (LWN)

Pin	Size	Color	Circuit	Terminal Type ID	Option	Function	Pin	Size	Color	Circuit	Terminal Type ID	Option
1	4	RD/GY	1042	III	—	Battery Positive Voltage	1	4	RD/GY	1042	IX	—
2	2.5	RD/YE	442	V	—	Battery Positive Voltage	2	2.5	RD/YE	442	VII	—
3	0.75	GY	1624	I	—	Trailer Backup Lamp Control	3	0.75	GY	1624	VI	—
4	0.75	L-GN	1619	I	—	Right Rear Trailer Stop/Turn Lamp Control	4	0.75	L-GN	1619	VI	—
5	0.75	YE	1618	I	—	Left Rear Trailer Stop/Turn Lamp Control	5	0.75	YE	1618	VI	—
6	0.5	BN/GY	2609	I	—	Right Rear Park Lamp Control	6	1.5	BN/GY	2609	XI	—
7	0.5	L-GN/WH	24	I	—	Backup Lamp Control	7	0.5	L-GN/WH	24	VI	—
8	0.5	L-GN/YE	6846	I	—	Rear License Lamp Control	8	0.5	L-GN/YE	6846	VI	—
9	0.5	L-GN/BK	7633	I	—	Integrated Trailer Brake Controller User Gain Signal	9	0.5	L-GN/BK	7633	VI	—
		VT/BK	2139	I	—	Run/Crank Ignition 1			VT/BK	2139	VI	—

10	0.75	VT/BK	2139	I	—	Run/Crank Ignition 1 Voltage	10	0.75	VT/BK	2139	VI	—
11	0.75	BK	1450	IV	—	Ground	11	0.75 0.75	BK BK	1450 1450	VI X	EXTENDED CAB CREW CAB
12	1.5	GY/YE	7542	I	—	Left Rear Stop Lamp Control	12	1.5	GY/YE	7542	XI	—
13	0.5	VT/L-GN	1739	I	—	Run/Crank Ignition 1 Voltage	13	0.5	VT/L-GN	1739	VI	—
14	0.5	BN/L-BU	2509	I	—	Left Rear Park Lamp Control	14	1.5	BN/L-BU	2509	XI	—
15	1.5	WH/YE	7541	I	—	Right Rear Stop Lamp Control	15	1.5	WH/YE	7541	XI	—
16	0.75	VT/GY	139	I	—	Run/Crank Ignition 1 Voltage	16	0.75	VT/GY	139	VI	—
17	0.5	L-BU/RD	7632	I	—	Integrated Trailer Brake Controller Switch 5 Volt Reference	17	0.5	L-BU/RD	7632	VI	—
18	0.5	YE	7635	I	—	Integrated Trailer Brake Controller Manual Apply Signal	18	0.5	YE	7635	VI	—
19	0.5	WH	2501	I	—	High Speed GMLAN Serial Data (-) (1)	19	0.5	WH	2501	VI	—
		RD/VT	1940	V	—	Battery Positive Voltage			RD/VT	1940	VII	—

20	2.5						20	2.5				
21	0.5	RD/BN	5940	I	—	Battery Positive Voltage	21	0.5	RD/BN	5940	VI	—
22	0.5	BK/L-GN	6281	I	—	Fuel Level Sensor Low Reference	22	0.5	BK/L-GN	6281	VI	—
23	0.5	L-BU/VT	1589	I	—	Primary Fuel Level Sensor Signal	23	0.5	L-BU/VT	1589	VI	—
24	0.5	RD/L-GN	2440	I	—	Battery Positive Voltage	24	0.5	RD/L-GN	2440	VI	—
25	0.5	BN	7634	I	—	Integrated Trailer Brake Controller Redundant Manual Apply Signal	25	0.5	BN	7634	VI	—
26	0.5	WH/L-BU	5986	I	—	Serial Data Communication Enable	26	0.5	WH/L-BU	5986	VI	—
27	0.5	BK/BN	7631	I	—	Integrated Trailer Brake Controller Switch Low Reference	27	0.5	BK/BN	7631	VI	—
28	0.5	L-BU	2500	I	—	High Speed GMLAN Serial Data (+) (1)	28	0.5	L-BU	2500	VI	—
29	2.5	RD/L-GN	242	V	—	Battery Positive Voltage	29	2.5	RD/L-GN	242	VII	—
30	0.5	GY/BK	1570	I	—	Front Axle Actuator Control	30	0.5	GY/BK	1570	VI	—
		YE/WH	1695	I	—	Four Wheel Drive Wheel			YE/WH	1695	VI	—

31	0.5					Lock Indicator Control	31	0.5				
32	—	—	—	—	—	Not Occupied	32	—	—	—	—	—
33	0.5	VT/YE	5985	I	—	Accessory Wakeup Serial Data	33	0.5	VT/YE	5985	VI	—
34 - 36	—	—	—	—	—	Not Occupied	34 - 36	—	—	—	—	—
37	0.5	L-BU/YE	6105	I	—	High Speed GMLAN Serial Data (+) (2)	37	0.5 0.5	L-BU/YE L-BU/YE	6105 6105	VI XI	CREW CAB EXTENDED CAB
38	4	OG	742	III	—	Battery Positive Voltage	38	4	OG	742	IX	—
39	1.5	BN	2109	V	—	Trailer Park Lamp Control	39	1.5	BN	2109	VII	—
40	0.5	L-GN	6974	I	—	Camera Low Reference	40	0.5	L-GN	6974	VI	—
41	0.5	GY/YE	6972	I	—	Camera Signal 2 +	41	0.5	GY/YE	6972	VI	—
42	0.5	WH/L-BU	6973	I	—	Camera Signal 2	42	0.5	WH/L-BU	6973	VI	—
43 - 45	—	—	—	—	—	Not Occupied	43 - 45	—	—	—	—	—
46	0.5	WH	6106	I	—	High Speed GMLAN Serial Data (-) (2)	46	0.5 0.5	WH WH	6106 6106	XI VI	EXTENDED CAB CREW CAB

47	0.75	WH/VT	1430	I	—	Exterior Courtesy Lamp Control	47	0.75	WH/VT	1430	VI	—
48	2.5	GY	120	II	—	Fuel Pump Control	48	2.5	GY	120	VIII	—

X107 Engine Harness to Chassis Harness (LWN)

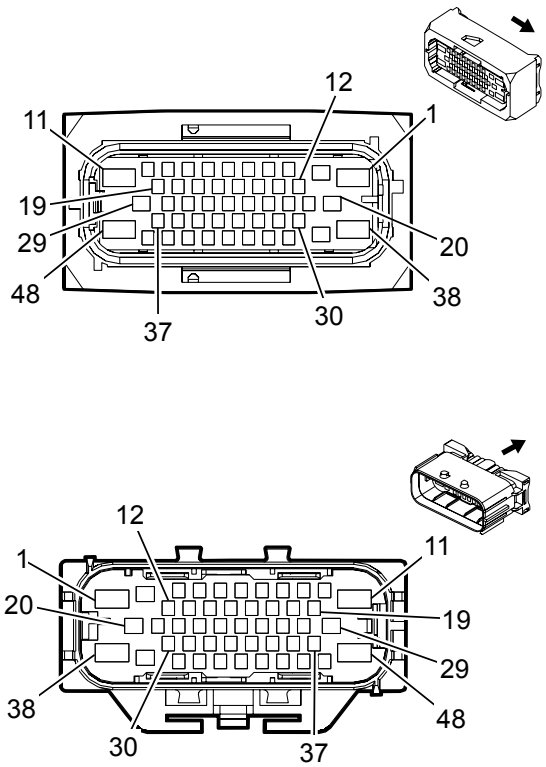

Connector Part Information

Harness Type: Engine

OEM Connector: 13937449

Service Connector: 19329744

Description: 48-Way F 1.5 MCP, 2.8 JPT, 6.3 MCP Series, Sealed (BK)

Connector Part Information

Harness Type: Chassis

OEM Connector: 13937571

Service Connector: 19329745

Description: 48-Way M 1.6, 2.8, 5.8 Series, Sealed (YE)

Terminal Part Information

Terminal Type ID	Terminated Lead	Diagnostic Test Probe	Terminal Removal Tool	Service Terminal	Tray	Core Crimp	Insulation Crimp
I	13579921	J-35616-40 (BU)	J-38125-556	1241408-1	4	B	G
II	13579921	J-35616-40 (BU)	J-38125-556	Not Available	Not Available	Not Available	Not Available
III	13580829	J-35616-4A (PU)	J-38125-36	Not Available	Not Available	Not Available	Not Available
IV	13580830	J-35616-4A (PU)	J-38125-36	Not Available	Not Available	Not Available	Not Available
V	19119381	J-35616-14 (GN)	J-38125-215A	Not Available	Not Available	Not Available	Not Available
VI	Not Required	Pending	No Tool Required	Not Required	Not Required	Not Required	Not Required
VII	13575380	J-35616-3 (GY)	J-38125-560	Not Available	Not Available	Not Available	Not Available
VIII	13578881	J-35616-5 (PU)	J-38125-36	Not Available	Not Available	Not Available	Not Available
IX	13581368	J-35616-5 (PU)	J-38125-36	Not Available	Not Available	Not Available	Not Available
X	19300650	J-35616-43 (RD)	J-38125-557	Not Available	Not Available	Not Available	Not Available

X	19300650	J-35616-43 (RD)	J-38125-357	Not Available	Not Available	Not Available	Not Available
XI	19301750	J-35616-42 (RD)	J-38125-36	Not Available	Not Available	Not Available	Not Available

X107 Engine Harness to Chassis Harness (LWN)

Pin	Size	Color	Circuit	Terminal Type ID	Option	Function	Pin	Size	Color	Circuit	Terminal Type ID	Option
1	0.75	VT/L-BU	3674	II	—	Nox Sensor (1) Control	1	0.75	VT/L-BU	3674	XI	—
2	0.5	BN/L-BU	2926	IV	—	Hydrocarbon Injector High Control	2	0.5	BN/L-BU	2926	VII	—
3	0.5	VT/BN	2927	V	—	Hydrocarbon Injector Low Control	3	0.5	VT/BN	2927	VII	—
4	—	—	—	—	—	Not Occupied	4	—	—	—	—	—
5	0.75	VT/GY	139	V	—	Run/Crank Ignition 1 Voltage	5	0.75	VT/GY	139	VII	—
6	0.5	L-BU/YE	6861	V	—	Water In Fuel Sensor Signal	6	0.5	L-BU/YE	6861	VII	—
7 - 9	—	—	—	—	—	Not Occupied	7 - 9	—	—	—	—	—
10	0.5	WH/RD	6054	V	—	Exhaust Pressure Sensor 5 Volt Reference (1)	10	0.5	WH/RD	6054	VII	—
11	0.5	BK/YE	6055	II	—	Exhaust Pressure Sensor Low Reference (1)	11	0.5	BK/YE	6055	XI	—
12	0.5	L-BU	6053	V	—	Exhaust Pressure Sensor Signal (1)	12	0.5	L-BU	6053	VII	—
13	0.5	VT/L-GN	4320	V	—	Selective Catalytic Reduction Power Module Wake Up Signal	13	0.5	VT/L-GN	4320	VII	—

14	0.5	BK/L-BU	6783	V	—	Exhaust Gas Temperature Sensor 2 Low Reference	14	0.5	BK/L-BU	6783	VII	—
15	0.5	L-BU/L-GN	5377	V	—	Exhaust Gas Temperature Sensor (2)	15	0.5	L-BU/L-GN	5377	VII	—
16 - 17	—	—	—	—	—	Not Occupied	16 - 17	—	—	—	—	—
18	0.5	BK/L-GN	3657	V	—	Exhaust Gas Temperature Sensor 3 Low Reference	18	0.5	BK/L-GN	3657	VII	—
19	0.5	GY/L-GN	5378	V	—	Exhaust Gas Temperature Sensor (3)	19	0.5	GY/L-GN	5378	VII	—
20	0.5	BK/GY	3659	IV	—	Exhaust Gas Temperature Sensor 4 Low Reference	20	0.5	BK/GY	3659	IX	—
21	0.5	VT/BN	3658	V	—	Exhaust Gas Temperature Sensor 4 Signal	21	0.5	VT/BN	3658	VII	—
22	0.5	BK/VT	3661	V	—	Exhaust Gas Temperature Sensor 5 Low Reference	22	0.5	BK/VT	3661	VII	—
23	0.5	L-BU/GY	3660	V	—	Exhaust Gas Temperature Sensor 5 Signal	23	0.5	L-BU/GY	3660	VII	—
24 - 27	—	—	—	—	—	Not Occupied	24 - 27	—	—	—	—	—
28	0.5	L-BU/BN	4498	V	—	High Speed GMLAN Serial Data (+) (7)	28	0.5	L-BU/BN	4498	VII	—
29	0.5	WH	4499	IV	—	High Speed GMLAN Serial Data (-) (7)	29	0.5	WH	4499	IX	—
		BN/GY	7072	V	—	Sensor Fuel			BN/GY	7072	VII	—

30	0.5	BN/GY	7072	V	—	Sensor Fuel Temperature 1 Signal	30	0.5	BN/GY	7072	VII	—
31	0.5	BN/WH	7073	V	—	Sensor Fuel Temperature 1 Low Reference	31	0.5	BN/WH	7073	VII	—
32 - 37	—	—	—	—	—	Not Occupied	32 - 37	—	—	—	—	—
38	— 4	— L-BU	— 3921	VI I	— —	— DEF Heater Supply 1	38	4 4	L-BU L-BU	3921 3921	X VIII	CREW CAB EXTENDED CAB
39	2.5	L-BU/L-GN	7071	III	—	Heater Fuel Control	39	2.5	L-BU/L-GN	7071	VIII	—
40 - 48	—	—	—	—	—	—	40 - 48	—	—	—	—	—

X108 Engine Harness to Cooling Fan Harness (LWN)

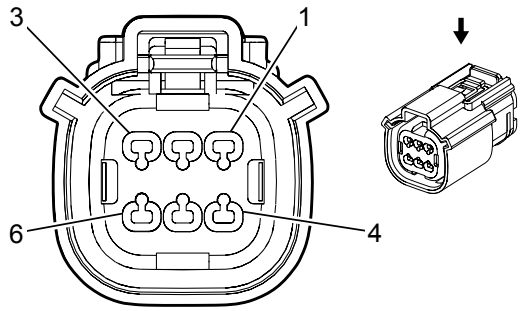

—

Connector Part Information

Harness Type: Engine

OEM Connector: 33472-0606

Service Connector: 13585853

Description: 6-Way F 150 MX Series, Sealed (BK)

Connector Part Information

Harness Type: Cooling Fan

OEM Connector: Not Available

Service Connector: Service by Harness - See Part Catalog

Description: 6-Way M

Terminal Part Information

Terminal Type ID	Terminated Lead	Diagnostic Test Probe	Terminal Removal Tool	Service Terminal	Tray	Core Crimp	Insulation Crimp
I	Not Required	J-35616-2A (GY)	Not Required	Not Required	Not Required	Not Required	Not Required
II	Not Required	Pending	No Tool Required	Not Required	Not Required	Not Required	Not Required

X108 Engine Harness to Cooling Fan Harness (LWN)

Pin	Size	Color	Circuit	Terminal Type ID	Option	Function	Pin	Size	Color	Circuit	Terminal Type ID	Option
1	—	—	—	—	—	Not Occupied	1	—	—	—	—	—
2	0.5	WH	2368	I	—	Cooling Fan Control Signal	2	0.5	WH	2368	II	—
3	0.5	GY/RD	2365	I	—	Cooling Fan Speed 5 Volt Reference	3	0.5	GY/RD	2365	II	—
4	0.5	L-BU/VT	2364	I	—	Cooling Fan Speed Signal	4	0.5	L-BU/VT	2364	II	—
5	0.5	BK/BN	6141	I	—	Cooling Fan Speed Low Reference	5	0.5	BK/BN	6141	II	—

6	0.5					Reference	6	0.5				
6	0.5	BK	550	I	—	Ground	6	0.5	BK	550	II	—

X109 Engine Harness to Forward Lamp Harness (LWN)

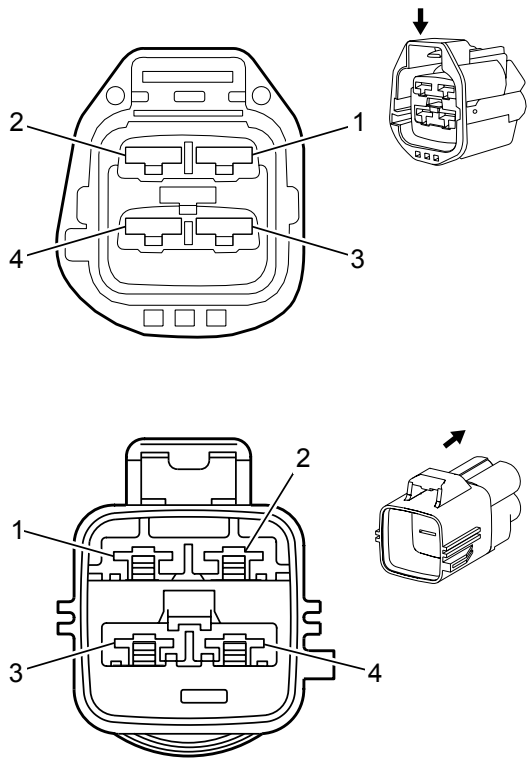

Connector Part Information

Harness Type: Engine

OEM Connector: 7283-5595-10

Service Connector: 19153180

Description: 4-Way F 250 Series, Sealed (D-GY)

Connector Part Information

Harness Type: Forward Lamp

OEM Connector: 7282-5595-10

Service Connector: 13585864

Description: 4-Way M 6.3 Series, Sealed (D-GY)

Terminal Part Information

Terminal Type ID	Terminated Lead	Diagnostic Test Probe	Terminal Removal Tool	Service Terminal	Tray	Core Crimp	Insulation Crimp
I	Not Required	J-35616-40 (BU)	Not Required	Not Required	Not Required	Not Required	Not Required
II	Not Required	J-35616-42 (RD)	Not Required	Not Required	Not Required	Not Required	Not Required
III	Not Required	J-35616-4A (PU)	Not Required	Not Required	Not Required	Not Required	Not Required
IV	Not Required	J-35616-43 (RD)	Not Required	Not Required	Not Required	Not Required	Not Required
IV	Not Required	J-35616-43 (RD)	Not Required	Not Required	Not Required	Not Required	Not Required

X109 Engine Harness to Forward Lamp Harness (LWN)

Pin	Size	Color	Circuit	Terminal Type ID	Option	Function	Pin	Size	Color	Circuit	Terminal Type ID	Option
1	6	BN/L-BU	104	II	—	Glow Plug Control	1	4	BN/L-BU	104	IV	—

2	4	L-BU	3921	I	—	DEF Heater Supply 1	2	4	L-BU	3921	IV	—
3	2.5	L-BU/L-GN	7071	III	—	Heater Fuel Control	3	2.5	L-BU/L-GN	7071	IV	—
4	—	—	—	—	—	—	4	—	—	—	—	—

X110 Forward Lamp Harness to Headlamp - Left Harness

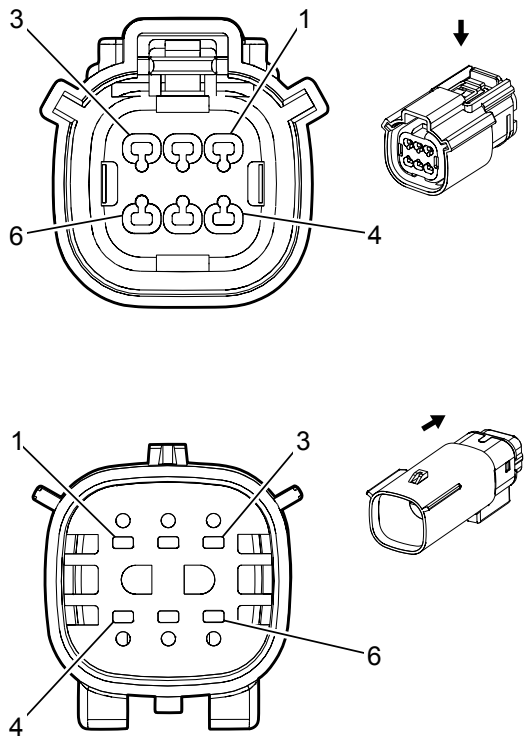

Connector Part Information

Harness Type: Forward Lamp

OEM Connector: 33472-0606

Service Connector: 13585853

Description: 6-Way F 150 MX Series, Sealed (BK)

Connector Part Information

Harness Type: Headlamp - Left

OEM Connector: 13503535

Service Connector: Service by Harness - See Part Catalog

Description: 6-Way M 150 MX Series, Sealed (BK)

Terminal Part Information

Terminal Type ID	Terminated Lead	Diagnostic Test Probe	Terminal Removal Tool	Service Terminal	Tray	Core Crimp	Insulation Crimp
I	Not Required	J-35616-2A (GY)	Not Required	Not Required	Not Required	Not Required	Not Required
I	Not Required	J-35616-2A (GY)	Not Required	Not Required	Not Required	Not Required	Not Required
I	Not Required	J-35616-2A (GY)	Not Required	Not Required	Not Required	Not Required	Not Required
II	Not Required	Pending	No Tool Required	Not Required	Not Required	Not Required	Not Required

X110 Forward Lamp Harness to Headlamp - Left Harness

Pin	Size	Color	Circuit	Terminal Type ID	Option	Function	Pin	Size	Color	Circuit	Terminal Type ID	Option
1	1.5	BK	1150	I	—	Ground	1	1.5	BK	1150	II	—

2	1.5	YE	712	I	—	Left Headlamp Low Beam Control	2	1.5	YE	712	II	—
3	0.5	WH	711	I	—	Left Headlamp High Beam Control	3	0.5	WH	711	II	—
4	0.75	VT/GY	709	I	—	Left Park Lamp Control	4	0.75	VT/GY	709	II	—
5	0.75	L-BU/WH	1314	I	—	Left Front Turn Signal Lamp Control	5	0.75	L-BU/WH	1314	II	—
6	—	—	—	—	—	—	6	—	—	—	—	—

X111 Engine Harness to Glow Plug Harness (LWN)

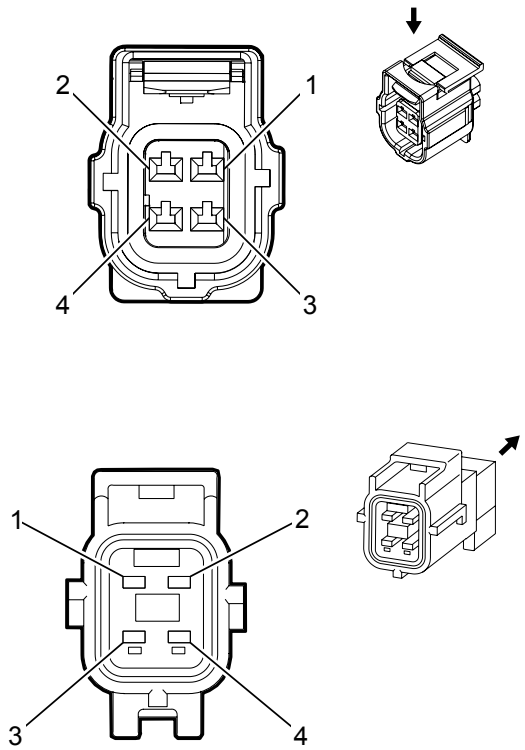

Connector Part Information

Harness Type: Engine

OEM Connector: 184248-1

Service Connector: 13587793

Description: 4-Way F SSC Series (BK)

Connector Part Information

Harness Type: Glow Plug

OEM Connector: 184346-1

Service Connector: Service by Harness - See Part Catalog

Description: 4-Way M Sealed Sensor Connector System (BK)

Terminal Part Information

Terminal Type ID	Terminated Lead	Diagnostic Test Probe	Terminal Removal Tool	Service Terminal	Tray	Core Crimp	Insulation Crimp
I	Not Required	J-35616-33 (YE)	Not Required	Not Required	Not Required	Not Required	Not Required
II	N/A	J-35616-33 (YE)	J-38125-12A	184030-1	9	C	1

X111 Engine Harness to Glow Plug Harness (LWN)

Pin	Size	Color	Circuit	Terminal Type ID	Option	Function	Pin	Size	Color	Circuit	Terminal Type ID	Option
1	2	GY/L-BU	1581	I	—	Glow Plug Control (1)	1	2	GY/L-BU	1581	II	—
2	2	GY/BN	1582	I	—	Glow Plug Control (2)	2	2	GY/BN	1582	II	—

3	2	GY/L-GN	1583	I	—	Glow Plug Control (3)	3	2	GY/L-GN	1583	II	—
4	2	GY/YE	1584	I	—	Glow Plug Control (4)	4	2	GY/YE	1584	II	—

X112 Engine Harness to Intake Manifold Pressure Harness (LWN)

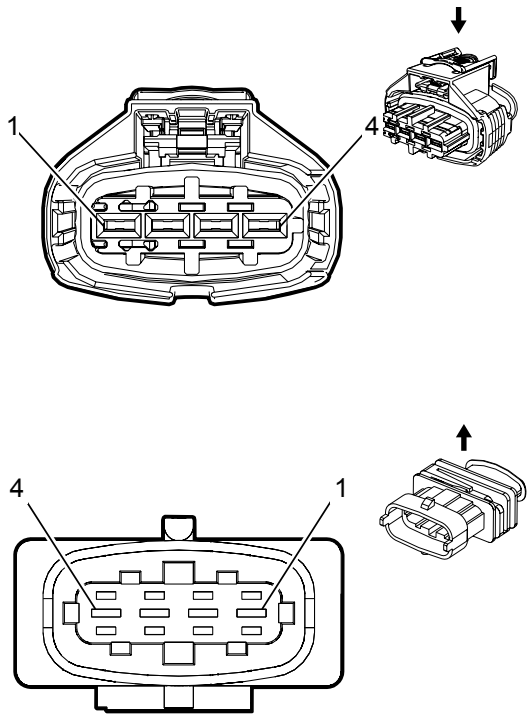

Connector Part Information

Harness Type: Engine

OEM Connector: 1928405525

Service Connector: 13584423

Description: 4-Way F 2.8 Series, Sealed (BK)

Connector Part Information

Harness Type: Intake Manifold Pressure

OEM Connector: 13122327

Service Connector: Service by Harness - See Part Catalog

Description: 4-Way M 2.8 Series, Sealed (BK)

Terminal Part Information

Terminal Type ID	Terminated Lead	Diagnostic Test Probe	Terminal Removal Tool	Service Terminal	Tray	Core Crimp	Insulation Crimp
I	Not Required	J-35616-35 (VT)	Not Required	Not Required	Not Required	Not Required	Not Required
II	Not Required	Pending	No Tool Required	Not Required	Not Required	Not Required	Not Required

X112 Engine Harness to Intake Manifold Pressure Harness (LWN)

Pin	Size	Color	Circuit	Terminal Type ID	Option	Function	Pin	Size	Color	Circuit	Terminal Type ID	Option
1	0.5	BK/L-GN	469	I	—	Manifold Absolute Pressure Sensor Low Reference	1	0.5	BK/L-GN	469	II	—
2	0.5	BN	7348	I	—	Induction Air Temperature Sensor 2 Signal	2	0.5	BN	7348	II	—

3	0.5	GY/RD	2704	I	—	Manifold Absolute Pressure Sensor 5 Volt Reference	3	0.5	GY/RD	2704	II	—
4	0.5	L-GN/WH	432	I	—	Manifold Absolute Pressure Sensor Signal	4	0.5	L-GN/WH	432	II	—

X120 Forward Lamp Harness to Headlamp - Right Harness

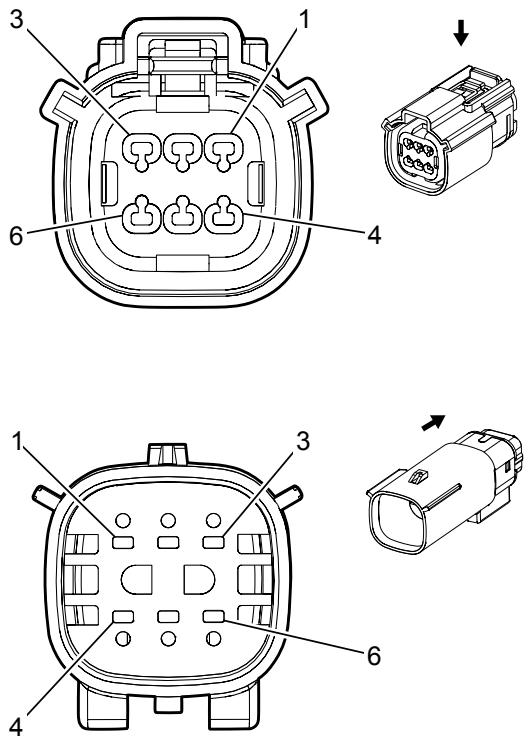

Connector Part Information

Harness Type: Forward Lamp

OEM Connector: 33472-0606

Service Connector: 13585853

Description: 6-Way F 150 MX Series, Sealed (BK)

Connector Part Information

Harness Type: Headlamp - Right

OEM Connector: 13503535

Service Connector: Service by Harness - See Part Catalog

Description: 6-Way M 150 MX Series, Sealed (BK)

Terminal Part Information

Terminal Type ID	Terminated Lead	Diagnostic Test Probe	Terminal Removal Tool	Service Terminal	Tray	Core Crimp	Insulation Crimp
I	Not Required	J-35616-2A (GY)	Not Required	Not Required	Not Required	Not Required	Not Required
I	Not Required	J-35616-2A (GY)	Not Required	Not Required	Not Required	Not Required	Not Required
II	Not Required	Pending	No Tool Required	Not Required	Not Required	Not Required	Not Required

X120 Forward Lamp Harness to Headlamp - Right Harness

Pin	Size	Color	Circuit	Terminal Type ID	Option	Function	Pin	Size	Color	Circuit	Terminal Type ID	Option
1	1.5	BK	1250	I	—	Ground	1	1.5	BK	1250	II	—
2	1.5	YE	312	I	—	Right Headlamp Low	2	1.5	YE	312	II	—

2	1.5					Beam Control	2	1.5				
3	0.75	WH	311	I	—	Right Headlamp High Beam Control	3	0.75	WH	311	II	—
4	0.75	GY/BN	309	I	—	Right Park Lamp Control	4	0.75	GY/BN	309	II	—
5	0.75	L-GN/VT	1315	I	—	Right Front Turn Signal Lamp Control	5	0.75	L-GN/VT	1315	II	—
6	—	—	—	—	—	—	6	—	—	—	—	—

X160 Engine Harness to Fuel Injector Harness (LCV)

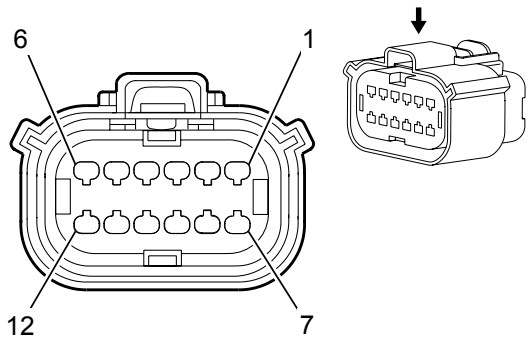

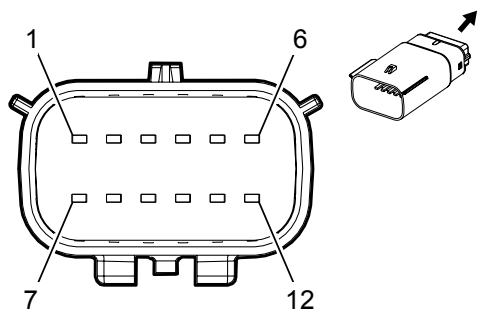

Connector Part Information

Harness Type: Engine

OEM Connector: 33472-1216

Service Connector: 19150019

Description: 12-Way F 150 MX Series, Sealed (BK)

Connector Part Information

Harness Type: Fuel Injector

OEM Connector: 13503542

Service Connector: Service by Harness - See Part Catalog

Description: 12-Way M 150 MX Series, Sealed

Terminal Part Information

Terminal Type ID	Terminated Lead	Diagnostic Test Probe	Terminal Removal Tool	Service Terminal	Tray	Core Crimp	Insulation Crimp
I	19300635	J-35616-2A (GY)	J-38125-217	Not Available	Not Available	Not Available	Not Available
I	19300635	J-35616-2A (GY)	J-38125-217	Not Available	Not Available	Not Available	Not Available
II	Not Required	Pending	No Tool Required	Not Required	Not Required	Not Required	Not Required

X160 Engine Harness to Fuel Injector Harness (LCV)

Pin	Size	Color	Circuit	Terminal Type ID	Option	Function	Pin	Size	Color	Circuit	Terminal Type ID	Option
1	0.75	BN	4801	I	—	Direct Fuel Injector (DFI) High Voltage Control Cylinder 1	1	0.75	BN	4801	II	—
2	0.75	L-BU	4802	I	—	Direct Fuel Injector	2	0.75	L-BU	4802	II	—

2	0.75					(DFI) High Voltage Control Cylinder 2	2	0.75				
3	0.75	L-GN	4803	I	—	Direct Fuel Injector (DFI) High Voltage Control Cylinder 3	3	0.75	L-GN	4803	II	—
4	0.75	GY/L-BU	4804	I	—	Direct Fuel Injector (DFI) High Voltage Control Cylinder 4	4	0.75	GY/L-BU	4804	II	—
5	0.5	BK/L-GN	2919	I	—	Fuel Rail Pressure Sensor Low Reference	5	0.5	BK/L-GN	2919	II	—
6	—	—	—	—	—	Not Occupied	6	—	—	—	—	—
7	0.75	BN/WH	4901	I	—	Direct Fuel Injector (DFI) High Voltage Supply Cylinder 1	7	0.75	BN/WH	4901	II	—
8	0.75	L-BU/GY	4902	I	—	Direct Fuel Injector (DFI) High Voltage Supply Cylinder 2	8	0.75	L-BU/GY	4902	II	—
9	0.75	L-GN/GY	4903	I	—	Direct Fuel Injector (DFI) High Voltage Supply Cylinder 3	9	0.75	L-GN/GY	4903	II	—
10	0.75	L-BU/WH	4904	I	—	Direct Fuel Injector (DFI) High Voltage Supply Cylinder 4	10	0.75	L-BU/WH	4904	II	—
11	0.5	BN/RD	2917	I	—	Fuel Rail Pressure Sensor 5 Volt Reference	11	0.5	BN/RD	2917	II	—
12	0.5	L-BU/WH	2918	I	—	Fuel Rail Pressure Sensor Signal	12	0.5	L-BU/WH	2918	II	—

X160 Engine Harness to Fuel Injector - Odd Harness (LFX)

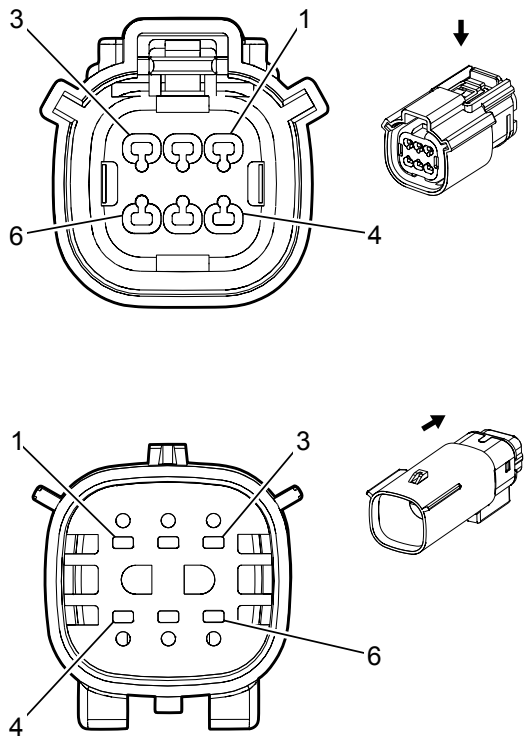

Connector Part Information

Harness Type: Engine

OEM Connector: 33472-0606

Service Connector: 13585853

Description: 6-Way F 150 MX Series, Sealed (BK)

Connector Part Information

Harness Type: Fuel Injector - Odd

OEM Connector: 13503535

Service Connector: Service by Harness - See Part Catalog

Description: 6-Way M 150 MX Series, Sealed (BK)

Terminal Part Information

Terminal Type ID	Terminated Lead	Diagnostic Test Probe	Terminal Removal Tool	Service Terminal	Tray	Core Crimp	Insulation Crimp
I	Not Required	J-35616-2A (GY)	Not Required	Not Required	Not Required	Not Required	Not Required
II	Not Required	Pending	No Tool Required	Not Required	Not Required	Not Required	Not Required

X160 Engine Harness to Fuel Injector - Odd Harness (LFX)

Pin	Size	Color	Circuit	Terminal Type ID	Option	Function	Pin	Size	Color	Circuit	Terminal Type ID	Option
1	0.75	BN	4801	I	—	Direct Fuel Injector (DFI) High Voltage Control Cylinder 1	1	0.75	BN	4801	II	—
2	0.75	BN/WH	4901	I	—	Direct Fuel Injector (DFI) High Voltage Supply Cylinder 1	2	0.75	BN/WH	4901	II	—

3	0.75	L-GN	4803	I	—	Direct Fuel Injector (DFI) High Voltage Control Cylinder 3	3	0.75	L-GN	4803	II	—
4	0.75	L-GN/GY	4903	I	—	Direct Fuel Injector (DFI) High Voltage Supply Cylinder 3	4	0.75	L-GN/GY	4903	II	—
5	0.75	WH/L-GN	4805	I	—	Direct Fuel Injector (DFI) High Voltage Control Cylinder 5	5	0.75	WH/L-GN	4805	II	—
6	0.75	L-GN/WH	4905	I	—	Direct Fuel Injector (DFI) High Voltage Supply Cylinder 5	6	0.75	L-GN/WH	4905	II	—

X161 Engine Harness to Fuel Injector - Even Harness (LFX)

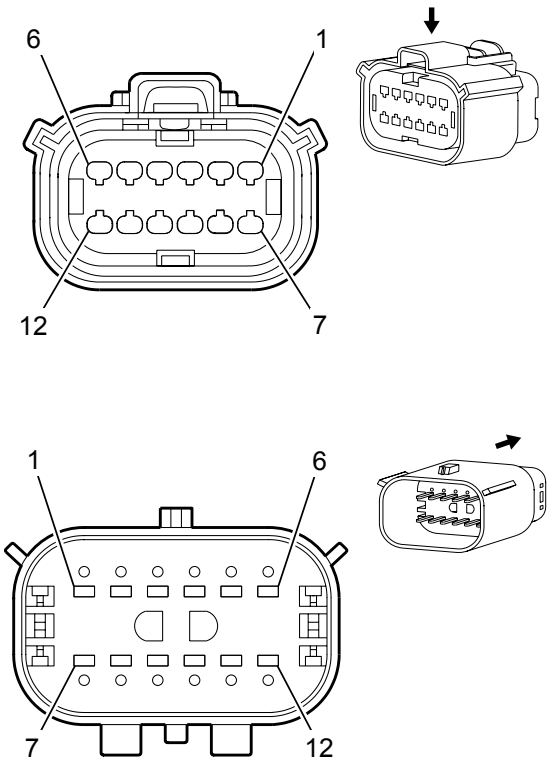

Connector Part Information

Harness Type: Engine

OEM Connector: 33472-1236

Service Connector: 19178148

Description: 12-Way F 150 MX Series, Sealed (BK)

Connector Part Information

Harness Type: Fuel Injector - Odd

OEM Connector: 13503543

Service Connector: Service by Harness - See Part Catalog

Description: 12-Way M 150 MX Series, Sealed (BK)

Terminal Part Information

Terminal Type ID	Terminated Lead	Diagnostic Test Probe	Terminal Removal Tool	Service Terminal	Tray	Core Crimp	Insulation Crimp
I	13575868	J-35616-2A (GY)	J-38125-217	Not Available	Not Available	Not Available	Not Available
II	19300635	J-35616-2A (GY)	J-38125-217	Not Available	Not Available	Not Available	Not Available
III	Not Required	Pending	No Tool Required	Not Required	Not Required	Not Required	Not Required

X161 Engine Harness to Fuel Injector - Even Harness (LFX)

Pin	Size	Color	Circuit	Terminal Type ID	Option	Function	Pin	Size	Color	Circuit	Terminal Type ID	Option
1	—	—	—	—	—	Not Occupied	1	—	—	—	—	—
2	0.75	L-BU	4802	II	—	Direct Fuel Injector (DFI) High Voltage Control Cylinder 2	2	0.75	L-BU	4802	III	—

3	0.75	GY/L-BU	4804	II	—	Direct Fuel Injector (DFI) High Voltage Control Cylinder 4	3	0.75	GY/L-BU	4804	III	—
4	0.75	VT/L-GN	4806	II	—	Direct Fuel Injector (DFI) High Voltage Control Cylinder 6	4	0.75	VT/L-GN	4806	III	—
5	0.5	BK/L-GN	2919	I	—	Fuel Rail Pressure Sensor Low Reference	5	0.5	BK/L-GN	2919	III	—
6 - 7	—	—	—	—	—	Not Occupied	6 - 7	—	—	—	—	—
8	0.75	L-BU/GY	4902	II	—	Direct Fuel Injector (DFI) High Voltage Supply Cylinder 2	8	0.75	L-BU/GY	4902	III	—
9	0.75	L-BU/WH	4904	II	—	Direct Fuel Injector (DFI) High Voltage Supply Cylinder 4	9	0.75	L-BU/WH	4904	III	—
10	0.75	VT/GY	4906	II	—	Direct Fuel Injector (DFI) High Voltage Supply Cylinder 6	10	0.75	VT/GY	4906	III	—
11	0.5	BN/RD	2917	I	—	Fuel Rail Pressure Sensor 5 Volt Reference	11	0.5	BN/RD	2917	III	—
12	0.5	L-BU/WH	2918	I	—	Fuel Rail Pressure Sensor Signal	12	0.5	L-BU/WH	2918	III	—

X200 Body Harness to Instrument Panel Harness

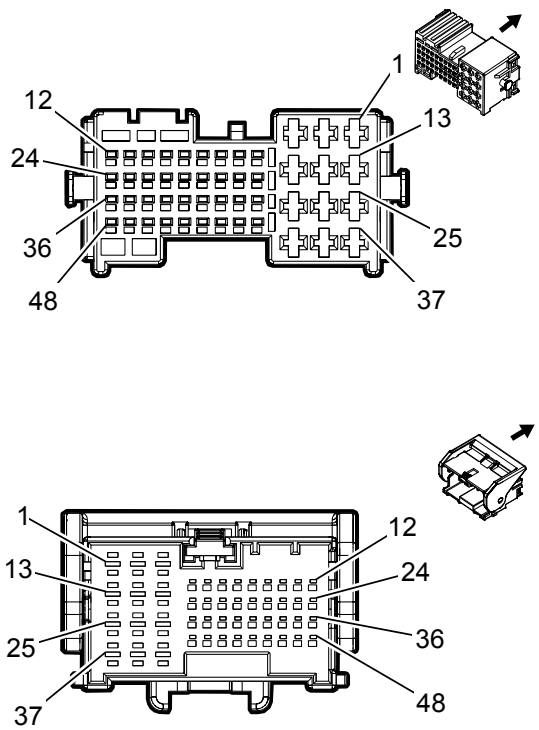

Connector Part Information

Harness Type: Body

OEM Connector: 2109452-2

Service Connector: 19329739

Description: 48-Way F 1.2 MCON, 2.8 MCP Series

Connector Part Information

Harness Type: Instrument Panel

OEM Connector: 13582054

Service Connector: 19329740

Description: 48-Way M 1.2 MCON, 2.8 MCP Series (BK)

Terminal Part Information

Terminal Type ID	Terminated Lead	Diagnostic Test Probe	Terminal Removal Tool	Service Terminal	Tray	Core Crimp	Insulation Crimp
I	19119592	J-35616-35 (VT)	J-38125-557	Not Available	Not Available	Not Available	Not Available
I	19119592	J-35616-35 (VT)	J-38125-557	Not Available	Not Available	Not Available	Not Available
II	19329758	J-35616-16 (LT GN)	J-38125-12A	Not Available	Not Available	Not Available	Not Available
II	19329758	J-35616-16 (LT GN)	J-38125-12A	Not Available	Not Available	Not Available	Not Available
III	13575529	J-35616-5 (PU)	J-38125-36	Not Available	Not Available	Not Available	Not Available
IV	13575574	J-35616-5 (PU)	J-38125-36	Not Available	Not Available	Not Available	Not Available
IV	13575574	J-35616-5 (PU)	J-38125-36	Not Available	Not Available	Not Available	Not Available
V	19329749	J-35616-13 (BU)	J-38125-12A	Not Available	Not Available	Not Available	Not Available
V	19329749	J-35616-13 (BU)	J-38125-12A	Not Available	Not Available	Not Available	Not Available

X200 Body Harness to Instrument Panel Harness

Pin	Size	Color	Circuit	Terminal Type ID	Option	Function	Pin	Size	Color	Circuit	Terminal Type ID	Option
1	2.5	RD/VT	542	I	—	Battery Positive Voltage	1	2.5	RD/VT	542	IV	—
2	—	—	—	—	—	Not Occupied	2	—	—	—	—	—
3	0.5	L-GN/BN	507	I	—	Wait To Start Indicator Control	3	0.35	L-GN/BN	507	III	—
4	0.5	L-BU/YE	6105	II	—	High Speed GMLAN Serial Data (+) (2)	4	0.5	L-BU/YE	6105	V	—
5	0.5	WH	6106	II	—	High Speed GMLAN Serial Data (-) (2)	5	0.5	WH	6106	V	—
6	0.5	L-BU/BN	7573	II	—	Electric Variable Displacement Supply	6	0.5	L-BU/BN	7573	V	—
7	0.5	L-BU/YE	7574	II	—	Electric Variable Displacement Control	7	0.5	L-BU/YE	7574	V	—
8 - 9	—	—	—	—	—	Not Occupied	8 - 9	—	—	—	—	—
10	0.5	RD/L-GN	4440	II	—	Battery Positive Voltage	10	0.5	RD/L-GN	4440	V	—
11 - 13	—	—	—	—	—	Not Occupied	11 - 13	—	—	—	—	—
14	1	L-BU	201	I	—	Left Front Speaker Control (+) (1)	14	1 0.75	L-BU L-BU	201 201	IV	UQA UQ3
15	1	BN/L-BU	118	I	—	Left Front Speaker Signal (-) (1)	15	1	BN/L-BU	118	IV	UQA

15	1					Signal (-) (1)	15	1 0.75	BN/L-BU	118		UQ3
16 - 17	—	—	—	—	—	Not Occupied	16 - 17	—	—	—	—	—
18	0.5	GY	158	II	—	Cargo Lamp Switch Signal	18	0.35	GY	158	V	—
19	0.5	BN/WH	1429	II	—	Standing Lamp Relay Control	19	0.5	BN/WH	1429	V	—
20	—	—	—	—	—	Not Occupied	20	—	—	—	—	—
21	0.35	WH	6816	II	—	Indicator Dimming Control	21	0.35	WH	6816	V	—
22	0.5	YE	6817	II	—	LED Backlight Dimming Control	22	0.5	YE	6817	V	—
23	0.35	YE/BN	3265	II	—	Child Security Lock Switch Signal	23	0.35	YE/BN	3265	V	—
24	0.35	GY	5697	II	—	Child Lockout Indicator Control	24	0.35	GY	5697	V	—
25	—	—	—	—	—	Not Occupied	25	—	—	—	—	—
26	1	L-GN/BK	116	I	—	Left Rear Speaker Signal (-)	26	1 0.75	L-GN/BK L-GN/BK	116 116	IV	UQA UQ3
27	1	L-GN	199	I	—	Left Rear Speaker Control (+)	27	1	L-GN	199	IV	UQA

								0.75	L-GN	199		UQ3
28 - 29	—	—	—	—	—	Not Occupied	28 - 29	—	—	—	—	—
30	0.5	BN/WH	419	II	—	Check Engine Indicator Control	30	0.35	BN/WH	419	V	—
31	0.35	BN/YE	780	II	—	Driver Door Lock Switch Lock Signal	31	0.35	BN/YE	780	V	—
32	0.35	BN/WH	781	II	—	Driver Door Lock Switch Unlock Signal	32	0.35	BN/WH	781	V	—
33	0.5	WH	5359	II	—	Brake Apply Sensor Control	33	0.35	WH	5359	V	—
34	0.5	L-BU/YE	5361	II	—	Brake Apply Sensor Signal	34	0.35	L-BU/YE	5361	V	—
35	0.5	BK/BN	5360	II	—	Brake Apply Sensor Low Reference	35	0.35	BK/BN	5360	V	—
36	0.5	BARE	6974	II	—	Camera Low Reference	36	0.35	BARE	6974	V	—
37	2.5	RD/L-GN	242	I	—	Battery Positive Voltage	37	2.5	RD/L-GN	242	IV	—
38 - 41	—	—	—	—	—	Not Occupied	38 - 41	—	—	—	—	—
42	0.5	BK/WH	2251	II	—	Signal Ground	42	0.5	BK/WH	2251	V	—

43	0.5	WH/L-BU	5986	II	—	Serial Data Communication Enable	43	0.5	WH/L-BU	5986	V	—
44	—	—	—	—	—	Not Occupied	44	—	—	—	—	—
45	0.5	BN/VT	193	II	—	Rear Defog Relay Control	45	0.35	BN/VT	193	V	—
46	0.5	L-GN/GY	6135	II	—	Local Interconnect Network Serial Data Bus 4	46	0.5	L-GN/GY	6135	V	—
47	0.5	GY/YE	6972	II	—	Camera Signal 2 +	47	0.35	GY/YE	6972	V	—
48	0.5	WH/L-BU	6973	II	—	Camera Signal 2	48	0.35	WH/L-BU	6973	V	—

X202 Body Harness to Instrument Panel Harness

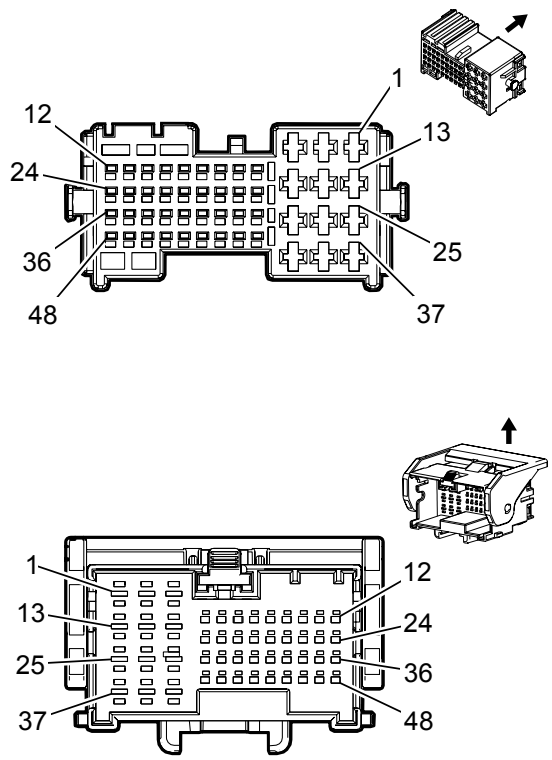

Connector Part Information

Harness Type: Body

OEM Connector: 1-2109452-3

Service Connector: 19329737

Description: 48-Way F 1.2 MCON, 2.8 MCP Series

Connector Part Information

Harness Type: Instrument Panel

OEM Connector: 13582055

Service Connector: 19329738

Description: 48-Way M Hybrid Series

Terminal Part Information

Terminal Type ID	Terminated Lead	Diagnostic Test Probe	Terminal Removal Tool	Service Terminal	Tray	Core Crimp	Insulation Crimp
I	19119592	J-35616-35 (VT)	J-38125-557	Not Available	Not Available	Not Available	Not Available
I	19119592	J-35616-35 (VT)	J-38125-557	Not Available	Not Available	Not Available	Not Available
II	19329758	J-35616-16 (LT GN)	J-38125-12A	Not Available	Not Available	Not Available	Not Available
II	19329758	J-35616-16 (LT GN)	J-38125-12A	Not Available	Not Available	Not Available	Not Available
III	13575574	J-35616-5 (PU)	J-38125-36	Not Available	Not Available	Not Available	Not Available
III	13575574	J-35616-5 (PU)	J-38125-36	Not Available	Not Available	Not Available	Not Available
IV	19329749	J-35616-13 (BU)	J-38125-12A	Not Available	Not Available	Not Available	Not Available
IV	19329749	J-35616-13 (BU)	J-38125-12A	Not Available	Not Available	Not Available	Not Available

X202 Body Harness to Instrument Panel Harness

Pin	Size	Color	Circuit	Terminal Type	Option	Function	Pin	Size	Color	Circuit	Terminal Type	Option

				ID							ID	
1 - 3	—	—	—	—	—	Not Occupied	1 - 3	—	—	—	—	—
4	0.5	RD/GY	2140	II	—	Battery Positive Voltage	4	0.5	RD/GY	2140	IV	—
5	—	—	—	—	—	Not Occupied	5	—	—	—	—	—
6	0.35	RD/YE	3040	II	—	Battery Positive Voltage	6	0.35	RD/YE	3040	IV	—
7	0.75	RD/BN	2240	II	—	Battery Positive Voltage	7	0.75	RD/BN	2240	IV	—
8	0.35	VT	801	II	—	Retained Accessory Power Fuse Control	8	0.35	VT	801	IV	—
9	0.5	RD/GY	2840	II	—	Battery Positive Voltage	9	0.5	RD/GY	2840	IV	—
10	0.5	VT/BN	300	II	—	Run Ignition 3 Voltage	10	0.5	VT/BN	300	IV	—
11 - 13	—	—	—	—	—	Not Occupied	11 - 13	—	—	—	—	—
14	2.5	L-BU	47	I	—	Trailer Auxiliary Control	14	2.5	L-BU	47	III	—
15	—	—	—	—	—	Not Occupied	15	—	—	—	—	—
16	0.35	GY/WH	3272	II	—	Remote Function Actuator Control	16	0.35	GY/WH	3272	IV	—
17	0.35	YE/L-GN	3274	II	—	Remote Function Actuator Transmit Signal	17	0.35	YE/L-GN	3274	IV	—
		L-BU/WH	3275	II	—	Remote Function			L-BU/WH	3275	IV	—

18	0.35	L-BU/WH	3273	II	—	Remote Function Actuator Receive Signal	18	0.35	L-BU/WH	3273	IV	—
19	0.35	GY	3273	II	—	Remote Function Actuator Low Reference	19	0.35	GY	3273	IV	—
20	0.35	GY/L-GN	328	II	—	Interior Lamp Defeat Switch Signal	20	0.35	GY/L-GN	328	IV	—
21	0.5	GY	157	II	—	Interior Lamp Control	21	0.5	GY	157	IV	—
22	0.5	YE	6817	II	—	LED Backlight Dimming Control	22	0.5	YE	6817	IV	—
23 - 24	—	—	—	—	—	Not Occupied	23 - 24	—	—	—	—	—
25	2.5	RD/YE	2340	I	—	Battery Positive Voltage	25	2.5	RD/YE	2340	III	—
26 - 27	—	—	—	—	—	Not Occupied	26 - 27	—	—	—	—	—
28	0.35	L-GN/BK	1563	II	—	2 HI Indicator Control	28	0.35	L-GN/BK	1563	IV	—
29	0.35	GY/L-GN	1561	II	—	AWD Indicator Control	29	0.35	GY/L-GN	1561	IV	—
30	0.35	BN/BK	1566	II	—	4 HI Indicator Control	30	0.35	BN/BK	1566	IV	—
31	0.35	VT/WH	1565	II	—	4 LO Indicator Control	31	0.35	VT/WH	1565	IV	—
32	0.35	BN	1560	II	—	Neutral Indicator Control	32	0.35	BN	1560	IV	—

33	0.35	GY/RD	6029	II	—	Four Wheel Drive Mode Switch 5 Volt Reference	33	0.35	GY/RD	6029	IV	—
34	0.35	L-BU/YE	1693	II	—	Four Wheel Drive Switch Signal	34	0.35	L-BU/YE	1693	IV	—
35	0.5	L-GN/BK	7633	II	—	Integrated Trailer Brake Controller User Gain Signal	35	0.5	L-GN/BK	7633	IV	—
36	0.5	YE	7635	II	—	Integrated Trailer Brake Controller Manual Apply Signal	36	0.5	YE	7635	IV	—
37	0.5	L-BU/RD	7632	II	—	Integrated Trailer Brake Controller Switch 5 Volt Reference	37	0.5	L-BU/RD	7632	III	—
38	0.5	BN	7634	I	—	Integrated Trailer Brake Controller Redundant Manual Apply Signal	38	0.5	BN	7634	III	—
39	0.5	BK/BN	7631	I	—	Integrated Trailer Brake Controller Switch Low Reference	39	0.5	BK/BN	7631	III	—
40	—	—	—	—	—	Not Occupied	40	—	—	—	—	—
41	0.5	WH/VT	5905	II	—	Key Capture/Column Lock Shift Position Signal	41	0.5	WH/VT	5905	IV	—
42	0.5	L-GN/L-BU	6133	II	—	Local Interconnect Network Serial Data Bus 2	42	0.5	L-GN/L-BU	6133	IV	—
43	0.5	WH/L-BU	3691	II	—	Trailer Brake Apply Signal	43	0.5	WH/L-BU	3691	IV	—
		VT/BK	7553	II	—	Park Lock Solenoid			VT/BK	7553	IV	—

44	0.5	VT/BK	7553	II	—	Park Lock Solenoid Control	44	0.5	VT/BK	7553	IV	—
45 - 48	—	—	—	—	—	—	45 - 48	—	—	—	—	—

X203 Body Harness to Instrument Panel Harness

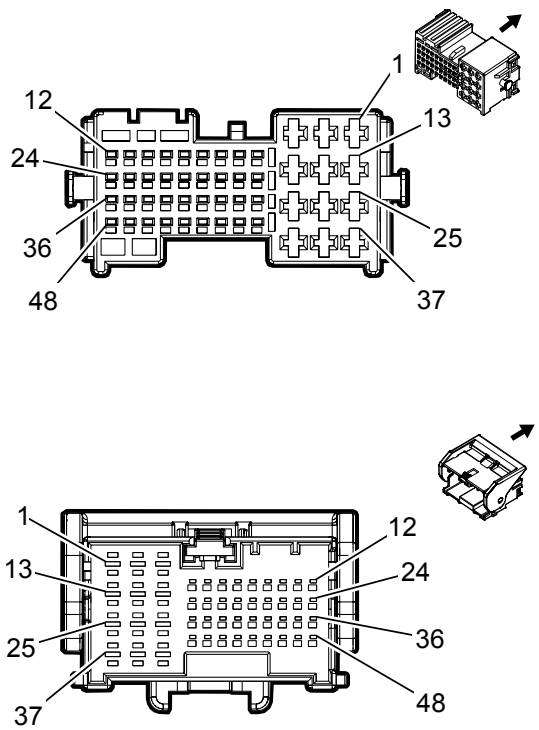

Connector Part Information

Harness Type: Body

OEM Connector: 2109452-2

Service Connector: 19329739

Description: 48-Way F 1.2 MCON, 2.8 MCP Series

Connector Part Information

Harness Type: Instrument Panel

OEM Connector: 13582054

Service Connector: 19329740

Description: 48-Way M 1.2 MCON, 2.8 MCP Series (BK)

Terminal Part Information

Terminal Type ID	Terminated Lead	Diagnostic Test Probe	Terminal Removal Tool	Service Terminal	Tray	Core Crimp	Insulation Crimp
I	19119592	J-35616-35 (VT)	J-38125-557	Not Available	Not Available	Not Available	Not Available
I	19119592	J-35616-35 (VT)	J-38125-557	Not Available	Not Available	Not Available	Not Available
II	19329758	J-35616-16 (LT GN)	J-38125-12A	Not Available	Not Available	Not Available	Not Available
II	19329758	J-35616-16 (LT GN)	J-38125-12A	Not Available	Not Available	Not Available	Not Available
II	19329758	J-35616-16 (LT GN)	J-38125-12A	Not Available	Not Available	Not Available	Not Available
III	13575574	J-35616-5 (PU)	J-38125-36	Not Available	Not Available	Not Available	Not Available
III	13575574	J-35616-5 (PU)	J-38125-36	Not Available	Not Available	Not Available	Not Available
IV	19329749	J-35616-13 (BU)	J-38125-12A	Not Available	Not Available	Not Available	Not Available
IV	19329749	J-35616-13 (BU)	J-38125-12A	Not Available	Not Available	Not Available	Not Available
IV	19329749	J-35616-13 (BU)	J-38125-12A	Not Available	Not Available	Not Available	Not Available

IV	19329749	3-35016-15 (BU)	3-38125-12A	Not Available	Not Available	Not Available	Not Available

X203 Body Harness to Instrument Panel Harness

Pin	Size	Color	Circuit	Terminal Type ID	Option	Function	Pin	Size	Color	Circuit	Terminal Type ID	Option
1	2.5	RD/YE	3740	I	—	Battery Positive Voltage	1	2.5	RD/YE	3740	III	—
2	1	YE/BK	117	I	—	Right Front Speaker Signal (-) (1)	2	1 0.75	YE/BK YE/BK	117 117	III	UQA UQ3
3	1	YE	200	I	—	Right Front Speaker Control (+) (1)	3	1 0.75	YE YE	200 200	III	UQA UQ3
4	0.35	YE/RD	597	II	—	5 Volt Reference	4	0.35	YE/RD	597	IV	—
5	0.35	BK/L-BU	7566	II	—	Humidity/Windscreen Temp Sensor Low Reference	5	0.35	BK/L-BU	7566	IV	—
6	0.35	GY/L-GN	7565	II	—	Windscreen Temp Sensor Signal	6	0.35	GY/L-GN	7565	IV	—
7	0.35	GY/L-BU	7564	II	—	Humidity Sensor Signal	7	0.35	GY/L-BU	7564	IV	—
8	0.35	YE/L-BU	3197	II	—	Humidity Temperature Sensor Signal	8	0.35	YE/L-BU	3197	IV	—
		YE	6817	II	—	LED Backlight Dimming			YE	6817	IV	—

9	0.35	YE	6817	II	—	LED Backlight Dimming Control	9	0.35	YE	6817	IV	—
10	0.35	BN	6136	II	—	Control	10	0.35	BN	6136	IV	—
11	0.5	RD/L-BU	540	II	—	Battery Positive Voltage	11	0.5	RD/L-BU	540	IV	—
12	—	—	—	—	—	Not Occupied	12	—	—	—	—	—
13	2.5	RD/VT	4040	I	—	Battery Positive Voltage	13	2.5	RD/VT	4040	III	—
14	1	L-BU/BK	115	I	—	Right Rear Speaker Signal (-)	14	1 0.75	L-BU/BK L-BU/BK	115 115	IV	UQA UQ3
15	1	WH	46	I	—	Right Rear Speaker Control (+)	15	1 0.75	WH WH	46 46	III	UQA UQ3
16	0.35	VT/WH	5234	II	—	Passenger Seat Belt Indicator Control	16	0.35	VT/WH	5234	IV	—
17	0.35	L-BU	2307	II	—	Passenger Air Bag On Indicator Control	17	0.35	L-BU	2307	IV	—
18	0.35	L-GN	2308	II	—	Passenger Air Bag Off Indicator Control	18	0.35	L-GN	2308	IV	—

19	0.5	BARE	1792	II	—	Low Reference	19	0.5	BARE	1792	IV	—
20	0.35	BK/GY	5152	II	—	Voice Recognition Audio Low Reference	20	0.35	BK/GY	5152	IV	—
21	0.35	GY/YE	5149	II	—	Voice Recognition Audio Signal	21	0.35	GY/YE	5149	IV	—
22	—	—	—	—	—	Not Occupied	22	—	—	—	—	—
23	0.35	GY/WH	3153	II	—	Lane Departure Warning Disable Switch Signal	23	0.35	GY/WH	3153	IV	—
24	0.35	WH	3152	II	—	Lane Departure Warning Indicator Control	24	0.35	WH	3152	IV	—
25	—	—	—	—	—	Not Occupied	25	—	—	—	—	—
26	1.5	VT	2101	I	—	Retained Accessory Power Fuse Ignition	26	1.5	VT	2101	III	—
27	2.5	RD/L-GN	2440	I	—	Battery Positive Voltage	27	2.5	RD/L-GN	2440	III	—
28	0.35	BARE	514	II	—	Low Reference	28	0.35	BARE	514	IV	—
29	0.35	YE	658	II	—	Cellular Telephone Voice Signal	29	0.35	YE	658	IV	—
30	0.35	BK/YE	659	II	—	Cellular Telephone Voice Low Reference	30	0.35	BK/YE	659	IV	—
31 - 34	—	—	—	—	—	Not Occupied	31 - 34	—	—	—	—	—

35	1	RD/VT	340	II	—	Battery Positive Voltage	35	1	RD/VT	340	IV	—
36						Run/Crank Ignition 1 Voltage	36	0.5	VT/BK	1639	IV	—
37	1.5	VT	1701	I	—	Retained Accessory Power Ignition	37	1.5	VT	1701	III	—
38	0.5	RD/VT	340	I	—	Battery Positive Voltage	38	0.5	RD/VT	340	III	—
39	0.75	BK	2050	I	—	Ground	39	0.75	BK	2050	III	—
40	0.5	L-BU	2500	II	—	High Speed GMLAN Serial Data (+) (1)	40	0.5	L-BU	2500	IV	—
41	0.5	WH	2501	II	—	High Speed GMLAN Serial Data (-) (1)	41	0.5	WH	2501	IV	—
42 - 45	—	—	—	—	—	Not Occupied	42 - 45	—	—	—	—	—
46	0.5	RD/VT	3340	II	—	Battery Positive Voltage	46	0.5	RD/VT	3340	IV	—
47	0.35	VT/GY	539	II	—	Run/Crank Ignition 1 Voltage	47	0.35	VT/GY	539	IV	—
48	0.5	RD/WH	640	II	—	Battery Positive Voltage	48	0.5	RD/WH	640	IV	—

X206 Instrument Panel Harness to HVAC Harness (C68)

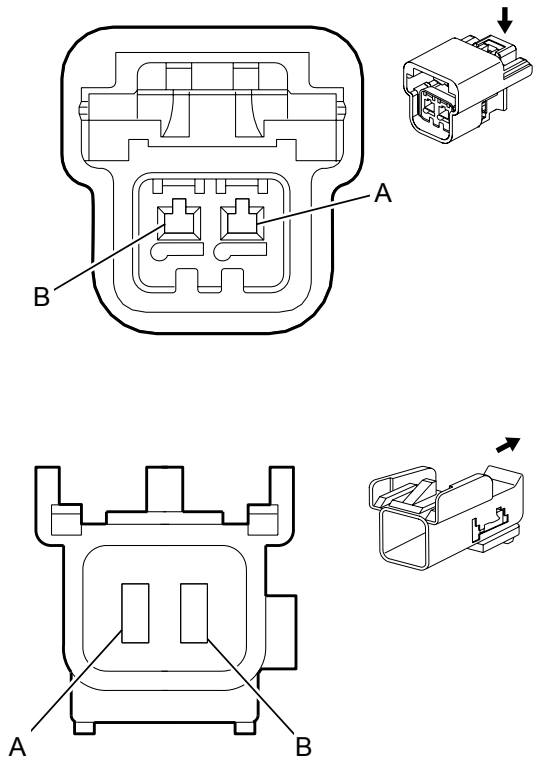

Connector Part Information

Harness Type: Instrument Panel

OEM Connector: 19206608

Service Connector: 13587145

Description: 2-Way F 150 GT FBT Series (BK)

Connector Part Information

Harness Type: HVAC

OEM Connector: 15332130

Service Connector: Service by Harness - See Part Catalog

Description: 2-Way M 150 GT Series (BK)

Terminal Part Information

Terminal Type ID	Terminated Lead	Diagnostic Test Probe	Terminal Removal Tool	Service Terminal	Tray	Core Crimp	Insulation Crimp
I	Not Required	J-35616-2A (GY)	Not Required	Not Required	Not Required	Not Required	Not Required
II	Not Required	Pending	No Tool Required	Not Required	Not Required	Not Required	Not Required

X206 Instrument Panel Harness to HVAC Harness (C68)

Pin	Size	Color	Circuit	Terminal Type ID	Option	Function	Pin	Size	Color	Circuit	Terminal Type ID	Option
A	—	—	—	—	—	Not Occupied	A	—	—	—	—	—
B	0.5	BN	518	I	—	Lower Left Air Temperature Sensor Signal	B	0.5	BN	518	II	—

X207 Instrument Panel Harness to Passenger Air Bag Extension Harness

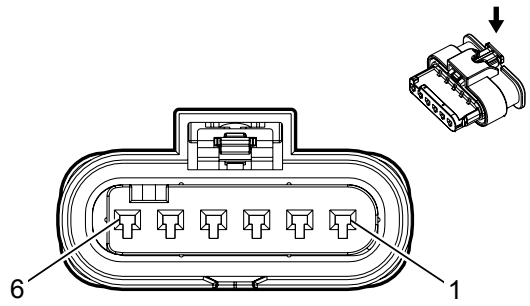

—

Connector Part Information

Harness Type: Instrument Panel

OEM Connector: 13580158

Service Connector: 19301524

Description: 6-Way F 1.2 Multiple Contact Point Series, Sealed (YE)

Connector Part Information

Harness Type: Passenger Air Bag Extension

OEM Connector: Not Available

Service Connector: Service by Harness - See Part Catalog

Description: 6-Way M

Terminal Part Information

Terminal Type ID	Terminated Lead	Diagnostic Test Probe	Terminal Removal Tool	Service Terminal	Tray	Core Crimp	Insulation Crimp
I	Not Required	J-35616-16 (LT GN)	Not Required	Not Required	Not Required	Not Required	Not Required
I	Not Required	J-35616-16 (LT GN)	Not Required	Not Required	Not Required	Not Required	Not Required
II	Not Required	Pending	No Tool Required	Not Required	Not Required	Not Required	Not Required

X207 Instrument Panel Harness to Passenger Air Bag Extension Harness

Pin	Size	Color	Circuit	Terminal Type ID	Option	Function	Pin	Size	Color	Circuit	Terminal Type ID	Option
1	0.35	YE/OG	3025	I	—	Passenger IP Module Stage 1 High Control	1	0.35	YE/OG	3025	II	—
2	0.35	OG/WH	3024	I	—	Passenger IP Module Stage 1 Low Control	2	0.35	OG/WH	3024	II	—
3	0.35	GY/OG	3027	I	—	Passenger IP Module Stage 2 High Control	3	0.35	GY/OG	3027	II	—
4	0.35	OG/VT	3026	I	—	Passenger IP Module Stage 2 Low Control	4	0.35	OG/VT	3026	II	—

5	0.5	BK/WH	2051	I	—	Signal Ground	5	0.5	BK/WH	2051	II	—
6	—	—	—	—	—	—	6	—	—	—	—	—

X218 Instrument Panel COAX Harness to Body COAX Harness

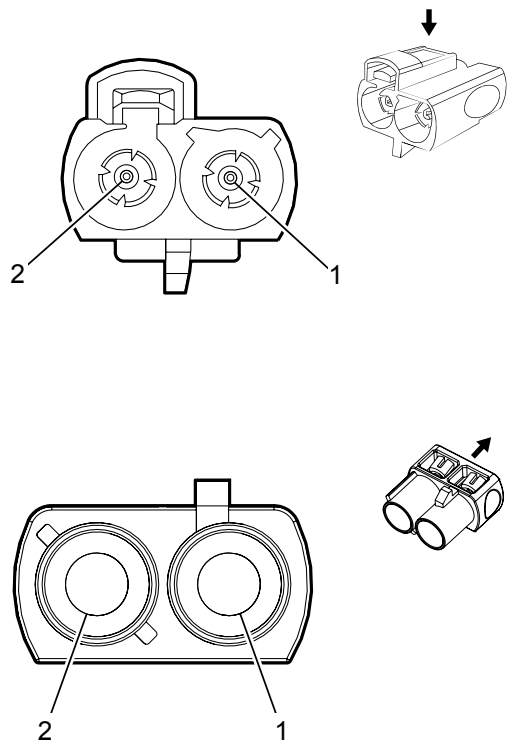

Connector Part Information

Harness Type: Instrument Panel COAX

OEM Connector: COAX

Service Connector: Service by Cable Assembly - See Part Catalog

Description: 2-Way F Coax Type (BK)

Connector Part Information

Harness Type: Body COAX

OEM Connector: COAX

Service Connector: Service by Cable Assembly - See Part Catalog

Description: 2-Way M Coax Type (BK)

Terminal Part Information

Terminal Type ID	Terminated Lead	Diagnostic Test Probe	Terminal Removal Tool	Service Terminal	Tray	Core Crimp	Insulation Crimp
I	Not Available	Not Available	Not Available	Not Available	Not Available	Not Available	Not Available

X218 Instrument Panel COAX Harness to Body COAX Harness

Pin	Size	Color	Circuit	Terminal Type ID	Option	Function	Pin	Size	Color	Circuit	Terminal Type ID	Option
-	-	COAX	-	I	-	(AM/FM) Antenna RF Signal	-	-	COAX	-	I	-
	-	COAX	-		-	(FM2) Antenna RF Signal (2)		-	COAX	-		-

X219 Instrument Panel COAX Harness to Body COAX Harness

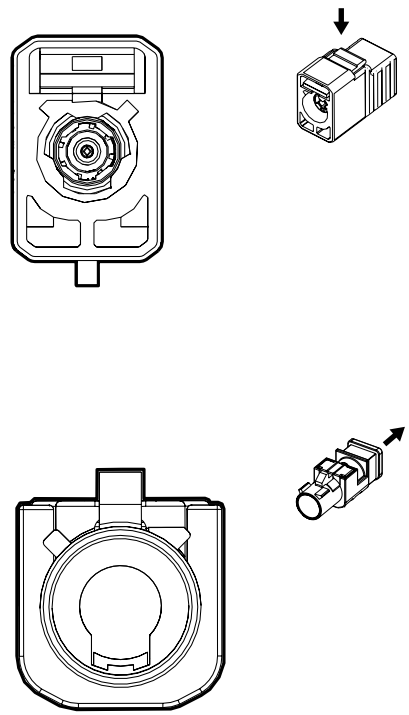

Connector Part Information

Harness Type: Instrument Panel COAX

OEM Connector: COAX

Service Connector: Service by Cable Assembly - See Part Catalog

Description: 2-Way F Coax Type (BK)

Connector Part Information

Harness Type: Body COAX

OEM Connector: COAX

Service Connector: Service by Cable Assembly - See Part Catalog

Description: 2-Way M Coax Type (BK)

Terminal Part Information

Terminal Type ID	Terminated Lead	Diagnostic Test Probe	Terminal Removal Tool	Service Terminal	Tray	Core Crimp	Insulation Crimp
I	Not Available	Not Available	Not Available	Not Available	Not Available	Not Available	Not Available

X219 Instrument Panel COAX Harness to Body COAX Harness

Pin	Size	Color	Circuit	Terminal Type ID	Option	Function	Pin	Size	Color	Circuit	Terminal Type ID	Option
-	-	COAX	-	I	-	(AM/FM) Antenna RF Signal	-	-	COAX	-	I	-

X220 Instrument Panel COAX Harness to Body COAX Harness

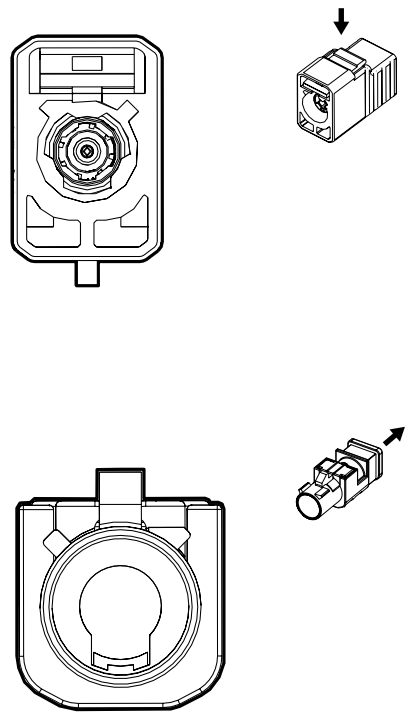

Connector Part Information

Harness Type: Instrument Panel COAX

OEM Connector: COAX

Service Connector: Service by Cable Assembly - See Part Catalog

Description: 2-Way F Coax Type (BK)

Connector Part Information

Harness Type: Body COAX

OEM Connector: COAX

Service Connector: Service by Cable Assembly - See Part Catalog

Description: 2-Way M Coax Type (BK)

Terminal Part Information

Terminal Type ID	Terminated Lead	Diagnostic Test Probe	Terminal Removal Tool	Service Terminal	Tray	Core Crimp	Insulation Crimp
I	Not Available	Not Available	Not Available	Not Available	Not Available	Not Available	Not Available

X220 Instrument Panel COAX Harness to Body COAX Harness

Pin	Size	Color	Circuit	Terminal Type ID	Option	Function	Pin	Size	Color	Circuit	Terminal Type ID	Option
-	-	COAX	-	I	-	(GPS only) Coaxial Antenna GPS Signal	-	-	COAX	-	I	-

X300 Headliner Harness to Body Harness

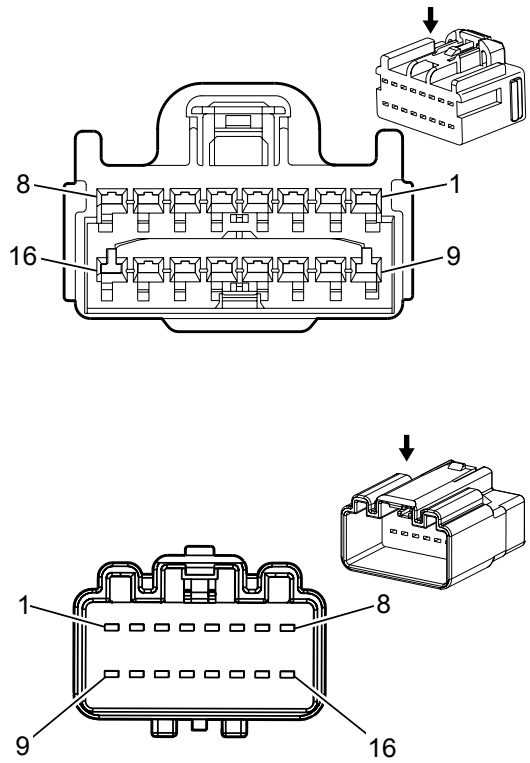

Connector Part Information

Harness Type: Headliner

OEM Connector: 7283-6453-60

Service Connector: 89047090

Description: 16-Way F 1.5 Kaizen Series (GN)

Connector Part Information

Harness Type: Body

OEM Connector: 7282-6453-60

Service Connector: 89047072

Description: 16-Way M 1.5 Kaizen Series (GN)

Terminal Part Information

Terminal Type ID	Terminated Lead	Diagnostic Test Probe	Terminal Removal Tool	Service Terminal	Tray	Core Crimp	Insulation Crimp
I	13578891	J-35616-2A (GY)	J-38125-11A	Not Available	Not Available	Not Available	Not Available
II	13575818	J-35616-3 (GY)	J-38125-553	Not Available	Not Available	Not Available	Not Available

X300 Headliner Harness to Body Harness

Pin	Size	Color	Circuit	Terminal Type ID	Option	Function	Pin	Size	Color	Circuit	Terminal Type ID	Option
1	0.35	BK/BN	654	I	—	Cellular Telephone Microphone Low Reference	1	0.35	BK/BN	654	II	—
2	0.35	L-GN/BK	2515	I	—	Keypad Control	2	0.35	L-GN/BK	2515	II	—

3	0.35	L-GN/WH	2514	I	—	Keypad Signal	3	0.35	L-GN/WH	2514	II	—
4	0.35	YE/VT	2516	I	—	Keypad Green LED Control	4	0.35	YE/VT	2516	II	—
5	0.35	BN/WH	2517	I	—	Keypad Red LED Control	5	0.35	BN/WH	2517	II	—
6	0.35	YE/RD	597	I	—	5 Volt Reference	6	0.35	YE/RD	597	II	—
7	0.35	BK/L-BU	7566	I	—	Humidity/Windscreen Temp Sensor Low Reference	7	0.35	BK/L-BU	7566	II	—
8	0.35	GY/L-GN	7565	I	—	Windscreen Temp Sensor Signal	8	0.35	GY/L-GN	7565	II	—
9	0.35	L-BU	655	I	—	Cellular Telephone Microphone Signal	9	0.35	L-BU	655	II	—
10	0.35	RD/L-GN	3140	I	—	Battery Positive Voltage	10	0.35	RD/L-GN	3140	II	—
11	0.35	BK	3450	I	—	Ground	11	0.35	BK	3150	II	—
12	0.35	WH	3152	I	—	Lane Departure Warning Indicator Control	12	0.35	WH	3152	II	—
13	0.35	GY/WH	3153	I	—	Lane Departure Warning Disable Switch Signal	13	0.35	GY/WH	3153	II	—

14	0.35	GY/L-BU	7564	I	—	Humidity Sensor Signal	14	0.35	GY/L-BU	7564	II	—
15	0.35	YE/L-BU	3197	I	—	Humidity Temperature Sensor Signal	15	0.35	YE/L-BU	3197	II	—
16	—	—	—	—	—	—	16	—	—	—	—	—

X301 Headliner Harness to Body Harness

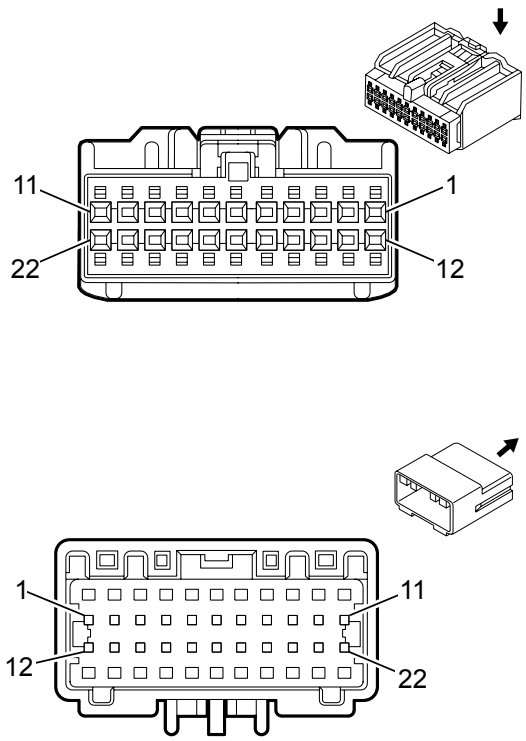

Connector Part Information

Harness Type: Headliner

OEM Connector: AIT2PB-22-2AK

Service Connector: 13504097

Description: 22-Way F 0.64 Kaizen Series (BK)

Connector Part Information

Harness Type: Body

OEM Connector: 13892299

Service Connector: 19119921

Description: 22-Way M 0.64 Series (BK)

Terminal Part Information

Terminal Type ID	Terminated Lead	Diagnostic Test Probe	Terminal Removal Tool	Service Terminal	Tray	Core Crimp	Insulation Crimp
I	13575867	J-35616-64B (LT BU)	J-38125-215A	SAIT-A03T-M064	23	P	P
I	13575867	J-35616-64B (LT BU)	J-38125-215A	SAIT-A03T-M064	23	P	P
II	19299859	J-35616-65B (LT BU)	J-38125-215A	Not Available	Not Available	Not Available	Not Available
II	19299859	J-35616-65B (LT BU)	J-38125-215A	Not Available	Not Available	Not Available	Not Available
III	19299859	J-35616-65B (LT BU)	J-38125-215A	SAITW-A03T-064	18	J	J

X301 Headliner Harness to Body Harness

Pin	Size	Color	Circuit	Terminal Type ID	Option	Function	Pin	Size	Color	Circuit	Terminal Type ID	Option
1	0.35	GY/WH	3272	I	—	Remote Function Actuator Control	1	0.35	GY/WH	3272	II	—

2	0.35	YE/L-GN	3274	I	—	Remote Function Actuator Transmit Signal	2	0.35 0.35	YE/L-GN YE/L-GN	3274 3274	III II	— —
3	0.35	L-BU/WH	3275	I	—	Remote Function Actuator Receive Signal	3	0.35	L-BU/WH	3275	II	—
4	0.35	GY	3273	I	—	Remote Function Actuator Low Reference	4	0.35	GY	3273	II	—
5	0.5	YE	6817	I	—	LED Backlight Dimming Control	5	0.5	YE	6817	II	—
6	0.5	WH/BN	6815	I	—	Inadvertent Power Control	6	0.75	WH/BN	6815	II	—
7	0.5	GY	157	I	—	Interior Lamp Control	7	0.5 0.5	GY GY	157 157	III II	— —
8	0.35	GY/L-GN	328	I	—	Interior Lamp Defeat Switch Signal	8	0.35 0.35	GY/L-GN GY/L-GN	328 328	II III	— —
9	0.35	GY	156	I	—	Courtesy Lamp Switch Signal	9	0.35	GY GY	156 156	II III	— —

								0.35				
10	0.5	VT/L-GN	1739	I	—	Run/Crank Ignition 1 Voltage	10	0.5	VT/L-GN	1739	II	—
11	0.5	L-GN/WH	24	I	DD8	Backup Lamp Control	11	0.5	L-GN/WH	24	III	DD8
12	0.75	BK	2050	I	—	Ground	12	0.75	BK	3150	II	—
13	—	—	—	—	—	Not Occupied	13	—	—	—	—	—
14	0.35	VT/WH	5234	I	—	Passenger Seat Belt Indicator Control	14	0.35	VT/WH	5234	II	—
15	0.35	L-BU	2307	I	—	Passenger Air Bag On Indicator Control	15	0.35	L-BU	2307	II	—
16	0.35	L-GN	2308	I	—	Passenger Air Bag Off Indicator Control	16	0.35	L-GN	2308	II	—
17	0.5	L-GN	5060	I	—	Low Speed GMLAN Serial Data	17	0.5	L-GN	5060	II	—
18						Local Interconnect Network Serial Data Bus 1	18	0.5	L-GN/BN	6132	II	—
19	0.35	VT/WH	1139	I	—	Run/Crank Ignition 1 Voltage	19	0.35	VT/WH	1139	II	—
20 - 22	—	—	—	—	—	—	20 - 22	—	—	—	—	—

X302 Floor Console USB Harness to Instrument Panel USB Harness

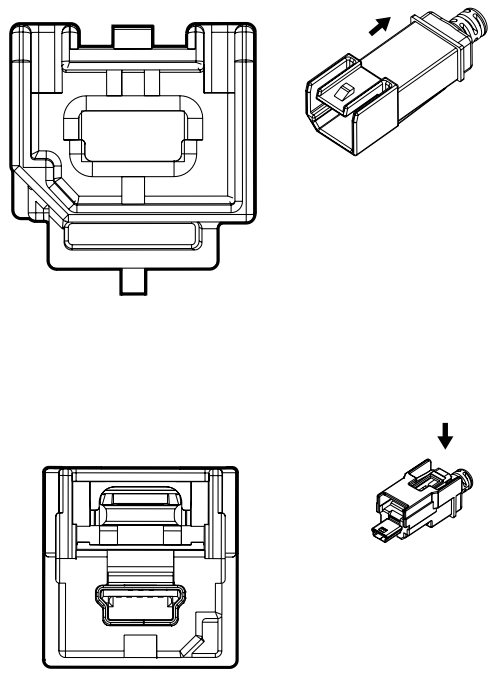

Connector Part Information

Harness Type: Floor Console USB

OEM Connector: 13584760

Service Connector: Service by Cable Assembly — See Part Catalog

Description: 5-Way F 2.0 Mini B USB Type (BK)

Connector Part Information

Harness Type: Instrument Panel USB

OEM Connector: RSD-111014-152

Service Connector: Service by Cable Assembly — See Part Catalog

Description: 5-Way M 2.0 Mini B USB Type (BK)

Terminal Part Information

Terminal Type ID	Terminated Lead	Diagnostic Test Probe	Terminal Removal Tool	Service Terminal	Tray	Core Crimp	Insulation Crimp
I	Not Available	Not Available	Not Available	Not Available	Not Available	Not Available	Not Available

X302 Floor Console USB Harness to Instrument Panel USB Harness

Pin	Size	Color	Circuit	Terminal Type ID	Option	Function	Pin	Size	Color	Circuit	Terminal Type ID	Option
-	-	USB	-	I	-	USB Serial Data	-	-	USB	-	I	-

X303 Body Harness to CHMSL Harness

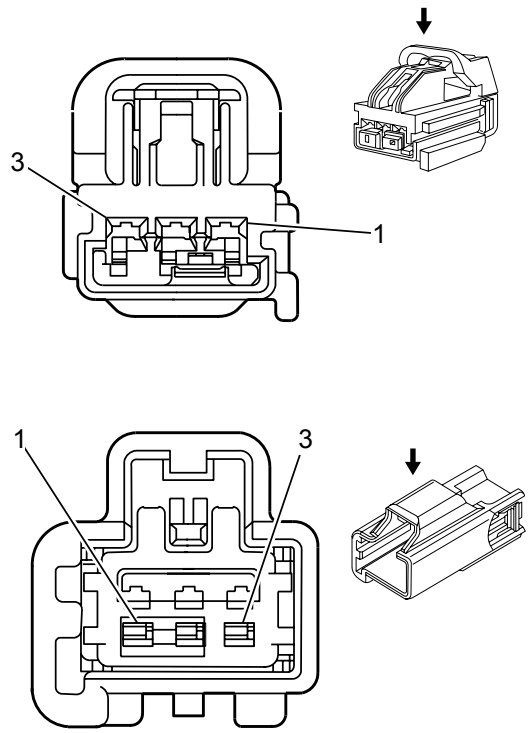

Connector Part Information

Harness Type: Body

OEM Connector: 7283-3440-40

Service Connector: 19149536

Description: 3-Way F 1.5 Kaizen Series (L-GY)

Connector Part Information

Harness Type: CHMSL

OEM Connector: 7282-3440-40

Service Connector: Service by Harness - See Part Catalog

Description: 3-Way M 1.5 Kaizen YESC Series (L-GY)

Terminal Part Information

Terminal Type ID	Terminated Lead	Diagnostic Test Probe	Terminal Removal Tool	Service Terminal	Tray	Core Crimp	Insulation Crimp
I	Not Required	J-35616-2A (GY)	Not Required	Not Required	Not Required	Not Required	Not Required
I	Not Required	J-35616-2A (GY)	Not Required	Not Required	Not Required	Not Required	Not Required
II	Not Required	Pending	No Tool Required	Not Required	Not Required	Not Required	Not Required

X303 Body Harness to CHMSL Harness

Pin	Size	Color	Circuit	Terminal Type ID	Option	Function	Pin	Size	Color	Circuit	Terminal Type ID	Option
1	0.75	WH/VT	1430	I	—	Exterior Courtesy Lamp Control	1	0.75	WH/VT	1430	II	—
2	0.35	VT/GY	1054	I	—	Stop Lamp Control	2	0.35	VT/GY	1054	II	—

2	0.35						2	0.35				
3	0.75	BK	3150	I	—	Ground	3	0.75	BK	3150	II	—

X304 Windshield Sensor Harness to Headliner Harness (C68)

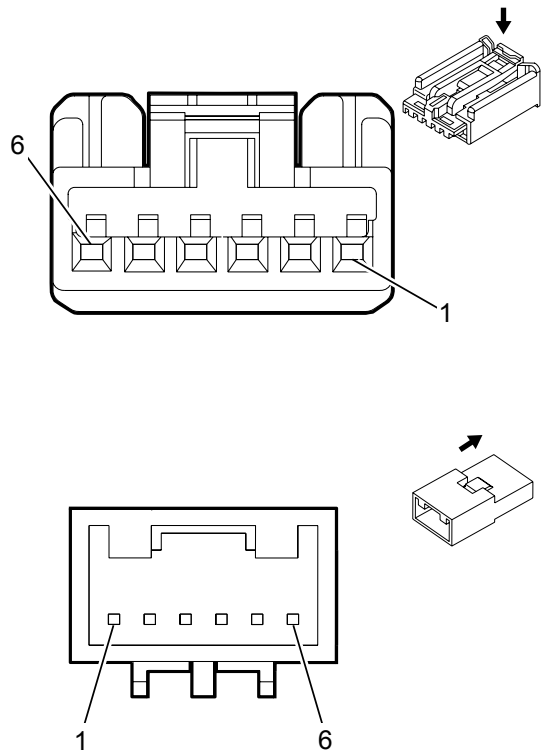

Connector Part Information

Harness Type: Windshield Sensor

OEM Connector: 15269798

Service Connector: Service by Harness - See Part Catalog

Description: 6-Way F 0.64 Kaizen Series (BK)

Connector Part Information

Harness Type: Headliner

OEM Connector: AIT2WSB-06-1AK

Service Connector: 19299681

Description: 6-Way M 0.64 Kaizen Series (BK)

Terminal Part Information

Terminal Type ID	Terminated Lead	Diagnostic Test Probe	Terminal Removal Tool	Service Terminal	Tray	Core Crimp	Insulation Crimp
I	Not Required	Pending	No Tool Required	Not Required	Not Required	Not Required	Not Required
II	Not Required	J-35616-65B (LT BU)	Not Required	Not Required	Not Required	Not Required	Not Required

X304 Windshield Sensor Harness to Headliner Harness (C68)

Pin	Size	Color	Circuit	Terminal Type ID	Option	Function	Pin	Size	Color	Circuit	Terminal Type ID	Option
1	0.35	YE/RD	597	I	—	5 Volt Reference	1	0.35	YE/RD	597	II	—
2	0.35	GY/L-BU	7564	I	—	Humidity Sensor Signal	2	0.35	GY/L-BU	7564	II	—

3	0.35	BK/L-BU	7566	I	—	Humidity/Windscreen Temp Sensor Low Reference	3	0.35	BK/L-BU	7566	II	—
4	0.35	GY/L-GN	7565	I	—	Windscreen Temp Sensor Signal	4	0.35	GY/L-GN	7565	II	—
5	0.35	YE/L-BU	3197	I	—	Humidity Temperature Sensor Signal	5	0.35	YE/L-BU	3197	II	—

X305 Instrument Panel Harness to Floor Console Harness

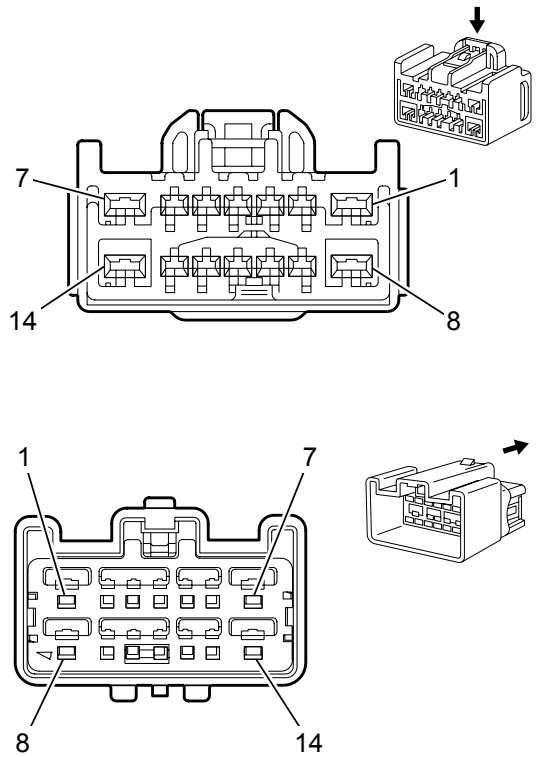

Connector Part Information

Harness Type: Instrument Panel

OEM Connector: 88988260

Service Connector: 88956524

Description: 14-Way F Hybrid Series (L-GY)

Connector Part Information

Harness Type: Floor Console

OEM Connector: 7282-6447-40

Service Connector: Service by Harness - See Part Catalog

Description: 14-Way M Hybrid Series (L-GY)

Terminal Part Information

Terminal Type ID	Terminated Lead	Diagnostic Test Probe	Terminal Removal Tool	Service Terminal	Tray	Core Crimp	Insulation Crimp
I	13575839	J-35616-35 (VT)	J-38125-11A	Not Available	Not Available	Not Available	Not Available
II	13575850	J-35616-2A (GY)	J-38125-11A	Not Available	Not Available	Not Available	Not Available
III	Not Required	J-35616-3 (GY)	Not Required	Not Required	Not Required	Not Required	Not Required
IV	Not Required	J-35616-5 (PU)	Not Required	Not Required	Not Required	Not Required	Not Required

X305 Instrument Panel Harness to Floor Console Harness

Pin	Size	Color	Circuit	Terminal Type ID	Option	Function	Pin	Size	Color	Circuit	Terminal Type ID	Option
1	1.5	BK	2050	I	—	Ground	1	1.5	BK	2050	IV	—

2	0.35	BK/WH	2051	II	—	Signal Ground	2	0.35	BK/WH	2051	III	—
3 - 5	—	—	—	—	—	Not Occupied	3 - 5	—	—	—	—	—
6	0.5	RD/VT	340	II	—	Battery Positive Voltage	6	0.5	RD/VT	340	III	—
7	1.5	VT	1701	I	—	Retained Accessory Power Ignition	7	1.5	VT	1701	IV	—
8	1.5	BK	2050	I	—	Ground	8	1.5	BK	2050	IV	—
9	0.35	L-GN	5841	II	—	Right Auxiliary Audio Signal (2)	9	0.35	L-GN	5841	III	—
10	0.35	GY	5839	II	—	Left Auxiliary Audio Signal (2)	10	0.35	GY	5839	III	—
11	0.35	VT	5843	II	—	Auxiliary Audio Common Signal	11	0.35	VT	5843	III	—
12	0.5	BK	5842	II	—	Auxiliary Audio Screen (2)	12	0.5	BK	5842	III	—
13	0.35	L-BU	2060	II	—	Auxiliary Detection Signal	13	0.35	L-BU	2060	III	—
14	1.5	VT	2101	I	—	Retained Accessory Power Fuse Ignition	14	1.5	VT	2101	IV	—

X306 Instrument Panel Harness to Floor Console Harness (MYB)

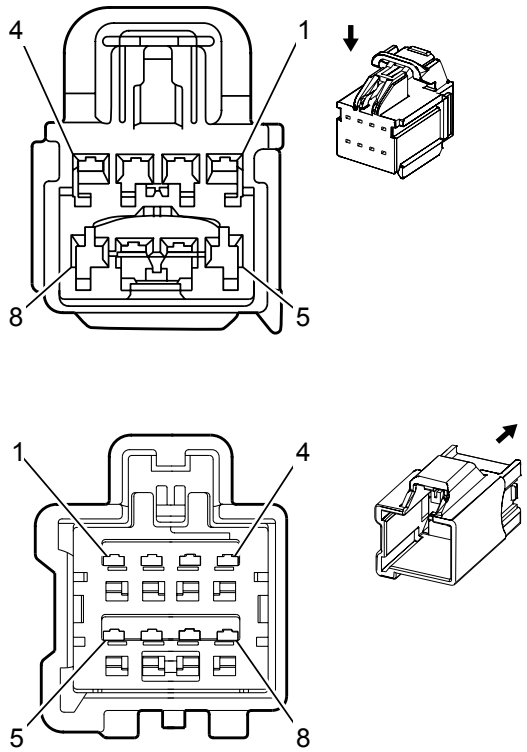

Connector Part Information

Harness Type: Instrument Panel

OEM Connector: 13580896

Service Connector: 19153166

Description: 8-Way F 1.5 Kaizen YESC Series (L-GY)

Connector Part Information

Harness Type: Floor Console

OEM Connector: 7282-3441-40

Service Connector: Service by Harness - See Part Catalog

Description: 8-Way M 1.5 Kaizen YESC Series (L-GY)

Terminal Part Information

Terminal Type ID	Terminated Lead	Diagnostic Test Probe	Terminal Removal Tool	Service Terminal	Tray	Core Crimp	Insulation Crimp
I	Not Required	J-35616-2A (GY)	Not Required	Not Required	Not Required	Not Required	Not Required
II	Not Required	J-35616-3 (GY)	Not Required	Not Required	Not Required	Not Required	Not Required

X306 Instrument Panel Harness to Floor Console Harness (MYB)

Pin	Size	Color	Circuit	Terminal Type ID	Option	Function	Pin	Size	Color	Circuit	Terminal Type ID	Option
1	0.35	VT	801	I	—	Retained Accessory Power Fuse Control	1	0.35	VT	801	II	—
2	0.5	L-GN/L-BU	6133	I	—	Local Interconnect Network Serial Data Bus 2	2	0.5	L-GN/L-BU	6133	II	—

3	0.35	BK	2050	I	—	Ground	3	0.35	BK	2050	II	—
4 - 5	—	—	—	—	—	Not Occupied	4 - 5	—	—	—	—	—
6	0.35	VT/YE	5526	I	—	Tap Up/Tap Down Switch Signal	6	0.35	VT/YE	5526	II	—
7	0.5	VT/BK	7553	I	—	Park Lock Solenoid Control	7	0.5	VT/BK	7553	II	—
8	0.5	WH/VT	5905	I	—	Key Capture/Column Lock Shift Position Signal	8	0.5	WH/VT	5905	II	—

X310 Driver Seat Cushion Harness to Body Harness

—

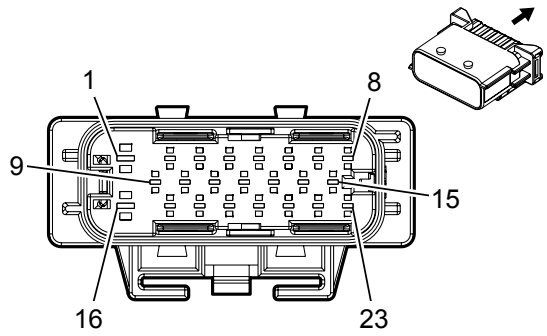

Connector Part Information

Harness Type: Driver Seat Cushion

OEM Connector: Not Available

Service Connector: Service by Harness - See Part Catalog

Description: 23-Way F

Connector Part Information

Harness Type: Body

OEM Connector: 13750010

Service Connector: 19332380

Description: 23-Way M 1.5 DSQ, 2.8 AST Series, Sealed

Terminal Part Information

Terminal Type ID	Terminated Lead	Diagnostic Test Probe	Terminal Removal Tool	Service Terminal	Tray	Core Crimp	Insulation Crimp
I	Not Required	Pending	No Tool Required	Not Required	Not Required	Not Required	Not Required
II	—	—	—	—	—	—	—
III	13575380	J-35616-3 (GY)	J-38125-560	Not Available	Not Available	Not Available	Not Available
IV	13578881	J-35616-5 (PU)	J-38125-36	Not Available	Not Available	Not Available	Not Available
V	13578882	J-35616-3 (GY)	J-38125-560	Not Available	Not Available	Not Available	Not Available
VI	13579985	J-35616-3 (GY)	J-38125-560	Not Available	Not Available	Not Available	Not Available

X310 Driver Seat Cushion Harness to Body Harness

Pin	Size	Color	Circuit	Terminal Type ID	Option	Function	Pin	Size	Color	Circuit	Terminal Type ID	Option
1	2.5	RD/YE	5040	I	—	Battery Positive Voltage	1	2.5	RD/YE	5040	IV	—
2	0.75	BK/YE	2080	I	—	Driver Heated Seat NTC Low Reference	2	0.75	BK/YE	2080	III	—
7	0.35	YE/OG	3482	I	—	Driver Seat Belt Anchor Pretensioner Low	7	0.35	YE/OG	3482	VI	—

7	0.35					Pretensioner Low Control	7	0.35				
8	0.35	OG/YE	3481	I	—	Driver Seat Belt Anchor Pretensioner High Control	8	0.35	OG/YE	3481	VI	—
10	0.75	VT/BK	2424	I	—	Driver Heated Back Element Low Reference	10	0.75	VT/BK	2424	III	—
11	0.35	OG/BN	238	I	—	Driver Seat Belt Switch Signal	11	0.35	OG/BN	238	V	—
13	0.75	L-BU	2425	I	KA1	Driver Heated Back NTC Signal	13	0.75	L-BU	2425	III	KA1
15	0.35	L-GN/OG	3069	I	—	Driver Side Impact Module Low Control	15	0.35	L-GN/OG	3069	VI	—
16	2.5	BK	3750	I	—	Ground	16	2.5	BK	3750	IV	—
17	0.75	YE/GY	2079	I	—	Driver Heated Seat NTC Signal	17	0.75	YE/GY	2079	III	—
19	0.35	BK/OG	1363	I	—	Driver Seat Belt Switch Low Reference	19	0.35	BK/OG	1363	VI	—
21	0.75	BN/VT	2077	I	—	Driver Heated Seat Element Control	21	0.75	BN/VT	2077	III	—
22	— 0.75	— BN	— 2432	I	KA1 KA1	— Driver Heated Back Element Control	22	0.75 —	BN —	2432 —	III II	KA1 KA1

22	— 0.75	— BN	— 2432	I	KA1 KA1	— Driver Heated Back Element Control	22	0.75 —	BN —	2432 —	III II	KA1 KA1
23	0.35	OG/L-BU	3068	I	—	Driver Side Impact Module High Control	23	0.35	OG/L-BU	3068	VI	—

X311 Driver Seat Back Harness to Driver Seat Cushion Harness

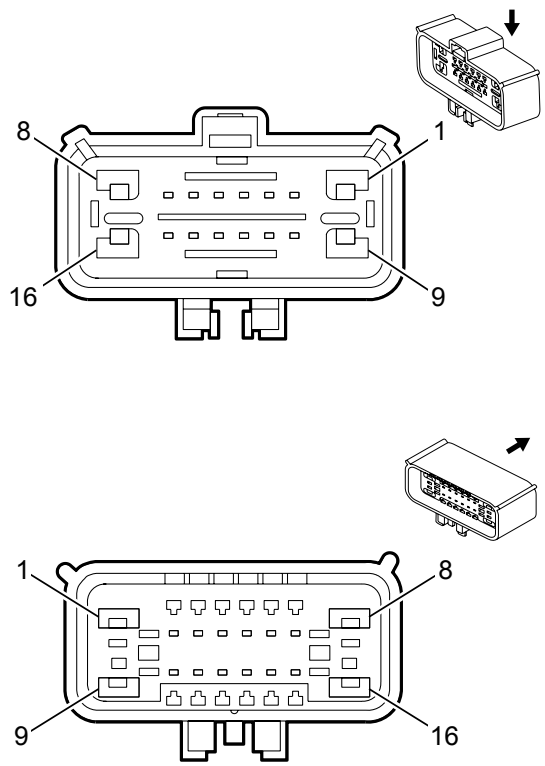

Connector Part Information

Harness Type: Driver Seat Back

OEM Connector: 33476-1955

Service Connector: 13574908

Description: 16-Way F 1.5, 2.8 Series, Sealed (YE)

Connector Part Information

Harness Type: Driver Seat Cushion

OEM Connector: 33486-1762

Service Connector: Service by Harness – See Part Catalog

Description: 16-Way M 1.5, 2.8 Series, Sealed (YE)

Terminal Part Information

Terminal Type ID	Terminated Lead	Diagnostic Test Probe	Terminal Removal Tool	Service Terminal	Tray	Core Crimp	Insulation Crimp
I	13505803	J-35616-35 (VT)	J-38125-12A	1326030-8	13	A	4
II	13578813	J-35616-2A (GY)	J-38125-217	Not Available	Not Available	Not Available	Not Available
III	Not Available	J-35616-5 (PU)	J-38125-12A	1326030-6	12	E	C
IV	Not Available	J-35616-3 (GY)	J-38125-12A	Not Available	Not Available	Not Available	Not Available
V	Not Available	J-35616-5 (PU)	J-38125-12A	1326030-6	12	Not Available	Not Available
VI	Pending	Pending	Pending	Pending	Pending	Pending	Pending

X311 Driver Seat Back Harness to Driver Seat Cushion Harness

Pin	Size	Color	Circuit	Terminal Type ID	Option	Function	Pin	Size	Color	Circuit	Terminal Type ID	Option
1	0.75	BN	2432	I	KA1	Driver Heated Back Element Supply	1	0.75	BN	2432	III	KA1

						Voltage						
2-3	-	-	-	-	-	Not Occupied	2-3	-	-	-	-	-
4	0.5	OG/BU	3068	II	AY0	Driver Side Impact Module High Control	4	0.5	OG/BU	3068	IV	AY0
5	0.5	GN/OG	3069	II	AY0	Driver Side Impact Module Low Control	5	0.5	GN/OG	3069	IV	AY0
6-7	-	-	-	-	-	Not Occupied	6-7	-	-	-	-	-
8	1.5	VT	610	I	AL9	Driver Power Seat Lumbar Motor Rearward Control	8	1.5	VT	610	V	AL9
9	0.75	BK	3750	I	KA1	Ground	9	0.75	BK	3750	III	KA1
10-13	-	-	-	-	-	Not Occupied	10-15	-	-	-	-	-
14	0.75	L-BU	2425	VI	KA1	Driver Heated Back NTC Signal	14	0.75	L-BU	2425	VI	KA1
15	0.75	BK/YE	2080	VI	KA1	Driver Heated Seat NTC Low Reference	15	0.75	BK/YE	2080	VI	KA1
16	1.5	BU	611	I	AL9	Driver Power Seat Lumbar Motor Forward Control	16	1.5	BU	611	V	AL9

X320 Passenger Seat Cushion Harness to Body Harness

—

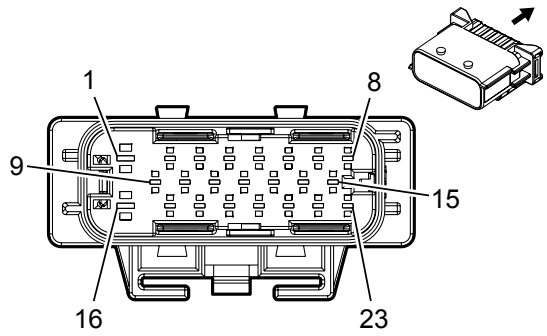

Connector Part Information

Harness Type: Passenger Seat Cushion

OEM Connector: Not Available

Service Connector: Service by Harness - See Part Catalog

Description: 23-Way F

Connector Part Information

Harness Type: Body

OEM Connector: 13750010

Service Connector: 19332380

Description: 23-Way M 1.5 DSQ, 2.8 AST Series, Sealed

Terminal Part Information

Terminal Type ID	Terminated Lead	Diagnostic Test Probe	Terminal Removal Tool	Service Terminal	Tray	Core Crimp	Insulation Crimp
I	Not Required	Pending	No Tool Required	Not Required	Not Required	Not Required	Not Required
II	13575380	J-35616-3 (GY)	J-38125-560	Not Available	Not Available	Not Available	Not Available
III	13578881	J-35616-5 (PU)	J-38125-36	Not Available	Not Available	Not Available	Not Available
IV	13579985	J-35616-3 (GY)	J-38125-560	Not Available	Not Available	Not Available	Not Available
IV	13579985	J-35616-3 (GY)	J-38125-560	Not Available	Not Available	Not Available	Not Available

X320 Passenger Seat Cushion Harness to Body Harness

Pin	Size	Color	Circuit	Terminal Type ID	Option	Function	Pin	Size	Color	Circuit	Terminal Type ID	Option
1	2.5	RD/BN	1440	I	—	Battery Positive Voltage	1	2.5	RD/BN	1440	III	—
2	0.75	BK/YE	2080	I	—	Driver Heated Seat NTC Low Reference	2	0.75	BK/YE	2080	II	—
3	0.75	RD/L-GN	5140	I	—	Battery Positive Voltage	3	0.75	RD/L-GN	5140	II	—

5	0.5	BK/WH	2251	I	—	Signal Ground	5	0.5	BK/WH	2251	IV	—
6	0.35	L-GN	5060	I	—	Low Speed GMLAN Serial Data	6	0.35	L-GN	5060	IV	—
7	0.35	GY/OG	3480	I	—	Passenger Seat Belt Anchor Pretensioner Low Control	7	0.35	GY/OG	3480	IV	—
8	0.35	OG/BN	3479	I	—	Passenger Seat Belt Anchor Pretensioner High Control	8	0.35	OG/BN	3479	IV	—
9	0.75	RD/L-GN	6140	I	—	Battery Positive Voltage	9	0.75	RD/L-GN	6140	II	—
10	0.75	VT/BK	2424	I	—	Driver Heated Back Element Low Reference	10	0.75	VT/BK	2424	II	—
11	0.35	OG/VT	1362	I	—	Passenger Seat Belt Switch Signal	11	0.35	OG/VT	1362	IV	—
12	0.35	RD/L-GN	4440	I	—	Battery Positive Voltage	12	0.35	RD/L-GN	4440	IV	—
13	0.75	L-BU	2425	I	KA1	Driver Heated Back NTC Signal	13	0.75	L-BU	2425	II	KA1
15	0.35	BN/OG	3067	I	—	Passenger Side Impact Module Low Control	15	0.35	BN/OG	3067	IV	—
16	2.5	BK	3850	I	—	Ground	16	2.5	BK	3850	III	—

17	0.75	YE/GY	2079	I	—	Driver Heated Seat NTC Signal	17	0.75	YE/GY	2079	II	—
18	0.5	L-GN/L-BU	6133	I	—	Local Interconnect Network Serial Data Bus 2	18	0.5	L-GN/L-BU	6133	II	—
19	0.35	BK/OG	1361	I	—	Passenger Seat Belt Switch Low Reference	19	0.35	BK/OG	1361	IV	—
21	0.75	BN/VT	2077	I	—	Driver Heated Seat Element Control	21	0.75	BN/VT	2077	II	—
22	— 0.75	— BN	— 2432	I	KA1 KA1	— Driver Heated Back Element Control	22	0.75 0.75	BN BN	2432 2432	II IV	KA1 KA1
22	— 0.75	— BN	— 2432	I	KA1 KA1	— Driver Heated Back Element Control	22	0.75 0.75	BN BN	2432 2432	II IV	KA1 KA1
23	0.35	OG/GY	3066	I	—	Passenger Side Impact Module High Control	23	0.35	OG/GY	3066	IV	—

X321 Passenger Seat Back Harness to Passenger Seat Cushion Harness

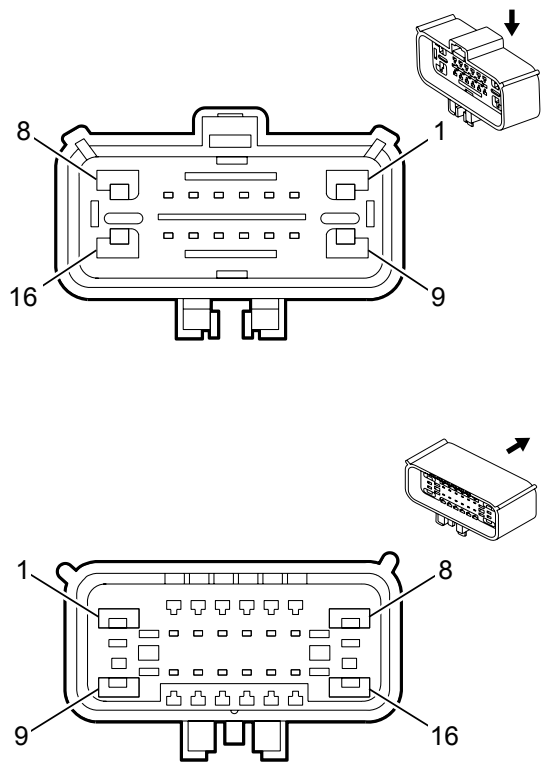

Connector Part Information

Harness Type: Passenger Seat Back

OEM Connector: 33476-1955

Service Connector: 13574908

Description: 16-Way F 1.5, 2.8 Series, Sealed (YE)

Connector Part Information

Harness Type: Passenger Seat Cushion

OEM Connector: 33486-1762

Service Connector: Service by Harness – See Part Catalog

Description: 16-Way M 1.5, 2.8 Series, Sealed (YE)

Terminal Part Information

Terminal Type ID	Terminated Lead	Diagnostic Test Probe	Terminal Removal Tool	Service Terminal	Tray	Core Crimp	Insulation Crimp
I	13505803	J-35616-35 (VT)	J-38125-12A	1326030-8	13	A	4
II	13578813	J-35616-2A (GY)	J-38125-217	Not Available	Not Available	Not Available	Not Available
III	Not Available	J-35616-5 (PU)	J-38125-12A	1326030-6	12	E	C
IV	Not Available	J-35616-3 (GY)	J-38125-12A	Not Available	Not Available	Not Available	Not Available
V	Not Available	J-35616-5 (PU)	J-38125-12A	1326030-6	12	Not Available	Not Available
VI	Pending	Pending	Pending	Pending	Pending	Pending	Pending

X321 Passenger Seat Back Harness to Passenger Seat Cushion Harness

Pin	Size	Color	Circuit	Terminal Type ID	Option	Function	Pin	Size	Color	Circuit	Terminal Type ID	Option
1	0.75	WH/BN	2481	I	KA1	Passenger Heated Back Element Supply	1	0.75	WH/BN	2481	III	KA1

						Voltage						
2-3	-	-	-	-	-	Not Occupied	2-3	-	-	-	-	-
4	0.5	OG/GY	3066	II	AY0	Passenger Side Impact Module High Control	4	0.5	OG/GY	3066	IV	AY0
5	0.5	BN/OG	3067	II	AY0	Passenger Side Impact Module Low Control	5	0.5	BN/OG	3067	IV	AY0
6-7	-	-	-	-	-	Not Occupied	6-7	-	-	-	-	-
8	1.5	VT	210	I	AT9	Passenger Power Seat Lumbar Motor Rearward Control	8	1.5	VT	210	V	AT9
9	0.75	BK	3850	I	KA1	Ground	9	0.75	BK	3850	III	KA1
10-13	-	-	-	-	-	Not Occupied	10-15	-	-	-	-	-
14	0.75	WH/L-BU	2436	VI	KA1	Passenger Heated Back NTC Signal	14	0.75	WH/L-BU	2436	VI	KA1
15	0.75	BK/L-GN	2482	VI	KA1	Passenger Heated Seat NTC Low Reference	15	0.75	BK/L-GN	2482	VI	KA1
16	1.5	BU	211	I	AT9	Passenger Power Seat Lumbar Motor Forward Control	16	1.5	BU	211	V	AT9

X399 Instrument Panel Harness to Instrument Panel Harness

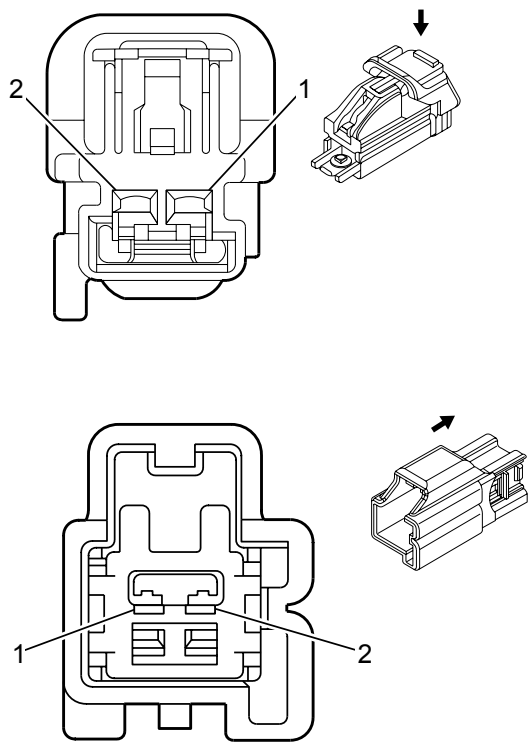

Connector Part Information

Harness Type: Instrument Panel

OEM Connector: 19167918

Service Connector: 88988504

Description: 2-Way F 1.5 YESC Series (L-GY)

Connector Part Information

Harness Type: Instrument Panel

OEM Connector: 13580902

Service Connector: 88988503

Description: 2-Way M 1.5 Series (L-GY)

Terminal Part Information

Terminal Type ID	Terminated Lead	Diagnostic Test Probe	Terminal Removal Tool	Service Terminal	Tray	Core Crimp	Insulation Crimp
I	Not Required	J-35616-2A (GY)	Not Required	Not Required	Not Required	Not Required	Not Required
II	Not Required	J-35616-3 (GY)	Not Required	Not Required	Not Required	Not Required	Not Required

X399 Instrument Panel Harness to Instrument Panel Harness

Pin	Size	Color	Circuit	Terminal Type ID	Option	Function	Pin	Size	Color	Circuit	Terminal Type ID	Option
1	0.5	GY/VT	3998	I	—	MOST Serial Data (+)	1	0.5	GY/VT	3998	II	—
2	0.5	WH/L-GN	3997	I	—	MOST Serial Data (-)	2	0.5	WH/L-GN	3997	II	—

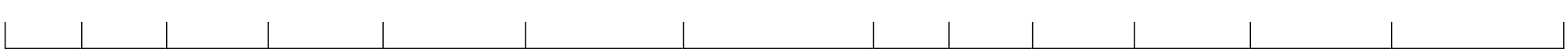

X400 Chassis Harness to License Lamp Harness

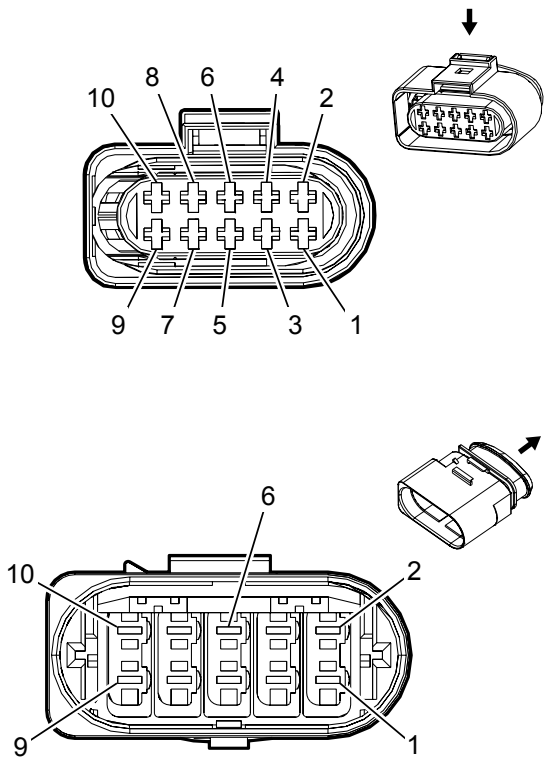

Connector Part Information

Harness Type: Chassis

OEM Connector: 493577-2

Service Connector: 19301910

Description: 10-Way F 2.8 Junior Mini-Timer Series, Sealed (BK)

Connector Part Information

Harness Type: License Lamp

OEM Connector: 1718167-1

Service Connector: Service by Harness - See Part Catalog

Description: 10-Way M 2.8 Series, Sealed (BK)

Terminal Part Information

Terminal Type ID	Terminated Lead	Diagnostic Test Probe	Terminal Removal Tool	Service Terminal	Tray	Core Crimp	Insulation Crimp
I	13578866	J-35616-4A (PU)	J-38125-36	964280-2	22	E	C
II	Not Required	J-35616-5 (PU)	Not Required	Not Required	Not Required	Not Required	Not Required

X400 Chassis Harness to License Lamp Harness

Pin	Size	Color	Circuit	Terminal Type ID	Option	Function	Pin	Size	Color	Circuit	Terminal Type ID	Option
1	0.5	L-GN/YE	6846	I	—	Rear License Lamp Control	1	0.5	L-GN/YE	6846	II	—
2	0.5	BK	750	I	—	Ground	2	0.5	BK	750	II	—

3						Rear License Lamp Control	3	0.5	L-GN/YE	6846	II	—
4						Ground	4	0.5	BK	750	II	—
5	0.5	WH/L-BU	6973	I	—	Camera Signal 2	5	0.5	WH/L-BU	6973	II	—
6	0.5	GY/YE	6972	I	—	Camera Signal 2 +	6	0.5	GY/YE	6972	II	—
7	0.5	L-GN	6974	I	—	Camera Low Reference	7	0.5	L-GN	6974	II	—
8	0.5	BK/WH	751	I	—	Signal Ground	8	0.5	BK/WH	751	II	—
9	0.5	VT/L-GN	1739	I	—	Run/Crank Ignition 1 Voltage	9	0.5	VT/L-GN	1739	II	—
10	0.5	L-GN/WH	24	I	—	Backup Lamp Control	10	0.5	L-GN/WH	24	II	—

X401 Chassis Harness to Cargo Lamp Harness (S0Y)

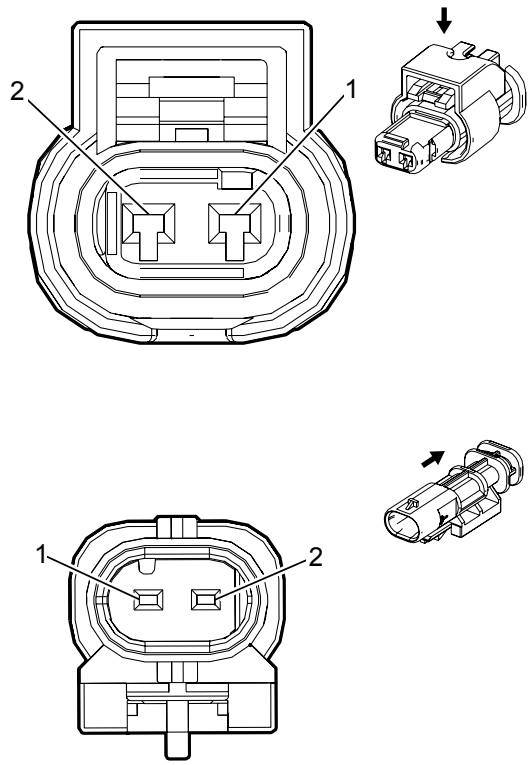

Connector Part Information

Harness Type: Chassis

OEM Connector: 1-1823608-5

Service Connector: 19329415

Description: 2-Way F 1.2 Multiple Contact Point Series, Sealed (BK with BK Inner Connector)

Connector Part Information

Harness Type: Chassis

OEM Connector: 2203314-1

Service Connector: 19332631

Description: 2-Way M 1.2 MLK Series, Sealed (BK)

Terminal Part Information

Terminal Type ID	Terminated Lead	Diagnostic Test Probe	Terminal Removal Tool	Service Terminal	Tray	Core Crimp	Insulation Crimp
I	Not Required	J-35616-16 (LT GN)	Not Required	Not Required	Not Required	Not Required	Not Required
II	Not Required	J-35616-13 (BU)	Not Required	Not Required	Not Required	Not Required	Not Required

X401 Chassis Harness to Cargo Lamp Harness (S0Y)

Pin	Size	Color	Circuit	Terminal Type ID	Option	Function	Pin	Size	Color	Circuit	Terminal Type ID	Option
1	0.75	WH/VT	1430	I	—	Exterior Courtesy Lamp Control	1	0.75	WH/VT	1430	II	—
2	0.75	BK/WH	751	I	—	Signal Ground	2	0.75	BK/WH	751	II	—

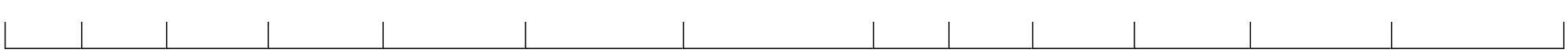

X410 Tail Lamp - Left Harness to Chassis Harness

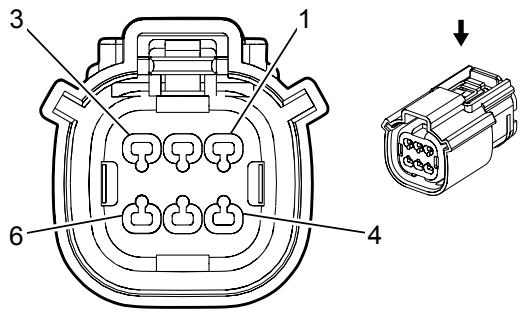

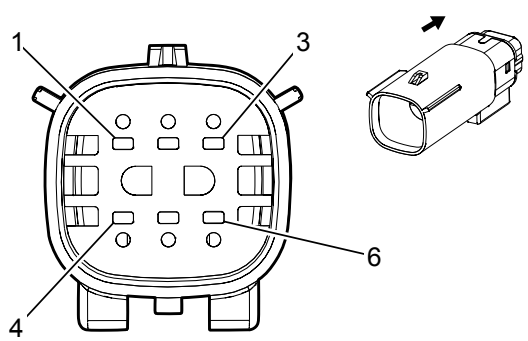

Connector Part Information

Harness Type: Tail Lamp - Left

OEM Connector: 19178149

Service Connector: Service by Harness - See Part Catalog

Description: 6-Way F 150 MX Series, Sealed (BK)

Connector Part Information

Harness Type: Chassis

OEM Connector: 33482-0601

Service Connector: 13395395

Description: 6-Way M 150 MX Series, Sealed (BK)

Terminal Part Information

Terminal Type ID	Terminated Lead	Diagnostic Test Probe	Terminal Removal Tool	Service Terminal	Tray	Core Crimp	Insulation Crimp
I	Not Required	Pending	No Tool Required	Not Required	Not Required	Not Required	Not Required
II	—	—	—	—	—	Not Required	Not Required
III	Not Required	J-35616-3 (GY)	Not Required	Not Required	Not Required	Not Required	Not Required

X410 Tail Lamp - Left Harness to Chassis Harness

Pin	Size	Color	Circuit	Terminal Type ID	Option	Function	Pin	Size	Color	Circuit	Terminal Type ID	Option
1	1.5	L-GN/WH	24	I	—	Backup Lamp Control	1	1.5	L-GN/WH	24	III	—
2	1.5	BN/L-BU	2509	I	—	Left Rear Park Lamp	2	1.5	BN/L-BU	2509	III	—

2	1.5					Control	2	1.5				
3	1.5	GY/YE	7542	I	—	Left Rear Stop Lamp Control	3	1.5	GY/YE	7542	III	—
4	1.5	BK	750	I	—	Ground	4	1.5 1.5	BK BK	750 750	II III	— —
5 - 6	—	—	—	—	—	—	5 - 6	—	—	—	—	—

X420 Tail Lamp - Right Harness to Chassis Harness

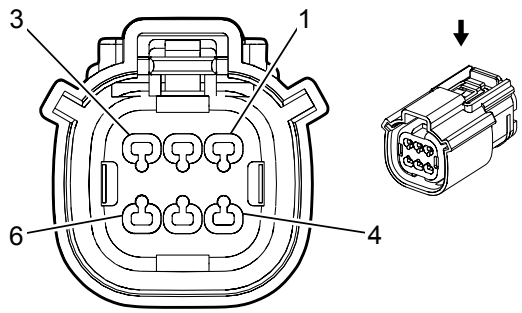

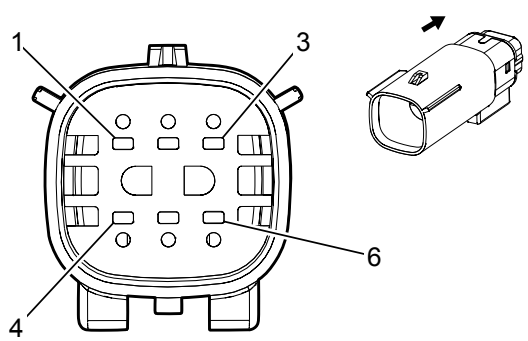

Connector Part Information

Harness Type: Tail Lamp - Right

OEM Connector: 19178149

Service Connector: Service by Harness - See Part Catalog

Description: 6-Way F 150 MX Series, Sealed (BK)

Connector Part Information

Harness Type: Chassis

OEM Connector: 33482-0601

Service Connector: 13395395

Description: 6-Way M 150 MX Series, Sealed (BK)

Terminal Part Information

Terminal Type ID	Terminated Lead	Diagnostic Test Probe	Terminal Removal Tool	Service Terminal	Tray	Core Crimp	Insulation Crimp
I	Not Required	Pending	No Tool Required	Not Required	Not Required	Not Required	Not Required
II	Not Required	J-35616-3 (GY)	Not Required	Not Required	Not Required	Not Required	Not Required
II	Not Required	J-35616-3 (GY)	Not Required	Not Required	Not Required	Not Required	Not Required

X420 Tail Lamp - Right Harness to Chassis Harness

Pin	Size	Color	Circuit	Terminal Type ID	Option	Function	Pin	Size	Color	Circuit	Terminal Type ID	Option
1	1.5	L-GN/WH	24	I	—	Backup Lamp Control	1	1.5	L-GN/WH	24	II	—
2	1.5	BN/GY	2609	I	—	Right Rear Park Lamp	2	1.5	BN/GY	2609	II	—

2	1.5					Control	2	1.5				
3	1.5	WH/YE	7541	I	—	Right Rear Stop Lamp Control	3	1.5	WH/YE	7541	II	—
4	1.5	BK	850	I	—	Ground	4	1.5	BK	850	II	—
5 - 6	—	—	—	—	—	—	5 - 6	—	—	—	—	—

X500 Body Harness to Driver Door Harness

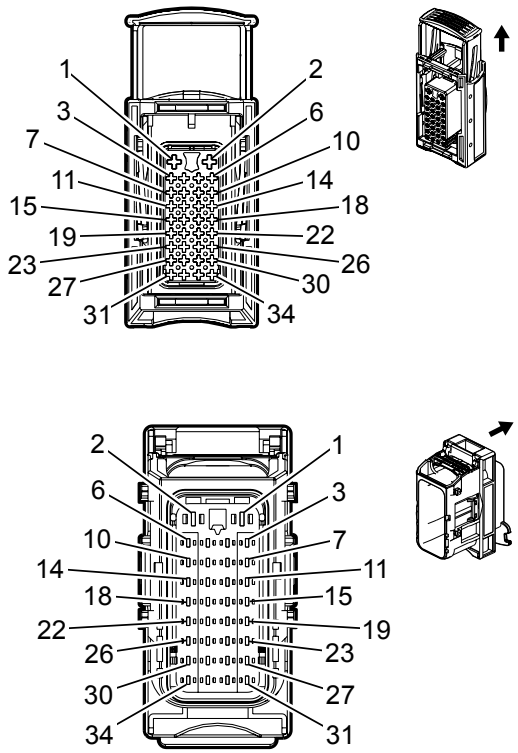

Connector Part Information

Harness Type: Body

OEM Connector: 30432411

Service Connector: 19300485

Description: 34-Way F 1.5, 2.8 Series, Sealed (BK)

Connector Part Information

Harness Type: Driver Door

OEM Connector: 3 053 06 11

Service Connector: Service by Harness - See Part Catalog

Description: 34-Way M 1.5, 2.8 Series, Sealed (BK)

Terminal Part Information

Terminal Type ID	Terminated Lead	Diagnostic Test Probe	Terminal Removal Tool	Service Terminal	Tray	Core Crimp	Insulation Crimp
I	13575357	J-35616-2A (GY)	J-38125-560	Not Available	Not Available	Not Available	Not Available
II	13575377	J-35616-35 (VT)	J-38125-557	Not Available	Not Available	Not Available	Not Available
III	13578884	J-35616-14 (GN)	J-38125-560	Not Available	Not Available	Not Available	Not Available
IV	Not Required	J-35616-19 (BK)	Not Required	Not Required	Not Required	Not Required	Not Required
IV	Not Required	J-35616-19 (BK)	Not Required	Not Required	Not Required	Not Required	Not Required
V	Not Required	J-35616-5 (PU)	Not Required	Not Required	Not Required	Not Required	Not Required

X500 Body Harness to Driver Door Harness

Pin	Size	Color	Circuit	Terminal Type ID	Option	Function	Pin	Size	Color	Circuit	Terminal Type ID	Option
		RD/L-BU	1240	II	—	Battery Positive Voltage			RD/L-BU	1240	V	—

1	2.5						1	2.5				
2	2.5	BK	3550	II	—	Ground	2	2.5	BK	3550	V	—
3	0.35	WH	3398	I	—	Passenger Mirror Motor Common Control	3	0.35	WH	3398	IV	—
4	0.5	BN/YE	2267	III	—	Mirror Heating Element Control	4	0.5	BN/YE	2267	IV	—
5	0.35	YE/VT	3397	I	—	Passenger Mirror Motor Up (+) Down (-) Control	5	0.35	YE/VT	3397	IV	—
6	0.35	L-GN/BK	3396	I	—	Passenger Mirror Motor Right (+) Left (-) Control	6	0.35	L-GN/BK	3396	IV	—
7 - 8	—	—	—	—	—	Not Occupied	7 - 8	—	—	—	—	—
9	1	BN/L-BU	118	III	—	Left Front Speaker Signal (-) (1)	9	1	BN/L-BU	118	IV	—
10	1	L-BU	201	III	—	Left Front Speaker Control (+) (1)	10	1	L-BU	201	IV	—
11	—	—	—	—	—	Not Occupied	11	—	—	—	—	—
12	0.35	WH	6816	I	—	Indicator Dimming Control	12	0.35	WH	6816	IV	—
13	—	—	—	—	—	Not Occupied	13	—	—	—	—	—
14	0.35	OG/L-GN	2132	I	—	Left Front Side Impact Sensing Module Signal	14	0.35	OG/L-GN	2132	IV	—
		BK/OG	6628	I	—	Left Front Side Impact			BK/OG	6628	IV	—

15	0.35					Sensing Module Low Reference	15	0.35				
16	0.35	RD/VT	1940	I	—	Battery Positive Voltage	16	0.35 0.5	RD/VT RD/VT	1940 1940	IV	— —
17	0.35	BN/WH	781	I	—	Driver Door Lock Switch Unlock Signal	17	0.35	BN/WH	781	IV	—
18	0.35	BN/YE	780	I	—	Driver Door Lock Switch Lock Signal	18	0.35	BN/YE	780	IV	—
19	0.75	BN/YE	294	III	—	Door Lock Actuator Unlock Control	19	0.75	BN/YE	294	IV	—
20	0.75	GY	5911	III	—	Door Lock Actuator Lock Control 2	20	0.75	GY	5911	IV	—
21 - 25	—	—	—	—	—	Not Occupied	21 - 25	—	—	—	—	—
26	0.35	YE	6817	I	—	LED Backlight Dimming Control	26	0.35	YE	6817	IV	—
27 - 31	—	—	—	—	—	Not Occupied	27 - 31	—	—	—	—	—
32	0.35	GY	5697	I	—	Child Lockout Indicator Control	32	0.35	GY	5697	IV	—
33	0.5	L-GN/YE	6134	III	—	Local Interconnect Network Serial Data Bus 3	33	0.5	L-GN/YE	6134	IV	—
34	0.35	YE/BN	3265	I	—	Child Security Lock Switch Signal	34	0.35	YE/BN	3265	IV	—

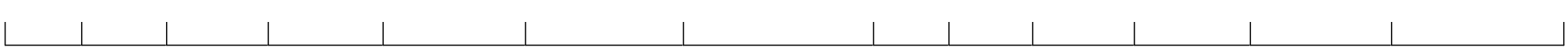

X510 Driver Outside Rearview Mirror Harness to Driver Door Harness

—

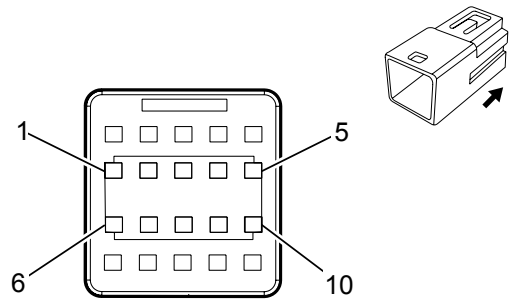

Connector Part Information

Harness Type: Driver Outside Rearview Mirror

OEM Connector: Not Available

Service Connector: Service by Harness - See Part Catalog

Description: 10-Way F

Connector Part Information

Harness Type: Driver Door

OEM Connector: AIT2WSB-10A-2AK

Service Connector: Service by Harness - See Part Catalog

Description: 10-Way M 0.64 Kaizen Series (BK)

Terminal Part Information

Terminal Type ID	Terminated Lead	Diagnostic Test Probe	Terminal Removal Tool	Service Terminal	Tray	Core Crimp	Insulation Crimp
I	Not Required	Pending	No Tool Required	Not Required	Not Required	Not Required	Not Required
II	Not Required	J-35616-65B (LT BU)	Not Required	Not Required	Not Required	Not Required	Not Required

X510 Driver Outside Rearview Mirror Harness to Driver Door Harness

Pin	Size	Color	Circuit	Terminal Type ID	Option	Function	Pin	Size	Color	Circuit	Terminal Type ID	Option
1	0.35	YE/BN	3391	I	—	Driver Mirror Motor Common Control	1	0.35	YE/BN	3391	II	—
2	0.35	VT/L-BU	3390	I	—	Driver Mirror Motor Up (+) Down (-) Control	2	0.35	VT/L-BU	3390	II	—
3	0.35	BN/BK	3389	I	—	Driver Mirror Motor Right (+) Left (-) Control	3	0.35	BN/BK	3389	II	—
4	0.5	BN/YE	2267	I	DL9	Mirror Heating Element Control	4	0.5	BN/YE	2267	II	DL9

5	0.5	BK	3550	I	—	Ground	5	0.5	BK	3550	II	—

X600 Body Harness to Passenger Door Harness

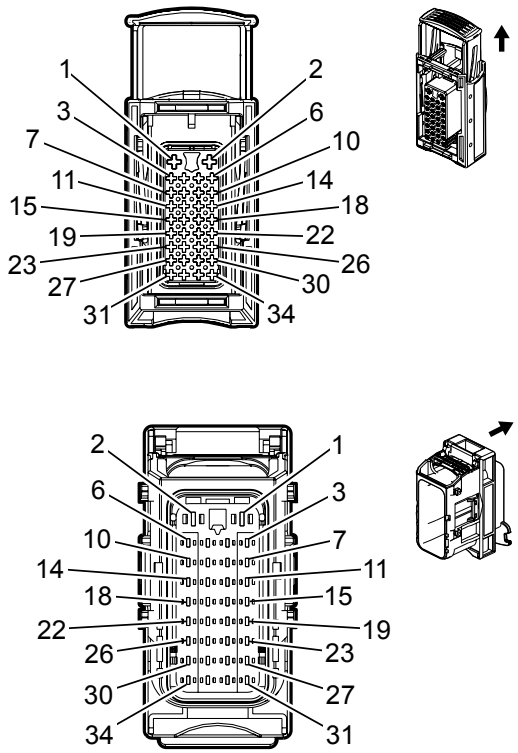

Connector Part Information

Harness Type: Body

OEM Connector: 30432411

Service Connector: 19300485

Description: 34-Way F 1.5, 2.8 Series, Sealed (BK)

Connector Part Information

Harness Type: Passenger Door

OEM Connector: 3 053 06 11

Service Connector: Service by Harness - See Part Catalog

Description: 34-Way M 1.5, 2.8 Series, Sealed (BK)

Terminal Part Information

Terminal Type ID	Terminated Lead	Diagnostic Test Probe	Terminal Removal Tool	Service Terminal	Tray	Core Crimp	Insulation Crimp
I	13575357	J-35616-2A (GY)	J-38125-560	Not Available	Not Available	Not Available	Not Available
II	13575377	J-35616-35 (VT)	J-38125-557	Not Available	Not Available	Not Available	Not Available
III	13578884	J-35616-14 (GN)	J-38125-560	Not Available	Not Available	Not Available	Not Available
IV	Not Required	J-35616-19 (BK)	Not Required	Not Required	Not Required	Not Required	Not Required
IV	Not Required	J-35616-19 (BK)	Not Required	Not Required	Not Required	Not Required	Not Required
V	Not Required	J-35616-5 (PU)	Not Required	Not Required	Not Required	Not Required	Not Required

X600 Body Harness to Passenger Door Harness

Pin	Size	Color	Circuit	Terminal Type ID	Option	Function	Pin	Size	Color	Circuit	Terminal Type ID	Option
		RD/WH	1340	II	—	Battery Positive Voltage			RD/WH	1340	V	—

1	2.5						1	2.5				
2	2.5	BK	3650	II	—	Ground	2	2.5	BK	3650	V	—
3	0.35	WH	3398	I	—	Passenger Mirror Motor Common Control	3	0.35	WH	3398	IV	—
4	0.5	BN/YE	2267	III	—	Mirror Heating Element Control	4	0.5	BN/YE	2267	IV	—
5	0.35	YE/VT	3397	I	—	Passenger Mirror Motor Up (+) Down (-) Control	5	0.35	YE/VT	3397	IV	—
6	0.35	L-GN/BK	3396	I	—	Passenger Mirror Motor Right (+) Left (-) Control	6	0.35	L-GN/BK	3396	IV	—
7 - 8	—	—	—	—	—	Not Occupied	7 - 8	—	—	—	—	—
9	1	YE/BK	117	III	—	Right Front Speaker Signal (-) (1)	9	1	YE/BK	117	IV	—
10	1	YE	200	III	—	Right Front Speaker Control (+) (1)	10	1	YE	200	IV	—
11 - 13	—	—	—	—	—	Not Occupied	11 - 13	—	—	—	—	—
14	0.35	BN/OG	2134	I	—	Right Front Side Impact Sensing Module Signal	14	0.35	BN/OG	2134	IV	—
15	0.35	BK/OG	6629	I	—	Right Front Side Impact Sensing Module Low Reference	15	0.35	BK/OG	6629	IV	—
16	—	—	—	—	—	Not Occupied	16	—	—	—	—	—
		BN/VT	245	I	—	Passenger Door Lock			BN/VT	245	IV	—

17	0.35					Switch Unlock Control	17	0.35				
18	0.35	YE/VT	244	I	—	Passenger Door Lock Switch Lock Control	18	0.35	YE/VT	244	IV	—
19	0.75	BN/YE	294	III	—	Door Lock Actuator Unlock Control	19	0.75	BN/YE	294	IV	—
20	0.75	GY	295	III	—	Door Lock Actuator Lock Control	20	0.75	GY	295	IV	—
21 - 25	—	—	—	—	—	Not Occupied	21 - 25	—	—	—	—	—
26	0.35	YE	6817	I	—	LED Backlight Dimming Control	26	0.35	YE	6817	IV	—
27 - 32	—	—	—	—	—	Not Occupied	27 - 32	—	—	—	—	—
33	0.5	L-GN/YE	6134	III	—	Local Interconnect Network Serial Data Bus 3	33	0.5	L-GN/YE	6134	IV	—
34	—	—	—	—	—	—	34	—	—	—	—	—

X610 Passenger Outside Rearview Mirror Harness to Passenger Door Harness

—

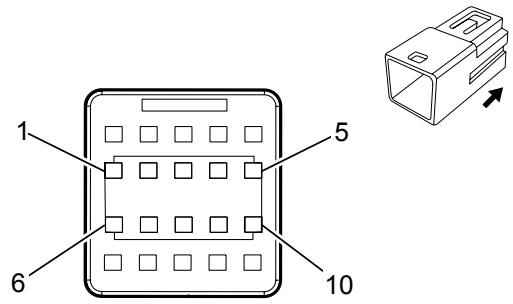

Connector Part Information

Harness Type: Passenger Outside Rearview Mirror

OEM Connector: Not Available

Service Connector: Service by Harness - See Part Catalog

Description: 10-Way F

Connector Part Information

Harness Type: Passenger Door

OEM Connector: AIT2WSB-10A-2AK

Service Connector: Service by Harness - See Part Catalog

Description: 10-Way M 0.64 Kaizen Series (BK)

Terminal Part Information

Terminal Type ID	Terminated Lead	Diagnostic Test Probe	Terminal Removal Tool	Service Terminal	Tray	Core Crimp	Insulation Crimp
I	Not Required	Pending	No Tool Required	Not Required	Not Required	Not Required	Not Required
II	Not Required	J-35616-65B (LT BU)	Not Required	Not Required	Not Required	Not Required	Not Required

X610 Passenger Outside Rearview Mirror Harness to Passenger Door Harness

Pin	Size	Color	Circuit	Terminal Type ID	Option	Function	Pin	Size	Color	Circuit	Terminal Type ID	Option
1	0.35	WH	3398	I	—	Passenger Mirror Motor Common Control	1	0.35	WH	3398	II	—
2	0.35	YE/VT	3397	I	—	Passenger Mirror Motor Up (+) Down (-) Control	2	0.35	YE/VT	3397	II	—
3	0.35	L-GN/BK	3396	I	—	Passenger Mirror Motor Right (+) Left (-) Control	3	0.35	L-GN/BK	3396	II	—
4	0.5	BN/YE	2267	I	—	Mirror Heating Element Control	4	0.5	BN/YE	2267	II	—

5	0.5	BK	3650	I	—	Ground	5	0.5	BK	3650	II	—

X700 Left Rear Door Harness to Body Harness (Crew Cab)

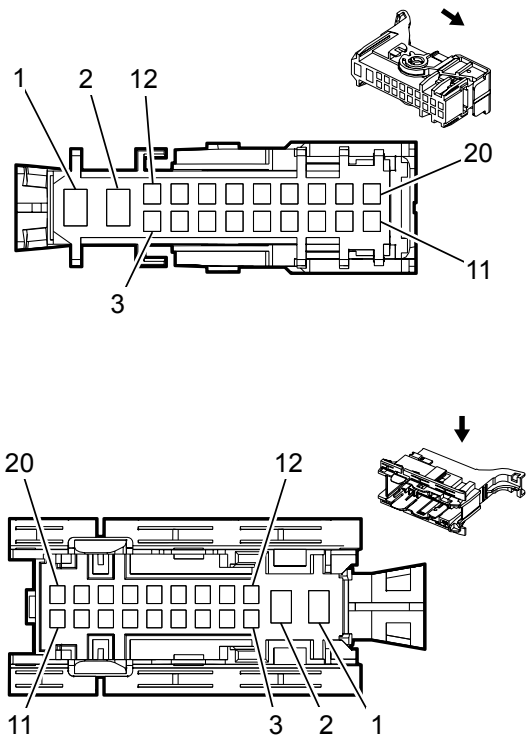

Connector Part Information

Harness Type: Left Rear Door

OEM Connector: 13678789

Service Connector: Service by Harness - See Part Catalog

Description: 20-Way F 4.8 Timer/1.5 DSQ Series (GY)

Connector Part Information

Harness Type: Body

OEM Connector: 13680032

Service Connector: 13577518

Description: 20-Way M 1.5, 2.8 DSQ Series (GY)

Terminal Part Information

Terminal Type ID	Terminated Lead	Diagnostic Test Probe	Terminal Removal Tool	Service Terminal	Tray	Core Crimp	Insulation Crimp
I	Not Required	J-35616-14 (GN)	Not Required	Not Required	Not Required	Not Required	Not Required
I	Not Required	J-35616-14 (GN)	Not Required	Not Required	Not Required	Not Required	Not Required
II	Not Required	J-35616-42 (RD)	Not Required	Not Required	Not Required	Not Required	Not Required
III	13575556	J-35616-34 (YE)	J-38125-560	Not Available	Not Available	Not Available	Not Available
IV	13575706	J-35616-42 (RD)	J-38125-36	Not Available	Not Available	Not Available	Not Available
V	13575775	J-35616-34 (YE)	J-38125-560	Not Available	Not Available	Not Available	Not Available
VI	13575776	J-35616-34 (YE)	J-38125-560	964265-2	24	E	2
VII	13575776	J-35616-34 (YE)	J-38125-560	964265-2	24	E	C

X700 Left Rear Door Harness to Body Harness (Crew Cab)

Pin	Size	Color	Circuit	Terminal Type	Option	Function	Pin	Size	Color	Circuit	Terminal Type	Option

				ID							ID	
1	2.5	RD/L-BU	1240	II	—	Battery Positive Voltage	1	2.5	RD/L-BU	1240	IV	—
2	2.5	BK	3350	II	—	Ground	2	2.5	BK	3350	IV	—
3 - 6	—	—	—	—	—	Not Occupied	3 - 6	—	—	—	—	—
7	1	L-GN	199	I	—	Left Rear Speaker Control (+)	7	1	L-GN	199	III	—
8	—	—	—	—	—	Not Occupied	8	—	—	—	—	—
9	0.75	WH/L-BU	3266	I	—	Child Security Lock Motor Lock Control	9	0.75	WH/L-BU	3266	VII	—
10	0.75	BN/YE	294	I	—	Door Lock Actuator Unlock Control	10	0.75	BN/YE	294	VII	—
11	0.75	GY	295	I	—	Door Lock Actuator Lock Control	11	0.75	GY	295	VII	—
12 - 15	—	—	—	—	—	Not Occupied	12 - 15	—	—	—	—	—
16	1	L-GN/BK	116	I	—	Left Rear Speaker Signal (-)	16	1	L-GN/BK	116	III	—
17 - 18	—	—	—	—	—	Not Occupied	17 - 18	—	—	—	—	—
19	0.35	BN/WH	3269	I	—	Child Security Lock Motor Status Signal Left Rear	19	0.35	BN/WH	3269	V	—
20	0.5	L-GN/GY	6135	I	—	Local Interconnect Network Serial Data Bus 4	20	0.5	L-GN/GY	6135	VI	—

X700 Left Rear Door Harness to Body Harness (Extended Cab)

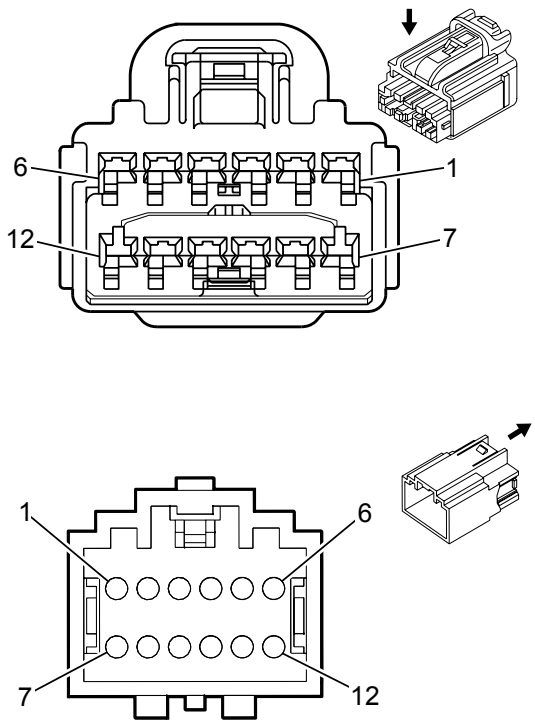

Connector Part Information

Harness Type: Left Rear Door

OEM Connector: 7283-3442-40

Service Connector: Service by Harness - See Part Catalog

Description: 12-Way F YESC Kaizen Series (L-GY)

Connector Part Information

Harness Type: Body

OEM Connector: 7282-3442-40

Service Connector: 88988266

Description: 12-Way M 1.5 Series (L-GY)

Terminal Part Information

Terminal Type ID	Terminated Lead	Diagnostic Test Probe	Terminal Removal Tool	Service Terminal	Tray	Core Crimp	Insulation Crimp
I	Not Required	J-35616-2A (GY)	Not Required	Not Required	Not Required	Not Required	Not Required
I	Not Required	J-35616-2A (GY)	Not Required	Not Required	Not Required	Not Required	Not Required
I	Not Required	J-35616-2A (GY)	Not Required	Not Required	Not Required	Not Required	Not Required
II	N/A	J-35616-3 (GY)	J-38125-553	Not Available	Not Available	Not Available	Not Available
II	N/A	J-35616-3 (GY)	J-38125-553	Not Available	Not Available	Not Available	Not Available
III	Not Available	Pending	Pending	Not Available	Not Available	Not Available	Not Available

X700 Left Rear Door Harness to Body Harness (Extended Cab)

Pin	Size	Color	Circuit	Terminal Type ID	Option	Function	Pin	Size	Color	Circuit	Terminal Type ID	Option
1	—	—	—	—	—	Not Occupied	1	—	—	—	—	—

2	0.35	OG/YE	3481	I	—	Driver Seat Belt Anchor Pretensioner High Control	2	0.35	OG/YE	3481	III	—
3	0.35	OG/WH	3477	I	—	Driver Seat Belt Retractor Pretensioner High Control	3	0.35 0.5	OG/WH OG/WH	3477 3477	III	— —
4	1	L-GN/BK	116	I	—	Left Rear Speaker Signal (-)	4	1	L-GN/BK	116	II	—
5	0.35	GY	747	I	—	Left Rear Door Ajar Switch Signal	5	0.35	GY	747	II	—
6 - 7	—	—	—	—	—	Not Occupied	6 - 7	—	—	—	—	—
8	0.35	YE/OG	3482	I	—	Driver Seat Belt Anchor Pretensioner Low Control	8	0.35	YE/OG	3482	III	—
9	0.35	GY/OG	3478	I	—	Driver Seat Belt Retractor Pretensioner Low Control	9	0.35 0.5	GY/OG GY/OG	3478 3478	III	— —
10	1	L-GN	199	I	—	Left Rear Speaker Control (+)	10	1	L-GN	199	II	—
11	0.35	BK	3350	I	—	Ground	11	0.5	BK	3350	II	—
12	—	—	—	—	—	—	12	—	—	—	—	—

X800 Right Rear Door Harness to Body Harness (Crew Cab)

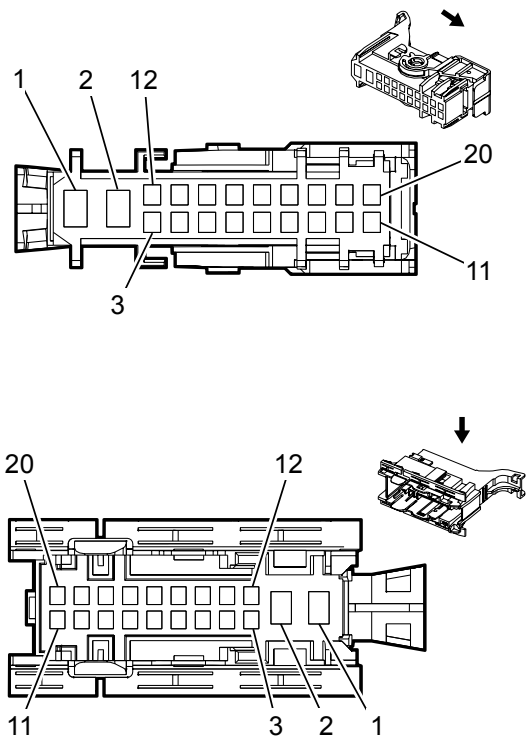

Connector Part Information

Harness Type: Right Rear Door

OEM Connector: 13678789

Service Connector: Service by Harness - See Part Catalog

Description: 20-Way F 4.8 Timer/1.5 DSQ Series (GY)

Connector Part Information

Harness Type: Body

OEM Connector: 13680032

Service Connector: 13577518

Description: 20-Way M 1.5, 2.8 DSQ Series (GY)

Terminal Part Information

Terminal Type ID	Terminated Lead	Diagnostic Test Probe	Terminal Removal Tool	Service Terminal	Tray	Core Crimp	Insulation Crimp
I	Not Required	J-35616-14 (GN)	Not Required	Not Required	Not Required	Not Required	Not Required
I	Not Required	J-35616-14 (GN)	Not Required	Not Required	Not Required	Not Required	Not Required
II	Not Required	J-35616-42 (RD)	Not Required	Not Required	Not Required	Not Required	Not Required
III	13575556	J-35616-34 (YE)	J-38125-560	Not Available	Not Available	Not Available	Not Available
IV	13575706	J-35616-42 (RD)	J-38125-36	Not Available	Not Available	Not Available	Not Available
V	13575775	J-35616-34 (YE)	J-38125-560	Not Available	Not Available	Not Available	Not Available
VI	13575776	J-35616-34 (YE)	J-38125-560	964265-2	24	E	2
VII	13575776	J-35616-34 (YE)	J-38125-560	964265-2	24	E	C

X800 Right Rear Door Harness to Body Harness (Crew Cab)

Pin	Size	Color	Circuit	Terminal Type	Option	Function	Pin	Size	Color	Circuit	Terminal Type	Option

				ID							ID	
1	2.5	RD/WH	1340	II	—	Battery Positive Voltage	1	2.5	RD/WH	1340	IV	—
2	2.5	BK	3450	II	—	Ground	2	2.5	BK	3450	IV	—
3 - 6	—	—	—	—	—	Not Occupied	3 - 6	—	—	—	—	—
7	1	WH	46	I	—	Right Rear Speaker Control (+)	7	1	WH	46	III	—
8	—	—	—	—	—	Not Occupied	8	—	—	—	—	—
9	0.75	WH/L-BU	3266	I	—	Child Security Lock Motor Lock Control	9	0.75	WH/L-BU	3266	VII	—
10	0.75	BN/YE	294	I	—	Door Lock Actuator Unlock Control	10	0.75	BN/YE	294	VII	—
11	0.75	GY	295	I	—	Door Lock Actuator Lock Control	11	0.75	GY	295	VII	—
12 - 15	—	—	—	—	—	Not Occupied	12 - 15	—	—	—	—	—
16	1	L-BU/BK	115	I	—	Right Rear Speaker Signal (-)	16	1	L-BU/BK	115	III	—
17 - 18	—	—	—	—	—	Not Occupied	17 - 18	—	—	—	—	—
19	0.35	GY/BK	3268	I	—	Child Security Lock Motor Status Signal Right Rear	19	0.35	GY/BK	3268	V	—
20	0.5	L-GN/GY	6135	I	—	Local Interconnect Network Serial Data Bus 4	20	0.5	L-GN/GY	6135	VI	—

X800 Right Rear Door Harness to Body Harness (Extended Cab)

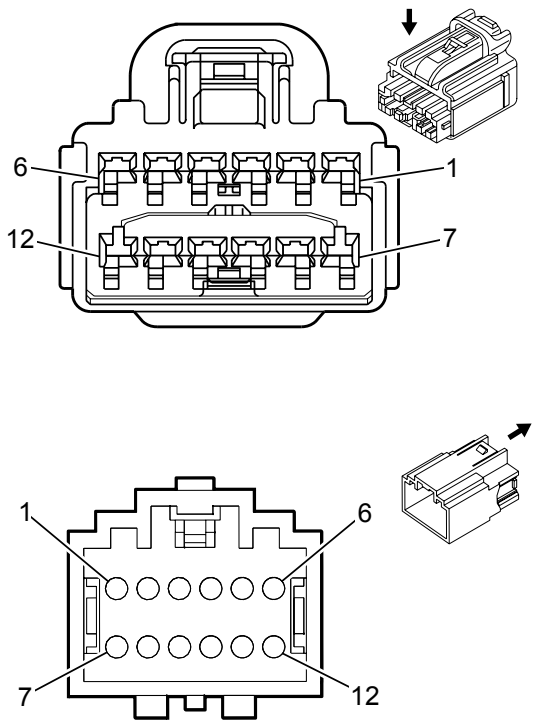

Connector Part Information

Harness Type: Right Rear Door

OEM Connector: 7283-3442-40

Service Connector: Service by Harness - See Part Catalog

Description: 12-Way F YESC Kaizen Series (L-GY)

Connector Part Information

Harness Type: Body

OEM Connector: 7282-3442-40

Service Connector: 88988266

Description: 12-Way M 1.5 Series (L-GY)

Terminal Part Information

Terminal Type ID	Terminated Lead	Diagnostic Test Probe	Terminal Removal Tool	Service Terminal	Tray	Core Crimp	Insulation Crimp
I	Not Required	J-35616-2A (GY)	Not Required	Not Required	Not Required	Not Required	Not Required
I	Not Required	J-35616-2A (GY)	Not Required	Not Required	Not Required	Not Required	Not Required
I	Not Required	J-35616-2A (GY)	Not Required	Not Required	Not Required	Not Required	Not Required
II	13575818	J-35616-3 (GY)	J-38125-553	Not Available	Not Available	Not Available	Not Available
II	13575818	J-35616-3 (GY)	J-38125-553	Not Available	Not Available	Not Available	Not Available
III	19329753	J-35616-14 (GN)	J-38125-560	Not Available	Not Available	Not Available	Not Available

X800 Right Rear Door Harness to Body Harness (Extended Cab)

Pin	Size	Color	Circuit	Terminal Type ID	Option	Function	Pin	Size	Color	Circuit	Terminal Type ID	Option
1	—	—	—	—	—	Not Occupied	1	—	—	—	—	—

2	0.5	OG/BN	3479	I	—	Passenger Seat Belt Anchor Pretensioner High Control	2	0.35	OG/BN	3479	III	—
3	0.5	OG/L-GN	3475	I	—	Passenger Seat Belt Retractor Pretensioner High Control	3	0.35 0.5	OG/L-GN OG/L-GN	3475 3475	III	— —
4	1	L-BU/BK	115	I	—	Right Rear Speaker Signal (-)	4	1	L-BU/BK	115	II	—
5	0.35	GY	748	I	—	Right Rear Door Ajar Switch Signal	5	0.35	GY	748	II	—
6 - 7	—	—	—	—	—	Not Occupied	6 - 7	—	—	—	—	—
8	0.5	GY/OG	3480	I	—	Passenger Seat Belt Anchor Pretensioner Low Control	8	0.35	GY/OG	3480	III	—
9	0.5	WH/OG	3476	I	—	Passenger Seat Belt Retractor Pretensioner Low Control	9	0.35 0.5	WH/OG WH/OG	3476 3476	III	— —
10	1	WH	46	I	—	Right Rear Speaker Control (+)	10	1	WH	46	II	—
11	0.35	BK	3450	I	—	Ground	11	0.5	BK	3450	II	—
12	—	—	—	—	—	—	12	—	—	—	—	—

Description and Operation

Electronic Park Lock Description and Operation

If the vehicle is equipped with automatic transmission and a floor mounted console gear shift, it has an electronic park lock system (EPL). The EPL system purpose is to prevent the ignition key from being turned to the OFF position when the transmission is in any position other than PARK and the vehicle may still be moving. The EPL system consists of an ignition lock cylinder solenoid, and a park position switch that is located in the A/T shift lock control switch. The ignition lock cylinder solenoid contains a pin that is spring loaded to mechanically prevent the ignition key cylinder from being turned to the lock position when the vehicle transmission is not in the PARK position. If vehicle power is lost, and/or the transmission is not in the Park position the operator will not be able to turn the ignition key to the lock position and will not be able to remove the ignition key from the column.

Power Mode Description and Operation

Power Moding D&O Block Diagram

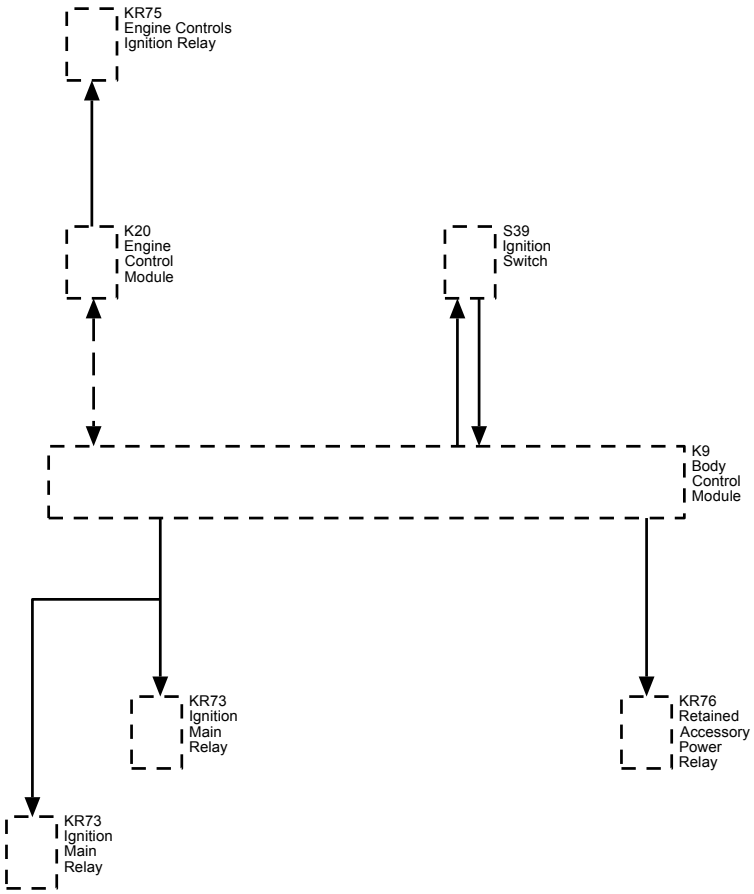

Serial Data Power Mode Master

Power to many of this vehicles circuits is controlled by the module that is designated the power mode master. This vehicles power mode master is the body control module (BCM). The BCM has multiple B+ circuits that feed into it. Each of those circuits are partitioned within the controller to drive certain outputs of the vehicle's body functions. An open or short in any one of the B+ circuits may induce multiple codes/or a section of non-functionality within the BCM with the rest of the BCM functioning normally. In this case it is useful to refer to the power distribution schematics to determine if the non-functional partition of the controller shares a common B+ circuit. The ignition switch is a low current switch with multiple discrete ignition switch signals to the power mode master for determination of the power mode that will be sent over the serial data circuits to the other modules that need this information. The power mode master will also activate relays and other direct outputs of the power mode master as needed. The power mode master determines which power mode (Off, Accessory, Run, Crank Request) is required, and reports this information to other modules via serial data. Modules which have switched voltage inputs may operate in a default mode if the power mode serial data message does not match what the individual module can see from its own connections.

The power mode master receives ignition switch or ignition mode switch signals to identify the operators desired power mode. The Power Mode Parameter tables below illustrate the correct state of these input parameters (circuits) in correspondence to the ignition switch position or ignition mode switch with the transmitter to vehicle range:

Power Mode Parameters

Ignition Switch Position	Power Mode Transmitted	Ign. Off/Run/Crank (Off/Run Crank Voltage Circuit)	Ignition Accessory/Run (Accessory Voltage Circuit)	Ignition Run/Crank (Ignition 1 Voltage Circuit)
Off Key Out	Off	Key Out / ACC	Inactive	Inactive
Off Key IN	Off	Key In / Off	Inactive	Inactive
Accessory	Accessory	Key Out / ACC	Active	Inactive

Run	Run	Run	Active	Active
Start	Crank Request	Crank	Inactive	Active

Relay Controlled Power Mode

The BCM uses the discrete ignition switch inputs Off/Run/Crank Voltage, Accessory Voltage, and Ignition 1 Voltage, to distinguish the correct power mode. The BCM, after determining the desired power mode, will activate the appropriate relays for that power mode.

The accessory relay remains on for a timed period after the Ignition key is removed. Refer to Retained Accessory Power Description and Operation for more information on the retained accessory power function.

Battery Saver Mode (Transport Mode)

Battery saver mode (transport mode) reduces the parasitic load of some modules during overseas shipment or during vehicle storage conditions. This improves the drain time on the battery (up to 70 days without the battery going dead). When a vehicle is in transport/storage, some features may have reduced functionality while in the battery saver mode, such as disabling keyless entry, afterblow, and content theft features. Battery saver mode is initiated by turning on the hazard flashers, applying the brake pedal, and then turning the ignition key to the start position or pushing the ignition mode switch with the foot on the brake for greater than 15 seconds. The mode is disengaged by repeating the previous process. The driver information center (if equipped) will display Transport Mode is On when battery saver mode is enabled and Transport Mode is Off when battery saver mode is disabled. For vehicles not equipped with a driver information center, the battery indicator light will constantly flash on the Instrument Cluster when battery saver mode is enabled. This feature can be used as many times as necessary if the vehicle is to be stored for an extended period of time.

BCM Awake/Sleep States

The BCM is able to control or perform all of the BCM functions in the awake state. The BCM enters the sleep state when active control or normal monitoring of system functions has stopped and a time limit has passed. The BCM must detect certain wake-up inputs before entering the awake state. The BCM monitors for these inputs during the sleep state.

The BCM will enter the awake state if any of the following wake-up inputs are detected:

- Activity on the serial data line
- Detection of a battery reconnect
- Any door open signal
- Headlamps ON
- Key-in-ignition
- Ignition ON
- Park lamps ON
- Keyless entry or remote start message

The BCM will enter a sleep state when all of the following conditions exist:

- The ignition switch is OFF, key out.
- Ignition OFF, transmitter is out of range
- No activity exists on the serial data line.
- No outputs are commanded.
- No delay timers are actively counting.
- No wake-up inputs are present.

If all these conditions are met, the BCM will enter a low power or sleep condition.

RAP Description and Operation Block Diagram

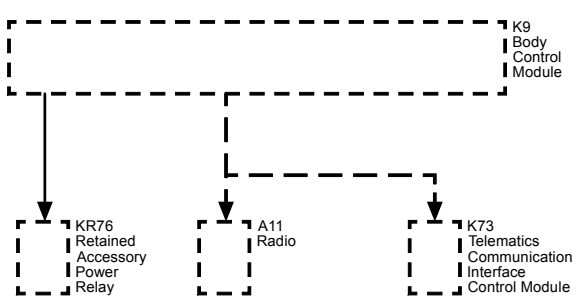

Retained Accessory Power

The body control module (BCM) monitors the ignition switch position, battery condition, and each door ajar/open switch status to determine whether the retained accessory power should be initiated or terminated. Retained accessory power is controlled by two different methods; relay control and serial data. Some modules receive a retained accessory power message from the BCM over the serial data circuits. Serial data controlled retained accessory power is deactivated as required by their modules retained accessory power mode operation. Other subsystems are activated directly by the BCM through a relay. Components and systems that are active in retained accessory power are also activated anytime the ignition is any position other than OFF regardless of the door switch signals.

Relay Controlled Retained Accessory Power

The BCM keeps the relay energized during all power modes, except Off-Awake and Crank. The relay is also energized for approximately 10 minutes after shutting the ignition OFF and removing the key, providing no door is opened.

Relay controlled retained accessory power will end when one of the following conditions is met:

- The BCM receives an input from any door ajar or open switch indicating the opening of any door after the ignition key is out of the ignition.

  Note: If the BCM is receiving any door ajar or open signal from those switches when the ignition key is turned OFF, retained accessory power will not initiate.

- The BCM internal timer for the retained accessory power expires after approximately 10 minutes.
- The BCM detects a decrease in battery capacity below a prescribed limit.

Systems powered by the retained accessory power relay during the retained accessory power mode are as follows:

Note: The vehicle may not be equipped with all components as listed below.

- Accessory Power Receptacle
- Cigarette Lighter Receptacle

- Window Switches
- Sunroof Control Module
- Sunroof Switch
- Mobile Device Wireless Charger Module
- Mobile Telephone Control Module
- Traffic Data Receiver
- Transmission Shift Lever Position Indicator (w/floor mounted console gear shift)
- Seat Heating Control Module

Serial Data Controlled Retained Accessory Power

Retained accessory power systems controlled by serial data are as follows:

Radio

Radio retained accessory power activation / termination is the same as relay operation with one exception; the only door switch that will turn off the radio during retained accessory power is the driver door open switch.

Vehicle Communication Interface Module (VCIM) (Onstar®) (If Equipped)

VCIM RAP activation/termination is the same as radio operation with 1 exception; if there is an active call when the ignition key is turned off the VCIM will remain in RAP mode, and keep the radio in RAP mode until the call is terminated.

Safety and Security

Immobilizer

Schematic and Routing Diagrams

Immobilizer Schematics

Immobilizer

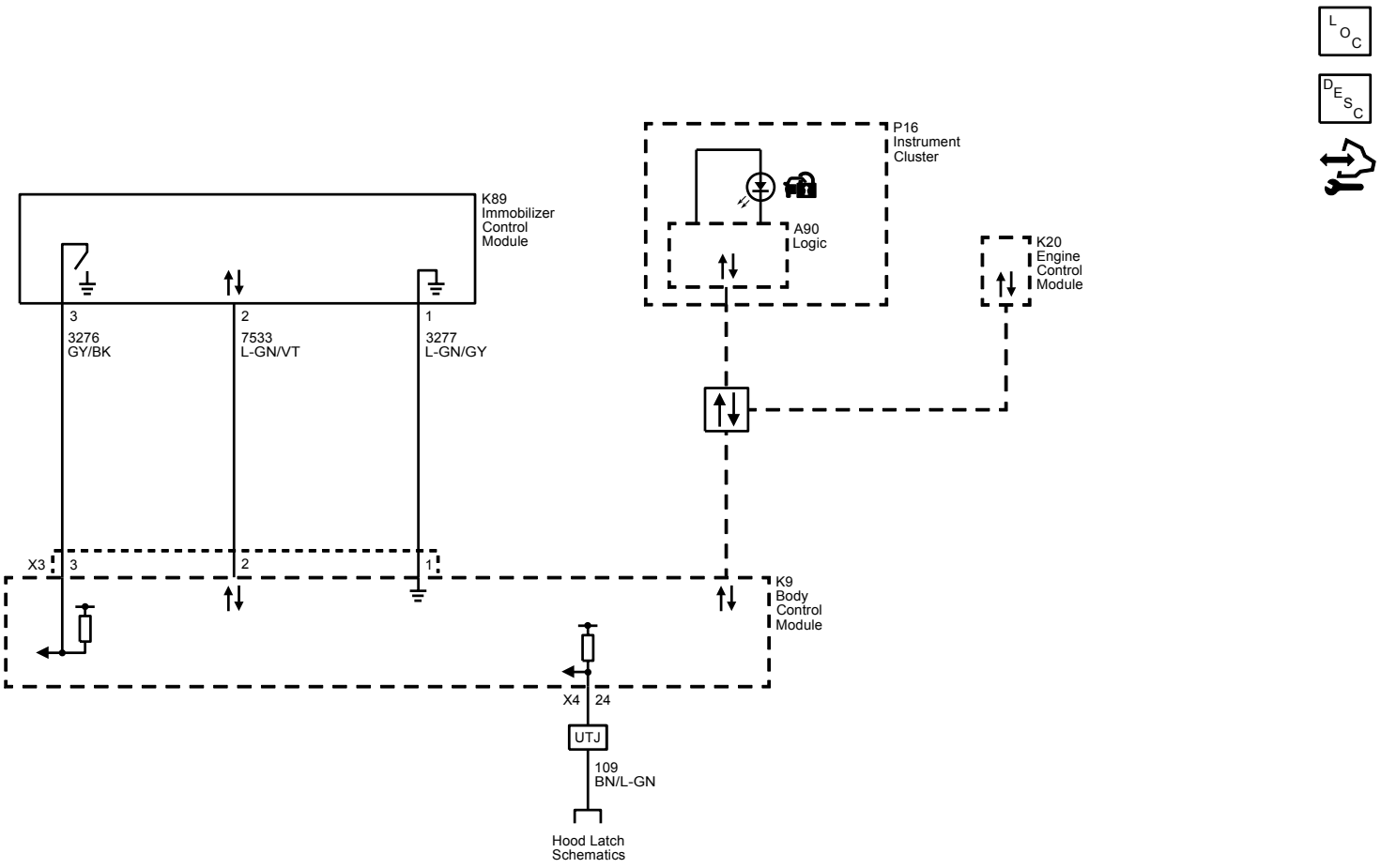

Description and Operation

Immobilizer Description and Operation

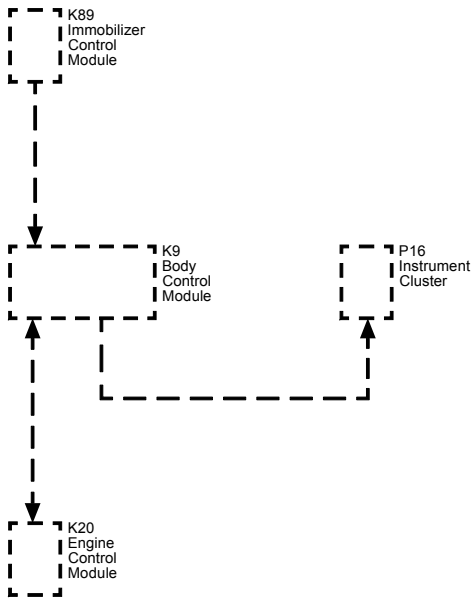

The immobilizer system functions are provided by the body control module (BCM) and the engine control module (ECM), as well as any control modules which store and report the environment identifier.

When an ignition key is inserted into the ignition lock cylinder and the ignition is switched ON, the transponder in the key is energized by the immobilizer coil surrounding the ignition lock cylinder. This immobilizer coil is part of the immobilizer control module. The transponder transmits a signal that contains its unique value, which is received by the BCM through the immobilizer coil. The BCM then compares this value to a value stored in memory. The BCM also monitors various control modules to determine if the stored environment identifiers match.

If both the environment identifier and the value received from the transponder match, the BCM will send the prerelease password via serial data to the ECM. If the encrypted code's unique value is incorrect or the environment identifier does not match, the BCM will send the start disable message to the ECM.

When the ECM receives the BCM prerelease password, the ECM will challenge the password. The ECM sends this challenge to the BCM via serial data. Both the ECM and BCM perform a calculation on this challenge. If the BCM calculated response to the challenge equals the calculation performed by the ECM, the ECM will allow vehicle starting.

The components of the theft system are as follows:

- BCM
- ECM
- Immobilizer control module
- Ignition key
- Security indicator
- Various control modules which store and report the environment identifier

Body Control Module (BCM)

The immobilizer system is an integral part of the BCM and is controlled internally within the BCM. The BCM can learn up to 8 keys (transponder values).

The BCM uses the following inputs:

- Environment identifier exchange with various modules
- Encrypted code from the vehicle key, received by the immobilizer control module

The BCM uses the following outputs:

- Prerelease password communication with ECM
- Challenge/response with ECM

When an ignition key is inserted into the ignition lock cylinder and the ignition is switched ON, the encrypted code in the key is energized by the immobilizer control module surrounding the ignition lock cylinder. The energized transponder transmits a signal that contains its unique value, which is received by the BCM. The BCM then compares this value to the learned key code stored in memory. The BCM then performs one of the following functions:

- If the encrypted code value matches the values stored in the BCM memory, the BCM will send the prerelease password to the ECM via serial data.
- If the encrypted code unique value does not match the value stored in the BCM, the BCM will send the start disable message to the ECM via serial data.
- If the BCM is unable to measure the ignition key encrypted code value, the BCM will not send any messages to the ECM.

Engine Control Module (ECM)

When the ECM receives the BCM prerelease password, the ECM will challenge the password. The ECM sends this challenge to the BCM via the serial data circuit. Both the ECM and BCM perform a calculation on this challenge. If the calculated response from the BCM equals the calculation performed by the ECM, the ECM will allow vehicle starting.

The ECM will disable vehicle starting if any of the following immobilization conditions occur:

- The prerelease password is invalid.
- The start disable password is sent by the BCM.
- No passwords are received. There is no communication with the BCM.
- The BCM calculated response to the challenge does not equal the calculation performed by the ECM.

Immobilizer Control Module

The immobilizer control module contains an immobilizer coil which surrounds the ignition cylinder. The coil passively powers the transponder located in the ignition key when the key is in the ignition. When powered, the key transmits its unique value to the immobilizer control module, which is then relayed to the BCM via a discrete serial data circuit. The immobilizer control module also receives B+ and ground from the BCM.

The immobilizer control module is used to:

1. Learn keys
2. To start the vehicle

Ignition Key

Each ignition key contains a transponder with a unique encrypted value. The transponder's encrypted value is fixed and unable to be changed. The immobilizer system uses the ignition key transponder value to determine if a valid ignition key is being used to start the vehicle.

Environment Identifier

Various modules throughout the vehicle learn a specific environment identifier during the module programming process. The environment identifier is learned by each individual module and matches the environment identifier stored in the BCM. Prior to starting after a battery disconnect, each of the modules which store a environment identifier will compare their identifier to that of the identifier stored in the BCM. If all the identifiers match, the engine starting process will continue. If the environment identifiers do not match, engine starting will be disabled.

Security Indicator

The BCM will command the instrument cluster to illuminate the security indicator when the ignition is in the ON position to indicate a fault has occurred within the immobilizer system and when the engine starting is disabled.

Object Detection

Schematic and Routing Diagrams

Object Detection Schematics

Rear Camera (IO3)

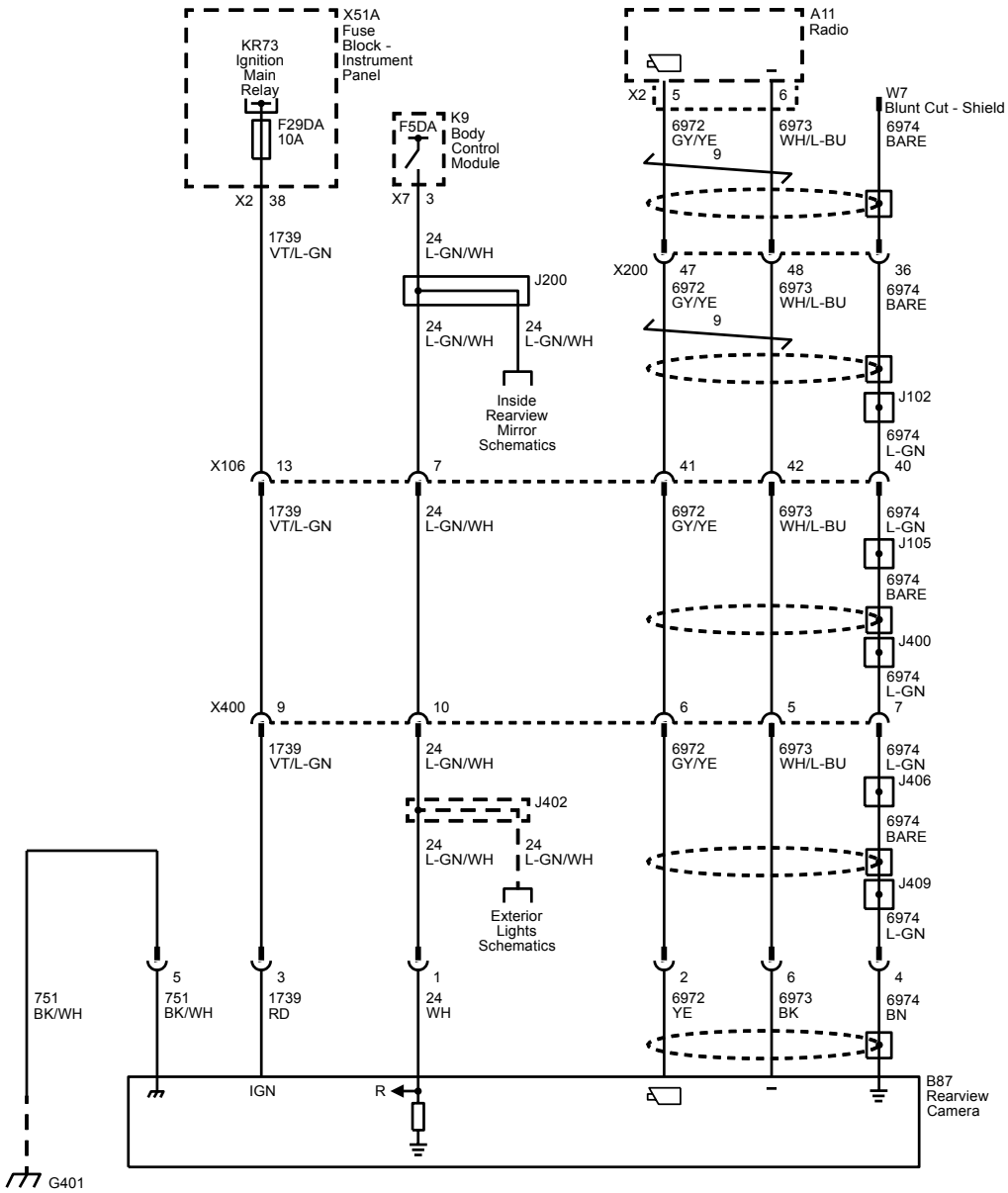

Rear Camera (IO4/IO5/IO6)

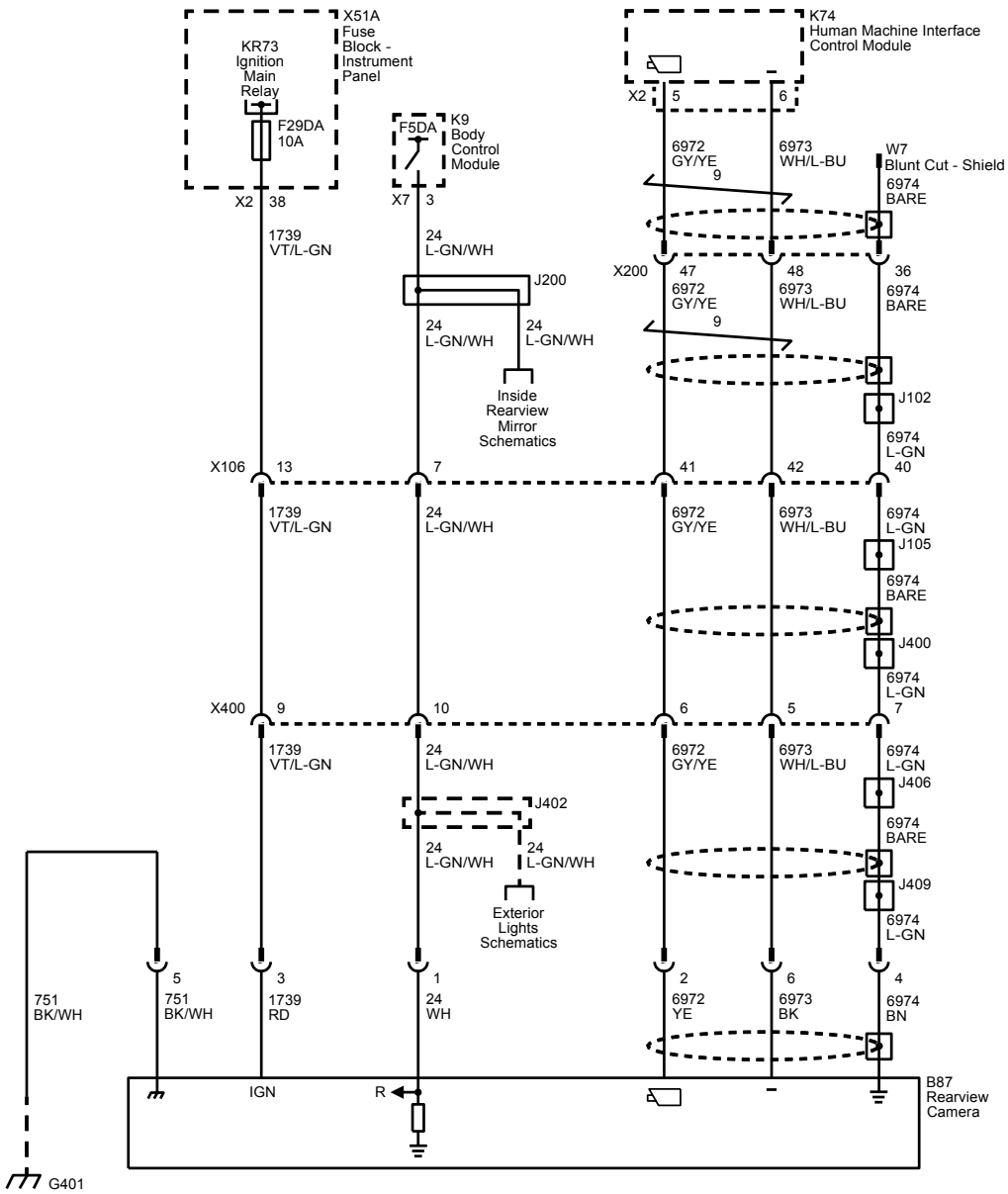

Lane Departure Warning and Forward Collision Alert (UEU/UFL)

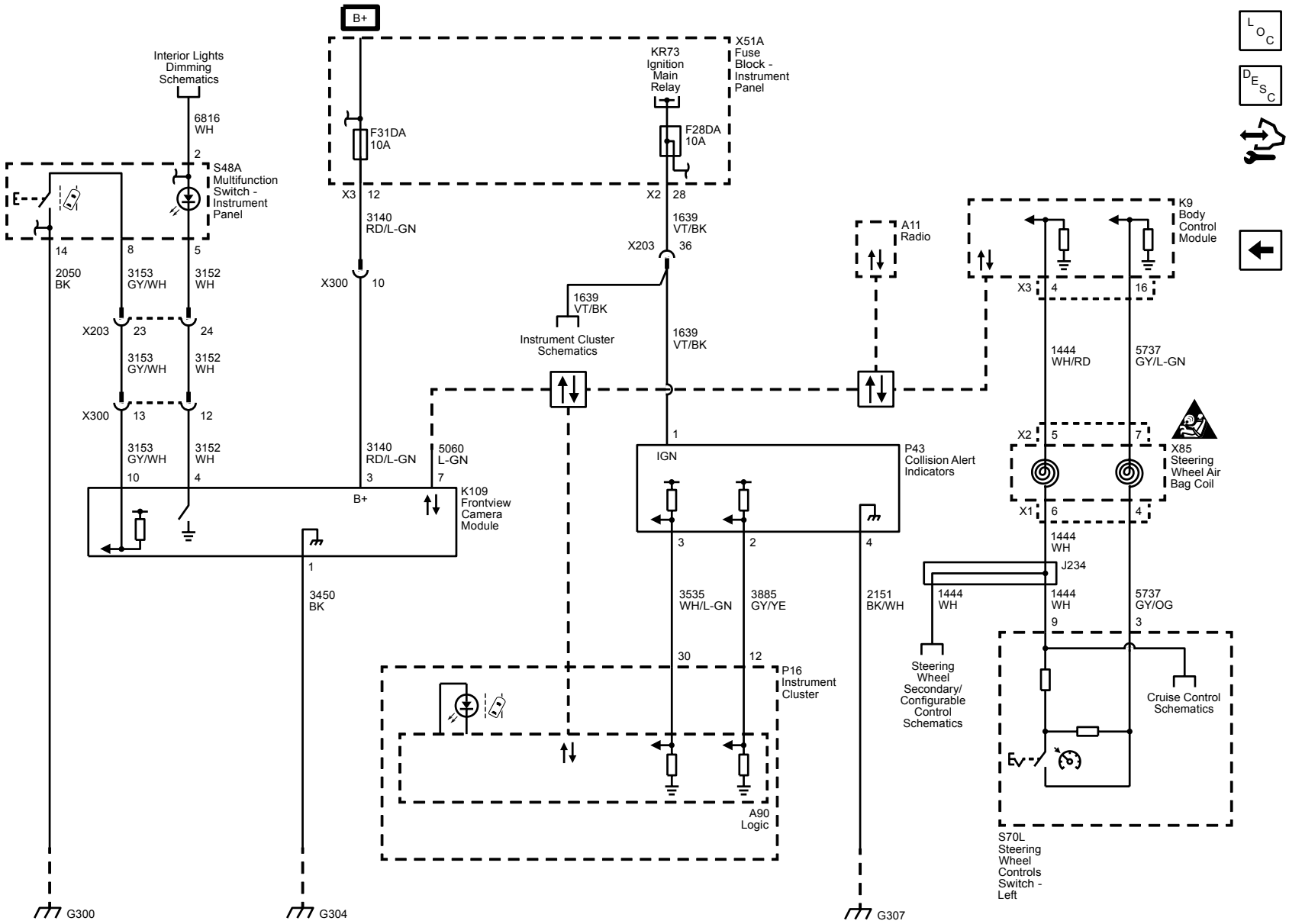

Description and Operation

Lane Departure Warning Description and Operation

Lane Departure Warning Block Diagram

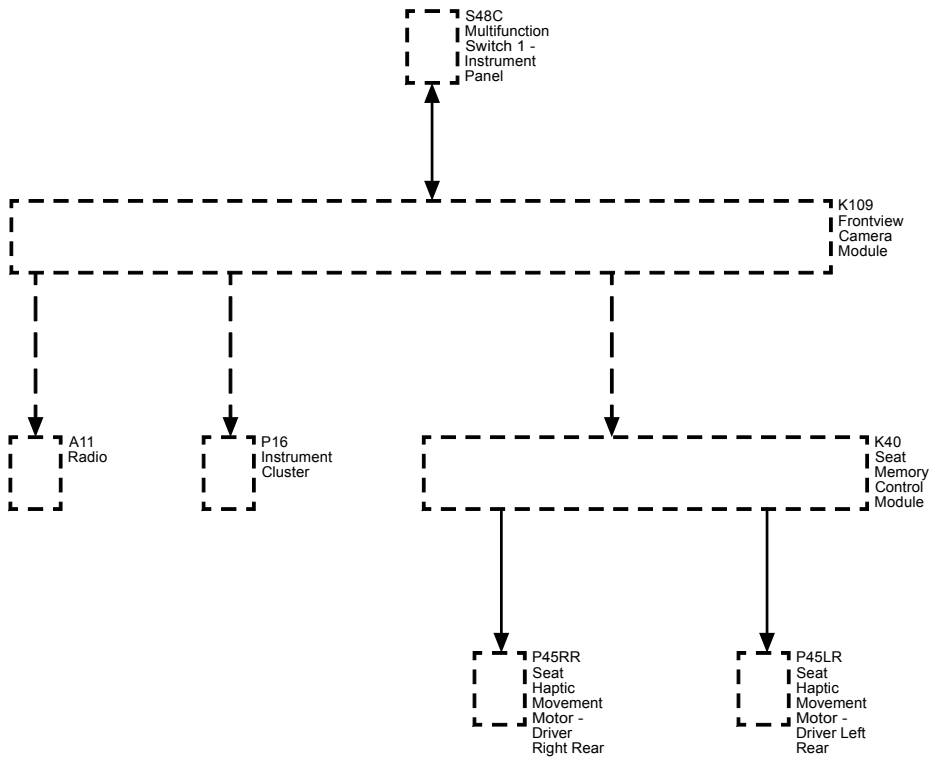

The lane departure warning system is a convenience feature of the front view camera that issues a warning when the system detects that the vehicle has unintentionally crossed a lane marking. The front view camera is located behind the windshield, looking out at the road ahead and detecting any lane markings. When the vehicle unintentionally leaves a detected lane, a visual and audible or haptic (pulses the seat, if equipped) alerts are given to the driver. The visual alert cannot be changed, but the driver can select between audible or haptic alerts in the vehicle personalization menus. See the user's manual for more detailed information on vehicle personalization.

The lane departure warning system is made up of the following components:

- Front view camera module
- Lane departure warning switch / control indicator
- Instrument cluster / Vehicle Direction Display
- Radio
- Safety Alert Seat, if equipped

Front View Camera Module

The camera detects visual queues such as lane markings. When it is determined that the vehicle has unintentionally moved outside of the lane, visual, and audible or haptic warning is given to the driver. The front view camera module receives an input from the lane departure warning switch and controls the lane departure warning switch indicator output. The front view camera module also communicates via serial data with the instrument cluster, radio, and memory seat module to request visual, and audible or haptic alerts.

Lane Departure Warning Switch

The lane departure warning switch provides an input to the front view camera module to turn the lane departure warning system ON and OFF. The front view camera module provides a signal voltage to the normally open momentary switch. When the switch is pressed, the signal circuit is pulled to ground, indicating to the front view camera module that the system has been requested to turn ON or OFF. The lane departure warning switch also

contains the lane departure warning switch indicator, which is controlled by the front view camera module to indicate the ON and OFF status of the lane departure warning system. When the system has been enabled by the lane departure warning switch, the front view camera module applies ground to the switch indicator and illuminates the LED. The location of the lane departure warning switch can vary with different vehicles. For the exact location please refer to the user's manual.

Instrument Cluster

The vehicle direction display contains green and amber lane departure warning indicators. These indicate to the driver the current status of the lane departure warning system and are controlled via serial data by the front view camera module. When the vehicle speed is above 56 km/h (35 MPH) and the system has detected the required lane markings and is ready to assist, the green indicator will be illuminated on the vehicle direction display. If the vehicle has unintentionally left the lane, the amber indicator will flash.

Radio

The radio controls the audible alert for the lane departure warning. If the vehicle has unintentionally left the lane, the radio will command three beeps as an audible alert to the driver.

Safety Alert Seat

The memory seat module controls the haptic alert provided by the seats. If the vehicle has unintentionally left the lane, the memory seat module will command three pulses to the left or right side of the seat, depending on the lane departure direction.

Lane Departure Warning Operation

System operation can be described by the following modes:

- Off State: The system has been turned off by the driver using the lane departure warning switch. The lane departure warning indicator will not be illuminated.
- Not Ready To Assist: The system is enabled and the lane departure warning indicator is illuminated, but not ready to assist when any of the following conditions is true:
  - Vehicle speed is less than 56 km/h (35 MPH). The system is designed to function at speeds greater than 56 km/h (35 MPH).
  - The system cannot detect lane markings. This may be because there are no lane markings, as on a country road or that the lane markings cannot be determined due to snow, rain, or other driving conditions.
  - The windshield area in front of the camera or the camera lens is blocked by fog, dirt, damage to the windshield or other elements that may prevent the camera from detecting lane markings.
- Ready To Assist: The system is enabled and ready to warn of the unintentional lane crossing. The system is ready to assist when the green lane departure warning indicator is illuminated on the vehicle direction display.

Lane Crossing Alerts

- When one of the following conditions are met, the system will not give alerts:
  - The correct turn signal is activated. An activated turn signal is interpreted as an intentional lane crossing.
  - The operator makes an intentional steering maneuver.
  - The operator makes an intentional accelerating maneuver.
  - The operator makes an intentional braking maneuver.
- Lane crossing alert consists of the following:
  - The amber lane departure warning indicator will flash.
  - Three chimes are activated through the radio.
  - or if equipped, three pulses to the left or right side of the seat.

Lane Departure Warning System Driver Information Center Messages

The front view camera module can command the driver information center to display the various messages to alert the driver of a system concern or status information. For detailed information about the possible messages please refer to the user's manual.

Forward Collision Alert Description and Operation

Forward Collision Alert Block Diagram

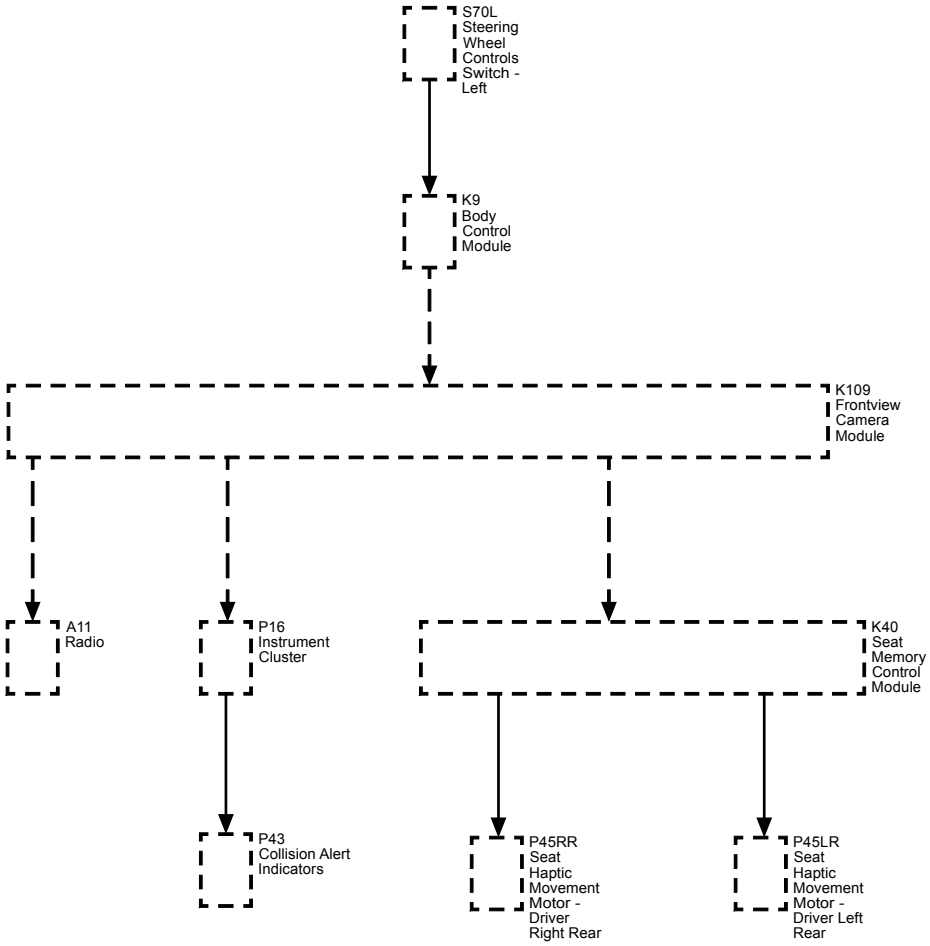

The forward collision alert system is a convenience feature of the front view camera that issues a warning to the driver when a potential collision risk exists. The front view camera is located behind the windshield, looking out at the road ahead and detecting vehicles directly ahead, within a distance of approximately 60 meters (197 ft). The forward collision alert system operates at speeds above 40 kph (25 mph). When the system detects a vehicle in the path ahead, the green vehicle ahead indicator in the vehicle direction display is illuminated. When approaching another vehicle too rapidly, the collision alert symbol will flash in the head-up display (if equipped) or a series of red LEDs in the vehicle direction display. Simultaneously an audible alert can sound or the Safety Alert Seat pulses. The visual alert cannot be changed, but the driver can select between audible or haptic alerts in the vehicle personalization menus. The forward collision alert system can also be turned on or off through the vehicle personalization menus. See the user's manual for more detailed information on vehicle personalization.

Forward collision alert does not warn the driver of any objects that are not detected as a vehicle, like e.g. pedestrians, animals, signs, guard rails, bridges, construction barrels or other stationary or slow moving objects. The forward collision alert timing sensitivity to control the distance to the vehicle ahead can be set using the forward collision alert switch in the left steering wheel controls.

In some cases the camera may detect a vehicle that is not in the path ahead, or the system may occasionally provide unrealistic alerts. This could respond to a turning vehicle ahead, guard rails, traffic signs, or other stationary objects. This is normal operation, the vehicle does not need service. Forward collision alert may sometimes set unnecessary alerts to turning vehicles, vehicles in other lanes, objects that are not vehicles, or shadows. These alerts are normal operation and the vehicle does not need service.

The forward collision alert system is made up of the following components:

- Front view camera module
- Forward collision alert switch
- Instrument cluster / Vehicle direction display
- Radio
- Memory Seat Module and Safety Alert Seat, if equipped

Front View Camera Module

The camera detects vehicles in front of the host vehicle. The front view camera module requests the green vehicle ahead alert indicator in the vehicle direction display ON via serial data when the front view camera system has

detected a vehicle in the driving path ahead. The front view camera module also communicates via serial data with the driver information center, radio, and memory seat module to request visual, and audible or haptic alerts.

Forward Collision Alert Switch

The forward collision alert switch provides an input to the front view camera module to select the alert timing sensitivity when approaching another vehicle too rapidly. The front view camera module provides a signal voltage to the normally open switch. When the switch is pressed, the signal circuit is pulled to ground, indicating to the front view camera module that the system has been requested to change the alert timing sensitivity. The first button press shows the current alert timing setting on the driver information center. With every button press, the alert timing sensitivity is changed. The current alert timing setting will be maintained until it is changed. The preset alert timing setting is displayed in the top line of the driver information center. The position of the forward collision alert switch can vary with different vehicles. For the exact position of the switch and possible user settings, please refer to the user's manual.

Instrument Cluster

The Vehicle direction display contains the green vehicle ahead indicator, which indicates to the driver that the Front View Camera system has detected a vehicle in the driving path ahead and is controlled via serial data. When approaching another vehicle too rapidly, the collision alert symbol will flash in the Vehicle direction display. The red Front collision alert display will stay continuously illuminated if the vehicle ahead remains much too close. The vehicle ahead indicator will display amber when following too close to the vehicle ahead.

Radio

The radio controls the audible alert for the forward collision alert system. If the host vehicle is approaching another vehicle too rapidly, the radio will command eight beeps as an audible alert to the driver.

Safety Alert Seat

The memory seat module controls the haptic alert provided by the seats. If the vehicle is approaching another vehicle too quickly, the memory seat module will command five pulses to both sides of the seat.

Forward Collision Alert System Driver Information Center Messages

The front view camera module can command the driver information center to display the various messages to alert the driver of a system concern or status information. For detailed information about the possible messages please refer to the user's manual.

Rear Vision Camera Description and Operation

Rear Vision Camera System Operation

The rear vision camera system consists of a video camera/module located at the rear of the vehicle and the infotainment display.

When the transmission is placed into REVERSE, a 12 volt signal is sent to the rear vision camera by the body control module (BCM). This signal indicates to the camera that the vehicle is in reverse and image display is requested. The rear vision camera receives ignition voltage and a constant ground to power the camera. Video signal + and video signal – circuits carry the video image from the rear vision camera to the infotainment display. Additionally, the video signal circuits are shielded to prevent any interference which may lead to a loss of video signal resolution and a degraded video image. The shield is provided a ground path by the rear vision camera.

The following conditions may cause a degraded rear vision camera image:

- Ice, snow, or mud has built up on the rear vision camera
- Dark conditions
- Extreme light conditions, such as glare from the sun or the headlights of another vehicle
- Damage to the rear of the vehicle
- Extreme high temperatures or extreme temperature changes

If a malfunction is detected in the system, Service Rear Vision Camera may be displayed on the infotainment display as an indicator to the customer that a problem exists that requires service.

Remote Functions

Schematic and Routing Diagrams

Remote Function Schematics

Keyless Entry

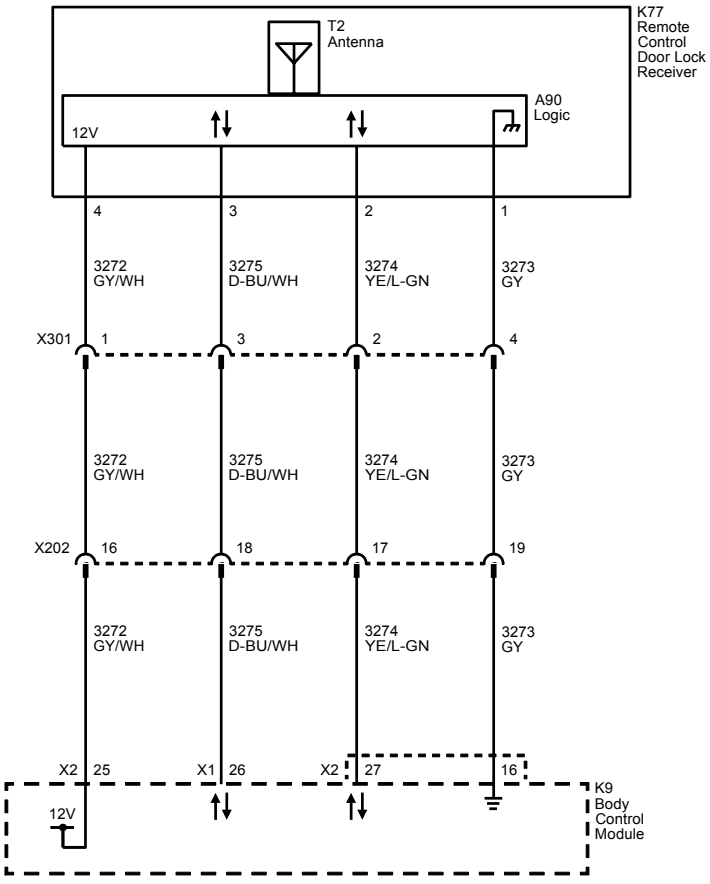

Description and Operation

Keyless Entry System Description and Operation

The keyless entry system is a vehicle entry device. The keyless entry system is used in conjunction with the door locks to unlock the vehicle. Keyless entry will lock/unlock the vehicle doors or open the rear compartment lid when a corresponding button on the keyless entry transmitter is pressed. This is accomplished by the transmitter sending a radio frequency to the Remote Control Door Lock Receiver antenna that has a direct link to the Body Control Module (BCM). The BCM interprets the signal and activates the requested function or request the appropriate control module to activate the function via a serial data message. A low transmitter battery or radio frequency interference from aftermarket devices, such as 2-way radios, power inverters, computers, etc., may cause a system malfunction. High radio frequency traffic areas, such as gas stations that use pay-at-the-pump radio frequency transponders, may also cause interference that could lead to a malfunction. Keyless entry allows you to operate the following features:

- Door lock/unlock
- Vehicle locator/Panic alarm
- Remote vehicle starting, if equipped

The keyless entry system has the following components:

- Keyless entry transmitters
- Body Control Module
- Remote Control Door Lock Receiver

Keyless Entry Transmitters

Note: When the vehicle key is in the ignition, keyless entry functions from all keyless entry transmitter are disabled.

The keyless entry transmitters are used to perform various entry functions while away from the immediate are of the vehicle. Keyless entry functions may work at up to 20 m (65 ft) away from the vehicle. Ambient conditions may affect the performance of the keyless entry transmitter and reduce the range at which keyless entry functions operate. Up to eight transmitters may be programmed to a single vehicle.

OnStar® Remote Link (if equipped)

A vehicle operator may have the ability to perform some of the keyless entry functions using applications on personal devices such as a smart phone. Unwanted or inadvertent door lock/unlock activation may be requested by the OnStar® Remote Link app. It is possible that a customer may be unaware of account usage, result in an unwanted or phantom door lock/unlock. If normal system diagnosis does results in an inability to verify the customer's concern, contact Technical Assistance Center (TAC).

Body Control Module (BCM)

The BCM is a multifunction module that operates the keyless entry system. When an radio frequency message is received from a keyless entry transmitter, the BCM interprets this signal and performs the specific function, i.e. door lock, door unlock, or vehicle locate.

Remote Control Door Lock Receiver

The Remote Control Door Lock Receiver acts as an antenna for the keyless entry system and communicates with the BCM through a dedicated serial data link. When a button is pressed on a keyless entry transmitter, the Remote Control Door Lock Receiver receives this signal and sends the request to the BCM. The BCM interprets the signal and performs the specific function, i.e. door lock, door unlock, or vehicle locate.

Unlock Doors

Momentarily press the transmitter UNLOCK button in order to perform the following functions:

- Unlock only the driver door or all doors and liftgate (if equipped); this is customized through the DIC.
- Illuminate the interior lamps for a determined length of time or until the ignition is turned ON.
- Flash the exterior lights; this is customized through the DIC.
- Disarm the content theft deterrent system, if equipped.
- Deactivate the content theft deterrent system when in the alarm mode.

Lock All Doors

Press the transmitter LOCK button to perform the following functions:

- Lock all vehicle doors.
- Immediately turn OFF the interior lamps.
- Flash the exterior lights and/or sound the horn; this is customized through the DIC.
- Arm the content theft deterrent system.

Vehicle Locator/Panic Alarm

A single press of the panic button performs the following functions. Some functions may be dependent on personalization settings:

- Pulse the horn three times.
- Flash the exterior lamps three times.

A press and hold of the panic button performs the following functions:

- Illuminate the interior lamps.

- Pulse the horn and flash the exterior lamps for 30 seconds or until the following conditions occur:
  - The panic button is pressed.
  - The ignition switch is turned to the RUN position with a valid key.

Remote Vehicle Start, if equipped

The remote vehicle start function allows engine starting while not in the vehicle. It also allows the vehicle HVAC system and other vehicle systems to enable, providing a comfortable vehicle upon entry. The remote vehicle start sequence begins by pressing and releasing the lock button and then pressing and holding the remote vehicle start buttons on the keyless entry transmitter. The turn signal lamps will illuminate to indicate the vehicle has received the remote start request. Each time an remote vehicle start is performed, the vehicle doors are locked, however they may then be unlocked/locked with the transmitter or vehicle key at any time. Once activated, the engine is allowed to run for 10 minutes. The remote vehicle start time may be extended by an additional 10 minutes by again pressing and releasing the lock button and then pressing and holding the remote vehicle start buttons on the transmitter. This feature is called a remote vehicle start continue and allows a maximum of 20 minutes of engine running. If the remote vehicle start continue is performed at seven minutes into the initial 10 minute time-out, a total of 17 minutes of engine running would occur. The remote vehicle start event may be suspended at any time by pressing only the remote vehicle start button on the transmitter or by entering the vehicle and pressing the hazard lamp switch.

In between ignition cycles, only two remote vehicle start events may occur or be attempted. Once two events or attempts have been made, future remote vehicle start events will be suspended until the vehicle is started using the ignition.

Enable/Disable Remote Vehicle Start

Using the driver information center, remote vehicle start may be enabled or disabled as a part of vehicle personalization. Refer to the vehicle owners manual for more information.

Hood Ajar Switch

The hood switch provides status of the hood to the BCM for remote vehicle start purposes. The switch is integrated into the hood latch assembly.

Remote Vehicle Start Circuit Description

The BCM receives a signal from the keyless entry transmitter indicating a remote vehicle start request. A message is then sent to the BCM which determines if a crank request message will be sent to the ECM to allow engine starting. To determine if conditions are correct for an remote vehicle start event, the BCM will ensure the following conditions are met:

- A valid hood ajar switch closed signal is present.
- The doors are locked.
- The hazard switch is OFF.
- The vehicle power mode is correct.
- No content theft deterrent alarm triggers are present.

When the BCM determines all conditions meet those required for an remote vehicle start event, a message is sent via serial data to the ECM. The ECM relies on the remote vehicle start message from BCM to enable remote vehicle start when the crank request signal is received. If the ECM does not receive a valid remote vehicle start message, it will not attempt to start the engine. While the ECM is in remote vehicle start mode it will suspend engine operation if any of the following additional conditions occur:

- Vehicle speed is greater than 0.
- Transmission is not in PARK.
- Excessive engine coolant temperature
- Low oil pressure
- The malfunction indicator lamp (MIL) is commanded ON.
- Engine crank time is greater than 30 seconds.
- Excessive engine speed
- Accelerator pedal position too high
- Remote start timer equals 0.
- Immobilizer system indicates tamper

Keyless Entry Personalization

Vehicle lock/unlock functions and remote vehicle start remote vehicle start settings may be personalized. For functional descriptions and personalization instructions, refer to the vehicle owners manual.

Seat Belts

Schematic and Routing Diagrams

Seat Belt Schematics

Seat Belts

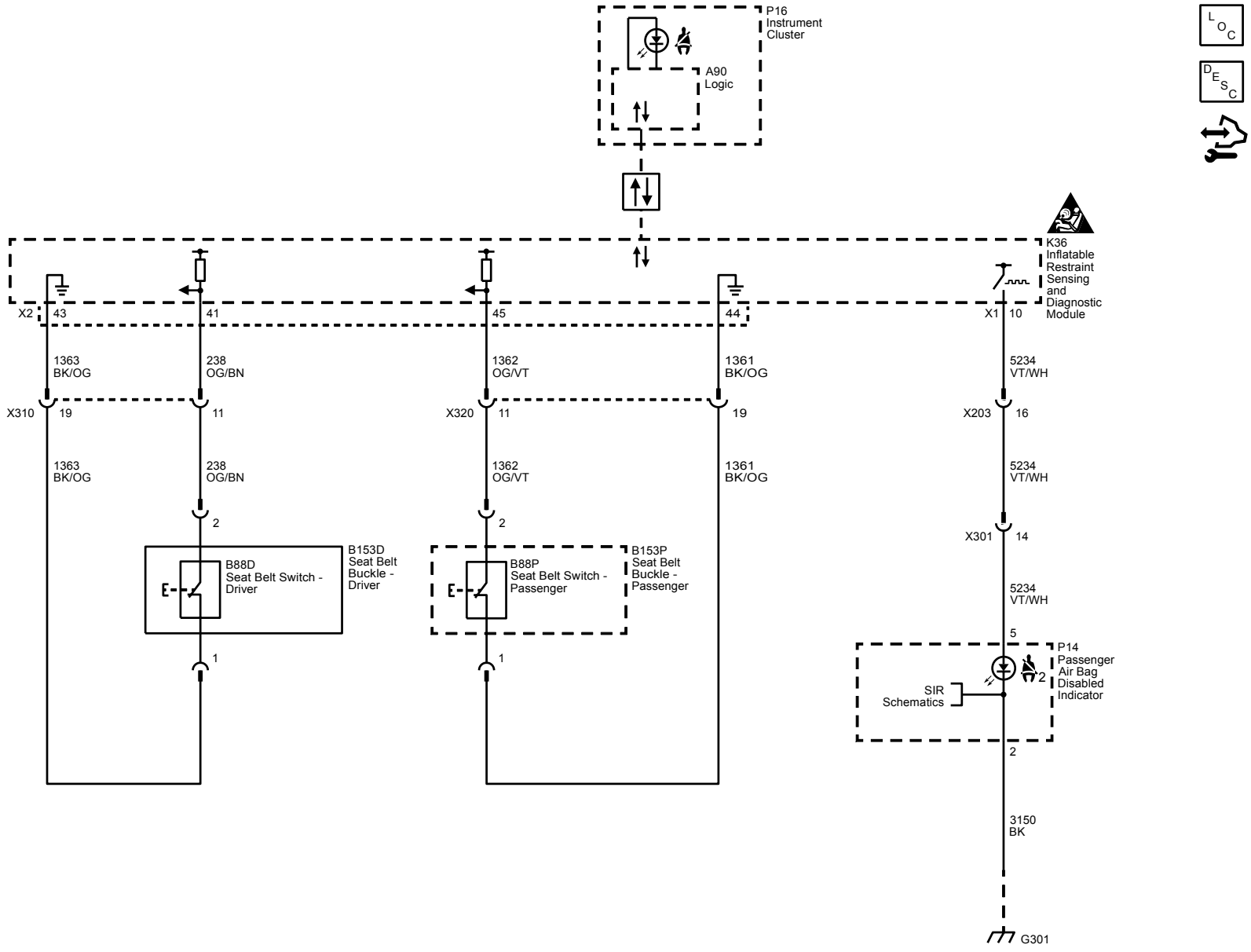

Seats

Power Seats

Schematic and Routing Diagrams

Driver Seat Schematics

Power Seat

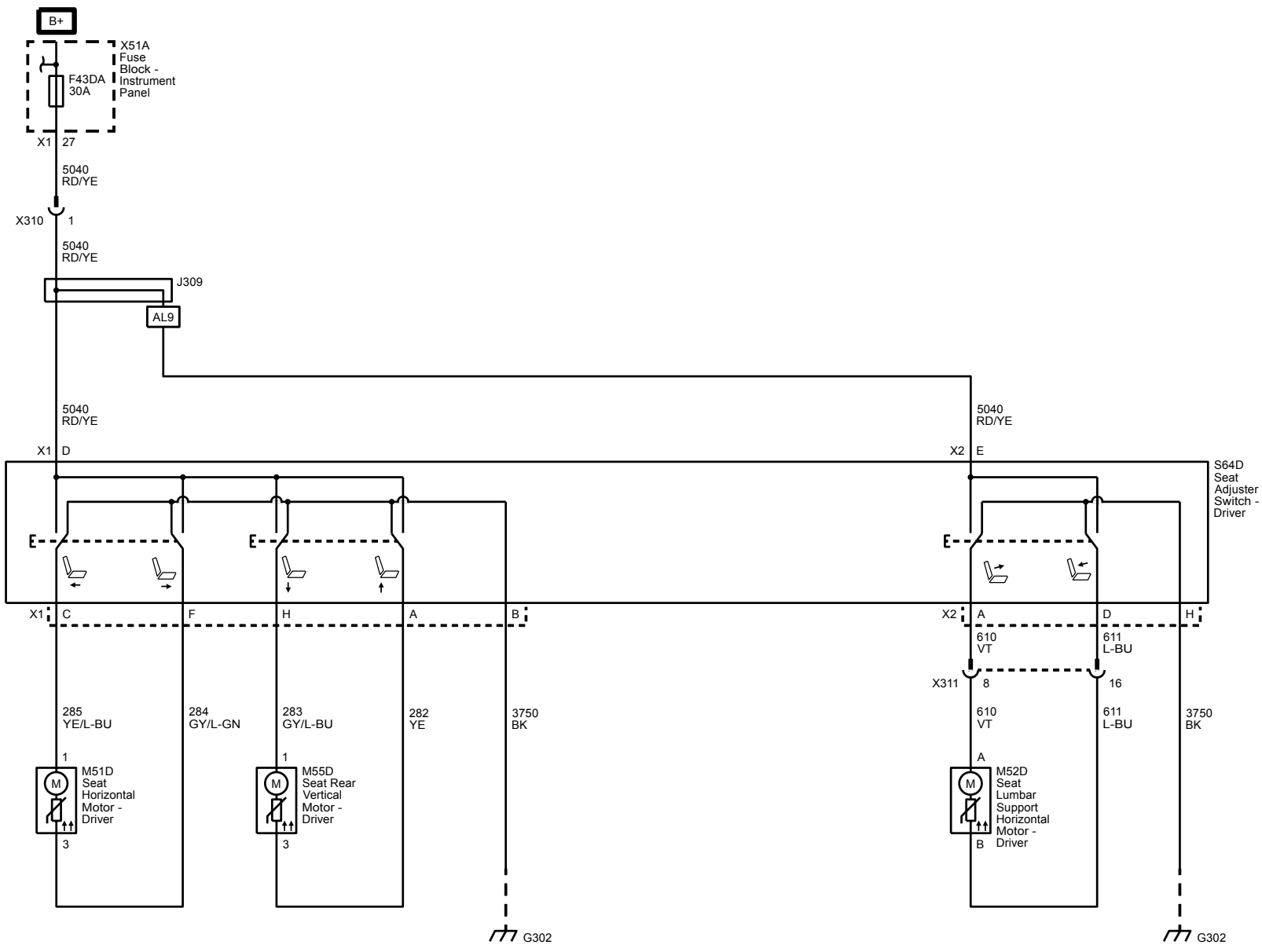

Passenger Seat Schematics

Power Seat

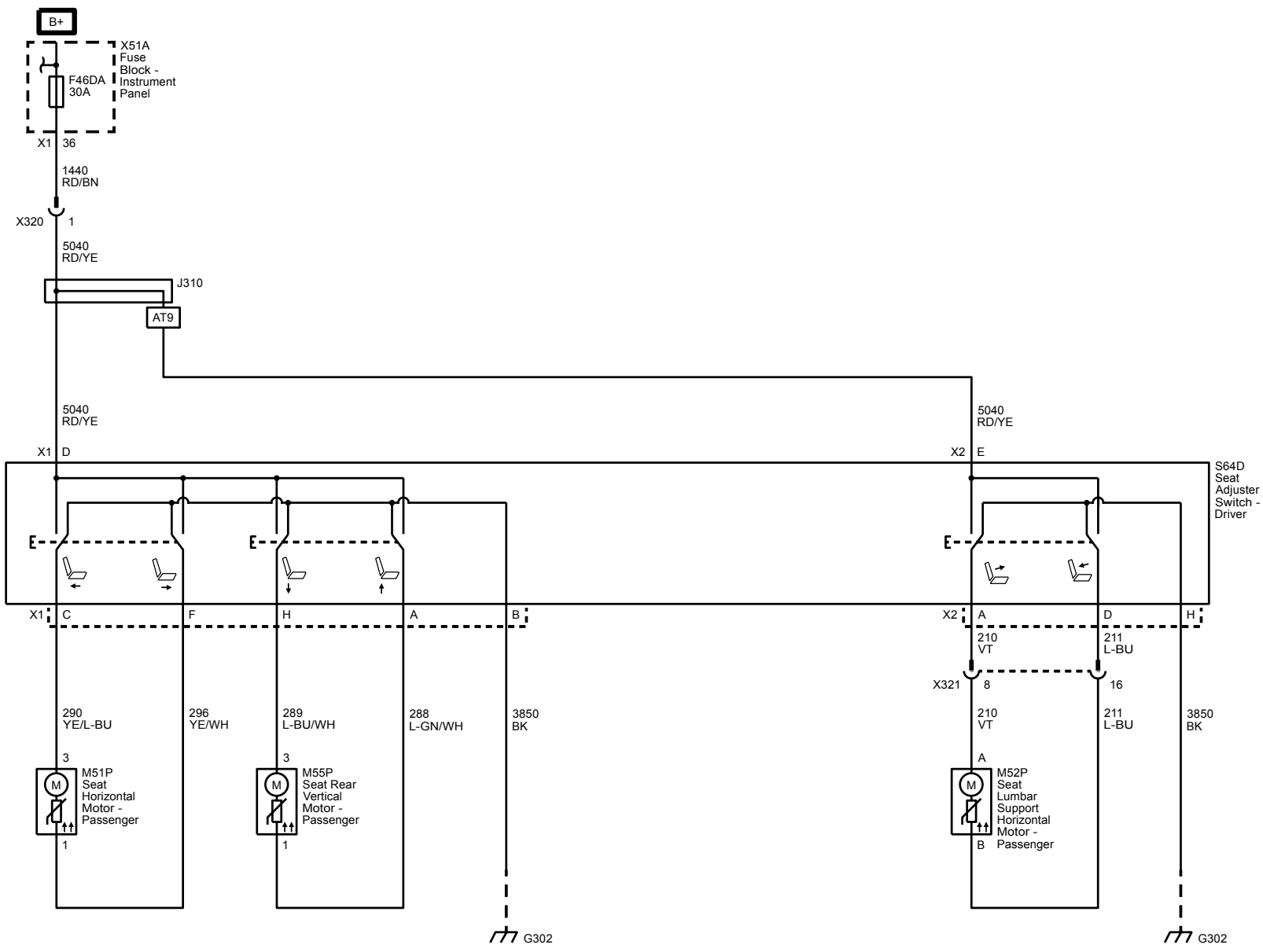

Seat Heating and Cooling

Schematic and Routing Diagrams

Heated/Cooled Seat Schematics

Power, Ground, Serial Data and Switches (KA1)

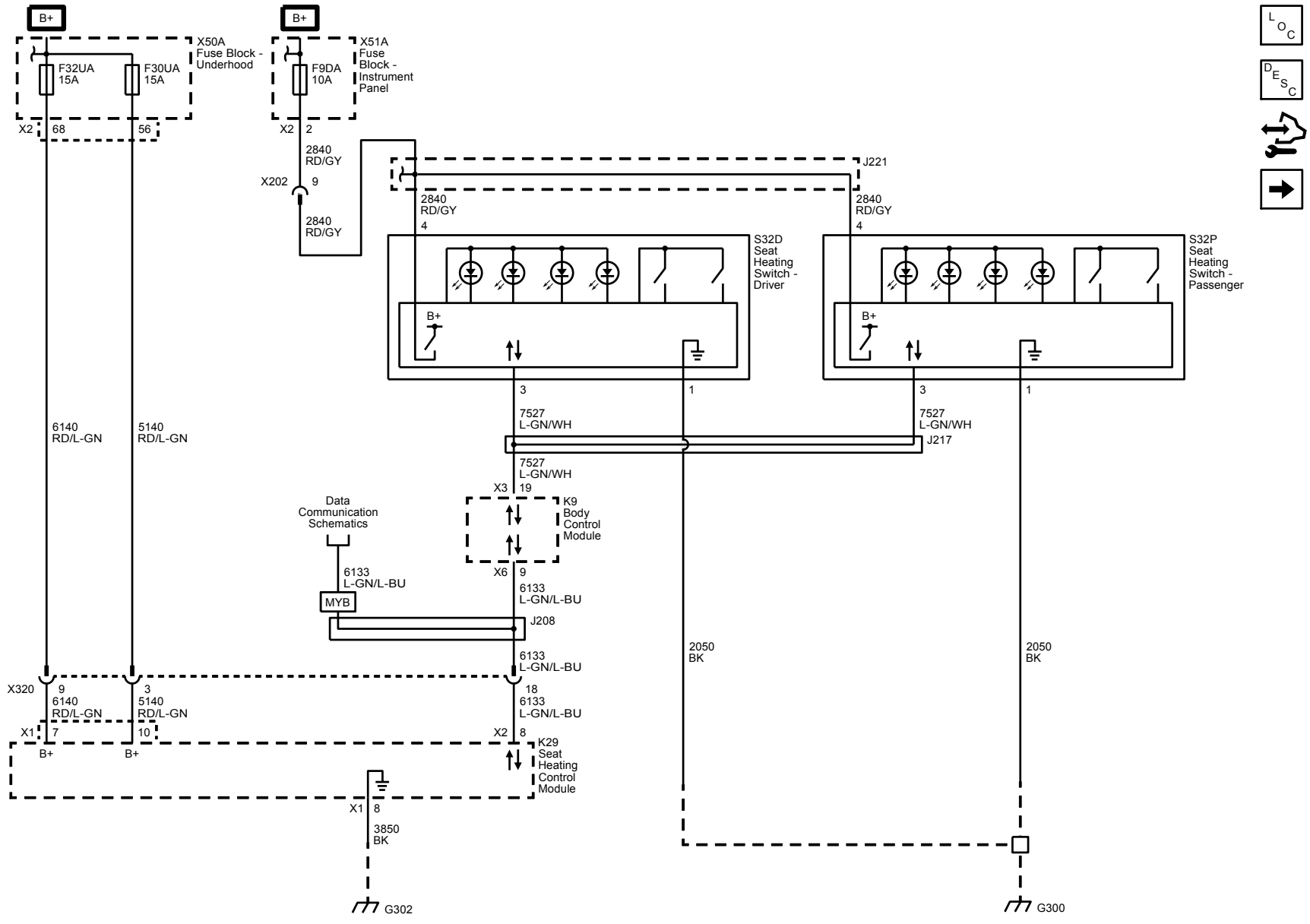

Heating Elements (KA1)

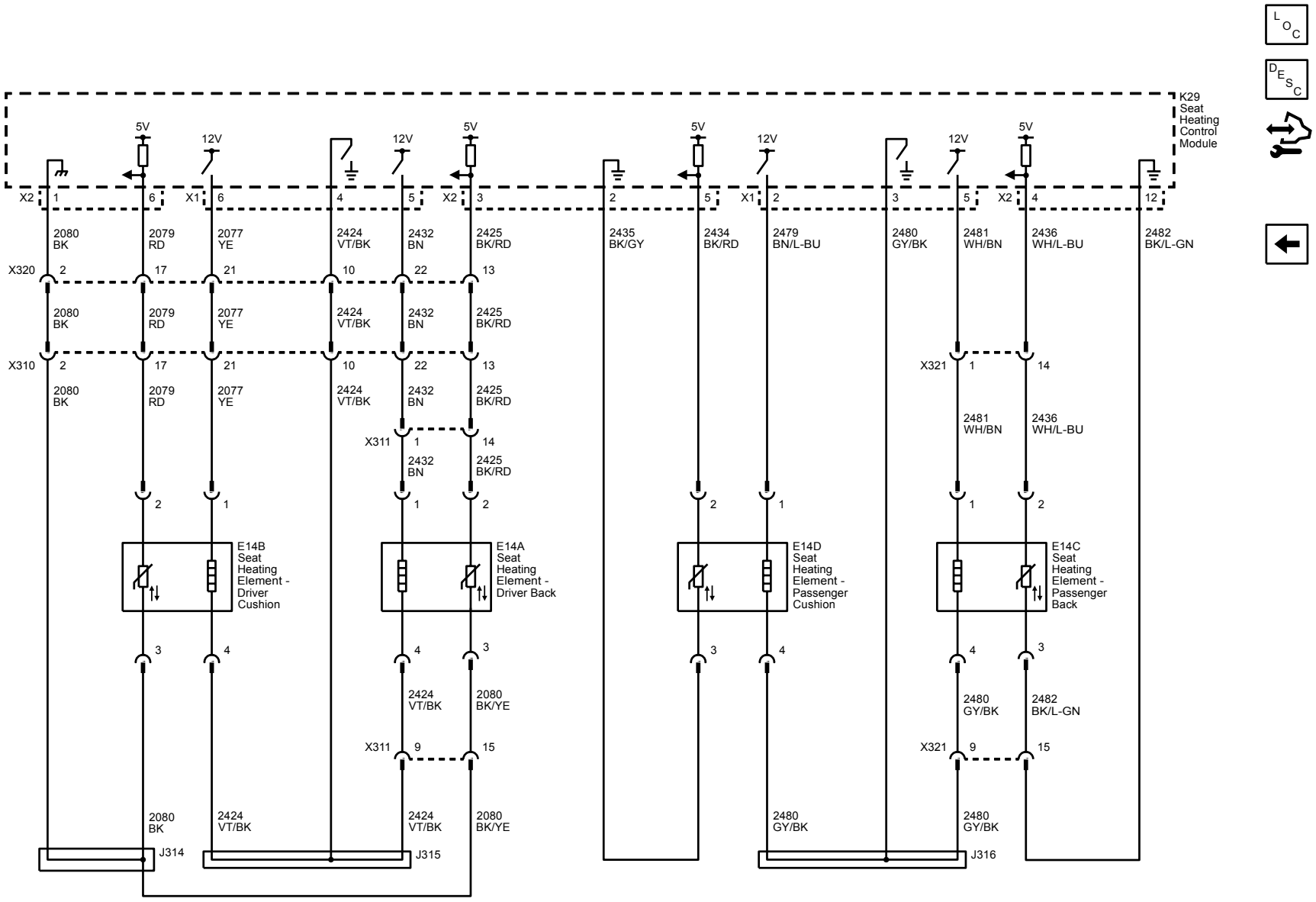

Transmission

Shift Lock Control

Schematic and Routing Diagrams

Shift Lock Control Schematics

MYB

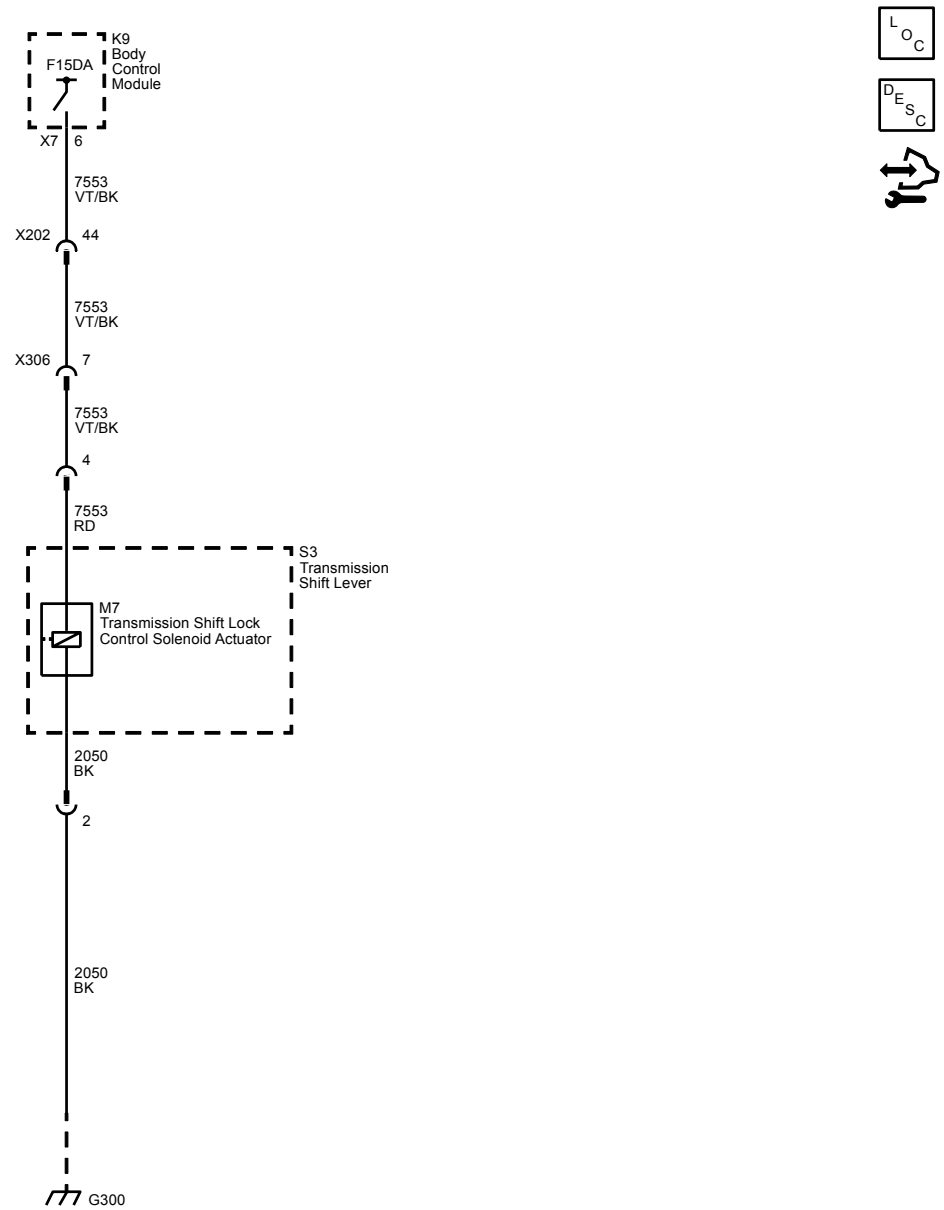

Description and Operation

Automatic Transmission Shift Lock Control Description and Operation

The automatic transmission park lock control system is a safety device that prevents an inadvertent shift out of PARK. The driver must press the brake pedal before moving the park lever out of the PARK position. The system consists of the following components:

- The automatic transmission park lock solenoid (serviced as the automatic transmission shift lock actuator), is located within the floor shift control assembly.
- The body control module, which controls the voltage supply circuit of the park lock control solenoid.
- The engine control module.

The body control module controls the voltage to the park lock control solenoid through the park lock control solenoid controlled voltage circuit. The following conditions must be met before the body control module will supply voltage to the park lock solenoid:

- The ignition is in the ON position.
- The engine control module sends an input via GMLAN serial data to the body control module indicating the transmission is in the PARK position.
- The body control module determines the brake pedal is applied according the brake pedal position.

Since the park lock control solenoid is permanently grounded, the body control module supplies voltage to the automatic transmission park lock control solenoid, unlocking the park lever allowing the driver to move the park lever out of the PARK position as the solenoid energizes. When the brake pedal is not applied, the body control module turns the control voltage output of the park lock control solenoid OFF, de-energizing the park lock control solenoid. The de-energized solenoid mechanically locks the park lever in the PARK position.

Automatic Transmission Shift Lock Control Description and Operation (RPO T4Z)

The automatic transmission park lock control system is a safety device that prevents an inadvertent shift out of PARK. Vehicles equipped with the Safety Belt Assurance System (RPO T4Z), the driver must press the brake pedal and have the driver and if present, the front outboard passenger safety belt(s) buckled before moving the park lever out of the PARK position. The system consists of the following components:

- The automatic transmission park lock solenoid (serviced as the automatic transmission shift lock actuator), is located within the floor shift control assembly.
- The body control module, which controls the voltage supply circuit of the park lock control solenoid.
- The engine control module.
- The inflatable restraint sensing and diagnostic module.

The body control module controls the voltage to the park lock control solenoid through the park lock control solenoid controlled voltage circuit. The following conditions must be met before the body control module will supply voltage to the park lock solenoid:

- The ignition is in the ON position.
- The engine control module sends an input via GMLAN serial data to the body control module indicating the transmission is in the PARK position.
- The body control module determines the brake pedal is applied according the brake pedal position.
- The inflatable restraint sensing and diagnostic module determines if the occupied driver and front outboard passenger, if present, have their safety belt(s) buckled.

Since the park lock control solenoid is permanently grounded, the body control module supplies voltage to the automatic transmission park lock control solenoid, unlocking the park lever allowing the driver to move the park lever out of the PARK position as the solenoid energizes. When the brake pedal is not applied, the body control module turns the control voltage output of the park lock control solenoid OFF, de-energizing the park lock control solenoid. The de-energized solenoid mechanically locks the park lever in the PARK position.

Vehicles with the Safety Belt Assurance System, will display the following message “Shift Locked, Buckle Seatbelt” if the driver and front outboard passenger, if present, do not have safety belt(s) buckled. The vehicle will not shift out of PARK. Buckle the safety belt(s) to unlock the shifter.

This system may not allow the vehicle to shift out of PARK if an object such as a briefcase, handbag, grocery bag, laptop, or other electronic devices is on the front outboard passenger seat. If this happens, remove the object from the seat or buckle the safety belt.

Vehicles with the Safety Belt Assurance System, will display the following message “Shift Unlocked, Brake To Shift” if the system times out and allows the vehicle to be shifted out of PARK after 30 s following brake applied.

The Safety Belt Assurance System can be disabled with a calibration file update in the K36 Inflatable Restraint Sensing and Diagnostic Module using SPS. This procedure should only be done to help resolve a customer dissatisfaction issue.