200

SERIES

Workshop Manual

Werkplaatshandboek

Manuel D'Atelier

Werkstatthandbuch

Manuale D'Officina

Manual De Taller

Manual de Oficina

ROVER

AMENDMENT INSTRUCTION SHEET

NEW ROVER 200 SERIES WORKSHOP MANUAL

Publication Number RCL0064ENG (8th Edition)

Amendment Number: **RF-005/99ENG** Date: **06/99**

To ensure that this manual is kept up to date and that a record of amendments to this manual is available, an Amendment Instruction Sheet will be issued with each set of revised pages.

- The Title page of the Manual is re-issued, and the Part No. has been raised to the next edition. Except for the Contents pages, all revised and new pages have the issue date at the foot of each page, together with an indication of whether the pages are revised or new.
- This Amendment Instruction Sheet must be inserted at the front of the manual to indicate that the amendment has been incorporated. Do not discard previous Amendment Instruction sheets.
- Your manual is only complete to this issue providing all prior Amendments are included.
- The filing instructions give section and page numbers affected. Additional pages or complete new sections may be issued, insert the pages as instructed.

FILING INSTRUCTIONS

Section	Discard Existing Pages	Insert New Pages	Reason for Amendment
TITLE PAGE	Title page	Title page	Publication part number raised to 9th Edition.
GENERAL INFORMATION	General Precautions and Fitting Instructions pages 5 & 6	General Precautions and Fitting Instructions pages 5 & 6	Information on wax coated oil seals added.
INFORMATION	General Data pages 5 & 6 General Data pages 7 & 8 Torque Wrench Settings pages 1 & 2	General Data pages 5 & 6 General Data pages 7 & 8 Torque Wrench Settings pages 1 & 2	BRM steering geometry data amended. BRM brake master cylinder and brake servo data added. Amendments to existing information and addition of new torque figure.
ENGINE - 'K8'	Repairs pages 1 to 8 Repairs pages 11 & 12 Repairs pages 27 & 28 Repairs pages 29 & 30	Repairs pages 1 to 8 Repairs pages 11 & 12 Repairs pages 27 & 28 Repairs pages 29 & 30	Introduction of new camshaft gear holding tool. Instruction to lubricate camshaft and crankshaft front oil seals deleted, requirement to fit oil seals dry added. Introduction of new camshaft gear holding tool. Camshaft Cover Gasket - Remove and Refit - Revised procedure issued herewith. Oil Pump - Remove and Refit - Revised procedure issued herewith. Sump Gasket - Remove and Refit - Revised procedure issued herewith.

Continued.....

Section	Discard Existing Pages	Insert New Pages	Reason for Amendment
ENGINE - 'K16'	Contents Page	Contents Page	Contents amended.
	Repairs pages 1 to 4	Repairs pages 1 to 4	Introduction of new camshaft gear holding tool. Instruction to lubricate camshaft oil seals deleted, requirement to fit oil seals dry added.
	Repairs pages 7 & 8	Repairs pages 7 & 8	Instruction to lubricate crankshaft front oil seal deleted, requirement to fit oil seal dry added.
	Repairs pages 9 & 10	Repairs pages 9 & 10	Introduction of new camshaft gear holding tool.
	Repairs pages 13 to 16	Repairs pages 13 to 16	Introduction of new camshaft gear holding tool.
	Repairs pages 21 & 22	Repairs pages 21 & 22	Introduction of new camshaft gear holding tool.
	Repairs pages 79 to 84	Repairs pages 79 to 84	Oil Pump - Remove and Refit, Sump Gasket - 1.4 Models - Remove and Refit and Sump - 1.6 and 1.8 Models - Remove and Refit - Revised procedures issued herewith.
ENGINE - 'K16 WITH VVC'	Contents Page	Contents Page	Contents amended.
	Repairs pages 1 to 4	Repairs pages 1 to 4	Introduction of new camshaft gear holding tool. Instruction to lubricate camshaft oil seals deleted, requirement to fit oil seals dry added.
	Repairs pages 7 & 8	Repairs pages 7 & 8	Instruction to lubricate crankshaft front oil seal deleted, requirement to fit oil seal dry added. Introduction of new camshaft gear holding tool.
	Repairs pages 15 & 16	Repairs pages 15 & 16	Introduction of new camshaft gear holding tool.
	Repairs pages 23 & 24	Repairs pages 23 & 24	Introduction of new camshaft gear holding tool.
	Repairs pages 49 & 50	Repairs pages 49 & 50	Oil Pump - Remove and Refit - Revised procedure issued herewith.
	Repairs pages 51 & 52	Repairs pages 51 & 52	Engine Sump - Remove and Refit - Revised procedure issued herewith.
	Repairs pages 59 & 60	Repairs pages 59 & 60	Amendment to existing caution. Introduction of new camshaft gear holding tool.
ENGINE - 'L' SERIES	Repairs pages 3 & 4	Repairs pages 3 & 4	Instruction to lubricate camshaft front oil seal deleted, requirement to fit oil seal dry added.
	Repairs pages 7 & 8	Repairs pages 7 & 8	Instruction to lubricate camshaft rear oil seal deleted, requirement to fit oil seal dry added.
	Repairs pages 13 & 14	Repairs pages 13 & 14	Instruction to lubricate crankshaft front oil seal deleted, requirement to fit oil seal dry added. Amendment to existing information.
	Repairs pages 71 to 74	Repairs pages 71 to 74	Oil Pump - Remove and Refit - Revised procedure issued herewith.
ENGINE MANAGEMENT SYSTEM - MEMS	Repairs pages 15 & 16	Repairs pages 15 & 16	Note added regarding fitting of HO2S sensor.

Continued.....

Section	Discard Existing Pages	Insert New Pages	Reason for Amendment
COOLING SYSTEM - 'L' SERIES	Description and Operation pages 1 & 2	Description and Operation pages 1 & 2	Cooling system operation amended.
CLUTCH	Repairs pages 9 & 10	Repairs pages 9 & 10	Introduction of new clutch alignment tool for 'L' Series engine.
AUTOMATIC GEARBOX - 'CVT'	Repairs pages 19 & 20	Repairs pages 19 & 20	Illustration showing fluid cooler feed/hose pipe removal amended.
STEERING	Adjustments pages 1 & 2	Adjustments pages 1 & 2	BRM steering geometry data amended.
ELECTRICAL	Contents Page Adjustments pages 1 & 2 Repairs pages 1 & 2 Repairs pages 7 & 8 Repairs pages 9 & 10	Contents Page Adjustments pages 1 & 2 Repairs pages 1 & 2 Repairs pages 7 & 8 Repairs pages 9 & 10	Page numbers amended. Auxiliary Drive Belt - 'K' Series Without Air Conditioning - Check and Adjust - Cautions regarding drive belt adjusting bolt added. Alternator - 'K' Series Without Air Conditioning - Remove and Refit - Cautions regarding drive belt adjusting bolt added. Auxiliary Drive Belt - 'K' Series Without Power Steering - Remove and Refit - Cautions regarding drive belt adjusting bolt added. Auxiliary Drive Belt - 'K' Series With Power Steering - Remove and Refit - Cautions regarding drive belt adjusting bolt added.

AMENDMENT INSTRUCTION SHEET

NEW ROVER 200 WORKSHOP MANUAL

Publication Number: RCL 0064ENG - 7th Edition

Amendment Number: **RF-002/99ENG** Date:**02/99**

To ensure that this manual is kept up to date and that a record of amendments to this manual is available, an Amendment Instruction Sheet will be issued with each set of revised pages.

- This Amendment Instruction Sheet must be inserted at the front of the manual to indicate that the amendment has been incorporated. Do not discard previous Amendment Instruction sheets.
- Your manual is only complete to this issue providing all prior Amendments are included.
- The filing instructions give section and page numbers affected. Additional pages or complete new sections may be issued, insert the pages as instructed.

FILING INSTRUCTIONS

Section	Discard Existing Pages	Insert New Pages	Reason for Amendment
TITLE PAGE	Title Page	Title Page	Publication part number raised to 8th Edition
INFORMATION	Contents Page	Contents Page	Contents and page numbers changed.
	General Data pages 3 to 15 Engine Tuning Data pages 5 & 6 Torque Wrench Settings pages 1 & 2 Torque Wrench Settings pages 5 & 6 Torque Wrench Settings pages 11 to 15 Capacities, Fluids and Lubricants pages 1 & 2	General Data pages 3 to 17 Engine Tuning Data pages 5 & 6 Torque Wrench Settings pages 1 & 2 Torque Wrench Settings pages 5 & 6 Torque Wrench Settings pages 11 to 14 Capacities, Fluids and Lubricants pages 1 & 2	Data for BRM model added together with additional steering geometry data. Maximum no-load engine speed for 2.0 'L' Series engine added. Amendments to existing information and addition of new torque figures. Data for BRM model included.
MAINTENANCE	Maintenance pages 7 & 8 Maintenance pages 13 & 14	Maintenance pages 7 & 8 Maintenance pages 13 & 14	Amendments to existing information. Automatic gearbox oil top-up procedure revised.
ENGINE 'K8'	Repairs pages 5 & 6	Repairs pages 5 & 6	Addition of sealant bead to crankshaft rear oil seal.
ENGINE 'K16'	Repairs pages 7 & 8 Repairs pages 87 & 88	Repairs pages 7 & 8 Repairs pages 87 & 88	Addition of sealant bead to crankshaft rear oil seal. Requirement to replace automatic timing belt tensioner at specific intervals deleted.
ENGINE 'K16 WITH VVC'	Repairs pages 7 & 8	Repairs pages 7 & 8	Addition of sealant bead to crankshaft rear oil seal.

Continued.....

Section	Discard Existing Pages	Insert New Pages	Reason for Amendment
ENGINE 'L' SERIES	Contents Page Adjustments pages 1 & 2 Repairs sub-section pages 1 to 69	Contents Page - Repairs sub-section pages 1 to 89	Contents and page numbers amended. Requirement to inspect camshaft and FIP timing belts deleted. Method for removing, refitting and tensioning camshaft and FIP timing belts amended. Revisions to camshaft oil seals and cylinder head remove and refit procedures. Sump refit procedure amended and sealant part number changed.
MANIFOLD AND EXHAUST SYSTEMS	Description and Operation pages 3 & 4 Repairs pages 19 & 20	Description and Operation pages 3 & 4 Repairs pages 19 & 20	Key to illustration amended. 'K16' inlet manifold fixings torque figure amended.
STEERING	Adjustments pages 1 & 2	Adjustments pages 1 & 2	Data for BRM model included together with additional steering geometry data.
BODY	Contents Page Doors pages 11 & 12 Exterior Fittings pages 5 to 15 Interior Trim Components pages 1 to 20	Contents Page Doors pages 11 & 12 Exterior Fittings pages 5 to 16 Interior Trim Components pages 1 to 21	Contents and page numbers changed. Front door trim casing remove and refit procedure amended. BRM model included in front bumper remove and refit. BRM model included in front console remove and refit. BRM front console trim pad remove and refit operation added.
ELECTRICAL	Contents Pages Repairs pages 31 to 51	Contents Pages Repairs pages 31 to 53	Contents and page numbers changed. Tweeter - front door and CD Player remove and refit operations added.

AMENDMENT INSTRUCTION SHEET

NEW ROVER 200 SERIES WORKSHOP MANUAL

Publication Number: RCL 0064ENG - 6th Edition

Amendment Number: **RF-003/98ENG** Date:**11/98**

To ensure that this manual is kept up to date and that a record of amendments to this manual is available, an Amendment Instruction Sheet will be issued with each set of revised pages.

- This Amendment Instruction Sheet must be inserted at the front of the manual to indicate that the amendment has been incorporated. Do not discard previous Amendment Instruction sheets.
- Your manual is only complete to this issue providing all prior Amendments are included.
- The filing instructions give section and page numbers affected. Additional pages or complete new sections may be issued, insert the pages as instructed.

FILING INSTRUCTIONS

Section	Discard Existing Pages	Insert New Pages	Reason for Amendment
TITLE PAGE	Title Page	Title Page	Publication part number raised to 7th Edition
INTRODUCTION	Contents Page Introduction page 3	Contents Page Introduction pages 3 & 4	Contents and page numbers changed Model change identifying VIN Nos. added
INFORMATION	Torque Wrench Settings pages 1 & 2	Torque Wrench Settings pages 1 & 2	Amendments to existing information and addition of new torque figure
ENGINE -'K8'	Contents page Adjustments page 1 Repairs pages 1 to 4 Repairs pages 29 to 32	Contents page - Repairs pages 1 to 4 Repairs pages 29 to 32	Contents and page numbers changed Camshaft timing belt inspection deleted Introduction of new camshaft oil seals and modified service tool General updating of camshaft timing belt information
ENGINE - 'K16'	Contents page Adjustments page 1 Repairs sub-section pages 1 to 95	Contents page - Repairs sub-section pages 1 to 94	Contents and page numbers changed Camshaft timing belt inspection deleted Introduction of new camshaft oil seals and modified service tool. Revisions to cylinder head remove and refit procedures.Introduction of camshaft timing belt automatic tensioner together with general updating of camshaft timing belt information. Camshaft timing belt remove and refit procedures combined. General updating of information.
ENGINE - 'K16 WITH VVC'	Contents page Adjustments pages 1 & 2 Repairs sub-section pages 1 to 62	Contents page - Repairs sub-section pages 1 to 60	Contents and page numbers changed Camshaft timing belt inspection deleted, adjustment procedure included in Repairs sub-section Introduction of new camshaft oil seals and modified service tool. Camshaft timing belt adjustment included in remove and refit together with updating of camshaft front and rear timing belt information. General updating of information

Continued.....

Section	Discard Existing Pages	Insert New Pages	Reason for Amendment
AUTOMATIC GEARBOX - ’CVT’	Contents page Repairs pages 23 & 24	Contents page Repairs pages 23 to 27	Additional operation added Primary bearing remove and refit added
BRAKES	Adjustments pages 1 & 2	Adjustments pages 1 & 2	Handbrake cable check - data amended

AMENDMENT INSTRUCTION SHEET

NEW ROVER 200 SERIES WORKSHOP MANUAL

Publication Number RCL0064ENG - 5th Edition

Amendment Number: **RF-001/98ENG** Date: **01/98**

To ensure that this manual is kept up to date and that a record of amendments to this manual is available, an Amendment Instruction Sheet will be issued with each set of revised pages.

- The Title page of the Manual is re-issued, and the Part No. has been raised to the next edition. Except for the Contents pages, all revised and new pages have the issue date at the foot of each page, together with an indication of whether the pages are revised or new.
- This Amendment Instruction Sheet must be inserted at the front of the manual to indicate that the amendment has been incorporated. Do not discard previous Amendment Instruction sheets.
- Your manual is only complete to this issue providing all prior Amendments are included.
- The filing instructions give section and page numbers affected. Additional pages or complete new sections may be issued, insert the pages as instructed.

FILING INSTRUCTIONS

Section	Discard Existing Pages	Insert New Pages	Reason for Amendment
TITLE PAGE	Title page	Title page	Part number raised to 6th Edition.
GENERAL INFORMATION	Vehicle Identification Number page 1	Vehicle Identification Number page 1	Introduction of 1.1 'K8' engine.
INFORMATION	Contents page General Data pages 1 to 9 General Data pages 13 & 15 Engine Tuning Data sub-section Torque Wrench Settings pages 5 & 11 Capacities, Fluids and Lubricants page 1	Contents page General Data pages 1 to 9 General Data pages 13 & 15 Engine Tuning Data sub-section Torque Wrench Settings pages 5 & 11 Capacities, Fluids and Lubricants page 1	Contents amended. Introduction of 1.1 'K8' engine. Introduction of 1.1 'K8' engine. Section content revised. Introduction of 1.1 'K8' engine and drum ABS. Introduction of 1.1 'K8' engine.
ENGINE - 'K16'	Repairs page 69	Repairs page 69	Torque figure corrected.
STEERING	Contents page Adjustments page 1 Repairs pages 9 & 11 Repairs pages 15 to 21	Contents page Adjustments page 1 Repairs pages 9 & 11 Repairs pages 15 to 21	Contents amended. Text correction. Introduction of PAS drive belt automatic tensioner. 'K' series PAS pump repair procedure revised. Introduction of PAS drive belt automatic tensioner. Introduction of passive coil for friendly re-mobilisation.

Continued.....

Section	Discard Existing Pages	Insert New Pages	Reason for Amendment
FRONT SUSPENSION	Repairs page 11	Repairs page 11	Front beam repair procedure revised.
REAR SUSPENSION	Contents page Description and Operation pages 1 & 3 Repairs pages 3 to 19	Contents page Description and Operation pages 1 & 3 Repairs pages 3 to 25	Contents amended. Introduction of drum ABS. Introduction of drum ABS. Stub axle bolt torque figure amended.
BRAKES	Contents page Description and Operation page 7 Repairs pages 3, 5, 9 & 29	Contents page Description and Operation page 7 Repairs pages 3, 5, 9 & 29 Repairs pages 31 & 33	Contents amended. Introduction of ABS 5.3. Illustration correction. Introduction of ABS 5.3.
RESTRAINT SYSTEMS	Contents page	Contents page Precautions page 11	Contents amended. Service replacement policy.
ELECTRICAL	Contents page Repairs pages 39 & 49	Contents page Repairs pages 39, 49 & 51	Contents amended. Headlamp levelling motor repair procedure added. Introduction of friendly re-mobilisation.

Technical Information Review

While every attempt is made to ensure that the technical information we supply is as accurate and up to date as possible, from time to time, errors do occur. There may also be instances where the style or content of our publications do not meet your exact needs.

We would value your assistance in helping us to improve the quality of our publications and invite you to submit details of any technical errors, or improvements you would like to see, in the space below.

Publication part number and edition .....

Publication title .....

Section and/or pages affected .....

Technical information errors:

_____

_____

_____

_____

_____

_____

_____

_____

Other improvements/changes you would like us to consider:

_____

_____

_____

_____

_____

_____

_____

_____

Service manager's signature .....

Date .....

Dealer Stamp

Please return to:
Technical Communication, Rover Group After Sales, PO BOX 29, Cowley, Oxford, OX4 5NL

NEW ROVER 200 SERIES

WORKSHOP MANUAL

This manual should be used in conjunction with the following overhaul manuals.

RCL 0053	R65 Manual Gearbox
RCL 0057	'K' Series Engine
RCL 0095	'L' Series Engine
RCL 0124	PG1 Manual Gearbox

Publication Part No. RCL 0064ENG (9th Edition)
Published by Rover Technical Communication
© 1999 Rover Group Limited

INTRODUCTION
GENERAL INFORMATION
INFORMATION

MAINTENANCE

ENGINE - 'K8'
ENGINE - 'K16'
ENGINE - 'K16 WITH VVC'
ENGINE - 'L' SERIES

EMISSION CONTROL
ENGINE MANAGEMENT SYSTEM:
- MEMS
- EDC
FUEL DELIVERY SYSTEM

COOLING SYSTEM - 'K' SERIES
COOLING SYSTEM - 'L' SERIES

MANIFOLD & EXHAUST SYSTEMS

CLUTCH

MANUAL GEARBOX - 'R65'
MANUAL GEARBOX - 'PG1'
AUTOMATIC GEARBOX - 'CVT'

DRIVE SHAFTS

STEERING

FRONT SUSPENSION
REAR SUSPENSION

BRAKES

RESTRAINT SYSTEMS
BODY

HEATING & VENTILATION
AIR CONDITIONING

WIPERS & WASHERS
ELECTRICAL
INSTRUMENTS

CONTENTS

Page

INTRODUCTION

INTRODUCTION 1
REPAIRS AND REPLACEMENTS 2
SPECIFICATION 2
MODEL CHANGE IDENTIFICATION 3
ABBREVIATIONS AND SYMBOLS 4

INTRODUCTION

How to use this Manual

To assist in the use of this Manual the section title is given at the top and the relevant sub-section is given at the bottom of each page.

Each major section starts with a contents page, listing the information contained in the relevant sub-sections. To assist filing of revised information each sub-section is numbered from page 1.

The individual items comprising repair operations are to be followed in the sequence in which they appear. Items numbers in the illustration are referred to in the text.

Adjustment and repair operations include reference to Service tool numbers and the associated illustration depicts the tool. Where usage is not obvious the tool is shown in use. Adjustment and repair operations also include reference to wear limits, relevant data, torque figures, and specialist information and useful assembly details. Each adjustment or repair operation is given its Repair Operation Time number.

WARNINGS, CAUTIONS and **NOTES** have the following meanings:

WARNING: Procedures which must be followed precisely to avoid the possibility of injury.

CAUTION: Calls attention to procedures which must be followed to avoid damage to components.

NOTE: Gives helpful information.

References

References to the LH or RH side given in this Manual are made when viewing the vehicle from the rear. With the engine and gearbox assembly removed, the crankshaft pulley end of the engine is referred to as the front.

Operations covered in this Manual do not include reference to testing the vehicle after repair. It is essential that work is inspected and tested after completion and if necessary a road test of the vehicle is carried out particularly where safety related items are concerned.

Dimensions

The dimensions quoted are to design engineering specification with Service limits where applicable.

REPAIRS AND REPLACEMENTS

When replacement parts are required it is essential that only Rover recommended parts are used.

Attention is particularly drawn to the following points concerning repairs and the fitting of replacement parts and accessories.

Safety features and corrosion prevention treatments embodied in the car may be impaired if other than Rover recommended parts are fitted. In certain territories, legislation prohibits the fitting of parts not to the manufacturer's specification. Torque wrench setting figures given in this Manual must be used. Locking devices, where specified, must be fitted. If the efficiency of a locking device is impaired during removal it must be renewed.

Owners purchasing accessories while travelling abroad should ensure that the accessory and its fitted location on the car conform to legal requirements.

The Terms of the vehicle Warranty may be invalidated by the fitting of other than Rover recommended parts.

All Rover recommended parts have the full backing of the vehicle Warranty.

Rover Dealers are obliged to supply only Rover recommended parts.

SPECIFICATION

Rover are constantly seeking to improve the specification, design and production of their vehicles and alterations take place accordingly. While every effort has been made to ensure the accuracy of this Manual, it should not be regarded as an infallible guide to current specifications of any particular vehicle.

This Manual does not constitute an offer for sale of any particular vehicle. Rover Dealers are not agents of Rover and have no authority to bind the manufacturer by any expressed or implied undertaking or representation.

MODEL CHANGE IDENTIFICATION

Model year feature changes are identified from the following VIN's:

97.5MY from VIN 186624
All models except 200*vi* badged as 200
1.8 'K16' engine
Headlamp levelling

98MY from VIN 267264
1.1 'K8' engine
Bosch ABS5.3
Drum ABS
Friendly re-mobilisation

ABBREVIATIONS AND SYMBOLS

After Bottom Dead Centre	ABDC
After Top Dead Centre	ATDC
Air conditioning	A/C
Air fuel ratio	AFR
Alternating current	ac
Amperes	A
Anti-lock brake system	ABS
Before Bottom Dead Centre	BBDC
Before Top Dead Centre	BTDC
Bottom Dead Centre	BDC
British Standards	BS
Carbon monoxide	CO
Celcius (Centigrade)	C
Centimetre	cm
Chlorofluorocarbons	CFCs
Crankshaft position	CKP
Cubic centimetres	cm^3
Degree (angle)	deg. or °
Degree (temperature)	deg. or °
Dial test indicator	DTI
Diameter	dia.
Direct current	dc
Double Overhead Camshaft	DOHC
Electronic Control Unit	ECU
Exhaust gas recirculation	EGR
Electronic air control valve	EACV
Engine Control Module	ECM
Electronic Diesel Control	EDC
Engine coolant temperature	ECT
Fuel Injection Pump	FIP
Gramme (mass)	g
Heated oxygen sensor	HO2S
High compression	hc
High tension	h.t.
Hour	h
Idle air control valve	IACV
Intake air temperature	IAT
Internal diameter	i.dia.
International Organisation for Standardization	ISO
Kilometre	km
Kilogramme	kg
Left-hand	LH
Left-hand drive	LHD
Light emitting diode	LED
Litre	l
Low Compression	lc
Manifold absolute pressure	MAP
Mass air flow	MAF
Mercury	Hg
Metre	m
Miles per hour	mph
Millimetre	mm
Minimum	min
Minus (of tolerance)	-
Minute (angle)	'
Model Year	MY
Multi-function unit	MFU
Multi-point injection	MPi
Negative (electrical)	(-)
Newton metre	Nm
Number	No.
Outside diameter	o.dia.
Percentage	%
Plus or minus	æ
Plus (tolerance)	+
Positive (electrical)	+
Positive crankcase ventilation	PCV
Positive temperature coefficient	PTC
Power assisted steering	PAS
Radius	r
Ratio	:
Reference	ref
Revolutions per minute	rev/min
Right-hand	RH
Right-hand drive	RHD
Rover Engineering Standards	RES
Second (angle)	"
Single overhead camshaft	SOHC
Specific gravity	sp.gr
Square centimetres	cm^2
Standard	std.
Supplementary Restraint System	SRS
Synchronizer/synchromesh	synchro
Thousand	k
Top dead centre	TDC
Throttle position	TP
United Kingdom	UK
United States	US
Vehicle identification number	VIN
Volt	V
Watt	W

CONTENTS

Page

VEHICLE IDENTIFICATION NUMBER
VEHICLE IDENTIFICATION NUMBER 1
IDENTIFICATION NUMBER LOCATIONS 1

GENERAL PRECAUTIONS AND FITTING INSTRUCTIONS
GENERAL PRECAUTIONS AND FITTING INSTRUCTIONS 1
Dangerous substances 1
Engine oils 1
Health Protection Precautions 1
Environmental Protection Precautions 1
SAFETY INSTRUCTIONS 2

FUEL HANDLING PRECAUTIONS
FUEL HANDLING PRECAUTIONS 1

ELECTRICAL PRECAUTIONS
ELECTRICAL PRECAUTIONS 1

VEHICLE IDENTIFICATION NUMBER

Location

The Vehicle Identification Number (VIN) plate is attached to the LH 'B' post.
The VIN is also stamped in the followinng locations:
On the centre top of the engine bulkhead.
On a plate behind the LH lower corner of the windscreen.

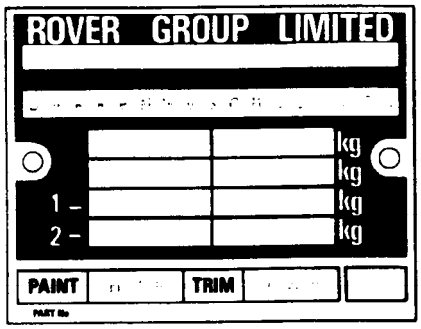

1M0061

Vehicle identification number

Example: S A R R F M W X C A D 000400

S= Geographic area

A= Country

R= Manufacturer

RF= Marque/Model

M= Class

W= Body

X= Engine

C= Transmission and Steering

A= Model change

D= Assembly plant

6 figures= Serial number

Paint and Trim colour codes

3-letter codes identifying the original Paint and Trim colours are stamped on the VIN plate.

Paint

Example: H A M

H= Basic colour

A= Mark identifier

M= Colour/Shade name

Trim

Example: L P R

L= Basic colour

P= Mark identifier

R= Colour/Shade name

IDENTIFICATION NUMBER LOCATIONS

Engine number

'K' Series Engine: Stamped on the front face of the cylinder block adjacent to the gearbox.

'L' Series Engine: Stamped on the front face of the cylinder block at top centre.

Gearbox number

Manual Gearbox - R65 and PG1: Stamped on a label attached to the front face of the clutch housing.

Automatic Gearbox: Stamped on a plate attached to the rear top face of the gearbox.

Body number

The body number is stamped on a plate fixed to the floor to the LH side of the spare wheel compartment.

GENERAL PRECAUTIONS AND FITTING INSTRUCTIONS

Ignition system safety precautions

WARNING: Before commencing work on an ignition system, all high tension terminals, adapters and diagnostic equipment for testing should be inspected to ensure that they are adequately insulated and shielded to prevent accidental personal contacts and minimise the risk of shock. Wearers of surgically implanted pacemaker devices should not be in close proximity to ignition circuits or diagnostic equipment.

Dangerous substances

WARNING: Many liquids and other substances used in motor vehicles are poisonous and should under no circumstances be consumed and should, as far as possible, be kept from contact with the skin. These substances among others include acid, anti- freeze, asbestos, brake fluid, fuel, windscreen washer additives, lubricants, refrigerant and various adhesives.
Always read carefully the instructions printed on labels or stamped on components and obey them implicitly. Such instructions are included for reasons of your health and personal safety. Never disregard them.
Used engine oils: Prolonged exposure to used engine oils can cause serious skin disorders, avoid excessive skin contact and always adhere to the following recommendations:

Engine oils

Prolonged and repeated contact with mineral oil will result in the removal of natural fats from the skin, leading to dryness, irritation and dermatitis. In addition, used engine oil contains potentially harmful contaminants which may cause skin cancer. Adequate means of skin protection and washing facilities must be provided.

Health Protection Precautions

- Avoid prolonged and repeated contact with oils, particularly used engine oils.
- Wear protective clothing, including impervious gloves where practicable.
- Do not put oily rags in pockets.
- Avoid contaminating clothes, particularly underpants, with oil.
- Overalls must be cleaned regularly. Discard heavily soiled clothing and oil impregnated footwear.
- First aid treatment should be obtained immediately for open cuts and wounds.
- Use barrier creams, applying before each work period, to help the removal of oil from the skin.
- Wash with soap and water to ensure all oil is removed (skin cleansers and nail brushes will help). Preparations containing lanolin replace the natural skin oils which have been removed.
- Do not use petrol, kerosene, diesel fuel, gas oil, thinners or solvents for cleaning skin.
- If skin disorders develop, obtain medical advice without delay.
- Where practicable, degrease components prior to handling.
- Where there is a risk of eye contact, eye protection should be worn, for example, chemical goggles or face shields; in addition an eye wash facility should be provided.

Environmental Protection Precautions

It is illegal to pour used oil on to the ground, down sewers or drains, or into water courses.

Burning of used engine oil in small space heaters or boilers can be recommended only for units of approved design. The heating system must meet the regulatory standards for small burners(s) with a net rated thermal input of less than 3 MW.The use of waste oil burners must be licensed by the local authority.

Dispose of used oil and used filters through authorised waste disposal contractors to licensed waste disposal sites, or to the waste oil reclamation trade. If in doubt, contact the Local Authority for advice on disposal facilities.

SAFETY INSTRUCTIONS

Jacking

The recommended jacking points are given in **LIFTING AND TOWING**, always ensure that any lifting apparatus has adequate load and safety capacity for the weight to be lifted. Ensure the vehicle is standing on level ground prior to lifting or jacking. Apply the handbrake and chock the wheels.

Never rely on a jack as the sole means of support when working beneath the vehicle. Use additional safety supports beneath the vehicle.

Do not leave tools, lifting equipment, spilt oil, etc. around or on the work bench area.

Precautions against damage

Always fit wing and seat covers before commencing work. Avoid spilling brake fluid or battery acid on paintwork. Wash off with water immediately if this occurs.

Disconnect the battery earth lead before starting work, see **ELECTRICAL PRECAUTIONS.**

Always use the recommended service tool or a satisfactory equivalent where specified.

Protect exposed bearing and sealing surfaces and screw threads from damage.

Brake shoes and pads

WARNING: Always fit the correct grade and specification of brake linings and renew brake pads and brake shoes in axle sets only.

Brake hydraulics

WARNING: It is imperative that the correct brake fittings are used and that threads of components are compatible.

Always use two spanners when slackening or tightening brake pipe or hose connections. Ensure that hoses run in a natural curve and are not kinked or twisted. Fit brake pipes securely in their retaining clips and ensure that the pipe run cannot contact a potential chafing point.

Containers used for hydraulic fluid must be kept absolutely clean. Do not store hydraulic fluid in an unsealed container, it will absorb water and in this condition would be dangerous to use. Do not allow hydraulic fluid to be contaminated with mineral oil, or use a container which has previously contained mineral oil. Do not re-use fluid from the system. Always use clean brake fluid or a recommended alternative to clean hydraulic components. Fit a blanking cap to an hydraulic union and a plug to its socket after removal to prevent the ingress of dirt. Absolute cleanliness must be observed with hydraulic components.

Engine coolant caps and plugs

Extreme care is necessary when removing engine coolant caps and plugs when the engine is hot and especially if it is overheated. To avoid the possibility of scalding allow the engine to cool before attempting coolant cap or plug removal.

Cleaning components

Always use the recommended cleaning agent or equivalent.

Do not use degreasing equipment for components containing items which could be damaged by the use of this process. Whenever possible clean components and the area surrounding them before removal. Always observe scrupulous cleanliness when cleaning dismantled components.

Joints and joint faces

Fit joints dry unless otherwise specified in this Manual.

If gaskets and/or jointing compound is recommended for use; remove all traces of old jointing material prior to reassembly. Do not use a tool which will damage the joint faces and smooth out any scratches or burrs on the joint faces using an oil stone. Do not allow dirt or jointing material to enter any tapped holes.

Prior to reassembly, blow through any pipes, channels or crevices with compressed air.

Screw threads

Metric threads to ISO standards are used.

Damaged nuts, bolts and screws must always be discarded.

Cleaning up damaged threads with a die or tap impairs the strength and closeness of fit of the threads and is not recommended.

Castellated nuts must not be slackened back to accept a split-pin, except in those recommended cases when this forms part of an adjustment.

Do not allow oil or grease to enter blind threaded holes. The hydraulic action on screwing in the bolt or stud could split the housing.

Always tighten a nut or bolt to the recommended torque figure. Damaged or corroded threads can affect the torque reading.

To check or re-tighten a bolt or screw to a specified torque figure, first slacken a quarter of a turn, then retighten to the correct torque figure.

Bolt identification

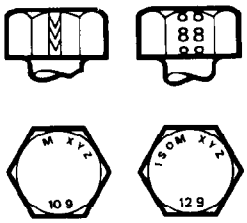

1M0055

An ISO metric bolt or screw made of steel and larger than 6 mm in diameter can be identified by either of the symbols ISO M or M embossed or indented on top of the head.

In addition to marks to identify the manufacturer, the head is also marked with symbols to indicate the strength grade, e.g. 8.8; 10.9; 12.9; 14.9. As an alternative, some bolts and screws have the M and strength grade symbol on the flats of the hexagon.

Nut identification

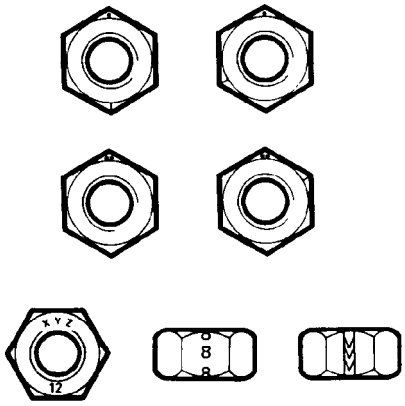

1M0056

A nut with an ISO metric thread is marked on one face or on one of the flats of the hexagon with the strength grade symbol 8, 12, or 14. Some nuts with a strength grade 4, 5 or 6 are also marked and some have the metric symbol M on the flat opposite the strength grade marking.

A clock face system is used as an alternative method of indicating the strength grade. The external chambers or a face of the nut is marked in a position relative to the appropriate hour mark on a clock face to indicate the strength grade.

A dot is used to locate the 12 o'clock position and a dash to indicate the strength grade. If the grade is above 12, two dots identify the 12 o'clock position.

Locking devices

Always release locking tabs and fit new locking washers, do not re-use locking tabs. Always use a backing spanner when slackening or tightening brake and fuel pipe unions.

Fitting a split pin

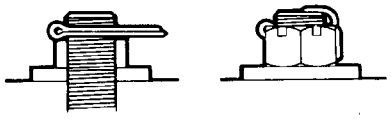

1M0057

Always fit new split-pins of the correct size for the hole in the bolt or stud. **Do not slacken back nut to enter split-pin.**

Always fit new roll pins of an interference fit in the hole.

Always fit new circlips of the correct size for the groove.

Self-locking nuts

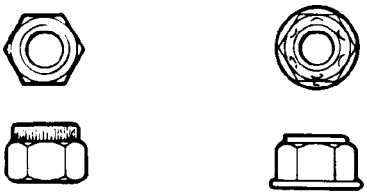

1M0058

Self-locking nuts, i.e. nylon insert or metal stiff nuts can be re-used providing resistance can be felt when the locking portion of the nut passes over the thread of the bolt or stud.

Self-locking bolts and screws

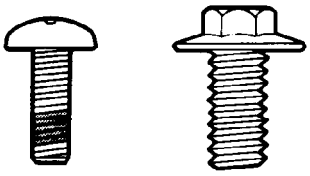

1M0059

Self-locking bolts and screws, i.e. nylon patched or trilobular thread can be re-used providing resistance can be felt when the locking portion enters the female thread.

Nylon patched bolts and screws have a locking agent pre-applied to the threads. They are identified by the presence of a coloured section of thread which extends for up to 180° around the thread.

Trilobular i.e. Powerlok bolts have a special thread form which creates a slight interference in the tapped hole or threads of the nut into which it is screwed.

DO NOT re-use self-locking fasteners in critical locations eg engine bearings flywheel. Always use the correct replacement self-locking nut, bolt or screw.

DO NOT fit non self-locking fasteners in applications where a self-locking nut, bolt or screw is specified.

Encapsulated bolts and screws

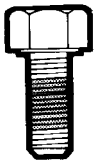

1M0062

Encapsulated bolts and screws have a micro-encapsulated locking agent pre-applied to the thread. They are identified by the presence of a coloured section of thread which extends completely around the thread - 360°. The locking agent is released and activated by the assembly process and is then chemically cured to provide the locking action.

Unless a specific repair procedure states otherwise, encapsulated bolts may be re-used providing the threads are undamaged and the following procedure is adopted.

Remove loose adhesive from the bolt and housing threads, ensure threads are clean and free of oil and grease. Apply an approved adhesive.

Fit a new encapsulated bolt, or if not available a bolt of equivalent specification treated with an approved adhesive.

Oil seals

Always renew oil seals which have been removed from their working location either as an individual component or as part of an assembly.

Ensure the surface on which the new seal is to run is free of burrs or scratches. Renew the component if the original sealing surface cannot be completely restored.

Protect the seal from any surface which it has to pass when being fitted. Use a protective sleeve or tape to cover the relevant surface.

Certain oil seals are coated with a protective wax and must be fitted dry unless stated otherwise. Where an oil seal needs to be lubricated prior to fitment, lubricate the sealing lips with a recommended lubricant before use to prevent damage in initial use. On dual lipped seals, smear the area between the lips with grease.

Use the recommended service tool to fit an oil seal.

If the correct service tool is not available, use a suitable tube approximately 0.4 mm smaller than the outside diameter of the seal.

Press or drift the seal in to the depth of its housing, with the sealing lip facing the lubricant to be retained if the housing is shouldered, or flush with the face of the housing where no shoulder is provided.

Service tools and garage equipment

Special service tools have been developed to facilitate removal, dismantling and assembly of mechanical components in a cost effective and practical manner without causing damage. Some operations in this Manual cannot be carried out without the aid of the relevant service tools.

Where specific garage equipment is required for diagnosis and repair, reference should be made to the Service Tools and Equipment Programme where details of the equipment recommended by Rover Service may be found.

Synthetic rubber

Many ’O’ rings, seals, hoses, flexible pipes and other similar items which appear to be natural rubber, are in fact, made of synthetic materials called Fluoroelastomers. Under normal operating conditions this material is safe and does not present a health hazard. However, if the material is damaged by fire or excessive heating, it can break down and produce highly corrosive Hydrofluoric acid which can cause serious burns on contact with skin. If skin contact does occur:

- Remove any contaminated clothing immediately.
- Irrigate effected area with a copious amount of cold water or limewater for 15 to 60 minutes.
- Obtain medical assistance immediately

Should the material be in a burnt or over-heated condition handle only with seamless industrial gloves. Decontaminate and dispose of gloves immediately after use.

FUEL HANDLING PRECAUTIONS

General

The following information provides basic precautions which must be observed if petrol (gasoline) is to be handled safely. It also outlines other areas of risk which must not be ignored. This information is issued for basic guidance only, and if in doubt appropriate enquiries should be made of your local Fire Officer.

Petrol - Gasoline

Petrol/gasoline vapour is highly flammable and in confined spaces is also explosive and toxic.

When petrol/gasoline evaporates it produces 150 times its own volume in vapour which when diluted with air becomes a readily ignitable mixture. The vapour is heavier than air and will always fall to the lowest level. It can readily be distributed throughout a workshop by air currents; consequently, even a small spillage of petrol/ gasoline is potentially very dangerous.

Always have a fire extinguisher containing FOAM, CO2, GAS or POWDER close at hand when handling or draining fuel or when dismantling fuel systems and in other areas where fuel containers are stored.

Always disconnect the vehicle battery before carrying out dismantling or draining work on a fuel system.

Whenever petrol/gasoline is being handled, drained or stored or when fuel systems are being dismantled, all forms of ignition must be extinguished or removed; any leadlamps must be flameproof and kept clear of spillage.

WARNING: No one should be permitted to repair components associated with petrol/gasoline without first having specialist training.

Fuel tank drainage

WARNING: Petrol/gasoline must not be extracted or drained from any vehicle whilst it is standing over a pit.
Draining or extraction of petrol/gasoline from a vehicle fuel tank must be carried out in a well ventilated area.
The receptacle used to contain the petrol/gasoline must be more than adequate for the full amount of fuel to be extracted or drained.
The receptacle should be clearly marked with its contents, and placed in a safe storage area which meets the requirements of local authority regulations.

CAUTION: When petrol/gasoline has been extracted or drained from a fuel tank the precautions governing naked lights and ignition sources should be maintained.

Fuel tank removal

When the fuel line is secured to the fuel tank outlet by a spring steel clip, the clip must be released before the fuel line is disconnected or the fuel tank is removed. This procedure will avoid the possibility of residual petrol fumes in the fuel tank being ignited when the clip is released.

As an added precaution fuel tanks should have a ’PETROL (GASOLINE) VAPOUR’ warning label attached to them as soon as they are removed from the vehicle.

Fuel tank repairs

Under no circumstances should a repair to any fuel tank involving heat treatment be carried out without first rendering the tank SAFE, by using one of the following methods:

a. STEAMING: With the filler cap and tank unit removed, empty the tank. Steam the tank for at least two hours with low pressure steam. Position the tank so that condensation can drain away freely, ensuring that any sediment and sludge not volatized by the steam is washed out during the steaming process.

b. BOILING: With the filler cap and tank unit removed, empty the tank. Immerse the tank completely in boiling water containing an effective alkaline degreasing agent or a detergent, with the water filling and also surrounding the tank for at least two hours.

After steaming or boiling, a signed and dated label to this effect should be attached to the tank.

Body and underbody repairs

When a body or underbody repairs involve the use of heat, all fuel pipes which run in the vicinity of the repair area must be removed, and the tank outlet plugged, BEFORE HEAT IS APPLIED. If the repair is in the vicinity of the fuel tank, the tank must be removed.

Plastic fuel pipes are particularly susceptible to heat, even at relatively low temperature, and can be melted by heat conducted from some distance away.

Fuel lines or tanks must not be removed whilst the vehicle is over an inspection pit.

ELECTRICAL PRECAUTIONS

General

The following guidelines are intended to ensure the safety of the operator whilst preventing damage to the electrical and electronic components fitted to the vehicle. Where necessary specific precautions are detailed in the relevant sections of this Manual which should be referred to prior to commencing repair operations.

Equipment - Prior to commencing any test procedure on the vehicle ensure that the relevant test equipment is working correctly and any harness or connectors are in good condition, this particularly applies to mains lead and plugs.

WARNING: Before commencing work on an ignition system all high tension terminals, adapters and diagnostic equipment for testing should be inspected to ensure that they are adequately insulated and shielded to prevent accidental personal contacts and minimise the risk of shock. Wearers of surgically implanted pacemaker devices should not be in close proximity to ignition circuits or diagnostic equipment.

Polarity - Never reverse connect the vehicle battery and always observe the correct polarity when connecting test equipment.

High Voltage Circuits - Whenever disconnecting live ht circuits always use insulated pliers and never allow the open end of the ht lead to come into contact with other components particularly ECU's. Exercise caution when measuring the voltage on the coil terminals while the engine is running, high voltage spikes can occur on these terminals.

Connectors and Harness - The engine compartment of a vehicle is a particularly hostile environment for electrical components and connectors. Always ensure these items are dry and oil free before disconnecting and connecting test equipment. Never force connectors apart either by using tools or by pulling on the wiring harness. Always ensure locking tabs are disengaged before removal and not orientation to enable correct reconnection. Ensure that any protective covers and substances are replaced if disturbed.

Having confirmed a component to be faulty switch off the ignition and disconnect the battery. Remove the component and support the disconnected harness. When replacing the component keep oily hands away from electrical connection areas and push connectors home until any locking tabs fully engage.

Battery disconnection

Before disconnecting the battery, switch off all electrical equipment. If the radio is to be serviced, ensure the security code has been deactivated.

CAUTION: To prevent damage to electrical components ALWAYS disconnect the battery when working on the vehicle electrical system. The earth lead must be disconnected first and reconnected last. Always ensure that battery leads are routed correctly and are not close to any potential chafing points.

Battery charging

Recharge the battery out of the vehicle and keep the top well ventilated. While being charged or discharged, and for approximately fifteen minutes afterwards, batteries emit hydrogen gas. This gas is inflammable.

Always ensure any battery charging area is well ventilated and that every precautions is taken to avoid naked flames and sparks.

Disciplines

Switch off ignition prior to making any connection or disconnection in the system as electrical surge caused by disconnecting 'live' connections can damage electronic components.

Ensure hands and work surfaces are clean and free of grease, swarf, etc. as grease collects dirt which can cause tracking or high-resistance contacts.

When handling printed circuit boards, treat them as you would a disc - hold by the edges only; note that some electronic components are susceptible to body static.

Connectors should never be subjected to forced removal or refit, especially inter-board connectors, damaged contacts will cause short- circuit and open-circuit conditions.

Prior to commencing test, and periodically during test, touch a good earth, i.e. cigar lighter socket, to discharge body static as some electronic components are vulnerable to static electricity.

Grease for electrical connectors

All under bonnet and under body connectors are protected against corrosion by the application of a special grease on production. Should connectors be disturbed in service or repaired or replaced, a grease of this type, available in 150 gm tubes under Part No. BAU 5811, should again be applied.

NOTE: The use of greases other than BAU 5811 must be avoided as they can migrate into relays, switches etc. contaminating the contacts and leading to intermittent operation or failure.

CONTENTS

Page

LIFTING AND TOWING
JACKING, SUPPORTING AND TOWING 2
WORKSHOP JACK 3
WHEEL-FREE LIFT 3
RECOVERY 3
TOWING 4

GENERAL DATA
ENGINE - 'K' SERIES 1
ENGINE - 'K' SERIES WITH VVC 1
ENGINE - 'L' SERIES 2
FUEL SYSTEM - 'K' SERIES 2
FUEL SYSTEM - 'L' SERIES 2
COOLING SYSTEM - 'K' SERIES 3
COOLING SYSTEM - 'L' SERIES 3
CLUTCH 3
MANUAL GEARBOX - R65 4
MANUAL GEARBOX - PG1 4
AUTOMATIC GEARBOX 4
FINAL DRIVE 5
STEERING - EXCEPT BRM 5
STEERING - BRM 6
SUSPENSION - EXCEPT BRM 6
SUSPENSION - BRM 7
BRAKES 8
WHEELS 9
TYRE SIZES 10
TYRE PRESSURES - 1.1, 1.4 & 1.6 'K' SERIES WITH MANUAL GEARBOX 11
TYRE PRESSURES - 1.6 'K' SERIES WITH AUTOMATIC GEARBOX 12
TYRE PRESSURES - 1.8 'K' SERIES & 1.8 'K' SERIES WITH VVC - EXCEPT BRM 13
TYRE PRESSURES - 1.8 'K' SERIES WITH VVC - BRM 13
TYRE PRESSURES - 2.0 'L' SERIES 14
ELECTRICAL - 'K' SERIES 15
ELECTRICAL - 'L' SERIES 15
DIMENSIONS 16
WEIGHTS 17

ENGINE TUNING DATA
1.1 K8 with MPi 1
1.4 K8 with MPi 2
1.4 and 1.6 K16 with MPi 3
1.8 K16 with VVC 4
2.0 - 'L' Series 5
1.8 K16 with MPi 6

TORQUE WRENCH SETTINGS
ENGINE - 'K' SERIES 1
ENGINE - 'L' SERIES 2
EMISSION CONTROL 3
ENGINE MANAGEMENT SYSTEM - MEMS 3

CONTENTS

Page

ENGINE MANAGEMENT SYSTEM - EDC 4
FUEL DELIVERY SYSTEM 5
COOLING 5
MANIFOLD AND EXHAUST 6
CLUTCH 6
MANUAL GEARBOX - R65 7
MANUAL GEARBOX - PG1 7
AUTOMATIC GEARBOX - CVT 8
DRIVE SHAFTS 8
STEERING 9
SUSPENSION 10
BRAKES 11
RESTRAINT SYSTEMS 11
BODY 12
HEATING AND VENTILATION 13
AIR CONDITIONING 13
WIPERS AND WASHERS 14
ELECTRICAL 14
INSTRUMENTS 14

CAPACITIES, FLUIDS AND LUBRICANTS

CAPACITIES 1
FLUIDS 2
LUBRICATION 3

This page is intentionally left blank

JACKING, SUPPORTING AND TOWING

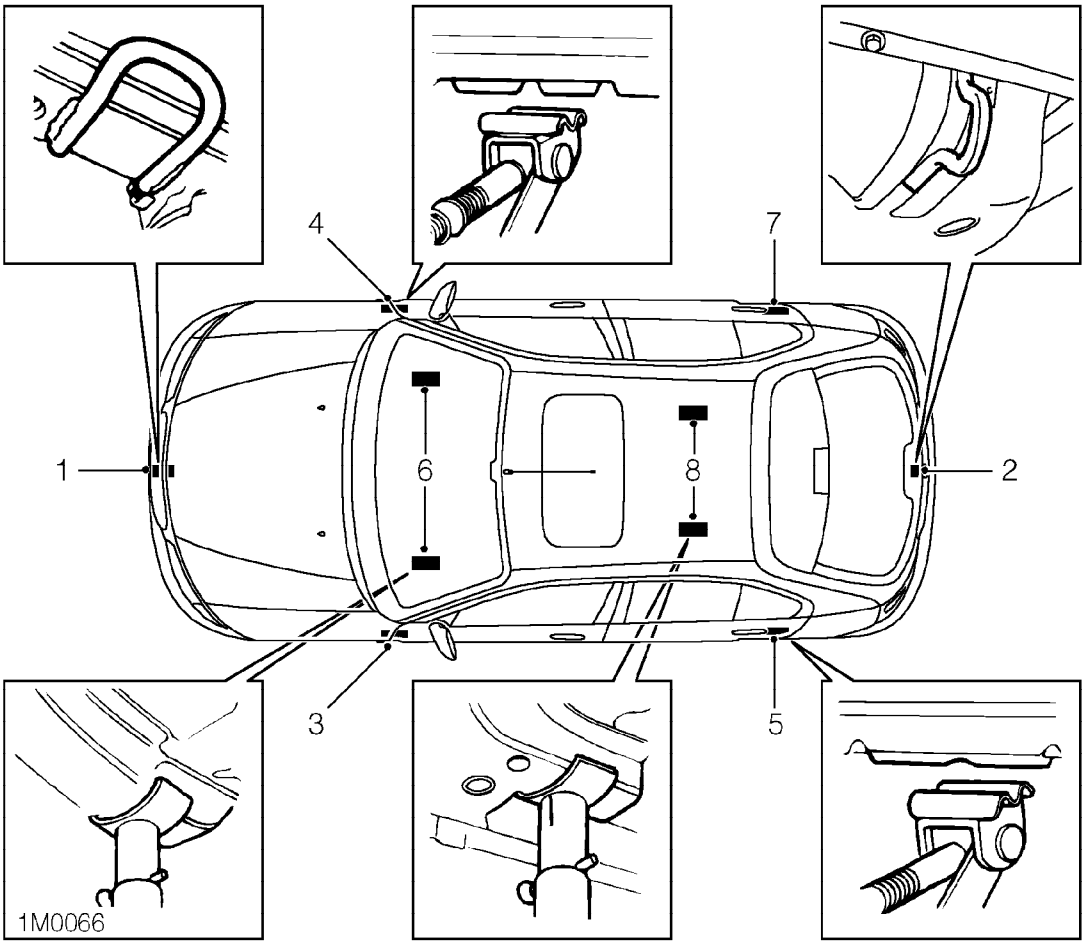

Jacking and support points

1. Front jacking point, lashing/towing eye - front
2. Rear jacking point, lashing/towing eye - rear
3. LH sill re-inforced bracket front
4. RH sill re-inforced bracket front
5. LH sill re-inforced bracket rear
6. Longitudinal members - front
7. RH sill re-inforced bracket rear
8. Longitudinal members - rear

WARNING: In accordance with normal workshop practice and to avoid the possibility of damage or personal injury, work must not be carried out on or under a vehicle when it is supported solely on a jack. Place safety supports under the floor longitudinal members (3, 4, 5 and 7).

WARNING: Do not position a jack, jack stand or wheel free support under the suspension attachment points or the rear suspension 'H' frame.

WORKSHOP JACK

WARNING: Do not attempt to jack under suspension attachment points or the rear suspension 'H' frame.

Front
Locate the jack head under the central towing bracket (1).
Position safety supports under both front longitudinal members (6).

Rear
Locate the jack head under the rear towing eye (2).
Position safety supports under both rear longitudinal members (8).

Side

CAUTION: The side jacking points are designed to accomodate the vehicle jack only.

Front: Locate the jack head pad under the front reinforced bracket between the two protrusions on the sill (3 or 4).
Position a safety support under the appropriate front longitudinal member (6).

Rear: Locate the jack head pad under the reinforced bracket between the two protrusions on the rear sill (5 or 7).
Position a safety support under the appropriate rear longitudinal member (8).

WHEEL-FREE LIFT

Two-post lift and crossbeams: Locate the pads under the sill reinforced jacking brackets at the front (3, 4) and rear (5, 7).

Longitudinal beams: Locate the beams under the floor longitudinals with the lifting pads at the front and rear positions (6) and (8). Raise the lift a few inches and ensure the vehicle is firmly supported. Raise the lift to full height and inspect the lifting points for security.

RECOVERY

It is recommended that a recovery trailer or two wheel car ambulance be used. In an emergency, the car may be towed on its own wheels using the front lashing/towing eye (1).

Suspended tow
A front wheel lift should be used with a cross beam and body protection.

Before towing commences release the handbrake, place the gear lever in neutral and the ignition switch at **'I'**. Do not tow at a speed greater than 30 mph, 50 km/h.

CAUTION: On no account should the vehicle be towed with the front wheels on the ground if the transmission is faulty, the transmission fluid level is low, or the towing distance exceeds 30 miles, 50 km.

TOWING

CAUTION: The rear lashing/towing eye (2), must only be used for towing a light vehicle.

Manual gearbox models
Use the front lashing/towing eye (1) for towing the vehicle on all four wheels from the front.

WARNING: To ensure that the steering does not lock when the vehicle is being towed, it is essential that the starter key is turned to position 'I', and remains there while the vehicle is moving.
Ensure the following precautions are observed:
Do not tow if the gearbox or a drive shaft is faulty.
Do not tow if a wheel or drive shafts are touching the body or frame.
Ensure the gear lever is in neutral and the handbrake is released.
Remember that greater effort than normal will be necessary to apply the brakes if the vehicle is being towed without the engine running.

Automatic gearbox models

When a car with an automatic gearbox is to be towed, a suspended tow must be used because the gearbox is not adequately lubricated without the engine running. The following precautions must be observed:

The selector must be at **'N'**.

CAUTION: A rear suspended tow must not be attempted as serious damage will be caused to the automatic transmission.

NOTE: A vehicle fitted with an automatic gearbox cannot be started by towing or pushing.

ENGINE - 'K' SERIES

Type:	
K8	8 valve SOHC
K16	16 valve DOHC
Cylinder arrangement	4 in line - transverse
Bore:	
1.1 & 1.4	75.00 mm
1.6 & 1.8	80.00 mm
Stroke	
1.1	63.25 mm
1.4 & 1.6	79.00 mm
1.8	89.30 mm
Capacity:	
1.1	1120 cm^3
1.4	1396 cm^3
1.6	1589 cm^3
1.8	1796 cm^3
Firing order	1 - 3 - 4 - 2
Rotation	Clockwise, viewed from front of engine

Lubrication

System Type	Wet sump, crankshaft driven eccentric rotor pump
Pressure at idle	1.7 to 3.5 bar
Relief valve opening pressure	4.1 bar
Maximum pressure at 6500 rev/min	7.0 bar (below 40°C)
Oil pressure warning light switch opens	0.3 to 0.5 bar
Oil filter	Full flow with disposable canister

ENGINE - 'K' SERIES WITH VVC

Type	16 valve DOHC with Variable Valve Control on inlet valves
Cylinder arrangement	4 in line - transverse
Bore	80.00 mm
Stroke	89.30 mm
Capacity	1796 cm^3
Firing order	1 - 3 - 4 - 2
Rotation	Clockwise, viewed from front of engine

Lubrication

System Type	Wet sump, crankshaft driven eccentric rotor pump
Pressure at idle	1.7 to 3.5 bar
Relief valve opening pressure	4.1 bar
Maximum pressure at 6500 rev/min	7.0 bar (below 40°C)
Oil pressure warning light switch opens	0.3 to 0.5 bar
Oil filter	Full flow with disposable canister

ENGINE - 'L' SERIES

Type	8 valve SOHC
Cylinder arrangement	4 in line - transverse
Bore	84 mm
Stroke	89 mm
Capacity	1994 cm^3
Firing order	1 - 3 - 4 - 2
Rotation	Clockwise, viewed from the front of the engine
Cylinder head warp - maximum	0.10 mm

Lubrication

System Type	Wet sump, crankshaft driven eccentric rotor pump
Pressure at idle	0.7 bar
Relief valve opening pressure	4.5 bar
Pressure at 3000 rev/min hot	3.8 bar
Oil pressure warning light switch opens	0.4 to 0.7 bar
Oil filter	Full flow with disposable canister

FUEL SYSTEM - 'K' SERIES

Electronic fuel injection data	***See Engine tuning data.***

Fuel Pump

Type	Electric immersible
Pump maximum pressure at 13.5V	4.1 bar
Regulated injection pressure range	3.0 ±0.2 bar

FUEL SYSTEM - 'L' SERIES

Fuel filter	Bosch 0450 906172
Fuel injection pump	Bosch rotary
Mechanical	VP21
Electronic	VP37
Fuel injectors	Bosch two spring, needle lift sensing on number one injector

COOLING SYSTEM - 'K' SERIES

Pressure cap opens	0.9 to 1.2 bar
Thermostat starts to open	88° ± 2°C
Thermostat fully open	100° ± 2°C
Cooling fan operation:	
Heater cars	On - 104°C, Off - 98°C
Air conditioned cars:	
Slow speed	On - 104°C, Off - 98°C
Fast speed	On - 112°C, Off - 106°C

NOTE: With air conditioning operating, fans will run at slow speed. Fans may run on for up to 8 minutes if temperature exceeds 112°C at switch off.

COOLING SYSTEM - 'L' SERIES

Pressure cap opens	0.9 to 1.2 bar
Thermostat fully open	82° ± 5°C

Cooling fan switch

Models without intercooler:	
Without air conditioning	On - 104°C, Off - 94°C
With air conditioning:	
Slow speed	On - 98°C, Off - 94°C
Fast speed	On - 112°C, Off - 104°C
Models with intercooler:	
Without air conditioning	On - 105°C, Off - 94°C
With air conditioning:	
Slow speed	On - 105°C, Off - 94°C
Fast speed	On - 112°C, Off - 103°C

CLUTCH

Type	Diaphragm spring, hydraulic operation
Clutch plate diameter:	
1.1, 1.4 and 1.6 'K' Series	200 mm
1.8 'K' Series	215 mm
2.0 'L' Series:	
Without intercooler	215 mm
With intercooler	228 mm
Friction material wear limit	1.5 mm

MANUAL GEARBOX - R65

Gearbox code:	
1.1 'K' series	5C 42 WUR
1.4 'K' series	5C 39 WUR
1.6 'K' series	5C 37 WUC
Gear ratios:	
Fifth	0.854 : 1
Fourth	1.054 : 1
Third	1.333 : 1
Second	1.947 : 1
First	3.417 : 1
Reverse	3.583 : 1

MANUAL GEARBOX - PG1

Gearbox code	
1.8 'K' series	C6BS
1.8 'K' series with VVC	
- Except BRM	C4BS
- BRM	B6BST
2.0 'L' series:	
Without intercooler	S6BS
With intercooler	S6BSU

Gear ratios:	C4BS/C6BS	S6BS/S6BSU
Fifth	0.765 : 1	0.648 : 1
Fourth	1.033 : 1	0.848 : 1
Third	1.308 : 1	1.222 : 1
Second	1.842 : 1	1.895 : 1
First	3.167 : 1	3.250 : 1
Reverse	3.000 : 1	3.000 : 1

	B6BST
Fifth	0.848:1
Fourth	1.033:1
Third	1.308:1
Second	1.750:1
First	2.923:1
Reverse	3.000:1

AUTOMATIC GEARBOX

Type	Constantly Variable Transmission (CVT)
Gearbox code	VT-1
Ratio range	2.47 : 1 to 0.445 : 1

FINAL DRIVE

Ratios:		
1.1 'K' series	4.200 : 1	
1.4 'K' series	3.937 : 1	
1.6 'K' series	3.765 : 1	
1.8 'K' series	3.938 : 1	
1.8 'K' series with VVC		
- Except BRM	4.200 : 1	
- BRM	3.938:1	
2.0 'L' series	3.938 : 1	
Road speed at 1000 rev/min in top gear:		
1.1 'K' series	29.3 km/h	18.2 mph
1.4 'K' series	31.8 km/h	19.8 mph
1.6 'K' series:		
Manual gearbox	33.3 km/h	20.7 mph
Automatic gearbox	41.7 km/h	25.9 mph
1.8 'K' series	35.5 km/h	22.1 mph
1.8 'K' series with VVC		
- Except BRM	33.3 km/h	20.7 mph
- BRM	32.3 km/h	20.1 mph
2.0 'L' series	41.8 km/h	26.0 mph

STEERING - EXCEPT BRM

NOTE: The following steering geometry settings are given in degrees and minutes, decimal parts of a degree and millimetres. Steering and Suspension geometry settings are for a vehicle at unladen weight.

Front wheel alignment - toe-out - per side:	0° 5' ± 0° 7.5'	0.10° ± 0.12°
5J x 14 wheel	0.53 mm ± 0.80 mm	
$5^1/_2$ J x 15 wheel	0.60 mm ± 0.84 mm	
Front wheel camber - negative:	0° 20' ± 0° 10'	0.33° ± 0.21°
5J x 14 wheel	2.10 mm ± 1.03 mm	
$5^1/_2$ J x 15 wheel	2.20 mm ± 1.10 mm	
Front wheel caster:	2° ± 0° 30'	2 ° ± 0.5°
5J x 14 wheel	12.41 mm ± 3.10 mm	
$5^1/_2$ J x 15 wheel	13.30 mm ± 3.31 mm	
King pin inclination:	12° 7' ± 0° 30'	12.12° ± 0.5°
5J x 14 wheel	76.34 mm ± 3.10 mm	
$5^1/_2$ J wheel	81.80 mm ± 3.31 mm	
Turns - lock to lock:		
Manual	4.0	
PAS	3.4	
Rear wheel alignment - toe-in - per side:	0° 8' ± 0° 10'	0.13° ± 0.21°
5J x 14 wheel	0.82 mm ± 1.03 mm	
$5^1/_2$ J x 15 wheel	0.88 mm ± 1.10 mm	
Rear wheel camber - negative:	0° 20' ± 0° 10'	0.33° ± 0.21 °
5J x 14 wheel	2.10 mm ± 1.03 mm	
$5^1/_2$ J wheel	2.20 mm ± 1.10 mm	

STEERING - BRM

NOTE: The following steering geometry settings are given in degrees and minutes, decimal parts of a degree and millimetres. Steering and Suspension geometry settings are for a vehicle at unladen weight.

Front wheel alignment - toe-out - per side:	0° 5' ± 0° 7.5'	0.10° ± 0.12° 0.61 mm ± 0.85 mm
Front wheel camber - negative:	0° 51' ± 0° 45'	0.85° ± 0.75° 6.11 mm ± 5.32 mm
Front wheel caster:	1° 37' ± 1°	1.61° ± 1° 11.50 mm ± 7.11 mm
King pin inclination:	10° 48' ± 1°	10.8° ± 1° 77.54 mm ± 7.11 mm
Turns - lock to lock:	3.2	
Rear wheel alignment - toe-in - per side:	0° 8' ± 0° 7.5'	0.13° ± 0.12° 0.93 mm ± 0.85 mm
Rear wheel camber - negative:	0° 20' ± 0° 45'	0.33° ± 0.75 ° 2.41 mm ± 5.32 mm

SUSPENSION - EXCEPT BRM

Front

Type	Independent, MacPherson strut damper with coil spring and anti-roll bar.
Nominal height to wheel arch from hub centre *:	
All models except 1.8 'K' series & 1.8 'K' series with VVC	386 mm ± 10 mm
1.8 'K' series & 1.8 'K' series with VVC	366 mm ± 10 mm
Road spring identification (colour code):	
1.1, 1.4 & 1.6 'K' series:	
Manual gearbox	PINK
Air conditioning and/or Automatic	GREY
1.8 'K' series and 1.8 'K' series with VVC	BLUE
2.0 'L' series	BROWN
Anti-roll bar:	
1.1, 1.4 & 1.6 'K' series:	19 mm diameter
1.8 'K' series and 1.8 'K' series with VVC	25 mm diameter
2.0 'L' series	23 mm diameter

Rear

Type	Independent, torsion beam 'H' frame with dampers, coil springs and anti-roll bar - if fitted.
Nominal height to wheel arch from hub centre *.	
All models except 1.8 'K' series & 1.8 'K' series with VVC	387 mm ± 10 mm
1.8 'K' series and 1.8 'K' series with VVC	367 mm ± 10 mm
Road spring identification (colour code):	
All models except 1.8 'K' series and 1.8 'K' series with VVC	WHITE
1.8 'K' series and 1.8 'K' series with VVC	ORANGE
Anti-roll bar:	
1.8 'K' series and 1.8 'K' series with VVC - All models	18 mm diameter
2.0 'L' series	16 mm diameter

* At unladen weight

SUSPENSION - BRM

Front

Type	Independent, MacPherson strut damper with coil spring and anti-roll bar.
Nominal height to wheel arch from hub centre *:	346 mm ± 10 mm
Road spring identification (colour code):	WHITE
Anti-roll bar:	25 mm diameter

Rear

Type	Independent, torsion beam 'H' frame with dampers, coil springs and anti-roll bar.
Nominal height to wheel arch from hub centre *.	347 mm ± 10 mm
Road spring identification (colour code):	WHITE
Anti-roll bar:	18 mm diameter

* At unladen weight

BRAKES

Front disc brakes

Disc diameter:	262 mm
Disc wear limit (minimum thickness)	
Solid disc	11.0 mm
Ventilated disc	19.0 mm
Pad minimum thickness	3.0 mm

Rear disc brakes

Disc diameter	239 mm
Disc wear limit (minimum thickness)	8.0 mm
Pad minimum thickness	3.0 mm

Rear drum brakes

Drum inside diameter	203.2 mm
Drum wear limit (maximum diameter)	204 mm
Lining minimum thickness	2.0 mm

Master cylinder

Bore diameter:	
Except BRM	22.21 mm
BRM	23.83 mm

Brake servo

Servo boost ratio:	
Except BRM	4.0 : 1
BRM	4.6 : 1

Anti-lock braking system

System type:	
Up to 98MY	Bosch ABS5 electronic
98MY on	Bosch ABS5.3 electronic

WHEELS

Wheel type and size:

1.1 'K' series	5J x 14 steel
1.4 'K' series	
Standard	5J x 14 steel
Option	$5^1/_2$ J x 15 alloy*
1.6 'K' series	
Standard	5J x 14 steel
Option	$5^1/_2$ J x 15 alloy*
1.8 'K' series & 1.8 'K' series with VVC	
- Except BRM	$5^1/_2$ J x 15 alloy*
- BRM	$6^1/_2$ J x 16 alloy**
2.0 'L' series	
Standard	5J x 14 steel
Option	$5^1/_2$ J x 15 alloy*

* These cars fitted with alloy road wheels are equipped with a $5^1/_2$ J x 15 temporary use, steel spare wheel fitted with a 185/55-R15 81V tyre.
** BRM models are equipped with a 5J x 14 temporary use, steel spare wheel fitted with a 175/65-R14 82T tyre.

WARNING: The steel spare wheel supplied with cars fitted with alloy wheels is for temporary use only and must be changed as soon as possible after fitting. The car MUST be driven with caution and speed MUST NOT exceed 50 mph (80 km/h) with the spare wheel fitted. No more than one temporary spare wheel may be fitted at any one time. Replacement tyres fitted to the temporary use spare wheel must be of the same make and specification as those originally fitted.

TYRE SIZES

1.1 'K' series	175/65 - R14 82T
1.4 'K' series	
Steel wheel	175/65 - R14 82T
Alloy wheel	185/55 - R15 81V
1.6 'K' series	
Steel wheel	175/65 - R14 82H
Alloy wheel	185/55 - R15 81V
1.8 'K' series and 1.8 'K' series with VVC	
- Except BRM	185/55 - R15 81V
- BRM	Dunlop 205/45 ZR16 - Directional*
Steel spare wheel	Dunlop 175/65 R14*
2.0 'L' series (without intercooler)	
Steel wheel	175/65 - R14 82T
Alloy wheel	185/55 - R15 81V
2.0 'L' series (with intercooler)	
Steel wheel	175/65 - R14 82H
Alloy wheel	

* Replacement tyres must be of the same make and specification as those originally fitted.

TYRE PRESSURES - 1.1, 1.4 & 1.6 'K' SERIES WITH MANUAL GEARBOX

Pressures (cold):

Loading conditions	bar	lbf/in^2
Normal driving conditions		
175/65 R14 82T tyres		
Front and rear	2.1	30
175/65 R14 82H tyres		
Front and rear	2.1	30
185/55 R15 81V tyres		
Front and rear	2.1	30
Max. load conditions		
175/65 R14 82T tyres		
Front and rear	2.1	30
175/65 R14 82H tyres		
Front and rear	2.1	30
185/55 R15 81V tyres		
Front and rear	2.1	30
Speeds over 100 mph (160 km/h)		
175/65 R14 82T tyres		
Front and rear	2.3	33
175/65 R14 82H tyres		
Front and rear	2.4	34
185/55 R15 81V tyres		
Front and rear	2.4	34
Towing		
175/65 R14 82T tyres		
Front	2.1	30
Rear	2.4	34
175/65 R14 82H tyres		
Front	2.1	30
Rear	2.4	34
185/55 R15 81V tyres		
Front	2.1	30
Rear	2.4	34

TYRE PRESSURES - 1.6 'K' SERIES WITH AUTOMATIC GEARBOX

Pressures (cold):

Loading conditions	bar	lbf/in^2
Normal driving conditions		
175/65 R14 82T tyres		
Front	2.2	32
Rear	2.1	30
185/55 R15 81V tyres		
Front	2.3	33
Rear	2.1	30
Max. load conditions		
175/65 R14 82T tyres		
Front	2.2	32
Rear	2.1	30
185/55 R15 81V tyres		
Front	2.3	33
Rear	2.1	30
Speeds over 100 mph (160 km/h)		
175/65 R14 82T tyres automatic		
Front	2.5	36
Rear	2.4	34
185/55 R15 81V tyres		
Front	2.5	37
Rear	2.4	34
Towing		
175/65 R14 82T tyres		
Front	2.2	32
Rear	2.4	34
185/55 R15 81V tyres		
Front	2.3	33
Rear	2.4	34

TYRE PRESSURES - 1.8 'K' SERIES & 1.8 'K' SERIES WITH VVC - EXCEPT BRM

Pressures (cold):

Loading conditions	bar	lbf/in^2
Normal driving conditions		
Front and rear	2.2	32
Max. load conditions		
Front and rear	2.2	32
Speeds over 100 mph (160 km/h) automatic automatic		
Front and rear	2.6	38
Towing		
Front	2.2	32
Rear	2.5	36

TYRE PRESSURES - 1.8 'K' SERIES WITH VVC - BRM

Pressures (cold):

Loading conditions	bar	lbf/in^2
Normal driving conditions*		
Front	1.9	28
Rear	2.1	30
Max. load conditions**		
Front	2.2	32
Rear	2.1	30
Speeds over 100 mph (160 km/h) automatic		
Front and rear	2.6	38
Towing		
Front	2.2	32
Rear	2.5	36
Steel spare wheel		
Front and rear	2.1	30

* Up to 4 passengers and luggage
** Up to maximum gross vehicle weight

TYRE PRESSURES - 2.0 'L' SERIES

Pressures (cold):

Loading conditions	bar	lbf/in^2
Normal driving conditions		
175/65 R14 82T tyres		
Front	2.2	32
Rear	2.1	30
175/65 R14 82H tyres		
Front	2.2	32
Rear	2.1	30
185/55 R15 81V tyres		
Front	2.3	33
Rear	2.1	30
Max. load conditions		
175/65 R14 82T tyres		
Front	2.4	35
Rear	2.1	30
175/65 R14 82H tyres		
Front	2.5	35
Rear	2.1	30
185/55 R15 81V tyres		
Front	2.5	36
Rear	2.1	30
Speeds over 100 mph (160 km/h)		
175/65 R14 82T tyres		
Front	2.4	35
Rear	2.3	33
175/65 R14 82H tyres		
Front	2.5	35
Rear	2.3	33
185/55 R15 81V tyres		
Front	2.5	36
Rear	2.3	33
Towing		
175/65 R14 82T tyres		
Front	2.2	32
Rear	2.4	34
175/65 R14 82H tyres		
Front	2.2	32
Rear	2.4	34
185/55 R15 81V tyres		
Front	2.3	33
Rear	2.4	34

ELECTRICAL - 'K' SERIES

System	12 volt, negative earth
Battery	
Capacity	45 amp hour at 20 hour rate
Alternator	
Type	Magnetti Marelli A115-65A
Maximum output	65 Amps
Regulator	21TR
Starter motor	
Type	Magnetti Marelli E80E or M79
Power	
1.1, 1.4	0.8 kW
1.6	0.9 kW
1.8	1.0 kW

ELECTRICAL - 'L' SERIES

System	12 volt, negative earth
Battery	
Capacity	75 amp hour at 20 hour rate
Alternator	
Type	Nippon Denso
Maximum output:	
Without air conditioning	80 amp
With air conditioning	90 amp
Starter motor	
Type	Nippon Denso RA 11P 15
Power	1.8 kW

DIMENSIONS

Overall length	3.973 m
Overall width:	
Including mirrors	1.894 m
Excluding mirrors	1.688 m
Overall height*	
- Except BRM	1.419 m
- BRM	1.39 m
Ground clearance:	
All models except 1.8 'K' series & 1.8 'K' series with VVC *	120 mm
1.8 'K' series & 1.8 'K' series with VVC *	
- Except BRM	110 mm
- BRM **	114 mm
Wheelbase	2.502 m
Turning circle (kerb to kerb)	
- Except BRM	10.31 m
- BRM	11.39 m
Track:	
Front	1473 mm
Rear	1461 mm

* At unladen weight
** At unladen weight but including driver

WEIGHTS

Approximate unladen (fuel tank full, excluding options)		
Petrol models (manual gearbox)		
- Except BRM	1000 - 1060 kg	2205 - 2335 lb
- BRM	1100 kg	2424 lb
Petrol models (automatic gearbox)	1045 - 1085 kg	2305 - 2390 lb
Diesel models	1105 - 1165 kg	2435 - 2570 lb
Maximum gross vehicle weight:		
1.1 & 1.4 models	1460 - 1480 kg	3220 - 3265 lb
1.6 manual models	1480 - 1510 kg	3265 - 3330 lb
1.6 automatic models	1500 - 1550 kg	3310 - 3415 lb
1.8 models	1520 kg	3350 lb
Diesel models	1580 - 1620 kg	3485 - 3570 lb
Maximum rear axle load (must NOT be exceeded)	750 kg	1655 lb
Maximum rear axle load when towing at speeds up to 62 mph (100 km/h)	860 kg	1875 lb
Maximum towing weight - braked trailer (restart on 12% gradient with two occupants):		
1.1 models	800 kg	1765 lb
1.4 models	900 kg	1985 lb
All other models	1000 kg	2200 lb
Towing hitch downward load	70 kg	154 lb
Coupling device maximum overhang:		
Fixed coupling	749 mm	29.5 in
Removable coupling	779 mm	30.7 in
Maximum roof rack load (includes weight of rack)	65 kg	143 lb

Model: 1.1 K8 with MPi **Year: 1998 on**

Engine

Type/Capacity	11K8 / 1119 cm^3
Firing order	1 - 3 - 4 - 2
Compression ratio	9.75 : 1
Idle speed controlled by ECM	875 ± 50 rev/min
Exhaust gas CO content at idle**	less than 0.5% hot
Ignition timing at idle speed:*	
vacuum connected**	10 ± 5° BTDC

Programmed ignition

Distributor rotor arm	Resistive type
Rotation	Anti-clockwise (front of engine - clockwise)

Ignition Coil

Type	F type, dry
Primary resistance at 20°C	0.63 to 0.77 ohm

Spark Plugs

Type	Unipart GSP 6662
Gap	0.85 mm

Engine Management System

Type	Indirect multi-port fuel injection
Fuel pressure	3.0 ± 0.2 bar constant
Fuel grade	95 RON minimum - **UNLEADED** fuel

CAUTION: Serious damage to the engine may occur if a lower octane number fuel than recommended is used. Serious damage to the catalyst will occur if LEADED fuel is used.

* Ignition timing in Crankshaft degrees.

** No electrical load present

Model: 1.4 K8 with MPi **Year: 1995 on**

Engine

Type/Capacity	14K8 / 1396 cm^3
Firing order	1 - 3 - 4 - 2
Compression ratio	9.9 : 1
Idle speed controlled by ECM	875 ± 50 rev/min
Exhaust gas CO content at idle**	less than 0.5% hot
Ignition timing at idle speed:*	
vacuum connected**	10 ± 5° BTDC

Programmed ignition

Distributor rotor arm	Resistive type
Rotation	Anti-clockwise (front of engine - clockwise)

Ignition Coil

Type	F type, dry
Primary resistance at 20°C	0.63 to 0.77 ohm

Spark Plugs

Type	Unipart GSP 6662
Gap	0.85 mm

Engine Management System

Type	Indirect multi-port fuel injection
Fuel pressure	3.0 ± 0.2 bar constant
Fuel grade	95 RON minimum - **UNLEADED** fuel

CAUTION: Serious damage to the engine may occur if a lower octane number fuel than recommended is used. Serious damage to the catalyst will occur if LEADED fuel is used.

* Ignition timing in Crankshaft degrees.

** No electrical load present

Model: 1.4 and 1.6 K16 with MPi **Year: 1995 on**

Engine

Type/Capacity:	
1.4	14K16 / 1396 cm^3
1.6	16K16 / 1589 cm^3
Firing order	1 - 3 - 4 - 2
Compression ratio:	
1.4 K16	10.4 : 1
1.6 K16	10.5 : 1
Idle speed controlled by ECM	875 ± 50 rev/min
Exhaust gas CO content at idle**	less than 0.5% hot
Ignition timing at idle speed:*	
vacuum connected**	10 ± 5°BTDC

Programmed ignition

Distributor rotor arm	Resistive type
Rotation	Anti-clockwise (front of engine - clockwise)

Ignition Coil

Type	F type, dry
Primary resistance at 20°C	0.63 to 0.77 ohm

Spark Plugs

Type	Unipart GSP 6662
Gap	0.85 mm

Engine Management System

Type	Indirect multi-port fuel injection
Fuel pressure	3.0 ± 0.2 bar constant
Fuel grade	95 RON minimum - **UNLEADED** fuel

CAUTION: Serious damage to the engine may occur if a lower octane number fuel than recommended is used. Serious damage to the catalyst will occur if LEADED fuel is used.

* Ignition timing in Crankshaft degrees.

** No electrical load present

Model: 1.8 K16 with VVC **Year: 1995 on**

Engine

Type/Capacity	18K16 / 1796 cm^3
Firing order	1 - 3 - 4 - 2
Compression ratio	10.5 : 1
Exhaust gas CO content at idle **	less than 0.5%
Idle speed controlled by ECM	875 ± 50 rev/min
Ignition timing at idle speed:*	
Vacuum connected **	10 ± 5°BTDC

Ignition Coil

Type	H type twin coil
Primary resistance at 20°C	0.4 to 0.61 ohm

Spark Plugs

Type - Double Platinum	Unipart GSP 9652 or Champion RC8 PYP
Gap	0.85 mm

Engine Management System

Type	Indirect multi-port fuel injection
Fuel pressure	3.0 ± 0.2 bar constant
Fuel grade	95 RON minimum - **UNLEADED** fuel

CAUTION: Serious damage to the engine may occur if a lower octane number fuel than recommended is used. Serious damage to the catalyst will occur if LEADED fuel is used.

* Ignition timing in Crankshaft degrees.

** No electrical load present

Model: 2.0 - 'L' Series **Year: 1995 on**

Engine

Type/Capacity:	
Models without intercooler	20T2R / 1994 cm^3
Models with intercooler	20T2N / 1994 cm^3
Firing order	1 - 3 - 4 - 2
Compression ratio	19.5 : 1
Idle speed:	
Models without intercooler	850 ± 50 rev/min
Models with intercooler	805 ± 50 rev/min
Max. no load engine speed	5300 rev/min

Engine Management System

ECM - make:	
Models without intercooler	Rover
Models with intercooler	Bosch
Fuel injection pump - make/type:	
Models without intercooler	Bosch electronic rotary / VP 21
Models with intercooler	Bosch electronic rotary / VP 37
Injectors:	
Make	Bosch
Type	2-stage needle lift injectors
Opening pressure	2000/32000 kPa
Glow plugs:	
Make	BERU
Type	0100226 184

Model: 1.8 K16 with MPi **Year: 1997.5 on**

Engine

Type/capacity:	18K16 / 1796 cm^3
Firing order	1-3-4-2
Compression ratio	10.5 : 1
Idle speed controlled by ECM	875 ± 50 rev/min
Exhaust gas CO content at idle **	0.5 % - maximum
Ignition timing at idle * vacuum connected **	12° BTDC

Programmed ignition

Distributor rotor arm	Resistive type
Rotation	Anti-clockwise (front of engine - clockwise)

Ignition Coil

Type	H type twin coil
Primary resistance at 20° C	0.4 to 0.61 ohm

Spark Plugs

Type - Double Platinum	Champion RC8 PYP or Unipart GSP 9652
Gap	0.85 mm

Engine Management System

Type	Indirect multi-port fuel injection
Fuel pressure	3.0 ± 0.2 bar constant
Fuel grade	95 RON minimum - **UNLEADED** fuel

CAUTION: Serious damage to the engine may occur if a lower octane number fuel than recommended is used. Serious damage to the catalyst will occur if LEADED fuel is used.

* Ignition timing in crankshaft degrees.

** No electrical load present

Refer to appropriate section heading for component torque figures, e.g.
Road wheel nuts - refer to **SUSPENSION,**
Exhaust front pipe to manifold - refer to **MANIFOLD AND EXHAUST**

ENGINE - 'K' SERIES

Timing belt cover bolts	10 Nm
Tensioner pulley backplate bolt - Manual timing belt tensioner	10 Nm
Timing belt pulley Allen bolt - Manual timing belt tensioner	45 Nm
Timing belt tensioner bolt - Automatic timing belt tensioner *	25 Nm
Camshaft gear bolts:	
M8	35 Nm
M10	65 Nm
Timing belt tensioner pulley Allen bolt	45 Nm
Rear camshaft cover plate bolts	25 Nm
Tensioner backplate screw	45 Nm
Camshaft timing belt rear cover bolts	10 Nm
Drive belt tensioner to steering pump bracket	25 Nm
Crankshaft pulley bolt	163 Nm
Engine RH mounting to engine nuts	100 Nm
Engine RH mounting to body through bolt	80 Nm
Torque mounting RH bracket to engine bolts	60 Nm
Engine LH mounting to body bolts	55 Nm
Engine LH mounting bracket to body bolts	55 Nm
Steady bar to engine	45 Nm
Steady bar to subframe	80 Nm
Oil pressure switch	15 Nm
Cylinder head bolts, tighten progressively:	
1st stage +	20 Nm
2nd stage +	a further 180°
3rd stage +	a final 180°
Alternator top mounting bracket nut/bolt	25 Nm
Camshaft cover to carrier bolts +	10 Nm
Spark plug cover screws	2 Nm
Engine lifting bracket bolts	9 Nm
Flywheel to crankshaft NEW bolts	85 Nm
Flywheel lower cover bolts	9 Nm
Dipstick tube to block	10 Nm
Oil pump to block bolts + *	10 Nm
Pressed steel sump to bearing ladder:	
M6/M8 bolts + *	10 Nm
Alloy sump to bearing ladder bolts +	25 Nm
Engine sump drain plug:	
Steel sump	42 Nm
Alloy sump	25 Nm

+ Tighten in sequence
* New Patchlok bolts must be fitted

ENGINE - 'L' SERIES

Camshaft cover bolts	12 Nm
Camshaft gear centre bolt	20 Nm + 90°
Camshaft gear hub bolts	25 Nm
Camshaft timing belt upper rear cover bolts	8 Nm
FIP timing belt tensioner pulley Allen bolt	44 Nm
FIP timing belt backplate bolts	8 Nm
Timing belt lower rear cover bolts	8 Nm
Timing belt tensioner pulley Allen bolt	55 Nm
Timing cover bolts	5 Nm
Crankshaft pulley bolt	63 Nm + 90°
Crankshaft rear oil seal housing bolts +	8 Nm
Cylinder head bolts	
First stage +	30 Nm
Second stage +	65 Nm
Third stage +	a further 90°
Fourth stage +	a final 90°
Manifold nuts +	25 Nm
Manifold bolts +	33 Nm
Manifold intake pipe bolts	25 Nm
EGR recirculation pipe bolts	10 Nm
Engine LH mounting to body bolts	85 Nm
Engine LH mounting to gearbox bolts	100 Nm
Engine RH mounting to body bolts	45 Nm
Engine RH mounting to engine bolts	100 Nm
Engine RH mounting to bracket, nut	85 Nm
Engine RH mounting to steady bar bolts	80 Nm
Snubber nuts	10 Nm
Steady bar through bolt to body	60 Nm
Steady bar through bolt to engine	85 Nm
Steady bar bracket bolt	80 Nm
Oil pump to block:	
M10 bolts +	45 Nm
M6 bolts +	10 Nm
Oil pipe to oil pipe union	10 Nm
Oil pipes to pump	25 Nm
Sump bolts +	25 Nm
Sump drain plug	25 Nm
Sump to gearbox support bracket	25 Nm
Oil filter	17 Nm
Dipstick tube bracket bolt	25 Nm
Oil pressure switch	16 Nm
Oil cooler to block:	
M10 bolts	45 Nm
M8 bolts	25 Nm
Oil cooler pipe unions	25 Nm
Fuel injection pipe union nuts	28 Nm
Spill return pipes to injectors	10 Nm
Flywheel to crankshaft NEW bolts	15 Nm then further 90°
Turbocharger:	
Oil drain pipe bolts	8 Nm
Oil feed pipe banjo bolt	18 Nm
Vacuum pipe banjo bolt	25 Nm

+ Tighten in sequence

EMISSION CONTROL

Catalytic converter heat shield bolts	8 Nm

ENGINE MANAGEMENT SYSTEM - MEMS

Air cleaner to battery tray bolts	9 Nm
Intake resonator to battery tray bolts	9 Nm
Expansion tank to body bolts	9 Nm
Throttle body to inlet manifold bolts	7 Nm
Spark plugs to cylinder head	27 Nm
H.t. lead cover bolts	2 Nm
Rotor arm to camshaft, NEW patchlock screw	8 Nm
Ignition coil to engine:	
M10 bolts	45 Nm
M6 bolts	9 Nm
ECM to bracket nuts	4 Nm
Idle air control valve to manifold Torx screws	8 Nm
Intake air temperature sensor to manifold	7 Nm
Engine coolant temperature sensor to housing	15 Nm
Crankshaft position sensor to housing bolt	6 Nm
Throttle position sensor to housing Torx screws	1.5 Nm
Oxygen sensor to exhaust manifold	55 Nm
Fuel rail to manifold bolts	10 Nm
Fuel feed pipe to fuel rail bolts	5 Nm
Variable Valve Control (VVC):	
Hydraulic control unit solenoid nut	12 Nm
Oil temperature sensor	15 Nm
Manifold absolute pressure sensor bolts	10 Nm
Camshaft position sensor bolt	6 Nm

ENGINE MANAGEMENT SYSTEM - EDC

Crankshaft position sensor	8 Nm
ECM to bracket	4 Nm
Exhaust gas recirculation:	
EGR pipe to plenum chamber	10 Nm
EGR valve to manifold	25 Nm
EGR valve to recirculation pipe	25 Nm
Glow plug	20 Nm
Glow plug lead terminal nut	2.5 Nm
Air temperature sensor to intake manifold	12 Nm
Mean atmospheric pressure sensor	9 Nm
Injector clamp plate bolt	25 Nm
Coolant temperature sensor (ECT)	15 Nm
Throttle position sensor to bracket nuts	4 Nm
Injection pump gear nut	60 Nm
Injection pump spacer bolt	10 Nm
Injection pump adaptor bracket Allen screws	10 Nm
Injection pump feed/return pipe banjo bolt	25 Nm
Injector pipe union	20 Nm
Fuel shut-off solenoid	20 Nm
Exhaust manifold elbow to turbocharger bolts	25 Nm
Turbocharger to manifold nuts	25 Nm
Exhaust manifold to mounting bracket bolts	25 Nm
Oil drain tube to turbocharger nuts	10 Nm
Oil feed/return pipe to turbocharger nuts	20 Nm
Turbocharger air pipe to cylinder head bolts	10 Nm
Intercooler to radiator bolts	25 Nm

FUEL DELIVERY SYSTEM

Fuel tank heat shield bolts	9 Nm

'K' Series

Fuel filter union, inlet/outlet	30 Nm
Fuel filter bracket to bulkhead	10 Nm
Inertia fuel shut-off switch	2 Nm
Fuel pump to tank nuts	9 Nm

'L' Series

Injector pipes	20 Nm
Plenum chamber to camshaft cover bolt	9 Nm
Plenum chamber to inlet manifold	9 Nm

COOLING

'K' Series

Cooling fan housing to radiator	9 Nm
Radiator mountings to bonnet locking platform	9 Nm
Expansion tank to body bolts	5 Nm
Thermostat housing cover bolts	9 Nm
Thermostat housing to block bolts	10 Nm
Coolant rail to block bolts	9 Nm
Thermostatic switch	25 Nm
Coolant pump to cylinder block bolts	10 Nm
Rear cover to coolant pump bolt	10 Nm

'L' Series

Coolant outlet elbow to cylinder head nuts	25 Nm
Coolant pump/cover to bracket bolts	10 Nm
Support bracket to pump	25 Nm
Cooling fan to housing	9Nm
Cooling fan housing to radiator bolts	9 Nm
Expansion tank to body bolts	5 Nm
Radiator to bonnet locking platform bolts	9 Nm

MANIFOLD AND EXHAUST

Exhaust front pipe to catalyst nuts	50 Nm
Catalyst to intermediate pipe nuts	50 Nm
Intermediate pipe to tail pipe nuts	50 Nm

'K' Series

'K8' - Inlet manifold to cylinder head nut and bolts[1]	25 Nm
'K8' - Inlet manifold chamber to manifold bolts	25 Nm
'K16' Non VVC - Inlet manifold to cylinder head nut and bolts[1]	17 Nm
'K16 VVC' - Inlet manifold to cylinder head nut and bolts[1]	25 Nm
Inlet manifold to support bracket bolt	25 Nm
Exhaust manifold to cylinder head nuts[1]	45 Nm
Alternator heat shield, bolts	10 Nm
Support bracket to exhaust manifold nuts	25 Nm
Exhaust front pipe to manifold nuts	50 Nm

'L' Series

Inlet manifold to cylinder head bolts[1]	25 Nm
Exhaust manifold to cylinder head:	
Nuts[1]	25 Nm
Bolts[1]	33 Nm
Exhaust manifold support bracket bolt	25 Nm
Turbocharger to exhaust manifold nuts	25 Nm
Turbocharger pipe to cylinder head bolts	10 Nm

CLUTCH

'K' Series

Pressure plate to flywheel Torx bolts:[1]	
1.1, 1.4 and 1.6	18 Nm
1.8	26 Nm

'L' Series

Pressure plate to flywheel Torx bolts[1]	26 Nm
Clutch release fork to shaft	29 Nm

[1]Tighten in diagonal sequence

MANUAL GEARBOX - R65

Reverse light switch	25 Nm
Filler/level plug	25 Nm
Drain plug	25 Nm
Gearbox to engine bolts[1]	85 Nm
LH engine mounting to body bolts	55 Nm
Mounting bracket to gearbox bolts	60 Nm
Gearbox mounting through bolt	85 Nm
Engine rear mounting to engine bolts	60 Nm
Engine steady bar to gearbox bolts	100 Nm
Flywheel front cover plate bolts	9 Nm
Flywheel lower cover plate bolts	9 Nm
Gear selector to body bolts	22 Nm
Gearchange linkage to rear beam bolts	24 Nm

MANUAL GEARBOX - PG1

Reverse light switch	25 Nm
Drain plug	45 Nm
Filler/level plug	40 Nm
Gearbox lifting eye bolt	27 Nm
Gearbox to mounting plate bolts[1]	85 Nm
Gearbox mounting bracket	60 Nm
LH mounting to body bracket bolts	85 Nm
LH engine mounting to gearbox bolts	100 Nm
Gearchange steady bar to gearbox	10 Nm
Earth lead to gearbox bolt	35 Nm

[1]Tighten in sequence

AUTOMATIC GEARBOX - CVT

Inhibitor/reverse light switch	12 Nm
Drain plug	30 Nm
Fluid pan bolts[1]	10 Nm
Pitot chamber bolts	12 Nm
Pitot tube	10 Nm
Fluid cooler union nut	15 Nm
Gearbox fluid hose adaptors	37 Nm
Dipstick tube retaining bolt	25 Nm
Primary cover olts	10 Nm
Secondary cover bolts	10 Nm
Selector shaft nut	15 Nm
Flywheel cover plate bolts	8 Nm
Engine to gearbox bolts[1]	85 Nm
Mounting bracket to gearbox	80 Nm
Gearbox mounting bracket to engine bolts	45 Nm
Steady bar to engine through bolt	45 Nm
Steady bar to body through bolt	80 Nm
Gear selector lever nut	7 Nm
Gearchange linkage to rear beam bolts	24 Nm

[1]Tighten in sequence

DRIVE SHAFTS

Drive shaft NEW nut	180 Nm

STEERING

Steering wheel nut	50 Nm
Steering column lower clamp bolt/nut	22 Nm
Steering column upper bracket nuts	12 Nm
Steering column upper bracket bolts	22 Nm
Steering column universal joint bolts	28 Nm
Track-rod ball pin Nyloc nut	45 Nm
Steering rack clamp bolts	38 Nm
Steering rack pinion flange bolts	58 Nm
Steering rack feed pipe union	37 Nm
Steering rack return pipe union	28 Nm
Steering pipe clip	9 Nm
Steering arm ball joint Nyloc nut	45 Nm

'K' Series

Steering pump adjuster clamp bolt	25 Nm
Steering pump mounting bracket bolts	25 Nm
Steering pump pulley bolts	9 Nm
Steering pump outlet hose union	55 Nm

'L' Series

High pressure hose union to PAS pump	20 Nm
PAS pump pulley screws	10 Nm
PAS pump to coolant pump bolts	25 Nm

SUSPENSION

Road wheel nuts[1]	110 Nm

Front Suspension

Anti-roll bar link to lower arm bolt	60 Nm
Anti-roll bar to link bolt	45 Nm
Anti-roll bar clamp to rear beam bolts	22 Nm
Damper shaft nut	40 Nm
Damper top mounting nuts[2]	30 Nm
Damper to hub pinch bolt[2]	80 Nm
Lower arm front pivot bolt[2]	45 Nm
Lower arm ball joint nut	55 Nm
Upper arm ball joint nut	30 Nm
Tie-rod to lower arm bolts	80 Nm
Tie-rod to front beam nut	45 Nm
Front beam to body bolts	100 Nm
Rear beam to body bolts	100 Nm

Rear Suspension

Damper to mounting plate, self locking nut	30 Nm
Damper mounting plate nuts	38 Nm
Damper to 'H' frame bolt[2]	80 Nm
Hub shaft NEW nut	185 Nm
'H' frame to body bolts	100 Nm
'H' frame pivot bush bolt	100 Nm
Anti-roll bar to 'H' frame nuts	80 Nm
Stub axle to 'H' frame bolts	45 Nm

[1]Tighten in diagonal sequence

[2]Tighten with weight of vehicle on suspension.

BRAKES

Bleed screw - calipers	10 Nm
Front caliper to mounting bolts	108 Nm
Front disc to drive flange screws	10 Nm
Front caliper shield bolts	10 Nm
Front caliper guide pin bolts	27 Nm
Front caliper banjo bolt	34 Nm
Brake hose bracket bolts	10 Nm
ABS front sensor to hub screw	6 Nm
ABS front sensor harness bracket bolts	10 Nm
Rear disc to hub screws	10 Nm
Rear caliper shield, bolts	10 Nm
Rear caliper guide pin bolts	27 Nm
Rear caliper banjo bolt	34 Nm
ABS rear sensor to adaptor screw	6 Nm
ABS rear sensor cover to hub bolts	10 Nm
ABS rear sensor harness bracket bolts	10 Nm
Master cylinder to servo nuts	15 Nm
Pipe unions to master cylinder	19 Nm
Brake servo to bulkhead nuts	13 Nm
'L' Series:	
Brake servo pipe bolt	25 Nm
Vacuum adaptor to pump	25 Nm
Vacuum feed pipe to pump union	18 Nm
Vacuum pump to alternator	8 Nm
ABS ECU to modulator screws	8 Nm
ABS modulator mounting spigot	15 Nm
ABS modulator mounting nuts	10 Nm
ABS ECU pipe unions	14 Nm
Brake proportioning valve bracket nuts	10 Nm
Brake proportioning valve pipe unions	19 Nm
Handbrake lever to body bolts	22 Nm
Handbrake switch to handbrake screw	5 Nm
Handbrake cable brackets bolts	22 Nm
Handbrake cable retaining plate to back plate bolts	22 Nm
Rear drum brakes:	
Bleed screw - rear wheel cylinder	7 Nm
Rear brake drum to hub screws	7 Nm
Rear wheel cylinder to backplate bolts	8 Nm
Rear wheel cylinder pipe union	19 Nm
Back plate to trailing arm bolts	64 Nm
Brake hose bracket to trailing arm bolt	22 Nm
ABS rear sensor adaptor clamp screw	0.5 Nm

RESTRAINT SYSTEMS

Driver's airbag module Torx screws	9 Nm
Passenger's airbag module to fascia screws	9 Nm
Passenger's airbag module to lower mounting nuts	9 Nm
SRS earth strap bolt	9 Nm

BODY

Doors

Door lock striker to body screws	18 Nm
Door glass regulator to door bolts	9 Nm
Door glass regulator to motor screws	7 Nm
Door glass regulator roller guide	8 Nm
Door glass rear channel bolt	8 Nm
Door outside handle bolts	9 Nm
Door latch to door Torx screws	6 Nm
Front door glass rear channel bolt	8 Nm
Rear door glass rear channel nut	4 Nm
Rear door glass rear channel bolts	8 Nm
Rear door latch and cover screws	7 Nm
Tailgate lock striker to body screws	9 Nm
Tailgate latch to tailgate screws	7 Nm
Tailgate hinges to body nuts	22 Nm

Exterior Fitting

Exterior mirror to door Torx screws	4 Nm
Bonnet hinge, bolts	9 Nm
Bonnet lock to body bolts	10 Nm
Bumper to body bolts	6 Nm
Front bumper:	
Impact cans to front panel bolts	22 Nm
Bumper to bonnet platform screws	5 Nm
Under tray to beam bolts	9 Nm
Splash shield to body screws/bolts	5 Nm
Tailgate spoiler to tailgate bolts	6 Nm

Interior Trim Components

Fascia mounting bolts	9 Nm
Glovebox to fascia screws	10 Nm
Lower rail to fascia:	
M8 bolts	20 Nm
M6 bolts	10 Nm
Front console screws	2 Nm
Rear console screws	3 Nm
Gear lever gaiter finisher self-locking nuts - BRM only	3 Nm
Sun visor screws	2.5 Nm
Bonnet release handle screws	9 Nm

Seats and Seat Belts

Seat belt pretensioner to seat bolt	30 Nm
Seat belt mounting bolt	50 Nm
Seat belt reel bracket to body bolt	30 Nm
Seat belt bracket M6 bolt	9 Nm
Rear seat belt stalk bolt	50 Nm
Front seat runner to body bolts	34 Nm
Front seat runner to frame Torx screws	22 Nm
Rear squab hinge to body bolts	10 Nm
Rear seat to floor	10 Nm

Screens

Sun roof mountings screws	5 Nm
Sun roof to body bolts	9 Nm
Rear quarter glass nuts - 3 door	9 Nm

HEATING AND VENTILATION

Heater unit to bulkhead:	
6 mm nuts/bolts	10 Nm
8 mm nuts/bolts	22 Nm
Blower motor screws	9 Nm

AIR CONDITIONING

Pipe bracket to condenser bolts	6 Nm
Condenser to fan housing bolts	9 Nm
Trinary switch	12 Nm
Receiver/drier to body bolts	9 Nm
Pipes to receiver/drier bolts	5 Nm
Pipe to pipe unions	25 Nm
Pipe bracket to gearbox bracket bolt	9 Nm
Relay module to body bolts	9 Nm
Expansion valve	9 Nm
Adaptor to expansion valve	9 Nm
Evaporator casing screws	10 Nm
Pipe flange to evaporator bolt	10 Nm
Pipe bracket screw (LH Drive)	10 Nm

'K' Series

Compressor to mounting bracket bolts	45 Nm
Pipe union to compressor	35 Nm
Evaporator pipe to compressor	45 Nm
Condenser pipe to compressor	25 Nm

'L' Series

Compressor mounting bolts	45 Nm
Pipe unions to compressor	45 Nm
Engine overheat sensor	15 Nm

WIPERS AND WASHERS

Windscreen wiper motor linkage bolts	10 Nm
Windscreen wiper motor bolts	5 Nm
Windscreen wiper arm nut	10 Nm
Rear wiper arm nut	10 Nm
Rear wiper motor bolts	8 Nm
Rear wiper motor spindle nut	2 Nm

ELECTRICAL

Battery tray to body bolts	9 Nm
Earth lead to body bolt	9 Nm
Horn bracket to body nut	5 Nm
Horns to bracket nut	5 Nm
Headlamp to body bolts	5 Nm
Dim dip resistor bolt	8 Nm
Engine compartment fusebox to body bolts	10 Nm
Passenger compartment fusebox to body bolts	10 Nm
Starter switch:	
Lower clamp bolts	22 Nm
Top bracket nuts	16 Nm

'K' Series

Drive belt tensioner bolt	25 Nm
Alternator to mounting bolts	25 Nm
Alternator top mounting bracket to engine nut/bolt	25 Nm
Alternator through bolts nut	45 Nm
Alternator pulley nut	25 Nm
Battery cable to alternator nut	4 Nm
Starter motor support bracket nuts	25 Nm
Starter motor to engine bolts	45 Nm

'L' Series

Alternator drive belt tensioner bolt	45 Nm
Alternator upper fixing bolt	25 Nm
Alternator lower fixing bolt	45 Nm
Battery cable to alternator stud	4 Nm
Starter motor bolts	55 Nm

INSTRUMENTS

'K' Series

Coolant temperature gauge sensor	10 Nm
Speedometer pinion housing to gearbox	9 Nm

'L' Series

Engine coolant temperature sensor	5 Nm
Speedometer pinion housing to gearbox	9 Nm

CAPACITIES

Fuel tank	50 litres
Engine oil refill and filter change:	
1.1, 1.4, 1.6 & 1.8 'K' Series	4.5 litres
2.0 'L' Series	4.8 litres
Engine oil refill from dry:	
1.1, 1.4, 1.6 & 1.8 'K' Series	4.8 litres
2.0 'L' Series	5.2 litres
Manual gearbox - R65	
Refill	1.8 litres
From dry	2.0 litres
Manual gearbox - PG1	
- Except BRM	
Refill	2.0 litres
From dry	2.2 litres
- BRM	
Refill	2.3 litres
From dry	2.4 litres
CVT - Automatic	4.5 litres
Power steering	0.3 litre
Cooling system from dry: *	
1.1, 1.4, 1.6 & 1.8 'K' Series	5.5 litres
2.0 'L' Series	7.0 litres
Washer reservoir	6.5 litres

* Refill capacity is approx. 0.7 litre less than the from dry figures.

FLUIDS

Brake Fluid

Use only AP New Premium Super DOT 4 brake fluid or Castrol Girling Universal DOT 4 brake/clutch fluid. DO NOT use any other type of fluid.

Anti-freeze solutions

The overall anti-freeze concentration should not fall, by volume, below 50% to ensure that the anti-corrosion properties of the coolant are maintained. Anti-freeze concentrations greater than 60% are not recommended as cooling efficiency will be impaired.

Use **UNIPART Superplus 3 Anti-freeze and Summer Coolant** to protect the cooling system.

The cooling system should be drained, flushed and refilled with the correct amount of anti-freeze solution at the intervals given on the Service Maintenance Check Sheet.

CAUTION: No other 'universal' anti-freeze should be used with UNIPART Superplus 3 Anti-freeze and Summer Coolant.

If **UNIPART Superplus 3 Anti-freeze and Summer Coolant** is not available, use an ethylene glycol based anti-freeze containing no methanol with non-phosphate corrosion inhibitors which meet specifications BS6580 and BS5117 suitable for use in mixed metal engines. To ensure the protection of the cooling system against corrosion, these anti-freezes must be renewed every 12 months.

After filling with anti-freeze solution, attach a warning label to a prominent position on the vehicle stating the type of anti-freeze contained in the cooling system to ensure that the correct type is used for topping-up.

The recommended quantities of anti-freeze for different degrees of frost protection are:

Solution	Amount of anti-freeze	Commences freezing		Frozen solid	
50%	Litres	°C	°F	°C	°F
'K' Series models	2.7	-36	-33	-48	-53
'L' Series models	3.5	-36	-33	-48	-53

LUBRICATION

The engine and other lubricating systems are filled with high- performance lubricants giving prolonged life.

CAUTION: You should always use a high quality oil of the correct viscosity range in the engine and gearbox during maintenance and when topping-up. The use of oil not to the correct specification can lead to high oil and fuel consumption and ultimately to damaged components.

Oil to the correct specification contains additives which disperse the corrosive acids formed by combustion and prevent the formation of sludge which can block the oil ways. Additional oil additives should not be used.
Always adhere to the recommended servicing intervals.

Engine oil

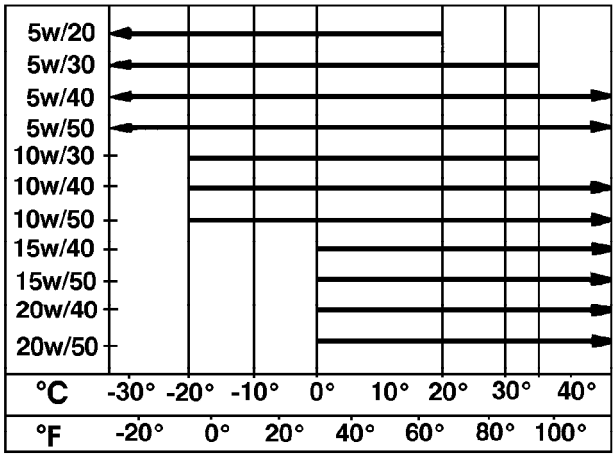

1M0060A

Petrol vehicles

Use oil meeting specification RES.22.OL.G4 or the requirements of CCMC G4, and having a viscosity band recommended for the temperature range of your locality. Where oils to these Rover and European specifications are not available, well known brands of oils meeting API SG, SH or SG/CD quality should be used.

Diesel vehicles

Use oil meeting specification RES.22.06.PD2 or CCMC PD2 and having a viscosity band recommended for the temperature range of your locality.

Manual gearbox - R65

Use the following oils for refill or topping-up:

ESSO Gear oil BV 75w/80w
MOBIL Mobilube 1 SHC
SHELL SF5288 75w/80w
UNIPART Gear oil BV 75w/80w

The following oils may be used for topping-up only:

BP Hypogear TL 75w/80w
CASTROL EPX 75w/80w
DUCKHAMS Hypoid PT 75w/80w

Manual gearbox - PG1

Use the following oils for refill or topping-up:

TEXACO MTF 94
UNIPART MTF 94

The following oils may be used for topping-up only:

Use oil meeting the requirments of RES.22.OL.G4 or CCMC G4 and a viscosity of 10W/40

Automatic gearbox - CVT

Use the following oils for refill or topping-up:
ESSO CVT Fluid
UNIPART CVT Fluid

The following oil may be used for topping-up only:

Automatic Transmission Fluid meeting Dexron II D specification.

Power Steering

TOPPING-UP: Use Unipart Power Steering Fluid or an Automatic Transmission Fluid meeting Dexron II D specification.

COMPLETE FILL: Use Unipart Power Steering Fluid or a fluid meeting PSF-V specification.

Gear linkage - Manual

Use grease Part No. AFU 1500 containing 3% Molybdenum Disulphide.

General Greasing

Use Multipurpose Lithium Base Grease N.L.G.I. consistency No. 2.

Bonnet latch

Lubricate cable and latch with oil.

Locks, Latches and Hinges

Use Door Lock and Latch Lubricant, Part No. VWN 10075.

CONTENTS

Page

MAINTENANCE

UNDERBONNET LOCATIONS - 'K8' 1
UNDERBONNET LOCATIONS - 'K16' 2
UNDERBONNET LOCATIONS - 'K16 1.8 and K16 WITH VVC' 3
UNDERBONNET LOCATIONS - 'L' SERIES 4
CHECK ENGINE AND TRANSMISSION 5
ENGINE OIL AND FILTER - 'K' SERIES 5
ENGINE OIL AND FILTER - 'L' SERIES 6
CAMSHAFT TIMING BELT - 'K' SERIES 7
CAMSHAFT TIMING BELT - 'L' SERIES 7
INJECTION PUMP TIMING BELT - 'L' SERIES 7
CRANKCASE VENT HOSES - 'K' SERIES 8
CRANKCASE PRESSURE LIMITER VALVE - 'L' SERIES 8
FUEL SYSTEM HOSES, PIPES AND UNIONS 9
FUEL FILTER 10
ENGINE TUNING 10
AIR CLEANER ELEMENT - 'K' SERIES 10
AIR CLEANER ELEMENT - 'L' SERIES 10
DISTRIBUTOR CAP, H.T. CABLES AND COIL TOWER - 'K' SERIES 10
SPARK PLUGS - 'K' SERIES 10
COOLING SYSTEM 11
EXHAUST SYSTEM 11
CLUTCH 11
GEARBOX OIL - 'R65' 12
GEARBOX OIL - 'PG1' 12
AUTOMATIC GEARBOX OIL - 'CVT' 13
DRIVE SHAFT GAITERS 13
STEERING 14
SUSPENSION DAMPERS, BALL JOINTS, ... 16
ROAD WHEELS AND FASTENINGS 18
TYRE PRESSURES AND CONDITION 18
FOOTBRAKE 18
HANDBRAKE 19
BRAKE FLUID 19
BRAKE HOSES AND PIPES 21
FRONT BRAKES-HYDRAULICS, PADS, DISCS AND CALIPERS 23
REAR DRUM BRAKES 24
REAR DISC BRAKES 25
BODY 26
DRIVER AIR BAG MODULE 27
PASSENGER AIR BAG MODULE 27
ROTARY COUPLER 27
SCREEN WIPERS AND BLADES 27
WINDSCREEN AND REAR SCREEN WASHERS 28
LAMPS, HORNS AND WARNING INDICATORS 29
BATTERY CONNECTIONS 29
FUSEBOX 29
ROAD TEST 30

UNDERBONNET LOCATIONS - 'K8'

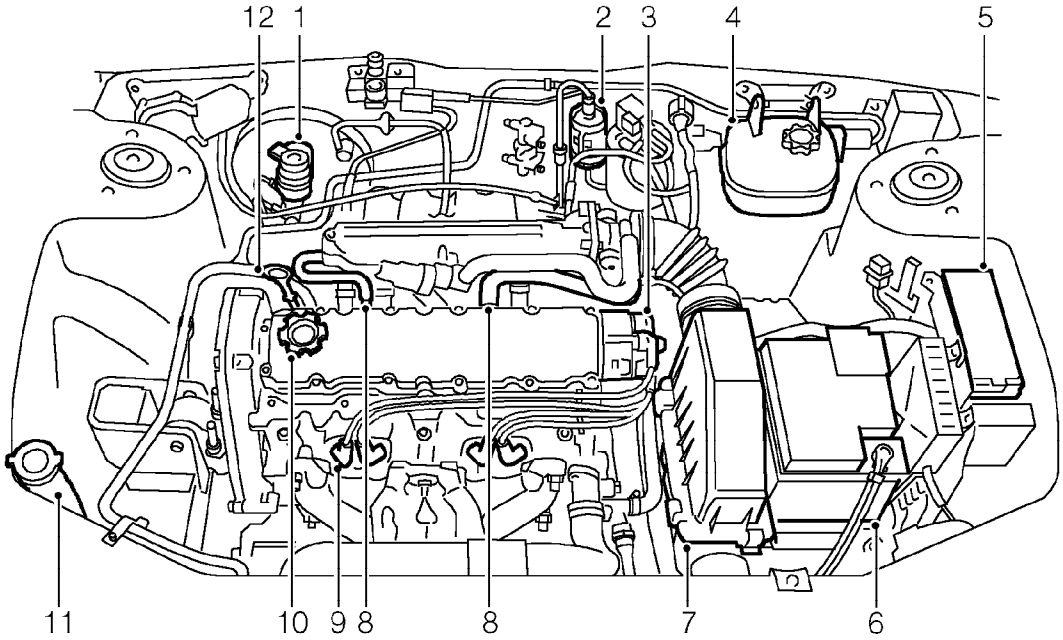

10M0429

1. Brake fluid reservoir
2. Fuel filter
3. Distributor
4. Coolant expansion tank
5. Engine compartment fusebox
6. Battery
7. Air cleaner
8. Crankcase ventilation hoses
9. Spark plugs
10. Engine oil filler cap
11. Windscreen and rear screen washers reservoir
12. Engine oil dipstick

UNDERBONNET LOCATIONS - 'K16'

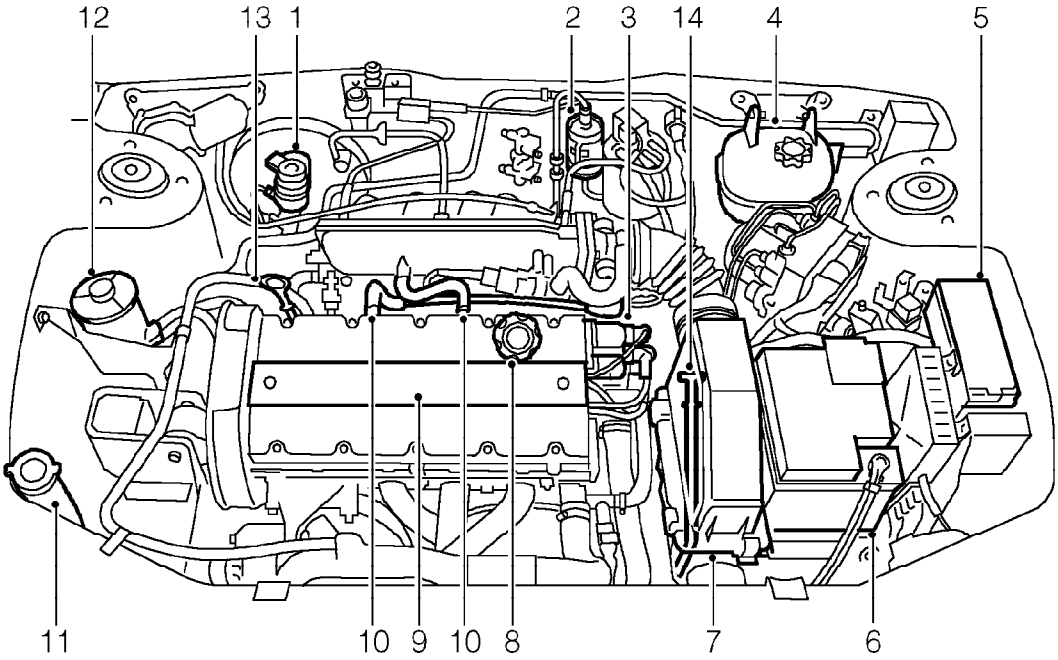

10M0430A

1. Brake fluid reservoir
2. Fuel filter
3. Distributor
4. Coolant expansion tank
5. Engine compartment fusebox
6. Battery
7. Air cleaner
8. Engine oil filler cap
9. Spark plugs
10. Crankcase ventilation hoses
11. Windscreen and rear screen washers reservoir
12. Power steering reservoir
13. Engine oil dipstick
14. Automatic gearbox oil dipstick (If fitted)

UNDERBONNET LOCATIONS - 'K16 1.8 and K16 WITH VVC'

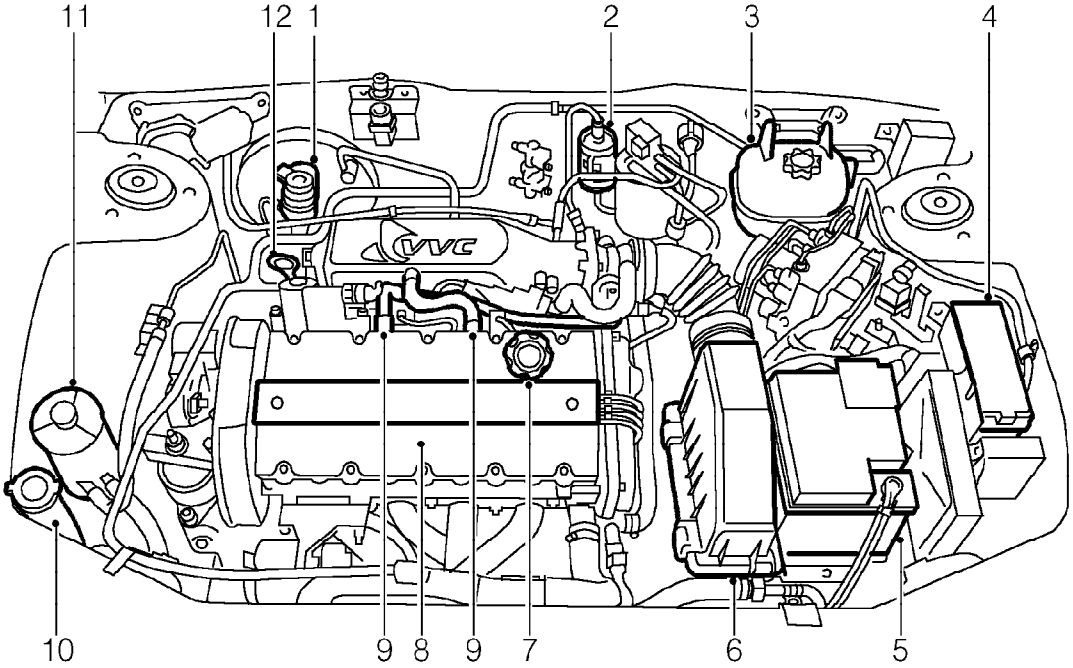

10M0431

VVC engine illustrated

1. Brake fluid reservoir
2. Fuel filter
3. Coolant expansion tank
4. Engine compartment fusebox
5. Battery
6. Air cleaner
7. Engine oil filler cap
8. Spark plugs
9. Crankcase ventilation hoses
10. Windscreen and rear screen washers reservoir
11. Power steering reservoir
12. Engine oil dipstick

UNDERBONNET LOCATIONS - 'L' SERIES

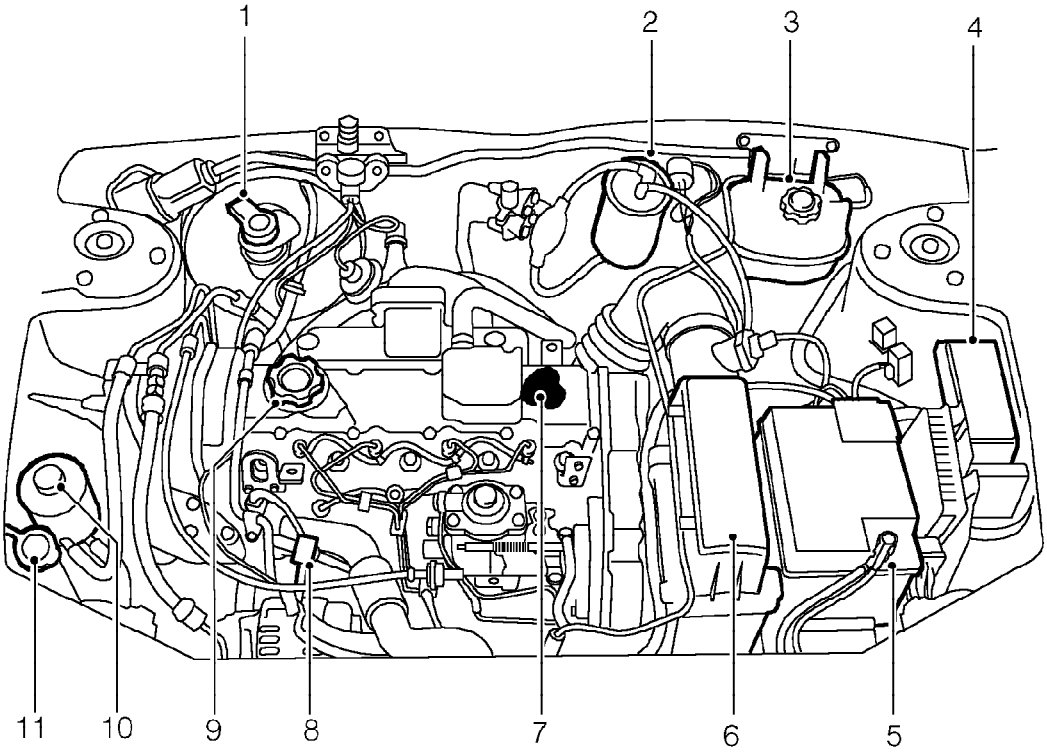

10M0443

Non - intercooler illustrated

1. Brake fluid reservoir
2. Fuel filter
3. Coolant expansion tank and cap
4. Engine compartment fusebox
5. Battery
6. Air cleaner
7. Crankcase pressure limiter valve
8. Engine oil dipstick
9. Engine oil filler cap
10. Windscreen and rear screen washer reservoir
11. Power steering reservoir

CHECK ENGINE AND TRANSMISSION

1. Visually inspect for oil leaks from engine and transmission, pay particular attention to areas of gaskets and seals.

ENGINE OIL AND FILTER - 'K' SERIES

Oil level check

Always check oil level and drain oil with vehicle standing on level ground and use engine oil of specification 10w/40 for topping up and refilling.

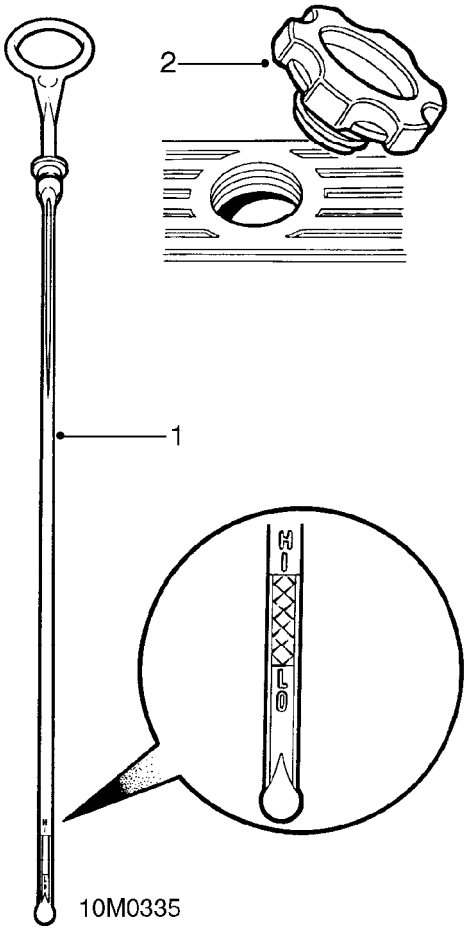

1. Withdraw dipstick and wipe blade. Re-insert dipstick fully, withdraw it and check oil level which must be maintained between minimum mark **'LO'** and maximum mark **'HI'** on dipstick.
2. If required, remove filler cap and top-up with new engine oil to specification 10w/40. ***See INFORMATION, Capacities, fluids and lubricants.***

Oil drain and refill

The oil should be drained when engine is warm. The oil filter can be renewed while oil is being drained.

WARNING: Observe due care when draining engine oil as the oil can be very hot.
Prolonged and repeated contact with used engine oil may cause serious skin disorders, wash thoroughly after contact. Keep out of reach of children.

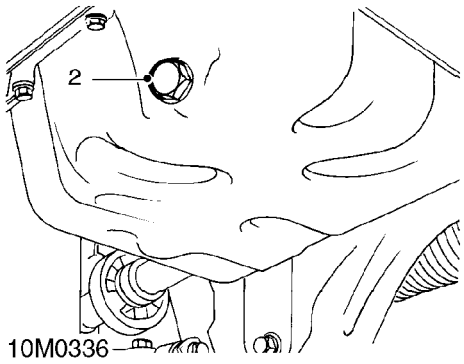

1. Place a container under sump.
2. Remove drain plug and sealing washer, allow oil to drain.
3. Clean the drain plug, fit new sealing washer and refit drain plug. Tighten to 42 Nm.
4. Remove filler cap, refill with new engine oil to specification 10w/40. Re-check oil level.

OIL FILTER RENEWAL

Service repair no - 12.60.04

For information on replacement of the oil filter refer to one of the following engine sections:

'K8' models: ***See ENGINE - 'K8', Repairs.***
'K16' models: ***See ENGINE - 'K16', Repairs.***
'K16 with VVC' models: ***See ENGINE - 'K16 WITH VVC', Repairs.***

ENGINE OIL AND FILTER - 'L' SERIES

Oil level check

Always check oil level and drain oil with vehicle standing on level ground and use engine oil of specification 10w/40 for topping up and refilling.

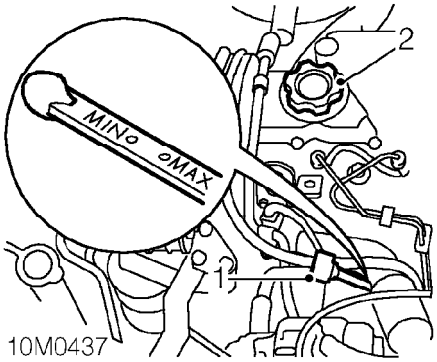

1. Withdraw dipstick and wipe blade. Re-insert dipstick fully, withdraw it and check oil level which must be maintained between minimum and maximum marks on dipstick.
2. If required, remove filler cap and top-up with new engine oil to specification 10w/40. ***See INFORMATION, Capacities, fluids and lubricants.***

Oil drain and refill

The oil should be drained when engine is warm. The oil filter can be renewed while oil is being drained.

WARNING: Observe due care when draining engine oil as the oil can be very hot.
Prolonged and repeated contact with used engine oil may cause serious skin disorders, wash thoroughly after contact. Keep out of reach of children.

1. Raise front of vehicle.

WARNING: Support on safety stands.

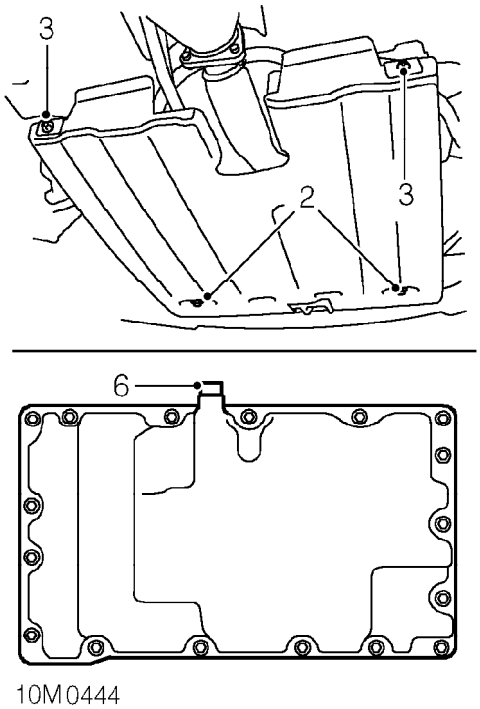

2. Remove 2 bolts securing undertray to front beam.
3. Remove 2 nuts securing undertray to rear beam.
4. Release and remove undertray.
5. Place a container under sump.
6. Remove drain plug and sealing washer, allow oil to drain.
7. Clean drain plug, fit new sealing washer and refit drain plug. Tighten to 45 Nm.
8. Position undertray and locate on studs on rear beam.
9. Fit nuts securing undertray to rear beam and tighten to 10 Nm.
10. Fit bolts securing undertray to front beam and tighten to 10 Nm.
11. Remove stand(s) and lower vehicle.
12. Remove filler cap, refill with new engine oil to specification 10w/40. Re-check oil level.

CAUTION: Do not raise oil level above the 'MAX' mark on dipstick.

13. Start and run engine and check for oil leaks.
14. Stop engine, wait a few minutes, then check oil level and top up if necessary.

CAUTION: Ensure oil does not drop onto the alternator when extracting the dipstick.

OIL FILTER RENEWAL

Service repair no - 12.60.04

For information on replacement of the oil filter refer to the engine section.

See ENGINE - 'L' SERIES, Repairs.

CAMSHAFT TIMING BELT - 'K' SERIES

'K8' models: ***See ENGINE - 'K8', Repairs.***
'K16' models: ***See ENGINE - 'K16', Repairs.***
'K16 with VVC' models: ***See ENGINE - 'K16 WITH VVC', Repairs.***

CAMSHAFT TIMING BELT - 'L' SERIES

See ENGINE - 'L' SERIES, Repairs.

INJECTION PUMP TIMING BELT - 'L' SERIES

See ENGINE - 'L' SERIES, Repairs.

CRANKCASE VENT HOSES - 'K' SERIES

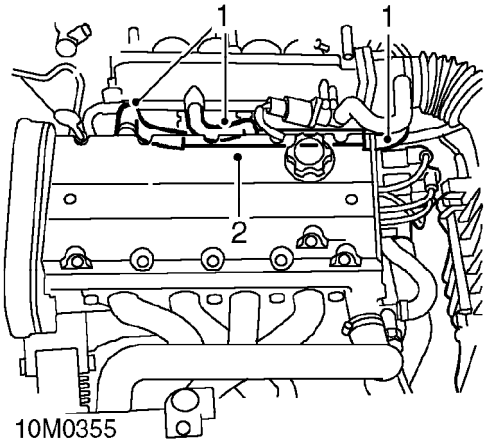

1. Check crankcase ventilation hoses for signs of splitting and general condition.
2. Check hoses are routed correctly, secure and serviceable.

CRANKCASE PRESSURE LIMITER VALVE - 'L' SERIES

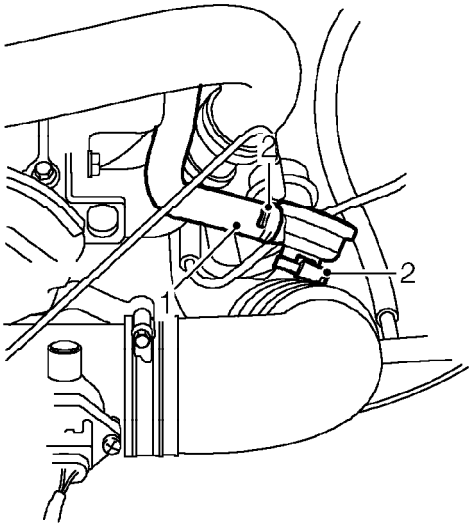

1. Check hoses for signs of splitting and general condition.
2. Check valve connections are secure.
3. Check hoses are routed correctly, secure and serviceable.

FUEL SYSTEM HOSES, PIPES AND UNIONS

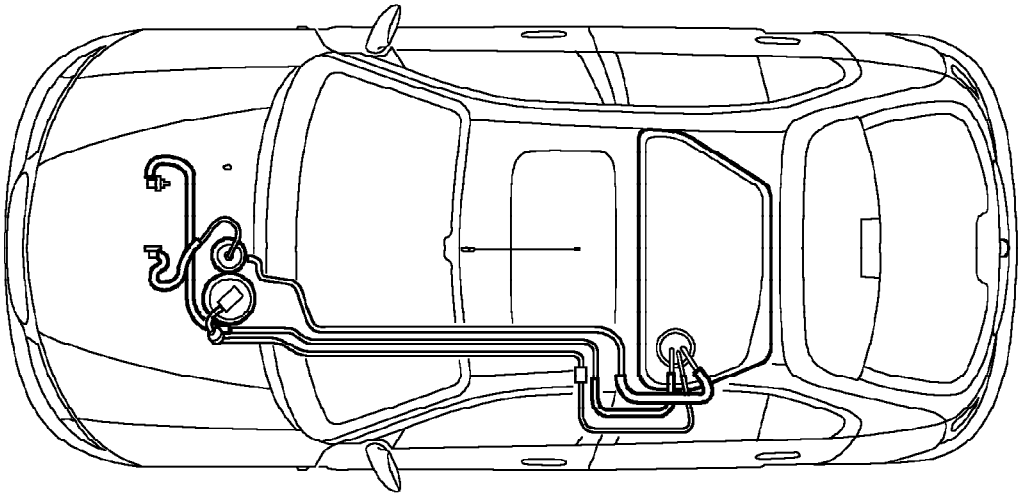

10M0450

'K' series

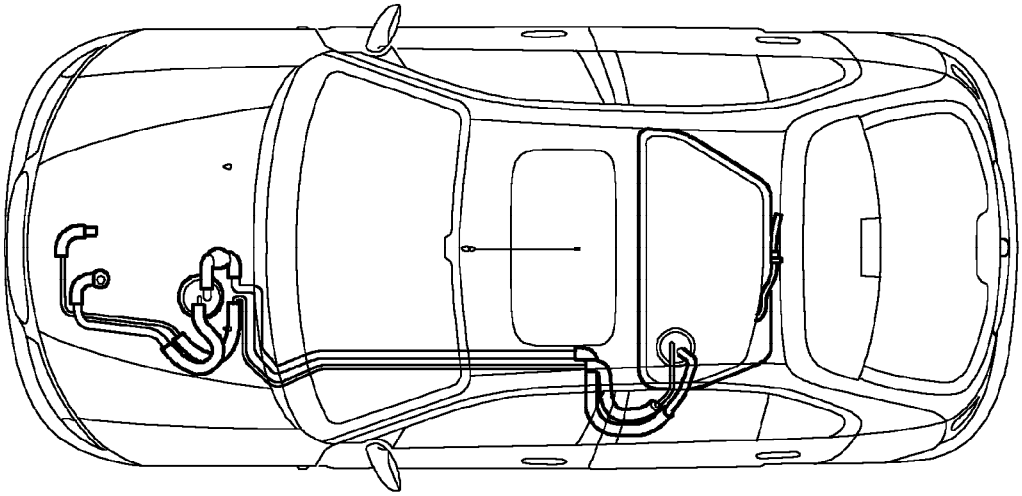

10M0447

'L' series

1. Check fuel pipes and connections for chafing and leakage.
2. Check pipes are securely clipped.
3. Check fuel tank connections for security.
4. Check fuel tank is free from leaks and corrosion.
5. Check fuel tank for security of fixings.

FUEL FILTER

See FUEL DELIVERY SYSTEM, Repairs.

ENGINE TUNING

Engine tuning must be carried out using TestBook.

AIR CLEANER ELEMENT - 'K' SERIES

See ENGINE MANAGEMENT SYSTEM - MEMS, Repairs.

AIR CLEANER ELEMENT - 'L' SERIES

See ENGINE MANAGEMENT SYSTEM - EDC, Repairs.

DISTRIBUTOR CAP, H.T. CABLES AND COIL TOWER - 'K' SERIES

Check

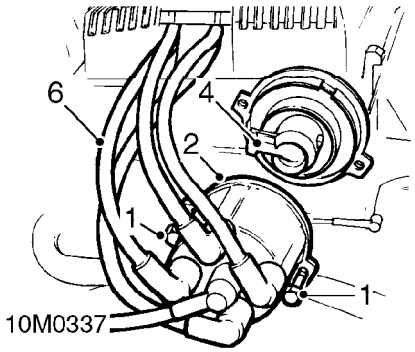

1. Release 2 screws.
2. Lift off distributor cap.
3. Check cap for cracks, warping and burns.
4. Check rotor for damage.
5. Clean interior and exterior of distributor cap.
6. Check that h.t. cables are free from damage, routed correctly and all connections are tight.
7. Clean ignition coil tower.
8. Refit distributor cap.
9. Tighten distributor cap screws to 2 Nm.

SPARK PLUGS - 'K' SERIES

See ENGINE MANAGEMENT SYSTEM - MEMS, Repairs.

COOLING SYSTEM

WARNING: Since injury such as scalding could be caused by escaping steam or coolant, do not remove pressure relief cap from expansion tank while system is hot. Wait until system has cooled, use a cloth or glove to protect hands from escaping steam.

Check level and top-up

CAUTION: The coolant level should only be checked when the system is cold.

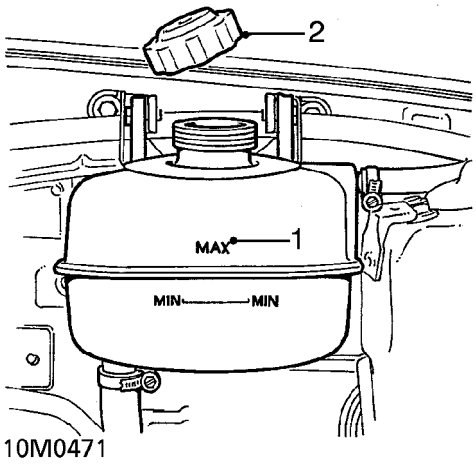

1. Visually check that coolant level is between the 'MAX' and 'MIN' marks on expansion tank. If level is appreciably low, suspect leakage or overheating.

CAUTION: If coolant is not visible in expansion tank, system must be refilled in accordance with refilling procedure.

'K' series models: ***See COOLING SYSTEM - 'K' SERIES, Adjustments.***
'L' series models: ***See COOLING SYSTEM - 'L' SERIES, Adjustments.***

2. If required, remove coolant expansion tank cap and top-up with anti-freeze mixture. ***See INFORMATION, Capacities, fluids and lubricants.***

CAUTION: The coolant must not exceed the maximum level indication.

3. Check specific gravity of coolant. The overall anti-freeze concentration must not be below 50% by volume and must not exceed 60% by volume.
4. Refit expansion tank cap.

EXHAUST SYSTEM

1. Check for damage and signs of leakage.
2. Check security of system.
3. Check mountings and correct alignment.
4. Check security of heat shields.

CLUTCH

1. Check operation of the clutch and free movement of the pedal.
2. Check the cable for fraying.

GEARBOX OIL - 'R65'

Oil level check and top-up

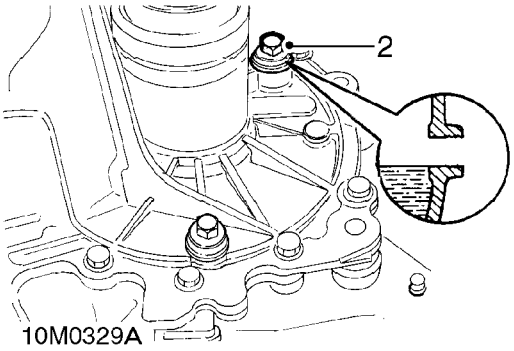

1. Ensure vehicle is standing on level surface.
2. Wipe clean area around filler/level plug and remove plug and sealing washer. Discard sealing washer.
3. Check that oil is level with bottom of level plug hole.

CAUTION: Oil lodged behind level plug will trickle out when plug is removed and can give impression that level is correct.

4. Top-up, if required, until oil just runs from hole. Allow sufficient time for oil to flow and reach a common level within gearbox.
   Use a BV 75w/80w transmission oil. ***See INFORMATION, Capacities, fluids and lubricants.***
5. Refit filler/level plug and new sealing washer and tighten to 25 Nm.

GEARBOX OIL - 'PG1'

Oil level check and top-up

1. Ensure vehicle is standing on a level surface.
2. *'L' series models:* Remove underbelly panel. ***See BODY, Exterior fittings.***
3. Clean area around filler/level plug.

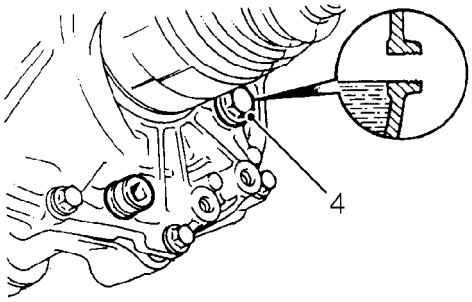

4. Remove filler/level plug.
5. Check that oil is level with bottom of filler/level plug hole.

CAUTION: Oil lodged behind filler/level plug will trickle out when plug is removed and can give the impression that level is correct.

6. Top-up, if required, until oil just runs from filler/level hole. Allow sufficient time for oil to flow until it reaches a common level in the gearbox.
   Use the correct specification oil. ***See INFORMATION, Capacities, fluids and lubricants.***
7. Fit filler/level plug and tighten to 40 Nm.
8. *'L' series models:* Fit underbelly panel. ***See BODY, Exterior fittings.***

AUTOMATIC GEARBOX OIL - 'CVT'

Oil level check and top-up

NOTE: Always check fluid level with vehicle standing on level ground and gearbox at operating temperature.

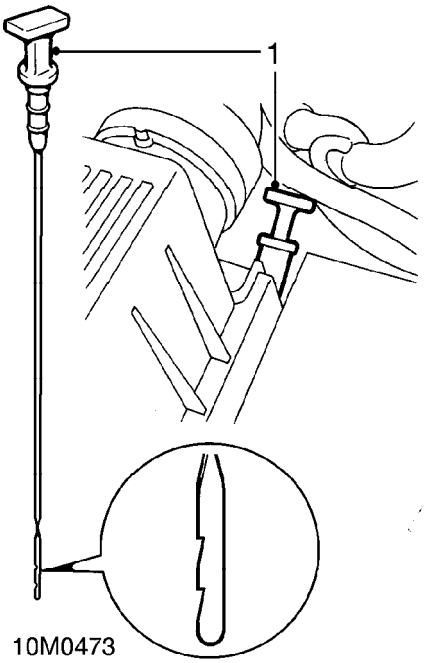

1. With engine running at idle speed and handbrake applied, select 'P' or 'N'. Withdraw dipstick and wipe blade with clean cloth.
2. Re-insert dipstick fully, withdraw and check fluid level which must be maintained between minimum and maximum marks on dipstick.
3. Switch off engine and top-up to maximum mark if required. ***See AUTOMATIC GEARBOX - 'CVT', Adjustments.***
4. Refit dipstick.

DRIVE SHAFT GAITERS

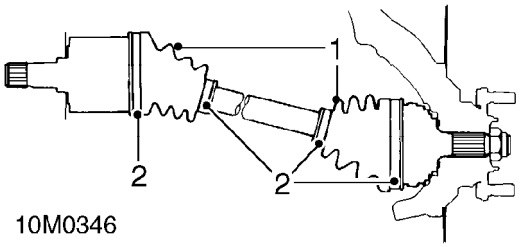

1. Check that drive shaft gaiters are not twisted, split or damaged.
2. Check clips are secure.

STEERING

Check and top-up power steering fluid

Carry out fluid level check when engine is stopped and system is cold.

NOTE: It is essential that power steering system should not have been operated since engine was stopped.

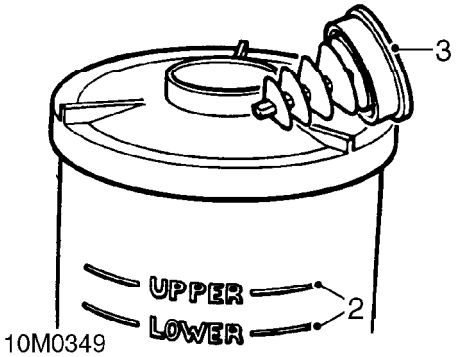

1. Clean reservoir around filler cap and level indicators.
2. Visually check fluid level is between level indicators.
3. If required, remove filler cap and top-up with DEXRON II D specification fluid. **Do not overfill**.

CAUTION: Ensure no dirt is allowed to enter reservoir when cap is removed.

4. Refit filler cap.

Steering column, rack, joints and gaiters

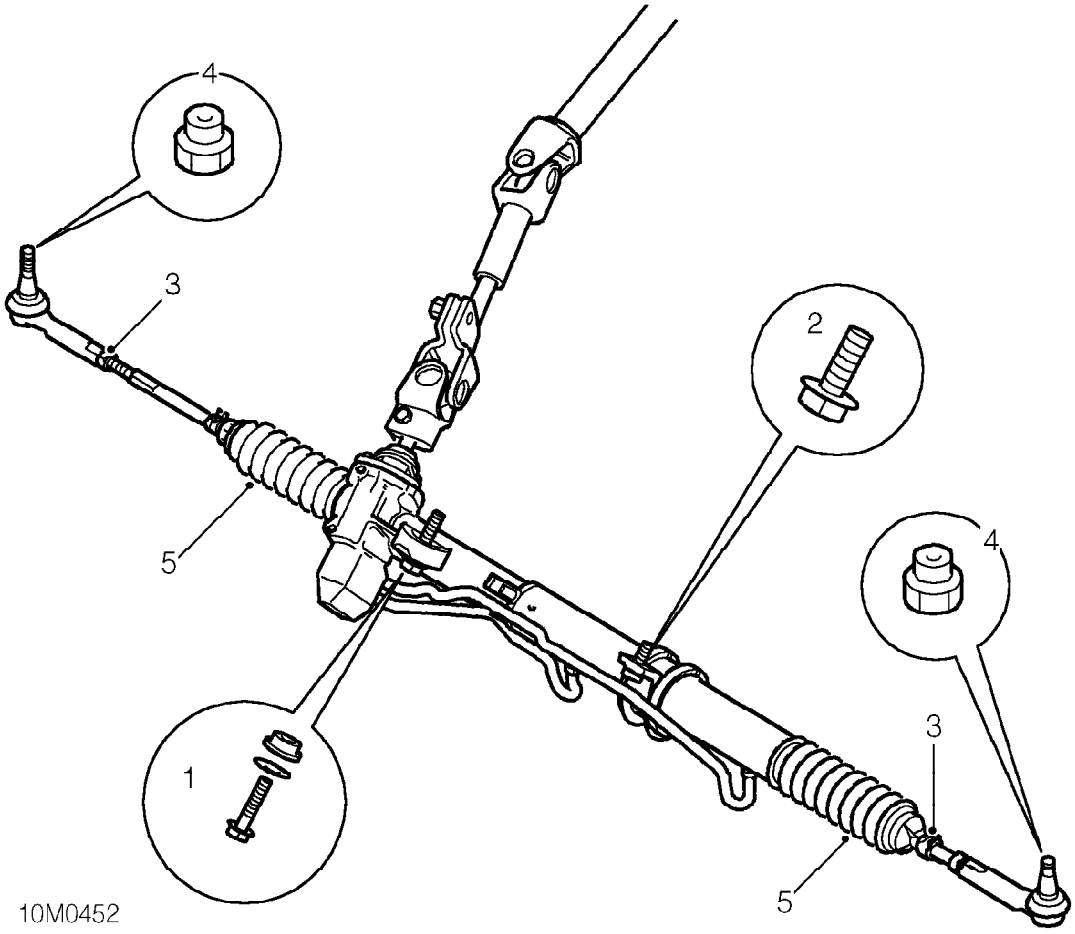

1. Check security of pinion flange bolts, tighten to 58 Nm.
2. Check security of steering rack clamp bolt, tighten to 38 Nm.
3. Restrain ball joint movement and check that steering track rod locknuts are tightened to 45 Nm.
4. Check that ball joint nuts are tightened to 45 Nm.
5. Visually check that the rack sealing gaiters are not twisted or damaged and clips are secure.
6. Check for signs of lubricant leakage.

SUSPENSION DAMPERS, BALL JOINTS, FIXINGS AND GAITERS

Front suspension

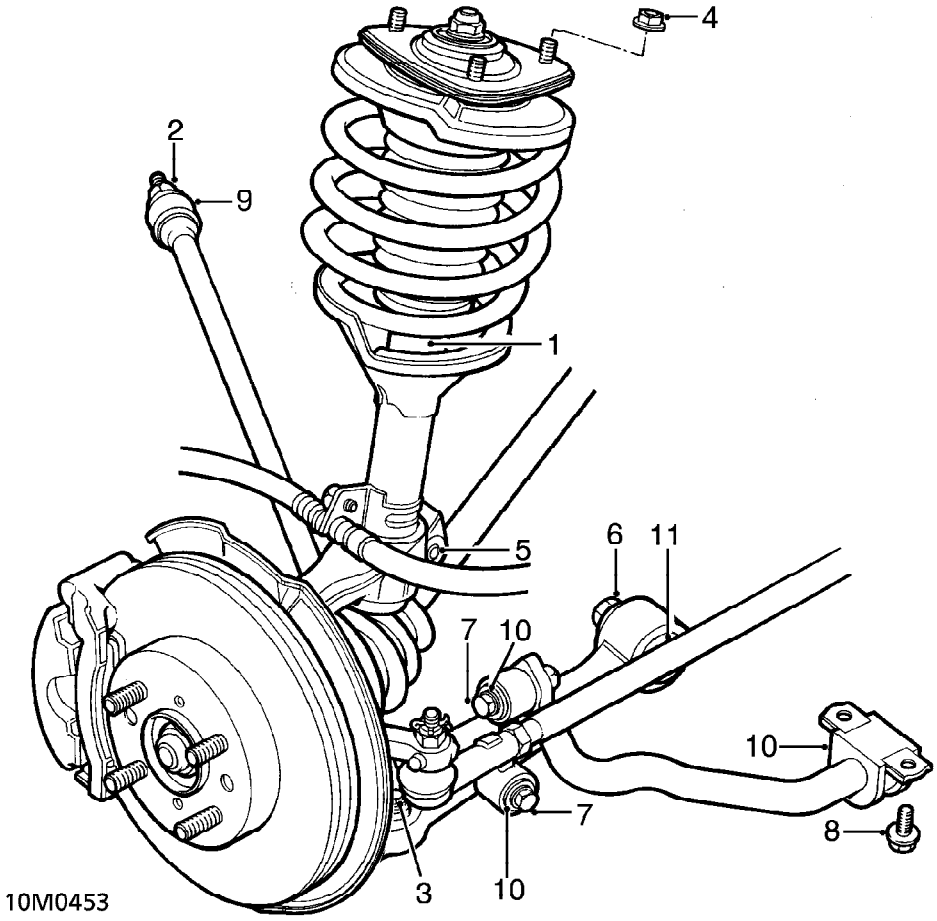

1. Check suspension dampers for oil leaks.
2. Check tie rod front mounting nuts - 45 Nm.
3. Check tie rod to lower arm bolts - 80 Nm.
4. Check damper top mounting nuts - 30 Nm.
5. Check front hub damper bolts - 80 Nm.
6. Check lower arm to body bolts - 60 Nm.
7. Check anti-roll bar to link bolts- 45 Nm.
   Check anti-roll bar link to lower arm bolts - 60 Nm.
8. Check anti-roll bar clamp bolts - 22 Nm.
9. Check condition of tie rod bushes.
10. Check condition of anti-roll bar bushes.
11. Check condition of lower arm bushes.
12. Check that a split pin is fitted to lower arm ball joint nuts.

Rear suspension

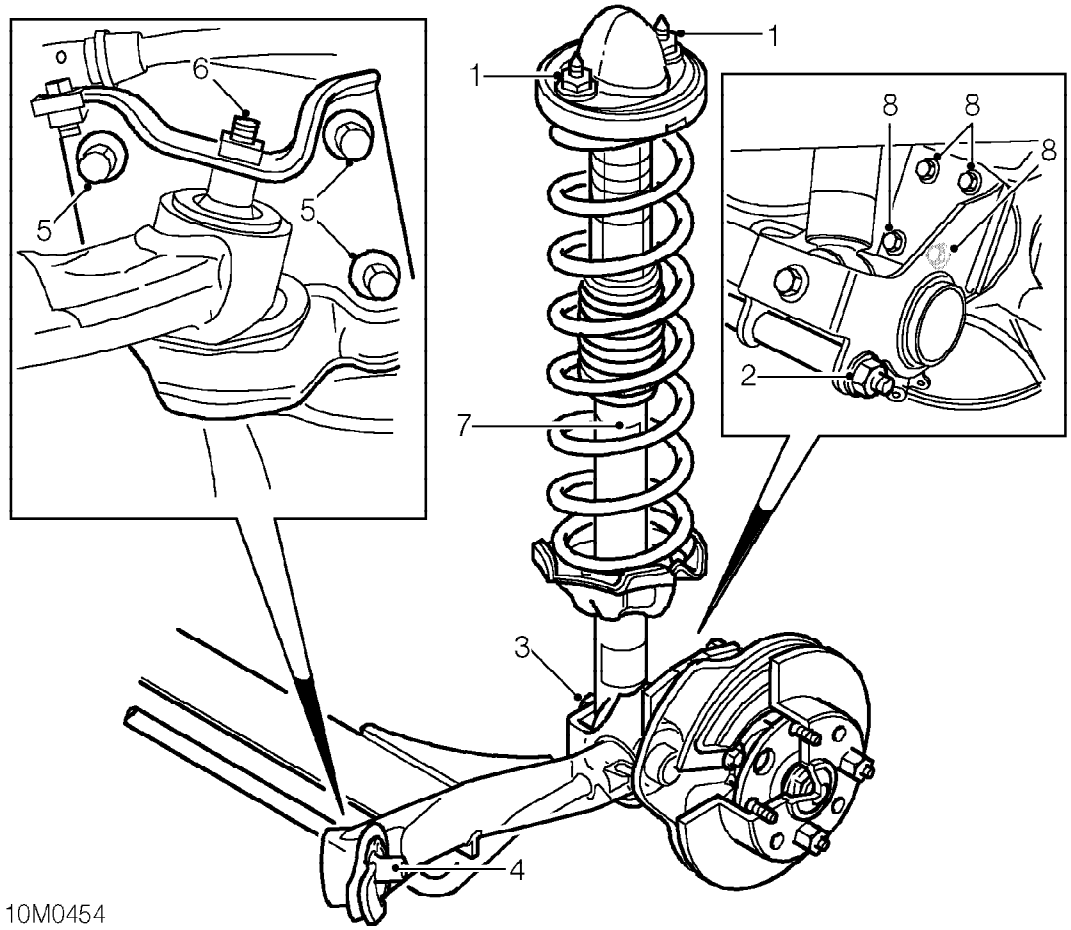

1. Check damper top mounting nuts - 30 Nm.
2. Check anti-roll bar fixing nuts - 80 Nm.
3. Check damper assembly to 'H'frame fixing bolts - 80 Nm.
4. Check condition of pivot bushes.
5. Check condition of body bracket bolts - 100 Nm.
6. Check pivot bush fixing bolts - 100 Nm.
7. Check suspension dampers for oil leaks.
8. Check stub axle fixing bolts - 45 Nm.

ROAD WHEELS AND FASTENINGS

1. *Steel wheel:* Remove wheel trim.

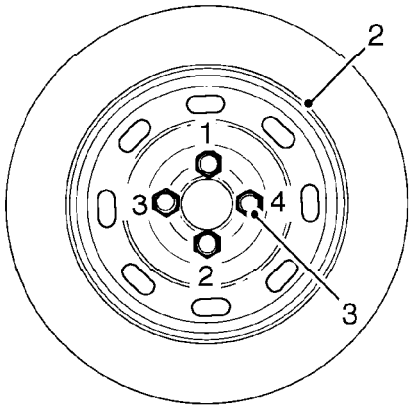

10M0333

2. Check condition of road wheels including spare for signs of buckling and rim damage.
3. Working in a diagonal sequence loosen each nut $^1/_2$ turn and then tighten to 110 Nm.

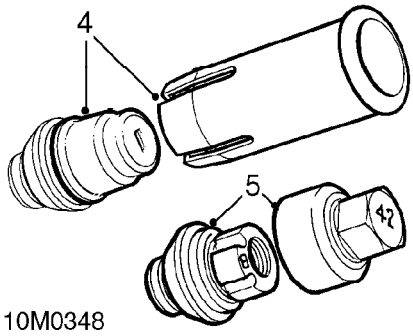

10M0348

4. *Alloy wheel:* Push extractor tool over head of nut cover and pull to remove.
5. Fit key socket over locking wheel nut, then fit wheel nut spanner over key socket and unscrew.
6. *Steel wheel:* Refit wheel trim, ensuring valve stem locates between stem guides. Use firm pressure around edge to push trim securely into position.

TYRE PRESSURES AND CONDITION

1. Check for signs of tyre wear indicator in tread pattern.
2. Check all tyres including spare for uneven wear, external cuts in fabric, exposure of ply or cord structure, lumps and bulges.
3. Check and adjust tyre pressures. ***See INFORMATION, General data.***

FOOTBRAKE

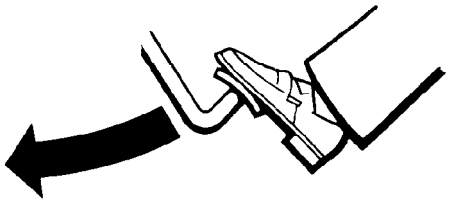

10M0338

1. Press brake pedal and check for firm resistance after short pedal movement.

HANDBRAKE

Check

1. Apply handbrake lever one notch at a time and count number of notches to apply the brakes firmly, equivalent to 21.5 Nm applied perpendicular at a point 50 mm from the end of the handbrake grip.

DATA: Handbrake lever travel =
10 ± 2 notches at 21.5 Nm for drum brakes;
12 ± 2 notches at 21.5 Nm for disc brakes.

2. Adjust handbrake cable tension if travel is outside limits. ***See BRAKES, Adjustments.***

BRAKE FLUID

WARNING: Do not allow dirt or foreign liquids to enter reservoir when topping-up. Use only new AP New Premium Super DOT 4 or Castrol Girling Universal DOT 4 brake fluid from airtight containers.

CAUTION: Do not allow brake fluid to contact paint finished surfaces as paint may be damaged. If spilled, remove fluid and clean area with clean warm water.

Level check

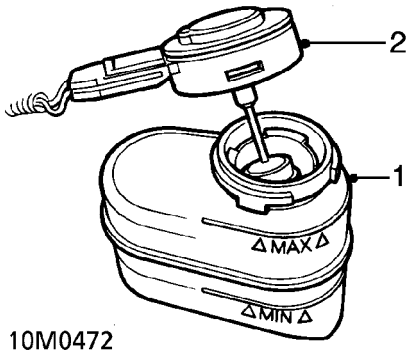

1. Wipe reservoir body and filler cap clean and check level visually.
2. Remove filler cap and top-up to 'MAX' mark, if required.

Renew fluid

1. Raise vehicle.

WARNING: Support on safety stands.

CAUTION: Never re-use fluid that has been bled from system.

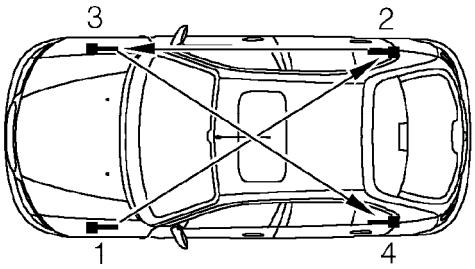

10M0456 Bleed sequence

CAUTION: Braking efficiency may be seriously impaired if wrong bleed sequence is used.

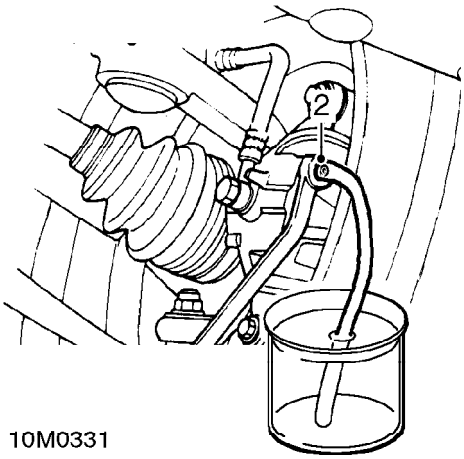

10M0331

2. Attach a bleed tube to LH front bleed screw. Insert free end of tube into bottle containing fluid.
3. Open bleed screw and use an assistant to press brake pedal to floor and release.
4. Repeat operation until clean fluid flows from bleed screw.
5. When clear, bubble free fluid flows, hold pedal to floor and tighten bleed screw to 10 Nm on calipers and 7 Nm on wheel cylinders.

CAUTION: Ensure that fluid level in reservoir is maintained during the complete operational sequence using new brake fluid.

6. Remove bleed tube.
7. Repeat foregoing procedure for each wheel in sequence illustrated.
8. Apply brakes and check for fluid leakage.
9. Remove stand(s) and lower vehicle.
10. After completion of bleed sequence, check pedal for short firm travel when brakes are applied.

BRAKE HOSES AND PIPES

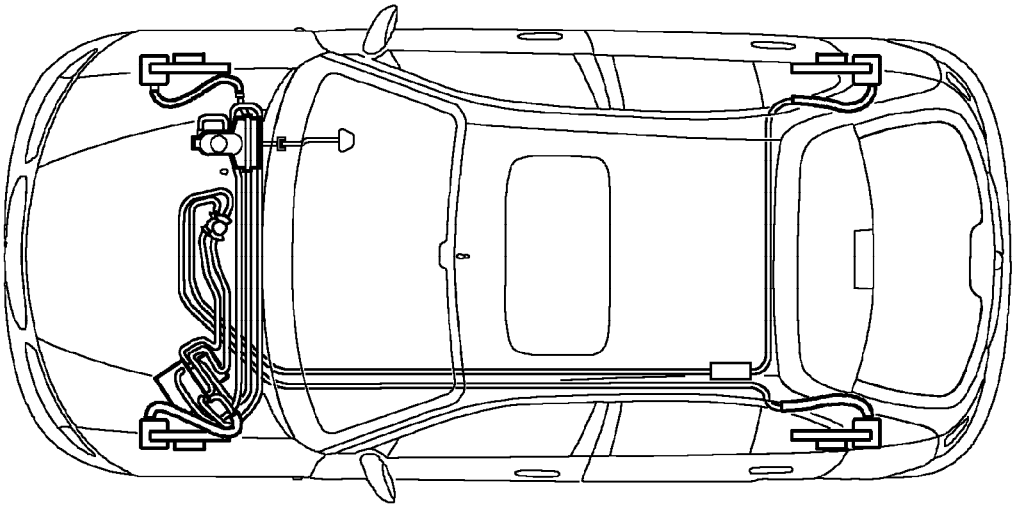

10M0458

1. Visually check all brake fluid pipes, hoses and connections for correct routing and security.
2. Check for signs of chafing, leakage or corrosion.

Renew brake hose

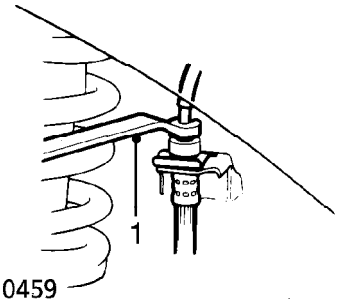

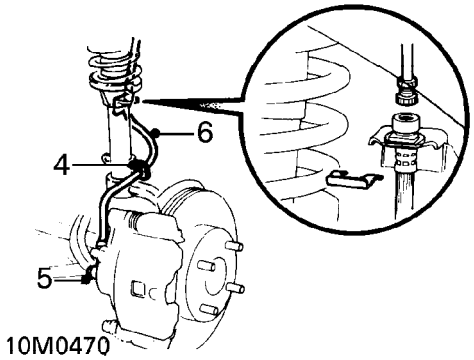

NOTE: Disconnect hose at end nearest to master cylinder first.

1. Release brake pipe union from hose using correct union spanner.

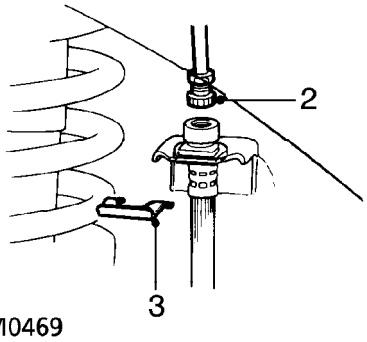

2. Fit plug to pipe end to prevent undue fluid loss.
3. Withdraw brake hose clip from upper bracket.
4. Remove bolt and release hose from bracket, front brake hose only.
5. Release banjo bolt at other end of hose and discard 2 sealing washers.
6. Remove hose and discard.
7. Position new hose through bracket.
8. Fit banjo end to caliper or wheel cylinder with banjo bolt and 2 new sealing washers and tighten to 34 Nm.
9. Fit brake hose clip to bracket and tap home with hide mallet.
10. Remove plug from pipe end, connect brake pipe to hose and tighten union.
11. Secure hose to bracket with bolt and tighten. Front brake only.
12. Bleed brake system. ***See BRAKES, Adjustments.***

FRONT BRAKES-HYDRAULICS, PADS, DISCS AND CALIPERS

Check

1. Raise front of vehicle.

WARNING: Support on safety stands.

2. Remove both front road wheels.

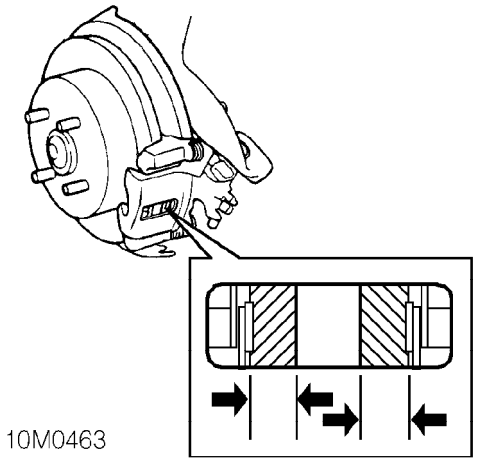

3. Check brake pads visually and assess lining thickness.

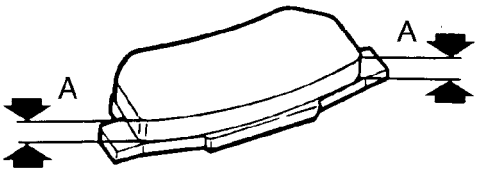

Minimum brake pad thickness:
Dimension A = 3 mm.

NOTE: Measurement does not include pad backing thickness.

4. Renew brake pads if thickness is less than minimum dimension. ***See BRAKES, Repairs.***
5. Fit road wheel(s) and tighten nuts to correct torque. ***See INFORMATION, Torque wrench settings.***
6. Remove stand(s) and lower vehicle.
7. Depress footbrake several times in order to give correct pad to disc clearance before road testing.

REAR DRUM BRAKES

Check

1. Raise rear of vehicle.

WARNING: Support on safety stands.

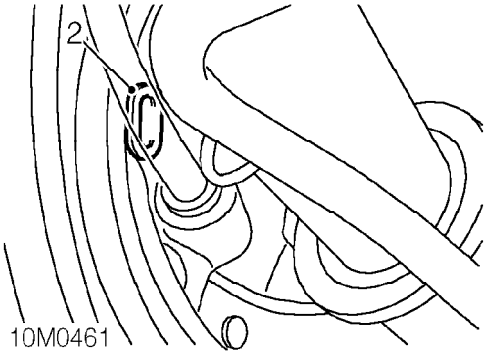

2. Remove inspection grommet from brake backplate.
3. Check brake linings for contamination and assess wear.
   Minimum lining thickness = 2.0 mm

Inspect

1. Remove road wheel(s).
2. Release handbrake.

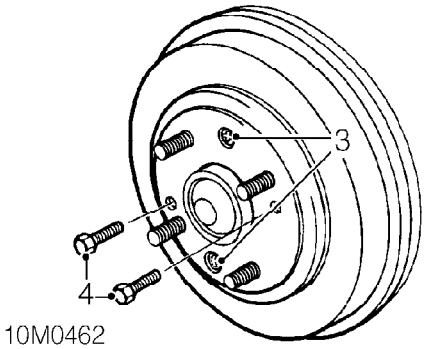

3. Remove 2 screws retaining brake drum.
4. Remove brake drum. Ease drum from hub using 2 screws.

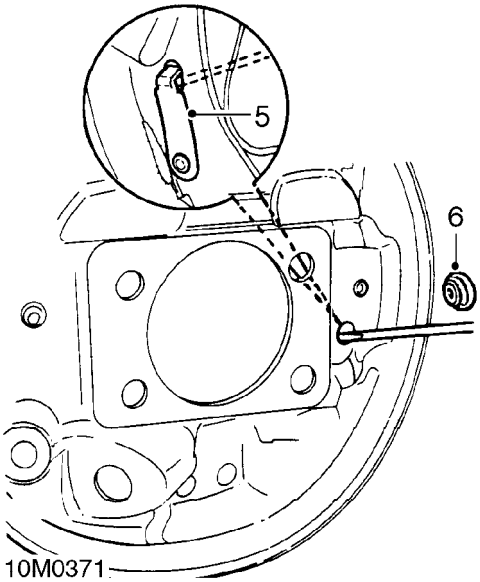

5. If drum cannot be removed due to a wear/corrosion lip, proceed as follows. Slacken hand brake cable.
6. Remove rubber grommet from rear of brake backplate.
7. Disengage handbrake lever stop from behind lever with a screwdriver to increase shoe to drum clearance, and then remove drum.
8. If the brake shoes need to be renewed. ***See BRAKES, Repairs.***
9. Clean down backplate with Girling cleaning fluid.
10. Ensure handbrake lever and quadrant lever are free to rotate.
11. Lubricate contact faces of strut, handbrake lever and quadrant lever with Girling brake grease.
12. Apply Molycote 3-111 Grease to shoe platforms on backplate and contact areas of adjuster strut and backplate.

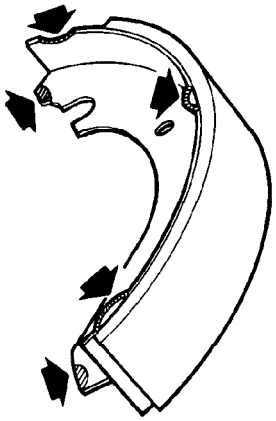

10M0372

13. Apply Molycote 3-111 Grease to shoe steady platforms and tips of shoes as shown.

CAUTION: Keep grease away from shoe linings and all hydraulic parts.

14. Inspect drum for cracks, score marks and corrosion. If serviceable, remove any loose rust with a wire brush and wipe inside of drum with damp cloth.
15. Check quadrant is in minimum adjustment position.
16. Reset adjustment by placing a piece of wood between hub and trailing brake shoe to prevent it from moving forward. Lever leading shoe away from wheel cylinder with a screwdriver. Move quadrant in required direction, ease shoe back into position and remove wood.
17. Refit brake drum and 2 screws and tighten to 7 Nm.
18. Repeat brake assembly inspection and cleaning procedure for the remaining rear brake assembly.
19. Fit road wheel(s) and tighten nuts to correct torque. ***See INFORMATION, Torque wrench settings.***
20. Apply footbrake 3 times to set shoe to drum clearance.
21. Adjust handbrake cable. ***See BRAKES, Adjustments.***
22. Remove stand(s) and lower vehicle.

REAR DISC BRAKES

Check

1. Raise rear of vehicle.

WARNING: Support on safety stands.

2. Remove road wheel(s).

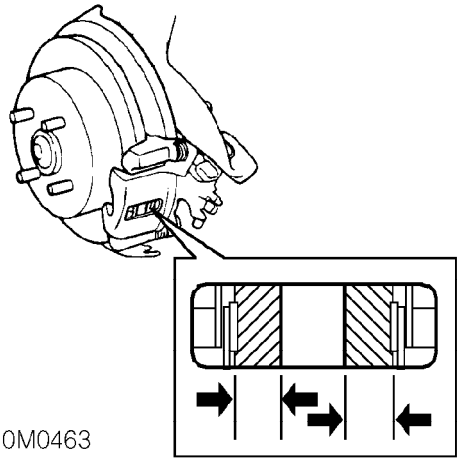

10M0463

3. Check brake pads visually and assess pad thickness.

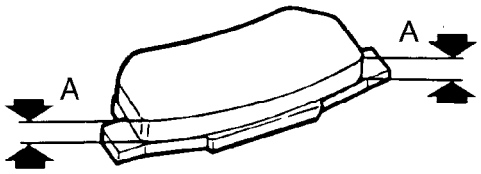

10M0374

Minimum pad thickness
Dimension A = 3 mm.

NOTE: Measurement does not include pad backing thickness.

4. Renew brake pads if thickness is less than minimum dimension. ***See BRAKES, Repairs.***
5. Fit road wheel(s) and tighten nuts to correct torque. ***See INFORMATION, Torque wrench settings.***
6. Remove stand(s) and lower vehicle.

BODY

Locks, hinges and latch mechanism (not steering lock)

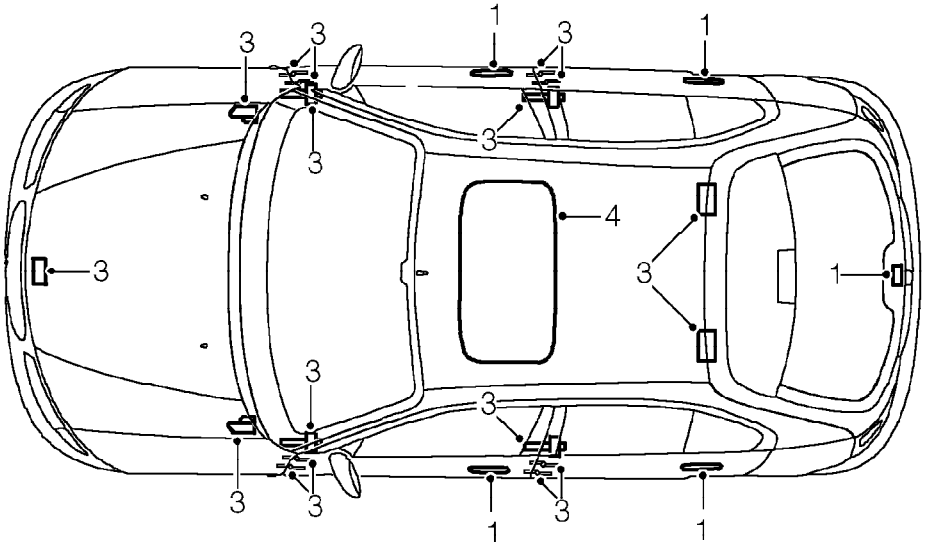

1. Functionally check operation of all locks.
2. Operate front door lock and check that electric central door locking operates.
3. Ensure that all locks, hinges and latch mechanisms are lubricated using Door Lock and Latch Lubricant, Part No. VWN 10075. Inject grease sparingly into lock barrels. Clean off any surplus grease.
   DO NOT lubricate the steering lock.
4. Lubricate sunroof lid seal very sparingly using Non-Staining Grease BAU 5812 (Corning No. 7).

Exterior paintwork and body panels

1. Visually check paintwork and body panels for damage and corrosion.

Underbody sealer

1. Visually check underbody sealer for damage and continuity.

DRIVER AIR BAG MODULE

1. Visually check for signs of damage.
2. To renew an air bag. ***See RESTRAINT SYSTEMS, Repairs.***

PASSENGER AIR BAG MODULE

1. Visually check for signs of damage.
2. To renew an air bag. ***See RESTRAINT SYSTEMS, Repairs.***

ROTARY COUPLER

1. Rotate steering wheel one half turn in each direction and check for noise from the rotary coupler.
2. To renew the rotary coupler. ***See ELECTRICAL, Repairs.***

SCREEN WIPERS AND BLADES

1. Operate front screen wiper.
2. Check that blades wipe screen without smearing.
3. Check that wipers park correctly.
4. Operate wiper switch in all modes.
5. Check that wipers operate at speeds selected.
6. Operate rear screen wiper and check that blade wipes screen without smearing.

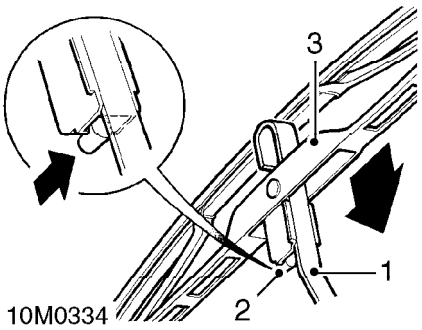

Renew blade

1. Lift wiper arm.
2. Press retaining lever.
3. Slide blade down arm.
4. Withdraw blade assembly from arm.
5. Position new blade to wiper arm.
6. Push blade into engagement with arm.
7. Check that it is retained.

WINDSCREEN AND REAR SCREEN WASHERS

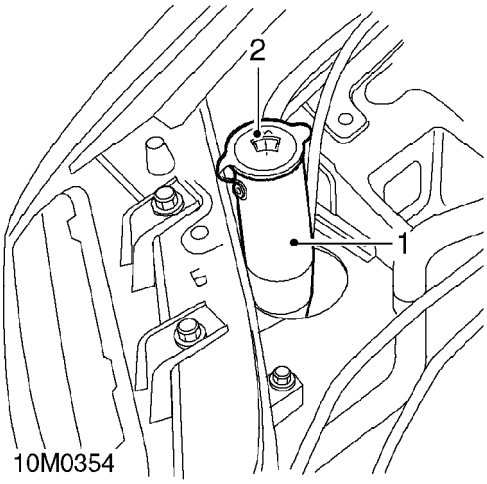

1. Visually check mixture level in reservoir.
2. Top-up by removing filler cap and adding required concentration mixture of water and 'Screenwash'.
3. Clean windscreen washer jets using thin wire as a probe.

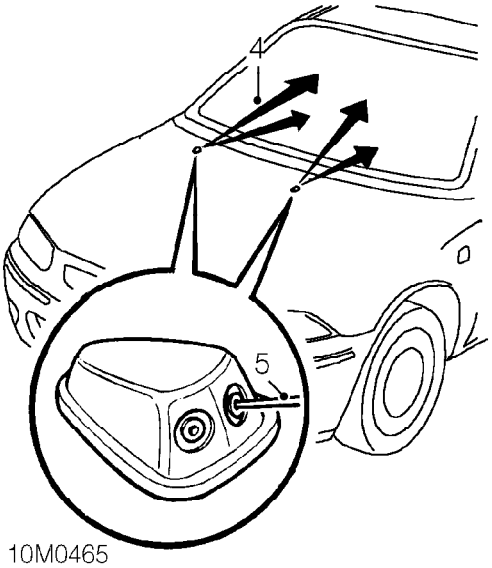

4. Operate windscreen washer and check that jets strike top and centre of area to be wiped.
5. Adjust jet by inserting a needle into jet hole and repositioning.

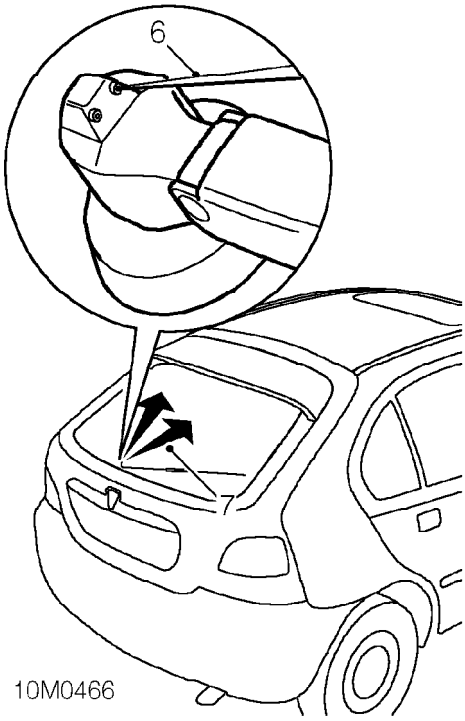

6. Clean rear screen washer jets using thin wire as a probe.
7. Operate rear screen washer and check that jet strikes centre of area to be wiped.
8. Adjust jet by inserting a needle into jet hole and repositioning.
9. Check operation of programmed wash/wipe by switching on ignition and operating washer lever.
10. Observe that washer and wiper operate for as long as lever is operated and wiper operates for a further 5 seconds after lever is released.
11. Recheck level in reservoir after adjustments.

LAMPS, HORNS AND WARNING INDICATORS

1. Check for correct operation of all lamps, warning lamps, switches and horn.

BATTERY CONNECTIONS

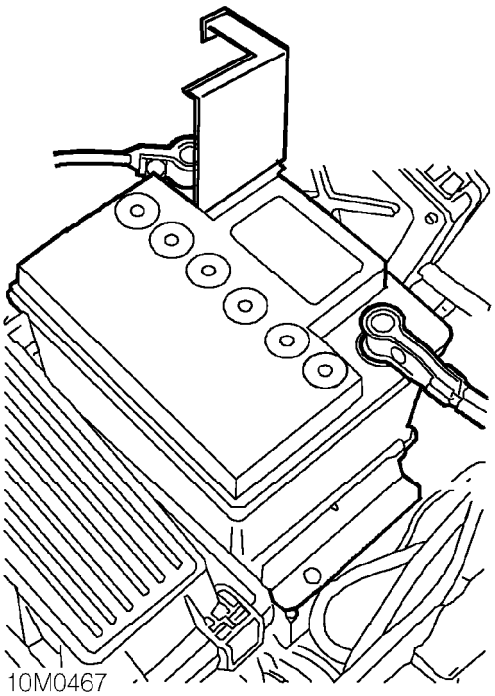

1. Wipe battery top clean and dry.
2. Pull back protector to expose terminal posts and smear with petroleum jelly.
3. Ensure terminals are tight.
4. Replace protector.

FUSEBOX

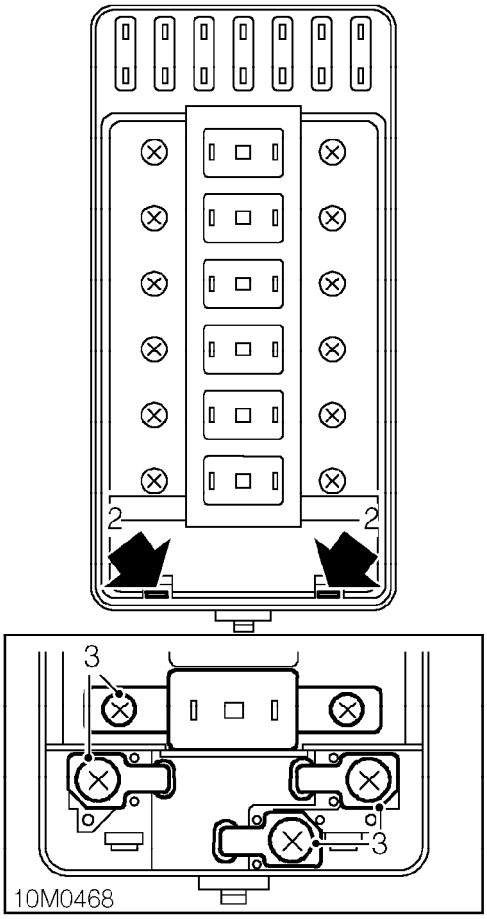

Engine compartment fuse box

1. Release and lift off cover.
2. Release 2 clips and remove fuse box inner cover.
3. Check security of fusible link and power lead connections.
4. Refit inner cover.
5. Refit cover and secure.

ROAD TEST

Starter inhibitor switch - automatic

1. Select ’D’ gear lever position.
2. Check that engine will not start.
3. Select ’R’ gear lever position and repeat start check.
4. Check that engine will start in ’P’ and ’N’ positions.

Selector and kick-down cables - automatic

1. Check for correct setting of gear selector cable and kick-down overcheck.

Engine start and fast idle speed

1. Start engine from cold and check that fast engine idle speed is maintained until normal engine temperature is reached.

Engine performance and throttle operation

1. Start engine and check that it starts easily.
2. Check that ’oil pressure’ and ’no charge’ warning lamps extinguish.
3. Check that throttle pedal movement is free and unrestricted.
4. Check that engine is responsive to throttle movement.

Clutch and gear selection - manual. Normal driving conditions

1. Check that clutch engages smoothly without judder, slipping or noise.
2. Check for abnormal transmission noise.
3. Check for smooth quiet gear change and that gear selected engages easily.

Gear change and parking pawl engagement - automatic. Normal driving conditions

1. Select ’R’ and check for smooth take up.
2. Select ’D’ and check for smooth up-changes of ratio from rest.
3. Check operation of kick-down by driving vehicle at approximately 30 mph (50 km/h) and pressing throttle pedal quickly and firmly to the floor. Automatic down-change should operate.
4. Slow down vehicle and check for smooth down-changes of ratio.
5. Stop vehicle on a slope.
6. Select ’P’ and release handbrake.
7. Check that vehicle does not move and that selector does not slip out of ’P’.
8. Carry out a similar check with vehicle facing in the opposite direction.

Steering

1. Check for noise, effort required, free play and self- centralism.

Suspension

1. Check for noise, irregularity in ride (e.g dampers) and wheel imbalance.

Footbrake

1. Check for pedal effort, travel, braking efficiency, pulling and binding.

Instruments

1. Check that all instruments operate.
2. Check speedometer for steady operation, noise and operation of distance recorder.

Body

1. Check for abnormal body noise.

Seat belts

1. Check for operation of inertia reels and condition of belt webbing.

Handbrake

1. Apply handbrake firmly, check travel and ratchet hold and release.

CONTENTS

Page

REPAIRS

CAMSHAFT FRONT OIL SEAL 1
CAMSHAFT REAR OIL SEAL 2
CRANKSHAFT FRONT PULLEY 3
CRANKSHAFT FRONT OIL SEAL 5
CRANKSHAFT REAR OIL SEAL 6
CYLINDER HEAD GASKET 7
CAMSHAFT COVER GASKET 12
VALVE STEM OIL SEAL 13
ENGINE AND GEARBOX 15
ENGINE STEADY BAR 23
ENGINE LH MOUNTING 24
ENGINE RH MOUNTING 25
FLYWHEEL 25
FLYWHEEL STARTER RING GEAR 26
OIL FILTER 26
DIPSTICK TUBE 27
OIL PUMP 27
SUMP GASKET 28
OIL PRESSURE SWITCH 30
CAMSHAFT TIMING BELT 30
CAMSHAFT TIMING BELT UPPER COVER 33
CAMSHAFT TIMING BELT LOWER COVER 34

CAMSHAFT FRONT OIL SEAL

Service repair no - 12.13.05

Remove

1. Remove and discard camshaft timing belt. ***See this section.***

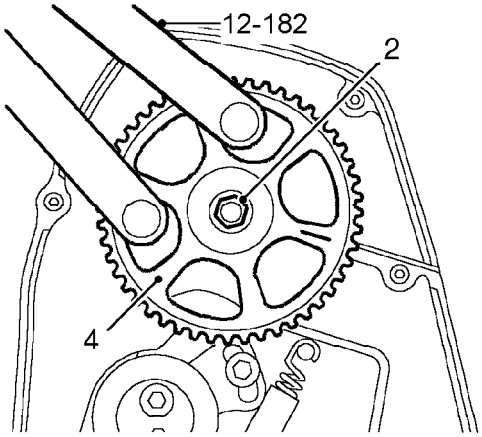

M12 5020A

2. Using tool **12-182,** hold camshaft gear against rotation and loosen centre bolt.
3. Remove centre bolt and plain washer from camshaft gear.
4. Remove camshaft gear.

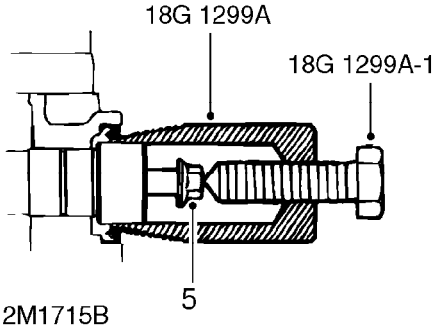

12M1715B

5. Fit camshaft gear centre bolt to camshaft.
6. Fit tool **18G 1299A** into camshaft seal.
7. Remove oil seal by tightening centre bolt **18G 1299A-1**
8. Remove centre bolt from camshaft.

Refit

1. Clean sealing area of cylinder head and camshaft, ensuring all traces of rubber are removed. DO NOT use a scraper as this may damage sealing surfaces.

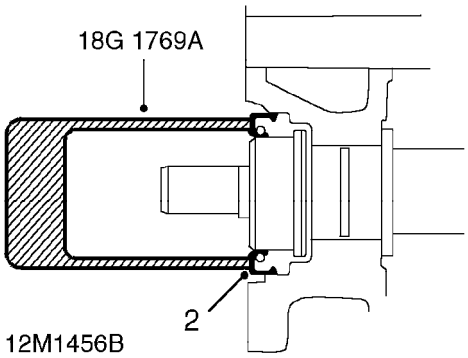

12M1456B

2. Using tool **18G 1769A** fit new camshaft oil seal.

NOTE: This oil seal is coloured BLACK.

CAUTION: Oil seal must be fitted dry. Do not use tool 18G 1769.

3. Align timing mark and fit camshaft gear.
4. Fit centre bolt and plain washer to camshaft gear.

5. Using tool **12-182** hold camshaft gear against rotation and tighten centre bolt to:
   M8 Bolt - 35 Nm
   M10 Bolt - 65 Nm
6. Check camshaft gear timing mark alignment.
7. Fit new camshaft timing belt. ***See this section.***

CAMSHAFT REAR OIL SEAL

Service repair no - 12.13.06

Remove

1. Disconnect battery earth lead.
2. Remove air cleaner assembly. ***See ENGINE MANAGEMENT SYSTEM - MEMS, Repairs.***
3. Remove distributor cap. ***See ENGINE MANAGEMENT SYSTEM - MEMS, Repairs.***

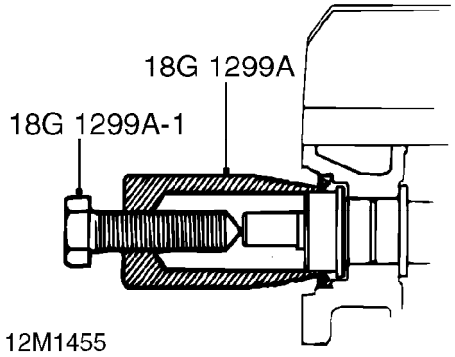

4. Screw tool **18G 1299A** into camshaft rear oil seal.
5. Tighten centre bolt, tool **18G 1299A-1,** to remove seal.
6. Remove camshaft oil seal.

Refit

1. Clean sealing area of cylinder head and camshaft carrier, ensuring all traces of rubber are removed. DO NOT use a scraper as this may damage sealing surfaces.

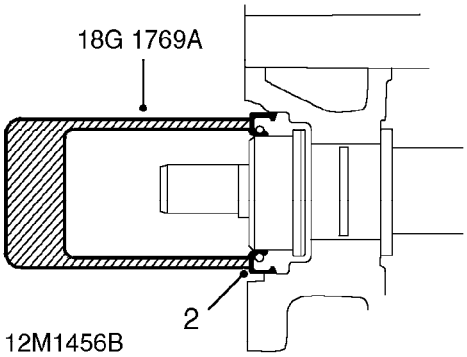

2. Using tool **18G 1769A** fit new camshaft oil seal.

NOTE: This oil seal is coloured RED.

CAUTION: Oil seal must be fitted dry. Do not use tool 18G 1769.

3. Fit distributor cap. ***See ENGINE MANAGEMENT SYSTEM - MEMS, Repairs.***
4. Fit air cleaner assembly. ***See ENGINE MANAGEMENT SYSTEM - MEMS, Repairs.***
5. Connect battery earth lead.

CRANKSHAFT FRONT PULLEY

Service repair no - 12.21.01

Remove

1. Disconnect battery earth lead.
2. Raise front of vehicle.

WARNING: Support on safety stands.

3. Remove auxiliary drive belt. ***See ELECTRICAL, Repairs.***
4. Remove starter motor. ***See ELECTRICAL, Repairs.***

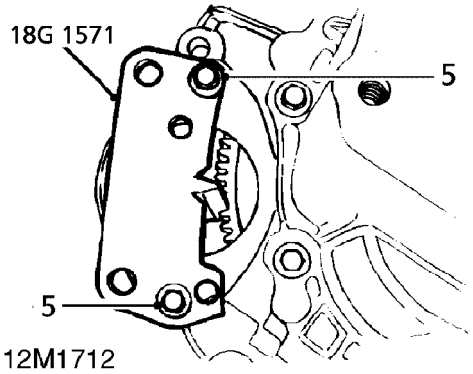

5. Fit flywheel locking tool **18G 1571** to flywheel housing and secure with 2 bolts.

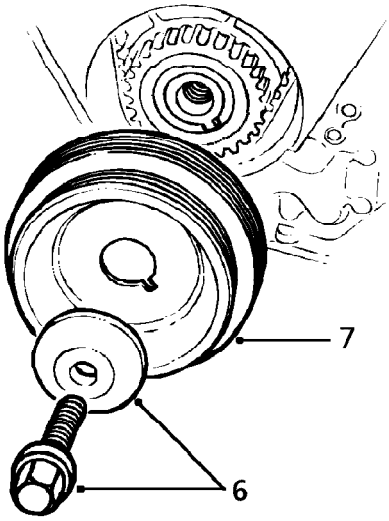

12M1713

6. Remove bolt securing pulley to crankshaft and collect washer.
7. Remove crankshaft pulley.

Refit

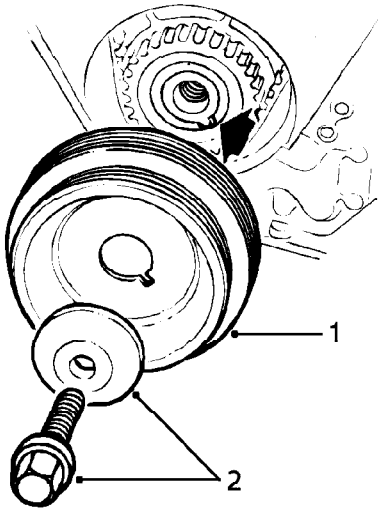

12M2356

1. Fit crankshaft pulley to crankshaft gear ensuring that indent on pulley locates over lug on gear (arrowed in illustration).
2. Fit washer and bolt securing crankshaft pulley to crankshaft and tighten to 205 Nm.
3. Remove 2 bolts securing tool **18G 1571** to flywheel housing and remove tool **18G 1571.**
4. Fit starter motor. ***See ELECTRICAL, Repairs.***
5. Fit auxiliary drive belt. ***See ELECTRICAL, Repairs.***
6. Connect battery earth lead.

CRANKSHAFT FRONT OIL SEAL

Service repair no - 12.21.14

Remove

1. Remove camshaft timing belt. ***See this section.***

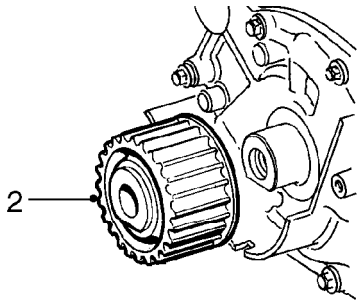

12M1636

2. Remove crankshaft gear.

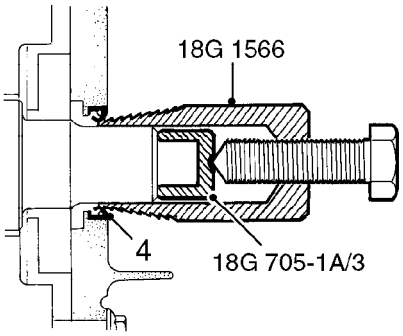

12M1637

3. Fit tool **18G 705-1A/3** to end of crankshaft.
4. Ensure bore of tool **18G 1566** is free from burrs.
5. Screw tool **18G 1566** into crankshaft front oil seal.
6. Tighten centre bolt of tool **18G 1566** to remove seal
7. Discard crankshaft front oil seal.
8. Remove **18G 705-1A/3** from crankshaft.

Refit

1. Using a lint free cloth, thoroughly clean oil seal recess in oil pump and running surface on crankshaft.

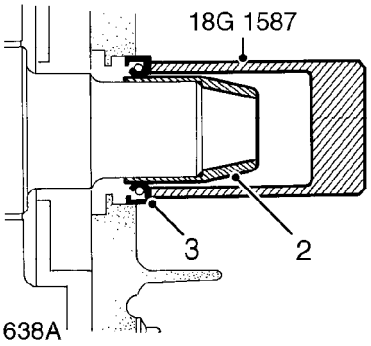

12M 1638A

2. Fit oil seal guide, from seal kit, over end of crankshaft.
3. Position new seal on crankshaft up against oil pump housing. Drift seal into place using tool **18G 1587.**

CAUTION: Oil seal must be fitted dry.

4. Remove tool **18G 1587** and oil seal guide.
5. Clean crankshaft gear.
6. Fit crankshaft gear to crankshaft.
7. Fit camshaft timing belt. ***See this section.***

CRANKSHAFT REAR OIL SEAL

Service repair no - 12.21.20

Remove

1. Remove flywheel. ***See this section.***

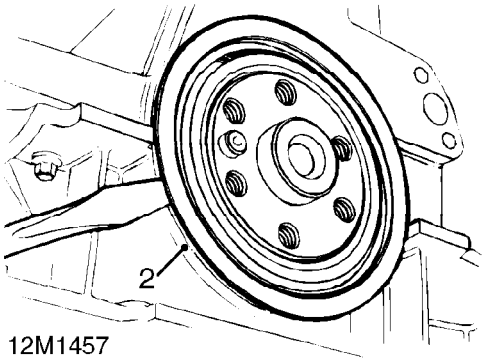

2. Using a burr free flat ended screwdriver, ease crankshaft rear oil seal from cylinder block and remove. Discard oil seal.

CAUTION: Do not mark sealing surface on crankshaft or cylinder block.

Refit

1. Remove all traces of oil and sealant from cylinder block, oil seal recess and running surface on crankshaft.

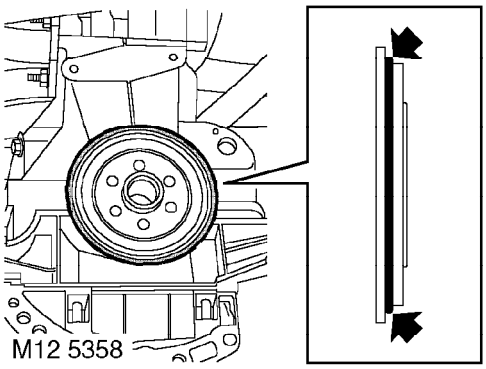

2. Apply a l.5 mm continuous bead of sealant, Part No. GAC 8000 to replacement oil seal as shown.

CAUTION: Do not apply oil or grease to any part of oil seal or running surface of crankshaft. Seal must be fitted immediately after application of sealant.

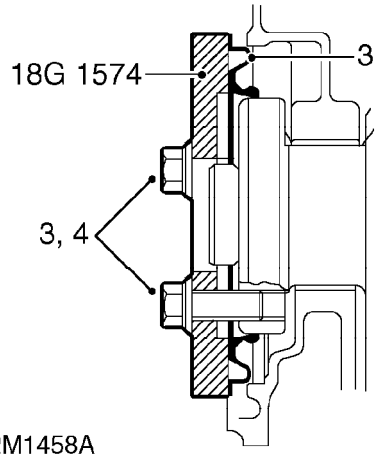

3. Position oil seal to cylinder block and fit oil seal replacer tool **18G 1574,** retain tool using 3 slave bolts.
4. Evenly tighten oil seal replacer bolts to press oil seal squarely into cylinder block.
5. Leave oil seal replacer tool and oil seal in clamped position for one minute.
6. Remove oil seal replacer tool.
7. Allow sealant to cure for a minimum of 30 minutes before topping-up oil or rotating crankshaft.
8. Fit flywheel. ***See this section.***

CYLINDER HEAD GASKET

Service repair no - 12.29.02

Remove

1. Disconnect battery earth lead.
2. Drain cooling system. ***See COOLING SYSTEM - ’K’ SERIES, Repairs.***
3. Remove air cleaner. ***See ENGINE MANAGEMENT SYSTEM - MEMS, Repairs.***
4. Remove exhaust manifold. ***See MANIFOLD & EXHAUST SYSTEMS, Repairs.***
5. Remove and discard camshaft timing belt. ***See this section.***

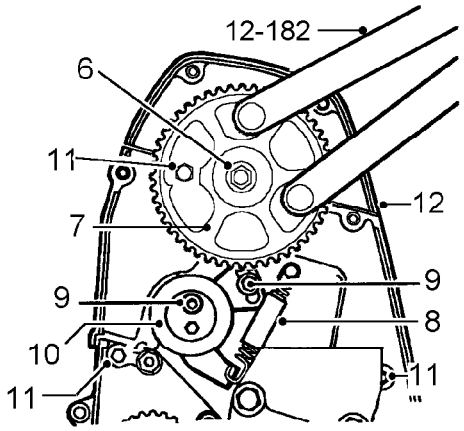

12M 2200A

6. Restrain camshaft gear using tool **12-182** and remove bolt and washer securing camshaft gear to camshaft.
7. Remove camshaft gear.
8. Remove camshaft timing belt tensioner spring.
9. Remove timing belt tensioner centre Allen bolt and backplate screw.
10. Remove camshaft timing belt tensioner.
11. Remove 3 bolts securing camshaft timing belt rear cover.
12. Remove camshaft timing belt rear cover.

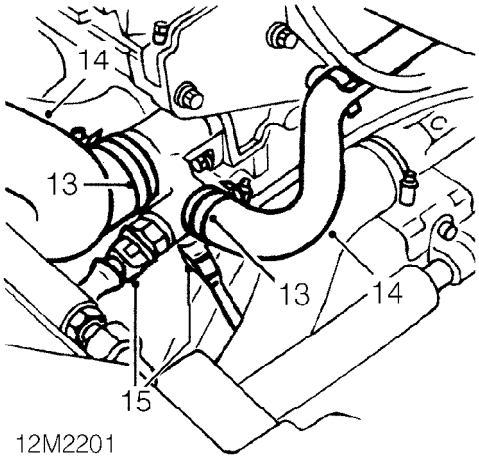

12M2201

13. Remove clips securing coolant hoses to coolant outlet elbow.
14. Release coolant pipes from outlet elbow.
15. Disconnect multiplugs from coolant sensors on outlet elbow.

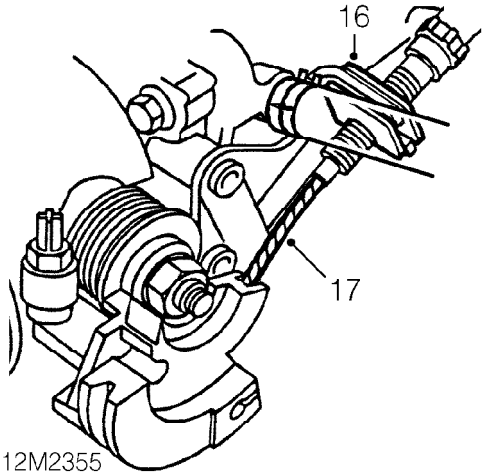

12M2355

16. Release throttle cable adjustment nut from abutment bracket.
17. Release throttle cable from throttle cam.

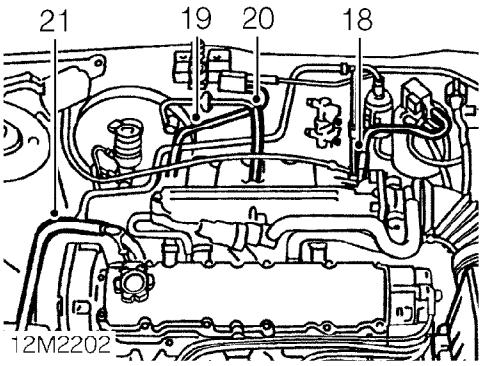

18. Release clip securing evaporative emission canister vacuum pipe to inlet manifold and disconnect pipe.
19. Disconnect ECM vacuum pipe from inlet manifold.
20. Depress plastic collar on quick release connector and disconnect brake servo vacuum hose from inlet manifold.
21. Release clip securing coolant pipe to inlet manifold and disconnect pipe.
22. Position absorbent cloth around fuel filter outlet union.

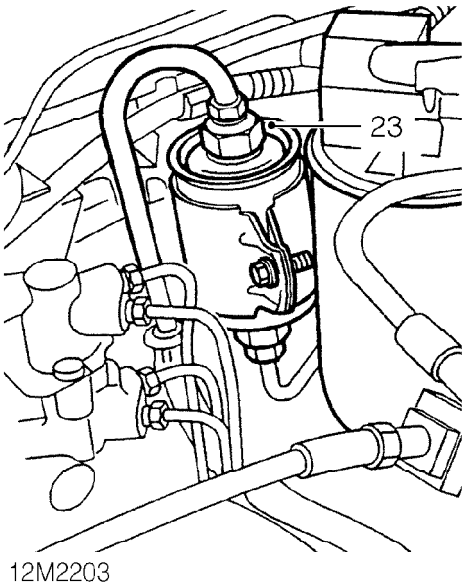

23. Loosen fuel filter outlet union to relieve fuel pressure.
24. Re-tighten union to 28 Nm.

CAUTION: To prevent damage to fuel system pipes or components, use two spanners when loosening or tightening unions.

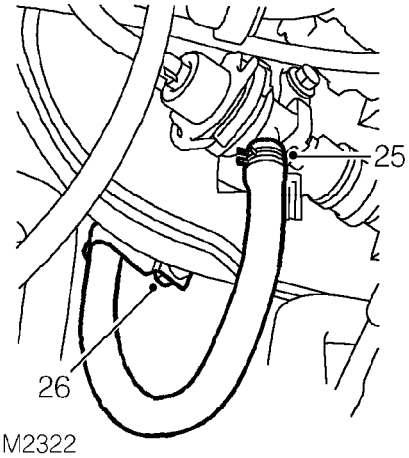

25. Release clip securing fuel return pipe to fuel rail and disconnect pipe.

CAUTION: Plug fuel system hoses and connections.

26. Release fuel return pipe from 2 clips on underside of inlet manifold.

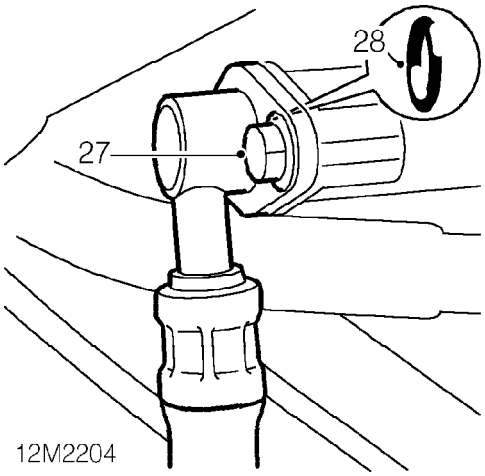

27. Remove 2 bolts securing fuel feed pipe to fuel rail.
28. Remove fuel feed pipe from fuel rail and discard ’O’ ring.

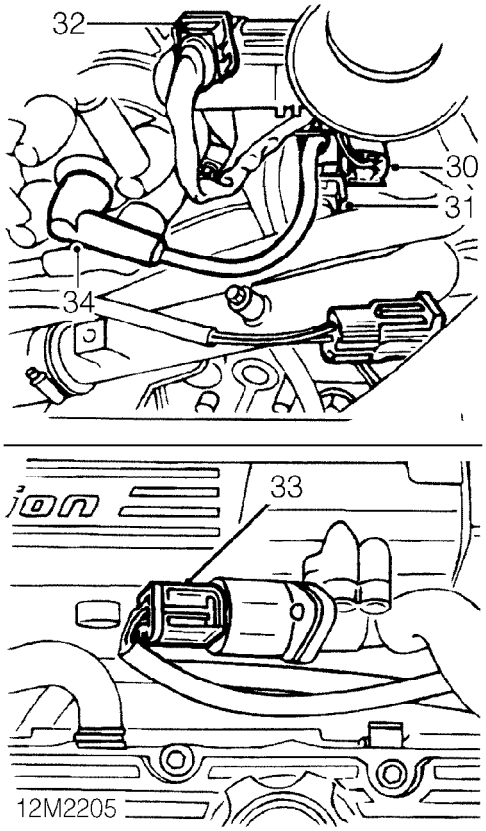

29. Release injector harness multiplug from bracket on throttle body.
30. Disconnect multiplug from injector harness.
31. Disconnect multiplug from IAT sensor.
32. Disconnect multiplug from TP sensor.
33. Disconnect multiplug from IACV.
34. Disconnect coil h.t. lead from distributor.

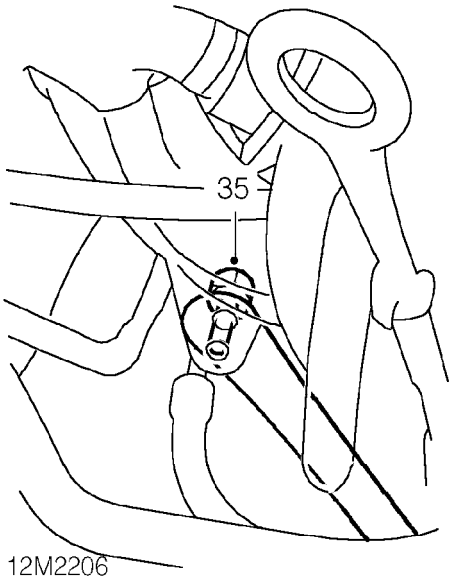

35. Remove bolt securing inlet manifold to support bracket.

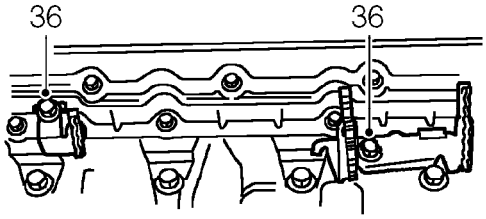

36. Remove 3 bolts securing both h.t. lead guide brackets to cylinder head and collect brackets.

37. Remove camshaft cover. ***See this section.***

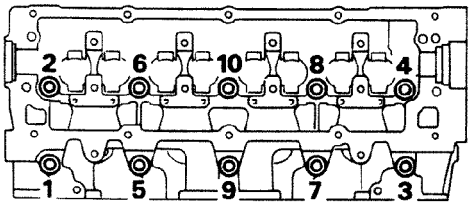

38. Remove 10 cylinder head bolts in sequence shown. Remove bolts and store in fitted order.

39. Using assistance, remove cylinder head assembly from cylinder block.

40. Remove cylinder head gasket from cylinder block and discard.

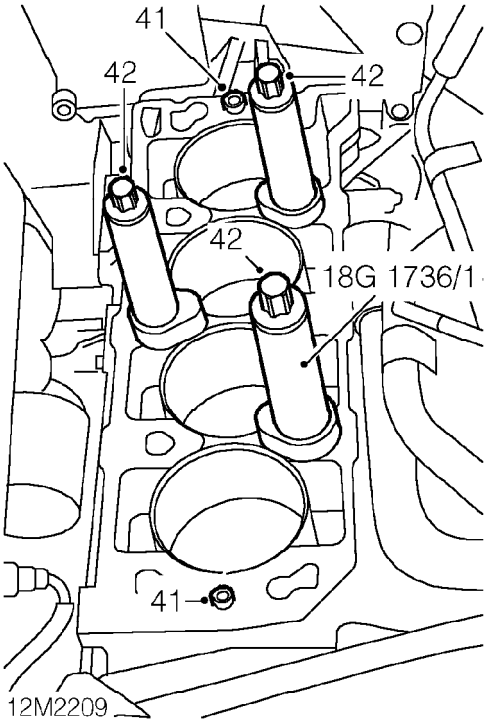

41. Remove 2 location dowels from cylinder block.

42. Fit cylinder liner clamps **18G 1736/1** to cylinder block and secure with cylinder head bolts.

CAUTION: Do not rotate crankshaft with cylinder head removed. Place cylinder head on blocks of wood to avoid damaging valves.

Refit

1. Remove bolts securing cylinder liner clamps to cylinder block and remove clamps.
2. Clean joint surfaces of cylinder head and cylinder block.
   Clean oil and coolant passages.
   If necessary, de-carbonise piston crowns and cylinder head.
3. Clean cylinder head bolts with a wire brush. Inspect cylinder head bolts for signs of damage.
4. Wash cylinder head bolts and wipe dry. apply a light film of oil to bolt threads and underside of head bolts.
5. Clean location dowels and fit to cylinder block.
6. Fit new cylinder head gasket, dry, to cylinder block.
7. Using assistance, fit cylinder head onto cylinder block, carefully locating dowels.
8. Carefully enter cylinder head bolts. DO NOT DROP. Screw bolts into place by hand.

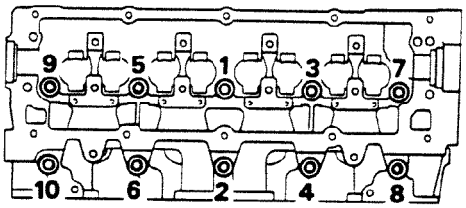

12M2210

9. Working in the sequence shown, progressively tighten the cylinder head bolts using the following procedure:
   i. All bolts to 20 Nm. Use a felt tip pen and mark position of radial mark on each bolt head.
   ii. Turn all bolts through 180°.
   iii. Turn all bolts through another 180° and align radial mark.

CAUTION: If bolt is overtightened, back off 90° then realign radial marks.

10. Fit camshaft cover. ***See this section.***
11. Fit h.t. lead guide brackets and secure with bolts.
12. Connect coil h.t. lead to distributor.
13. Fit bolt securing inlet manifold to support bracket and tighten to 25 Nm.
14. Connect multiplug to IACV.
15. Connect multiplug to TP sensor.
16. Connect multiplug to IAT sensor.
17. Connect injector harness multiplug and secure on throttle body mounting bracket.
18. Fit new ’O’ ring to fuel feed pipe
19. Fit fuel feed pipe to fuel rail and tighten bolts to 5 Nm.
20. Fit fuel return hose to fuel rail and secure with clip.
21. Secure fuel return pipe to clips on underside of inlet manifold.
22. Fit coolant pipe to inlet manifold and secure with clip.
23. Connect brake servo pipe to inlet manifold.
24. Connect ECM vacuum pipe to inlet manifold.
25. Fit evaporative emission canister vacuum pipe to inlet manifold and secure with clip.
26. Connect throttle cable to throttle cam.
27. Locate throttle cable adjusting nut in abutment bracket.
28. Connect coolant pipes to outlet elbow on cylinder head and secure with clips.
29. Connect multiplugs to coolant sensors on outlet elbow.
30. Fit camshaft timing belt rear cover and tighten bolts to 10 Nm.

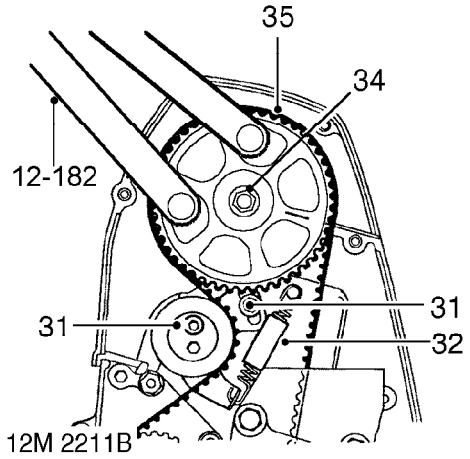

31. Position camshaft timing belt tensioner to engine and fit centre bolt and backplate screw.
32. Fit camshaft timing belt tensioner spring.
33. Fit camshaft gear to camshaft ensuring timing marks on camshaft gear and rear cover are aligned.
34. Fit bolt and washer securing camshaft gear to camshaft. Using tool **12-182** restrain camshaft gear and tighten bolt to:
    M8 Bolt - 35 Nm
    M10 Bolt - 65 Nm
35. Fit new camshaft timing belt. ***See this section.***
36. Fit exhaust manifold. ***See MANIFOLD & EXHAUST SYSTEMS, Repairs.***
37. Fit air cleaner. ***See ENGINE MANAGEMENT SYSTEM - MEMS, Repairs.***
38. Connect battery earth lead.
39. Refill engine cooling system. ***See COOLING SYSTEM - 'K' SERIES, Repairs.***
40. Adjust throttle cable. ***See ENGINE MANAGEMENT SYSTEM - MEMS, Adjustments.***

CAMSHAFT COVER GASKET

Service repair no - 12.29.40

Remove

1. Disconnect battery earth lead.

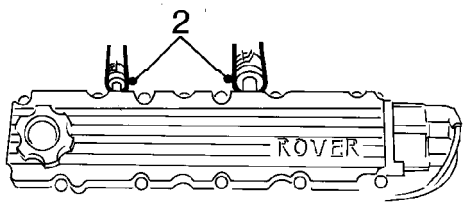

12M1077

2. Release 2 clips and disconnect 2 breather hoses from camshaft cover.

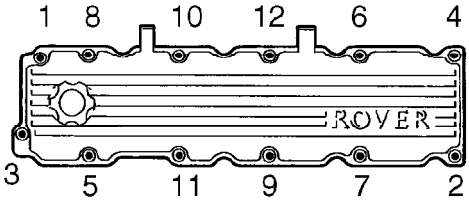

12M1716

3. Using sequence shown, progressively loosen and remove 12 bolts securing camshaft cover.
4. Remove camshaft cover.

NOTE: The gasket is re-usable and should remain attached to camshaft cover.

5. Check condition of sealing path. It should be complete and attached to gasket. Remove gasket from camshaft cover only if sealing path is damaged or detached from gasket.

Refit

1. Clean mating surfaces of camshaft cover and carrier.
2. Clean inside of camshaft cover. If necessary, wash oil separator elements in solvent and blow dry.

CAUTION: If camshaft cover gasket is to be renewed, fit new gasket to camshaft cover.

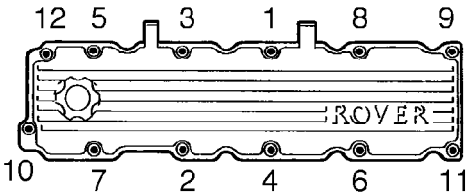

12M1717

3. Fit camshaft cover to camshaft carrier. Fit bolts and working in sequence illustrated, tighten progressively to 10 Nm.
4. Connect breather hoses to cover and secure with clips.
5. Connect battery earth lead.

VALVE STEM OIL SEAL

Service repair no - 12.30.26

Remove

1. Disconnect battery earth lead.
2. Remove camshaft cover. ***See this section.***
3. Remove camshaft. See **’K’ Series Engine Overhaul Manual - Overhaul.**
4. Remove spark plug from cylinder head. ***See ENGINE MANAGEMENT SYSTEM - MEMS, Repairs.***

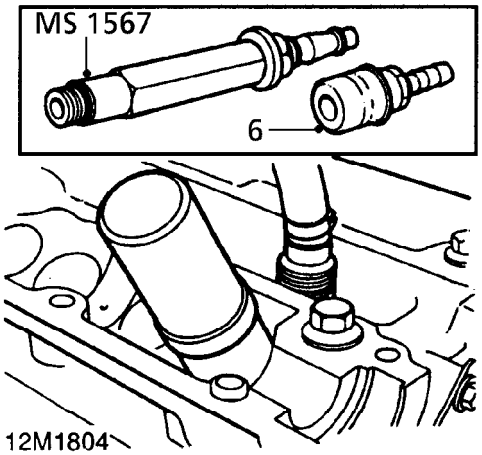

12M1804

5. Screw air line adaptor **MS 1567** into spark plug hole.
6. Connect air line to adaptor.
7. Remove hydraulic tappet from valve.

CAUTION: Store tappets inverted to prevent oil loss.

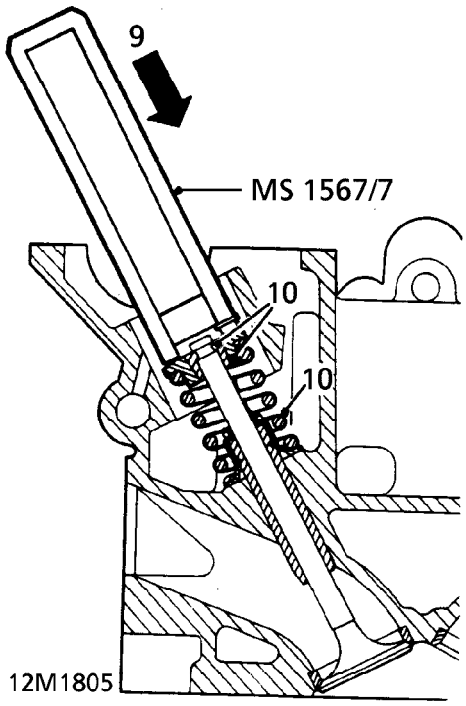

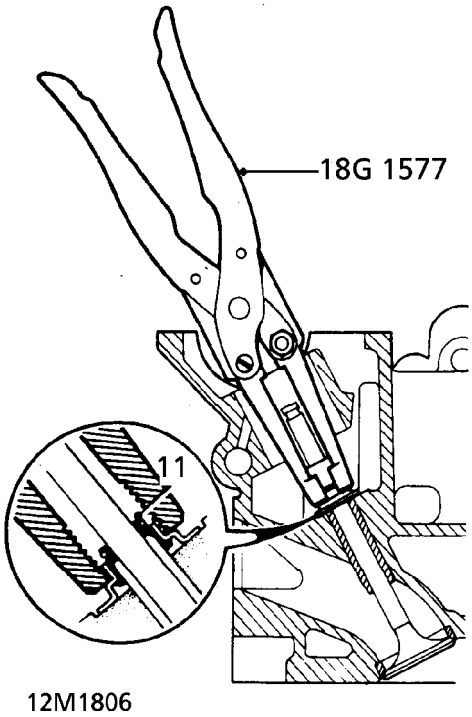

8. Position tool **MS 1567/7** to valve spring cap.
9. Strike tool firmly with hammer to release spring cap collets.
10. Remove collets, spring cap, and valve spring.
11. Use tool **18G 1577** to remove valve stem oil seal.

Refit

1. Lubricate new valve stem oil seal with engine oil.
2. Use tool **18G 1577** to fit oil seal to valve stem.

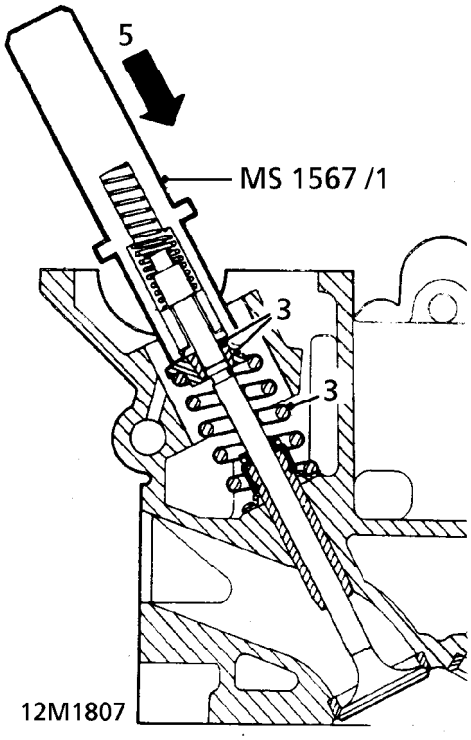

3. Position valve spring, spring cap, and collets.
4. Position tool **MS 1567/1** to valve spring cap.
5. Strike tool with hammer to secure spring cap to valve with collets. Ensure spring cap collets are correctly seated.
6. Fit hydraulic tappet to valve.
7. Disconnect air line, and remove adaptor from cylinder head.
8. Fit spark plug. ***See ENGINE MANAGEMENT SYSTEM - MEMS, Repairs.***
9. Fit camshaft. See **’K’ Series Engine Overhaul Manual - Overhaul.**
10. Remove camshaft cover. ***See this section.***
11. Connect battery earth lead.

ENGINE AND GEARBOX

Service repair no - 12.37.01.99

Remove

1. Raise front of vehicle.

WARNING: Support on safety stands.

2. Remove road wheel(s).
3. *If required:* Drain engine oil. ***See MAINTENANCE.***
4. Drain cooling system. ***See COOLING SYSTEM - ’K’ SERIES, Adjustments.***
5. Drain gearbox oil. ***See MANUAL GEARBOX - ’R65’, Adjustments.***
6. Remove air cleaner. ***See ENGINE MANAGEMENT SYSTEM - MEMS, Repairs.***
7. Remove ECM. ***See ENGINE MANAGEMENT SYSTEM - MEMS, Repairs.***
8. Remove engine management relay module. ***See ENGINE MANAGEMENT SYSTEM - MEMS, Repairs.***

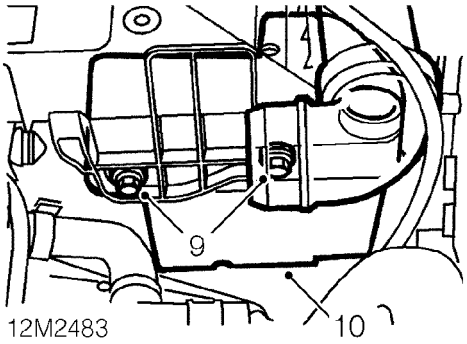

9. Remove 2 bolts securing resonator to battery tray.
10. Remove resonator.
11. Remove engine compartment fuse box. ***See ELECTRICAL, Repairs.***

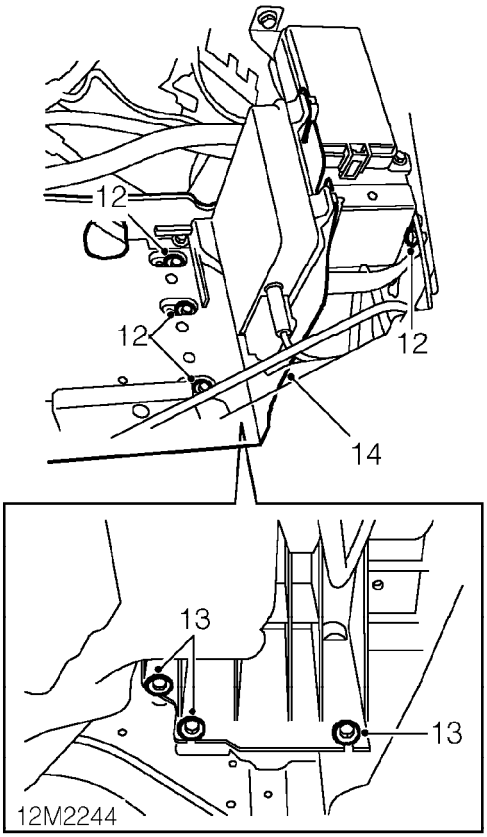

12. Remove 4 bolts securing battery tray to body.
13. Loosen 3 bolts securing battery tray to body.
14. Remove battery tray.

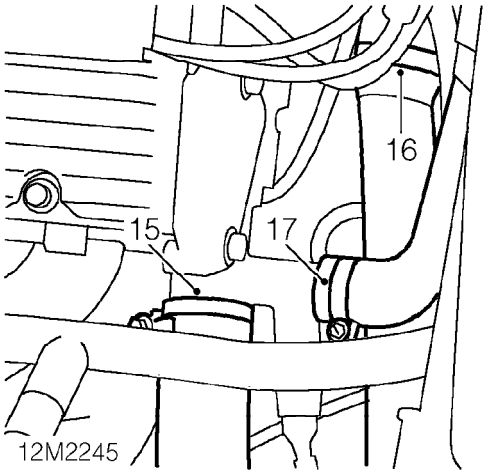

15. Loosen clip and disconnect radiator top hose from coolant outlet elbow.
16. Loosen clip and disconnect coolant hose from coolant rail.
17. Loosen clip and disconnect heater hose from coolant outlet elbow, position hose aside.

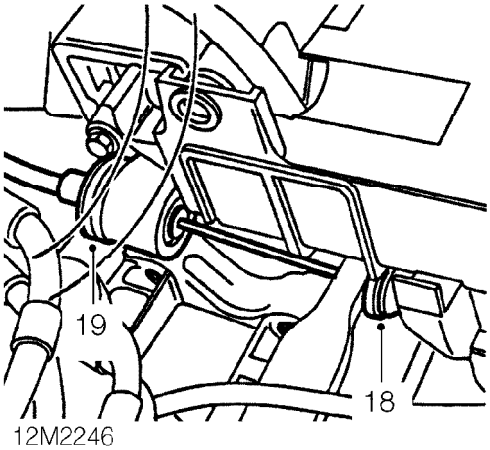

18. Disconnect clutch cable from clutch release lever.
19. Release cable from abutment bracket.

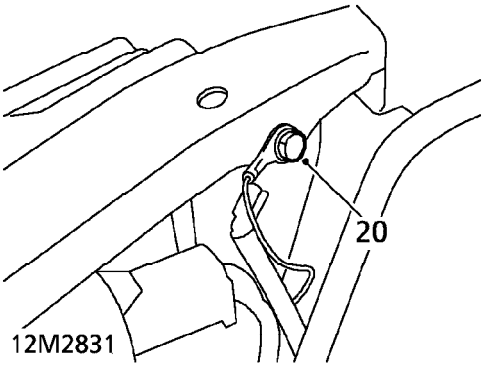

20. Remove bolt securing engine harness earth lead to bonnet locking platform.

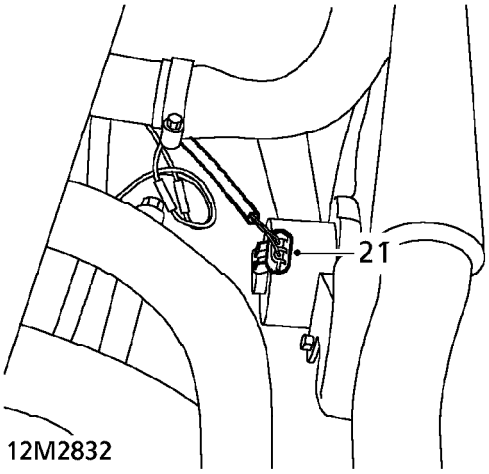

21. Disconnect multiplug from radiator cooling fan.

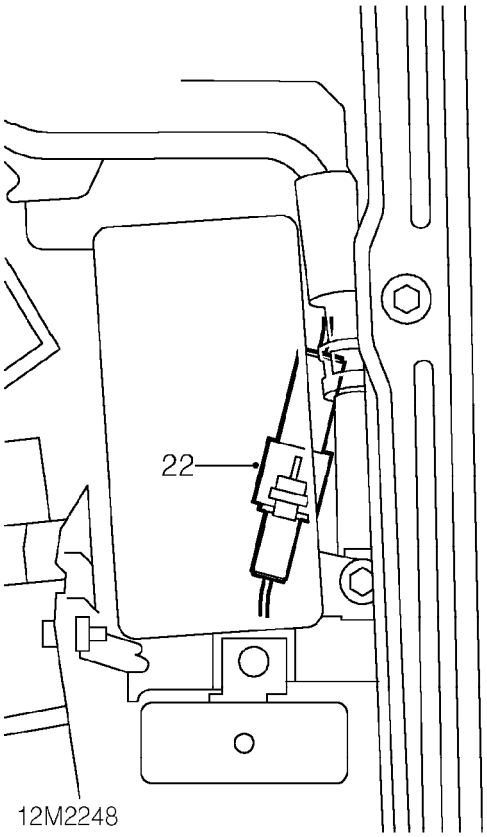

22. Disconnect engine harness multiplug from main harness.

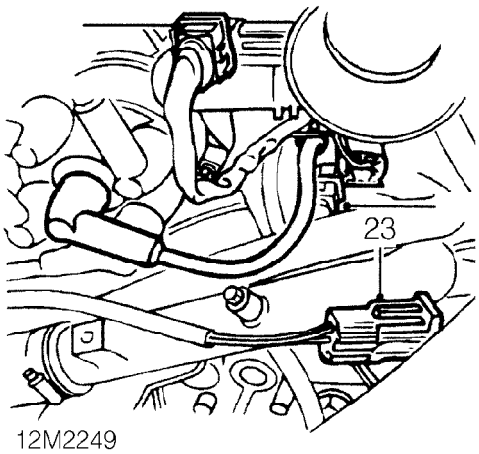

23. Disconnect multiplug from HO2S.
24. Disconnect front pipe from manifold. ***See MANIFOLD & EXHAUST SYSTEMS, Repairs.***

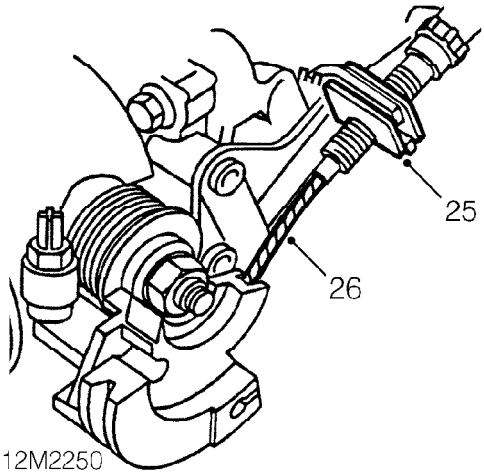

25. Release throttle cable adjusting nut from abutment bracket.
26. Disconnect throttle cable from throttle cam.
27. Remove evaporative emission canister. ***See EMISSION CONTROL, Repairs.***

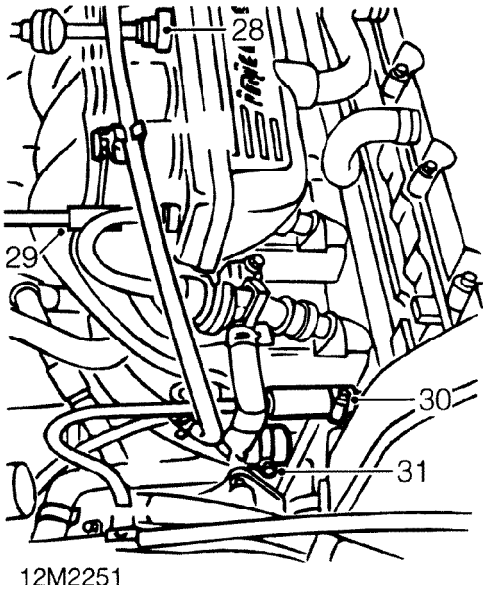

28. Depress collar and release brake servo vacuum hose from inlet manifold.
29. Release ECM vacuum pipe from inlet manifold.
30. Loosen clip and disconnect coolant hose from inlet manifold.
31. Loosen clip and disconnect hose from thermostat housing.

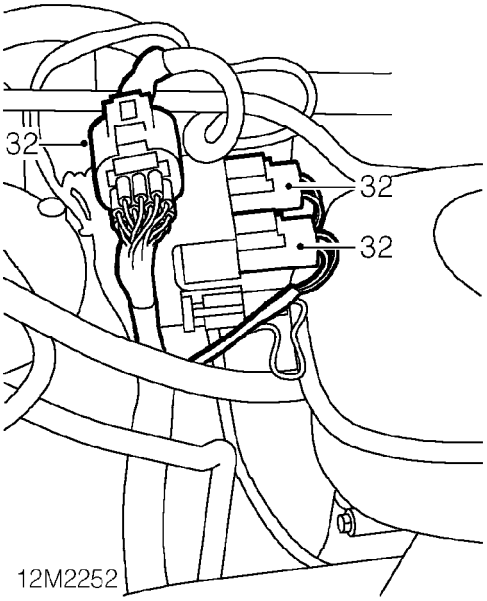

32. Disconnect 3 engine harness multiplugs from main harness.

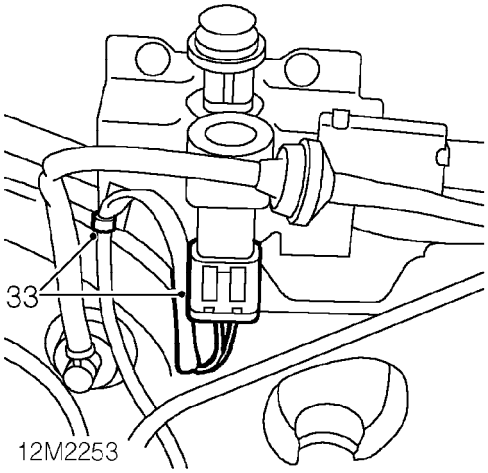

33. Disconnect inertia switch multiplug and release harness clip from bracket.

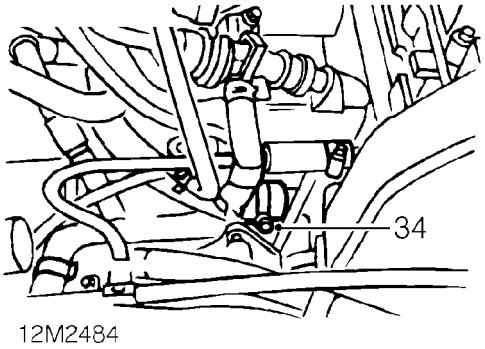

34. Loosen clip and disconnect hose from coolant rail.

35. Position absorbent cloth around fuel filter outlet union.

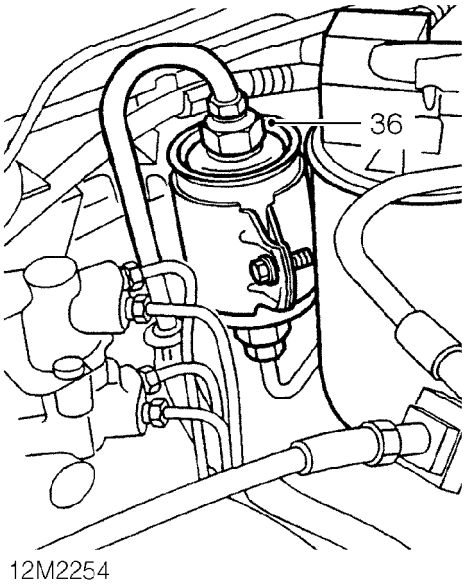

36. Loosen union to relieve fuel pressure then re-tighten to 28 Nm.

CAUTION: To prevent damage to fuel system pipes or components use two spanners when loosening or tightening unions.

37. Position an absorbent cloth around fuel rail feed pipe.

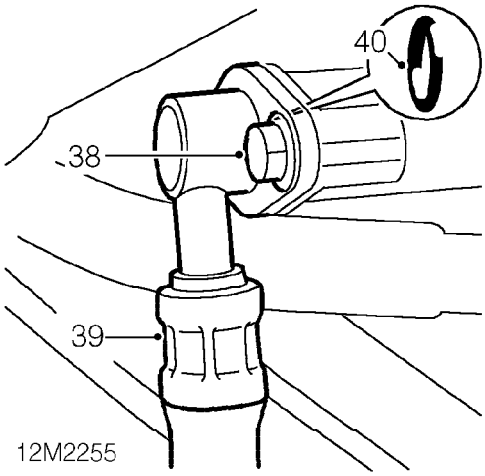

38. Remove 2 bolts securing fuel feed pipe to fuel rail.
39. Disconnect fuel feed pipe from fuel rail.
40. Remove and discard 'O' ring.

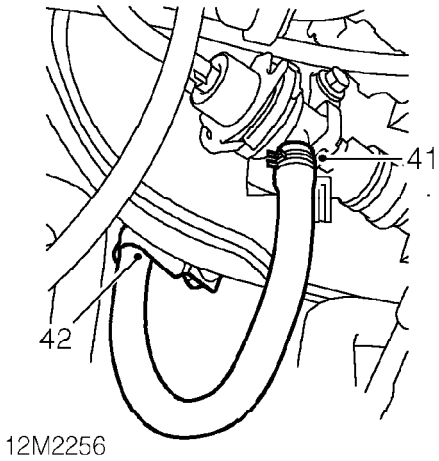

41. Release clip and disconnect fuel return hose from fuel rail.

CAUTION: Plug the connections.

42. Release fuel return hose from clips on underside of inlet manifold and position aside.
43. Release both drive shafts from gearbox, as detailed in Differential oil seal. ***See MANUAL GEARBOX - 'R65', Repairs.***

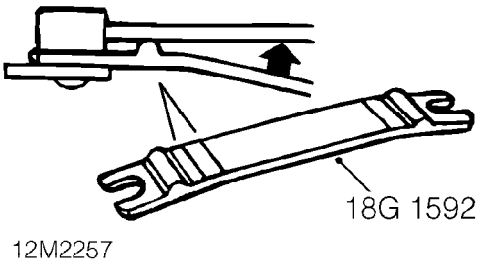

44. Using tool **18G 1592** release gear selector linkage ball joint from gear selector lever.
45. Using tool **18G 1592** release gear change linkage ball joint from gear change lever.

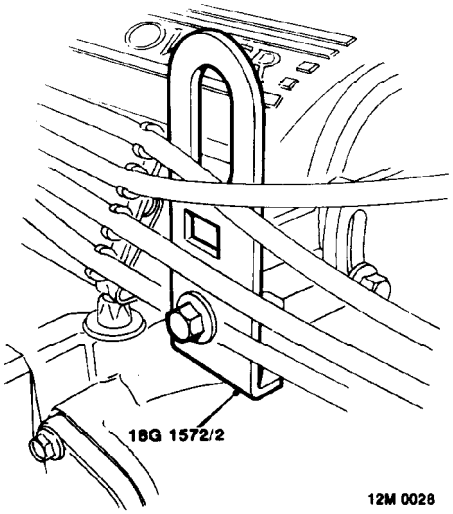

46. Fit lifting bracket **18G 1572/2** to cylinder head and tighten bolt to 9 Nm.

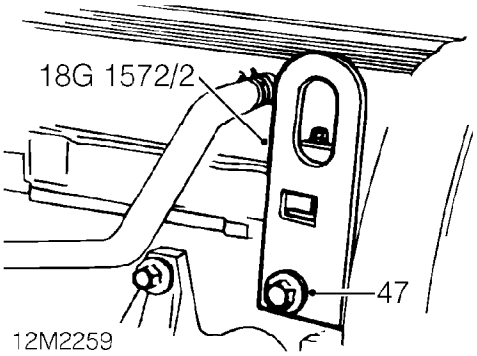

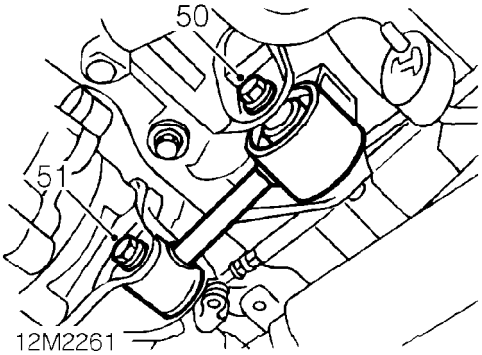

47. Fit second lifting bracket **18G 1572/2** to cylinder head and tighten bolt to 9 Nm.

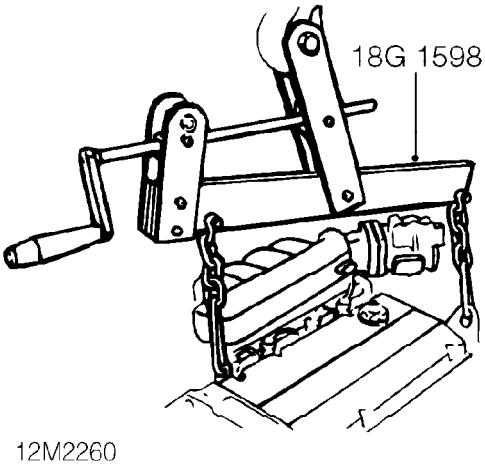

48. Connect adjustable lifting bracket **18G 1598** to engine lifting brackets.
49. Connect hoist to engine lifting bracket and raise to take weight of engine without exerting load on engine mounting bolts.

50. Loosen through bolt securing engine steady bar to subframe.
51. Remove through bolt securing engine steady bar to bracket on gearbox.
52. Remove engine LH mounting. ***See this section.***

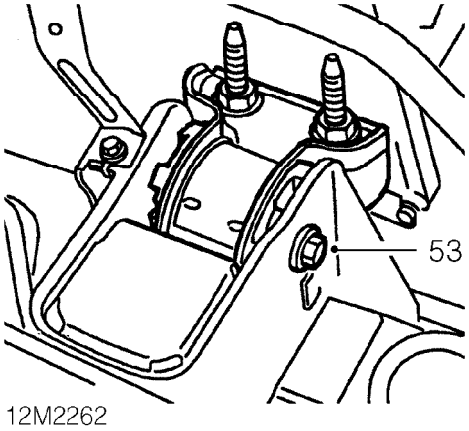

53. Remove through bolt securing engine RH mounting to body.
54. Using adjustable lifting bracket tool **18G 1598,** tilt engine with the gearbox as low as possible.
55. Using assistance, manoeuvre engine and gearbox from vehicle.
56. Lower engine and gearbox assembly and disconnect hoist from adjustable lifting bracket.

Refit

1. Connect hoist to tool **18G 1598.**
2. Using assistance, raise engine and manoeuvre into position in vehicle.
3. Adjust tool **18G 1598** so engine is horizontal in engine compartment.
4. Fit engine RH mounting through bolt but do not tighten.
5. Fit engine LH mounting. ***See this section.***
6. Connect steady bar to engine, fit through bolt and tighten bolt to 45 Nm.
7. Tighten through bolt securing engine steady bar to subframe to 80 Nm.
8. Tighten engine RH mounting through bolt to 80 Nm.
9. Lower hoist and disconnect tool **18G 1598** from engine lifting brackets.
10. Remove lifting brackets **18G 1592** from engine.
11. Clean gear selector linkage and gear selector linkage ball joints.

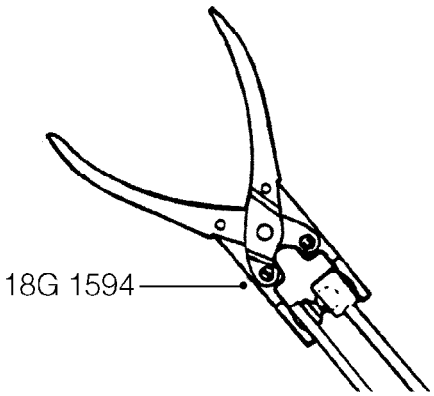

12M2239

12. Using tool **18G 1594** connect gear selector linkage ball joint to gear selector lever.
13. Using tool **18G 1594** connect gear change linkage ball joint to gear change lever.
14. Connect drive shafts to gearbox, as detailed in Differential oil seal. ***See MANUAL GEARBOX - 'R65', Repairs.***
15. Position fuel return hose through clips under inlet manifold and connect to fuel rail, secure with clip.
16. Lubricate new 'O' ring with silicone grease and fit to fuel feed pipe.
17. Connect feed pipe to fuel rail and tighten bolts to 5 Nm.
18. Connect hose to coolant rail and tighten clip.
19. Connect hose to thermostat housing and tighten clip.
20. Connect coolant hose to inlet manifold and tighten clip.
21. Connect multiplug to inertia switch and secure clip on harness to bracket.
22. Connect engine harness multiplugs to main harness.
23. Connect ECM vacuum pipe to inlet manifold.
24. Connect brake servo vacuum pipe to inlet manifold.
25. Fit evaporative emission canister. ***See EMISSION CONTROL, Repairs.***
26. Connect throttle cable to throttle cam.
27. Secure throttle cable adjusting nut to abutment bracket.
28. Connect front pipe to manifold. ***See MANIFOLD & EXHAUST SYSTEMS, Repairs.***
29. Connect multiplug to HO2S.
30. Connect multiplug to radiator cooling fan.
31. Connect engine harness multiplug to main harness.
32. Position engine harness earth lead to bonnet platform and tighten bolt to 9 Nm.
33. Feed clutch cable through abutment bracket and connect to clutch release lever.
34. Connect heater hose to coolant outlet elbow and tighten clip.
35. Connect radiator bottom hose to coolant rail and tighten clip.
36. Connect radiator top hose to coolant outlet elbow and tighten clip.
37. Position battery tray in vehicle.
38. Tighten 3 bolts securing battery tray to body, to 10 Nm.
39. Fit engine compartment fuse box. ***See ELECTRICAL, Repairs.***
40. Fit 4 bolts securing battery tray to body and tighten to 10 Nm.

41. Fit resonator to air intake pipe.
42. Fit bolts securing resonator to battery tray and tighten to 10 Nm.
43. Fit engine management relay module. ***See ENGINE MANAGEMENT SYSTEM - MEMS, Repairs.***
44. Fit ECM. ***See ENGINE MANAGEMENT SYSTEM - MEMS, Repairs.***
45. Fit air cleaner. ***See ENGINE MANAGEMENT SYSTEM - MEMS, Repairs.***
46. Fit road wheel(s) and tighten nuts to correct torque. ***See INFORMATION, Torque wrench settings.***
47. Remove stand(s) and lower vehicle.
48. Refill gearbox with oil. ***See MANUAL GEARBOX - ’R65’, Adjustments.***
49. Refill cooling system. ***See COOLING SYSTEM - ’K’ SERIES, Adjustments.***
50. *If required:* Refill engine with oil. ***See MAINTENANCE.***
51. Adjust throttle cable. ***See ENGINE MANAGEMENT SYSTEM - MEMS, Adjustments.***

ENGINE STEADY BAR

Service repair no - 12.45.08

Remove

1. Raise front of vehicle.

WARNING: Support on safety stands.

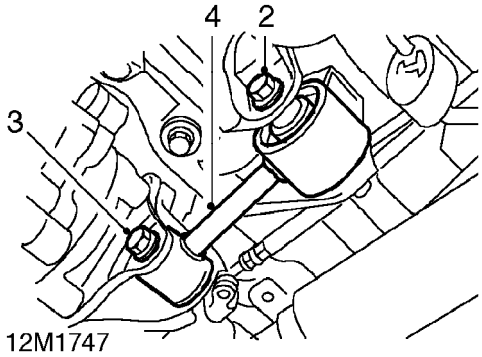

2. Remove through bolt securing engine steady bar to subframe.
3. Remove through bolt securing engine steady bar to bracket on gearbox.
4. Remove engine steady bar.

Refit

1. Position engine steady bar to subframe and fit through bolt.
2. Fit and tighten through bolt securing steady bar to bracket on gearbox to 45 Nm.
3. Tighten through bolt securing steady bar to subframe, to 80 Nm.
4. Remove stand(s) and lower vehicle.

ENGINE LH MOUNTING

Service repair no - 12.45.30

Remove

1. Raise front of vehicle.

WARNING: Support on safety stands.

2. Fit block to jack and position jack to support engine.
3. Remove air cleaner. ***See ENGINE MANAGEMENT SYSTEM - MEMS, Repairs.***

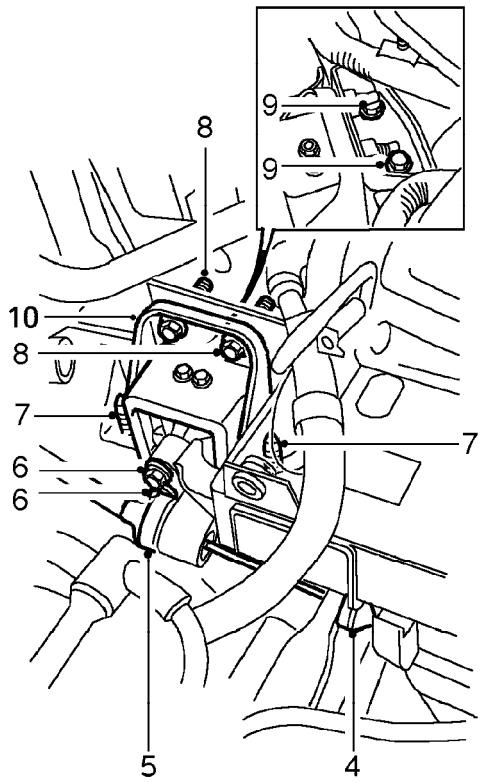

12M1746

4. Disconnect clutch cable from clutch release lever.
5. Release clutch cable from abutment bracket on gearbox and position aside.
6. Remove 2 bolts securing engine mounting to gearbox mounting bracket.
7. Remove 2 bolts securing engine mounting to body.
8. Remove 2 bolts securing engine mounting to mounting bracket
9. Loosen 2 bolts securing engine mounting bracket to body.
10. Carefully lower engine and remove engine mounting.

Refit

1. Position engine mounting and raise engine and gearbox assembly.
2. Fit bolts securing engine mounting to body and tighten to 55 Nm.
3. Fit bolts securing engine mounting to bracket on body and tighten to 55 Nm.
4. Align gearbox mounting bracket to engine mounting, fit bolts and tighten to 60 Nm.
5. Tighten bolts securing bracket to body, to 55 Nm.
6. Lower jack supporting engine, and remove from beneath vehicle.
7. Feed clutch cable through abutment bracket and connect to clutch release lever.
8. Fit air cleaner. ***See ENGINE MANAGEMENT SYSTEM - MEMS, Repairs.***
9. Fit road wheel(s) and tighten nuts to correct torque. ***See INFORMATION, Torque wrench settings.***
10. Remove stand(s) and lower vehicle.

ENGINE RH MOUNTING

Service repair no - 12.45.31

Remove

1. Disconnect battery earth lead.
2. Fit wooden block to jack and position jack to support engine.

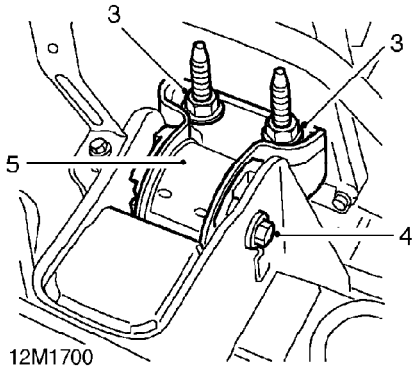

3. Remove and discard 2 nuts securing engine mounting to engine.
4. Remove through bolt securing engine mounting to body.
5. Remove engine mounting.
6. Remove 2 rubber washers from mounting.

Refit

1. Fit rubber washers to engine mounting.
2. Fit engine mounting to body and engine.
3. Fit through bolt securing engine mounting to body, but do not tighten.
4. Fit 2 new nuts securing engine mounting to engine and tighten to 100 Nm.
5. Tighten through bolt securing engine mounting to body, to 75 Nm.
6. Lower jack supporting engine and remove from beneath vehicle.
7. Connect battery earth lead.

FLYWHEEL

Service repair no - 12.53.07

Remove

1. Remove clutch assembly. ***See CLUTCH, Repairs.***
2. Leave tool **18G 1571** attached to cylinder block.
3. Remove crankshaft position sensor. ***See ENGINE MANAGEMENT SYSTEM - MEMS, Repairs.***

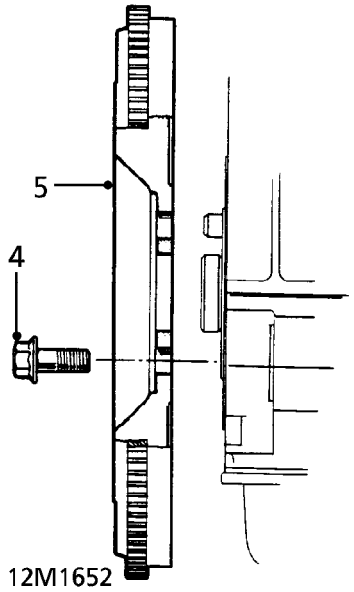

4. Remove and discard 6 bolts securing flywheel to crankshaft.
5. Remove flywheel from crankshaft.

Refit

1. Using a tap, clean adhesive from threads of flywheel bolt holes in crankshaft.
2. Clean flywheel and mating face of crankshaft.
3. Fit flywheel to crankshaft.
4. Fit NEW bolts securing flywheel to crankshaft and working in a diagonal sequence tighten bolts to 85 Nm.
5. Fit crankshaft position sensor. ***See ENGINE MANAGEMENT SYSTEM - MEMS, Repairs.***
6. Fit clutch assembly. ***See CLUTCH, Repairs.***

FLYWHEEL STARTER RING GEAR

Service repair no - 12.53.19

Remove

1. Remove flywheel. ***See this section.***

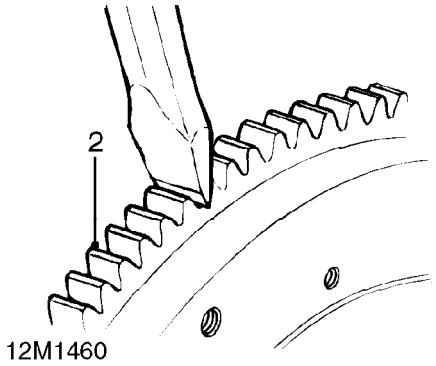

2. Apply a cold chisel in root of one of ring gear teeth, strike chisel with hammer to break ring gear.
3. Remove starter ring gear.

Refit

1. Clean flywheel and starter ring gear.
2. Heat new starter ring gear evenly to @350°C, indicated when the ring is a light blue colour.
3. Locate ring gear on flywheel and press ring gear hard against flange on flywheel.
4. Ensure ring gear is correctly seated around the complete circumference of flywheel and allow to cool.
5. Fit flywheel. ***See this section.***

OIL FILTER

Service repair no - 12.60.04

Remove

1. Raise front of vehicle.

WARNING: Support on safety stands.

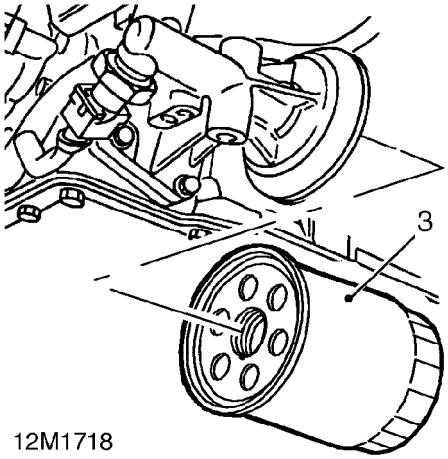

2. Clean area around filter head and place a container beneath engine
3. Using a strap wrench, unscrew and discard filter.

Refit

1. Clean mating face of filter head.
2. Lubricate sealing ring of new filter with clean engine oil.
3. Fit new filter and tighten by hand until it seats then tighten a further half turn.
4. Remove stand(s) and lower vehicle.
5. Top up engine with oil to specification 10w/40 until level is correct.
6. Start and run engine and check for leaks.
7. Stop engine, wait a few minutes, then check oil level. Top up if necessary.

DIPSTICK TUBE

Service repair no - 12.60.09

Remove

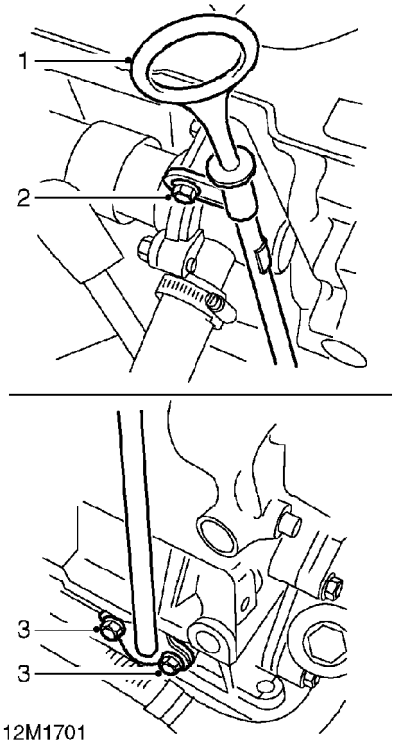

1. Remove dipstick.
2. Remove bolt securing thermostat housing and dipstick tube to cylinder block.
3. Remove 2 bolts securing dipstick tube to cylinder block.
4. Remove dipstick tube and collect gasket.

Refit

1. Fit new gasket and dipstick tube to cylinder block.
2. Fit bolts securing dipstick tube to cylinder block and tighten to 10 Nm.
3. Fit bolt securing dipstick tube and thermostat housing to cylinder block and tighten to 10 Nm.
4. Fit dipstick.

OIL PUMP

Service repair no - 12.60.26

Remove

1. Remove camshaft timing belt. ***See this section.***
2. Remove crankshaft gear.

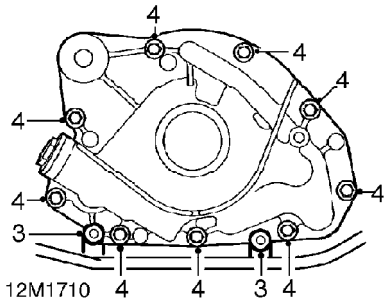

3. Remove 2 bolts securing engine harness to oil pump.
4. Remove and discard 9 bolts securing oil pump to cylinder block.

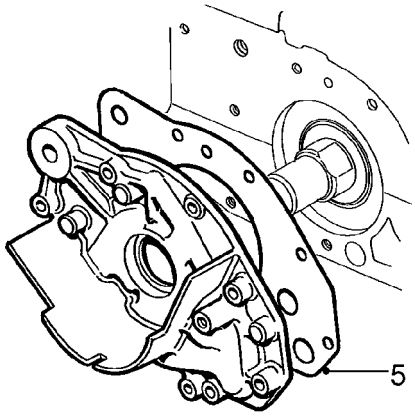

12M1711

5. Remove oil pump and discard gasket.

Refit

1. Clean oil pump bolt holes in cylinder block.
2. Clean mating surfaces of oil pump and cylinder block.
3. Clean oil seal running surface on crankshaft.
4. Fit new oil pump gasket to cylinder block and position oil pump.

CAUTION: Do not lubricate crankshaft front oil seal or running surface of crankshaft.

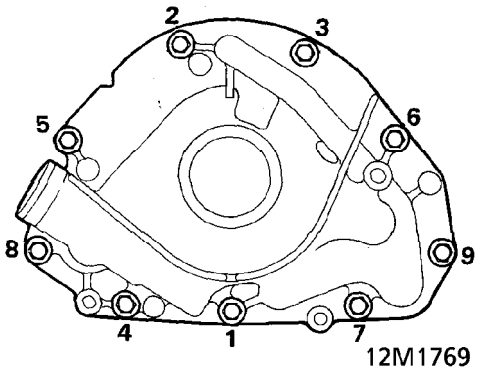

5. Fit new Patchlok bolts and tighten in sequence shown to 10 Nm.
6. Align engine harness to oil pump, fit bolts and tighten to 10 Nm.
7. Clean crankshaft gear.
8. Fit gear to crankshaft.
9. Fit camshaft timing belt. ***See this section.***

SUMP GASKET

Service repair no - 12.60.38

Remove

1. Disconnect battery earth lead.
2. Raise front of vehicle.

WARNING: Support on safety stands.

3. Drain engine oil. ***See MAINTENANCE.***
4. Fit new sealing washer to engine oil drain plug. Fit drain plug and tighten to 42 Nm.
5. Remove exhaust front pipe. ***See MANIFOLD & EXHAUST SYSTEMS, Repairs.***

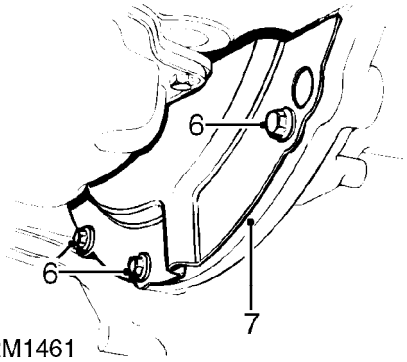

6. Remove 3 bolts securing flywheel lower cover plate to flywheel housing.
7. Remove flywheel lower cover plate.

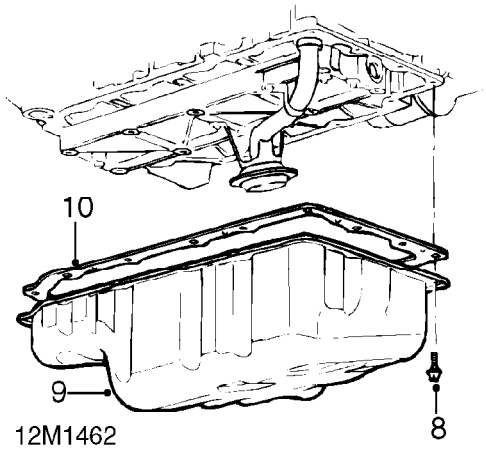

8. Remove and discard 14 bolts securing sump to engine bearing ladder.
9. Release gasket from bearing ladder and remove sump.
10. Remove gasket from sump.

Refit

1. Clean inside of sump and mating faces of sump and bearing ladder.
2. Check condition of sump gasket, renew gasket if it shows signs of damage or deterioration.
3. Fit gasket to sump ensuring its 7 pegs are located in holes on sump.
4. Position sump to engine bearing ladder, fit and lightly tighten new Patchlok bolts.

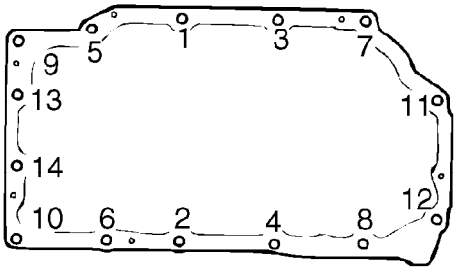

12M1463

5. Working in the sequence shown, progressively tighten sump bolts to:
   M6/M8 bolts - 10 Nm.
6. Fit flywheel lower cover plate and tighten 3 bolts to 9 Nm.
7. Fit exhaust front pipe. ***See MANIFOLD & EXHAUST SYSTEMS, Repairs.***
8. Remove stand(s) and lower vehicle.
9. Fill engine with oil. ***See MAINTENANCE.***
10. Connect battery earth lead.

OIL PRESSURE SWITCH

Service repair no - 12.60.50

Remove

1. Disconnect battery earth lead.
2. Raise front of vehicle.

WARNING: Support on safety stands.

3. Position container below engine oil filter to collect spillage.

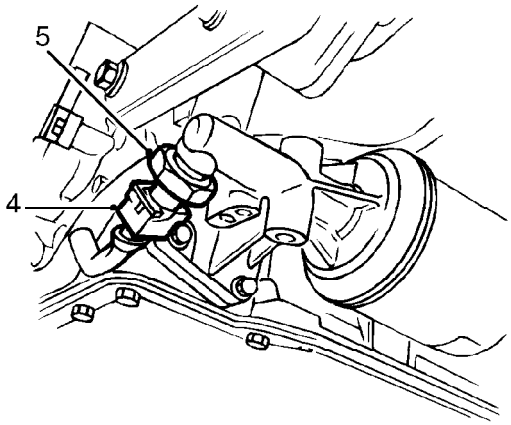

12M1395

4. Disconnect multiplug from oil pressure switch.
5. Remove oil pressure switch.

Refit

1. Clean oil pressure switch threads.
2. Fit oil pressure switch and tighten to 15 Nm.
3. Connect multiplug to oil pressure switch.
4. Remove stand(s) and lower vehicle.
5. Top-up engine oil. ***See MAINTENANCE.***
6. Connect battery earth lead.

CAMSHAFT TIMING BELT

Service repair no - 12.65.18

Remove

CAUTION: Timing belt must be replaced if cylinder head is to be removed or new timing gears, tensioner or coolant pump are to be fitted.
Timing belts must be stored and handled with care. Always store a timing belt on its edge with a bend redius greater than 50 mm.
Do not use a timing belt that has been twisted or bent double as this can damage the reinforcing fibres.
Do not use a timing belt if debris other than belt dust is found in timing cover.
Do not use a timing belt if partial engine seizure has occurred.
Do not use a timing belt if belt mileage exceeds 48,000 miles (77,000 km).
Do not use an oil or coolant contaminated belt.

NOTE: The cause of contamination MUST be rectified.

1. Disconnect battery earth lead.
2. Raise front of vehicle.

WARNING: Support on safety stands.

3. Remove RH front road wheel.
4. Remove timing belt upper cover. ***See this section.***

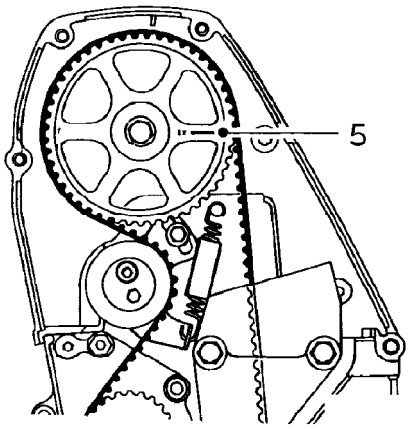

12M1719

5. Rotate crankshaft to align camshaft gear timing marks with top face of cylinder head - 90° BTDC.

6. Remove starter motor. ***See ELECTRICAL, Repairs.***

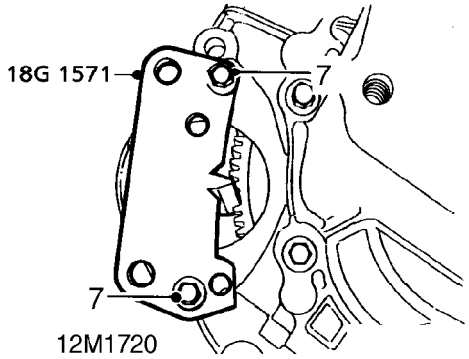

7. Position flywheel locking tool **18G 1571** to flywheel and secure with 2 starter motor bolts.
8. Remove auxiliary drive belt. ***See ELECTRICAL, Repairs.***
9. Remove engine RH mounting. ***See this section.***

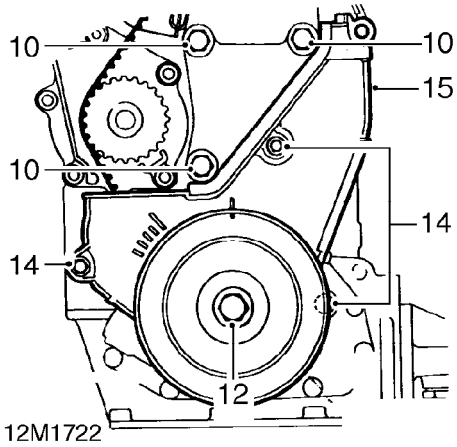

10. Remove 3 bolts securing engine RH mounting bracket to engine.
11. Carefully raise engine slightly to remove engine mounting bracket.
12. Remove crankshaft pulley bolt and washer.
13. Remove crankshaft pulley.
14. Remove 3 bolts securing timing belt lower cover.
15. Remove lower cover and rubber seal.

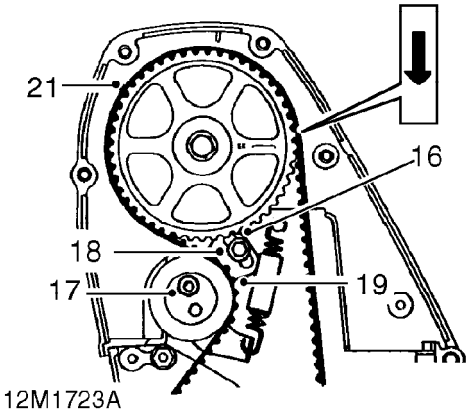

16. If camshaft timing belt is to be re-used, mark position of tensioner backplate to cylinder head for belt tensioning reference. Mark direction of rotation of belt using chalk.
17. Loosen tensioner pulley Allen bolt $^1/_2$ turn.
18. Loosen tensioner backplate screw $^1/_2$ turn.
19. Push tensioner pulley down to fully OFF position.
20. Tighten backplate bolt to 10 Nm.
21. Ease timing belt from gears and remove.

CAUTION: Ease timing belt off gears using fingers only. Metal levers may damage the belt and gears.

22. Slacken tensioner backplate bolt and ensure tensioner moves freely through its adjustment range and returns under spring tension.
23. Push tensioner down to OFF position and tighten backplate bolt to 10 Nm.

Refit

1. Clean timing gears and pulleys.

CAUTION: If the sintered gears have been subjected to prolonged oil contamination, they must be soaked in a solvent bath and then thoroughly washed in clean solvent before refitment. Because of the porous construction of sintered material, oil impregnated in the gear will emerge and contaminate a new belt.

2. Check correct alignment of timing marks for 90° BTDC.

NOTE: Ensure dots on crankshaft gear are aligned with flange onoil pump and camshaft gear aligns with mark on rear cover.

3. Fit timing belt over crankshaft gear and then over camshaft gear, keeping belt taut from crankshaft to camshaft gears.

CAUTION: Existing timing belts - ensure direction of rotation mark is facing correct way.

4. Using fingers only, ease timing belt over tensioner pulley and coolant pump drive gear, ensuring belt is positioned centrally around gears and pulley.
5. Fit timing belt lower cover, ensuring correct position of seal.
6. Fit bolts securing lower cover and tighten to 10 Nm.

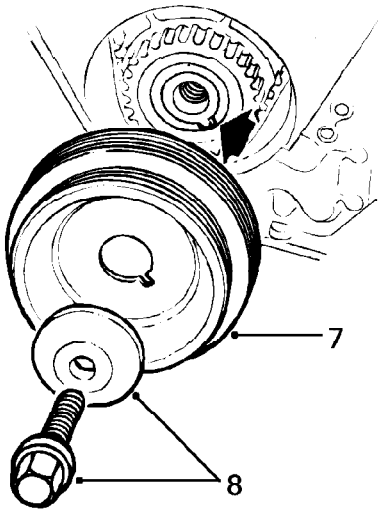

12M2524

7. Fit crankshaft pulley to crankshaft gear, ensuring indent on pulley locates over gear lug.
8. Fit crankshaft pulley bolt and washer and tighten bolt to 205 Nm.
9. Remove tool **18G 1571** from flywheel.
10. Position starter motor to flywheel housing.
11. Fit starter motor. ***See ELECTRICAL, Repairs.***
12. Fit engine RH mounting bracket to engine and tighten bolts to 60 Nm.
13. Fit engine RH mounting. ***See this section.***
14. Remove jack.

Existing timing belts

15. Unhook tensioner spring from pillar bolt.
16. Position tensioner to align mark on backplate with mark on cylinder head.
17. Tighten tensioner backplate bolt to 10 Nm.
18. Tighten tensioner pulley Allen bolt to 45 Nm.
19. Connect tensioner spring to pillar bolt.

Replacement timing belts

20. Loosen tensioner backplate bolt and tension timing belt by applying finger pressure to backplate and pushing tensioner pulley against belt.
21. Hold tensioner in this position and tighten backplate bolt to 10 Nm.
22. Rotate crankshaft clockwise 2 complete revolutions and align camshaft timing gear mark with top face of cylinder head.
23. Slacken backplate bolt and check that belt tension is being applied by tensioner spring.
24. Tighten tensioner backplate bolt to 10 Nm.
25. Tighten tensioner pulley Allen bolt to 45 Nm.
26. Fit timing belt upper cover. ***See this section.***
27. Fit auxiliary drive belt. ***See ELECTRICAL, Repairs.***
28. Connect battery earth lead.
29. Fit road wheel(s) and tighten nuts to correct torque. ***See INFORMATION, Torque wrench settings.***
30. Lower vehicle.

CAMSHAFT TIMING BELT UPPER COVER

Service repair no - 12.65.41

Remove

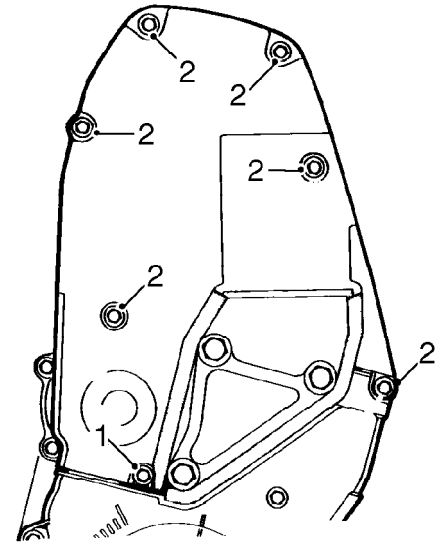

12M1724

1. Loosen lower bolt securing camshaft timing belt upper cover to engine.
2. Remove 6 bolts securing camshaft timing belt upper cover to rear cover.
3. Remove camshaft timing belt upper cover and rubber seal.

Refit

1. Clean camshaft timing belt upper cover.
2. Position timing belt upper cover, ensuring correct position of rubber seal.
3. Fit bolts securing camshaft timing belt upper cover to rear cover and tighten to 5 Nm.
4. Tighten bolt securing camshaft timing belt upper cover to engine to 5 Nm.
5. Connect battery earth lead.

CAMSHAFT TIMING BELT LOWER COVER

Service repair no - 12.65.43

Remove

1. Disconnect battery earth lead.
2. Raise front of vehicle.

WARNING: Support on safety stands.

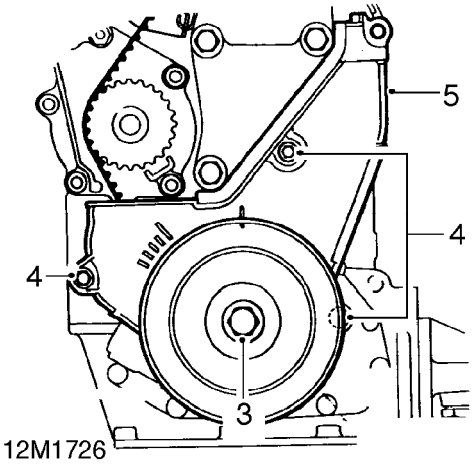

3. Remove crankshaft front pulley. ***See this section.***
4. Remove 3 bolts securing timing belt lower cover to engine.
5. Remove timing belt lower cover.

Refit

1. Fit timing belt lower cover to engine.
2. Fit bolts securing cover to engine and tighten to 5 Nm.
3. Fit crankshaft front pulley. ***See this section.***
4. Remove stand(s) and lower vehicle.
5. Connect battery earth lead.

CONTENTS

Page

REPAIRS

EXHAUST CAMSHAFT FRONT OIL SEAL 1
EXHAUST CAMSHAFT REAR OIL SEAL 2
INLET CAMSHAFT FRONT OIL SEAL 3
INLET CAMSHAFT REAR OIL SEAL 4
CRANKSHAFT FRONT PULLEY - 1.4 & 1.6 MODELS 5
CRANKSHAFT FRONT OIL SEAL 6
CRANKSHAFT REAR OIL SEAL 7
CYLINDER HEAD GASKET - MODELS WITHOUT AIR CONDITIONING 8
CYLINDER HEAD GASKET - MODELS WITH AIR CONDITIONING 15
CAMSHAFT COVER GASKET 22
VALVE STEM OIL SEAL 23
ENGINE AND GEARBOX - MODELS WITH AIR CONDITIONING 25
ENGINE AND GEARBOX - MODELS WITHOUT AIR CONDITIONING 37
ENGINE AND AUTOMATIC GEARBOX - MODELS WITH AIR CONDITIONING . 48
ENGINE AND AUTOMATIC GEARBOX - MODELS WITHOUT AIR CONDITIONING 59
ENGINE STEADY BAR - 1.4 MODELS 69
ENGINE STEADY BAR - 1.6 & 1.8 MODELS 69
ENGINE LH MOUNTING - 1.4 MODELS 70
ENGINE LH MOUNTING - 1.6 & 1.8 MODELS 71
ENGINE LH MOUNTING - AUTOMATIC GEARBOX MODELS WITHOUT ABS . 71
ENGINE LH MOUNTING - AUTOMATIC GEARBOX MODELS WITH ABS 73
ENGINE RH MOUNTING - 1.4 MODELS 74
ENGINE RH MOUNTING - 1.6 & 1.8 MODELS 75
FLYWHEEL - 1.4 & 1.6 MODELS WITH MANUAL GEARBOX 76
FLYWHEEL - MODELS WITH AUTOMATIC GEARBOX 76
TORSION DAMPER 77
FLYWHEEL STARTER RING GEAR 78
OIL FILTER 78
DIPSTICK TUBE 79
OIL PUMP 79
SUMP GASKET - 1.4 MODELS 80
SUMP - 1.6 & 1.8 MODELS 82
OIL PRESSURE SWITCH 84
CAMSHAFT TIMING BELT 84
CAMSHAFT TIMING BELT UPPER COVER 91
CAMSHAFT TIMING BELT LOWER COVER 91
CRANKSHAFT FRONT PULLEY - 1.8 MODELS 92
FLYWHEEL - 1.8 MODELS 94

EXHAUST CAMSHAFT FRONT OIL SEAL

Service repair no - 12.13.07

Remove

1. Remove and discard camshaft timing belt. ***See ENGINE - ’K’ SERIES, Repairs.***

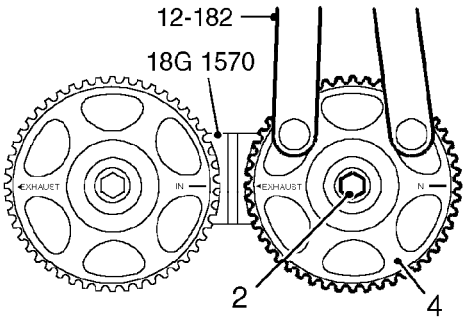

M12 5013B

2. Restrain camshaft gear using tool **12-182** and remove bolt and washer securing camshaft gear to camshaft.
3. Remove camshaft gear locking tool **18G 1570.**
4. Remove camshaft gear.

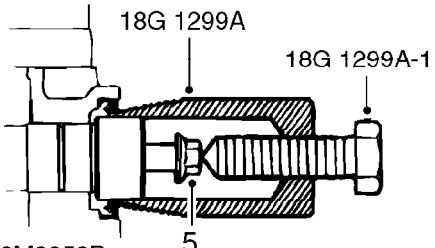

12M2352B

5. Fit camshaft gear retaining bolt to camshaft.
6. Screw oil seal removal tool **18G 1299A** into camshaft oil seal.
7. Remove oil seal by tightening centre bolt, tool **18G 1299A-1** .
8. Discard camshaft oil seal.
9. Remove bolt from camshaft.

Refit

1. Clean sealing area of cylinder head and camshaft carrier, ensuring all traces of rubber are removed. DO NOT use a scraper as this may damage sealing surfaces.

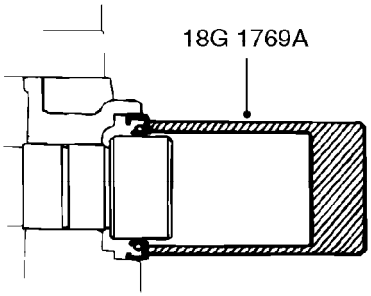

12M1452A

2. Using tool **18G 1769A** fit new camshaft oil seal.

NOTE: This oil seal is coloured BLACK.

CAUTION: Oil seal must be fitted dry. Do not use tool 18G 1769.

3. Clean camshaft gear.

CAUTION: If the sintered gears have been subjected to prolonged oil contamination, they must be soaked in a solvent bath and thoroughly washed in clean solvent before refitment. Because of the porous construction of sintered material, oil impregnated in the gear will emerge and contaminate a new timing belt.

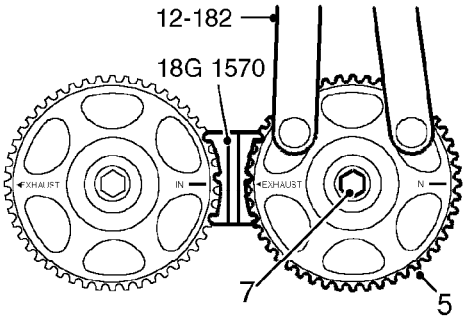

M12 5014A

4. Align camshaft gear timing marks.
5. Fit camshaft gear to camshaft.
6. Fit camshaft gear locking tool **18G 1570.**
7. Fit bolt and washer securing camshaft gear to camshaft, restrain gear using tool **12-182** and tighten bolt to:
   M8 bolt 35 Nm
   M10 bolt 65 Nm.
8. Fit new camshaft timing belt. ***See ENGINE - 'K' SERIES, Repairs.***

EXHAUST CAMSHAFT REAR OIL SEAL

Service repair no - 12.13.08

Remove

1. Disconnect battery earth lead.
2. Remove air cleaner assembly. ***See ENGINE MANAGEMENT SYSTEM - MEMS, Repairs.***

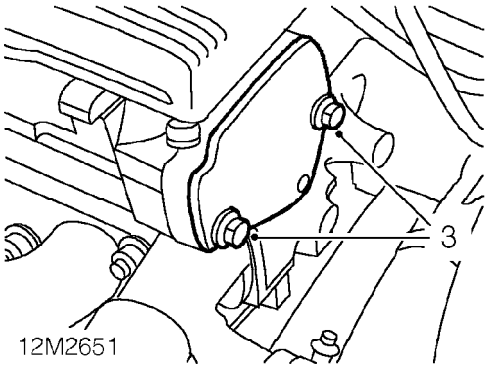

12M2651

3. Remove 2 bolts securing rear cover plate and remove plate.

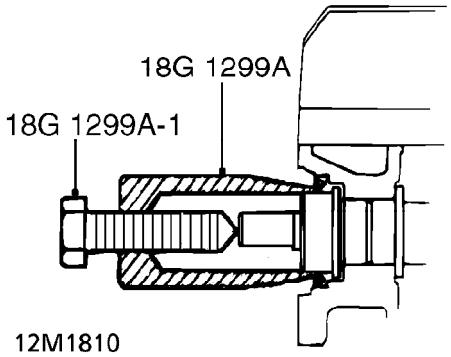

12M1810

4. Screw tool **18G 1299A** into camshaft rear oil seal.
5. Tighten centre bolt of tool **18G 1299A-1** to remove seal.
6. Discard camshaft oil seal.

Refit

1. Clean sealing area of cylinder head and camshaft carrier, ensuring all traces of rubber are removed. DO NOT use a scraper as this may damage sealing surfaces.

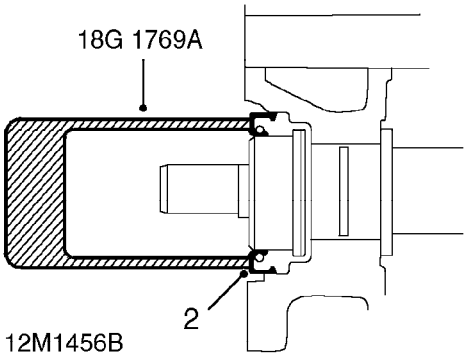

2. Using tool **18G 1769A** , fit new camshaft oil seal.

NOTE: This oil seal is coloured RED.

CAUTION: Oil seal must be fitted dry. Do not use tool 18G 1769.

3. Clean camshaft rear cover plate.
4. Position cover plate, fit bolts and tighten to 25 Nm.
5. Fit air cleaner assembly. ***See ENGINE MANAGEMENT SYSTEM - MEMS, Repairs.***
6. Connect battery earth lead.

INLET CAMSHAFT FRONT OIL SEAL

Service repair no - 12.13.09

The procedure for renewing the inlet camshaft front oil seal is identical to the procedure for renewing the exhaust camshaft front oil seal except that the inlet camshaft gear not the exhaust camshaft gear must be removed. ***See this section.***

INLET CAMSHAFT REAR OIL SEAL

Service repair no - 12.13.10

Remove

1. Disconnect battery earth lead.
2. Remove air cleaner assembly. ***See ENGINE MANAGEMENT SYSTEM - MEMS, Repairs.***
3. Remove distributor cap. ***See ENGINE MANAGEMENT SYSTEM - MEMS, Repairs.***

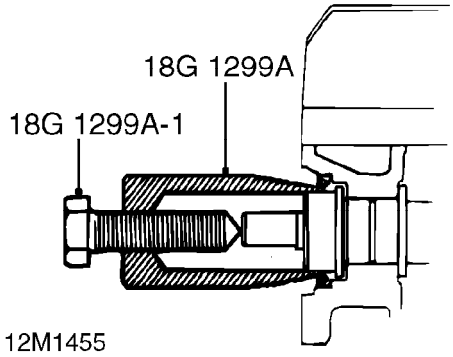

4. Screw tool **18G 1299A** into camshaft rear oil seal.
5. Tighten centre bolt, tool **18G 1299A-1,** to remove seal.
6. Remove camshaft oil seal.

Refit

1. Clean sealing area of cylinder head and camshaft carrier, ensuring all traces of rubber are removed. DO NOT use a scraper as this may damage sealing surfaces.

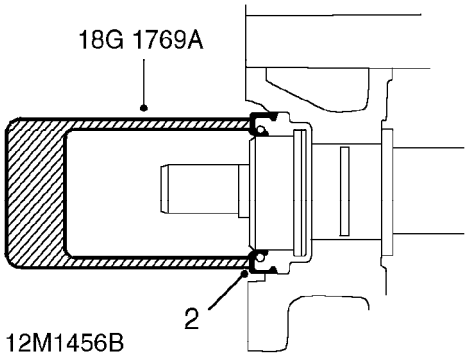

2. Using tool **18G 1769A,** fit new camshaft oil seal.

NOTE: This oil seal is coloured RED.

CAUTION: Oil seal must be fitted dry. Do not use tool 18G 1769.

3. Fit distributor cap. ***See ENGINE MANAGEMENT SYSTEM - MEMS, Repairs.***
4. Fit air cleaner assembly. ***See ENGINE MANAGEMENT SYSTEM - MEMS, Repairs.***
5. Connect battery earth lead.

CRANKSHAFT FRONT PULLEY - 1.4 & 1.6 MODELS

Service repair no - 12.21.01

Remove

1. Disconnect battery earth lead.
2. Raise front of vehicle.

WARNING: Support on safety stands.

3. Remove auxiliary drive belt. ***See ELECTRICAL, Repairs.***
4. Remove starter motor. ***See ELECTRICAL, Repairs.***

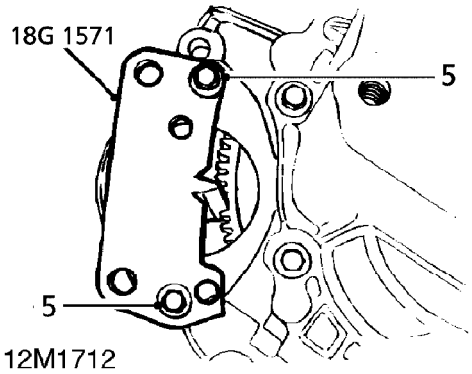

5. Fit tool **18G 1571** to flywheel housing and secure with 2 bolts.

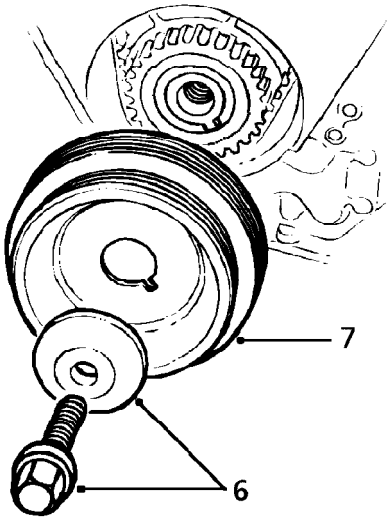

6. Remove bolt securing pulley to crankshaft and collect washer.
7. Remove crankshaft pulley.

Refit

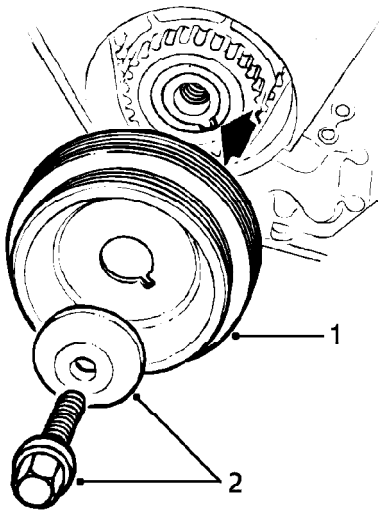

12M2356

1. Fit crankshaft pulley to crankshaft gear ensuring that indent on pulley locates over lug on gear (arrowed in illustration).
2. Fit washer and bolt securing crankshaft pulley to crankshaft and tighten to 205 Nm.
3. Remove 2 bolts securing tool **18G 1571** to flywheel housing and remove tool **18G 1571.**
4. Fit starter motor. ***See ELECTRICAL, Repairs.***
5. Fit auxiliary drive belt. ***See ELECTRICAL, Repairs.***
6. Connect battery earth lead.

CRANKSHAFT FRONT OIL SEAL

Service repair no - 12.21.14

Remove

1. Remove camshaft timing belt. ***See this section.***

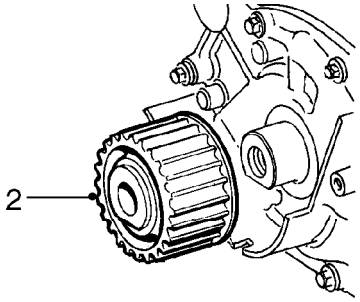

12M1636

2. Remove crankshaft gear.

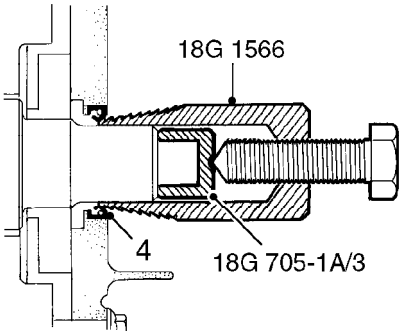

12M1637

3. Fit thrust button, tool **18G 705-1A/3** to end of crankshaft.
4. Ensure bore of tool **18G 1566** is free from burrs.
5. Screw tool **18G 1566** into crankshaft front oil seal.
6. Tighten centre bolt of tool **18G 1566** to remove seal
7. Discard crankshaft front oil seal.
8. Remove tool **18G 705-1A/3.**

Refit

1. Using a lint free cloth, thoroughly clean oil seal recess in oil pump and running surface on crankshaft.

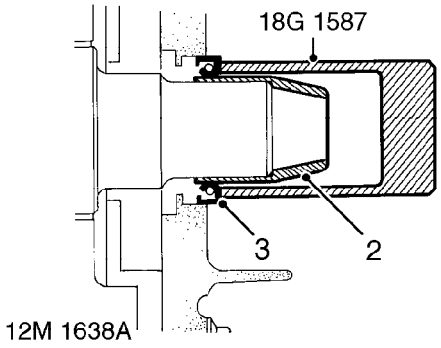

2. Fit oil seal guide, from seal kit, over end of crankshaft.
3. Position new seal on crankshaft up against oil pump housing. Drift seal into place using tool **18G 1587.**

CAUTION: Oil seal must be fitted dry.

4. Remove tool **18G 1587** and oil seal guide.
5. Clean crankshaft gear.
6. Fit crankshaft gear to crankshaft.
7. Fit camshaft timing belt. ***See this section.***

CRANKSHAFT REAR OIL SEAL

Service repair no - 12.21.20

Remove

1. Remove engine flywheel. ***See this section.***

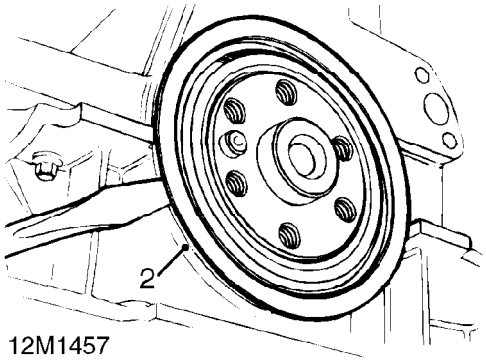

2. Using a burr free flat ended screwdriver, ease crankshaft rear oil seal from cylinder block and remove. Discard oil seal.

CAUTION: Do not mark sealing surface on crankshaft or cylinder block.

Refit

1. Remove all traces of oil and sealant from cylinder block, oil seal recess and running surface on crankshaft.

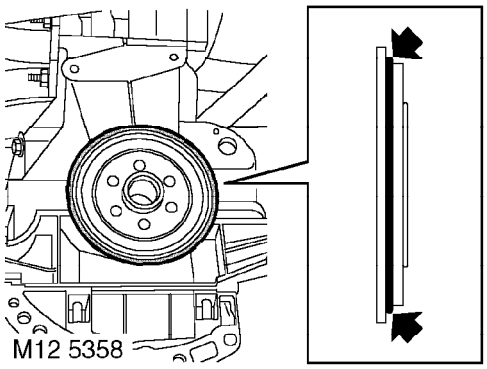

2. Apply a l.5 mm continuous bead of sealant, Part No. GAC 8000 to replacement oil seal as shown.

CAUTION: Do not apply oil or grease to any part of oil seal or running surface of crankshaft. Seal must be fitted immediately after applying sealant.

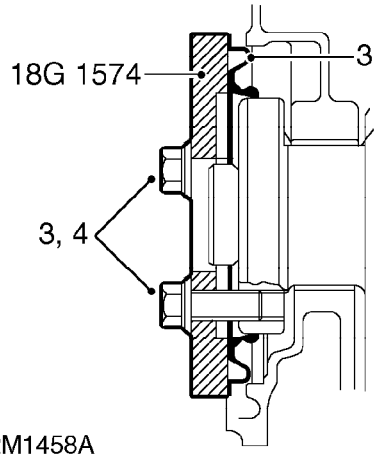

3. Position oil seal to cylinder block and fit oil seal replacer tool **18G 1574,** retain tool using 3 slave bolts.
4. Evenly tighten oil seal replacer bolts to press oil seal squarely into cylinder block.
5. Leave oil seal replacer tool and oil seal in clamped position for one minute.
6. Remove oil seal replacer tool.
7. Allow sealant to cure for a minimum of 30 minutes before topping-up oil or rotating crankshaft.
8. Fit flywheel. ***See this section.***

CYLINDER HEAD GASKET - MODELS WITHOUT AIR CONDITIONING

Service repair no - 12.29.02

Remove

1. Disconnect battery earth lead.
2. Raise front of vehicle.

WARNING: Support on safety stands.

3. Remove and discard camshaft timing belt. ***See this section.***
4. Drain cooling system. ***See COOLING SYSTEM - 'K' SERIES, Adjustments.***

Engines fitted with manual timing belt tensioner

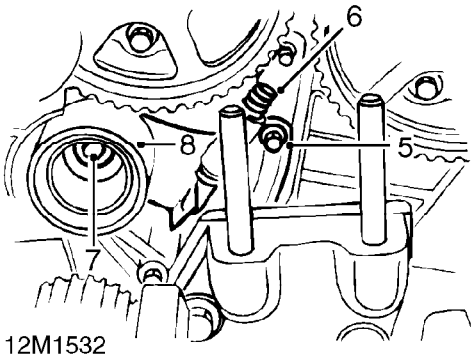

5. Remove bolt securing camshaft timing belt tensioner backplate to cylinder head.
6. Disconnect camshaft timing belt tensioner spring from stud on cylinder head.
7. Remove Allen bolt securing camshaft timing belt tensioner pulley to cylinder head.
8. Remove camshaft timing belt tensioner.

All engines

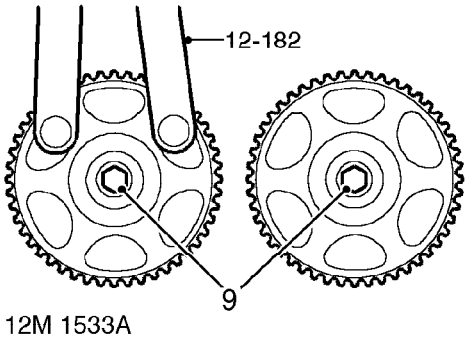

12M 1533A

9. Restrain camshaft gears using **12-182** and remove bolts and washers securing camshaft gears to camshafts.
10. Remove camshaft gear locking tool **18G 1570.**
11. Mark camshaft gears for identification when refitting.
12. Remove 2 camshaft gears.

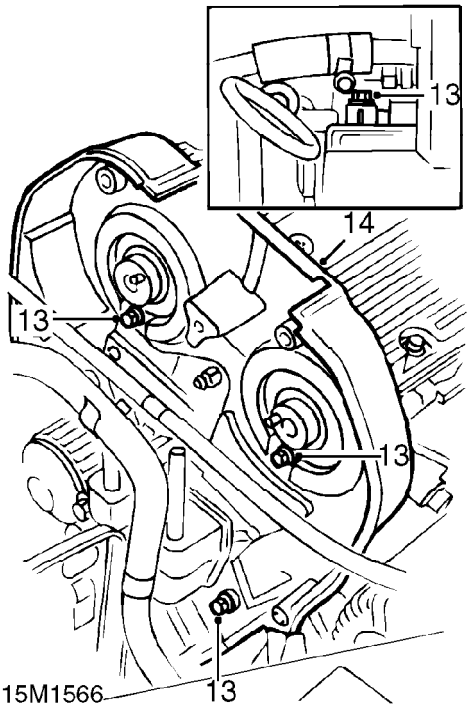

15M1566

13. Remove 4 bolts securing camshaft timing belt rear cover to cylinder head and block.
14. Remove camshaft timing belt rear cover.

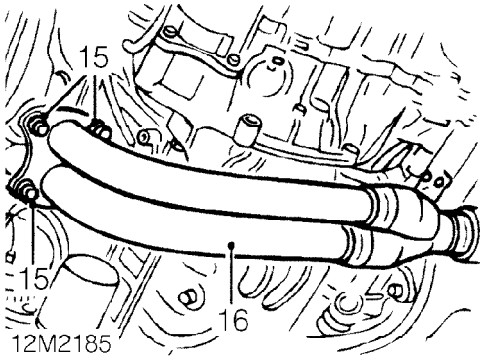

12M2185

15. Remove 4 nuts securing exhaust front pipe to exhaust manifold.
16. Release exhaust front pipe from exhaust manifold.
17. Remove and discard exhaust manifold flange gasket.

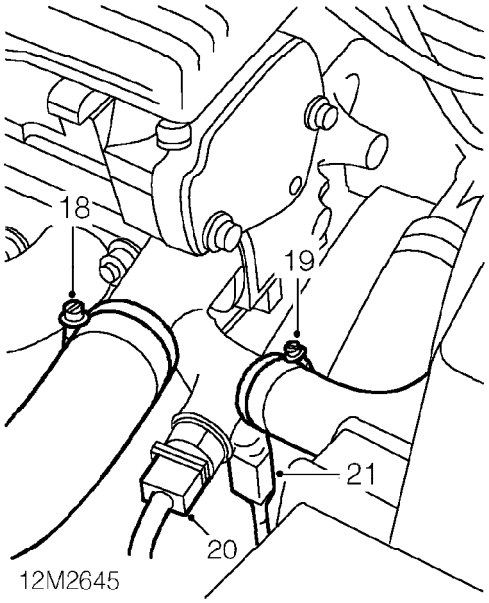

12M2645

18. Loosen clip and disconnect radiator top hose from coolant outlet elbow.
19. Loosen clip and disconnect coolant hose from coolant outlet elbow.
20. Disconnect multiplug from ECT sensor.
21. Disconnect multiplug from engine coolant temperature gauge sensor.

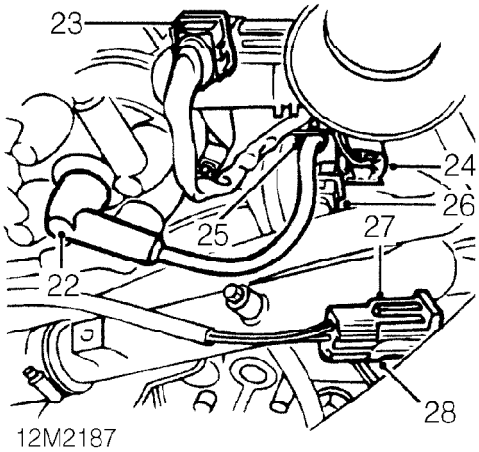

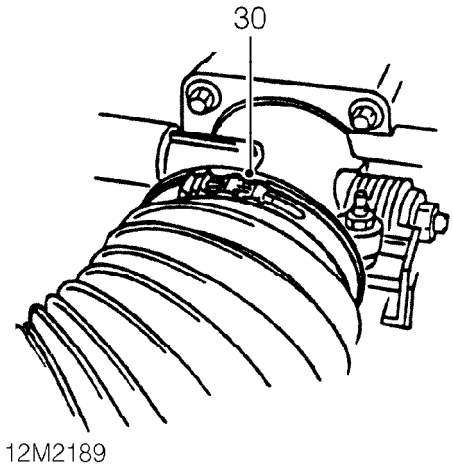

22. Disconnect coil h.t. lead from distributor.
23. Disconnect multiplug from TP sensor.
24. Disconnect multiplug from injector harness.
25. Release coil h.t. lead from clip on bracket.
26. Disconnect multiplug from IAT sensor.
27. Disconnect HO2S multiplug from engine harness.
28. Release HO2S multiplug from clip on bracket.

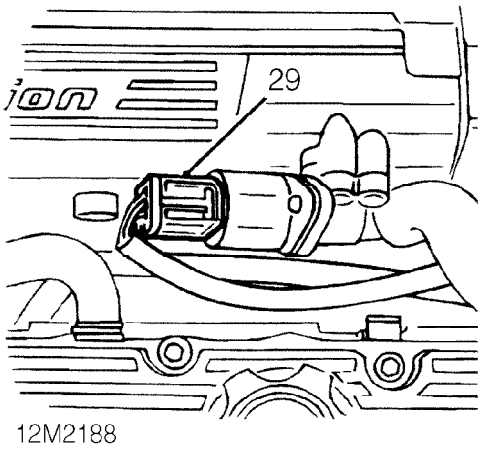

29. Disconnect multiplug from IACV.

30. Release clip and disconnect air intake pipe from throttle body.
31. Position absorbent cloth around fuel filter outlet union.

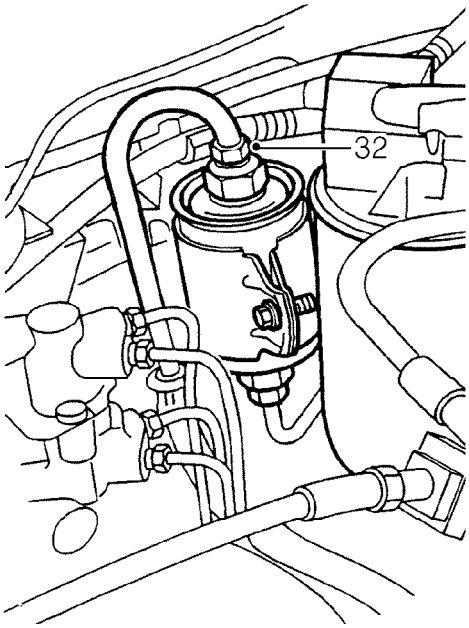

12M2190

32. Loosen fuel filter outlet union to relieve fuel pressure.

CAUTION: To prevent damage to fuel system pipes or components use two spanners when loosening or tightening unions.

33. Tighten fuel filter union to 28 Nm.

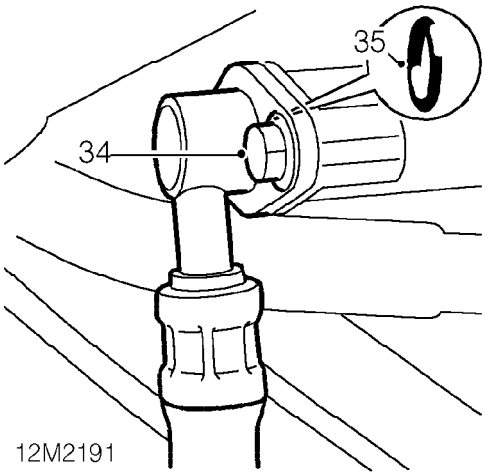

12M2191

34. Remove 2 bolts securing fuel feed pipe to fuel rail.

35. Release pipe from fuel rail and remove and discard ’O’ ring.

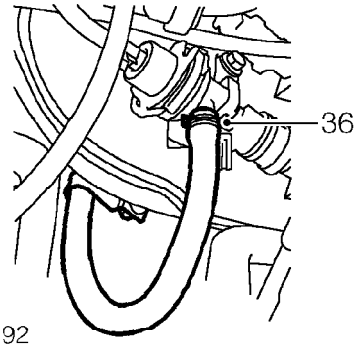

12M2192

36. Release clip and disconnect fuel return hose from fuel rail.

CAUTION: Plug the connections.

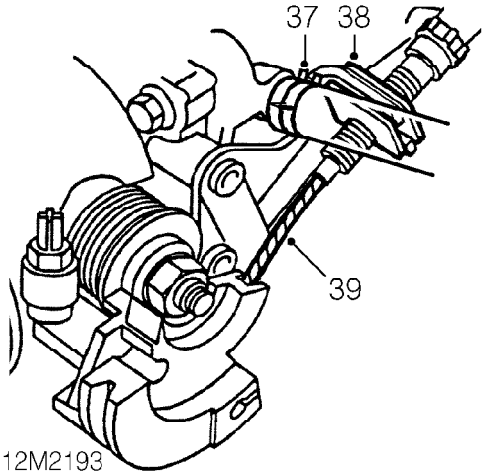

37. Release clip and disconnect purge hose from throttle housing.
38. Release throttle cable adjusting nut from abutment bracket.
39. Release throttle cable from throttle cam.

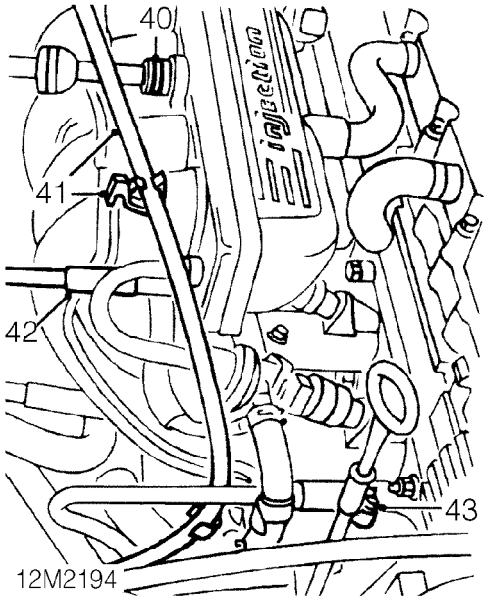

40. Depress plastic collar on quick release connector and disconnect brake servo vacuum hose from inlet manifold.
41. Release throttle cable from clip on inlet manifold.
42. Disconnect vacuum hose from inlet manifold.
43. Loosen clip and disconnect expansion tank hose from inlet manifold.
44. Remove camshaft cover. ***See this section.***

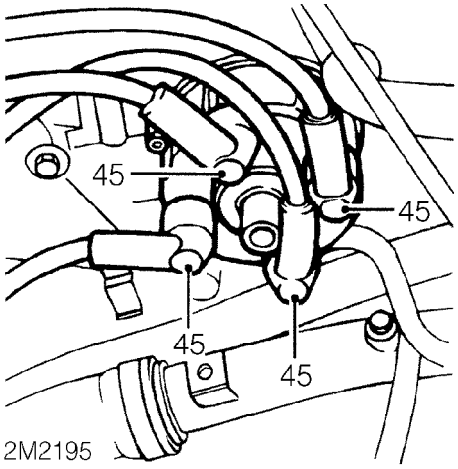

45. Disconnect h.t. leads from distributor cap.
46. Remove h.t. leads.

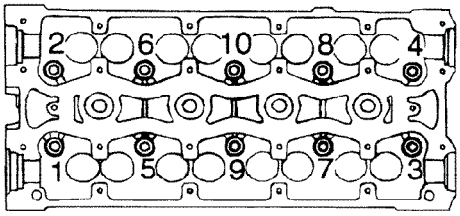

12M2196

47. Working in the sequence shown, loosen 10 cylinder head to oil rail bolts.
48. Remove cylinder head bolts and store in fitted order.
49. Using assistance, remove cylinder head assembly from cylinder block.

CAUTION: Take care not to damage HO2S when removing cylinder head.

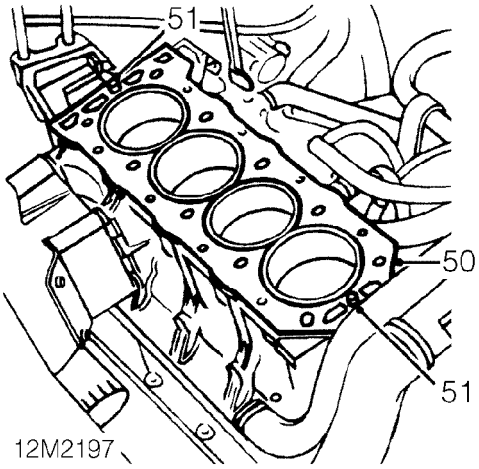

12M2197

50. Remove and discard cylinder head gasket from cylinder block.
51. Remove 2 location dowels from cylinder block.

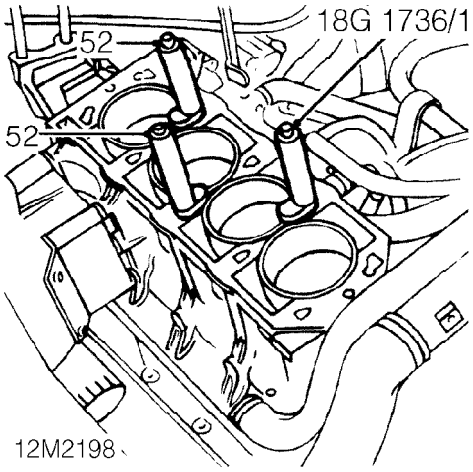

12M2198

52. Fit cylinder liner clamps **18G 1736/1** to cylinder block and secure with cylinder head bolts.

CAUTION: Do not rotate crankshaft with cylinder head removed.

Refit

1. Remove bolts securing cylinder liner clamps to cylinder block and remove clamps.
2. Clean joint surfaces of cylinder head and cylinder block.
   Clean oil and coolant passages.
   Clean mating face of exhaust manifold and exhaust front pipe.
   If necessary, de-carbonise piston crowns and cylinder head.
3. Clean cylinder head bolts with a wire brush. Inspect cylinder head bolts for signs of damage.
4. Wash cylinder head bolts and wipe dry. Apply a light film of oil to bolt threads and underside of bolt heads.
5. Clean location dowels and fit to cylinder block.
6. Fit new cylinder head gasket, dry, to cylinder block.
7. Using assistance, fit cylinder head onto cylinder block carefully locating on dowels.

CAUTION: Take care not to damage HO2S when refitting cylinder head.

8. Carefully enter cylinder head bolts. DO NOT DROP. Screw bolts into place by hand.

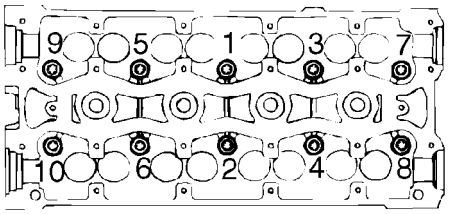

12M1544

9. Working in the sequence shown, progressively tighten the cylinder head bolts using the following procedure:
   i. All bolts to 20 Nm. Use a felt tip pen and mark position of radial mark on each bolt head.
   ii. Turn all bolts through 180°.
   iii. Turn all bolts through another 180° and align radial mark.

CAUTION: If bolt is overtightened, back off 90° then realign radial marks.

10. Fit camshaft cover. ***See this section.***
11. Connect h.t. leads to distributor cap.
12. Connect expansion tank hose to inlet manifold and tighten clip.
13. Connect vacuum hose to inlet manifold.
14. Secure throttle cable to clip on inlet manifold, ensure throttle cable is correctly routed.
15. Connect brake servo vacuum hose to inlet manifold.
16. Connect throttle cable to throttle cam.
17. Locate throttle cable adjusting nut in abutment bracket.
18. Connect purge hose to throttle housing and secure with clip.
19. Connect air intake pipe to throttle body and secure with clip.
20. Remove plugs from fuel system hoses and components.
21. Connect fuel return pipe to fuel rail and secure with clip.
22. Fit new ’O’ ring to fuel feed pipe.
23. Connect fuel feed pipe to fuel rail and secure with bolts. Tighten bolts to 5 Nm.
24. Connect multiplug to IACV.
25. Connect HO2S multiplug to engine harness and secure to clip on bracket.
26. Secure coil h.t. lead to clip on bracket and connect to distributor cap.
27. Connect multiplug to IAT sensor.
28. Connect multiplug to injector harness.
29. Connect multiplug to TP sensor.
30. Connect multiplugs to ECT sensors.
31. Connect coolant hose to coolant outlet elbow and tighten clip.
32. Connect radiator top hose to coolant outlet elbow and tighten clip.
33. Fit new gasket to exhaust manifold flange and connect exhaust front pipe.
34. Fit 4 nuts securing exhaust front pipe to exhaust manifold and tighten to 45 Nm.
35. Fit camshaft timing belt rear cover to cylinder head and cylinder block.
36. Fit 4 bolts securing camshaft timing belt rear cover to cylinder head and cylinder block and tighten bolts to 10 Nm.
37. Fit 2 camshaft gears to their respective camshafts.

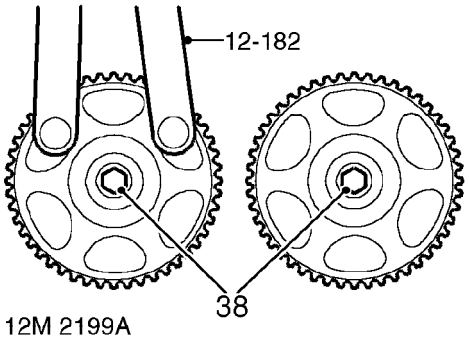

12M 2199A

38. Fit bolts and washers securing camshaft gears to camshafts. Using tool **12-182** restrain camshaft gears and tighten bolts to:
    M8 Bolts - 35 Nm.
    M10 Bolts - 65 Nm
39. Using tool **12-182** align camshaft gear timing marks and fit camshaft gear locking tool **18G 1570.**

Engines fitted with manual timing belt tensioner

40. Fit camshaft timing belt tensioner to cylinder head.
41. Fit tensioner pulley Allen bolt.
42. Connect tensioner spring to tensioner and to stud on cylinder head.
43. Push tensioner pulley down to fully OFF position, fit and tighten backplate bolt to 10 Nm.

All engines

44. Fit new camshaft timing belt. ***See this section.***
45. Remove stand(s) and lower vehicle.
46. Refill cooling system. ***See COOLING SYSTEM - ’K’ SERIES, Adjustments.***
47. Connect battery earth lead.
48. Adjust throttle cable. ***See ENGINE MANAGEMENT SYSTEM - MEMS, Adjustments.***

CYLINDER HEAD GASKET - MODELS WITH AIR CONDITIONING

Service repair no - 12.29.02.20

Remove

1. Disconnect battery earth lead.
2. Raise front of vehicle.

WARNING: Support on safety stands.

3. Remove and discard camshaft timing belt. ***See this section.***
4. Drain cooling system. ***See COOLING SYSTEM - ’K’ SERIES, Adjustments.***

Engines fitted with manual timing belt tensioner

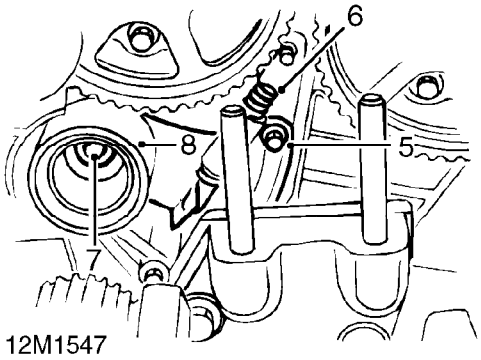

5. Remove bolt securing camshaft timing belt tensioner backplate to cylinder head.
6. Disconnect camshaft timing belt tensioner spring from stud on cylinder head.
7. Remove Allen bolt securing camshft timing belt tensioner pulley to cylinder head.
8. Remove camshaft timing belt tensioner.

All engines

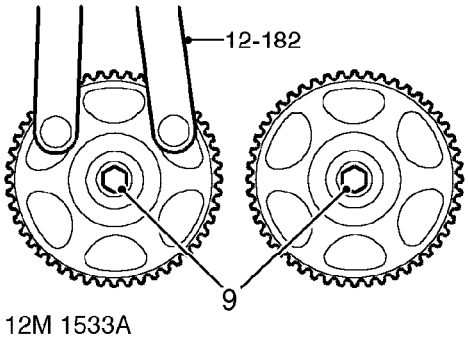

9. Restrain camshaft gears using tool **12-182** and remove bolts and washers securing camshaft gears to camshafts.
10. Remove tool **18G 1570** from camshaft gears.
11. Mark camshaft gears for identification when refitting.
12. Remove 2 camshaft gears.

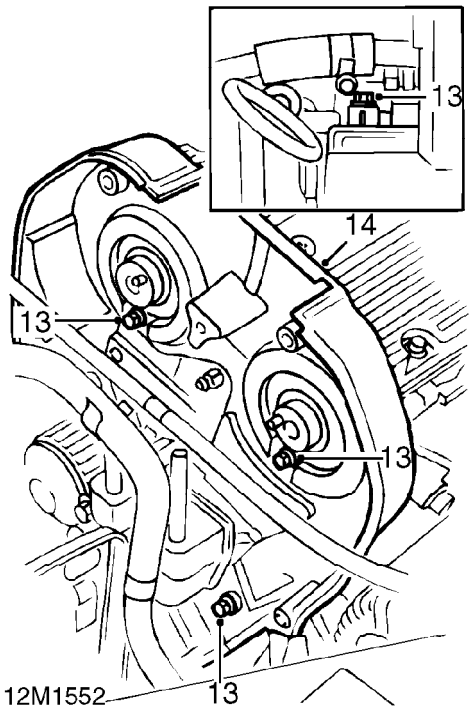

13. Remove 4 bolts securing camshaft timing belt rear cover to cylinder head and block.
14. Remove camshaft timing belt rear cover.

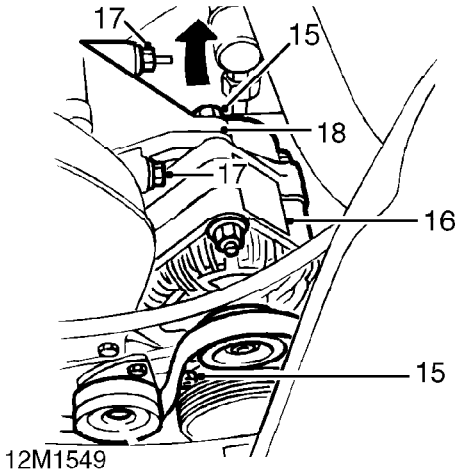

15. Remove 2 nuts and bolts securing alternator to engine.
16. Release alternator from mounting brackets.
17. Remove nut and bolt securing alternator top mounting bracket to cylinder head.
18. Pivot alternator top mounting bracket out of the way.

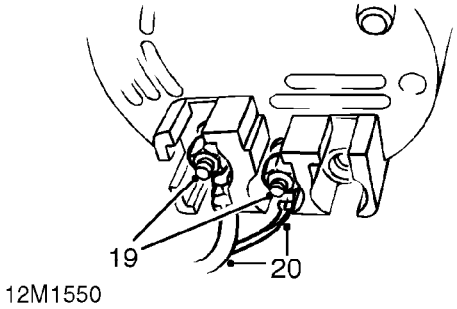

19. Loosen 2 nuts securing cables to alternator.
20. Disconnect 2 cables from alternator.
21. Remove alternator from vehicle.

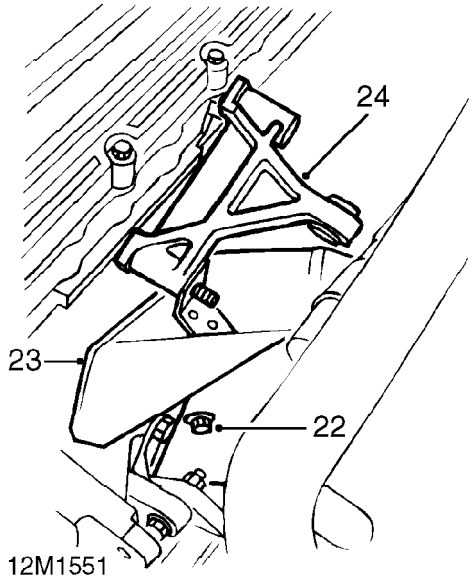

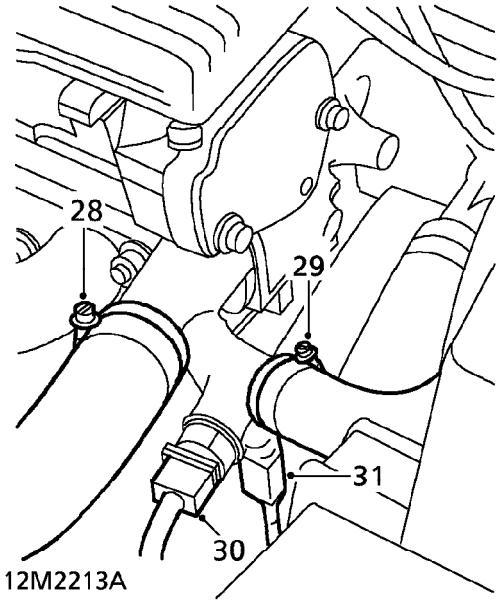

22. Remove bolt securing alternator heatshield to mounting bracket.
23. Release alternator heatshield from stud on cylinder head.
24. Remove alternator top mounting bracket.

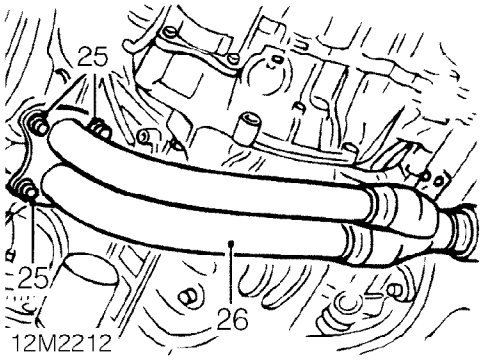

25. Remove 4 nuts securing exhaust front pipe to exhaust manifold.
26. Release exhaust front pipe from exhaust manifold.
27. Remove and discard exhaust manifold flange gasket.

28. Loosen clip and disconnect radiator top hose from coolant outlet elbow.
29. Loosen clip and disconnect coolant hose from coolant outlet elbow.
30. Disconnect multiplug from ECT sensor.
31. Disconnect multiplug from engine coolant temperature gauge sensor.

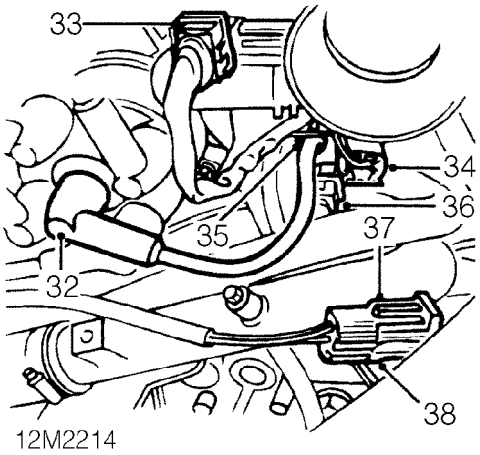

32. Disconnect coil h.t. lead from distributor.
33. Disconnect multiplug from TP sensor.
34. Disconnect multiplug from injector harness.
35. Release coil h.t. lead from clip on bracket.
36. Disconnect multiplug from IAT sensor.
37. Disconnect HO2S multiplug from engine harness.
38. Release HO2S multiplug from clip on bracket.

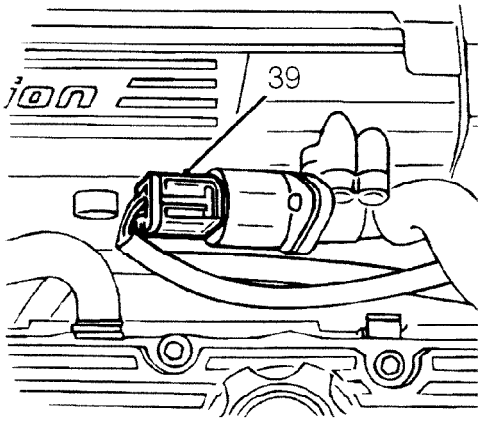

12M2215

39. Disconnect multiplug from IACV.
40. Position absorbent cloth around fuel filter outlet union.

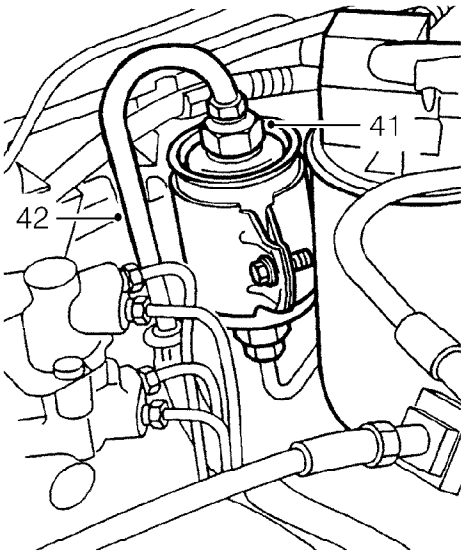

12M2216

41. Loosen fuel filter outlet union to relieve fuel pressure.

CAUTION: To prevent damage to fuel system pipes or components use two spanners when loosening or tightening unions.

42. Disconnect fuel outlet pipe from fuel filter and position aside.

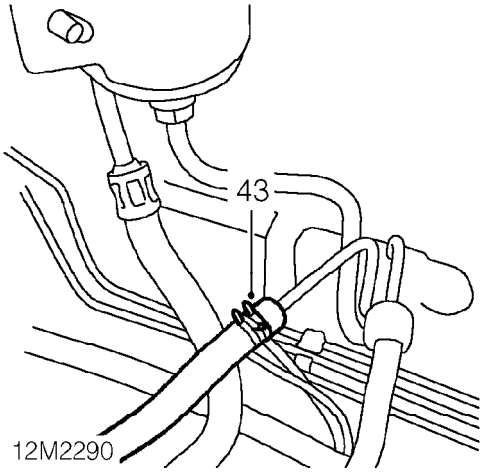

12M2290

43. Release clip and disconnect hose from fuel return pipe.

CAUTION: Plug the connections.

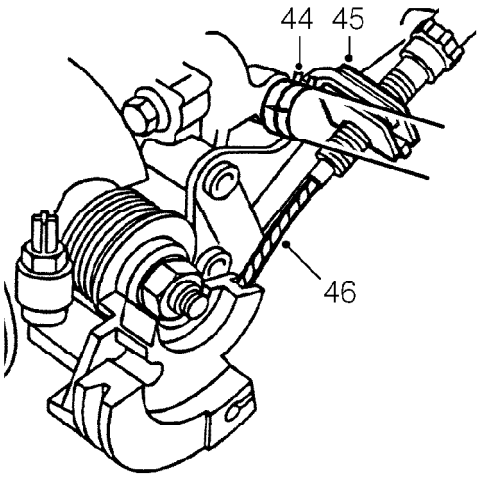

44. Release clip and disconnect purge hose from throttle housing.
45. Release throttle cable adjusting nut from abutment bracket.
46. Release throttle cable from throttle cam.

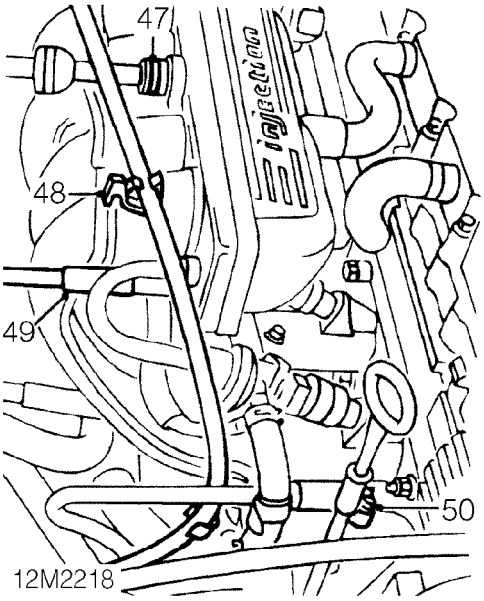

47. Depress plastic collar on quick release connector and disconnect brake servo vacuum hose from inlet manifold.
48. Release throttle cable from clip on inlet manifold.
49. Disconnect vacuum hose from inlet manifold.
50. Loosen clip and disconnect expansion tank hose from inlet manifold.
51. Remove camshaft cover. ***See this section.***

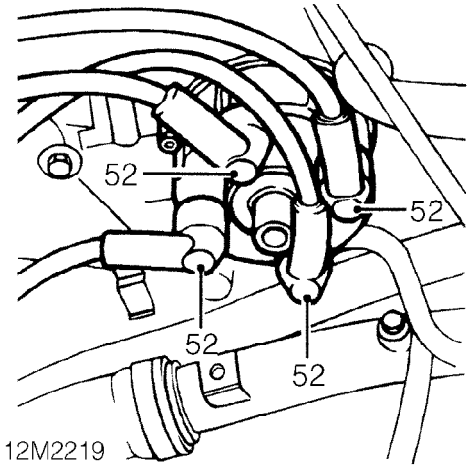

52. Disconnect h.t. leads from distributor cap.
53. Remove h.t. leads.

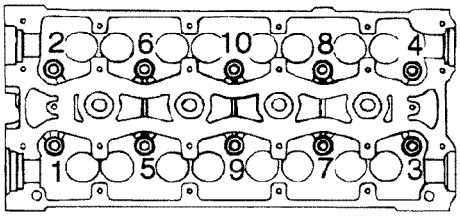

54. Working in the sequence shown, loosen 10 cylinder head to oil rail bolts.
55. Remove cylinder head bolts and store in fitted order.
56. Using assistance, remove cylinder head assembly from cylinder block.

CAUTION: Take care not to damage HO2S when removing cylinder head.

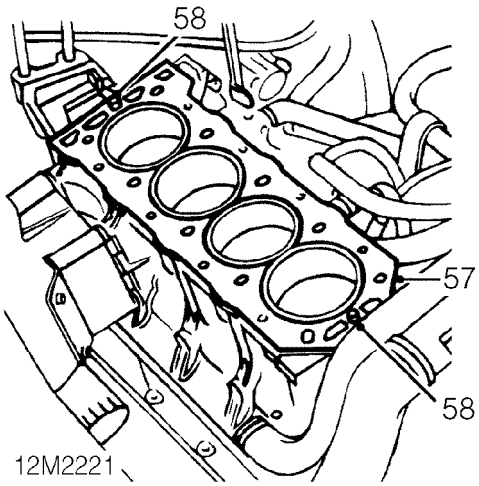

57. Remove and discard cylinder head gasket from cylinder block.
58. Remove 2 location dowels from cylinder block.

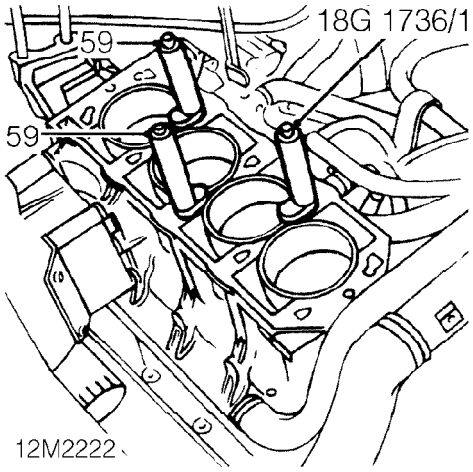

59. Fit cylinder liner clamps **18G 1736/1** to cylinder block and secure with cylinder head bolts.

CAUTION: Do not rotate crankshaft with cylinder head removed.

Refit

1. Remove bolts securing cylinder liner clamps to cylinder block and remove clamps.
2. Clean joint surfaces of cylinder head and cylinder block.
   Clean oil and coolant passages.
   Clean mating face of exhaust manifold and exhaust front pipe.
   If necessary, de-carbonise piston crowns and cylinder head.
3. Clean cylinder head bolts with a wire brush. Inspect cylinder head bolts for signs of damage.
4. Wash cylinder head bolts and wipe dry. Apply a light film of oil to bolt threads and underside of bolt heads.
5. Clean location dowels and fit to cylinder block.
6. Fit new cylinder head gasket, dry, to cylinder block.
7. Using assistance, fit cylinder head onto cylinder block carefully locating on dowels.

CAUTION: Take care not to damage HO2S when refitting cylinder head.

8. Carefully enter cylinder head bolts, DO NOT DROP. Screw bolts into place by hand.

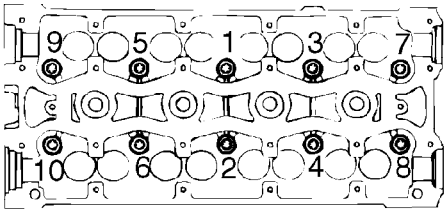

12M1564

9. Working in the sequence shown, progressively tighten the cylinder head bolts using the following procedure:
   i. All bolts to 20 Nm. Use a felt tip pen and mark position of radial mark on each bolt head.
   ii. Turn all bolts through 180°.
   iii. Turn all bolts through another 180° and align radial mark.

CAUTION: If bolt is overtightened, back off 90° then realign radial marks.

10. Fit camshaft cover. ***See this section.***
11. Connect h.t. leads to distributor cap.
12. Connect expansion tank hose to inlet manifold and tighten clip.
13. Connect vacuum hose to inlet manifold.
14. Secure throttle cable to clip on inlet manifold, ensure throttle cable is correctly routed.
15. Connect brake servo vacuum hose to inlet manifold.
16. Connect throttle cable to throttle cam.
17. Locate throttle cable adjusting nut in abutment bracket.
18. Connect purge hose to throttle housing and secure with clip.
19. Remove plugs from fuel system hoses and components.
20. Connect hose to fuel return pipe and secure with clip.
21. Clean union of fuel filter and fuel outlet pipe.

22. Connect fuel outlet pipe to fuel filter and tighten union to 28 Nm.
23. Connect multiplug to IACV.
24. Connect HO2S multiplug to engine harness and secure to clip on bracket.
25. Secure coil h.t. lead to clip on bracket and connect to distributor cap.
26. Connect multiplug to IAT sensor.
27. Connect multiplug to injector harness.
28. Connect multiplug to TP sensor.
29. Connect multiplugs to ECT sensors.
30. Connect coolant hose to coolant outlet elbow and tighten clip.
31. Connect radiator top hose to coolant outlet elbow and tighten clip.
32. Fit new gasket to exhaust manifold flange and connect exhaust front pipe.
33. Fit 4 nuts securing exhaust front pipe to exhaust manifold and tighten to 45 Nm.
34. Fit alternator top mounting bracket to stud on cylinder head.
35. Connect alternator heatshield to stud on cylinder head.
36. Fit and tighten bolt securing alternator heatshield to mounting bracket.
37. Position alternator in vehicle.
38. Connect 2 cables to alternator and secure with nuts.
39. Fit bolt securing alternator top mounting bracket to cylinder head and tighten to 25 Nm.
40. Fit nut securing alternator top mounting bracket to cylinder head and tighten to 25 Nm.
41. Manoeuvre alternator onto mounting brackets.
42. Fit 2 through bolts securing alternator to mounting brackets, fit 2 nuts and tighten to 45 Nm.
43. Fit camshaft timing belt rear cover to cylinder head and cylinder block.
44. Fit 4 bolts securing camshaft timing belt rear cover to cylinder head and cylinder block and tighten bolts to 10 Nm.
45. Fit 2 camshaft gears to their respective camshafts.

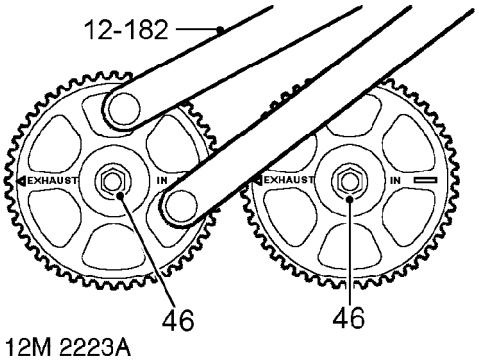

46. Fit bolts and washers securing camshaft gears to camshafts. Using tool **12-182** restrain camshaft gears and tighten bolts to:
    M8 Bolts - 35 Nm
    M10 Bolts - 65 Nm
47. Using tool **12-182** align camshaft gear timing marks and fit tool **18G 1570** to camshaft gears.

Engines fitted with manual timing belt tensioner

48. Fit camshaft timing belt tensioner to cylinder head.
49. Fit tensioner pulley Allen bolt.
50. Connect tensioner spring to tensioner and to stud on cylinder head.
51. Push tensioner pulley down to fully OFF position, fit and tighten backplate bolt to 10 Nm.

All engines

52. Fit new camshaft timing belt. ***See this section.***
53. Remove stand(s) and lower vehicle.
54. Refill cooling system. ***See COOLING SYSTEM - 'K' SERIES, Adjustments.***
55. Connect battery earth lead.
56. Adjust throttle cable. ***See ENGINE MANAGEMENT SYSTEM - MEMS, Adjustments.***

CAMSHAFT COVER GASKET

Service repair no - 12.29.40

Remove

1. Disconnect battery earth lead.

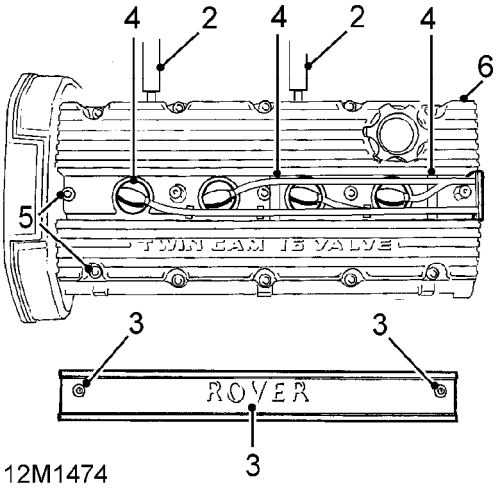

2. Release 2 clips and disconnect 2 breather hoses from camshaft cover.
3. Remove 2 screws securing spark plug cover and remove cover.
4. Disconnect h.t. leads from spark plugs, release mounting rubbers and place leads aside.
5. Progressively loosen and remove 15 bolts securing camshaft cover.
6. Remove camshaft cover.

NOTE: The gasket is re-usable and should remain attached to camshaft cover.

7. Check condition of sealing path. It should be complete and attached to gasket. Remove gasket from camshaft cover only if sealing path is damaged or detached from gasket.

Refit

1. Clean mating surfaces of camshaft cover and carrier.
2. Clean inside of camshaft cover. If necessary, wash oil separator elements in solvent and blow dry.

CAUTION: If camshaft cover gasket is to be renewed, fit new gasket with ’EXHAUST MAN SIDE’ mark towards exhaust manifold

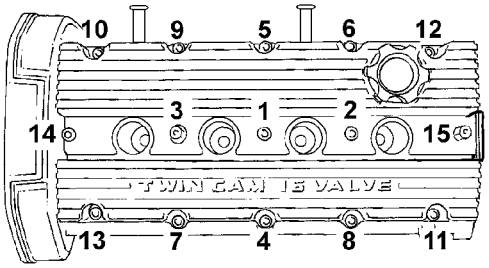

3. Fit camshaft cover to camshaft carrier. Fit bolts and working in sequence illustrated, tighten progressively to 10 Nm.
4. Connect h.t. leads to spark plugs and secure mounting rubbers in camshaft cover.
5. Fit spark plug cover, fit screws and tighten to 8 Nm.
6. Connect breather hoses and secure with clips.
7. Connect battery earth lead.

VALVE STEM OIL SEAL

Service repair no - 12.30.26

Remove

1. Disconnect battery earth lead.
2. Remove camshaft cover. ***See this section.***
3. Remove inlet and exhaust camshafts. See **’K’ Series Engine Overhaul Manual - Overhaul.**

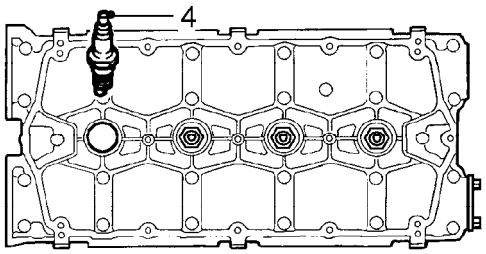

12M1631

4. Using a 16 mm spark plug socket, remove spark plug.

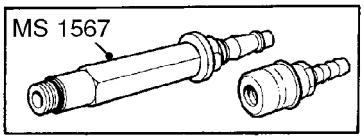

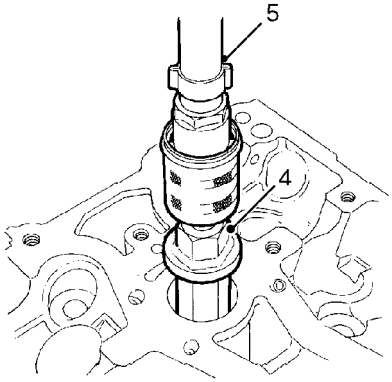

12M1632

5. Fit and tighten air line adaptor tool **MS 1567** into spark plug hole.
6. Connect an airline to adaptor and apply air pressure.
7. Remove hydraulic tappet from exhaust valve.

CAUTION: Store tappet inverted to prevent oil loss.

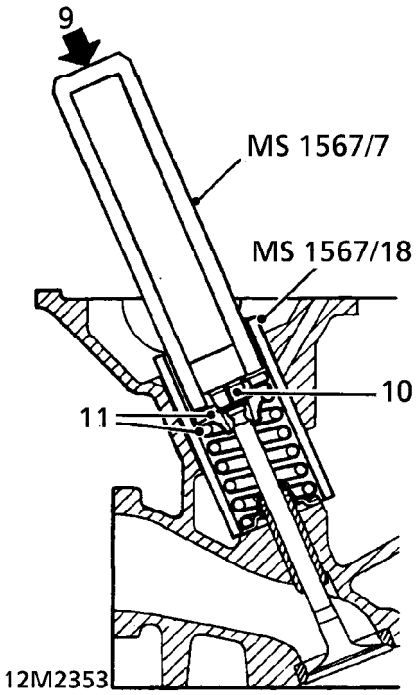

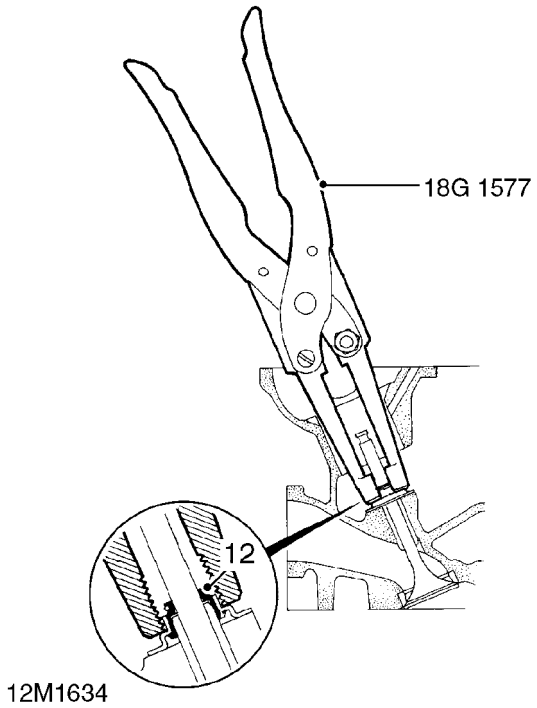

8. Fit tool **MS 1657/18** and tool **MS 1567/7** to valve spring cap.
9. Strike head of tool firmly with hammer to release valve spring collets.
10. Remove collets from magnetic end of tool.
11. Remove valve spring cap and spring.
12. Use tool **18G 1577** to remove valve stem oil seal.
13. Repeat operations to remove second exhaust valve oil seal.

Refit

1. Lubricate new valve stem oil seal with engine oil.
2. Use tool **18G 1577** to fit new oil seals.
3. Fit valve spring and spring cap to each valve.

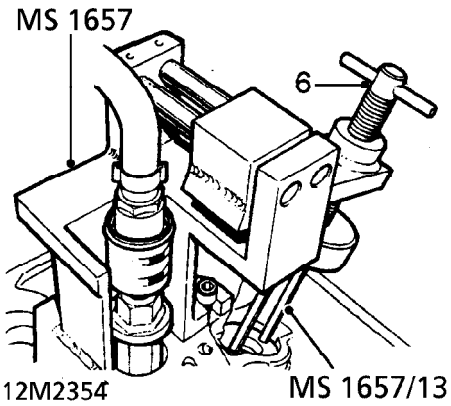

4. Assemble tool **MS 1657** in over exhaust valve.
5. Locate valve spring cap with compressor tool **MS 1657/13.**
6. Screw down valve spring compressor until valve stem collet groove is level with top face of spring cap.
7. Attach collets to end of a small flat screwdriver with grease and locate collets in valve stem groove.
8. Unscrew valve spring compressor ensuring collets are correctly located in valve spring cap.
9. Repeat refit operations on second valve.
10. Remove valve spring compressor tool **MS 1657.**
11. Lubricate tappet with clean engine oil and refit.
12. Disconnect air line from adaptor tool **MS 1567.**
13. Remove air line adaptor tool **MS 1567.**
14. Clean spark plug and set gap to 0.85 mm.
15. Fit spark plug and tighten to 27 Nm.
16. Fit inlet and exhaust camshafts. See **'K' Series Engine Overhaul Manual - Overhaul.**
17. Fit camshaft cover. ***See this section.***
18. Connect battery earth lead.

ENGINE AND GEARBOX - MODELS WITH AIR CONDITIONING

Service repair no - 12.37.01.20

Remove

1. Disconnect battery earth lead.
2. *If required:* Drain engine oil. ***See MAINTENANCE.***
3. Fit new sealing washer to drain plug, fit drain plug and tighten to 42 Nm.
4. Drain cooling system. ***See COOLING SYSTEM - 'K' SERIES, Adjustments.***
5. Drain gearbox oil.
   1.4 & 1.6 models: ***See MANUAL GEARBOX - 'R65', Adjustments.***
   1.8 models: ***See MANUAL GEARBOX - 'PG1', Adjustments.***
6. Recover refrigerant from air conditioning system. ***See AIR CONDITIONING, Adjustments.***
7. Raise front of vehicle.

WARNING: Support on safety stands.

8. Remove air cleaner. ***See ENGINE MANAGEMENT SYSTEM - MEMS, Repairs.***
9. Remove ECM. ***See ENGINE MANAGEMENT SYSTEM - MEMS, Repairs.***
10. Remove engine management relay module. ***See ENGINE MANAGEMENT SYSTEM - MEMS, Repairs.***
11. Release ABS fuse holder from battery tray.

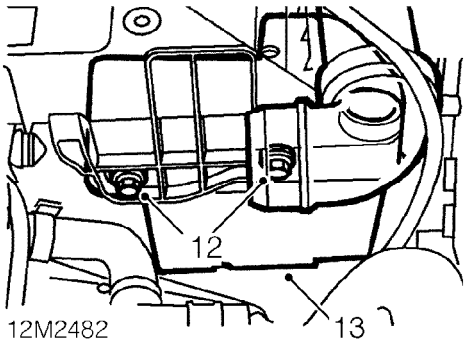

12. Remove 2 bolts securing resonator to battery tray.
13. Remove resonator.

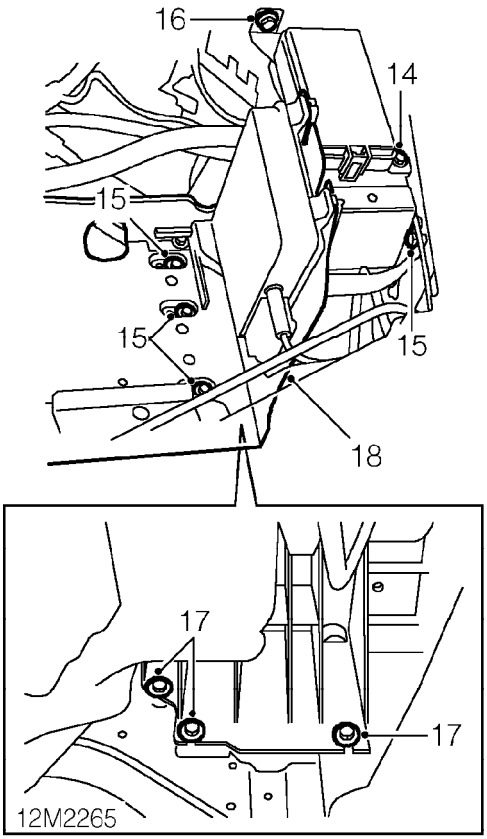

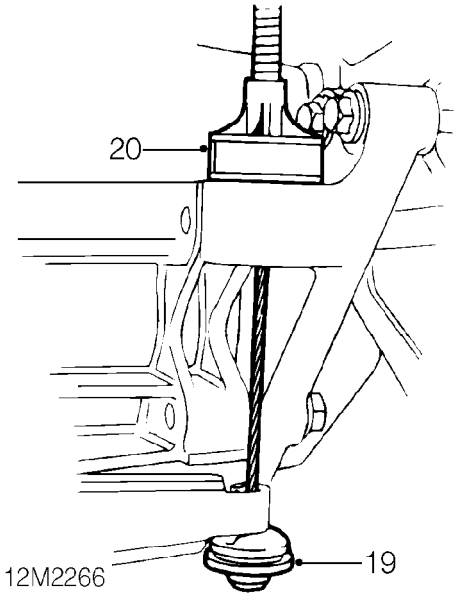

1.4 & 1.6 models illustrated

14. Remove bolt securing engine compartment fuse box to battery tray.
15. Remove 4 bolts securing battery tray to body.
16. Remove bolt securing engine compartment fuse box to body and position fuse box aside.
17. Loosen 3 bolts securing battery tray to body.
18. Remove battery tray from vehicle.

19. Disconnect clutch cable from clutch release lever.
20. Release clutch cable from abutment bracket on gearbox and position aside.
21. Release both drive shafts from gearbox as detailed in Differential oil seal.
1.4 & 1.6 models: ***See MANUAL GEARBOX - ’R65’, Repairs.***
1.8 models: ***See MANUAL GEARBOX - ’PG1’, Repairs.***

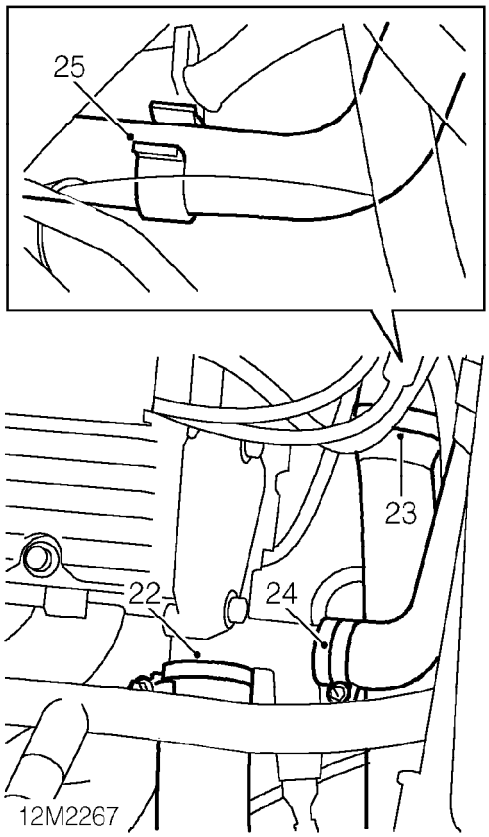

22. Loosen clip and disconnect radiator top hose from coolant outlet elbow.
23. Loosen clip and disconnnect radiator bottom hose from coolant rail.
24. Loosen clip and disconnect heater hose from coolant outlet elbow.
25. Release heater hose from clip on coolant rail and position aside.

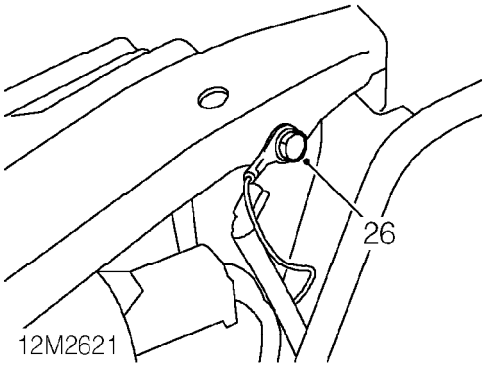

26. Remove bolt securing earth lead to bonnet locking platform.

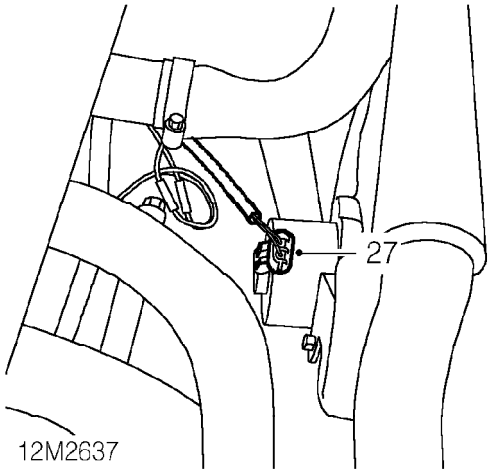

27. Disconnect multiplug from radiator cooling fan.

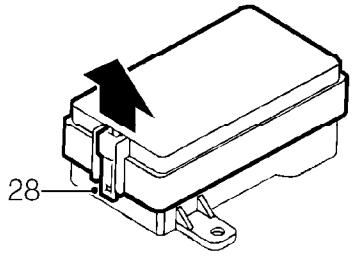

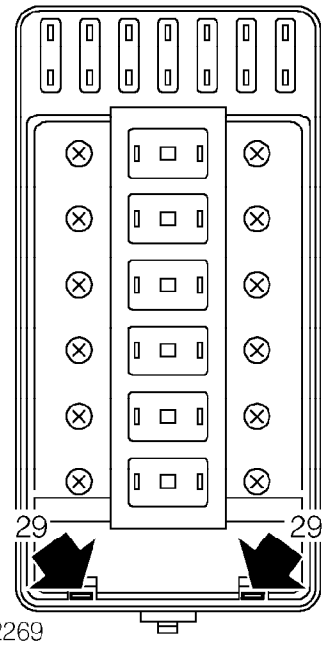

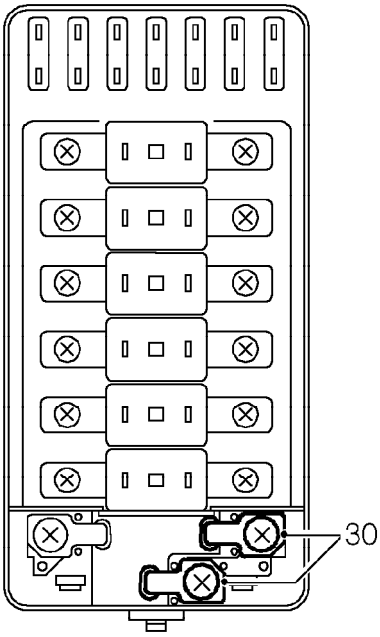

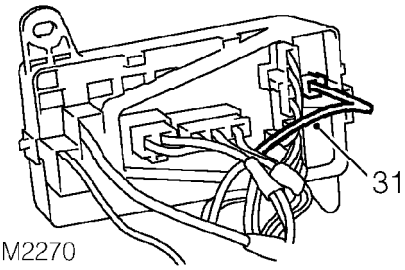

28. Release clip and remove fuse box cover.
29. Depress 2 clips and remove fuse box inner cover.
30. Remove 2 screws securing positive leads to fuse box.
31. Disconnect multiplug from fuse box.

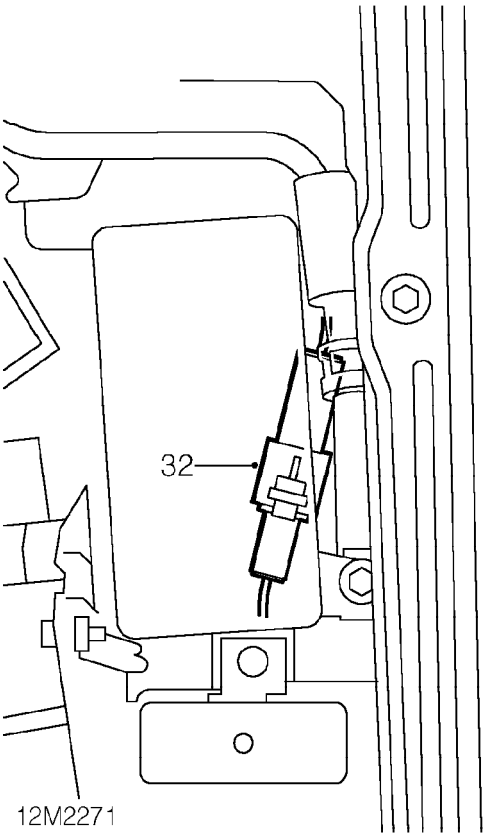

32. Disconnect engine harness to main harness connector.
33. Lay engine harness across engine to avoid it being caught when the engine is removed.
34. Remove evaporative emission canister. ***See EMISSION CONTROL, Repairs.***
35. Remove exhaust front pipe. ***See MANIFOLD & EXHAUST SYSTEMS, Repairs.***
36. Position absorbent cloth around fuel filter outlet union.

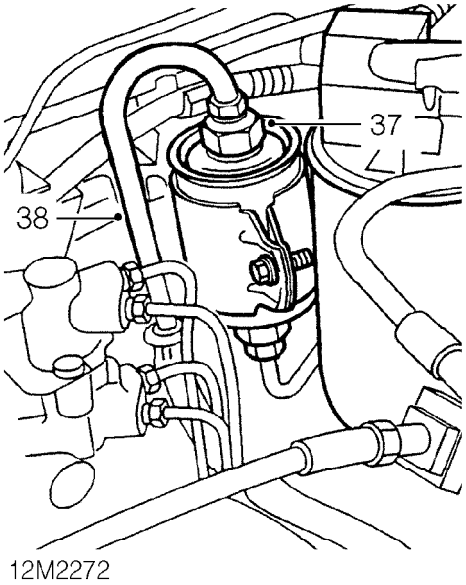

37. Loosen fuel filter outlet union to relieve fuel pressure.

CAUTION: To prevent damage to fuel system pipes and components use two spanners when loosening or tightening unions.

38. Disconnect fuel outlet pipe from fuel filter and position aside.

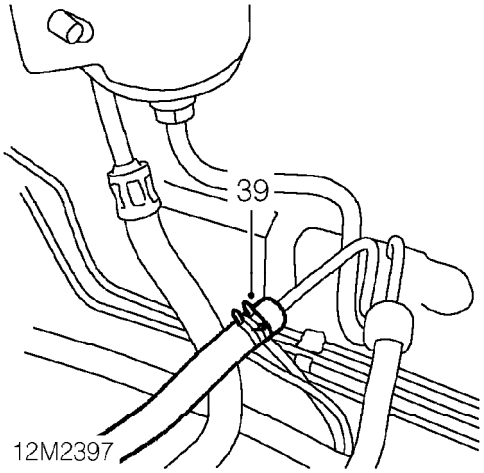

39. Release clip and disconnect hose from fuel return pipe.

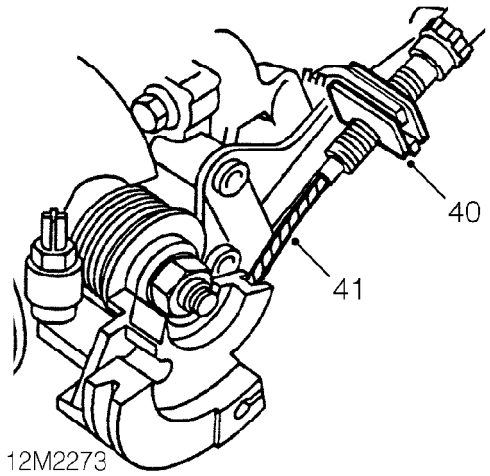

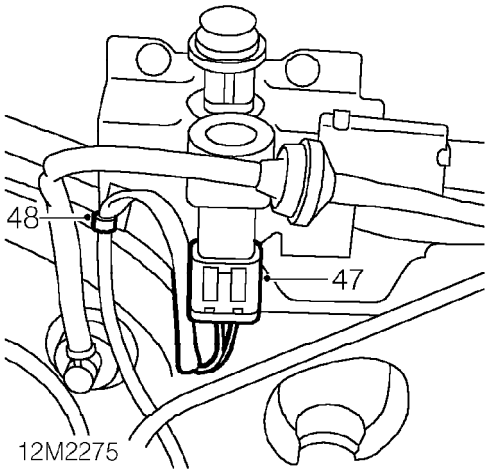

40. Release throttle cable adjusting nut from abutment bracket.
41. Release throttle cable from throttle cam.

47. Disconnect multiplug from inertia switch.
48. Release clip securing inertia switch harness to mounting bracket.

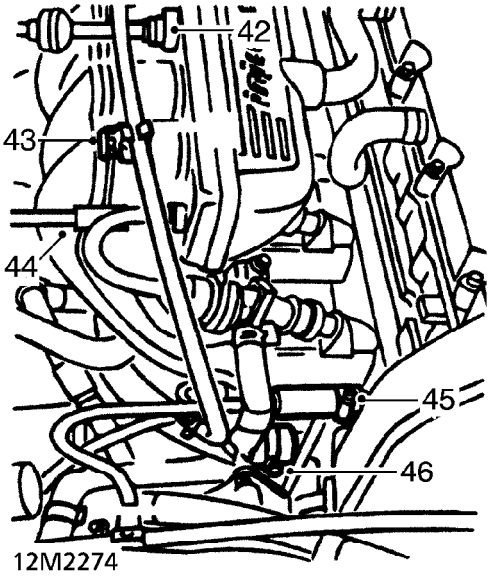

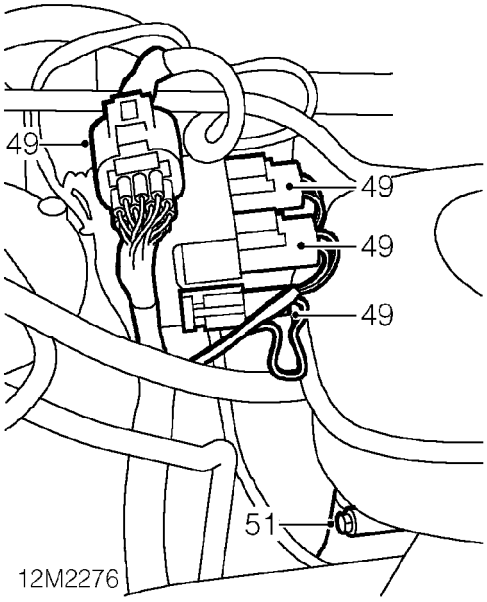

42. Depress plastic collar on quick release connector and disconnect brake servo vacuum pipe from inlet manifold.
43. Release throttle cable from clip on inlet manifold.
44. Disconnect ECM vacuum pipe from inlet manifold.
45. Loosen clip and disconnect expansion tank hose from inlet manifold.
46. Loosen clip and disconnect coolant hose from thermostat housing.

49. Release 4 multiplugs from mounting bracket on bulkhead.
50. Disconnect engine harness multiplugs from main harness.
51. Loosen clip and disconnect coolant feed hose from coolant expansion tank.
52. Position container to catch fluid loss from power steering system.

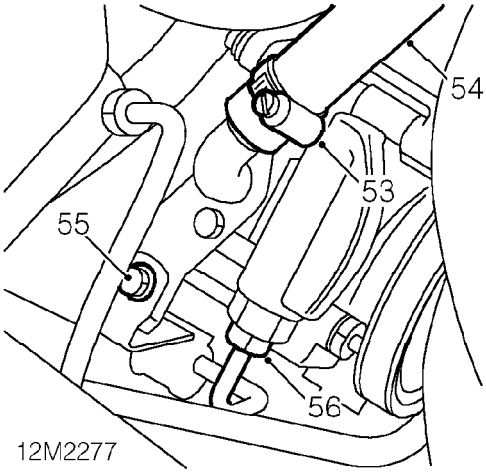

53. Loosen clip securing fluid inlet hose to power steering pump.
54. Disconnect fluid inlet hose from power steering pump.
55. Remove bolt securing fluid outlet hose clamp to bracket.
56. Loosen union and disconnect fluid outlet hose from power steering pump.

CAUTION: To prevent damage to pipes and components use two spanners when loosening or tightening unions.

57. Remove and discard ’O’ ring from fluid outlet hose.
58. Plug hose and power steering pump connections to prevent excess fluid loss and the ingress of dirt into the system.

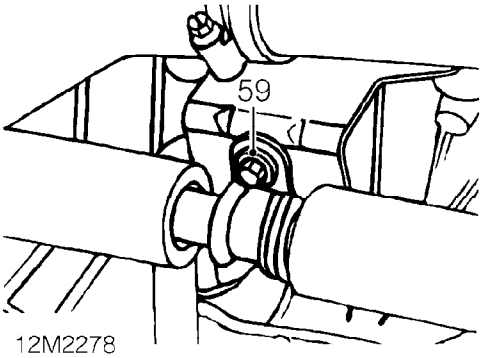

59. Remove bolt securing air conditioning pipe to bracket on flywheel housing.

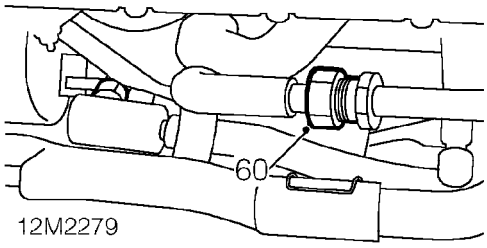

60. Loosen union and disconnect compressor pipe from evaporator pipe.

CAUTION: To prevent damage to air conditioning pipes and components use two spanners when loosening or tightening unions.

61. Remove and discard ’O’ ring from compressor pipe.
62. Position evaporator pipe aside.

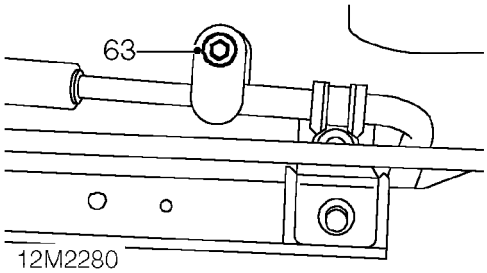

63. Remove bolt securing compressor pipe to condenser pipe.
64. Release compressor pipe from condenser pipe and discard ’O’ ring.

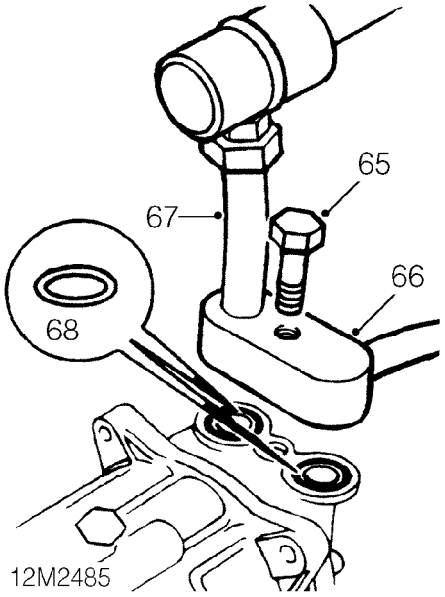

65. Remove bolt securing air conditioning pipe union to compressor.
66. Release air conditioning pipe union from compressor.
67. Remove air conditioning pipes.
68. Remove and discard 2 'O' rings from compressor.

CAUTION: Immediately cap all air conditioning pipes and compressor to prevent ingress of dirt and moisture into the system.

1.4 & 1.6 Models

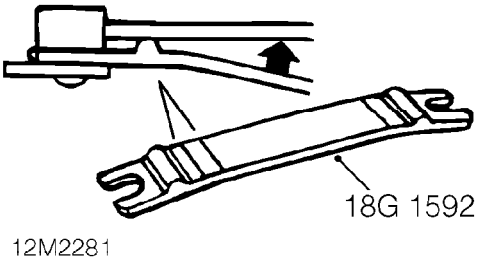

69. Using tool **18G 1592** release gear selector linkage ball joint from gear selector lever.
70. Using tool **18G 1592** release gear change linkage ball joint from gear change lever.

1.8 Models

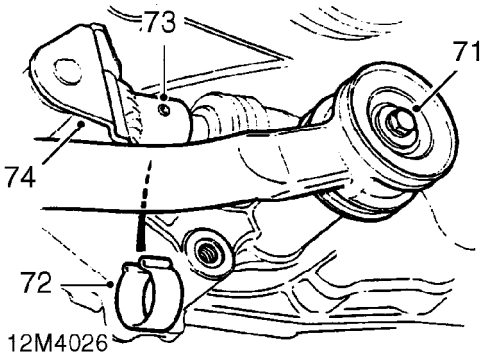

71. Remove bolt and disconnect gear change steady bar from gearbox. Collect 2 washers.
72. Remove clip retaining selector rod roll pin.
73. Using a suitable punch, drive out roll pin securing selector rod to selector shaft.
74. Release selector rod from selector shaft and tie aside.

All models

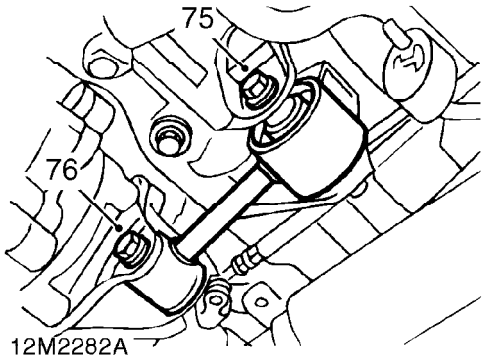

1.4 model illustrated

75. Loosen through bolt securing engine steady bar to subframe.
76. Remove through bolt securing engine steady bar to bracket on gearbox/sump.

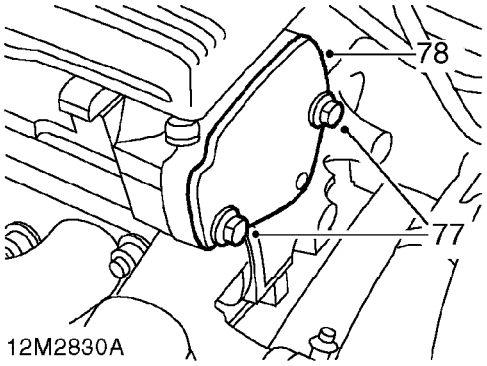

77. Remove 2 bolts securing camshaft rear cover plate to cylinder head.
78. Remove camshaft rear cover plate.

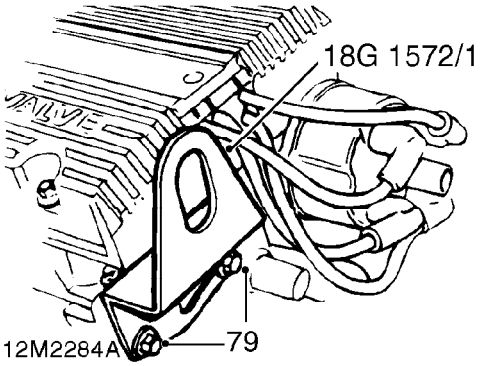

79. Fit lifting bracket tool **18G 1572/1** to cylinder head. Fit bolts and tighten to 9 Nm.

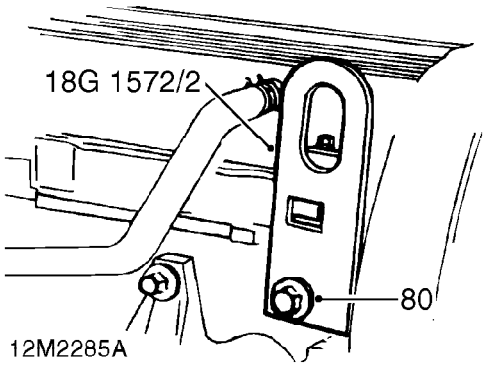

80. Fit lifting bracket tool **18G 1572/2** to cylinder head. Fit bolt and tighten to 9 Nm.

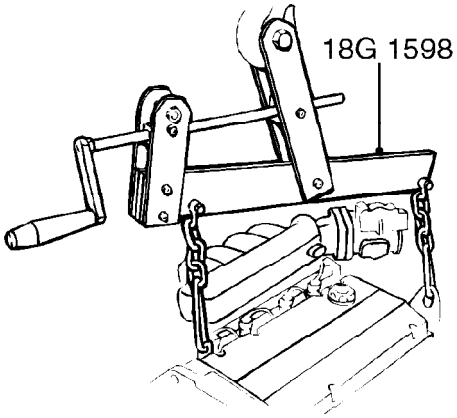

81. Connect adjustable lifting bracket tool **18G 1598** to lifting brackets.
82. Connect a hoist to tool **18G 1598** and raise hoist to take weight of engine without exerting load on engine mounting bolts.
83. Remove engine RH mounting. ***See this section.***

1.4 models

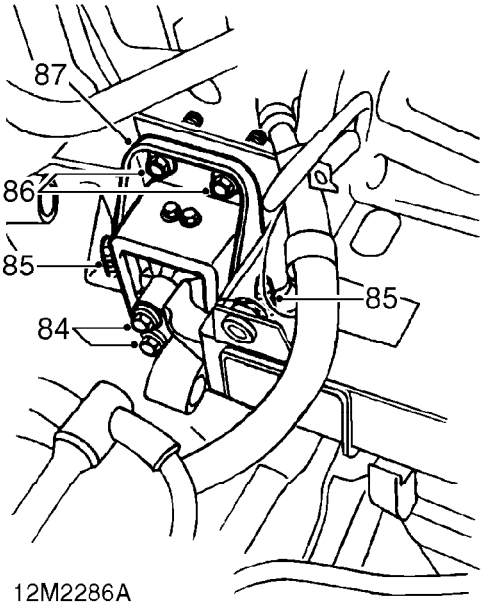

84. Remove 2 bolts securing engine LH mounting to gearbox mounting bracket.
85. Remove 2 bolts securing engine LH mounting to body.
86. Remove 2 bolts securing engine LH mounting to mounting bracket.
87. Remove engine LH mounting.

1.6 & 1.8 models

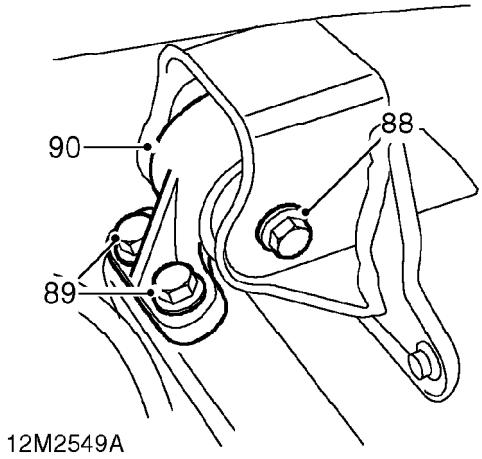

88. Remove through bolt securing engine LH mounting to bracket on body.
89. Remove 2 bolts securing engine LH mounting to mounting bracket on gearbox.
90. Remove engine LH mounting.

All models

91. Adjust tool **18G 1598** to tilt engine with the gearbox as low as possible.
92. Using assistance, manoeuvre engine and gearbox from vehicle.

CAUTION: Take care not to damage the ABS modulator or brake pipes when removing the engine.

93. Lower engine and gearbox assembly and disconnect hoist from adjustable lifting bracket.

Refit

1. Connect hoist to adjustable lifting bracket tool **18G 1598.**
2. Using assistance, raise engine and manoeuvre into position in vehicle.
3. Adjust lifting bracket tool so engine is horizontal in engine compartment.

1.6 & 1.8 models

4. Position engine LH mounting to mounting bracket on gearbox, fit bolts and tighten to 100 Nm.
5. Align engine LH mounting to bracket on body, fit through bolt and tighten to 85 Nm.

1.4 models

6. Position engine LH mounting.
7. Fit bolts securing engine LH mounting to mounting bracket and tighten to 55 Nm.
8. Fit bolts securing engine LH mounting to body and tighten to 55 Nm.
9. Align gearbox mounting bracket to engine mounting, fit bolts and tighten to 60 Nm.

All models

10. Fit engine RH mounting. ***See this section.***
11. Lower hoist and disconnect lifting bracket tool **18G 1598** from lifting brackets.
12. Remove bolt securing lifting bracket tool **18G 1572/2** to cylinder head and remove lifting bracket.
13. Remove 2 bolts securing lifting bracket tool **18G 1572/1** to cylinder head and remove lifting bracket.
14. Clean camshaft rear cover plate.
15. Position camshaft rear cover plate to cylinder head, fit bolts and tighten to 25 Nm.
16. *1.6 & 1.8 models:* Connect engine steady bar to bracket on sump, fit through bolt and tighten to 80 Nm.
17. *1.4 models:* Connect engine steady bar to bracket on gearbox, fit through bolt and tighten to 45 Nm.
18. Tighten through bolt, engine steady bar to subframe, to 80 Nm.
19. Clean gear selector linkage and gear change linkage ball joints.

1.4 & 1.6 Models

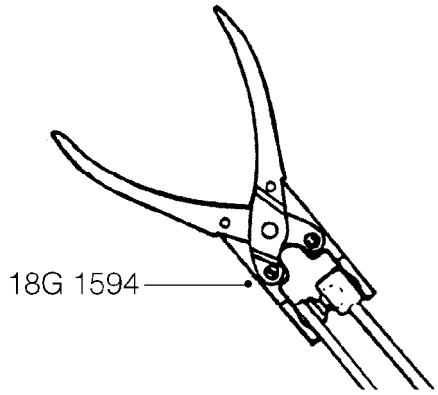

20. Using tool **18G 1594** connect gear selector linkage ball joint to gear selector lever.
21. Using tool **18G 1594** connect gear change linkage ball joint to gear change lever.

1.8 Models

22. Connect selector rod to selector shaft and align holes.
23. Fit NEW roll pin securing selector rod to shaft and fit roll pin retaining clip.
24. Fit washers to steady bar and connect to gearbox.
25. Fit bolt securing steady bar to gearbox and tighten to 60 Nm.

All models

26. Remove caps from air conditioning pipes and compressor.
27. Clean mating faces of air conditioning pipe union and compressor.
28. Lubricate 2 new 'O' rings with refrigerant oil and fit to compressor.
29. Position air conditioning pipe union to compressor, fit bolt and tighten to 35 Nm.
30. Clean condenser pipe and compressor pipe unions.
31. Lubricate new 'O' ring with refrigerant oil and fit to condenser pipe.
32. Connect condenser pipe to compressor pipe, fit bolt and tighten to 6 Nm.

33. Clean compressor pipe and evaporator pipe unions.
34. Lubricate new ’O’ ring with refrigerant oil and fit to compressor pipe.
35. Connect evaporator pipe to compressor pipe and tighten union to 45 Nm.

CAUTION: To prevent damage to air conditioning pipes and components use two spanners when loosening or tightening unions.

36. Align air conditioning pipe to bracket on flywheel housing, fit bolt and tighten to 6 Nm.
37. Remove plugs from power steering pump and hose connections.
38. Lubricate new ’O’ ring with clean power steering fluid and fit to fluid outlet hose.
39. Connect fluid outlet hose to power steering pump and tighten union to 55 Nm.

CAUTION: To prevent damage to components, use two spanners when loosening or tightening unions.

40. Align fluid outlet hose clamp to bracket and secure with bolt.
41. Connect fluid inlet hose to power steering pump and tighten clip.
42. Connect coolant feed hose to expansion tank and tighten clip.
43. Connect 4 engine harness multiplugs to main harness and secure to mounting bracket on bulkhead.
44. Connect multiplug to inertia switch and secure harness clip to mounting bracket.
45. Connect coolant hose to thermostat housing and tighten clip.
46. Connect expansion tank hose to inlet manifold and tighten clip.
47. Connect ECM vacuum pipe to inlet manifold.
48. Connect throttle cable to throttle cam.
49. Locate throttle cable adjusting nut in abutment bracket.
50. Ensure throttle cable is correctly routed and secure to clip on inlet manifold.
51. Connect brake servo vacuum pipe to inlet manifold.
52. Connect hose to fuel return pipe and secure with clip.
53. Clean union of fuel outlet pipe and fuel filter.
54. Connect fuel outlet pipe to fuel filter and tighten union to 28 Nm.

CAUTION: To prevent damage to fuel system pipes and components use two spanners when loosening or tightening unions.

55. Fit exhaust front pipe. ***See MANIFOLD & EXHAUST SYSTEMS, Repairs.***
56. Fit evaporative emission canister. ***See EMISSION CONTROL, Repairs.***
57. Connect the engine harness to main harness connector.
58. Connect multiplug to fuse box.
59. Fit positive leads to fuse box and secure with screws.
60. Fit fuse box inner cover.
61. Fit fuse box cover.
62. Connect multiplug to radiator cooling fan.
63. Position earth lead to bonnet locking platform, fit bolt and tighten to 9 Nm.
64. Connect heater hose to coolant outlet elbow and tighten clip.
65. Secure heater hose to clip on coolant rail.
66. Connect radiator bottom hose to coolant rail and tighten clip.
67. Connect radiator top hose to coolant outlet elbow and tighten clip.
68. Connect drive shafts to gearbox as detailed in Differential oil seal.
    1.4 & 1.6 models: ***See MANUAL GEARBOX - ’R65’, Repairs.***
    1.8 models: ***See MANUAL GEARBOX - ’PG1’, Repairs.***
69. Feed clutch cable through abutment bracket and connect to clutch release lever.
70. Position battery tray in vehicle.
71. Tighten 3 bolts securing battery tray to body, to 10 Nm.
72. Position engine compartment fuse box to body, fit bolt and tighten to 10 Nm.

73. Fit 4 bolts securing battery tray to body and tighten to 10 Nm.
74. Fit and tighten bolt securing engine compartment fuse box to battery tray.
75. Fit resonator to air intake pipe.
76. Fit and tighten bolts securing resonator to battery tray.
77. Secure ABS fuse holder to battery tray.
78. Fit engine management relay module. ***See ENGINE MANAGEMENT SYSTEM - MEMS, Repairs.***
79. Fit ECM. ***See ENGINE MANAGEMENT SYSTEM - MEMS, Repairs.***
80. Fit air cleaner. ***See ENGINE MANAGEMENT SYSTEM - MEMS, Repairs.***
81. Replace receiver/dryer. ***See AIR CONDITIONING, Repairs.***
82. Remove stand(s) and lower vehicle.
83. Recharge air conditioning system. ***See AIR CONDITIONING, Adjustments.***
84. Refill gearbox with oil.
    1.4 & 1.6 models: ***See MANUAL GEARBOX - ’R65’, Adjustments.***
    1.8 models: ***See MANUAL GEARBOX - ’PG1’, Adjustments.***
85. Refill cooling system. ***See COOLING SYSTEM - ’K’ SERIES, Adjustments.***
86. *If required:* Refill engine with oil. ***See MAINTENANCE.***
87. Bleed power steering system. ***See STEERING, Adjustments.***
88. Adjust throttle cable. ***See ENGINE MANAGEMENT SYSTEM - MEMS, Adjustments.***

ENGINE AND GEARBOX - MODELS WITHOUT AIR CONDITIONING

Service repair no - 12.37.01.99

Remove

1. Disconnect battery earth lead.
2. *If required:* Drain engine oil. ***See MAINTENANCE.***
3. Fit new sealing washer to drain plug.
4. Fit drain plug and tighten to 42 Nm.
5. Drain cooling system. ***See COOLING SYSTEM - ’K’ SERIES, Adjustments.***
6. Drain gearbox oil.
   1.4 & 1.6 models: ***See MANUAL GEARBOX - ’R65’, Adjustments.***
   1.8 models: ***See MANUAL GEARBOX - ’PG1’, Adjustments.***
7. Raise front of vehicle.

WARNING: Support on safety stands.

8. Remove air cleaner. ***See ENGINE MANAGEMENT SYSTEM - MEMS, Repairs.***
9. Remove ECM. ***See ENGINE MANAGEMENT SYSTEM - MEMS, Repairs.***
10. Remove engine management relay module. ***See ENGINE MANAGEMENT SYSTEM - MEMS, Repairs.***
11. Release ABS fuse holder from battery tray.

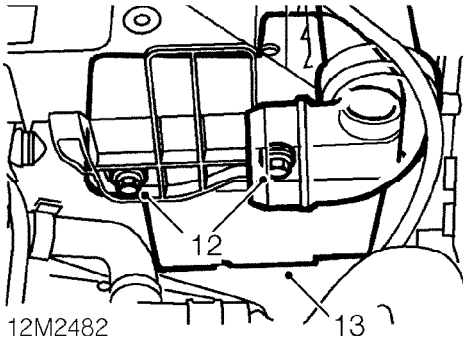

12. Remove 2 bolts securing resonator to battery tray.
13. Remove resonator.

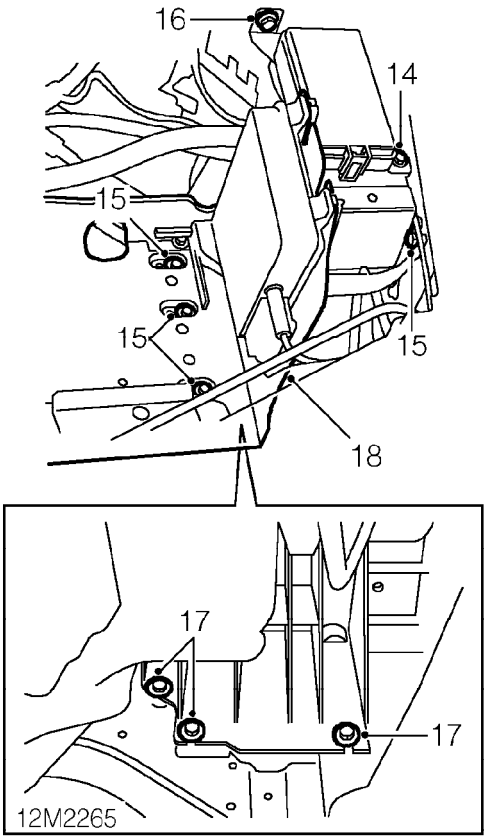

14. Remove bolt securing engine compartment fuse box to battery tray.
15. Remove 4 bolts securing battery tray to body.
16. Remove bolt securing engine compartment fuse box to body and position fuse box aside.
17. Loosen 3 bolts securing battery tray to body.
18. Remove battery tray from vehicle.

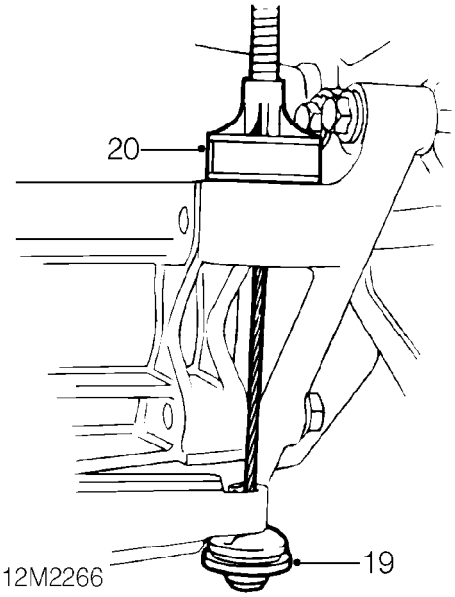

1.4 & 1.6 models illustrated

19. Disconnect clutch cable from clutch release lever.
20. Release clutch cable from abutment bracket on gearbox and position aside.
21. Release both drive shafts from gearbox as detailed in Differential oil seal.
    1.4 & 1.6 models: ***See MANUAL GEARBOX - ’R65’, Repairs.***
    1.8 models: ***See MANUAL GEARBOX - ’PG1’, Repairs.***

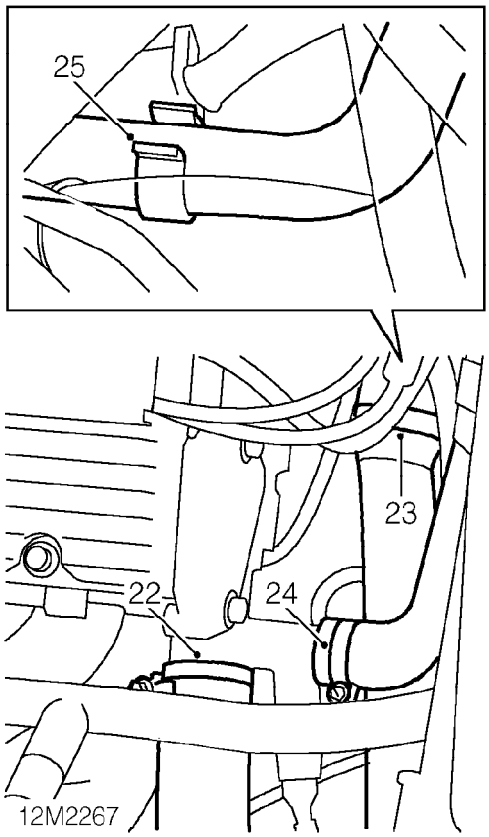

22. Loosen clip and disconnect radiator top hose from coolant outlet elbow.
23. Loosen clip and disconnnect radiator bottom hose from coolant rail.
24. Loosen clip and disconnect heater hose from coolant outlet elbow.
25. Release heater hose from clip on coolant rail and position aside.

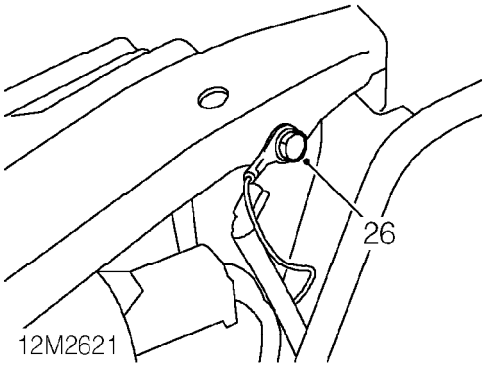

26. Remove bolt securing earth lead to bonnet locking platform.

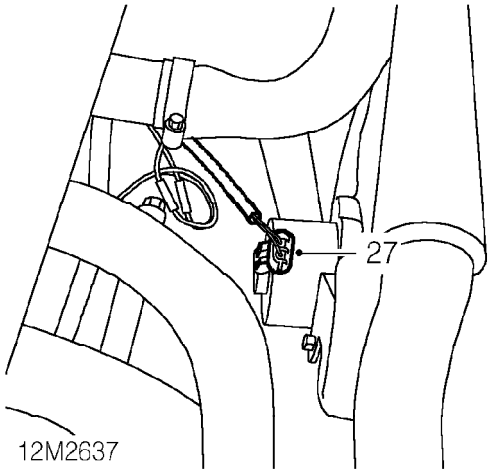

27. Disconnect multiplug from radiator cooling fan.

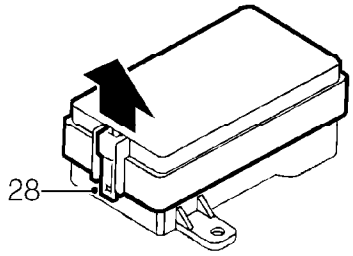

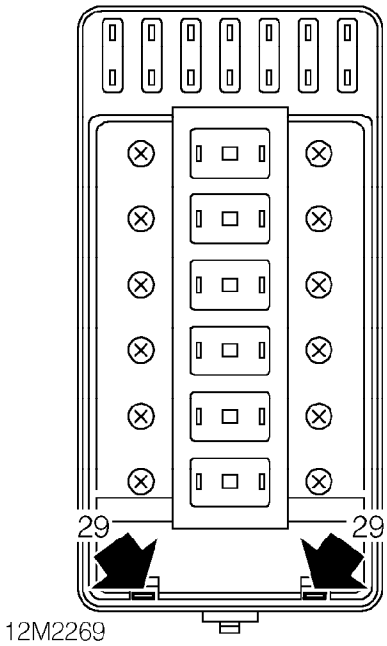

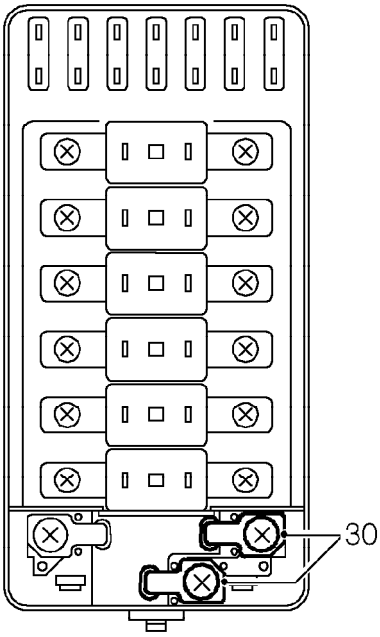

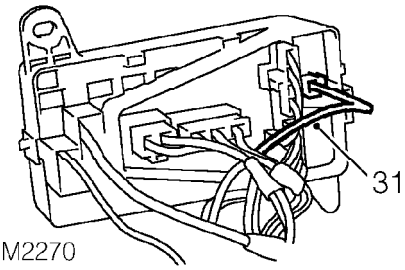

28. Release clip and remove fuse box cover.
29. Depress 2 clips and remove fuse box inner cover.
30. Remove 2 screws securing positive leads to fuse box.
31. Disconnect multiplug from fuse box.

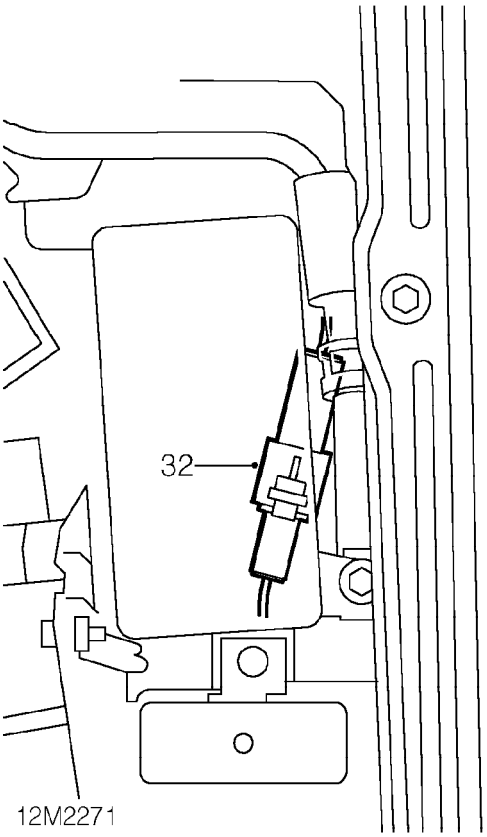

32. Disconnect engine harness to main harness connector.
33. Lay engine harness across engine to avoid it being caught when the engine is removed.
34. Remove evaporative emission canister. ***See EMISSION CONTROL, Repairs.***
35. Remove exhaust front pipe. ***See MANIFOLD & EXHAUST SYSTEMS, Repairs.***
36. Position absorbent cloth around fuel filter outlet union.

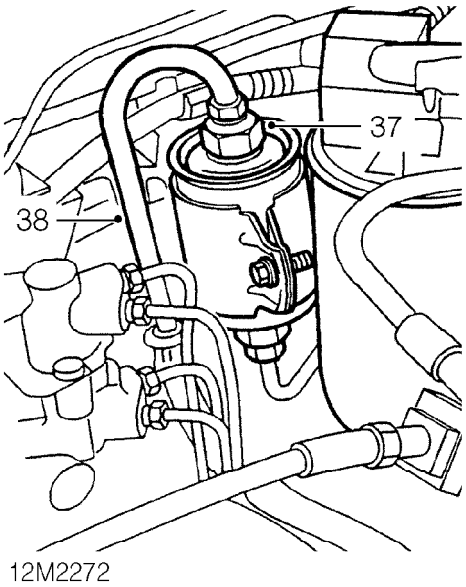

37. Loosen fuel filter outlet union to relieve fuel pressure.

CAUTION: To prevent damage to fuel system pipes and components use two spanners when loosening or tightening unions.

38. Disconnect fuel outlet pipe from fuel filter and position aside.

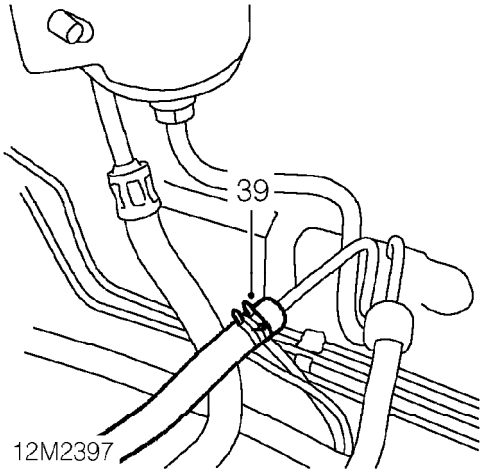

39. Release clip and disconnect hose from fuel return pipe.

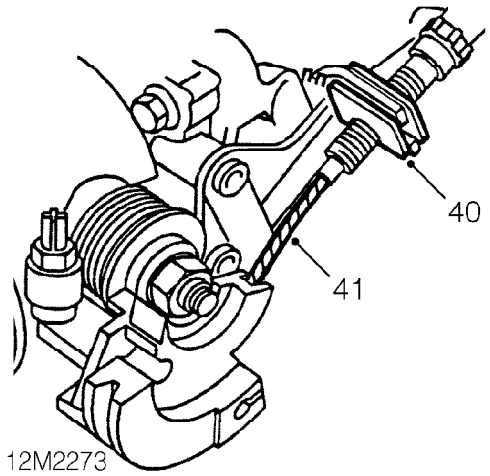

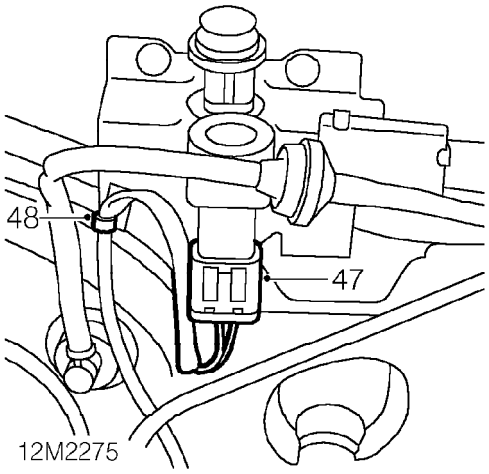

40. Release throttle cable adjusting nut from abutment bracket.
41. Release throttle cable from throttle cam.

47. Disconnect multiplug from inertia switch.
48. Release clip securing inertia switch harness to mounting bracket.

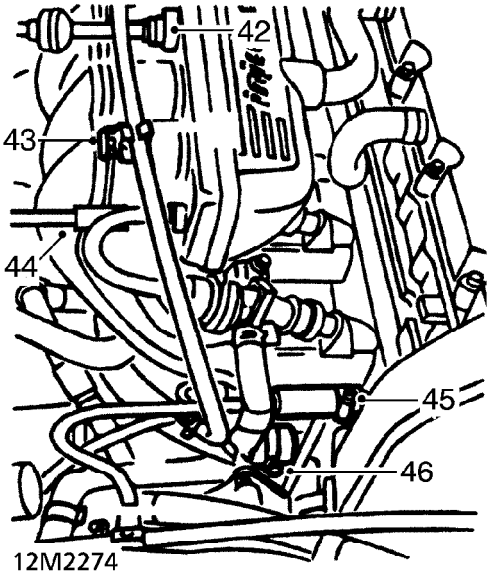

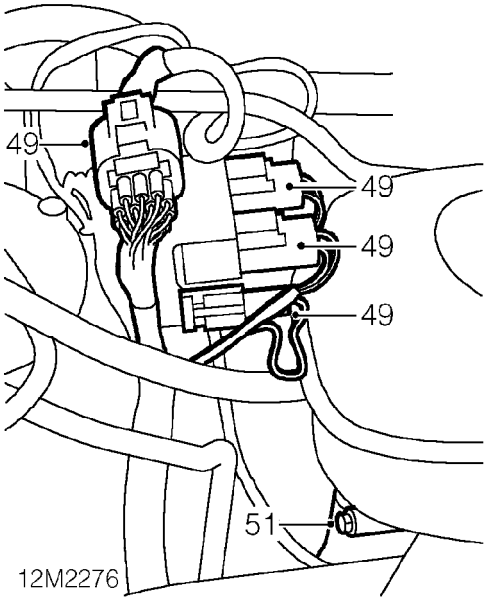

42. Depress plastic collar on quick release connector and disconnect brake servo vacuum pipe from inlet manifold.
43. Release throttle cable from clip on inlet manifold.
44. Disconnect ECM vacuum pipe from inlet manifold.
45. Loosen clip and disconnect expansion tank hose from inlet manifold.
46. Loosen clip and disconnect coolant hose from thermostat housing.

49. Release 4 multiplugs from mounting bracket on bulkhead.
50. Disconnect engine harness multiplugs from main harness.
51. Loosen clip and disconnect coolant feed hose from coolant expansion tank.
52. Position container to catch fluid loss from power steering system.

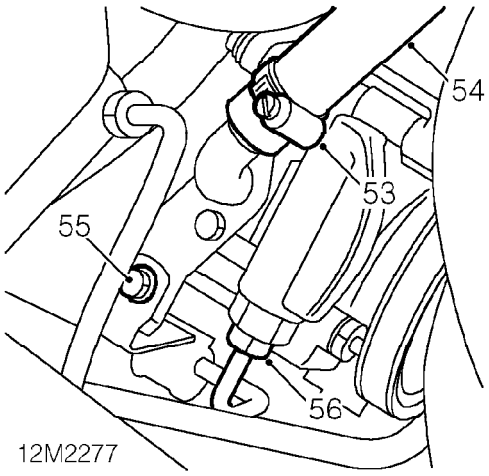

53. Loosen clip securing fluid inlet hose to power steering pump.
54. Disconnect fluid inlet hose from power steering pump.
55. Remove bolt securing fluid outlet hose clamp to bracket.
56. Loosen union and disconnect fluid outlet hose from power steering pump.

CAUTION: To prevent damage to pipes and components use two spanners when loosening or tightening unions.

57. Remove and discard ’O’ ring from fluid outlet hose.
58. Plug hose and power steering pump connections to prevent excess fluid loss and the ingress of dirt into the system.

1.4 & 1.6 models

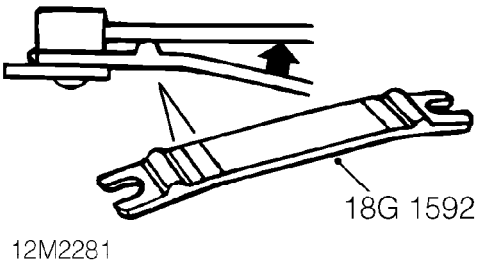

59. Using tool **18G 1592** release gear selector linkage ball joint from gear selector lever.
60. Using tool **18G 1592** release gear change linkage ball joint from gear change lever.

1.8 Models

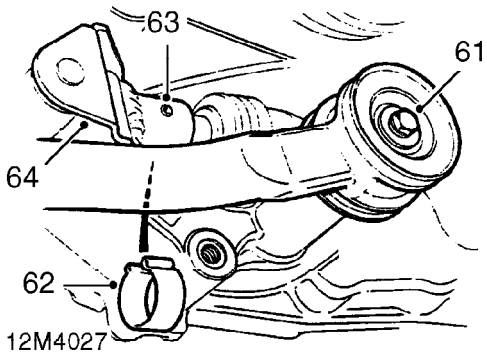

61. Remove bolt and disconnect gear change steady bar from gearbox. Collect 2 washers.
62. Remove clip retaining selector rod roll pin.
63. Using a suitable punch, drive out roll pin securing selector rod to selector shaft.
64. Release selector rod from selector shaft and tie aside.

All models

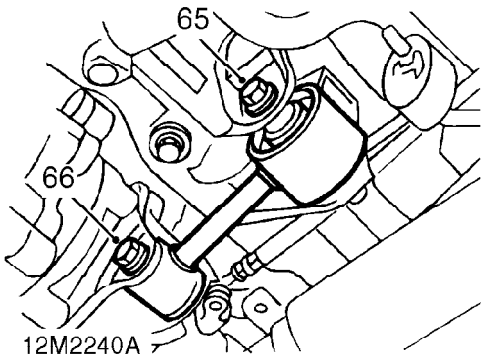

1.4 model illustrated

65. Loosen through bolt securing engine steady bar to subframe.
66. Remove through bolt securing engine steady bar to bracket on gearbox/sump.

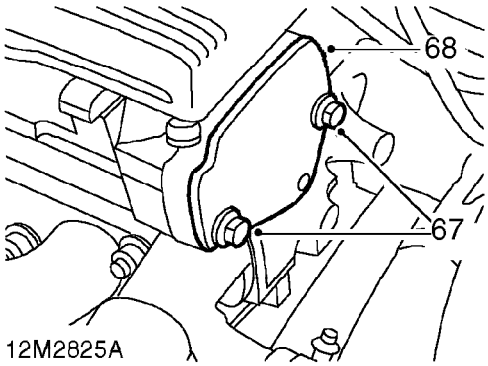

67. Remove 2 bolts securing camshaft rear cover plate to cylinder head.
68. Remove camshaft rear cover plate.

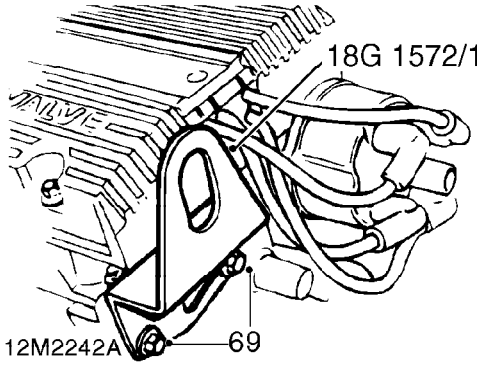

69. Fit lifting bracket tool **18G 1572/1** to cylinder head. Fit bolts and tighten to 9 Nm.

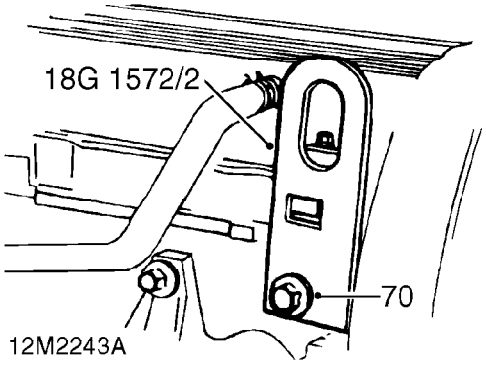

70. Fit lifting bracket tool **18G 1572/2** to cylinder head. Fit bolt and tighten to 9 Nm.

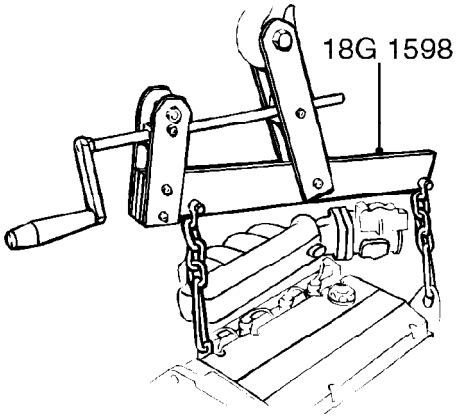

71. Connect adjustable lifting bracket tool **18G 1598** to lifting brackets.
72. Connect a hoist to tool **18G 1598** and raise hoist to take weight of engine without exerting load on engine mounting bolts.
73. Remove engine RH mounting. ***See this section.***

1.4 models

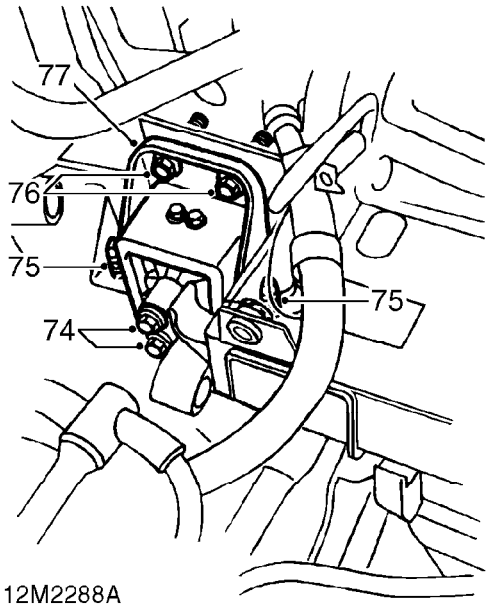

74. Remove 2 bolts securing engine LH mounting to gearbox mounting bracket.
75. Remove 2 bolts securing engine LH mounting to body.
76. Remove 2 bolts securing engine LH mounting to mounting bracket.
77. Remove engine LH mounting.

1.6 & 1.8 models

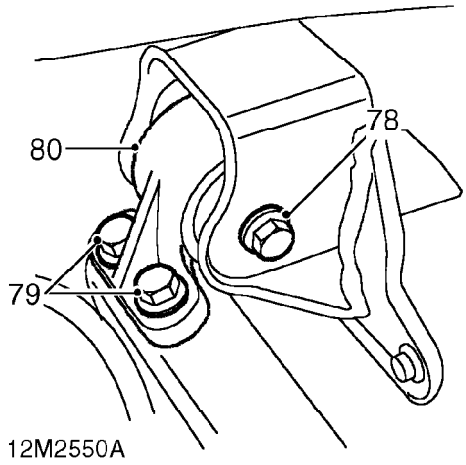

78. Remove through bolt securing engine LH mounting to bracket on body.
79. Remove 2 bolts securing engine LH mounting to mounting bracket on gearbox.
80. Remove engine LH mounting.

All models

81. Adjust tool **18G 1598** to tilt engine with the gearbox as low as possible.
82. Using assistance, manoeuvre engine and gearbox from vehicle.

CAUTION: Take care not to damage the ABS modulator or brake pipes when removing the engine.

83. Lower engine and gearbox assembly and disconnect hoist from adjustable lifting bracket.

Refit

1. Connect hoist to adjustable lifting bracket tool **18G 1598.**
2. Using assistance, raise engine and manoeuvre into position in vehicle.
3. Adjust lifting bracket tool so engine is horizontal in engine compartment.

1.6 & 1.8 models

4. Position engine LH mounting to mounting bracket on gearbox, fit bolts and tighten to 100 Nm.
5. Align engine LH mounting to bracket on body, fit through bolt and tighten to 85 Nm.

1.4 models

6. Position engine LH mounting.
7. Fit bolts securing engine LH mounting to mounting bracket and tighten to 55 Nm.
8. Fit bolts securing engine LH mounting to body and tighten to 55 Nm.
9. Align gearbox mounting bracket to engine mounting, fit bolts and tighten to 60 Nm.

All models

10. Fit engine RH mounting. ***See this section.***
11. Lower hoist and disconnect lifting bracket tool **18G 1598** from engine lifting brackets.
12. Remove bolt securing lifting bracket tool **18G 1572/2** to cylinder head and remove lifting bracket.
13. Remove 2 bolts securing lifting bracket tool **18G 1572/1** to cylinder head and remove lifting bracket.
14. Clean camshaft rear cover plate.
15. Position camshaft rear cover plate to cylinder head, fit bolts and tighten to 25 Nm.
16. *1.6 & 1.8 models:* Connect engine steady bar to bracket on sump, fit through bolt and tighten to 80 Nm.
17. *1.4 models:* Connect engine steady bar to bracket on gearbox, fit through bolt and tighten to 45 Nm.
18. Tighten through bolt, engine steady bar to subframe, to 80 Nm.

1.4 & 1.6 models

19. Clean gear selector linkage and gear change linkage ball joints.

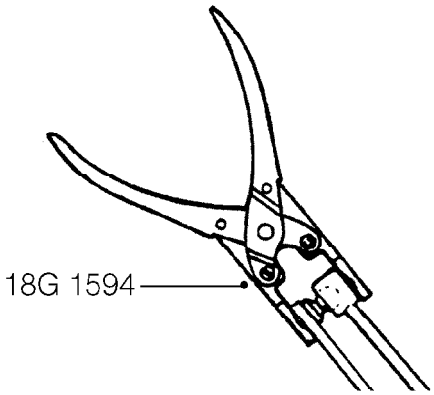

12M2239

20. Using tool **18G 1594** connect gear selector linkage ball joint to gear selector lever.
21. Using tool **18G 1594** connect gear change linkage ball joint to gear change lever.

1.8 Models

22. Connect selector rod to selector shaft and align holes.
23. Fit NEW roll pin securing selector rod to shaft and fit roll pin retaining clip.
24. Fit washers to steady bar and connect to gearbox.
25. Fit bolt securing steady bar to gearbox and tighten to 60 Nm.

All models

26. Remove plugs from power steering pump and hose connections.
27. Lubricate new ’O’ ring with clean power steering fluid and fit to fluid outlet hose.
28. Connect fluid outlet hose to power steering pump and tighten union to 55 Nm.

CAUTION: To prevent damage to components, use two spanners when loosening or tightening unions.

29. Align fluid outlet hose clamp to bracket and secure with bolt.
30. Connect fluid inlet hose to power steering pump and tighten clip.
31. Connect coolant feed hose to expansion tank and tighten clip.
32. Connect 4 engine harness multiplugs to main harness and secure to mounting bracket on bulkhead.
33. Connect multiplug to inertia switch and secure harness clip to mounting bracket.
34. Connect coolant hose to thermostat housing and tighten clip.
35. Connect expansion tank hose to inlet manifold and tighten clip.
36. Connect ECM vacuum pipe to inlet manifold.
37. Connect throttle cable to throttle cam.
38. Locate throttle cable adjusting nut in abutment bracket.
39. Ensure throttle cable is correctly routed and secure to clip on inlet manifold.
40. Connect brake servo vacuum pipe to inlet manifold.
41. Connect hose to fuel return pipe and secure with clip.
42. Clean union of fuel outlet pipe and fuel filter.
43. Connect fuel outlet pipe to fuel filter and tighten union to 28 Nm.

CAUTION: To prevent damage to fuel system pipes and components use two spanners when loosening or tightening unions.

44. Fit exhaust front pipe. ***See MANIFOLD & EXHAUST SYSTEMS, Repairs.***
45. Fit evaporative emission canister. ***See EMISSION CONTROL, Repairs.***
46. Connect the engine harness to main harness connector.
47. Connect multiplug to fuse box.
48. Fit positive leads to fuse box and secure with screws.
49. Fit fuse box inner cover.
50. Fit fuse box cover.
51. Connect multiplug to radiator cooling fan.
52. Position earth lead to bonnet locking platform, fit bolt and tighten to 9 Nm.
53. Connect heater hose to coolant outlet elbow and tighten clip.
54. Secure heater hose to clip on coolant rail.
55. Connect radiator bottom hose to coolant rail and tighten clip.
56. Connect radiator top hose to coolant outlet elbow and tighten clip.
57. Connect drive shafts to gearbox as detailed in Differential oil seal.
    1.4 & 1.6 models: ***See MANUAL GEARBOX - ’R65’, Repairs.***
    1.8 models: ***See MANUAL GEARBOX - ’PG1’, Repairs.***
58. Feed clutch cable through abutment bracket and connect to clutch release lever.

59. Position battery tray in vehicle.
60. Tighten 3 bolts securing battery tray to body, to 10 Nm.
61. Position engine compartment fuse box to body, fit bolt and tighten to 10 Nm.
62. Fit 4 bolts securing battery tray to body and tighten to 10 Nm.
63. Fit and tighten bolt securing engine compartment fuse box to battery tray.
64. Fit resonator to air intake pipe.
65. Fit and tighten bolts securing resonator to battery tray.
66. Secure ABS fuse holder to battery tray.
67. Fit engine management relay module. ***See ENGINE MANAGEMENT SYSTEM - MEMS, Repairs.***
68. Fit ECM. ***See ENGINE MANAGEMENT SYSTEM - MEMS, Repairs.***
69. Fit air cleaner. ***See ENGINE MANAGEMENT SYSTEM - MEMS, Repairs.***
70. Remove stand(s) and lower vehicle.
71. Refill gearbox with oil.
    1.4 & 1.6 models: ***See MANUAL GEARBOX - ’R65’, Adjustments.***
    1.8 models: ***See MANUAL GEARBOX - ’PG1’, Adjustments.***
72. Refill cooling system. ***See COOLING SYSTEM - ’K’ SERIES, Adjustments.***
73. *If required:* Refill engine with oil. ***See MAINTENANCE.***
74. Bleed power steering system. ***See STEERING, Adjustments.***
75. Adjust throttle cable. ***See ENGINE MANAGEMENT SYSTEM - MEMS, Adjustments.***

ENGINE AND AUTOMATIC GEARBOX - MODELS WITH AIR CONDITIONING

Service repair no - 12.37.01.20

Remove

1. Disconnect battery earth lead.
2. *If required:* Drain engine oil. ***See MAINTENANCE.***
3. Fit new sealing washer to drain plug, fit drain plug and tighten to 42 Nm.
4. Drain cooling system. ***See COOLING SYSTEM - ’K’ SERIES, Adjustments.***
5. Drain gearbox fluid. ***See AUTOMATIC GEARBOX - ’CVT’, Adjustments.***
6. Recover refrigerant from air conditioning system. ***See AIR CONDITIONING, Adjustments.***
7. Raise front of vehicle.

WARNING: Support on safety stands.

8. Remove air cleaner. ***See ENGINE MANAGEMENT SYSTEM - MEMS, Repairs.***
9. Remove ECM. ***See ENGINE MANAGEMENT SYSTEM - MEMS, Repairs.***
10. Remove engine management relay module. ***See ENGINE MANAGEMENT SYSTEM - MEMS, Repairs.***
11. Release ABS fuse holder from battery tray.

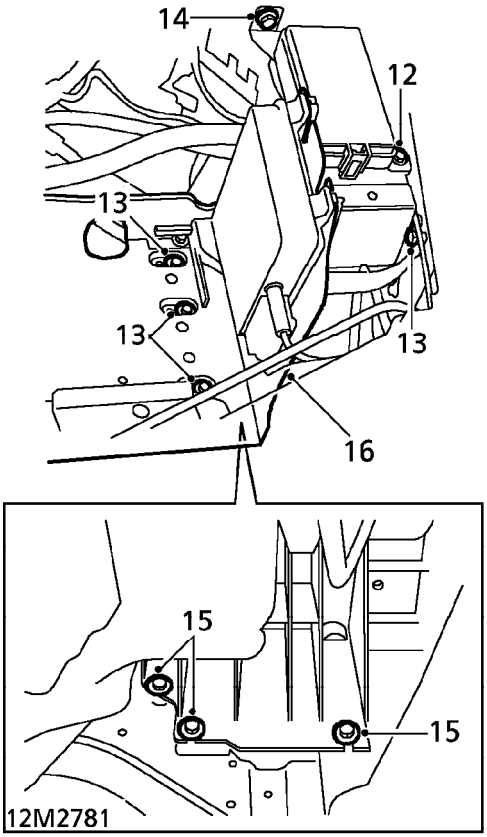

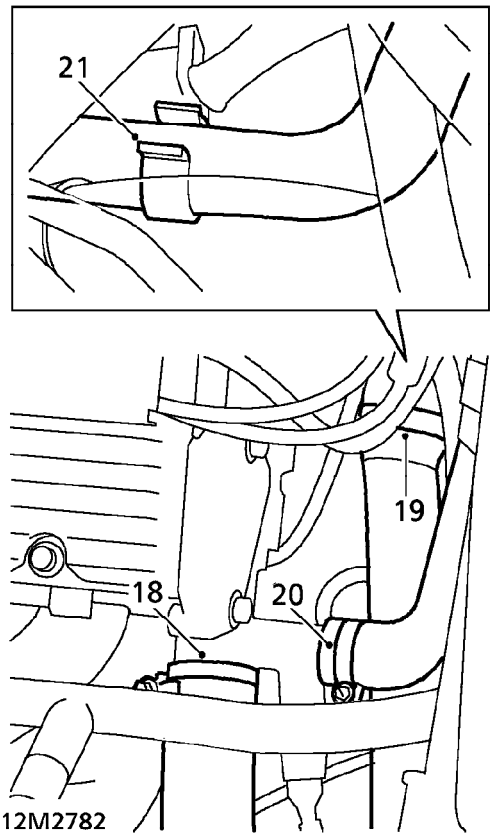

12. Remove bolt securing engine compartment fuse box to battery tray.
13. Remove 4 bolts securing battery tray to body.
14. Remove bolt securing engine compartment fuse box to body and position fuse box aside.
15. Loosen 3 bolts securing battery tray to body.
16. Remove battery tray from vehicle.
17. Release both drive shafts from gearbox as detailed in Differential oil seal. ***See AUTOMATIC GEARBOX - 'CVT', Repairs.***
18. Loosen clip and disconnect radiator top hose from coolant outlet elbow.
19. Loosen clip and disconnnect radiator bottom hose from coolant rail.
20. Loosen clip and disconnect heater hose from coolant outlet elbow.
21. Release heater hose from clip on coolant rail and position aside.

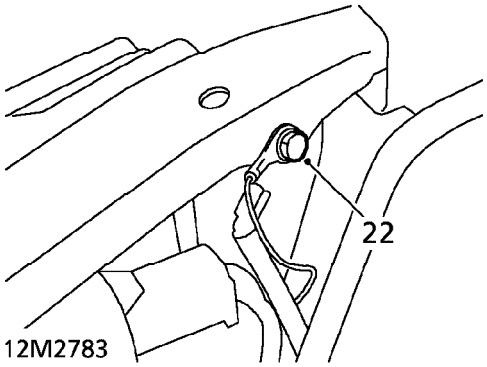

22. Remove bolt securing earth lead to bonnet locking platform.

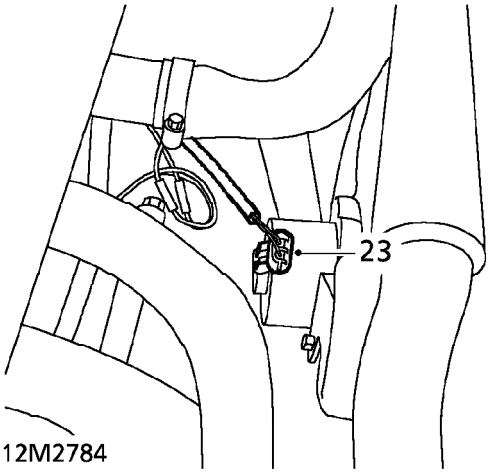

23. Disconnect multiplug from radiator cooling fan.

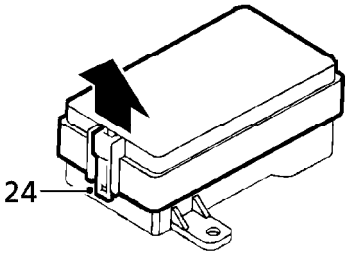

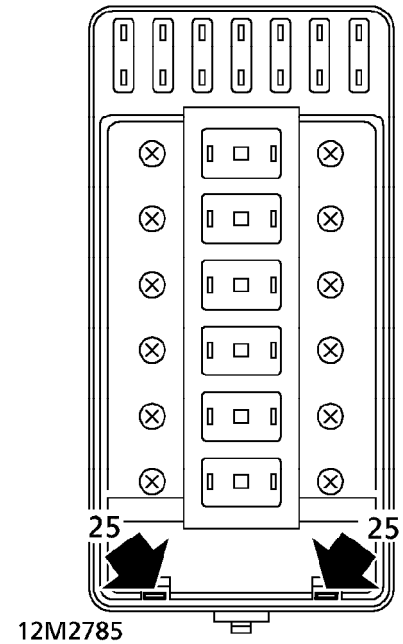

24. Release clip and remove fuse box cover.
25. Depress 2 clips and remove fuse box inner cover.

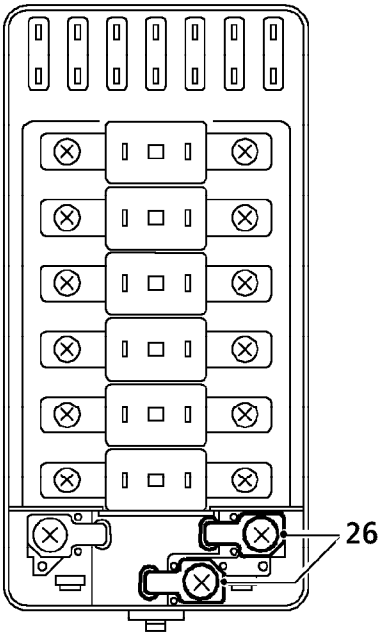

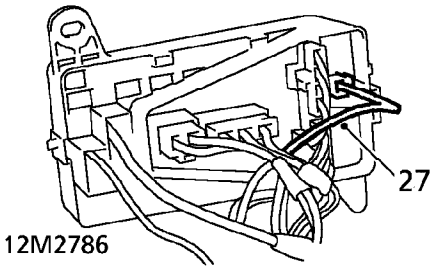

26. Remove 2 screws securing positive leads to fuse box.
27. Disconnect multiplug from fuse box.

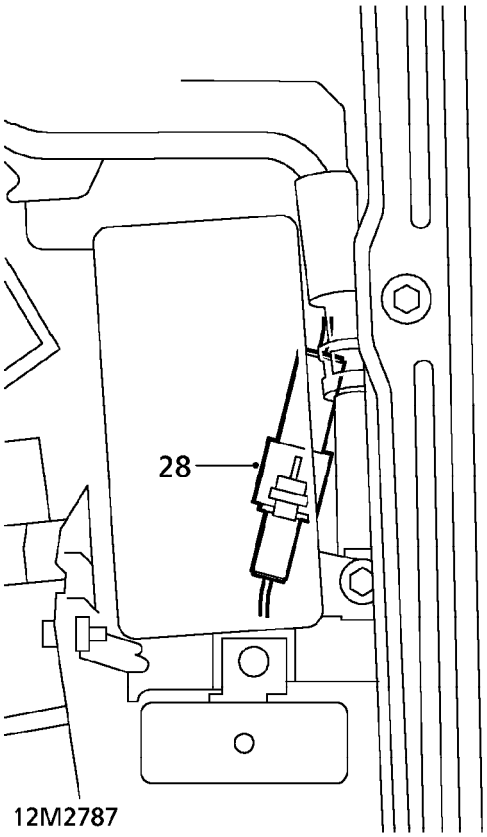

28. Disconnect engine harness to main harness connector.
29. Lay engine harness across engine to avoid it being caught when the engine is removed.
30. Remove evaporative emission canister. ***See EMISSION CONTROL, Repairs.***
31. Remove exhaust front pipe. ***See MANIFOLD & EXHAUST SYSTEMS, Repairs.***
32. Position absorbent cloth around fuel filter outlet union.

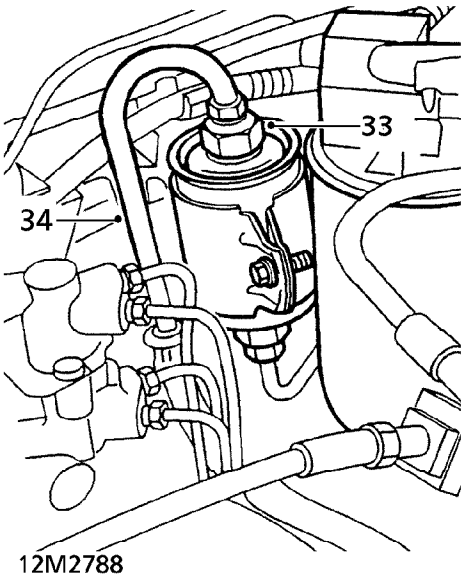

33. Loosen fuel filter outlet union to relieve fuel pressure.

CAUTION: To prevent damage to fuel system pipes and components use two spanners when loosening or tightening unions.

34. Disconnect fuel outlet pipe from fuel filter and position aside.

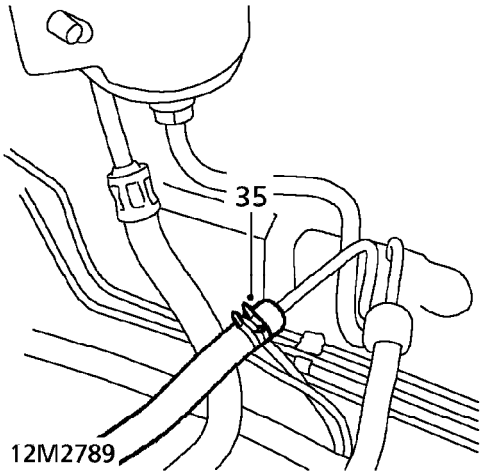

35. Release clip and disconnect hose from fuel return pipe.

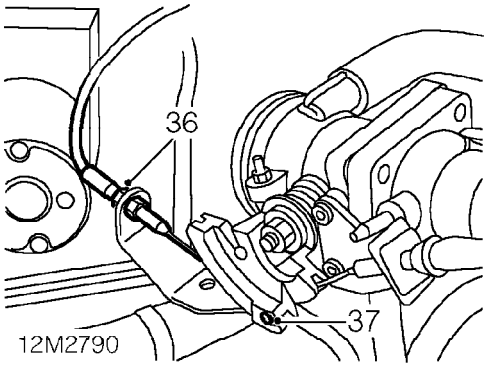

36. Release throttle cable adjusting nut from abutment bracket.
37. Release throttle cable from throttle cam.

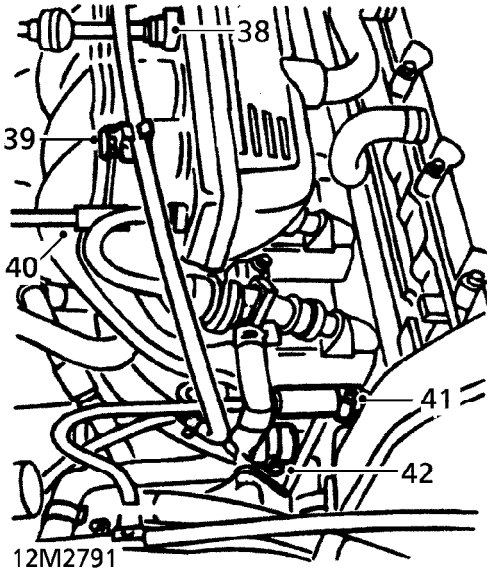

38. Depress plastic collar on quick release connector and disconnect brake servo vacuum pipe from inlet manifold.
39. Release throttle cable from clip on inlet manifold.
40. Disconnect ECM vacuum pipe from inlet manifold.
41. Loosen clip and disconnect expansion tank hose from inlet manifold.
42. Loosen clip and disconnect coolant hose from thermostat housing.

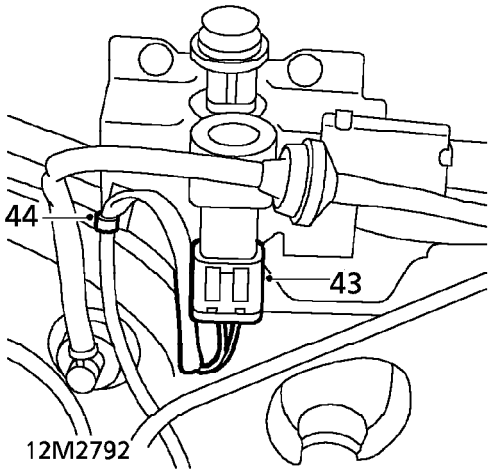

43. Disconnect multiplug from inertia switch.
44. Release clip securing inertia switch harness to mounting bracket.

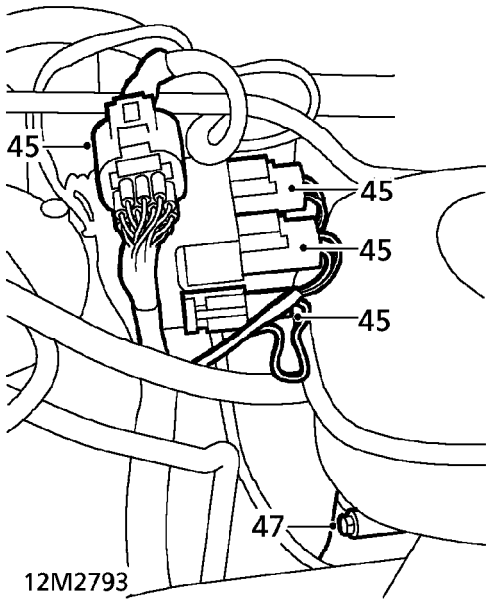

45. Release 4 multiplugs from mounting bracket on bulkhead.
46. Disconnect engine harness multiplugs from main harness.
47. Loosen clip and disconnect coolant feed hose from coolant expansion tank.
48. Position container to catch fluid loss from power steering system.

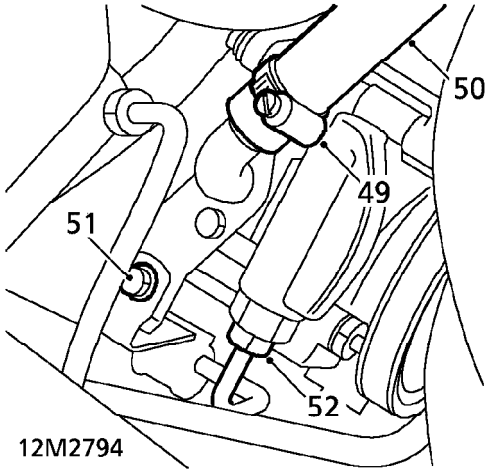

49. Loosen clip securing fluid inlet hose to power steering pump.
50. Disconnect fluid inlet hose from power steering pump.
51. Remove bolt securing fluid outlet hose clamp to bracket.
52. Loosen union and disconnect fluid outlet hose from power steering pump.

CAUTION: To prevent damage to pipes and components use two spanners when loosening or tightening unions.

53. Remove and discard ’O’ ring from fluid outlet hose.
54. Plug hose and power steering pump connections to prevent excess fluid loss and the ingress of dirt into the system.

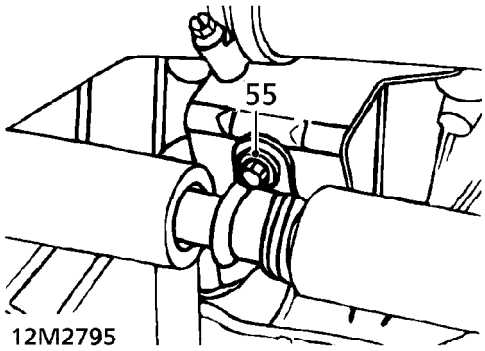

55. Remove bolt securing air conditioning pipe to bracket on flywheel housing.

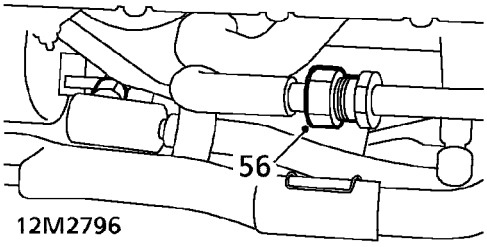

56. Loosen union and disconnect compressor pipe from evaporator pipe.

CAUTION: To prevent damage to air conditioning pipes and components use two spanners when loosening or tightening unions.

57. Remove and discard ’O’ ring from compressor pipe.
58. Position evaporator pipe aside.

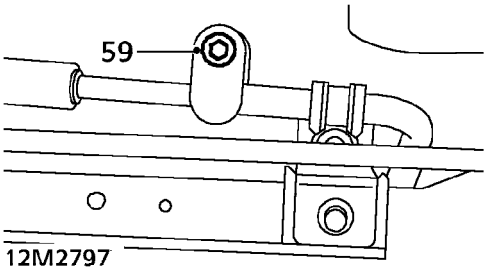

59. Remove bolt securing compressor pipe to condenser pipe.
60. Release compressor pipe from condenser pipe and discard ’O’ ring.

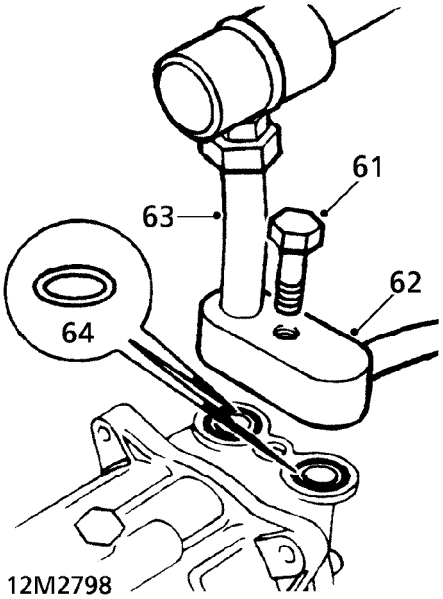

61. Remove bolt securing air conditioning pipe union to compressor.
62. Release air conditioning pipe union from compressor.
63. Remove air conditioning pipes.
64. Remove and discard 2 ’O’ rings from compressor.

CAUTION: Immediately cap all air conditioning pipes and compressor to prevent ingress of dirt and moisture into the system.

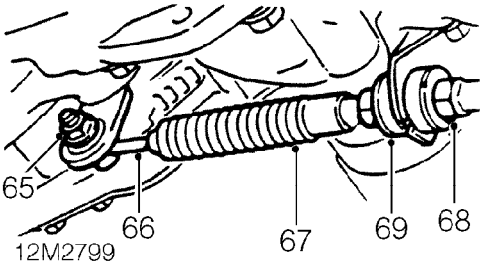

65. Remove nut securing selector cable rod to selector lever.
66. Release selector cable rod from selector lever.
67. Slide rubber sleeving back from lock nut on selector cable rod.
68. Loosen lock nut securing selector cable to abutment bracket.
69. Seperate anti-vibration rubbers and release cable from abutment bracket.

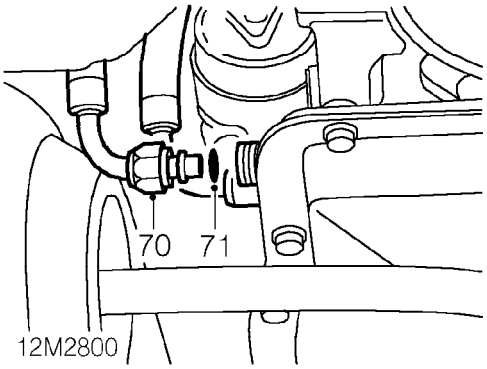

70. Loosen unions and disconnect 2 fluid cooler hoses from gearbox.
71. Remove and discard ’O’ rings from fluid cooler hose unions.

CAUTION: Plug the connections.

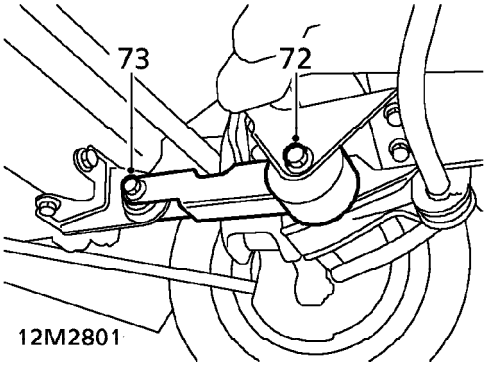

72. Loosen through bolt securing engine steady bar to subframe.
73. Remove through bolt securing engine steady bar to bracket on sump.

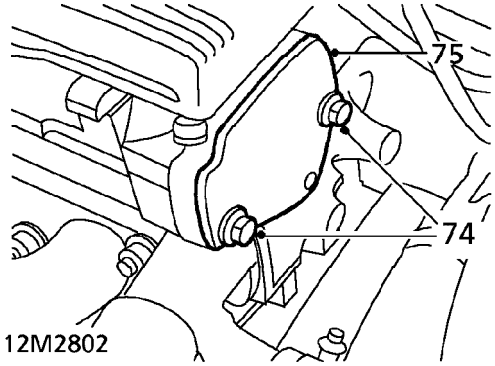

74. Remove 2 bolts securing camshaft rear cover plate to cylinder head.
75. Remove camshaft rear cover plate.

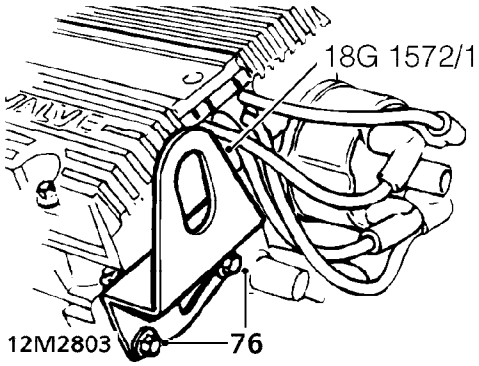

76. Fit lifting bracket tool **18G 1572/1** to cylinder head. Fit bolts and tighten to 9 Nm.

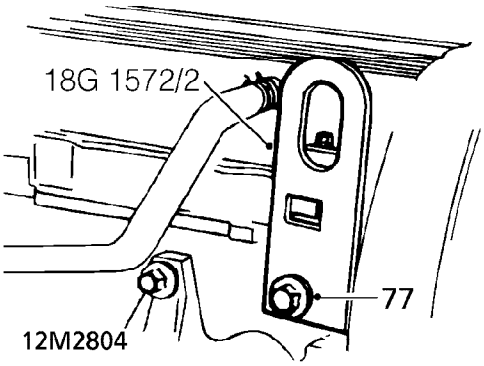

77. Fit lifting bracket tool **18G 1572/2** to cylinder head. Fit bolt and tighten to 9 Nm.

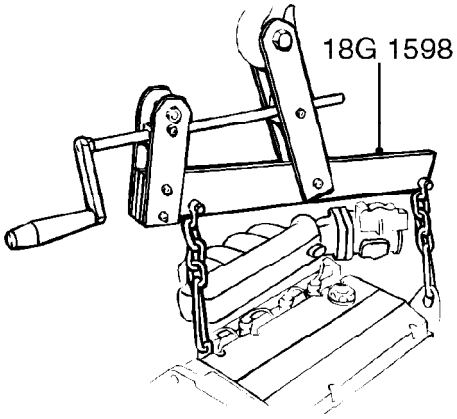

12M1506

78. Connect adjustable lifting bracket tool **18G 1598** to lifting brackets.
79. Connect a hoist to tool **18G 1598** and raise hoist to take weight of engine without exerting load on engine mounting bolts.

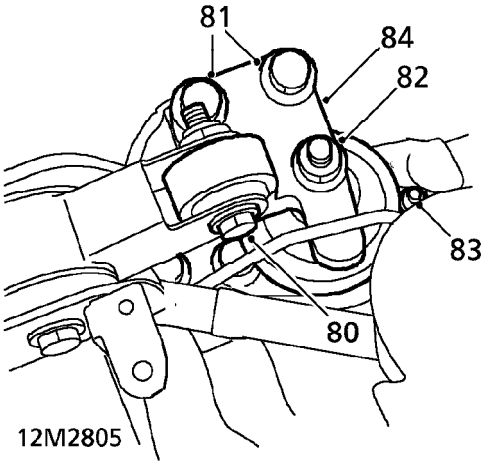

80. Remove bolt securing RH steady bar to engine mounting.
81. Remove 2 bolts securing mounting bracket to engine.
82. Remove nut securing mounting bracket to engine mounting.
83. Loosen 2 nuts securing engine mounting restraint bar to body.
84. Remove RH engine mounting bracket.

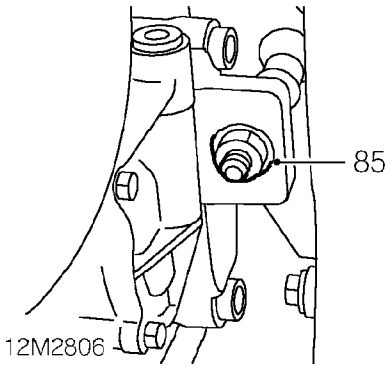

85. Remove and discard nut securing gearbox mounting bracket to engine LH mounting.
86. Adjust tool **18G 1598** to tilt engine with the gearbox as low as possible.
87. Using assistance, manoeuvre engine and gearbox from vehicle.

CAUTION: Take care not to damage the ABS modulator or brake pipes when removing the engine.

88. Lower engine and gearbox assembly and disconnect hoist from adjustable lifting bracket.

Refit

1. Connect hoist to adjustable lifting bracket tool **18G 1598.**
2. Using assistance, raise engine and manoeuvre into position in vehicle.
3. Adjust lifting bracket tool so engine is horizontal in engine compartment.
4. Locate gearbox mounting bracket on engine LH mounting.
5. Fit new Nyloc nut securing bracket to engine mounting and tighten to 160 Nm.
6. Fit engine RH mounting bracket to engine mounting, steady bar and engine.
7. Align mounting bracket to engine, fit bolts and tighten to 160 Nm.
8. Fit nut securing mounting bracket to engine mounting and tighten to 85 Nm.
9. Tighten nuts securing engine mounting to body, to 45 Nm.
10. Fit bolt securing RH steady bar to mounting bracket and tighten to 80 Nm.
11. Lower hoist and disconnect lifting bracket tool **18G 1598** from lifting brackets.
12. Remove bolt securing lifting bracket tool **18G 1572/2** to cylinder head and remove lifting bracket.
13. Remove 2 bolts securing lifting bracket tool **18G 1572/1** to cylinder head and remove lifting bracket.
14. Clean camshaft rear cover plate.
15. Position camshaft rear cover plate to cylinder head, fit bolts and tighten to 25 Nm.
16. Connect engine steady bar to bracket on sump, fit through bolt and tighten to 80 Nm.
17. Tighten through bolt, engine steady bar to subframe, to 80 Nm.
18. Remove plugs from fluid cooler hose unions, lubricate new ’O’ rings with gearbox and fit to unions.
19. Connect fluid cooler hoses to gearbox and tighten unions to 37 Nm.
20. Fit selector cable to abutment bracket and push anti-vibration rubbers into position.
21. Tighten selector cable lock nut to abutment bracket.
22. Slide selector cable rod sleeving into position.
23. Connect selector cable rod to selector rod, DO NOT tighten nut.

24. Remove caps from air conditioning pipes and compressor.
25. Clean mating faces of air conditioning pipe union and compressor.
26. Lubricate 2 new ’O’ rings with refrigerant oil and fit to compressor.
27. Position air conditioning pipe union to compressor, fit bolt and tighten to 35 Nm.
28. Clean condenser pipe and compressor pipe unions.
29. Lubricate new ’O’ ring with refrigerant oil and fit to condenser pipe.
30. Connect condenser pipe to compressor pipe, fit bolt and tighten to 6 Nm.
31. Clean compressor pipe and evaporator pipe unions.
32. Lubricate new ’O’ ring with refrigerant oil and fit to compressor pipe.
33. Connect evaporator pipe to compressor pipe and tighten union to 45 Nm.

CAUTION: To prevent damage to air conditioning pipes and components use two spanners when loosening or tightening unions.

34. Align air conditioning pipe to bracket on flywheel housing, fit bolt and tighten to 6 Nm.
35. Remove plugs from power steering pump and hose connections.
36. Lubricate new ’O’ ring with clean power steering fluid and fit to fluid outlet hose.
37. Connect fluid outlet hose to power steering pump and tighten union to 55 Nm.

CAUTION: To prevent damage to components, use two spanners when loosening or tightening unions.

38. Align fluid outlet hose clamp to bracket and secure with bolt.
39. Connect fluid inlet hose to power steering pump and tighten clip.
40. Connect coolant feed hose to expansion tank and tighten clip.
41. Connect 4 engine harness multiplugs to main harness and secure to mounting bracket on bulkhead.
42. Connect multiplug to inertia switch and secure harness clip to mounting bracket.
43. Connect coolant hose to thermostat housing and tighten clip.
44. Connect expansion tank hose to inlet manifold and tighten clip.
45. Connect ECM vacuum pipe to inlet manifold.
46. Connect throttle cable to throttle cam.
47. Locate throttle cable adjusting nut in abutment bracket.
48. Ensure throttle cable is correctly routed and secure to clip on inlet manifold.
49. Connect brake servo vacuum pipe to inlet manifold.
50. Connect hose to fuel return pipe and secure with clip.
51. Clean union of fuel outlet pipe and fuel filter.
52. Connect fuel outlet pipe to fuel filter and tighten union to 28 Nm.

CAUTION: To prevent damage to fuel system pipes and components use two spanners when loosening or tightening unions.

53. Fit exhaust front pipe. ***See MANIFOLD & EXHAUST SYSTEMS, Repairs.***
54. Fit evaporative emission cansiter. ***See EMISSION CONTROL, Repairs.***
55. Connect the engine harness to main harness connector.
56. Connect multiplug to fuse box.
57. Fit positive leads to fuse box and secure with screws.
58. Fit fuse box inner cover.
59. Fit fuse box cover.
60. Connect multiplug to radiator cooling fan.
61. Position earth lead to bonnet locking platform, fit bolt and tighten to 9 Nm.

62. Connect heater hose to coolant outlet elbow and tighten clip.
63. Secure heater hose to clip on coolant rail.
64. Connect radiator bottom hose to coolant rail and tighten clip.
65. Connect radiator top hose to coolant outlet elbow and tighten clip.
66. Connect drive shafts to gearbox as detailed in Differential oil seal. ***See AUTOMATIC GEARBOX - 'CVT', Repairs.***
67. Position battery tray in vehicle.
68. Tighten 3 bolts securing battery tray to body, to 10 Nm.
69. Position engine compartment fuse box to body, fit bolt and tighten to 10 Nm.
70. Fit 4 bolts securing battery tray to body and tighten to 10 Nm.
71. Fit and tighten bolt securing engine compartment fuse box to battery tray.
72. Secure ABS fuse holder to battery tray.
73. Fit engine management relay module. ***See ENGINE MANAGEMENT SYSTEM - MEMS, Repairs.***
74. Fit ECM. ***See ENGINE MANAGEMENT SYSTEM - MEMS, Repairs.***
75. Fit air cleaner. ***See ENGINE MANAGEMENT SYSTEM - MEMS, Repairs.***
76. Replace receiver/dryer. ***See AIR CONDITIONING, Repairs.***
77. Adjust selector cable. ***See AUTOMATIC GEARBOX - 'CVT', Adjustments.***
78. Remove stand(s) and lower vehicle.
79. Recharge air conditioning system. ***See AIR CONDITIONING, Adjustments.***
80. Refill gearbox with fluid. ***See AUTOMATIC GEARBOX - 'CVT', Adjustments.***
81. Refill cooling system. ***See COOLING SYSTEM - 'K' SERIES, Adjustments.***
82. *If required:* Refill engine with oil. ***See MAINTENANCE.***
83. Bleed power steering system. ***See STEERING, Adjustments.***
84. Adjust throttle and kickdown cable. ***See AUTOMATIC GEARBOX - 'CVT', Adjustments.***

ENGINE AND AUTOMATIC GEARBOX - MODELS WITHOUT AIR CONDITIONING

Service repair no - 12.37.01.99

Remove

1. Disconnect battery earth lead.
2. *If required:* Drain engine oil. ***See MAINTENANCE.***
3. Fit new sealing washer to drain plug, fit drain plug and tighten to 42 Nm.
4. Drain cooling system. ***See COOLING SYSTEM - 'K' SERIES, Adjustments.***
5. Drain gearbox fluid. ***See AUTOMATIC GEARBOX - 'CVT', Adjustments.***
6. Raise front of vehicle.

WARNING: Support on safety stands.

7. Remove air cleaner. ***See ENGINE MANAGEMENT SYSTEM - MEMS, Repairs.***
8. Remove ECM. ***See ENGINE MANAGEMENT SYSTEM - MEMS, Repairs.***
9. Remove engine management relay module. ***See ENGINE MANAGEMENT SYSTEM - MEMS, Repairs.***
10. Release ABS fuse holder from battery tray.

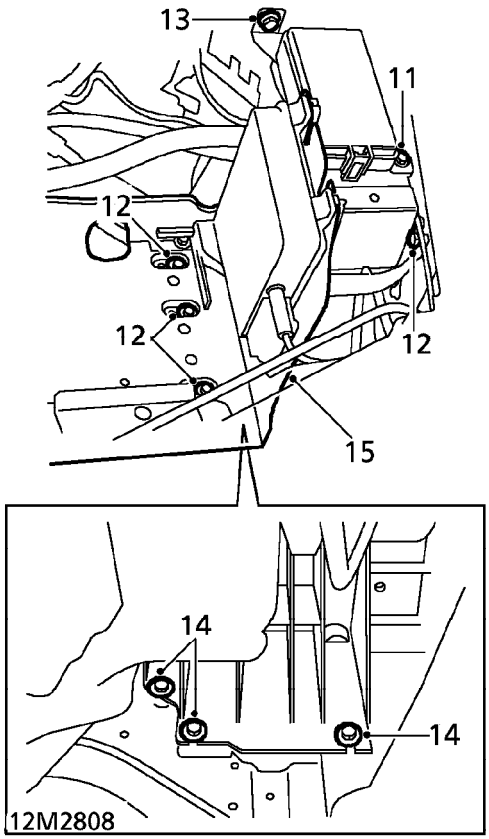

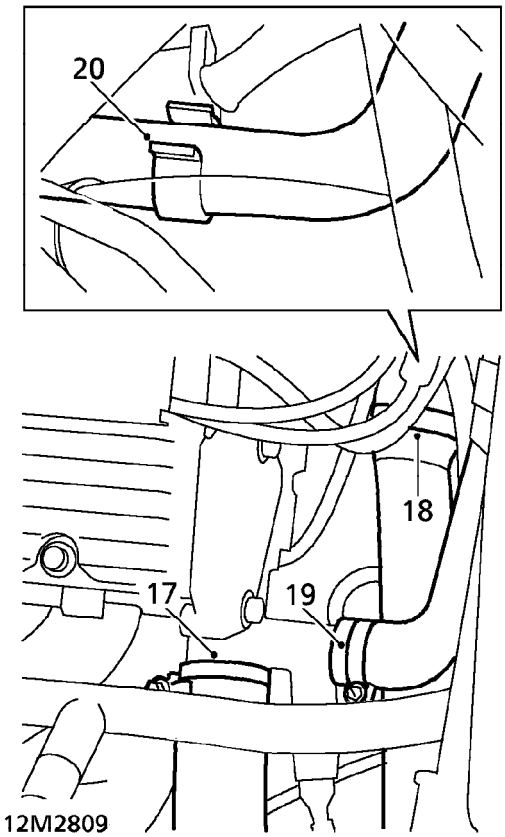

11. Remove bolt securing engine compartment fuse box to battery tray.
12. Remove 4 bolts securing battery tray to body.
13. Remove bolt securing engine compartment fuse box to body and position fuse box aside.
14. Loosen 3 bolts securing battery tray to body.
15. Remove battery tray from vehicle.
16. Release both drive shafts from gearbox as detailed in Differential oil seal. ***See AUTOMATIC GEARBOX - 'CVT', Repairs.***
17. Loosen clip and disconnect radiator top hose from coolant outlet elbow.
18. Loosen clip and disconnnect radiator bottom hose from coolant rail.
19. Loosen clip and disconnect heater hose from coolant outlet elbow.
20. Release heater hose from clip on coolant rail and position aside.

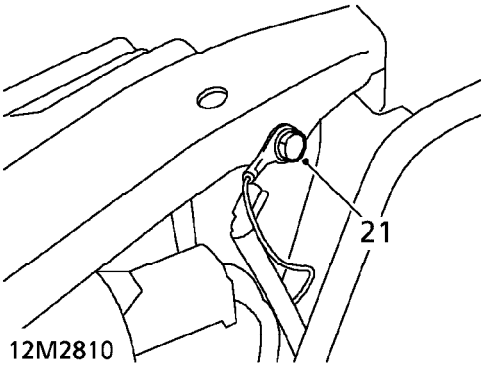

21. Remove bolt securing earth lead to bonnet locking platform.

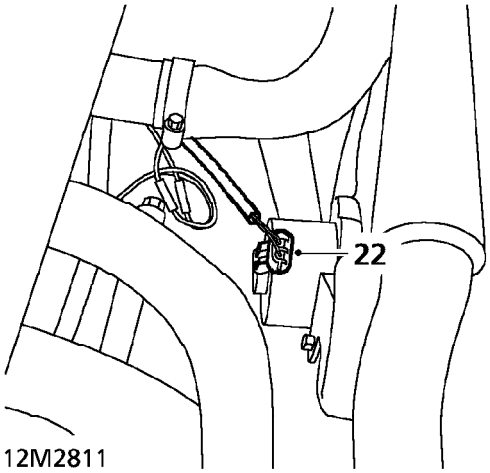

22. Disconnect multiplug from radiator cooling fan.

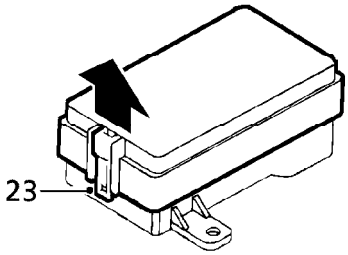

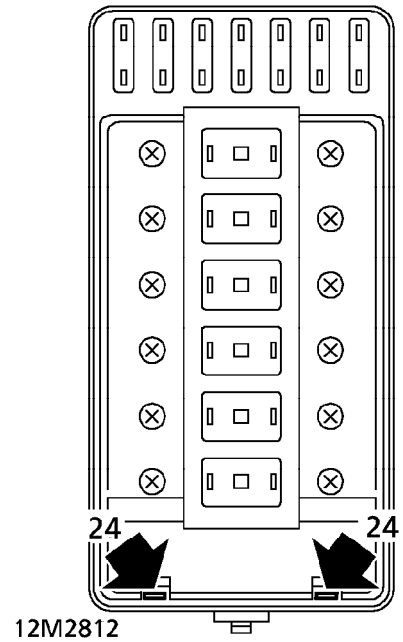

23. Release clip and remove fuse box cover.
24. Depress 2 clips and remove fuse box inner cover.

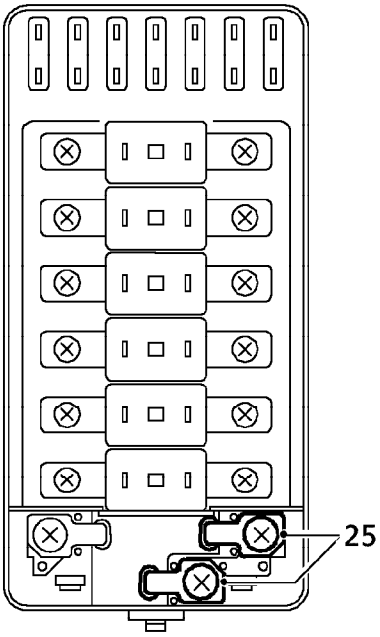

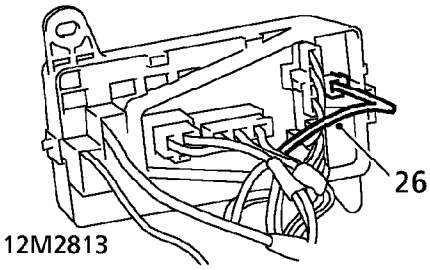

25. Remove 2 screws securing positive leads to fuse box.
26. Disconnect multiplug from fuse box.

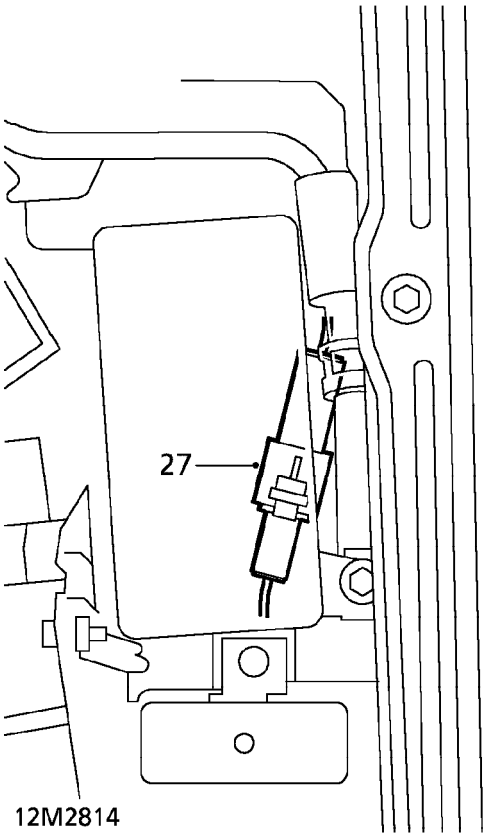

27. Disconnect engine harness to main harness connector.
28. Lay engine harness across engine to avoid it being caught when the engine is removed.
29. Remove evaporative emission canister. ***See EMISSION CONTROL, Repairs.***
30. Remove exhaust front pipe. ***See MANIFOLD & EXHAUST SYSTEMS, Repairs.***
31. Position absorbent cloth around fuel filter outlet union.

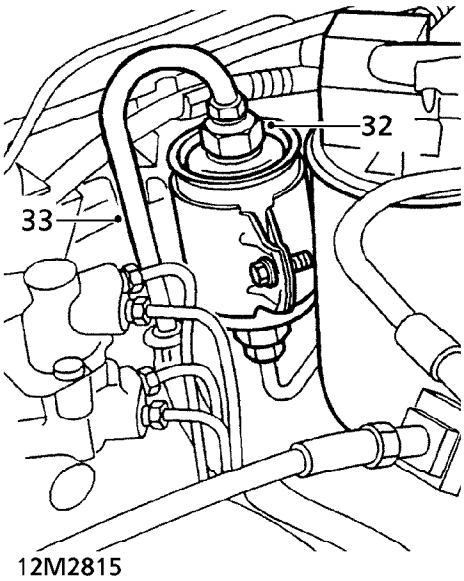

32. Loosen fuel filter outlet union to relieve fuel pressure.

CAUTION: To prevent damage to fuel system pipes and components use two spanners when loosening or tightening unions.

33. Disconnect fuel outlet pipe from fuel filter and position aside.

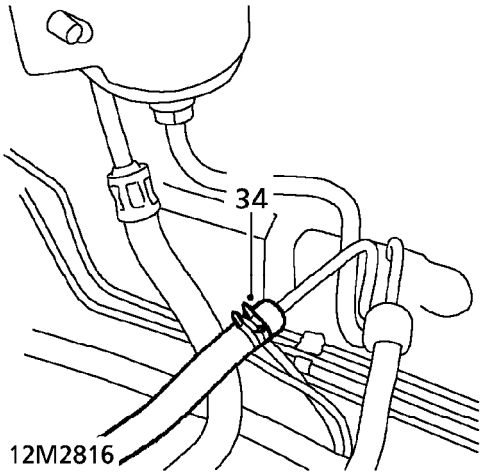

34. Release clip and disconnect hose from fuel return pipe.

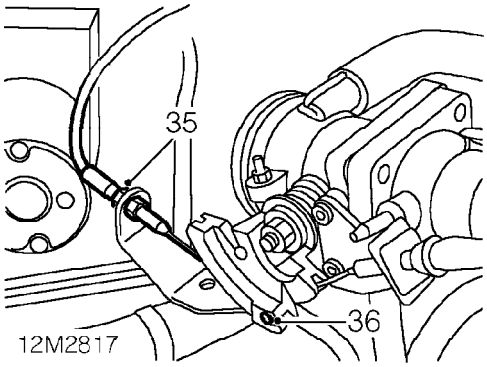

35. Release throttle cable adjusting nut from abutment bracket.
36. Release throttle cable from throttle cam.

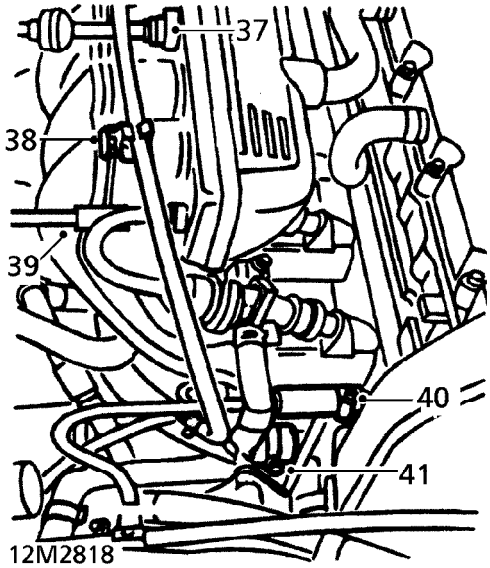

37. Depress plastic collar on quick release connector and disconnect brake servo vacuum pipe from inlet manifold.
38. Release throttle cable from clip on inlet manifold.
39. Disconnect ECM vacuum pipe from inlet manifold.
40. Loosen clip and disconnect expansion tank hose from inlet manifold.
41. Loosen clip and disconnect coolant hose from thermostat housing.

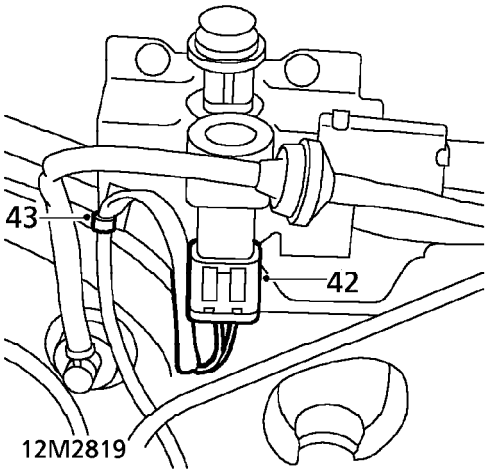

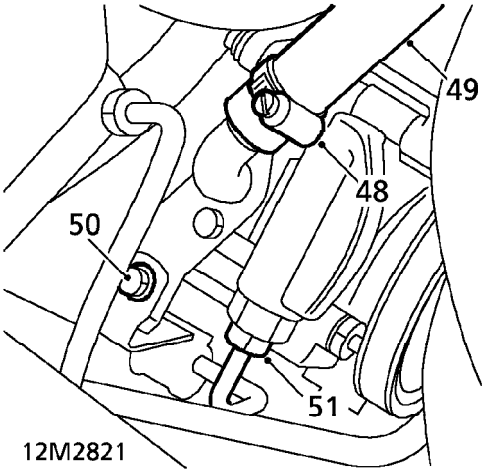

42. Disconnect multiplug from inertia switch.
43. Release clip securing inertia switch harness to mounting bracket.

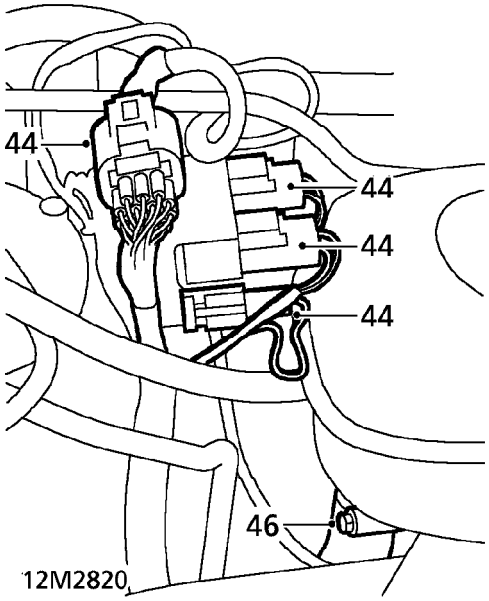

44. Release 4 multiplugs from mounting bracket on bulkhead.
45. Disconnect engine harness multiplugs from main harness.
46. Loosen clip and disconnect coolant feed hose from coolant expansion tank.
47. Position container to catch fluid loss from power steering system.

48. Loosen clip securing fluid inlet hose to power steering pump.
49. Disconnect fluid inlet hose from power steering pump.
50. Remove bolt securing fluid outlet hose clamp to bracket.
51. Loosen union and disconnect fluid outlet hose from power steering pump.

CAUTION: To prevent damage to pipes and components use two spanners when loosening or tightening unions.

52. Remove and discard ’O’ ring from fluid outlet hose.
53. Plug hose and power steering pump connections to prevent excess fluid loss and the ingress of dirt into the system.

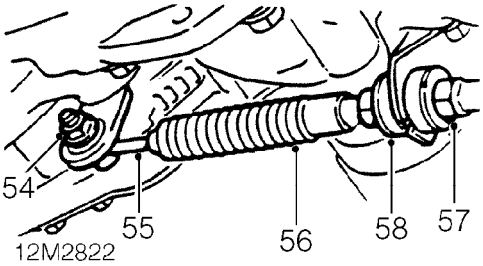

54. Remove nut securing selector cable rod to selector lever.
55. Release selector cable rod from selector lever.
56. Slide rubber sleeving back from lock nut on selector cable rod.
57. Loosen lock nut securing selector cable to abutment bracket.
58. Seperate anti-vibration rubbers and release cable from abutment bracket.

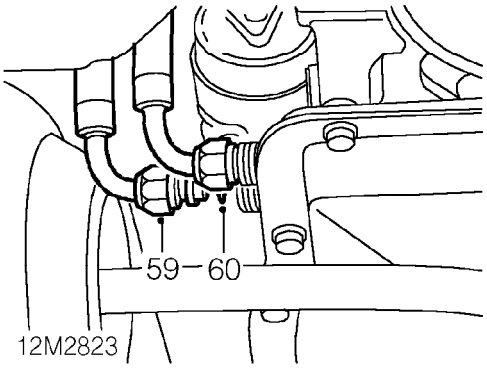

59. Loosen unions and disconnect 2 fluid cooler hoses from gearbox.
60. Remove and discard ’O’ rings from fluid cooler hose unions.

CAUTION: Plug the connections.

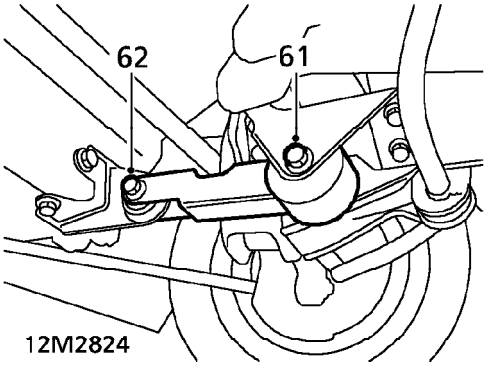

61. Loosen through bolt securing engine steady bar to subframe.
62. Remove through bolt securing engine steady bar to bracket on sump.

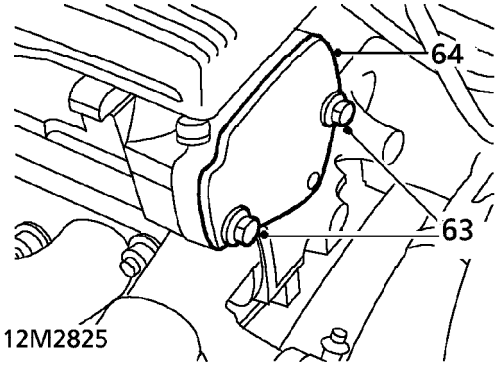

63. Remove 2 bolts securing camshaft rear cover plate to cylinder head.
64. Remove camshaft rear cover plate.

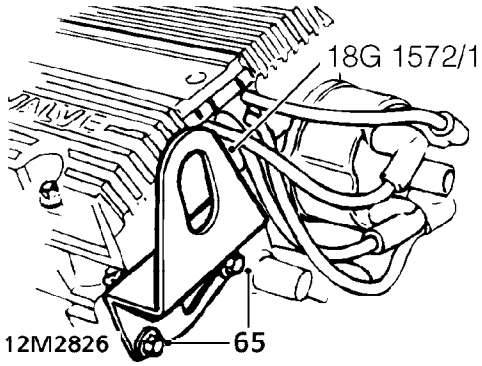

65. Fit lifting bracket tool **18G 1572/1** to cylinder head. Fit bolts and tighten to 9 Nm.

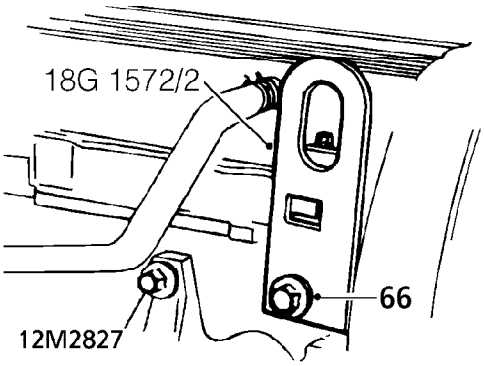

66. Fit lifting bracket tool **18G 1572/2** to cylinder head. Fit bolt and tighten to 9 Nm.

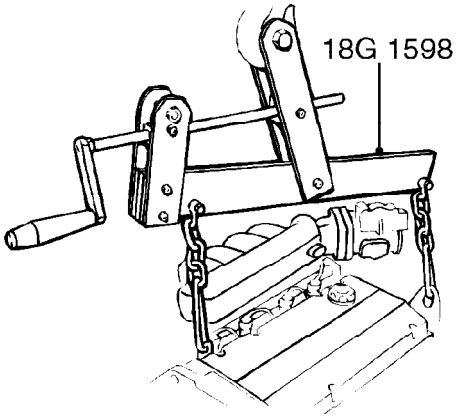

12M1506

67. Connect adjustable lifting bracket tool **18G 1598** to lifting brackets.
68. Connect a hoist to tool **18G 1598** and raise hoist to take weight of engine without exerting load on engine mounting bolts.

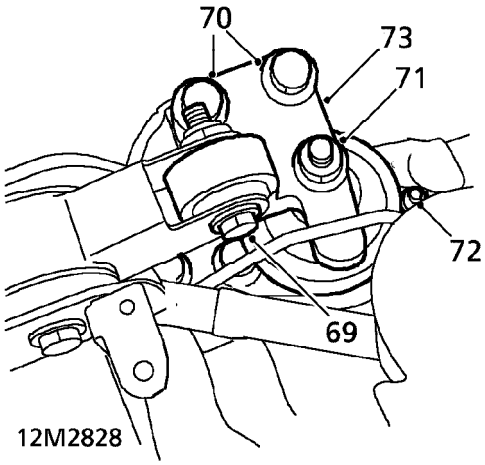

69. Remove bolt securing RH steady bar to engine mounting.
70. Remove 2 bolts securing mounting bracket to engine.
71. Remove nut securing mounting bracket to engine mounting.
72. Loosen 2 nuts securing engine mounting restraint bar to body.
73. Remove RH engine mounting bracket.

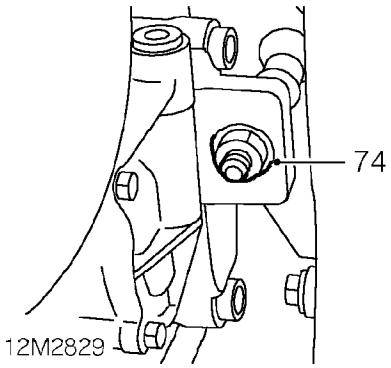

74. Remove and discard nut securing gearbox mounting bracket to engine LH mounting.
75. Adjust tool **18G 1598** to tilt engine with the gearbox as low as possible.
76. Using assistance, manoeuvre engine and gearbox from vehicle.

CAUTION: Take care not to damage the ABS modulator or brake pipes when removing the engine.

77. Lower engine and gearbox assembly and disconnect hoist from adjustable lifting bracket.

Refit

1. Connect hoist to adjustable lifting bracket tool **18G 1598.**
2. Using assistance, raise engine and manoeuvre into position in vehicle.
3. Adjust lifting bracket tool so engine is horizontal in engine compartment.
4. Locate gearbox mounting bracket on engine LH mounting.
5. Fit new Nyloc nut securing bracket to engine mounting and tighten to 160 Nm.
6. Fit engine RH mounting bracket to engine mounting, steady bar and engine.
7. Align mounting bracket to engine, fit bolts and tighten to 160 Nm.
8. Fit nut securing mounting bracket to engine mounting and tighten to 85 Nm.
9. Tighten nuts securing engine mounting to body, to 45 Nm.
10. Fit bolt securing RH steady bar to mounting bracket and tighten to 80 Nm.
11. Lower hoist and disconnect lifting bracket tool **18G 1598** from lifting brackets.
12. Remove bolt securing lifting bracket tool **18G 1572/2** to cylinder head and remove lifting bracket.
13. Remove 2 bolts securing lifting bracket tool **18G 1572/1** to cylinder head and remove lifting bracket.
14. Clean camshaft rear cover plate.
15. Position camshaft rear cover plate to cylinder head, fit bolts and tighten to 25 Nm.
16. Connect engine steady bar to bracket on sump, fit through bolt and tighten to 80 Nm.
17. Tighten through bolt, engine steady bar to subframe, to 80 Nm.
18. Remove plugs from fluid cooler hose unions, lubricate new ’O’ rings with gearbox and fit to unions.
19. Connect fluid cooler hoses to gearbox and tighten unions to 37 Nm.
20. Fit selector cable to abutment bracket and push anti-vibration rubbers into position.
21. Tighten selector cable lock nut to abutment bracket.
22. Slide selector cable rod sleeving into position.
23. Connect selector cable rod to selector rod, DO NOT tighten nut.
24. Remove plugs from power steering pump and hose connections.
25. Lubricate new ’O’ ring with clean power steering fluid and fit to fluid outlet hose.
26. Connect fluid outlet hose to power steering pump and tighten union to 55 Nm.

CAUTION: To prevent damage to components, use two spanners when loosening or tightening unions.

27. Align fluid outlet hose clamp to bracket and secure with bolt.
28. Connect fluid inlet hose to power steering pump and tighten clip.
29. Connect coolant feed hose to expansion tank and tighten clip.
30. Connect 4 engine harness multiplugs to main harness and secure to mounting bracket on bulkhead.
31. Connect multiplug to inertia switch and secure harness clip to mounting bracket.
32. Connect coolant hose to thermostat housing and tighten clip.

33. Connect expansion tank hose to inlet manifold and tighten clip.
34. Connect ECM vacuum pipe to inlet manifold.
35. Connect throttle cable to throttle cam.
36. Locate throttle cable adjusting nut in abutment bracket.
37. Ensure throttle cable is correctly routed and secure to clip on inlet manifold.
38. Connect brake servo vacuum pipe to inlet manifold.
39. Connect hose to fuel return pipe and secure with clip.
40. Clean union of fuel outlet pipe and fuel filter.
41. Connect fuel outlet pipe to fuel filter and tighten union to 28 Nm.

CAUTION: To prevent damage to fuel system pipes and components use two spanners when loosening or tightening unions.

42. Fit exhaust front pipe. ***See MANIFOLD & EXHAUST SYSTEMS, Repairs.***
43. Fit evaporative emission cansiter. ***See EMISSION CONTROL, Repairs.***
44. Connect the engine harness to main harness connector.
45. Connect multiplug to fuse box.
46. Fit positive leads to fuse box and secure with screws.
47. Fit fuse box inner cover.
48. Fit fuse box cover.
49. Connect multiplug to radiator cooling fan.
50. Position earth lead to bonnet locking platform, fit bolt and tighten to 9 Nm.
51. Connect heater hose to coolant outlet elbow and tighten clip.
52. Secure heater hose to clip on coolant rail.
53. Connect radiator bottom hose to coolant rail and tighten clip.
54. Connect radiator top hose to coolant outlet elbow and tighten clip.
55. Connect drive shafts to gearbox as detailed in Differential oil seal. ***See AUTOMATIC GEARBOX - 'CVT', Repairs.***
56. Position battery tray in vehicle.
57. Tighten 3 bolts securing battery tray to body, to 10 Nm.
58. Position engine compartment fuse box to body, fit bolt and tighten to 10 Nm.
59. Fit 4 bolts securing battery tray to body and tighten to 10 Nm.
60. Fit and tighten bolt securing engine compartment fuse box to battery tray.
61. Secure ABS fuse holder to battery tray.
62. Fit engine management relay module. ***See ENGINE MANAGEMENT SYSTEM - MEMS, Repairs.***
63. Fit ECM. ***See ENGINE MANAGEMENT SYSTEM - MEMS, Repairs.***
64. Fit air cleaner. ***See ENGINE MANAGEMENT SYSTEM - MEMS, Repairs.***
65. Replace receiver/dryer. ***See AIR CONDITIONING, Repairs.***
66. Adjust selector cable. ***See AUTOMATIC GEARBOX - 'CVT', Adjustments.***
67. Remove stand(s) and lower vehicle.
68. Recharge air conditioning system. ***See AIR CONDITIONING, Adjustments.***
69. Refill gearbox with fluid. ***See AUTOMATIC GEARBOX - 'CVT', Adjustments.***
70. Refill cooling system. ***See COOLING SYSTEM - 'K' SERIES, Adjustments.***
71. *If required:* Refill engine with oil. ***See MAINTENANCE.***
72. Bleed power steering system. ***See STEERING, Adjustments.***
73. Adjust throttle and kickdown cable. ***See AUTOMATIC GEARBOX - 'CVT', Adjustments.***

ENGINE STEADY BAR - 1.4 MODELS

Service repair no - 12.45.08

Remove

1. Raise front of vehicle.

WARNING: Support on safety stands.

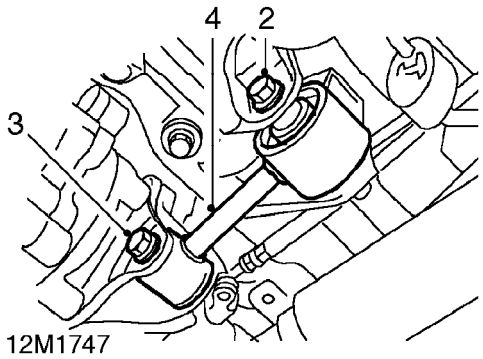

2. Remove through bolt securing engine steady bar to subframe.
3. Remove through bolt securing engine steady bar to bracket on gearbox.
4. Remove engine steady bar.

Refit

1. Position engine steady bar to subframe and fit through bolt.
2. Fit and tighten through bolt securing steady bar to bracket on gearbox to 45 Nm.
3. Tighten through bolt securing steady bar to subframe, to 80 Nm.
4. Remove stand(s) and lower vehicle.

ENGINE STEADY BAR - 1.6 & 1.8 MODELS

Service repair no - 12.45.08

Remove

1. Raise front of vehicle.

WARNING: Support on safety stands.

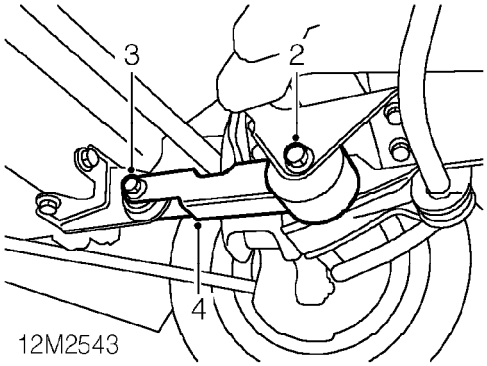

2. Remove through bolt securing engine steady bar to subframe.
3. Remove through bolt securing engine steady bar to bracket on sump.
4. Remove engine steady bar.

Refit

1. Position engine steady bar to subframe and fit through bolt.
2. Fit and tighten through bolt securing steady bar to bracket on sump to 45 Nm.
3. Tighten through bolt securing steady bar to subframe to 80 Nm.
4. Remove stand(s) and lower vehicle.

ENGINE LH MOUNTING - 1.4 MODELS

Service repair no - 12.45.30

Remove

1. Raise front of vehicle.

WARNING: Support on safety stands.

2. Fit block to jack and position jack to support engine.
3. Remove air cleaner. ***See ENGINE MANAGEMENT SYSTEM - MEMS, Repairs.***

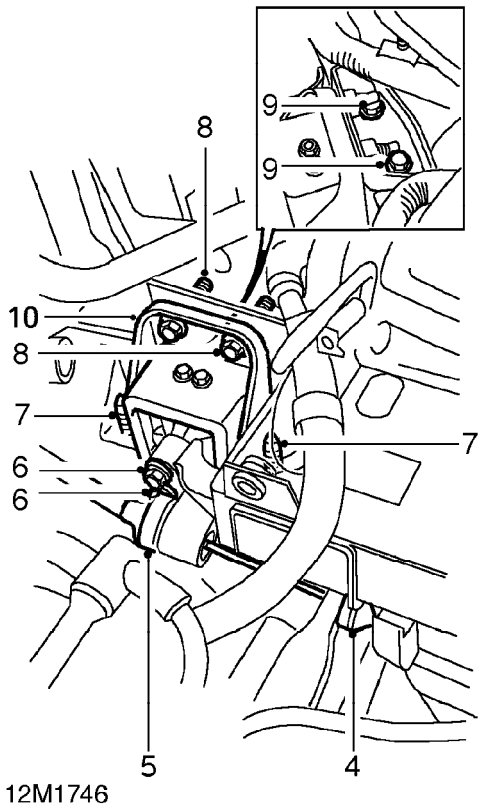

4. Disconnect clutch cable from clutch release lever.
5. Release clutch cable from abutment bracket on gearbox and position aside.
6. Remove 2 bolts securing engine mounting to gearbox mounting bracket.
7. Remove 2 bolts securing engine mounting to body.
8. Remove 2 bolts securing engine mounting to mounting bracket
9. Loosen 2 bolts securing engine mounting bracket to body.
10. Carefully lower engine and remove engine mounting.

Refit

1. Position engine mounting and raise engine and gearbox assembly.
2. Fit bolts securing engine mounting to body and tighten to 55 Nm.
3. Fit bolts securing engine mounting to bracket on body and tighten to 55 Nm.
4. Align gearbox mounting bracket to engine mounting, fit bolts and tighten to 60 Nm.
5. Tighten bolts securing bracket to body, to 55 Nm.
6. Lower jack supporting engine, and remove from beneath vehicle.
7. Feed clutch cable through abutment bracket and connect to clutch release lever.
8. Fit air cleaner. ***See ENGINE MANAGEMENT SYSTEM - MEMS, Repairs.***
9. Fit road wheel(s) and tighten nuts to correct torque. ***See INFORMATION, Torque wrench settings.***
10. Remove stand(s) and lower vehicle.

ENGINE LH MOUNTING - 1.6 & 1.8 MODELS

Service repair no - 12.45.30

Remove

1. Raise front of vehicle.

WARNING: Support on safety stands.

2. Remove air cleaner ***See ENGINE MANAGEMENT SYSTEM - MEMS, Repairs.***
3. Fit wooden block to jack and position jack to support gearbox.

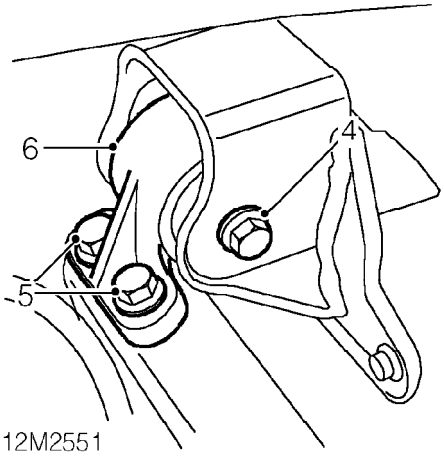

4. Remove through bolt securing engine mounting to bracket on body.
5. Remove 2 bolts securing engine mounting to mounting bracket on gearbox.
6. Remove engine mounting.

Refit

1. Position engine mounting to body and gearbox mounting brackets.
2. Fit bolts securing engine mounting to bracket on gearbox and tighten to 100 Nm.
3. Fit through bolt securing engine mounting to bracket on body and tighten to 85 Nm.
4. Lower jack supporting engine and remove from beneath vehicle.
5. Fit air cleaner. ***See ENGINE MANAGEMENT SYSTEM - MEMS, Repairs.***
6. Remove stand(s) and lower vehicle.

ENGINE LH MOUNTING - AUTOMATIC GEARBOX MODELS WITHOUT ABS

Service repair no - 12.45.30

Remove

1. Raise front of vehicle.

WARNING: Support on safety stands.

2. Remove air cleaner. ***See ENGINE MANAGEMENT SYSTEM - MEMS, Repairs.***
3. Fit wooden block to jack and position jack to support engine.

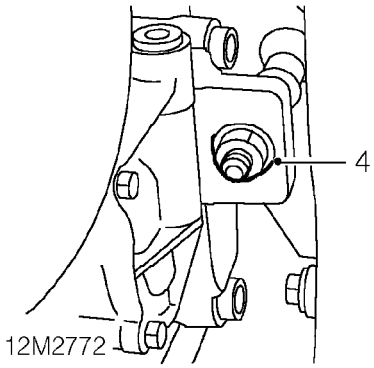

4. Remove and discard nut securing gearbox mounting bracket to engine.
5. Lower engine and gearbox from engine mounting.

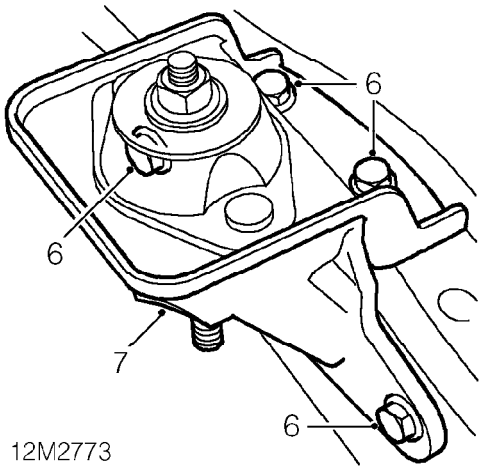

6. Remove 4 bolts securing engine LH mounting bracket to body.
7. Remove engine mounting and bracket.

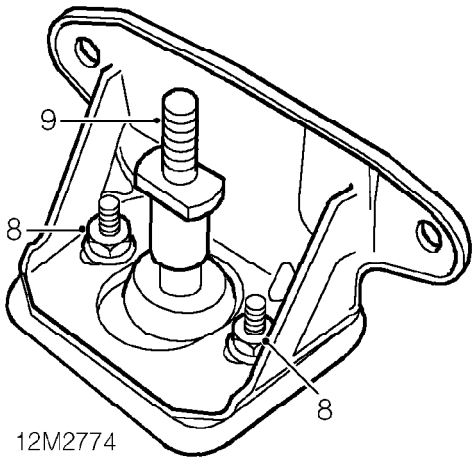

8. Remove 2 nuts securing bracket to engine mounting.
9. Remove engine mounting.

Refit

1. Fit engine mounting to mounting bracket, fit nuts but DO NOT tighten.
2. Position engine mounting assembly in vehicle.
3. Fit bolts securing lower half of engine mounting bracket to body and tighten to 55 Nm.
4. Fit bolts securing upper half of engine mounting bracket to body and tighten to 55 Nm.
5. Raise engine and gearbox assembly and locate gearbox mounting bracket on engine mounting.
6. Fit NEW Nyloc nut securing gearbox mounting bracket engine mounting and tighten to 160 Nm.
7. Tighten 2 nuts securing engine mounting to mounting bracket to 45 Nm.
8. Fit air cleaner. ***See ENGINE MANAGEMENT SYSTEM - MEMS, Repairs.***
9. Remove stand(s) and lower vehicle.

ENGINE LH MOUNTING - AUTOMATIC GEARBOX MODELS WITH ABS

Service repair no - 12.45.30.35

Remove

1. Raise front of vehicle.

WARNING: Support on safety stands.

2. Remove air cleaner. ***See ENGINE MANAGEMENT SYSTEM - MEMS, Repairs.***
3. Remove ABS hydraulic modulator. ***See BRAKES, Repairs.***

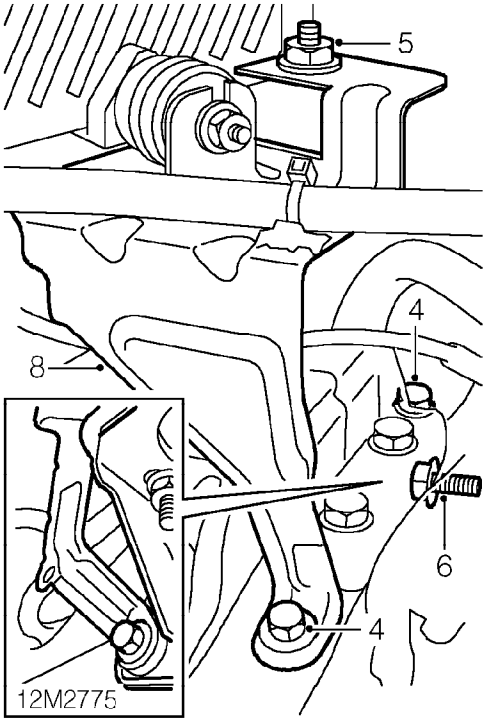

4. Remove 2 bolts securing modulator mounting bracket to body.
5. Remove nut securing modulator mounting bracket to body.
6. Remove bolt securing modulator mounting bracket and engine LH mounting bracket to body.
7. Release brake pipes from clip on modulator mounting bracket.
8. Remove modulator mounting bracket.
9. Fit wooden block to jack and position jack to support engine.

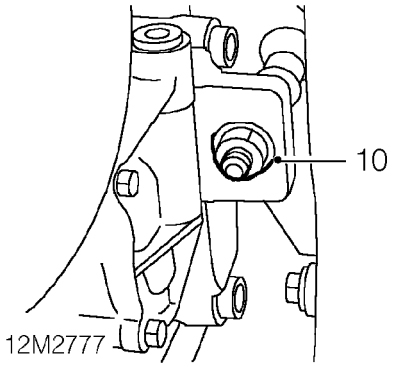

10. Remove and discard nut securing gearbox mounting bracket to engine.
11. Lower engine and gearbox from engine LH mounting.

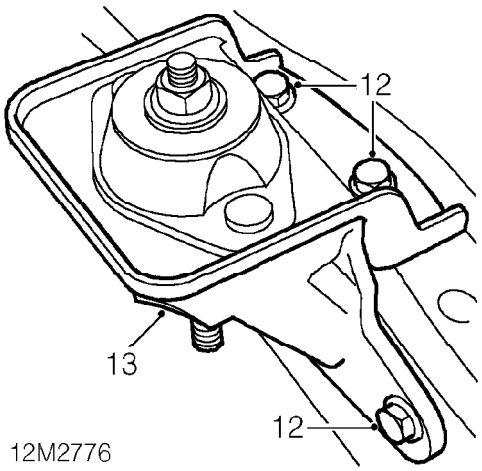

12. Remove 3 bolts securing engine LH mounting bracket to body.
13. Remove engine mounting and bracket.

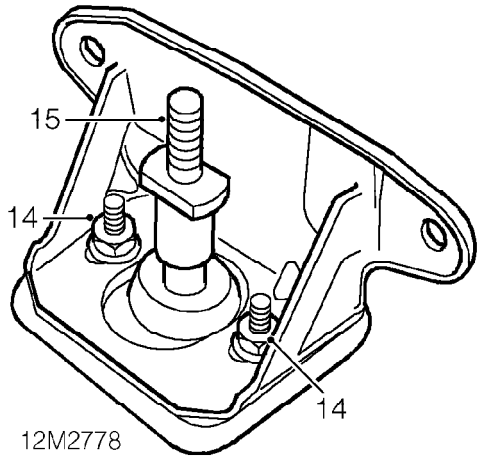

14. Remove 2 nuts securing engine mounting to bracket.
15. Remove engine mounting.

Refit

1. Fit engine mounting to mounting bracket, fit nuts but DO NOT tighten.
2. Position engine mounting assembly in vehicle.
3. Fit bolt securing lower half of engine mounting bracket to body and tighten to 55 Nm.
4. Fit 2 bolts securing upper half of engine mounting bracket to body and tighten to 55 Nm.
5. Raise engine and gearbox assembly and locate gearbox mounting bracket on engine mounting.
6. Fit NEW Nyloc nut securing gearbox mounting bracket to engine mounting and tighten to 160 Nm.
7. Tighten 2 nuts securing engine mounting to mounting bracket to 45 Nm.
8. Position modulator mounting bracket, fit and tighten nuts and bolts.
9. Tighten bolt securing modulator mounting bracket and engine mounting bracket to body to 55 Nm.
10. Fit ABS modulator. ***See BRAKES, Repairs.***
11. Fit air cleaner. ***See ENGINE MANAGEMENT SYSTEM - MEMS, Repairs.***
12. Remove stand(s) and lower vehicle.

ENGINE RH MOUNTING - 1.4 MODELS

Service repair no - 12.45.31

Remove

1. Disconnect battery earth lead.
2. Fit wooden block to jack and position jack to support engine.

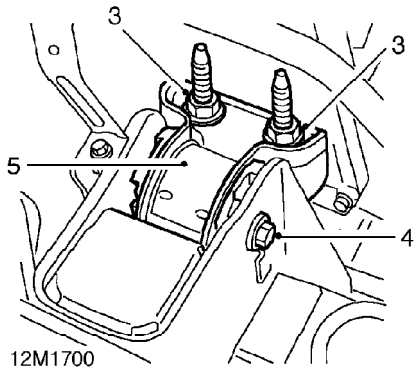

3. Remove and discard 2 nuts securing engine mounting to engine.
4. Remove through bolt securing engine mounting to body.
5. Remove engine mounting.
6. Remove 2 rubber washers from mounting.

Refit

1. Fit rubber washers to engine mounting.
2. Fit engine mounting to body and engine.
3. Fit through bolt securing engine mounting to body, but do not tighten.
4. Fit 2 new nuts securing engine mounting to engine and tighten to 100 Nm.
5. Tighten through bolt securing engine mounting to body, to 80 Nm.
6. Lower jack supporting engine and remove from beneath vehicle.
7. Connect battery earth lead.

ENGINE RH MOUNTING - 1.6 & 1.8 MODELS

Service repair no - 12.45.31

Remove

1. Raise front of vehicle.

WARNING: Support on safety stands.

2. Fit wooden block to jack and position jack to support engine.

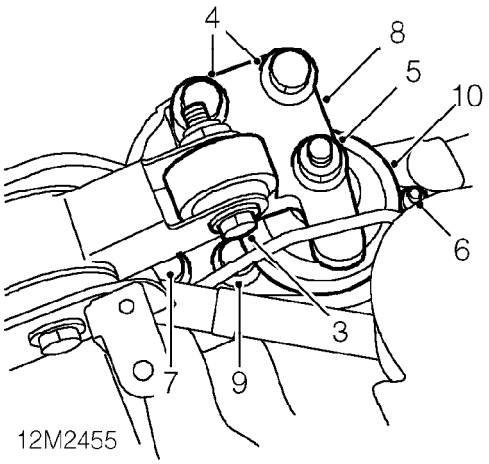

3. Remove bolt securing RH steady bar to engine mounting bracket.
4. Remove 2 bolts securing mounting bracket to engine.
5. Remove nut securing mounting bracket to engine mounting.
6. Remove nut securing engine mounting and restraint bar to body.
7. Loosen nut securing restraint bar to body and move aside.
8. Remove engine mounting bracket.
9. Remove nut securing engine mounting to body.
10. Remove RH engine mounting.

Refit

1. Fit engine mounting to vehicle and finger tighten rear nut.
2. Fit mounting bracket to engine mounting, steady bar, and engine.
3. Align mounting bracket to engine, fit bolts and tighten to 160 Nm.
4. Align restraint bar and fit and tighten nuts to 45 Nm.
5. Tighten nut securing engine mounting to body to 45 Nm.
6. Fit nut securing engine mounting to mounting bracket and tighten to 85 Nm.
7. Fit bolt securing mounting bracket to steady bar and tighten to 80 Nm.
8. Remove jack.
9. Remove stand(s) and lower vehicle.

FLYWHEEL - 1.4 & 1.6 MODELS WITH MANUAL GEARBOX

Service repair no - 12.53.07

Remove

1. Remove clutch assembly. ***See CLUTCH, Repairs.***
2. Leave flywheel locking tool **18G 1571** attached to cylinder block.
3. Remove CKP sensor. ***See ENGINE MANAGEMENT SYSTEM - MEMS, Repairs.***

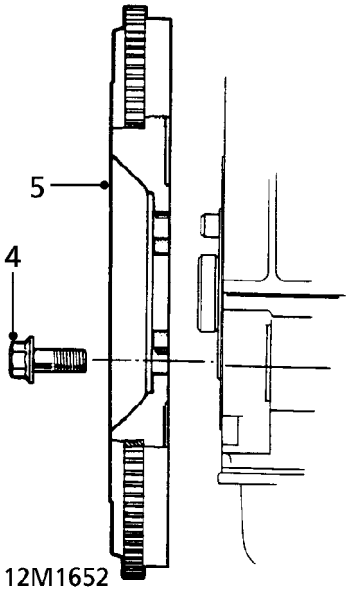

4. Remove and discard 6 bolts securing flywheel to crankshaft.
5. Remove flywheel from crankshaft.

Refit

1. Using a tap, clean adhesive from threads of flywheel bolt holes in crankshaft.
2. Clean flywheel and mating face of crankshaft.
3. Fit flywheel to crankshaft.
4. Fit NEW bolts securing flywheel to crankshaft and working in a diagonal sequence tighten bolts to 85 Nm.
5. Fit CKP sensor. ***See ENGINE MANAGEMENT SYSTEM - MEMS, Repairs.***
6. Fit clutch assembly. ***See CLUTCH, Repairs.***

FLYWHEEL - MODELS WITH AUTOMATIC GEARBOX

Service repair no - 12.53.07

Remove

1. Remove torsion damper. ***See this section.***
2. Leave tool **18G 1674** attached to cylinder block.
3. Remove CKP sensor. ***See ENGINE MANAGEMENT SYSTEM - MEMS, Repairs.***

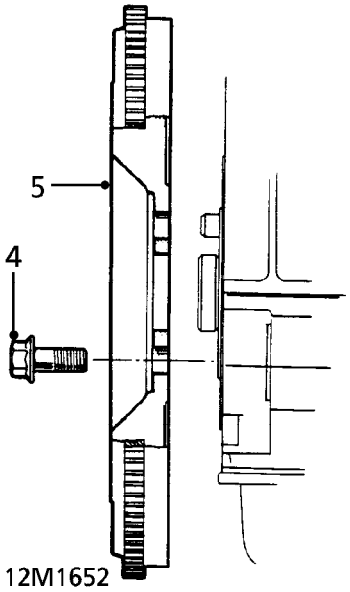

4. Remove 6 bolts securing flywheel to crankshaft.
5. Remove flywheel from crankshaft.

Refit

1. Using a tap, clean adhesive from threads of flywheel bolt holes in crankshaft.
2. Clean flywheel and mating face of crankshaft.
3. Fit flywheel to crankshaft.
4. Fit NEW bolts securing flywheel to crankshaft and working in a diagonal sequence tighten bolts to 85 Nm.
5. Fit CKP sensor. ***See ENGINE MANAGEMENT SYSTEM - MEMS, Repairs.***
6. Fit torsion damper. ***See this section.***

TORSION DAMPER

Service repair no - 12.53.13

Remove

1. Remove automatic gearbox assembly. ***See AUTOMATIC GEARBOX - 'CVT', Repairs.***

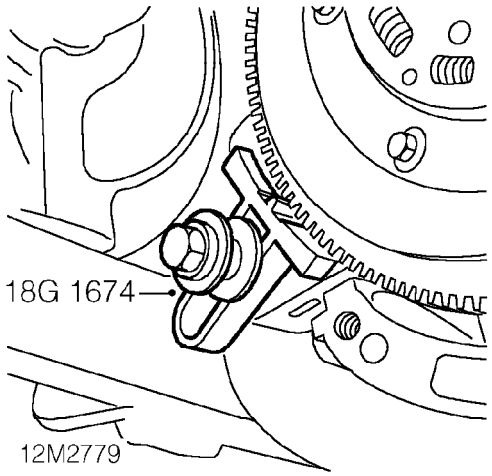

2. Fit flywheel locking tool **18G 1674** to flywheel.
3. Fit and tighten bolt securing tool in place.

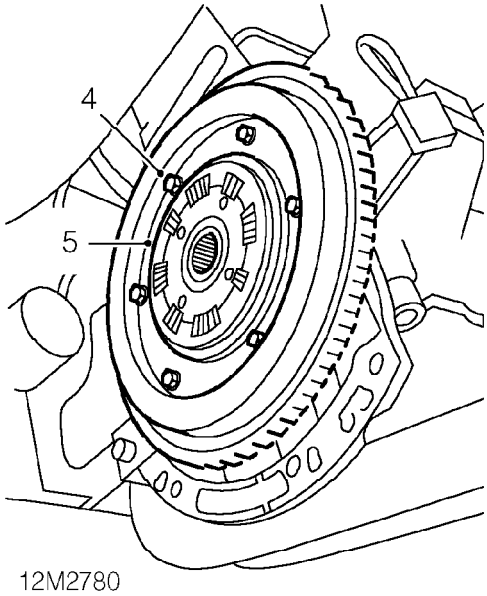

4. Progressively loosen and then remove 6 bolts securing torsion damper to flywheel.
5. Remove torsion damper.

Refit

1. Clean torsion damper and flywheel mating faces.
2. Position torsion damper to flywheel and finger tighten bolts.
3. Working in a diagonal sequence, progressively tighten bolts to 22 Nm.
4. Remove bolt securing flywheel locking tool and remove tool.
5. Fit automatic gearbox assembly. ***See AUTOMATIC GEARBOX - 'CVT', Repairs.***

FLYWHEEL STARTER RING GEAR

Service repair no - 12.53.19

Remove

1. Remove flywheel. ***See this section.***

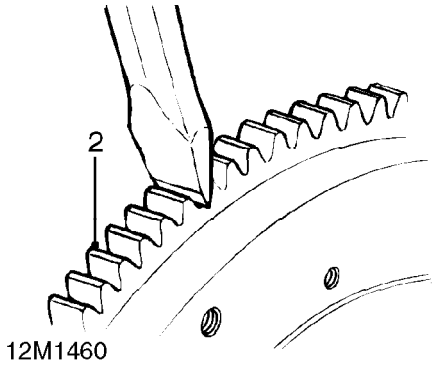

2. Apply a cold chisel in root of one of ring gear teeth, strike chisel with hammer to break ring gear.
3. Remove starter ring gear.

Refit

1. Clean flywheel and starter ring gear.
2. Heat new starter ring gear evenly to 350°C, indicated when the ring is a light blue colour.
3. Locate ring gear on flywheel and press ring gear hard against flange on flywheel.
4. Ensure ring gear is correctly seated around the complete circumference of flywheel and allow to cool.
5. Fit flywheel. ***See this section.***

OIL FILTER

Service repair no - 12.60.04

Remove

1. Raise front of vehicle.

WARNING: Support on safety stands.

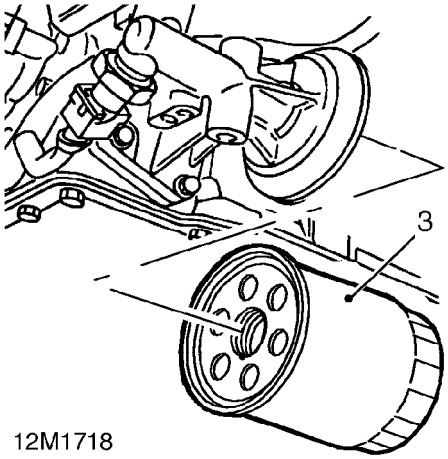

2. Clean area around filter head and place a container beneath engine
3. Using a strap wrench, unscrew and discard filter.

Refit

1. Clean mating face of filter head.
2. Lubricate sealing ring of new filter with clean engine oil.
3. Fit new filter and tighten by hand until it seats then tighten a further half turn.
4. Remove stand(s) and lower vehicle.
5. Top up engine with oil to specification 10w/40 until level is correct.
6. Start and run engine and check for leaks.
7. Stop engine, wait a few minutes, then check oil level. Top up if necessary.

DIPSTICK TUBE

Service repair no - 12.60.09

Remove

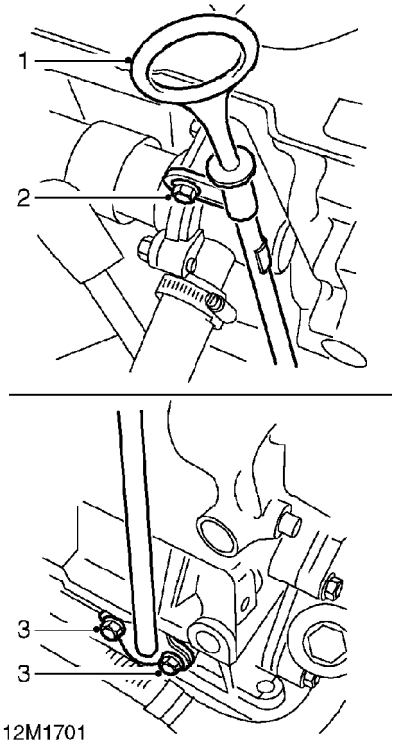

1. Remove dipstick.
2. Remove bolt securing thermostat housing and dipstick tube to cylinder block.
3. Remove 2 bolts securing dipstick tube to cylinder block.
4. Remove dipstick tube and collect gasket.

Refit

1. Fit new gasket and dipstick tube to cylinder block.
2. Fit bolts securing dipstick tube to cylinder block and tighten to 10 Nm.
3. Fit bolt securing dipstick tube and thermostat housing to cylinder block and tighten to 10 Nm.
4. Fit dipstick.

OIL PUMP

Service repair no - 12.60.26

Remove

1. Remove camshaft timing belt. ***See this section.***
2. Remove crankshaft gear.

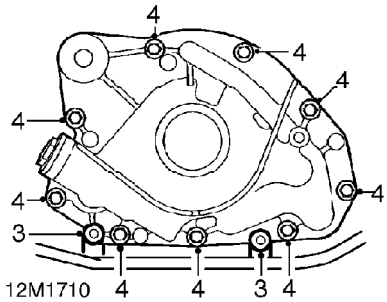

3. Remove 2 bolts securing engine harness to oil pump.
4. Remove and discard 9 bolts securing oil pump to cylinder block.

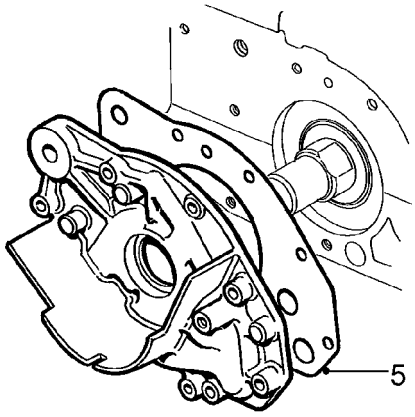

12M1711

5. Remove oil pump and discard gasket.

Refit

1. Clean oil pump bolt holes in cylinder block.
2. Clean mating surfaces of oil pump and cylinder block.
3. Clean oil seal running surface on crankshaft.
4. Fit new oil pump gasket to cylinder block and position oil pump.

CAUTION: Do not lubricate crankshaft front oil seal or running surface of crankshaft.

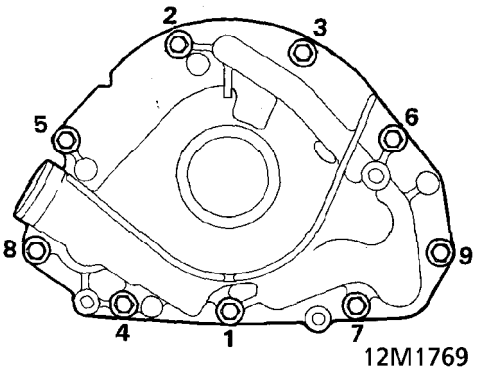

5. Fit new Patchlok bolts and tighten in sequence shown to 10 Nm.
6. Align engine harness to oil pump, fit bolts and tighten to 10 Nm.
7. Clean crankshaft gear.
8. Fit gear to crankshaft.
9. Fit camshaft timing belt. ***See this section.***

SUMP GASKET - 1.4 MODELS

Service repair no - 12.60.38

Remove

1. Disconnect battery earth lead.
2. Raise front of vehicle.

WARNING: Support on safety stands.

3. Drain engine oil. ***See MAINTENANCE.***
4. Fit new sealing washer to engine oil drain plug. Fit drain plug and tighten to 42 Nm.
5. Remove exhaust front pipe. ***See MANIFOLD & EXHAUST SYSTEMS, Repairs.***

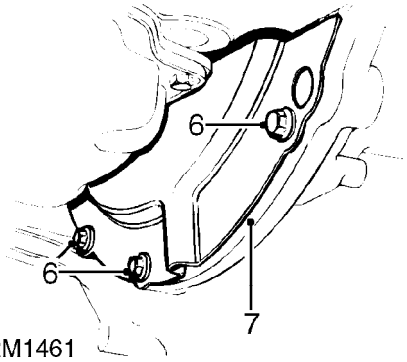

6. Remove 3 bolts securing flywheel lower cover plate to flywheel housing.
7. Remove flywheel lower cover plate.

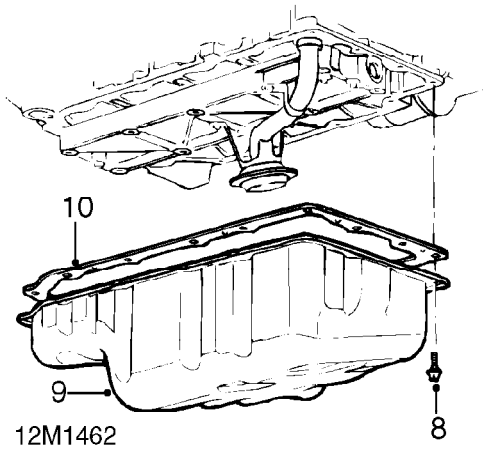

8. Remove and discard 14 bolts securing sump to engine bearing ladder.
9. Release gasket from bearing ladder and remove sump.
10. Remove gasket from sump.

Refit

1. Clean inside of sump and mating faces of sump and bearing ladder.
2. Check condition of sump gasket, renew gasket if it shows signs of damage or deterioration.
3. Fit gasket to sump ensuring its 7 pegs are located in holes on sump.
4. Position sump to engine bearing ladder, fit and lightly tighten new Patchlok bolts.

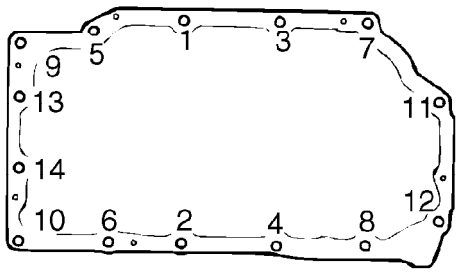

12M1463

5. Working in the sequence shown, progressively tighten sump bolts to:
   M6/M8 bolts - 10 Nm.
6. Fit flywheel lower cover plate and tighten 3 bolts to 9 Nm.
7. Fit exhaust front pipe. ***See MANIFOLD & EXHAUST SYSTEMS, Repairs.***
8. Remove stand(s) and lower vehicle.
9. Fill engine with oil. ***See MAINTENANCE.***
10. Connect battery earth lead.

SUMP - 1.6 & 1.8 MODELS

Service repair no - 12.60.38

Remove

1. Disconnect battery earth lead.
2. Raise front of vehicle.

WARNING: Support on safety stands.

3. Remove exhaust front pipe. ***See MANIFOLD & EXHAUST SYSTEMS, Repairs.***
4. Drain engine oil. ***See MAINTENANCE.***
5. Fit new sealing washer to engine oil drain plug. Fit drain plug and tighten to 25 Nm.

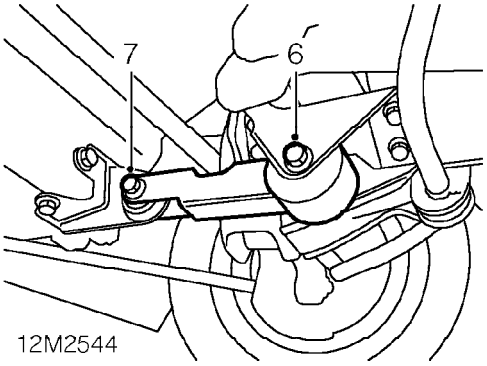

6. Loosen through bolt securing engine steady bar to subframe.
7. Remove through bolt securing engine steady bar to bracket on sump.

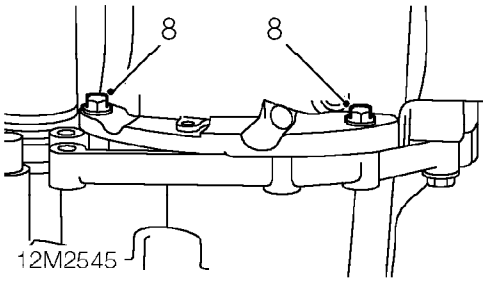

8. Remove 2 bolts securing sump to gearbox.

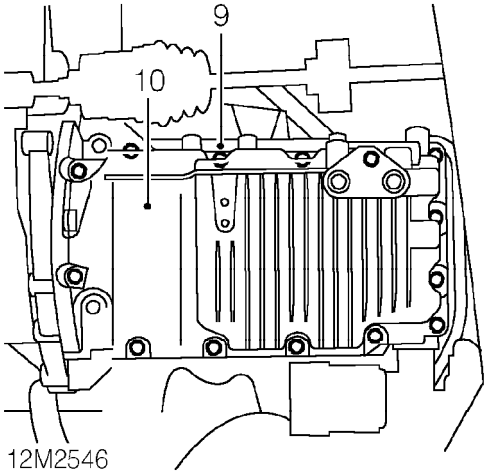

9. Noting fitted positions of 2 longest bolts, remove 14 bolts securing sump to engine bearing ladder.
10. Using a mallet, gently tap sump sideways to release sealant bond; remove sump.

CAUTION: Do not lever between sump and bearing ladder.

Do not carry out further dismantling if component is removed for access only.

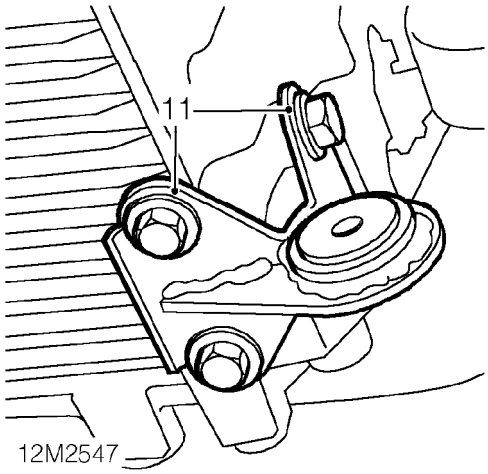

11. Remove 4 bolts securing engine steady bar bracket to sump, remove bracket.
12. Fit bracket to sump, fit bolts and tighten to 80 Nm.

Refit

1. Clean inside of sump. Remove all traces of sealant using a suitable solvent.
2. Apply sealant from kit, Part No. GUG 705963GM to sump joint face then spread to an even film using a brush or roller.

CAUTION: To avoid contamination, assembly should be completed immediately after application of sealant. Do not use RTV or any sealant other than that supplied with kit.

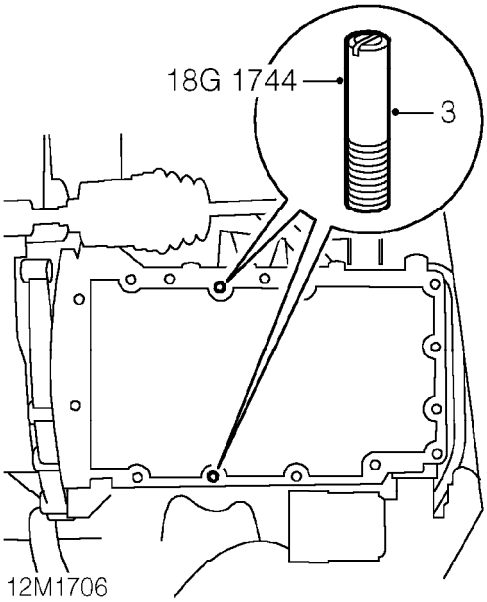

3. Fit sump alignment pins **18G 1744** to bearing ladder as shown.

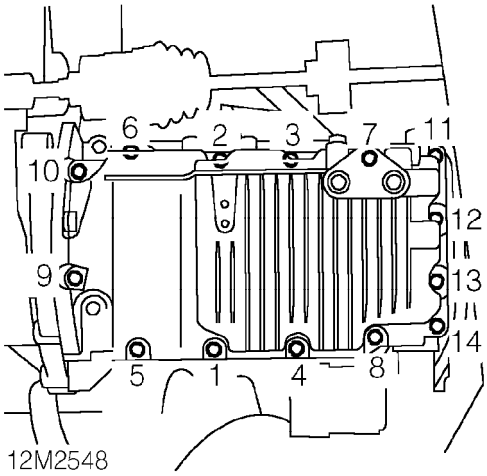

4. Position sump on alignment pins, fit 2 bolts at positions 5 and 6 and tighten to 4 Nm.
5. Fit 10 bolts into remaining holes ensuring that 2 longest bolts are in original fitted positions; finger tighten bolts.
6. Remove alignment pins **18G 1744,** fit and finger tighten remaining 2 bolts.
7. Progressively tighten sump bolts in sequence shown to 25 Nm.
8. Fit bolts, sump to gearbox, and tighten to 25 Nm.
9. Connect engine steady bar to bracket on sump, fit through bolt and tighten to 80 Nm.
10. Tighten engine steady bar to subframe bolt to 80 Nm.
11. Fit exhaust front pipe. ***See MANIFOLD & EXHAUST SYSTEMS, Repairs.***
12. Fill engine with oil. ***See MAINTENANCE.***
13. Remove stand(s) and lower vehicle.
14. Connect battery earth lead.

OIL PRESSURE SWITCH

Service repair no - 12.60.50

Remove

1. Disconnect battery earth lead.
2. Raise front of vehicle.

WARNING: Support on safety stands.

3. Position container below engine oil filter to collect spillage.

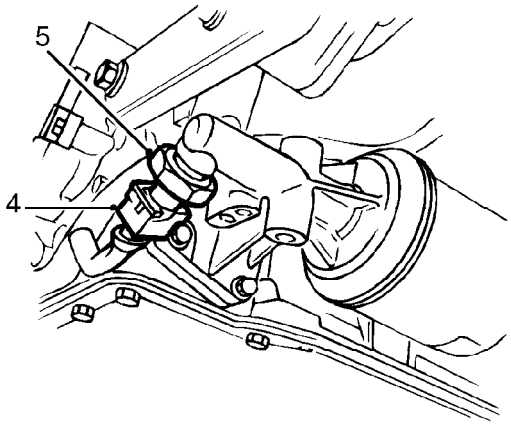

12M1395

4. Disconnect multiplug from oil pressure switch.
5. Remove oil pressure switch.

Refit

1. Clean oil pressure switch threads.
2. Fit oil pressure switch and tighten to 15 Nm.
3. Connect multiplug to oil pressure switch.
4. Remove stand(s) and lower vehicle.
5. Top-up engine oil. ***See MAINTENANCE.***
6. Connect battery earth lead.

CAMSHAFT TIMING BELT

Service repair no - 12.65.18

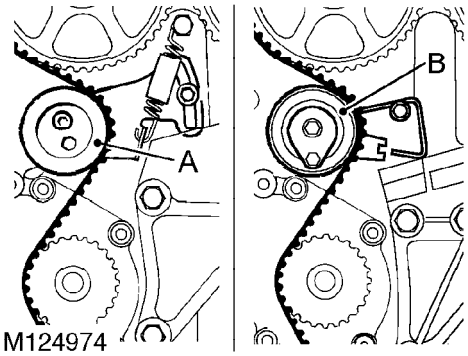

NOTE: Two types of timing belt tensioner are fitted, type A is a manual tensioner, type B is an automatic tensioner. The tensioners and their timing belts are not interchangeable.

CAUTION: Timing belt must be replaced if cylinder head is to be removed or new timing gears, tensioner or coolant pump are to be fitted.
Timing belts must be stored and handled with care.
Always store a timing belt on its edge with a bend radius greater than 50 mm.
Do not use a timing belt that has been twisted or bent double as this will damage the reinforcing fibres.
Do not use a timing belt if debris other than belt dust is found in timing cover.
Do not use a timing belt if partial engine seizure has occurred.
Do not use a timing belt if belt mileage exceeds 48,000 miles (77,000 km).
Do not use an oil or coolant contaminated belt.

NOTE: The cause of contamination MUST be rectified.

Remove - Engines fitted with manual timing belt tensioner

1. Disconnect battery earth lead.
2. Raise front of vehicle.

WARNING: Support on safety stands.

3. Remove RH front road wheel.

4. Remove camshaft timing belt upper cover. ***See this section.***

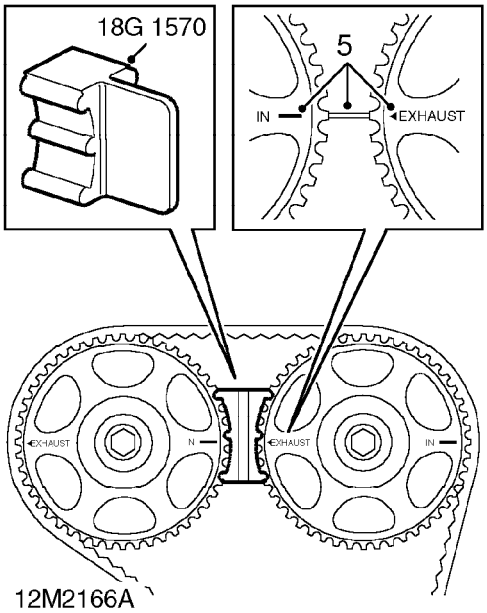

5. Using a socket and extension bar on the crankshaft pulley bolt, rotate crankshaft clockwise to align camshaft gear timing marks with mark on backplate - 90° BTDC.

CAUTION: Never use camshaft gears, gear retaining bolts or timing belt to rotate crankshaft.

6. Fit camshaft gear locking tool **18G 1570.**
7. Fit wooden block to jack and position jack to support engine.

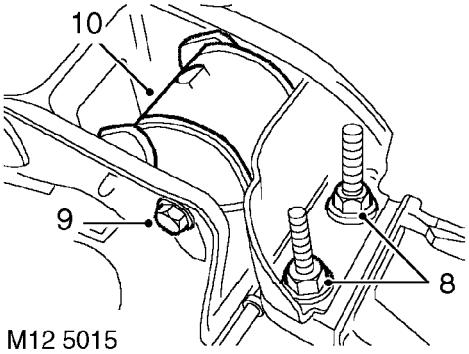

8. Remove and discard 2 nuts securing RH engine mounting to engine.
9. Remove through bolt securing RH engine mounting to body.
10. Remove RH engine mounting.

11. Remove camshaft timing belt lower cover. ***See this section.***

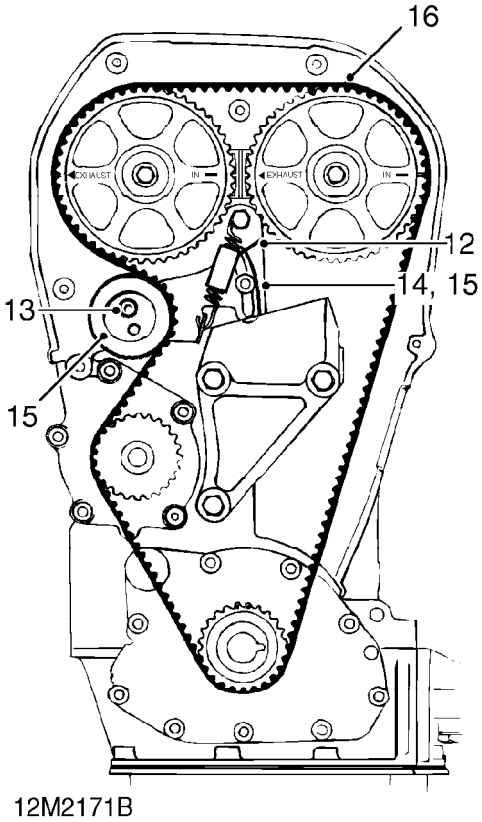

12. If camshaft timing belt is to be re-used, mark position of tensioner backplate to cylinder head for belt tensioning reference. Mark direction of belt rotation using chalk.
13. Loosen tensioner pulley Allen bolt $^1/_2$ turn.
14. Loosen tensioner backplate bolt $^1/_2$ turn.
15. Push tensioner pulley down to fully OFF position and tighten backplate bolt to 10 Nm.
16. Remove camshaft timing belt.

CAUTION: Ease timing belt off timing gears using fingers only. Metal levers may damage the belt and gears.

Do not rotate the crankshaft with the timing belt removed and the cylinder head fitted.

Refit - Engines fitted with manual timing belt tensioner

1. Clean crankshaft pulley, timing belt gears, coolant pump drive gear and tensioner pulley.

CAUTION: If the sintered gears have been subjected to prolonged oil contamination, they must be soaked in a solvent bath and then thoroughly washed in clean solvent before refitting. Because of the porous construction of sintered material, oil impregnated in the gears will emerge and contaminate the belt.

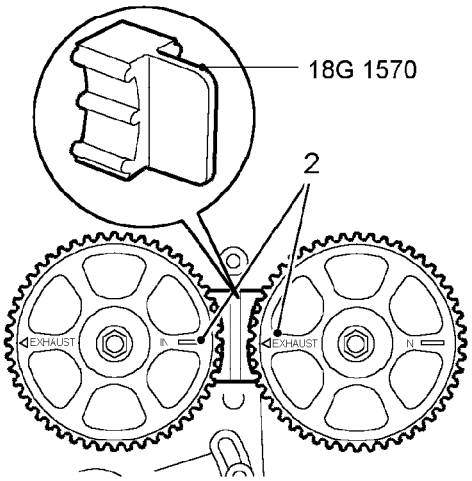

M124961

2. Check correct alignment of camshaft timing marks for 90° BTDC and that tool **18G 1570** is locking camshaft gears.

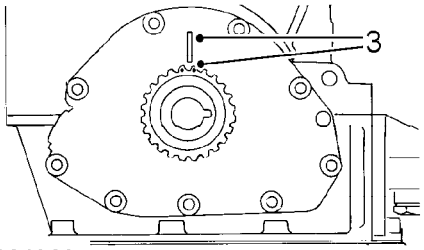

M124962

3. Ensure dots on crankshaft gear are aligned with flange on oil pump and that tool **18G 1742** is locking flywheel.
4. Loosen tensioner backplate bolt and ensure tensioner moves freely through its adjustment range and returns under spring tension.
5. Push tensioner down to OFF position and tighten backplate bolt to 10 Nm.
6. Using fingers only, fit timing belt, ensure belt run between the crankshaft gear and the camshaft gears is kept taut during the fitting procedure.

CAUTION: If the original belt is to be refitted, ensure the direction of rotation mark is facing the correct way.

7. Check that timing belt is positioned centrally around all gears and tensioner pulley.
8. Fit camshaft timing belt lower cover. ***See this section.***

NOTE: Do not fit timing belt upper cover at this stage.

9. Fit RH engine mounting to body and engine.
10. Fit through bolt securing RH engine mounting to body but do not tighten.
11. Fit 2 new nuts securing RH engine mounting to engine and tighten to 100 Nm.
12. Tighten RH engine mounting to body through bolt to 75 Nm.
13. Lower jack supporting power unit and remove from beneath vehicle.
14. Remove camshaft gear locking tool **18G 1570.**

Tensioning existing timing belt

15. Unhook tensioner spring from pillar bolt.
16. Loosen tensioner backplate bolt.
17. Position tensioner to align mark on backplate with mark on cylinder head.
18. Tighten tensioner backplate bolt to 10 Nm.
19. Tighten tensioner pulley Allen bolt to 45 Nm.
20. Connect tensioner spring to pillar bolt.

Tensioning replacement timing belt

21. Loosen tensioner backplate bolt and tension timing belt by applying finger pressure to backplate and pushing tensioner pulley against belt.
22. Hold tensioner in this position and tighten backplate bolt to 10 Nm.
23. Rotate crankshaft clockwise 2 complete revolutions and align camshaft timing gear marks.

CAUTION: Do not use camshaft gears, gear retaining bolts or timing belt to rotate crankshaft.

24. Loosen backplate bolt and check that belt tension is being applied by tensioner spring.
25. Tighten tensioner backplate bolt to 10 Nm.
26. Tighten tensioner pulley Allen bolt to 45 Nm.

All timing belts

27. Fit camshaft timing belt upper cover. ***See this section.***
28. Fit road wheel and tighten nuts to correct torque.
29. Remove stand(s) and lower vehicle.
30. Connect battery earth lead.

Remove - Engines fitted with automatic timing belt tensioner

1. Disconnect battery earth lead.
2. Raise front of vehicle.

WARNING: Support on safety stands.

3. Remove RH front road wheel.
4. Remove camshaft timing belt upper cover. ***See this section.***

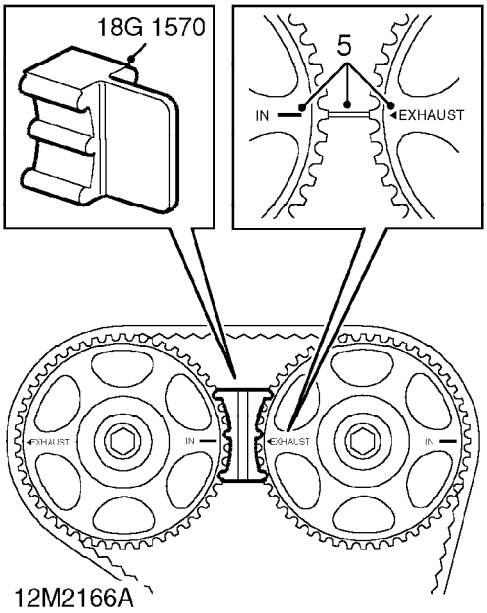

5. Using a socket and extension bar on the crankshaft pulley bolt, rotate crankshaft clockwise to align camshaft gear timing marks with mark on backplate - 90° BTDC.

CAUTION: Never use camshaft gears, gear retaining bolts or timing belt to rotate crankshaft.

6. Fit camshaft gear locking tool **18G 1570.**
7. Fit wooden block to jack and position jack to support engine.

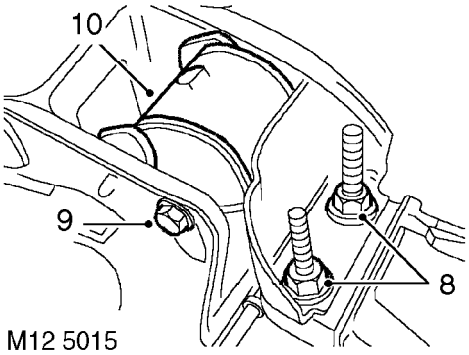

M12 5015

8. Remove and discard 2 nuts securing RH engine mounting to engine.
9. Remove through bolt securing RH engine mounting to body.
10. Remove RH engine mounting.
11. Remove camshaft timing belt lower cover. ***See this section.***
12. If camshaft timing belt is to be re-used, mark direction of belt rotation using chalk.

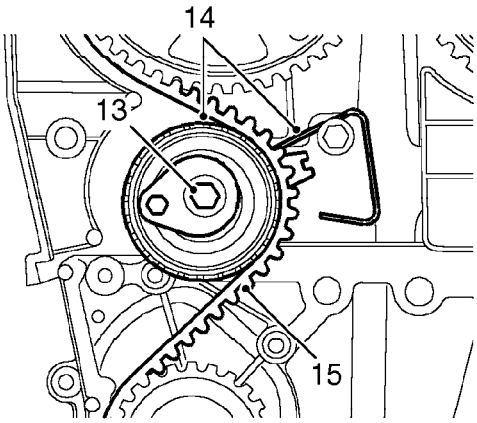

M12 5016

13. Remove and discard timing belt tensioner bolt.
14. Disengage index wire from its fitted position whilst at the same time removing the timing belt tensioner.
15. Remove camshaft timing belt.

CAUTION: Ease timing belt off timing gears using fingers only. Metal levers may damage the belt and gears.
Do not rotate the crankshaft with the timing belt removed and the cylinder head fitted.

Refit - Engines fitted with automatic timing belt tensioner

1. Clean crankshaft pulley, timing belt gears, coolant pump drive gear and tensioner pulley.

CAUTION: If the sintered gears have been subjected to prolonged oil contamination, they must be soaked in a solvent bath and then thoroughly washed in clean solvent before refitting. Because of the porous construction of sintered material, oil impregnated in the gears will emerge and contaminate the belt.

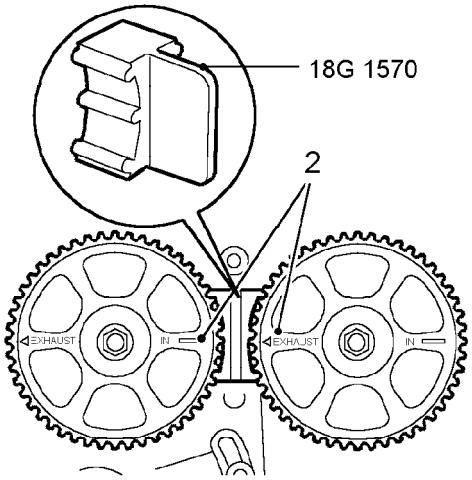

M124961

2. Check correct alignment of camshaft timing marks for 90° BTDC and that tool **18G 1570** is locking camshaft gears.

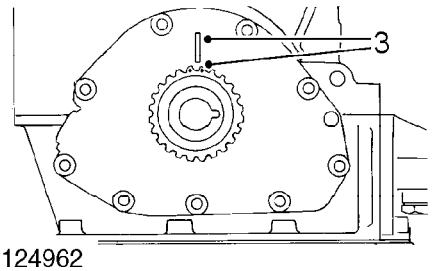

M124962

3. Ensure dots on crankshaft gear are aligned with flange on oil pump and that tool **18G 1742** is locking flywheel.

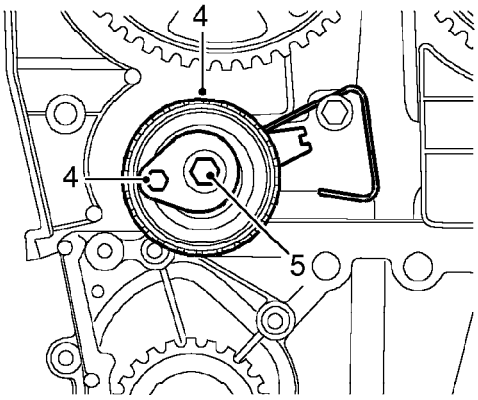

M12 5017

4. Fit timing belt tensioner ensuring that index wire is positioned over pillar bolt and that tensioner lever is at 9 o’clock position.
5. Fit a new tensioner Patchlok bolt and tighten bolt until it is just possible to move tensioner lever.
6. Using the fingers only, fit the timing belt over crankshaft timing gear, then over camshaft gears, coolant pump drive gear and tensioner pulley ensuring that the belt run is kept taut between the crankshaft timing gear and exhaust camshaft gear.

CAUTION: If original belt is being refitted, ensure that direction of rotation mark is facing correct way.

7. Check that timing belt is positioned centrally around all gears and tensioner pulley.
8. Fit timing belt lower cover. ***See this section.***

NOTE: Do not fit timing belt upper cover at this stage.

9. Fit RH engine mounting to body and engine.
10. Fit through bolt securing RH engine mounting to body but do not tighten.
11. Fit 2 new nuts securing RH engine mounting to engine and tighten to 100 Nm.
12. Tighten RH engine mounting to body through bolt to 75 Nm.
13. Lower jack supporting power unit, remove jack from beneath vehicle.
14. Remove camshaft gear locking tool **18G 1570.**

Tensioning timing belt

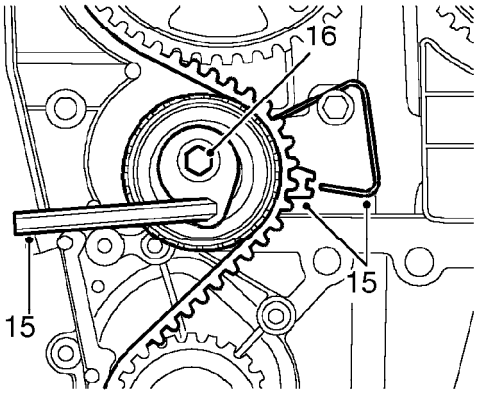

M12 5018

15. Using a 6 mm Allen key, rotate tensioner anti-clockwise and align the tensioner pointer to the index wire.

NOTE: If original belt is being refitted, align index wire to lower land of pointer.

CAUTION: Ensure that pointer approaches the index wire from above. Should pointer go past index wire, release tension completely and repeat tensioning procedure.

16. Ensuring that pointer maintains correct position, tighten tensioner bolt to 25 Nm.

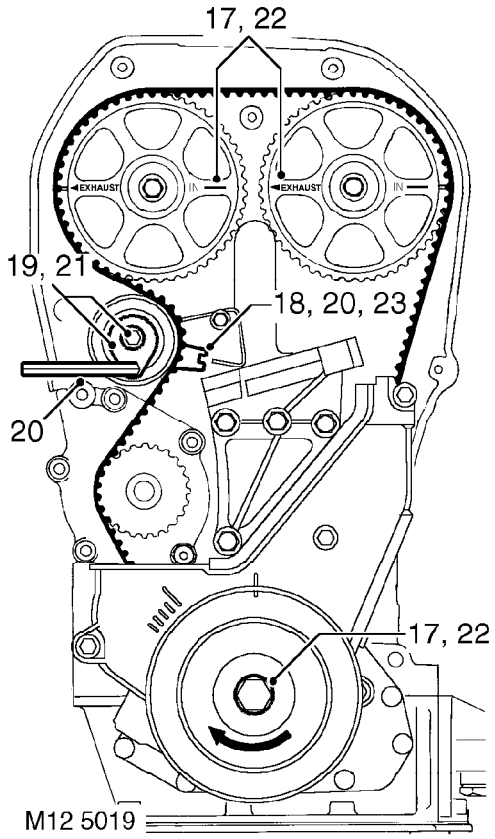

17. Using crankshaft pulley bolt, rotate crankshaft 2 turns clockwise and align camshaft gear timing marks.

CAUTION: Do not use camshaft gears, gear retaining bolts or timing belt to rotate crankshaft.

18. Check that pointer is still correctly aligned with index wire.

CAUTION: If pointer is not correctly aligned, carry out the following procedure.

19. Slacken tensioner bolt until it is just possible to move the tensioner lever.
20. Using a 6 mm Allen key, rotate tensioner lever clockwise until pointer is just above the index wire then rotate the lever anti-clockwise until pointer is correctly aligned with index wire.
21. Ensuring that pointer maintains correct position, tighten tensioner bolt to 25 Nm.
22. Using crankshaft pulley bolt, rotate crankshaft 2 turns clockwise and align camshaft gear timing marks.
23. Check that pointer is still correctly aligned with index wire.
24. Fit camshaft timing belt upper cover. ***See this section.***
25. Fit road wheel and tighten nuts to correct torque.
26. Remove stand(s) and lower vehicle.
27. Connect battery earth lead.

CAMSHAFT TIMING BELT UPPER COVER

Service repair no - 12.65.41

Remove

1. Disconnect battery earth lead.

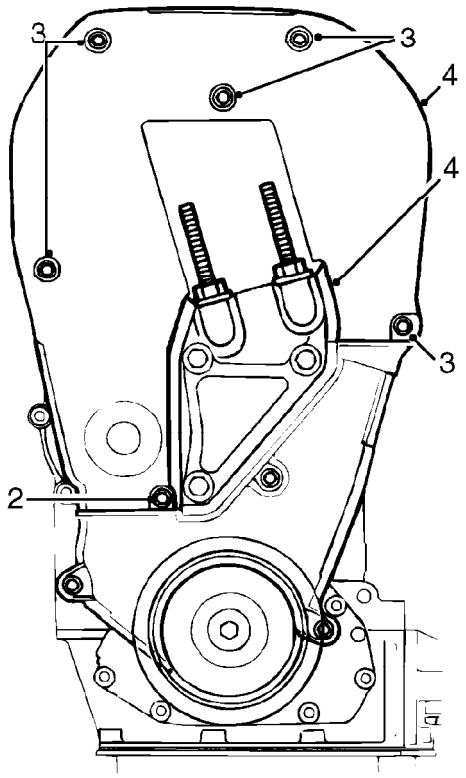

2. Loosen lower bolt securing camshaft timing belt upper cover to engine.
3. Remove 5 bolts securing camshaft timing belt upper cover to rear cover.
4. Remove camshaft timing belt upper cover and rubber seal.

Refit

1. Clean timing belt upper cover.
2. Fit timing belt upper cover, ensuring correct position of rubber seal.
3. Fit 5 bolts securing camshaft timing belt upper cover to rear cover and tighten to 5 Nm.
4. Tighten bolt securing camshaft timing belt top cover to engine, to 5 Nm.
5. Connect battery earth lead.

CAMSHAFT TIMING BELT LOWER COVER

Service repair no - 12.65.43

Remove

1. Disconnect battery earth lead.
2. Raise front of vehicle.

WARNING: Support on safety stands.

3. Remove timing belt upper cover. ***See this section.***
4. Remove crankshaft front pulley. ***See this section.***

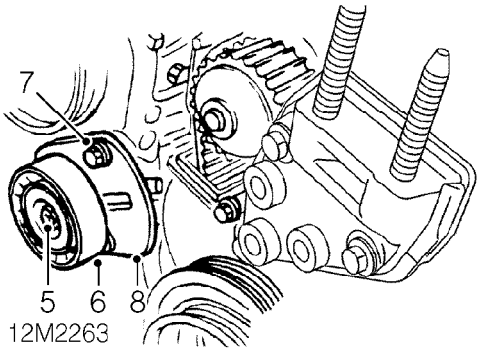

5. Remove nut and collect washer securing power steering pump drive belt tensioner pulley to tension adjuster.
6. Remove power steering pump tensioner pulley.
7. Remove 3 bolts securing drive belt tension adjuster to power steering pump mounting bracket.
8. Remove power steering pump drive belt tension adjuster.

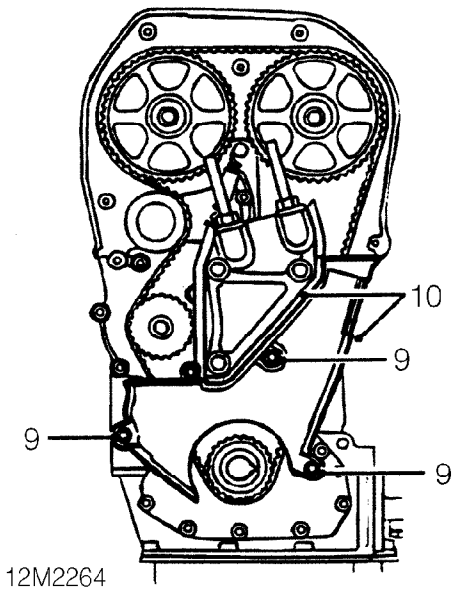

9. Remove 3 bolts securing camshaft timing belt lower cover to engine.
10. Remove camshaft timing belt lower cover and rubber seal.

Refit

1. Clean timing belt lower cover.
2. Fit timing belt lower cover ensuring correct position of rubber seal.
3. Fit bolts securing timing belt lower cover to engine and tighten to 5 Nm.
4. Position drive belt tension adjuster to power steering pump bracket, fit bolts and tighten to 25 Nm.
5. Fit power steering pump tensioner pulley and secure with washer and nut.
6. Fit crankshaft front pulley. ***See this section.***
7. Fit timing belt upper cover. ***See this section.***
8. Remove stand(s) and lower vehicle.
9. Connect battery earth lead.

CRANKSHAFT FRONT PULLEY - 1.8 MODELS

Service repair no - 12.21.01

Remove

1. Disconnect battery earth lead.
2. Raise front of vehicle.

WARNING: Support on safety stands.

3. Remove auxiliary drive belt. ***See ELECTRICAL, Repairs.***
4. Remove starter motor. ***See ELECTRICAL, Repairs.***

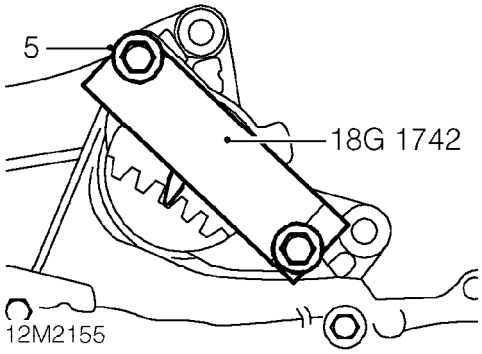

5. Fit flywheel locking tool **18G 1742** to flywheel housing and secure with 2 bolts.

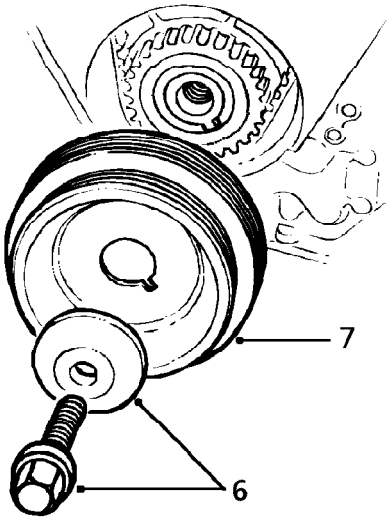

12M1713

6. Remove bolt securing pulley to crankshaft and collect washer.
7. Remove crankshaft pulley.

Refit

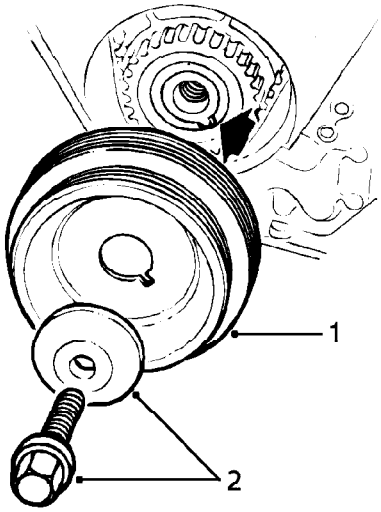

12M2356

1. Fit crankshaft pulley to crankshaft gear ensuring that indent on pulley locates over lug on gear (arrowed in illustration).
2. Fit washer and bolt securing crankshaft pulley to crankshaft and tighten to 205 Nm.
3. Remove 2 bolts securing tool **18G 1742** to flywheel housing and remove tool **18G 1742.**
4. Fit starter motor. ***See ELECTRICAL, Repairs.***
5. Fit auxiliary drive belt. ***See ELECTRICAL, Repairs.***
6. Connect battery earth lead.

FLYWHEEL - 1.8 MODELS

Service repair no - 12.53.07

Remove

1. Remove clutch assembly. ***See CLUTCH, Repairs.***
2. Leave tool **18G 1674** attached to cylinder block.
3. Remove crankshaft position sensor. ***See ENGINE MANAGEMENT SYSTEM - MEMS, Repairs.***

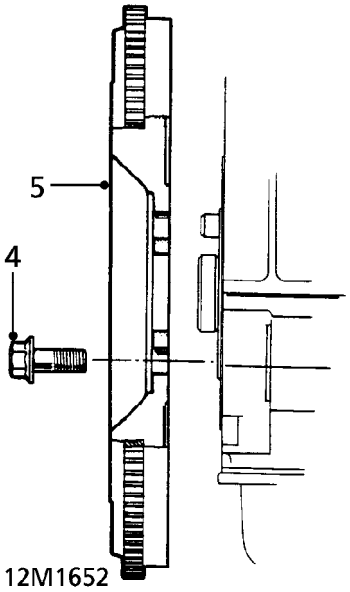

4. Remove and discard 6 bolts securing flywheel to crankshaft.
5. Remove flywheel from crankshaft.

Refit

1. Using a tap, clean adhesive from threads of flywheel bolt holes in crankshaft.
2. Clean flywheel and mating face of crankshaft.
3. Fit flywheel to crankshaft.
4. Fit NEW bolts securing flywheel to crankshaft and working in a diagonal sequence tighten bolts to 85 Nm.
5. Fit crankshaft position sensor. ***See ENGINE MANAGEMENT SYSTEM - MEMS, Repairs.***
6. Fit clutch assembly. ***See CLUTCH, Repairs.***

CONTENTS

Page

REPAIRS

EXHAUST CAMSHAFT FRONT OIL SEAL 1
EXHAUST CAMSHAFT REAR OIL SEAL 2
INLET CAMSHAFT FRONT OIL SEAL 3
INLET CAMSHAFT REAR OIL SEAL 4
CRANKSHAFT FRONT PULLEY 5
CRANKSHAFT FRONT OIL SEAL 6
CRANKSHAFT REAR OIL SEAL 7
CYLINDER HEAD GASKET - MODELS WITHOUT AIR CONDITIONING 8
CYLINDER HEAD GASKET - MODELS WITH AIR CONDITIONING 15
CAMSHAFT COVER GASKET 23
ENGINE AND GEARBOX - MODELS WITH AIR CONDITIONING 24
ENGINE AND GEARBOX - MODELS WITHOUT AIR CONDITIONING 36
ENGINE STEADY BAR 46
ENGINE LH MOUNTING 46
ENGINE RH MOUNTING 47
FLYWHEEL 48
FLYWHEEL STARTER RING GEAR 48
OIL FILTER 49
DIPSTICK TUBE 49
OIL PUMP 50
ENGINE SUMP 51
OIL PRESSURE SWITCH 53
CAMSHAFT TIMING BELT 53
CAMSHAFT TIMING BELT UPPER COVER 57
CAMSHAFT TIMING BELT LOWER COVER 58
CAMSHAFT REAR BELT COVER 59
CAMSHAFT REAR TIMING BELT 59

EXHAUST CAMSHAFT FRONT OIL SEAL

Service repair no - 12.13.07

Remove

1. Remove and discard camshaft timing belt. ***See this section.***

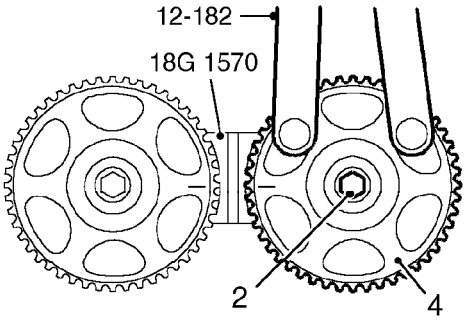

M12 5022B

2. Restrain exhaust camshaft gear using tool **12-182** and remove bolt and washer securing camshaft gear to camshaft.
3. Remove tool **18G 1570.**
4. Remove camshaft gear.

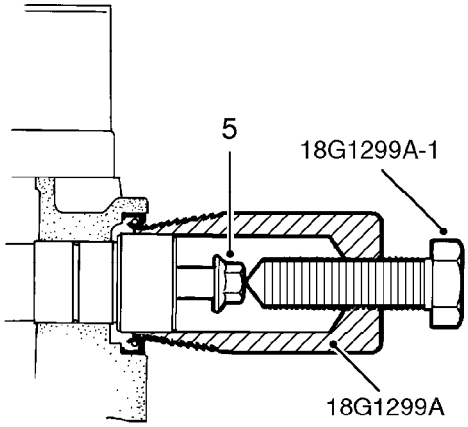

12M2604A

5. Fit camshaft gear retaining bolt to camshaft.
6. Screw tool **18G 1299A** into camshaft oil seal.
7. Remove oil seal by tightening centre bolt of tool **18G 1299A-1.**
8. Remove bolt from camshaft.

Refit

1. Clean sealing area of head and camshaft, ensuring all traces of rubber are removed. DO NOT use a scraper as this may damage sealing surfaces.

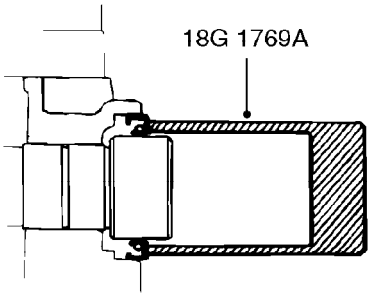

12M1452A

2. Using tool **18G 1769A** fit new camshaft oil seal.

NOTE: This oil seal is coloured BLACK.

CAUTION: Oil seal must be fitted dry. Do not use tool 18G 1769.

3. Clean camshaft gear.

CAUTION: If the sintered gears have been subjected to prolonged oil contamination, they must be soaked in a solvent bath and thoroughly washed in clean solvent before refitment. Because of the porous construction of sintered material, oil impregnated in the gear will emerge and contaminate a new timing belt.

4. Align camshaft gear timing marks and fit camshaft gear to camshaft.
5. Fit tool **18G 1570** to camshaft gears.
6. Fit bolt and washer securing camshaft gear to camshaft, restrain gear using tool **12-182** and tighten bolt to 65 Nm.
7. Fit new camshaft timing belt. ***See this section.***

EXHAUST CAMSHAFT REAR OIL SEAL

Service repair no - 12.13.08

Remove

1. Remove and discard camshaft rear timing belt. ***See this section.***

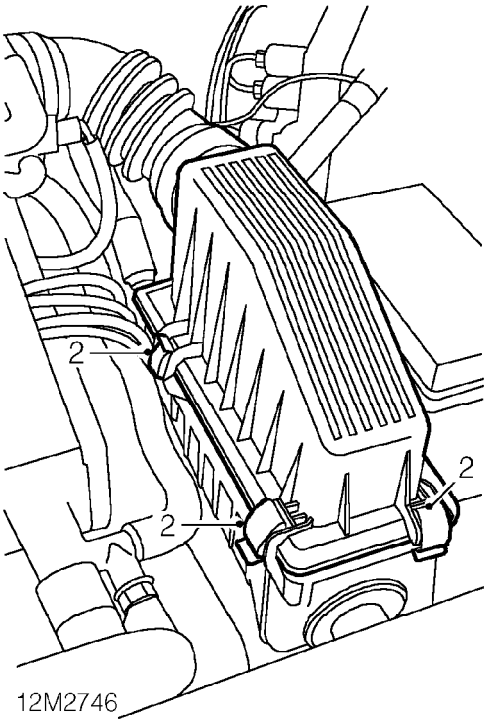

2. Release 4 clips securing 2 halves of air cleaner together and position top half aside.

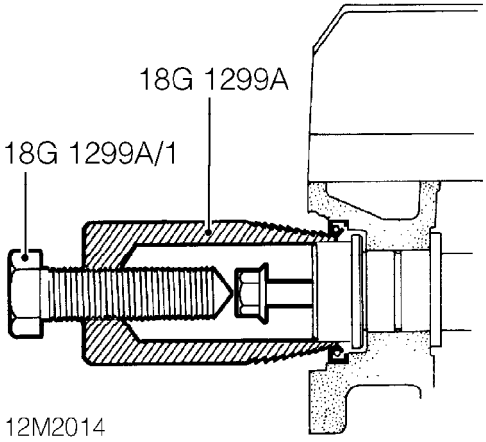

3. Fit camshaft timing belt gear bolt to camshaft and screw tool **18G 1299A** into seal.
4. Remove oil seal by tightening centre bolt of tool **18G 1299A-1.**

Refit

1. Clean sealing area of cylinder head and camshaft, ensuring all traces of rubber are removed. Do not scrape sealing surfaces.

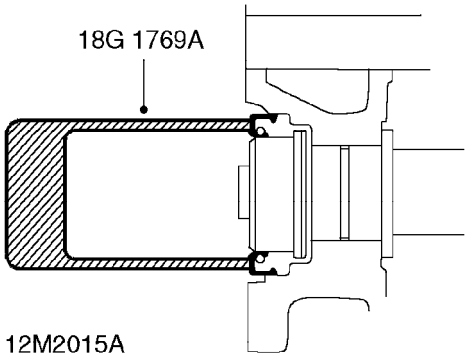

2. Fit new camshaft oil seal using tool **18G 1769A.**

NOTE: This oil seal is coloured RED.

CAUTION: Oil seal must be fitted dry. Do not use tool 18G 1769.

3. Position top half of air cleaner to lower half and secure with clips.
4. Fit new camshaft rear timing belt. ***See this section.***

INLET CAMSHAFT FRONT OIL SEAL

Service repair no - 12.13.09

Remove

1. Remove and discard camshaft timing belt. ***See this section.***

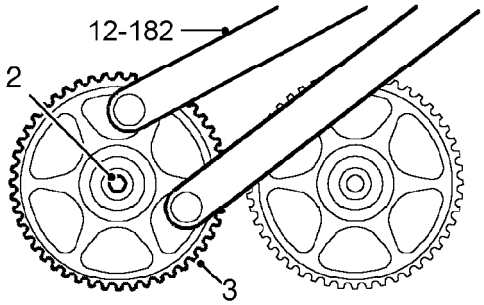

M12 5003A

2. Restrain camshaft gear using tool **12-182** and remove bolt and washer securing camshaft gear to camshaft.
3. Remove camshaft gear locking tool **18G 1570,** remove camshaft gear.

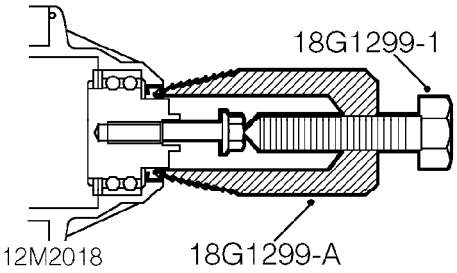

4. Fit camshaft gear retaining bolt to camshaft and screw tool **18G 1299A** into seal.
5. Remove oil seal by tightening centre bolt of tool **18G 1299A-1.**
6. Remove bolt from camshaft.

Refit

1. Clean sealing area of head and camshaft, ensuring all traces of rubber are removed. DO NOT use a scraper as this may damage sealing surfaces.

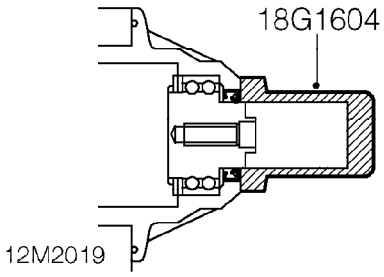

2. Using tool **18G 1604** fit new camshaft oil seal until seal is flush to face of mechanism.

CAUTION: Oil seal must be fitted dry.

3. Clean camshaft gear.

CAUTION: If the sintered gears have been subjected to prolonged oil contamination, they must be soaked in a solvent bath and thoroughly washed in clean solvent before refitment. Because of the porous construction of sintered material, oil impregnated in the gear will emerge and contaminate a new timing belt.

4. Align camshaft gear timing marks and fit camshaft gear to camshaft.
5. Fit tool **18G 1570** to camshaft gears.
6. Fit bolt and washer securing camshaft gear to camshaft, restrain gear using tool **12-182** and tighten bolt to 65 Nm.
7. Fit new camshaft timing belt. ***See this section.***

INLET CAMSHAFT REAR OIL SEAL

Service repair no - 12.13.10

Remove

1. Remove and discard camshaft rear timing belt. ***See this section.***

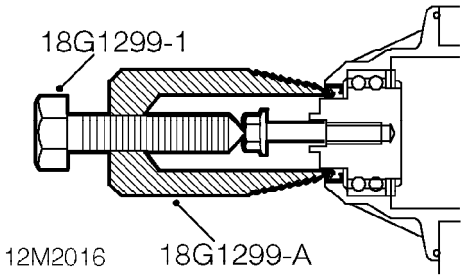

2. Fit camshaft timing belt gear bolt to camshaft and screw tool **18G 1299A** into seal.
3. Remove oil seal by tightening centre bolt of tool **18G 1299A-1.**

Refit

1. Clean sealing area of cylinder head and camshaft, ensuring all traces of rubber are removed. Do not scrape or lubricate sealing surfaces.

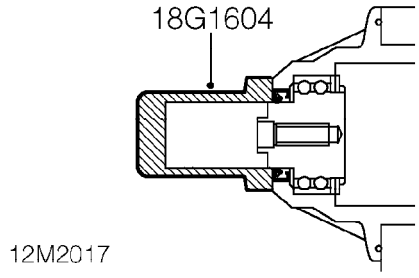

2. Fit new camshaft oil seal using tool **18G 1604** until seal is flush to mechanism face.

CAUTION: Oil seal must be fitted dry.

3. Fit new camshaft rear timing belt. ***See this section.***

CRANKSHAFT FRONT PULLEY

Service repair no - 12.21.01

Remove

1. Disconnect battery earth lead.
2. Raise front of vehicle.

WARNING: Support on safety stands.

3. Remove auxiliary drive belt. ***See ELECTRICAL, Repairs.***
4. Remove starter motor. ***See ELECTRICAL, Repairs.***

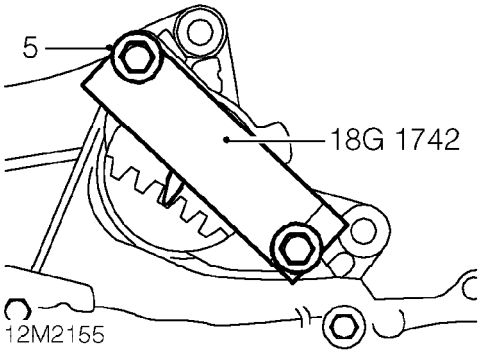

5. Fit flywheel locking tool **18G 1742** to flywheel housing and secure with 2 bolts.

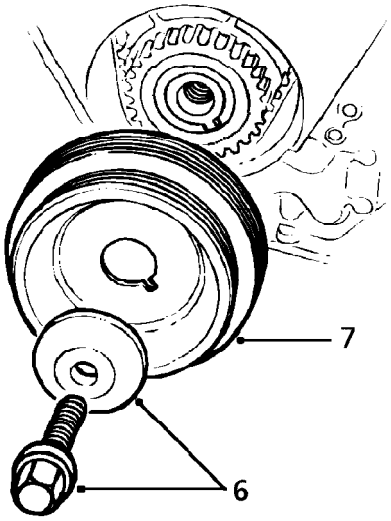

12M1713

6. Remove bolt securing pulley to crankshaft and collect washer.
7. Remove crankshaft pulley.

Refit

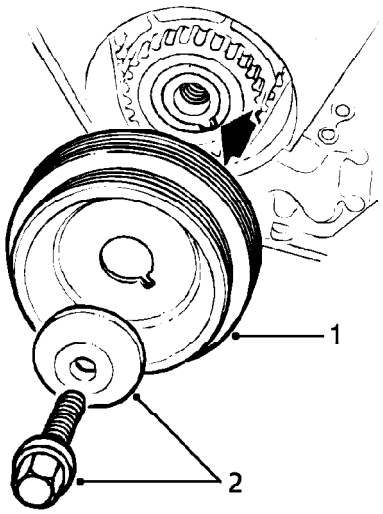

12M2356

1. Fit crankshaft pulley to crankshaft gear ensuring that indent on pulley locates over lug on gear (arrowed in illustration).
2. Fit washer and bolt securing crankshaft pulley to crankshaft and tighten to 205 Nm.
3. Remove 2 bolts securing tool **18G 1742** to flywheel housing and remove tool **18G 1742.**
4. Fit starter motor. ***See ELECTRICAL, Repairs.***
5. Fit auxiliary drive belt. ***See ELECTRICAL, Repairs.***
6. Connect battery earth lead.

CRANKSHAFT FRONT OIL SEAL

Service repair no - 12.21.14

Remove

1. Remove camshaft timing belt. ***See this section.***

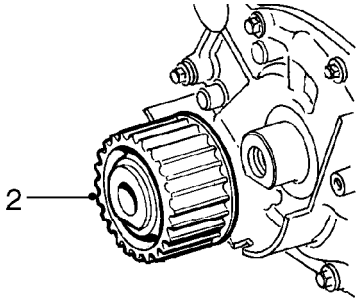

12M1636

2. Remove crankshaft gear.

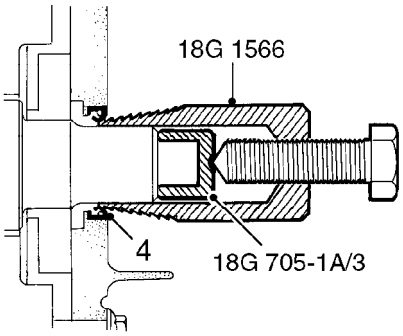

12M1637

3. Fit thrust button, tool **18G 705-1A/3** to end of crankshaft.
4. Ensure bore of tool **18G 1566** is free from burrs.
5. Screw tool **18G 1566** into crankshaft front oil seal.
6. Tighten centre bolt of tool **18G 1566** to remove oil seal.
7. Discard crankshaft front oil seal.
8. Remove thrust button from crankshaft.

Refit

1. Using a lint free cloth, thoroughly clean oil seal recess in oil pump and running surface on crankshaft.

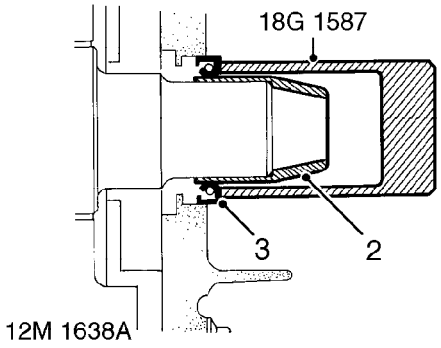

2. Fit oil seal guide, from seal kit, over end of crankshaft.
3. Position new seal on crankshaft up against oil pump housing. Drift seal into place using tool **18G 1587.**

CAUTION: Oil seal must be fitted dry.

4. Remove tool **18G 1587** and oil seal guide.
5. Clean crankshaft gear.
6. Fit crankshaft gear to crankshaft.
7. Fit camshaft timing belt. ***See this section.***

CRANKSHAFT REAR OIL SEAL

Service repair no - 12.21.20

Remove

1. Remove flywheel. ***See this section.***

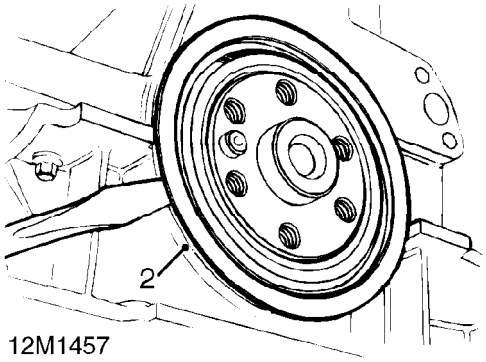

2. Using a burr free flat ended screwdriver, ease crankshaft rear oil seal from cylinder block and remove. Discard oil seal.

CAUTION: Do not mark sealing surface on crankshaft or cylinder block.

Refit

1. Remove all traces of oil and sealant from cylinder block, oil seal recess and running surface on crankshaft.

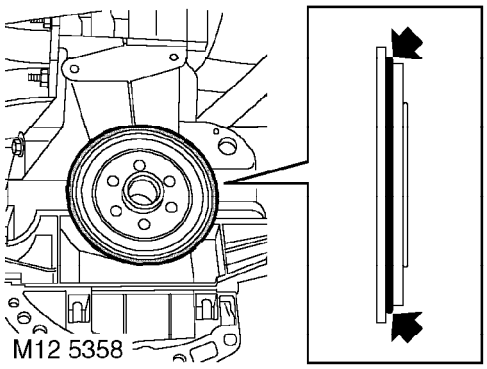

2. Apply a l.5 mm continuous bead of sealant, Part No. GAC 8000 to replacement oil seal as shown.

CAUTION: Do not apply oil or grease to any part of oil seal or running surface of crankshaft. Seal must be fitted immediately after applying sealant.

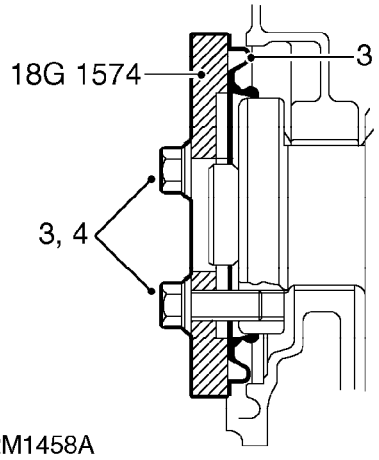

3. Position oil seal to cylinder block and fit oil seal replacer tool **18G 1574,** retain tool using three slave bolts.
4. Evenly tighten oil seal replacer bolts to press oil seal squarely into cylinder block.
5. Leave oil seal replacer tool and oil seal in clamped position for one minute.
6. Remove oil seal replacer tool.
7. Allow sealant to cure for a minimum of 30 minutes before topping-up oil or rotating crankshaft.
8. Fit flywheel. ***See this section.***

CYLINDER HEAD GASKET - MODELS WITHOUT AIR CONDITIONING

Service repair no - 12.29.02

Remove

1. Disconnect battery earth lead.
2. Drain engine coolant. ***See COOLING SYSTEM - 'K' SERIES, Adjustments.***
3. Remove and discard camshaft timing belt. ***See this section.***
4. Check correct alignment of timing marks on crankshaft and camshaft gears.

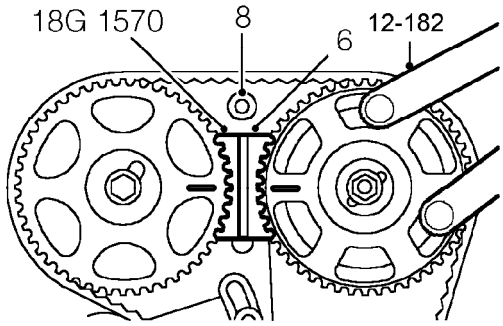

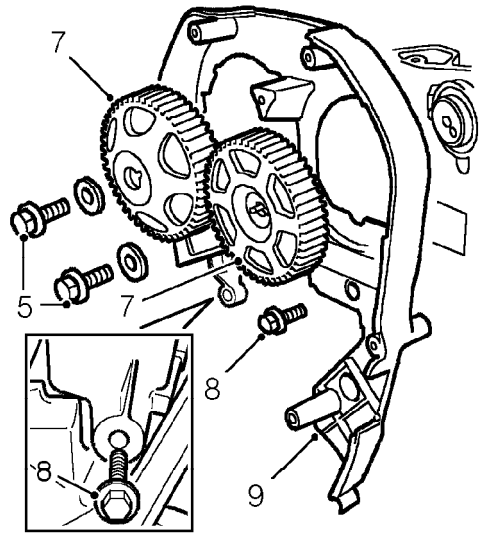

5. Using tool **12-182** to hold camshaft gears, remove 2 bolts and plain washers from camshaft gears.
6. Remove tool **18G 1570.**
7. Mark camshaft gears for fitting reference and remove 2 camshaft gears.
8. Remove 3 bolts from upper part of timing belt rear cover.
9. Remove rear cover.

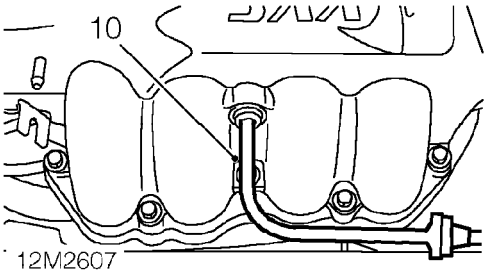

10. Release brake servo vacuum hose from inlet manifold.

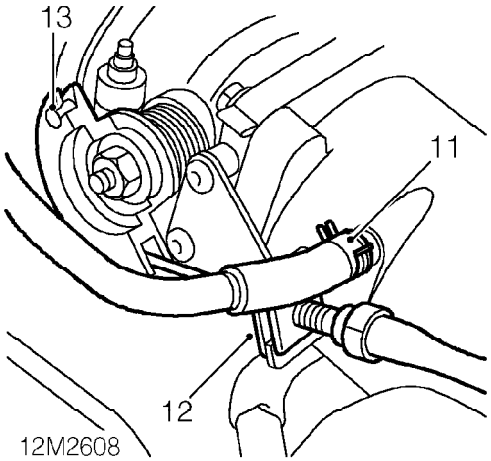

11. Release clip and remove evaporative emission canister hose from inlet manifold.
12. Release throttle cable adjustment nut from abutment bracket.
13. Release throttle cable from throttle cam.

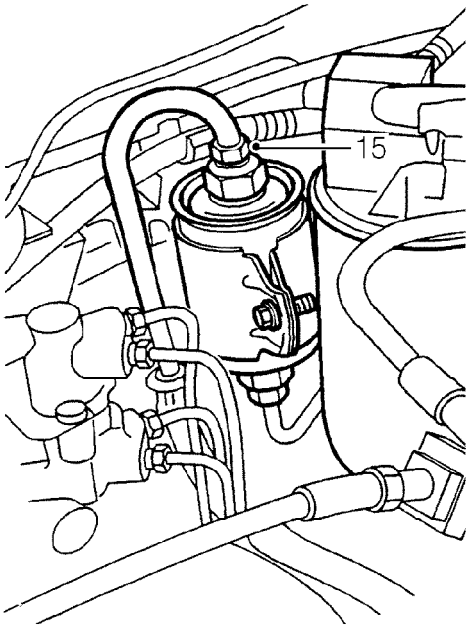

14. Position absorbent cloth around fuel filter outlet union.
15. Loosen fuel filter outlet union to relieve fuel pressure.

CAUTION: To prevent damage to fuel system pipes or components use two spanners when loosening or tightening unions.

16. Tighten outlet union to 28 Nm.

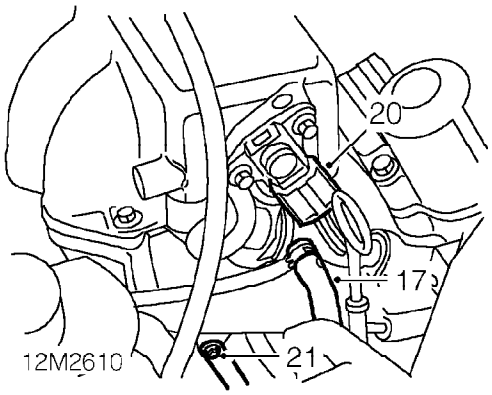

17. Release clip and fuel return hose from fuel rail.
18. Release fuel return hose from 2 clips, underside of inlet manifold.
19. Release clip and disconnect coolant hose from inlet manifold.
20. Disconnect multiplug from MAP sensor.
21. Remove bolt securing inlet manifold to support stay.

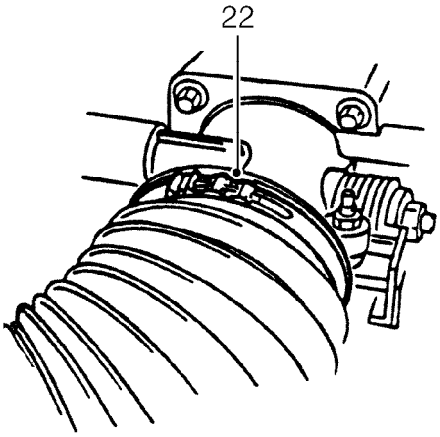

22. Remove clip and disconnect air intake pipe from throttle body.

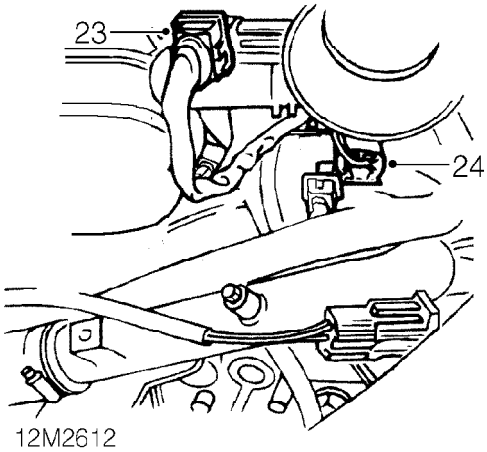

23. Disconnect multiplug from TP sensor.
24. Release injector harness multiplug from mounting bracket and disconnect from engine harness.

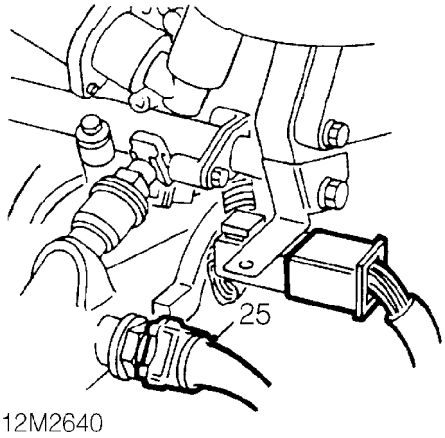

25. Disconnect multiplug from IAT sensor.

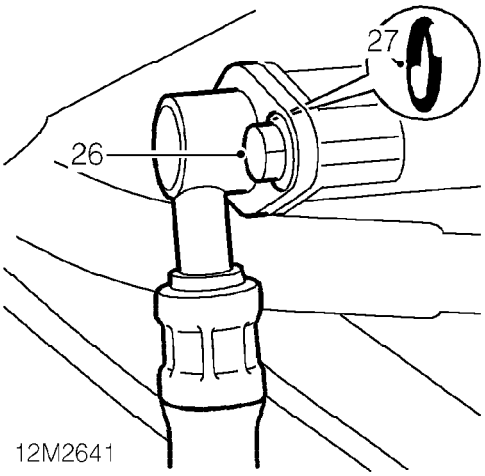

26. Remove 2 bolts securing fuel feed pipe to fuel rail.
27. Release feed pipe from fuel rail and remove and discard ’O’ ring.

CAUTION: Plug the connections.

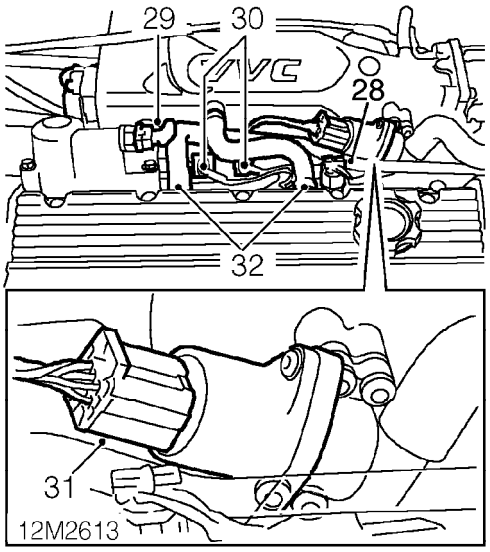

28. Disconnect multiplug from CMP sensor.
29. Disconnect multiplug from oil temperature sensor.
30. Disconnect 2 multiplugs from hydraulic control solenoids.
31. Disconnect multiplug from IACV.
32. Release 2 clips and disconnect 2 breather hoses from camshaft cover.

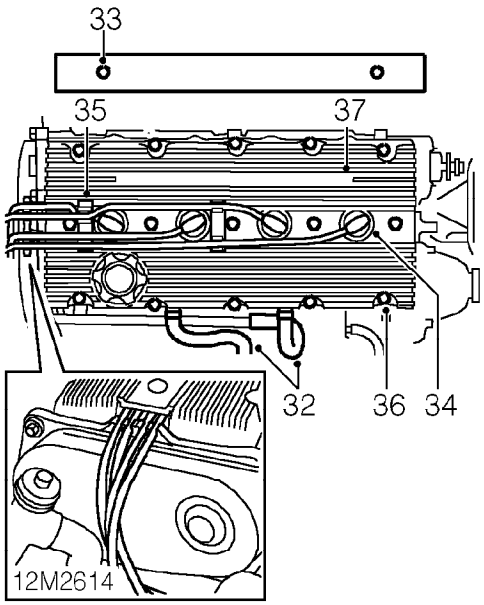

33. Remove 2 screws securing spark plug cover and remove cover.
34. Disconnect 4 plug tubes from spark plugs.
35. Lift clip plate and grommet and position h.t. leads aside.
36. Progressively loosen then remove 15 bolts from camshaft cover.
37. Remove camshaft cover assembly.

NOTE: The gasket is reusable and should remain attached to the camshaft cover unless it is to be renewed.

38. Check condition of sealing path is complete and attached to the gasket.
39. Remove gasket from camshaft cover only if sealing path is damaged or detached from gasket.

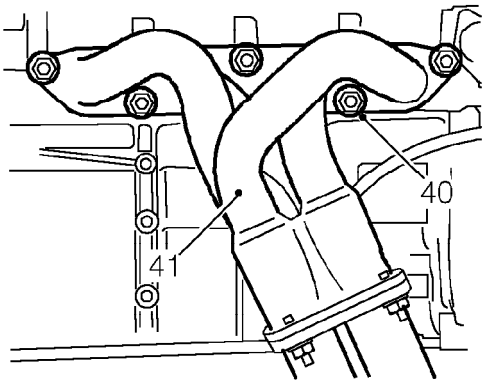

40. Remove 5 flange nuts securing exhaust manifold to cylinder head.
41. Position manifold aside, remove gasket and discard.
42. Loosen clips and disconnect 2 coolant hoses from coolant outlet elbow.
43. Disconnect 2 multiplugs from coolant outlet elbow.

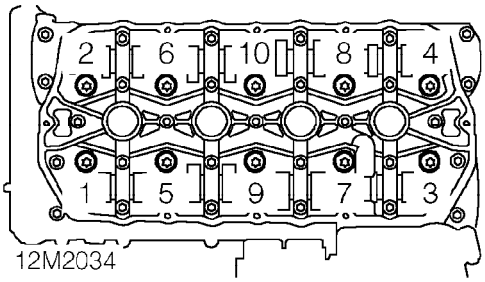

44. Loosen 10 cylinder head to oil rail bolts in sequence shown.
45. Remove bolts and store in fitted order.
46. Using assistance, remove cylinder head from cylinder block.

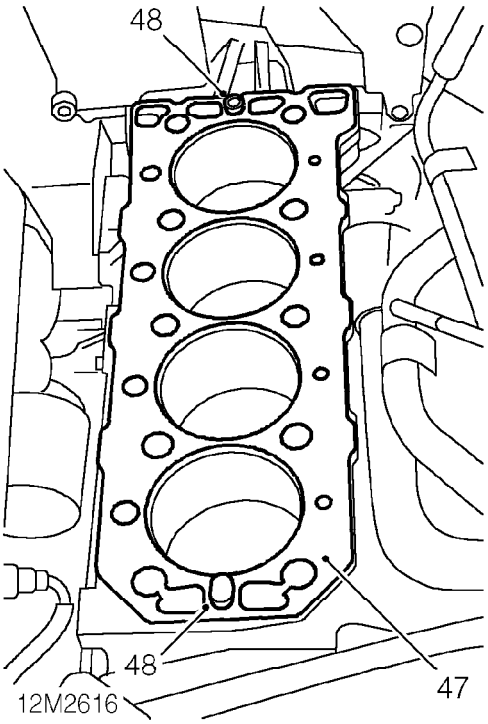

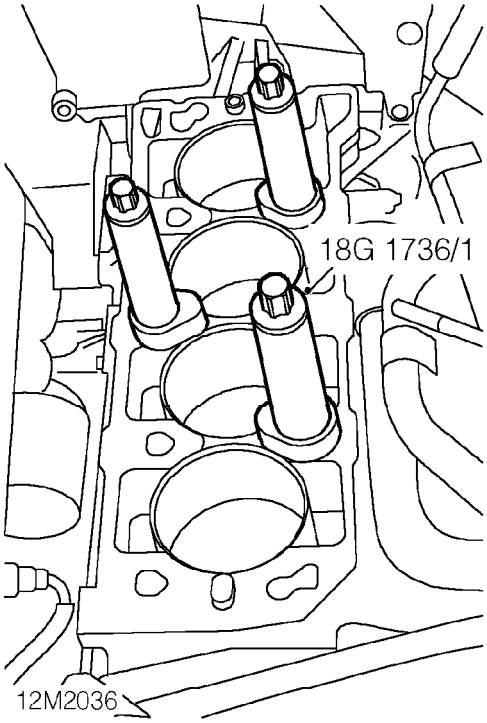

47. Remove and discard cylinder head gasket from cylinder block.

48. Remove 2 location dowels from cylinder block.

49. Fit cylinder liner clamps **18G 1736/1** to cylinder block and secure using cylinder head bolts.

CAUTION: Do not rotate crankshaft with cylinder head removed.

Refit

1. Remove bolts securing cylinder liner clamps to cylinder block and clamps.
2. Clean joint surfaces on cylinder head and block.
   Clean oil and coolant passages.
   Clean exhaust manifold and cylinder head joint surfaces.
   If necessary, de-carbonise piston crowns and cylinder head.
3. Wash cylinder head bolts and wipe dry.
   Apply a light film of oil to bolt threads and under side of bolt heads.
4. Clean location dowels and fit to cylinder block.
5. Fit NEW cylinder head gasket, dry, to cylinder block.
6. Using assistance, fit cylinder head onto cylinder block and carefully locate dowels.
7. Carefully enter cylinder head bolts, **DO NOT DROP.** Screw bolts into place by hand.

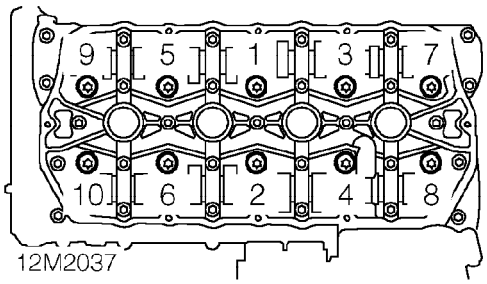

8. Working in the sequence shown, progressively tighten the cylinder head bolts using the following procedure:
   i. All bolts to 20 Nm. Use a felt tip pen and mark position of radial mark on each bolt head.
   ii. Turn all bolts through 180°.
   iii. Turn all bolts through another 180° and align mark.

CAUTION: If bolt is overtightened, back off 90° and realign radial marks.

9. Connect multiplugs to coolant outlet elbow.
10. Fit coolant hoses to outlet elbow and secure with clips.
11. Fit NEW exhaust manifold gasket to cylinder head.

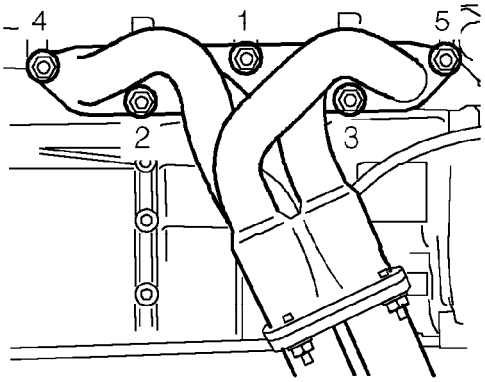

12. Position manifold and working in the sequence shown, tighten nuts to 45 Nm.
13. Clean mating surfaces and inside of camshaft cover. If necessary, wash oil separator elements in solvent and blow dry.
14. Fit NEW camshaft cover gasket to camshaft cover if required with 'TOP' mark towards the inlet manifold.
15. Fit camshaft cover onto camshaft carrier.

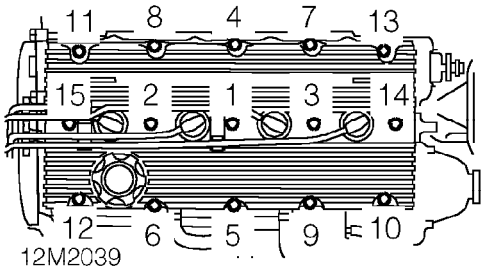

16. Tighten camshaft cover bolts to 9 Nm in the sequence illustrated.
17. Fit clip plate and grommet and press plug tubes onto spark plugs.
18. Fit spark plug cover to camshaft cover and secure screws.
19. Position inlet manifold support stay, fit and tighten bolt to 25 Nm.

20. Position breather hoses to camshaft cover and secure with clips.
21. Connect multiplugs to hydraulic control solenoids.
22. Connect multiplug to CMP sensor.
23. Connect multiplug to oil temperature sensor.
24. Connect multiplug to IACV.
25. Connect injector harness multiplug and secure to mounting bracket.
26. Connect multiplug to TP sensor.
27. Connect multiplug to IAT sensor.
28. Connect multiplug to MAP sensor.
29. Lubricate new 'O' ring with silicone grease and fit to fuel feed pipe.
30. Connect feed pipe to fuel rail and tighten bolts to 5 Nm.
31. Connect air intake pipe to throttle body and secure with clip.
32. Connect return pipe to fuel rail and secure with clip.
33. Secure return pipe to clips on underside of inlet manifold.
34. Fit camshaft gear rear cover and tighten bolts to 9 Nm.
35. Clean mating surfaces of camshaft and gears.
36. Fit gears to camshafts.
37. Using tool **12-182** to restrain gears, fit bolts and washers and tighten to 65 Nm.
38. Check timing of gears and adjust if necessary.
39. Fit tool **18G 1570** to gears.
40. Fit new camshaft timing belt. ***See this section.***
41. Connect brake servo vacuum hose to inlet manifold.
42. Connect evaporative emission canister hose to inlet manifold and secure with clip.
43. Fit coolant hose to inlet manifold and secure with clip.
44. Connect throttle cable to throttle cam.
45. Connect throttle cable adjustment nut to abutment bracket.
46. Adjust throttle cable. ***See ENGINE MANAGEMENT SYSTEM - MEMS, Adjustments.***
47. Refill engine cooling system. ***See COOLING SYSTEM - 'K' SERIES, Adjustments.***

CYLINDER HEAD GASKET - MODELS WITH AIR CONDITIONING

Service repair no - 12.29.02.20

Remove

1. Disconnect battery earth lead.
2. Drain cooling system. ***See COOLING SYSTEM - 'K' SERIES, Adjustments.***
3. Remove and discard camshaft timing belt. ***See this section.***
4. Check correct alignment of timing marks on crankshaft and camshaft gears.

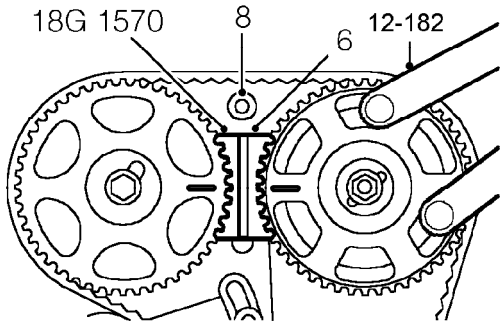

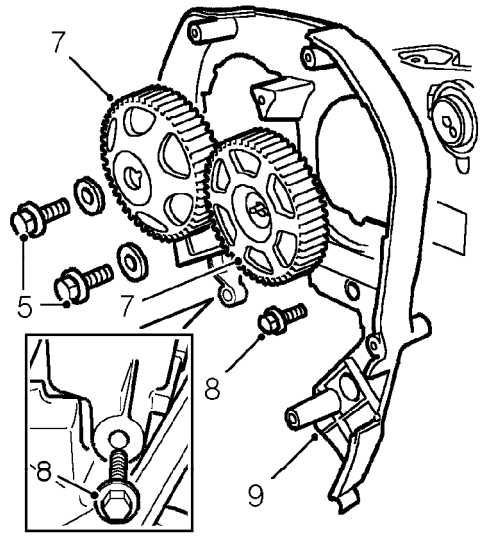

12M 2606A

5. Restrain camshaft gears using tool **12-182** and remove bolts and washers securing gears to camshafts.
6. Remove tool **18G 1570** from camshaft gears.
7. Mark camshaft gears for fitting reference and remove 2 camshaft gears.
8. Remove 3 bolts from upper part of timing belt rear cover.
9. Remove rear cover.

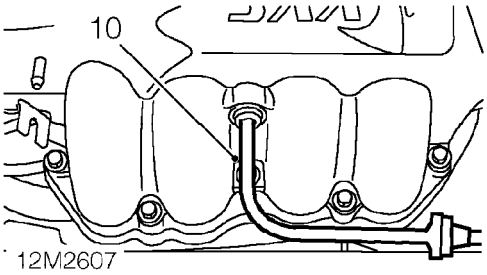

10. Release brake servo vacuum hose from inlet manifold.

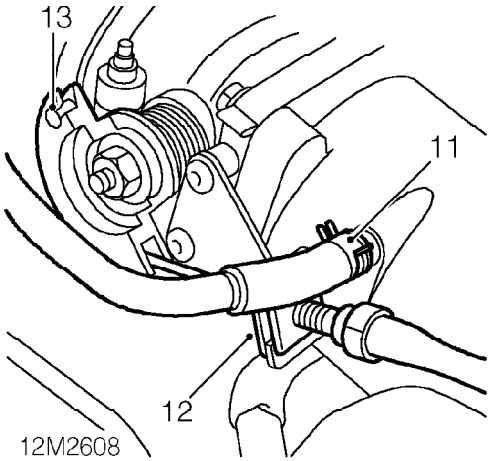

11. Release clip and remove evaporative emission canister hose from inlet manifold.
12. Release throttle cable adjustment nut from abutment bracket.
13. Release throttle cable from throttle cam.

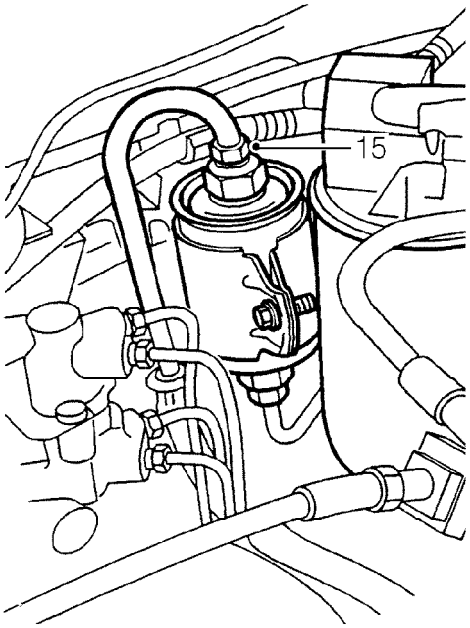

14. Position absorbent cloth around fuel filter outlet union.
15. Loosen fuel filter outlet union to relieve fuel pressure.

CAUTION: To prevent damage to fuel system pipes or components use two spanners when loosening or tightening unions.

16. Tighten outlet union to 28 Nm.

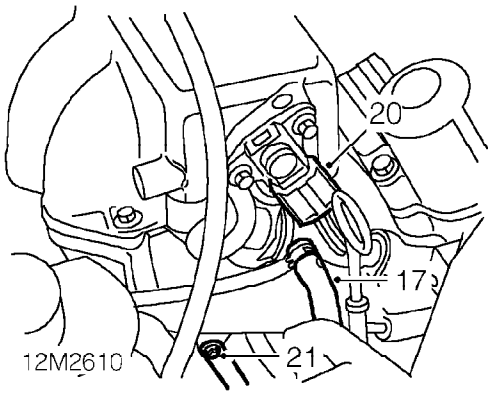

17. Release clip and release fuel return hose from fuel rail.
18. Release fuel return hose from 2 clips, underside of inlet manifold.
19. Release clip and disconnect coolant hose from inlet manifold.
20. Disconnect multiplug from MAP sensor.
21. Remove bolt securing inlet manifold to support stay.

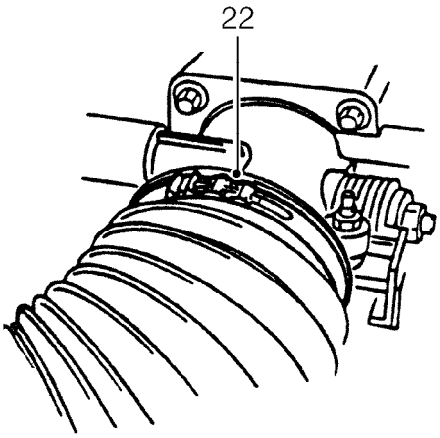

22. Remove clip and disconnect air intake pipe from throttle body.

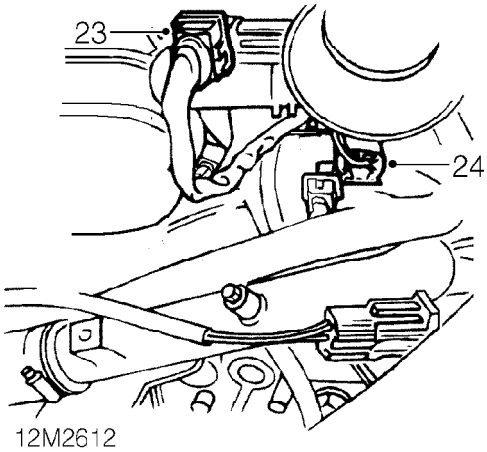

23. Disconnect multiplug from TP sensor.
24. Release injector harness multiplug from mounting bracket and disconnect from engine harness.

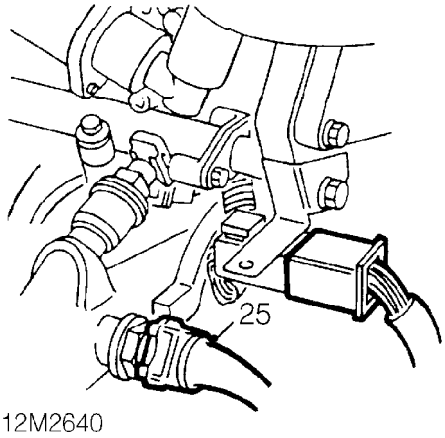

25. Disconnect multiplug from IAT sensor.

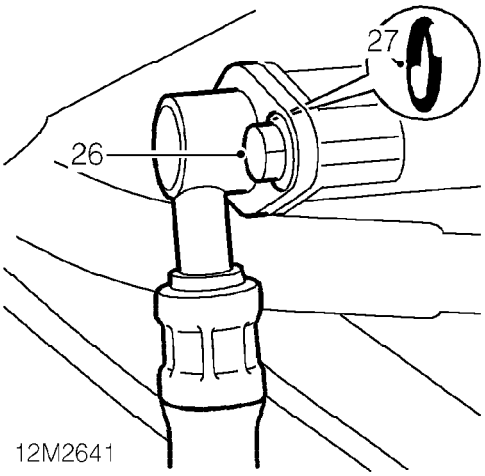

26. Remove 2 bolts securing fuel feed pipe to fuel rail.
27. Release feed pipe from fuel rail and remove and discard 'O' ring.

CAUTION: Plug the connections.

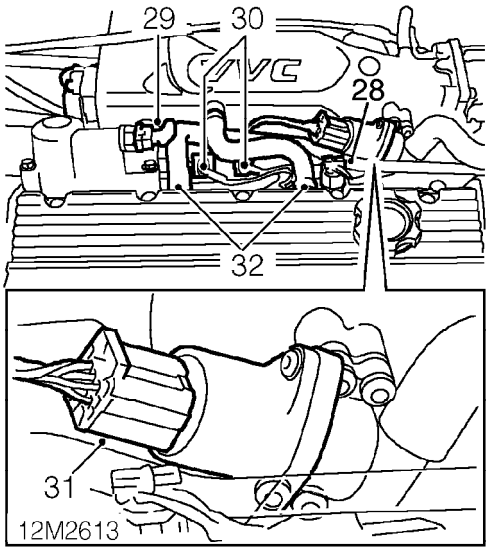

28. Disconnect multiplug from CMP sensor.
29. Disconnect multiplug from oil temperature sensor.
30. Disconnect 2 multiplugs from hydraulic control solenoids.
31. Disconnect multiplug from IACV.
32. Release 2 clips and disconnect 2 breather hoses from camshaft cover.

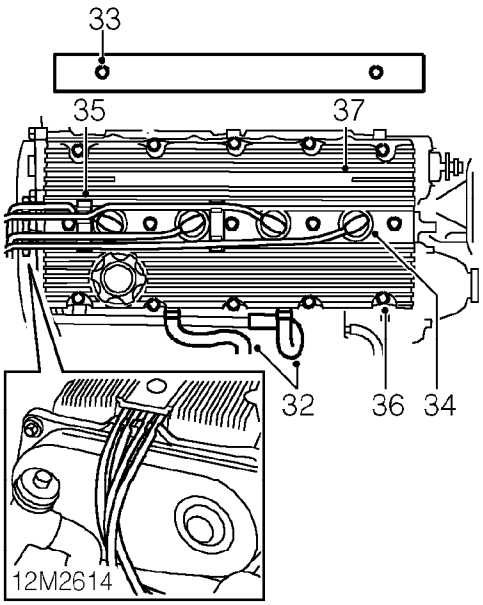

33. Remove 2 screws securing spark plug cover and remove cover.
34. Disconnect 4 plug tubes from spark plugs.
35. Lift clip plate and grommet and position h.t. leads aside.
36. Progressively loosen then remove 15 bolts from camshaft cover.
37. Remove camshaft cover assembly.

NOTE: The gasket is reusable and should remain attached to the camshaft cover unless it is to be renewed.

38. Check condition of sealing path is complete and attached to the gasket.
39. Remove gasket from camshaft cover only if sealing path is damaged or detached from gasket.

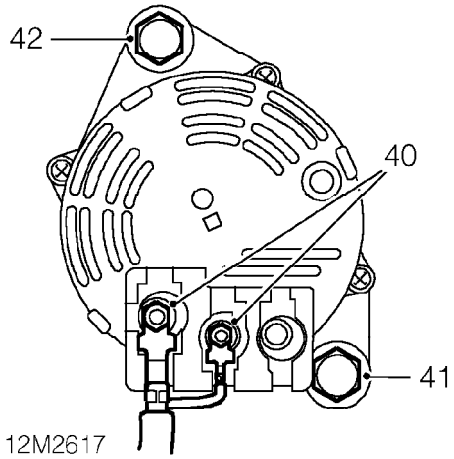

40. Remove 2 nuts securing leads to alternator and position aside.
41. Loosen alternator lower mounting bolt.
42. Remove alternator top mounting bolt and swing alternator aside.

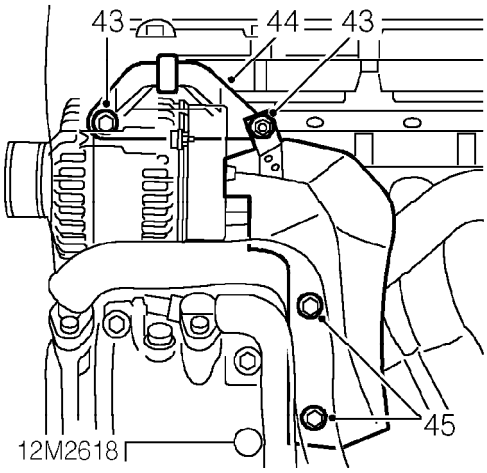

43. Remove nut and bolt securing alternator top mounting bracket.
44. Remove alternator top mounting bracket.
45. Remove 2 bolts securing heat shield to cylinder block and remove heat shield.

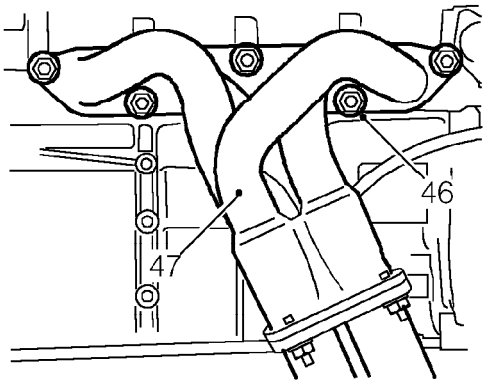

12M2619

46. Remove 5 flange nuts securing exhaust manifold to cylinder head.
47. Position manifold aside, remove gasket and discard.
48. Loosen clips and disconnect 2 coolant hoses from coolant outlet elbow.
49. Disconnect 2 multiplugs from coolant outlet elbow.

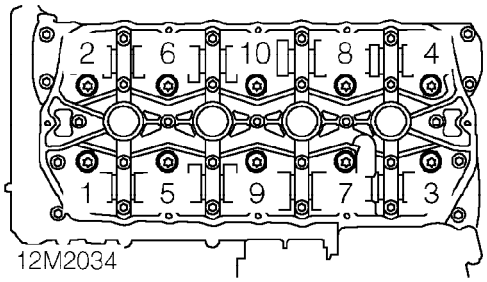

12M2034

50. Loosen 10 cylinder head to oil rail bolts in sequence shown.
51. Remove bolts and store in fitted order.
52. Using assistance, remove cylinder head from cylinder block.

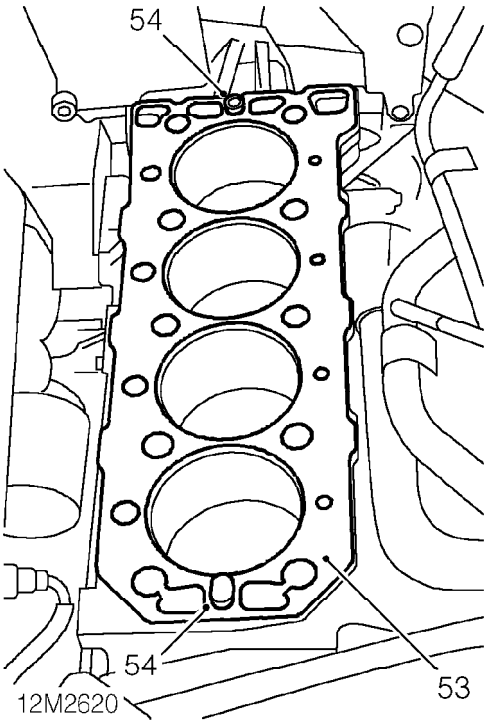

12M2620

53. Remove and discard cylinder head gasket from cylinder block.
54. Remove 2 location dowels from cylinder block.

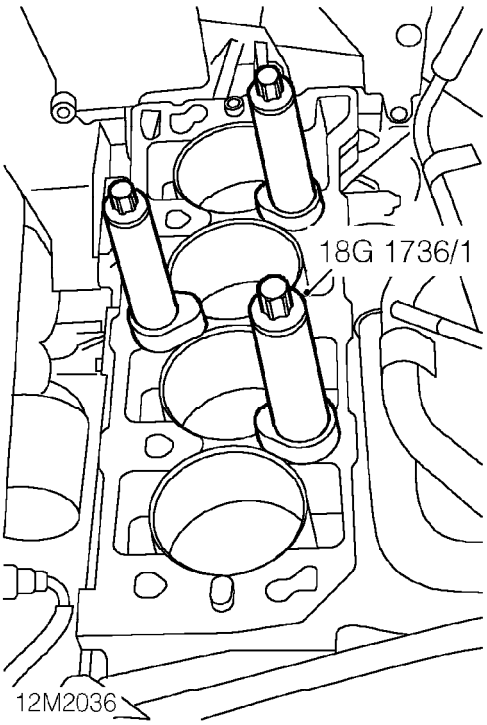

55. Fit cylinder liner clamps **18G 1736/1** to cylinder block and secure with cylinder head bolts.

CAUTION: Do not rotate crankshaft with cylinder head removed.

Refit

1. Remove bolts securing cylinder liner clamps to cylinder block and remove clamps.
2. Clean joint surfaces on cylinder head and block.
   Clean oil and coolant passages.
   Clean exhaust manifold and cylinder head joint surfaces.
   If necessary, de-carbonise piston crowns and cylinder head.
3. Wash cylinder head bolts and wipe dry.
   Apply a light film of oil to bolt threads and underside of bolt heads.
4. Clean location dowels and fit to cylinder block.
5. Fit NEW cylinder head gasket, dry, to cylinder block.
6. Using assistance, fit cylinder head onto cylinder block and carefully locate on dowels.
7. Carefully enter cylinder head bolts, **DO NOT DROP.** Screw bolts into place by hand.

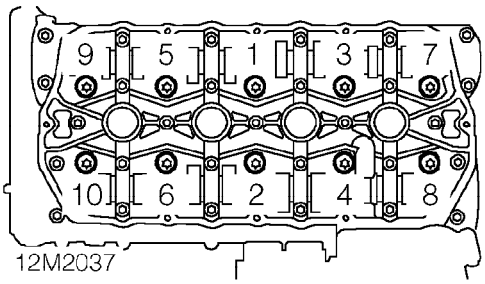

8. Working in the sequence shown, progressively tighten the cylinder head bolts using the following procedure:
   i.All bolts to 20 Nm. Use a felt tip pen and mark position of radial mark on each bolt head.
   ii. Turn all bolts through 180°.
   iii. Turn all bolts through another 180° and align mark.

CAUTION: If bolt is overtightened, back off 90°then realign radial marks.

9. Connect multiplugs to coolant outlet elbow.
10. Fit coolant hoses to outlet elbow and secure with clips.
11. Fit NEW exhaust manifold gasket to cylinder head.

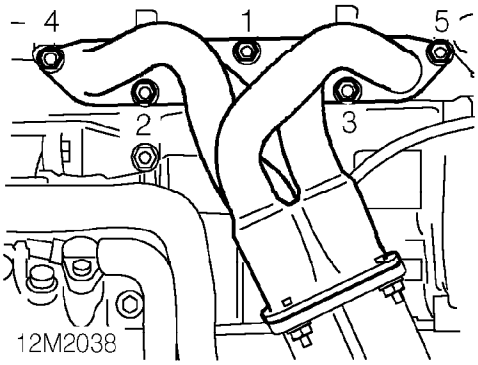

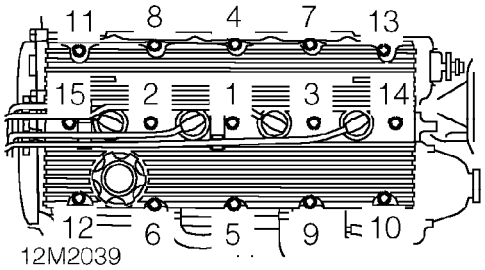

12. Position manifold and working in the sequence shown, tighten nuts to 45 Nm.
13. Fit exhaust heat shield and tighten bolts to 10 Nm.
14. Clean mating surfaces and inside of camshaft cover. If necessary, wash oil separator elements in solvent and blow dry.
15. Fit NEW camshaft cover gasket to camshaft cover if required with 'TOP' mark towards the inlet manifold.
16. Fit camshaft cover onto camshaft carrier.
17. Tighten camshaft cover bolts to 9 Nm in the sequence illustrated.
18. Fit clip plate and grommet and press plug tubes onto spark plugs.
19. Fit spark plug cover to camshaft cover and secure screws.
20. Position inlet manifold support stay, fit and tighten bolt to 25 Nm.
21. Connect breather hoses to camshaft cover and secure with clips.
22. Connect multiplugs to hydraulic control solenoids.
23. Connect multiplug to CMP sensor.
24. Connect multiplug to oil temperature sensor.
25. Connect multiplug to IACV.
26. Connect injector harness multiplug to engine harness and secure to mounting bracket.
27. Connect multiplug to TP sensor.
28. Connect multiplug to IAT sensor.
29. Connect MAP sensor multiplug.
30. Lubricate new 'O' ring with silicone grease and fit to fuel feed pipe.
31. Connect feed pipe to fuel rail and tighten bolts to 5 Nm.

32. Connect air intake pipe to throttle body and secure with clip.
33. Connect return pipe to fuel rail and secure with clip.
34. Secure return pipe to clips on underside of inlet manifold.
35. Fit camshaft gear rear cover and tighten bolts to 9 Nm.
36. Clean mating surfaces of camshaft and gears.
37. Fit gears to camshafts.
38. Using tool **12-182** to restrain gears, fit bolts and washers and tighten to 65 Nm.
39. Check timing of gears and adjust if necessary.
40. Fit tool **18G 1570** to gears.
41. Fit new camshaft timing belt. ***See this section.***
42. Connect brake servo vacuum hose to inlet manifold.
43. Connect evaporative emission canister hose to inlet manifold and secure with clip.
44. Fit coolant hose to inlet manifold and secure with clip.
45. Connect throttle cable to throttle cam.
46. Connect throttle cable adjustment nut to abutment bracket.
47. Fit alternator top mounting bracket to cylinder head. Fit and tighten nut and bolt to 25 Nm.
48. Swing alternator into position and tighten top mounting bolt to 25 Nm.
49. Tighten alternator lower mounting bolt to 45 Nm.
50. Adjust throttle cable. ***See ENGINE MANAGEMENT SYSTEM - MEMS, Adjustments.***
51. Refill cooling system. ***See COOLING SYSTEM - 'K' SERIES, Adjustments.***

CAMSHAFT COVER GASKET

Service repair no - 12.29.40

Remove

1. Disconnect battery earth lead.

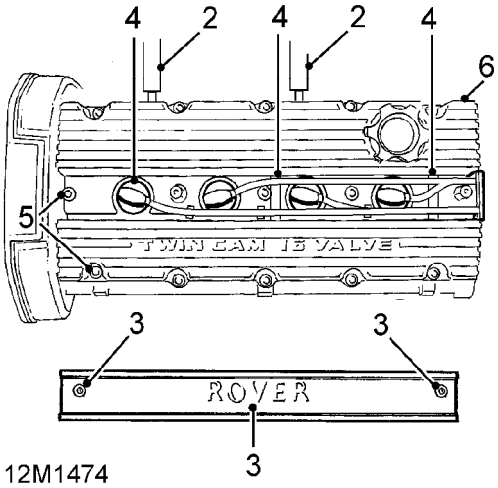

2. Release 2 clips and disconnect 2 breather hoses from camshaft cover.
3. Remove 2 screws securing spark plug cover and remove cover.
4. Disconnect h.t. leads from spark plugs, release mounting rubbers and place leads aside.
5. Progressively loosen and remove 15 bolts securing camshaft cover.
6. Remove camshaft cover.

NOTE: The gasket is re-usable and should remain attached to camshaft cover.

7. Check condition of sealing path. It should be complete and attached to gasket. Remove gasket from camshaft cover only if sealing path is damaged or detached from gasket.

Refit

1. Clean mating surfaces of camshaft cover and carrier.
2. Clean inside of camshaft cover. If necessary, wash oil separator elements in solvent and blow dry.

CAUTION: If camshaft cover gasket is to be renewed, fit new gasket with 'EXHAUST MAN SIDE' mark towards exhaust manifold

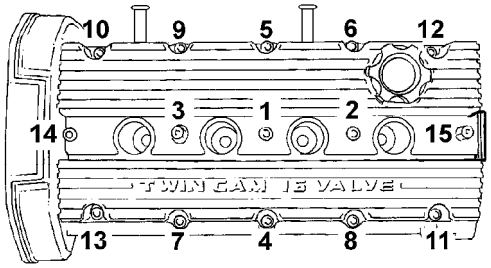

12M1475

3. Fit camshaft cover to camshaft carrier. Fit bolts and working in sequence illustrated, tighten progressively to 10 Nm.
4. Connect h.t. leads to spark plugs and secure mounting rubbers in camshaft cover.
5. Fit spark plug cover, fit screws and tighten to 8 Nm.
6. Connect breather hoses and secure with clips.
7. Connect battery earth lead.

ENGINE AND GEARBOX - MODELS WITH AIR CONDITIONING

Service repair no - 12.37.01.20

Remove

1. Disconnect battery earth lead.
2. Recover refrigerant from air conditioning system. ***See AIR CONDITIONING, Adjustments.***
3. Drain engine oil. ***See MAINTENANCE.***
4. Fit new sealing washer to drain plug, fit drain plug and tighten to 42 Nm.
5. Drain cooling system. ***See COOLING SYSTEM - 'K' SERIES, Adjustments.***
6. Drain gearbox oil. ***See MANUAL GEARBOX - 'PG1', Repairs.***
7. Raise front of vehicle.

WARNING: Support on safety stands.

8. Remove air cleaner. ***See ENGINE MANAGEMENT SYSTEM - MEMS, Repairs.***
9. Remove ECM. ***See ENGINE MANAGEMENT SYSTEM - MEMS, Repairs.***
10. Remove engine management relay module. ***See ENGINE MANAGEMENT SYSTEM - MEMS, Repairs.***
11. Release ABS fuse holder from battery tray.

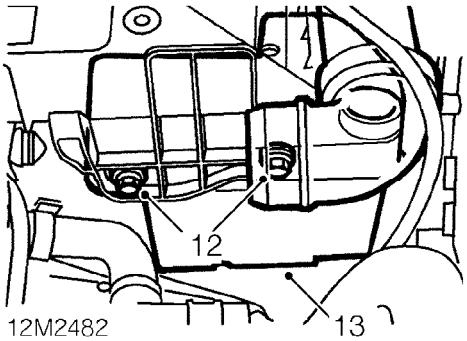

12M2482

12. Remove 2 bolts securing resonator to battery tray.
13. Remove resonator.

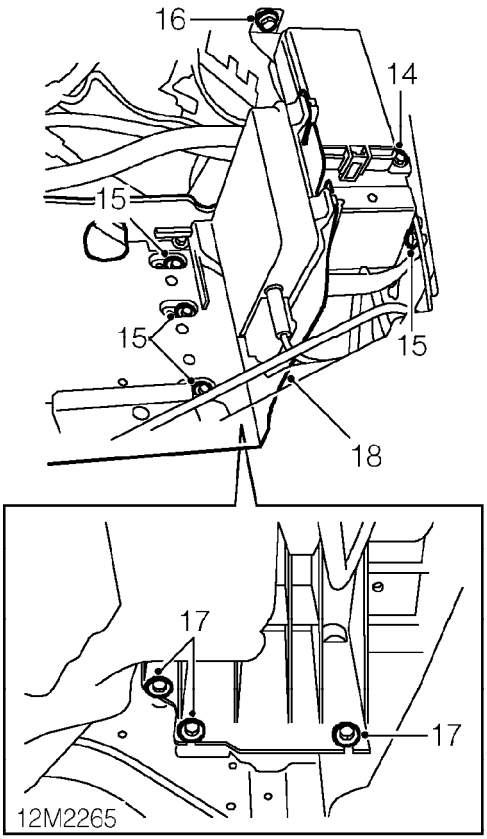

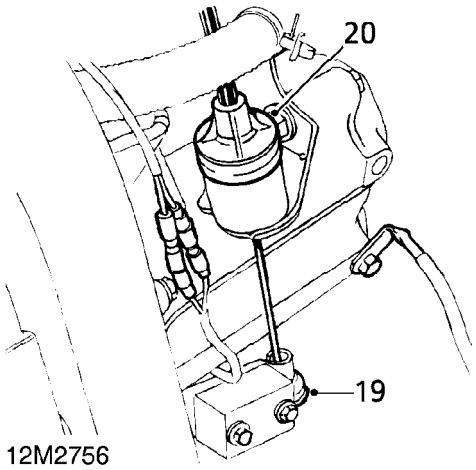

14. Remove bolt securing engine compartment fuse box to battery tray.
15. Remove 4 bolts securing battery tray to body.
16. Remove bolt securing engine compartment fuse box to body and position fuse box aside.
17. Loosen 3 bolts securing battery tray to body.
18. Remove battery tray from vehicle.

19. Disconnect clutch cable from clutch release lever.
20. Release clutch cable from abutment bracket on gearbox and position aside.
21. Release both drive shafts from gearbox as detailed in Differential oil seal. ***See MANUAL GEARBOX - 'PG1', Repairs.***

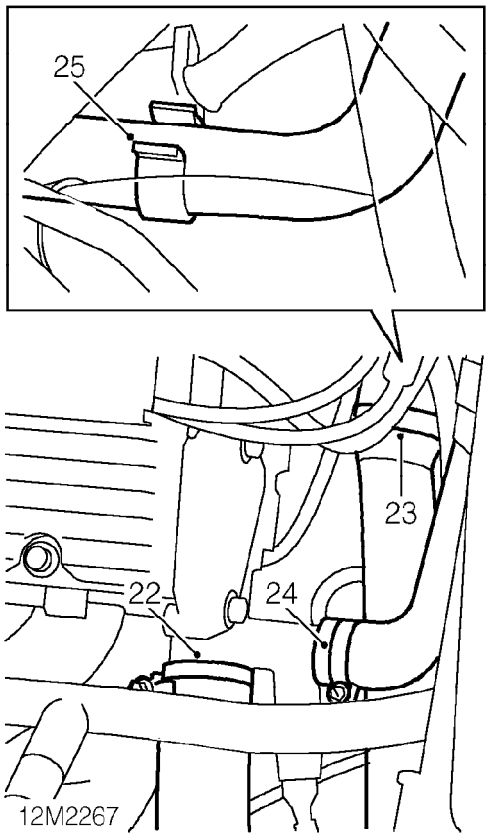

22. Loosen clip and disconnect radiator top hose from coolant outlet elbow.
23. Loosen clip and disconnect radiator bottom hose from coolant rail.
24. Loosen clip and disconnect heater hose from coolant outlet elbow.
25. Release heater hose from 2 clips on coolant rail and position aside.

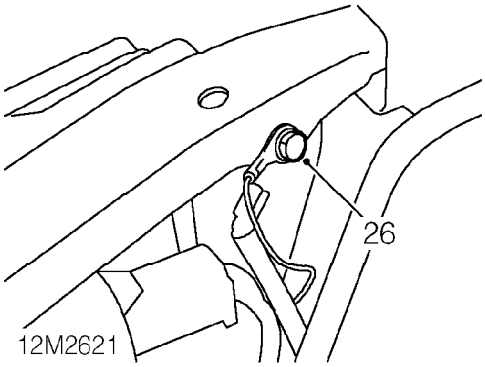

26. Remove bolt securing earth lead to bonnet locking platform.

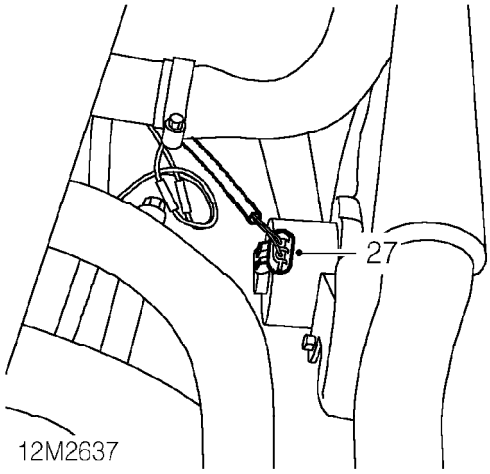

27. Disconnect multiplug from radiator cooling fan.

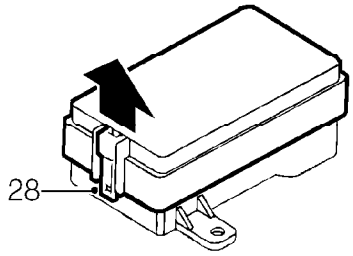

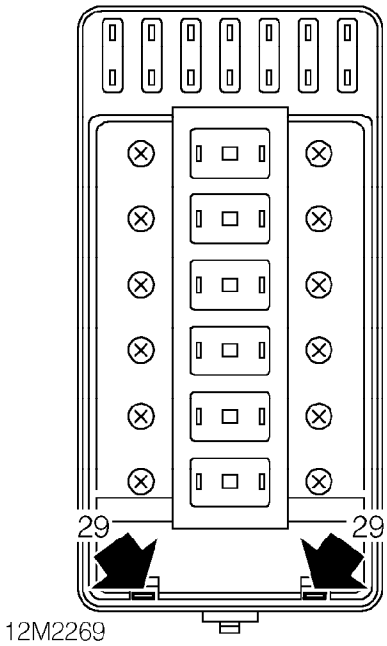

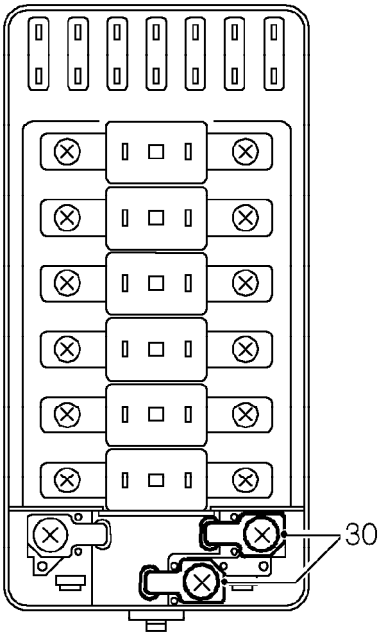

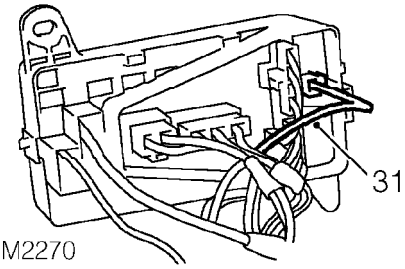

28. Release clip and remove fuse box cover.
29. Depress 2 clips and remove fuse box inner cover.
30. Remove screw securing positive lead to fuse box.
31. Disconnect multiplug from fuse box.

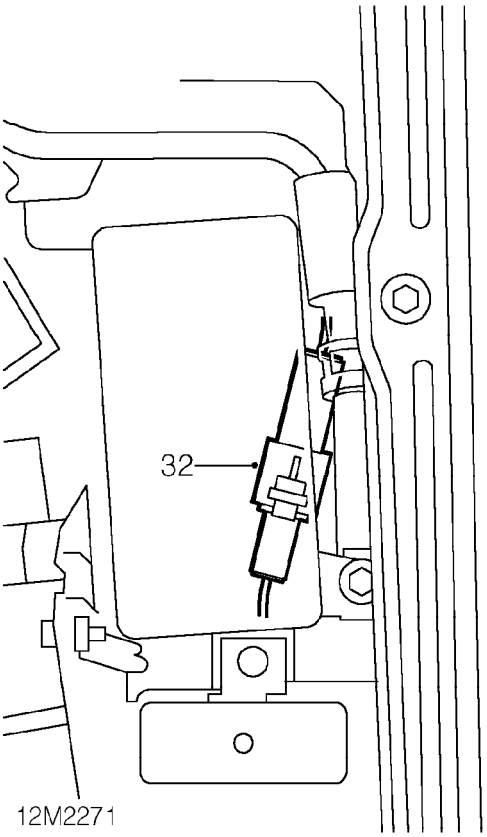

32. Disconnect engine harness to main harness multiplug.
33. Lay engine harness across engine to avoid being caught when the engine is removed.
34. Remove evaporative emission canister. ***See EMISSION CONTROL, Repairs.***
35. Remove exhaust front pipe. ***See MANIFOLD & EXHAUST SYSTEMS, Repairs.***
36. Position absorbent cloth around fuel filter outlet union.

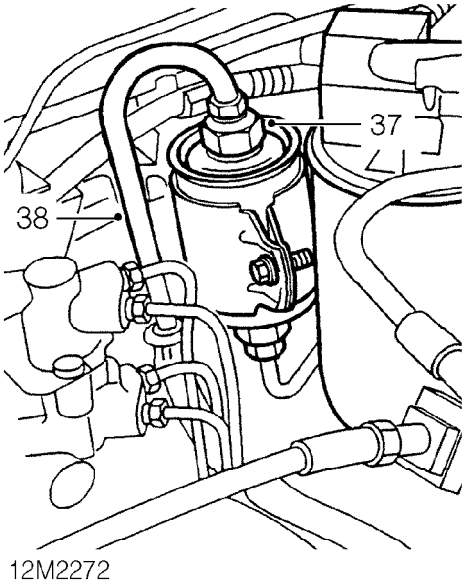

37. Loosen fuel filter outlet union to relieve fuel pressure.

CAUTION: To prevent damage to fuel system pipes and components use two spanners when loosening or tightening unions.

38. Disconnect fuel outlet pipe from fuel filter and position aside.

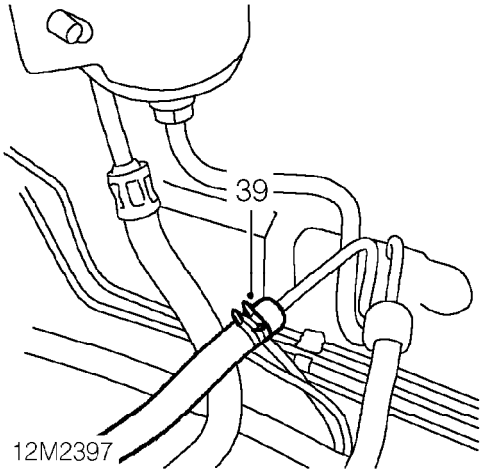

39. Release clip and disconnect hose from fuel return pipe.

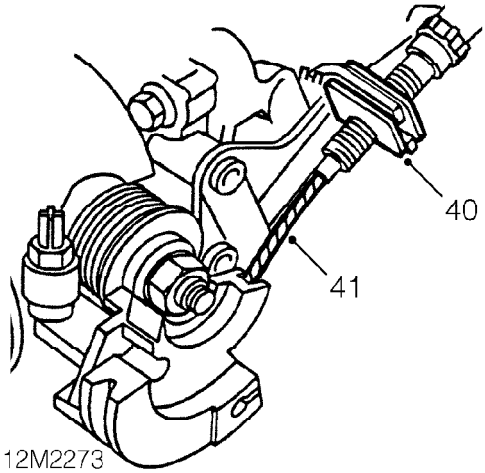

40. Release throttle cable adjusting nut from abutment bracket.
41. Disconnect throttle cable from throttle cam.

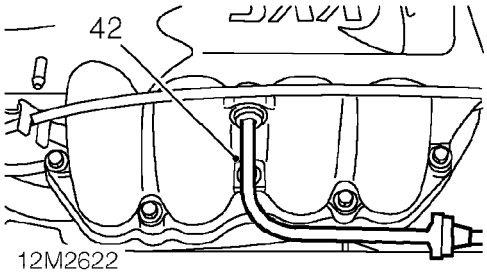

42. Depress plastic collar on quick release connector and disconnect brake servo vacuum pipe from inlet manifold.

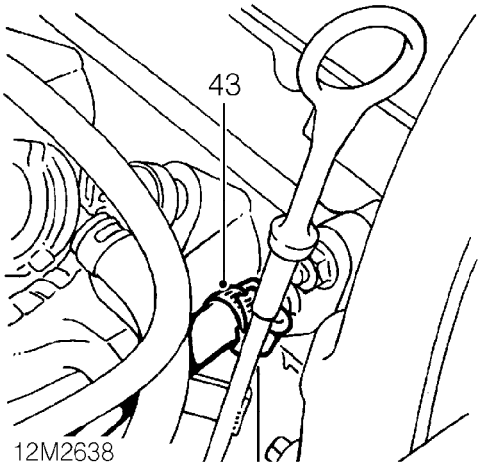

43. Release clip and disconnect expansion tank hose from inlet manifold.

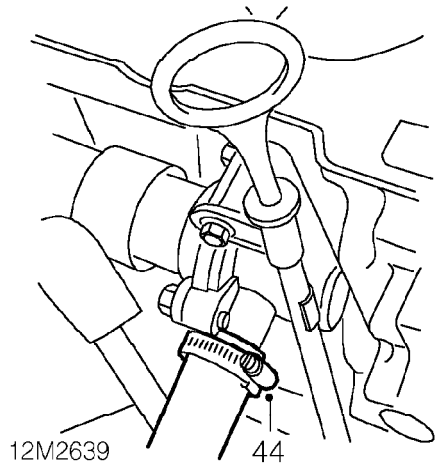

44. Loosen clip and disconnect coolant hose from thermostat housing.

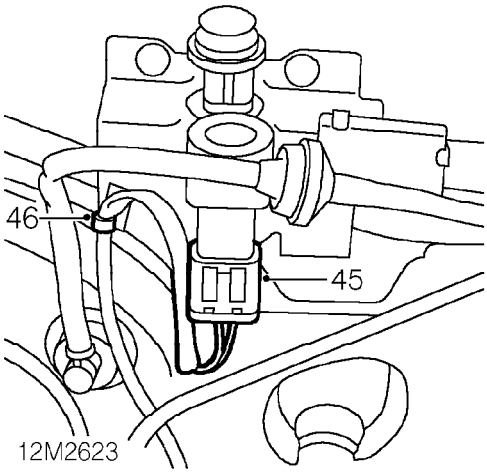

45. Disconnect multiplug from inertia switch.
46. Release clip securing inertia switch harness to mounting bracket.

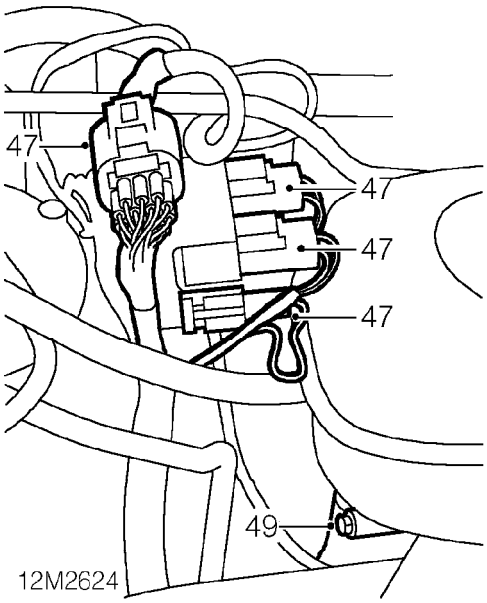

47. Release 4 multiplugs from mounting bracket on bulkhead.
48. Disconnect 4 engine multiplugs from main harness.
49. Loosen clip and disconnect coolant feed hose from coolant expansion tank.
50. Position container to catch fluid loss from power steering system.

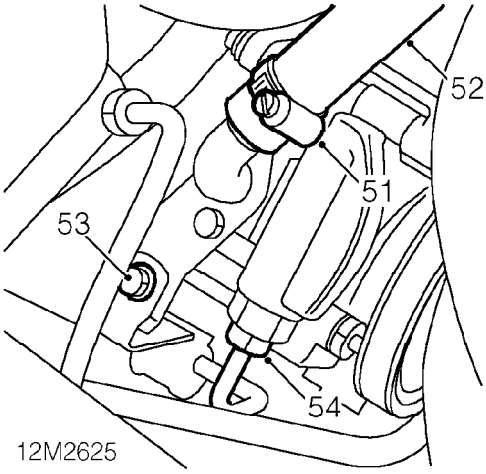

51. Loosen clip securing fluid inlet hose to power steering pump.
52. Disconnect fluid inlet hose from power steering pump.
53. Remove bolt securing fluid outlet hose clamp to bracket.
54. Loosen union and disconnect fluid outlet hose from power steering pump.

CAUTION: To prevent damage to pipes and components use two spanners when loosening or tightening unions.

55. Remove and discard 'O' ring from fluid outlet hose.
56. Plug hose and power steering pump connections to prevent excess fluid loss and the ingress of dirt into the system.

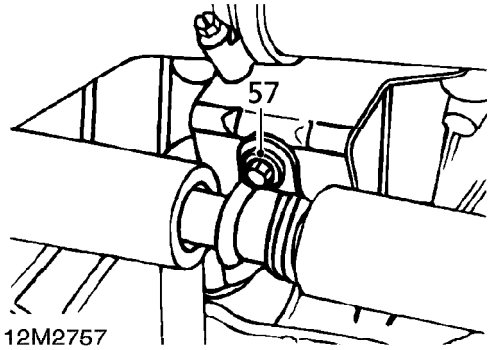

57. Remove bolt securing air conditioning pipe to bracket on flywheel housing.

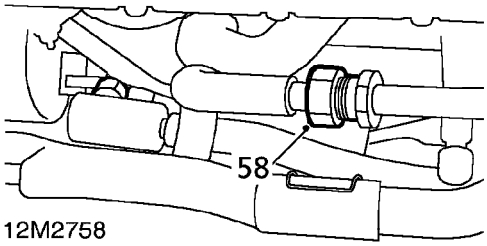

58. Loosen union and disconnect compressor pipe from evaporator pipe.

CAUTION: To prevent damage to air conditioning pipes and components, use two spanners when loosening or tightening unions.

59. Remove and discard 'O' ring from compressor pipe.
60. Position evaporator pipe aside.

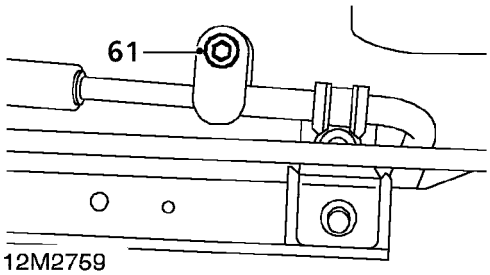

61. Remove bolt securing compressor pipe to condenser pipe.
62. Release compressor pipe from condenser pipe and discard 'O' ring.

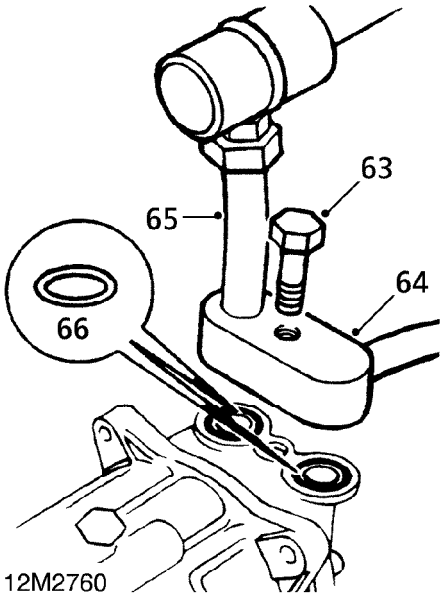

63. Remove bolt securing air conditioning pipe union to compressor.
64. Release air conditioning pipe union from compressor.
65. Remove air conditioning pipes.
66. Remove and discard 2 'O' ring seals from compressor.

CAUTION: Immediately cap all air conditioning pipes and compressor to prevent ingress of dirt and moisture into the system.

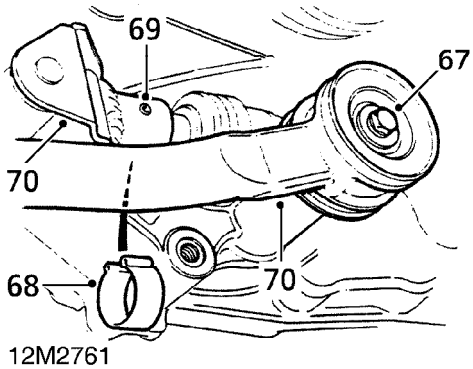

67. Remove bolt and disconnect gear change steady bar from gearbox and collect 2 washers.
68. Remove clip retaining selector rod roll pin.
69. Using a suitable punch, drive out roll pin securing selector rod to selector shaft.
70. Disconnect selector rod from selector shaft.
71. Tie selector shaft and steady bar aside.

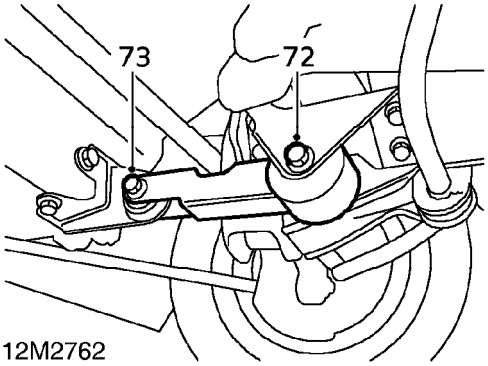

72. Loosen through bolt securing engine steady bar to subframe.
73. Remove through bolt securing engine steady bar to bracket on gearbox.

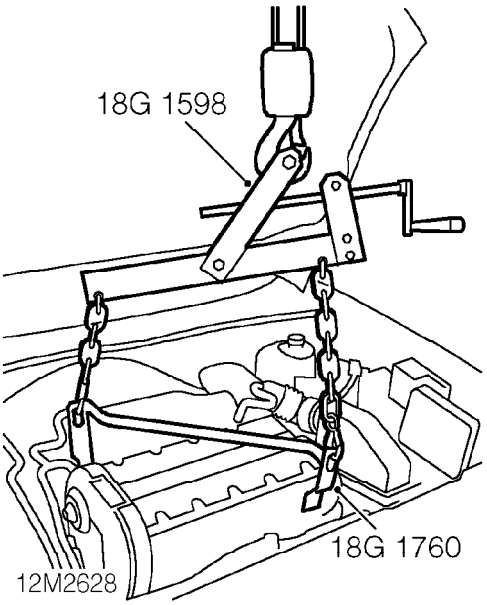

74. Fit engine lifting bracket **18G 1760** to cylinder head. Fit bolt and tighten to 9 Nm.
75. Connect adjustable lifting bracket tool **18G 1598** to engine lifting brackets.
76. Connect a hoist to lifting bracket tool **18G 1598** and raise hoist to take weight of engine without exerting load on engine mounting bolts.
77. Remove engine RH mounting. ***See this section.***
78. Remove 2 bolts securing engine LH mounting to gearbox mounting bracket.

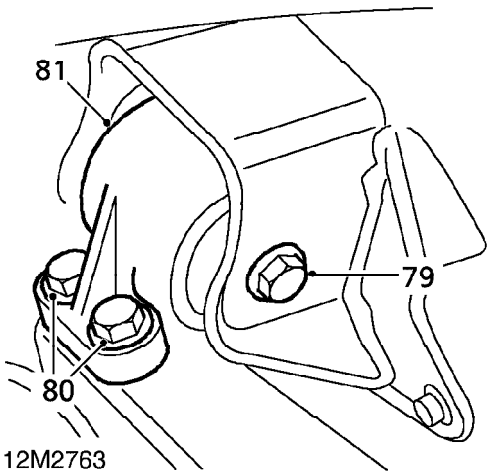

79. Remove bolt securing engine LH mounting to body.
80. Remove 2 bolts securing engine LH mounting to gearbox bracket.
81. Remove engine LH mounting.
82. Using adjustable lifting bracket tool **18G 1598,** tilt engine with the gearbox as low as possible.
83. Using assistance, manoeuvre engine and gearbox from vehicle.

CAUTION: Take care not to damage the ABS modulator or brake pipes when removing the engine.

84. Lower engine and gearbox assembly and disconnect hoist from adjustable lifting bracket.

Refit

1. Connect hoist to adjustable lifting bracket tool **18G 1598.**
2. Using assistance, raise engine and manoeuvre into position in vehicle.
3. Adjust lifting bracket tool so engine is horizontal in engine compartment.
4. Position engine LH mounting to gearbox bracket, fit bolts and tighten to 100 Nm.
5. Align engine LH mounting to body bracket and tighten to 85 Nm.
6. Fit engine RH mounting. ***See this section.***
7. Lower hoist and disconnect adjustable lifting bracket tool **18G 1598** from engine lifting bracket.
8. Remove bolt securing engine lifting bracket tool **18G 1760** to cylinder head and remove engine lifting bracket.
9. Connect engine steady bar to bracket on gearbox, fit through bolt and tighten to 80 Nm.
10. Tighten through bolt, engine steady bar to subframe, to 80 Nm.
11. Connect selector rod to shaft and align holes.
12. Fit new roll pin securing selector rod to shaft and fit roll pin retaining clip.
13. Fit washers to gear change steady bar and connect to gearbox.
14. Fit bolt securing gear change steady bar to gearbox and tighten to 60 Nm.
15. Remove caps from air conditioning pipes and compressor.
16. Clean mating faces of air conditioning pipe union and compressor.
17. Lubricate 2 new 'O' ring seals with refrigerant oil and fit to compressor.
18. Position air conditioning pipe union to compressor, fit bolt and tighten to 35 Nm.
19. Clean condenser pipe and compressor pipe unions.
20. Lubricate new 'O' ring seal with refrigerant oil and fit to condenser pipe.
21. Connect condenser pipe to compressor pipe, fit bolt and tighten to 6 Nm.
22. Clean compressor pipe and evaporator pipe unions.
23. Lubricate new 'O' ring seal with refrigerant oil and fit to compressor pipe.
24. Connect evaporator pipe to compressor pipe and tighten union to 45 Nm.

CAUTION: To prevent damage to air conditioning pipes and components, use two spanners when loosening or tightening unions.

25. Align air conditioning pipe to bracket on flywheel housing, fit bolt and tighten to 6 Nm.
26. Remove plugs from power steering pump and hose connections.
27. Lubricate new 'O' ring with clean power steering fluid and fit to fluid outlet hose.
28. Connect fluid outlet hose to power steering pump and tighten union to 55 Nm.

CAUTION: To prevent damage to components, use two spanners when loosening or tightening unions.

29. Align fluid outlet hose clamp to bracket and secure with bolt.
30. Connect fluid inlet hose to power steering pump and tighten clip.
31. Connect coolant feed hose to expansion tank and tighten clip.
32. Connect 4 engine harness multiplugs to main harness and secure to bracket.
33. Connect multiplug to inertia switch and secure harness clip to mounting bracket.
34. Connect coolant hose to thermostat housing and tighten clip.
35. Connect expansion tank hose to inlet manifold and tighten clip.
36. Connect throttle cable to throttle cam.
37. Locate throttle cable adjusting nut in abutment bracket.

38. Connect brake servo vacuum pipe to inlet manifold.
39. Connect hose to fuel return pipe and secure with clip.
40. Clean union of fuel outlet pipe and fuel filter.
41. Connect fuel outlet pipe to fuel filter and tighten union to 28 Nm.

CAUTION: To prevent damage to fuel system pipes and components use two spanners when loosening or tightening unions.

42. Fit exhaust front pipe. ***See MANIFOLD & EXHAUST SYSTEMS, Repairs.***
43. Fit evaporative emission canister. ***See EMISSION CONTROL, Repairs.***
44. Connect engine harness to main harness multiplugs.
45. Connect multiplug to fuse box.
46. Fit positive leads to fuse box and secure with screws.
47. Fit fuse box inner cover.
48. Fit fuse box cover.
49. Connect multiplug to radiator cooling fan.
50. Position earth lead to bonnet locking platform, fit bolt and tighten to 9 Nm.
51. Connect heater hose to coolant outlet elbow and tighten clip.
52. Secure heater hose to clip on coolant rail.
53. Connect radiator bottom hose to coolant rail and tighten clip.
54. Connect radiator top hose to coolant outlet elbow and tighten clip.
55. Connect drive shafts to gearbox as detailed in Differential oil seal. ***See MANUAL GEARBOX - 'PG1', Repairs.*** **differential oil seal.**
56. Feed clutch cable through abutment bracket and connect to clutch release lever.
57. Position battery tray in vehicle.
58. Tighten 3 bolts, battery tray to body, to 10 Nm.
59. Position engine compartment fuse box to body, fit bolt and tighten to 10 Nm.
60. Fit 4 bolts securing battery tray to body and tighten to 10 Nm.
61. Fit and tighten bolt securing engine compartment fuse box to battery tray.
62. Fit resonator to air intake pipe.
63. Fit and tighten bolts securing resonator to battery tray.
64. Secure ABS fuse holder to battery tray.
65. Fit engine management relay module. ***See ENGINE MANAGEMENT SYSTEM - MEMS, Repairs.***
66. Fit ECM. ***See ENGINE MANAGEMENT SYSTEM - MEMS, Repairs.***
67. Fit air cleaner. ***See ENGINE MANAGEMENT SYSTEM - MEMS, Repairs.***
68. Remove stand(s) and lower vehicle.
69. Refill gearbox with oil. ***See MANUAL GEARBOX - 'PG1', Adjustments.***
70. Refill cooling system. ***See COOLING SYSTEM - 'K' SERIES, Adjustments.***
71. Refill engine with oil. ***See MAINTENANCE.***
72. Bleed power steering system. ***See STEERING, Adjustments.***
73. Adjust throttle cable. ***See ENGINE MANAGEMENT SYSTEM - MEMS, Adjustments.***
74. Replace receiver/dryer. ***See AIR CONDITIONING, Repairs.***
75. Recharge air conditioning system. ***See AIR CONDITIONING, Adjustments.***

ENGINE AND GEARBOX - MODELS WITHOUT AIR CONDITIONING

Service repair no - 12.37.01.99

Remove

1. Disconnect battery earth lead.
2. Drain engine oil. ***See MAINTENANCE.***
3. Fit new sealing washer to drain plug.
4. Fit drain plug and tighten to 42 Nm.
5. Drain cooling system. ***See COOLING SYSTEM - 'K' SERIES, Adjustments.***
6. Drain gearbox oil. ***See MANUAL GEARBOX - 'PG1', Repairs.***
7. Raise front of vehicle.

WARNING: Support on safety stands.

8. Remove air cleaner. ***See ENGINE MANAGEMENT SYSTEM - MEMS, Repairs.***
9. Remove ECM. ***See ENGINE MANAGEMENT SYSTEM - MEMS, Repairs.***
10. Remove engine management relay module. ***See ENGINE MANAGEMENT SYSTEM - MEMS, Repairs.***
11. Release ABS fuse holder from battery tray.

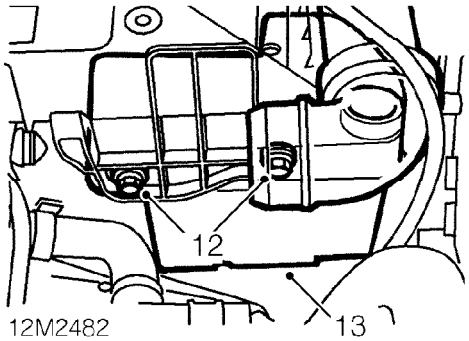

12. Remove 2 bolts securing resonator to battery tray.
13. Remove resonator.

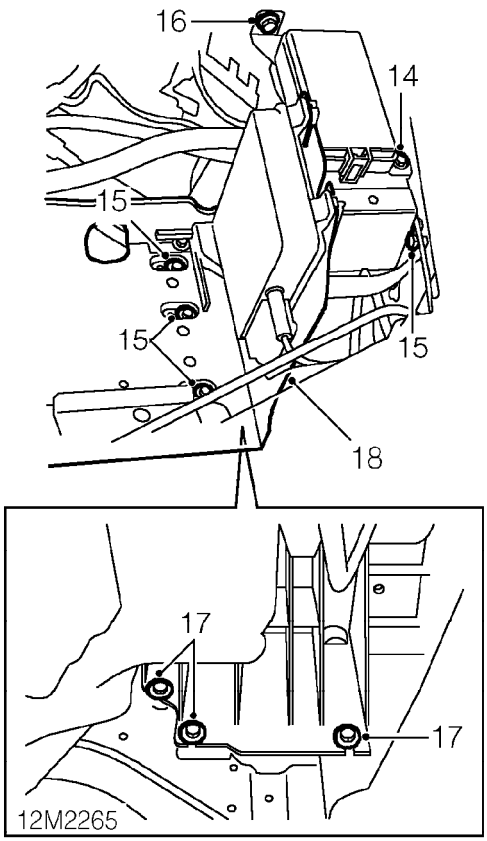

14. Remove bolt securing engine compartment fuse box to battery tray.
15. Remove 4 bolts securing battery tray to body.
16. Remove bolt securing engine compartment fuse box to body and position fuse box aside.
17. Loosen 3 bolts securing battery tray to body.
18. Remove battery tray from vehicle.

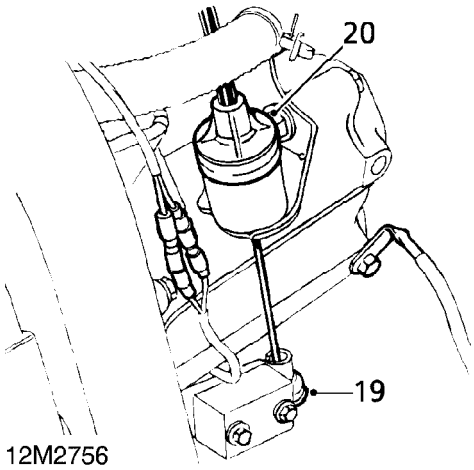

19. Disconnect clutch cable from clutch release lever.
20. Release clutch cable from abutment bracket on gearbox and position aside.
21. Release both drive shafts from gearbox. as detailed in Differential oil seal. ***See MANUAL GEARBOX - 'PG1', Repairs.***

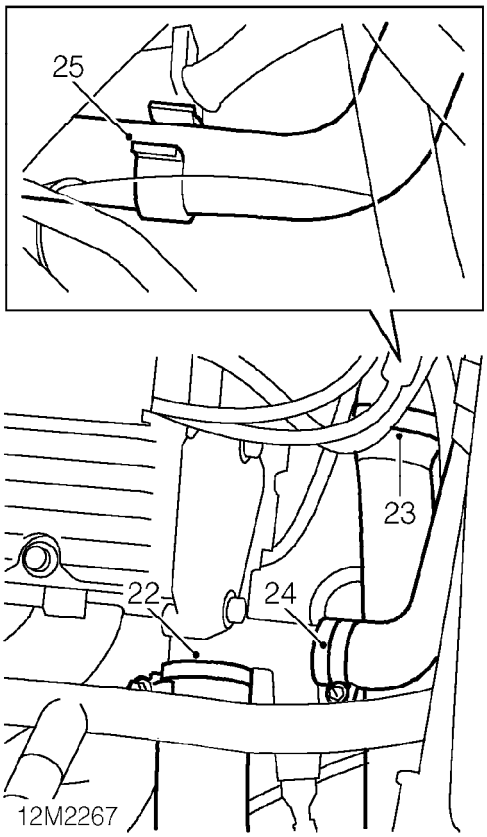

22. Loosen clip and release radiator top hose from coolant outlet elbow.
23. Loosen clip and release radiator bottom hose from coolant rail.
24. Loosen clip and release heater hose from coolant outlet elbow.
25. Release heater hose from 2 clips on coolant rail and position aside.

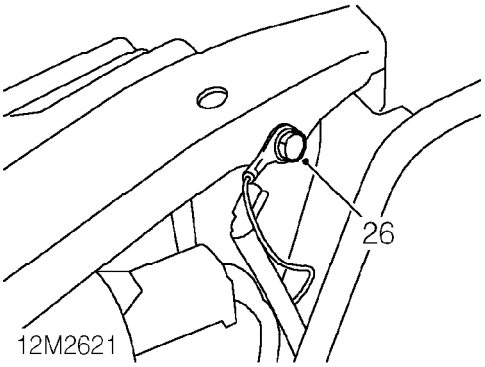

26. Remove bolt securing earth lead to bonnet locking platform.

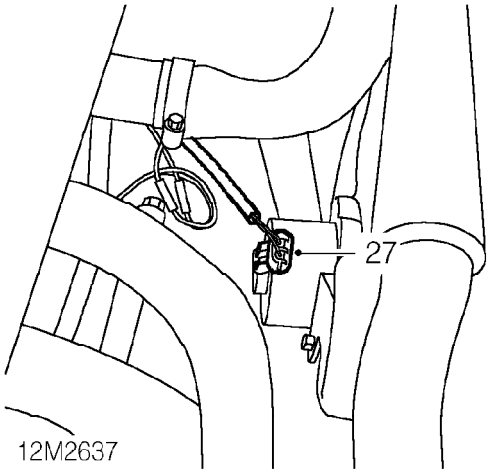

27. Disconnect multiplug from radiator cooling fan.

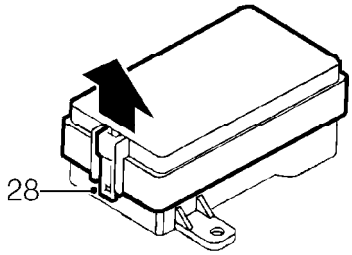

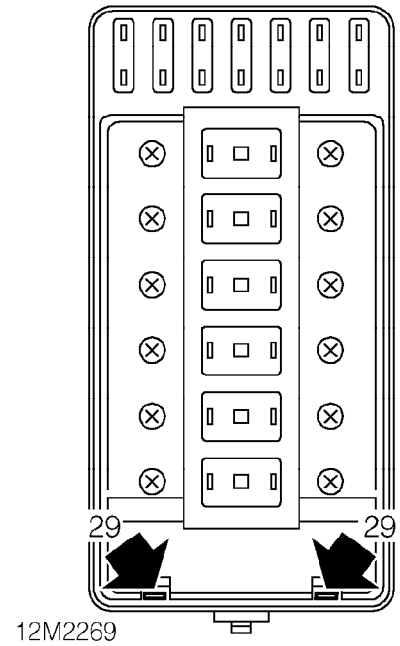

28. Release clip and remove fuse box cover.
29. Depress 2 clips and remove fuse box inner cover.

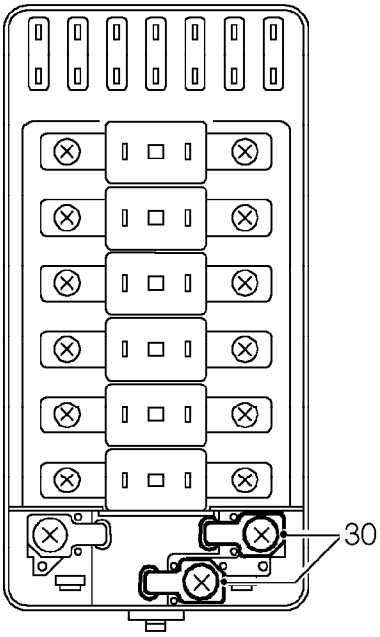

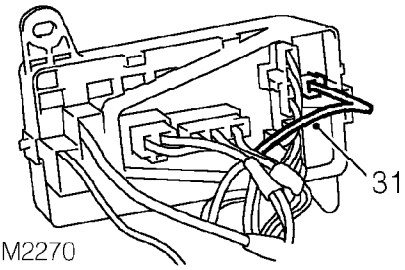

30. Remove 2 screws securing positive leads to fuse box.
31. Disconnect multiplug from fuse box.

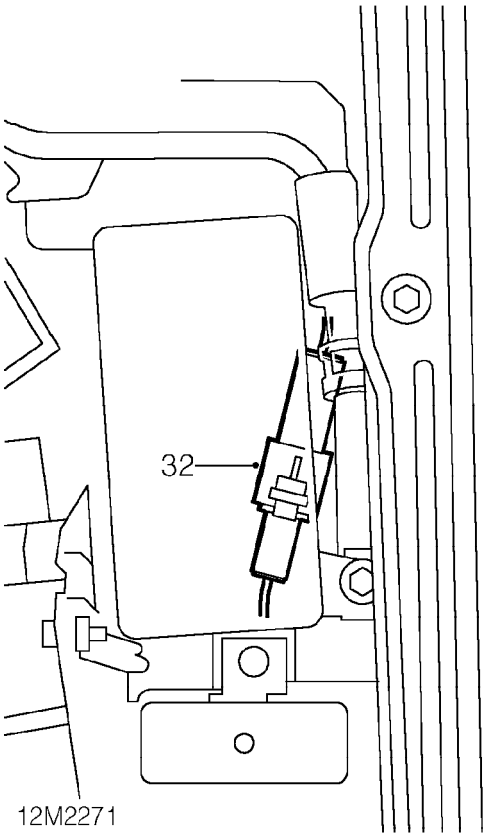

32. Disconnect engine harness to main harness connector.
33. Lay engine harness across engine to avoid being caught when the engine is removed.
34. Remove evaporative emission canister. ***See EMISSION CONTROL, Repairs.***
35. Remove exhaust front pipe. ***See MANIFOLD & EXHAUST SYSTEMS, Repairs.***

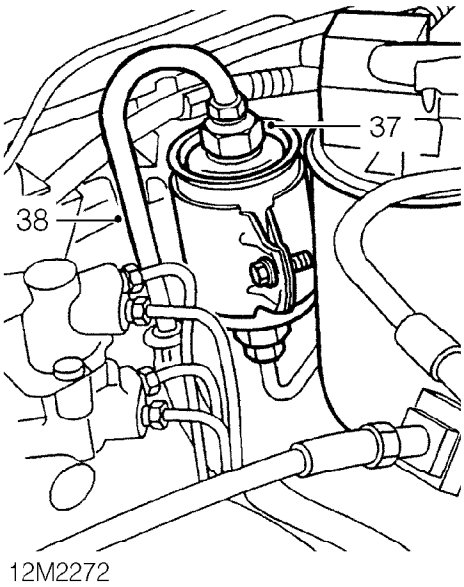

36. Position absorbent cloth around fuel filter outlet union.
37. Loosen fuel filter outlet union to relieve fuel pressure.

CAUTION: To prevent damage to fuel system pipes and components use two spanners when loosening or tightening unions.

38. Release fuel outlet pipe from fuel filter and position aside.

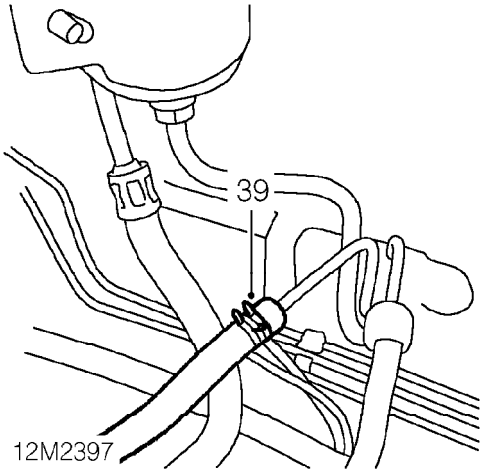

39. Release clip and disconnect hose from fuel return pipe.

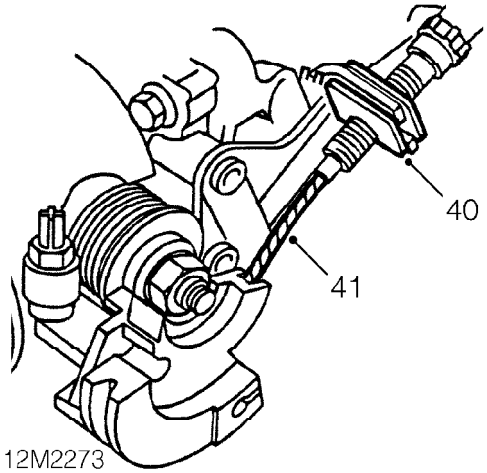

40. Release throttle cable adjusting nut from abutment bracket.
41. Release throttle cable from throttle cam.

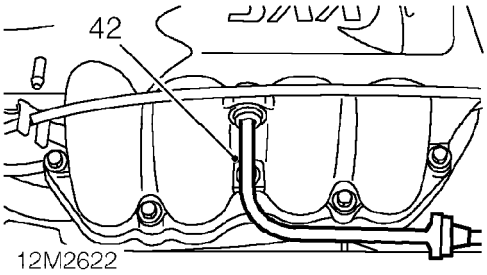

42. Depress plastic collar on quick release connector and disconnect brake servo vacuum pipe from inlet manifold.

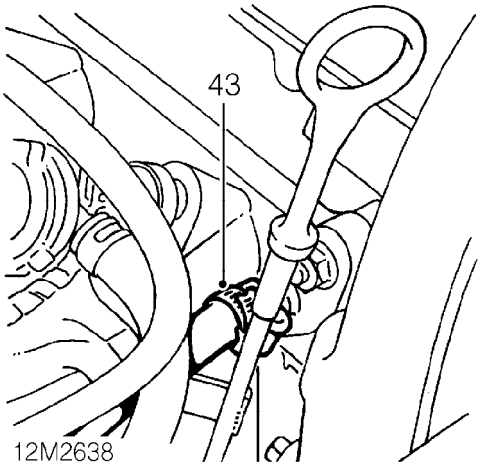

43. Release clip and disconnect expansion tank hose from inlet manifold.

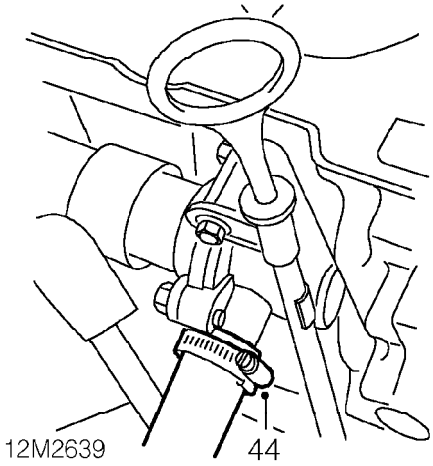

44. Loosen clip and disconnect coolant hose from thermostat housing.

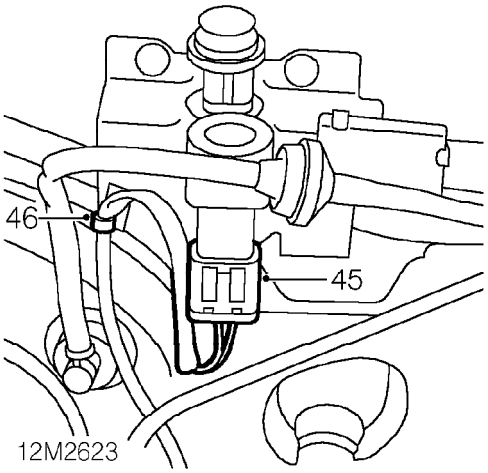

45. Disconnect multiplug from inertia switch.
46. Release clip securing inertia switch harness to mounting bracket.

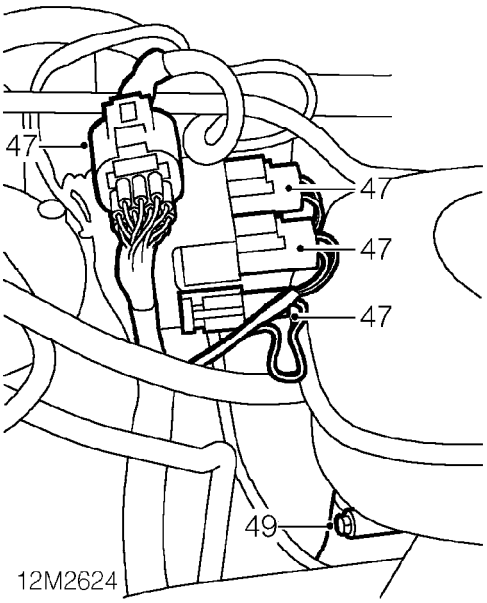

47. Release 4 multiplugs from mounting bracket on bulkhead.
48. Disconnect 4 engine harness multiplugs from main harness.
49. Loosen clip and disconnect coolant feed hose from coolant expansion tank.

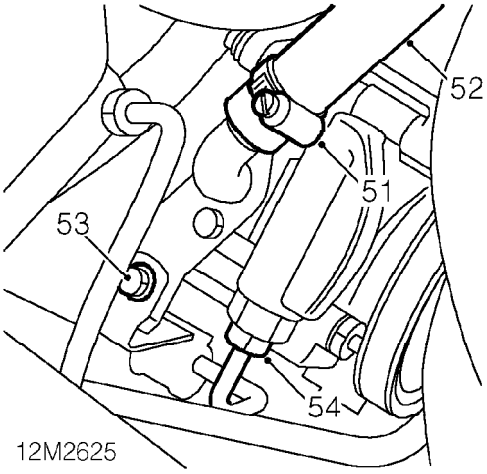

50. Position container to catch fluid loss from power steering system.
51. Loosen clip securing fluid inlet hose to power steering pump.
52. Release fluid inlet hose from power steering pump.
53. Remove bolt securing fluid outlet hose clamp to bracket.
54. Loosen union and release fluid outlet hose from power steering pump.

CAUTION: To prevent damage to pipes and components use two spanners when loosening or tightening unions.

55. Remove and discard 'O' ring from fluid outlet hose.
56. Plug hose and power steering pump connections to prevent excess fluid loss and the ingress of dirt into the system.

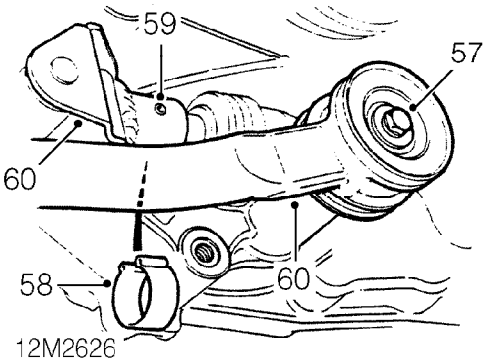

57. Remove bolt and disconnect gear change steady bar from gearbox and collect 2 washers.
58. Remove clip retaining selector rod roll pin.
59. Using a suitable punch, drive out roll pin securing selector rod to selector shaft.
60. Release selector rod from selector shaft.
61. Tie selector shaft and steady bar aside.

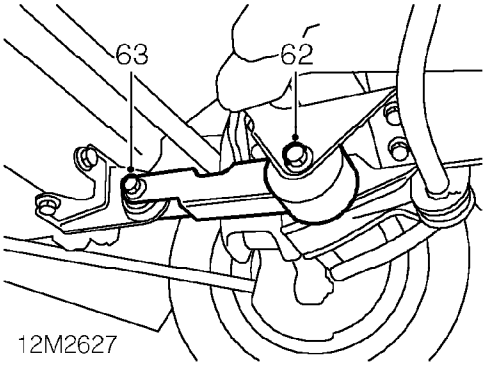

62. Loosen through bolt securing engine steady bar to subframe.
63. Remove through bolt securing engine steady bar to bracket on sump.

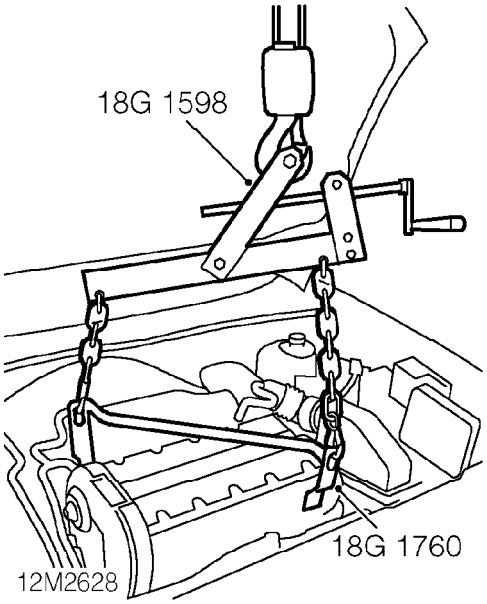

64. Fit engine lifting brackets **18G 1760** to cylinder head and tighten bolts to 9 Nm.
65. Connect adjustable lifting bracket tool **18G 1598** to engine lifting brackets.
66. Connect a hoist to lifting bracket tool **18G 1598** and raise hoist to take weight of engine without exerting load on engine mounting bolts.
67. Remove RH engine mounting. ***See this section.***

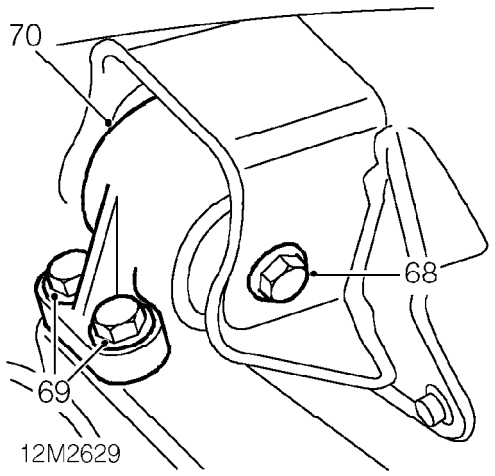

68. Remove through bolt securing LH mounting to bracket on body.
69. Remove 2 bolts securing LH engine mounting to mounting bracket on gearbox.
70. Remove LH engine mounting.
71. Using adjustable lifting bracket tool **18G 1598,** tilt engine with the gearbox as low as possible.
72. Using assistance, manoeuvre engine and gearbox from vehicle.

CAUTION: Take care not to damage the ABS modulator or brake pipes when removing the engine.

73. Lower engine and gearbox assembly and disconnect hoist from adjustable lifting bracket.

Refit

1. Connect hoist to adjustable lifting bracket tool **18G 1598.**
2. Using assistance, raise engine and manoeuvre into position in vehicle.
3. Adjust lifting bracket tool so engine is horizontal in engine compartment.
4. Position LH engine mounting to mounting bracket on gearbox, fit and tighten bolts to 100 Nm.
5. Align LH engine mounting to bracket on body, fit and tighten bolt to 85 Nm.
6. Fit RH engine mounting. ***See this section.***
7. Lower hoist and disconnect adjustable lifting bracket tool **18G 1598** from engine lifting brackets.
8. Remove bolts securing engine lifting brackets **18G 1760** to cylinder head and remove engine lifting brackets.
9. Connect engine steady bar to bracket on sump, fit through bolt and tighten to 80 Nm.
10. Tighten through bolt, engine steady bar to subframe, to 80 Nm.
11. Connect selector rod to shaft and align holes.
12. Fit new roll pin securing selector rod to shaft and fit roll pin retaining clip.
13. Fit washers to gear change steady bar and connect to gearbox.
14. Fit bolt securing gear change steady bar to gearbox and tighten to 60 Nm.
15. Remove plugs from power steering pump and hose connections.
16. Lubricate new 'O' ring with clean power steering fluid and fit to fluid outlet hose.
17. Connect fluid outlet hose to power steering pump and tighten union to 55 Nm.

CAUTION: To prevent damage to components, use two spanners when loosening or tightening unions.

18. Align fluid outlet hose clamp to bracket and secure with bolt.
19. Connect fluid inlet hose to power steering pump and tighten clip.

20. Connect coolant feed hose to expansion tank and tighten clip.
21. Connect multiplug to inertia switch and secure harness clip to mounting bracket.
22. Connect coolant hose to thermostat housing and tighten clip.
23. Connect expansion tank hose to inlet manifold and tighten clip.
24. Connect throttle cable to throttle cam.
25. Locate throttle cable adjusting nut in abutment bracket.
26. Connect brake servo vacuum pipe to inlet manifold.
27. Connect hose to fuel return pipe and secure with clip.
28. Clean union of fuel outlet pipe and fuel filter.
29. Connect fuel outlet pipe to fuel filter and tighten union to 28 Nm.

CAUTION: To prevent damage to fuel system pipes and components use two spanners when loosening or tightening unions.

30. Fit exhaust front pipe. ***See MANIFOLD & EXHAUST SYSTEMS, Repairs.***
31. Fit evaporative emission cansiter. ***See EMISSION CONTROL, Repairs.***
32. Connect the engine harness to main harness multiplugs.
33. Connect multiplug to fuse box.
34. Fit positive leads to fuse box and secure with screws.
35. Fit fuse box inner cover.
36. Fit fuse box cover.
37. Connect multiplug to radiator cooling fan.
38. Position earth lead to bonnet locking platform, fit bolt and tighten to 9 Nm.
39. Connect heater hose to coolant outlet elbow and tighten clip.
40. Secure heater hose to clip on coolant rail.
41. Connect radiator bottom hose to coolant rail and tighten clip.
42. Connect radiator top hose to coolant outlet elbow and tighten clip.
43. Connect driveshafts to gearbox. ***See MANUAL GEARBOX - 'PG1', Repairs.*** **differential oil seal.**
44. Feed clutch cable through abutment bracket and connect to clutch release lever.
45. Position battery tray in vehicle.
46. Tighten 3 bolts, battery tray to body, to 10 Nm.
47. Position engine compartment fuse box to body, fit bolt and tighten to 10 Nm.
48. Fit 4 bolts securing battery tray to body and tighten to 10 Nm.
49. Fit and tighten bolt securing engine compartment fuse box to battery tray.
50. Fit resonator to air intake pipe.
51. Fit and tighten bolts securing resonator to battery tray.
52. Secure ABS fuse holder to battery tray.
53. Fit engine management relay module. ***See ENGINE MANAGEMENT SYSTEM - MEMS, Repairs.***
54. Fit ECM. ***See ENGINE MANAGEMENT SYSTEM - MEMS, Repairs.***
55. Fit air cleaner. ***See ENGINE MANAGEMENT SYSTEM - MEMS, Repairs.***
56. Remove stand(s) and lower vehicle.
57. Refill gearbox with oil. ***See MANUAL GEARBOX - 'PG1', Adjustments.***
58. Refill cooling system. ***See COOLING SYSTEM - 'K' SERIES, Adjustments.***
59. *If required:* Refill engine with oil. ***See MAINTENANCE.***
60. Bleed power steering system. ***See STEERING, Adjustments.***
61. Adjust throttle cable. ***See ENGINE MANAGEMENT SYSTEM - MEMS, Adjustments.***

ENGINE STEADY BAR

Service repair no - 12.45.08

Remove

1. Raise front of vehicle.

WARNING: Support on safety stands.

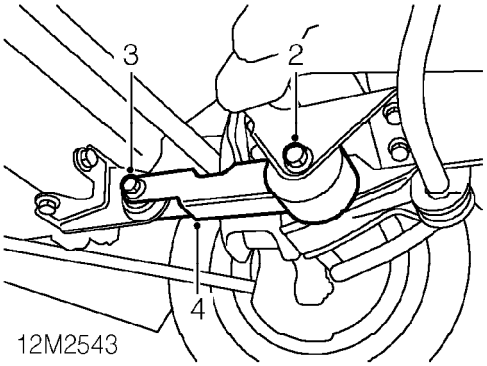

2. Remove through bolt securing engine steady bar to subframe.
3. Remove through bolt securing engine steady bar to bracket on sump.
4. Remove engine steady bar.

Refit

1. Position engine steady bar to subframe and fit through bolt.
2. Fit and tighten through bolt securing steady bar to bracket on sump to 80 Nm.
3. Tighten through bolt securing steady bar to subframe, to 80 Nm.
4. Remove stand(s) and lower vehicle.

ENGINE LH MOUNTING

Service repair no - 12.45.30

Remove

1. Raise front of vehicle.

WARNING: Support on safety stands.

2. Remove air cleaner ***See ENGINE MANAGEMENT SYSTEM - MEMS, Repairs.***
3. Fit wooden block to jack and position jack to support gearbox.

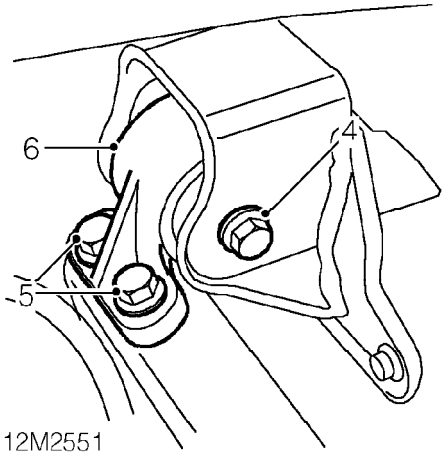

4. Remove through bolt securing engine mounting to bracket on body.
5. Remove 2 bolts securing engine mounting to mounting bracket on gearbox.
6. Remove engine mounting.

Refit

1. Position engine mounting to body and gearbox mounting brackets.
2. Fit bolts securing engine mounting to bracket on gearbox and tighten to 100 Nm.
3. Fit through bolt securing engine mounting to bracket on body and tighten to 85 Nm.
4. Lower jack supporting engine and remove from beneath vehicle.
5. Fit air cleaner. ***See ENGINE MANAGEMENT SYSTEM - MEMS, Repairs.***
6. Remove stand(s) and lower vehicle.

ENGINE RH MOUNTING

Service repair no - 12.45.31

Remove

1. Raise front of vehicle.

WARNING: Support on safety stands.

2. Fit wooden block to jack and position jack to support engine.

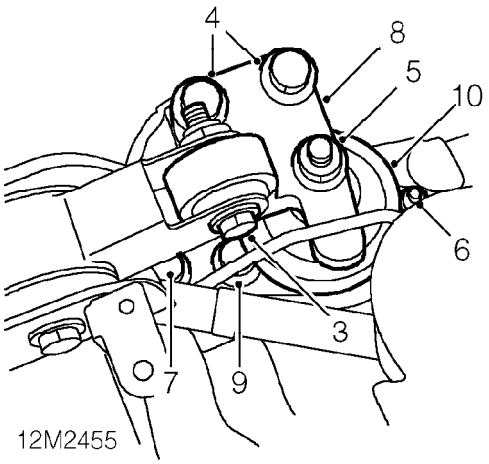

3. Remove bolt securing RH steady bar to engine mounting bracket.
4. Remove 2 bolts securing mounting bracket to engine.
5. Remove nut securing mounting bracket to engine mounting.
6. Remove nut securing engine mounting and restraint bar to body.
7. Loosen nut securing restraint bar to body and move aside.
8. Remove engine mounting bracket.
9. Remove nut securing engine mounting to body.
10. Remove RH engine mounting.

Refit

1. Fit engine mounting to vehicle and finger tighten rear nut.
2. Fit mounting bracket to engine mounting, steady bar, and engine.
3. Align mounting bracket to engine, fit bolts and tighten to 160 Nm.
4. Align restraint bar and fit and tighten nuts to 45 Nm.
5. Tighten nut securing engine mounting to body to 45 Nm.
6. Fit nut securing engine mounting to mounting bracket and tighten to 85 Nm.
7. Fit bolt securing mounting bracket to steady bar and tighten to 80 Nm.
8. Remove jack.
9. Remove stand(s) and lower vehicle.

FLYWHEEL

Service repair no - 12.53.07

Remove

1. Remove clutch assembly. ***See CLUTCH, Repairs.***
2. Leave tool **18G 1674** attached to cylinder block.
3. Remove crankshaft position sensor. ***See ENGINE MANAGEMENT SYSTEM - MEMS, Repairs.***

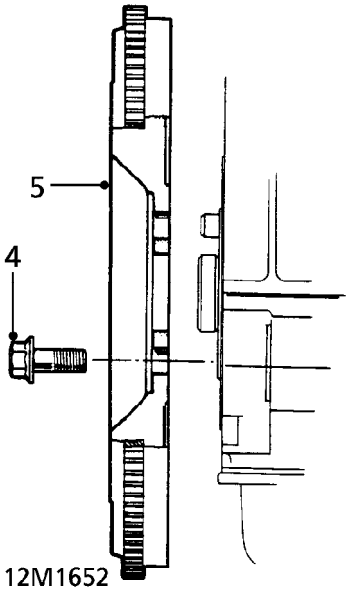

4. Remove and discard 6 bolts securing flywheel to crankshaft.
5. Remove flywheel from crankshaft.

Refit

1. Using a tap, clean adhesive from threads of flywheel bolt holes in crankshaft.
2. Clean flywheel and mating face of crankshaft.
3. Fit flywheel to crankshaft.
4. Fit NEW bolts securing flywheel to crankshaft and working in a diagonal sequence tighten bolts to 85 Nm.
5. Fit crankshaft position sensor. ***See ENGINE MANAGEMENT SYSTEM - MEMS, Repairs.***
6. Fit clutch assembly. ***See CLUTCH, Repairs.***

FLYWHEEL STARTER RING GEAR

Service repair no - 12.53.19

Remove

1. Remove flywheel. ***See this section.***

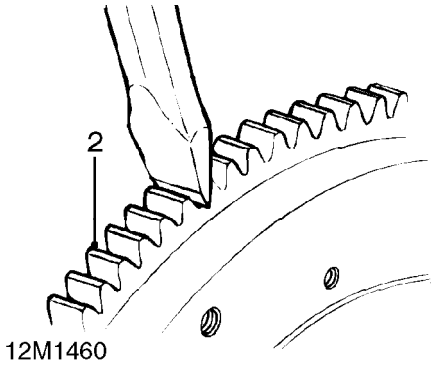

2. Apply a cold chisel in root of one of ring gear teeth, strike chisel with hammer to break ring gear.
3. Remove starter ring gear.

Refit

1. Clean flywheel and starter ring gear.
2. Heat new starter ring gear evenly to @350°C, indicated when the ring is a light blue colour.
3. Locate ring gear on flywheel and press ring gear hard against flange on flywheel.
4. Ensure ring gear is correctly seated around the complete circumference of flywheel and allow to cool.
5. Fit flywheel. ***See this section.***

OIL FILTER

Service repair no - 12.60.04

Remove

1. Raise front of vehicle.

WARNING: Support on safety stands.

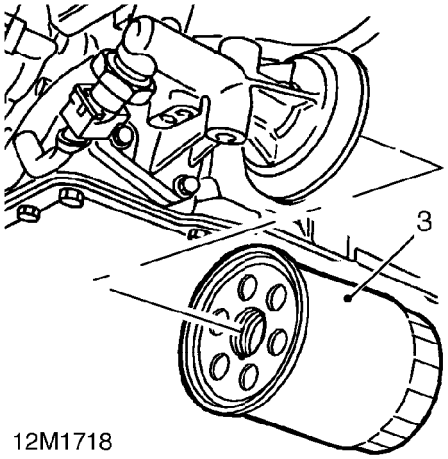

2. Clean area around filter head and place a container beneath engine
3. Using a strap wrench, unscrew and discard filter.

Refit

1. Clean mating face of filter head.
2. Lubricate sealing ring of new filter with clean engine oil.
3. Fit new filter and tighten by hand until it seats then tighten a further half turn.
4. Remove stand(s) and lower vehicle.
5. Top up engine with oil to specification 10w/40 until level is correct.
6. Start and run engine and check for leaks.
7. Stop engine, wait a few minutes, then check oil level. Top up if necessary.

DIPSTICK TUBE

Service repair no - 12.60.09

Remove

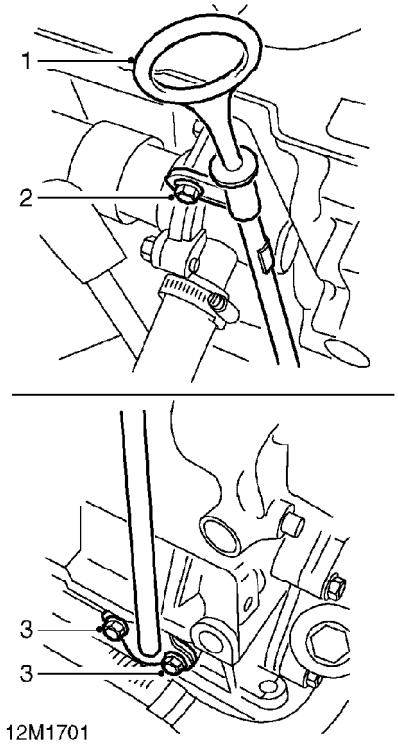

1. Remove dipstick.
2. Remove bolt securing thermostat housing and dipstick tube to cylinder block.
3. Remove 2 bolts securing dipstick tube to cylinder block.
4. Remove dipstick tube and collect gasket.

Refit

1. Fit new gasket and dipstick tube to cylinder block.
2. Fit bolts securing dipstick tube to cylinder block and tighten to 10 Nm.
3. Fit bolt securing dipstick tube and thermostat housing to cylinder block and tighten to 10 Nm.
4. Fit dipstick.

OIL PUMP

Service repair no - 12.60.26

Remove

1. Remove camshaft timing belt. ***See this section.***
2. Remove crankshaft gear.

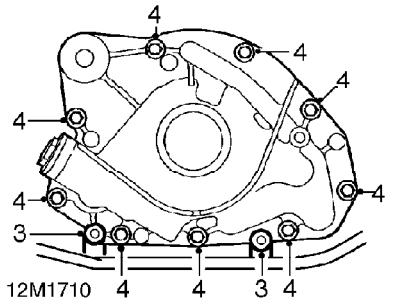

3. Remove 2 bolts securing engine harness to oil pump.
4. Remove and discard 9 bolts securing oil pump to cylinder block.

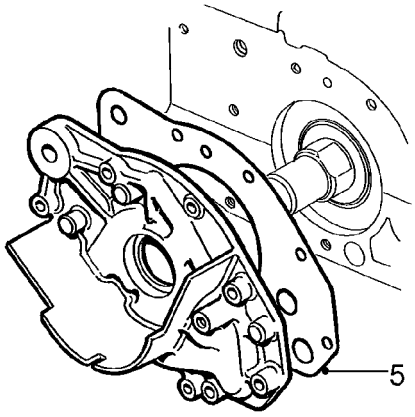

12M1711

5. Remove oil pump and discard gasket.

Refit

1. Clean oil pump bolt holes in cylinder block.
2. Clean mating surfaces of oil pump and cylinder block.
3. Clean oil seal running surface on crankshaft.
4. Fit new oil pump gasket to cylinder block and position oil pump.

CAUTION: Do not lubricate crankshaft front oil seal or running surface of crankshaft.

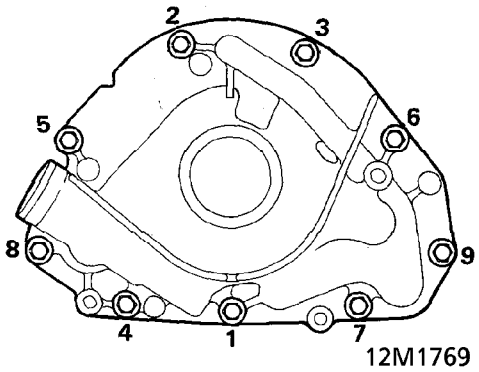

5. Fit new Patchlok bolts and tighten in sequence shown to 10 Nm.
6. Align engine harness to oil pump, fit bolts and tighten to 10 Nm.
7. Clean crankshaft gear.
8. Fit gear to crankshaft.
9. Fit camshaft timing belt. ***See this section.***

ENGINE SUMP

Service repair no - 12.60.38

Remove

1. Disconnect battery earth lead.
2. Raise front of vehicle.

WARNING: Support on safety stands.

3. Remove exhaust front pipe. ***See MANIFOLD & EXHAUST SYSTEMS, Repairs.***
4. Drain engine oil. ***See MAINTENANCE.***
5. Fit new sealing washer to engine oil drain plug. Fit drain plug and tighten to 25 Nm.

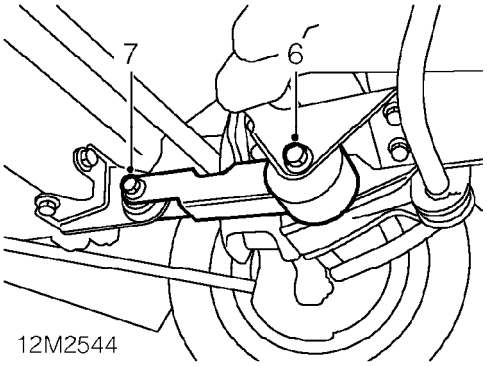

6. Loosen through bolt securing engine steady bar to subframe.
7. Remove through bolt securing engine steady bar to bracket on engine sump.

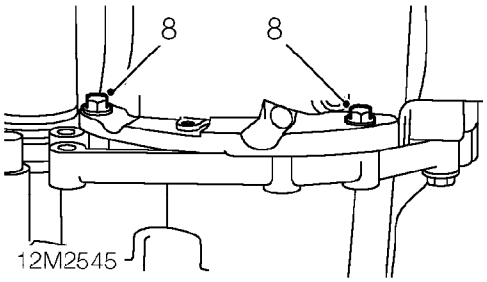

8. Remove 2 bolts securing engine sump to gearbox.

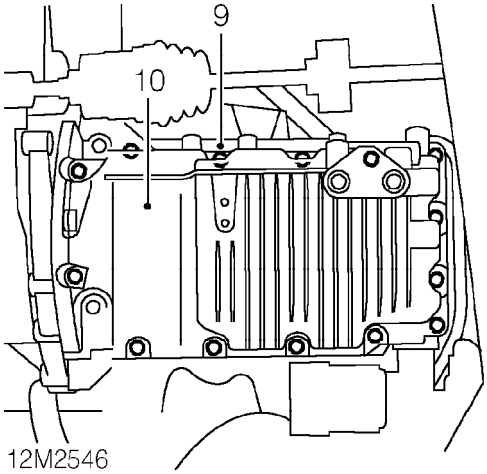

9. Noting the fitted position of 2 longest bolts, remove 14 bolts securing sump to engine bearing ladder.
10. Using a mallet, gently tap sump sideways to release sealant bond, remove sump.

CAUTION: Do not lever between sump and bearing ladder.

Do not carry out further dismantling if component is removed for access only.

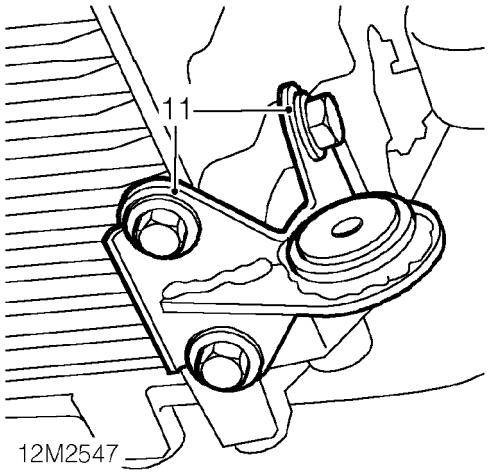

11. Remove 4 bolts securing engine rear mount to sump, remove mount.
12. Fit mount to sump, fit bolts and tighten bolts to 80 Nm.

Refit

1. Clean inside of sump. Remove all traces of sealant using a suitable solvent.
2. Apply sealant from kit, Part No. GUG 705963GM to sump joint face then spread to an even film using a brush or roller.

CAUTION: To avoid contamination, assembly should be completed immediately after application of sealant. Do not use RTV or any sealant other than that supplied with kit.

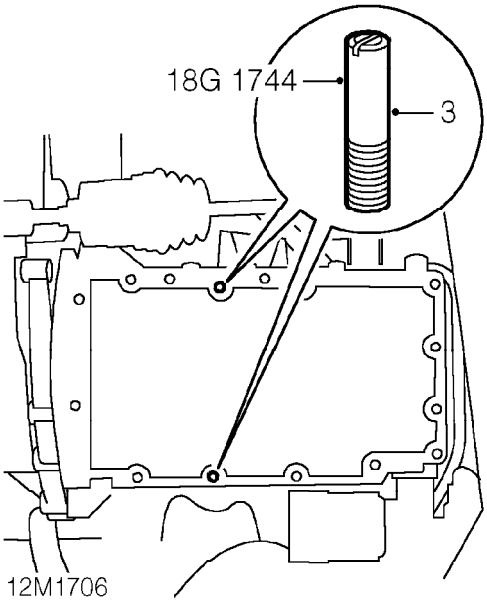

3. Fit sump alignment pins **18G 1744** to bearing ladder as shown.

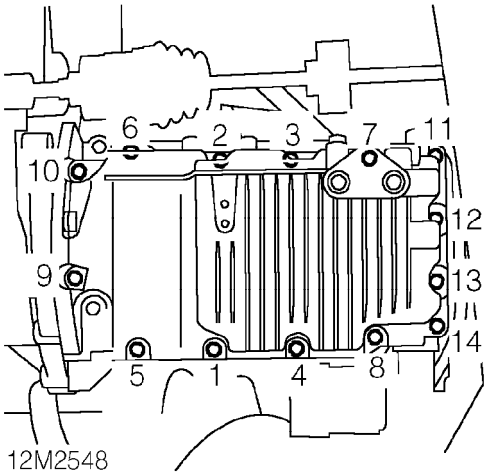

4. Position sump on alignment pins, fit 2 bolts at positions 5 and 6 and tighten to 4 Nm.
5. Fit 10 bolts into remaining holes ensuring that 2 longest bolts are in original fitted positions, finger tighten bolts.
6. Remove alignment pins **18G 1744,** fit and finger tighten 2 remaining bolts.
7. Progressively tighten sump bolts in sequence shown to 25 Nm.
8. Fit bolts, sump to gearbox, and tighten to 25 Nm.
9. Connect engine steady bar to bracket on sump, fit through bolt and tighten to 85 Nm.
10. Tighten engine steady bar to subframe bolt to 85 Nm.
11. Fit exhaust front pipe. ***See MANIFOLD & EXHAUST SYSTEMS, Repairs.***
12. Fill engine with oil. ***See MAINTENANCE.***
13. Remove stand(s) and lower vehicle.
14. Connect battery earth lead.

OIL PRESSURE SWITCH

Service repair no - 12.60.50

Remove

1. Disconnect battery earth lead.
2. Raise front of vehicle.

WARNING: Support on safety stands.

3. Position container below engine oil filter to collect spillage.

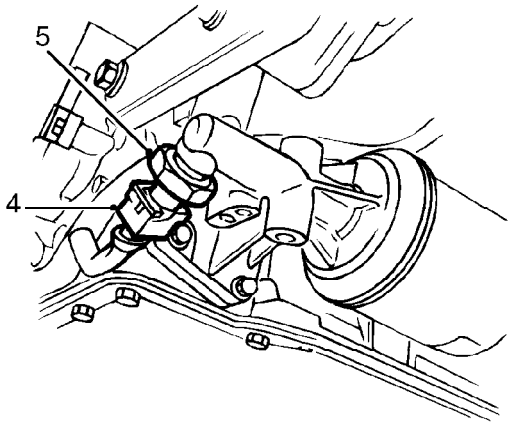

12M1395

4. Disconnect multiplug from oil pressure switch.
5. Remove oil pressure switch.

Refit

1. Clean oil pressure switch threads.
2. Fit oil pressure switch and tighten to 15 Nm.
3. Connect multiplug to oil pressure switch.
4. Remove stand(s) and lower vehicle.
5. Top-up engine oil. ***See MAINTENANCE.***
6. Connect battery earth lead.

CAMSHAFT TIMING BELT

Service repair no - 12.65.18

Remove

CAUTION: Timing belt must be replaced if cylinder head is to be removed or new timing gears, tensioner or coolant pump are to be fitted.
Timing belts must be stored and handled with care.
Always store a timing belt on its edge with a bend radius greater than 50 mm.
Do not use a timing belt that has been twisted or bent double as this will damage the reinforcing fibres.
Do not use a timing belt if debris other than belt dust is found in timing cover.
Do not use a timing belt if partial engine seizure has occurred.
Do not use a timing belt if belt mileage exceeds 48,000 miles (77,000 km).
Do not use an oil or coolant contaminated belt.

NOTE: The cause of contamination MUST be rectified.

1. Disconnect battery earth lead.
2. Remove camshaft timing belt upper cover. ***See this section.***

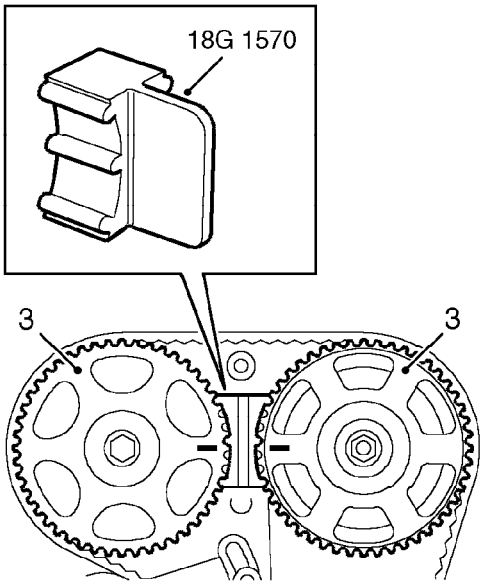

M12 5023

3. Using a socket and extension bar on crankshaft pulley bolt, rotate crankshaft clockwise to align camshaft gear timing marks - 90° BTDC. Fit camshaft gear locking tool **18G 1570.**
4. Support engine on jack.

CAUTION: Place a block of wood between sump and jack to prevent damaging the sump.

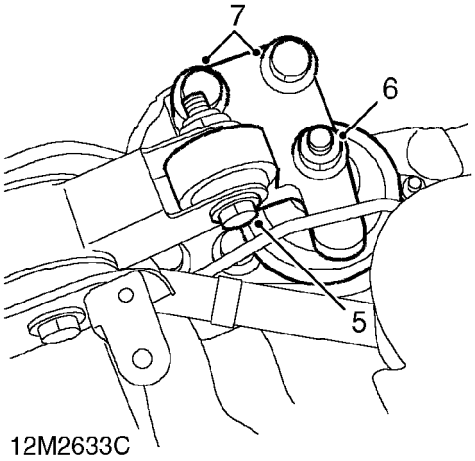

12M2633C

5. Remove bolt securing engine mounting bracket to steady bar.
6. Remove nut securing engine mounting bracket to engine mounting.
7. Remove 2 bolts securing engine mounting bracket to engine, remove mounting bracket.
8. Remove camshaft timing belt lower cover. ***See this section.***

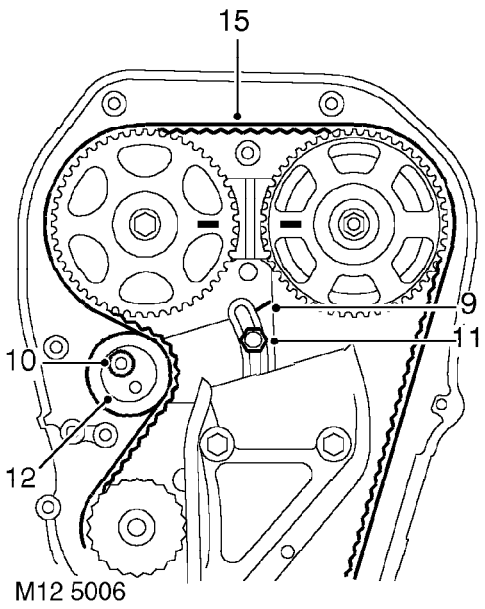

9. If camshaft timing belt is to be reused, mark position of tensioner backplate to cylinder head for belt tensioning reference. Mark direction of rotation on belt using chalk.
10. Loosen tensioner pulley Allen screw $^1/_2$ turn.
11. Loosen tensioner backplate bolt $^1/_2$ turn.
12. Push tensioner pulley down to fully OFF position.
13. Tighten tensioner backplate screw to 10 Nm.
14. Lower engine to enable timing belt to be removed.
15. Ease timing belt from camshaft gears and crankshaft gear, remove timing belt.

CAUTION: Ease timing belt from the gears using the fingers only, metal levers may damage the belt and gears.
Do not rotate the crankshaft with the timing belt removed and the cylinder head fitted.

Refit

1. Clean crankshaft pulley, timing belt gears, coolant pump drive gear and tensioner pulley.

CAUTION: If the sintered gears have been subjected to prolonged oil contamination, they must be soaked in a solvent bath and then thoroughly washed in clean solvent before refitting. Because of the porous construction of sintered material, oil impregnated in the gears will emerge and contaminate a new belt.

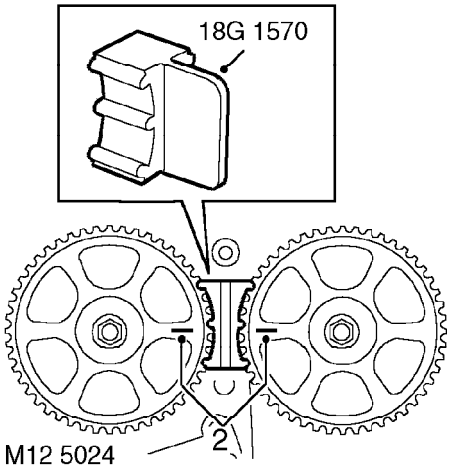

2. Check correct alignment of camshaft gear timing marks for 90° BTDC and that tool **18G 1570** is locking camshaft gears.

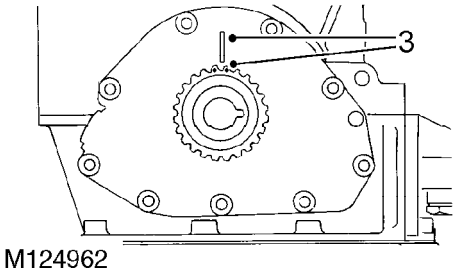

3. Ensure dots on crankshaft gear are aligned with flange on oil pump and that tool is locking flywheel.

Replacement timing belt

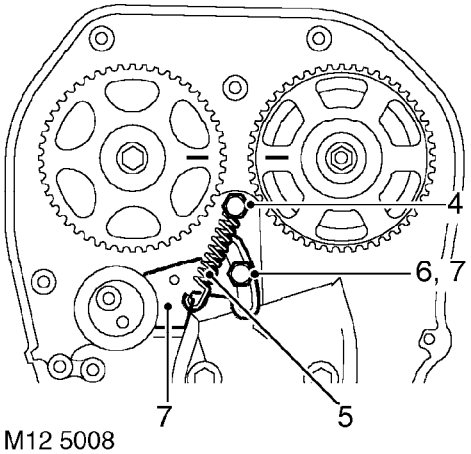

M12 5008

4. Fit pillar bolt supplied with replacement belt to cylinder head.
5. Connect spring supplied with replacement belt to pillar bolt and tensioner.

NOTE: This spring is not fitted with a sleeve.

6. Slacken backplate bolt and ensure tensioner moves fully through its adjustment range and returns under spring tension.
7. Push tensioner down to fully OFF position and tighten backplate bolt to 10 Nm.

All timing belts

8. Using fingers only, fit timing belt over crankshaft gear and then over camshaft gears, keeping belt taut from crankshaft gear and between camshaft gears.
9. Position belt using fingers only over tensioner and coolant pump drive gear.

CAUTION: If original belt is being refitted, ensure direction of rotation mark is facing correct way.

10. Check that timing belt is positioned centrally around all gears and pulley.
11. Fit timing belt lower cover. ***See this section.***

NOTE: Do not fit timing belt upper cover at this stage.

12. Raise engine to correct height.
13. Fit bracket to engine mounting and finger tighten nut.
14. Fit bolt securing bracket to engine and tighten to 160 Nm.
15. Fit bolt securing bracket to tie bar and tighten to 80 Nm.
16. Tighten nut securing bracket to engine mounting to 85 Nm.
17. Remove jack.
18. Remove camshaft gear locking tool **18G 1570.**

Tensioning an existing camshaft timing belt

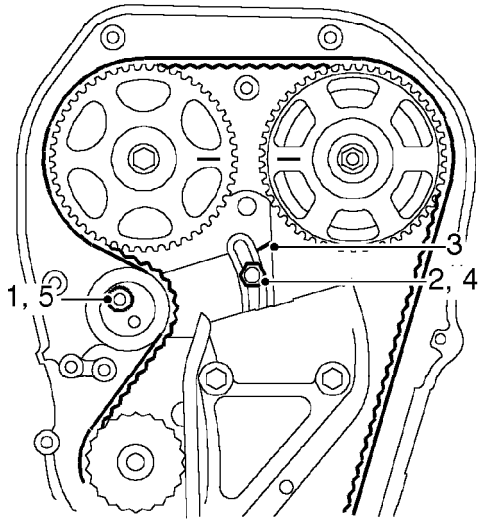

M12 5009

1. Loosen tensioner pulley Allen screw $^1/_2$ turn.
2. Loosen tensioner backplate bolt $^1/_2$ turn.
3. Position tensioner to align reference mark on backplate and cylinder head.
4. Tighten tensioner backplate bolt to 10 Nm.
5. Tighten tensioner pulley Allen screw to 45 Nm.

Tensioning a new camshaft timing belt

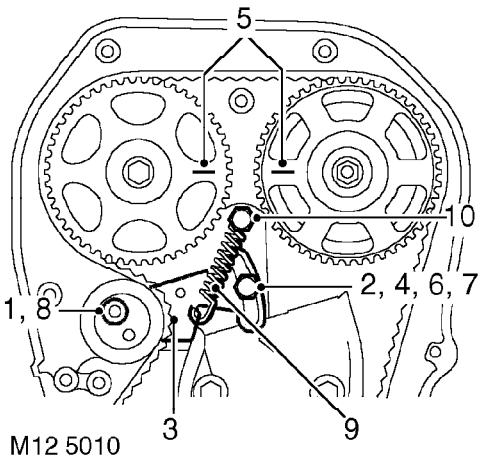

1. Loosen tensioner pulley Allen screw $^1/_2$ turn.
2. Loosen tensioner backplate bolt $^1/_2$ turn.
3. Apply tension to belt by applying finger pressure to tensioner backplate.
4. With tensioner pulley against timing belt and backplate held in position, tighten tensioner backplate bolt to 10 Nm.
5. Rotate crankshaft clockwise two complete revolutions and align camshaft gear timing marks.

CAUTION: Do not use camshaft gears, gear retaining bolts or timing belt to rotate crankshaft.

6. Loosen tensioner backplate bolt and check that belt is being tensioned by tensioner spring.
7. Tighten tensioner backplate bolt to 10 Nm.
8. Tighten tensioner pulley Allen screw to 45 Nm.
9. Release tensioner spring from pillar bolt and remove spring from tensioner, discard spring.
10. Remove pillar bolt from cylinder head, discard pillar bolt.

All timing belts

11. Fit timing belt upper cover. ***See this section.***
12. Connect battery earth lead.

CAMSHAFT TIMING BELT UPPER COVER

Service repair no - 12.65.41

Remove

1. Disconnect battery earth lead.

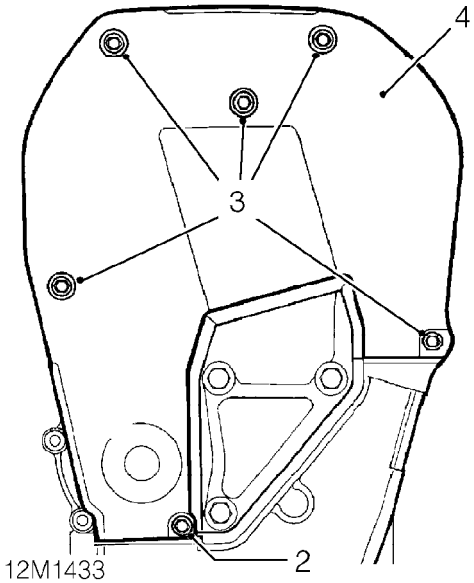

2. Loosen lower bolt securing camshaft timing belt upper cover to engine.
3. Remove 5 bolts securing camshaft timing belt upper cover to rear cover.
4. Remove camshaft timing belt upper cover and rubber seal.

Refit

1. Clean timing belt upper cover.
2. Fit timing belt upper cover, ensuring correct position of rubber seal.
3. Fit 5 bolts securing camshaft timing belt upper cover to rear cover and tighten to 5 Nm.
4. Tighten bolt securing camshaft timing belt top cover to engine, to 5 Nm.
5. Connect battery earth lead.

CAMSHAFT TIMING BELT LOWER COVER

Service repair no - 12.65.43

Remove

1. Disconnect battery earth lead.
2. Raise front of vehicle.

WARNING: Support on safety stands.

3. Remove timing belt upper cover. ***See this section.***
4. Remove crankshaft front pulley. ***See this section.***

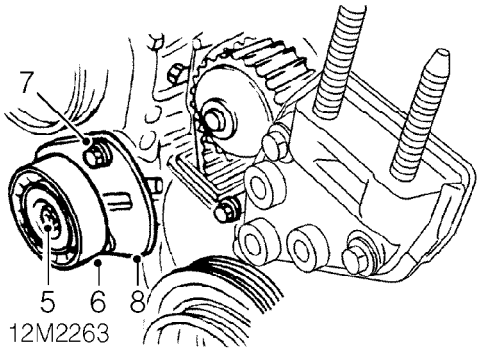

5. Remove nut and collect washer securing power steering pump drive belt tensioner pulley to tension adjuster.
6. Remove power steering pump tensioner pulley.
7. Remove 3 bolts securing drive belt tension adjuster to power steering pump mounting bracket.
8. Remove power steering pump drive belt tension adjuster.

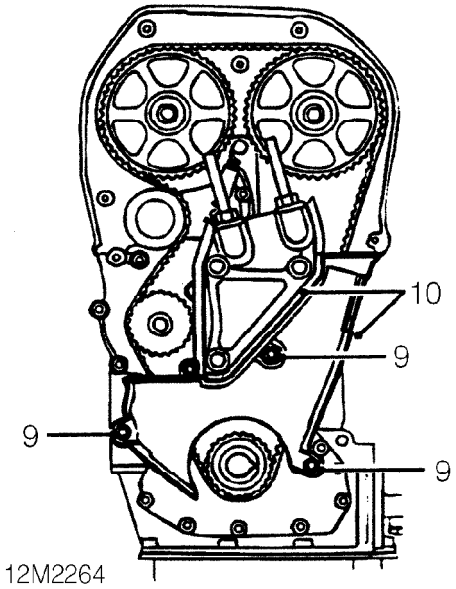

9. Remove 3 bolts securing camshaft timing belt lower cover to engine.
10. Remove camshaft timing belt lower cover and rubber seal.

Refit

1. Clean timing belt lower cover.
2. Fit timing belt lower cover ensuring correct position of rubber seal.
3. Fit bolts securing timing belt lower cover to engine and tighten to 5 Nm .
4. Position drive belt tension adjuster to power steering pump bracket, fit bolts and tighten to 25 Nm.
5. Fit power steering pump tensioner pulley and secure with washer and nut.
6. Fit crankshaft front pulley. ***See this section.***
7. Fit timing belt upper cover. ***See this section.***
8. Remove stand(s) and lower vehicle.
9. Connect battery earth lead.

CAMSHAFT REAR BELT COVER

Service repair no - 12.65.46

Remove

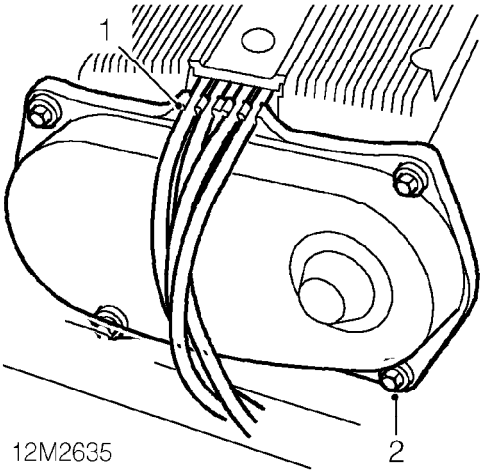

1. Release 4 h.t. leads from camshaft rear belt cover.
2. Remove 4 bolts securing cover to cylinder head.
3. Remove camshaft belt cover.

Refit

1. Fit camshaft rear belt cover to cylinder head.
2. Fit bolts and tighten to 10 Nm.
3. Secure h.t. leads to clips on cover.

CAMSHAFT REAR TIMING BELT

Service repair no - 12.65.56

Remove

CAUTION: Timing belts must be replaced if cylinder head is to be removed or new timing gears are to be fitted.
Timing belts must be stored and handled with care.
Always store a timing belt on its edge with a bend radius greater than 50 mm.
Do not use a timing belt that has been twisted or bent double as this can damage the reinforcing fibres.
Do not use a timing belt if debris other than belt dust is found in timing cover.
Do not use a timing belt if partial engine seizure has occured.
Do not use a timing belt if belt mileage exceeds 48,000 (77,000 Km).
Do not use an oil or coolant contaminated timing belt.

NOTE: The cause of contamination MUST be rectified.

1. Disconnect battery earth lead.
2. Remove camshaft timing belt upper cover. ***See this section.***
3. Remove camshaft rear belt cover. ***See this section.***

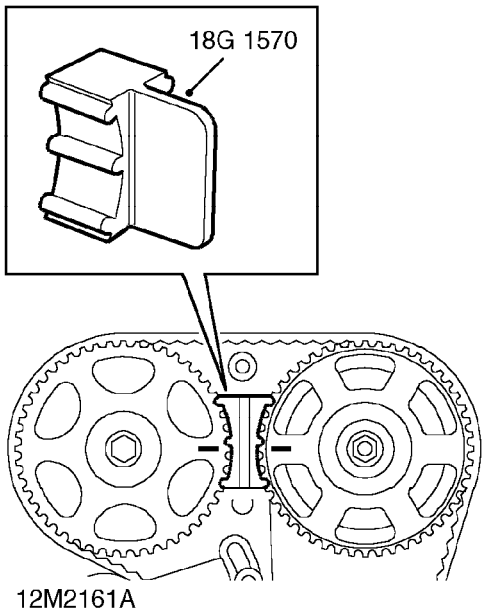

4. Rotate crankshaft clockwise to align camshaft gear timing marks.
5. Fit camshaft gear locking tool **18G 1570.**

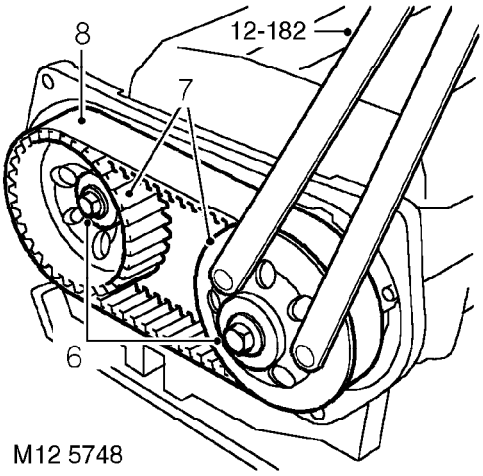

6. Restrain camshaft gears using tool **12-182** and remove bolt securing each camshaft rear gear.
7. Remove both gears from camshafts.
8. Remove and discard belt.

Refit

1. Clean gear to camshaft mating faces.

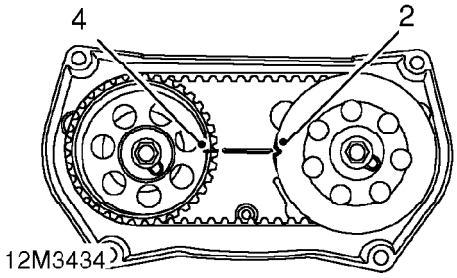

2. Fit inlet cam gear and align timing mark on cam gear with timing mark on back plate.
3. Using fingers only, fit exhaust cam gear and new timing belt together. Ensuring cam gear is located correctly on cam dowel.
4. Align timing mark on exhaust cam gear with timing mark on back plate.
5. Use a straight edge to check alignment of timing marks on camshaft gears and backplate.
6. Use tool **12-182** to restrain gears.
7. Fit bolts to camshaft gears and tighten to 65 Nm.
8. Check that timing belt is positioned centrally around both gears.
9. Using a straight edge, check timing of camshaft rear gears.
10. Remove camshaft locking tool from front camshaft gears.
11. Fit camshaft rear cover. ***See this section.***
12. Fit timing belt upper front cover. ***See this section.***
13. Connect battery earth lead.

CONTENTS

Page

REPAIRS

CAMSHAFT FRONT OIL SEAL 1
CAMSHAFT REAR OIL SEAL 5
CRANKSHAFT FRONT PULLEY 10
CRANKSHAFT FRONT OIL SEAL 13
CRANKSHAFT REAR OIL SEAL 14
CYLINDER HEAD GASKET - MODELS WITHOUT INTERCOOLER 15
CYLINDER HEAD GASKET - MODELS WITH INTERCOOLER 30
CAMSHAFT COVER GASKET - MODELS WITHOUT INTERCOOLER 46
CAMSHAFT COVER GASKET - MODELS WITH INTERCOOLER 47
ENGINE AND GEARBOX - MODELS WITH AIR CONDITIONING 49
ENGINE AND GEARBOX - MODELS WITHOUT AIR CONDITIONING 57
ENGINE STEADY BAR 65
ENGINE LH MOUNTING 66
ENGINE RH MOUNTING 67
FLYWHEEL 68
FLYWHEEL STARTER RING GEAR 69
ENGINE OIL FILTER 69
DIPSTICK TUBE 70
OIL PUMP 71
ENGINE SUMP GASKET 74
OIL PRESSURE SWITCH 76
OIL COOLER 76
CAMSHAFT TIMING BELT 77
CAMSHAFT TIMING BELT UPPER COVER 83
CAMSHAFT TIMING BELT LOWER COVER 84
FIP TIMING BELT 85
FIP TIMING BELT COVER 89

CAMSHAFT FRONT OIL SEAL

Service repair no - 12.13.05

Remove

1. Raise front of vehicle.

WARNING: Support on safety stands.

2. Remove RH front road wheel.
3. Disconnect battery earth lead.
4. Remove camshaft timing belt upper cover. ***See this section.***

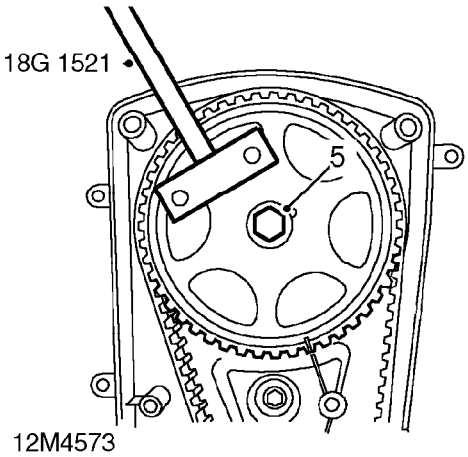

5. Restrain camshaft gear using tool **18G 1521** and loosen but do not remove camshaft gear retaining bolt.

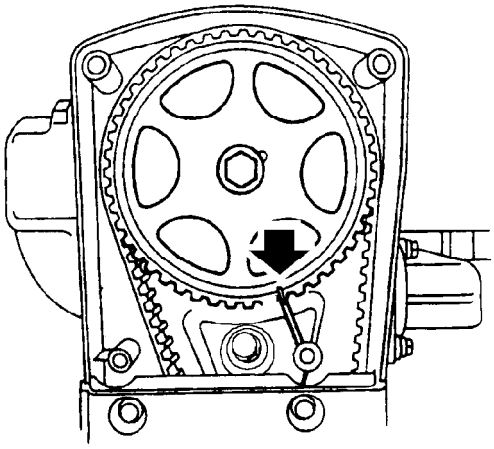

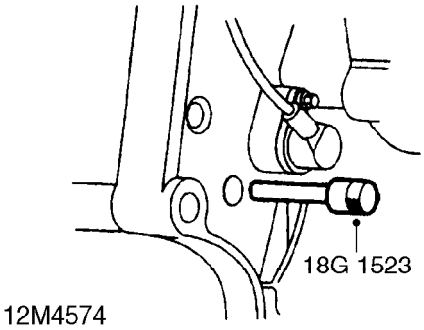

6. Insert timing pin **18G 1523** through hole in gearbox mounting plate, hold pin in contact with flywheel.
7. Using assistance, rotate crankshaft clockwise until timing pin **18G 1523** can be felt to enter hole in crankshaft.

CAUTION: Never use the camshaft gear, gear retaining bolt or timing belt to rotate the crankshaft.

8. Check that timing marks on camshaft gear and back cover are aligned.

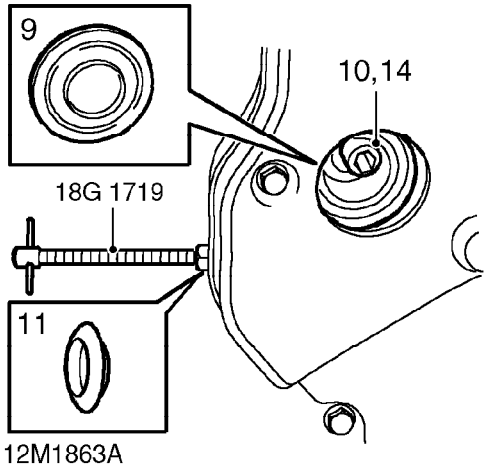

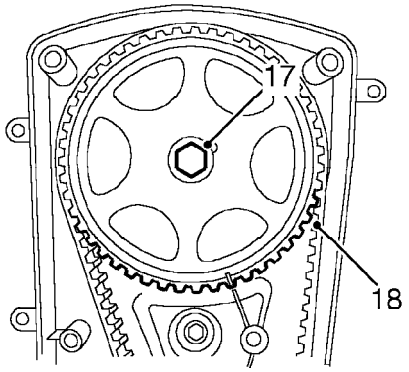

9. Remove tensioner access plug from camshaft timing belt lower cover.
10. Loosen Allen bolt securing tensioner pulley.
11. Remove tensioner access plug from back cover.
12. Screw timing belt tensioner retractor tool **18G 1719** into timing belt tensioner plunger.
13. Tighten nut on tool **18G 1719** until timing belt tension is released.
14. Tighten tensioner pulley Allen bolt.
15. Remove engine RH mounting. ***See this section.***
16. Raise RH side of engine sufficiently only to give access to fit seal removal tool.
17. Remove and retain camshaft gear retaining bolt.
18. Release camshaft gear from camshaft and remove from belt.

CAUTION: Do not rotate camshaft or crankshaft with timing belt removed.

If the sintered gear has been subjected to prolonged oil contamination, it must be soaked in a solvent bath and thoroughly washed with solvent before refitment. Because of the porous construction of the sintered material, oil impregnated in the gear will emerge and contaminate a new belt.

If camshaft timing belt shows any sign of oil or coolant contamination, renew belt. *See this section.*

Cause of contamination must be rectified.

19. Fit but do not tighten the original camshaft gear retaining bolt.

CAUTION: Ensure camshaft does not rotate.

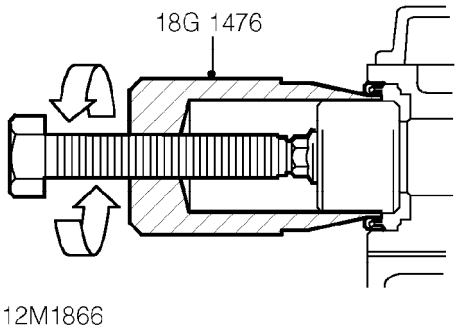

20. Fit and tighten seal remover tool **18G 1476** to camshaft seal.
21. Tighten seal remover centre screw to remove camshaft seal.
22. Remove seal remover **18G 1476.**
23. Remove and discard seal from seal remover tool.
24. Remove and discard camshaft gear retaining bolt.

Refit

1. Clean seal recess.
2. Clean oil seal running surface on camshaft.
3. Ensure seal fitting tool **18G 1716** is clean.

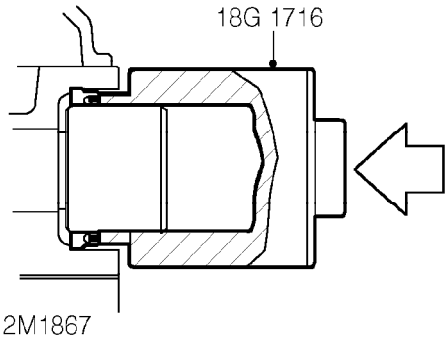

4. Locate new oil seal to seal housing.
5. Position tool **18G 1716** to seal and drift seal into housing.

CAUTION: Oil seal must be fitted dry.

6. Remove tool **18G 1716.**
7. Clean camshaft gear and mating face.
8. Fit camshaft gear to belt and position gear to camshaft.

CAUTION: Ensure timing marks on camshaft gear and upper rear cover are aligned.

9. Apply clean engine oil to threads of new camshaft gear retaining bolt.
10. Fit camshaft bolt but do not tighten at this stage.

CAUTION: Ensure camshaft does not rotate.

11. Fit engine RH mounting. ***See this section.***

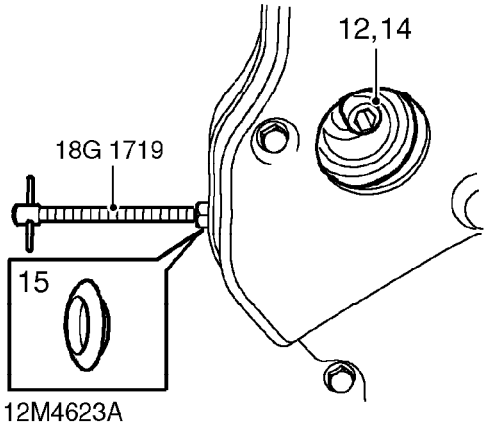

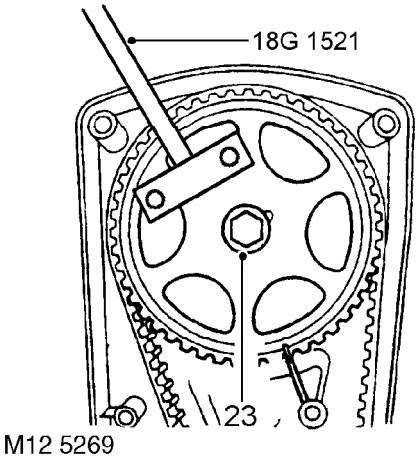

12. Loosen tensioner pulley Allen bolt until tensioner moves easily without tipping.
13. Release camshaft timing belt tensioner plunger using tool **18G 1719.**
14. Remove tool **18G 1719** from camshaft timing belt tensioner and tighten Allen bolt to 55 Nm.
15. Fit access plug to back cover.
16. Remove timing pin tool **18G 1523** from flywheel.
17. Using a socket and extension bar on crankshaft pulley bolt, rotate crankshaft 2 turns clockwise and fit timing pin **18G 1523** into flywheel ensuring that pin is fully inserted in hole in flywheel.
18. Check camshaft gear timing mark is aligned with mark on back cover.
19. Slacken Allen bolt securing belt tensioner pulley, allow pulley to react and tighten Allen bolt to 55 Nm.

CAUTION: Do not exceed specified torque figure.

20. Fit access plug to timing belt cover.
21. Remove timing pin **18G 1523.**
22. Restrain camshaft gear using tool **18G 1521.**
23. Tighten camshaft gear retaining bolt to 20 Nm + 90° .
24. Fit camshaft timing belt upper cover. ***See this section.***
25. Fit road wheel(s) and tighten nuts to correct torque. ***See INFORMATION, Torque wrench settings.***
26. Remove stand(s) and lower vehicle.
27. Connect battery earth lead.

CAMSHAFT REAR OIL SEAL

Service repair no - 12.13.06

Remove

1. Remove undertray. ***See BODY, Exterior fittings.***
2. Remove FIP timing belt cover. ***See this section.***
3. Remove camshaft timing belt upper cover. ***See this section.***

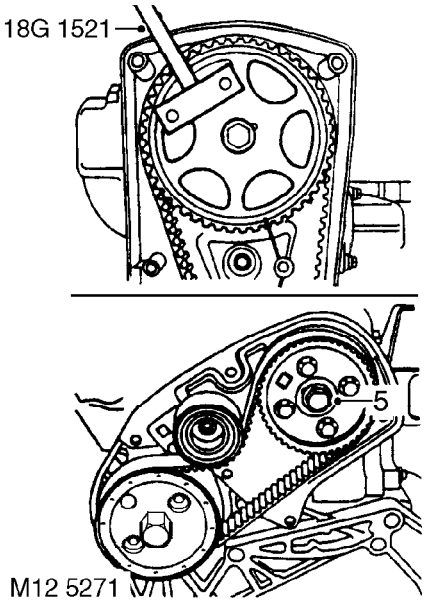

4. Restrain camshaft gear using tool **18G 1521.**
5. Loosen but do not remove FIP timing belt drive gear bolt.

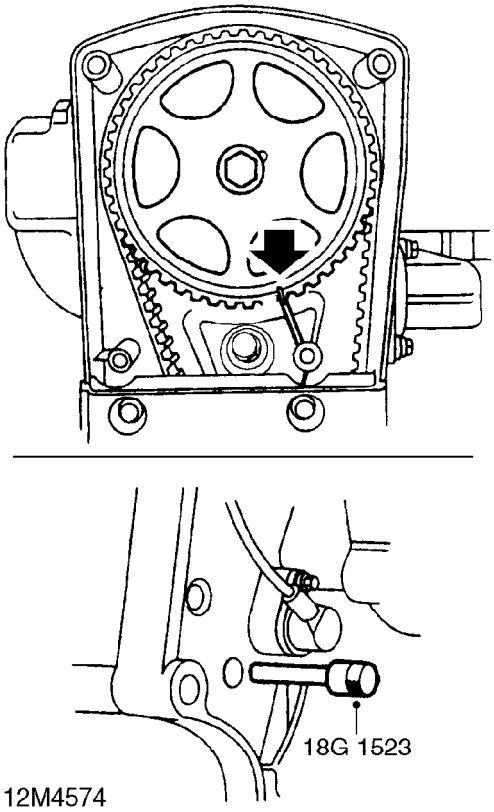

6. Insert timing pin **18G 1523** through hole in gearbox adapter plate, hold pin in contact with flywheel, and using assistance, rotate crankshaft clockwise until timing pin enters flywheel.

CAUTION: Never use the camshaft gear, gear retaining bolt or timing belt to rotate crankshaft.

7. Check that timing marks on camshaft gear and back cover are aligned.

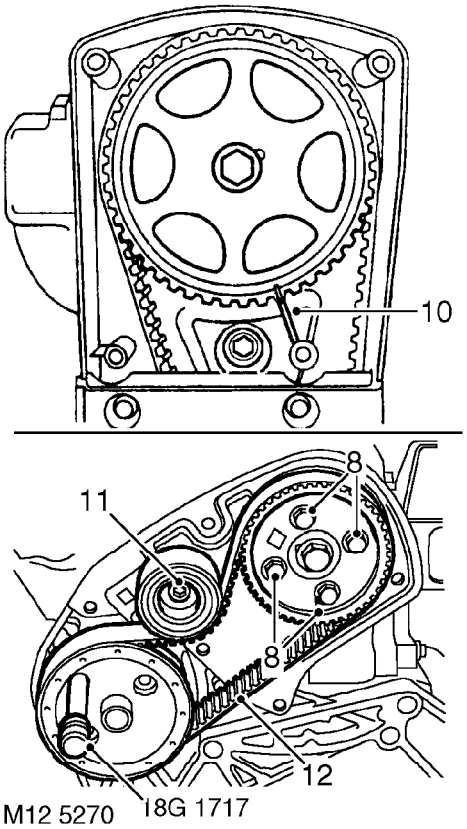

8. Loosen, but do not remove 4 bolts securing FIP timing belt drive gear to hub.
9. Fit locking pin **18G 1717** through FIP drive gear and into hole in adapter plate.

CAUTION: Locking pin must be a sliding fit, if pin is tight, rotate pump drive gear slightly using a socket on pump drive gear nut until pin can be inserted correctly.

10. Check that timing marks on camshaft gear and back cover are still aligned.

CAUTION: If drive belt is to be refitted, mark direction of rotation on belt.

11. Loosen Allen bolt securing FIP timing belt tensioner pulley, move tensioner away from belt and tighten Allen bolt.
12. Remove FIP timing belt.

CAUTION: Do not rotate camshaft or FIP with timing belt removed.
Ease belt from gears using fingers only. Store a belt on its edge with a radius greater than 50 mm. DO NOT use a belt which has been twisted or bent double as this can fracture reinforcing fibres. Do not use an oil or coolant contaminated belt.
Cause of contamination must be rectified.
Although the belt has a service life of 84,000 miles, (135,000 km) an existing belt should only be refitted if it has completed less than 42,000 miles, (65,000 km).

13. Remove bolt securing FIP timing belt drive gear.
14. Remove FIP timing belt drive gear.

CAUTION: If the gear has been subjected to prolonged oil contamination, it must be soaked in a solvent bath and thoroughly washed with solvent before refitting. Because of the porous construction of the sintered material, oil impregnated in the gear will emerge and contaminate a new belt.

15. Remove Allen bolt securing FIP timing belt tensioner and remove tensioner.

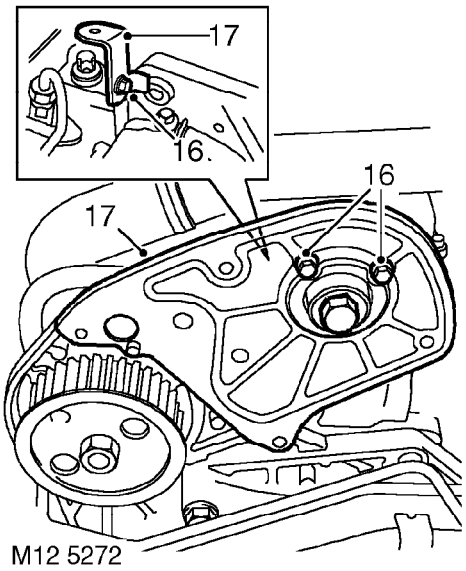

16. Remove 3 bolts securing FIP timing belt backplate and bracket.
17. Remove backplate and bracket.
18. Fit but do not tighten the old FIP timing belt drive gear retaining bolt.

CAUTION: Ensure camshaft does not rotate.

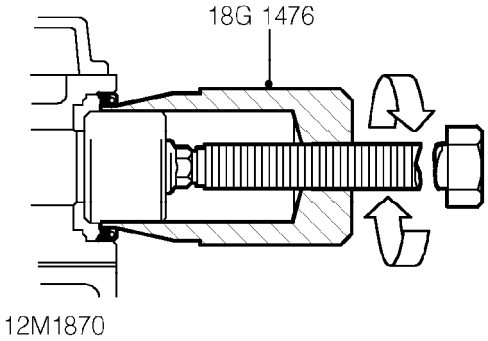

19. Fit and tighten seal remover tool **18G 1476** to camshaft seal.
20. Tighten seal remover centre screw to remove camshaft seal.
21. Remove seal remover **18G 1476.**
22. Remove and discard seal from seal remover tool.
23. Remove and discard FIP timing belt drive gear retaining bolt.

Refit

1. Clean seal recess.
2. Clean oil seal running surface on camshaft.

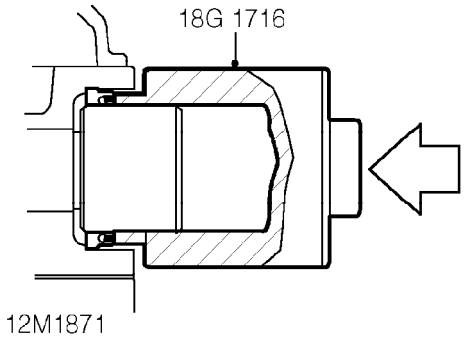

3. Ensure seal fitting tool **18G 1716** is clean.
4. Fit camshaft oil seal using **18G 1716.**

CAUTION: Oil seal must be fitted dry.

5. Fit timing belt backplate and bracket.
6. Fit 3 bolts securing FIP timing belt backplate and bracket, tighten bolts to 8 Nm.
7. Fit FIP timing belt tensioner, fit Allen bolt.
8. Clean FIP timing belt drive gear and mating face.
9. Fit FIP timing belt drive gear to camshaft, apply clean engine oil to threads of new bolt.
10. Fit but do not tighten bolt securing gear.

CAUTION: Ensure camshaft does not rotate.

11. Fit FIP timing belt using fingers only, rotating the FIP timing belt belt drive gear fully clockwise within the slots, and then anti-clockwise until the drive belt locates in the gear teeth. Fitting the belt in the other possible position will not allow for correct belt adjustment.

CAUTION: If original belt is to be refitted, ensure direction of rotation mark is facing correct way.

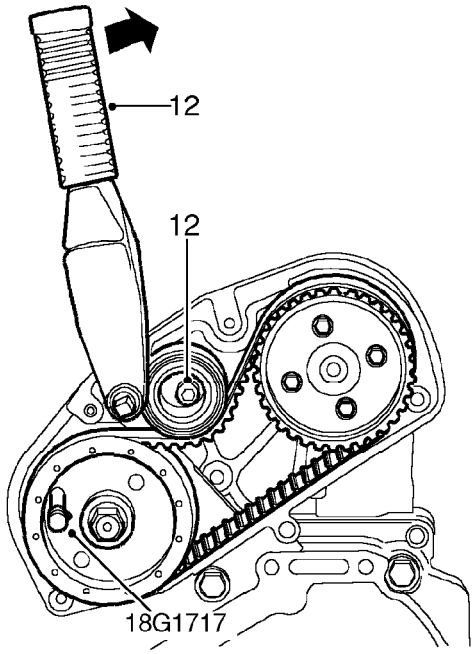

M12 5273

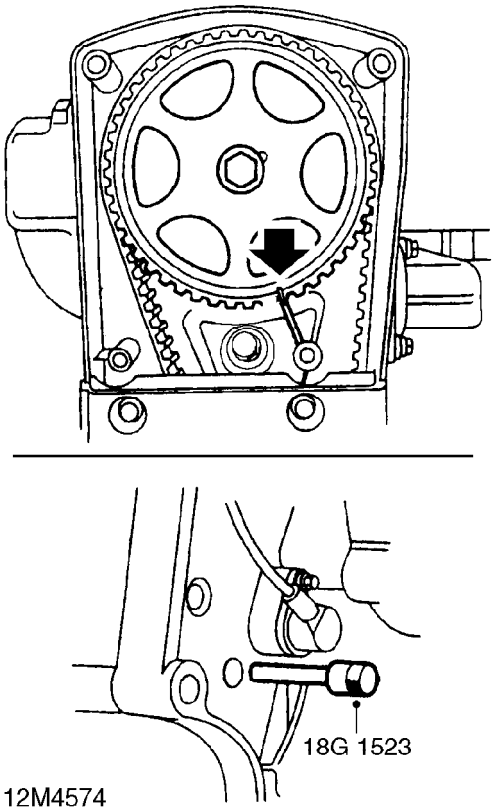

12M4574

12. Using a torque wrench fitted to tensioner pulley backplate, apply a **clockwise,** as viewed from rear of engine, torque loading of 6 Nm to drive belt. Maintain loading and tighten tensioner pulley Allen bolt to 44 Nm.

CAUTION: Do not exceed specified torque figure.

13. Remove FIP gear locking pin **18G 1717** and timing pin **18G 1523.**

14. Rotate crankshaft clockwise 2 complete revolutions and fit timing pin **18G 1523.**

CAUTION: Ensure pin is fully inserted into hole in flywheel.

15. Check that camshaft drive gear timing mark is aligned with mark on back cover.

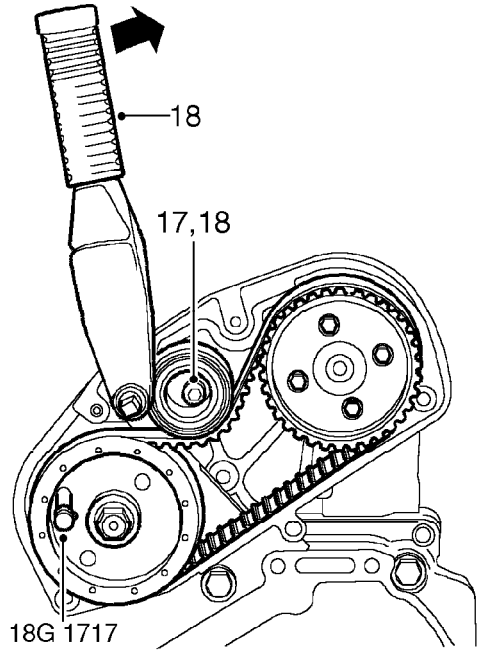

M12 5274

16. Insert locking pin **18G 1717** through FIP drive gear and into hole in adapter plate.

NOTE: Locking pin may be a tight fit at this stage.

17. Loosen timing belt tensioner pulley Allen bolt.
18. Using a torque wrench fitted to tensioner pulley backplate, apply a **clockwise,** as viewed from rear of engine, torque loading of 6 Nm to drive belt. Maintain loading and tighten tensioner pulley Allen bolt to 44 Nm.

CAUTION: Do not exceed specified torque figure.

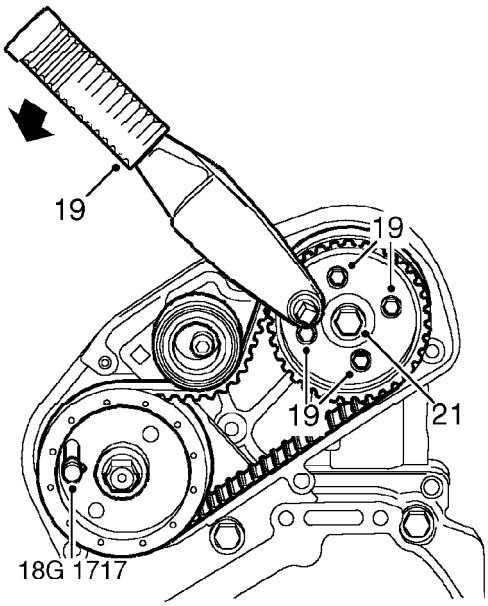

M12 5275

19. Fit torque wrench to square hole in FIP timing belt drive gear as shown and apply an **anti-clockwise** as viewed from rear of engine, torque loading of 25 Nm. Maintain loading and tighten 4 bolts securing gear to 25 Nm.
20. Remove FIP drive gear locking pin **18G 1717** and timing pin **18G 1523.**
21. Restrain camshaft gear using **18G 1521** and tighten bolt retaining FIP timing belt drive gear to 20 Nm + 90°.
22. Rotate crankshaft clockwise 2 complete revolutions and fit timing pin **18G 1523.**

CAUTION: Ensure pin is fully inserted into hole in flywheel.

23. Check that camshaft gear timing mark is aligned with mark on back cover.
24. Insert locking pin **18G 1717** through FIP drive gear and into hole in adapter plate.

CAUTION: To ensure injection pump timing is correct, locking pin must be a sliding fit. If pin is a tight fit, adjustment procedure must be repeated.

25. On completion, remove timing pin **18G 1523** and locking pin **18G 1717.**
26. Fit timing belt upper cover. ***See this section.***
27. Fit FIP timing belt cover. ***See this section.***
28. Fit undertray. ***See BODY, Exterior fittings.***

CRANKSHAFT FRONT PULLEY

Service repair no - 12.21.01

Remove

1. Disconnect battery earth lead.
2. Raise front of vehicle.

WARNING: Support on safety stands.

3. Remove auxiliary drive belt. ***See ELECTRICAL, Repairs.***
4. Remove RH front road wheel.
5. Remove camshaft timing belt upper cover. ***See this section.***

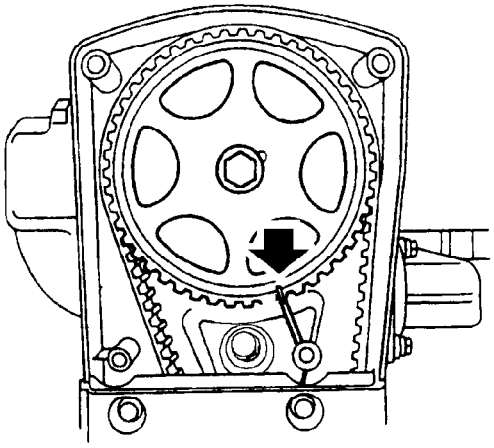

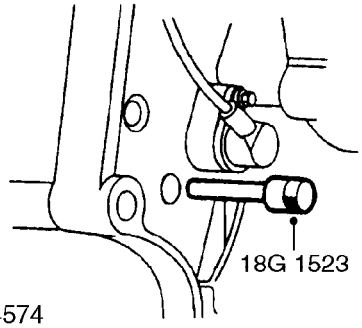

12M4574

6. Insert timing pin **18G 1523** through hole in gearbox adapter plate, hold pin in contact with flywheel, and using assistance, rotate crankshaft clockwise until timing pin enters flywheel.
7. Check that timing marks on camshaft gear and back cover are aligned.

CAUTION: Never use the camshaft gear, gear retaining bolt or timing belt to rotate crankshaft.

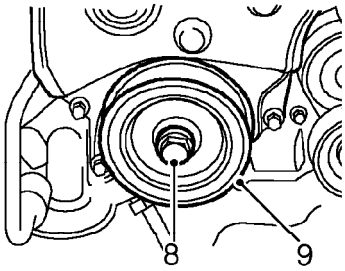

12M4568

8. Remove bolt securing crankshaft pulley.
9. Remove crankshaft pulley.

Refit

1. Clean and fit pulley to crankshaft, fit bolt securing pulley and tighten to 63 Nm + 90°.
2. Remove air cleaner assembly. ***See ENGINE MANAGEMENT SYSTEM - EDC, Repairs.***

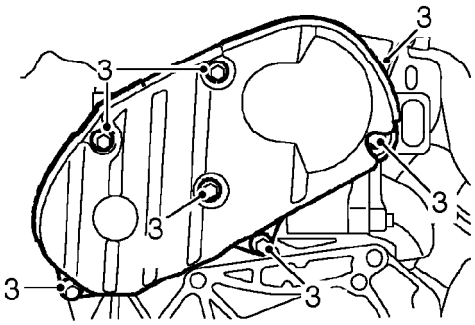

M12 5276

3. Remove 6 bolts securing FIP timing belt cover, remove cover.

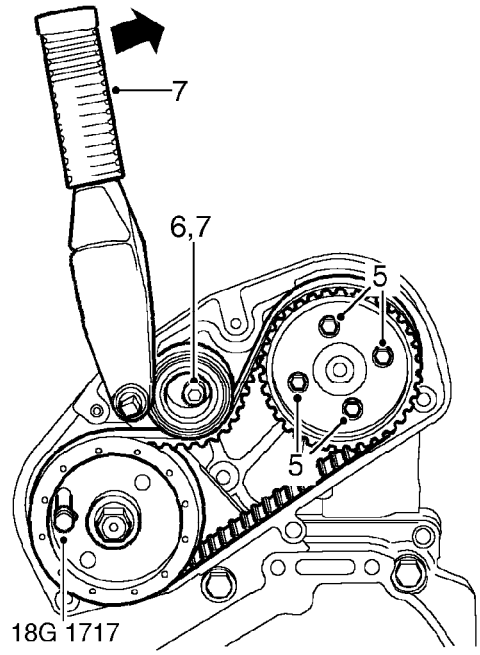

M12 5277

4. Insert locking pin **18G 1717** through FIP drive gear and into hole in adapter plate. Locking pin must be a sliding fit. If pin is a tight fit, proceed as follows:
5. Loosen 4 bolts securing FIP timing belt drive gear to hub.
6. Loosen timing belt tensioner Allen bolt.
7. Using a torque wrench fitted to tensioner pulley backplate, apply a **clockwise,** as viewed from rear of engine, torque loading of 6 Nm to drive belt. Maintain loading and tighten tensioner pulley Allen bolt to 44 Nm.

CAUTION: Do not exceed specified torque figure.

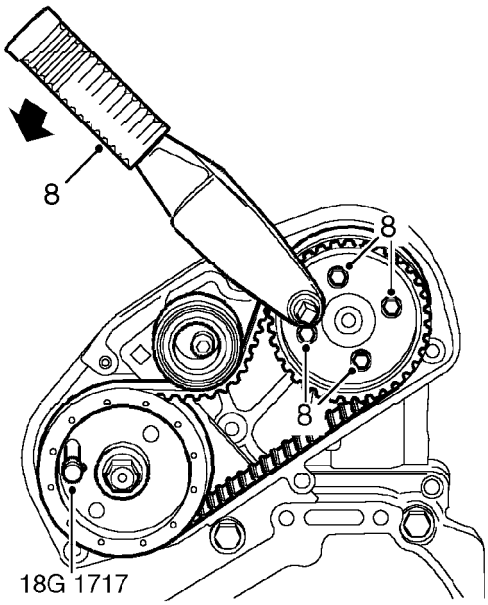

M12 5278

8. Fit torque wrench to square hole in FIP timing belt drive gear as shown and apply an **anti-clockwise,** as viewed from rear of engine, torque loading of 25 Nm. Maintain loading and tighten 4 bolts securing gear to 25 Nm.
9. Remove FIP drive gear locking pin **18G 1717** and timing pin **18G 1523.**

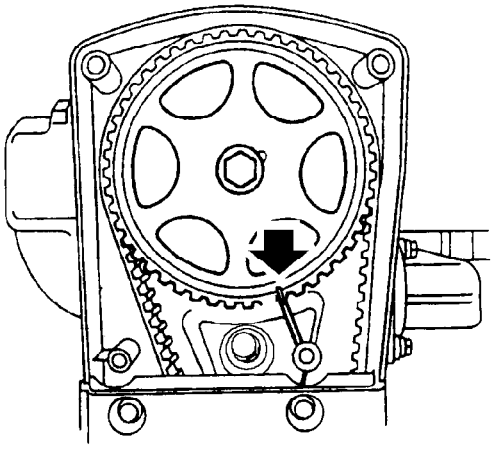

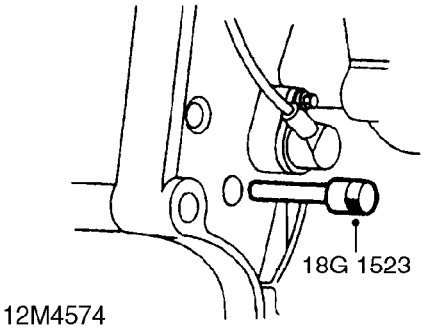

10. Rotate crankshaft clockwise 2 complete revolutions and fit timing pin **18G 1523.**

CAUTION: Ensure pin is fully inserted into hole in flywheel.

11. Check that camshaft drive gear timing mark is aligned with mark on back cover.

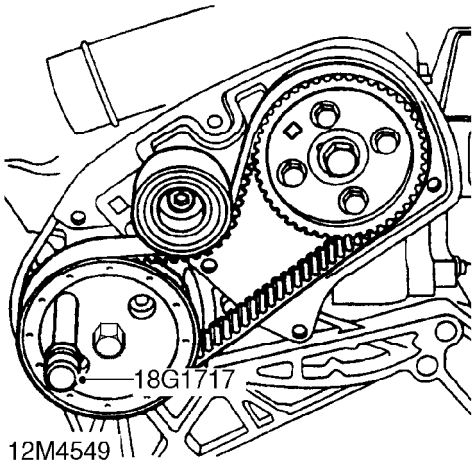

12. Insert locking pin **18G 1717** through FIP drive gear and into hole in adapter plate.

CAUTION: To ensure FIP timing is correct, locking pin must be a sliding fit. If pin is a tight fit, drive belt adjustment procedure must be repeated.

13. On completion, remove timing pin **18G 1523** and locking pin **18G 1717.**
14. Fit camshaft timing belt upper cover. ***See this section.***
15. Fit FIP timing belt cover, fit bolts and tighten to 5 Nm.
16. Fit air cleaner assembly. ***See ENGINE MANAGEMENT SYSTEM - EDC, Repairs.***
17. Fit auxiliary drive belt. ***See ELECTRICAL, Repairs.***

CRANKSHAFT FRONT OIL SEAL

Service repair no - 12.21.14

Remove

1. Disconnect battery earth lead.
2. Remove camshaft timing belt. ***See this section.***

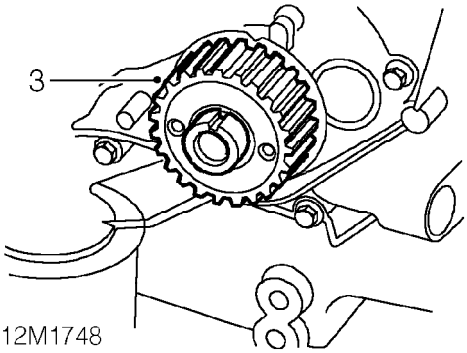

3. Remove timing gear from crankshaft.

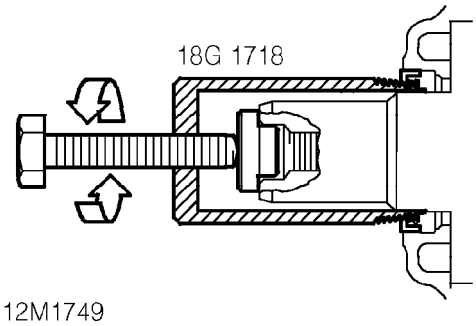

4. Ensure bore of tool **18G 1718** is burr free, screw tool into crankshaft front oil seal.
5. Remove oil seal by tightening centre bolt of tool.

Refit

1. Use lint free cloth and thoroughly clean seal recess in oil pump and running surface on crankshaft.

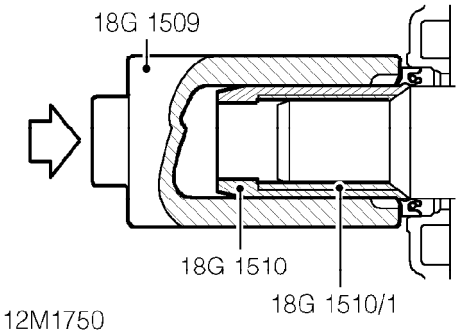

2. Fit guide tools **18G 1510** and **18G 1510-1** onto crankshaft.
3. Using guide tools, position new seal on crankshaft journal and against oil pump. Drift into place using special tool **18G 1509.**

CAUTION: Oil seal must be fitted dry.

4. Remove guide tools from crankshaft.
5. Clean crankshaft timing gear and slide onto crankshaft.
6. Fit camshaft timing belt. ***See this section.***
7. Connect battery earth lead.

CRANKSHAFT REAR OIL SEAL

Service repair no - 12.21.20

Remove

1. Remove flywheel. ***See this section.***
2. Remove sump. ***See this section.***

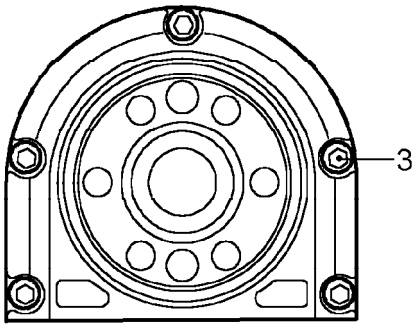

12M3555

3. Remove 5 bolts securing oil seal housing, remove and discard oil seal and housing.

Refit

1. Ensure oil seal running surface on crankshaft and oil seal housing mating surfaces on cylinder block are clean and oil free and that bolt and dowel holes are clean and dry.

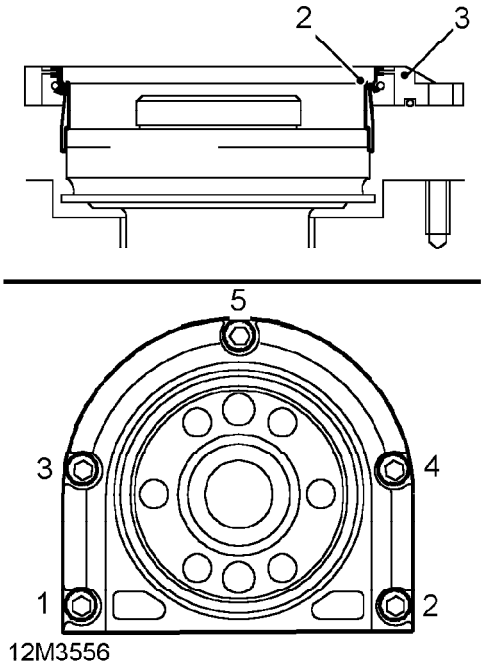

12M3556

CAUTION: Do not lubricate oil seal or running surfaces on crankshaft. Do not separate protector sleeve from oil seal and do not touch lip of oil seal. If seal is inadvertently handled it must not be fitted as the coating applied to the seal during manufacture will be destroyed and oil leakage can result.

2. Slide oil seal protector sleeve, oil seal and housing over end of crankshaft.
3. Position oil seal and housing on cylinder block.

NOTE: Oil seal protector sleeve will be displaced as seal and housing are fitted.

4. Fit bolts and working in sequence shown, tighten to 8 Nm.
5. Fit sump. ***See this section.***
6. Fit flywheel. ***See this section.***

CYLINDER HEAD GASKET - MODELS WITHOUT INTERCOOLER

Service repair no - 12.29.02

Remove

1. Disconnect battery earth lead.
2. Drain cooling system. ***See COOLING SYSTEM - 'L' SERIES, Adjustments.***
3. Raise front of vehicle.

WARNING: Support on safety stands.

4. Remove FIP timing belt cover. ***See this section.***
5. Remove auxiliary drive belt. ***See ELECTRICAL, Repairs.***
6. Remove camshaft timing belt upper cover. ***See this section.***

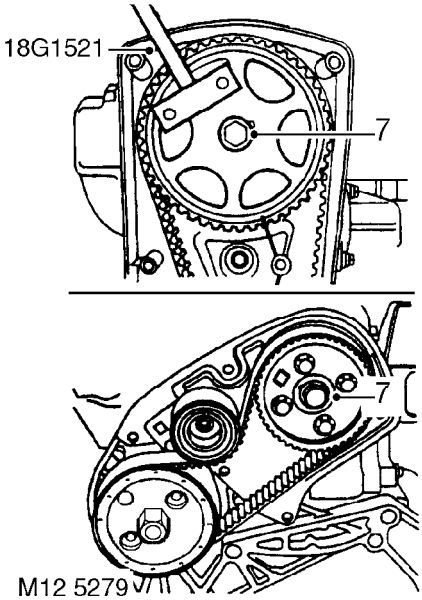

7. Restrain camshaft gear using tool **18G 1521** and loosen but do not remove bolts securing camshaft and FIP timing belt drive gears.

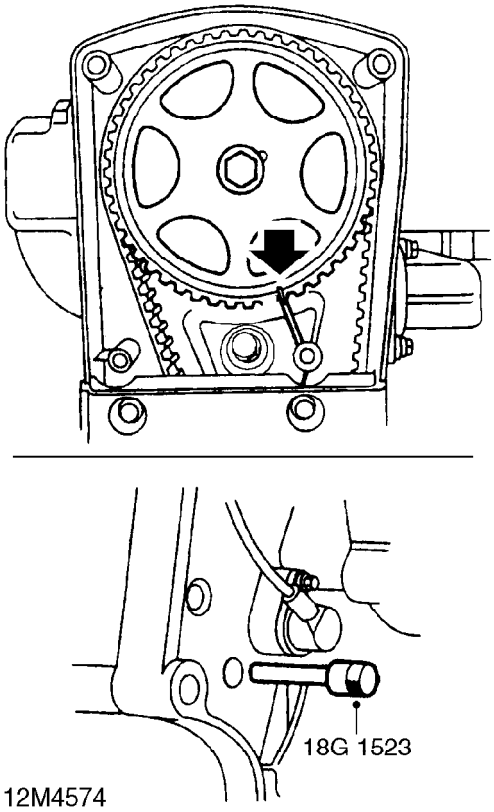

8. Insert timing pin **18G 1523** through hole in gearbox adapter plate, hold pin in contact with flywheel and using assistance, rotate crankshaft clockwise until timing pin enters hole in flywheel.
9. Check that timing marks on camshaft gear and back cover are aligned.

CAUTION: Do not use camshaft gear, gear retaining bolt or timing belt to rotate crankshaft.

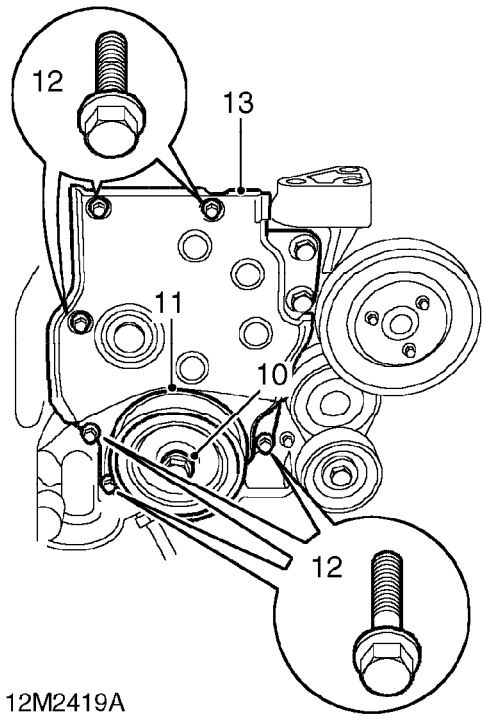

10. Remove bolt securing pulley to crankshaft.
11. Remove crankshaft front pulley.
12. Remove 6 bolts securing timing belt lower cover to rear cover.
13. Remove timing belt lower cover.

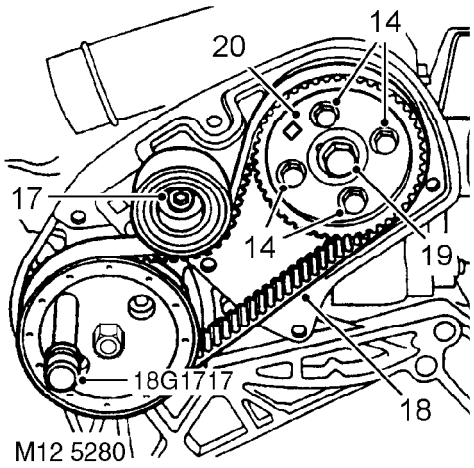

14. Loosen but do not remove 4 bolts securing FIP timing belt drive gear to hub.
15. Insert locking pin **18G 1717** through hole in FIP drive gear and into hole in adapter plate.

CAUTION: Locking pin 18G 1717 must be a sliding fit. If difficulty is experienced, rotate pump hub using a socket on hub nut until pin can be inserted.

16. Check that timing marks on camshaft gear and back cover are still aligned.

CAUTION: If drive belt is to be refitted, mark direction of rotation on belt.

17. Loosen Allen bolt securing tensioner pulley, move tensioner away from belt and tighten Allen bolt.
18. Remove FIP timing belt.

CAUTION: Do not rotate camshaft or FIP with timing belt removed. Ease timing belt from gears using fingers only, metal levers may damage belt and gears. Store a belt on its edge with a radius greater than 50 mm. DO NOT use a belt that has been twisted or bent double as this can fracture the reinforcing fibres. Do not use an oil or coolant contaminated belt. Cause of contamination must be rectified. Although the belt has a service life of 84,000 miles (65,000 km) an existing belt should only be refitted if it has completed less than 42,000 miles (65,000 km).

19. Remove and discard FIP timing belt drive gear bolt.
20. Remove FIP timing belt drive gear.

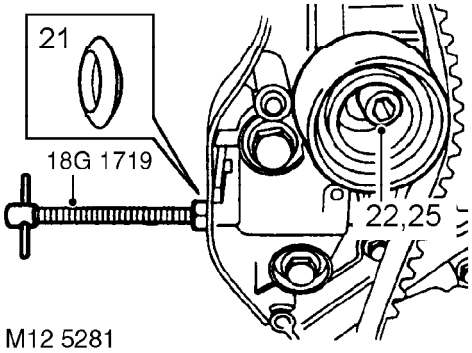

21. Remove timing belt tensioner access plug from timing belt back cover.
22. Loosen Allen bolt securing tensioner pulley.
23. Screw timing belt tensioner retractor tool **18G 1719** into tensioner.
24. Tighten nut on tool **18G 1719** until belt tension is released.
25. Tighten Allen bolt securing tensioner pulley.
26. Release timing belt from camshaft gear.

CAUTION: Ease timing belt off gear using fingers only. Metal levers may damage the belt and gear.

DO NOT rotate the crankshaft with the timing belt removed and the cylinder head fitted.

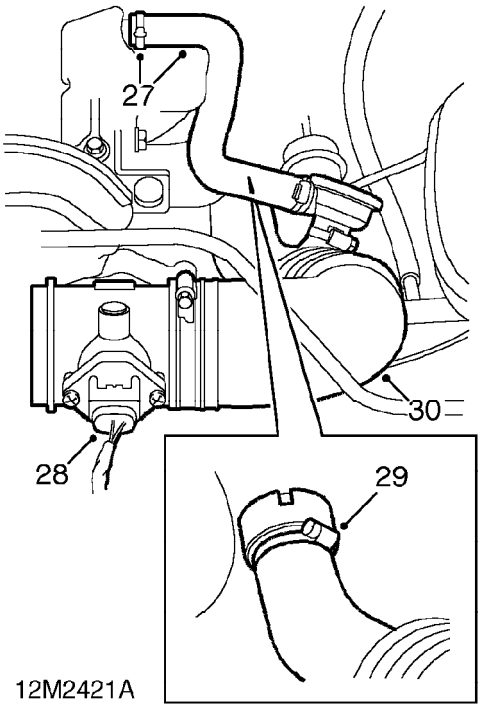

27. Loosen clip and disconnect breather hose from camshaft cover.
28. Disconnect multiplug from MAF sensor.
29. Loosen clip and disconnect air intake pipe from turbocharger.
30. Remove air intake pipe and MAF sensor.
31. Disconnect exhaust front pipe from manifold flange. ***See MANIFOLD & EXHAUST SYSTEMS, Repairs.***

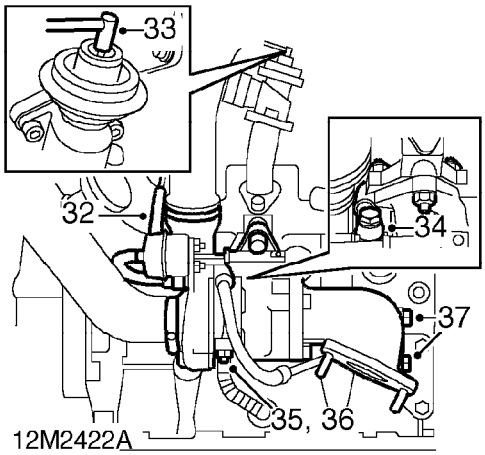

32. Disconnect vacuum pipe from turbocharger actuator.
33. Disconnect vacuum pipe from EGR valve.
34. Remove banjo bolt securing oil feed pipe to turbocharger; collect 2 sealing washers.
35. Remove 2 bolts securing oil drain pipe to turbocharger.
36. Remove and discard gasket.
37. Remove 2 bolts securing exhaust manifold to support bracket.

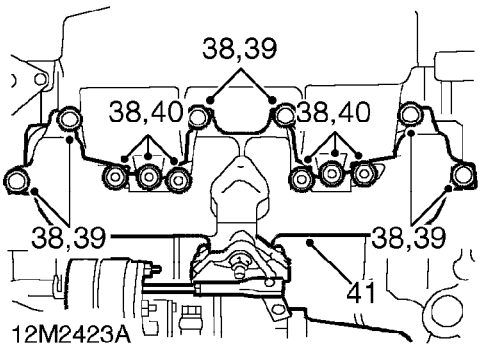

38. Loosen 6 nuts and 6 bolts securing inlet and exhaust manifolds to cylinder head.
39. Remove 6 bolts securing manifolds to cylinder head and collect 4 washers.
40. Remove 6 nuts securing manifolds to cylinder head.
41. Release and remove inlet and exhaust manifolds as an assembly.
42. Remove and discard manifold gasket.

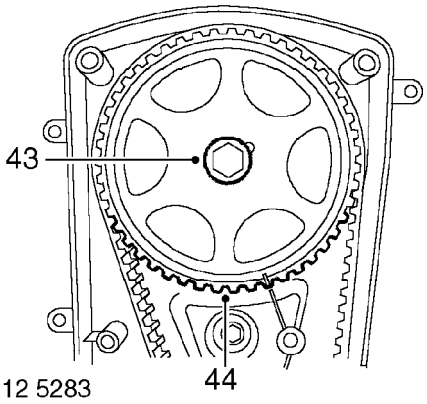

43. Remove and discard camshaft gear retaining bolt.
44. Remove camshaft gear.

CAUTION: If the sintered gears have been subjected to prolonged oil contamination, they must be soaked in a solvent bath and thoroughly washed with solvent before refitment. Because of the porous construction of sintered material, oil impregnated in the gear will emerge and contaminate a new belt.

Cause of oil contamination must be rectified.

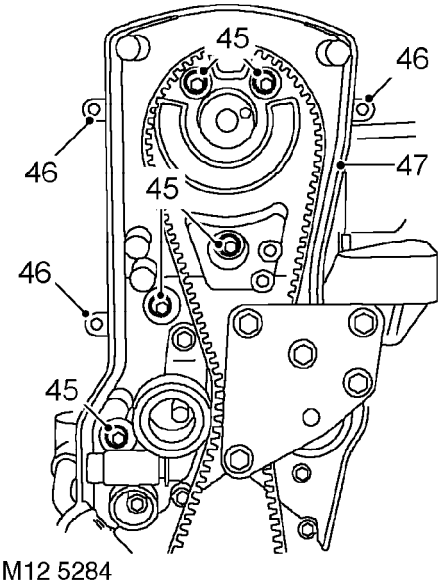

45. Remove 5 bolts securing camshaft timing belt back cover to cylinder head and block.
46. Release 3 clips securing engine harness to back cover.
47. Remove camshaft timing belt back cover.

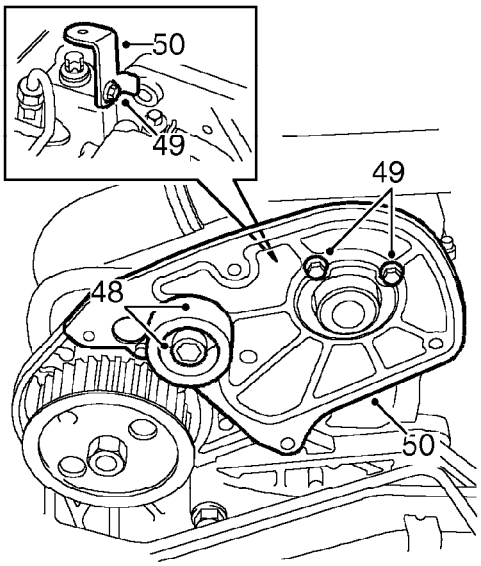

12M2427A

48. Remove Allen bolt securing FIP drive belt tensioner to backplate and remove tensioner.
49. Remove 3 bolts securing FIP timing belt backplate and bracket to cylinder head.
50. Remove backplate and bracket.

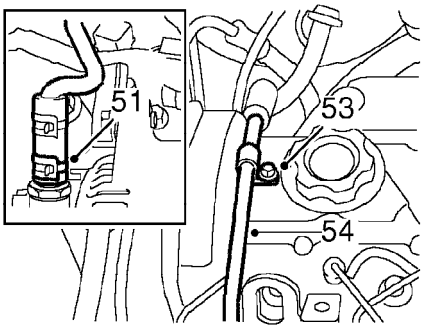

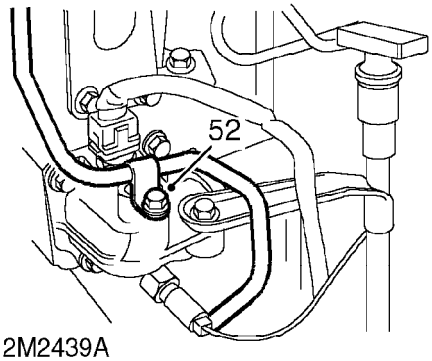

12M2439A

51. Release clip and disconnect hose from brake servo vacuum pipe.
52. Remove bolt securing brake servo vacuum pipe to coolant outlet elbow.
53. Remove bolt securing brake servo vacuum pipe to camshaft cover.
54. Position vacuum pipe aside.

Models with air conditioning fitted

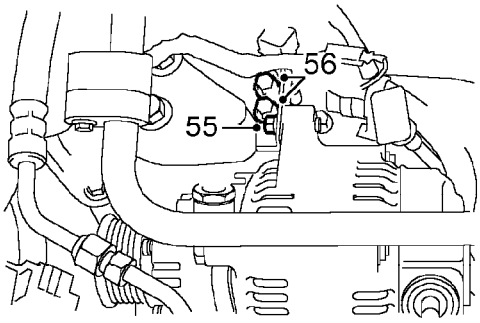

12M2440A

55. Remove bolt securing alternator to top mounting bracket.
56. Remove 2 bolts securing mounting bracket to coolant outlet elbow. Remove mounting bracket.

All models

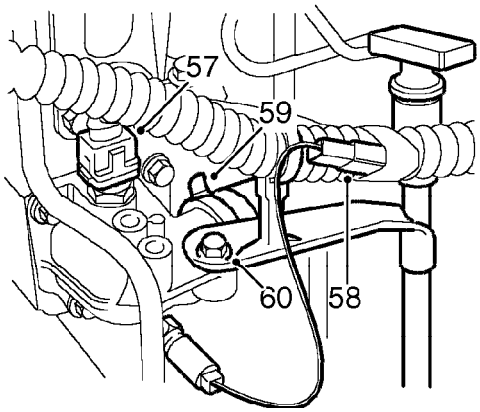

12M2428A

57. Disconnect multiplug from ECT sensor.
58. Disconnect engine coolant temperature gauge Lucar from harness.
59. Loosen clip and disconnect radiator top hose from coolant outlet elbow.
60. Remove bolt securing dipstick tube bracket to coolant outlet elbow.

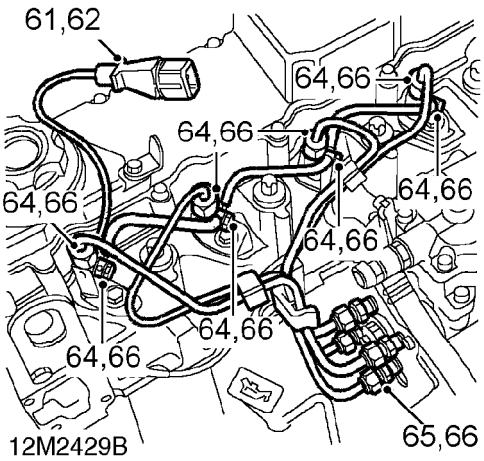

12M2429B

61. Release injector needle lift sensor multiplug from injection pump bracket.
62. Disconnect injector needle lift sensor multiplug from harness.
63. Position absorbent cloth around fuel injector pipe unions to absorb any fuel spillage.
64. Loosen unions securing injection and spill return pipes to injectors.
65. Loosen unions securing pipes to injection pump.

CAUTION: To prevent damage to fuel injection pipes or components, use 2 spanners when loosening unions.

66. Disconnect pipe unions from injectors and injection pump, remove pipes.

CAUTION: Plug the connections.

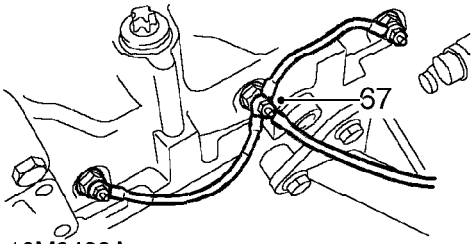

12M2433A

67. Remove nut and disconnect feed lead from glow plug No. 2.

NOTE: 4 glow plugs fitted to later engines.

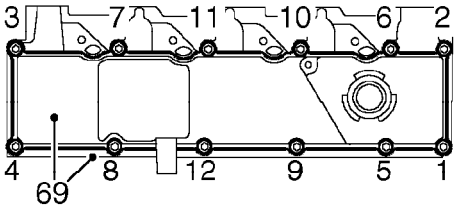

12M3558A

68. Using sequence shown, remove 12 bolts securing camshaft cover to camshaft carrier.

69. Remove camshaft cover, remove and discard gasket.

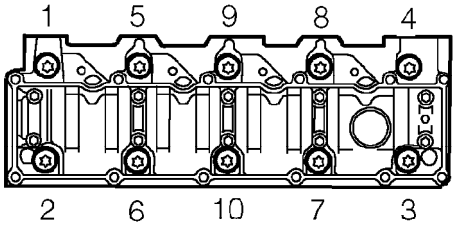

12M2431

70. Working in the sequence shown, progressively loosen and remove 10 Tx14 Torx cylinder head bolts.

CAUTION: Store cylinder head bolts in fitted order. Do not remove washers from bolts.

71. Using assistance, remove cylinder head assembly from cylinder block and stand on wooden blocks or stands.

CAUTION: The tips of the injectors and glow plugs protrude below the face of the cylinder head and will be damaged if the cylinder head is stood face down on a work bench. If crankshaft is to be rotated, ensure timing pin 18G 1523 is removed from flywheel prior to rotating crankshaft and is refitted on completion. Do not remove locking pin 18G 1717.

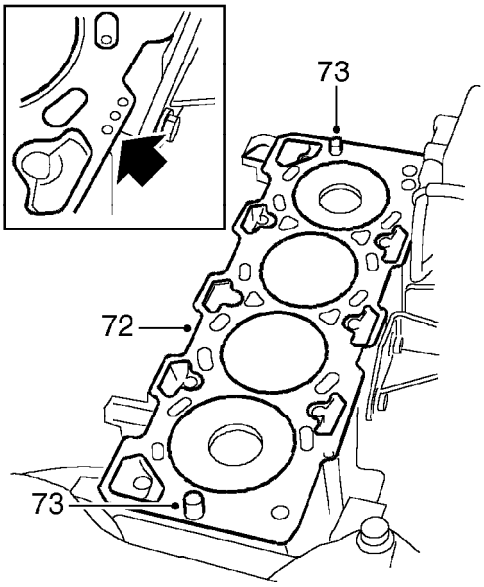

12M2432A

72. Remove cylinder head gasket from cylinder block and discard.

CAUTION: Note the gasket thickness indicator and ensure the same thickness gasket is used when refitting the cylinder head.

73. Remove location dowels from cylinder head.

Cylinder head - inspection

1. Inspect cylinder head for signs of damage.

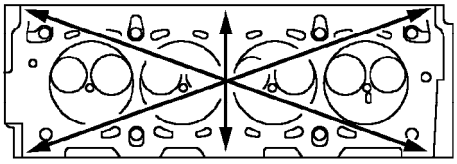

12M1903

2. Check cylinder head for warping, across centre and from corner to corner.
   Maximum warp = 0.10 mm

CAUTION: Cylinder heads may not be refaced, replace head assembly if warping exceeds figure given.

Refit

1. Clean mating faces of cylinder head and block. Clean oil and coolant passages.
   De-carbonise piston crowns and cylinder head if necessary.
2. Clean dowels, dowel holes and cylinder block bolt holes.

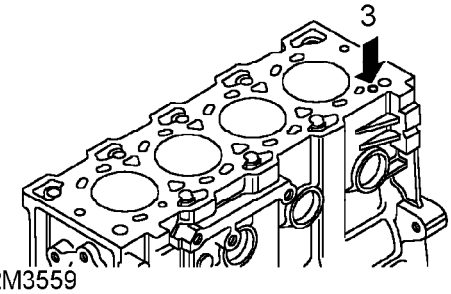

12M3559

3. Check that oil feed restrictor in cylinder block is clear and fitted below cylinder block top face.
4. Clean and dry cylinder head bolts.

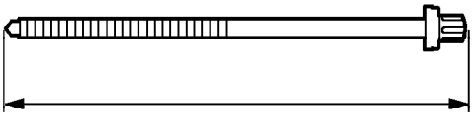

12M1916

5. Measure length of cylinder head bolts. if any bolt exceeds the maximum length of 243.41 mm, then all bolts must be renewed.

CAUTION: Do not remove washers from bolts, keep bolts in their fitted order.

6. Temporarily fit crankshaft pulley bolt, remove timing pin **18G 1523** and using crankshaft pulley bolt, rotate crankshaft anti-clockwise until numbers 1 and 4 pistons are approximately 25 mm below cylinder block top face. Do not remove pulley bolt at this stage.

CAUTION: Ensure timing belt is not trapped as crankshaft is rotated.

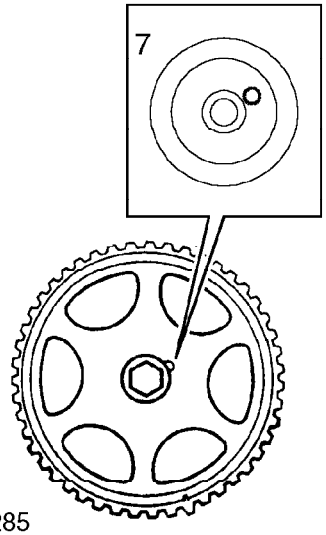

M12 5285

7. Check that camshaft timing gear drive pin is at 2 o’clock position. If necessary, temporarily fit camshaft gear and rotate camshaft until pin is positioned. Remove camshaft gear.
8. Apply a light film of engine oil to cylinder head bolt threads and underside of bolt heads.

CAUTION: Do not lubricate underside of washers.

9. Fit location dowels to cylinder block.
10. Fit new cylinder head gasket to block, dry.
11. Using assistance, fit cylinder head onto block, carefully locating on dowels.
12. Fit cylinder head bolts in their original fitted order, do not drop bolts into cylinder block.

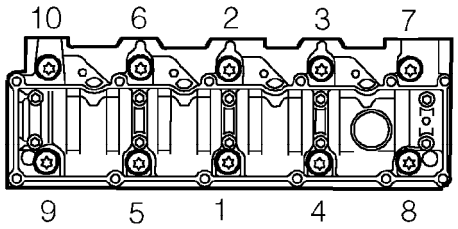

12M2436

13. Tighten cylinder head bolts progressively in the sequence shown, using the following procedure:
    i. Tighten all bolts to 30 Nm.
    ii. Tighten all bolts to 65 Nm. Using a felt tip pen, mark position of radial mark on each bolt head.
    iii. Turn all bolts through 90° .
    iv. Turn all bolts through another 90° .

CAUTION: Ensure correct sequence is followed for all 4 stages. Do not tighten bolts 180° in one operation.

14. Clean mating faces of camshaft carrier and camshaft cover.
15. Ensure bolt holes in camshaft carrier are clean and dry.
16. Fit a new gasket, dry, to camshaft cover.

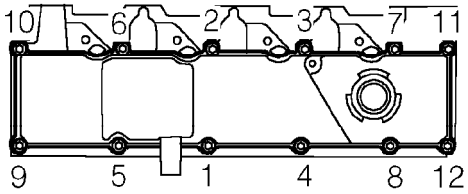

12M2437

17. Fit camshaft cover.
18. Working in the sequence shown, fit camshaft cover bolts and tighten to 12 Nm.

19. Connect glow plug feed lead to No.2 glow plug, fit and tighten nut.
20. Remove plugs from FIP and injectors.
21. Position injector pipes and connect unions to FIP and injectors, tighten unions to 28 Nm.

CAUTION: To prevent damage to fuel system pipes or components use 2 spanners when tightening unions.

22. Connect spill return pipes to injectors, tighten unions to 10 Nm.
23. Connect injector needle lift sensor multiplug to harness and secure to bracket on injection pump.
24. Connect radiator top hose to coolant outlet elbow and tighten clip.
25. Align dipstick tube bracket to coolant outlet elbow, fit bolt and tighten to 25 Nm.
26. Connect engine coolant temperature gauge sensor Lucar to harness.
27. Connect multiplug to ECT sensor.

Models with air conditioning fitted

28. Position alternator top mounting bracket to coolant outlet elbow, fit bolts and tighten to 25 Nm.
29. Fit bolt securing alternator to mounting bracket and tighten to 25 Nm.

All models

30. Connect hose to brake servo vacuum pipe and secure with clip.
31. Align brake servo vacuum pipe to coolant outlet elbow, fit bolt and tighten to 25 Nm.
32. Fit bolt securing vacuum pipe to camshaft cover and tighten to 10 Nm.
33. Position FIP timing belt backplate and bracket to cylinder head, fit bolts and tighten to 8 Nm.
34. Clean tensioner pulley.
35. Fit tensioner pulley to locating dowel, fit Allen bolt but do not tighten.
36. Position camshaft timing belt back cover to cylinder head and block, fit bolts and tighten to 8 Nm.
37. Align engine harness to back cover and secure with clips.
38. Clean camshaft gear and mating face.
39. Locate camshaft gear on camshaft.
40. Fit new camshaft gear retaining bolt but do not tighten at this stage.

CAUTION: Ensure camshaft does not rotate.

NOTE: Bolt is tightened after timing belt has been tensioned. Do not fit timing belt at this stage.

41. Clean FIP timing belt drive gear and mating face.
42. Locate FIP timing belt drive gear on camshaft.
43. Fit new FIP timing belt drive gear retaining bolt but do not tighten at this stage.

CAUTION: Ensure camshaft does not rotate.

NOTE: Bolt is tightened after FIP timing belt has been tensioned. Do not fit timing belt at this stage.

44. Clean mating faces of inlet manifold, exhaust manifold and cylinder head.
45. Fit new manifold gasket to cylinder head.
46. Manoeuvre inlet and exhaust manifolds into position on cylinder head.

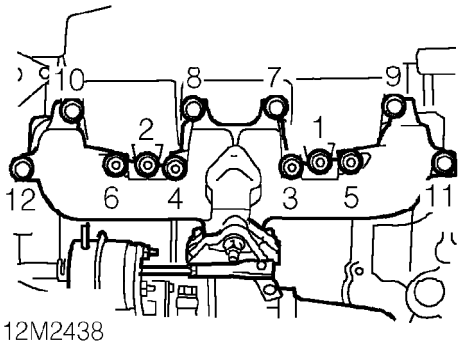

47. Fit nuts, bolts and washers securing manifolds to cylinder head.
48. Working in the sequence illustrated, tighten nuts to 25 Nm and bolts to 33 Nm.
49. Fit 2 bolts securing exhaust manifold to support bracket and tighten to 25 Nm.
50. Fit new gasket to turbocharger oil drain pipe. Align pipe to turbocharger, fit bolts and tighten to 8 Nm.
51. Clean turbocharger oil feed pipe union and banjo bolt.
52. Fit new sealing washers to banjo bolt. connect oil feed pipe to turbocharger and tighten banjo bolt to 18 Nm.
53. Connect vacuum pipe to EGR valve.
54. Connect vacuum pipe to turbocharger actuator.
55. Connect exhaust front pipe to manifold. ***See MANIFOLD & EXHAUST SYSTEMS, Repairs.***
56. Position air intake pipe and connect to turbocharger, tighten clip.
57. Connect multiplug to MAF sensor.
58. Connect breather hose to camshaft cover and tighten clip.

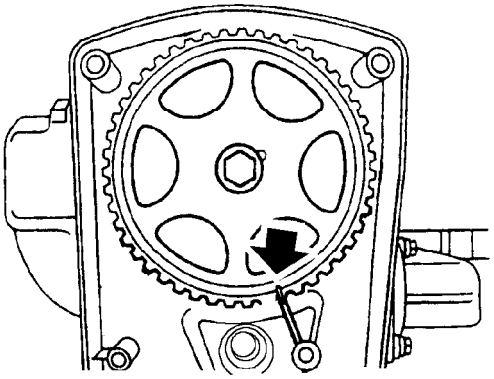

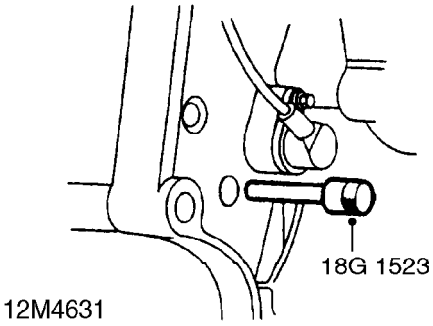

59. Align camshaft gear timing mark with mark on back cover.
60. Insert timing pin **18G 1523** through hole in gearbox adapter plate. Hold pin in contact with flywheel and using assistance, carefully rotate crankshaft clockwise until timing pin can be felt to enter hole in flywheel.

CAUTION: Do not rotate crankshaft too far, pistons may contact the valves.

61. Remove crankshaft pulley bolt.

62. Using fingers only, fit timing belt to camshaft gear. Ensure the belt run between the crankshaft gear and the camshaft gear is kept taut during the fitting procedure.

CAUTION: If original belt is to be refitted, ensure direction of rotation is correct. Ensure camshaft does not rotate and that timing marks are still aligned.

63. Ensure sealing strips are correctly located in camshaft timing belt lower cover.
64. Fit lower cover, fit bolts and tighten to 5 Nm.
65. Clean and fit crankshaft pulley, fit bolt and tighten to 63 Nm + 90° .

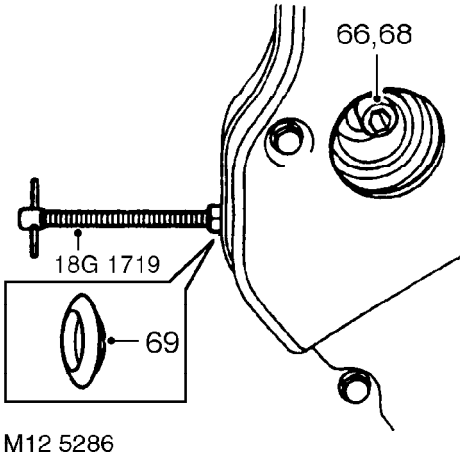

M12 5286

66. Loosen tensioner pulley Allen bolt until tensioner moves easily without tipping.
67. Release camshaft timing belt tensioner plunger using tool **18G 1719.**
68. Release tool **18G 1719** from camshaft timing belt tensioner and tighten Allen bolt to 55 Nm.

CAUTION: Do not exceed specified torque figure.

69. Fit access plug to timing belt back cover.
70. Remove timing pin **18G 1523** from flywheel.

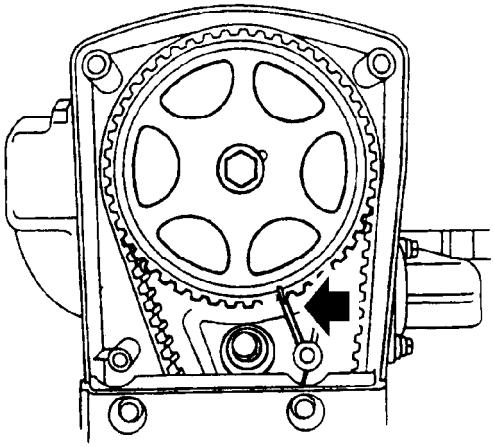

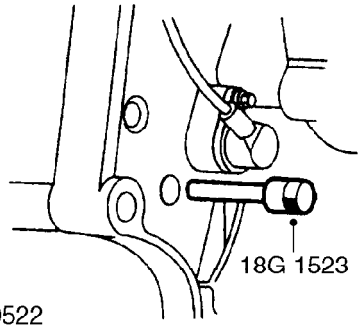

10M0522

71. Using crankshaft pulley bolt, rotate crankshaft 2 turns clockwise and align camshaft gear timing mark with mark on back cover.

CAUTION: Do not use camshaft gear, gear retaining bolt or timing belt to rotate crankshaft.

72. Insert timing pin **18G 1523** into flywheel ensuring that pin is fully inserted in hole.

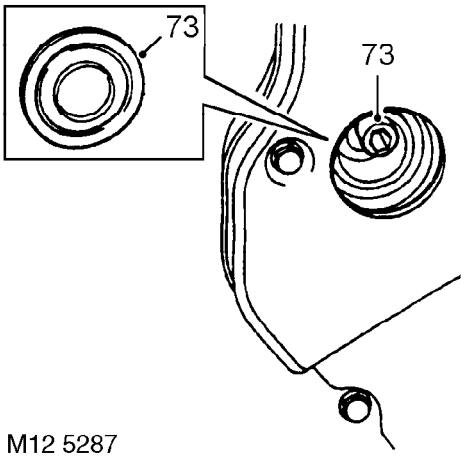

73. Loosen tensioner pulley Allen bolt until tensioner moves to tension belt then tighten Allen bolt to 55 Nm. Fit access plug into timing belt front cover.

74. Remove timing pin **18G 1523.**

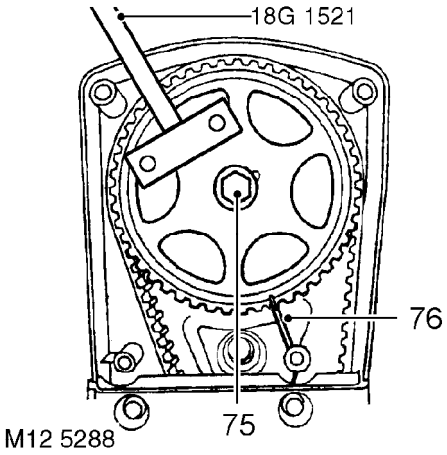

75. Restrain camshaft gear using tool **18G 1521** and tighten bolt to 20 Nm + 90° .

76. Check that camshaft gear timing mark is still aligned with mark on back cover.

77. Insert timing pin **18G 1523** into hole in flywheel ensuring that pin is fully inserted in hole.

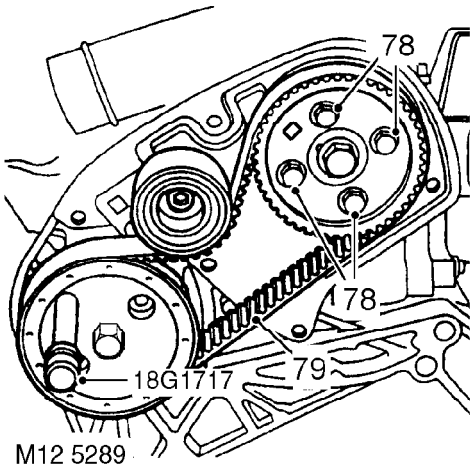

78. Check that 4 bolts securing FIP timing belt drive gear to hub are loosened sufficiently for gear to rotate within slots without tipping.

79. Fit FIP timing belt using the fingers only, rotating the gear fully clockwise within the slots and then anti-clockwise until the timing belt locates in the gear teeth. Fitting the belt in the other possible position will not allow for correct belt adjustment.

CAUTION: If original belt is to be refitted, ensure direction of rotation is correct. Ensure that camshaft does not rotate and that timing marks are still aligned.

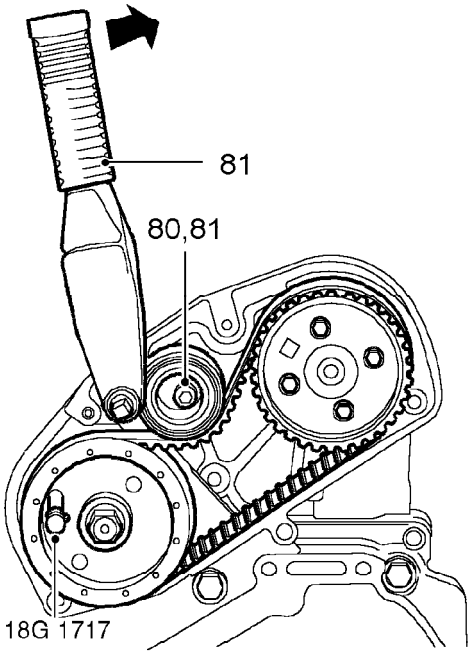

M12 2590

80. Loosen tensioner pulley Allen bolt.

81. Using a torque wrench fitted to tensioner pulley backplate, apply a **clockwise** (viewed from rear of engine) torque loading of 6 Nm to belt. Maintain loading and tighten tensioner pulley Allen bolt to 44 Nm.

CAUTION: Do not exceed specified torque figure.

82. Remove timing pin **18G 1523** and locking pin **18G 1717.**

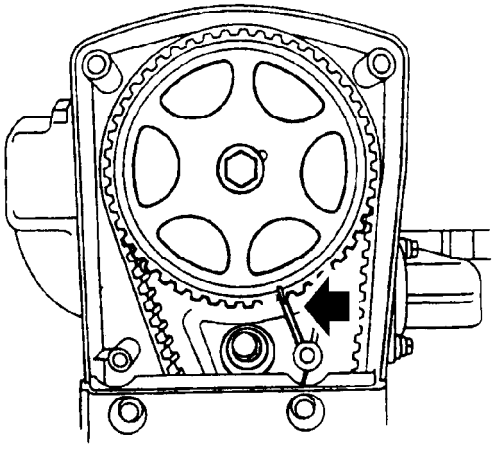

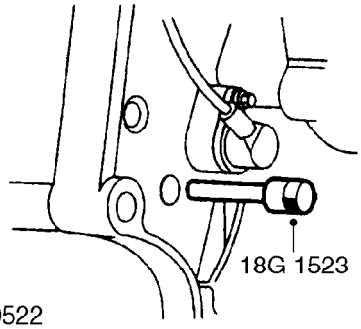

10M0522

83. Rotate crankshaft 2 turns clockwise, fit timing pin **18G 1523** ensuring that pin is fully inserted in hole in flywheel; check that camshaft gear timing mark is aligned with mark on back cover.

CAUTION: Do not use camshaft gear, gear retaining bolt or timing belt to rotate crankshaft.

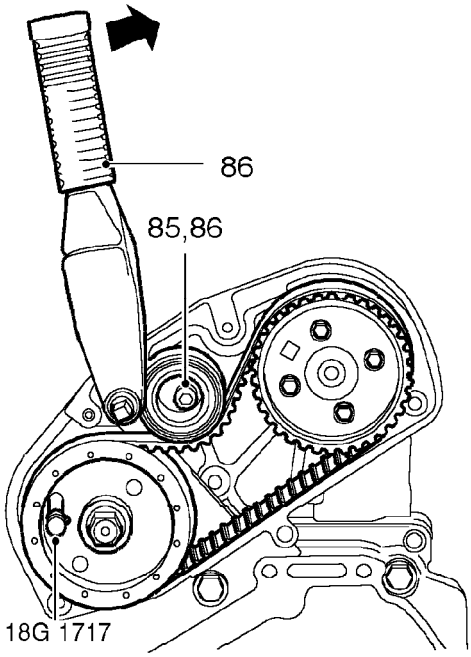

M12 5291

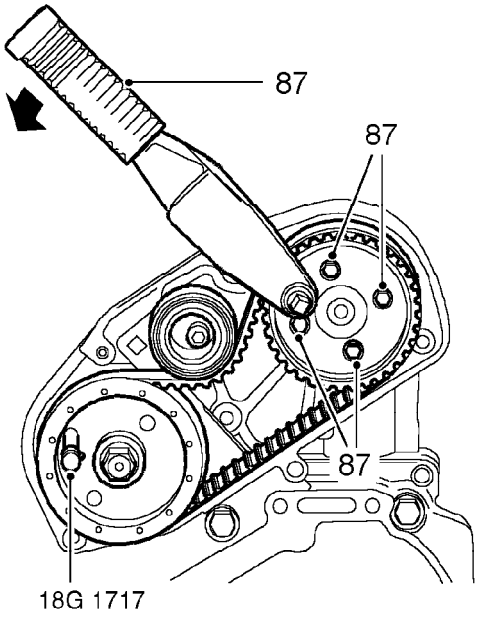

M12 5292

84. Insert locking pin **18G 1717** through FIP drive gear and into hole in adapter plate.

NOTE: Locking pin may be a tight fit at this stage.

85. Loosen tensioner pulley Allen bolt.

86. Using a torque wrench fitted to tensioner backplate, apply a **clockwise** (viewed from rear of engine) torque loading of 6 Nm to belt. Maintain loading and tighten tensioner pulley bolt to 44 Nm.

87. Fit torque wrench to square hole in FIP timing belt drive gear, position wrench as shown and apply an **anti-clockwise** (viewed from rear of engine) torque loading of 25 Nm to gear. Maintain loading and tighten 4 camshaft gear bolts to 25 Nm.

88. Remove timing pin **18G 1523.**

89. Remove locking pin **18G 1717.**

90. Using crankshaft pulley bolt, rotate crankshaft 2 turns clockwise.

91. Insert timing pin **18G 1523** into hole in flywheel ensuring that pin is fully inserted in hole.

92. Check that camshaft gear timing mark is aligned with mark on back cover.

93. Insert locking pin **18G 1717** through FIP drive gear and into hole in adapter plate.

CAUTION: To ensure that FIP timing is correct, locking pin must be a sliding fit. If pin is a tight fit, adjustment procedure must be repeated.

94. On completion, remove timing pin **18G 1523** and locking pin **18G 1717.**

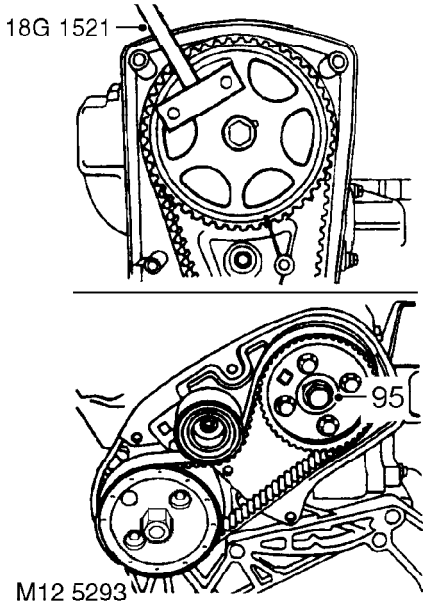

95. Restrain camshaft gear using tool **18G 1521** and tighten FIP timing belt drive gear retaining bolt to 20 Nm + 90° .
96. Fit FIP timing belt cover. ***See this section.***
97. Fit camshaft timing belt upper front cover. ***See this section.***
98. Fit auxiliary drive belt. ***See ELECTRICAL, Repairs.***
99. Remove stand(s) and lower vehicle.
100. Refill cooling system. ***See COOLING SYSTEM - 'L' SERIES, Adjustments.***
101. Connect battery earth lead.
102. Check engine oil and top-up if necessary.
103. Start engine and check for leaks.

NOTE: If tappet noise is evident, run engine for 20 minutes at 2000 to 2500 rev/min. Do not exceed 3000 rev/min until noise ceases.

104. Stop engine and allow to cool. Check for leaks and top-up fluid level if necessary.

CYLINDER HEAD GASKET - MODELS WITH INTERCOOLER

Service repair no - 12.29.02

Remove

1. Disconnect battery earth lead.
2. Drain cooling system. ***See COOLING SYSTEM - 'L' SERIES, Adjustments.***
3. Raise front of vehicle.

WARNING: Support on safety stands.

4. Remove FIP timing belt cover. ***See this section.***
5. Remove auxiliary drive belt. ***See ELECTRICAL, Repairs.***
6. Remove camshaft timing belt upper cover. ***See this section.***

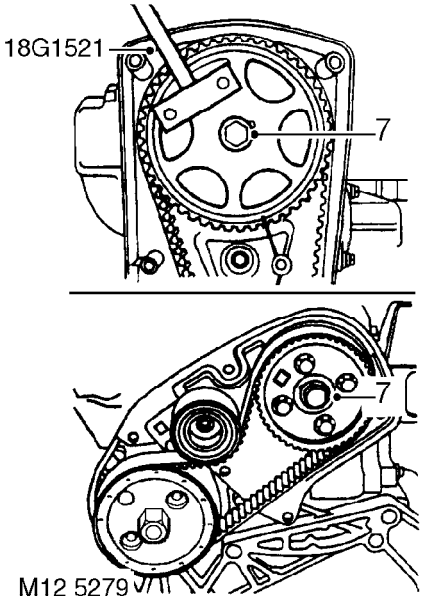

7. Restrain camshaft gear using tool **18G 1521** and loosen but do not remove bolts securing camshaft and FIP timing belt drive gears.

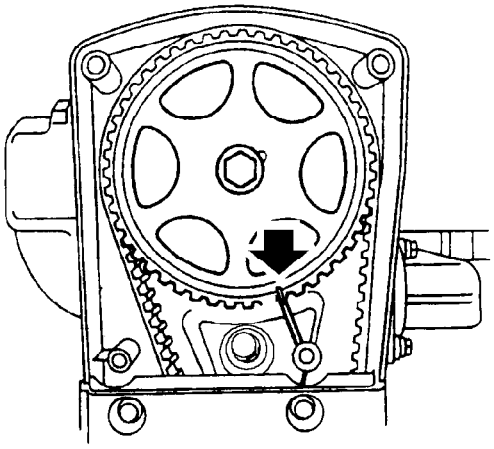

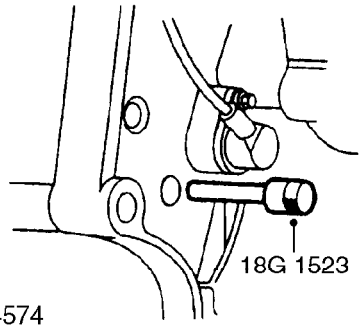

12M4574

8. Insert timing pin **18G 1523** through hole in gearbox adapter plate, hold pin in contact with flywheel and using assistance, rotate crankshaft clockwise until timing pin enters hole in flywheel.
9. Check that timing marks on camshaft gear and back cover are aligned.

CAUTION: Do not use camshaft gear, gear retaining bolt or timing belt to rotate crankshaft.

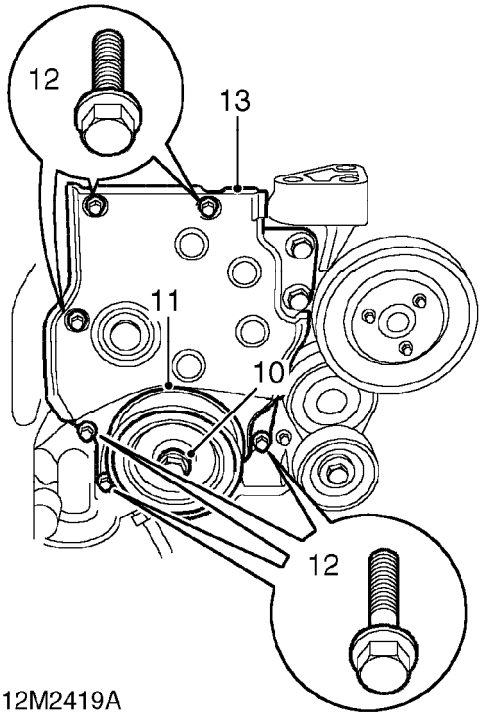

12M2419A

10. Remove bolt securing pulley to crankshaft.
11. Remove crankshaft front pulley.
12. Remove 6 bolts securing timing belt lower cover to rear cover.
13. Remove timing belt lower cover.

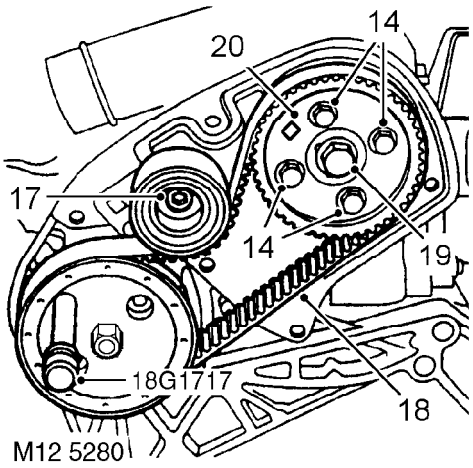

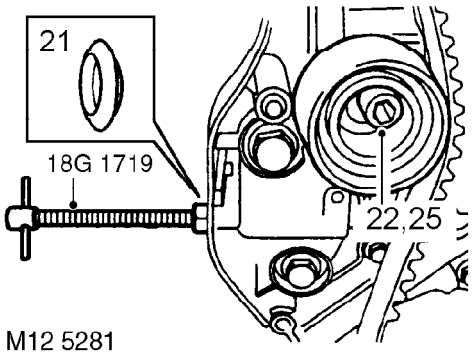

14. Loosen but do not remove 4 bolts securing FIP timing belt drive gear to hub.
15. Insert locking pin **18G 1717** through hole in FIP drive gear and into hole in adapter plate.

CAUTION: Locking pin 18G 1717 must be a sliding fit. If difficulty is experienced, rotate pump hub using a socket on hub nut until pin can be inserted.

16. Check that timing marks on camshaft gear and back cover are still aligned.

CAUTION: If drive belt is to be refitted, mark direction of rotation on belt.

17. Loosen Allen bolt securing tensioner pulley, move tensioner away from belt and tighten Allen bolt.
18. Remove FIP timing belt.

CAUTION: Do not rotate camshaft or FIP with timing belt removed. Ease timing belt from gears using fingers only, metal levers may damage belt and gears. Store a belt on its edge with a radius greater than 50 mm. DO NOT use a belt that has been twisted or bent double as this can fracture the reinforcing fibres. Do not use an oil or coolant contaminated belt. Cause of contamination must be rectified. Although the belt has a service life of 84,000 miles (65,000 km) an existing belt should only be refitted if it has completed less than 42,000 miles (65,000 km).

19. Remove and discard FIP timing belt drive gear bolt.
20. Remove FIP timing belt drive gear.
21. Remove timing belt tensioner access plug from timing belt back cover.
22. Loosen Allen bolt securing tensioner pulley.
23. Screw timing belt tensioner retractor tool **18G 1719** into tensioner.
24. Tighten nut on tool **18G 1719** until belt tension is released.
25. Tighten Allen bolt securing tensioner pulley.
26. Release timing belt from camshaft gear.

CAUTION: Ease timing belt off gear using fingers only. Metal levers may damage the belt and gear.
DO NOT rotate the crankshaft with the timing belt removed and the cylinder head fitted.

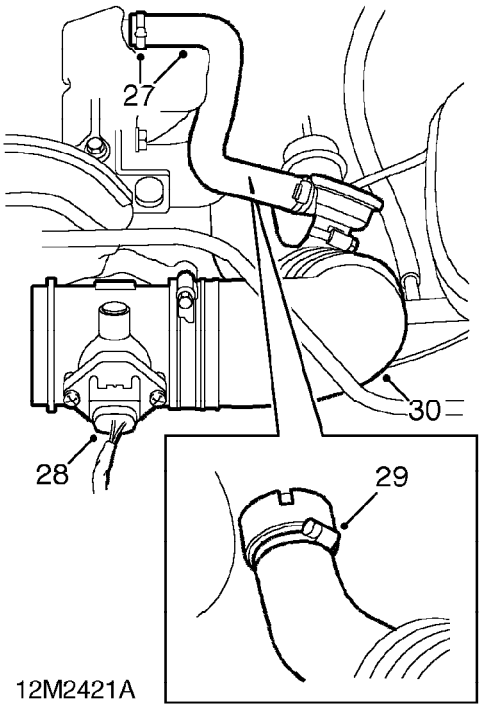

27. Loosen clip and disconnect breather hose from camshaft cover.
28. Disconnect multiplug from MAF sensor.
29. Loosen clip and disconnect air intake pipe from turbocharger.
30. Remove air intake pipe and MAF sensor.
31. Disconnect exhaust front pipe from manifold flange. ***See MANIFOLD & EXHAUST SYSTEMS, Repairs.***
32. Disconnect boost pressure sensing pipe from turbocharger.

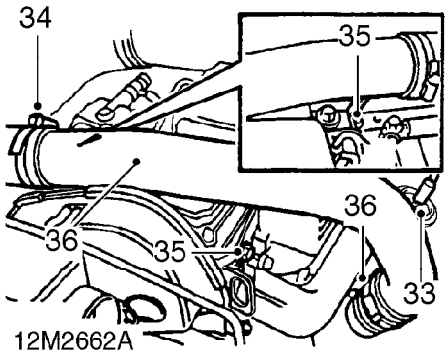

33. Disconnect vacuum pipe from EGR valve.
34. Loosen clip and disconnect intercooler top hose from turbocharger pipe.
35. Remove 2 bolts securing turbocharger pipe to cylinder head and engine lifting bracket.
36. Loosen clip securing pipe to turbocharger and remove turbocharger pipe.

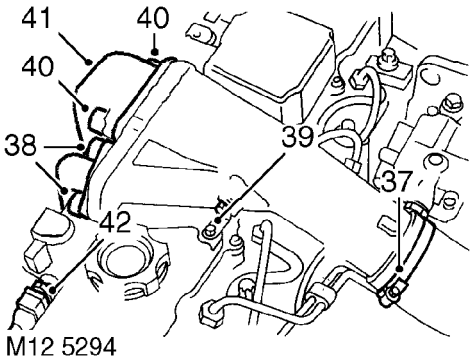

37. Loosen clip and disconnect intercooler bottom hose from inlet manifold intake pipe.
38. Remove 2 bolts securing EGR recirculation pipe to inlet manifold intake pipe.
39. Remove bolt securing inlet manifold intake pipe to camshaft cover.
40. Remove 2 bolts securing intake pipe to inlet manifold.
41. Remove inlet manifold intake pipe and discard gasket.
42. Disconnect multiplug from IAT sensor.

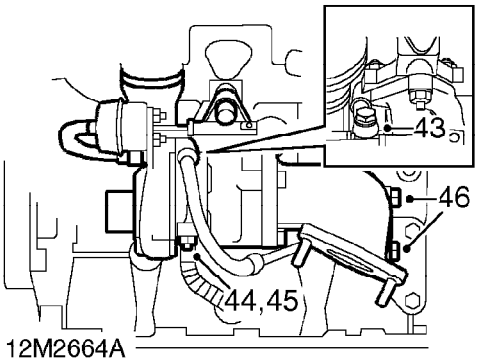

43. Remove banjo bolt securing oil feed pipe to turbocharger; collect 2 sealing washers.
44. Remove 2 bolts securing oil drain pipe to turbocharger.
45. Remove and discard gasket.
46. Remove 2 bolts securing exhaust manifold to support bracket.

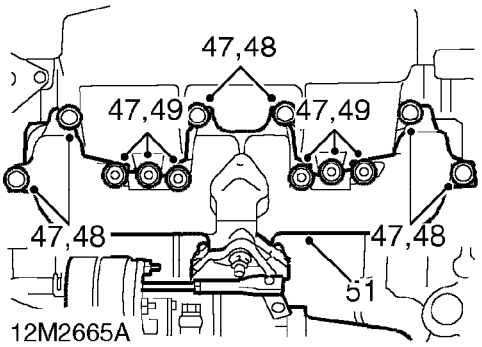

47. Loosen 6 nuts and 6 bolts securing inlet and exhaust manifolds to cylinder head.
48. Remove 6 bolts securing manifolds to cylinder head and collect 4 washers.
49. Remove 6 nuts securing manifolds to cylinder head.
50. Release and remove inlet and exhaust manifolds.
51. Remove and discard manifold gasket.

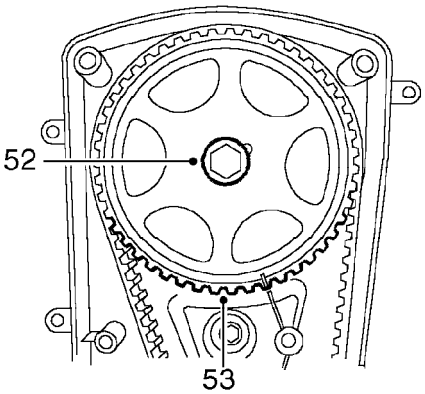

M12 5295

52. Remove and discard camshaft gear retaining bolt.
53. Remove camshaft gear.

CAUTION: If the sintered gears have been subjected to prolonged oil contamination, they must be soaked in a solvent bath and thoroughly washed with solvent before refitment. Because of the porous construction of sintered material, oil impregnated in the gear will emerge and contaminate a new belt.

Cause of oil contamination must be rectified.

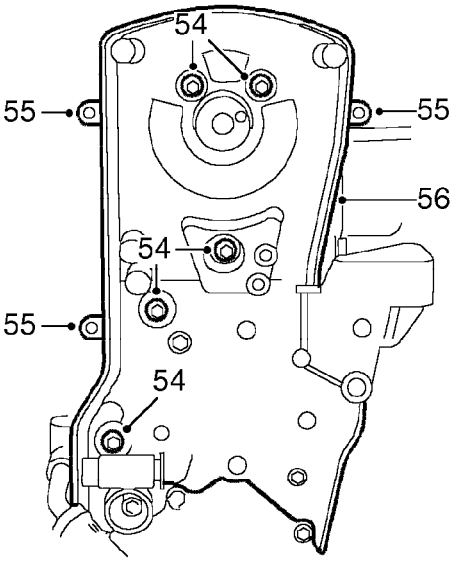

12M2667A

54. Remove 5 bolts securing camshaft timing belt back cover to cylinder head and block.
55. Release 3 clips securing engine harness to back cover.
56. Remove camshaft timing belt back cover.

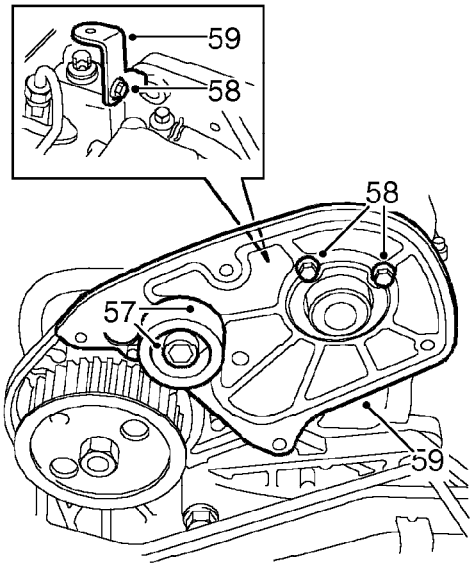

12M2668B

57. Remove Allen bolt securing FIP drive belt tensioner to backplate and remove tensioner.
58. Remove 3 bolts securing FIP timing belt backplate and bracket to cylinder head.
59. Remove backplate and bracket.

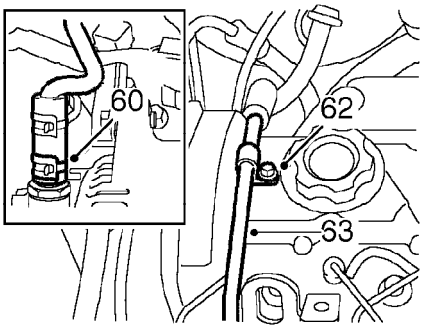

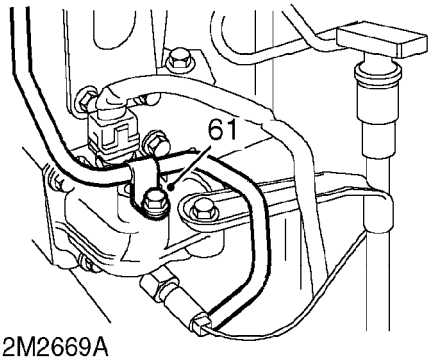

12M2669A

60. Release clip and disconnect hose from brake servo vacuum pipe.
61. Remove bolt securing brake servo vacuum pipe to coolant outlet elbow.
62. Remove bolt securing brake servo vacuum pipe to camshaft cover.
63. Position vacuum pipe aside.

Models with air conditioning fitted

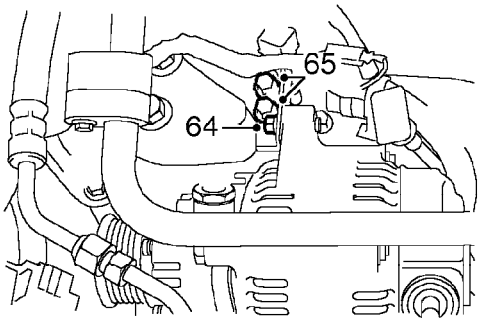

12M2670A

64. Remove bolt securing alternator to top mounting bracket.
65. Remove 2 bolts securing mounting bracket to coolant outlet elbow. Remove mounting bracket.

All models

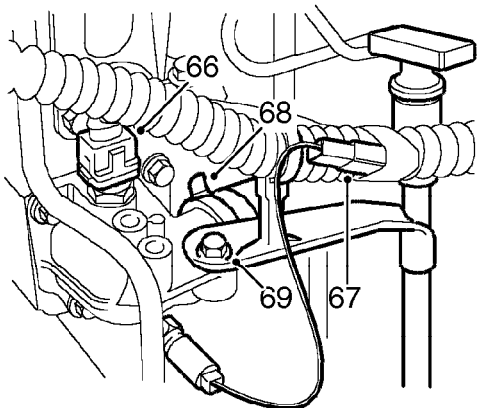

12M2671A

66. Disconnect multiplug from ECT sensor.
67. Disconnect engine coolant temperature gauge Lucar from harness.
68. Loosen clip and disconnect radiator top hose from coolant outlet elbow.
69. Remove bolt securing dipstick tube bracket to coolant outlet elbow.

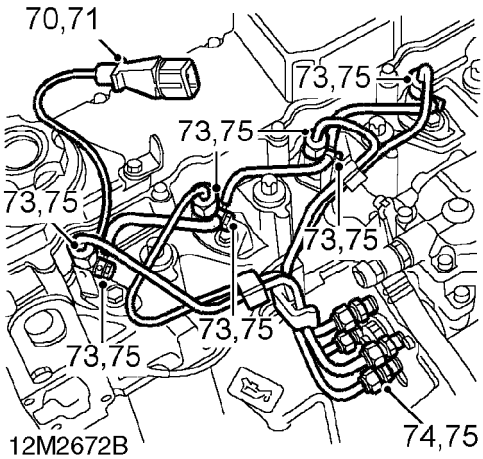

12M2672B

70. Release injector needle lift sensor multiplug from injection pump bracket.
71. Disconnect injector needle lift sensor multiplug from harness.
72. Position absorbent cloth around fuel injector pipe unions to absorb any fuel spillage.
73. Loosen unions securing injection and fuel return pipes to injectors.
74. Loosen unions securing pipes to injection pump.

CAUTION: To prevent damage to fuel injection pipes or components, use 2 spanners when loosening unions.

75. Disconnect pipe unions from injectors and injection pump, remove pipes.

CAUTION: Plug the connections.

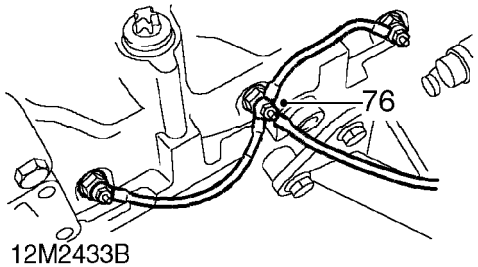

12M2433B

76. Remove nut and disconnect feed lead from glow plug No. 2.

NOTE: 4 glow plugs are fitted to later engines.

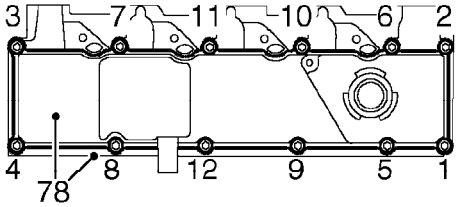

12M3561A

77. Using sequence shown, remove 12 bolts securing camshaft cover to camshaft carrier.

78. Remove camshaft cover, remove and discard gasket.

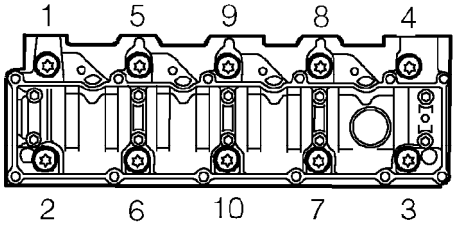

12M2674

79. Working in the sequence shown, progressively loosen and remove 10 Tx14 Torx cylinder head bolts.

CAUTION: Store cylinder head bolts in fitted order. Do not remove washers from bolts.

80. Using assistance, remove cylinder head assembly from cylinder block and stand on wooden blocks or stands.

CAUTION: The tips of the injectors and glow plugs protrude below the face of the cylinder head and will be damaged if the cylinder head is stood face down on a work bench. If crankshaft is to be rotated, ensure timing pin 18G 1523 is removed from flywheel prior to rotating crankshaft and is refitted on completion. Do not remove locking pin 18G 1717.

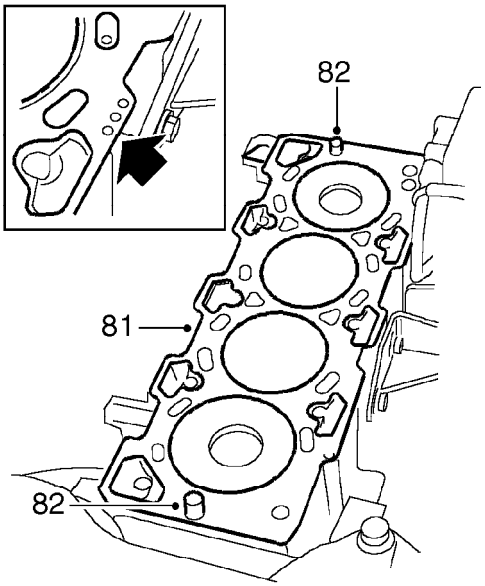

12M2643A

81. Remove cylinder head gasket from cylinder block and discard.

CAUTION: Note the gasket thickness indicator and ensure the same thickness gasket is used when refitting the cylinder head.

82. Remove location dowels from cylinder head.

Cylinder head - inspection

1. Inspect cylinder head for signs of damage.

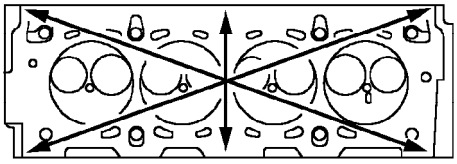

12M1903

2. Check cylinder head for warping, across centre and from corner to corner.
   Cylinder head maximum warp = 0.10 mm

CAUTION: Cylinder heads may not be refaced, replace head assembly if warping exceeds figure given.

Refit

1. Clean mating faces of cylinder head and block. Clean oil and coolant passages.
   De-carbonise piston crowns and cylinder head if necessary.
2. Clean dowel holes, dowels and cylinder block bolt holes.

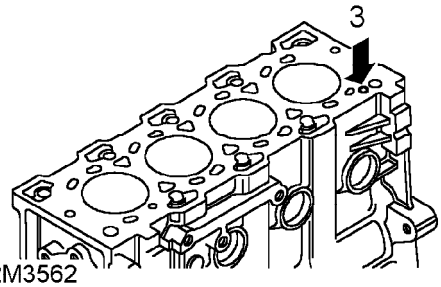

12M3562

3. Check that oil restrictor in cylinder block is clear and fitted below cylinder block top face.
4. Clean and dry cylinder head bolts.

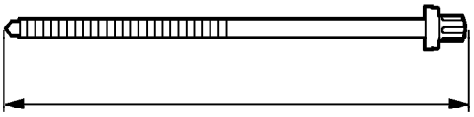

12M1916

5. Measure length of cylinder head bolts. if any bolt exceeds the maximum length of 243.41 mm, then all bolts must be renewed.

CAUTION: Do not remove washers from bolts, keep bolts in their fitted order.

6. Temporarily fit crankshaft pulley bolt, remove timing pin **18G 1523** and using crankshaft pulley bolt, rotate crankshaft anti-clockwise until numbers 1 and 4 pistons are approximately 25 mm below cylinder block top face. Do not remove bolt at this stage.

CAUTION: Ensure timing belt is not trapped as crankshaft is rotated.

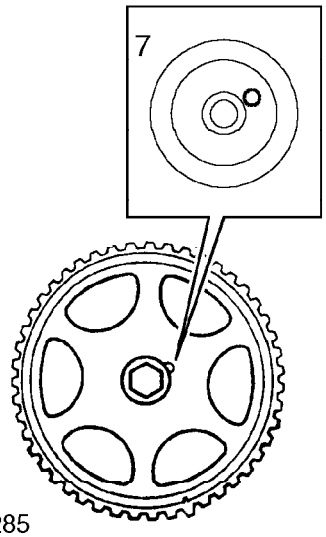

M12 5285

7. Check that camshaft timing gear drive pin is at 2 o’clock position. If necessary, temporarily fit camshaft gear and rotate camshaft until pin is positioned. Remove timing gear.
8. Apply a light film of engine oil to cylinder head bolt threads and underside of bolt heads.

CAUTION: Do not lubricate underside of washers.

9. Fit location dowels to cylinder block.
10. Fit new cylinder head gasket to block, dry.
11. Using assistance, fit cylinder head onto block, carefully locating on dowels.
12. Fit cylinder head bolts in their original fitted order, do not drop bolts into cylinder block.

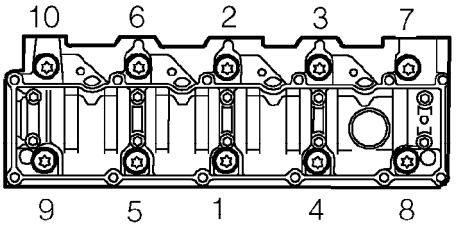

12M2436

13. Tighten cylinder head bolts progressively in the sequence shown, using the following procedure:
    i. Tighten all bolts to 30 Nm.
    ii. Tighten all bolts to 65 Nm. Using a felt tip pen, mark position of radial mark on each bolt head.
    iii. Turn all bolts through 90° .
    iv. Turn all bolts through another 90° .

CAUTION: Ensure correct sequence is followed for all 4 tightening stages. Do not tighten bolts 180° in one operation.

14. Clean mating faces of camshaft carrier and camshaft cover.
15. Ensure bolt holes in camshaft carrier are clean and dry.
16. Fit new gasket, dry, to camshaft cover.

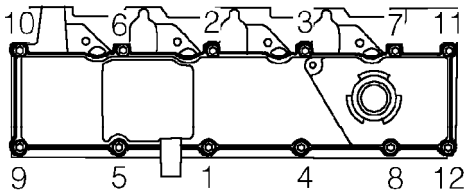

12M2437

17. Fit camshaft cover.
18. Fit camshaft cover bolts and working in the sequence shown, tighten to 12 Nm.
19. Connect glow plug feed lead to No.2 glow plug, fit and tighten nut.
20. Remove plugs from FIP and injectors.
21. Position injector pipes and connect unions to FIP and injectors, tighten unions to 28 Nm.

CAUTION: To prevent damage to fuel system pipes or components use 2 spanners when tightening unions.

22. Connect spill return pipes to injectors, tighten unions to 10 Nm.
23. Connect injector needle lift sensor multiplug to harness and secure to bracket on injection pump.
24. Connect radiator top hose to coolant outlet elbow and tighten clip.
25. Align dipstick tube bracket to coolant outlet elbow, fit bolt and tighten to 25 Nm.
26. Connect engine coolant temperature gauge sensor Lucar to harness.
27. Connect multiplug to ECT sensor.

Models with air conditioning fitted

28. Position alternator top mounting bracket to coolant outlet elbow, fit bolts and tighten to 25 Nm.
29. Fit bolt securing alternator to mounting bracket and tighten to 25 Nm.

All models

30. Connect hose to brake servo vacuum pipe and secure with clip.
31. Align brake servo vacuum pipe to coolant outlet elbow, fit bolt and tighten to 25 Nm.
32. Fit bolt securing vacuum pipe to camshaft cover and tighten to 10 Nm.
33. Position FIP timing belt backplate and bracket to cylinder head, fit bolts and tighten to 8 Nm.
34. Clean tensioner pulley.
35. Fit tensioner pulley to locating dowel, fit Allen bolt but do not tighten.
36. Position camshaft timing belt back cover to cylinder head and block, fit bolts and tighten to 8 Nm.
37. Align engine harness to back cover and secure with clips.
38. Clean camshaft gear and mating face.
39. Locate camshaft gear on camshaft.
40. Fit new camshaft gear retaining bolt but do not tighten at this stage.

CAUTION: Ensure camshaft does not rotate.

NOTE: Bolt is tightened after timing belt has been tensioned. Do not fit timing belt at this stage.

41. Clean FIP timing belt drive gear and mating face.
42. Locate FIP timing belt drive gear on camshaft.
43. Fit new FIP timing belt drive gear retaining bolt but do not tighten at this stage.

CAUTION: Ensure camshaft does not rotate.

NOTE: Bolt is tightened after FIP timing belt has been tensioned. Do not fit timing belt at this stage.

44. Clean mating faces of inlet manifold, exhaust manifold and cylinder head.
45. Fit new manifold gasket to cylinder head.
46. Manoeuvre inlet and exhaust manifolds into position on cylinder head.

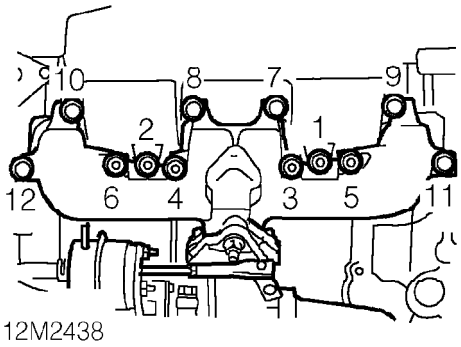

47. Fit nuts, bolts and washers securing manifolds to cylinder head.
48. Working in the sequence illustrated, tighten nuts to 25 Nm and bolts to 33 Nm.
49. Fit 2 bolts securing exhaust manifold to support bracket and tighten to 25 Nm.
50. Fit new gasket to turbocharger oil drain pipe. Align pipe to turbocharger, fit bolts and tighten to 8 Nm.
51. Clean turbocharger oil feed pipe union and banjo bolt.
52. Fit new sealing washers to banjo bolt. Connect oil feed pipe to turbocharger and tighten banjo bolt to 18 Nm.
53. Connect multiplug to IAT sensor.
54. Clean mating faces of inlet manifold and intake pipe.
55. Fit new gasket to inlet manifold, fit intake pipe and tighten bolts to 25 Nm.
56. Fit bolt securing inlet manifold intake pipe to camshaft cover bracket and tighten to 10 Nm.
57. Align EGR recirculation pipe to inlet manifold intake pipe, fit bolts and tighten to 10 Nm.
58. Connect intercooler bottom hose to inlet manifold intake pipe and tighten clip.
59. Position pipe to turbocharger and connect hose, tighten clip.
60. Align turbocharger pipe to cylinder head, fit bolts and tighten to 10 Nm.
61. Connect intercooler top hose to turbocharger pipe and tighten clip.
62. Connect vacuum pipe to EGR valve.
63. Connect boost pressure sensing pipe to turbocharger.
64. Connect exhaust front pipe to manifold. ***See MANIFOLD & EXHAUST SYSTEMS, Repairs.***
65. Position air intake pipe and connect to turbocharger, tighten clip.
66. Connect multiplug to MAF sensor.
67. Connect breather hose to camshaft cover and tighten clip.

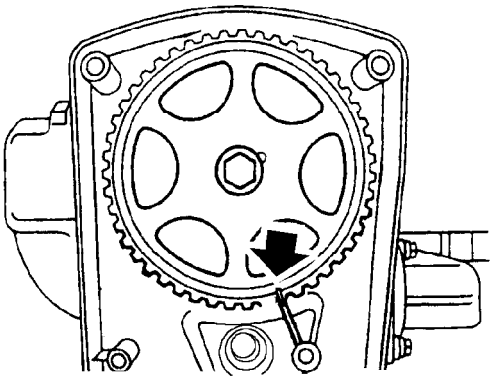

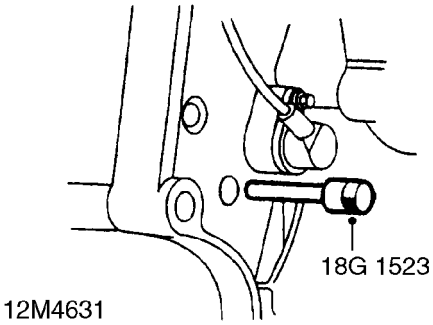

68. Align camshaft gear timing mark with mark on back cover.
69. Insert timing pin **18G 1523** through hole in gearbox adapter plate. Hold pin in contact with flywheel and using assistance, carefully rotate crankshaft clockwise until timing pin can be felt to enter hole in flywheel.

CAUTION: Do not rotate crankshaft too far, pistons may contact valves.

70. Using fingers only, fit timing belt to camshaft gear. Ensure the belt run between the crankshaft gear and the camshaft gear is kept taut during the fitting procedure.

CAUTION: If original belt is to be refitted, ensure direction of rotation is correct. Ensure camshaft does not rotate and that timing marks are still aligned.

71. Remove crankshaft pulley bolt.
72. Ensure sealing strips are correctly located in camshaft timing belt lower cover. Fit lower cover, fit bolts and tighten to 5 Nm.
73. Clean and fit crankshaft pulley, fit bolt and tighten to 63 Nm + 90° .

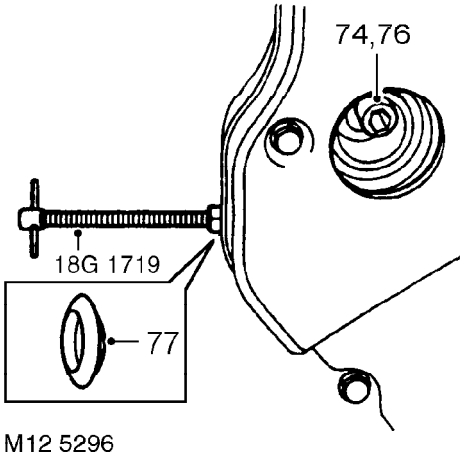

M12 5296

74. Loosen tensioner pulley Allen bolt until tensioner moves easily without tipping.
75. Release camshaft timing belt tensioner plunger using tool **18G 1719.**
76. Release tool **18G 1719** from camshaft timing belt tensioner and tighten Allen bolt to 55 Nm.

CAUTION: Do not exceed specified torque figure.

77. Fit access plug to timing belt back cover.
78. Remove timing pin **18G 1523** from flywheel.

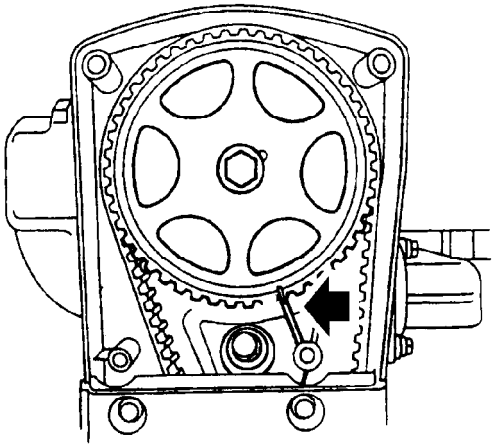

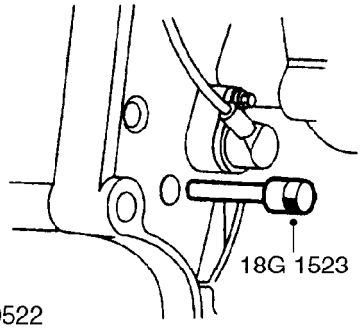

10M0522

79. Using crankshaft pulley bolt, rotate crankshaft 2 turns clockwise and align camshaft gear timing mark with mark on back cover.

CAUTION: Do not use camshaft gear, gear retaining bolt or timing belt to rotate crankshaft.

80. Insert timing pin **18G 1523** into flywheel ensuring that pin is fully inserted in hole.

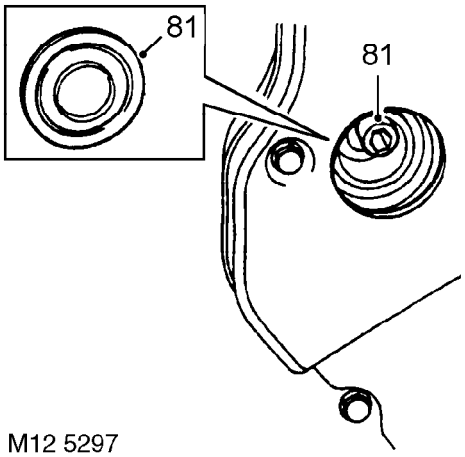

81. Loosen tensioner pulley Allen bolt until tensioner moves to tension belt then tighten Allen bolt to 55 Nm. Fit access plug into timing belt front cover.

82. Remove timing pin **18G 1523.**

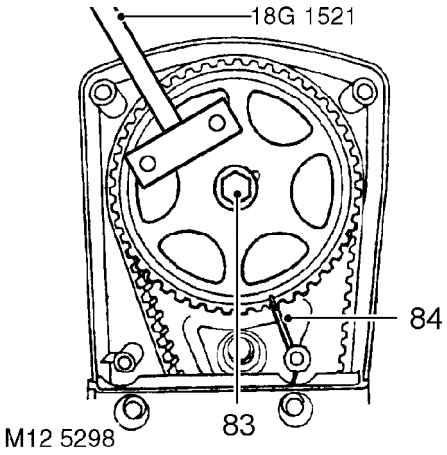

83. Restrain camshaft gear using tool **18G 1521** and tighten bolt to 20 Nm + 90° .

84. Check that camshaft gear timing mark is still aligned with mark on back cover.

85. Insert timing pin **18G 1523** into hole in flywheel ensuring that pin is fully inserted in hole.

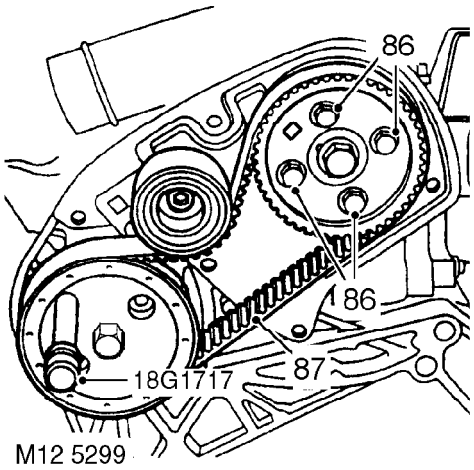

86. Check that 4 bolts securing FIP timing belt drive gear to hub are loosened sufficiently for gear to rotate within slots without tipping.

87. Fit FIP timing belt using the fingers only, rotating the gear fully clockwise within the slots and then anti-clockwise until the timing belt locates in the gear teeth. Fitting the belt in the other possible position will not allow for correct belt adjustment.

CAUTION: If original belt is to be refitted, ensure direction of rotation is correct. Ensure that camshaft does not rotate and that timing marks are still aligned.

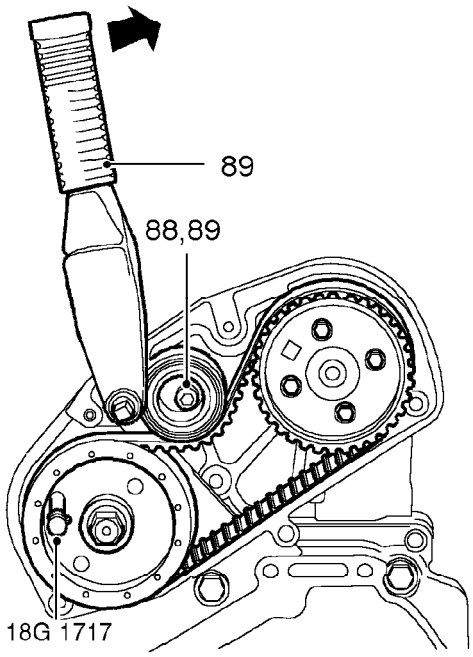

M12 5300

88. Loosen tensioner pulley Allen bolt.

89. Using a torque wrench fitted to tensioner pulley backplate, apply a **clockwise** (viewed from rear of engine) torque loading of 6 Nm to belt. Maintain loading and tighten tensioner pulley Allen bolt to 44 Nm.

CAUTION: Do not exceed specified torque figure.

90. Remove timing pin **18G 1523** and locking pin **18G 1717.**

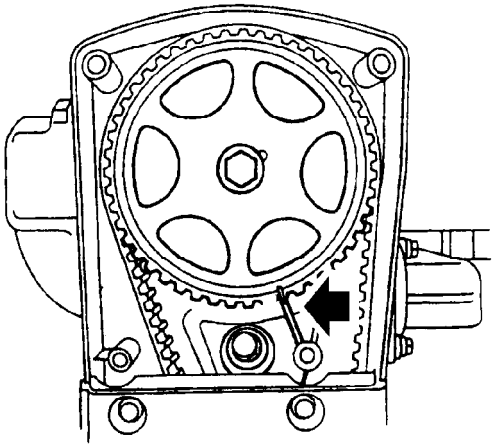

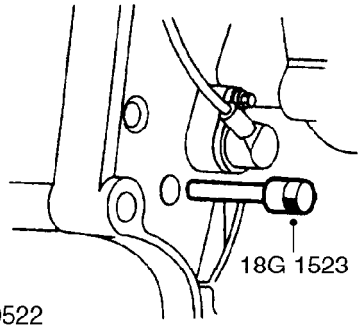

10M0522

91. Rotate crankshaft 2 turns clockwise, fit timing pin **18G 1523** ensuring that pin is fully inserted in hole in flywheel; check that camshaft gear timing mark is aligned with mark on back cover.

CAUTION: Do not use camshaft gear, gear retaining bolt or timing belt to rotate crankshaft.

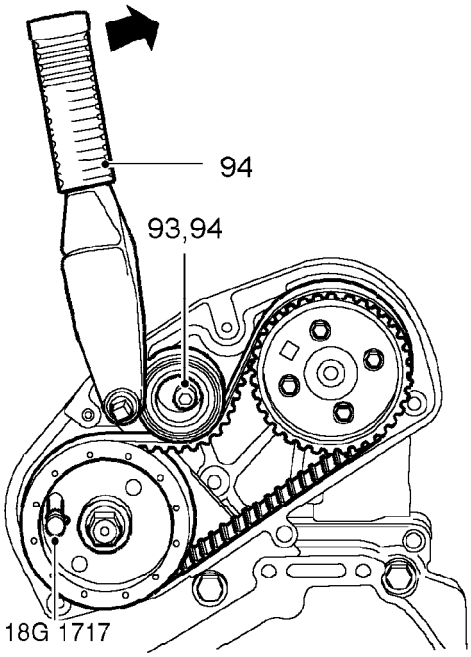

M12 5301

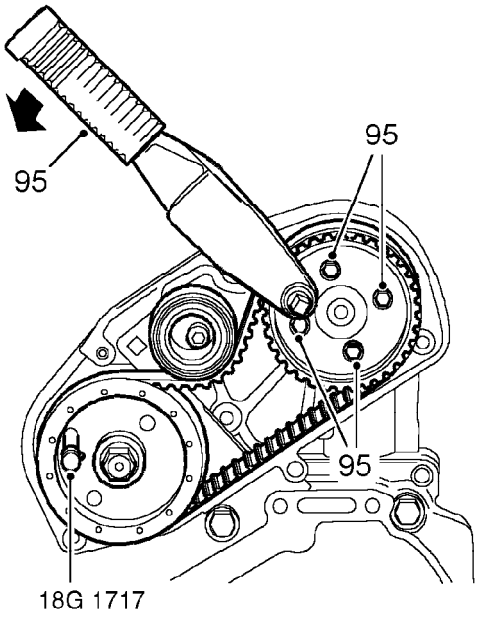

M12 5302

92. Insert locking pin **18G 1717** through FIP drive gear and into hole in adapter plate.

NOTE: Locking pin may be a tight fit at this stage.

93. Loosen tensioner pulley Allen bolt.

94. Using a torque wrench fitted to tensioner backplate, apply a **clockwise** (viewed from rear of engine) torque loading of 6 Nm to belt. Maintain loading and tighten tensioner pulley bolt to 44 Nm.

95. Fit torque wrench to square hole in FIP timing belt drive gear, position wrench as shown and apply an **anti-clockwise** (viewed from rear of engine) torque loading of 25 Nm to gear. Maintain loading and tighten 4 camshaft gear bolts to 25 Nm.

96. Remove timing pin **18G 1523.**

97. Remove locking pin **18G 1717.**

98. Using crankshaft pulley bolt, rotate crankshaft 2 turns clockwise.

99. Insert timing pin **18G 1523** into hole in flywheel ensuring that pin is fully inserted in hole.

100. Check that camshaft gear timing mark is aligned with mark on back cover.

101. Insert locking pin **18G 1717** through FIP drive gear and into hole in adapter plate.

CAUTION: To ensure that FIP timing is correct, locking pin must be a sliding fit. If pin is a tight fit, adjustment procedure must be repeated.

102. On completion, remove timing pin **18G 1523** and locking pin **18G 1717.**

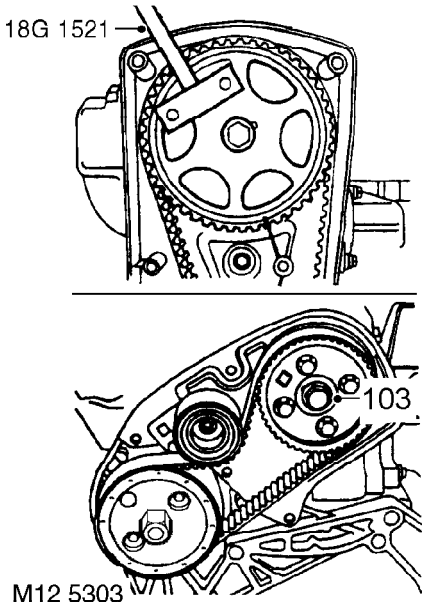

103. Restrain camshaft gear using tool **18G 1521** and tighten FIP timing belt drive gear retaining bolt to 20 Nm + 90° .
104. Fit FIP timing belt cover. ***See this section.***
105. Fit camshaft timing belt upper front cover. ***See this section.***
106. Fit auxiliary drive belt. ***See ELECTRICAL, Repairs.***
107. Remove stand(s) and lower vehicle.
108. Refill cooling system. ***See COOLING SYSTEM - 'L' SERIES, Adjustments.***
109. Connect battery earth lead.
110. Check engine oil and top-up if necessary.
111. Start engine and check for leaks.

NOTE: If tappet noise is evident, run engine for 20 minutes at 2000 to 2500 rev/min. Do not exceed 3000 rev/min until noise ceases.

112. Stop engine and allow to cool. Check for leaks and top-up fluid level if necessary.

CAMSHAFT COVER GASKET - MODELS WITHOUT INTERCOOLER

Service repair no - 12.29.40

Remove

1. Remove engine acoustic cover. ***See BODY, Exterior fittings.***

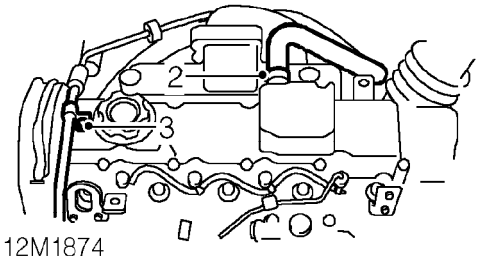

2. Loosen clip and disconnect engine breather hose from camshaft cover.
3. Remove bolt securing brake servo vacuum pipe to camshaft cover, move pipe aside.

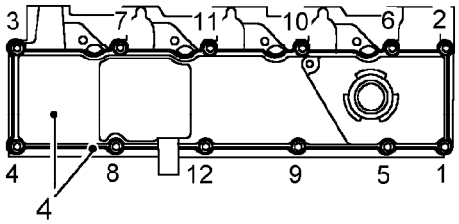

4. Using sequence shown, remove 12 bolts securing camshaft cover.

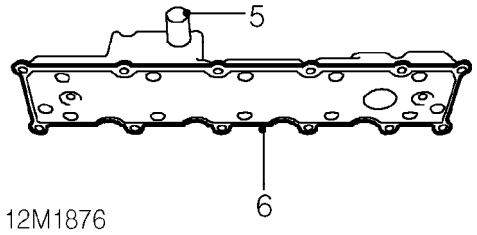

5. Remove camshaft cover.
6. Remove and discard gasket.

Refit

1. Clean camshaft cover and mating face on camshaft carrier. Ensure bolt holes in camshaft carrier are clean and dry.
2. Fit new gasket, dry, to camshaft cover.

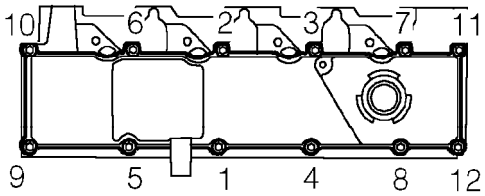

3. Fit camshaft cover and tighten bolts in sequence shown to 12 Nm.
4. Align brake servo vacuum pipe bracket to camshaft cover and secure with bolt.
5. Connect engine breather hose to camshaft cover and tighten clip.
6. Fit engine acoustic cover. ***See BODY, Exterior fittings.***

CAMSHAFT COVER GASKET - MODELS WITH INTERCOOLER

Service repair no - 12.29.40

Remove

1. Remove engine acoustic cover. ***See BODY, Exterior fittings.***

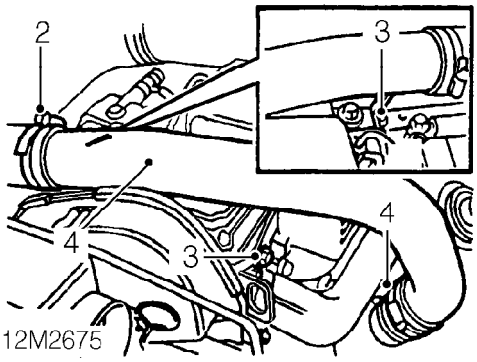

2. Loosen clip and disconnect intercooler top hose from turbocharger pipe.
3. Remove 2 bolts securing turbocharger pipe to cylinder head and engine lifting bracket.
4. Loosen clip securing pipe to turbocharger and remove turbocharger pipe.

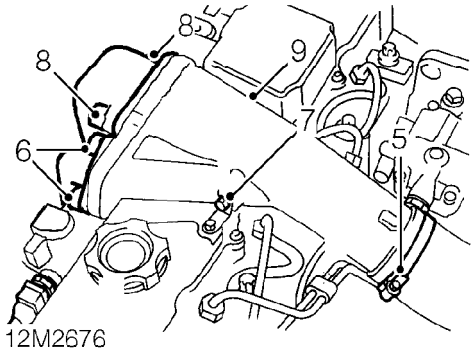

5. Loosen clip and disconnect intercooler bottom hose from inlet manifold intake pipe.
6. Remove 2 bolts securing EGR recirculation pipe to inlet manifold intake pipe.
7. Remove bolt securing inlet manifold intake pipe to camshaft cover.
8. Remove 2 bolts securing intake pipe to inlet manifold.
9. Remove inlet manifold intake pipe and discard gasket.

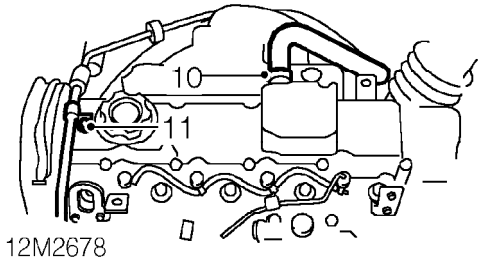

10. Loosen clip and disconnect engine breather hose from camshaft cover.
11. Remove bolt securing brake servo vacuum pipe to camshaft cover.
12. Move vacuum pipe aside.

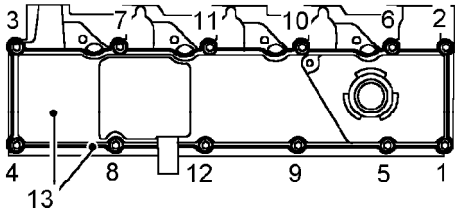

13. Using sequence shown, remove 12 bolts securing camshaft cover.

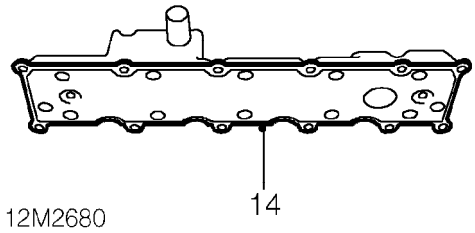

14. Remove camshaft cover, remove and discard gasket.

Refit

1. Clean camshaft cover and mating face on camshaft carrier. Ensure bolt holes in camshaft carrier are clean and dry.
2. Fit new gasket, dry, to camshaft cover.

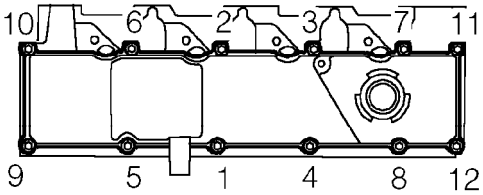

3. Fit camshaft cover and tighten bolts in sequence shown to 12 Nm.
4. Align brake servo vacuum pipe bracket to camshaft cover and secure with bolt.
5. Connect engine breather hose to camshaft cover and tighten clip.
6. Clean mating faces of inlet manifold and intake pipe.
7. Fit new gasket to inlet manifold, fit intake pipe and tighten bolts to 25 Nm.
8. Fit bolt securing inlet manifold intake pipe to camshaft cover bracket and tighten to 10 Nm.
9. Align EGR recirculation pipe to inlet manifold intake pipe, fit bolts and tighten to 10 Nm.
10. Connect intercooler bottom hose to inlet manifold intake pipe and tighten clip.
11. Position pipe to turbocharger and connect hose, tighten clip.
12. Align turbocharger pipe to cylinder head, fit bolts and tighten to 10 Nm.
13. Connect intercooler top hose to turbocharger pipe and tighten clip.
14. Fit engine acoustic cover. ***See BODY, Exterior fittings.***

ENGINE AND GEARBOX - MODELS WITH AIR CONDITIONING

Service repair no - 12.37.01.20

Remove

1. Raise vehicle on a 2 post ramp.
2. Recover refrigerant from air conditioning system. ***See AIR CONDITIONING, Adjustments.***
3. Drain gearbox oil. ***See MANUAL GEARBOX - 'PG1', Adjustments.***
4. Drain cooling system. ***See COOLING SYSTEM - 'L' SERIES, Adjustments.***
5. Disconnect battery earth lead.
6. Remove engine acoustic cover. ***See BODY, Exterior fittings.***
7. If required, drain engine oil. ***See MAINTENANCE.***
8. Fit new sealing washer to drain plug, fit drain plug and tighten to 25 Nm.
9. Remove air cleaner. ***See ENGINE MANAGEMENT SYSTEM - EDC, Repairs.***
10. Remove ECM. ***See ENGINE MANAGEMENT SYSTEM - EDC, Repairs.***
11. Remove engine management relay module. ***See ENGINE MANAGEMENT SYSTEM - EDC, Repairs.***

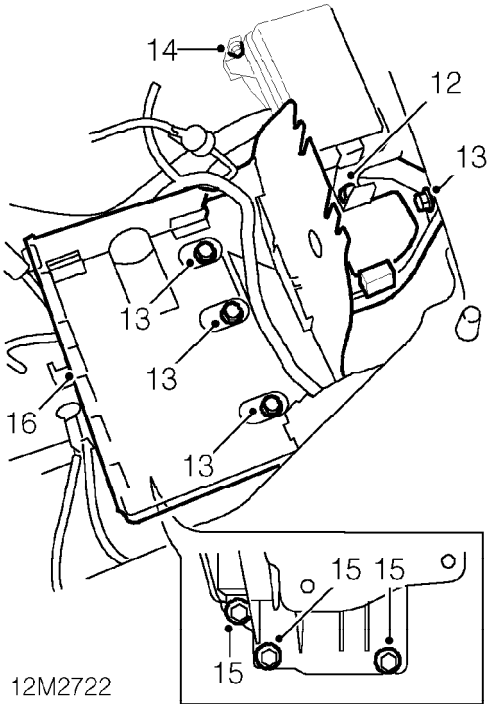

12. Remove bolt securing engine compartment fuse box to battery tray.
13. Remove 4 bolts securing battery tray to body.
14. Remove bolt securing engine compartment fuse box to body and position fuse box aside.
15. Loosen 3 bolts securing battery tray to body.
16. Remove battery tray from vehicle.

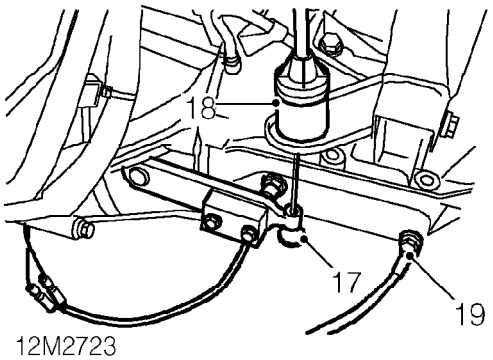

17. Disconnect clutch cable from clutch release lever.
18. Release clutch cable from abutment bracket on gearbox and position aside.
19. Remove bolt securing earth lead to gearbox.

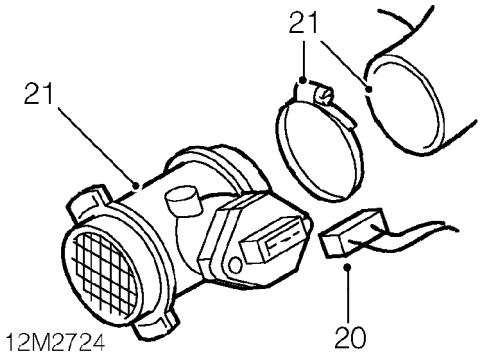

20. Disconnect multiplug from MAF sensor.
21. Loosen clip securing MAF sensor to air intake pipe and remove MAF sensor.
22. Remove exhaust front pipe. ***See MANIFOLD & EXHAUST SYSTEMS, Repairs.***

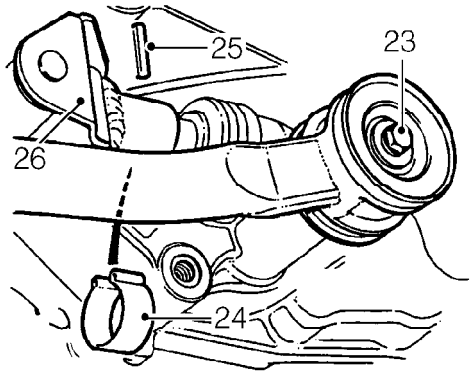

23. Remove bolt and disconnect gear change steady bar from gearbox, collect 2 washers.
24. Remove clip securing selector rod roll pin.
25. Using a suitable punch, drive out roll pin securing selector rod to selector shaft.
26. Release selector rod from selector shaft.
27. Tie selector rod and steady bar aside.

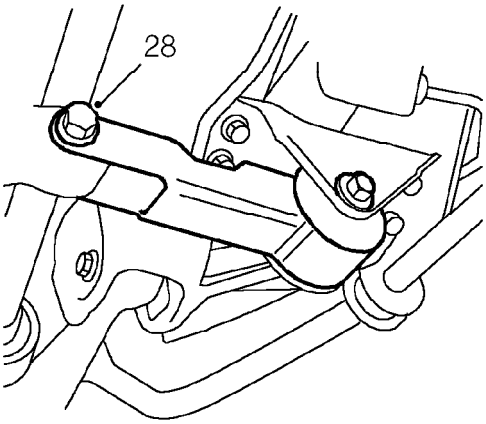

28. Remove through bolt securing engine steady bar to mounting bracket on engine.
29. Remove front beam. ***See FRONT SUSPENSION, Repairs.***
30. Release RH drive shaft from gearbox, as detailed in RH Differential oil seal. ***See MANUAL GEARBOX - 'PG1', Repairs.***
31. Release LH drive shaft from gearbox, as detailed in differential oil seal. ***See MANUAL GEARBOX - 'PG1', Repairs.***

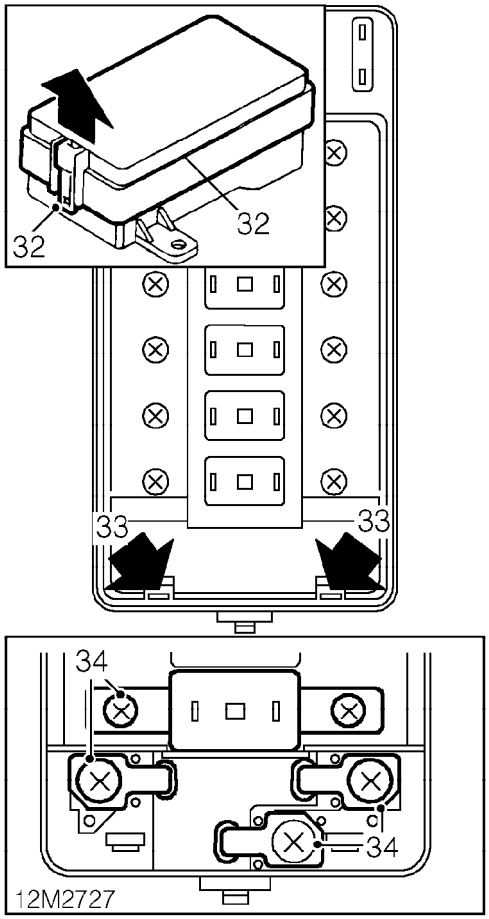

32. Release clip and remove fuse box cover.
33. Depress 2 clips and remove fuse box inner cover.
34. Remove 2 screws securing positive leads to fuse box.

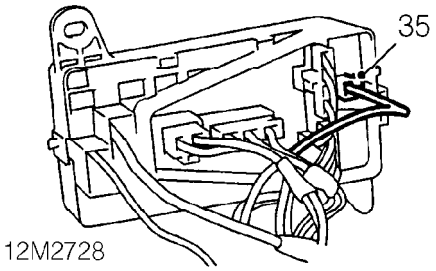

35. Disconnect multiplug from fuse box.

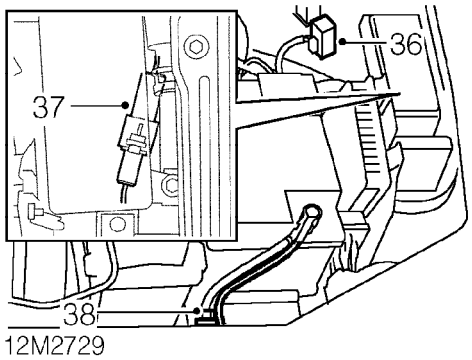

36. Release glow plug relay from mounting bracket.
37. Disconnect engine harness to main harness connector.
38. Remove bolt securing earth lead to bonnet platform.
39. Remove radiator cooling fan. ***See COOLING SYSTEM - 'L' SERIES, Repairs.***

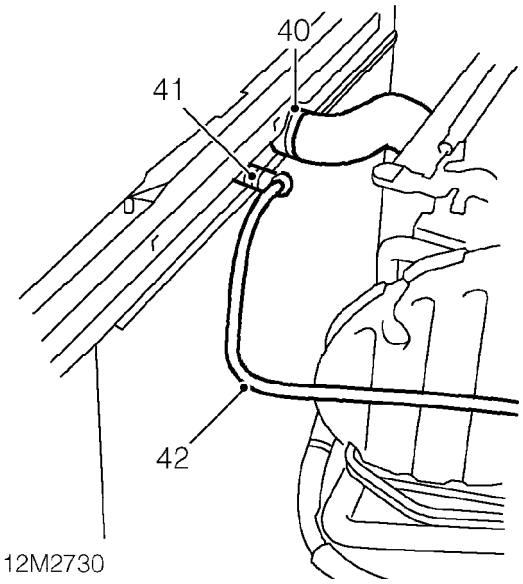

40. Loosen clip and disconnect top hose from radiator.
41. Loosen clip and disconnect coolant expansion tank hose from radiator.
42. Position coolant expansion tank hose aside.

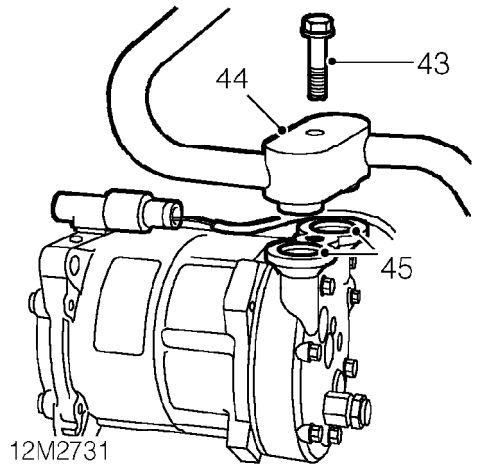

43. Remove bolt securing air conditioning pipe union to compressor.
44. Release air conditioning pipe union from compressor.
45. Remove and discard 2 ’O’ rings from compressor.

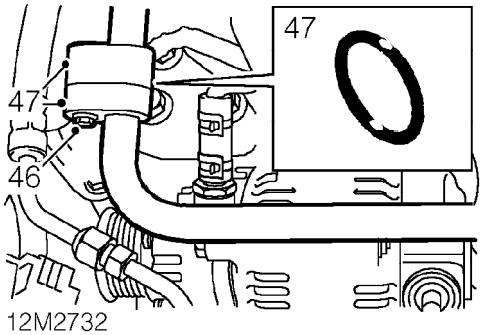

46. Remove bolt securing compressor pipe to evaporator pipe.
47. Release compressor pipe from evaporator pipe and discard ’O’ ring.

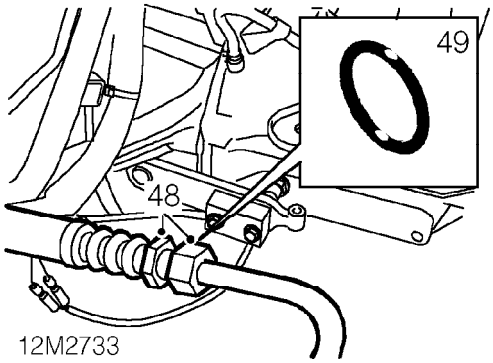

48. Loosen union and disconnect compressor pipe from condenser pipe

CAUTION: To prevent damage to air conditioning pipes and components, use 2 spanners when loosening or tightening unions.

49. Remove and discard ’O’ ring from condenser pipe.

CAUTION: Immediately cap all air conditioning pipes to prevent ingress of dirt and moisture into the system.

50. Remove air conditioning pipes.

Models without intercooler

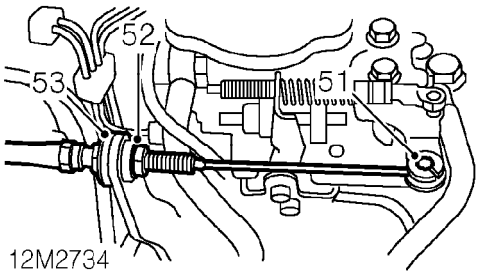

51. Release throttle cable from throttle lever.
52. Loosen nut securing throttle cable to abutment bracket.
53. Release throttle cable from abutment bracket and position aside.

Models with intercooler

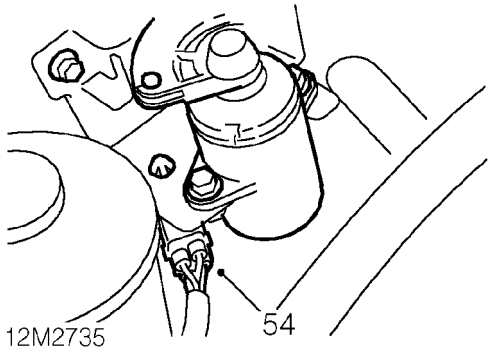

54. Disconnect harness multiplug from throttle potentiometer

All models

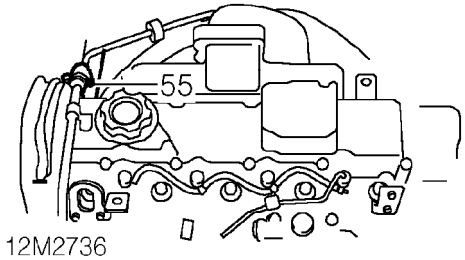

55. Release clip and disconnect brake servo vacuum hose from vacuum pipe.

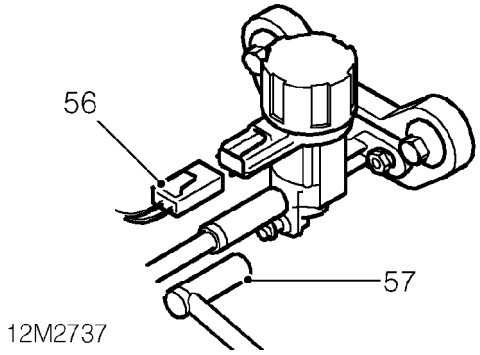

56. Disconnect multiplug from EGR solenoid.
57. Disconnect vacuum pipe from EGR valve.

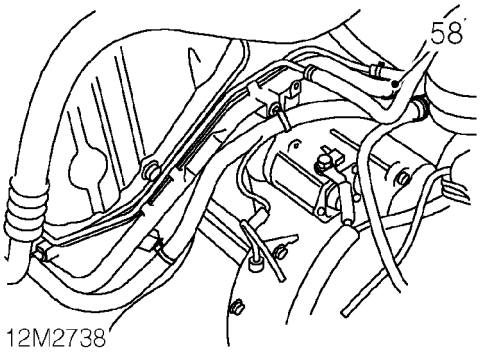

58. Loosen clip and disconnect hose from coolant rail.

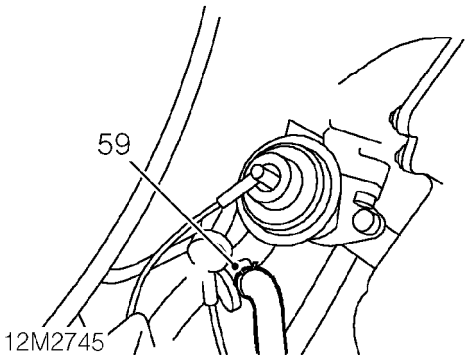

59. Loosen clip and disconnect hose from heater valve.
60. Position container to collect fluid loss from power steering system.

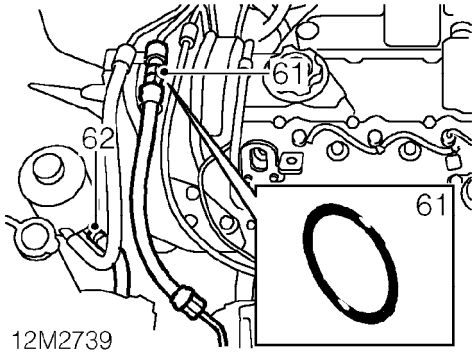

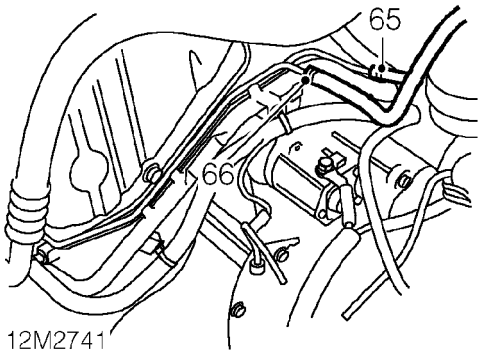

61. Loosen PAS pump pressure hose to intermediate pipe union, remove and discard 'O' ring seal.

CAUTION: Use 2 spanners when loosening or tightening unions. Plug the connections to prevent the ingress of dirt.

62. Release clip and disconnect PAS pump feed hose from PAS fluid reservoir.

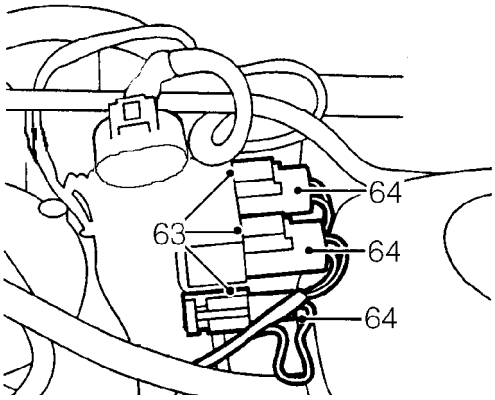

63. Release 3 multiplugs from mounting bracket on bulkhead.

64. Disconnect engine harness multiplugs from main harness.

65. Release clip and disconnect hose from fuel filter.

66. Release clip and disconnect hose from fuel return pipe.

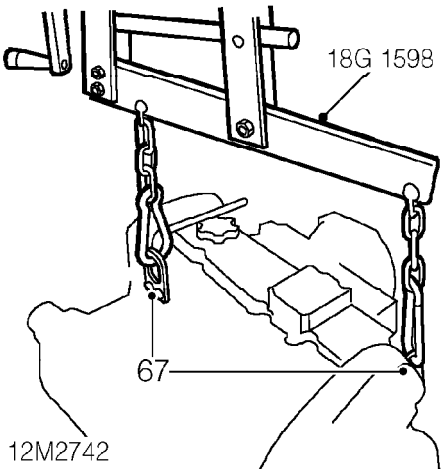

67. Connect adjustable lifting bracket tool **18G 1598** to engine lifting brackets.

68. Connect a hoist to lifting bracket tool **18G 1598** and raise hoist to take weight of engine without exerting load on engine mounting bolts.

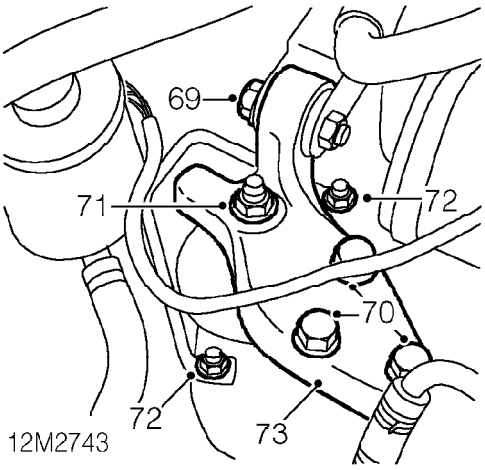

69. Remove through bolt securing RH steady bar to engine mounting bracket.
70. Remove 3 bolts securing mounting bracket to engine.
71. Remove nut securing mounting bracket to engine mounting.
72. Loosen 2 nuts securing restraint bar to body.
73. Remove engine mounting bracket.

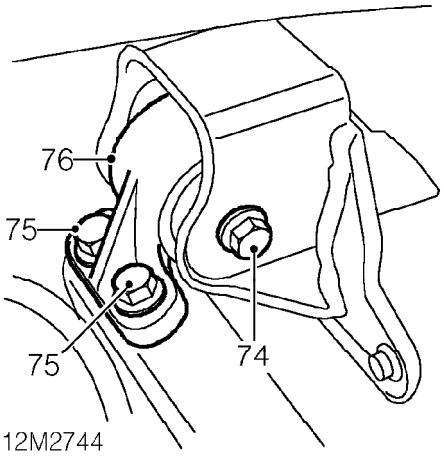

74. Remove through bolt securing engine LH mounting to bracket on body.
75. Remove 2 bolts securing engine mounting to bracket on gearbox.
76. Remove engine mounting.
77. Using assistance, manoeuvre and lower engine and gearbox from vehicle.
78. Disconnect hoist from adjustable lifting bracket.
79. Remove engine and gearbox from beneath vehicle.

Refit

1. Using assistance, position engine and gearbox beneath vehicle.
2. Connect hoist to adjustable lifting bracket tool **18G 1598.**
3. Raise and manoeuvre engine and gearbox into position in vehicle.
4. Adjust lifting bracket tool so engine is horizontal in engine compartment.
5. Position engine LH mounting to gearbox mounting bracket, fit bolts and tighten to 100 Nm.
6. Align engine LH mounting to bracket on body, fit through bolt and tighten to 85 Nm.
7. Fit mounting bracket to engine RH mounting.
8. Align mounting bracket to engine, fit 3 bolts and tighten to 100 Nm.
9. Fit nut securing mounting bracket to engine mounting and tighten to 85 Nm.
10. Tighten nuts, engine mounting restraint bar to body, to 45 Nm.
11. Connect steady bar to engine mounting bracket, fit through bolt and tighten to 80 Nm.
12. Lower hoist and disconnect adjustable lifting bracket tool **18G 1598.**
13. Connect hose to fuel return pipe and secure with clip.
14. Connect hose to fuel filter and secure with clip.
15. Connect 3 engine harness multiplugs to main harness.
16. Secure multiplugs to bracket on bulkhead.
17. Remove plugs from PAS pipes and hoses.
18. Connect PAS pump feed hose to fluid reservoir and secure with clip.
19. Fit new 'O' ring to PAS intermediate pipe.
20. Connect PAS pump pressure hose to intermediate pipe and tighten union to 20 Nm.

CAUTION: To prevent damage to components, use two spanners when loosening or tightening unions.

21. Remove container positioned to collect fluid loss from PAS system.
22. Connect coolant hose to heater valve and tighten clip.
23. Connect hose to coolant rail and tighten clip.
24. Connect vacuum pipe to EGR valve.
25. Connect multiplug to EGR solenoid.
26. Connect brake servo vacuum hose to vacuum pipe and secure with clip.

Models with intercooler

27. Connect harness multiplug to throttle potentiometer.

Models without intercooler

28. Connect throttle cable to abutment bracket and secure with nut.
29. Connect throttle cable to throttle lever.

All models

30. Remove caps from air conditioning pipes and compressor.
31. Clean mating faces of air conditioning pipe union and compressor.
32. Lubricate 2 new 'O' rings with refrigerant oil and fit to compressor.
33. Position air conditioning pipe to compressor. Fit bolt and tighten to 35 Nm.
34. Clean condenser pipe to evaporator pipe union.
35. Lubricate new 'O' ring with refrigerant oil and fit to compressor pipe.
36. Connect compressor pipe to evaporator pipe, fit bolt and tighten to 6 Nm.
37. Clean compressor pipe and condenser pipe unions.
38. Lubricate new 'O' ring with refrigerant oil and fit to condenser pipe.
39. Connect compressor pipe to condenser pipe and tighten union to 45 Nm.

CAUTION: To prevent damage to air conditioning pipes and components, use two spanners when loosening or tightening union.

40. Connect top hose to radiator and tighten clip.
41. Connect expansion tank hose to radiator and tighten clip.
42. Fit bolt securing earth leads to bonnet platform.
43. Connect engine harness to main harness connector.
44. Secure glow plug relay to mounting bracket.
45. Connect multiplug to engine compartment fuse box.
46. Fit positive leads to fuse box and secure with screws.
47. Fit fuse box inner cover.
48. Fit fuse box cover.
49. Connect LH drive shaft to gearbox, as detailed in Differential oil seal. ***See MANUAL GEARBOX - 'PG1', Repairs.***
50. Connect RH drive shaft to gearbox. as detailed in RH Differential oil seal ***See MANUAL GEARBOX - 'PG1', Repairs.***
51. Fit front beam. ***See FRONT SUSPENSION, Repairs.***
52. Fit through bolt securing engine steady bar to mounting bracket on engine and tighten to 85 Nm.
53. Connect selector rod to selector shaft and align holes.
54. Fit new roll pin securing selector rod to shaft and fit roll pin retaining clip.
55. Fit washers to gear change steady bar and connect steady bar to gearbox.
56. Fit bolt securing steady bar to gearbox and tighten to 10 Nm.
57. Fit exhaust front pipe. ***See MANIFOLD & EXHAUST SYSTEMS, Repairs.***
58. Fit MAF sensor to air intake pipe and tighten clip.
59. Connect multiplug to MAF sensor.
60. Position earth lead to gearbox, fit bolt and tighten to 35 Nm.
61. Feed clutch cable through abutment bracket and connect to clutch release lever.
62. Position battery tray in vehicle.
63. Tighten 3 bolts securing battery tray to vehicle.
64. Position engine compartment fuse box to body, fit bolt and tighten to 10 Nm.
65. Fit 4 bolts securing battery tray to body and tighten to 10 Nm.
66. Fit and tighten bolt securing engine compartment fuse box to battery tray.

67. Fit engine management relay module. ***See ENGINE MANAGEMENT SYSTEM - EDC, Repairs.***
68. Fit ECM. ***See ENGINE MANAGEMENT SYSTEM - EDC, Repairs.***
69. Fit air cleaner. ***See ENGINE MANAGEMENT SYSTEM - EDC, Repairs.***
70. Replace receiver/dryer. ***See AIR CONDITIONING, Repairs.***
71. *If required:* Refill engine with oil. ***See MAINTENANCE.***
72. Lower vehicle.
73. Recharge air conditioning system. ***See AIR CONDITIONING, Adjustments.***
74. Fit engine acoustic cover. ***See BODY, Exterior fittings.***
75. Fill gearbox with correct grade of oil. ***See MANUAL GEARBOX - 'PG1', Adjustments.***
76. Refill cooling system. ***See COOLING SYSTEM - 'L' SERIES, Adjustments.***
77. Bleed power steering system. ***See STEERING, Adjustments.***

Models without intercooler

78. Adjust throttle cable. ***See ENGINE MANAGEMENT SYSTEM - EDC, Adjustments.***

ENGINE AND GEARBOX - MODELS WITHOUT AIR CONDITIONING

Service repair no - 12.37.01.99

Remove

1. Raise vehicle on a 2 post ramp.
2. Drain gearbox oil. ***See MANUAL GEARBOX - 'PG1', Adjustments.***
3. Drain cooling system. ***See COOLING SYSTEM - 'L' SERIES, Adjustments.***
4. Disconnect battery earth lead.
5. Remove engine acoustic cover. ***See BODY, Exterior fittings.***
6. If required, drain engine oil. ***See MAINTENANCE.***
7. Fit new sealing washer to drain plug, fit drain plug and tighten to 25 Nm.
8. Remove air cleaner. ***See ENGINE MANAGEMENT SYSTEM - EDC, Repairs.***
9. Remove ECM. ***See ENGINE MANAGEMENT SYSTEM - EDC, Repairs.***
10. Remove engine management relay module. ***See ENGINE MANAGEMENT SYSTEM - EDC, Repairs.***

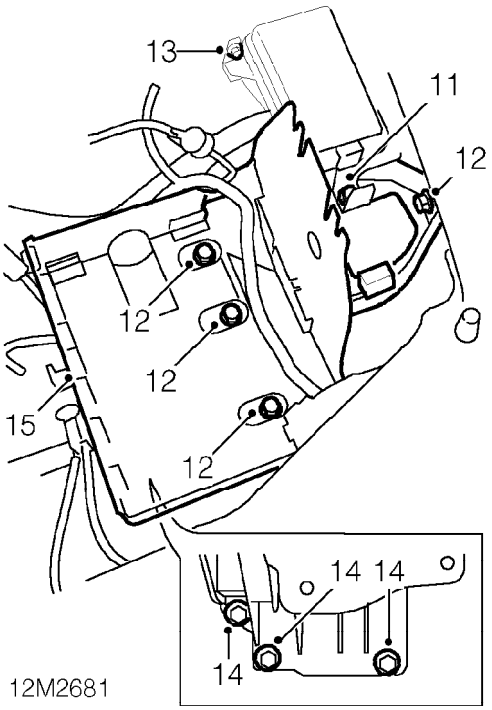

11. Remove bolt securing engine compartment fuse box to battery tray.
12. Remove 4 bolts securing battery tray to body.
13. Remove bolt securing engine compartment fuse box to body and position fuse box aside.
14. Loosen 3 bolts securing battery tray to body.
15. Remove battery tray from vehicle.

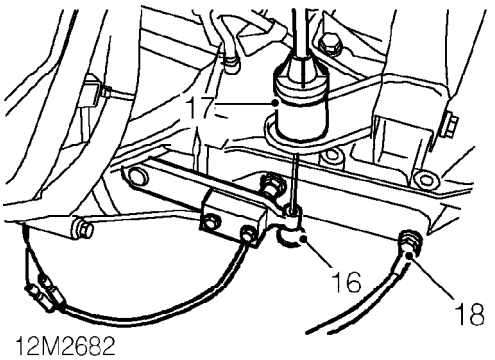

16. Disconnect clutch cable from clutch release lever.
17. Release clutch cable from abutment bracket on gearbox and position aside.
18. Remove bolt securing earth lead to gearbox.

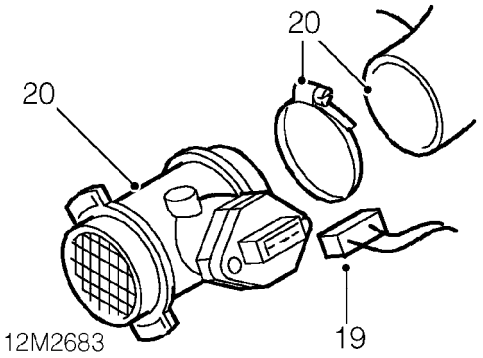

19. Disconnect multiplug from MAF sensor.
20. Loosen clip securing MAF sensor to air intake pipe and remove MAF sensor.
21. Remove exhaust front pipe. ***See MANIFOLD & EXHAUST SYSTEMS, Repairs.***

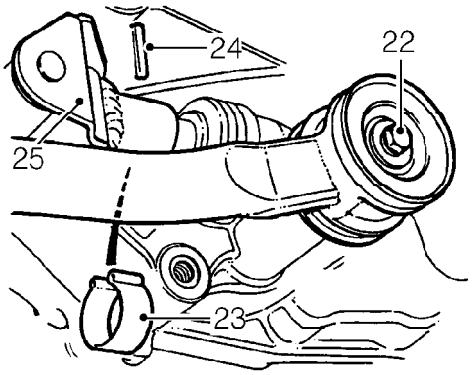

22. Remove bolt and disconnect gear change steady bar from gearbox, collect 2 washers.
23. Remove clip securing selector rod roll pin.
24. Using a suitable punch, drive out roll pin securing selector rod to selector shaft.
25. Release selector rod from selector shaft.
26. Tie selector rod and steady bar aside.

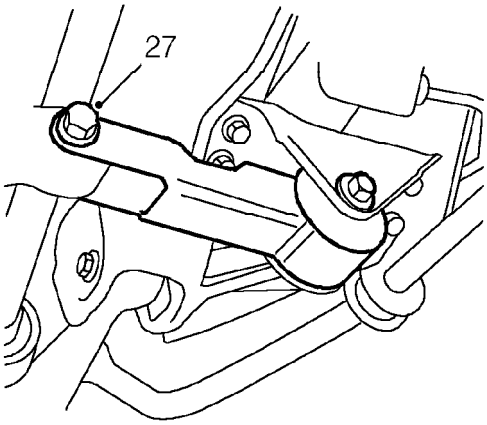

27. Remove through bolt securing engine steady bar to mounting bracket on engine.
28. Remove front beam. ***See FRONT SUSPENSION, Repairs.***
29. Release RH drive shaft from gearbox, as detailed in RH Differential oil seal. ***See MANUAL GEARBOX - 'PG1', Repairs.***
30. Release LH drive shaft from gearbox, as detailed in differential oil seal. ***See MANUAL GEARBOX - 'PG1', Repairs.***

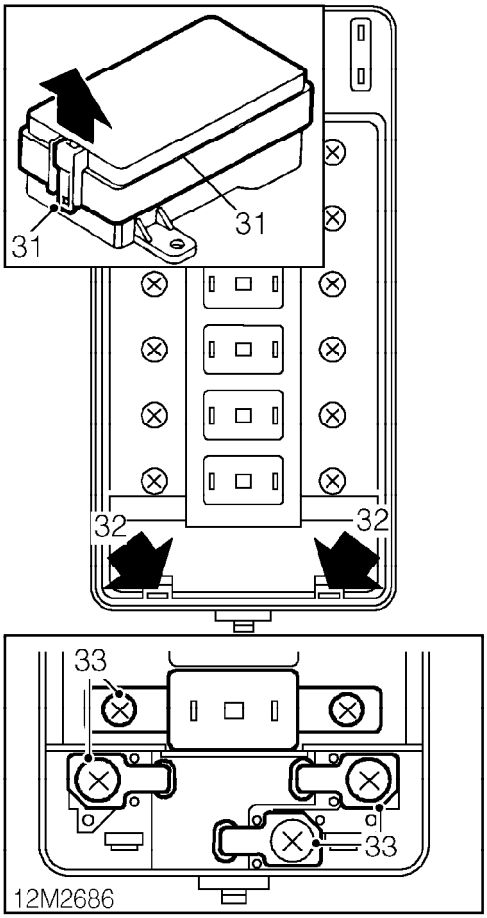

31. Release clip and remove fuse box cover.
32. Depress 2 clips and remove fuse box inner cover.
33. Remove 2 screws securing positive leads to fuse box.

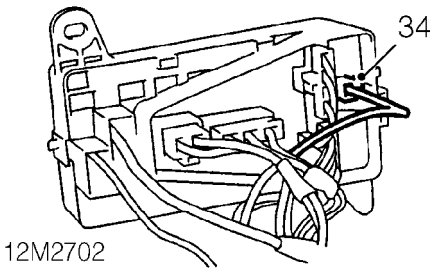

34. Disconnect multiplug from fuse box.

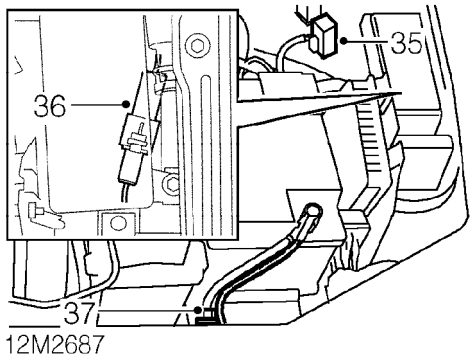

35. Release glow plug relay from mounting bracket.
36. Disconnect engine harness to main harness connector.
37. Remove bolt securing earth lead to bonnet platform.
38. Remove radiator cooling fan. ***See COOLING SYSTEM - 'L' SERIES, Repairs.***

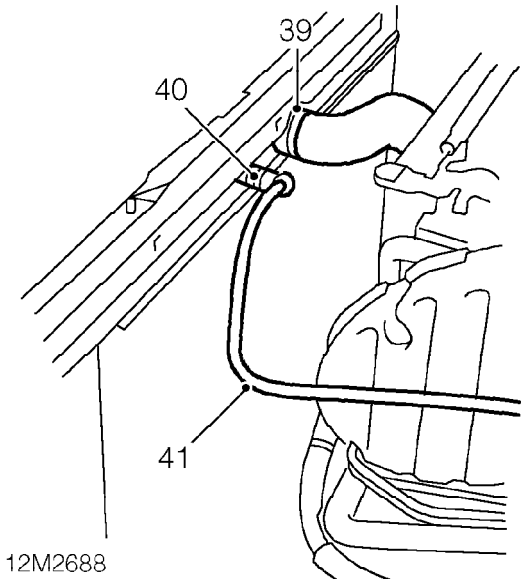

39. Loosen clip and disconnect top hose from radiator.
40. Loosen clip and disconnect coolant expansion tank hose from radiator.
41. Position coolant expansion tank hose aside.

Models without intercooler

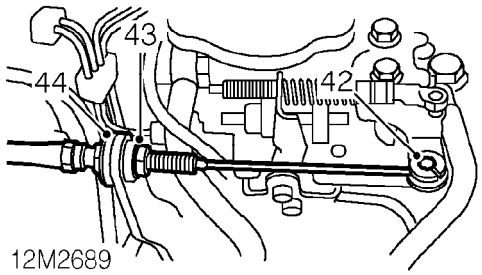

42. Release throttle cable from throttle lever.
43. Loosen nut securing throttle cable to abutment bracket.
44. Release throttle cable from abutment bracket and position aside.

Models with intercooler

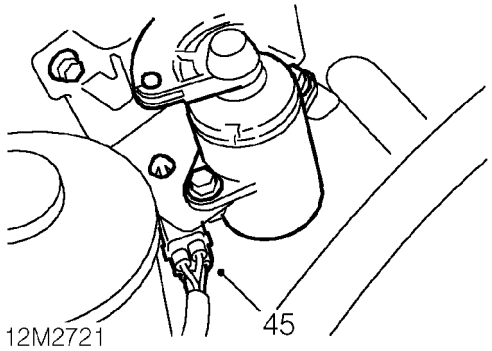

45. Disconnect harness multiplug from throttle potentiometer

All models

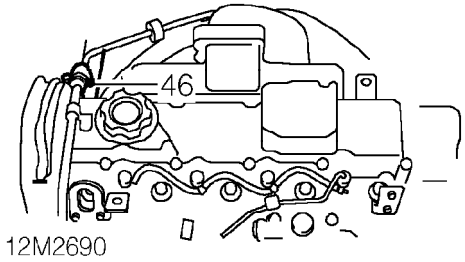

46. Release clip and disconnect brake servo vacuum hose from vacuum pipe.

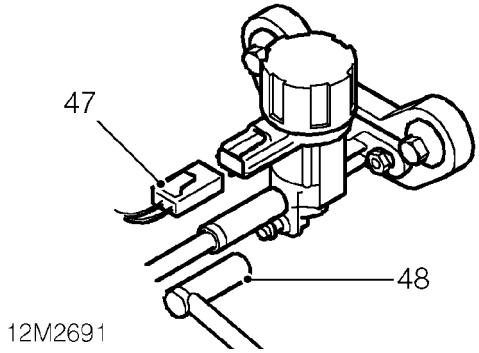

47. Disconnect multiplug from EGR solenoid.
48. Disconnect vacuum pipe from EGR valve.

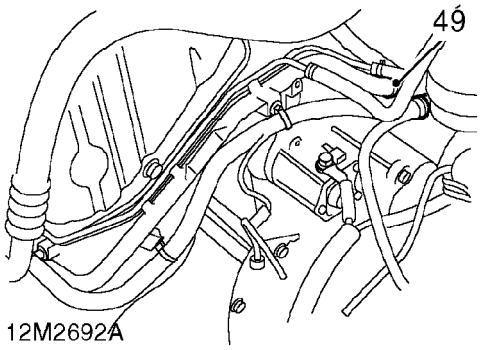

49. Loosen clip and disconnect hose from coolant rail.

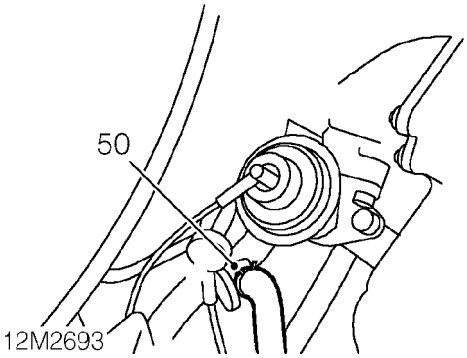

50. Loosen clip and disconnect hose from heater valve.

51. Position container to collect fluid loss from power steering system.

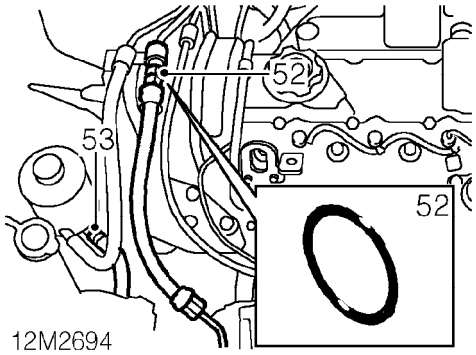

52. Loosen PAS pump pressure hose to intermediate pipe union, remove and discard 'O' ring seal.

CAUTION: Use 2 spanners when loosening or tightening unions. Plug the connections to prevent the ingress of dirt.

53. Release clip and disconnect PAS pump feed hose from PAS fluid reservoir.

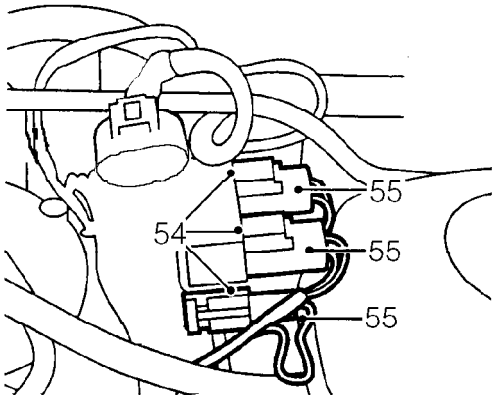

54. Release 3 multiplugs from mounting bracket on bulkhead.

55. Disconnect engine harness multiplugs from main harness.

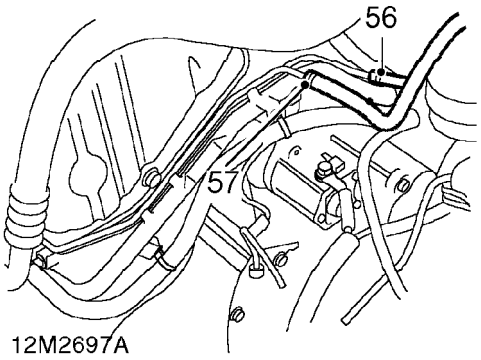

56. Release clip and disconnect hose from fuel filter.

57. Release clip and disconnect hose from fuel return pipe.

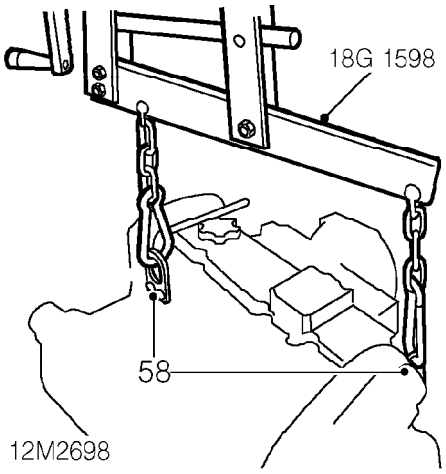

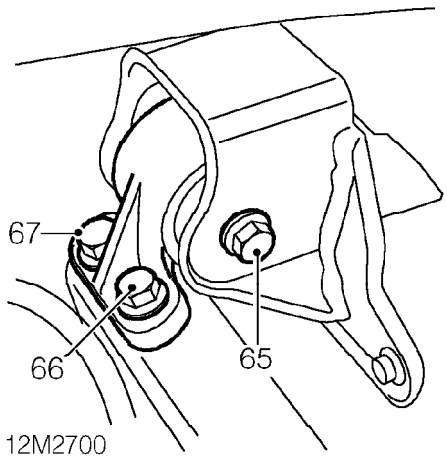

58. Connect adjustable lifting bracket tool **18G 1598** to engine lifting brackets.
59. Connect a hoist to lifting bracket tool **18G 1598** and raise hoist to take weight of engine without exerting load on engine mounting bolts.

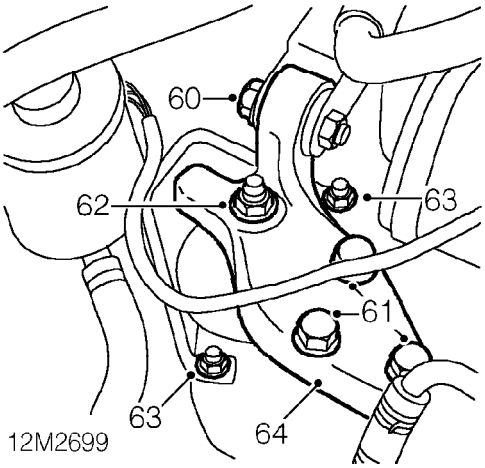

60. Remove through bolt securing RH steady bar to engine mounting bracket.
61. Remove 3 bolts securing mounting bracket to engine.
62. Remove nut securing mounting bracket to engine mounting.
63. Loosen 2 nuts securing restraint bar to body.
64. Remove engine mounting bracket.
65. Remove through bolt securing engine LH mounting to bracket on body.
66. Remove 2 bolts securing engine mounting to bracket on gearbox.
67. Remove engine mounting.
68. Using assistance, manoeuvre and lower engine and gearbox from vehicle.
69. Disconnect hoist from adjustable lifting bracket.
70. Remove engine and gearbox from beneath vehicle.

Refit

1. Using assistance, position engine and gearbox beneath vehicle.
2. Connect hoist to adjustable lifting bracket tool **18G 1598.**
3. Raise and manoeuvre engine and gearbox into position in vehicle.
4. Adjust lifting bracket tool so engine is horizontal in engine compartment.
5. Position engine LH mounting to gearbox mounting bracket, fit bolts and tighten to 100 Nm.
6. Align engine LH mounting to bracket on body, fit through bolt and tighten to 85 Nm.
7. Fit mounting bracket to engine RH mounting.
8. Align mounting bracket to engine, fit 3 bolts and tighten to 100 Nm.
9. Fit nut securing mounting bracket to engine mounting and tighten to 85 Nm.
10. Tighten nuts, engine mounting restraint bar to body, to 45 Nm.
11. Connect steady bar to engine mounting bracket, fit through bolt and tighten to 80 Nm.
12. Lower hoist and disconnect adjustable lifting bracket tool **18G 1598.**
13. Connect hose to fuel return pipe and secure with clip.
14. Connect hose to fuel filter and secure with clip.
15. Connect 3 engine harness multiplugs to main harness.
16. Secure multiplugs to bracket on bulkhead.
17. Remove plugs from PAS pipes and hoses.
18. Connect PAS pump feed hose to fluid reservoir and secure with clip.
19. Fit new 'O' ring to PAS intermediate pipe.
20. Connect PAS pump pressure hose to intermediate pipe and tighten union to 20 Nm.

CAUTION: To prevent damage to components, use two spanners when loosening or tightening unions.

21. Remove container positioned to collect fluid loss from PAS system.
22. Connect coolant hose to heater valve and tighten clip.
23. Connect hose to coolant rail and tighten clip.
24. Connect vacuum pipe to EGR valve.
25. Connect multiplug to EGR solenoid.
26. Connect brake servo vacuum hose to vacuum pipe and secure with clip.

Models with intercooler

27. Connect harness multiplug to throttle potentiometer.

Models without intercooler

28. Connect throttle cable to abutment bracket and secure with nut.
29. Connect throttle cable to throttle lever.

All models

30. Connect top hose to radiator and tighten clip.
31. Connect expansion tank hose to radiator and tighten clip.
32. Fit bolt securing earth leads to bonnet platform.
33. Connect engine harness to main harness connector.
34. Secure glow plug relay to mounting bracket.
35. Connect multiplug to engine compartment fuse box.
36. Fit positive leads to fuse box and secure with screws.
37. Fit fuse box inner cover.
38. Fit fuse box cover.
39. Connect LH drive shaft to gearbox, as detailed in Differential oil seal. ***See MANUAL GEARBOX - 'PG1', Repairs.***
40. Connect RH drive shaft to gearbox. as detailed in RH Differential oil seal ***See MANUAL GEARBOX - 'PG1', Repairs.***
41. Fit front beam. ***See FRONT SUSPENSION, Repairs.***
42. Fit through bolt securing engine steady bar to mounting bracket on engine and tighten to 85 Nm.
43. Connect selector rod to selector shaft and align holes.
44. Fit new roll pin securing selector rod to shaft and fit roll pin retaining clip.
45. Fit washers to gear change steady bar and connect steady bar to gearbox.

46. Fit bolt securing steady bar to gearbox and tighten to 10 Nm.
47. Fit exhaust front pipe. ***See MANIFOLD & EXHAUST SYSTEMS, Repairs.***
48. Fit MAF sensor to air intake pipe and tighten clip.
49. Connect multiplug to MAF sensor.
50. Position earth lead to gearbox, fit bolt and tighten to 35 Nm.
51. Feed clutch cable through abutment bracket and connect to clutch release lever.
52. Position battery tray in vehicle.
53. Tighten 3 bolts securing battery tray to vehicle.
54. Position engine compartment fuse box to body, fit bolt and tighten to 10 Nm.
55. Fit 4 bolts securing battery tray to body and tighten to 10 Nm.
56. Fit and tighten bolt securing engine compartment fuse box to battery tray.
57. Fit engine management relay module. ***See ENGINE MANAGEMENT SYSTEM - EDC, Repairs.***
58. Fit ECM. ***See ENGINE MANAGEMENT SYSTEM - EDC, Repairs.***
59. Fit air cleaner. ***See ENGINE MANAGEMENT SYSTEM - EDC, Repairs.***
60. *If required:* Refill engine with oil. ***See MAINTENANCE.***
61. Lower vehicle.
62. Fit engine acoustic cover. ***See BODY, Exterior fittings.***
63. Fill gearbox with correct grade of oil. ***See MANUAL GEARBOX - 'PG1', Adjustments.***
64. Refill cooling system. ***See COOLING SYSTEM - 'L' SERIES, Adjustments.***
65. Bleed power steering system. ***See STEERING, Adjustments.***

Models without intercooler

66. Adjust throttle cable. ***See ENGINE MANAGEMENT SYSTEM - EDC, Adjustments.***

ENGINE STEADY BAR

Service repair no - 12.45.08

Remove

1. Raise front of vehicle.

WARNING: Support on safety stands.

2. Remove undertray. ***See BODY, Exterior fittings.***

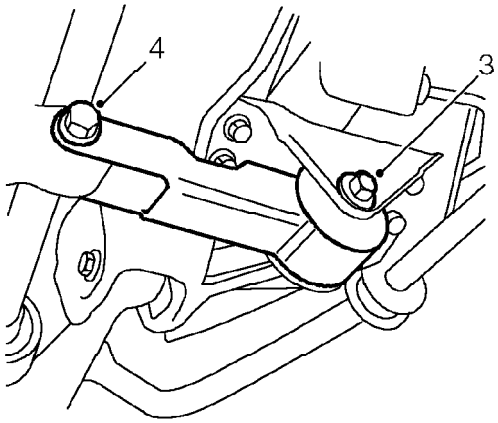

12M1728

3. Remove through bolt securing engine steady bar to sub-frame.
4. Remove through bolt securing engine steady bar to bracket on gearbox.
5. Remove engine steady bar.

Refit

1. Position engine steady bar to sub-frame and fit through bolt.
2. Fit and tighten through bolt securing steady bar to bracket on gearbox to 85 Nm.
3. Tighten through bolt, steady bar to sub-frame, to 85 Nm.
4. Fit undertray. ***See BODY, Exterior fittings.***
5. Remove stand(s) and lower vehicle.

ENGINE LH MOUNTING

Service repair no - 12.45.30

Remove

1. Raise front of vehicle.

WARNING: Support on safety stands.

2. Remove air cleaner ***See ENGINE MANAGEMENT SYSTEM - EDC, Repairs.***
3. Remove engine control module. ***See ENGINE MANAGEMENT SYSTEM - EDC, Repairs.***
4. Remove engine management relay module. ***See ENGINE MANAGEMENT SYSTEM - EDC, Repairs.***

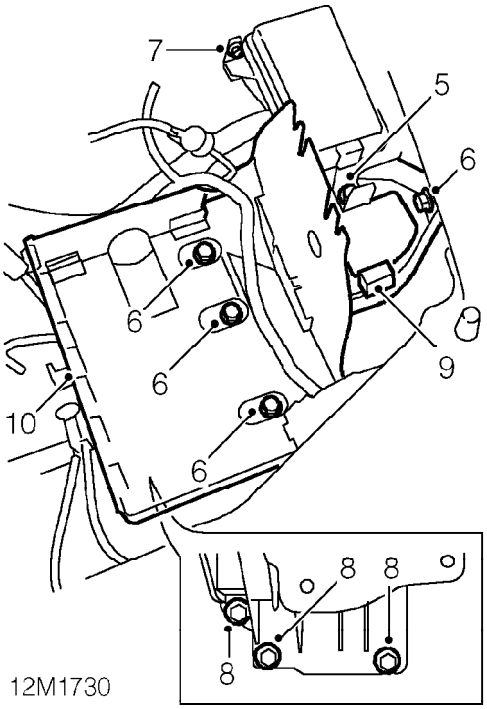

5. Remove bolt securing engine compartment fuse box to battery tray.
6. Remove 4 bolts securing battery tray to body.
7. Remove bolt securing engine compartment fuse box to body and position fuse box aside.
8. Loosen 3 bolts securing battery tray to body.
9. *If fitted:* Release ABS fuse holder from battery tray.
10. Remove battery tray.
11. Remove undertray. ***See BODY, Exterior fittings.***
12. Fit wooden block to jack and position jack to support gearbox.

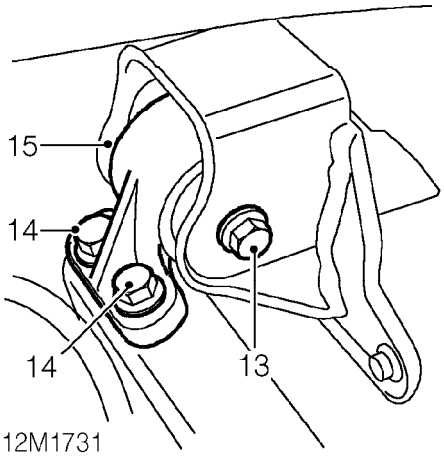

13. Remove bolt securing engine mounting to body mounting bracket.
14. Remove 2 bolts securing engine mounting to gearbox mounting bracket.
15. Remove engine mounting.

Refit

1. Position engine mounting to body and gearbox mounting brackets.
2. Fit bolts securing engine mounting to gearbox bracket and tighten to 100 Nm.
3. Fit bolt securing engine mounting to body mounting bracket and tighten to 85 Nm.
4. Remove jack.
5. Fit undertray. ***See BODY, Exterior fittings.***
6. Fit battery tray to vehicle.
7. Tighten bolts securing battery tray to body.
8. Position fuse box and secure with bolt.
9. Fit bolts securing battery tray to body.
10. Fit bolt securing fuse box to battery tray.
11. *If fitted:* Secure ABS fuse holder to battery tray.
12. Fit engine management relay module. ***See ENGINE MANAGEMENT SYSTEM - EDC, Repairs.***
13. Fit engine control module. ***See ENGINE MANAGEMENT SYSTEM - EDC, Repairs.***
14. Fit air cleaner. ***See ENGINE MANAGEMENT SYSTEM - EDC, Repairs.***
15. Remove stand(s) and lower vehicle.

ENGINE RH MOUNTING

Service repair no - 12.45.31

Remove

1. Raise front of vehicle.

WARNING: Support on safety stands.

2. Remove undertray. ***See BODY, Exterior fittings.***
3. Fit wooden block to jack and position jack to support engine.

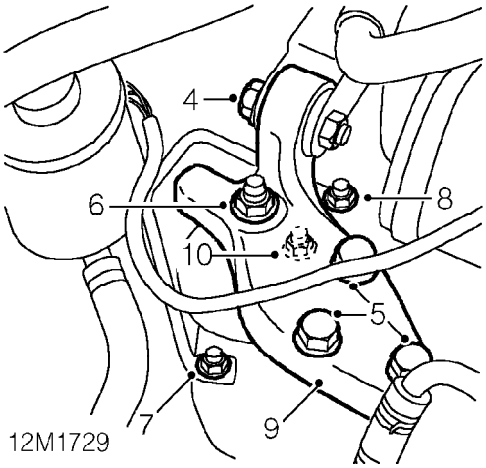

4. Remove bolt securing RH steady bar to engine mounting bracket.
5. Remove 3 bolts securing mounting bracket to engine.
6. Remove nut securing mounting bracket to engine mounting.
7. Remove nut securing engine mounting and restraint bar to body.
8. Loosen nut securing restraint bar to body and move aside.
9. Remove engine mounting bracket.
10. Remove nut securing engine mounting to body.
11. Remove engine RH mounting.

Refit

1. Fit engine mounting to vehicle and finger tighten rear nut.
2. Fit mounting bracket to engine mounting, steady bar, and engine.
3. Align restraint bar and fit and tighten nuts to 45 Nm.
4. Tighten nut securing engine mounting to body to 45 Nm.
5. Fit nut securing engine mounting to mounting bracket and tighten to 85 Nm.
6. Align engine with mounting bracket and fit bolts. Tighten bolts to 100 Nm.
7. Fit bolt securing mounting bracket to steady bar and tighten to 80 Nm.
8. Remove jack.
9. Fit undertray. ***See BODY, Exterior fittings.***
10. Remove stand(s) and lower vehicle.

FLYWHEEL

Service repair no - 12.53.07

Remove

1. Remove clutch assembly. ***See CLUTCH, Repairs.***
2. Remove CKP sensor. ***See ENGINE MANAGEMENT SYSTEM - EDC, Repairs.***
3. Ensure tool **18G 1523** is locking flywheel.

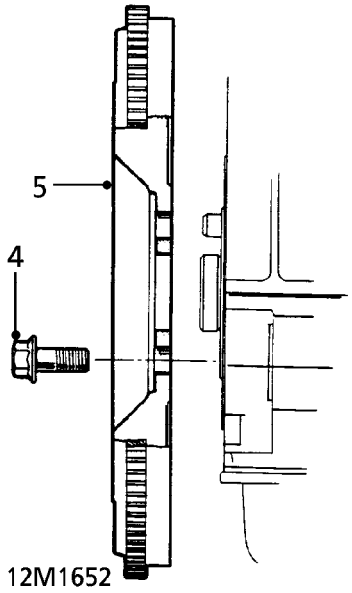

4. Remove and discard 6 bolts securing flywheel to crankshaft.
5. Remove flywheel locking pin tool **18G 1523,** remove flywheel from crankshaft.

Refit

1. Using an old flywheel bolt with two saw cuts at 45° to bolt shank, clean old adhesive from threads of flywheel bolt holes in crankshaft.
2. Clean flywheel and mating face of crankshaft.
3. Fit flywheel to crankshaft.
4. Fit flywheel locking pin tool **18G 1523.**
5. Fit new bolts securing flywheel to crankshaft and working in a diagonal sequence tighten bolts to 15 Nm then further 90° .
6. Fit CKP sensor. ***See ENGINE MANAGEMENT SYSTEM - EDC, Repairs.***
7. Fit clutch assembly. ***See CLUTCH, Repairs.***

FLYWHEEL STARTER RING GEAR

Service repair no - 12.53.19

Remove

1. Remove engine flywheel. ***See this section.***

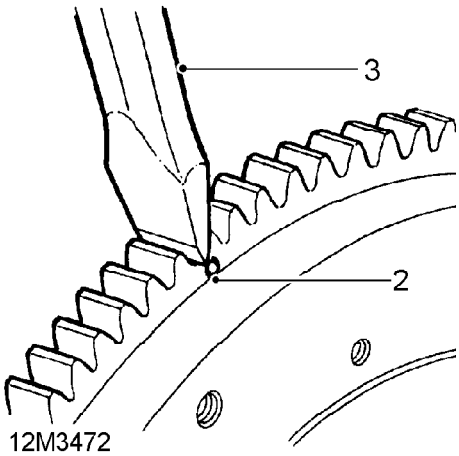

2. Drill a 2 mm diameter hole at root of 2 teeth.
3. Apply a cold chisel to root of teeth, strike chisel with hammer to break ring gear.

WARNING: Suitable eye protection must be worn.

4. Remove starter ring gear.

Refit

1. Clean flywheel and starter ring gear.
2. Heat new starter ring gear evenly to 350°C, indicated when the ring is a light blue colour.
3. Locate ring gear on flywheel and press ring gear hard against flange on flywheel.
4. Ensure ring gear is correctly seated around the complete circumference of flywheel and allow to cool.
5. Fit engine flywheel. ***See this section.***

ENGINE OIL FILTER

Service repair no - 12.60.04

Remove

1. Raise front of vehicle.

WARNING: Support on safety stands.

2. Remove undertray. ***See BODY, Exterior fittings.***
3. Clean area around filter head and place a container beneath engine.

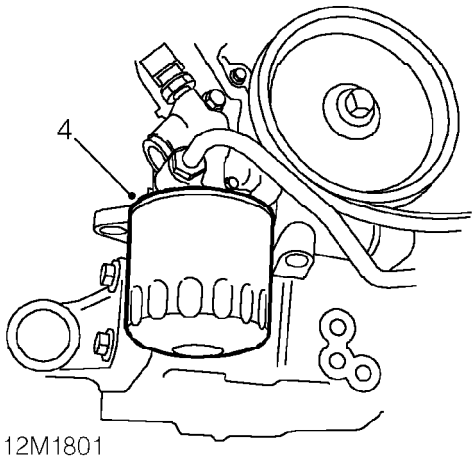

4. Using a strap wrench, unscrew and discard filter.

Refit

1. Clean mating face of filter head.
2. Lubricate sealing ring of new filter with engine oil.
3. Fit filter until it seats against filter head then tighten one complete turn or to 17 Nm.
4. Fit undertray. ***See BODY, Exterior fittings.***
5. Remove stand(s) and lower vehicle.
6. Top-up engine with correct specification engine oil until level is correct. ***See INFORMATION, Capacities, fluids and lubricants.***

CAUTION: Do not raise oil level above the 'MAX' mark on dipstick.

7. Start and run engine and check for oil leaks.
8. Stop engine, wait a few minutes, then check oil level and top up if necessary.

CAUTION: Ensure oil does not drop onto the alternator when extracting the dipstick.

DIPSTICK TUBE

Service repair no - 12.60.09

Remove

1. Remove engine acoustic cover. ***See BODY, Exterior fittings.***
2. Remove undertray. ***See BODY, Exterior fittings.***

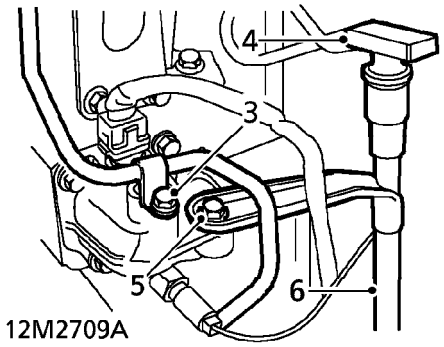

3. Remove bolt securing brake servo vacuum pipe to coolant outlet elbow and move aside.
4. Remove dipstick from tube.
5. Remove bolt securing dipstick tube to coolant outlet elbow.
6. Release dipstick tube from block and remove.

Refit

1. Clean dipstick tube and mating face on block.
2. Apply Loctite 638 to dipstick tube and fit to block.
3. Fit bolt securing dipstick tube to coolant outlet elbow and tighten to 25 Nm.
4. Fit bolt securing brake servo vacuum pipe to coolant outlet elbow and tighten to 25 Nm.
5. Fit dipstick to tube.
6. Fit undertray. ***See BODY, Exterior fittings.***
7. Fit engine acoustic cover. ***See BODY, Exterior fittings.***

OIL PUMP

Service repair no - 12.60.26

Remove

1. Disconnect battery earth lead.
2. Raise front of vehicle.

WARNING: Support on safety stands.

3. Remove RH front road wheel.
4. Remove engine oil filter. ***See this section.***
5. Remove camshaft timing belt. ***See this section.***

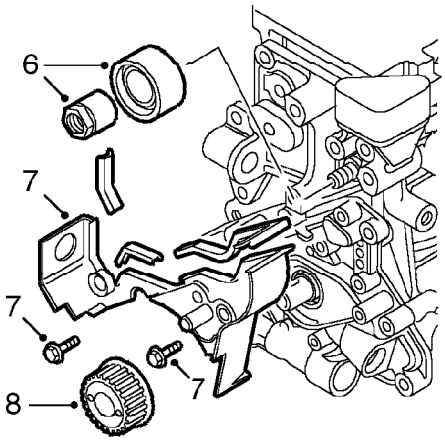

12M2715A

6. Remove idler pulley centre nut and collect pulley.

NOTE: Idler pulley mounting stud may be unscrewed as nut is removed.

7. Remove 2 bolts securing lower half of timing belt rear cover to engine and remove cover.
8. Remove crankshaft timing gear.

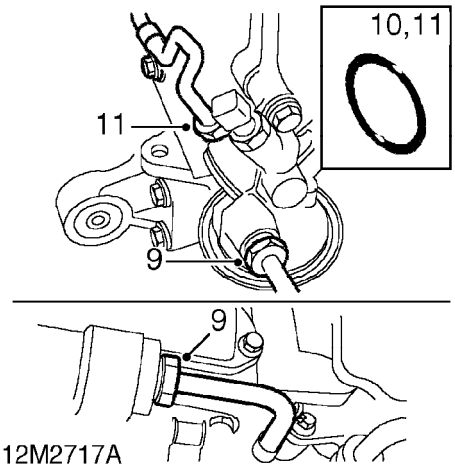

12M2717A

9. Using a 22 mm open ended spanner, remove oil cooler pipes from oil pump housing and move aside.
10. Remove and discard ’O’ rings from pipes.
11. Loosen union and disconnect turbocharger oil feed pipe from oil pump housing and move aside. Remove ’O’ ring from pipe.
12. Discard ’O’ ring.
13. Remove oil pressure switch. ***See this section.***

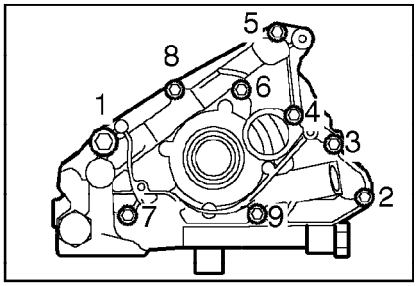

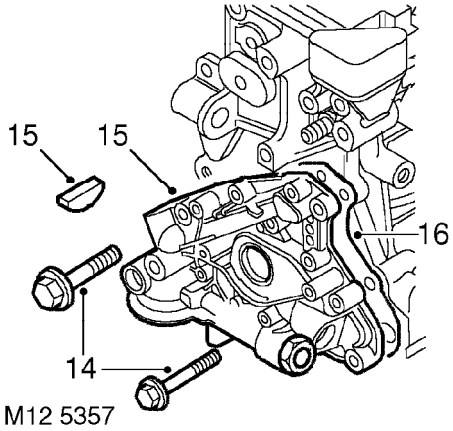

14. Using sequence shown, remove 1 x M10 and 8 x M6 bolts securing oil pump to cylinder block. Note position of longest bolt at position 9.
15. Remove oil pump from cylinder block and crankshaft, recover Woodruff key.
16. Remove and discard gasket.

Refit

1. Ensure bolt holes in cylinder block are clean and dry.
2. Remove all traces of gasket from cylinder block.
3. Using suitable solvent, remove all traces of sealant from front main bearing cap.
4. Clean oil seal running surface of crankshaft.
5. Fit Woodruff key to crankshaft.

.

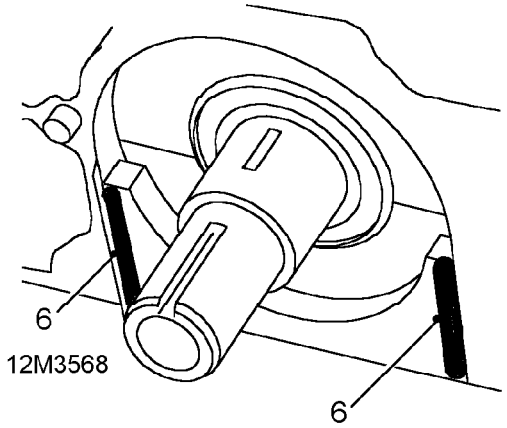

6. Using sealant from kit, Part Number GUG 705963GM, apply a 1 mm thick bead of sealant to joint line of front main bearing cap and cylinder block.
7. Fit new gasket, dry, to cylinder block.

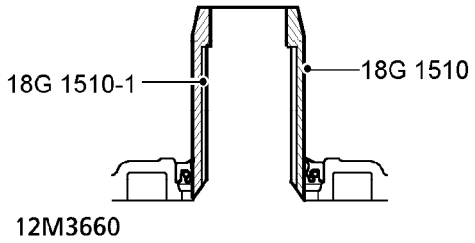

8. Fit oil seal protector **18G 1510** and adaptor sleeve **18G 1510 -1** on crankshaft.

NOTE: This will assist in locating oil pump inner rotor on Woodruff key.
Replacement oil pumps are supplied with crankshaft front oil seal fitted. A new oil seal is fitted to existing oil pumps after pump is fitted. Do not lubricate oil seal or running surface on crankshaft.

9. Slide oil pump over crankshaft ensuring Woodruff key is located in keyway in inner rotor.

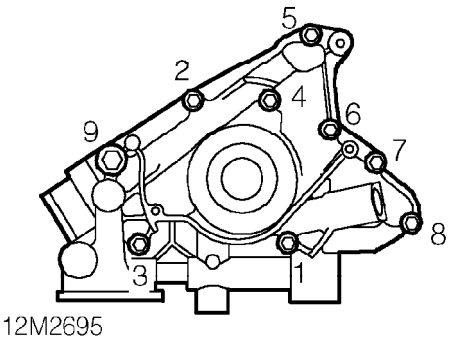

10. Fit but do not tighten bolts ensuring that longest bolt is fitted at position 1.
11. Gradually tighten bolts in sequence shown until oil pump is pulled against cylinder block.

CAUTION: Bolt tightening must be carried out gradually due to tight fit of oil pump rotor on crankshaft. Damage to the oil pump will result if this is not done.

12. Finally, tighten bolts in sequence shown to:
    M10 bolt - 45 Nm
    M6 bolts - 10 Nm

NOTE: Patchlok bolts may be re-used providing threads are undamaged.

13. *Existing oil pump:* Fit new crankshaft front oil seal. ***See this section.***
14. Fit new oil filter. ***See this section.***
15. Fit oil pressure switch. ***See this section.***
16. Fit 'O' ring to turbocharger oil feed pipe.
17. Fit pipe to oil pump housing and tighten union to 10 Nm.
18. Fit 'O' rings to oil cooler pipes.
19. Connect pipes to pump housing and tighten unions to 25 Nm.
20. Clean crankshaft timing gear and slide onto crankshaft.
21. Fit lower half of timing belt rear cover and tighten bolts to 8 Nm.
22. Apply Loctite 275 to threads of idler pulley nut.
23. Fit idler pulley to cylinder block and tighten nut to 45 Nm.

NOTE: If stud was unscrewed during nut removal, clean old Loctite from threads of stud and ensure hole in cylinder block is clean and dry. Apply Loctite 275 to threads of stud. Fit stud and tighten to 12 Nm.

24. Fit camshaft timing belt and adjust tension. ***See this section.***
25. Refill engine with oil. ***See MAINTENANCE.***
26. Connect battery earth lead.
27. Fit road wheel(s) and tighten nuts to correct torque. ***See INFORMATION, Torque wrench settings.***
28. Remove stand(s) and lower vehicle.

ENGINE SUMP GASKET

Service repair no - 12.60.38

Remove

1. Raise front of vehicle.

WARNING: Support on safety stands.

2. Remove oil filter. ***See this section.***
3. Remove engine steady bar. ***See this section.***

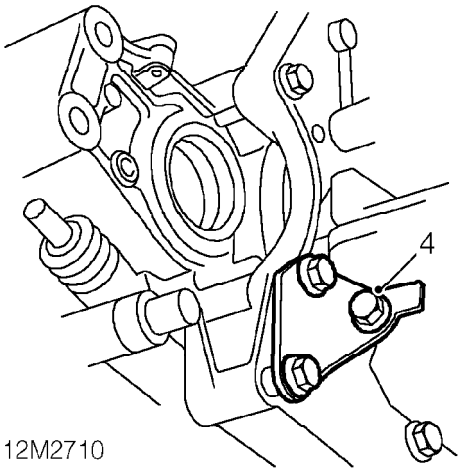

4. Remove bolt securing sump to gearbox support bracket.

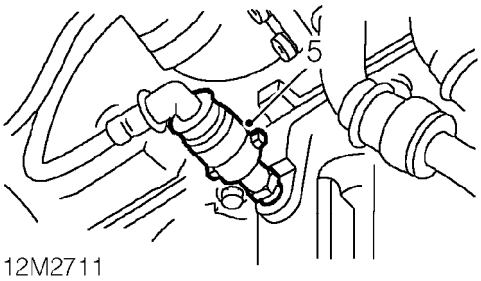

5. Disconnect vacuum pump oil drain pipe from sump.

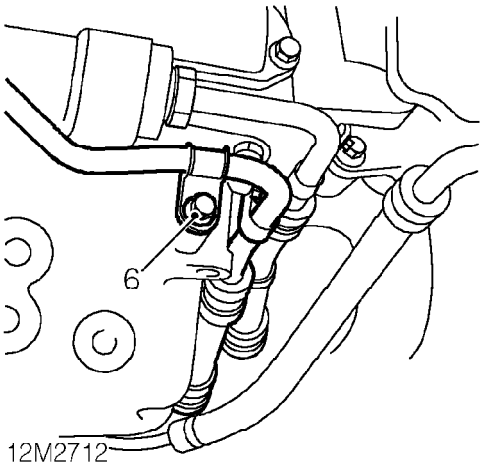

6. Remove bolt securing oil pipe to sump.

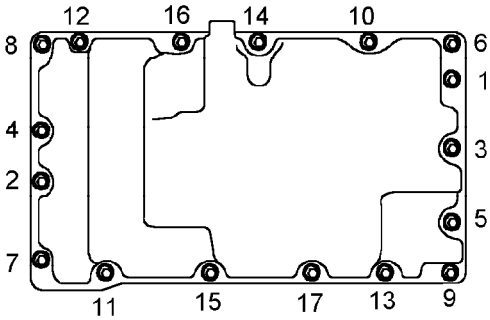

12M1938

7. Using sequence shown, remove 17 bolts securing sump to cylinder block.
8. Remove sump.
9. Remove and discard gasket from sump.

Refit

1. Ensure bolt holes in cylinder block are clean and dry.
2. Clean sump and cylinder block mating faces.
3. Remove all traces of sealant from rear oil seal housing, rear main bearing cap, cylinder block and front main bearing cap using suitable solvent.

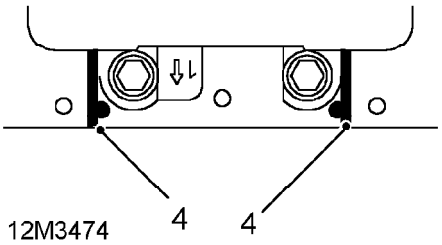

4. Using sealant from kit, Part Number GUG 705963GM, fill grooves on each side of front main bearing cap and along joint lines of bearing cap and cylinder block.

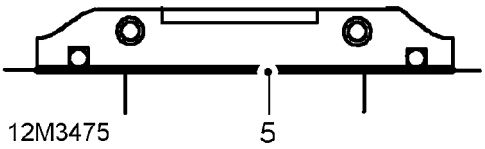

5. Apply a 1 mm thick bead of sealant from kit to joint line and around bolt holes of crankshaft rear oil seal housing, rear main bearing cap and cylinder block and sump bolt holes adjacent to rear main bearing cap.

CAUTION: Do not apply sealant until immediately prior to fitting sump. Do not spread sealant bead.

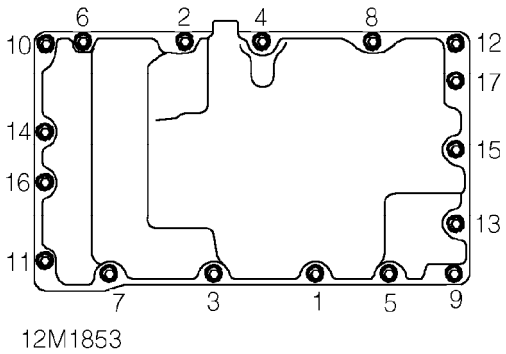

6. Fit gasket to sump.
7. Fit sump to cylinder block, fit and finger tighten 17 bolts.
8. Using sequence shown, tighten bolts to 25 Nm.
9. Using same sequence, check that all bolts are torqued to 25 Nm.
10. Fit bolt securing oil pipe to sump.
11. Connect vacuum pump oil drain pipe to sump.
12. Fit bolt securing sump to gearbox support bracket and tighten to 85 Nm.
13. Fit engine steady bar. ***See this section.***
14. Fit new oil filter. ***See this section.***
15. Remove stand(s) and lower vehicle.

OIL PRESSURE SWITCH

Service repair no - 12.60.50

Remove

1. Disconnect battery earth lead.
2. Raise front of vehicle.

WARNING: Support on safety stands.

3. Position drain tin below engine oil filter to collect spillage.

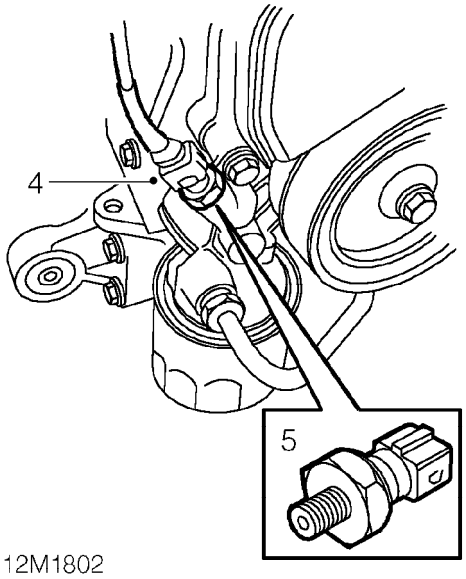

4. Disconnect multiplug from oil pressure switch.
5. Remove oil pressure switch.

Refit

1. Clean oil pressure switch threads.
2. Apply Loctite 577 to threads of switch.
3. Fit oil pressure switch and tighten to 16 Nm.
4. Connect multiplug to oil pressure switch.
5. Remove stand(s) and lower vehicle.
6. Top-up engine oil. ***See MAINTENANCE.***
7. Connect battery earth lead.

OIL COOLER

Service repair no - 12.60.68

Remove

1. Remove radiator. ***See COOLING SYSTEM - 'L' SERIES, Repairs.***

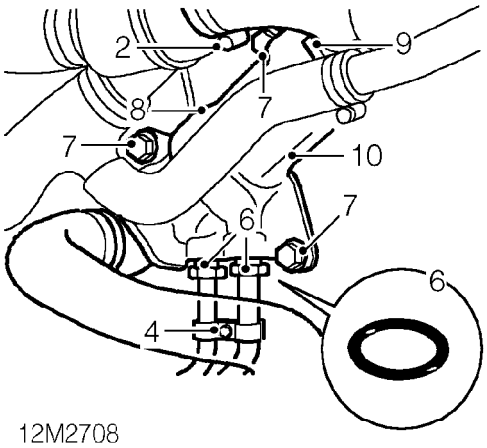

2. Loosen clip and disconnect coolant hose from thermostat.
3. Position container to collect fluid loss from oil cooler.
4. Loosen bolt clamp oil cooler pipes together.
5. Using a 22 mm open ended spanner loosen oil pipe unions on cooler.
6. Disconnect oil pipes from cooler, remove and discard 2 'O' rings.
7. Remove 3 bolts securing oil cooler to cylinder block.
8. Remove oil cooler and hose assembly. ***Do not carry out further dismantling if component is removed for access only.***
9. Loosen clip and remove radiator bottom hose from oil cooler.
10. Loosen clip and remove thermostat hose from oil cooler.
11. Fit hoses to new oil cooler and tighten clips.

Refit

1. Position oil cooler and hose assembly.
2. Clean threads of M10 bolts securing oil cooler to cylinder block and apply Loctite 242.
3. Fit bolts securing oil cooler to cylinder block and tighten:
   M8 bolt to 25 Nm.
   M10 bolts to 45 Nm.
4. Clean oil cooler pipes and unions, fit new 'O' rings to pipes.
5. Connect pipes to oil cooler and tighten unions to 25 Nm.
6. Connect coolant hose to thermostat and tighten clip.
7. Fit radiator. ***See COOLING SYSTEM - 'L' SERIES, Repairs.***
8. Remove container positioned to collect fluid loss from oil cooler and top-up engine oil.

CAMSHAFT TIMING BELT

Service repair no - 12.65.18

Remove

1. Remove camshaft timing belt lower cover. ***See this section.***

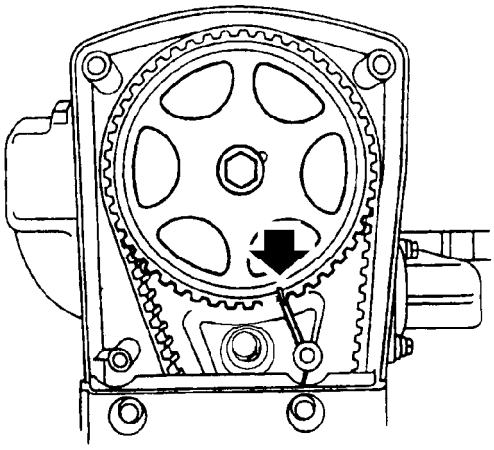

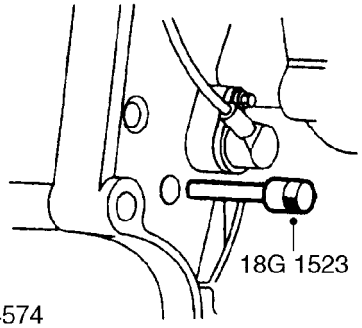

2. Insert timing pin **18G 1523** through hole in gearbox adapter plate, hold pin in contact with flywheel and using assistance, rotate crankshaft clockwise until timing pin enters hole in flywheel.

CAUTION: Never use the camshaft gear, gear retaining bolt or timing belt to rotate crankshaft.

3. Check that timing marks on camshaft gear and back cover are aligned.

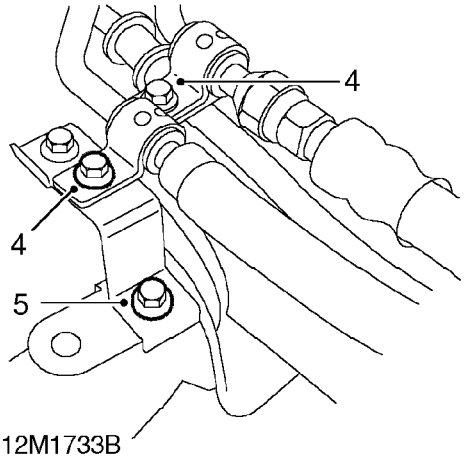

4. Remove 2 bolts securing PAS pipes to body and move pipes aside.
5. Remove bolt securing PAS pipe bracket to body and collect bracket.
6. Remove engine RH mounting. ***See this section.***

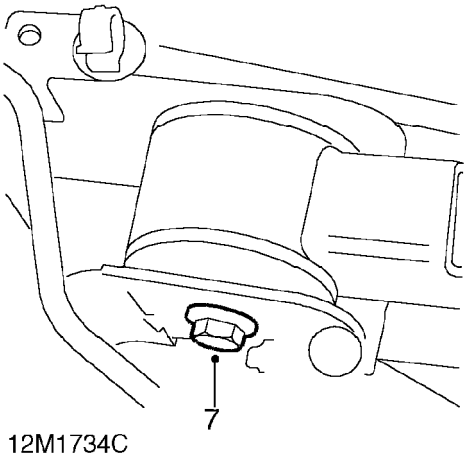

7. Remove bolt securing steady bar to body and remove steady bar.

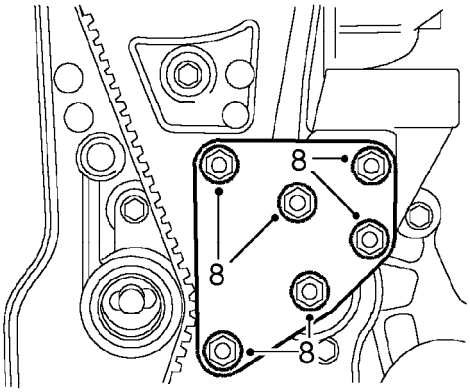

8. Remove 6 nuts and remove mounting plate.

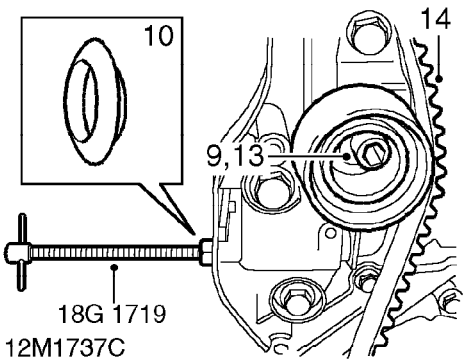

9. Loosen Allen bolt securing timing belt tensioner pulley.
10. Remove timing belt tensioner access plug from back cover.
11. Screw timing belt tensioner retractor tool **18G 1719** into timing belt tensioner plunger.
12. Tighten nut on tool **18G 1719** until belt tension is released.
13. Tighten tensioner pulley Allen bolt.
14. If timing belt is to be refitted, mark direction of rotation on belt. Remove timing belt.

CAUTION: Do not rotate crankshaft or camshaft with timing belt removed and cylinder head fitted.
Ease timing belt off gears using fingers only. Metal levers may damage the belt and gears.
Timing belts must be stored and handled with care.
Always store a timing belt on its edge with a bend radius greater than 50 mm.
Do not use a timing belt that has been twisted or bent double as this can damage the reinforcing fibres.
Do not use an oil or coolant contaminated timing belt.
The cause of contamination MUST be rectified.
Although the belt has a service life of 84,000 miles, (135,000 km) an existing belt should only be refitted if it has completed less than 42,000 miles (65,000 km).

Refit

1. Clean timing belt gears and pulley.

CAUTION: If the sintered gears have been subjected to prolonged oil contamination, they must be soaked in a solvent bath and then thoroughly washed in clean solvent before refitment. Because of the porous construction of sintered material, oil impregnated in the gear will emerge and contaminate the new belt.
Cause of oil contamination must be rectified.

2. Ensure timing marks on camshaft gear and back cover are aligned.
3. Using fingers only, fit timing belt to gears. Ensure the belt run between the crankshaft timing gear and the camshaft gear is kept taut during the fitting procedure.

CAUTION: If original belt is to be refitted, ensure direction of rotation mark is facing the correct way.

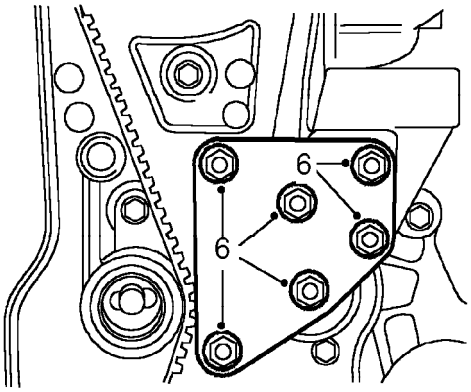

4. Clean mounting plate mating faces.
5. Fit plate to engine mounting studs.
6. Fit nuts and tighten to 35 Nm.

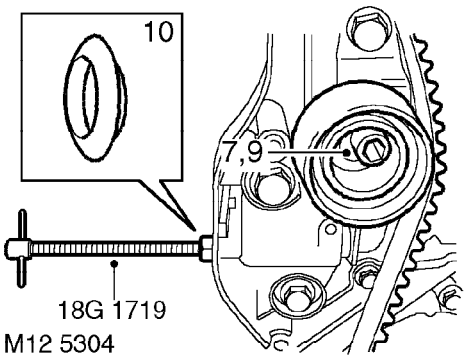

7. Loosen tensioner pulley Allen bolt until tensioner moves easily without tipping.
8. Release timing belt tensioner plunger using tool **18G 1719.**
9. Remove tool **18G 1719** from camshaft timing belt tensioner and tighten Allen bolt to 55 Nm.

CAUTION: Do not exceed the specified torque figure.

10. Fit timing belt tensioner access plug to back cover.
11. Remove Allen bolt access plug from lower cover.
12. Fit camshaft timing belt lower cover. ***See this section.***

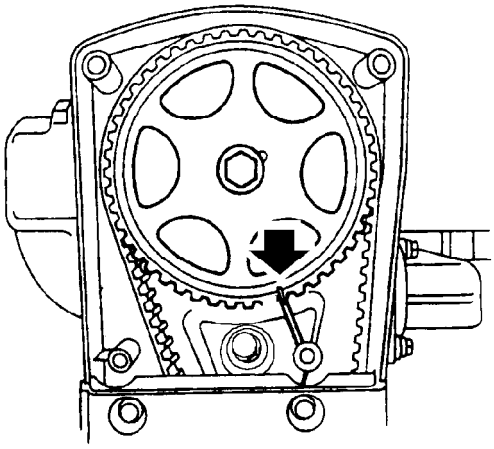

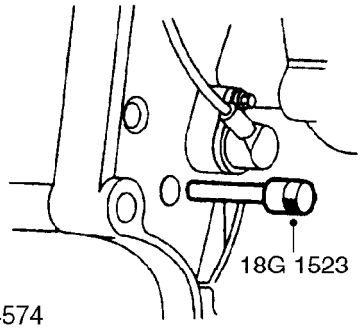

13. Remove timing pin **18G 1523** and using a socket and extension bar on crankshaft pulley bolt, rotate crankshaft two revolutions clockwise until timing pin **18G 1523** can be inserted in hole in flywheel.
14. Check camshaft gear timing mark is aligned with mark on back cover.

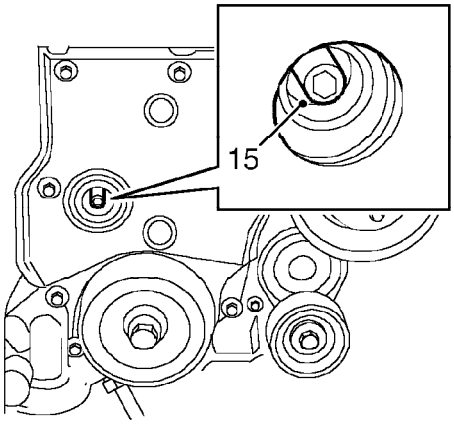

M12 5305

15. Loosen Allen bolt securing belt tensioner pulley, allow pulley to react, then tighten Allen bolt to 55 Nm. Fit Allen bolt access plug.

16. Remove FIP timing belt cover. ***See this section.***

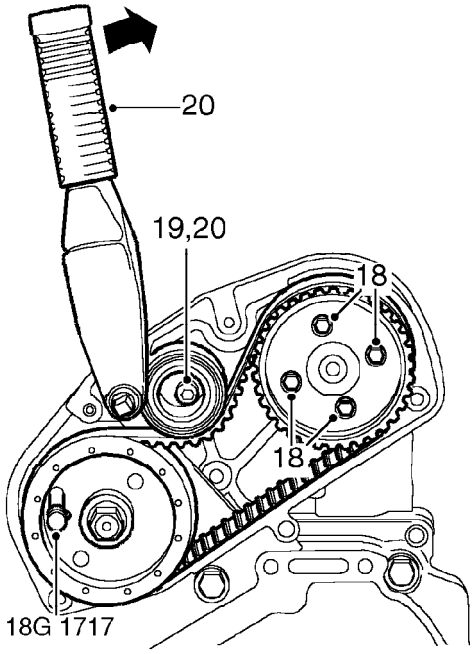

M12 5306

17. Insert locking pin **18G 1717** through hole in FIP drive gear and into hole in adapter plate. Locking pin must be a sliding fit. If pin is a tight fit, proceed as follows.

18. Loosen 4 bolts securing FIP timing belt drive gear to hub.

19. Loosen timing belt tensioner pulley Allen bolt.

20. Using a torque wrench fitted to tensioner pulley backplate, apply a **clockwise** (viewed from rear of engine) torque loading of 6 Nm to drive belt. Maintain loading and tighten tensioner pulley Allen bolt to 44 Nm.

CAUTION: Do not exceed the specified torque figure.

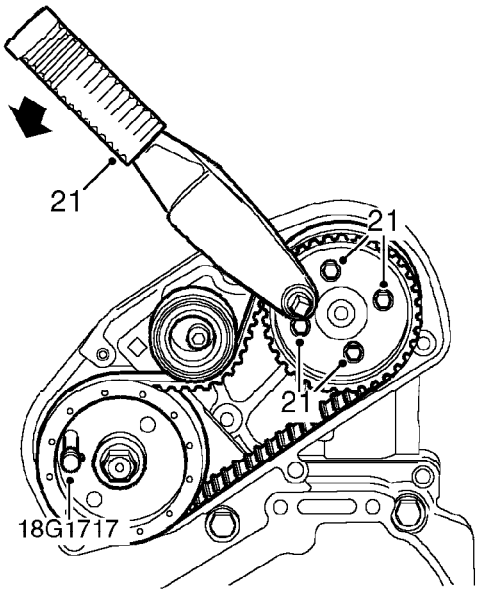

M12 5335

21. Fit torque wrench to square hole in FIP timing belt drive gear as shown and apply an **anti-clockwise** (viewed from rear of engine) torque loading of 25 Nm. Maintain loading and tighten 4 bolts securing gear to 25 Nm.

22. Remove locking pin **18G 1717** and timing pin **18G 1523.**

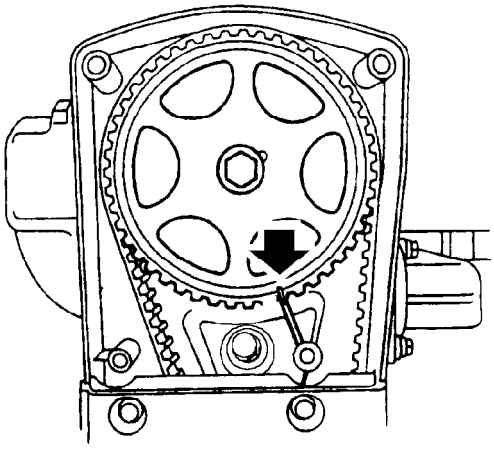

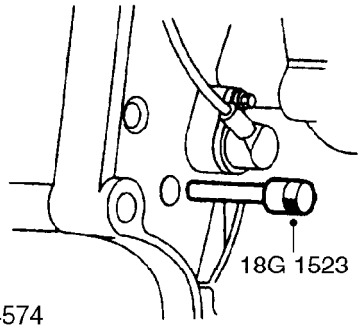

12M4574

23. Rotate crankshaft clockwise 2 revolutions and fit timing pin **18G 1523.**

CAUTION: Ensure pin is fully inserted in hole in flywheel.

24. Check that camshaft gear timing mark is aligned with mark on back cover.

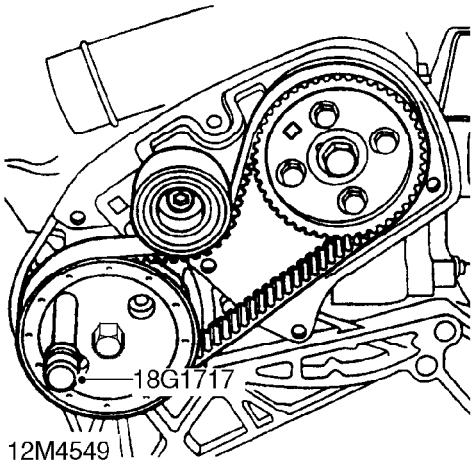

25. Insert locking pin **18G 1717** through hole in FIP drive gear and into hole in adapter plate.

CAUTION: To ensure injection pump timing is correct, locking pin must be a sliding fit. If pin is a tight fit, adjustment procedure must be repeated.

26. On completion, remove timing pin **18G 1523** and locking pin **18G 1717.**
27. Fit FIP timing belt cover. ***See this section.***
28. Fit timing belt upper cover. ***See this section.***
29. Fit timing belt tensioner access plug in lower cover.
30. Fit engine RH mounting. ***See this section.***
31. Fit bolt securing engine mounting steady bar to body and tighten to 80 Nm.
32. Fit PAS pipe mounting bracket to body and tighten bolt.
33. Position PAS pipes to bracket and tighten bolts.
34. Fit road wheel(s) and tighten nuts to correct torque. ***See INFORMATION, Torque wrench settings.***
35. Remove stand(s) and lower vehicle.
36. Connect battery earth lead.

CAMSHAFT TIMING BELT UPPER COVER

Service repair no - 12.65.41

Remove

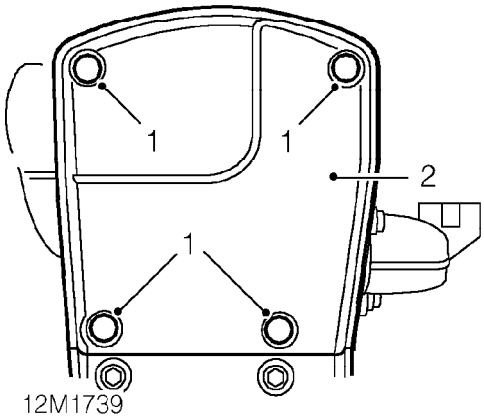

1. Remove 4 bolts securing timing belt upper cover to rear cover.
2. Remove timing belt upper cover.

Refit

1. Check that sealing strips are correctly located in timing belt upper cover.
2. Fit timing belt upper cover and tighten bolts to 5 Nm.

CAMSHAFT TIMING BELT LOWER COVER

Service repair no - 12.65.43

Remove

1. Disconnect battery earth lead.
2. Raise front of vehicle.

WARNING: Support on safety stands.

3. Remove RH front road wheel.
4. Remove timing belt upper cover. ***See this section.***
5. Remove crankshaft front pulley. ***See this section.***

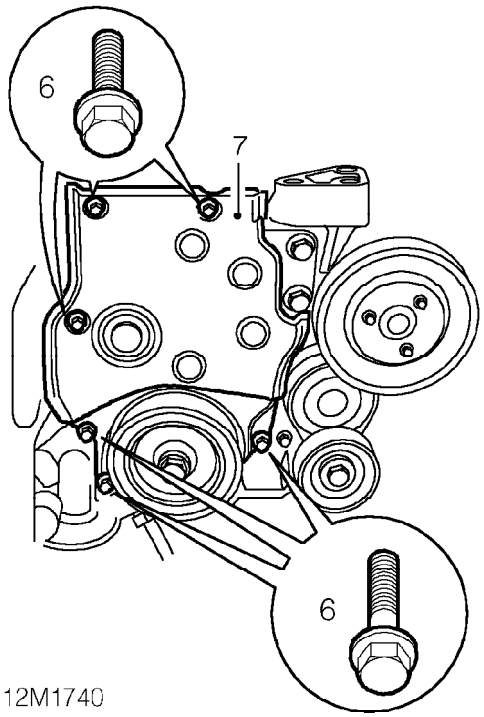

6. Remove 6 bolts securing lower cover.
7. Remove lower cover.

Refit

1. Check that sealing strips are correctly located in timing belt lower cover.
2. Fit lower cover to engine and tighten bolts to 5 Nm.

NOTE: The 3 longer bolts are fitted in the bottom of the cover.

3. Fit crankshaft front pulley. ***See this section.***
4. Fit timing belt upper cover. ***See this section.***
5. Fit road wheel(s) and tighten nuts to correct torque. ***See INFORMATION, Torque wrench settings.***
6. Remove stand(s) and lower vehicle.
7. Connect battery earth lead.

FIP TIMING BELT

Service repair no - 12.65.51

Remove

1. Disconnect battery earth lead.
2. Raise front of vehicle.

WARNING: Support on safety stands.

3. Remove FIP timing belt cover. ***See this section.***
4. Remove camshaft timing belt upper cover. ***See this section.***
5. Remove RH front road wheel.

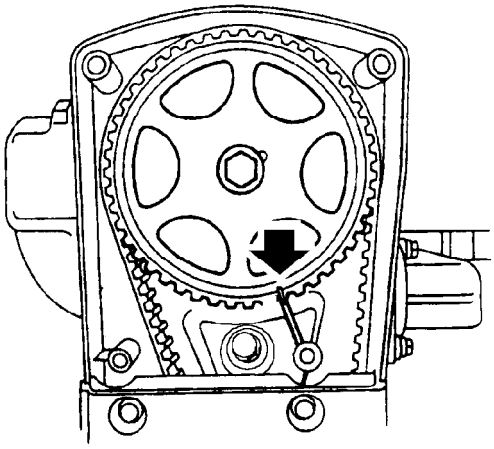

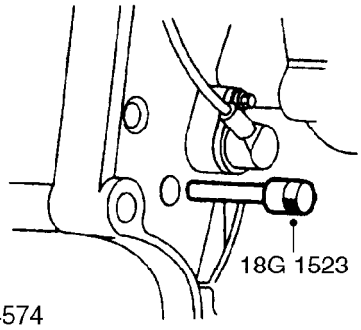

6. Insert timing pin **18G 1523** through hole in gearbox adapter plate, hold pin in contact with flywheel, and using assistance, rotate crankshaft clockwise until timing pin enters flywheel.

CAUTION: Never use the camshaft gear, gear retaining bolt or timing belt to rotate crankshaft.

7. Check that timing marks on camshaft gear and back cover are aligned.

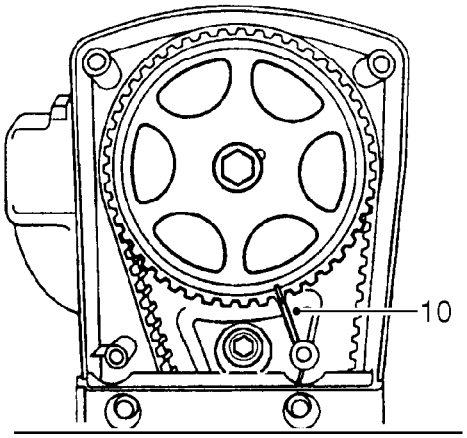

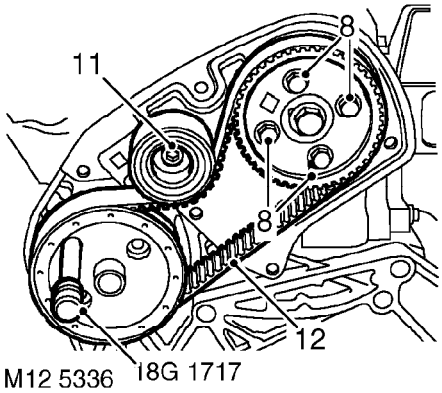

8. Loosen, but do not remove 4 bolts securing FIP timing belt drive gear to hub.
9. Fit locking pin **18G 1717** through FIP drive gear and into hole in adapter plate.

CAUTION: Locking pin must be a sliding fit, if pin is tight, rotate pump drive gear slightly using a socket on pump drive gear nut until pin can be inserted correctly.

10. Check that timing marks on camshaft gear and back cover are still aligned.

CAUTION: If drive belt is to be refitted, mark direction of rotation on belt.

11. Loosen Allen bolt securing tensioner pulley, move tensioner away from belt and tighten Allen bolt.
12. Remove FIP timing belt.

CAUTION: Do not rotate camshaft or FIP with timing belt removed.
Ease belt from gears using fingers only. Store a belt on its edge with a radius greater than 50 mm. DO NOT use a belt which has been twisted or bent double as this can fracture reinforcing fibres. Do not use an oil or water contaminated belt.
Cause of contamination must be rectified.
Although the belt has a service life of 84,000 miles, (135,000 km) an existing belt should only be refitted if it has completed less than 42,000 miles, (65,000 km).

Refit

1. Clean timing belt gears.

CAUTION: If the gears have been subjected to prolonged oil contamination, they must be soaked in a solvent bath and thoroughly clean and dry before reuse. The cause of oil contamination must be rectified.

2. Leave the 4 bolts securing the FIP timing belt drive gear to hub just loose enough for the gear to rotate within slots without tipping.
3. Fit timing belt using fingers only, rotating the FIP timing belt drive gear fully clockwise within the slots, and then anti-clockwise until the drive belt locates in the gear teeth. Fitting the belt in the other possible position will not allow for correct belt adjustment.

CAUTION: If original belt is to be refitted, ensure direction of rotation mark is facing correct way.

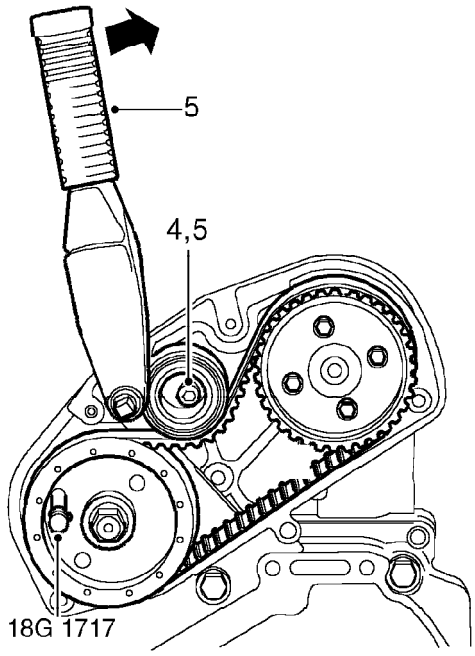

M12 5337

4. Loosen tensioner pulley Allen bolt.
5. Using a torque wrench fitted to tensioner pulley backplate, apply a **clockwise,** as viewed from rear of engine, torque loading of 6 Nm to drive belt. Maintain loading and tighten tensioner pulley Allen bolt to 44 Nm.

CAUTION: Do not exceed specified torque figure.

6. Remove FIP gear locking pin **18G 1717** and timing pin **18G 1523.**

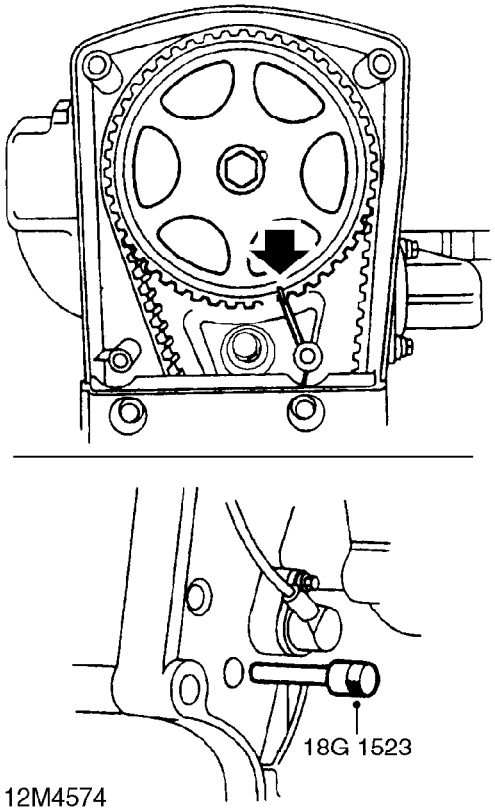

7. Rotate crankshaft clockwise 2 complete revolutions and fit timing pin **18G 1523.**

CAUTION: Ensure pin is fully inserted into hole in flywheel.

8. Check that camshaft gear timing mark is aligned with mark on back cover.

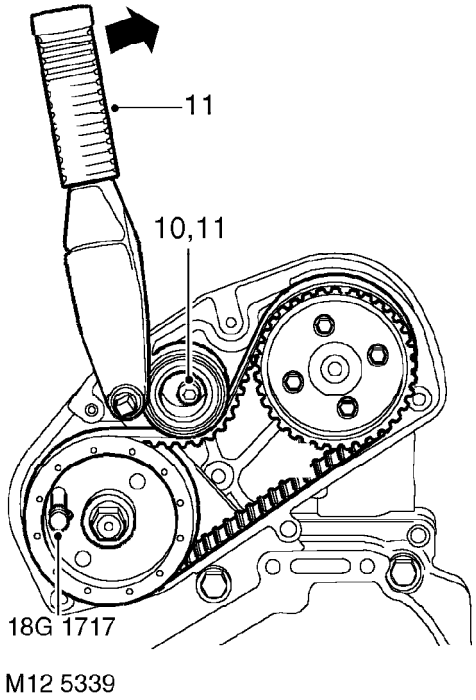

9. Insert locking pin **18G 1717** through FIP drive gear and into hole in adapter plate.

NOTE: Locking pin may be a tight fit at this stage.

10. Loosen timing belt tensioner Allen bolt.
11. Using a torque wrench fitted to tensioner pulley backplate, apply a **clockwise,** as viewed from rear of engine, torque loading of 6 Nm to drive belt. Maintain loading and tighten tensioner pulley Allen bolt to 44 Nm.

CAUTION: Do not exceed specified torque figure.

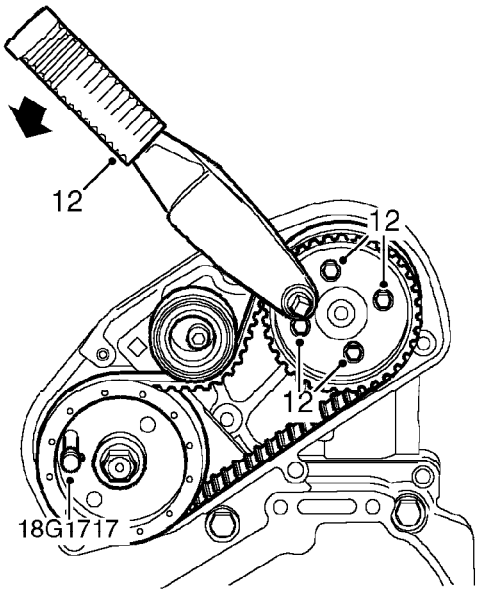

M12 5338

12. Fit torque wrench to square hole in FIP timing belt drive gear as shown and apply an **anti-clockwise** as viewed from rear of engine, torque loading of 25 Nm. Maintain loading and tighten 4 bolts securing gear to 25 Nm.
13. Remove FIP gear locking pin **18G 1717** and timing pin **18G 1523.**
14. Rotate crankshaft clockwise 2 complete revolutions and fit timing pin **18G 1523.**

CAUTION: Ensure pin is fully inserted into hole in flywheel.

15. Check that camshaft drive gear timing mark is aligned with mark on back cover.
16. Insert locking pin **18G 1717** through injection pump drive gear and into hole in adapter plate.

CAUTION: To ensure injection pump timing is correct, locking pin must be a sliding fit. If pin is a tight fit, adjustment procedure must be repeated.

17. On completion, remove timing pin **18G 1523** and locking pin **18G 1717.**
18. Fit FIP timing belt cover. ***See this section.***
19. Fit camshaft timing belt upper cover. ***See this section.***
20. Fit road wheel(s) and tighten nuts to correct torque. ***See INFORMATION, Torque wrench settings.***
21. Connect battery earth lead.

FIP TIMING BELT COVER

Service repair no - 12.65.53

Remove

1. Remove engine acoustic cover. ***See BODY, Exterior fittings.***
2. Remove air cleaner. ***See ENGINE MANAGEMENT SYSTEM - EDC, Repairs.***

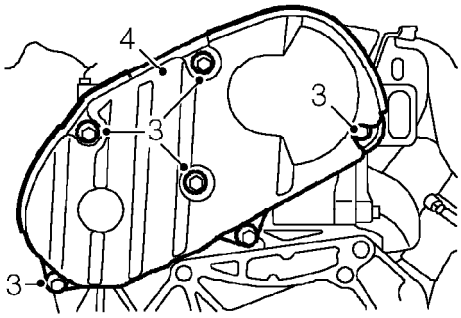

12M1745

3. Remove 6 bolts securing FIP timing belt cover to back plate.
4. Remove timing belt cover.

Refit

1. Fit timing belt cover and tighten bolts to 5 Nm.
2. Fit air cleaner. ***See ENGINE MANAGEMENT SYSTEM - EDC, Repairs.***
3. Fit engine acoustic cover. ***See BODY, Exterior fittings.***

CONTENTS

Page

DESCRIPTION AND OPERATION

EMISSION CONTROL SYSTEMS 1

REPAIRS

CRANKCASE PRESSURE LIMITER VALVE - 'L' SERIES 1
EVAPORATIVE EMISSION CANISTER - 'K' SERIES 1
EXHAUST GAS RECIRCULATION (EGR) VALVE - 'L' SERIES 2
EXHAUST GAS RECIRCULATION (EGR) SOLENOID - 'L' SERIES 2
CATALYTIC CONVERTER - 'K8' 3
CATALYTIC CONVERTER - 'K16' 4
CATALYTIC CONVERTER - 'L' SERIES 5
CATALYTIC CONVERTER HEAT SHIELD - 'K8' AND 'K16' 6
CATALYTIC CONVERTER HEAT SHIELD - 'K16 1.8 & K16 WITH VVC' 6

EMISSION CONTROL SYSTEMS

The vehicle is fitted with various emission and evaporative control components to comply with emission regulation requirements.

The following control systems are used to reduce harmful emissions released into the atmosphere from the vehicle at all times, and under all conditions:

1. Crankcase emission control
2. Exhaust emission control
3. Fuel vapour evaporative loss control ('K' series models)

In many countries it is against the law for a vehicle owner or an unauthorised repair shop to modify or tamper with emission control equipment. In this event the vehicle owner and/or the repairer may be liable for prosecution.

The emission control system fitted to the vehicle is designed to keep the emissions within the legal limits provided that the engine is correctly maintained and is in good mechanical condition.

Crankcase emission control system - 'K' series

Gases from the crankcase are drawn into throttle housing to be burnt in the combustion chambers with the fuel mixture. The system provides effective emission control under all circumstances while the engine is running.

Clean air is drawn into the crankcase through a pipe connected to the air cleaner side of the throttle housing. Crankcase gases and clean air are then drawn via a pipe, through a filter in the camshaft cover, into the manifold side of the throttle housing and consumed in the combustion chambers. This pipe incorporates a restrictor to prevent engine oil being drawn into the inlet manifold by the substantially greater manifold depression.

Crankcase emission control system - 'L' series

Gases from the crankcase are drawn into the inlet manifold to be burnt in the combustion chambers with the fuel mixture. The system provides effective emission control under all circumstances while the engine is running.

Crankcase gases are drawn from the camshaft cover into the turbocharger intake via a depression limiting valve (crankcase pressure limiter valve). The valve closes progressively as engine speed increases, so limiting the maximum depression in the crankcase.

Exhaust emission control

The engine management system provides accurately metered quantities of fuel to the combustion chambers to ensure the most efficient air to fuel ratio under all conditions of operation. A further improvement to combustion is made by measuring the oxygen content of the exhaust gases to enable the quantity of fuel injected to be varied maintaining the ratio necessary for efficient gas conversion by the catalytic converter.

The catalytic converter is situated between the exhaust front pipe and exhaust intermediate pipe. The catalytic converter reduces the emission of Carbon monoxide, Oxides of Nitrogen (NO_x) and Hydrocarbons released into the atmosphere. The active constituents of the converter are the precious metals Platinum and Rhodium.

'K' series models

The correct operation of the catalytic converter is dependent upon close control of the oxygen concentration in the exhaust gas entering the converter. The quantity of oxygen in the exhaust gas is determined by a heated oxygen sensor situated in the exhaust front pipe. The heated oxygen sensor provides the engine control module with a signal proportional to the oxygen content. The ECM can then determine whether any adjustment is required to the amount of fuel being injected to achieve the correct exhaust gas content, and implement the required changes.

CAUTION: Serious damage to the catalytic converter will occur if leaded fuel is used. The filler neck is designed to accommodate only unleaded fuel pump nozzles.

Exhaust gas recirculation (EGR) - 'L' series models

During certain running conditions the EGR system directs exhaust gases into the intake manifold to be used in the combustion process. The principal effect of this is to reduce combustion temperatures, which in turn reduces Oxides of Nitrogen (NO_x) emissions.

The EGR diaphragm valve is vacuum operated through a solenoid valve, mounted on the right hand suspension turret. When the Engine Control Module (ECM) determines that exhaust gas recirculation should take place, the solenoid valve is modulated and vacuum, supplied by the brake servo vacuum pump, opens the EGR valve. Exhaust gases are then fed through a pipe into the inlet manifold.

An air flow meter, mounted in the air intake pipe, senses the volume of air entering the engine. Using the principle that an increase in EGR will lead to a decrease in the intake air flow, the air flow meter is used by the ECM to monitor the amount of exhaust gases being recirculated. This feedback signal allows the ECM to accurately control the volume of exhaust gases being recirculated.

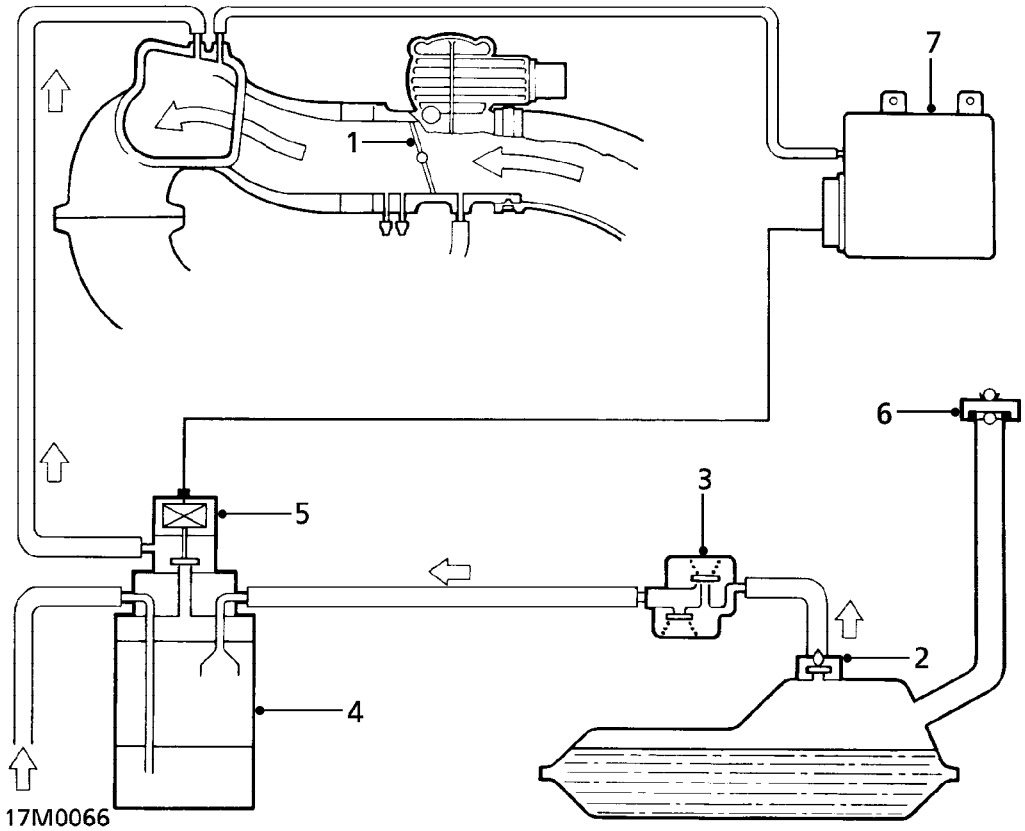

Fuel vapour evaporative loss control - 'K' series models

1. Throttle disc
2. Fuel cut-off valve
3. Two way valve
4. Evaporative emission canister
5. Evaporative emission canister purge valve
6. Fuel filler cap
7. ECM

Evaporative emission canister

The evaporative emission (EVAP) canister contains charcoal which absorbs and stores fuel vapour from the fuel tank while the engine is not running. When the engine is running the vapour is purged from the canister into the engine and burned.

The EVAP canister is purged when the EVAP canister purge valve is opened. Manifold depression draws fresh air into the canister through the charcoal, which releases fuel vapour into the throttle housing.

Evaporative emission canister purge valve

The EVAP canister purge valve is operated by the ECM. The valve remains closed when the engine is cold or at idling speed, to protect engine tune and catalyst performance. If the EVAP canister was purged during cold running or at idling speed, the additional enrichment in fuel mixture would delay catalyst light off time and cause erratic idling. When the engine is above 75˚C, the purge valve solenoid will become operational (modulated ON and OFF) whenever the engine speed is above approximately 1800 rev/min. When the purge valve is opened, fuel vapour from the EVAP canister is drawn into the throttle housing for combustion.

CRANKCASE PRESSURE LIMITER VALVE - 'L' SERIES

Service repair no - 17.10.25

Remove

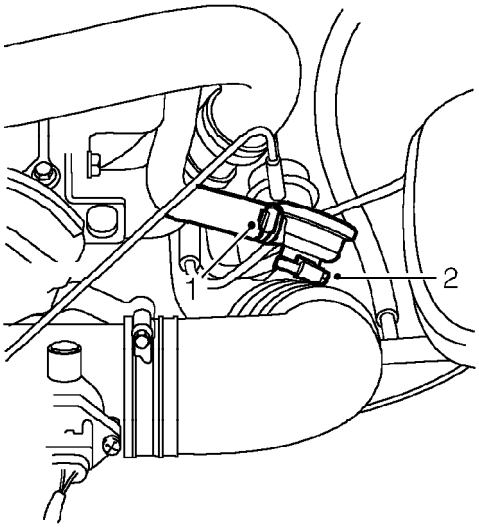

17M0072

1. Loosen clip and disconnect engine breather hose from valve.
2. Loosen clip and remove valve from air intake pipe.

Refit

1. Fit valve to air intake pipe and tighten clip.
2. Connect engine breather hose to valve and tighten clip.

EVAPORATIVE EMISSION CANISTER - 'K' SERIES

Service repair no - 17.15.13

Remove

1. Disconnect battery earth lead.

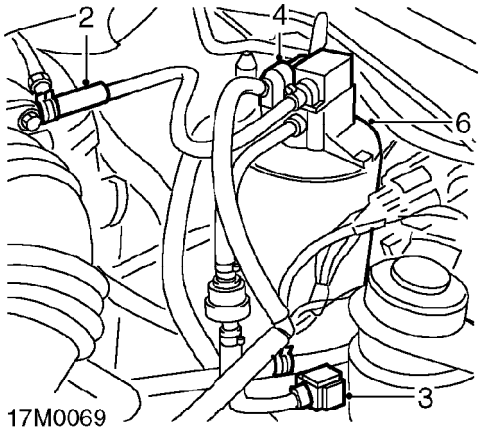

17M0069

2. Release clip and disconnect hose from inlet manifold.
3. Disconnect hose from fuel tank vent pipe.
4. Disconnect multiplug from purge valve.
5. Release evaporative emission canister from mounting bracket.
6. Remove evaporative emission canister.

Refit

1. Fit evaporative emission canister to mounting bracket.
2. Locate evaporative emission canister breather hose in subframe.
3. Connect hose to fuel tank vent pipe.
4. Connect hose to inlet manifold and secure with clip.
5. Connect multiplug to purge valve.
6. Connect battery earth lead.

EXHAUST GAS RECIRCULATION (EGR) VALVE - 'L' SERIES

Service repair no - 17.45.01

Remove

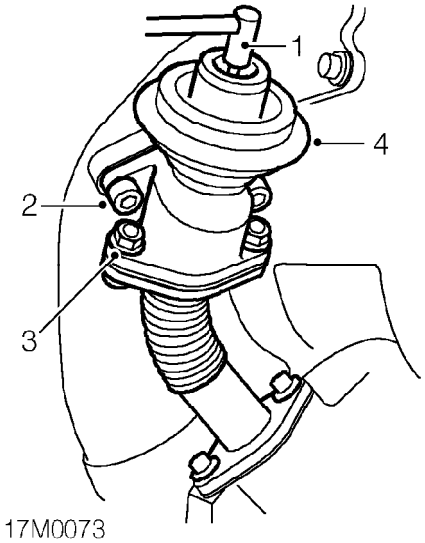

1. Disconnect vacuum pipe from valve.
2. Remove 2 Allen bolts securing valve to inlet manifold and collect gasket.
3. Remove 2 bolts securing valve to exhaust manifold pipe and collect nuts and gasket.
4. Remove EGR valve.

Refit

1. Position gasket to exhaust manifold pipe and fit EGR valve. Fit nuts and bolts and tighten to 25 Nm.
2. Position gasket between valve and inlet manifold and tighten Allen bolts to 25 Nm.
3. Connect vacuum pipe to EGR valve.

EXHAUST GAS RECIRCULATION (EGR) SOLENOID - 'L' SERIES

Service repair no - 17.45.04

Remove

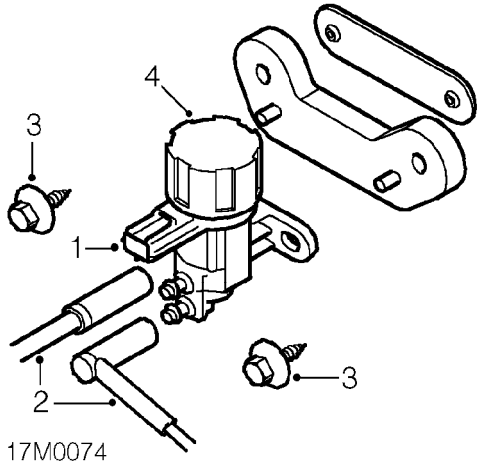

1. Disconnect multiplug from EGR solenoid.
2. Disconnect 2 vacuum pipes from EGR solenoid.
3. Remove 2 bolts securing EGR solenoid to bracket.
4. Remove EGR solenoid.

Refit

1. Fit EGR solenoid to bracket and secure with bolts.
2. Connect vacuum pipes to EGR solenoid.
3. Connect multiplug to EGR solenoid.

CATALYTIC CONVERTER - 'K8'

Service repair no - 17.50.01

Remove

1. Raise front of vehicle.

WARNING: Support on safety stands.

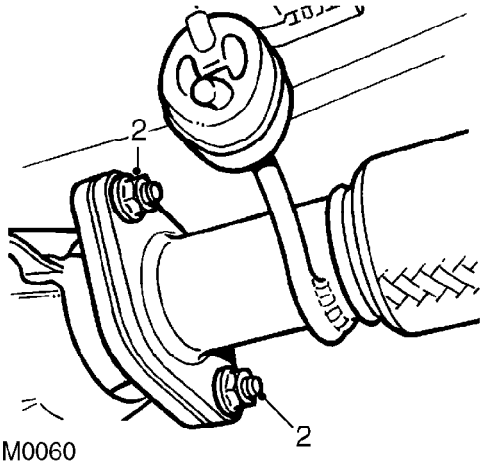

2. Remove 2 nuts securing catalytic converter to front pipe.

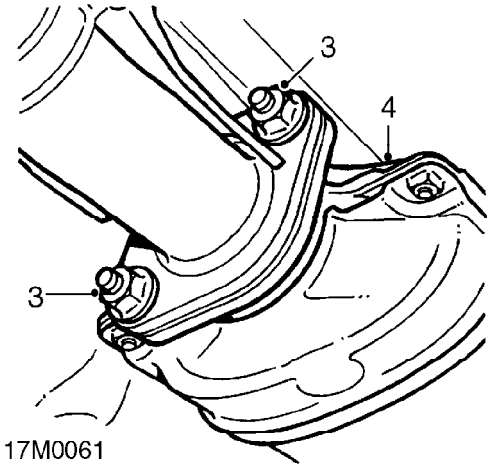

3. Remove 2 nuts securing catalytic converter to intermediate pipe.
4. Disconnect catalytic converter from intermediate pipe. Remove catalytic converter from front pipe.
5. Remove and discard gaskets.

CAUTION: Catalytic converters are manufactured from ceramic material which is very fragile, avoid heavy impacts on converter casing.

Do not carry out further dismantling if component is removed for access only.

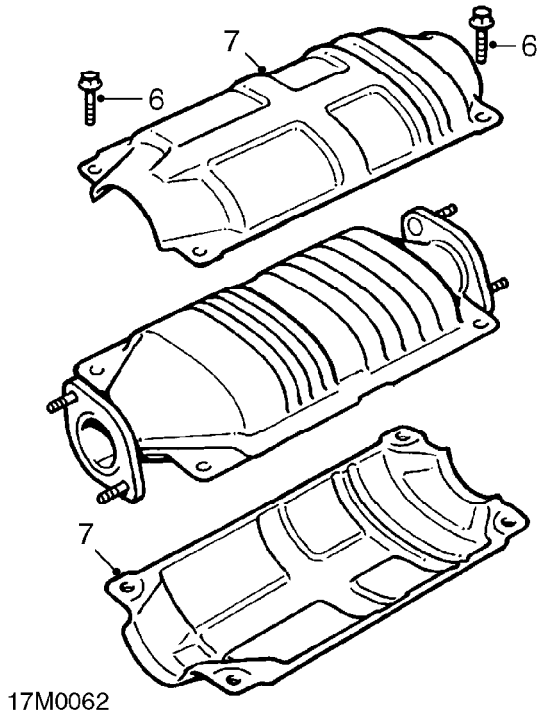

6. Remove 4 bolts securing heat shield to catalytic converter.
7. Remove heat shield.
8. Position heat shield to new catalytic converter, fit bolts and tighten to 6 Nm.

Refit

1. Clean mating faces of catalytic converter, front pipe and intermediate pipe.
2. Fit new gasket to each catalytic converter flange.
3. Fit catalytic converter to front pipe and connect to intermediate pipe. Fit nuts and tighten to 50 Nm.
4. Remove stand(s) and lower vehicle.

CATALYTIC CONVERTER - 'K16'

Service repair no - 17.50.01

Remove

1. Raise front of vehicle.

WARNING: Support on safety stands.

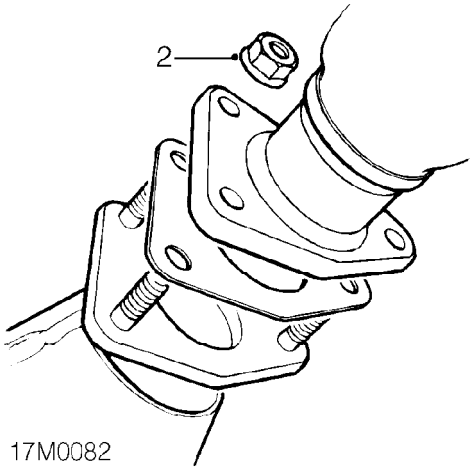

2. Remove 3 nuts securing catalytic converter to front pipe.

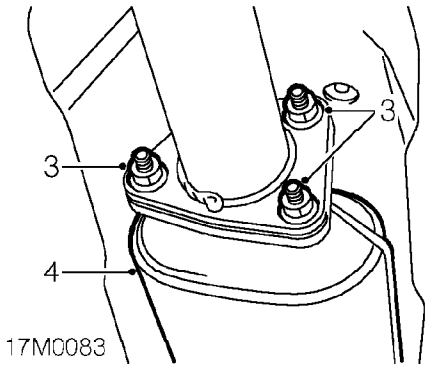

3. Remove 3 nuts securing catalytic converter to intermediate pipe.
4. Disconnect catalytic converter from intermediate pipe. Remove catalytic converter from front pipe.
5. Remove and discard gaskets.

CAUTION: Catalytic converters are manufactured from ceramic material which is very fragile, avoid heavy impacts on converter casing.

Refit

1. Clean mating faces of catalytic converter, front pipe and intermediate pipe.
2. Fit new gasket to each flange of catalytic converter.
3. Fit catalytic converter to front pipe and connect to intermediate pipe. Fit nuts and tighten to 50 Nm.
4. Remove stand(s) and lower vehicle.

CATALYTIC CONVERTER - 'L' SERIES

Service repair no - 17.50.01

Remove

1. Raise front of vehicle.

WARNING: Support on safety stands.

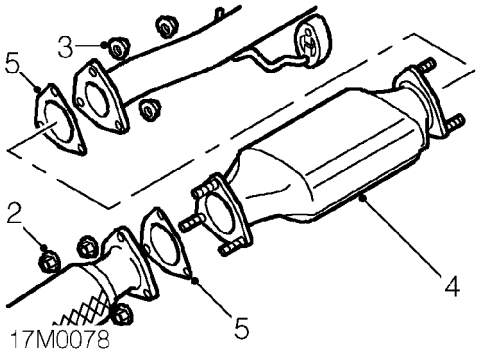

2. Remove 3 nuts securing catalytic converter to front pipe.
3. Remove 3 nuts securing catalytic converter to intermediate pipe.
4. Disconnect catalytic converter from intermediate pipe. Remove catalytic converter from front pipe.
5. Remove and discard gaskets.

CAUTION: Catalytic converters are manufactured from ceramic material which is very fragile, avoid heavy impacts on converter casing.

Refit

1. Clean mating faces of catalytic converter, front pipe and intermediate pipe.
2. Fit new gasket to each catalytic converter flange.
3. Fit catalytic converter to front pipe and connect to intermediate pipe. Fit nuts and tighten to 50 Nm.
4. Remove stand(s) and lower vehicle.

CATALYTIC CONVERTER HEAT SHIELD - 'K8' AND 'K16'

Service repair no - 17.50.05

Remove

1. Raise vehicle on 4 post ramp.

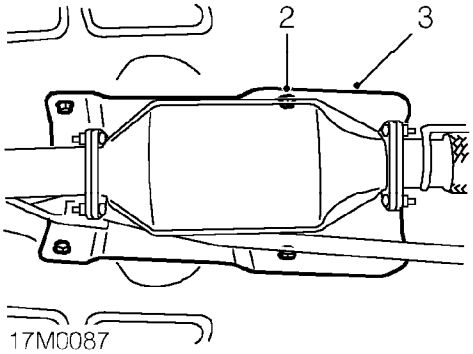

2. Remove 4 bolts securing catalytic converter heat shield to transmission tunnel.
3. Remove catalytic converter heat shield.

Refit

1. Fit catalytic converter heat shield.
2. Fit bolts securing heat shield to transmission tunnel and tighten to 6 Nm.
3. Lower vehicle.

CATALYTIC CONVERTER HEAT SHIELD - 'K16 1.8 & K16 WITH VVC'

Service repair no - 17.50.05

Remove

1. Raise vehicle on 4 post ramp.

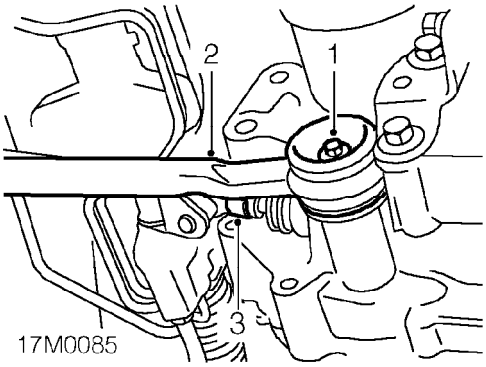

2. Remove bolt and disconnect gear change steady bar from gearbox, collect 2 washers.
3. Remove clip securing selector rod roll pin.
4. Using a suitable punch, drive out roll pin securing selector rod selector shaft.
5. Release selector rod from selector shaft.

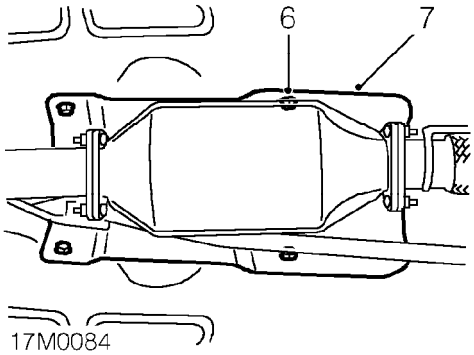

6. Remove 4 bolts securing catalytic converter heat shield to transmission tunnel.
7. Remove catalytic converter heat shield.

Refit

1. Fit catalytic converter heat shield.
2. Fit bolts securing heat shield to transmission tunnel and tighten to 6 Nm.
3. Connect selector rod to shaft and align holes.
4. Fit new roll pin securing selector rod to shaft and fit roll pin retaining clip.
5. Fit washers to gear change steady bar and connect to gearbox.
6. Fit bolt securing gear change steady bar to gearbox and tighten to 10 Nm.
7. Lower vehicle.

CONTENTS

Page

DESCRIPTION AND OPERATION

ENGINE COMPARTMENT COMPONENT LOCATIONS - 'K8' 1
ENGINE COMPARTMENT COMPONENT LOCATIONS - 'ALL K16 MODELS EXCEPT K16 WITH VVC' 2
ENGINE COMPARTMENT COMPONENT LOCATIONS - 'K16 WITH VVC' 3
ENGINE MANAGEMENT SYSTEM 4

ADJUSTMENTS

THROTTLE CABLE 1

REPAIRS

THROTTLE CABLE 1
AIR CLEANER 2
AIR CLEANER ELEMENT 3
SPARK PLUGS - 'K8' 4
SPARK PLUGS - 'K16' 5
DISTRIBUTOR CAP AND ROTOR ARM 6
IGNITION COIL 6
IGNITION COIL - 'K16 WITH VVC' 7
ENGINE CONTROL MODULE (ECM) 8
ENGINE CONTROL MODULE (ECM) - 'K16 WITH VVC' 9
IDLE AIR CONTROL VALVE (IACV) 9
INTAKE AIR TEMPERATURE (IAT) SENSOR 10
ENGINE COOLANT TEMPERATURE (ECT) SENSOR 10
CRANKSHAFT POSITION (CKP) SENSOR 11
CRANKSHAFT POSITION (CKP) SENSOR - 'K16 1.8 & K16 WITH VVC' 11
THROTTLE POSITION (TP) SENSOR 12
HYDRAULIC CONTROL UNIT (HCU) SOLENOIDS - 'K16 WITH VVC' 13
OIL TEMPERATURE SENSOR - 'K16 WITH VVC' 13
MANIFOLD ABSOLUTE PRESSURE (MAP) SENSOR - 'K16 WITH VVC' 14
ENGINE MANAGEMENT RELAY MODULE 14
CAMSHAFT POSITION (CMP) SENSOR - 'K16 WITH VVC' 15
HEATED OXYGEN (HO2S) SENSOR - 'K8' 15
HEATED OXYGEN (HO2S) SENSOR - 'K16' 16
THROTTLE HOUSING 16
ECM FUEL TRAP 17
FUEL RAIL - 'K8' 18
FUEL RAIL - 'K16' 19
FUEL RAIL - 'K16 WITH VVC' 21
FUEL INJECTORS - 'K8' 23
FUEL INJECTORS - 'K16' 23
AIR INTAKE RESONATOR 24

ENGINE COMPARTMENT COMPONENT LOCATIONS - 'K8'

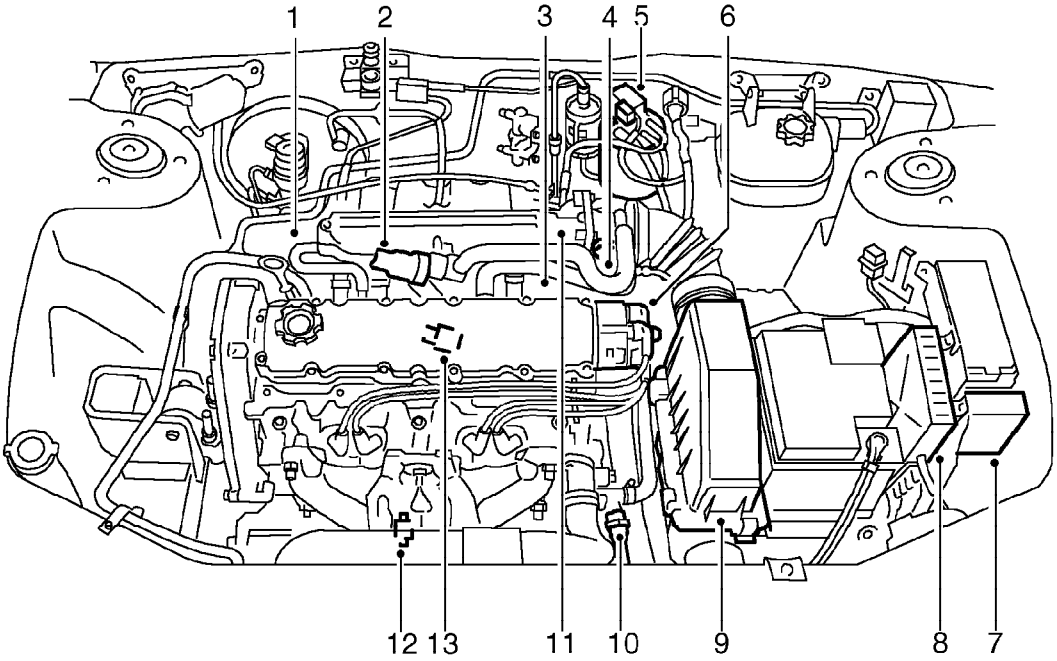

18M0137A

1. Fuel pressure regulator
2. Idle air control valve
3. Intake air temperature sensor
4. Throttle position sensor
5. EVAP canister and purge valve
6. Distributor
7. Relay module
8. Engine control module (ECM)
9. Air cleaner
10. Engine coolant temperature sensor
11. Crankshaft position sensor
12. Oxygen sensor
13. Ignition coil

ENGINE COMPARTMENT COMPONENT LOCATIONS - 'ALL K16 MODELS EXCEPT K16 WITH VVC'

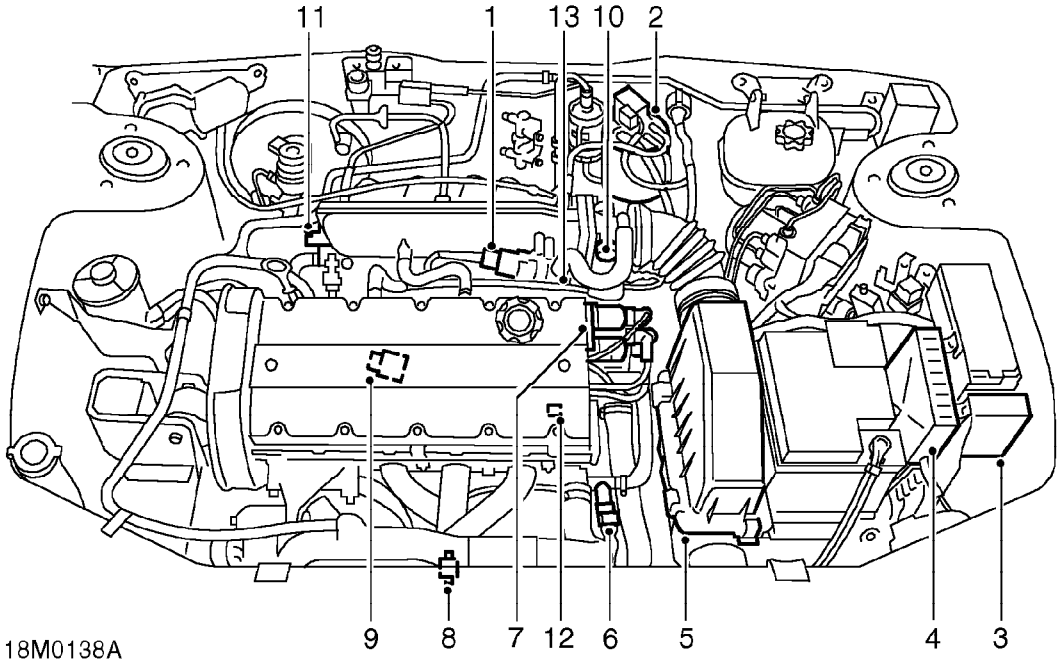

1. Idle air control valve
2. EVAP canister and purge valve
3. Relay module
4. Engine control module (ECM)
5. Air cleaner
6. Engine coolant temperature sensor
7. Distributor
8. Oxygen sensor
9. Ignition coil
10. Throttle position sensor
11. Fuel pressure regulator
12. Crankshaft position sensor
13. Intake air temperature sensor

ENGINE COMPARTMENT COMPONENT LOCATIONS - 'K16 WITH VVC'

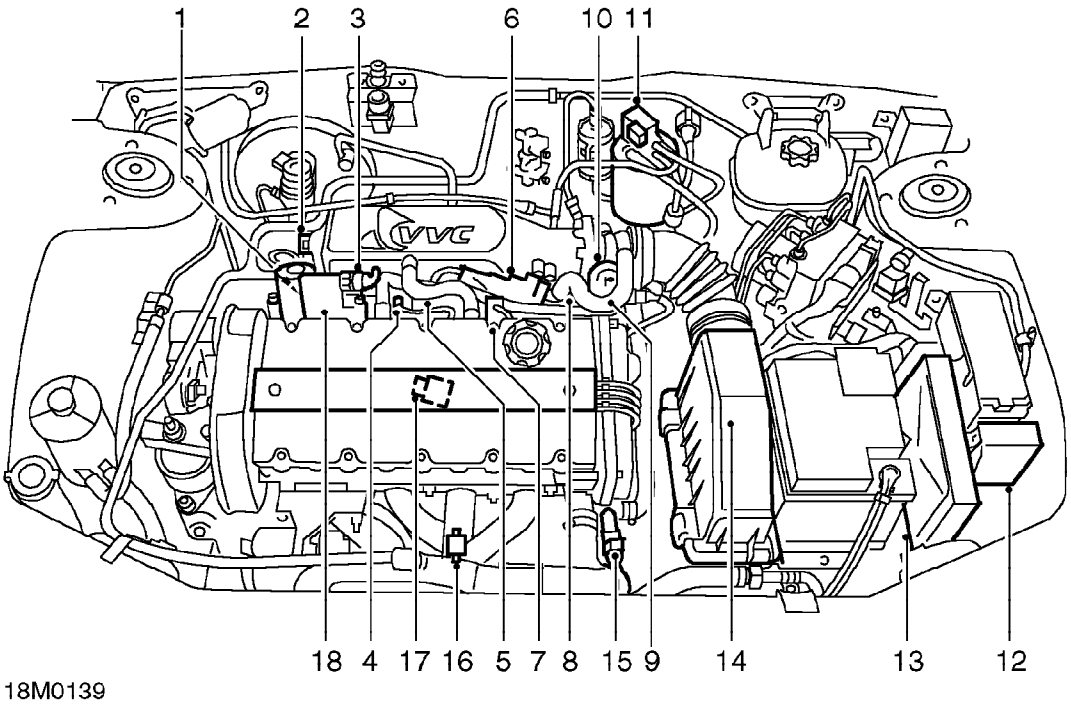

1. Fuel pressure regulator
2. Manifold absolute pressure sensor
3. Oil temperature sensor
4. Hydraulic control solenoid 1
5. Hydraulic control solenoid 2
6. Idle air control valve
7. Camshaft sensor
8. Intake air temperature sensor
9. Crankshaft position sensor
10. Throttle position sensor
11. EVAP canister and purge valve
12. Relay module
13. Engine control module (ECM)
14. Air cleaner
15. Engine coolant temperature sensor
16. Oxygen sensor
17. Ignition coil
18. Hydraulic control unit

ENGINE MANAGEMENT SYSTEM

The Engine Control Module (ECM) monitors the conditions required for optimum combustion of fuel in the cylinder through sensors located at strategic points around the engine. As a result of these sensor inputs, the engine control module can adjust the fuel quantity and timing of the fuel being delivered to the cylinders.

The main features are as follows:

- A single ECM controls the fuel injection system and the ignition system. The ECM incorporates short circuit protection and can store intermittent faults on certain inputs. TestBook can interrogate the ECM for these stored faults.
- The ECM is electronically immobilised which prevents the engine from being started unless it receives a coded signal from the anti-theft control unit.
- In conjunction with the throttle position sensor the ECM uses the speed/density method of air flow measurement to calculate fuel delivery. This method measures the inlet air temperature and inlet manifold pressure and assumes that the engine is a calibrated vacuum pump, with its characteristics stored in the ECM, it can then determine the correct amount of fuel to be injected.
- A separate diagnostic connector allows engine tuning or fault diagnosis to be carried out using TestBook without disconnecting the ECM harness multiplug.
- The ECM harness multiplug incorporates specially plated pins to minimise oxidation and give improved reliability.
- The ECM controls the operation of the radiator and air conditioning cooling fans, based on signals received from the engine coolant temperature sensor.
- If certain system inputs fail, the ECM implements a back-up facility to enable the system to continue functioning, although at a reduced level of performance.

'K16 with VVC' ECM - additional features

The ECM also controls the valve period, by driving the variable valve control (VVC) mechanism, to produce the optimum engine torque characteristic.

- The ECM measures the cam period via the cam sensor, and controls the VVC mechanism via two solenoids: one which increases the period and one which reduces the period.
- The ECM used on the VVC engine implements tune select which means that each ECM may contain engine calibrations for one or more vehicles. In order to prevent an ECM being fitted to a vehicle with the wrong calibration selected, when first supplied, the ECM has no calibration selected so the engine will not run. When fitted to a vehicle, the ECM calibration for that vehicle must be selected using diagnostics equipment in addition to programming the ECM security code.

IGNITION SYSTEM

The ECM determines the optimum ignition timing based on the signals from the following sensors:

1. Crankshaft position sensor - Engine speed and crankshaft position
2. Manifold absolute pressure sensor - Engine load
3. Engine coolant temperature sensor - Engine temperature
4. Manifold absolute pressure sensor - Throttle pedal released

The engine management system uses no centrifugal or vacuum advance. Timing is controlled by the ECM which is energised by the main relay, located within the relay module.

'K8' and 'K16' models

Spark distribution is achieved by means of a rotor arm and distributor mounted at the No.4 cylinder end of the inlet camshaft.

'K16 with VVC'

The VVC engine employs a direct ignition system which consists of two twin-ignition coils driven directly from the ECM. Each twin-ignition coil supplies two cylinders.

BASIC IGNITION TIMING

Crankshaft position sensor

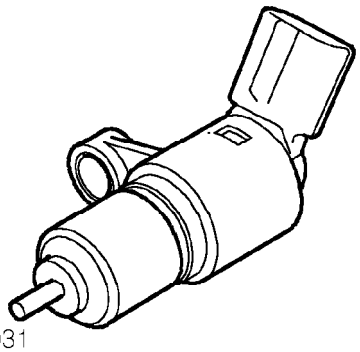

The speed and position of the engine is detected by the crankshaft position (CKP) sensor which is bolted to, and projects through, the engine adaptor plate adjacent to the flywheel.

The CKP sensor is an inductive sensor consisting of a bracket mounted body containing a coil and a permanent magnet which provides a magnetic field. The CKP sensor is situated so that an air gap exists between it and the flywheel. Air gap distance is critical for correct operation.

The flywheel incorporates a reluctor ring which consists of 32 poles spaced at 10° intervals, with 4 missing poles at 30°, 60°, 210° and 250°. The missing poles inform the ECM when to operate the groups of injectors. When the flywheel rotates, as a pole passes the CKP sensor it disturbs the magnetic field inducing a voltage pulse in the coil. This pulse is transmitted to the ECM.

By calculating the number of pulses that occur within a given time, the ECM can determine the engine speed. This is a primary input necessary to make the engine run.

Camshaft position sensor

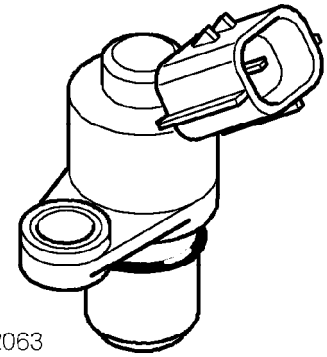

The camshaft position sensor has two functions. The first is to enable the ECM to run a sequential fuelling mode. The second is to measure the actual cam period, this measurment is achieved using teeth on the camshafts to indicate when the valve opens and closes.

If the camshaft position sensor fails when the engine is running, the engine will continue to run normally in sequential fuelling mode. If the sensor fails before the engine is started, the engine will start but run in grouped fuelling mode. The engine running in grouped fuelling mode can be usually detected by a reduced rev limit: 5000/5800 rpm in comparison to the normal rev limit of 7000/7300 rpm. Camshaft position sensor failure can be identified using TestBook.

Manifold absolute pressure sensor

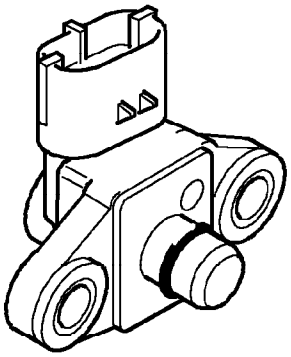

The manifold absolute pressure (MAP) sensor is located within the ECM except on VVC models, where it is mounted directly onto the manifold. It detects manifold pressure via a hose connected to the inlet manifold. The MAP sensor converts pressure variations into graduated electrical signals which can be read by the ECM. Increases and decreases in the manifold pressure provide the ECM with an accurate representation of the load being placed on the engine allowing the ECM to adjust the quantity of fuel being injected and the ignition timing to achieve optimum fuelling of the engine.

IGNITION TIMING COMPENSATION

Engine coolant temperature sensor

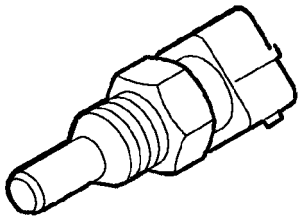

The engine coolant temperature (ECT) sensor is a 'thermistor' (a temperature dependent resistor), i.e. the voltage output varies in proportion to temperature. The ECT sensor is located on top of the coolant outlet elbow. The ECM constantly monitors this signal and uses the information to provide optimum driveability and emissions by advancing or retarding the ignition timing.

Idle speed control

With the throttle pedal released and the engine at idle, the ECM uses the fast response of the engine to ignition timing to maintain idle stabilisation.

When loads are placed on or removed from the engine, the ECM responds to changes in engine speed and in conjunction with adjusting the idle air control (IAC) valve, advances or retards the ignition timing to maintain a specified idle speed. When load is removed from the engine the IAC valve returns to its original position and the ignition timing returns to the idle setting.

NOTE: Due to the sensitivity of this system the ignition timing will be constantly changing at idle speed.

IGNITION COMPONENTS

Ignition coil

'K8' and 'K16' models

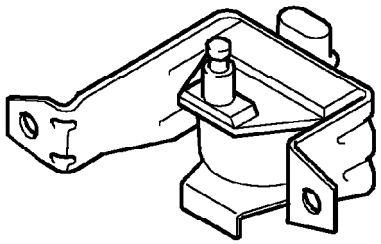

19M0848

'K16 with VVC'

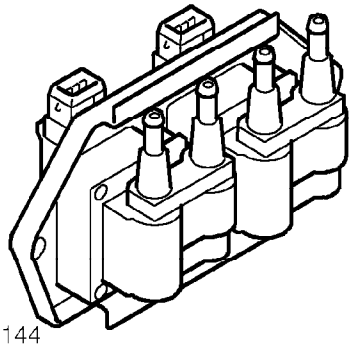

19M2144

The coil for the programmed ignition system is mounted on the back of the engine. The coil has a lower primary winding resistance (0.63 to 0.77 ohms at 20°C) than a coil in a conventional ignition system. This allows the full h.t. output to be reached faster and so makes the coil operation more consistent throughout the engine speed range.

Distributor cap and rotor arm

'K8' and 'K16' models

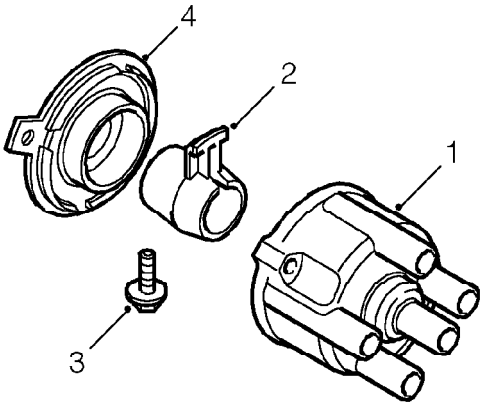

19M0857

1. Distributor cap
2. Rotor arm
3. Retaining screw
4. Anti-flash shield

The distributor cap, carrying a central carbon brush and four h.t. lead pick-ups, is located at the No.4 cylinder end of the inlet camshaft and surrounds the rotor arm. The rotor arm is secured by a retaining screw to a 'D' shaped stub shaft, which is press fitted into a vibration absorbing bush in the camshaft and is protected from oil contamination by an anti-flash shield which incorporates an oil drain.

VARIABLE VALVE CONTROL (VVC)

Hydraulic control unit (HCU)

Dependent on which solenoid is energised, a spool valve within the HCU dictates the position of the VVC mechanism.

Solenoids

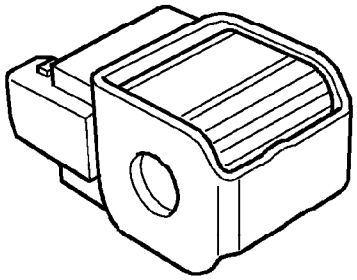

19M2060

Variable valve control is determined by the ECM which energises a solenoid in order to control the VVC mechanism. Only one solenoid will be energised at a time to either drive the VVC mechanism towards minimum cam period, or towards maximum cam period. The desired cam period is calculated by the ECM using engine speed and manifold pressure (engine load). The current cam period is measured by the ECM using the camshaft position sensor. The ECM then energises the correct solenoid in order to move the mechanism towards the desired position.

Oil temperature sensor

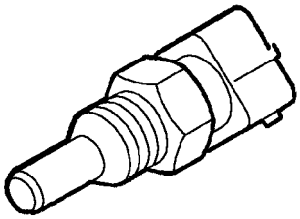

19M0847

The oil temperature measured by the ECM is used to derive the viscosity of the oil passing through the hydraulic control unit which indicates how quickly the VVC mechanism will respond.

Fault detection

If the ECM detects any faults with cam period measurement (or the cam period does not match the value required) during start-up and initial running, the ECM will try to drive the mechanism to minimum cam period.

If the ECM loses the cam period signal during running, the cam period will remain frozen at the last valid period. Engine speed may be limited as low as 5500 rpm depending on the cam period when the fault occurred. The engine speed will be raised and will remain at this level for the rest of the journey. Camshaft period measurement faults can be identified using TestBook.

NOTE: A camshaft period measurement will only be recorded by the ECM if the fault is detected at start-up or during initial running.

FUEL SYSTEM

Engine Control Module (ECM)

'K8' and 'K16' models

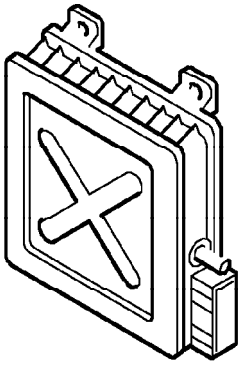

19M0849

The Modular Engine Management System (MEMS) is controlled by an ECM mounted in the engine compartment. The ECM is an adaptive unit which over a period of time learns the load and wear characteristics of the engine it controls. The ECM remembers and updates two main engine requirements when the engine is running at normal operating temperature:

1. The position of the idle air control (IAC) valve required to achieve a specified idle speed. This is then used as a reference for IAC valve movement to achieve idle speed under all load conditions.
2. The fuelling change or offset required to achieve a set oxygen sensor voltage. This allows the system to provide the correct fuelling without having to apply excessive adjustments to the fuelling which can adversely affect the emissions and driveability.

NOTE: After fitting a different ECM, TestBook will be required to reprogramme the ECM with the code from the anti-theft control unit and to perform a full engine tune procedure.

The ECM inputs and outputs are shown in the following table:

INPUTS		OUTPUTS
* Oil temperature sensor Crankshaft position sensor * Camshaft position sensor Manifold absolute pressure sensor Engine coolant temperature sensor Intake air temperature sensor Heated oxygen sensor Throttle position sensor Diagnostic input Battery supply Starter signal Earth supply Anti-theft control unit	ECM	* VVC solenoids Purge valve Ignition coil Injectors Idle air control valve Fuel pump relay Diagnostic connector Heated oxygen sensor relay Main relay Cooling fans Air conditioning

* 'K16 with VVC' models

Intake air temperature sensor

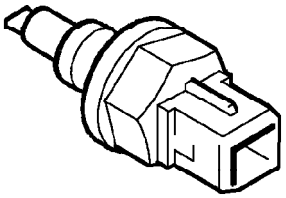

19M0850

The intake air temperature (IAT) sensor is located in the side of the inlet manifold. The IAT sensor is of the negative temperature coefficient (NTC) type, designed to reduce its resistance with increasing temperature. The ECM receives a signal proportional to the temperature of the intake air. When used in conjunction with the signal from the manifold absolute pressure sensor the ECM can calculate the volume of oxygen in the air and adjust the quantity of fuel being injected to achieve optimum fuelling of the engine.

Injectors

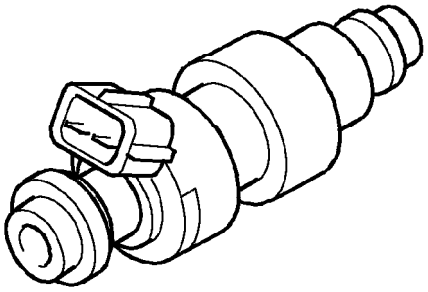

19M0851

The four fuel injectors are fitted between the pressurised fuel rail and inlet manifold. Each injector comprises a solenoid operated needle valve and a specially designed nozzle to ensure good fuel atomisation.

The injectors are controlled in grouped mode with 2 & 3 being grouped and 1 & 4 being grouped, with the injectors in each group being operated alternatively. The ECM determines when to operate the injectors based on the signal it receives from the crankshaft position sensor.

The ECM provides an earth signal for the period the injectors are required to be open, the injector solenoids are energised and fuel is sprayed into the inlet manifold onto the back of the inlet valves. The ECM carefully meters the amount of fuel injected by adjusting the injector opening period (pulse width). During cranking, when the engine speed is below approximately 400 rev/min, the ECM increases the injector pulse width to aid starting. The amount of increase depends upon engine coolant temperature. To prevent flooding, the ECM periodically inhibits the operation of the injectors.

Throttle housing

The throttle housing is located between the inlet manifold and air intake hose and is sealed to the manifold by an ’O’ ring. The throttle housing incorporates a throttle disc which is connected to the throttle pedal via the throttle lever and a cable.

There are two breather pipes connected to the throttle housing; one either side of the throttle disc. When the engine is running with the throttle disc open, both pipes are subject to manifold depression and draw crankcase fumes into the manifold. When the throttle disc is closed, only the pipe on the inlet manifold side of the disc is subject to manifold depression. This pipe incorporates a restrictor to prevent engine oil being drawn into the engine by the substantially greater manifold depression.

Mounted on the throttle housing are the throttle position sensor and idle air control valve.

Throttle position sensor

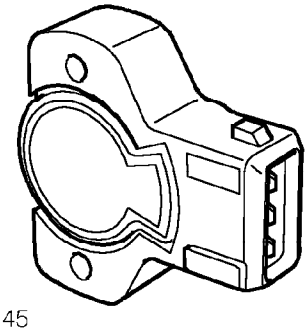

19M2145

The throttle position (TP) sensor is a potentiometer attached to the throttle housing and is directly coupled to the throttle disc. The TP sensor is non-adjustable. Closed throttle is detected by the TP sensor which initiates idle speed control via the idle air control valve.

The ECM supplies the TP sensor with a 5 volt supply and an earth path. The TP sensor returns a signal proportional to throttle disc position.

Throttle disc movement causes voltage across the TP sensor to vary. The ECM calculates the rate of change of the voltage signal in positive (acceleration) or negative (deceleration) directions. From this the ECM can determine the required engine speed, rate of acceleration or rate of deceleration and apply acceleration enrichment, deceleration fuel metering or over-run fuel cut-off.

Idle air control valve

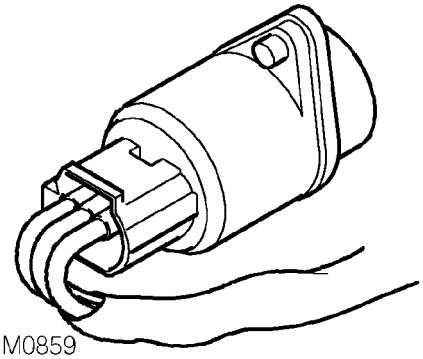

19M0859

The idle air control (IAC) valve is mounted on the inlet manifold and controlled by the ECM. The IAC valve opens a pintle valve situated in an air passage in the throttle housing, allowing air to bypass the throttle disc and flow straight into the inlet manifold.

By changing the amount the IAC valve is open the ECM can control engine idle speed and cold start air flow requirements by adjusting the flow of air in the passage.

During cold starting the ECM indexes the IAC valve open slightly to provide a level of fast idle, dependent on engine coolant temperature. As the engine warms, fast idle is gradually decreased until normal operating temperature is reached.

The position of the IAC valve should be within the range of 20 to 40 steps when the engine is running.

NOTE: Adjustment of the IAC valve ONLY applies to the 'learnt' position, not the actual position at idle, so adjustment is not recommended.

If the valve is identified as being outside this range it can be adjusted to within range using TestBook. This ensures that the IAC valve is at the optimum position within its range for providing further movement to compensate for changes in engine load or temperature in accordance with signals from the ECM.

NOTE: The position of the throttle disc is preset during manufacture and the throttle position setting screw MUST NOT be adjusted.

Relay module

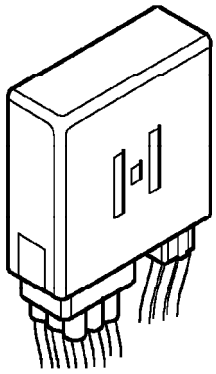

19M0855

The relay module is located in the engine compartment adjacent to the engine control module. The relay module contains the following relays:

- Main relay - energised when the ignition is switched on and supplies power to the ECM.
- Fuel pump relay - energised by the ECM for a short period when the ignition is switched on, during cranking and while the engine is running.
- Starter relay - energised by the cranking signal from the ignition switch.
- Heated oxygen sensor relay - energised by the ECM and supplies current to the heated oxygen sensor element.

Purge valve

The purge valve is an integral part of the EVAP canister, and is driven directly from the ECM. When the purge valve is opened it allows the EVAP canister to vent into the engine inlet manifold. The valve is opened by the ECM for varying periods under specific engine conditions to avoid degrading engine performance.

Fuel pump

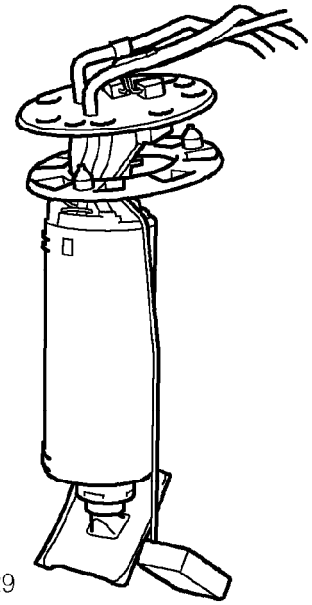

19M2129

The electric fuel pump is located inside the fuel tank and is energised by the ECM via the fuel pump relay in the relay module and the fuel cut-off switch.

The fuel pump delivers more fuel than the maximum load requirement for the engine, pressure is therefore maintained in the fuel system under all conditions.

Fuel pressure regulator

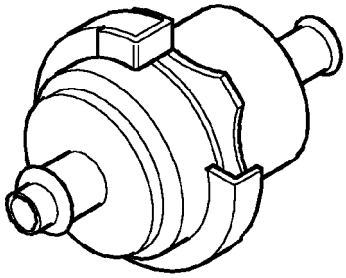

19M0860

The pressure regulator is a mechanical device controlled by manifold depression and is mounted on one end of the fuel rail. The regulator ensures that fuel rail pressure is maintained at a constant pressure difference to that in the inlet manifold, as manifold depression increases the regulated fuel pressure is reduced in direct proportion.

When pressure exceeds the regulator setting, excess fuel is returned to the fuel tank swirl pot which contains the fuel pump pick-up.

Inertia fuel shut-off switch

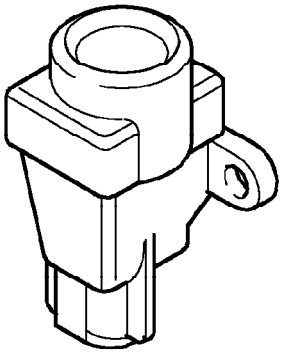

19M0852

The electrical circuit for the fuel pump incorporates an inertia fuel shut-off (IFS) switch which, in the event of a sudden deceleration, breaks the circuit to the fuel pump preventing fuel being delivered to the engine. The IFS switch is situated in the engine compartment, fixed to the bonnet switch bracket which is located on the bulkhead, and must be reset by pressing the rubber top before the engine can be restarted.

WARNING: ALWAYS check for fuel leaks and the integrity of fuel system connections before resetting the switch.

Diagnostic connector

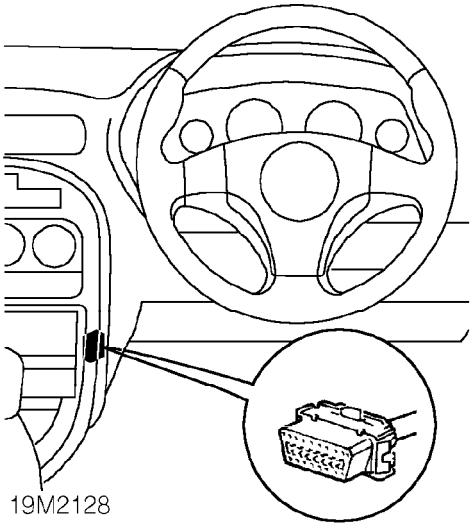

A diagnostic connector, located on a bracket behind the centre console, allows engine tuning or fault diagnosis to be carried out using TestBook without disconnecting the ECM harness multiplug.

Heated oxygen sensor

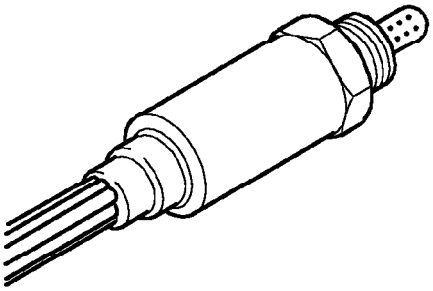

The modular engine management system operates a closed loop emission system to ensure the most efficient level of exhaust gas conversion.

A heated oxygen sensor (HO2S) fitted in the exhaust manifold monitors the exhaust gases. It supplies a small voltage proportional to exhaust oxygen content to the ECM. As the air/fuel mixture weakens, the exhaust oxygen content increases and the voltage to the ECM decreases. If the mixture becomes richer, the oxygen content decreases and the voltage to the ECM increases.

From this signal the ECM can determine the air/fuel mixture being delivered to the engine and can adjust the duration the injectors are open to maintain the ratio necessary for efficient gas conversion by the catalyst.

The HO2S has an integral heating element to ensure an efficient operating temperature is quickly reached from cold. The electrical supply to the heater element is controlled by the ECM via the HO2S relay in the relay module.

Acceleration enrichment

When the throttle pedal is depressed the ECM receives a rising voltage from the throttle position sensor and detects a rise in manifold pressure from the manifold absolute pressure sensor. The ECM provides additional fuel by increasing the normal injector pulse width and also provides a small number of extra additional pulses on rapid throttle openings.

Over-run fuel cut-off

The ECM implements over-run fuel cut-off when the engine speed is above 1600 rev/min with engine at normal operating temperature and the throttle position sensor in the closed position, i.e. the vehicle is 'coasting' with the throttle pedal released. The ECM indexes the idle air control valve open slightly to increase the air flow through the engine to maintain a constant manifold depression to keep emissions low.

Fuel is immediately reinstated if the throttle is opened. If the engine speed drops below 1600 rev/min on over-run, fuel is progressively reinstated.

Over-speed fuel cut-off

To prevent damage at high engine speeds the ECM will implement fuel cut-off at engine speeds above approximately 7000 rev/min; fuel being gradually reinstated as speed falls.

Ignition switch off

When the starter switch is turned off, the ECM will keep the main relay energised for approximately 30 seconds while it drives the idle air control valve to its power down position, ready for the next engine start.

The ECM monitors the engine coolant temperature for a minimum of 2 minutes after the starter switch is turned off.If the coolant temperature rises above a certain limit, the ECM switches on the radiator fans. Once the fans are running the ECM will not power down until either the coolant temperature falls below a certain limit or 8 minutes have elapsed since the starter switch was turned off. If the coolant temperature has not risen above the limit after 2 minutes, the ECM will power down.

AIR INTAKE SYSTEM

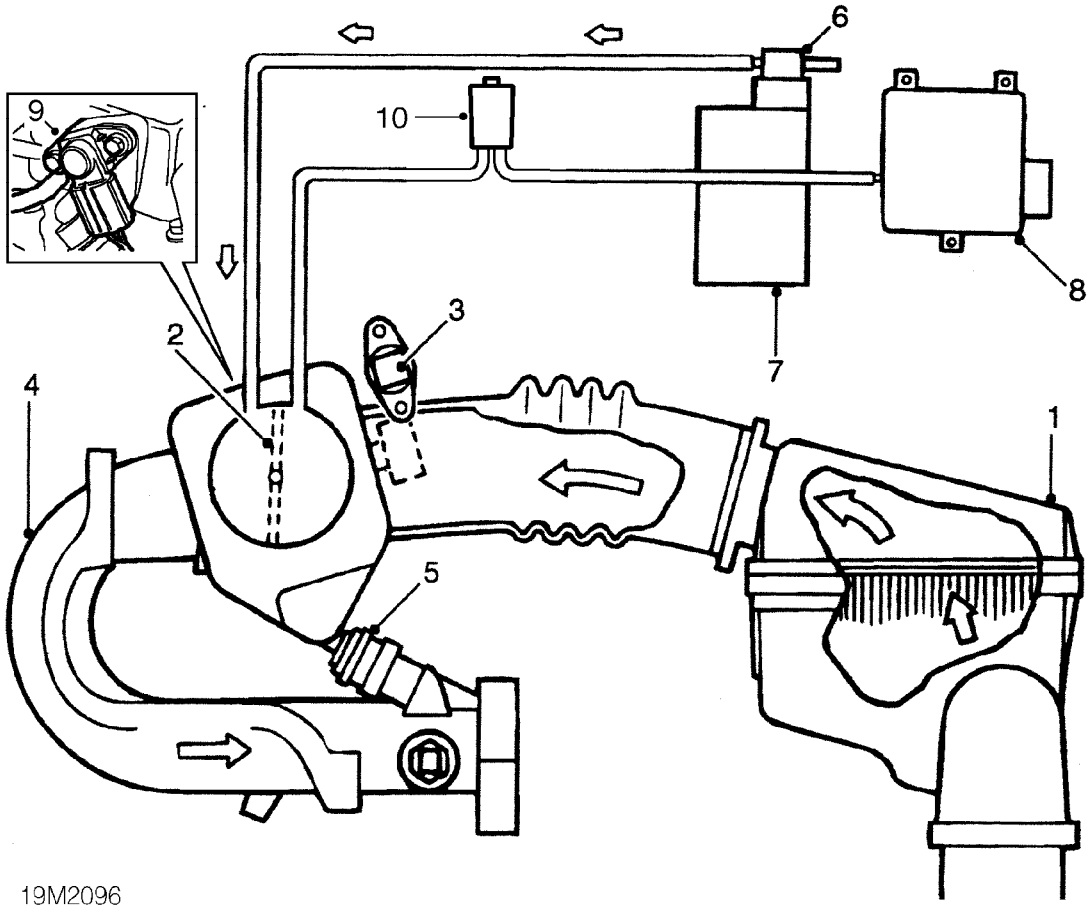

1. Air cleaner element
2. Throttle disc
3. Idle air control valve
4. Inlet manifold
5. Injector
6. Purge valve
7. EVAP canister
8. Engine Control Module (Mpi illustrated)
9. Manifold absolute pressure sensor (VVC models)
10. Fuel trap (Mpi models)

Intake air is drawn into the throttle housing through an air filter element. Incorporated in the throttle housing are the throttle disc and the throttle position sensor.

Air is passed from the throttle housing via the manifold chamber into the inlet manifold where it is mixed with fuel injected by the injectors before the mixture is drawn into the combustion chamber.

An engine load signal is applied to the manifold absolute pressure sensor from the manifold chamber. This signal is used to calculate the fuel to be delivered by the injectors.

VVC versions of the engine use a separate manifold absolute pressure sensor fitted directly to the manifold chamber.

THROTTLE CABLE

Service repair no - 19.20.05

NOTE: Before adjusting cable, ensure that cable is correctly routed and located. Do not attempt to adjust throttle cable or engine idle speed by means of the throttle stop screw.

Adjust

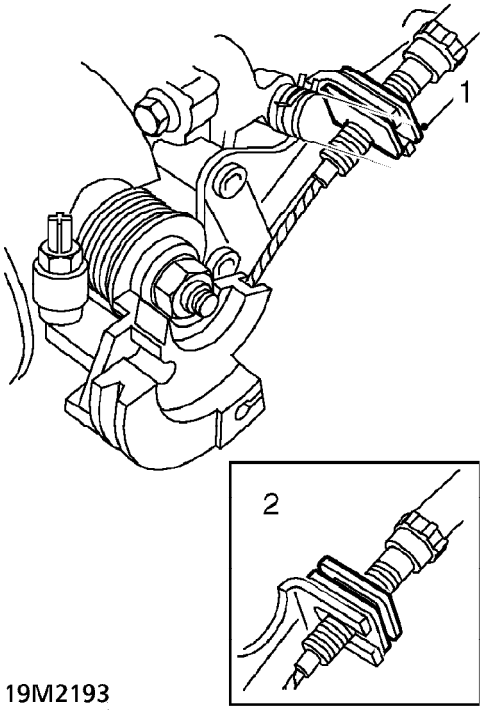

19M2193

1. Release cable adjusting nut from abutment bracket.
2. Position outer cable to abutment bracket so that adjusting nut contacts top of the abutment bracket.

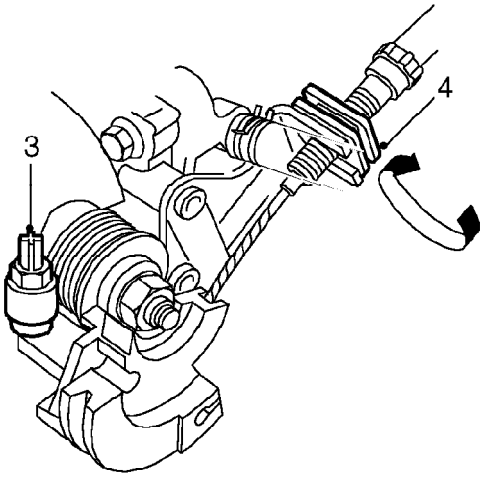

19M0925

3. Hold throttle cam in fully closed position, ensure throttle cam contacts throttle stop screw.
4. Rotate cable adjusting nut until all slack is taken out of inner cable. Ensure throttle does not open.
5. Locate throttle cable adjusting nut in abutment bracket.
6. Operate throttle pedal and ensure that full throttle pedal movement is available.

THROTTLE CABLE

Service repair no - 19.20.06

Remove

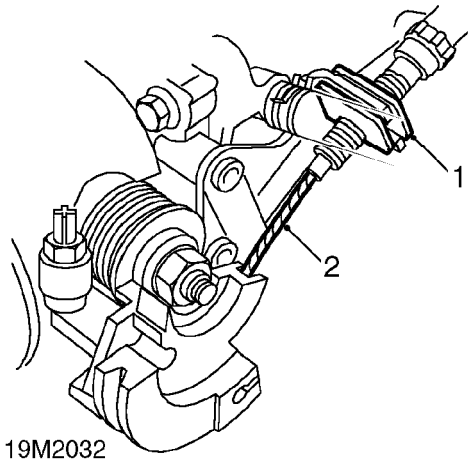

19M2032

1. Release cable adjusting nut from abutment bracket.
2. Release inner cable from cam.

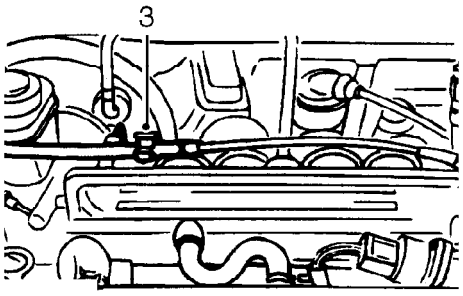

19M2033

3. Release cable from clip on inlet manifold.

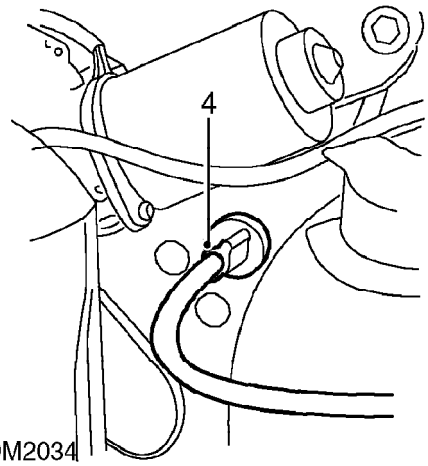

19M2034

4. Rotate collar through 90° and release cable from bulkhead.

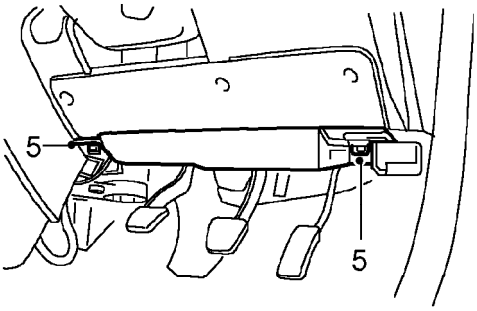

19M2116

5. Release 2 turnbuckles and remove closing panel.

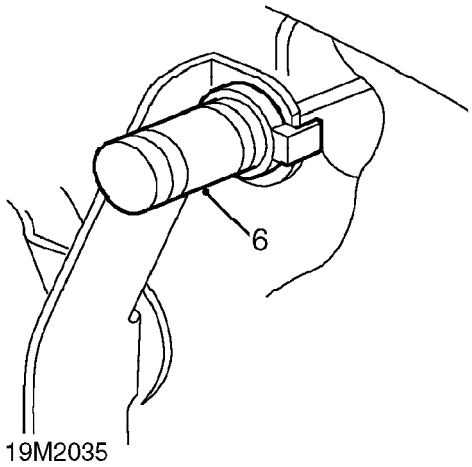

6. Depress nylon clips and disconnect throttle cable from pedal.
7. Remove throttle cable.

Refit

1. Feed cable through bulkhead and connect inner cable to pedal.
2. Fit closing panel and secure with turnbuckles.
3. Smear rubber grease of both sides of the rubber seal and secure cable to bulkhead.
4. Fit throttle cable to clip on inlet manifold.
5. Connect throttle cable to throttle cam.
6. Connect cable adjusting nut to abutment bracket.
7. Adjust throttle cable. ***See Adjustments.***

AIR CLEANER

Service repair no - 19.10.01

Remove

1. Remove battery. ***See ELECTRICAL, Repairs.***

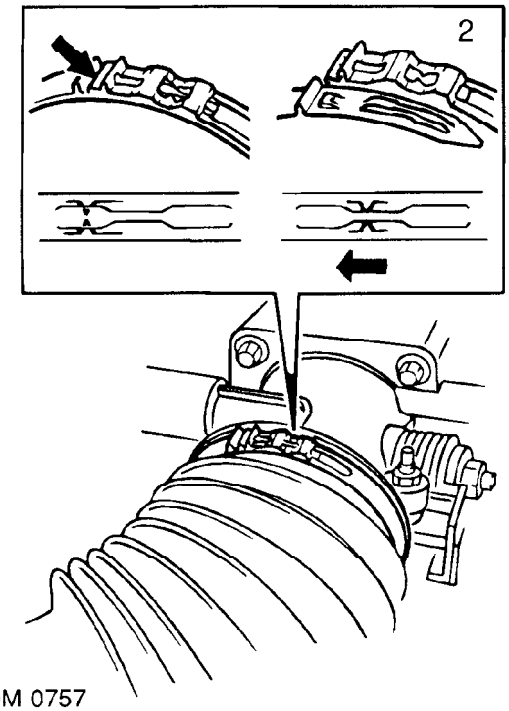

2. Release clip securing intake pipe to throttle housing.

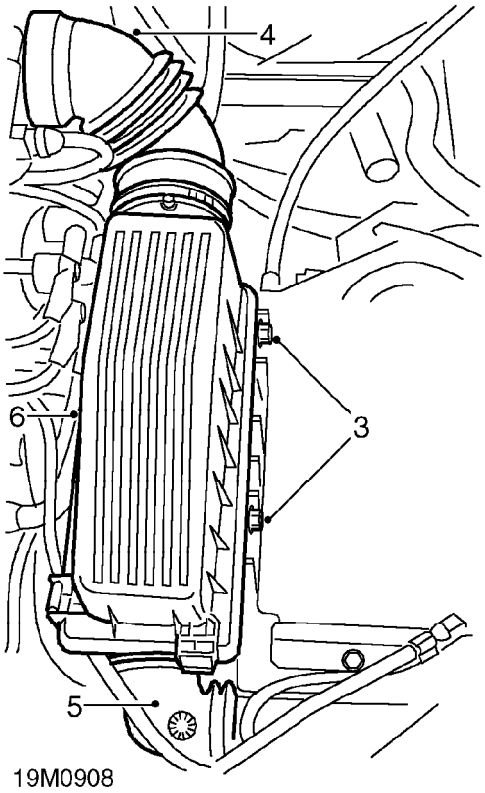

3. Remove 2 bolts securing air cleaner to battery tray.
4. Disconnect intake hose from throttle housing.
5. Release air cleaner from air intake hose
6. Remove air cleaner.

Refit

1. Position air cleaner in vehicle and connect to air intake hose.
2. Align air cleaner to battery tray.
3. Fit 2 bolts securing air cleaner to battery tray and tighten to 9 Nm.
4. Connect intake hose to throttle housing and secure with clip.
5. Fit battery. ***See ELECTRICAL, Repairs.***

AIR CLEANER ELEMENT

Service repair no - 19.10.10

Remove

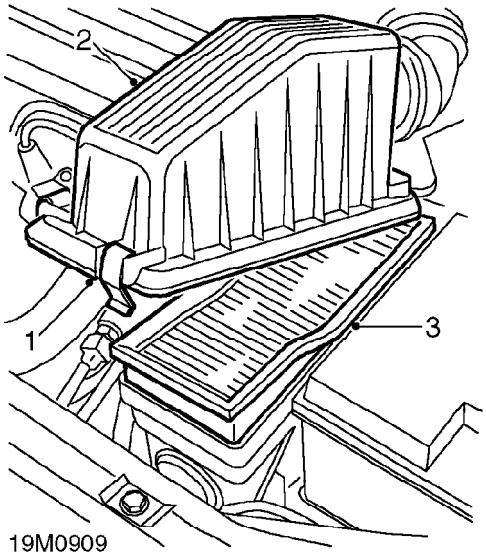

1. Release 4 clips securing 2 halves of air cleaner.
2. Release top half of air cleaner and position aside.
3. Remove and discard air cleaner element.

Refit

1. Clean inside of air cleaner casing.
2. Fit new air cleaner element in casing.
3. Position top half of air cleaner casing and secure with clips.

SPARK PLUGS - 'K8'

Service repair no - 18.20.02

Remove

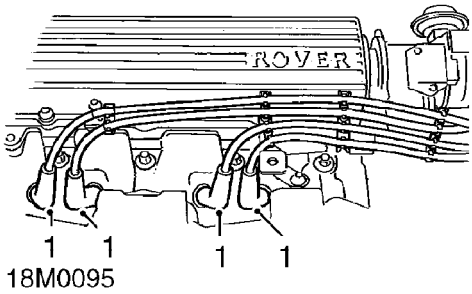

1. Disconnect h.t. leads from spark plugs.

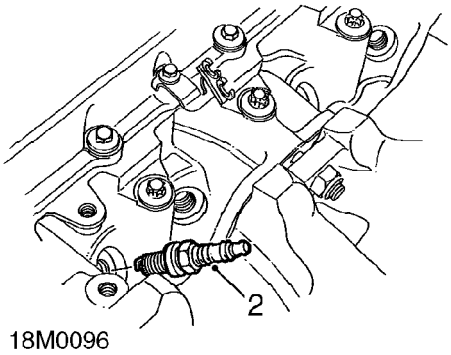

2. Using a 16 mm spark plug socket, remove 4 spark plugs.

Refit

1. Fit terminals to new spark plugs.

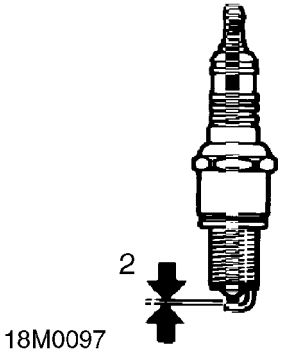

2. Set gap of each spark plug to 0.85 mm.
3. Fit spark plugs and tighten to 27 Nm.
4. Connect h.t. leads to spark plugs.

SPARK PLUGS - 'K16'

Service repair no - 18.20.02

Remove

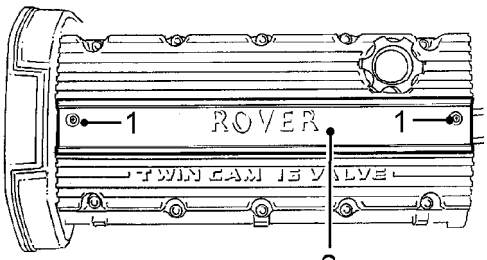

18M0042

1. Remove 2 screws retaining h.t. lead cover.
2. Remove h.t. lead cover.

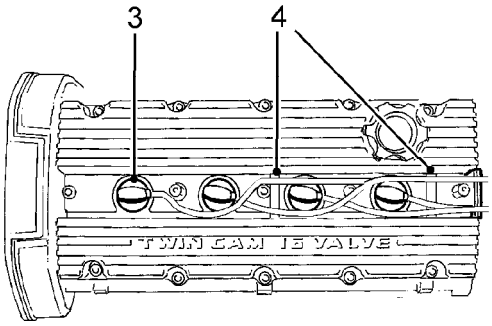

18M0043

3. Disconnect h.t. leads from spark plugs.
4. Release h.t. leads mounting rubbers from camshaft cover and place h.t. leads aside.

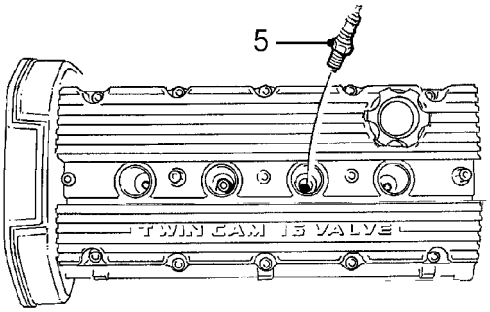

18M0044

5. Using a 16 mm spark plug socket remove 4 spark plugs.

Refit

1. Fit terminals to new spark plugs.

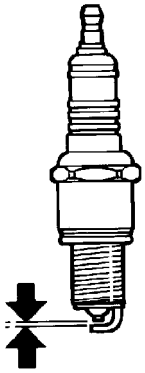

18M0055

2. Set gap of each spark plug to 0.85 mm.
3. Fit spark plugs and tighten to 27 Nm.
4. Connect h.t. leads to spark plugs.
5. Locate h.t lead mounting rubbers in camshaft cover.
6. Fit h.t. lead cover and tighten screws to 2 Nm.

DISTRIBUTOR CAP AND ROTOR ARM

Service repair no - 18.20.23

Remove

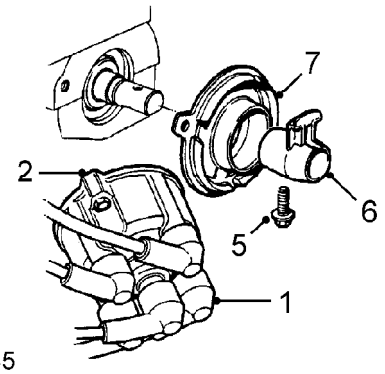

18M0045

1. Noting their fitted positions, disconnect 5 h.t. leads from distributor cap.
2. Loosen 2 screws securing distributor cap to engine.
3. Remove distributor cap.
4. Rotate engine to gain access to rotor arm screw.
5. Remove and discard screw securing rotor arm to camshaft.
6. Remove rotor arm.
7. Remove distributor flash shield.

Refit

1. Clean distributor cap, rotor arm and flash shield.
2. Examine distributor cap and rotor arm for signs of damage or tracking; renew if necessary.
3. Fit flash shield.
4. Clean rotor arm screw thread in camshaft with thread tap.
5. Position rotor arm on camshaft.
6. Fit new patchlock screw to secure rotor arm to camshaft and tighten to 8 Nm.
7. Fit distributor cap and align holes in cap and flash shield with those in engine.
8. Fit 2 screws securing distributor cap to engine.
9. Connect h.t. leads to distributor cap.

IGNITION COIL

Service repair no - 18.20.43

Remove

1. Disconnect battery earth lead.
2. Raise front of vehicle.

WARNING: Support on safety stands.

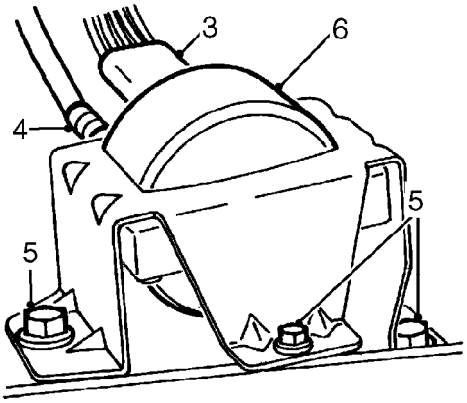

18M0098

3. Disconnect multiplug from ignition coil.
4. Disconnect h.t. lead from ignition coil.
5. Remove 3 bolts securing igntion coil to engine.
6. Remove ignition coil.

Refit

1. Position ignition coil to engine.
2. Fit bolts securing ignition coil to engine, tighten 2 x M10 bolts to 45 Nm and M6 bolt to 9 Nm.
3. Connect h.t. lead to ignition coil.
4. Connect multiplug to ignition coil.
5. Connect battery earth lead.
6. Remove stand(s) and lower vehicle.

IGNITION COIL - 'K16 WITH VVC'

Service repair no - 18.20.43

Remove

1. Raise front of vehicle.

WARNING: Support on safety stands.

2. Disconnect battery earth lead.

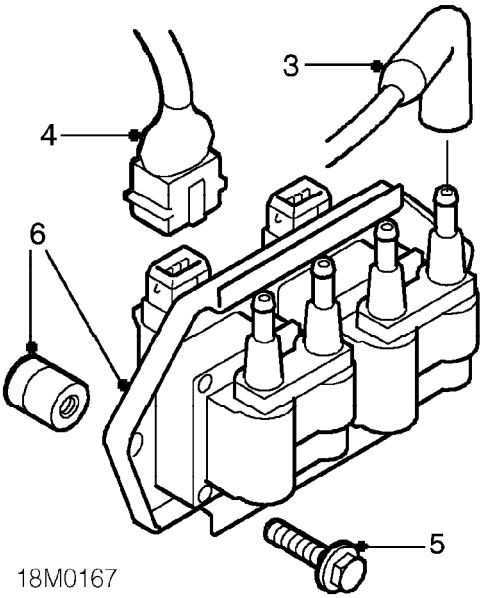

3. Disconnect 4 h.t. leads from ignition coils.
4. Disconnect 2 multiplugs from ignition coils.
5. From beneath vehicle; remove 2 bolts securing ignition coil mounting bracket to cylinder block.
6. Remove ignition coils and collect spacer.

Do not carry out further dismantling if component is removed for access only.

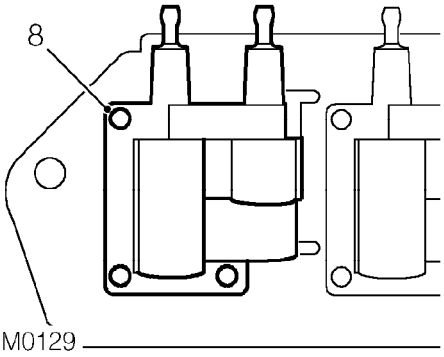

7. Centre punch top of 3 rivets securing coil to mounting bracket.
8. Drill out 3 rivets securing coil to mounting bracket.
9. Remove ignition coil.

Refit

1. Position ignition coil to mounting bracket and secure with nuts and bolts.
2. Position ignition coil mounting bracket and spacer to cylinder block.
3. Fit bolts securing ignition coil mounting bracket to cylinder block and tighten to 45 Nm.

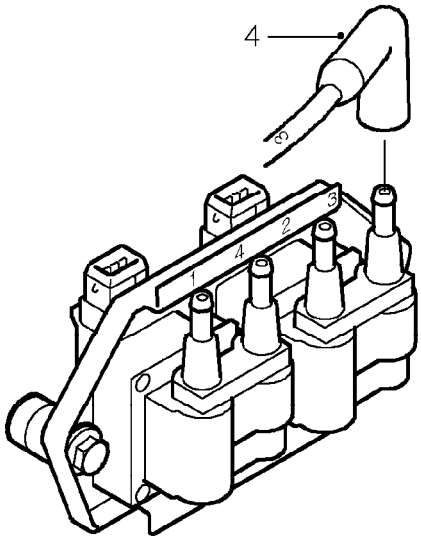

18M0176

4. Connect h.t. leads to ignition coils in the order shown.
5. Connect multiplug with 3 pins to ignition coil 1,4.
6. Connect multiplug with 2 pins to ignition coil 2,3.
7. Remove stand(s) and lower vehicle.
8. Connect battery earth lead.

ENGINE CONTROL MODULE (ECM)

Service repair no - 18.30.01

Remove

1. Disconnect battery earth lead.

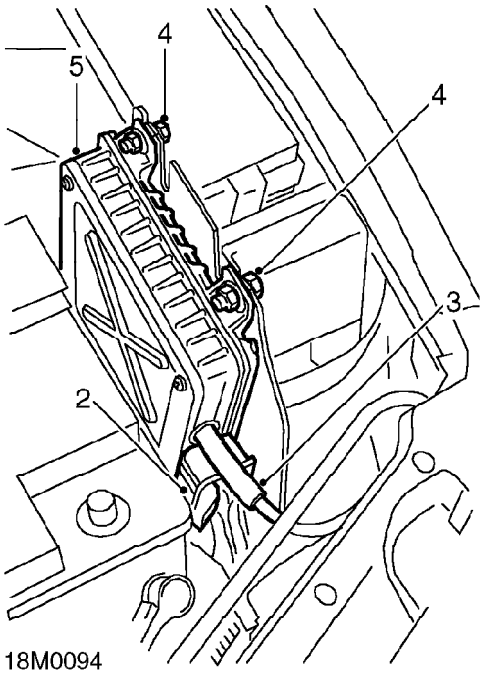

18M0094

2. Disconnect multiplug from ECM.
3. Disconnect vacuum hose from ECM.
4. Loosen bolts securing ECM to mounting bracket.
5. Release and remove ECM.

Refit

1. Fit ECM to mounting bracket.
2. Tighten bolts securing ECM to mounting bracket to 4 Nm.
3. Connect vacuum hose to ECM.
4. Connect multiplug to ECM.
5. Connect battery earth lead.

NOTE: If a new ECM has been fitted, the ECM will need to be programmed with the code from the anti-theft security unit using TestBook, before the engine can be started.

ENGINE CONTROL MODULE (ECM) - 'K16 WITH VVC'

Service repair no - 18.30.01

Remove

1. Disconnect battery earth lead.

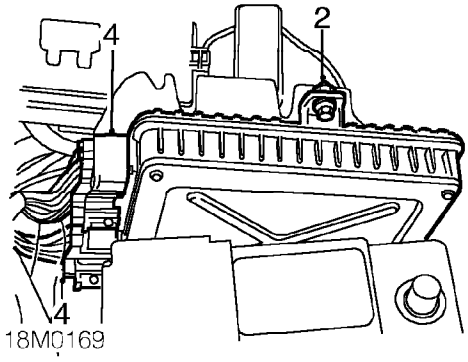

2. Loosen bolt securing ECM to battery tray.
3. Release ECM from battery tray.
4. Disconnect 2 multiplugs from ECM.
5. Remove ECM.

Refit

1. Position ECM and connect 2 multiplugs.
2. Locate ECM on battery tray.
3. Tighten bolt securing ECM to battery tray, to 4 Nm.
4. Connect battery earth lead.

NOTE: If a new ECM has been fitted, the ECM will need to be programmed with the code from the anti-theft security unit using TestBook, before the engine can be started.

IDLE AIR CONTROL VALVE (IACV)

Service repair no - 18.30.05

Remove

1. Disconnect battery earth lead.

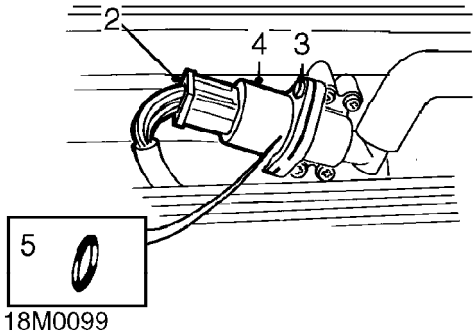

2. Disconnect multiplug from IACV.
3. Remove 2 TX20 Torx screws securing IACV to inlet manifold.
4. Remove IACV from inlet manifold.
5. Remove and discard 'O' ring from IACV.

Refit

1. Clean mating faces of IACV and inlet manifold.
2. Lubricate new 'O' ring with silicone grease and fit to IACV.
3. Fit IACV to inlet manifold. Fit Torx screws and tighten to 8 Nm.
4. Connect multiplug to IACV.
5. Connect battery earth lead.

INTAKE AIR TEMPERATURE (IAT) SENSOR

Service repair no - 18.30.09

Remove

1. Disconnect battery earth lead.

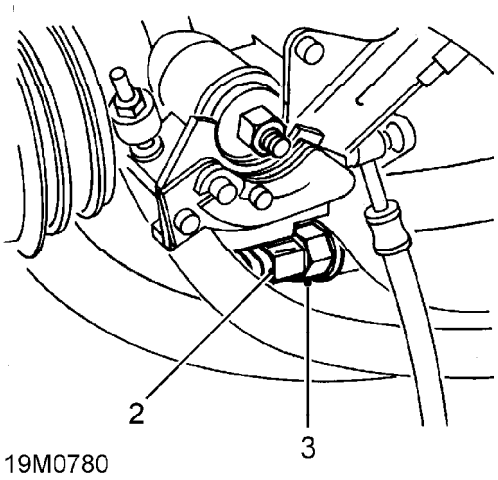

2. Disconnect multiplug from IAT sensor.
3. Remove IAT sensor.

Refit

1. Clean threads of IAT sensor.
2. Clean mating faces of IAT sensor and inlet manifold.
3. Fit IAT sensor to inlet manifold and tighten to 7 Nm.
4. Connect multiplug to IAT sensor.
5. Connect battery earth lead.

ENGINE COOLANT TEMPERATURE (ECT) SENSOR

Service repair no - 18.30.10

Remove

1. Disconnect battery earth lead.

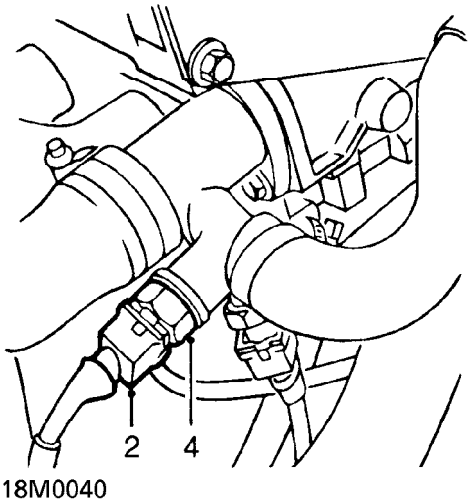

2. Disconnect multiplug from ECT sensor.
3. Position container to collect spillage.
4. Remove ECT sensor.

Refit

1. Clean threads of ECT sensor.
2. Apply Loctite 577 to threads of ECT sensor.
3. Fit ECT sensor and tighten to 15 Nm.
4. Connect multiplug to ECT sensor.
5. Connect battery earth lead.
6. Top-up coolant. ***See MAINTENANCE.***

CRANKSHAFT POSITION (CKP) SENSOR

Service repair no - 18.30.12

Remove

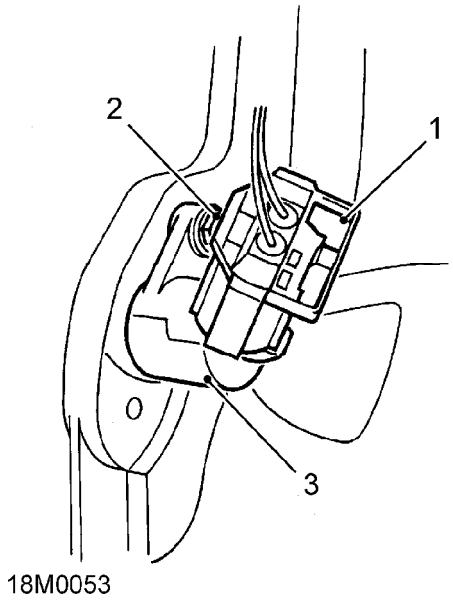

1. Disconnect multiplug from CKP sensor.
2. Remove bolt securing CKP sensor to flywheel housing.
3. Remove CKP sensor.

Refit

1. Clean CKP sensor and mating face on flywheel housing.
2. Position CKP sensor, fit bolt and tighten to 6 Nm.
3. Connect multiplug to CKP sensor.

CRANKSHAFT POSITION (CKP) SENSOR - 'K16 1.8 & K16 WITH VVC'

Service repair no - 18.30.12

Remove

1. Raise front of vehicle.

WARNING: Support on safety stands.

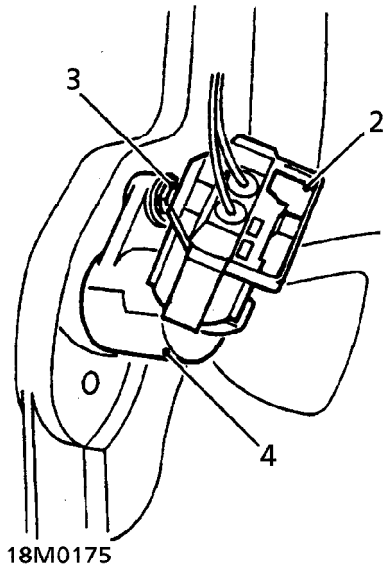

2. Disconnect multiplug from CKP sensor.
3. Remove bolt securing CKP sensor to flywheel housing.
4. Remove CKP sensor.

Refit

1. Clean CKP sensor and mating face on flywheel housing.
2. Position CKP sensor, fit bolt and tighten to 6 Nm.
3. Connect multiplug to CKP sensor.
4. Remove stand(s) and lower vehicle.

THROTTLE POSITION (TP) SENSOR

Service repair no - 18.30.17

Remove

1. Disconnect battery earth lead.

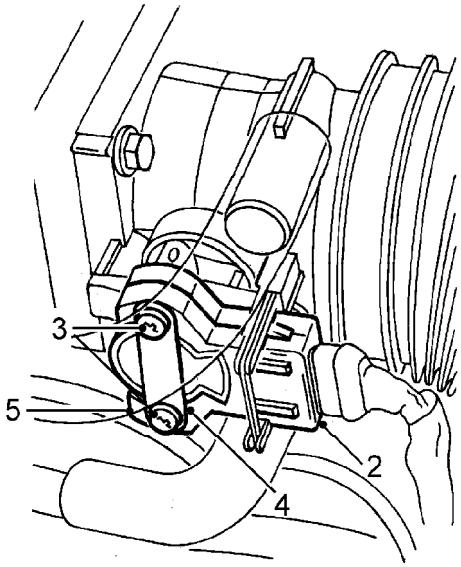

18M0050

2. Disconnect multiplug from TP sensor.
3. Remove and discard 2 TX20 Torx screws and wave washers securing TP sensor to throttle housing.
4. Remove TP sensor specification plate.
5. Pull TP sensor from throttle spindle.

CAUTION: Do not twist or apply leverage to TP sensor.

Refit

1. Clean mating faces of throttle housing and TP sensor.
2. Fit TP sensor to throttle spindle. Ensure that during fitting, the machined flat on the throttle spindle is aligned with the mating portion of the TP sensor.

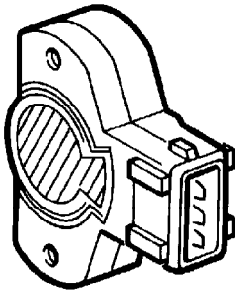

18M0056

CAUTION: The TP sensor can be easily damaged during fitting. When pressing the sensor onto the throttle spindle, use fingers only, and only apply pressure to the area shown shaded in the illustration.

3. Rotate TP sensor in an anti-clockwise direction to align fixing holes.

CAUTION: Do not rotate sensor in a clockwise direction, and ensure that it is not rotated beyond its internal stops.

4. Fit TP sensor specification plate.
5. Fit new Torx screws and wave washers, and tighten to 1.5 Nm.

CAUTION: Do not exceed specified torque figure.

6. Connect multiplug to TP sensor.
7. Operate throttle cable cam 2 or 3 times and ensure that full travel to the throttle open and the throttle closed positions is available.
8. Connect battery earth lead.

HYDRAULIC CONTROL UNIT (HCU) SOLENOIDS - 'K16 WITH VVC'

Service repair no - 18.30.39

Remove

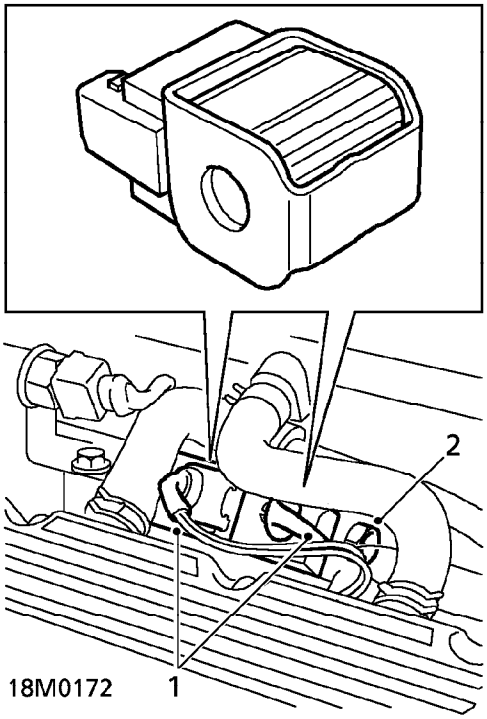

1. Disconnect 2 multiplugs from HCU solenoids.
2. Remove nut securing solenoids to HCU.
3. Remove 2 solenoids.

Refit

1. Clean solenoids and fit to HCU.
2. Position solenoids and tighten securing nut to 12 Nm.
3. Connect multiplugs to solenoids.

OIL TEMPERATURE SENSOR - 'K16 WITH VVC'

Service repair no - 18.30.41

Remove

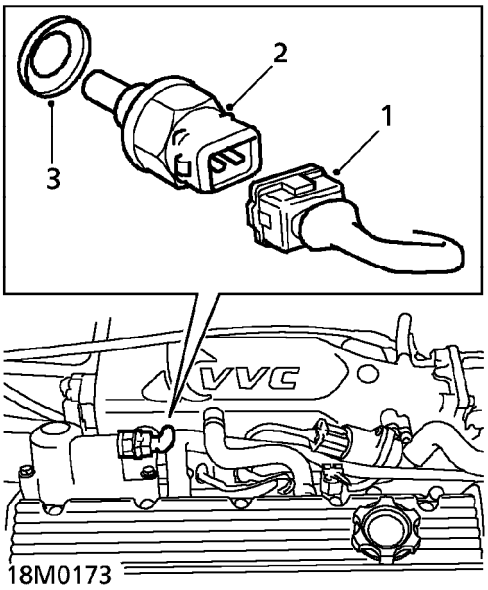

1. Disconnect multiplug from oil temperature sensor.
2. Remove temperature sensor from HCU.
3. Remove and discard seal.

Refit

1. Clean sealing faces of sensor and HCU.
2. Fit new seal to sensor.
3. Fit sensor and tighten to 15 Nm.
4. Connect multiplug to sensor.

MANIFOLD ABSOLUTE PRESSURE (MAP) SENSOR - 'K16 WITH VVC'

Service repair no - 18.30.56

Remove

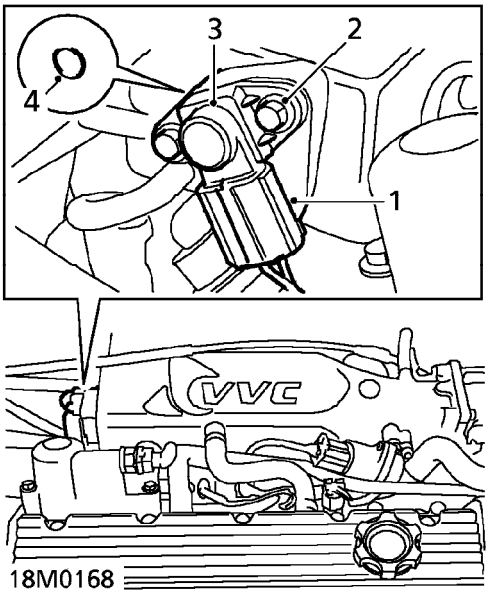

1. Disconnect multiplug from MAP sensor.
2. Remove 2 bolts securing MAP sensor to manifold chamber.
3. Remove MAP sensor.
4. Remove and discard 'O' ring from MAP sensor.

Refit

1. Clean sealing faces of sensor and manifold chamber.
2. Lubricate and fit new 'O' ring to MAP sensor.
3. Fit sensor to manifold chamber and tighten bolts to 10 Nm.
4. Connect multiplug to sensor.

ENGINE MANAGEMENT RELAY MODULE

Service repair no - 18.30.71

The engine management relay module contains the following relays:
- Main relay
- Starter relay
- Fuel pump relay
- HO2S relay

Remove

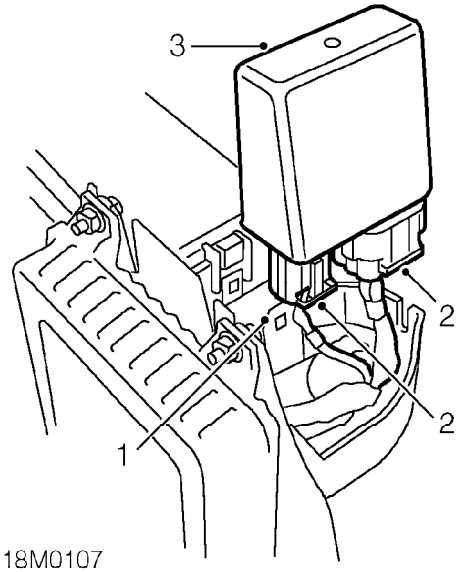

1. Release relay module from mounting bracket.
2. Disconnect 2 multiplugs from relay module.
3. Remove relay module.

Refit

1. Position relay module and connect 2 multiplugs. Ensure multiplugs are correctly engaged.
2. Secure relay module to mounting bracket.

CAMSHAFT POSITION (CMP) SENSOR - 'K16 WITH VVC'

Service repair no - 19.22.07

Remove

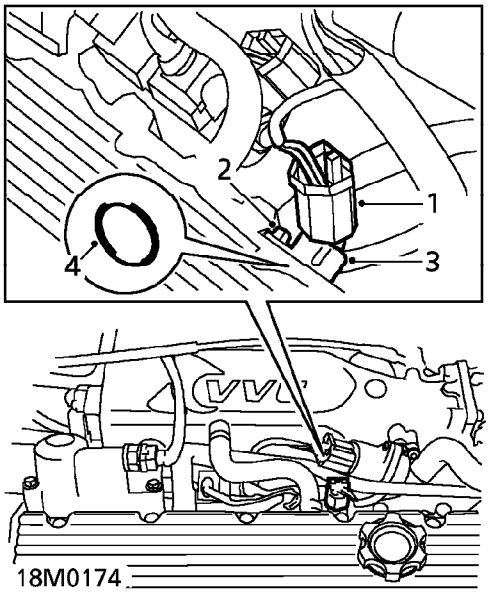

1. Disconnect multiplug from CMP sensor.
2. Remove bolt securing CMP sensor to cylinder head.
3. Remove CMP sensor.
4. Remove 'O' ring from CMP sensor.

Refit

1. Clean sealing faces of sensor and cylinder head.
2. Lubricate and fit 'O' ring to CMP sensor.
3. Fit sensor to cylinder head and tighten bolt to 6 Nm.
4. Connect multiplug to CMP sensor.

HEATED OXYGEN (HO2S) SENSOR - 'K8'

Service repair no - 19.22.16

Remove

1. Disconnect battery earth lead.
2. Disconnect HO2S multiplug from harness.

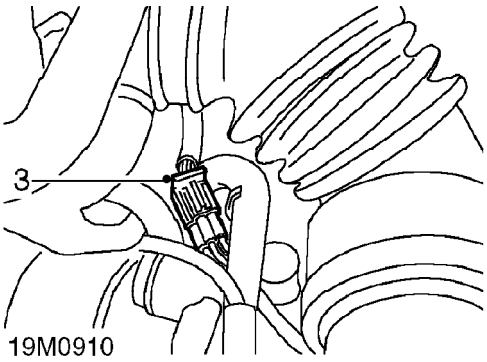

3. Release multiplug from bracket on coolant rail.

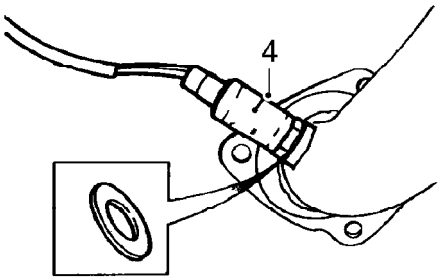

19M0911

4. Using a 22 mm open ended spanner remove HO2S and collect sealing washer.

Refit

NOTE: Any sensor that has been dropped must not be fitted to vehicle.

1. Fit sealing washer to HO2S.
2. Fit HO2S and tighten to 55 Nm.
3. Secure multiplug to bracket on coolant rail.
4. Connect HO2S multiplug to harness.
5. Connect battery earth lead.

HEATED OXYGEN (HO2S) SENSOR - 'K16'

Service repair no - 19.22.16

Remove

1. Remove exhaust manifold. ***See MANIFOLD & EXHAUST SYSTEMS, Repairs.***

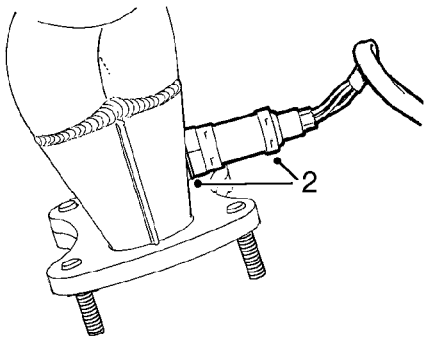

19M0932A

2. Using a 22 mm open ended spanner remove HO2S and collect sealing washer.

Refit

1. Fit sealing washer to HO2S
2. Fit HO2S and tighten to 55 Nm.
3. Fit exhaust manifold ***See MANIFOLD & EXHAUST SYSTEMS, Repairs.***

THROTTLE HOUSING

Service repair no - 19.22.45

Remove

1. Disconnect battery earth lead.

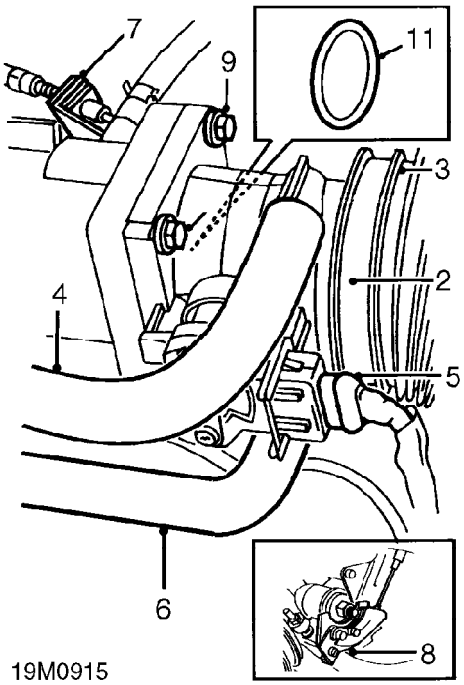

19M0915

2. Release clip securing air intake hose to throttle housing.
3. Disconnect air intake hose from throttle housing.
4. Disconnect hose from IACV.
5. Disconnect multiplug from TP sensor.
6. Release clip and disconnect breather hose from throttle housing.
7. Release throttle cable adjusting nut from abutment bracket.
8. Disconnect throttle cable from throttle cam.
9. Remove 4 bolts securing throttle housing to inlet manifold.
10. Remove throttle housing.
11. Remove and discard 'O' ring from throttle housing.

Refit

1. Clean mating faces of throttle housing and inlet manifold.
2. Lubricate new 'O' ring with silicone grease and fit to throttle housing.
3. Position throttle housing to inlet manifold and align injector harness multiplug bracket.
4. Fit bolts securing throttle housing to inlet manifold and tighten to 7 Nm.
5. Connect throttle cable to throttle cam.
6. Locate throttle cable adjusting nut in abutment bracket.
7. Connect breather hose to inlet manifold and secure with clip.
8. Connect multiplug to TP sensor.
9. Connect hose from IACV to throttle housing.
10. Connect air intake hose to throttle housing and secure with clip.
11. Connect battery earth lead.

ECM FUEL TRAP

Service repair no - 19.25.10

Remove

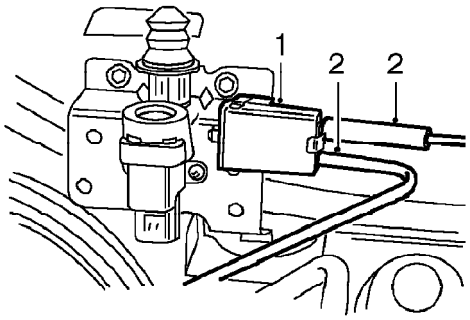

19M2041

1. Release fuel trap from mounting bracket.
2. Disconnect two vacuum pipes from fuel trap.

Refit

1. Connect vacuum pipes to fuel trap.
2. Fit fuel trap to mounting bracket.

FUEL RAIL - 'K8'

Service repair no - 19.60.04

Remove

1. Disconnect battery earth lead.
2. Position absorbent cloth around fuel filter outlet union.

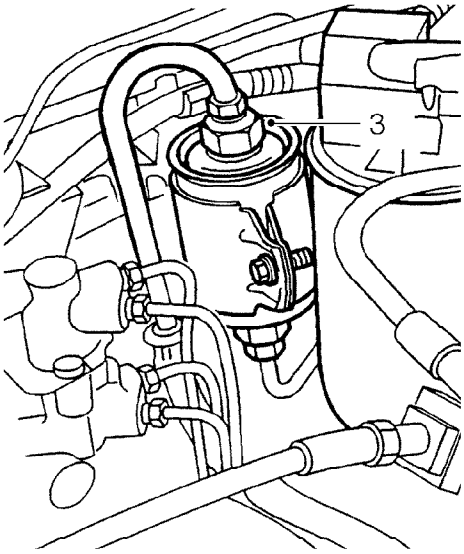

19M2073

3. Loosen union to relieve fuel pressure, then re-tighten to 28 Nm.

CAUTION: To prevent damage to fuel system pipes or components, use two spanners when loosening or tightening unions.

4. Remove inlet manifold chamber. ***See MANIFOLD & EXHAUST SYSTEMS, Repairs.***

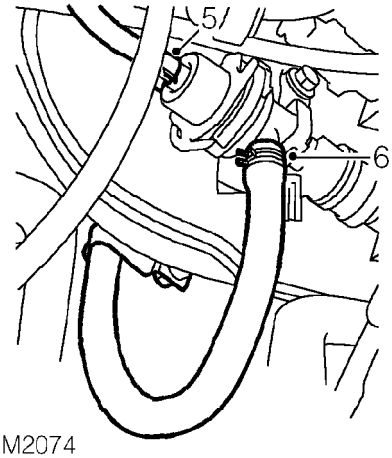

19M2074

5. Release clip and remove vacuum pipe from fuel pressure regulator.
6. Release clip and disconnect fuel return hose from fuel rail.

CAUTION: Plug the connections.

7. Position an absorbent cloth around fuel feed connection.

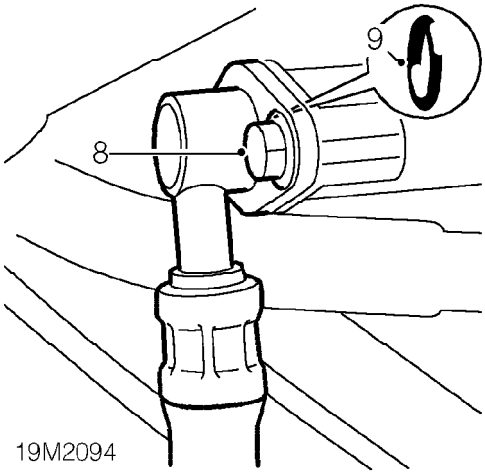

19M2094

8. Remove 2 bolts securing fuel feed pipe to fuel rail.
9. Release fuel feed pipe from fuel rail and discard 'O' ring.

CAUTION: Plug the connections.

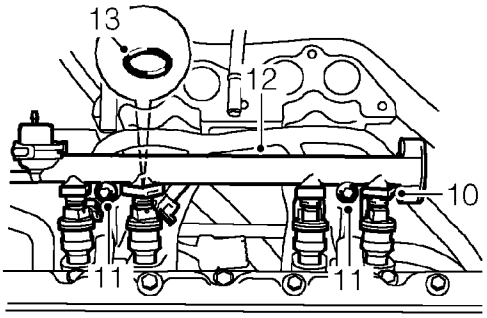

19M2095

10. Release clips securing injectors to fuel rail.
11. Remove 2 bolts securing fuel rail to inlet manifold.
12. Release fuel rail from injectors and remove.
13. Remove and discard 'O' ring from each injector.
14. Fit protective caps to each injector.

Refit

1. Clean injector recesses in fuel rail.
2. Lubricate new 'O' rings with silicone grease and fit to injectors.
3. Fit fuel rail to injectors and secure with spring clips.
4. Fit bolts securing fuel rail to inlet manifold and tighten to 10 Nm.
5. Lubricate new 'O' ring with silicone grease. Fit 'O' ring to fuel feed pipe.
6. Position fuel feed pipe to fuel rail and secure with bolts. Tighten to 5 Nm.
7. Connect fuel return hose to fuel rail and secure with clip.
8. Connect vacuum pipe to fuel pressure regulator and secure with clip.
9. Fit inlet manifold chamber. ***See MANIFOLD & EXHAUST SYSTEMS, Repairs.***
10. Connect battery earth lead.

FUEL RAIL - 'K16'

Service repair no - 19.60.04

Remove

1. Disconnect battery earth lead.

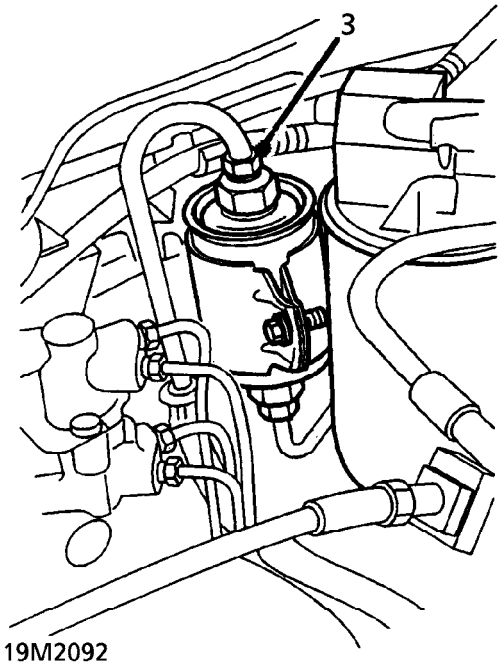

19M2092

2. Position absorbent cloth around fuel filter outlet union.
3. Loosen union to relieve fuel pressure then re-tighten.

CAUTION: To prevent damage to fuel system pipes or components use two spanners when loosening or tightening unions.

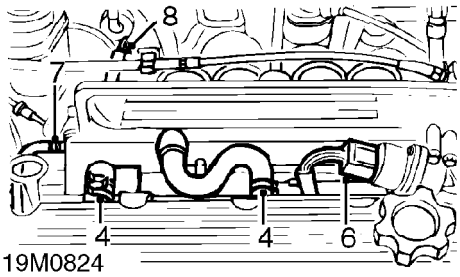

4. Release clips and disconnect breather hoses from camshaft cover.
5. Remove 2 breather hoses from inlet manifold.
6. Disconnect multiplug from IACV.
7. Release clip and disconnect vacuum pipe from fuel pressure regulator.
8. Release clip and disconnect fuel return hose from fuel rail.

CAUTION: Plug the connections.

9. Remove bolt securing injector harness multiplug bracket to inlet manifold.
10. Disconnect injector harness multiplug and remove bracket.
11. Position an absorbent cloth around fuel rail fuel feed connection.

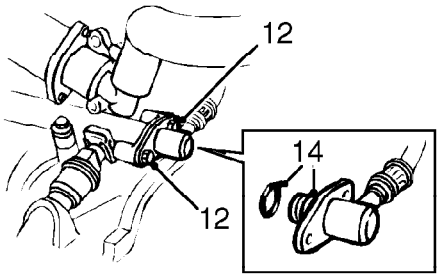

12. Remove 2 bolts securing fuel feed pipe to fuel rail.
13. Release fuel feed pipe from fuel rail.
14. Remove and discard 'O' ring.

CAUTION: Plug the connections.

15. Remove engine oil dipstick.

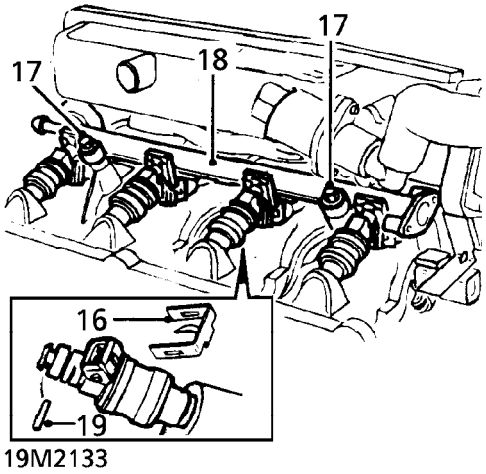

16. Release spring clips securing injectors to fuel rail.
17. Remove 2 bolts securing fuel rail to inlet manifold.
18. Release fuel rail from injectors and remove.
19. Remove and discard 'O' rings from injectors.

Refit

1. Lubricate new 'O' rings with silicone grease and fit injectors.
2. Position fuel rail and fit to injectors.
3. Fit bolts securing fuel rail to inlet manifold and tighten to 10 Nm.
4. Remove plugs from fuel feed pipe and fuel rail.
5. Lubricate new 'O' ring with silicone grease and fit to fuel feed pipe.
6. Fit fuel feed pipe to fuel rail, fit bolts and tighten to 5 Nm.
7. Fit engine oil dipstick.
8. Position injector harness multiplug bracket to inlet manifold and secure with bolt.
9. Connect injector harness multiplug to engine harness and secure to bracket.
10. Remove plugs from fuel return hose and fuel rail.
11. Connect fuel return hose to fuel rail and secure with clip.
12. Connect vacuum pipe to fuel pressure regulator and secure with clip.
13. Fit breather hoses to inlet manifold.
14. Connect multiplug to IACV.
15. Connect breather hoses to camshaft cover and secure with clips.
16. Connect battery earth lead.

FUEL RAIL - 'K16 WITH VVC'

Service repair no - 19.60.04

Remove

1. Disconnect battery earth lead.
2. Remove inlet manifold chamber. ***See MANIFOLD & EXHAUST SYSTEMS, Repairs.***
3. Position absorbent cloth around fuel filter outlet union. Loosen union to relieve fuel pressure. Retighten union to 28 Nm.

CAUTION: To prevent damage to fuel system pipes and components, use two spanners when loosening or tightening unions.

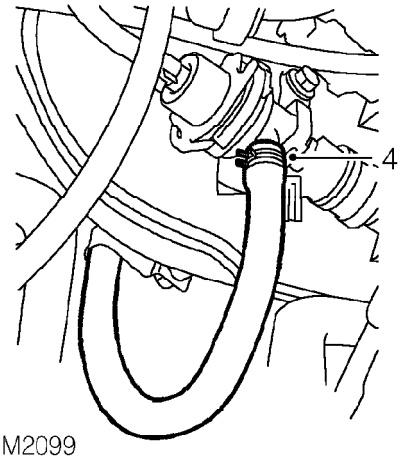

4. Remove clip and release fuel return pipe from fuel rail.

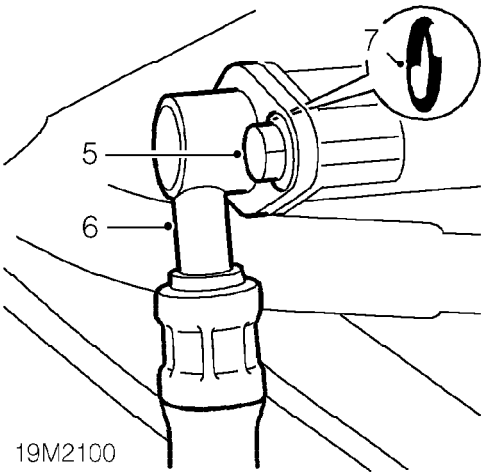

5. Remove 2 bolts securing fuel feed pipe to fuel rail.
6. Release fuel feed pipe from fuel rail.
7. Remove and discard 'O' ring.

CAUTION: Plug the connections.

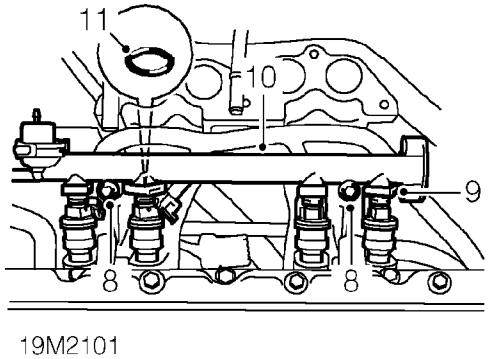

8. Remove 2 bolts securing fuel rail to inlet manifold.
9. Remove spring clips securing injectors to fuel rail.
10. Release fuel rail from injectors and remove.
11. Remove and discard 'O' rings from injectors.

Refit

1. Lubricate new 'O' rings with silicone grease and fit to injectors.
2. Position fuel rail and fit to injectors.
3. Fit spring clips securing fuel rail to injectors.
4. Fit bolts securing fuel rail to inlet manifold and tighten to 10 Nm.
5. Connect fuel return pipe to fuel rail secure with clip.
6. Remove plugs from fuel feed pipe and fuel rail.
7. Lubricate new 'O' ring with silicone grease and fit to fuel feed pipe.
8. Connect fuel feed pipe to fuel rail and tighten bolts to 5 Nm.
9. Fit inlet manifold chamber. ***See MANIFOLD & EXHAUST SYSTEMS, Repairs.***
10. Connect battery earth lead.

FUEL INJECTORS - 'K8'

Service repair no - 19.60.12

Remove

1. Disconnect battery earth lead.
2. Remove fuel rail. ***See this section.***

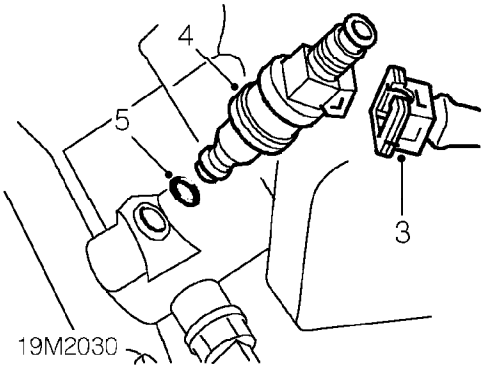

3. Disconnect multiplugs from injectors.
4. Remove injectors from inlet manifold.
5. Remove and discard 'O' rings from injectors.
6. Fit protective caps to each end of injectors.

Refit

1. Clean injectors and recesses in inlet manifold.
2. Lubricate new 'O' rings with silicone grease and fit to injectors.
3. Fit injectors to inlet manifold.
4. Connect multiplugs to injectors.
5. Fit fuel rail. ***See this section.***
6. Connect battery earth lead.

FUEL INJECTORS - 'K16'

Service repair no - 19.60.12

Remove

1. Disconnect battery earth lead.
2. Remove fuel rail. ***See this section.***

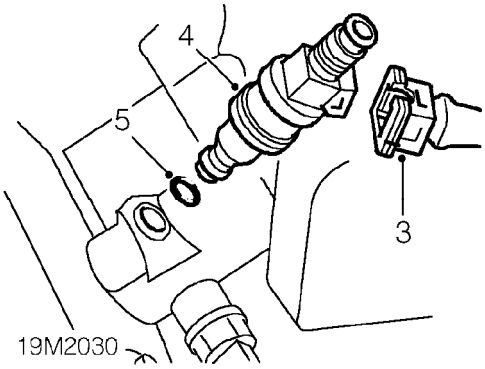

3. Disconnect multiplugs from injectors.
4. Remove injectors.
5. Remove and discard 'O' rings from injectors.
6. Fit protective caps to each end of injectors.

Refit

1. Clean injectors and recesses in inlet manifold.
2. Lubricate new 'O' ring seals with silicone grease and fit to injectors.
3. Fit injectors to inlet manifold.
4. Connect multiplugs to injectors.
5. Fit fuel rail. ***See this section.***
6. Connect battery earth lead.

AIR INTAKE RESONATOR

Service repair no - 19.70.03

Remove

1. Remove air cleaner. ***See this section.***

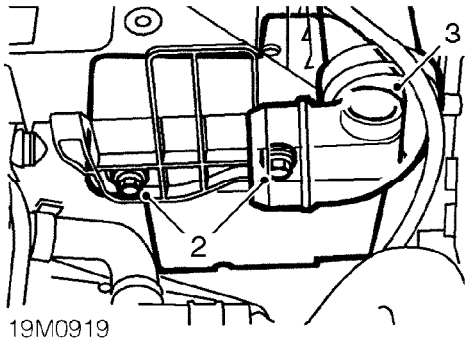

2. Remove 2 bolts securing resonator to battery tray.
3. Release resonator from air intake pipe and remove.

Refit

1. Fit resonator and connect to air intake pipe.
2. Fit bolts securing resonator to battery tray and tighten to 9 Nm.
3. Fit air cleaner. ***See this section.***

CONTENTS

Page

DESCRIPTION AND OPERATION

ENGINE COMPARTMENT COMPONENT LOCATIONS - WITHOUT INTERCOOLER 1
ENGINE COMPARTMENT COMPONENT LOCATIONS - WITH INTERCOOLER 2
PASSENGER COMPARTMENT COMPONENT LOCATIONS 3
ELECTRONIC DIESEL CONTROL OPERATION 4

ADJUSTMENTS

THROTTLE CABLE - MODELS WITHOUT INTERCOOLER 1
THROTTLE CABLE - MODELS WITH INTERCOOLER 1

REPAIRS

AIR CLEANER 1
AIR CLEANER ELEMENT 2
THROTTLE CABLE - MODELS WITHOUT INTERCOOLER 2
THROTTLE CABLE - MODELS WITH INTERCOOLER 4
MASS AIR FLOW (MAF) SENSOR 5
AIR INTAKE PIPE 5
ENGINE CONTROL MODULE (ECM) - ROVER 6
ENGINE CONTROL MODULE (ECM) - BOSCH 6
FUEL SHUT-OFF SOLENOID 7
INTAKE AIR TEMPERATURE (IAT) SENSOR 8
ENGINE COOLANT TEMPERATURE (ECT) SENSOR 9
CRANKSHAFT POSITION (CKP) SENSOR 10
THROTTLE POSITION (TP) SENSOR - MODELS WITH INTERCOOLER 10
MANIFOLD ABSOLUTE PRESSURE (MAP) SENSOR 11
ENGINE MANAGEMENT RELAY MODULE 11
INJECTOR NEEDLE LIFT SENSOR 12
FUEL INJECTION PUMP (FIP) - MODELS WITHOUT INTERCOOLER 13
FUEL INJECTION PUMP (FIP) - MODELS WITH INTERCOOLER 18
TURBOCHARGER - MODELS WITHOUT INTERCOOLER 22
TURBOCHARGER - MODELS WITH INTERCOOLER 24
INTERCOOLER - MODELS WITHOUT AIR CONDITIONING 26
INTERCOOLER - MODELS WITH AIR CONDITIONING 26
INJECTOR - MODELS WITHOUT INTERCOOLER 27
INJECTOR - MODELS WITH INTERCOOLER 29
GLOW PLUGS 30

ENGINE COMPARTMENT COMPONENT LOCATIONS - WITHOUT INTERCOOLER

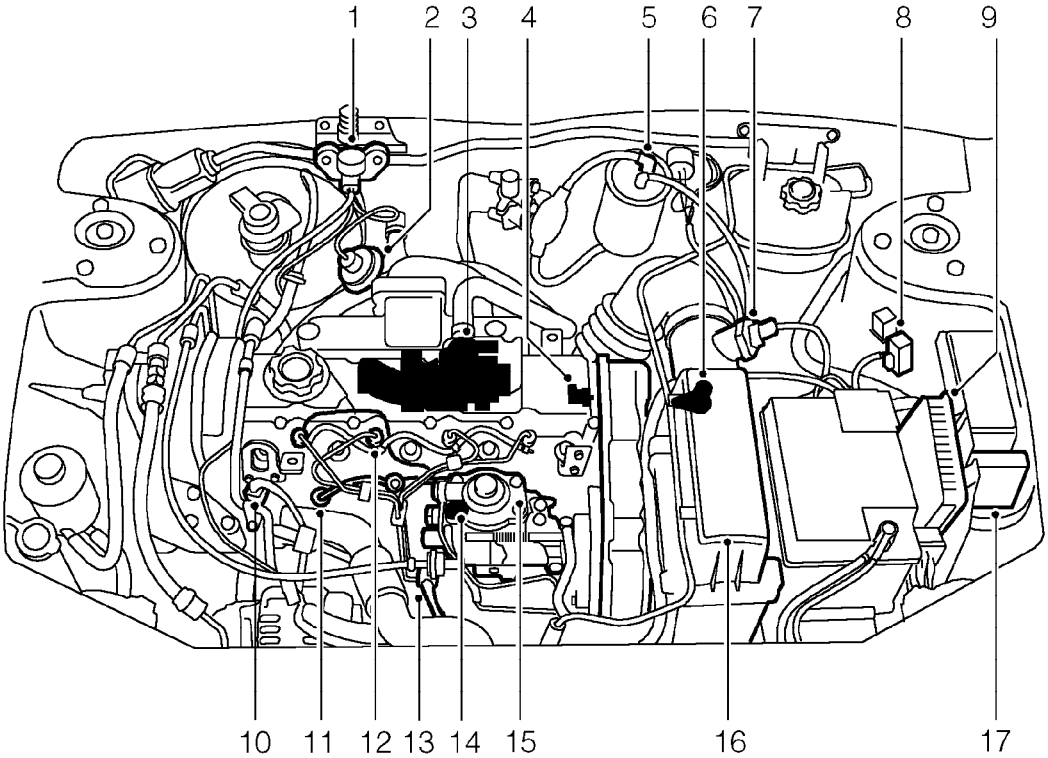

18M0171

1. EGR solenoid
2. EGR valve
3. Turbocharger
4. Crankshaft position sensor
5. Fuel filter
6. Vehicle speed sensor
7. Mass air flow sensor
8. Glow plug relay
9. ECM
10. Engine coolant temperature sensor
11. Glow plugs
12. Injectors
13. Needle lift sensor
14. Fuel shut-off solenoid
15. Fuel injection pump (mechanical)
16. Air cleaner
17. Relay module
    - main relay
    - starter relay
    - fuel shut-off relay

ENGINE COMPARTMENT COMPONENT LOCATIONS - WITH INTERCOOLER

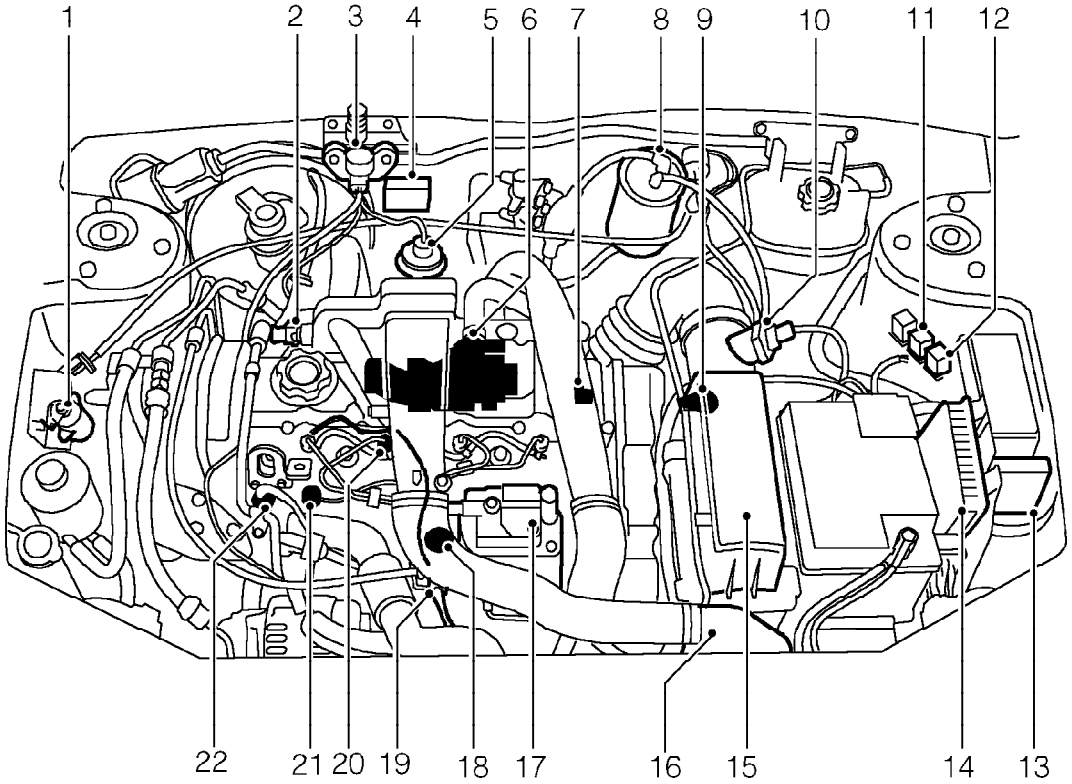

18M0136

1. Throttle position sensor
2. Intake air temperature sensor
3. EGR solenoid
4. Manifold absolute pressure sensor
5. EGR valve
6. Turbocharger
7. Crankshaft position sensor
8. Fuel filter
9. Vehicle speed sensor
10. Mass air flow sensor
11. Glow plug relay
12. Main relay
13. Relay module
    - starter relay
    - fuel shut-off relay
14. ECM
15. Air cleaner
16. Intercooler
17. Fuel injection pump (electronic)
18. Fuel shut-off solenoid
19. Needle lift sensor
20. Injectors
21. Glow plugs
22. Coolant temperature sensor

PASSENGER COMPARTMENT COMPONENT LOCATIONS

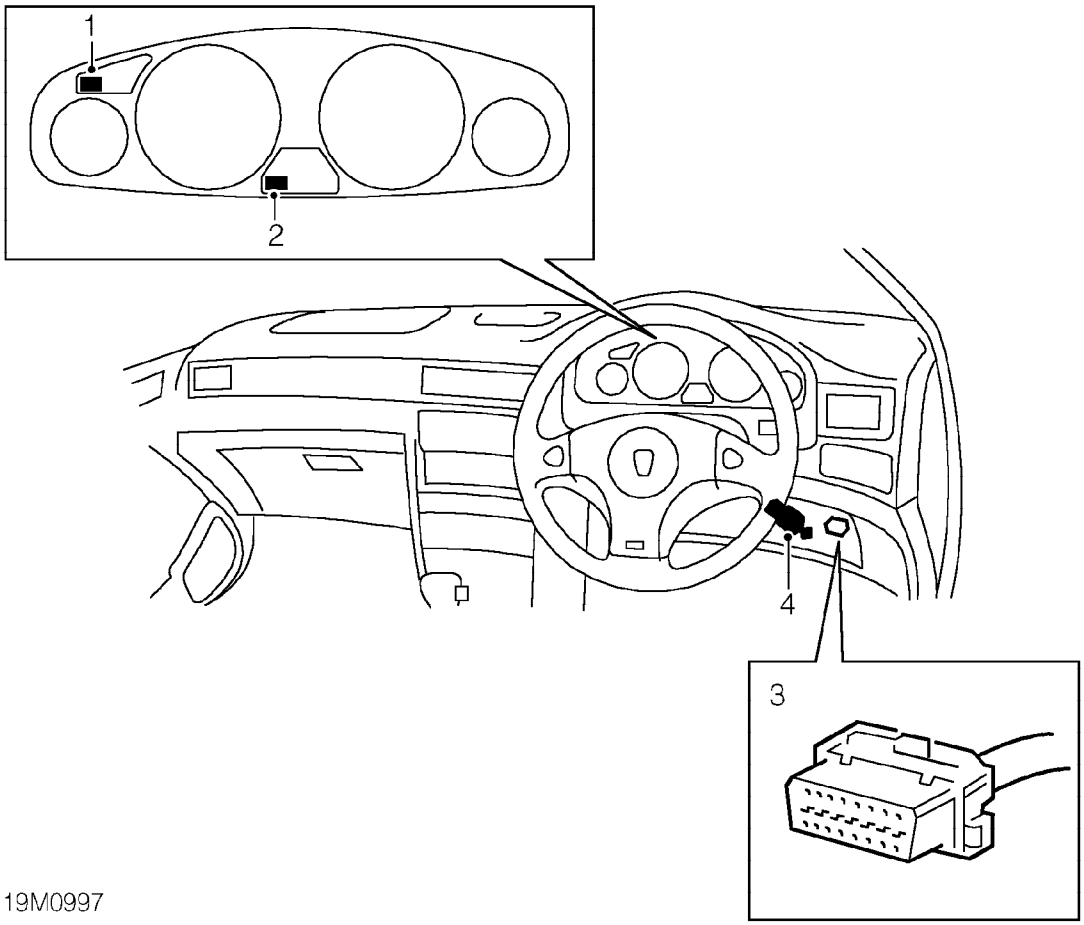

1. Glow plug warning lamp
2. Malfunction indicator lamp
3. Brake pedal switch (intercooler model)
4. Diagnostic connector

ELECTRONIC DIESEL CONTROL OPERATION

Diesel engines operate by compression ignition. The rapid compression of air in the cylinder during the compression cycle heats the injected fuel causing it to self ignite. During cold starting, automatically controlled glow plugs assist in raising the temperature of the compressed air to ignition point.

The Engine Control Module (ECM) monitors the conditions required for optimum combustion of fuel in the cylinder through sensors located at strategic points around the engine. Dependent on the inputs from these sensors, the engine control module can adjust the fuel quantity and timing of the fuel being delivered to the cylinder.

NOTE: Models fitted with an intercooler are controlled by a Bosch ECM and models without an intercooler are controlled by a Rover ECM.

The main features are as follows:

- The ECM controls the fuel injection quantity and timing of the fuel delivered to the cylinder based on inputs from sensors located around the engine. The ECM incorporates short circuit protection and can store intermittent faults on certain inputs. TestBook can interrogate the ECM for these stored faults.
- The engine management system is a 'Drive by Wire' system for models fitted with an intercooler. The throttle pedal is not physically connected to the fuel injection pump, but instead connected by a linkage to a remotely mounted throttle position sensor which provides the ECM with a signal proportional to throttle pedal movement. The ECM then adjusts the fuel injection pump to deliver the required amount of fuel.
- In conjunction with the throttle position sensor the ECM uses the speed/density method of air flow measurement to calculate fuel delivery. This method measures the inlet air temperature and inlet manifold pressure and assumes that the engine is a calibrated vacuum pump, with its characteristics stored in the ECM, it can determine the correct amount of fuel to be injected.
- If certain system inputs fail, the ECM implements a back-up facility to enable the system to continue functioning, although at a reduced level of performance.
- A separate diagnostic connector allows engine tuning or fault diagnosis to be carried out using TestBook without disconnecting the ECM harness multiplug.
- The ECM harness multiplug incorporates specially plated pins to minimise oxidation and give improved reliability.

The ECU inputs and outputs are shown in the following table.

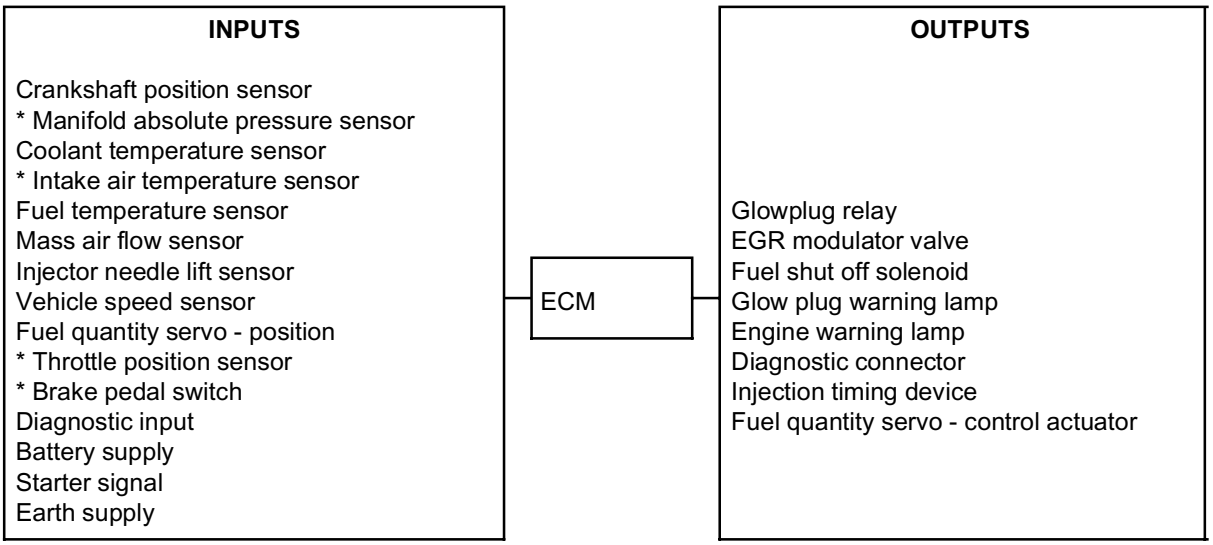

* Intercooler models

Fuel injection timing

The engine control module determines the optimum fuel injection timing for the injection pump based on the signals it receives from the following sensors:

1. Crankshaft position sensor - Engine speed and crankshaft position
2. Needle lift sensor - Start of injection
3. Coolant temperature sensor - Engine temperature
4. *Manifold absolute pressure - Engine load
5. *Intake air temperature sensor

* Intercooler models

Basic fuel injection timing

Crankshaft position sensor

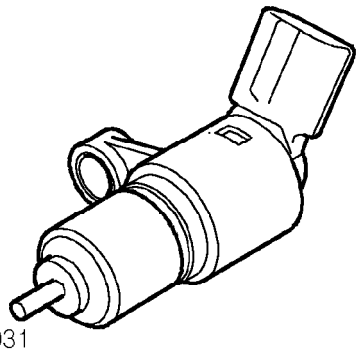

19M2031

The speed and position of the engine is detected by the crankshaft position sensor (CKP) which is bolted to, and projects through, the gearbox adaptor plate adjacent to the flywheel.

The CKP is an inductive sensor consisting of a bracket mounted body containing a coil and a permanent magnet which provides a magnetic field. The sensor is situated such that an air gap exists between it and the flywheel. Air gap distance is critical for correct operation.

The flywheel has four poles positioned equally around the crankshaft circumference at 90 degree intervals. When the flywheel rotates, as a pole passes the sensor it disturbs the magnetic field inducing a voltage pulse in the coil. This pulse is transmitted to the engine control module.

Four pulses are transmitted to the engine control module for each revolution of the flywheel. By calculating the number of pulses that occur within a given time, the engine control module can determine the engine speed. The output from this sensor when used in conjunction with that from the needle lift sensor is used for idle stabilisation and reference for injection timing.

Needle lift sensor

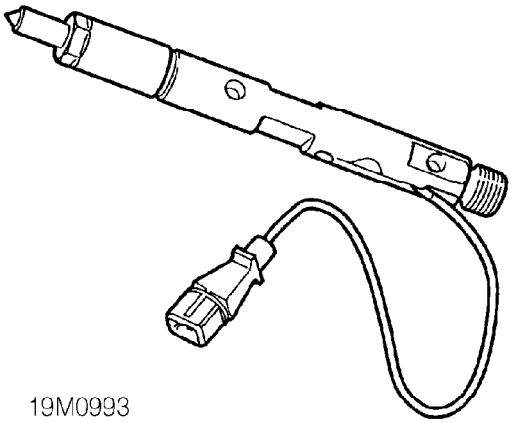

19M0993

The needle lift sensor consists of a coil which surrounds the shaft of an extended injection needle. The coil is fed a DC supply from the control unit which produces a magnetic field.

When the needle is moved under the influence of fuel pressure, the magnetic field is disturbed which induces an ac voltage in the coil. The induced voltage is registered in the engine control module as a reference point for the start of the injection sequence.

The engine control module uses the input signals from the needle lift sensor, together with the signal from the CKP sensor, to detect the actual start of injection. The engine control module, using inputs from the other sensors, calculates then adjusts the injection timing of the fuel pump to achieve optimum fuelling of the engine.

Fuel injection timing compensation

Engine coolant temperature sensor

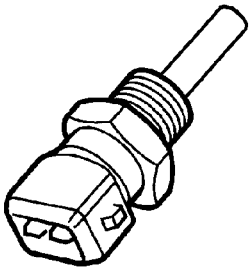

19M0985

The engine coolant temperature sensor is a 'thermistor' (a temperature dependent resistor), i.e. the voltage output varies in proportion to temperature. The sensor is located in the top of the coolant outlet elbow. The engine control module constantly monitors the signal and uses the information to correct the quantity of fuel injected and the injection timing especially during cold starting. During starting, output from the sensor determines how long the glow plugs are on.

Intake air temperature sensor - Bosch ECM only

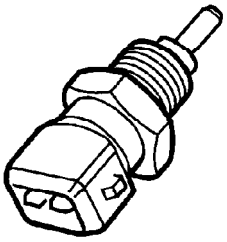

19M0981

The intake air temperature sensor is located in the side of the inlet manifold. This sensor is of the negative temperature coefficient (NTC) type, designed to reduce its resistance with increasing temperature. The engine control module receives a signal proportional to the temperature of the intake air. When used in conjunction with the signal from the manifold absolute pressure sensor the engine control module can calculate the volume of oxygen in the air and adjust the quantity of fuel being injected to achieve optimum fuelling of the engine.

Manifold absolute pressure sensor - Bosch ECM only

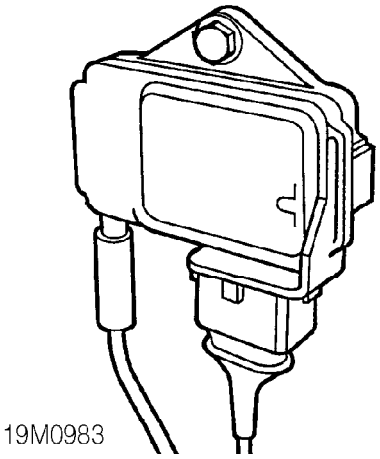

The pressure of the intake air is monitored by a strain gauge type sensor located on the bulkhead and connected, via a pressure tube, to the intake side of the turbocharger. The sensor is connected electrically to the engine control module.

The sensor comprises of a plastic body containing a pressure detection chamber. The pressure detection chamber consists of four individual sensors made from glass panels with silicon diaphragms. The silicon diaphragms contain resistors which are bonded to the glass panels forming an enclosed vacuum.

When the intake air pressure changes, pressure in the detection chamber causes the diaphragms to deflect. The deflection of the diaphragms alters the length of each resistor, changing their resistance. This change in resistance is converted into a signal within the pressure sensor. The change in output from the pressure sensor is detected by the engine control module where it is converted into a pressure value.

Manifold absolute pressure when used in conjunction with the signal from the intake air temperature sensor allows the engine control module to accurately calculate the volume of oxygen in the air and adjust the quantity of fuel being injected to achieve optimum fuelling of the engine.

Vehicle speed sensor

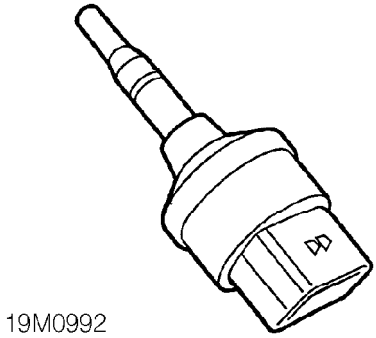

The vehicle speed sensor is located on the top of the differential housing. The vehicle speed sensor is driven by a shaft from the final drive gear where it is converted into an electrical signal proportional to road speed. The output from the vehicle speed sensor is used to drive the instrument pack speedometer in addition to providing a signal to the engine control module. The engine control module uses this signal to provide active surge damping and adjust idle stabilisation and the quantity of fuel being delivered to injectors.

Throttle position sensor - Bosch ECM only

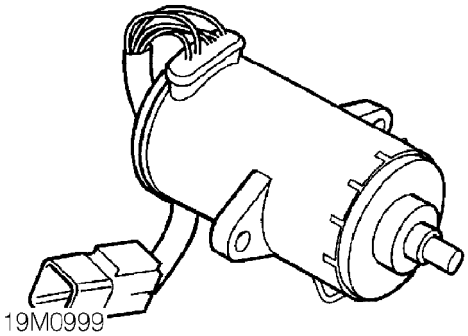

The throttle pedal is not physically connected to the fuel injection pump by a mechanical linkage as in a traditional injection system, but instead the amount of fuel injected is controlled by the control unit. The throttle pedal is connected by a linkage to a throttle position sensor. Movements of the throttle pedal are sensed by the throttle position sensor and a signal sent to the engine control module.

The throttle position sensor consists of a thick film potentiometer together with a sender switch. With the throttle pedal at rest the switch is open. When the throttle pedal has been moved enough to rotate the potentiometer more than 9 degrees the switch closes. The sender switch signal from the potentiometer is used by the engine control module to check the operation of the circuit, implement idle speed control and over-run fuel shut-off.

When the potentiometer is moved the sender switch signals a logic input to the engine control module. The engine control module then checks the voltage signal from the potentiometer. This voltage is compared with a pre-programmed value to check the potentiometer is working correctly.

Throttle pedal movement causes voltage across the potentiometer to vary. The control unit calculates the rate of change of the voltage signal in positive (acceleration) or negative (deceleration) directions. From this the engine control module can determine the required engine speed, rate of acceleration or rate of deceleration and apply acceleration enrichment, deceleration fuel metering or over-run fuel cut-off.

The engine control module calculates the 'maximum allowable fuel quantity' from the input signal according to strategies such as smoke limitation, active surge damping, fuel reduction to calculate the final figure. If the signal from the throttle potentiometer is smaller than the maximum allowable quantity then the requested quantity will be injected. However, if the requested quantity is greater than the maximum allowable quantity, then the maximum allowable quantity will be injected rather than that demanded.

Brake pedal switch - Bosch ECM only

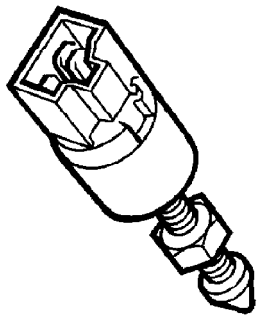

The brake pedal switch informs the engine control module when the vehicle is braking and allows it to implement active surge damping and over-run fuel cut-off.

The engine control module has two brake inputs, each of opposite polarity. Comparison of the two polarity states provides the engine control module with brake sense. If both switches are the same polarity the engine control module senses a fault.

NOTE: Failure to correctly adjust the switch could affect the fuel information supplied by the ECM.

Glow plug relay

When the starter switch is turned to position 'II' the engine control module energises the glow plug relay and illuminates the glow plug warning light in the fascia. The glow plug relay supplies a current from the battery to the three glow plugs (there is no glow plug in No. 4 cylinder) to assist cold starting by raising the temperature of the compressed air in the cylinder to ignition point.

Glow plug

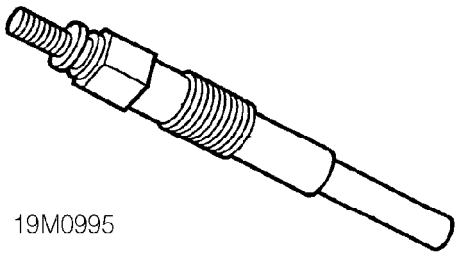

The length of time the glow plugs will remain operational is dependent upon the initial engine temperature determined by the engine control module from the coolant temperature sensor. Once the glow plugs have operated for their pre-determined time the control unit will remove the supply from the glow plug relay and extinguish the glow plug warning light on the fascia.

If an attempt to start the engine is made before the glow plugs have finished operating the engine control module will remove the supply from the glow plug relay, switching off the glow plugs.

Mass air flow sensor

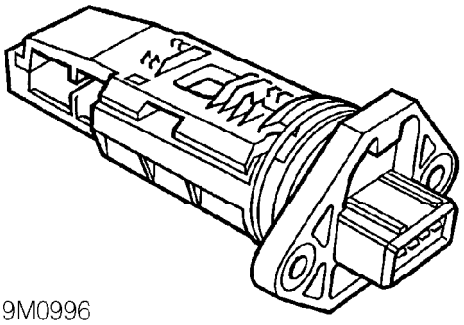

The mass air flow is determined from the cooling effect of inlet air flowing over a hot film sensor. This signal is fed back to the engine control module where it is used to monitor the recirculation of exhaust gases. Increase in the exhaust gas recirculation reduces the amount of intake air being drawn into the system, thereby reducing the cooling effect of hot film resistor.

Diagnostic connector

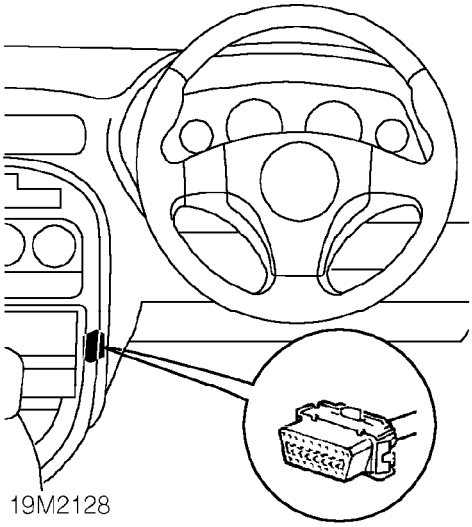

The diagnostic connector is located on a bracket behind the centre console and allows engine tuning or fault diagnosis via TestBook to be carried out without disturbing the system electrical connections. It utilises the ability of the engine control module to store certain faults.

Malfunction indicator lamp

The engine control module has a built in self-diagnosis function. If a fault is detected the malfunction indicator lamp (MIL) in the instrument pack will illuminate, and the control module will implement a back-up facility to enable the system to continue functioning, though at a reduced level of performance. If a serious fault is detected the warning light will illuminate and the engine management system will shut down preventing the car from being started or driven.

The MIL will remain illuminated until the starter switch is turned off. If the fault is still present when the starter switch is turned back on the MIL will illuminate. If the fault is not present when the starter switch is turned on, the MIL will remain extinguished, but a fault code will be stored in the memory of the engine control module.

FUEL SYSTEM

Fuel injection pump (electronic)

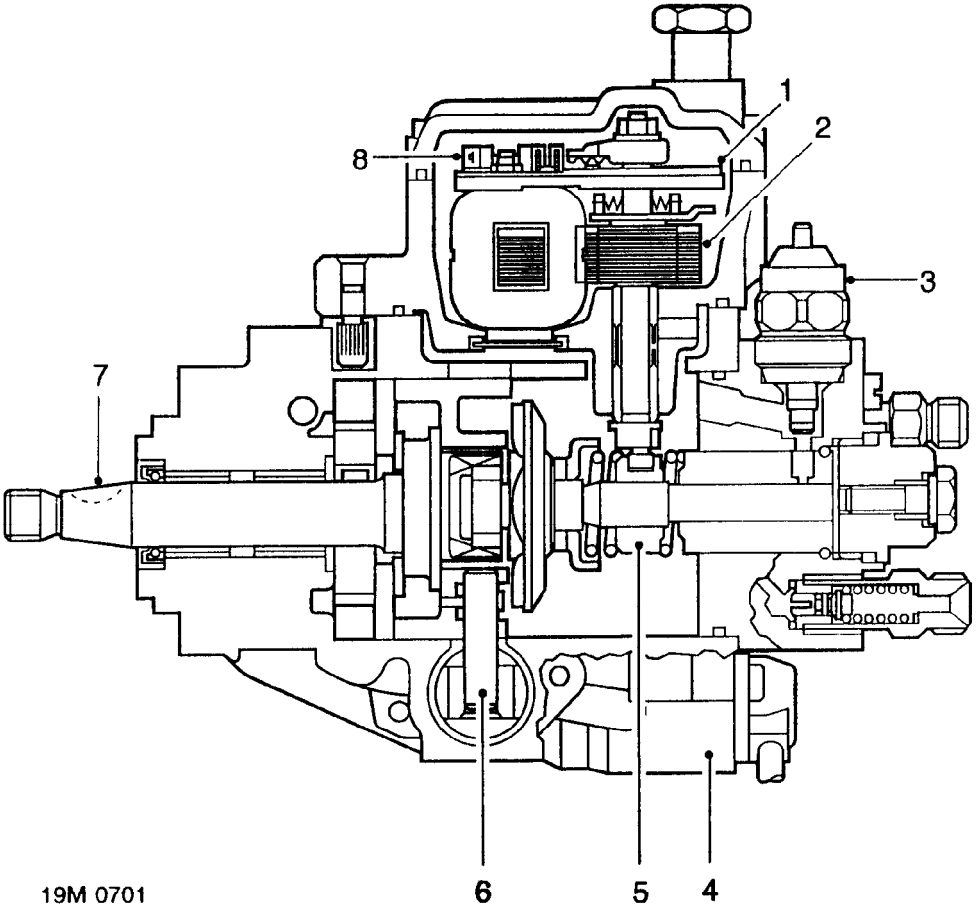

1. Fuel quantity servo potentiometer
2. Fuel quantity servo control unit
3. Fuel shut off solenoid
4. Injection timing device solenoid valve
5. Control spool
6. Injection timing device
7. Injection pump drive shaft
8. Fuel temperature sensor

The fuel injection pump is a vane-type pump, which is belt driven from the rear end of the camshaft. Fuel delivery from the pump to the injectors is regulated by the movement of a control spool. Movement of the control spool increases or decreases the fuel delivery rate to meet engine operating requirements.

The pump houses the following components which either provide feed back to the engine control module or are controlled by the engine control module:

Fuel temperature sensor

Fuel temperature is monitored by a sensor located in the fuel injection pump. This sensor is of the negative temperature coefficient (NTC) type, designed to reduce its resistance with increasing temperature. The sensor is connected to earth and to a precision resistor inside the engine control module. A small current is fed through the precision resistor.

When the system is operating the engine control module regularly checks the sensor voltage. This is converted to a digital word that can be read by the microprocessor and converted to a temperature reading. As fuel density varies with temperature, the information received is used to calculate the correct quantity of fuel to inject.

Quantity servo control unit

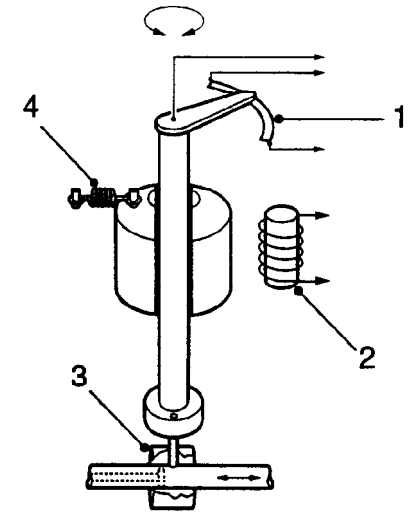

19M 0708

The servo control unit is used to accurately control the amount of fuel delivered to the injectors. The unit consists of a rotary magnet mounted on an eccentric shaft; the shaft engages with the control spool (3) of the pump. The rotary magnet is fitted with a return spring (4) and moves under the influence of a control coil (2). The magnet rotates through an arc of about 60 degrees moving the control spool from the closed position to the maximum fuel delivery position. The eccentric shaft engages with the control spool at one end, while the opposite end operates a rotary potentiometer (1).

When the control coil is energised the rotary magnet and eccentric shaft move against spring pressure. Rotary movement of the eccentric shaft is converted into linear movement of the control spool. This allows more fuel to be delivered to the injectors.

When the control coil is de-energised the return spring causes the rotary magnet and eccentric shaft to resume their original position. The control spool is moved to the closed position.

Quantity servo potentiometer

Mounted at the top of the servo control unit is a rotary potentiometer. As the eccentric shaft of the servo control unit moves, the wiper of the potentiometer is moved across the resistive part of the potentiometer. The voltage output from the potentiometer is proportional to the position of the control spool. From this input the engine control module can calculate the quantity of fuel being delivered by the pump and adjust the amount of fuel being delivered by energising the control coil to move the control spool.

Injection timing device

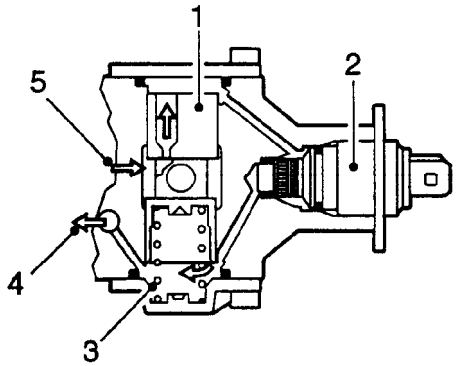

19M 0707

1. Plunger
2. Solenoid
3. Spring
4. Pump feed pressure
5. Pump internal pressure

The injection timing device consists of a spring loaded plunger and a solenoid. The spring loaded plunger acts against a cam plate driven by the injection pump shaft.The spring loaded plunger moves under the influence of pump working pressure.

The injection timing solenoid is responsible for the characteristic 'buzzing' sound when the ignition is turned on. The solenoid operates at 50 Hz and by varying the operating frequency the engine control module alters the fuel pressure on the plunger, moving it against spring tension. By moving the plunger against the spring, the height of the plunger acting against the cam plate is changed, retarding the ignition. Injection timing is fully advanced with the solenoid de-energised.

The engine control module receives a feedback signal from the needle lift sensor and will attempt to correct the injection timing accordingly by altering the signal to the solenoid. If a change does not occur or differs by a substantial amount the engine control module will assume a fault exists and reduce the amount of fuel injected.

Fuel shut-off solenoid

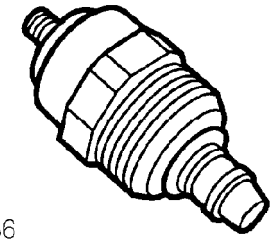
19M0986

The fuel shut-off solenoid is located in the high pressure section of the injection pump. When the ignition is switched on the engine control module sends a signal to the solenoid. The solenoid energises opening a valve allowing fuel to flow.

When the ignition is switched off, or in the event of a serious engine problem, the control unit will remove the supply to the solenoid, closing the valve and shutting off the fuel supply to the injectors.

AIR INTAKE SYSTEM (with intercooler fitted)

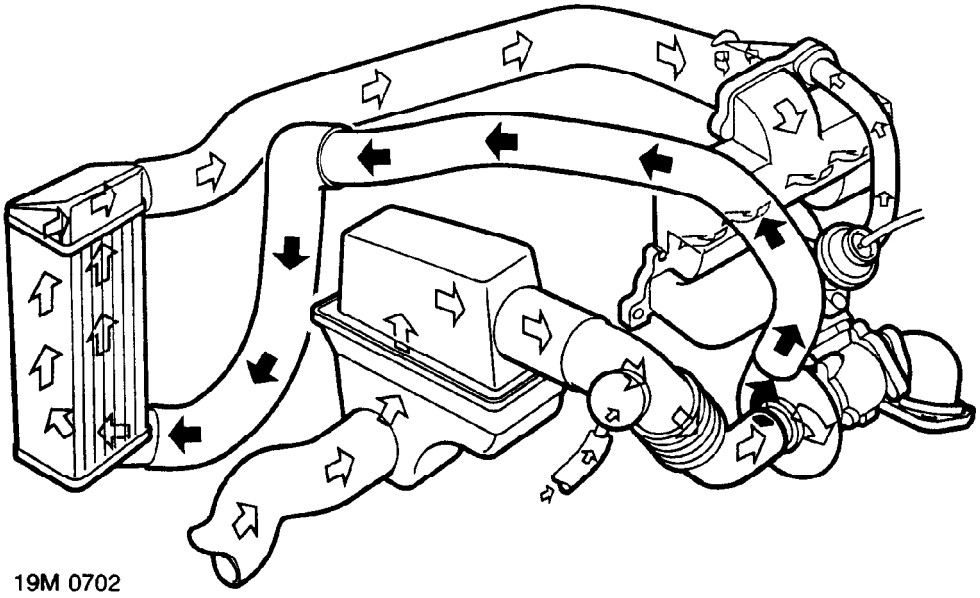

The engine is supplied with pre-compressed air by a single stage turbocharger.

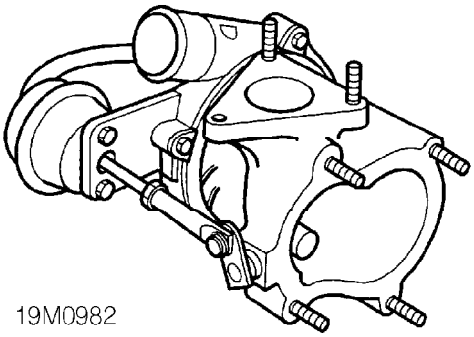

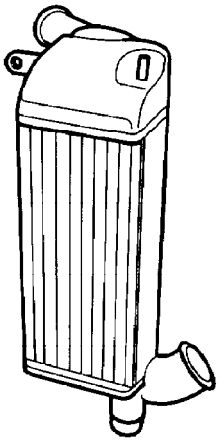

With the engine running, exhaust gases pass into the turbine side of the turbocharger causing the turbine to rotate, driving a compressor mounted on the turbine shaft in the intake side of the turbocharger.

Intake air is drawn through the air cleaner to the turbocharger, where it is compressed by the compressor. The compressed air is then fed into the inlet manifold via an intercooler (Bosch ECM only), which reduces the temperature of the compressed air, increasing its density.

Boost control

Boost control is achieved by a pneumatic actuator operating a mechanical flap situated in the turbocharger which, when operated, allows exhaust gases to bypass the turbine side of the turbocharger, so decreasing the rotational speed of the turbine thereby reducing the pressure of the intake air.

The pneumatic actuator consists of a diaphragm connected to a mechanical linkage which is opposed by an internal spring. Pressure from the compressor side of the turbocharger is applied to the pneumatic actuator via a sensing pipe. The pressure acting on the pneumatic actuator diaphragm builds up until it exceeds the opposing force of the internal spring (approx. 1.2 Bar) causing the mechanical linkage to move, thereby opening the flap on the turbocharger and so reducing the boost pressure. As boost pressure is reduced the mechanical linkage will move the other way closing the flap on the turbocharger allowing the pressure to increase again. With the engine under load the pneumatic actuator will be constantly opening and closing the flap on the turbocharger.

THROTTLE CABLE - MODELS WITHOUT INTERCOOLER

Service repair no - 19.20.05

Check

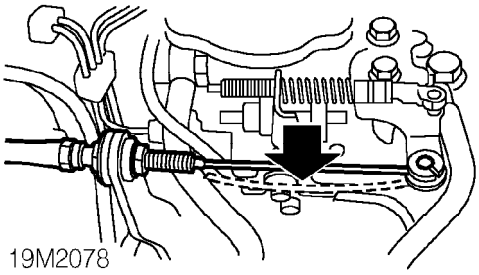

1. With throttle lever resting on its stop screw, the correct amount of cable free play is equivalent to a 4 mm deflection in the cable.

Adjust

1. Loosen locknut and tighten/loosen adjusting nut until correct free play is obtained.Tighten locknut.
2. Depress throttle pedal fully.
3. Check throttle lever contacts maximum speed stop screw.
4. Release pedal and check throttle lever returns fully.

THROTTLE CABLE - MODELS WITH INTERCOOLER

Service repair no - 19.20.05

NOTE: Before adjusting cable, ensure that cable is correctly routed and located.

Adjust

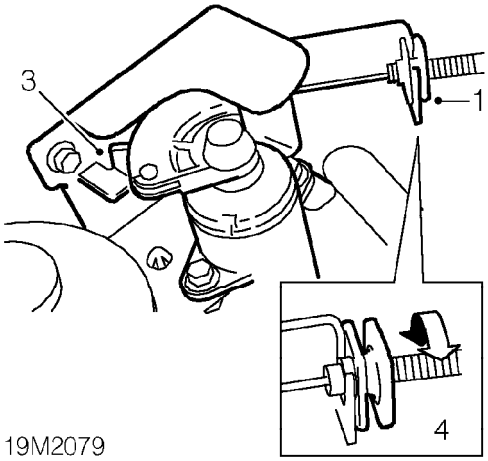

1. Release cable adjusting nut from abutment bracket.
2. Position outer cable to abutment bracket so that adjusting nut contacts top of the abutment bracket.
3. Hold throttle cam in fully closed position, ensure throttle cam contacts its stop.
4. Rotate cable adjusting nut until all slack is taken out of inner cable. Ensure throttle does not open.
5. Locate throttle cable adjusting nut in abutment bracket.
6. Operate throttle pedal and ensure that full throttle pedal movement is available.

AIR CLEANER

Service repair no - 19.10.01

Remove

1. Remove battery. ***See ELECTRICAL, Repairs.***

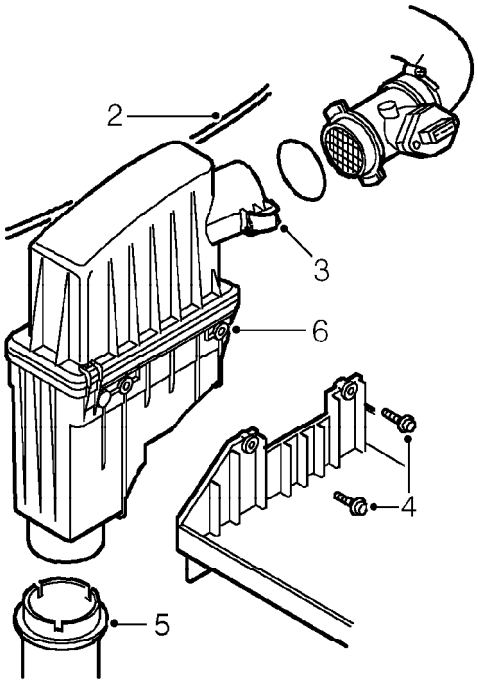

19M2076

2. Release coolant pipe from clips on air cleaner housing.
3. Release 2 clips and disconnect MAF sensor from air cleaner.
4. Remove 2 bolts securing air cleaner to battery tray.
5. Release air intake hose from bottom of air cleaner.
6. Remove air cleaner.

Refit

1. Connect air intake hose to bottom of air cleaner.
2. Position air cleaner to battery tray and secure with bolts.

NOTE: Ensure bottom of air cleaner is located on peg.

3. Connect MAF sensor and secure with clips.
4. Secure coolant pipe to clips on air cleaner.
5. Fit battery. ***See ELECTRICAL, Repairs.***

AIR CLEANER ELEMENT

Service repair no - 19.10.10

Remove

1. Release coolant pipe from clips on air cleaner.

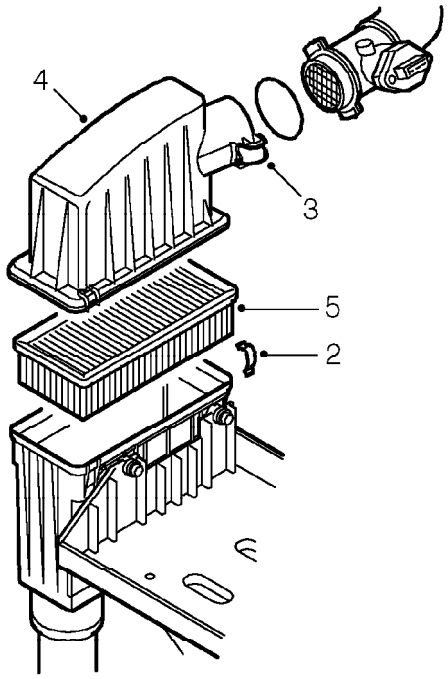

19M2077

2. Release 4 clips securing 2 halves of air cleaner.
3. Release 2 clips securing top half of air cleaner to MAF sensor.
4. Release top half of air cleaner and position aside.
5. Remove and discard air cleaner element.

Refit

1. Clean inside of air cleaner casing.
2. Fit new air cleaner element in casing.
3. Position top half of air cleaner casing and secure with clips.
4. Secure air cleaner to MAF sensor with clips.
5. Secure coolant pipe to clips on air cleaner.

THROTTLE CABLE - MODELS WITHOUT INTERCOOLER

Service repair no - 19.20.06

Remove

1. Remove engine acoustic cover. ***See BODY, Exterior fittings.***

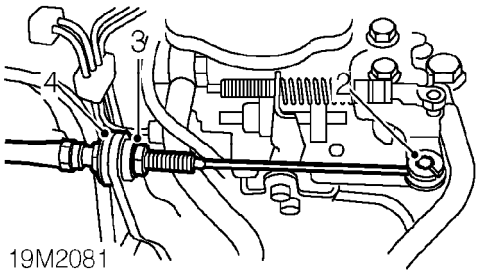

19M2081

2. Release throttle cable from throttle lever.
3. Loosen nut securing throttle cable to abutment bracket.
4. Release throttle cable from abutment bracket.
5. Release throttle cable from clip.

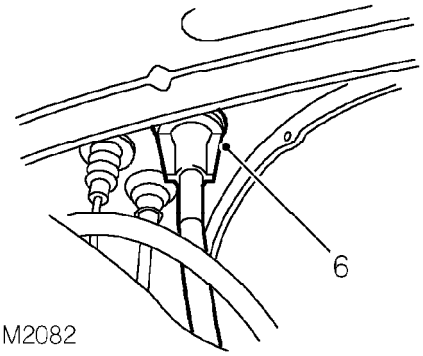

19M2082

6. Rotate collar through 90° and release cable from bulkhead.

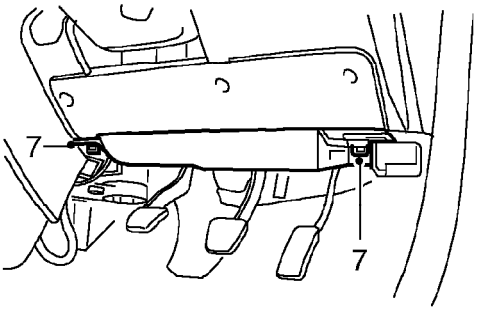

19M2083

7. Release 2 turnbuckles and remove closing panel.

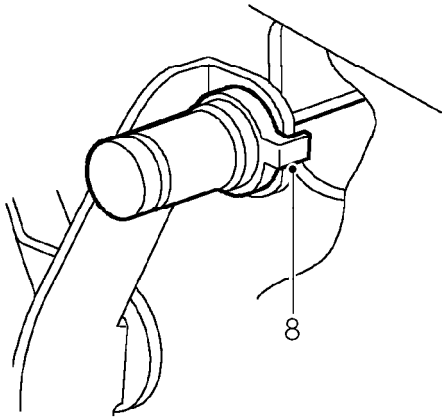

19M2084

8. Depress nylon clips and disconnect throttle cable from pedal.
9. Remove throttle cable.

Refit

1. Feed new cable through bulkhead and connect inner cable to pedal.
2. Fit closing panel and secure with turnbuckles.
3. Smear rubber grease on both sides of the rubber seal and secure cable to bulkhead.
4. Refit throttle cable to clip.
5. Route throttle cable through abutment bracket and connect to throttle lever.
6. Tighten nut securing throttle cable to abutment bracket.
7. Adjust throttle cable. ***See Adjustments.***
8. Fit engine acoustic cover. ***See BODY, Exterior fittings.***

THROTTLE CABLE - MODELS WITH INTERCOOLER

Service repair no - 19.20.06

Remove

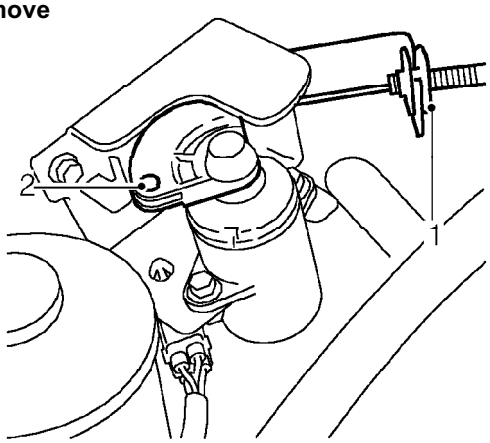

19M2085

1. Release cable adjusting nut from abutment bracket.
2. Release inner cable from cam on TP sensor.

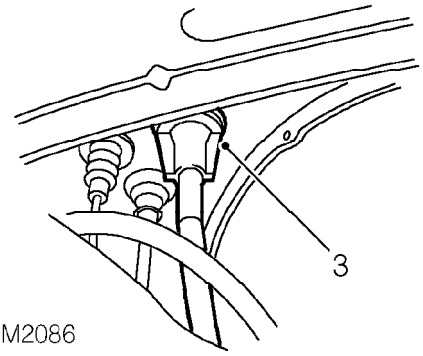

19M2086

3. Rotate collar through 90° and release cable from bulkhead.

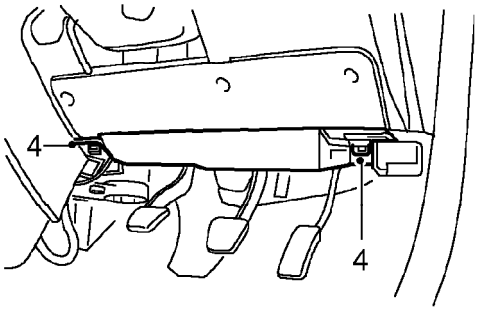

19M2087

4. Release 2 turnbuckles and remove closing panel.

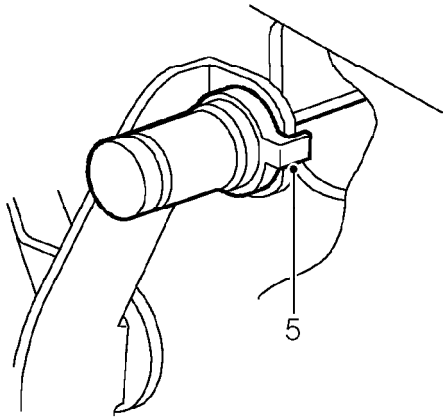

19M2088

5. Depress nylon clips and disconnect throttle cable from pedal.
6. Remove throttle cable.

Refit

1. Feed cable through bulkhead and connect inner cable to pedal.
2. Fit closing panel and secure with turnbuckles.
3. Smear rubber grease of both sides of the rubber seal and secure cable to bulkhead.
4. Connect throttle cable to cam on TP sensor.
5. Connect cable adjusting nut to abutment bracket.
6. Adjust throttle cable. ***See Adjustments.***

MASS AIR FLOW (MAF) SENSOR

Service repair no - 19.22.25

Remove

1. Disconnect battery earth lead.

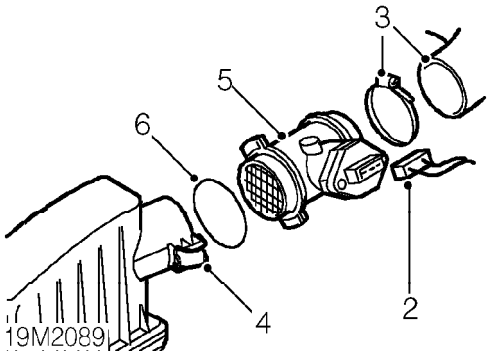

2. Release clip and disconnect multiplug from MAF sensor.
3. Loosen clip securing air intake hose to MAF sensor and disconnect hose.
4. Release 2 clips securing MAF sensor to air cleaner.
5. Release MAF sensor from air cleaner.
6. Remove MAF sensor.
7. Remove and discard ’O’ ring.

Refit

1. Fit new ’O’ ring to MAF sensor.
2. Fit MAF sensor to air cleaner, secure with clips.
3. Connect intake hose to MAF sensor and tighten clip.
4. Connect multiplug to MAF sensor.
5. Connect battery earth lead.

AIR INTAKE PIPE

Service repair no - 19.42.28

Remove

1. Disconnect battery earth lead.

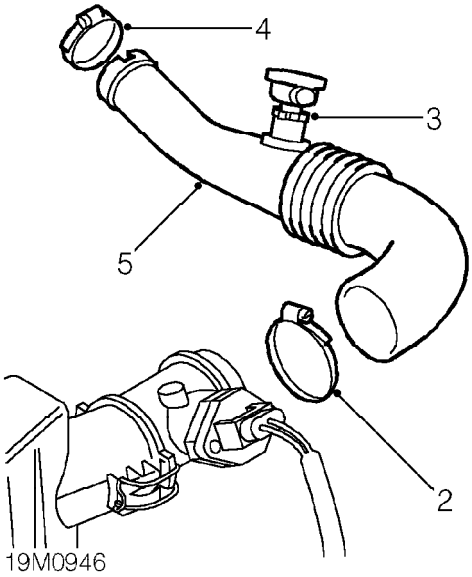

2. Loosen clip and disconnect pipe from MAF sensor.
3. Loosen clip and disconnect crankcase pressure limiter valve from pipe.
4. Loosen clip and disconnect pipe from turbocharger.
5. Remove air intake pipe.

Refit

1. Connect air intake pipe to turbocharger and tighten clip.
2. Connect pipe to MAF sensor and tighten clip.
3. Connect crankcase pressure limiter valve to and tighten clip.
4. Connect battery earth lead.

ENGINE CONTROL MODULE (ECM) - ROVER

Service repair no - 18.30.01

Remove

1. Disconnect battery earth lead.

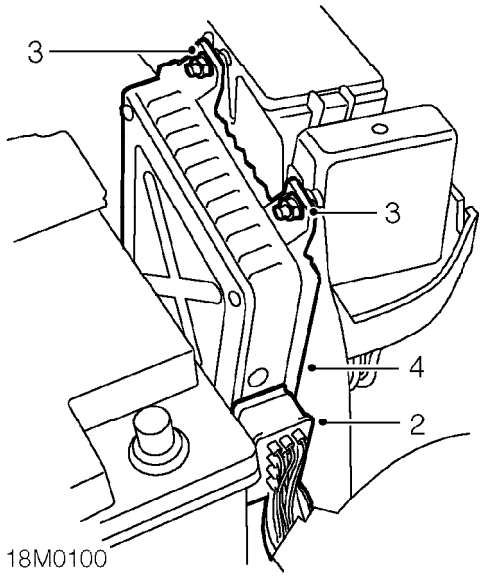

2. Disconnect multiplug from ECM.
3. Loosen 2 bolts securing ECM to mounting bracket.
4. Release and remove ECM.

Refit

1. Fit ECM to mounting bracket.
2. Tighten bolts securing ECM to mounting bracket to 4 Nm.
3. Connect multiplug to ECM.
4. Connect battery earth lead.

NOTE: If a new ECM has been fitted, the ECM will need to be programmed with the code from the anti-theft security unit using TestBook, before the engine can be started.

ENGINE CONTROL MODULE (ECM) - BOSCH

Service repair no - 18.30.01

Remove

1. Remove battery. ***See ELECTRICAL, Repairs.***

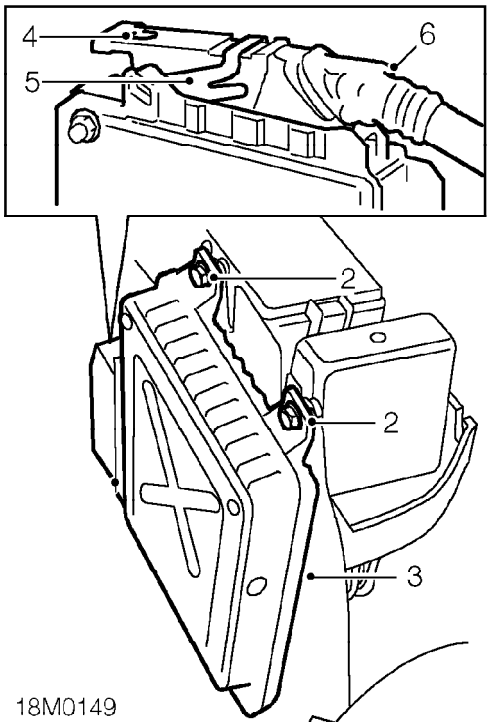

2. Loosen 2 bolts securing ECM to battery tray.
3. Release ECM from battery tray.
4. Remove screw securing multiplug to ECM.
5. Release metal clip securing multiplug to ECM.
6. Disconnect multiplug from ECM.

NOTE: Take care when disconnecting multiplug from ECM as it is possible to break the bridging piece which secures the multiplug to ECM.

7. Remove ECM.

Refit

1. Position ECM, connect multiplug and engage metal clip.
2. Fit and tighten ECM multiplug retaining screw.
3. Fit ECM to battery tray and tighten bolts to 4 Nm.
4. Fit battery. ***See ELECTRICAL, Repairs.***

NOTE: If a new ECM has been fitted, the ECM will need to be programmed with the code from the anti-theft security unit using TestBook, before the engine can be started.

FUEL SHUT-OFF SOLENOID

Service repair no - 18.30.07

Remove

1. Disconnect battery earth lead.
2. Remove engine acoustic cover. ***See BODY, Exterior fittings.***
3. Clean top of injection pump around solenoid.
4. Position absorbent cloth around solenoid to absorb fuel spillage.

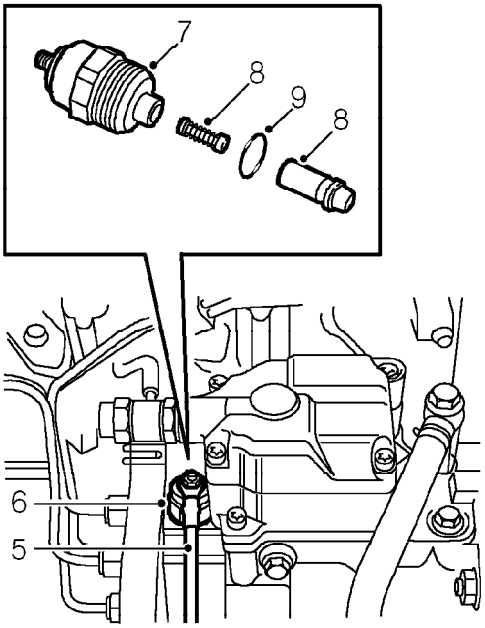

18M0102

5. Remove nut and disconnect lead from solenoid.
6. Using a 24 mm spanner, loosen fuel solenoid from injection pump.
7. Unscrew and remove solenoid.
8. Collect solenoid plunger and spring.
9. Remove and discard 'O' ring from solenoid.

Refit

1. Lubricate and fit new 'O' ring to fuel shut-off solenoid.
2. Clean solenoid plunger.
3. Fit spring and plunger to solenoid.
4. Fit solenoid to injection pump and tighten to 20 Nm.
5. Remove absorbent cloth.
6. Fit engine acoustic cover. ***See BODY, Exterior fittings.***
7. Connect battery earth lead.

INTAKE AIR TEMPERATURE (IAT) SENSOR

Service repair no - 18.30.09

Remove

1. Disconnect battery earth lead.
2. Remove engine acoustic cover. ***See BODY, Exterior fittings.***

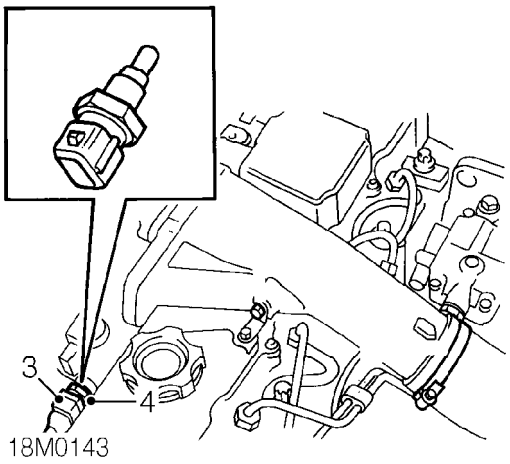

3. Disconnect multiplug from IAT sensor.
4. Remove IAT sensor.

Refit

1. Clean threads of IAT sensor and apply Loctite 577.
2. Fit sensor to inlet manifold and tighten to 12 Nm.
3. Connect multiplug to IAT sensor.
4. Fit engine acoustic cover. ***See BODY, Exterior fittings.***
5. Connect battery earth lead.

ENGINE COOLANT TEMPERATURE (ECT) SENSOR

Service repair no - 18.30.10

Remove

1. Remove engine acoustic cover. ***See BODY, Exterior fittings.***

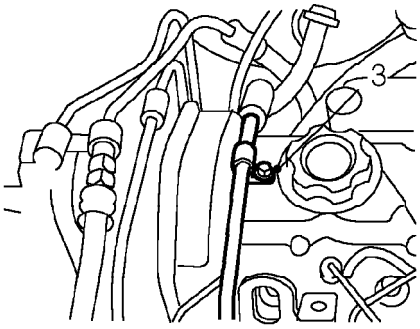

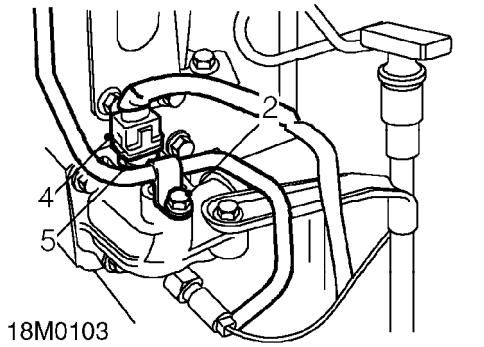

2. Remove bolt securing brake servo vacuum pipe to coolant outlet elbow.
3. Remove bolt securing vacuum pipe to camshaft cover and move pipe aside.
4. Disconnect multiplug from ECT sensor.
5. Position drain tray to collect any spillage.
6. Remove ECT sensor from coolant outlet elbow.

Refit

1. Apply Loctite 577 to threads of ECT sensor.
2. Fit ECT sensor to outlet elbow and tighten to 15 Nm.
3. Fit bolt securing brake servo vacuum pipe to camshaft cover and tighten to 10 Nm.
4. Fit bolt securing brake servo hose to coolant outlet elbow and tighten to 25 Nm.
5. Connect multiplug to ECT sensor.
6. Top-up cooling system. ***See MAINTENANCE.***
7. Fit engine acoustic cover. ***See BODY, Exterior fittings.***

CRANKSHAFT POSITION (CKP) SENSOR

Service repair no - 18.30.12

Remove

1. Disconnect battery earth lead.

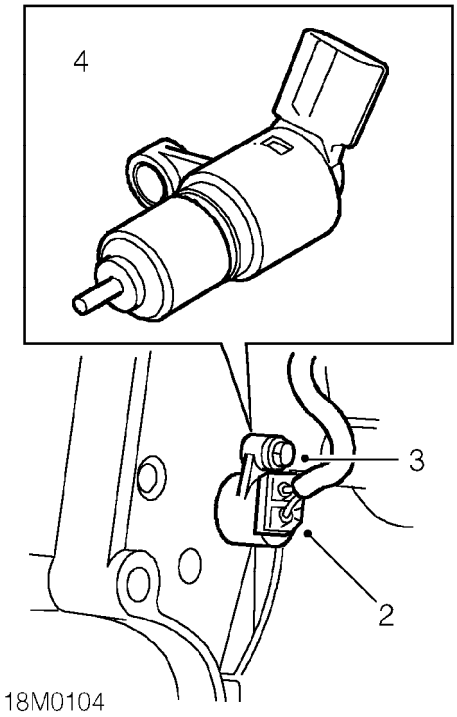

2. Disconnect multiplug from CKP sensor.
3. Remove bolt securing CKP sensor to gearbox adaptor plate.
4. Remove CKP sensor.

Refit

1. Clean CKP sensor and mating face of gearbox adaptor plate.
2. Fit CKP sensor, fit bolt and tighten to 6 Nm.
3. Connect multiplug to CKP sensor.
4. Connect battery earth lead.

THROTTLE POSITION (TP) SENSOR - MODELS WITH INTERCOOLER

Service repair no - 18.30.17

Remove

1. Disconnect battery earth lead.

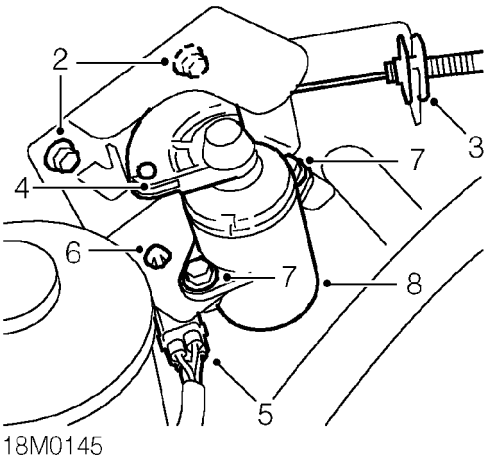

2. Remove 2 bolts securing TP sensor assembly to body.
3. Release throttle cable adjusting nut from abutment bracket.
4. Disconnect throttle cable from cam on TP sensor.
5. Disconnect engine harness from TP sensor.
6. Release TP sensor multiplug from clip on bracket.
7. Remove 2 bolts and nuts securing TP sensor to mounting bracket.
8. Remove TP sensor.

Refit

1. Position TP sensor to mounting bracket.
2. Fit 2 nuts and bolts securing TP sensor to mounting bracket and tighten to 4 Nm.
3. Secure TP sensor multiplug to clip on bracket.
4. Connect engine harness to TP sensor.
5. Connect throttle cable to cam on TP sensor.
6. Locate throttle cable adjusting nut in abutment bracket.
7. Position TP sensor assembly to body, fit bolts and tighten to 10 Nm.
8. Adjust throttle cable. ***See Adjustments.***
9. Connect battery earth lead.

MANIFOLD ABSOLUTE PRESSURE (MAP) SENSOR

Service repair no - 18.30.56

Remove

1. Disconnect battery earth lead.

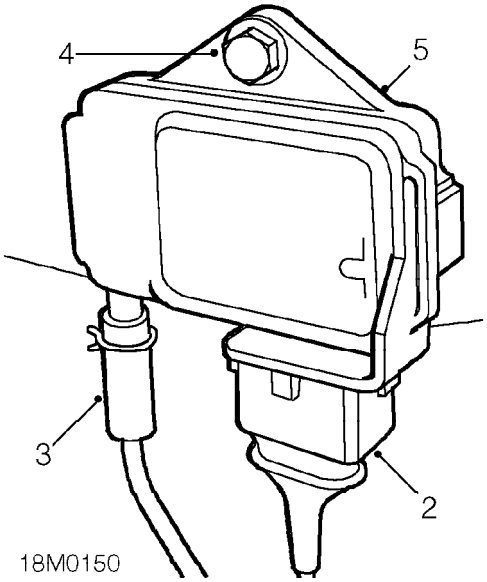

2. Disconnect multiplug from MAP sensor.
3. Release clip and disconnect boost pressure sensing pipe from MAP sensor.
4. Remove bolt securing MAP sensor to mounting bracket.
5. Remove MAP sensor.

Refit

1. Position MAP sensor to mounting bracket, fit bolt and tighten to 9 Nm.
2. Connect boost pressure sensing pipe to MAP sensor and secure with clip.
3. Connect multiplug to MAP sensor.
4. Connect battery earth lead.

ENGINE MANAGEMENT RELAY MODULE

Service repair no - 18.30.71

The engine management relay module contains the following relays:
Main relay
Starter relay
FIP relay

Remove

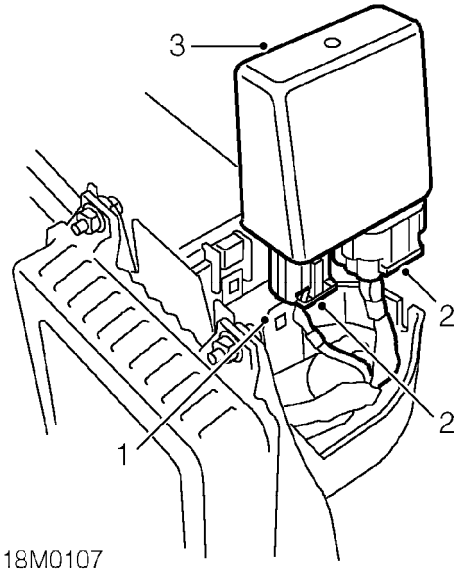

1. Release relay module from mounting bracket.
2. Disconnect 2 multiplugs from relay module.
3. Remove relay module.

Refit

1. Position relay module and connect 2 multiplugs. Ensure multiplugs are correctly engaged.
2. Secure relay module to mounting bracket.

INJECTOR NEEDLE LIFT SENSOR

Service repair no - 18.30.72

Remove

NOTE: The injector needle lift sensor is an integral part of No. 1 injector and cannot be replaced separately.

1. Disconnect battery earth lead.
2. Remove engine acoustic cover. ***See BODY, Exterior fittings.***

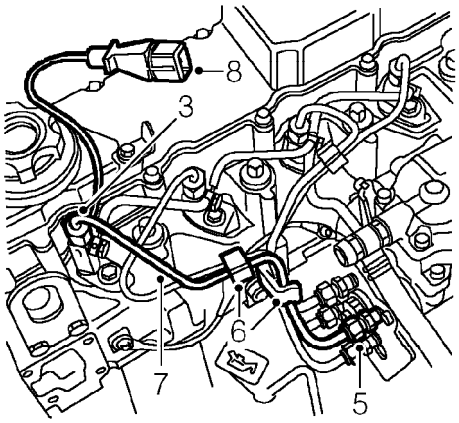

18M0109

3. Loosen injector pipe union at injector.
4. Position absorbent cloth around fuel injection pump connection to catch fuel spillage.
5. Loosen injector pipe union at injection pump.

CAUTION: To prevent damage to fuel system pipes or components, use 2 spanners when loosening or tightening unions.

6. Release 2 clips securing injector pipes together.
7. Disconnect injector pipe unions from fuel injection pump and injector, remove injector pipe.

CAUTION: Plug the connections to prevent the ingress of dirt.

8. Disconnect injector needle lift sensor multiplug from harness.

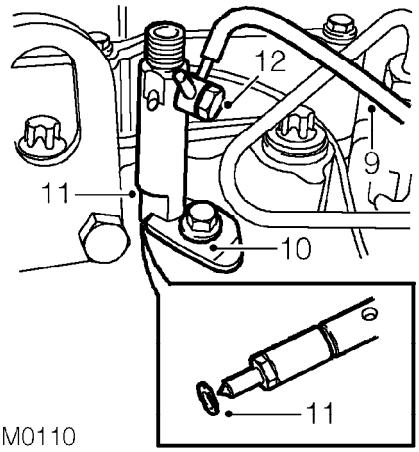

18M0110

9. Disconnect spill return pipe from injector.
10. Remove bolt and collect clamp plate securing injector to cylinder head.
11. Remove injector from cylinder head, remove and discard sealing washer.
    Do not carry out further dismantling if component is removed for access only.
12. Remove spill return pipe banjo bolt and discard 2 sealing washers.
13. Using new sealing washers, fit spill return pipe to new injector and tighten banjo bolt to 10 Nm.

Refit

1. Thoroughly clean injector and injector seat in cylinder head.
2. Fit new sealing washer to injector and fit injector to cylinder head.

CAUTION: Domed surface of sealing washer must face towards injector.

3. Fit clamp plate to injector, align injector and clamp plate to bolt hole in cylinder head
4. Fit injector clamp plate bolt and tighten to 23 Nm.
5. Connect spill return pipe to injector.
6. Connect needle lift sensor multiplug to harness.
7. Remove plugs from injector pipe, injection pump and injector unions.
8. Clean injector pipe, injection pump and injector unions.
9. Position injector pipe to injection pump and injector, connect unions.
10. Align injector pipe to other injector pipes, fit and secure retaining clips.
11. Tighten injector pipe to injector union to 20 Nm.
12. Tighten injector pipe to injection pump union to 20 Nm.

CAUTION: To prevent damage to fuel system pipes or components, use 2 spanners when loosening or tightening unions.

13. Fit engine acoustic cover. ***See BODY, Exterior fittings.***
14. Connect battery earth lead.

FUEL INJECTION PUMP (FIP) - MODELS WITHOUT INTERCOOLER

Service repair no - 19.30.07

Remove

1. Disconnect battery earth lead.
2. Remove engine acoustic cover. ***See BODY, Exterior fittings.***
3. Drain cooling system. ***See COOLING SYSTEM - 'L' SERIES, Adjustments.***

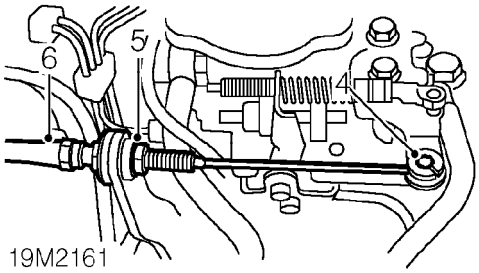

4. Release throttle cable from throttle lever.
5. Loosen nut securing throttle cable to abutment bracket.
6. Release throttle cable from abutment bracket and position aside.

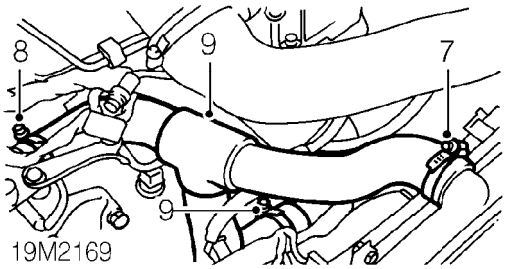

7. Loosen clip and disconnect radiator top hose from radiator.
8. Loosen clip and disconnect radiator top hose from coolant outlet elbow.
9. Loosen clip and remove radiator top hose from thermostat housing.
10. Remove FIP timing belt. ***See ENGINE - 'L' SERIES, Repairs.***

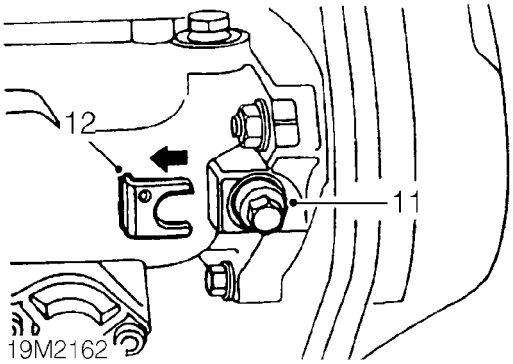

11. Loosen FIP shaft clamp bolt.
12. Remove spacer from clamp bolt.
13. Tighten clamp bolt to 25 Nm.

CAUTION: DO NOT exceed specified torque. Damage to the injection pump shaft will render the pump inoperable.

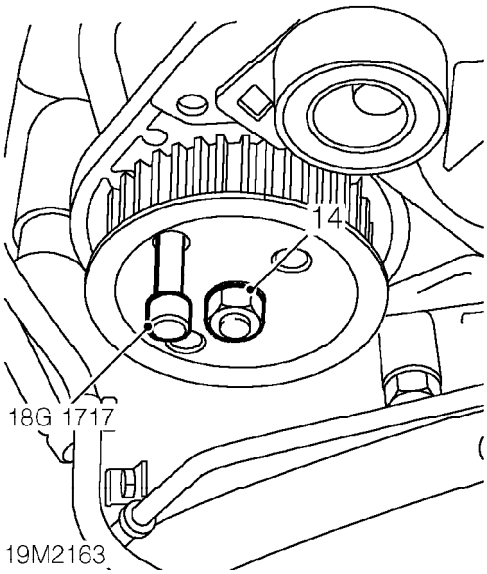

14. Remove FIP drive gear retaining nut and collect spring washer.
15. Remove locking pin tool **18G 1717** from FIP drive gear.

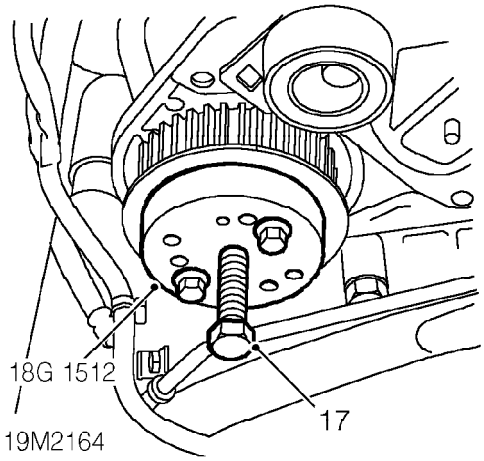

16. Fit tool **18G 1512** to FIP drive gear.
17. Rotate centre bolt of tool **18G 1512** clockwise to break FIP drive gear from taper.
18. Remove tool **18G 1512** from drive gear.

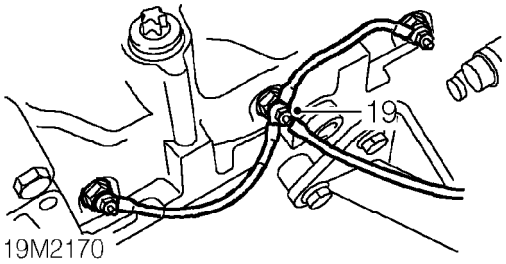

19. Remove nut and disconnect harness feed lead from No. 2 glow plug.

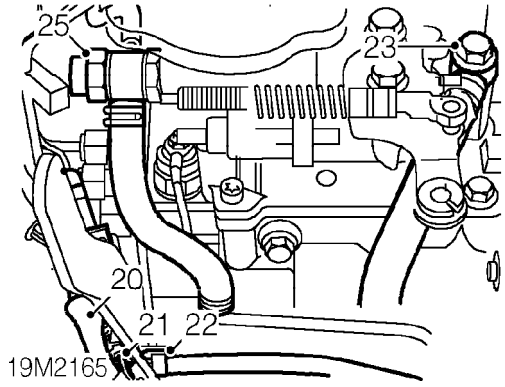

20. Release injector needle lift sensor multiplug from FIP mounting bracket.
21. Disconnect multiplug from FIP.
22. Release engine harness clip from abutment bracket.
23. Remove banjo bolt securing fuel feed pipe to FIP and discard sealing washers.
24. Disconnect fuel return/spill pipe from No. 3 injector.
25. Remove cap nut, disconnect fuel return pipe banjo from FIP and discard sealing washers.

CAUTION: Plug the connections.

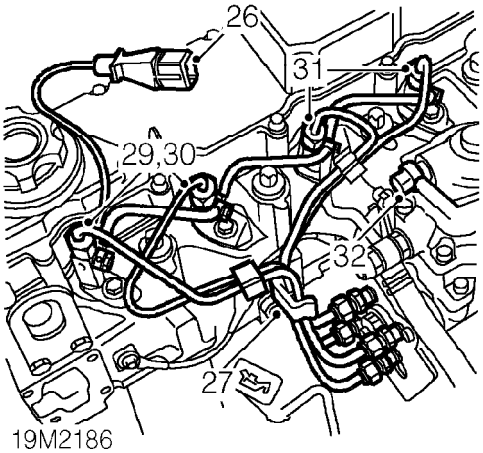

26. Release FIP multiplug(s) from mounting bracket.
27. Remove clamp securing 4 injector pipes together.
28. Position absorbent cloth around injector pipe connections to absorb fuel spillage.
29. Loosen No. 1 and No. 2 injector pipe unions at injectors and FIP.

CAUTION: To prevent damage to fuel injection pipes or components use 2 spanners when loosening unions.

30. Disconnect injector pipe unions from injectors and FIP and remove injector pipe assembly.

CAUTION: Plug the connections.

31. Repeat above procedure to remove injector pipes No. 3 and No. 4.
32. Remove bolt and release vacuum pipe banjo from injection pump. Discard sealing washers.

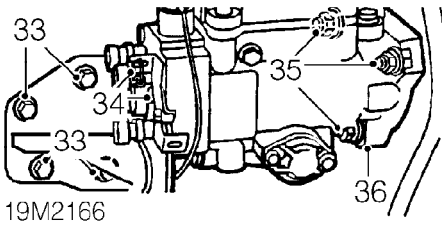

33. Remove 4 bolts securing FIP support bracket to engine.
34. Remove 2 bolts securing support bracket to FIP and move bracket aside.
35. Remove 3 nuts securing FIP to gearbox mounting plate.
36. Remove FIP and collect mounting bracket ***Do not carry out further dismantling if component is removed for access only.***
37. Clean top of FIP around fuel shut-off solenoid.
38. Position absorbent cloth around fuel shut-off solenoid.

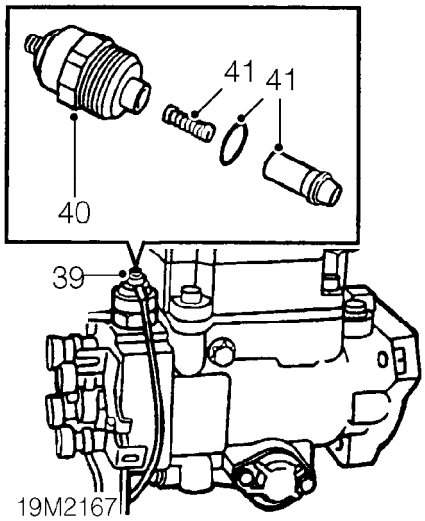

39. Remove nut and disconnect cable from fuel shut-off solenoid.
40. Using a 24 mm spanner remove fuel shut-off solenoid from FIP.
41. Collect solenoid plunger, spring, and 'O' ring.

CAUTION: Plug fuel shut-off solenoid aperture on FIP.

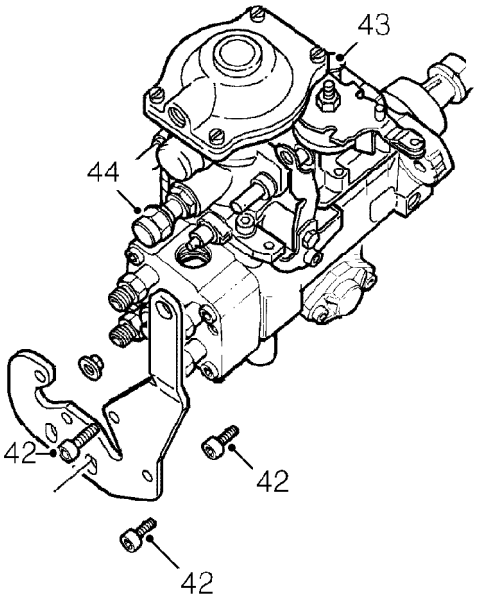

42. Remove 3 Allen screws securing abutment bracket to FIP and collect bracket.
43. Remove fuel feed banjo adaptor from FIP and discard sealing washer.
44. Remove fuel return banjo adaptor from FIP and discard sealing washer.

CAUTION: Plug the connections.

45. Fit fuel return banjo adaptor to FIP using new sealing washer and tighten adaptor to 25 Nm.
46. Fit fuel feed banjo adaptor to FIP using new sealing washer and tighten adaptor to 25 Nm.
47. Fit abutment bracket to FIP and tighten Allen screws to 10 Nm.
48. Lubricate and fit new 'O' ring to fuel shut-off solenoid.
49. Clean fuel shut-off solenoid plunger.
50. Fit plunger and spring to solenoid.
51. Fit solenoid to FIP and tighten to 20 Nm.
52. Connect cable to solenoid and secure terminal nut.

Refit

1. Clean mating faces of FIP and gearbox mounting plate.
2. Position mounting bracket to engine.
3. Fit FIP to gearbox mounting plate and tighten nuts to 25 Nm.
4. Fit FIP support bracket to engine, fit bolts but do not tighten.
5. Fit nuts and bolts securing support bracket to FIP and tighten to 25 Nm.
6. Tighten bolts, FIP support bracket to engine, to 25 Nm.
7. Using new sealing washers, fit vacuum pipe banjo to FIP and tighten bolt to 25 Nm.
8. Secure FIP multiplug(s) to support bracket.
9. Remove plugs from injector pipes, FIP and injector union connections.
10. Clean unions of injector pipes, FIP and injectors.
11. Position injector pipes No. 3 and No. 4 to FIP and injectors and tighten unions to 20 Nm.

CAUTION: To prevent damage to fuel system pipes or components use 2 spanners when tightening unions.

12. Position injector pipes No. 1 and No. 2 to FIP and injectors and tighten unions to 20 Nm.
13. Fit clamp securing injector pipes together.
14. Connect fuel return/spill pipe to injector No. 3.
15. Using new sealing washers, fit fuel return pipe to FIP and tighten banjo bolt to 25 Nm.
16. Using new sealing washers, connect fuel return banjo to FIP, fit cap nut and tighten to 25 Nm.
17. Secure engine harness clip to FIP abutment bracket.
18. Connect multiplug to FIP.
19. Secure injector needle lift sensor multiplug to injection pump mounting bracket.
20. Connect engine harness feed lead to glow plug No. 2 and tighten terminal nut to 2.5 Nm.
21. Clean FIP drive gear and shaft.
22. Fit drive gear to FIP.
23. Fit locking pin tool **18G 1717** to FIP drive gear and engage into gearbox mounting plate.
24. Fit spring washer and nut to FIP shaft and tighten to 60 Nm.
25. Loosen FIP shaft clamp bolt.
26. Position spacer beneath clamp bolt.
27. Tighten clamp bolt to 10 Nm.
28. Fit FIP timing belt. ***See ENGINE - 'L' SERIES, Repairs.***
29. Fit radiator top hose to thermostat and tighten clip.
30. Connect radiator top hose to coolant outlet elbow and tighten clip.
31. Connect radiator top hose to radiator and tighten clip.
32. Connect throttle cable to abutment bracket and secure with nut.
33. Connect throttle cable to throttle lever.
34. Adjust throttle cable. ***See Adjustments.***
35. Refill cooling system. ***See COOLING SYSTEM - 'L' SERIES, Adjustments.***
36. Fit engine acoustic cover. ***See BODY, Exterior fittings.***
37. Connect battery earth lead.

FUEL INJECTION PUMP (FIP) - MODELS WITH INTERCOOLER

Service repair no - 19.30.07

Remove

1. Disconnect battery earth lead.
2. Remove engine acoustic cover. ***See BODY, Exterior fittings.***

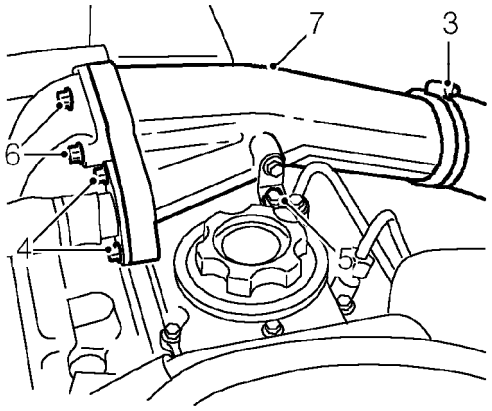

19M2173

3. Loosen clip and disconnect intercooler bottom hose from inlet manifold intake pipe.
4. Remove 2 bolts securing EGR recirculation pipe to inlet manifold intake pipe.
5. Remove bolt securing inlet manifold intake pipe to camshaft cover.
6. Remove 2 bolts securing intake pipe to inlet manifold.
7. Remove inlet manifold intake pipe and discard gasket.
8. Drain cooling system. ***See COOLING SYSTEM - 'L' SERIES, Adjustments.***

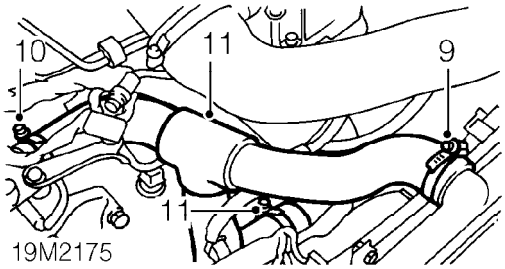

19M2175

9. Loosen clip and disconnect radiator top hose from radiator.
10. Loosen clip and disconnect radiator top hose from coolant outlet elbow.
11. Loosen clip and remove radiator top hose from thermostat housing.
12. Remove FIP timing belt. ***See ENGINE - 'L' SERIES, Repairs.***

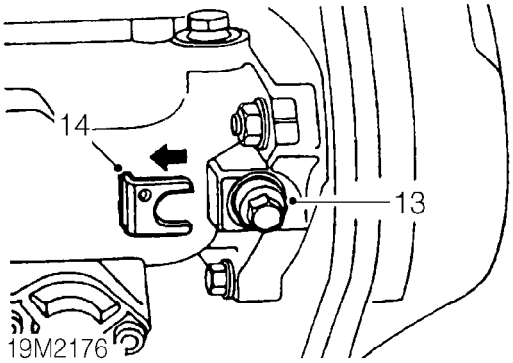

19M2176

13. Loosen FIP shaft clamp bolt.
14. Remove spacer from clamp bolt.
15. Tighten clamp bolt to 25 Nm.

CAUTION: DO NOT exceed specified torque. Damage to the injection pump shaft will render the pump inoperable.

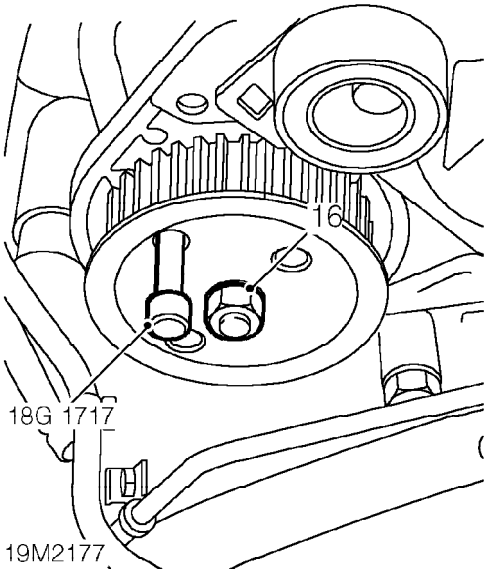

16. Remove FIP drive gear retaining nut and collect spring washer.
17. Remove locking pin tool **18G 1717** from FIP drive gear.

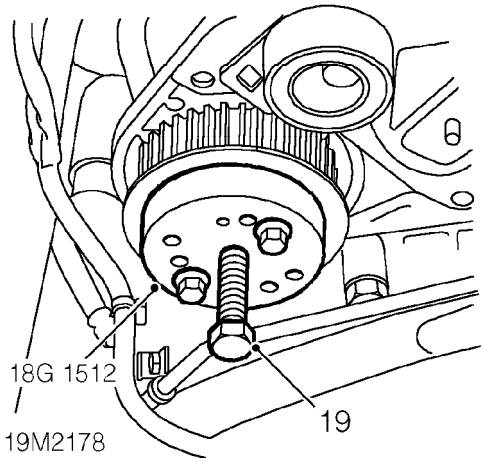

18. Fit tool **18G 1512** to FIP drive gear.
19. Rotate centre bolt of tool **18G 1512** clockwise to break FIP drive gear from taper.
20. Remove tool **18G 1512** from drive gear.

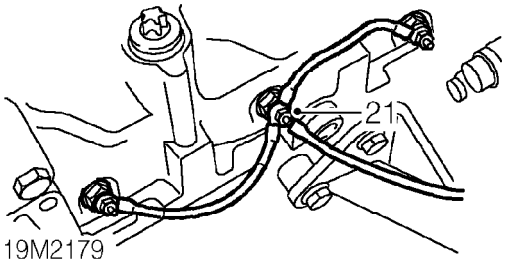

21. Remove nut and disconnect harness feed lead from No. 2 glow plug.

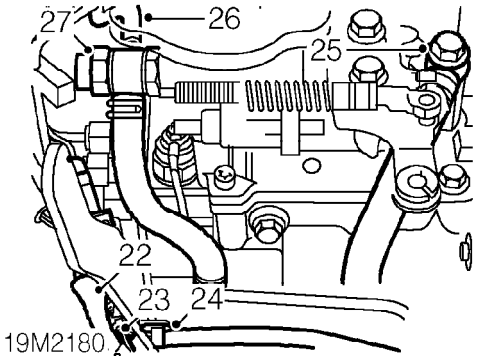

22. Release injector needle lift sensor multiplug from FIP mounting bracket.
23. Disconnect 2 multiplugs from FIP.
24. Release engine harness clip from support bracket.
25. Remove banjo bolt securing fuel feed pipe to FIP and discard sealing washers.
26. Disconnect fuel return/spill pipe from no. 3 injector.
27. Remove cap nut, disconnect fuel return pipe banjo from FIP and discard sealing washers.

CAUTION: Plug the connections.

28. Release FIP multiplug(s) from mounting bracket.

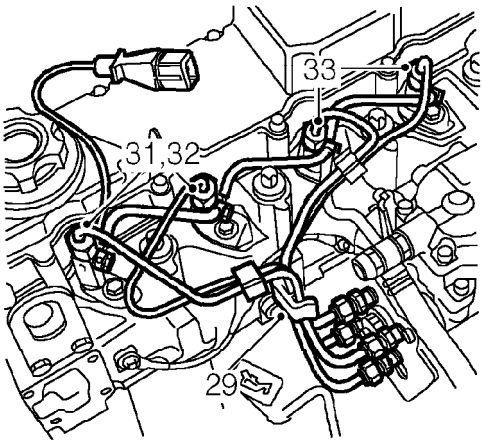

19M2171

29. Remove clamp securing 4 injector pipes together.
30. Position absorbent cloth around injector pipe connections to absorb fuel spillage.
31. Loosen No.1 and No. 2 injector pipe unions at injectors and FIP.

CAUTION: To prevent damage to fuel injection pipes or components use 2 spanners when loosening unions.

32. Disconnect injector pipe unions from injectors and FIP and remove injector pipe assembly.

CAUTION: Plug the connections.

33. Repeat above procedure to remove injector pipes No. 3 and No. 4.

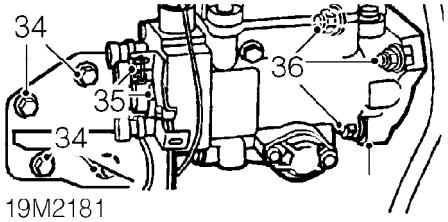

19M2181

34. Remove 4 bolts securing FIP support bracket to engine.
35. Remove 2 bolts securing support bracket to FIP and move bracket aside.
36. Remove 3 nuts securing FIP to gearbox mounting plate.
37. Remove FIP and collect mounting bracket ***Do not carry out further dismantling if component is removed for access only.***
38. Clean top of FIP around fuel shut-off solenoid.
39. Position absorbent cloth around fuel shut-off solenoid.

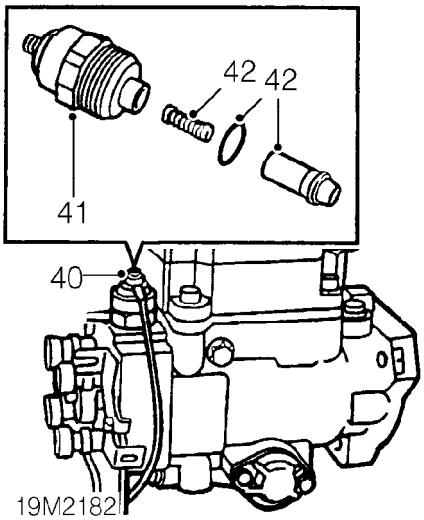

19M2182

40. Remove nut and disconnect cable from fuel shut-off solenoid.
41. Using a 24 mm spanner remove fuel shut-off solenoid from FIP.
42. Collect solenoid plunger, spring, and 'O' ring.

CAUTION: Plug fuel shut-off solenoid aperture on FIP.

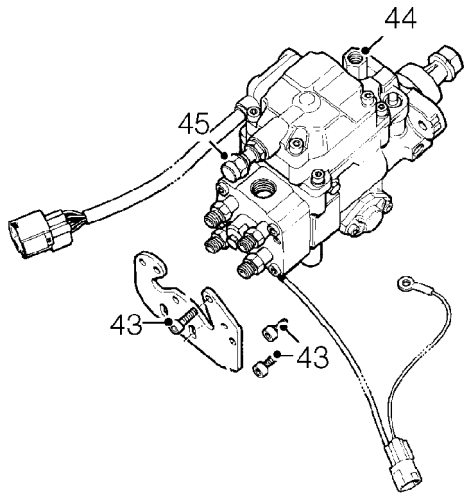

43. Remove 3 Allen screws securing adaptor bracket to FIP and collect bracket.
44. Remove fuel feed banjo adaptor from FIP and discard sealing washer.
45. Remove fuel return banjo adaptor from FIP and discard sealing washer.

CAUTION: Plug the connections.

46. Fit fuel return banjo adaptor to FIP using new sealing washer and tighten adaptor to 25 Nm.
47. Fit fuel feed banjo adaptor to FIP using new sealing washer and tighten adaptor to 25 Nm.
48. Fit adaptor bracket to FIP and tighten Allen screws to 10 Nm.
49. Lubricate and fit new 'O' ring to fuel shut-off solenoid.
50. Clean fuel shut-off solenoid plunger.
51. Fit plunger and spring to solenoid.
52. Fit solenoid to FIP and tighten to 20 Nm.
53. Connect cable to solenoid and secure terminal nut.

Refit

1. Clean mating faces of FIP and gearbox mounting plate.
2. Position mounting bracket to engine.
3. Fit FIP to gearbox mounting plate and tighten nuts to 25 Nm.
4. Fit FIP support bracket to engine, fit bolts but do not tighten.
5. Fit nuts and bolts securing support bracket to FIP and tighten to 25 Nm.
6. Tighten bolts, FIP support bracket to engine, to 25 Nm.
7. Secure FIP multiplug(s) to support bracket.
8. Remove plugs from injector pipes, FIP and injector union connections.
9. Clean unions of injector pipes, FIP and injectors.
10. Position injector pipes No. 3 and No. 4 to FIP and injectors and tighten unions to 20 Nm.

CAUTION: To prevent damage to fuel system pipes or components use 2 spanners when tightening unions.

11. Position injector pipes No. 1 and No. 2 to FIP and injectors and tighten unions to 20 Nm.
12. Fit clamp securing injector pipes together.
13. Connect fuel return/spill pipe to injector No. 3.
14. Using new sealing washers, fit fuel return pipe to FIP and tighten banjo bolt to 25 Nm.
15. Using new sealing washers, connect fuel return banjo to FIP, fit cap nut and tighten to 25 Nm.
16. Secure engine harness clip to FIP abutment bracket.
17. Connect 2 multiplugs to FIP.
18. Secure injector needle lift sensor multiplug to injection pump mounting bracket.
19. Connect engine harness feed lead to glow plug No. 2 and tighten terminal nut to 2.5 Nm.
20. Clean FIP drive gear and shaft.
21. Fit drive gear to FIP.
22. Fit locking pin tool **18G 1717** to FIP drive gear and engage into gearbox mounting plate.
23. Fit spring washer and nut to FIP shaft and tighten to 60 Nm.
24. Loosen FIP shaft clamp bolt.
25. Position spacer beneath clamp bolt.
26. Tighten clamp bolt to 10 Nm.
27. Fit FIP timing belt. ***See ENGINE - 'L' SERIES, Repairs.***

28. Fit radiator top hose to thermostat and tighten clip.
29. Connect radiator top hose to coolant outlet elbow and tighten clip.
30. Connect radiator top hose to radiator and tighten clip.
31. Clean mating faces of inlet manifold and intake pipe.
32. Fit new gasket to inlet manifold, fit intake pipe and tighten bolts to 25 Nm.
33. Fit bolt securing camshaft cover bracket to inlet manifold intake pipe and tighten to 10 Nm.
34. Align EGR recirculation pipe to inlet manifold intake pipe, fit bolts and tighten to 10 Nm.
35. Connect intercooler bottom hose to inlet manifold intake pipe and tighten clip.
36. Refill cooling system. ***See COOLING SYSTEM - 'L' SERIES, Adjustments.***
37. Fit engine acoustic cover. ***See BODY, Exterior fittings.***
38. Connect battery earth lead.

TURBOCHARGER - MODELS WITHOUT INTERCOOLER

Service repair no - 19.42.01

Remove

1. Disconnect battery earth lead.
2. Raise front of vehicle.

WARNING: Support on safety stands.

3. Remove engine acoustic cover. ***See BODY, Exterior fittings.***
4. Remove front pipe to manifold gasket. ***See MANIFOLD & EXHAUST SYSTEMS, Repairs.***

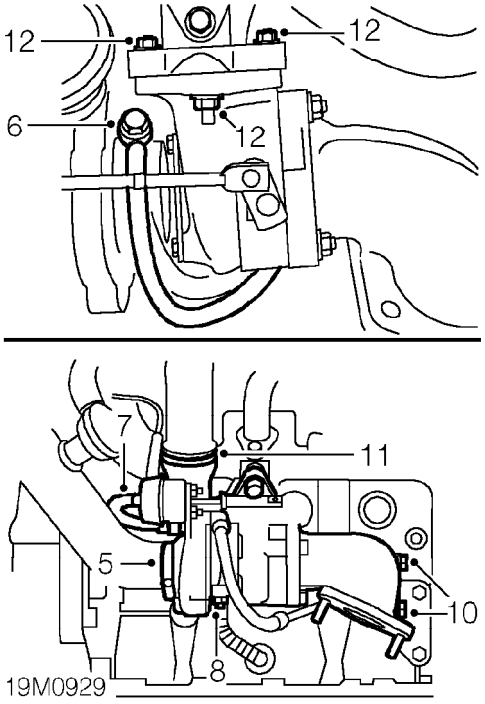

5. Loosen clip and disconnect air intake hose from turbocharger.
6. Remove banjo bolt securing oil feed pipe to turbocharger, discard 2 sealing washers.
7. Disconnect vacuum hose from turbocharger actuator.

8. Remove 2 bolts securing oil drain pipe flange to turbocharger.
9. Remove and discard gasket.
10. Remove 2 bolts securing exhaust manifold to mounting bracket.
11. Loosen clip securing inlet manifold pipe to turbocharger assembly.
12. Remove 3 nuts securing turbocharger assembly to exhaust manifold.
13. Release and remove turbocharger assembly and exhaust manifold elbow.
    Do not carry out further dismantling if component is removed for access only.

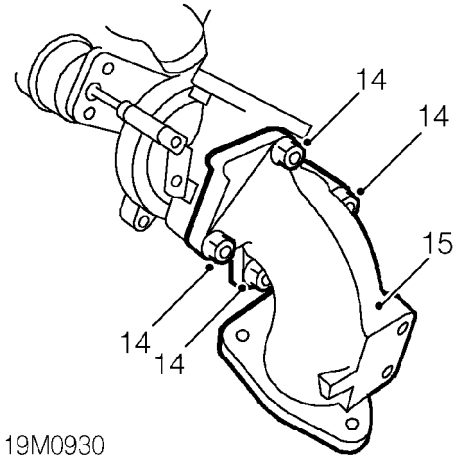

14. Remove 4 nuts securing exhaust manifold elbow to turbocharger assembly.
15. Remove exhaust manifold elbow.
16. Clean mating faces of turbocharger and exhaust manifold elbow.
17. Fit exhaust manifold elbow to turbocharger, fit nuts and tighten to 25 Nm.

Refit

1. Clean mating faces of turbocharger and exhaust manifold.
2. Fit turbocharger to exhaust manifold, fit nuts and tighten to 25 Nm.
3. Fit 2 bolts securing exhaust manifold to mounting bracket and tighten to 25 Nm.
4. Clean mating faces of oil drain pipe and turbocharger.
5. Fit gasket to turbocharger oil drain pipe.
6. Fit bolts securing oil drain pipe to turbocharger and tighten to 10 Nm.
7. Fit new front pipe to manifold gasket. ***See MANIFOLD & EXHAUST SYSTEMS, Repairs.***
8. Fit inlet manifold pipe to turbocharger assembly and tighten clip.
9. Connect vacuum hose to turbocharger actuator.
10. Clean turbocharger oil feed pipe union and banjo bolt.
11. Fit new sealing washers to banjo bolt, connect oil feed pipe to turbocharger and tighten union to 20 Nm.
12. Connect air intake pipe to turbocharger and tighten clip.
13. Fit engine acoustic cover. ***See BODY, Exterior fittings.***
14. Remove stand(s) and lower vehicle.
15. Connect battery earth lead.

TURBOCHARGER - MODELS WITH INTERCOOLER

Service repair no - 19.42.01

Remove

1. Disconnect battery earth lead.
2. Raise front of vehicle.

WARNING: Support on safety stands.

3. Remove engine acoustic cover. ***See BODY, Exterior fittings.***
4. Remove front pipe to manifold gasket. ***See MANIFOLD & EXHAUST SYSTEMS, Repairs.***

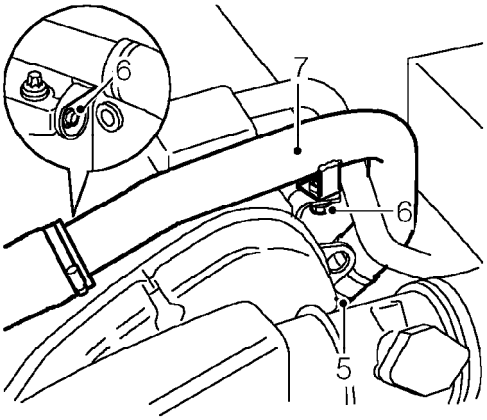

19M2187

5. Loosen clip securing pipe to turbocharger assembly.
6. Remove 2 bolts securing turbocharger pipe to cylinder head.
7. Disconnect pipe from turbocharger.

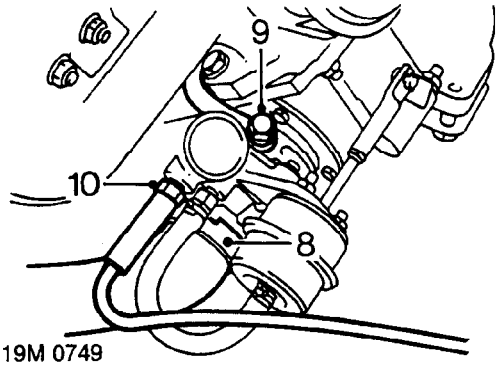

19M 0749

8. Loosen clip and disconnect air intake hose from turbocharger.
9. Remove banjo bolt securing oil feed pipe to turbocharger, discard 2 sealing washers.
10. Disconnect pressure sensing pipe from turbocharger.

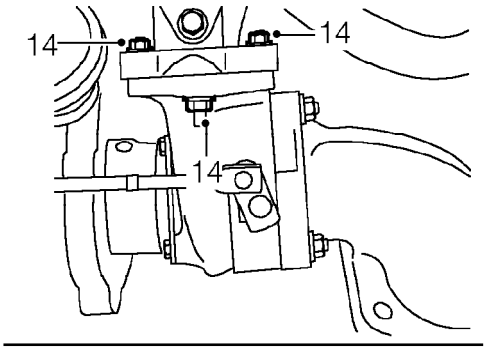

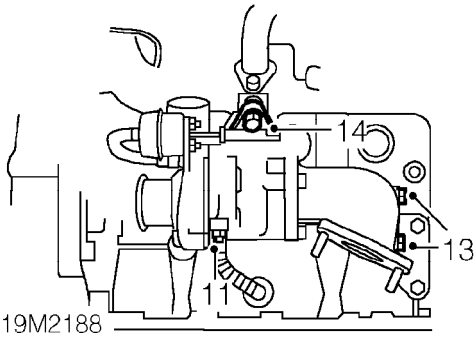

19M2188

11. Remove 2 bolts securing oil drain pipe flange to turbocharger.
12. Remove and discard gasket.
13. Remove 2 bolts securing exhaust manifold to mounting bracket.

14. Remove 3 nuts securing turbocharger assembly to exhaust manifold.
15. Release and remove turbocharger assembly and exhaust manifold elbow.
    Do not carry out further dismantling if component is removed for access only.

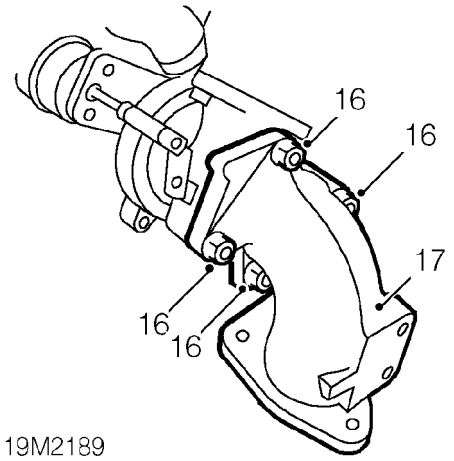

16. Remove 4 nuts securing exhaust manifold elbow to turbocharger assembly.
17. Remove exhaust manifold elbow.
18. Clean mating faces of turbocharger and exhaust manifold elbow.
19. Fit exhaust manifold elbow to turbocharger, fit nuts and tighten to 25 Nm.

Refit

1. Clean mating faces of turbocharger and exhaust manifold.
2. Fit turbocharger to exhaust manifold, fit nuts and tighten to 25 Nm.
3. Fit 2 bolts securing exhaust manifold to mounting bracket and tighten to 25 Nm.
4. Clean mating faces of oil drain pipe and turbocharger.
5. Fit gasket to turbocharger oil drain pipe.
6. Fit bolts securing oil drain pipe to turbocharger and tighten to 10 Nm.
7. Fit new front pipe to manifold gasket. ***See MANIFOLD & EXHAUST SYSTEMS, Repairs.***
8. Connect pipe to turbocharger and tighten clip.
9. Fit bolts securing turbocharger pipe to cylinder head and tighten to 10 Nm.
10. Connect pressure sensing pipe to turbocharger.
11. Clean turbocharger oil feed pipe union and banjo bolt.
12. Fit new sealing washers to banjo bolt, connect oil feed pipe to turbocharger and tighten union to 20 Nm.
13. Connect air intake pipe to turbocharger and tighten clip.
14. Fit engine acoustic cover. ***See BODY, Exterior fittings.***
15. Remove stand(s) and lower vehicle.
16. Connect battery earth lead.

INTERCOOLER - MODELS WITHOUT AIR CONDITIONING

Service repair no - 19.42.15

Remove

1. Remove radiator. ***See COOLING SYSTEM - 'L' SERIES, Adjustments.***

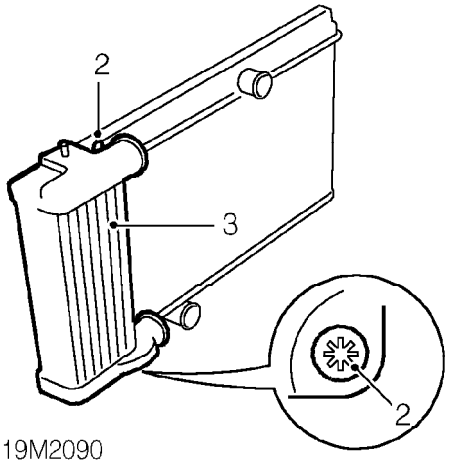

2. Remove 2 TX40 bolts and nuts securing intercooler to radiator.
3. Remove intercooler from radiator.

Refit

1. Position intercooler to radiator, fit Torx bolts and nuts and tighten to 25 Nm.
2. Fit radiator. ***See COOLING SYSTEM - 'L' SERIES, Adjustments.***

INTERCOOLER - MODELS WITH AIR CONDITIONING

Service repair no - 19.42.15.20

Remove

1. Remove front bumper. ***See BODY, Exterior fittings.***
2. Remove air cleaner. ***See this section.***

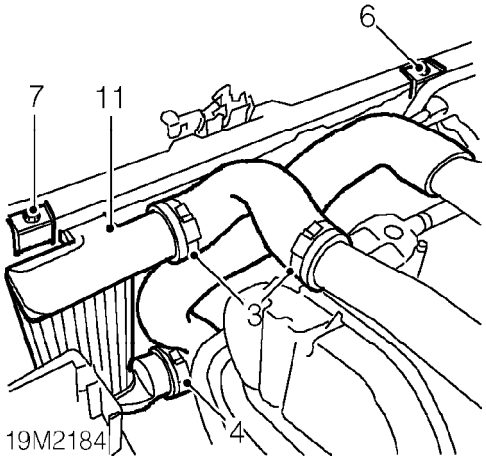

3. Loosen 2 clips securing intercooler top hose to intercooler and turbocharger pipe. Remove hose.
4. Release clip securing bottom hose to intercooler.
5. Release hose from intercooler and position aside.
6. Remove bolt securing radiator top mounting bracket to bonnet locking platform.
7. Remove bolt securing intercooler top mounting bracket to bonnet locking platform and remove bracket.
8. Remove top Torx screw and nut securing intercooler to radiator.

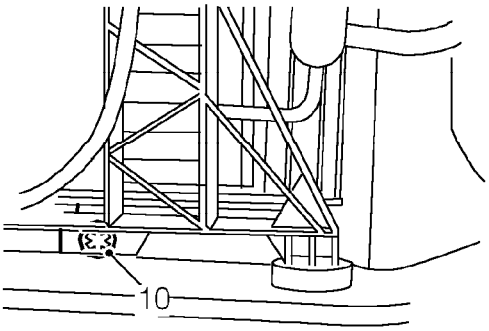

19M2185

9. Raise radiator and intercooler to gain access to bottom Torx screw.
10. Remove Torx screw and nut securing intercooler to radiator.
11. Release intercooler from bottom fixing and remove intercooler.

Refit

1. Fit intercooler and align to radiator.
2. Loosely fit top Torx bolt.
3. Raise radiator and intercooler and fit Torx bolt and nut.
4. Tighten Torx bolts to 25 Nm.
5. Ensure radiator and intercooler are located in bottom mountings and fit top mounting bracket to intercooler.
6. Tighten top mounting brackets to 9 Nm.
7. Position bottom hose to intercooler and secure with clip.
8. Fit top hose to intercooler and turbocharger pipe and tighten clips.
9. Fit air cleaner. ***See this section.***
10. Fit front bumper. ***See BODY, Exterior fittings.***

INJECTOR - MODELS WITHOUT INTERCOOLER

Service repair no - 19.60.10

Remove

NOTE: No. 1 injector incorporates the needle lift sensor and is covered in a separate procedure.

1. Disconnect battery earth lead.
2. Remove engine acoustic cover. ***See BODY, Exterior fittings.***
3. Position absorbent cloth around fuel injector to catch any fuel spillages.

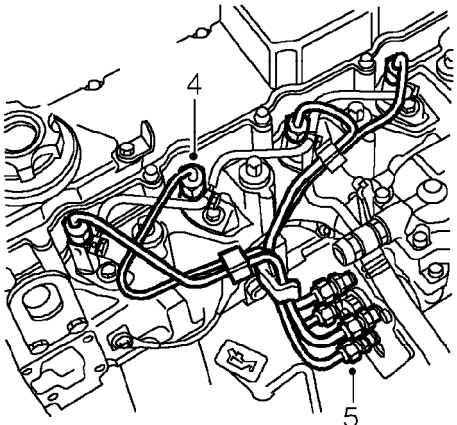

19M0920

4. Loosen injector pipe union at injector.
5. Disconnect injector pipe from injector and move aside.

CAUTION: To prevent damage to fuel system pipes or components, use two spanners when loosening or tightening unions.

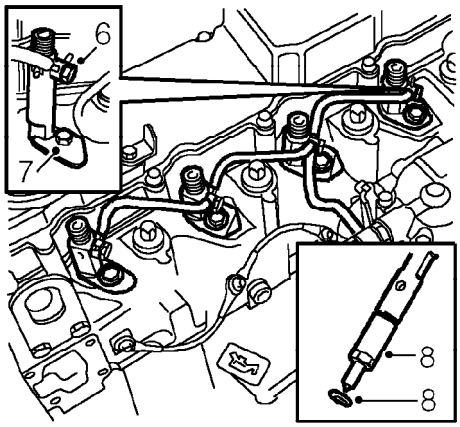

19M0921

6. Remove fuel return/spill hose banjo bolt from injector and discard 2 sealing washers.

CAUTION: Plug the connections to prevent the ingress of dirt.

7. Remove bolt and collect clamp plate securing injector to cylinder head.
8. Remove injector from cylinder head and discard sealing washer.

Refit

1. Thoroughly clean injector and injector seat in cylinder head.
2. Fit new sealing washer to injector and fit to cylinder head.

CAUTION: Domed surface of sealing washer must face towards injector.

3. Fit clamp plate to injector, align injector and clamp plate to bolt hole in cylinder head.
4. Fit injector clamp plate bolt and tighten to 23 Nm.
5. Remove plugs from injector, and injector pipe.
6. Using new sealing washers fit spill return hose banjo bolt to injector and tighten.
7. Clean injector pipe union.
8. Position injector pipe to injector and tighten union to 20 Nm.
9. Tighten union securing injector pipe to injection pump to 20 Nm.

CAUTION: To prevent damage to fuel system pipes or components, use 2 spanners when loosening and tightening unions.

10. Refit engine acoustic cover. ***See BODY, Exterior fittings.***
11. Connect battery earth lead.

INJECTOR - MODELS WITH INTERCOOLER

Service repair no - 19.60.10

Remove

NOTE: No. 1 injector incorporates the needle lift sensor and is covered in a seperate procedure.

1. Disconnect battery earth lead.
2. Remove engine acoustic cover. ***See BODY, Exterior fittings.***

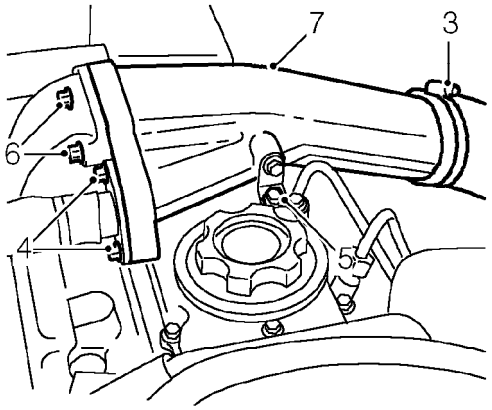

19M2173

3. Loosen clip and disconnect intercooler bottom hose from inlet manifold intake pipe.
4. Remove 2 bolts securing EGR recirculation pipe to inlet manifold intake pipe.
5. Remove bolt securing inlet manifold intake pipe to camshaft cover.
6. Remove 2 bolts securing intake pipe to inlet manifold.
7. Remove inlet manifold intake pipe and discard gasket.
8. Position absorbent cloth around fuel injector to absorb any fuel spillages.

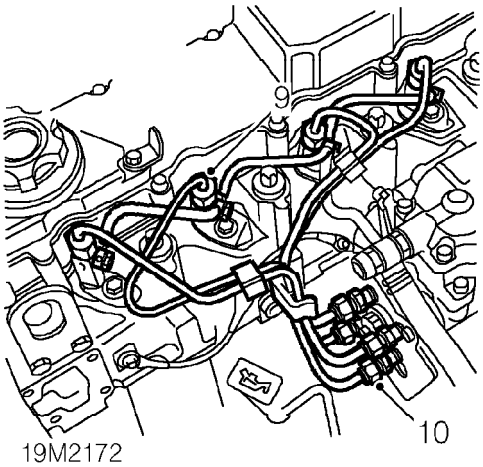

19M2172

9. Loosen injector pipe union at injector.
10. Disconnect injector pipe from injector and move aside.

CAUTION: To prevent damage to fuel system pipes or components, use two spanners when loosening or tightening unions.

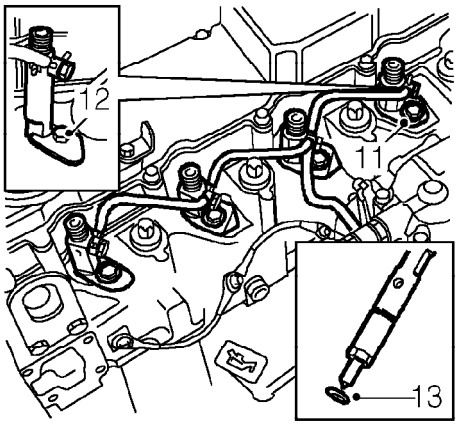

19M2174

11. Remove fuel return/spill hose banjo bolt from injector and discard 2 sealing washers.

CAUTION: Plug the connections to prevent the ingress of dirt.

12. Remove bolt and collect clamp plate securing injector to cylinder head.
13. Remove injector from cylinder head and discard sealing washer.

Refit

1. Thoroughly clean injector and injector seat in cylinder head.
2. Fit new sealing washer to injector and fit to cylinder head.

CAUTION: Domed surface of sealing washer must face towards injector.

3. Fit clamp plate to injector, align injector and clamp plate to bolt hole in cylinder head.
4. Fit injector clamp plate bolt and tighten to 25 Nm.
5. Remove plugs from injector, and injector pipe.
6. Using new sealing washers fit spill return hose banjo bolt to injector and tighten.
7. Clean injector pipe/union.
8. Position injector pipe to injector and tighten union to 20 Nm.
9. Tighten union securing injector pipe to injection pump, to 20 Nm.

CAUTION: To prevent damage to fuel system pipes or components, use 2 spanners when loosening and tightening unions.

10. Clean mating faces of inlet manifold and intake pipe.
11. Fit new gasket to inlet manifold, fit intake pipe and tighten bolts to 25 Nm.
12. Fit bolt securing camshaft cover bracket to inlet manifold intake pipe and tighten to 10 Nm.
13. Connect intercooler bottom hose to inlet manifold intake pipe and tighten clip.
14. Refit engine acoustic cover. ***See BODY, Exterior fittings.***
15. Connect battery earth lead.

GLOW PLUGS

Service repair no - 19.60.31

Remove

1. Disconnect battery earth lead.
2. Remove engine acoustic cover. ***See BODY, Exterior fittings.***
3. Drain cooling system. ***See COOLING SYSTEM - 'L' SERIES, Adjustments.***
4. *Models with air conditioning:* Remove alternator. ***See ELECTRICAL, Repairs.***

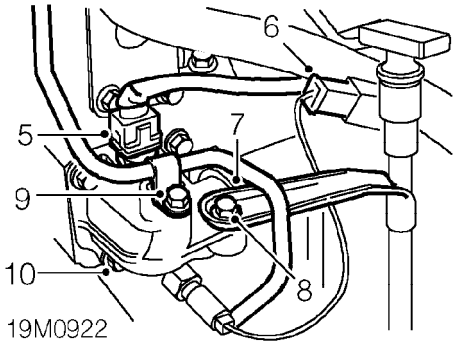

5. Disconnect multiplug from ECT sensor.
6. Disconnect temperature gauge sensor lucar.
7. Loosen clip and disconnect radiator top hose from coolant outlet elbow.
8. Remove bolt securing dipstick tube bracket to coolant outlet elbow.
9. Remove bolt securing brake servo vacuum pipe to coolant outlet elbow.
10. Remove 4 bolts securing coolant outlet elbow to cylinder head.

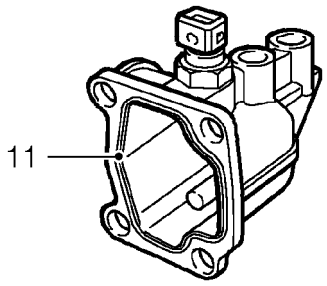

19M0923

11. Remove coolant outlet elbow, and discard seal.

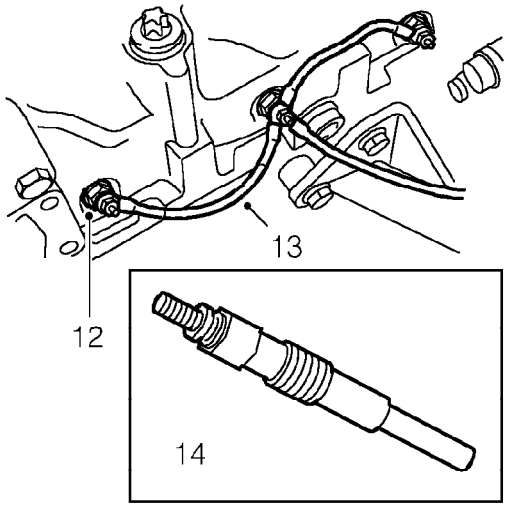

19M0924

12. Remove 3 terminal nuts securing feed leads to glow plugs.
13. Disconnect and remove glow plug leads.
14. Remove 3 glow plugs.

Refit

1. Thoroughly clean glow plugs and glow plug seating area in cylinder head.
2. Apply a suitable anti-sieze compound to threads of glow plugs.
3. Fit glow plugs and tighten to 20 Nm.
4. Connect feed leads to glow plugs.
5. Fit and tighten terminal nuts.

NOTE: Harness feed lead must be connected to No. 2 glow plug.

6. Clean mating faces of coolant outlet elbow and cylinder head.
7. Fit new seal to coolant outlet elbow.
8. Position coolant outlet elbow to cylinder head, fit bolts and tighten to 25 Nm.
9. Align dipstick tube bracket to coolant outlet elbow and secure with bolt.
10. Align brake servo vacuum pipe to outlet elbow and secure with bolt.
11. Connect temperature gauge sensor Lucar to harness.
12. Connect multiplug to ECT sensor.
13. Connect radiator top hose to coolant outlet elbow and tighten clip.
14. *Models with air conditioning:* Fit alternator. ***See ELECTRICAL, Repairs.***
15. Fit engine acoustic cover. ***See BODY, Exterior fittings.***
16. Connect battery earth lead.
17. Refill cooling system. ***See COOLING SYSTEM - 'L' SERIES, Adjustments.***

CONTENTS

Page

DESCRIPTION AND OPERATION

FUEL DELIVERY SYSTEM - ’K’ SERIES 1
FUEL DELIVERY SYSTEM - ’L’ SERIES 2

REPAIRS

FUEL TANK DRAINING - ’K’ SERIES 1
FUEL TANK DRAINING - ’L’ SERIES 1
INERTIA FUEL SHUT-OFF (IFS) SWITCH 2
FUEL FILTER - ’K’ SERIES 2
FUEL FILTER - ’L’ SERIES 3
ELECTRIC FUEL PUMP - ’K’ SERIES 4
FUEL TANK - ’K’ SERIES 5
FUEL TANK - ’L’ SERIES 8
FUEL TANK BREATHER VALVE - ’L’ SERIES 11

FUEL DELIVERY SYSTEM - 'K' SERIES

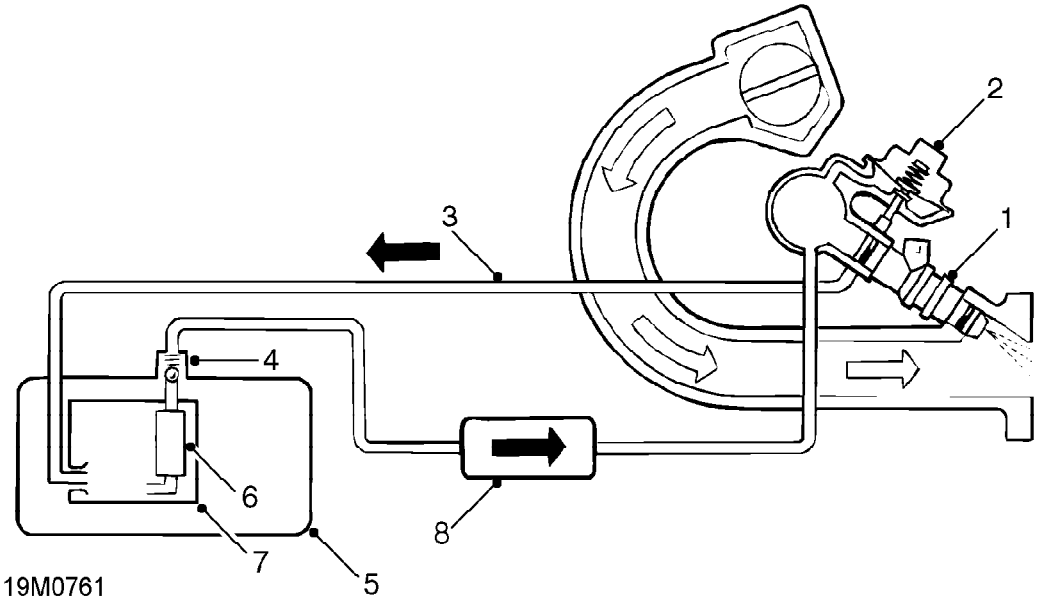

Recirculating fuel system - 'K' series illustrated

1. Injectors
2. Fuel pressure regulator
3. Fuel return line
4. Non return valve
5. Fuel tank
6. Fuel pump
7. Swirl pot
8. Fuel filter

RECIRCULATING FUEL SYSTEM

A recirculating fuel system is used to supply fuel to the injectors at a constant pressure and return excess fuel to the fuel tank.

Fuel pressure is produced by an electric pump immersed in the fuel tank and operating in a swirl pot to maintain a constant fuel level around the pump pick-up.

Pressurised fuel is fed to an in-line fuel filter via a non-return valve which prevents fuel returning to the tank when the pump is not running. Fuel is delivered from the fuel filter to the fuel rail which supplies the injectors. A fuel pressure regulator mounted on the fuel rail controls the pressure of fuel in the rail and returns excess fuel to the swirl pot in the tank. A venturi in the fuel tank causes returning fuel to draw cool fuel into the swirl pot from the tank.

FUEL DELIVERY SYSTEM - 'L' SERIES

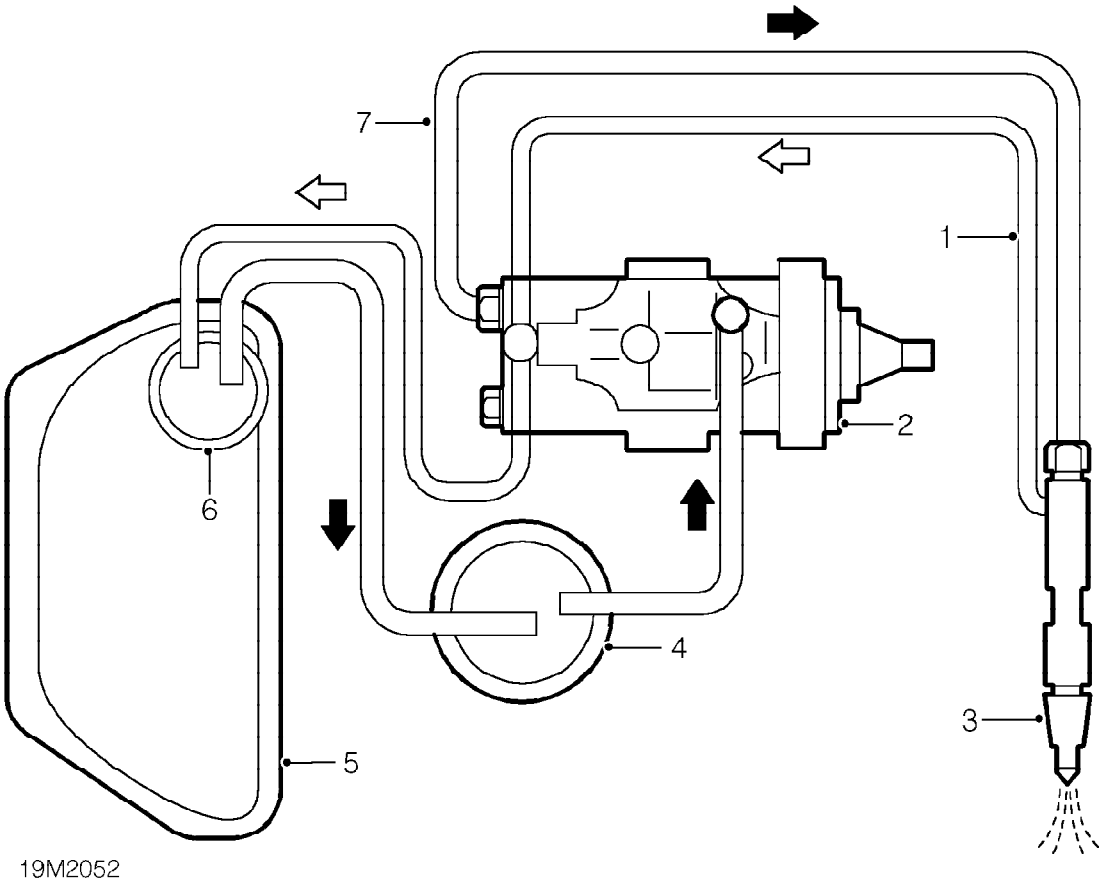

Recirculating fuel system - 'L' series

1. Fuel return line
2. Fuel injection pump
3. Injectors
4. Fuel filter
5. Fuel tank
6. Swirl pot
7. Fuel feed line

RECIRCULATING FUEL SYSTEM

Fuel is drawn from the tank by the injection pump via a filter which removes particle contamination from the fuel.

The injection pump meters a precisely timed, exact quantity of fuel to the injectors in response to throttle variations, injection timing varying with engine speed. Any excess fuel delivered to the injection pump is not injected, but passed back to the tank via the fuel return line.

Fuel is injected in a finely atomised form into a pre-combustion chamber in the cylinder head where it ignites. The burning fuel expands rapidly into the main combustion chamber, creating extreme turbulence which mixes the burning fuel thoroughly with the compressed air, providing complete combustion.

INERTIA FUEL SHUT-OFF SWITCH - 'K' series models

The electrical circuit for the fuel pump incorporates an inertia switch which, in the event of a sudden deceleration, breaks the circuit to the fuel pump preventing fuel being delivered to the engine. The switch is situated in the engine compartment and must be reset by pressing the rubber top before the engine can be restarted.

WARNING: ALWAYS check for fuel leaks and the integrity of fuel system connections before resetting the switch.

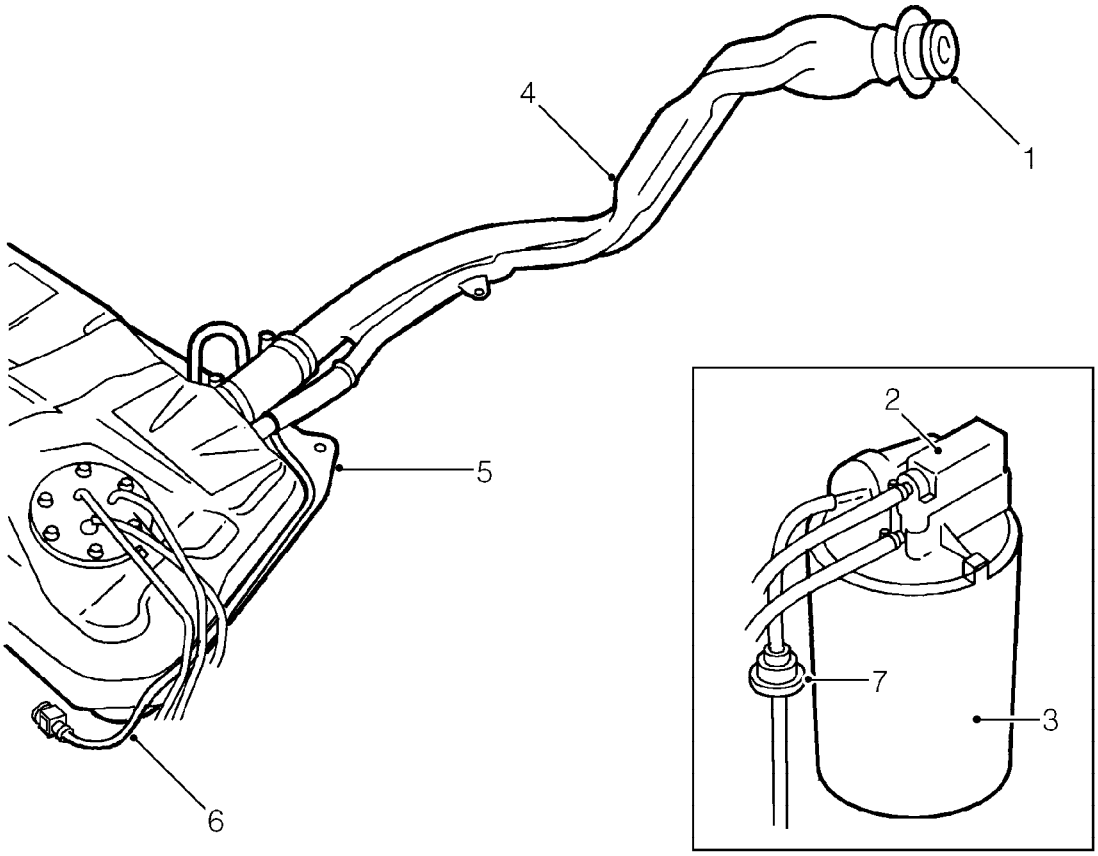

Fuel tank breathing system - 'K' series models

1. Filler cap
2. Evaporative emission canister purge valve
3. Evaporative emission canister
4. Filler neck breather pipe
5. Fuel tank
6. Vent pipe to evaporative emission canister
7. Two-way valve

FUEL TANK BREATHING SYSTEM - 'K' SERIES

When filling the fuel tank, air trapped in the fuel tank by the rising fuel level is allowed to vent to the top of the filler neck by a separate breather pipe.

With the filler cap in place, fuel tank breathing is via a two-way breather valve which allows expanding fumes to exit the tank. Fumes are directed via a two-way valve to the evaporative emission canister where they can be purged into the engine via the evaporative emission canister purge valve.

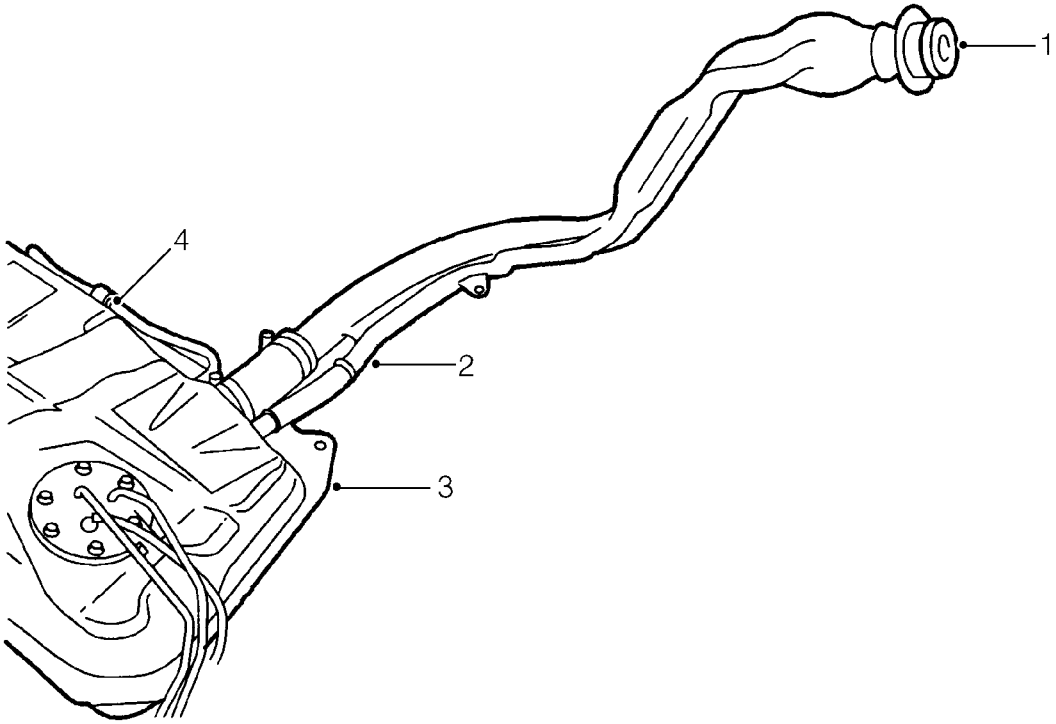

19M2053

Fuel tank breathing system - 'L' series

1. Filler cap
2. Filler neck breather pipe
3. Fuel tank
4. Breather valve

FUEL TANK BREATHING SYSTEM - 'L' SERIES

When filling the fuel tank, air trapped in the fuel tank by the rising fuel level is allowed to vent to the top of the filler neck by a separate breather pipe.

With the filler cap in place, fuel tank breathing is via a two-way breather valve which allows expanding fumes to exit the tank.

FUEL TANK DRAINING - 'K' SERIES

Service repair no - 19.55.02

WARNING: Before removing the fuel tank from the vehicle it must be drained.

Drain

WARNING: Petrol/gasoline vapour is highly flammable and in confined spaces is also explosive and toxic. Always have a fire extinguisher containing FOAM, CO2, GAS or POWDER close at hand when handling or draining fuel. ***See INTRODUCTION, Information.***

1. Remove fuel tank filler cap and allow fuel tank to vent in an open space before commencing work.
2. Disconnect battery earth lead.

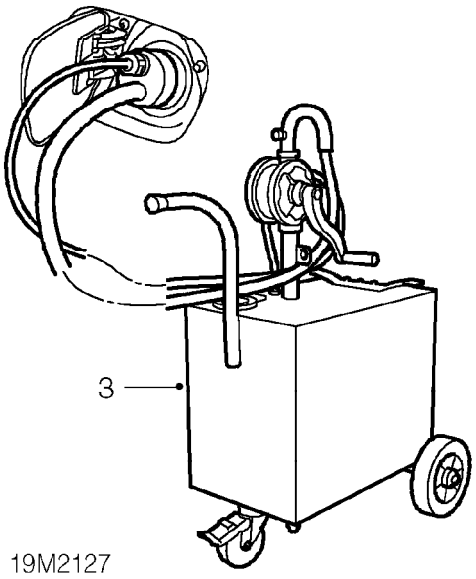

3. Using a bowser, drain fuel from the tank into a sealed container. Follow the manufacturers instructions for the connection and safe use of the bowser.
4. Continue draining until air bubbles appear and fuel ceases to flow.
5. Disconnect bowser from fuel tank.

FUEL TANK DRAINING - 'L' SERIES

Service repair no - 19.55.02

WARNING: Before removing the fuel tank from the vehicle it must be drained. Use gloves or suitable protective barrier cream to protect the hands against contact with diesel fuel.

1. Remove fuel tank filler cap and allow fuel tank to vent in an open space before commencing work.
2. Disconnect battery earth lead.

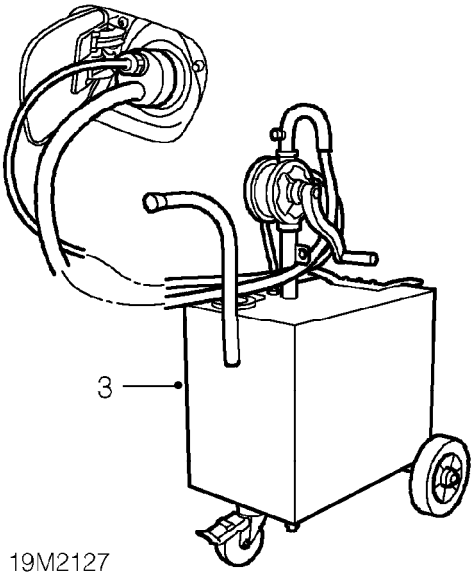

3. Using a bowser, drain fuel from the tank into a sealed container. Follow the manufacturers instructions for the connection and safe use of the bowser.
4. Continue draining until air bubbles appear and fuel ceases to flow.
5. Disconnect bowser from fuel tank.

INERTIA FUEL SHUT-OFF (IFS) SWITCH

Service repair no - 19.22.09

Remove

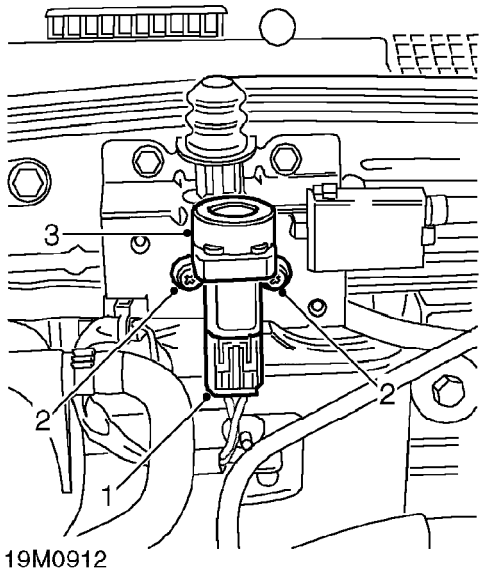

1. Disconnect multiplug from IFS switch.
2. Remove 2 screws securing IFS switch to mounting bracket.
3. Remove IFS switch.

Refit

1. Align IFS switch to mounting bracket.
2. Fit screws securing IFS switch to mounting bracket and tighten to 2 Nm.
3. Connect multiplug to IFS switch.
4. Press top of IFS switch to reset.

FUEL FILTER - 'K' SERIES

Service repair no - 19.25.02

Remove

1. Disconnect battery earth lead.

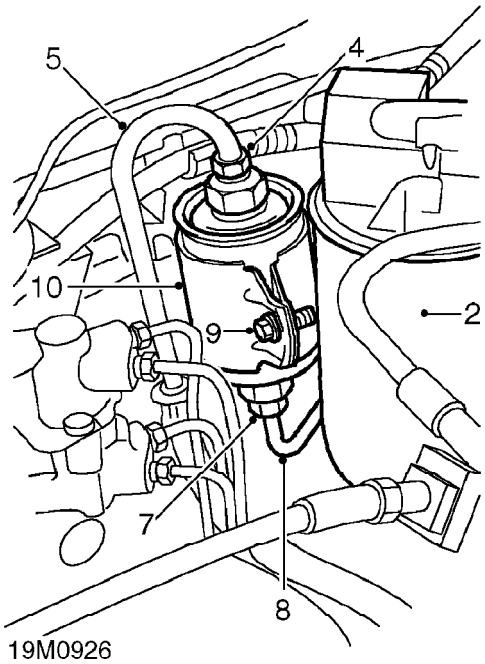

2. Release evaporative emission canister from mounting bracket and move aside.
3. Position absorbent cloth around fuel union.
4. Loosen union to relieve fuel pressure.

CAUTION: To prevent damage to fuel system pipes and components, use two spanners when loosening or tightening unions.

5. Disconnect fuel outlet pipe from fuel filter.
6. Position absorbent cloth around fuel filter union.
7. Loosen union and allow fuel to seep into cloth.
8. Disconnect fuel inlet pipe from fuel filter.
9. Loosen bolt securing fuel filter to bracket.
10. Remove and discard filter.

Refit

1. Position new filter in bracket with arrow pointing upwards and tighten bolt.
2. Clean fuel pipe unions.
3. Connect fuel inlet pipe to fuel filter and tighten union to 28 Nm.
4. Connect fuel outlet pipe to fuel filter and tighten union to 28 Nm.
5. Fit evaporative emission canister to mounting bracket.
6. Connect battery earth lead.

FUEL FILTER - 'L' SERIES

Service repair no - 19.25.02

Remove

1. Position absorbent cloth beneath fuel filter.

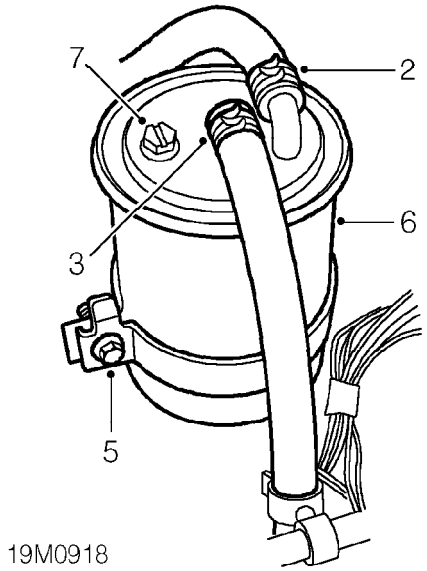

2. Release clip and disconnect fuel inlet hose from filter.
3. Release clip and disconnect fuel outlet hose from filter.

CAUTION: Plug the connections.

4. Remove fuel filter bracket from body mounting.
5. Loosen fuel filter bracket clamp bolt.
6. Remove fuel filter from fuel filter bracket.

Refit

1. Fit fuel filter to fuel filter bracket.
2. Tighten fuel filter bracket clamp bolt.
3. Fit fuel filter bracket to body mounting.
4. Remove plugs from connections.
5. Connect fuel outlet hose to filter and secure clip.
6. Connect fuel inlet hose to filter and secure clip.
7. Loosen bleed screw.
8. Repeatedly squeeze fuel hand primer until fuel, issuing from bleed screw is free from air bubbles; tighten bleed screw.
9. Continue to squeeze fuel hand primer until resistance is felt.
10. Remove absorbent cloth.

ELECTRIC FUEL PUMP - 'K' SERIES

Service repair no - 19.45.08

NOTE: The fuel pump and fuel gauge tank unit are integral parts of the fuel pump housing and cannot be renewed separately.

Remove

1. Remove fuel tank assembly. ***See this section.***

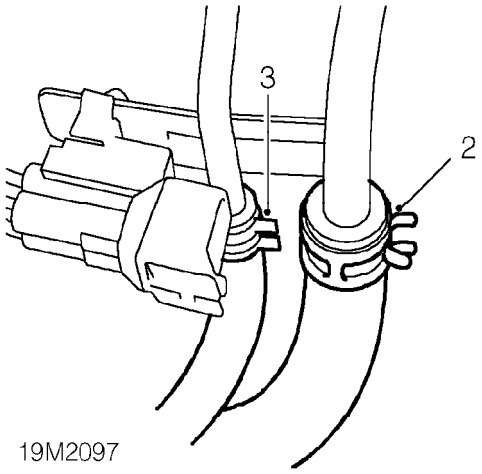

2. Release clip and disconnect fuel feed hose from fuel pump.
3. Release clip and disconnect fuel return hose from fuel pump.

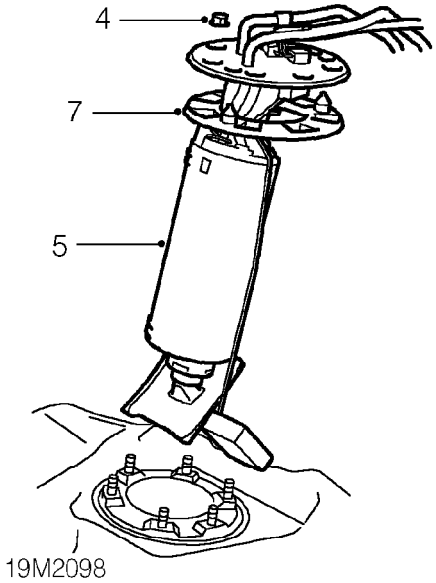

4. Remove 6 nuts securing fuel pump housing to fuel tank.
5. Release fuel pump housing from fuel tank.
6. Remove fuel pump housing from fuel tank.
7. Remove seal from fuel pump housing.

Refit

1. Clean mating face of fuel pump housing and fuel tank.
2. Clean seal and fit to fuel pump housing.
3. Fit fuel pump housing to fuel tank.
4. Fit nuts securing fuel pump housing to fuel tank and tighten to 9 Nm.
5. Connect fuel return hose to fuel pump and secure with clip.
6. Connect fuel feed hose to fuel pump and secure with clip.
7. Refit fuel tank assembly. ***See this section.***

FUEL TANK - 'K' SERIES

Service repair no - 19.55.01

Remove

1. Disconnect battery earth lead.
2. Raise rear of vehicle.

WARNING: Support on safety stands.

3. Drain fuel tank. ***See this section.***

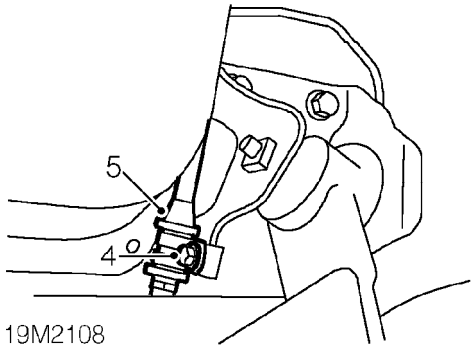

4. Remove bolt securing handbrake cable to 'H' frame LH mounting.
5. Release handbrake cable from 'H' frame mounting.

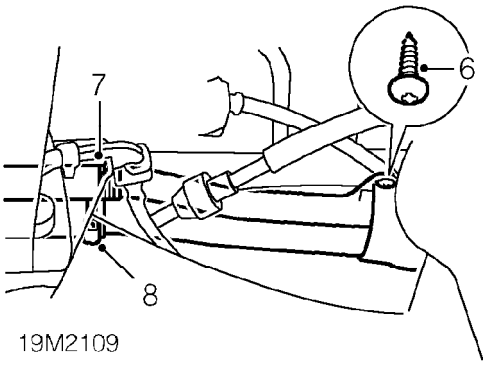

6. Remove screw securing filler neck to body.
7. Release clip and disconnect breather hose from filler neck.
8. Loosen clip and disconnect filler hose from filler neck.

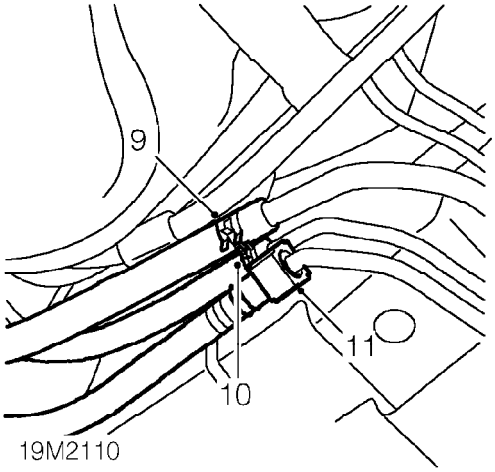

9. Release clip and disconnect fuel feed hose from fuel feed pipe.
10. Release clip and disconnect fuel return hose from fuel return pipe.
11. Clean area around quick fit connector and disconnect breather hose from pipe.
12. Fit wooden block to jack and position jack to support fuel tank.

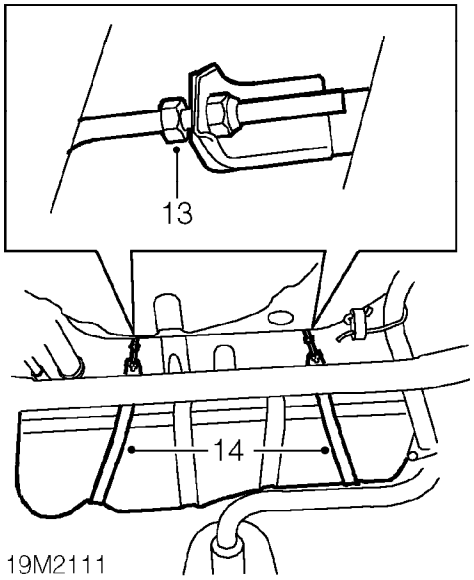

13. Loosen 2 fuel tank strap locknuts and remove 2 tank strap nuts.
14. Release fuel tank straps from vehicle body.
15. Using assistance, release fuel tank from body and lower.

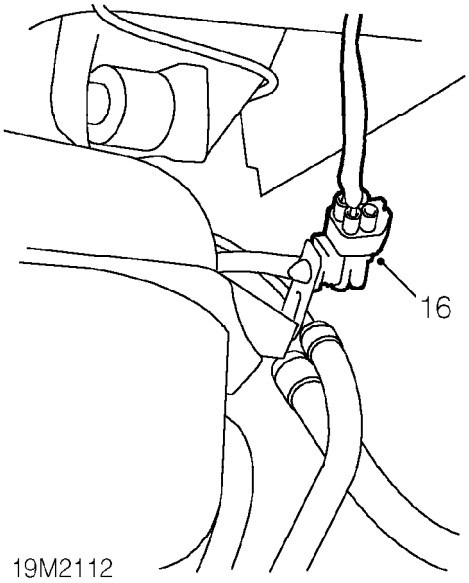

16. Disconnect fuel pump multiplug from harness.
17. Remove fuel tank from beneath vehicle.
    Do not carry out further dismantling if component is removed for access only.

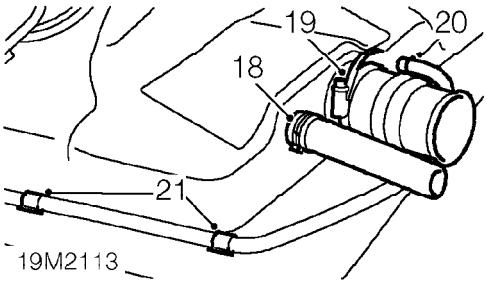

18. Release clip securing breather hose to fuel tank and remove breather hose.
19. Loosen clip securing filler neck hose to fuel tank and remove filler neck hose.
20. Release clip and disconnect breather hose from fuel tank.
21. Release breather hose from 2 clips on tank and remove hose.

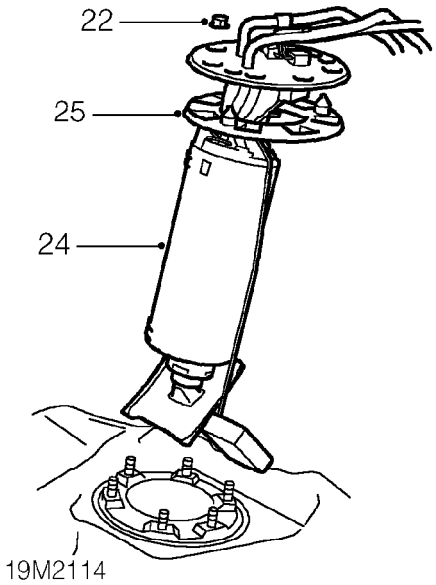

22. Remove 6 nuts securing fuel pump housing to fuel tank.
23. Release fuel pump housing from fuel tank.
24. Remove fuel pump housing from fuel tank.
25. Remove seal from fuel pump housing.

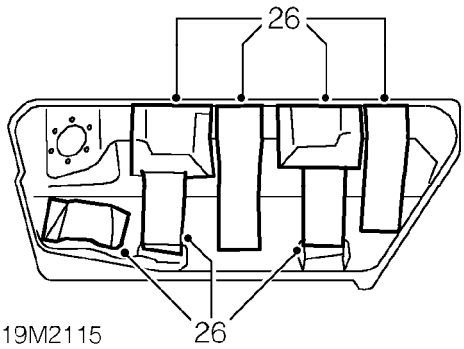

26. Remove rubber pads from old fuel tank, apply adhesive and fit to new tank.
27. Remove breather hose clips from old fuel tank and fit to new.
28. Clean mating face of fuel pump housing and fuel tank.
29. Clean seal and fit to fuel pump housing.
30. Fit fuel pump housing to fuel tank.
31. Fit nuts securing fuel pump housing to fuel tank and tighten to 9 Nm.
32. Connect breather hose to fuel tank and secure with clip.
33. Secure breather hose to clips on tank.
34. Fit filler hose to fuel tank and tighten clip.
35. Fit breather hose to fuel tank and secure with clip.

Refit

1. Using assistance, position fuel tank beneath vehicle and raise into position using a trolley jack.
2. Connect fuel pump multiplug to harness.
3. Align fuel tank to body and hook into position.
4. Align fuel tank straps to fuel tank and hook into body.
5. Fit and tighten nuts securing fuel tank straps to body. Tighten locknuts securing fuel tank straps.
6. Ensure fuel tank is properly located and remove trolley jack.
7. Connect fuel feed hose to fuel pipe and secure with clip.
8. Connect fuel breather hose to pipe, ensure connection to pipe is secure.
9. Connect fuel return hose to fuel return pipe and secure with clip.
10. Connect filler hose to filler neck and tighten clip.
11. Connect breather hose to filler neck and secure with clip.
12. Fit hand brake cable to ’H’ frame LH mounting, fit bolt and tighten to 20 Nm.
13. Align filler neck to body and secure with screw.
14. Remove stand(s) and lower vehicle.
15. Connect battery earth lead.

FUEL TANK - 'L' SERIES

Service repair no - 19.55.01

Remove

1. Disconnect battery earth lead.
2. Raise rear of vehicle.

WARNING: Support on safety stands.

3. Drain fuel tank. ***See this section.***

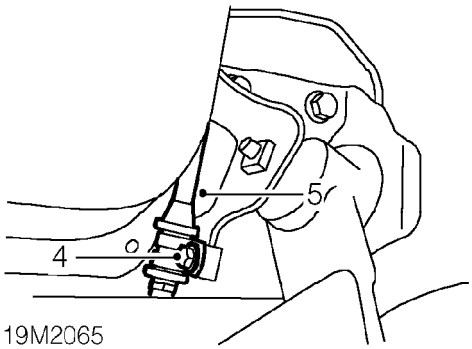

4. Remove bolt securing handbrake cable to 'H' frame LH mounting.
5. Release handbrake cable from 'H' frame mounting.

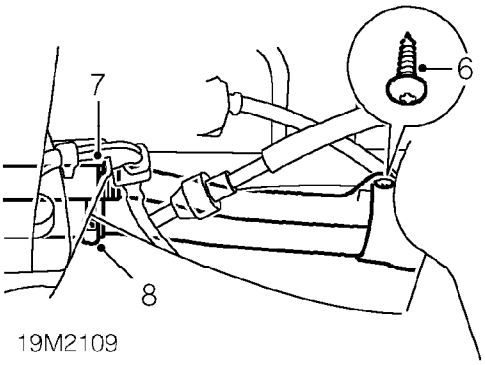

6. Remove screw securing filler neck to body.
7. Release clip and disconnect breather hose from filler neck.
8. Loosen clip and disconnect filler hose from filler neck.

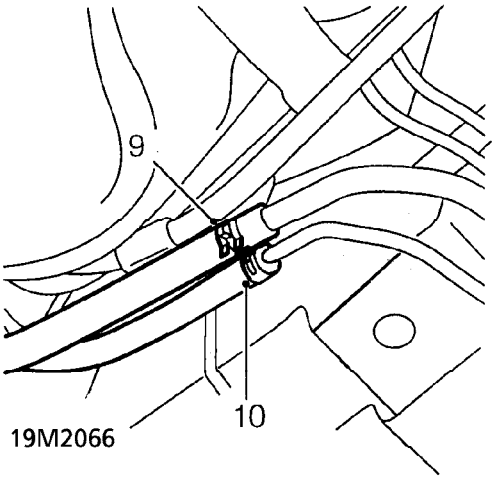

9. Release clip and disconnect fuel feed hose from fuel feed pipe.
10. Release clip and disconnect fuel return hose from fuel return pipe.
11. Fit wooden block to jack and position jack to support fuel tank.

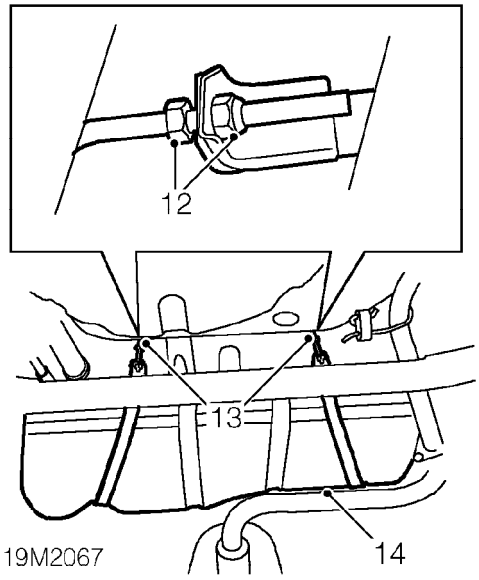

12. Loosen 2 fuel tank strap locknuts and remove 2 tank strap nuts.
13. Release fuel tank straps from vehicle body.
14. Using assistance, release fuel tank from body and lower.

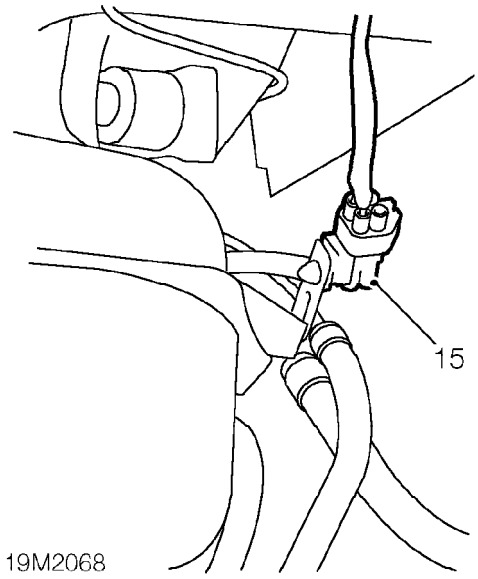

15. Disconnect fuel tank sender unit multiplug from harness.
16. Remove fuel tank from beneath vehicle.

Do not carry out further dismantling if component is removed for access only.

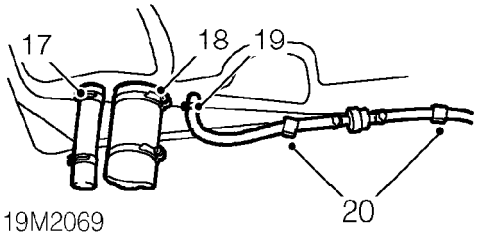

17. Release clip securing breather hose to fuel tank and remove breather hose.
18. Loosen clip securing filler neck hose to fuel tank and remove filler neck hose.
19. Release clip and disconnect breather hose from fuel tank.
20. Release breather hose and valve from 2 clips on tank and remove.

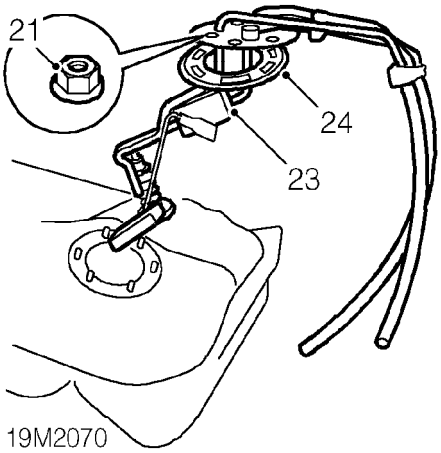

21. Remove 6 nuts securing fuel tank sender unit to tank.
22. Release sender unit from fuel tank.
23. Remove sender unit from tank.
24. Remove seal from sender unit.

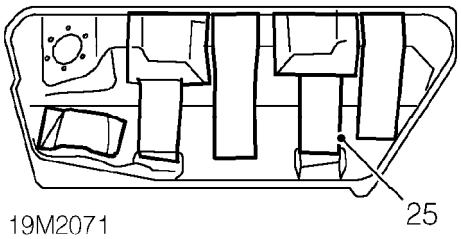

25. Remove rubber pads from old fuel tank, apply adhesive and fit to new tank.
26. Remove breather hose clips from old fuel tank and fit to new.
27. Clean mating face of sender unit and fuel tank.
28. Clean seal and fit to sender unit.
29. Fit sender unit to fuel tank.
30. Fit nuts securing sender unit to fuel tank and tighten to 9 Nm.
31. Connect breather hose to fuel tank and secure with clip.
32. Secure breather hose and valve to clips on tank.
33. Fit filler hose to fuel tank and tighten clip.
34. Fit breather hose to fuel tank and secure with clip.

Refit

1. Using assistance, position fuel tank beneath vehicle and raise into position using a trolley jack.
2. Connect fuel pump multiplug to harness.
3. Align fuel tank to body and hook into position.
4. Align fuel tank straps to fuel tank and hook into body.
5. Fit and tighten nuts securing fuel tank straps to body. Tighten locknuts securing fuel tank straps.
6. Ensure fuel tank is properly located and remove trolley jack.
7. Connect fuel feed hose to fuel pipe and secure with clip.
8. Connect fuel return hose to fuel return pipe and secure with clip.
9. Connect filler hose to filler neck and tighten clip.
10. Connect breather hose to filler neck and secure with clip.
11. Fit hand brake cable to ’H’ frame LH mounting, fit bolt and tighten to 20 Nm.
12. Align filler neck to body and secure with screw.
13. Remove stand(s) and lower vehicle.
14. Connect battery earth lead.

FUEL TANK BREATHER VALVE - 'L' SERIES

Service repair no - 19.55.25

Remove

1. Raise rear of vehicle.

WARNING: Support on safety stands.

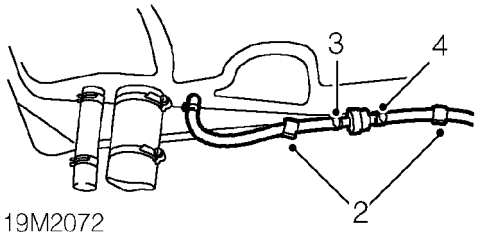

2. Release breather hose and valve from clips on tank.
3. Release clip and remove breather valve from hose on tank.
4. Release clip and disconnect hose from breather valve.

Refit

1. Connect hose to breather valve and secure with clip.
2. Connect breather valve to hose on fuel tank and secure with clip.
3. Secure breather valve and hose to clips on tank.
4. Remove stand(s) and lower vehicle.

CONTENTS

Page

DESCRIPTION AND OPERATION
COOLING SYSTEM COMPONENTS - ’K8’ 1
COOLING SYSTEM COMPONENTS - ’K16’ 2
COOLING SYSTEM OPERATION 3

ADJUSTMENTS
DRAIN AND REFILL 1

REPAIRS
COOLANT EXPANSION TANK 1
RADIATOR COOLING FAN 1
RADIATOR COOLING FAN - ’K16’ WITH AIR CONDITIONING 2
RADIATOR - ’K8’ 4
RADIATOR - ’K16’ 5
RADIATOR - ’K16’ WITH AIR CONDITIONING 6
THERMOSTAT 7
COOLANT PUMP - ’K8’ 8
COOLANT PUMP - ’K16’ 9
COOLANT PUMP - ’K16 WITH VVC’ 9

COOLING SYSTEM COMPONENTS - ’K8’

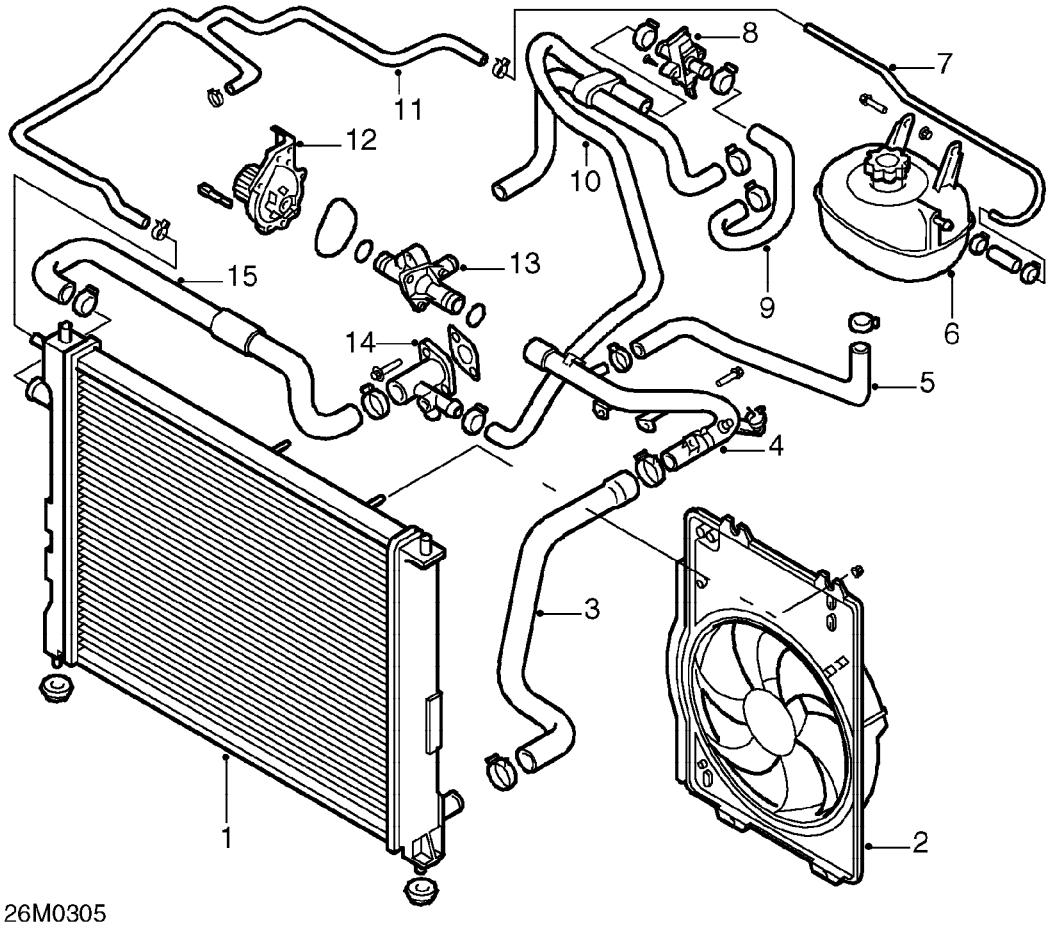

1. Radiator
2. Cooling fan and cowl
3. Bottom hose
4. Pipe - bottom hose to thermostat
5. Hose - expansion tank return
6. Expansion tank
7. Pipe - expansion tank to expansion hose
8. Heater temperature control valve
9. Hose - heater matrix feed
10. Hose - heater matrix return
11. Hose - expansion pipe to radiator
12. Coolant pump
13. Thermostat housing
14. Coolant outlet elbow
15. Top hose

COOLING SYSTEM COMPONENTS - ’K16’

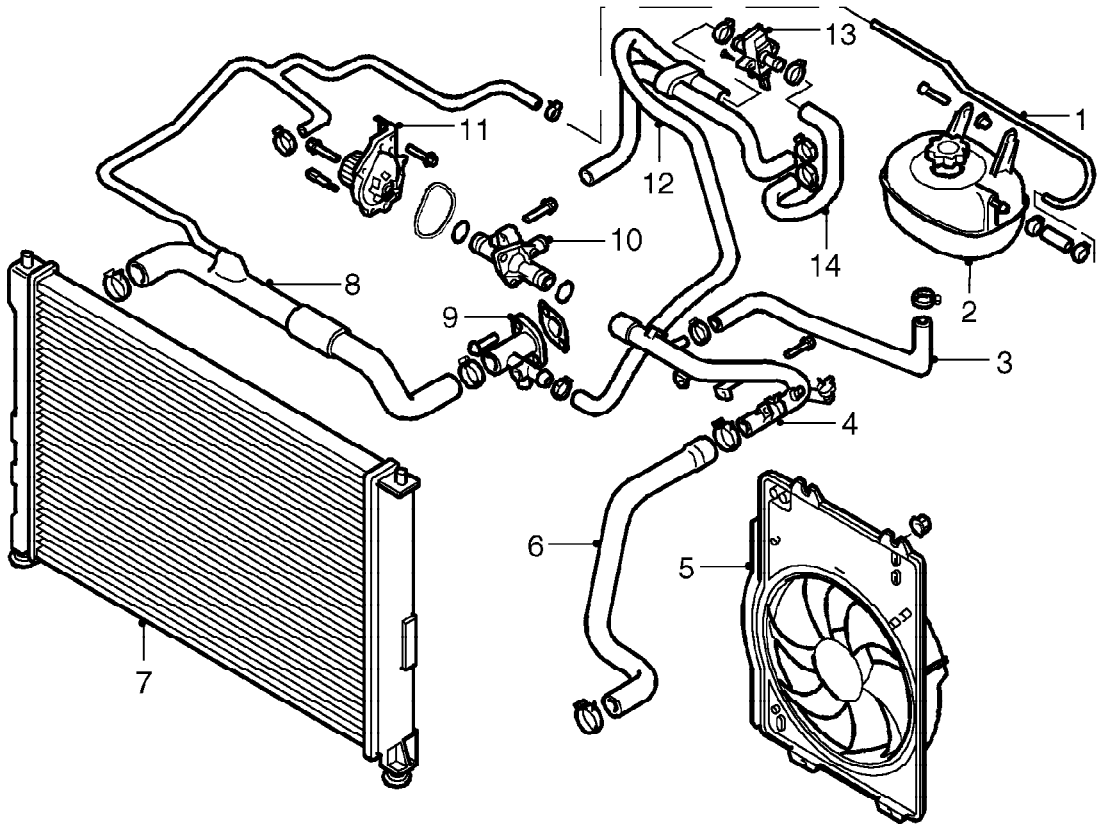

26M0330

1. Pipe - expansion tank to radiator
2. Expansion tank
3. Hose - expansion tank return
4. Pipe - bottom hose to thermostat
5. Cooling fan and cowl
6. Bottom hose
7. Radiator
8. Top hose
9. Coolant outlet elbow
10. Thermostat housing
11. Coolant pump
12. Hose - heater matrix return
13. Heater temperature control valve
14. Hose - heater matrix feed

COOLING SYSTEM OPERATION

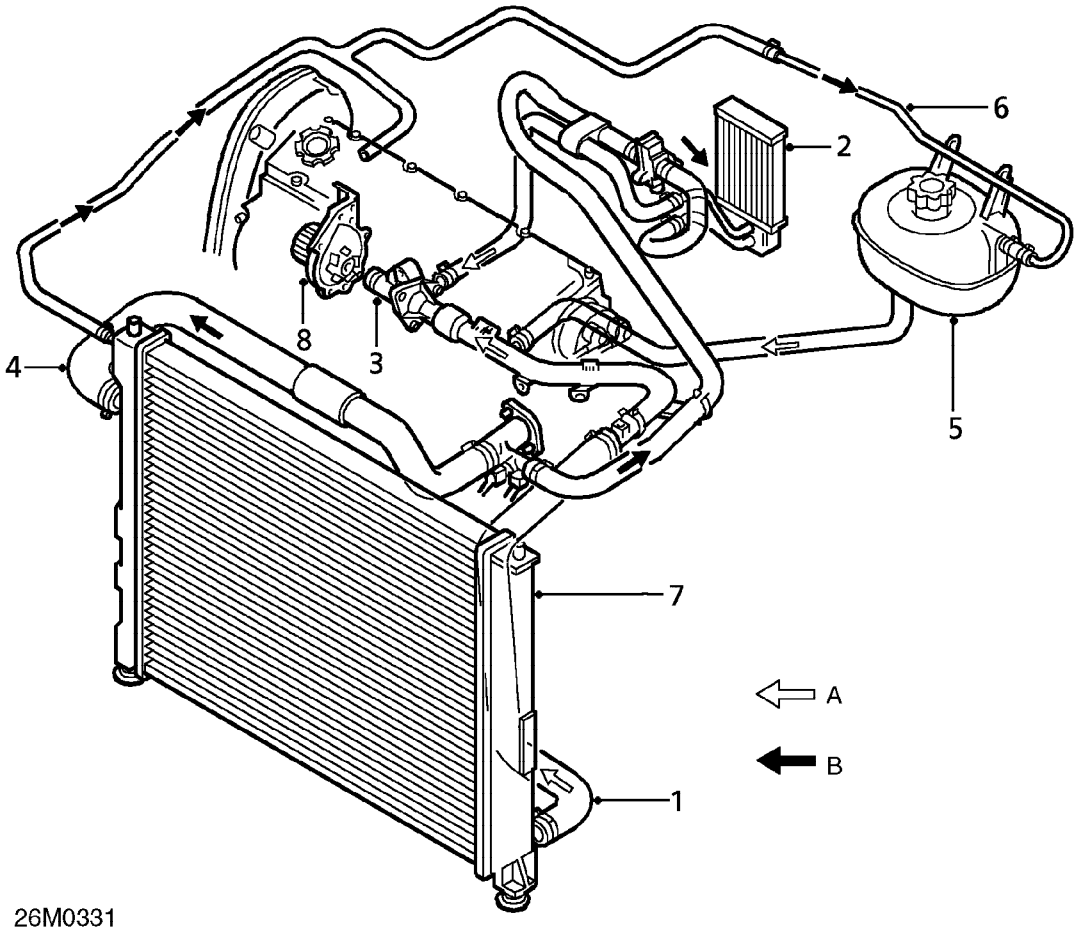

’K8’ flow diagram

A = COLD **B =** HOT

The cooling system employed is the bypass type.

When the engine is cold the thermostat closes off the coolant feed from the radiator bottom hose (1). Coolant is drawn via the heater matrix (2) from the top of the cylinder block, this allows some heat transfer to the radiator via the top hose by convection while retaining the majority of the heat within the cylinder block.

The siting of the thermostat (3) in the inlet rather than the outlet side of the system provides a reduced warm up time by circulating a small amount of coolant around a shorter tract, this also prevents temperature build up within the cylinder head prior to the thermostat opening.

As temperature increases the thermostat gradually opens, bleeding cool fluid into the cylinder block and allowing hot coolant to flow to the radiator via the top hose (4), balancing the flow of hot and cold fluid to maintain temperature. As the thermostat opens further so the full flow of coolant is drawn through the radiator.

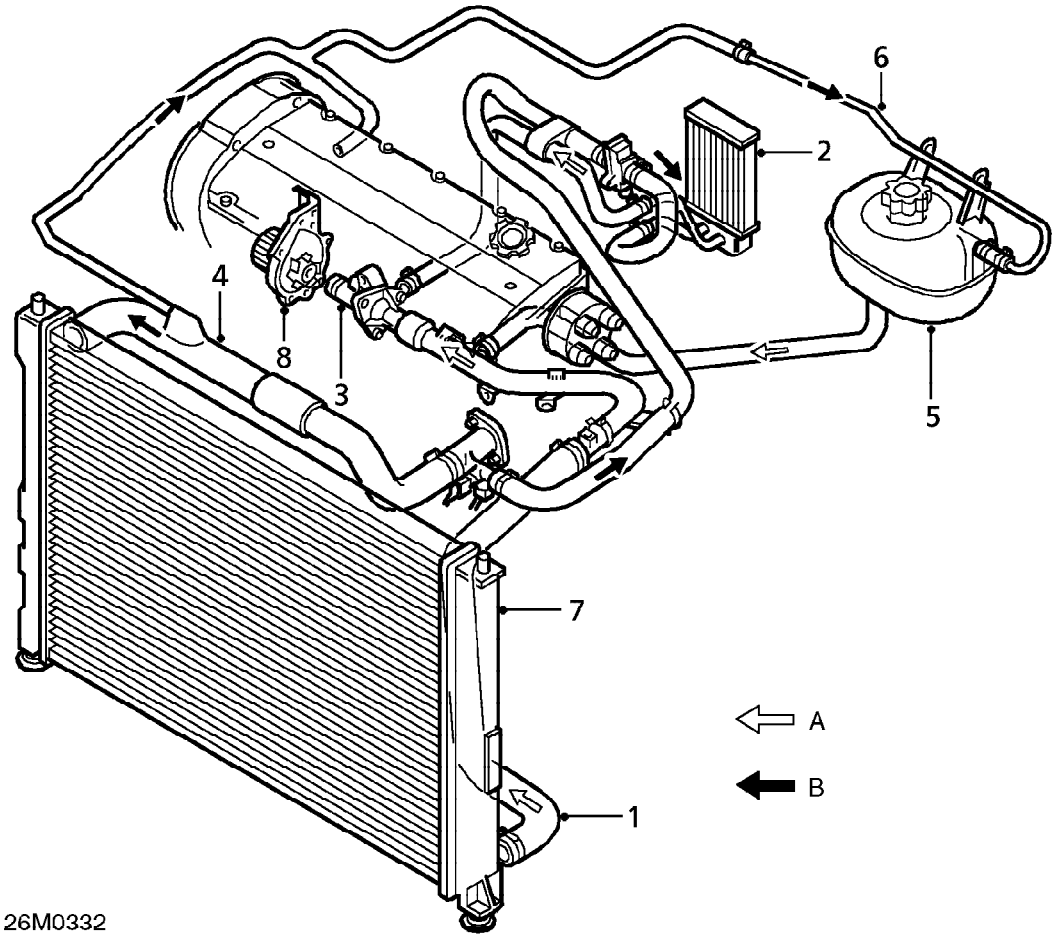

’K16’ flow diagram

A = COLD **B =** HOT

Any excess coolant created by heat expansion is returned to the expansion tank (5) via hose (6).

The radiator (7) is a copper/brass cross-flow type with moulded plastic end tanks which incorporate sensor mountings and is mounted on rubber bushes directly into the front body member. The top of the radiator is supported by means of mounting brackets bolted to the radiator and bonnet locking platform.

For additional air flow, at times when the vehicle is stationary, an electric cooling fan is fitted. This is triggered by the Engine Control Module (ECM) on ’K’ Series models or by a coolant temperature sensor at the rear of the cylinder block.

The coolant pump (8) is a rotor type pump which draws coolant directly from the thermostat. The pump is driven by a geared pulley from the camshaft timing belt.

DRAIN AND REFILL

Service repair no - 26.10.01

Drain

1. Visually check engine and cooling system for signs of coolant leaks.
2. Examine hoses for signs of cracking, distortion, and security of connections.
3. Remove air cleaner assembly. ***See ENGINE MANAGEMENT SYSTEM - MEMS, Repairs.***
4. Position heater temperature control to maximum heat position.
5. Remove expansion tank filler cap.
6. Position drain tin to collect coolant.

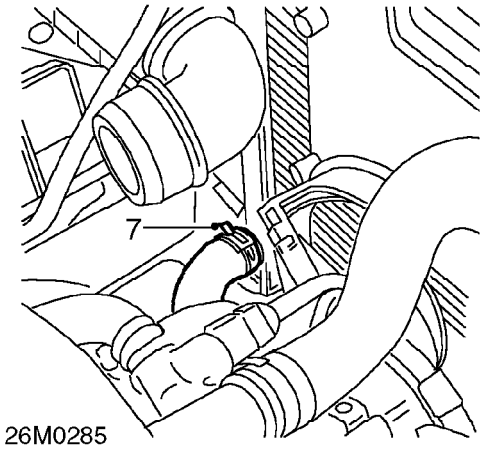

7. Loosen clip and disconnect bottom hose from radiator.
8. Allow cooling system to drain.

Refill

1. Flush system with water under low pressure.

CAUTION: High pressure water could damage the radiator.

2. Connect bottom hose to radiator and tighten clip.
3. Prepare coolant to required concentration. ***See INFORMATION, Capacities, fluids and lubricants.***
4. Remove bleed screw from coolant rail.

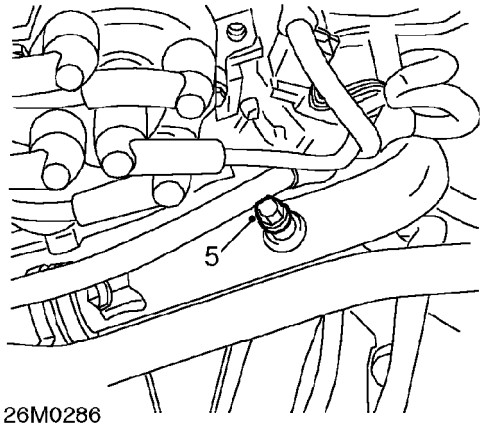

5. Fill system slowly until a steady flow of coolant is emitted from the bleed hole in coolant rail.
6. Fit bleed screw to coolant rail and tighten to 9 Nm.
7. Continue filling system until coolant level reaches 'MAX' mark on expansion tank.
8. Fit expansion tank filler cap.
9. Fit air cleaner. ***See ENGINE MANAGEMENT SYSTEM - MEMS, Repairs.***
10. Start and run engine until radiator cooling fan operates.
11. Switch off engine and allow to cool.
12. Check for leaks and top-up coolant to 'MAX' mark on expansion tank.

COOLANT EXPANSION TANK

Service repair no - 26.15.01

Remove

1. Position container to collect fluid loss from expansion tank.

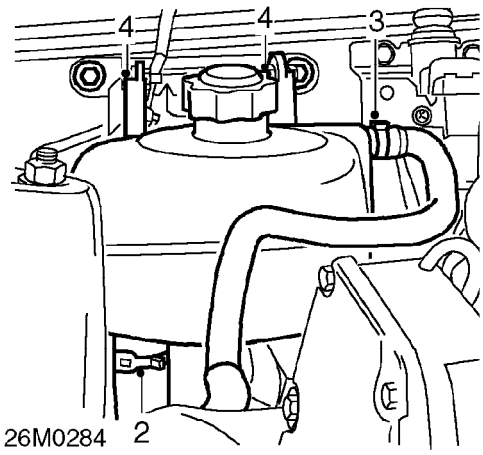

2. Loosen clip and disconnect hose from expansion tank.
3. Release clip and disconnect coolant feed hose from expansion tank.
4. Remove 2 bolts securing expansion tank to body.
5. Release expansion tank from body and allow coolant to drain.
6. Remove coolant expansion tank.

Refit

1. Position coolant expansion tank.
2. Fit 2 bolts securing expansion tank to body and tighten to 5 Nm.
3. Connect coolant feed hose to expansion tank and tighten clip.
4. Connect hose to expansion tank and tighten clip.
5. Top-up cooling system. ***See MAINTENANCE.***
6. Remove container positioned to catch fluid loss.

RADIATOR COOLING FAN

Service repair no - 26.25.22

Remove

1. Disconnect battery earth lead.

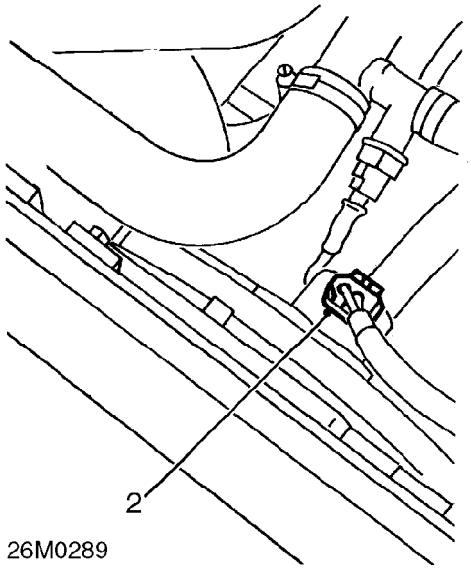

2. Disconnect multiplug from radiator cooling fan.
3. Release radiator top hose from clip on cooling fan housing.

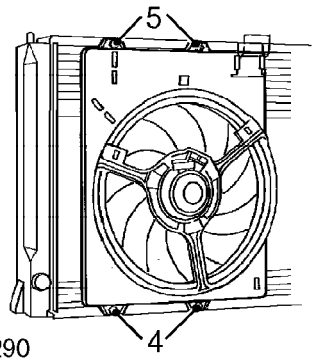

4. Remove 2 nuts securing bottom of cooling fan housing to radiator.
5. Remove 2 nuts securing top of cooling fan housing to radiator.
6. Release cooling fan housing from studs on radiator.
7. Manoeuvre cooling fan housing around radiator top hose and remove from vehicle.

Refit

1. Manoeuvre cooling fan housing around radiator top hose and into position on radiator studs.
2. Fit nuts securing cooling fan housing to radiator and tighten to 9 Nm.
3. Secure radiator top hose to clip on cooling fan housing.
4. Connect multiplug to radiator cooling fan.
5. Connect battery earth lead.

RADIATOR COOLING FAN - 'K16' WITH AIR CONDITIONING

Service repair no - 26.25.22.20

Remove

1. Raise front of vehicle.

WARNING: Support on safety stands.

2. Remove front beam. ***See FRONT SUSPENSION, Repairs.***

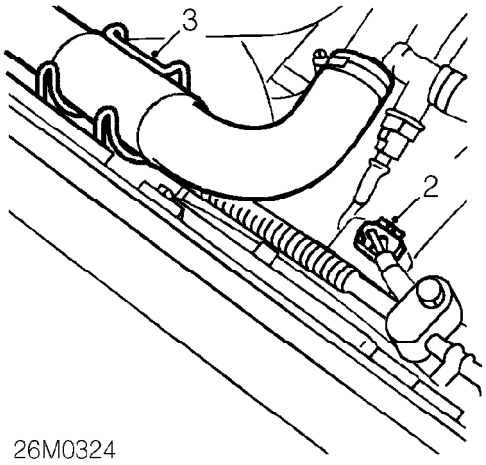

3. Release radiator top hose from clip on cooling fan housing.
4. Disconnect multiplug from cooling fan.

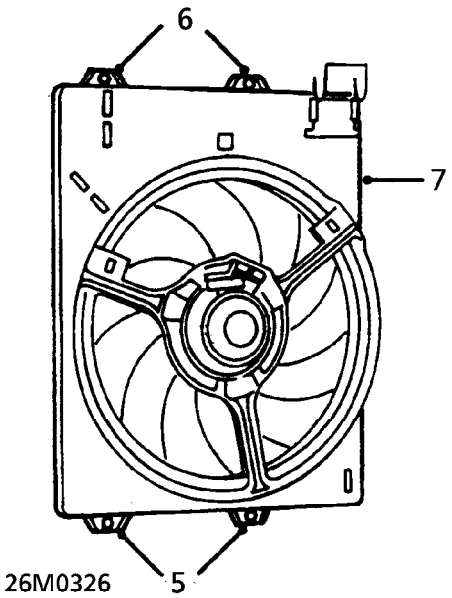

5. Remove 2 nuts securing bottom of cooling fan housing to radiator.
6. Remove 2 nuts securing top of cooling fan housing to radiator.
7. Release cooling fan housing from studs on radiator.
8. Lower cooling fan housing from vehicle and remove.

Do not carry out further dismantling if component is removed for access only.

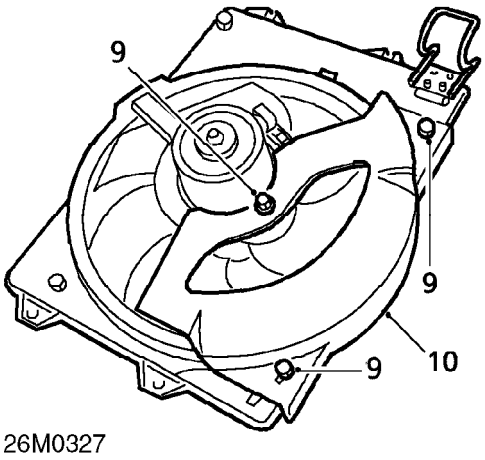

9. Remove 3 bolts securing heat shield to cooling fan housing.
10. Remove heat shield from cooling fan housing and fit to new.
11. Tighten bolts securing heat shield to 5 Nm.

Refit

1. Position cooling fan housing on radiator studs.
2. Fit nuts securing cooling fan housing to radiator and tighten to 9 Nm.
3. Secure radiator top hose to clip on cooling fan housing.
4. Connect multiplug to radiator cooling fan.
5. Fit front beam. ***See FRONT SUSPENSION, Repairs.***
6. Remove stand(s) and lower vehicle.

RADIATOR - 'K8'

Service repair no - 26.40.01

Remove

1. Drain cooling system. ***See Adjustments.***
2. Remove radiator cooling fan. ***See this section.***

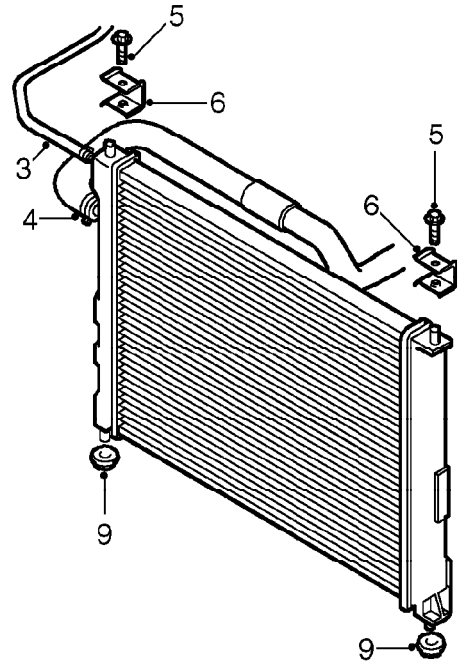

26M0311

3. Loosen clip and disconnect coolant expansion tank hose from radiator.
4. Loosen clip and disconnect top hose from radiator.
5. Remove 2 bolts securing radiator top mounting brackets to bonnet locking platform.
6. Remove 2 radiator top mounting brackets.
7. Release radiator from 2 lower mountings.
8. Remove radiator from vehicle.
   Do not carry out further dismantling if component is removed for access only.
9. Remove 2 lower mounting rubbers from radiator.
10. Fit lower mounting rubbers to new radiator.

Refit

1. Manoeuvre radiator into position and locate on lower mountings.
2. Fit top mountings to radiator and align to body.
3. Fit bolts securing radiator top mountings to bonnet locking platform and tighten to 9 Nm.
4. Connect top hose to radiator and tighten clip.
5. Connect coolant expansion tank hose to radiator and tighten clip.
6. Refit radiator cooling fan. ***See this section.***
7. Refill cooling system. ***See Adjustments.***

RADIATOR - 'K16'

Service repair no - 26.40.01

Remove

1. Drain cooling system. ***See Adjustments.***
2. Remove radiator cooling fan. ***See this section.***

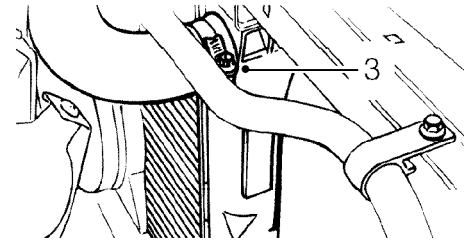

3. Loosen clip and disconnect top hose from radiator.

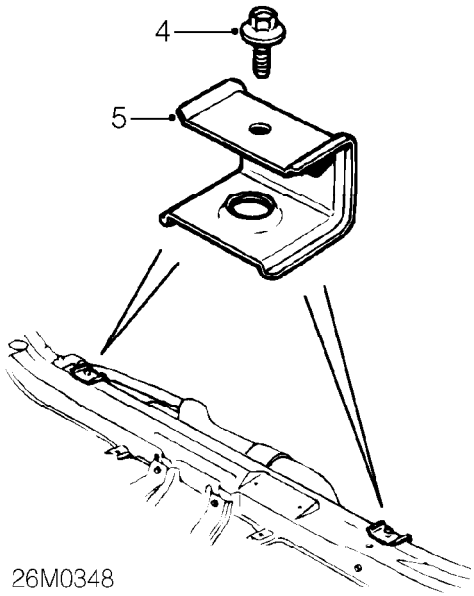

4. Remove 2 bolts securing radiator top mounting brackets to bonnet locking platform.
5. Remove 2 radiator top mounting brackets.

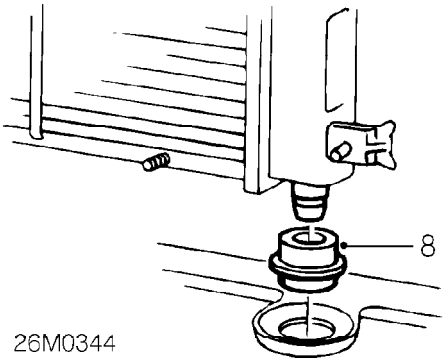

6. Release radiator from 2 lower mountings.
7. Remove radiator from vehicle.
   Do not carry out further dismantling if component is removed for access only.
8. Remove 2 lower mounting rubbers from radiator.
9. Fit lower mounting rubbers to new radiator.

Refit

1. Manoeuvre radiator into position and locate on lower mountings.
2. Fit top mountings to radiator and align to body.
3. Fit bolts securing radiator top mountings to bonnet locking platform and tighten to 9 Nm.
4. Connect top hose to radiator and tighten clip.
5. Refit radiator cooling fan. ***See this section.***
6. Refill cooling system. ***See Adjustments.***

RADIATOR - 'K16' WITH AIR CONDITIONING

Service repair no - 26.40.01.20

Remove

1. Drain cooling system. ***See Adjustments.***
2. Remove radiator cooling fan. ***See this section.***

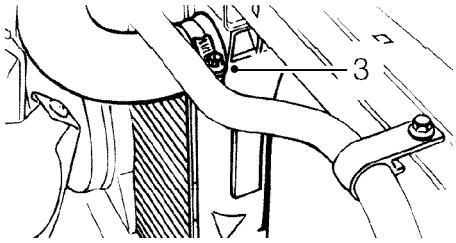

3. Loosen clip and disconnect top hose from radiator.

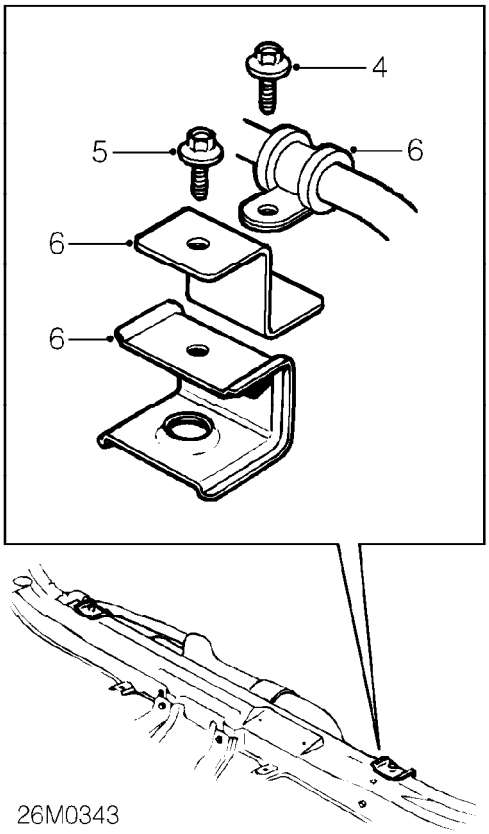

4. Remove bolt securing air conditioning pipe to mounting bracket.
5. Remove 2 bolts securing radiator top mounting brackets to bonnet locking platform.
6. Remove 2 radiator top mounting brackets and air conditioning pipe bracket.
7. Remove radiator by lowering to floor.
   Do not carry out further dismantling if component is removed for access only.

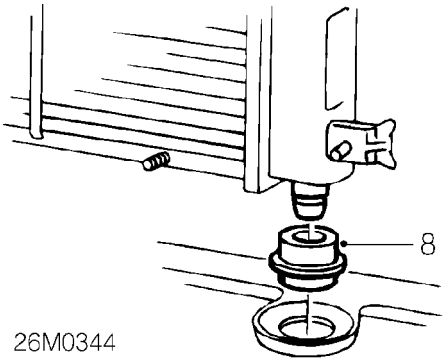

8. Remove 2 lower mounting rubbers from radiator.
9. Fit lower mounting rubbers to new radiator.

Refit

1. Position radiator and locate on lower mountings.
2. Fit top mounting brackets and air conditioning pipe bracket to radiator.
3. Fit bolts securing radiator top mounting bracket to bonnet locking platform and tighten to 9 Nm.
4. Connect top hose to radiator and tighten clip.
5. Fit bolt securing air conditioning pipe to mounting bracket and tighten to 6 Nm.
6. Fit radiator cooling fan. ***See this section.***
7. Refill cooling system. ***See Adjustments.***

THERMOSTAT

Service repair no - 26.45.09

Remove

1. Disconnect battery earth lead.
2. Drain cooling system. ***See Adjustments.***
3. Remove air cleaner. ***See ENGINE MANAGEMENT SYSTEM - MEMS, Repairs.***

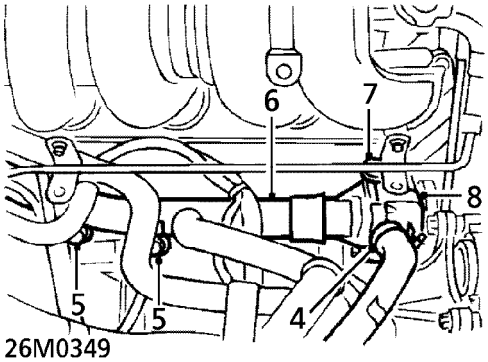

4. Loosen clip and disconnect heater hose from thermostat housing.
5. Remove 2 bolts securing coolant rail to cylinder block.
6. Release coolant rail from thermostat housing.
7. Remove bolt securing thermostat housing to cylinder block.
8. Release thermostat housing from coolant pump and remove thermostat housing.

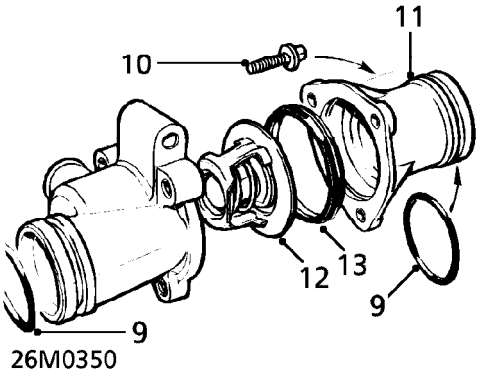

9. Remove and discard 2 'O' rings from thermostat housing.
10. Remove 3 bolts securing cover to thermostat housing.
11. Remove thermostat housing cover.
12. Remove thermostat from housing.
13. Remove rubber seal from thermostat.

Refit

1. Examine thermostat rubber seal for signs of deterioration or damage, renew if necessary.
2. Fit rubber seal to thermostat.
3. Clean mating faces of thermostat and cover.

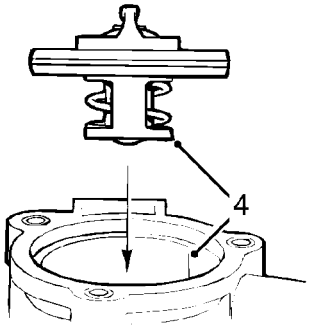

4. Align thermostat to shoulder in thermostat housing.
5. Fit thermostat housing cover and tighten bolts to 9 Nm.
6. Clean 'O' ring grooves on thermostat housing outlets.
7. Lubricate new 'O' rings with rubber grease.
8. Fit 'O' rings to thermostat housing.

9. Position thermostat housing and engage fully to coolant pump.
10. Align dipstick tube bracket to thermostat housing.
11. Fit bolt securing thermostat housing to cylinder block and tighten to 10 Nm.
12. Connect coolant rail to thermostat housing.
13. Align coolant rail to cylinder block, fit bolts and tighten to 9 Nm.
14. Connect heater hose to thermostat housing and tighten clip.
15. Refill cooling system. ***See Adjustments.***
16. Fit air cleaner. ***See ENGINE MANAGEMENT SYSTEM - MEMS, Repairs.***
17. Connect battery earth lead.

COOLANT PUMP - 'K8'

Service repair no - 26.50.01

Remove

1. Drain cooling system. ***See Adjustments.***
2. Remove camshaft timing belt. ***See ENGINE - 'K8', Repairs.***

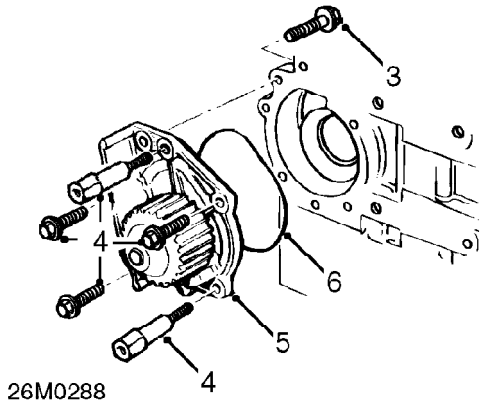

3. Remove bolt securing rear cover to coolant pump.
4. Remove 3 bolts and 2 pillar bolts securing coolant pump to cylinder block.
5. Remove coolant pump from dowels and rear cover.
6. Remove and discard 'O' ring from coolant pump.

Refit

1. Clean pump and mating face, dowel and dowel hole.
2. Fit new 'O' ring to coolant pump.
3. Fit coolant pump to cylinder block, fit and tighten bolts to 10 Nm.
4. Fit and tighten pillar bolts to 10 Nm.
5. Fit and tighten bolt, rear cover to coolant pump, to 10 Nm.
6. Fit camshaft timing belt. ***See ENGINE - 'K8', Repairs.***
7. Refill cooling system. ***See Adjustments.***

COOLANT PUMP - ’K16’

Service repair no - 26.50.01

Remove

1. Drain cooling system. ***See Adjustments.***
2. Remove camshaft timing belt. ***See ENGINE - ’K16’, Repairs.***

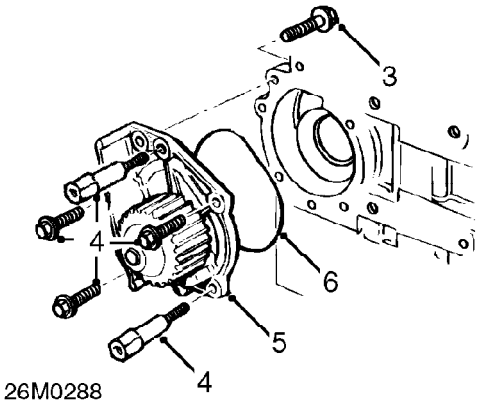

3. Remove bolt securing rear cover to coolant pump.
4. Remove 3 bolts and 2 pillar bolts securing coolant pump to cylinder block.
5. Remove coolant pump from dowels and rear cover.
6. Remove and discard ’O’ ring from coolant pump.

Refit

1. Clean pump and mating face, dowel and dowel hole.
2. Fit new ’O’ ring to coolant pump.
3. Fit coolant pump to cylinder block, fit and tighten bolts to 10 Nm.
4. Fit and tighten pillar bolts to 10 Nm.
5. Fit and tighten bolt, rear cover to coolant pump, to 10 Nm.
6. Fit camshaft timing belt. ***See ENGINE - ’K16’, Repairs.***
7. Refill cooling system. ***See Adjustments.***

COOLANT PUMP - ’K16 WITH VVC’

Service repair no - 26.50.01

Remove

1. Drain cooling system. ***See Adjustments.***
2. Remove camshaft timing belt. ***See ENGINE - ’K16 WITH VVC’, Repairs.***

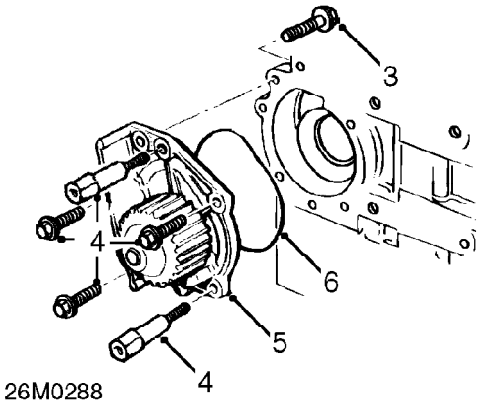

3. Remove bolt securing rear cover to coolant pump.
4. Remove 3 bolts and 2 pillar bolts securing coolant pump to cylinder block.
5. Remove coolant pump from dowels and rear cover.
6. Remove and discard ’O’ ring from coolant pump.

Refit

1. Clean pump and mating face, dowel and dowel hole.
2. Fit new ’O’ ring to coolant pump.
3. Fit coolant pump to cylinder block, fit and tighten bolts to 10 Nm.
4. Fit and tighten pillar bolts to 10 Nm.
5. Fit and tighten bolt, rear cover to coolant pump, to 10 Nm.
6. Fit camshaft timing belt. ***See ENGINE - ’K16 WITH VVC’, Repairs.***
7. Refill cooling system. ***See Adjustments.***

CONTENTS

Page

DESCRIPTION AND OPERATION
COOLING SYSTEM COMPONENTS 1
COOLING SYSTEM OPERATION 2

ADJUSTMENTS
DRAIN AND REFILL 1

REPAIRS
COOLANT EXPANSION TANK 1
RADIATOR COOLING FAN - MODELS WITHOUT AIR CONDITIONING 1
RADIATOR COOLING FAN - MODELS WITH AIR CONDITIONING 3
THERMOSTATIC SWITCH - MODELS WITH INTERCOOLER 4
THERMOSTATIC SWITCH - MODELS WITH AIR CONDITIONING 5
RADIATOR 6
RADIATOR - MODELS WITH INTERCOOLER 7
RADIATOR - MODELS WITH AIR CONDITIONING 8
THERMOSTAT 10
COOLANT PUMP - MODELS WITHOUT AIR CONDITIONING 10
COOLANT PUMP - MODELS WITH AIR CONDITIONING 11
COOLANT PUMP HOUSING - MODELS WITHOUT AIR CONDITIONING 13
COOLANT PUMP HOUSING - MODELS WITH AIR CONDITIONING 17

COOLING SYSTEM COMPONENTS

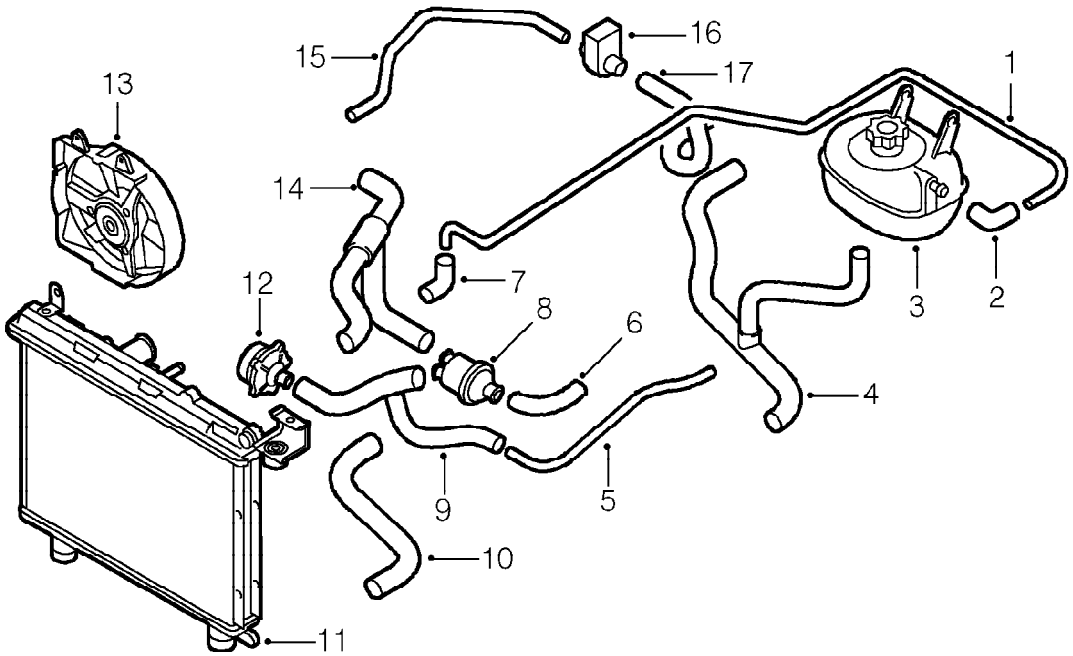

26M0333

1. Coolant expansion pipe
2. Elbow - expansion tank to expansion pipe
3. Expansion tank
4. Expansion tank to coolant rail
5. Coolant rail
6. Hose - oil cooler to thermostat housing
7. Pipe - expansion pipe to radiator
8. Thermostat housing
9. Hose - coolant pump to thermostat housing
10. Bottom hose
11. Radiator
12. Coolant pump
13. Cooling fan and cowl
14. Top hose
15. Hose - engine to heater valve
16. Heater temperature control valve
17. Hose - heater valve to heater

COOLING SYSTEM OPERATION

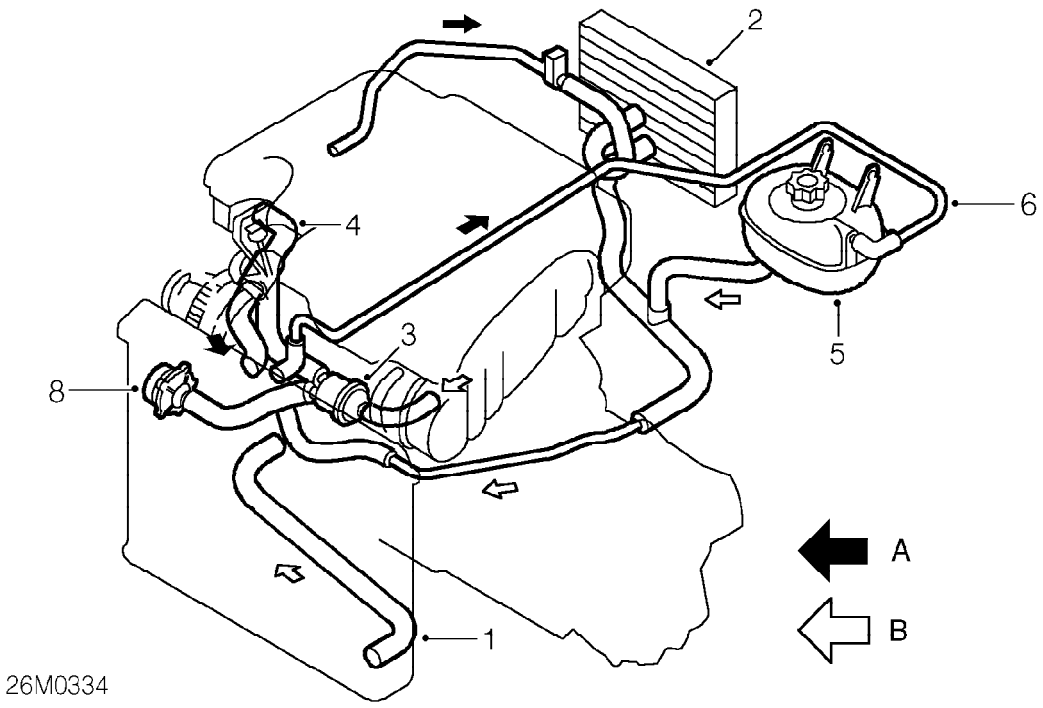

A = HOT **B =** COLD

The cooling system employed is the bypass type.

When the engine is cold the thermostat closes off the coolant feed from the radiator bottom hose (1). Coolant is drawn via the heater matrix (2) from the top of the cylinder block, this allows some heat transfer to the radiator via the top hose by convection while retaining the majority of the heat within the cylinder block.

The siting of the thermostat (3) in the inlet rather than the outlet side of the system provides a reduced warm up time by circulating a small amount of coolant around a shorter tract, this also prevents temperature build up within the cylinder head prior to the thermostat opening.

As temperature increases the thermostat gradually opens, bleeding cool fluid into the cylinder block and allowing hot coolant to flow to the radiator via the top hose (4), balancing the flow of hot and cold fluid to maintain temperature. As the thermostat opens further so the full flow of coolant is drawn through the radiator.

Any excess coolant created by heat expansion is returned to the expansion tank (5) via hose (6).

The radiator (7) is a copper/brass cross-flow type with moulded plastic end tanks which incorporate sensor mountings and is mounted on rubber bushes directly into the front body member. The top of the radiator is supported by means of mounting brackets bolted to the radiator and bonnet locking platform.

For additional air flow, at times when the vehicle is stationary, an electric cooling fan is fitted. This is triggered by the low temperature switch (on vehicles fitted with an intercooler) mounted in the top right hand side of the radiator or by the Engine Control Module (ECM) on non-intercooler vehicles.

The coolant pump (8) is a rotor type pump which draws coolant directly from the thermostat. The coolant pump is driven from the ABS pump.

DRAIN AND REFILL

Service repair no - 26.10.01

Drain

1. Visually check engine and cooling system for signs of coolant leaks.
2. Examine hoses for signs of cracking, distortion, and security of connections.
3. Remove undertray. ***See BODY, Exterior fittings.***
4. Position heater temperature control to maximum heat position.

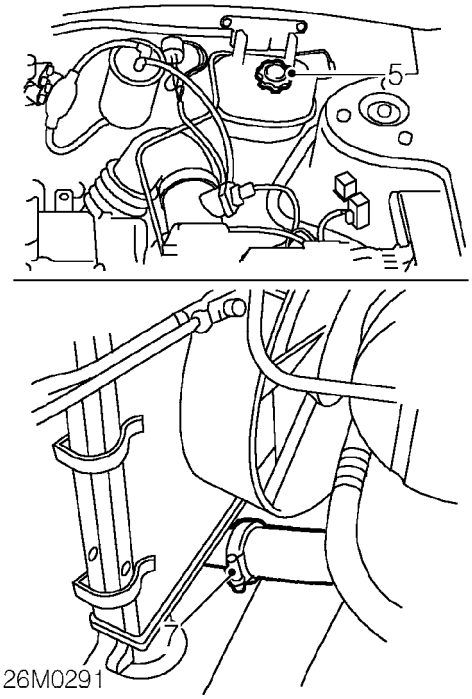

5. Remove expansion tank filler cap.
6. Position drain tin to collect coolant.
7. Loosen clip and disconnect bottom hose from radiator.
8. Allow cooling system to drain.

Refill

1. Flush system with water under low pressure.

CAUTION: High pressure water could damage the radiator.

2. Connect bottom hose to radiator and tighten clip.
3. Prepare coolant to required concentration. ***See INFORMATION, Capacities, fluids and lubricants.***
4. Fill system until coolant level reaches ’MAX’ mark on expansion tank.
5. Fit expansion tank filler cap.
6. Fit undertray. ***See BODY, Exterior fittings.***
7. Start and run engine until radiator cooling fan operates.
8. Switch off engine and allow to cool.
9. Check for leaks and top-up coolant to ’MAX’ mark on expansion tank.

COOLANT EXPANSION TANK

Service repair no - 26.15.01

Remove

1. Position container to collect fluid loss from expansion tank.

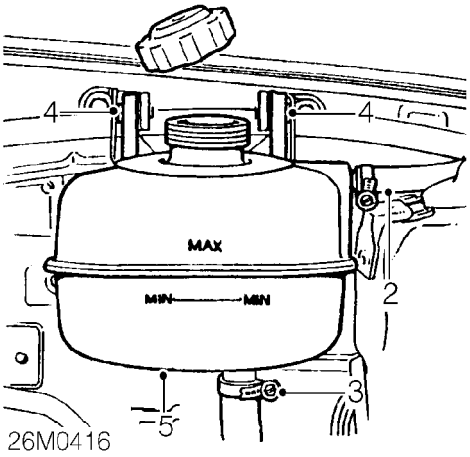

2. Release clip and disconnect hose from expansion tank.
3. Release clip and disconnect coolant feed hose from expansion tank.
4. Remove 2 bolts securing expansion tank to body.
5. Release expansion tank from body and allow coolant to drain.
6. Remove coolant expansion tank.

Refit

1. Position coolant expansion tank.
2. Fit 2 bolts securing expansion tank to body and tighten to 5 Nm.
3. Connect coolant feed hose to expansion tank and secure with clip.
4. Connect hose to expansion tank and secure with clip.
5. Top-up cooling system. ***See MAINTENANCE.***
6. Remove container positioned to catch fluid loss.

RADIATOR COOLING FAN - MODELS WITHOUT AIR CONDITIONING

Service repair no - 26.25.22

Remove

1. Disconnect battery earth lead.

Models with intercooler

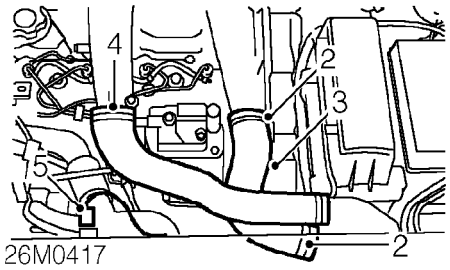

2. Loosen clips securing hose to turbocharger pipe and intercooler.
3. Remove intercooler top hose.
4. Release clip securing intercooler bottom hose to inlet manifold intake pipe and move aside.
5. Disconnect multiplug from thermostatic switch.

All models

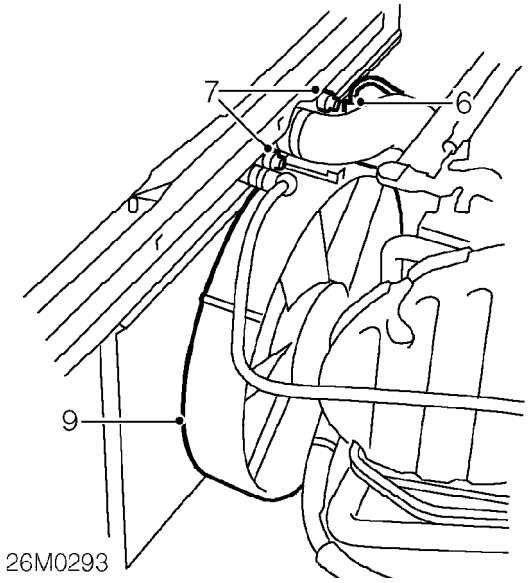

6. Disconnect multiplug from radiator cooling fan.
7. Remove 2 bolts securing cooling fan housing to radiator.
8. Release cooling fan housing from spigot on radiator.
9. Manoeuvre cooling fan housing around radiator top hose and remove from vehicle.

Refit

1. Manoeuvre cooling fan housing around radiator top hose and into position on radiator.
2. Fit bolts securing cooling fan housing to radiator and tighten to 9 Nm.
3. Connect multiplug to cooling fan.

Models with intercooler

4. Connect intercooler bottom hose to inlet manifold intake pipe and secure with clip.
5. Fit hose between intercooler and turbocharger pipe and tighten clips.
6. Connect multiplug to thermostatic switch.

All models

7. Connect battery earth lead.

RADIATOR COOLING FAN - MODELS WITH AIR CONDITIONING

Service repair no - 26.25.22.20

Remove

1. Remove engine acoustic cover. ***See BODY, Exterior fittings.***

Models with intercooler

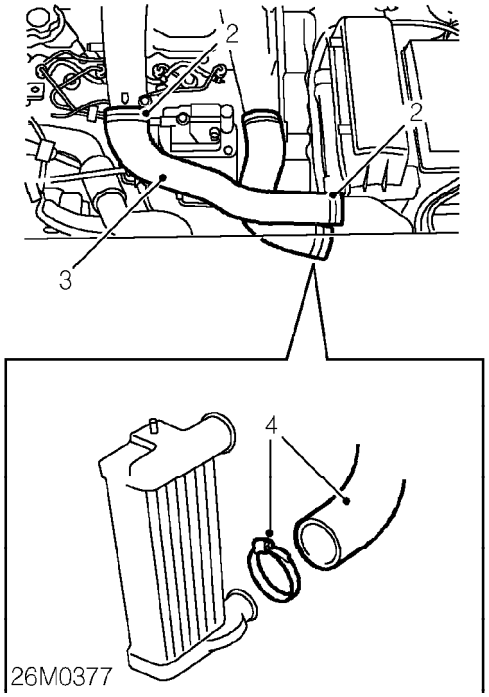

2. Loosen clips securing intercooler top hose to intercooler and turbocharger pipe.
3. Remove intercooler top hose.
4. Loosen clip securing intercooler bottom hose to inlet manifold intake pipe and position hose aside.

All models

5. Position drain tray to collect any coolant spillage.

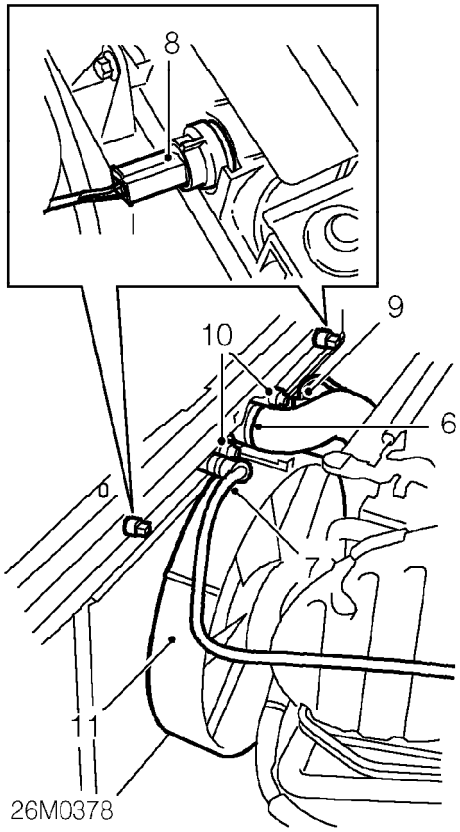

6. Loosen clip and disconnect top hose from radiator and position aside.
7. Loosen clip and disconnect expansion tank hose to radiator and position hose aside.
8. Disconnect multiplugs from thermostatic switches.
9. Disconnect multiplug from cooling fan.
10. Remove 2 bolts securing cooling fan housing to radiator.
11. Release and remove cooling fan housing from radiator.

Refit

1. Manoeuvre cooling fan housing into position and locate on radiator.
2. Fit 2 bolts securing cooling fan housing to radiator and tighten to 9 Nm.
3. Connect multiplug to cooling fan.
4. Connect multiplugs to thermostatic switches.
5. Connect expansion tank hose to radiator and tighten clip.
6. Connect top hose to radiator and tighten clip.

Models with intercooler

7. Connect intercooler bottom hose to inlet manifold intake pipe and tighten clip.
8. Fit hose between intercooler and turbocharger pipe and tighten clips.

All models

9. Fit engine acoustic cover. ***See BODY, Exterior fittings.***
10. Top up cooling system. ***See MAINTENANCE.***

THERMOSTATIC SWITCH - MODELS WITH INTERCOOLER

Service repair no - 26.25.35

Remove

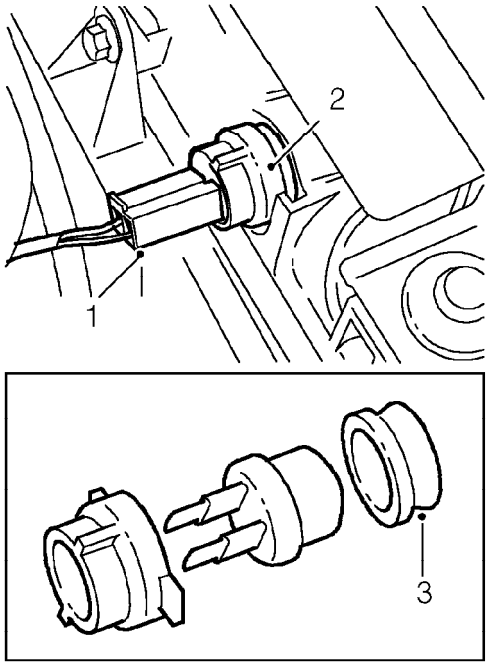

26M0381

1. Disconnect multiplug from switch.
2. Rotate switch locking ring through 90° and remove.
3. Release switch from radiator, remove and discard seal.

Refit

1. Fit new seal to switch and fit switch to radiator.
2. Secure switch with locking ring.
3. Connect multiplug to switch.

THERMOSTATIC SWITCH - MODELS WITH AIR CONDITIONING

Service repair no - 26.25.35.20

Remove

1. Remove engine acoustic cover. ***See BODY, Exterior fittings.***

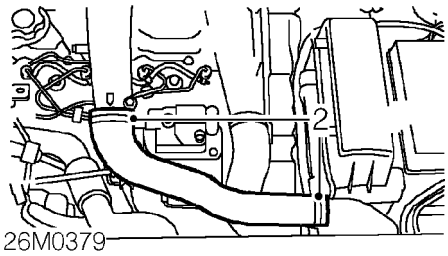

2. *If fitted:* Loosen 2 clips securing intercooler top hose to turbocharger pipe and intercooler, remove hose.

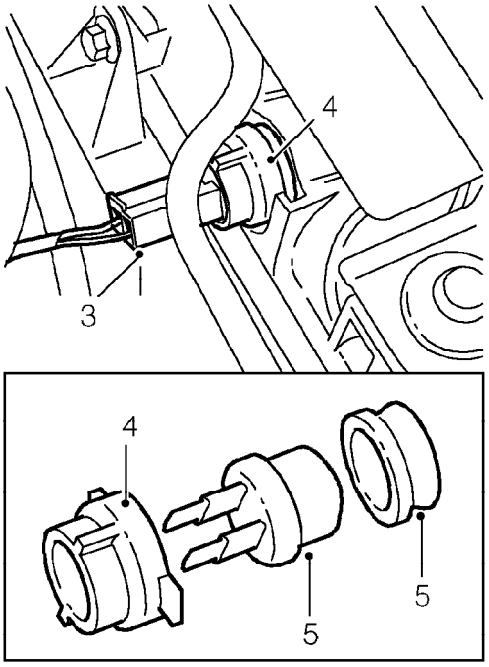

3. Disconnect multiplug from switch.
4. Rotate switch locking ring through 90° and remove.
5. Release switch from radiator, remove and discard seal.

Refit

1. Fit new seal to switch and fit switch to radiator.
2. Secure switch with locking ring.
3. Connect multiplug to switch.
4. *If fitted:* Fit intercooler top hose and tighten clips.
5. Fit engine acoustic cover. ***See BODY, Exterior fittings.***

RADIATOR

Service repair no - 26.40.01

Remove

1. Drain cooling system. ***See Adjustments.***
2. Remove radiator cooling fan. ***See this section.***

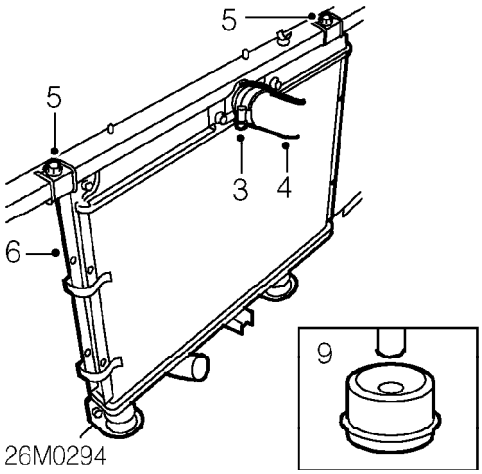

3. Loosen clip securing top hose to radiator.
4. Release top hose from radiator.
5. Remove 2 bolts securing radiator top mounting brackets to bonnet platform.
6. Remove 2 radiator top mounting brackets.
7. Release radiator from 2 lower mountings.
8. Remove radiator from vehicle.
   Do not carry out further dismantling if component is removed for access only.
9. Remove 2 lower mounting rubbers from old radiator.
10. Fit lower mounting rubbers to new radiator.

Refit

1. Manoeuvre radiator into position and locate on lower mountings.
2. Fit top mountings to radiator and align to body.
3. Fit bolts securing radiator to bonnet platform and tighten to 9 Nm.
4. Connect top hose to radiator and secure with clip.
5. Fit radiator cooling fan. ***See this section.***
6. Fill cooling system. ***See Adjustments.***

RADIATOR - MODELS WITH INTERCOOLER

Service repair no - 26.40.01

Remove

1. Drain cooling system. ***See Adjustments.***
2. Remove air cleaner. ***See ENGINE MANAGEMENT SYSTEM - EDC, Repairs.***
3. Remove engine acoustic cover. ***See BODY, Exterior fittings.***
4. Remove radiator cooling fan. ***See this section.***

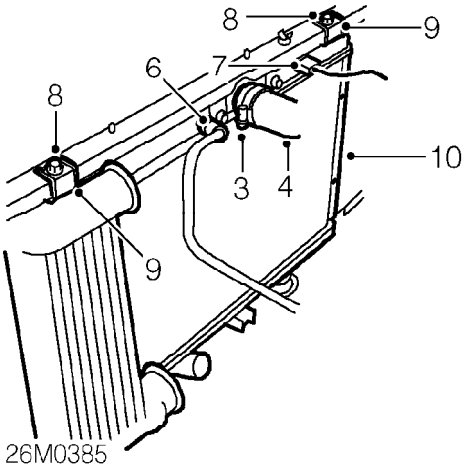

5. Loosen clip and disconnect expansion tank hose from radiator.
6. Loosen clip and disconnect top hose from radiator.
7. Disconnect multiplug from thermostatic switch.
8. Remove 2 bolts securing radiator top mounting brackets to bonnet lock platform.
9. Remove 2 radiator top mounting brackets.
10. Manoeuvre radiator and intercooler from engine compartment.

Do not carry out further dismantling if component is removed for access only.

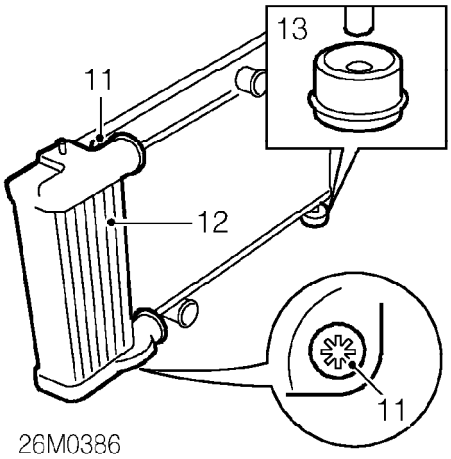

11. Remove 2 Tx40 Torx bolts and nuts securing intercooler to radiator.
12. Remove intercooler.
13. Remove 2 lower mounting rubbers from radiator.

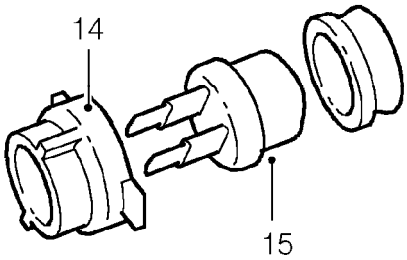

14. Remove locking ring securing thermostatic switch to radiator.
15. Remove thermostatic switch from radiator and fit to new.
16. Secure thermostatic switch with locking ring.
17. Fit lower mounting rubbers to new radiator.
18. Position intercooler to radiator, fit Torx bolts and nuts and tighten to 25 Nm.

Refit

1. Manoeuvre radiator and intercooler assembly into position and locate on lower mountings.
2. Fit top mounting brackets to radiator, align mounting bracket to bonnet platform, fit bolts and tighten to 25 Nm.
3. Connect multiplug to thermostatic switch.
4. Connect top hose to radiator and tighten clip.
5. Connect expansion tank hose to radiator and tighten clip.
6. Fit radiator cooling fan. ***See this section.***
7. Fit engine acoustic cover. ***See BODY, Exterior fittings.***
8. Fit air cleaner assembly. ***See ENGINE MANAGEMENT SYSTEM - EDC, Repairs.***
9. Refill cooling system. ***See Adjustments.***

RADIATOR - MODELS WITH AIR CONDITIONING

Service repair no - 26.40.01.20

Remove

1. *If fitted:* Remove intercooler. ***See ENGINE MANAGEMENT SYSTEM - EDC, Repairs.***
2. Drain cooling system. ***See Adjustments.***

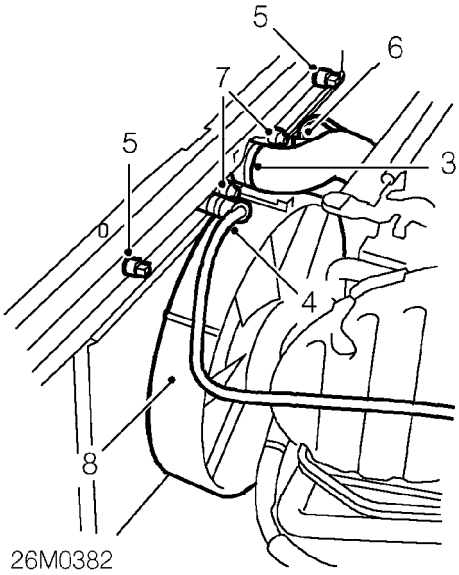

3. Loosen clip and disconnect top hose from radiator and position hose aside.
4. Loosen clip and disconnect expansion tank hose from radiator and position hose aside.
5. Disconnect 2 multiplugs from thermostatic switches.
6. Disconnect multiplug from cooling fan.
7. Remove 2 bolts securing cooling fan housing to radiator.
8. Release cooling fan housing from radiator and remove.

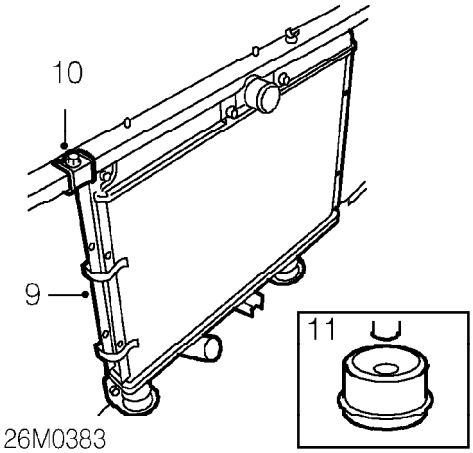

9. Release radiator from 2 lower mountings and remove radiator.
10. Remove top mounting bracket from radiator. ***Do not carry out further dismantling if component is removed for access only.***
11. Remove 2 lower mounting rubbers from old radiator and fit to new.

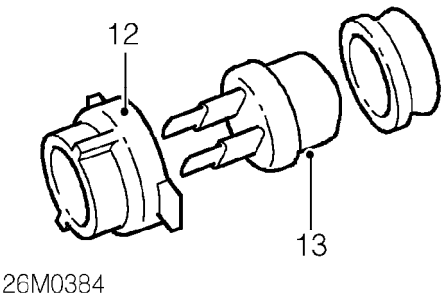

12. Remove 2 locking rings securing thermostatic switches to radiator.
13. Noting their fitted positions, remove thermostatic switches and fit to new radiator.
14. Secure thermostatic switches to radiator with locking rings.

Refit

1. Manoeuvre radiator into position and locate on lower mountings.
2. Fit top mounting bracket to radiator and fit bolt finger tight.
3. Position cooling fan housing and locate on radiator.
4. Fit 2 bolts securing cooling fan housing to radiator and tighten to 9 Nm.
5. Connect multiplug to cooling fan.
6. Connect multiplugs to thermostatic switches.
7. Connect expansion tank hose to radiator and tighten clip.
8. Connect top hose to radiator and tighten clip.
9. *If fitted:* Fit intercooler. ***See ENGINE MANAGEMENT SYSTEM - EDC, Repairs.***
10. Refill cooling system. ***See Adjustments.***

THERMOSTAT

Service repair no - 26.45.09

Remove

1. Remove radiator. ***See this section.***

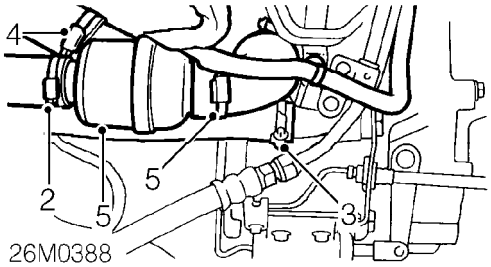

2. Loosen clip and disconnect hose from coolant pump.
3. Loosen clip and disconnect hose from coolant rail.
4. Loosen clip and disconnect radiator top hose from thermostat.
5. Loosen clip and disconnect oil cooler hose from thermostat.
6. Remove thermostat and hose assembly. ***Do not carry out further dismantling if component is removed for access only.***
7. Loosen clip and remove coolant hose from thermostat.
8. Fit coolant hose to new thermostat and tighten clip.

Refit

1. Position thermostat and hose assembly.
2. Connect oil cooler hose to thermostat and tighten clip.
3. Connect radiator top hose to thermostat and tighten clip.
4. Connect hose to coolant pump and tighten clip.
5. Connect hose to coolant rail and tighten clip.
6. Fit radiator. ***See this section.***

COOLANT PUMP - MODELS WITHOUT AIR CONDITIONING

Service repair no - 26.50.01

Remove

1. Drain cooling system. ***See Adjustments.***
2. Raise front of vehicle.

WARNING: Support on safety stands.

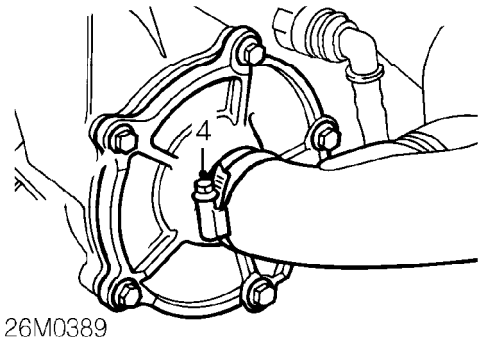

3. Remove front beam. ***See FRONT SUSPENSION, Repairs.***
4. Loosen clip and disconnect hose from coolant pump.
5. Remove 5 bolts securing cover to coolant pump housing.

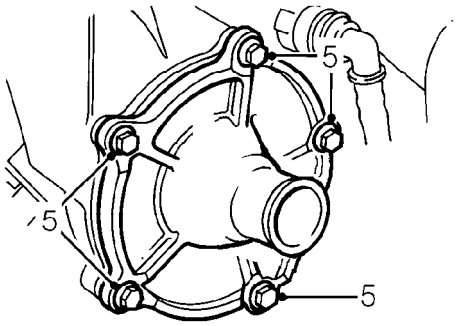

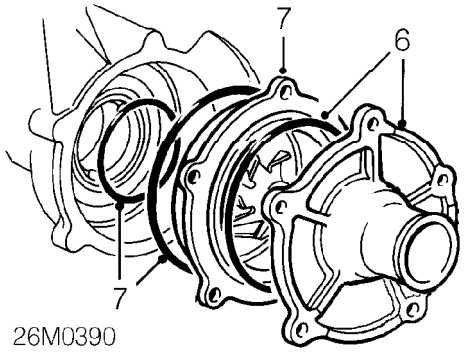

6. Remove coolant pump cover and discard 'O' ring.
7. Remove coolant pump from housing and discard 2 'O' rings.

Refit

1. Clean mating faces of coolant pump, housing and cover.
2. Lubricate 3 new 'O' rings with Loctite 405 and fit to coolant pump and cover.
3. Fit coolant pump and cover to housing, fit bolts and tighten to 10 Nm.
4. Connect hose to coolant pipe and tighten clip.
5. Fit front beam. ***See FRONT SUSPENSION, Repairs.***
6. Remove stand(s) and lower vehicle.
7. Refill cooling system. ***See Adjustments.***

COOLANT PUMP - MODELS WITH AIR CONDITIONING

Service repair no - 26.50.01.20

Remove

1. Remove alternator. ***See ELECTRICAL, Repairs.***
2. Drain cooling system. ***See this section.***
3. Recover refrigerant from air conditioning system. ***See AIR CONDITIONING, Adjustments.***

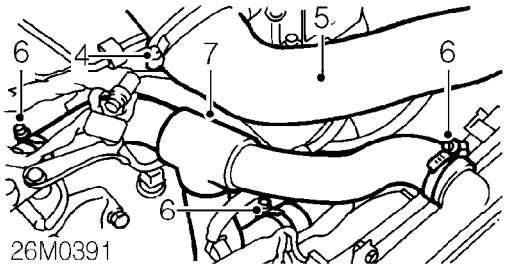

4. Release clip securing intercooler hose to inlet manifold.
5. Release hose from inlet manifold and move aside.
6. Release 3 clips securing coolant hose between radiator, outlet elbow, and thermostat housing.
7. Remove coolant hose.

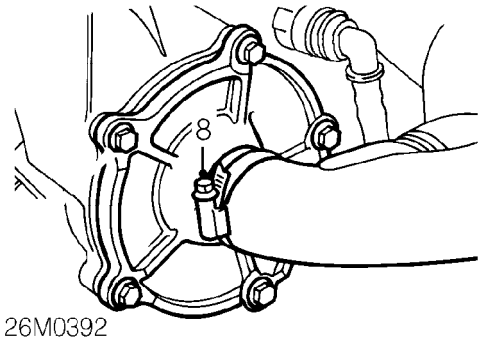

8. Release clip securing hose to coolant pump and move hose aside.

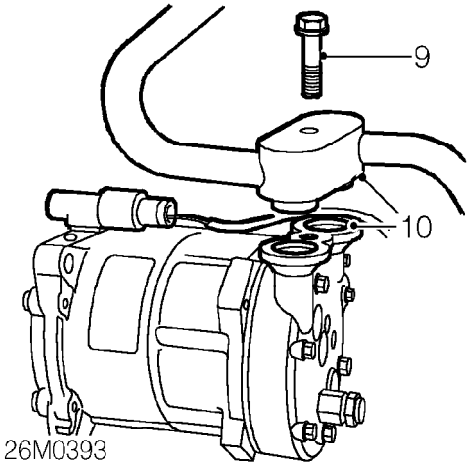

9. Remove bolt securing air conditioning pipes to compressor.
10. Release pipes from compressor and remove and discard ’O’ rings.

CAUTION: Immediately cap all air conditioning pipes to prevent ingress of dirt and moisture into the system.

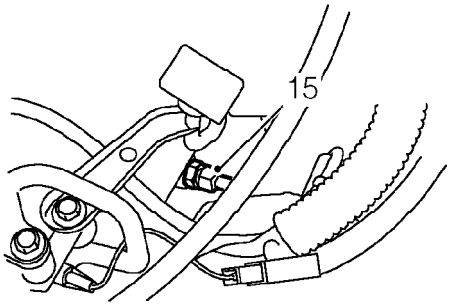

11. Loosen union and disconnect vacuum pump oil feed pipe from block.

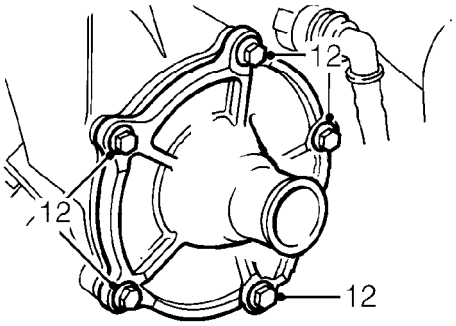

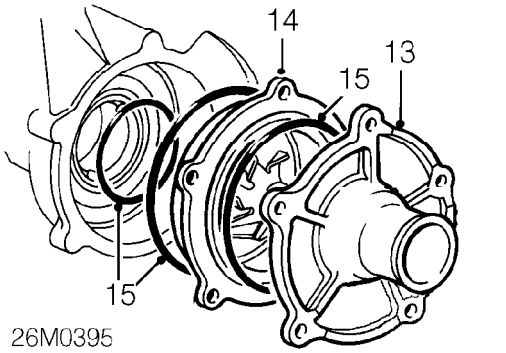

12. Remove 5 bolts securing coolant pump cover to housing.
13. Remove cover.
14. Remove pump from housing.
15. Remove 3 ’O’ rings from pump and discard.

Refit

1. Clean mating faces of coolant pump, housing, and cover.
2. Lubricate new 'O' rings with Loctite 405 and fit to coolant pump.
3. Fit coolant pump and cover to housing.
4. Fit bolts securing cover to housing and tighten to 10 Nm.
5. Connect vacuum pump oil feed pipe to block and tighten union.
6. Lubricate new 'O' rings with refrigerant oil and fit to air conditioning pipes.
7. Connect air conditioning pipes to compressor and tighten bolt to 45 Nm.
8. Connect coolant hose to pump and tighten clip.
9. Connect coolant hose between radiator, outlet elbow, and thermostat housing and tighten clips.
10. Connect intercooler hose to inlet manifold and tighten clip.
11. Fit alternator. ***See ELECTRICAL, Repairs.***
12. Replace receiver/dryer. ***See AIR CONDITIONING, Repairs.***
13. Refill cooling system. ***See this section.***
14. Recharge air conditioning system. ***See AIR CONDITIONING, Adjustments.***

COOLANT PUMP HOUSING - MODELS WITHOUT AIR CONDITIONING

Service repair no - 26.50.03

Remove

1. Drain cooling system. ***See Adjustments.***
2. Raise front of vehicle.

WARNING: Support on safety stands.

3. Remove alternator. ***See ELECTRICAL, Repairs.***
4. Remove front beam. ***See FRONT SUSPENSION, Repairs.***

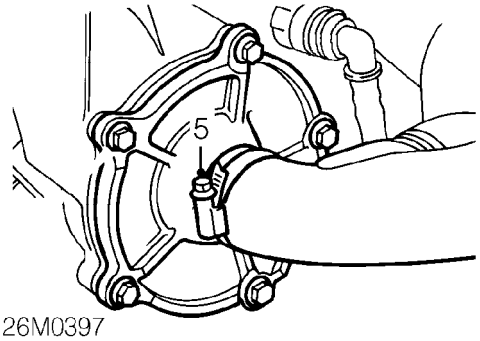

5. Loosen clip and disconnect hose from coolant pump.
6. Position container to collect fluid loss from power steering system.

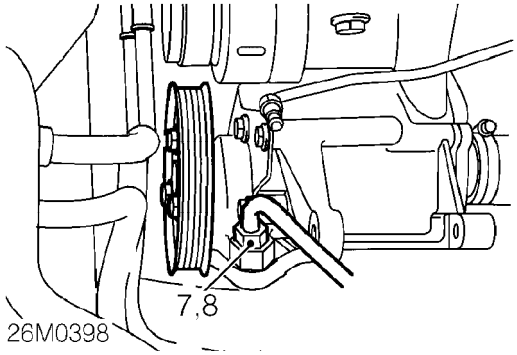

7. Loosen union securing high pressure hose to power steering pump.

CAUTION: To prevent damage to components, use two spanners when loosening or tightening unions.

8. Disconnect high pressure hose from power steering pump, remove and discard ’O’ ring.

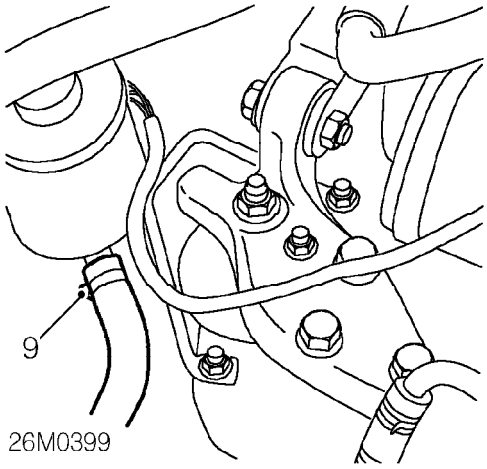

9. Release clip and disconnect power steering pump feed hose from fluid reservoir.

CAUTION: Plug the connections.

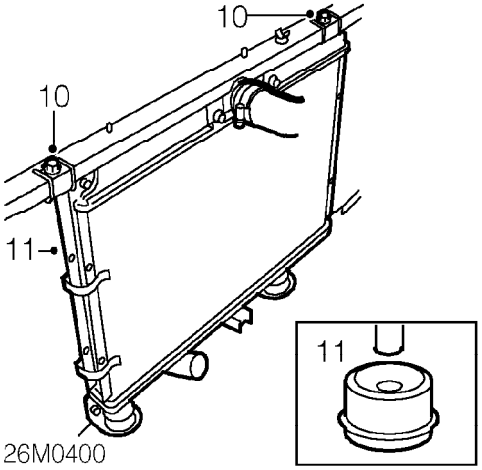

10. Remove 2 bolts securing radiator top mounting brackets to bonnet platform and remove mounting bracket.
11. Release radiator from lower mountings and move aside for access.

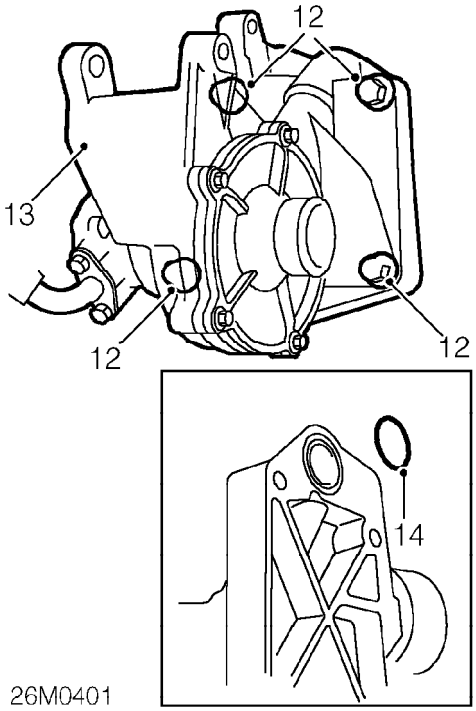

12. Remove four bolts securing coolant pump housing to cylinder block.
13. Release coolant pump housing from locating dowels and remove from vehicle.
14. Remove and discard 'O' ring from rear of coolant pump housing.

Do not carry out further dismantling if component is removed for access only.

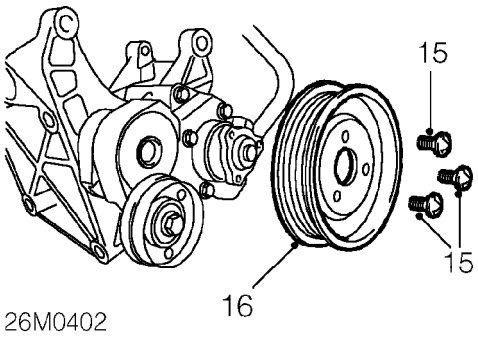

15. Restrain power steering pump pulley and remove 3 Tx30 Torx screws securing pulley to pump.
16. Remove pulley from power steering pump.

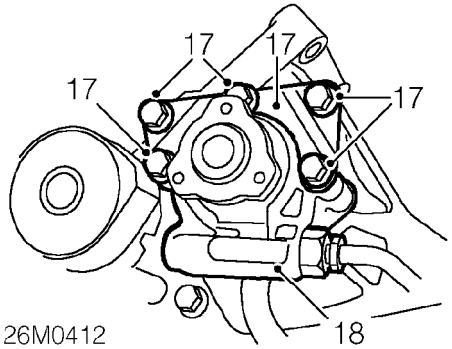

17. Remove 5 bolts securing support bracket to power steering pump and coolant pump housing.
18. Remove power steering pump and support bracket.

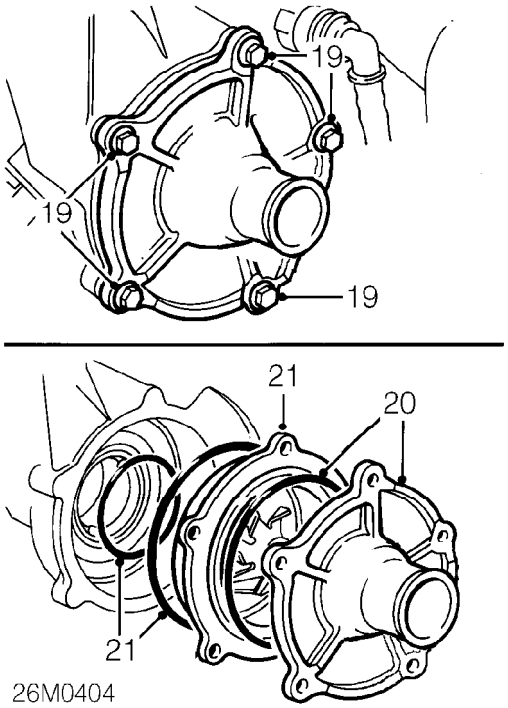

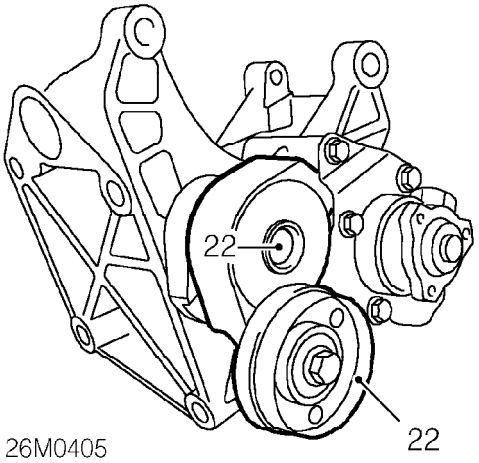

19. Remove 5 bolts securing cover to coolant pump housing.
20. Remove coolant pump cover and discard 'O' ring.
21. Remove coolant pump from housing and discard 2 'O' rings.

22. Remove bolt securing drive belt tensioner to housing and remove tensioner.
23. Fit tensioner to new housing, fit bolt and tighten to 45 Nm.
24. Clean mating faces of coolant pump and cover.
25. Lubricate 3 new 'O' rings with Loctite 405 and fit to coolant pump and cover.
26. Fit coolant pump and cover to new housing, fit bolts and tighten to 10 Nm.
27. Clean mating faces of power steering pump and coolant pump housing.
28. Position power steering pump to coolant pump housing and align drive lugs with those on coolant pump.
29. Position support bracket to coolant pump housing and power steering pump, fit bolts and tighten to 25 Nm.
30. Fit pulley to power steering pump. Fit Torx screws securing pulley to pump, restrain pulley and tighten Torx screws to 10 Nm.

Refit

1. Clean mating faces of coolant pump housing and cylinder block.
2. Lubricate new 'O' ring with Loctite 405 and fit to groove in rear of coolant pump housing.
3. Position coolant pump housing and locate on dowels on cylinder block.
4. Align oil cooler hose bracket to coolant pump housing, fit bolts and tighten in the sequence shown to 45 Nm.
5. Locate radiator on lower mountings and radiator top mounting brackets.
6. Fit bolts securing radiator top mounting brackets to bonnet platform and tighten to 9 Nm.
7. Remove plugs from power steering pump and hoses.
8. Lubricate and fit new 'O' ring to high pressure hose union.
9. Connect high pressure hose union to power steering pump and tighten union to 20 Nm.
10. Connect power steering pump feed hose to fluid reservoir and secure with clip.
11. Connect hose to coolant pump and tighten clip.
12. Fit front beam. ***See FRONT SUSPENSION, Repairs.***
13. Fit alternator. ***See ELECTRICAL, Repairs.***
14. Remove stand(s) and lower vehicle.
15. Refill cooling system. ***See Adjustments.***
16. Refill power steering fluid reservoir and bleed system. ***See STEERING, Adjustments.***

COOLANT PUMP HOUSING - MODELS WITH AIR CONDITIONING

Service repair no - 26.50.03.20

Remove

1. Remove coolant pump. ***See this section.***

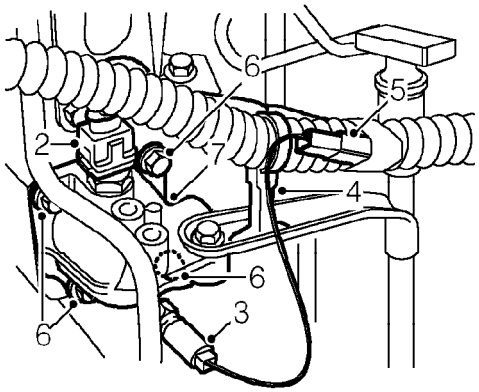

26M0406

2. Disconnect multiplug from ECT sensor.
3. Release multiplug from TP sensor.
4. Release harness from dipstick and timing belt cover and move aside.
5. Disconnect coolant temperature gauge lucar from engine harness.
6. Remove 4 bolts securing coolant outlet elbow to cylinder head.
7. Remove outlet elbow from head and discard gasket.
8. Remove intercooler. ***See ENGINE MANAGEMENT SYSTEM - EDC, Repairs.***

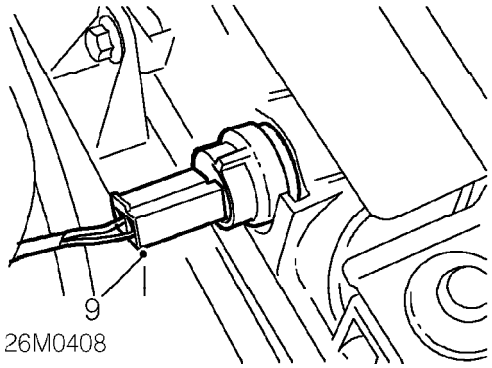

9. Disconnect multiplug from thermostatic switch.

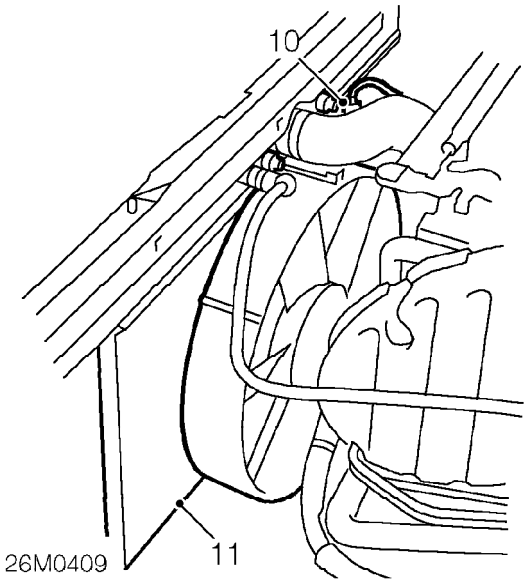

10. Disconnect radiator cooling fan multiplug.
11. Remove radiator and cooling fan assembly.

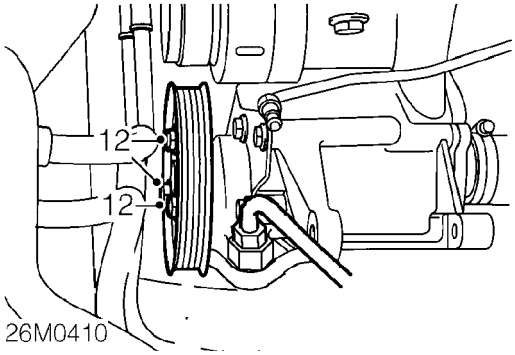

12. Remove 3 Torx screws securing pulley to PAS pump.
13. Manoeuvre pulley from vehicle.

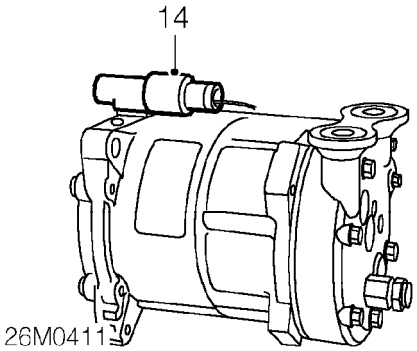

14. Disconnect multiplug from compressor.
15. Position drain tray to collect any fluid spillage.
16. Release clip and disconnect PAS pipe from pump.

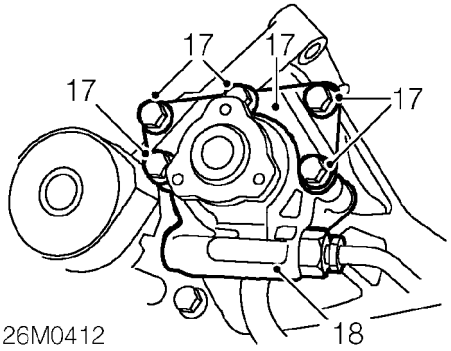

17. Remove 5 bolts securing PAS pump to coolant pump housing and collect clamping bracket.
18. Remove PAS pump.

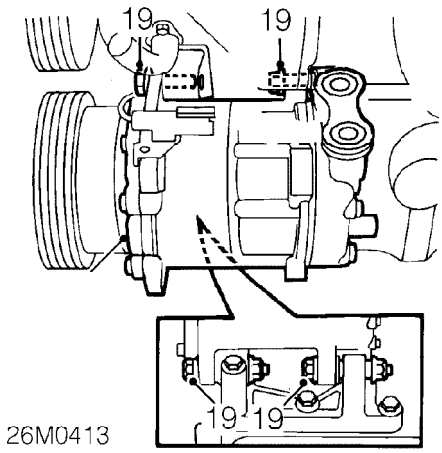

19. Remove 4 bolts securing compressor to coolant pump housing.
20. Remove compressor.

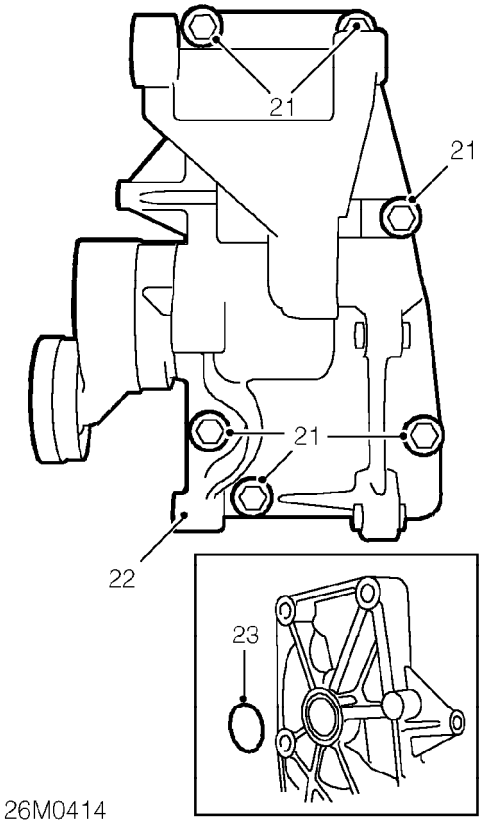

21. Remove 6 bolts securing coolant pump housing to block.
22. Remove housing.
23. Remove ’O’ ring from housing.

Do not carry out further dismantling if component is removed for access only.

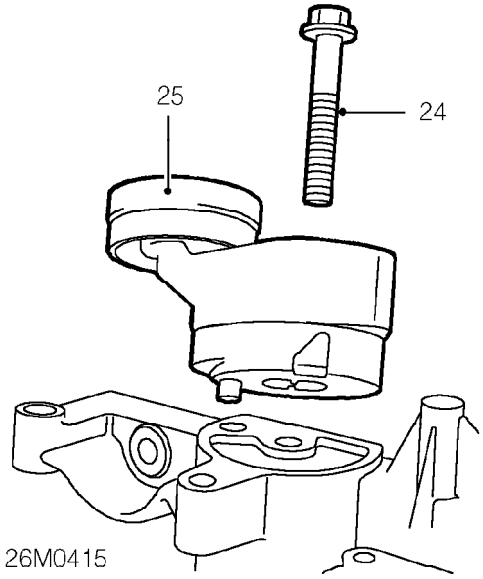

24. Remove centre bolt securing auxiliary drive belt tensioner to housing.
25. Remove tensioner.and position to new
26. Clean tensioner and housing mating faces.
27. Locate tensioner on dowel. Fit and tighten centre bolt to 45 Nm.

Refit

1. Clean mating face of coolant housing and block.
2. Lubricate new coolant pump housing 'O' ring with Loctite 405.
3. Fit 'O' ring to coolant pump housing.
4. Position housing to block and fit bolts. tighten bolts to 45 Nm.
5. Position compressor to housing and fit bolts. Tighten bolts to 45 Nm.
6. Connect multiplug to compressor.
7. Fit clamping bracket and 2 longer bolts to PAS pump.
8. Position PAS pump and clamp assembly to coolant pump housing.
9. Fit remaining bolts to PAS pump clamping bracket and tighten all bolts to 25 Nm.
10. Fit PAS pipe to pump and tighten clip.
11. Position pulley to PAS pump and fit new torx screws. Tighten screws to 10 Nm.
12. Position radiator and cooling fan assembly to vehicle.
13. Connect cooling fan multiplug.
14. Connect thermostatic switch multiplug.
15. Fit intercooler. ***See ENGINE MANAGEMENT SYSTEM - EDC, Repairs.***
16. Fit new gasket to coolant outlet elbow.
17. Position outlet elbow to cylinder head and tighten bolts to 25 Nm.
18. Connect coolant temperature gauge Lucar to engine harness.
19. Secure harness to dipstick and timing belt cover.
20. Connect multiplug to TP sensor.
21. Connect multiplug to ECT sensor.
22. Fit coolant pump. ***See this section.***
23. Bleed power steering system. ***See STEERING, Adjustments.***

CONTENTS

Page

DESCRIPTION AND OPERATION

EXHAUST PIPE - 'K8' 1
EXHAUST PIPE - 'K16' 2
EXHAUST PIPE - 'K16 WITH VVC' 3
EXHAUST PIPE - 'L' SERIES 4
INLET AND EXHAUST MANIFOLD - 'K8' 5
INLET AND EXHAUST MANIFOLD - 'K16' 6
INLET AND EXHAUST MANIFOLD - 'K16 WITH VVC' 7
INLET AND EXHAUST MANIFOLD - 'L' SERIES - WITHOUT INTERCOOLER 8
INLET AND EXHAUST MANIFOLD - 'L' SERIES - WITH INTERCOOLER 9
INLET MANIFOLD 10
EXHAUST MANIFOLD 10
EXHAUST SYSTEM 11

REPAIRS

FRONT PIPE - 'K8' 1
FRONT PIPE - 'K16' 2
FRONT PIPE - 'L' SERIES 3
INTERMEDIATE PIPE - 'K8' 4
INTERMEDIATE PIPE - 'K16' 5
INTERMEDIATE PIPE - 'L' SERIES 6
TAIL PIPE - 'K' SERIES 7
TAIL PIPE - 'L' SERIES 7
FRONT PIPE TO MANIFOLD GASKET - 'K8' 8
FRONT PIPE TO MANIFOLD GASKET - 'K16' 8
FRONT PIPE TO MANIFOLD GASKET - 'L' SERIES 9
TAIL PIPE HEAT SHIELD 9
INLET MANIFOLD - 'L' SERIES WITHOUT INTERCOOLER 10
INLET MANIFOLD GASKET - 'K8' 10
INLET MANIFOLD GASKET - 'K16 WITH VVC' 14
INLET MANIFOLD GASKET - 'K16' 16
EXHAUST MANIFOLD - 'L' SERIES WITHOUT INTERCOOLER 20
EXHAUST MANIFOLD - 'L' SERIES WITH INTERCOOLER 20
EXHAUST MANIFOLD GASKET - 'K8' 23
EXHAUST MANIFOLD GASKET - 'K16' WITHOUT AIR CONDITIONING 24
EXHAUST MANIFOLD GASKET - 'K16' WITH AIR CONDITIONING 25
INLET AND EXHAUST MANIFOLD GASKET - 'L' SERIES WITHOUT INTERCOOLER 27
INLET AND EXHAUST MANIFOLD GASKET - 'L' SERIES WITH INTERCOOLER 29
INLET MANIFOLD CHAMBER GASKET - 'K8' 30
INLET MANIFOLD CHAMBER GASKET - 'K16 WITH VVC' 32
PLASTIC MANIFOLD STUB PIPES - RENEW 34

EXHAUST PIPE - 'K8'

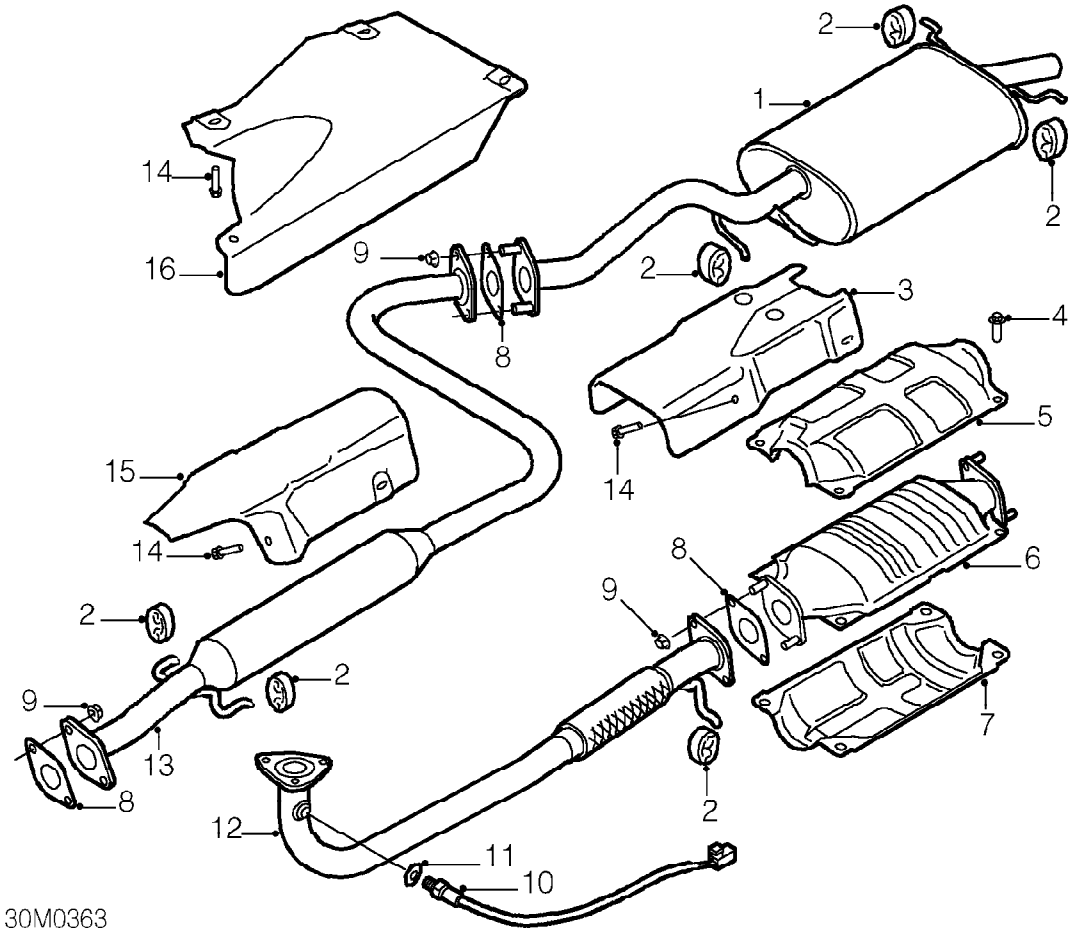

1. Exhaust tail pipe
2. Mounting rubber - 6 off
3. Heat shield
4. Bolt - catalyst heat shield
5. Heat shield - upper - catalyst
6. Catalytic converter
7. Heat shield - lower - catalyst
8. Gasket - pipe flange - 3 off
9. Flange nut
10. Heated oxygen sensor
11. Sealing washer - heated oxygen sensor
12. Exhaust front pipe
13. Exhaust intermediate pipe
14. Bolt - heat shield fixing
15. Heat shield - intermediate pipe
16. Heat shield - tail pipe

EXHAUST PIPE - 'K16'

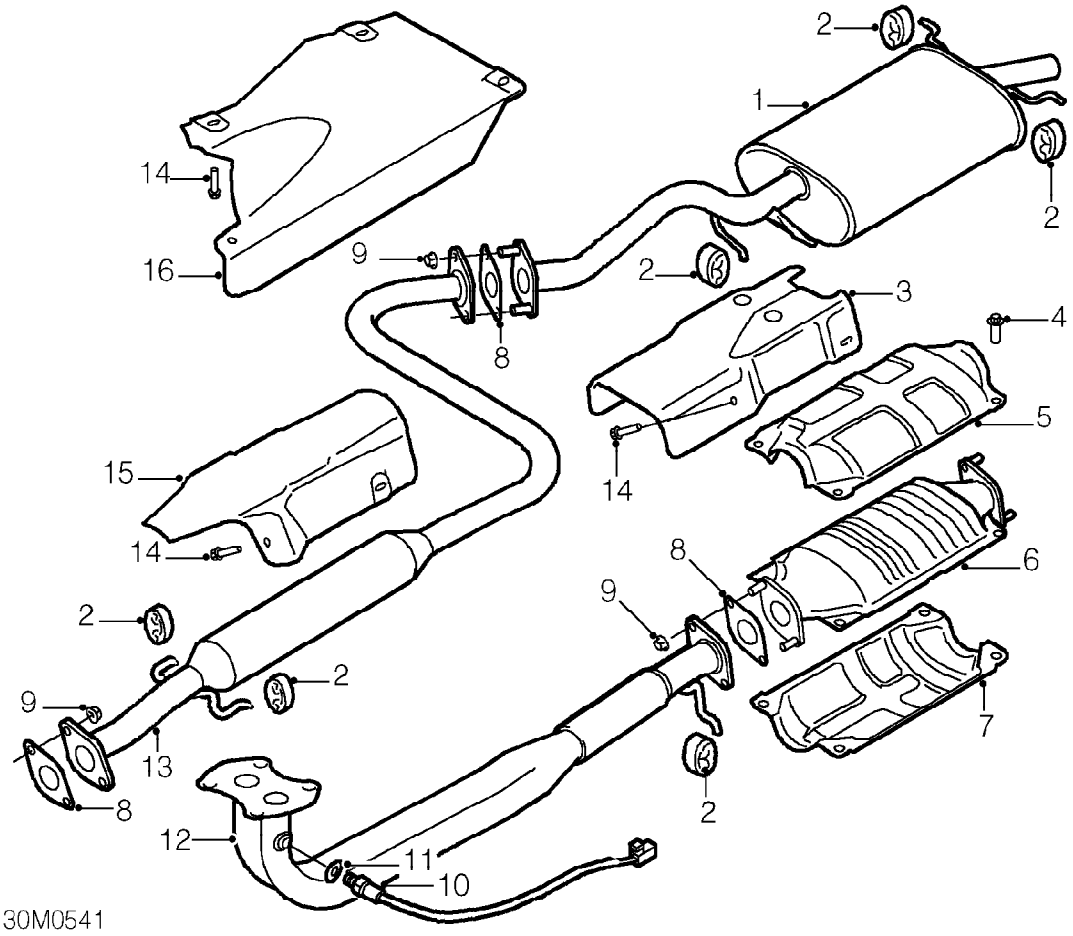

1. Exhaust tail pipe
2. Mounting rubber - 6 off
3. Heat shield
4. Bolt - catalyst heat shield
5. Heat shield - upper - catalyst
6. Catalytic converter
7. Heat shield - lower - catalyst
8. Gasket - pipe flange - 3 off
9. Flange nut
10. Heated oxygen sensor
11. Sealing washer - heated oxygen sensor
12. Exhaust front pipe
13. Exhaust intermediate pipe
14. Bolt - heat shield fixing
15. Heat shield - intermediate pipe
16. Heat shield - tail pipe

EXHAUST PIPE - 'K16 WITH VVC'

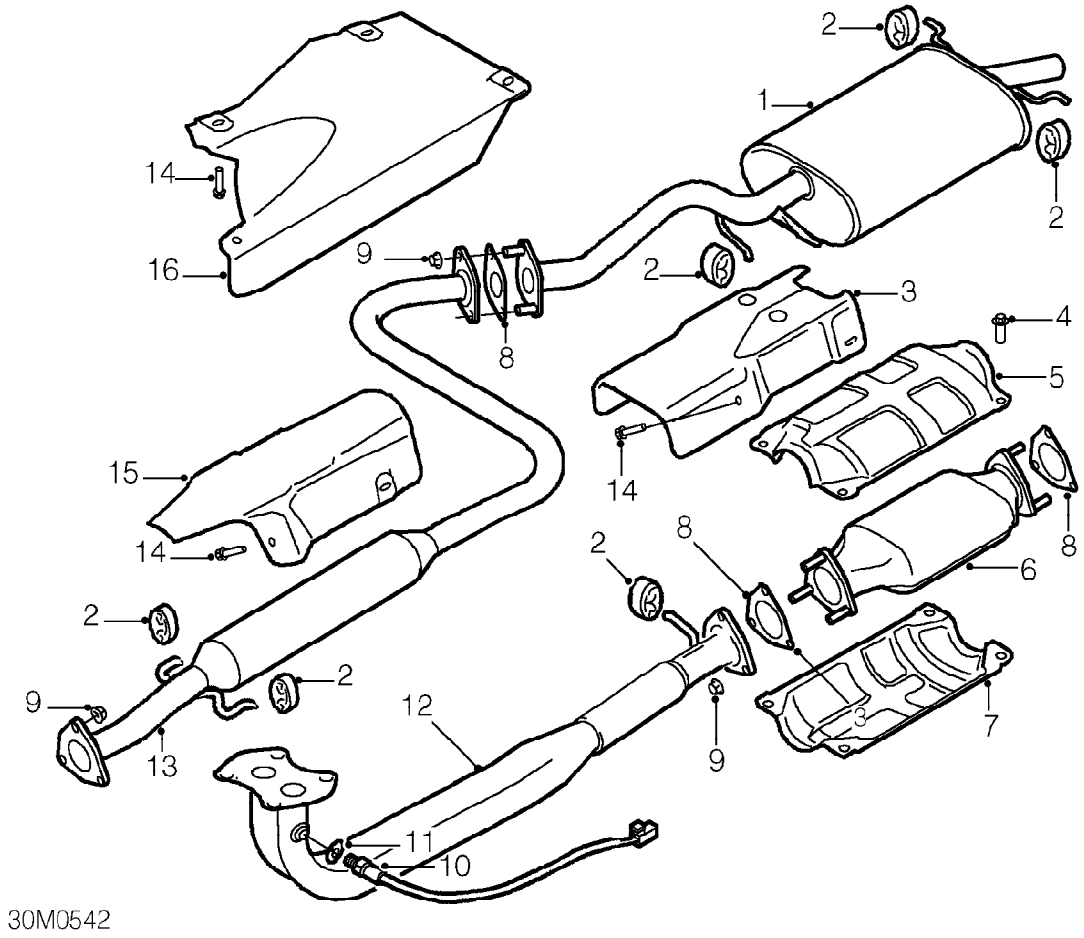

1. Exhaust tail pipe
2. Mounting rubber - 6 off
3. Heat shield
4. Bolt - catalyst heat shield
5. Heat shield - upper - catalyst
6. Catalytic converter
7. Heat shield - lower - catalyst
8. Gasket - pipe flange - 3 off
9. Flange nut
10. Heated oxygen sensor
11. Sealing washer - heated oxygen sensor
12. Exhaust front pipe
13. Exhaust intermediate pipe
14. Bolt - heat shield fixing
15. Heat shield - intermediate pipe
16. Heat shield - tail pipe

EXHAUST PIPE - 'L' SERIES

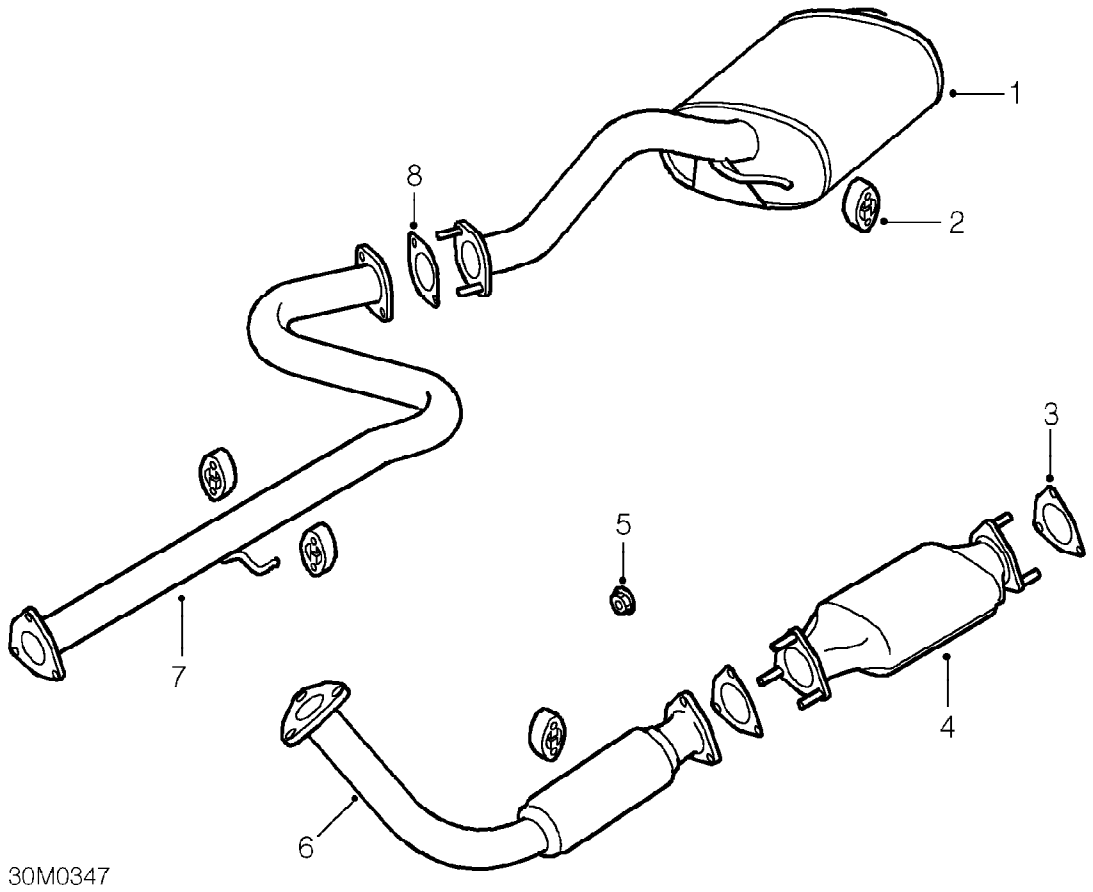

1. Exhaust tail pipe
2. Mounting rubber
3. Gasket - pipe flange
4. Catalytic converter
5. Flange nut
6. Exhaust front pipe
7. Exhaust intermediate pipe
8. Gasket - tail pipe flange

INLET AND EXHAUST MANIFOLD - 'K8'

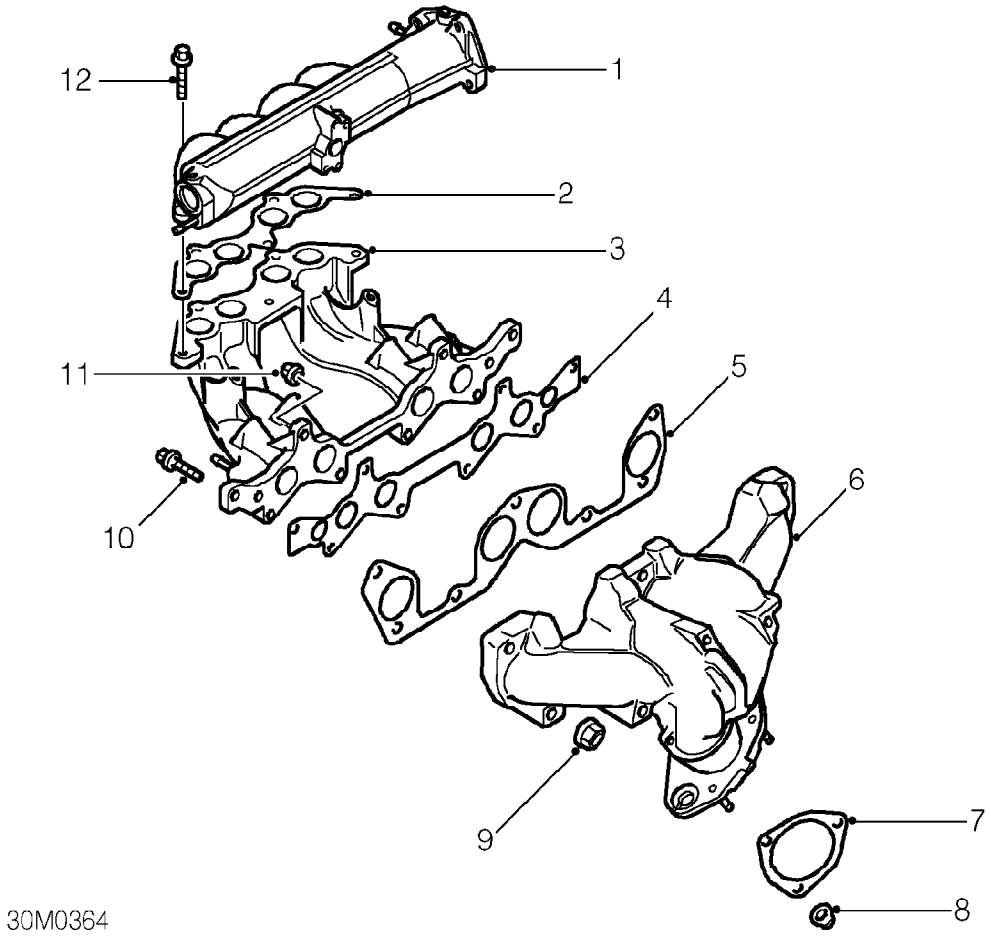

1. Inlet manifold chamber
2. Gasket - manifold to inlet chamber
3. Inlet manifold
4. Gasket - manifold to cylinder head
5. Gasket - manifold to block
6. Exhaust manifold
7. Gasket - manifold to front pipe
8. Self-locking nut
9. Flange nut
10. Flange bolt - manifold to cylinder head
11. Flange nut
12. Flange bolt - inlet chamber to manifold

INLET AND EXHAUST MANIFOLD - 'K16'

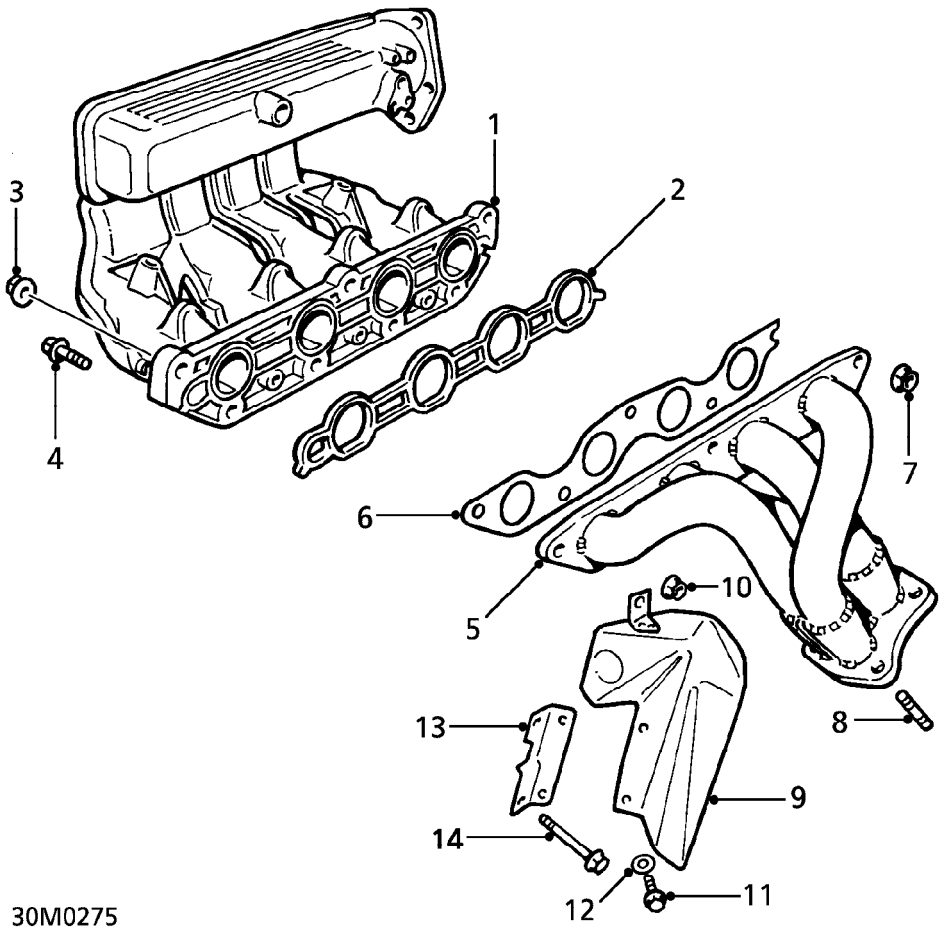

1. Inlet manifold - plastic
2. Gasket - inlet manifold
3. Flange nut - inlet manifold - 3 off
4. Bolt - inlet manifold - 4 off
5. Exhaust manifold - fabricated
6. Gasket - exhaust manifold
7. Flange nut - 5 off
8. Stud - exhaust manifold flange - 4 off
9. Heat shield
10. Flange nut
11. Flange bolt - 2 off
12. Plain washer - 2 off
13. Mounting bracket
14. Flange bolt - 2 off - 2 tier mounting bracket

INLET AND EXHAUST MANIFOLD - 'K16 WITH VVC'

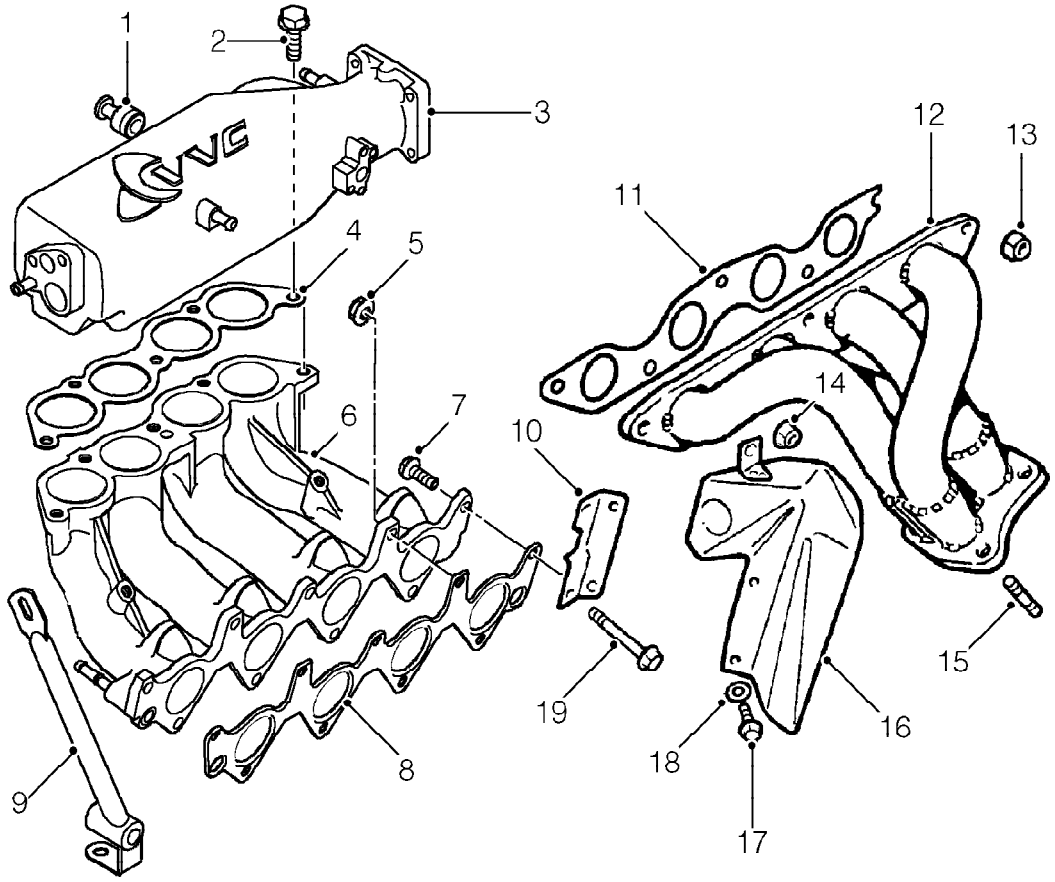

1. Vacuum pipe union
2. Bolt - manifold chamber to inlet manifold
3. Inlet manifold chamber
4. Gasket - manifold chamber to inlet manifold
5. Nut - inlet manifold to cylinder head
6. Inlet manifold
7. Bolt - inlet manifold to cylinder head
8. Gasket - inlet manifold to cylinder head
9. Inlet manifold support stay
10. Mounting bracket
11. Gasket - exhaust manifold
12. Exhaust manifold
13. Flange nut
14. Flange nut
15. Stud - exhaust manifold flange - 4 off
16. Heat shield
17. Flange bolt
18. Plain washer
19. Flange bolt - 2 off - 2 tier mounting bracket

INLET AND EXHAUST MANIFOLD - 'L' SERIES - WITHOUT INTERCOOLER

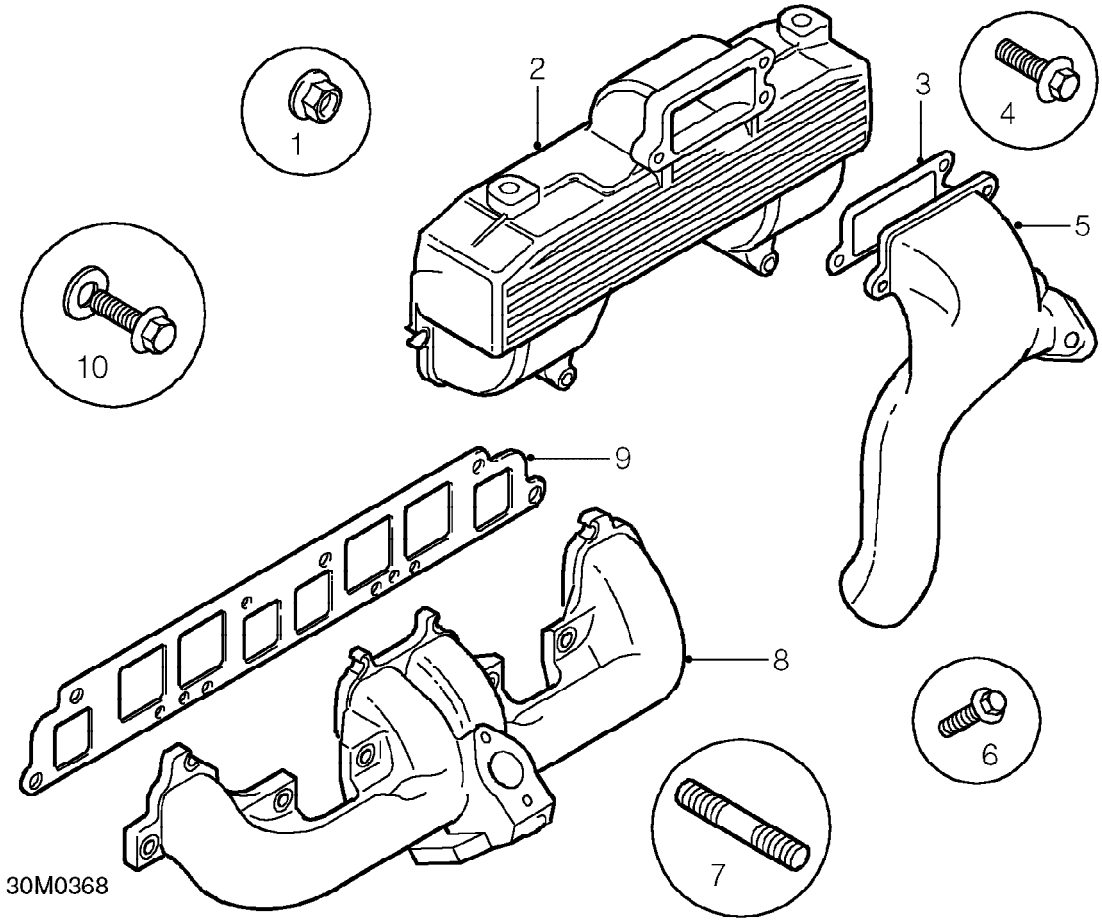

1. Flange nut - exhaust and inlet manifold
2. Inlet manifold
3. Gasket - inlet manifold to turbocharger adaptor
4. Bolt - inlet manifold to turbocharger adaptor (3 off)
5. Inlet manifold to turbocharger adaptor
6. Flange bolt
7. Stud - inlet/exhaust manifold to cylinder head
8. Exhaust manifold
9. Gasket - exhaust and inlet manifold
10. Flange bolt and plain washer - exhaust manifold

INLET AND EXHAUST MANIFOLD - 'L' SERIES - WITH INTERCOOLER

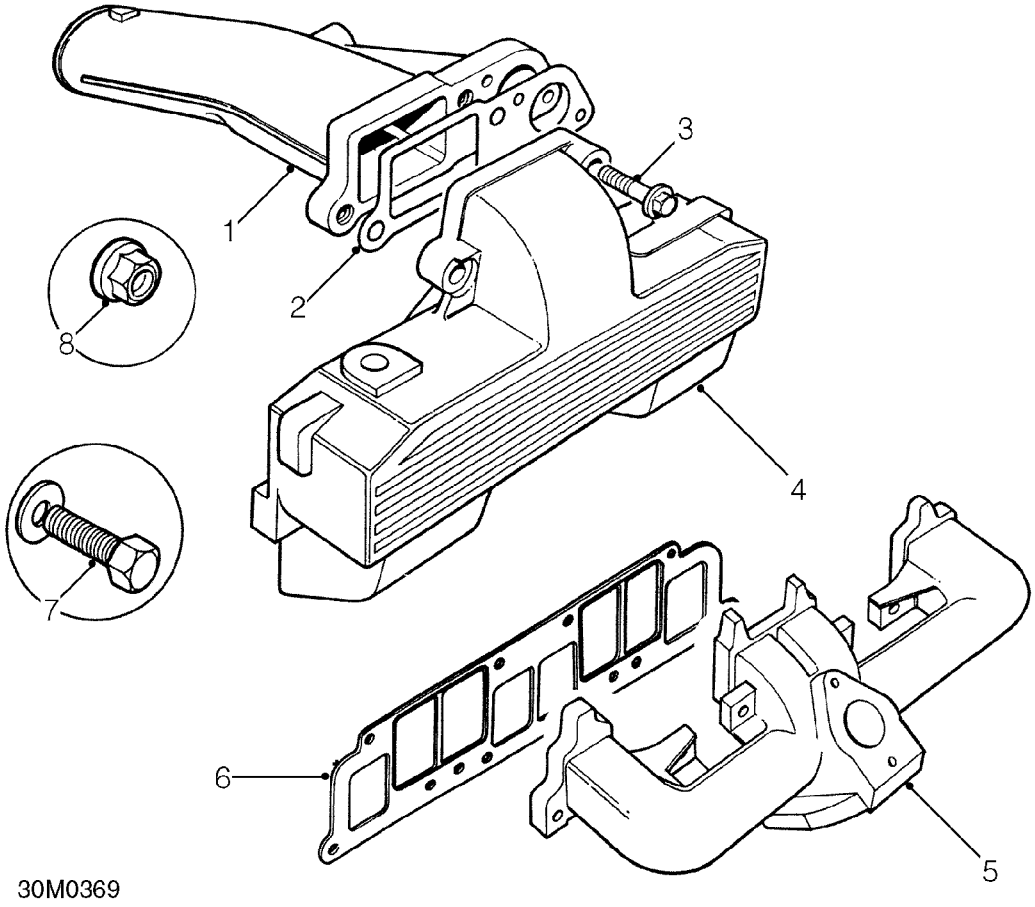

1. Intake pipe
2. Gasket - intake pipe
3. Bolt - intake pipe
4. Inlet manifold
5. Exhaust manifold
6. Gasket - inlet and exhaust manifold
7. Bolt and washer - inlet and exhaust manifold (6 off)
8. Flange nut - inlet and exhaust manifold (6 off)

INLET MANIFOLD

’K’ series engine

The inlet manifold is a one piece plastic moulding attached to the cylinder head with a gasket interposed between the 2 components. The throttle housing is bolted to the manifold chamber, sealing being effected by means of an ’O’ ring. The intake air temperature sensor is inserted at the rear just above the pipe flange.

’K16 with VVC’

The alloy inlet manifold assembly comprises a manifold chamber bolted to the inlet manifold with a gasket interposed between the two components. The throttle housing is bolted to the manifold chamber and sealed with and ’O’ ring.

The manifold chamber incorporates the manifold absolute pressure sensor and brake servo vacuum hose union. The air intake temperature sensor is incorporated in the inlet manifold. The inlet manifold is attached to the cylinder head and sealed with a gasket. A strut between the inlet manifold and the cylinder block supports the inlet manifold assembly.

’L’ series engine

The inlet manifold is manufactured from aluminium alloy and the gasket is a multi-leaf type which also seals the exhaust manifold.

On vehicles fitted with an intercooler, an intake air temperature sensor is located at the timing belt end to measure the temperature of the boosted air supply.

EXHAUST MANIFOLD

’K’ series engine

The 4 branch fabricated steel exhaust manifold terminates in a siamised front pipe flange. The heated oxygen sensor is located in the manifold at the rear and in the outlet for numbers 2 and 3 cylinders. The manifold flanges are sealed by gaskets.

’L’ series engine

The cast iron exhaust manifold carries an EGR valve and a variable wastegate Garrett turbocharger. There are two tappings on the compressor housing; the ’N’ port to the wastegate and the ’J’ port to the boost pressure sensor on the bulkhead.

NOTE: Gaskets are NOT fitted between the manifold to turbocharger joint or between the turbocharger to exhaust outlet pipe joint.

EXHAUST SYSTEM

The exhaust system consists of a front pipe, catalytic converter, an intermediate pipe which incorporates a silencer (not 'L' series) and tail pipe assembly which contains a large capacity silencer.

The 'K' series engine employs a twin front pipe terminating in an expansion chamber. The 'L' series front pipe consists of a single constant diameter pipe with integral flexible joint.

All the silencers contain a series of expansion chambers, resonators and baffles designed to give an improved exhaust system, which reduces condensation and increases the life of the system.

Except for 'L' series which is open loop, the catalytic converter operates in a 'closed loop' system. The exhaust gases are monitored by the oxygen sensor which provides a signal which is used by the Engine Control Module (ECM) to modify the fueling to maintain emissions acceptable to the catalytic converter. For information on the operation of the catalyst. ***See EMISSION CONTROL, Description and operation.***

FRONT PIPE - 'K8'

Service repair no - 30.10.09

Remove

1. Raise front of vehicle.

WARNING: Support on safety stands.

2. Remove HO2S. ***See ENGINE MANAGEMENT SYSTEM - MEMS, Repairs.***

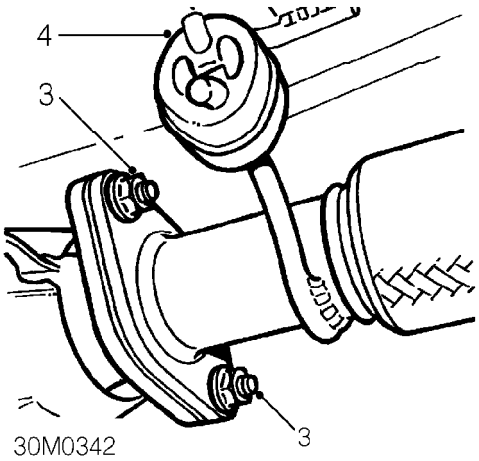

3. Remove 2 nuts securing front pipe to catalytic converter.
4. Release mounting rubber from bracket.

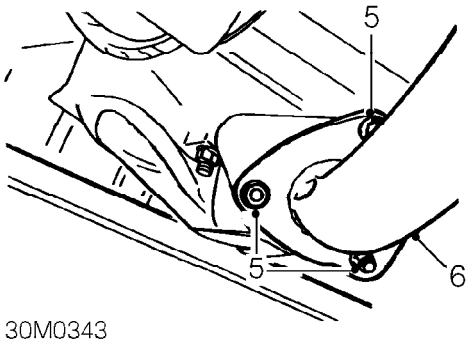

5. Remove 3 nuts securing front pipe to manifold.
6. Release front pipe from manifold and remove from catalytic converter.
7. Remove and discard flange gaskets.

Refit

1. Clean pipe flanges.
2. Fit new gasket to catalytic converter flange.
3. Fit front pipe to catalytic converter, fit nuts but DO NOT tighten.
4. Fit new gasket to manifold flange.
5. Fit front pipe to manifold flange, fit nuts and tighten to 50 Nm.
6. Tighten nuts securing front pipe to catalytic converter to 50 Nm.
7. Secure front pipe rubber mounting to bracket on body.
8. Fit HO2S. ***See ENGINE MANAGEMENT SYSTEM - MEMS, Repairs.***
9. Remove stand(s) and lower vehicle.

FRONT PIPE - 'K16'

Service repair no - 30.10.09

Remove

1. Raise vehicle on a 4 post ramp.

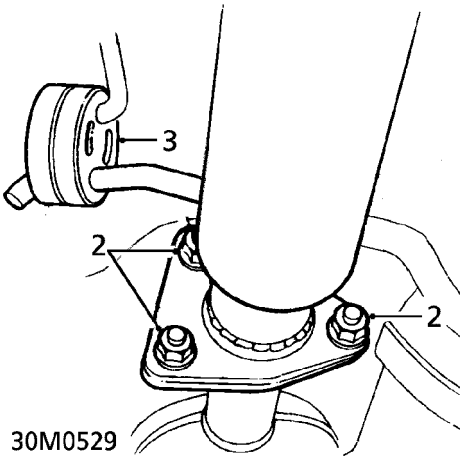

2. Remove 3 nuts securing front pipe to catalytic converter.
3. Release mounting rubber from bracket.

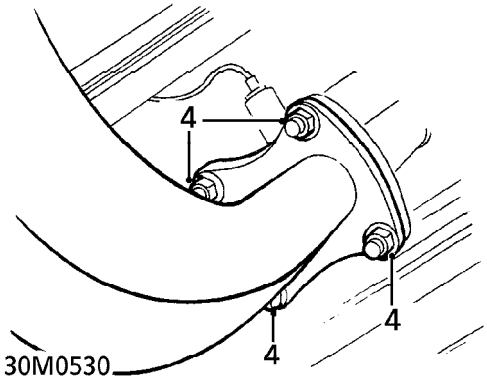

4. Remove 4 flange nuts securing front pipe to manifold.
5. Release front pipe from manifold and remove from catalytic converter.
6. Remove flange gaskets.

Refit

1. Clean pipe flanges.
2. Fit new gasket to catalytic converter flange.
3. Fit front pipe to catalytic converter, fit flange nuts but DO NOT tighten.
4. Fit new gasket to manifold flange.
5. Fit front pipe to manifold flange, fit nuts and tighten to 50 Nm.
6. Tighten nuts securing front pipe to catalytic converter to 50 Nm.
7. Secure front pipe rubber mounting to bracket on body.
8. Lower vehicle.

FRONT PIPE - 'L' SERIES

Service repair no - 30.10.09

Remove

1. Raise front of vehicle.

WARNING: Support on safety stands.

2. Remove undertray. ***See BODY, Exterior fittings.***

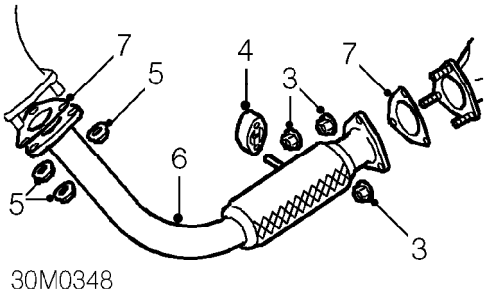

3. Remove 3 nuts securing front pipe to catalytic converter.
4. Release mounting rubber from pipe bracket.
5. Remove 3 nuts securing front pipe to manifold.
6. Release front pipe from manifold and remove from catalytic converter.
7. Remove flange gaskets.

Refit

1. Clean pipe flanges.
2. Fit new gasket to catalytic converter flange.
3. Fit front pipe to catalytic converter, fit nuts but DO NOT tighten.
4. Fit new gasket to manifold flange.
5. Raise front pipe and engage flange.
6. Fit manifold to front pipe nuts and tighten to 50 Nm.
7. Tighten nuts securing front pipe to catalytic converter to 50 Nm.
8. Secure front pipe rubber mounting to bracket on body.
9. Fit undertray. ***See BODY, Exterior fittings.***
10. Remove stand(s) and lower vehicle.

INTERMEDIATE PIPE - 'K8'

Service repair no - 30.10.11

Remove

1. Raise vehicle on 4 post ramp.

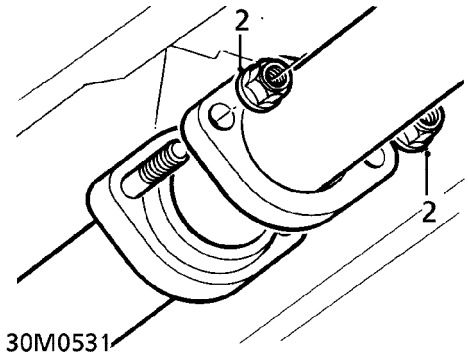

2. Remove 2 nuts securing tail pipe to intermediate pipe.

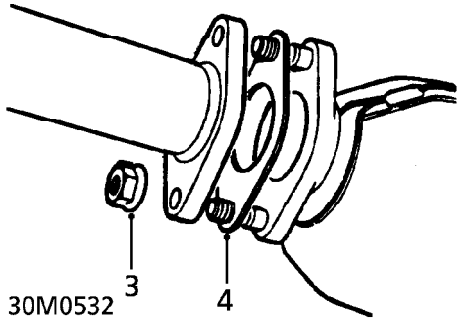

3. Remove 2 nuts securing intermediate pipe to catalytic converter.
4. Release intermediate pipe from catalytic converter. Remove and discard gasket

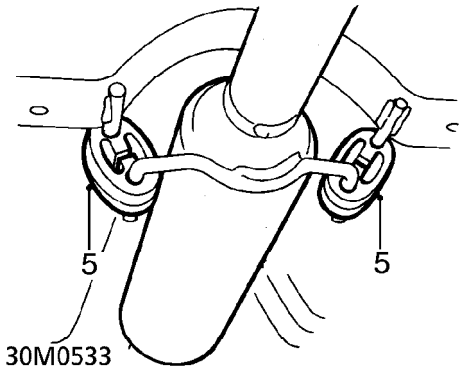

5. Release 2 rubber mountings securing intermediate pipe to body.
6. Release and remove intermediate pipe. remove and discard gasket from tail pipe flange end of intermediate pipe.

Refit

1. Clean mating faces of intermediate pipe, catalytic converter and tail pipe.
2. Fit new gaskets to tail pipe flange end of intermediate pipe and catalytic converter flange.
3. Fit intermediate pipe to tail pipe, align and connect to catalytic converter flange.
4. Fit nuts securing intermediate pipe to catalytic converter and tighten to 50 Nm.
5. Fit nuts securing intermediate pipe to tailpipe and tighten to 50 Nm.
6. Secure intermediate pipe mounting rubbers to body.
7. Lower vehicle.

INTERMEDIATE PIPE - 'K16'

Service repair no - 30.10.11

Remove

1. Raise vehicle on 4 post ramp.

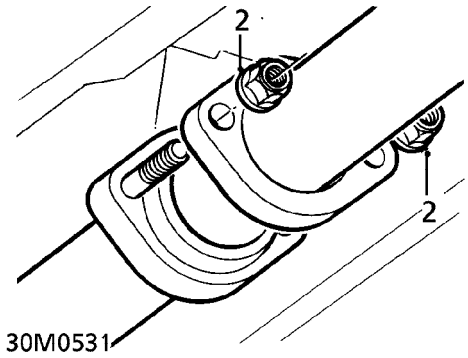

2. Remove 2 nuts securing tail pipe to intermediate pipe.

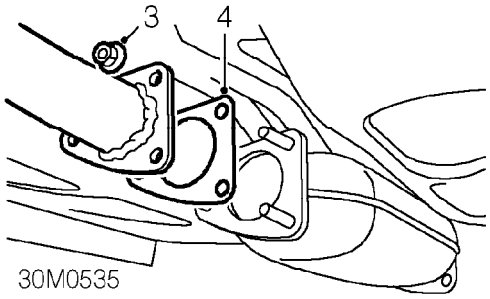

3. Remove 3 nuts securing intermediate pipe to catalytic converter.
4. Release intermediate pipe from catalytic converter. Remove and discard gasket

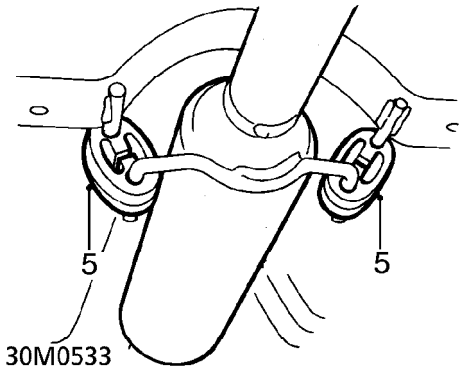

5. Release 2 rubber mountings securing intermediate pipe to body.
6. Release and remove intermediate pipe. remove and discard gasket from tail pipe flange end of intermediate pipe.

Refit

1. Clean mating faces of intermediate pipe, catalytic converter and tail pipe.
2. Fit new gaskets to tail pipe flange end of intermediate pipe and catalytic converter flange.
3. Fit intermediate pipe to tail pipe, align and connect to catalytic converter flange.
4. Fit nuts securing intermediate pipe to catalytic converter and tighten to 50 Nm.
5. Fit nuts securing intermediate pipe to tail pipe and tighten to 50 Nm.
6. Secure intermediate pipe mounting rubbers to body.
7. Lower vehicle.

INTERMEDIATE PIPE - 'L' SERIES

Service repair no - 30.10.11

Remove

1. Raise vehicle on 4 post ramp.

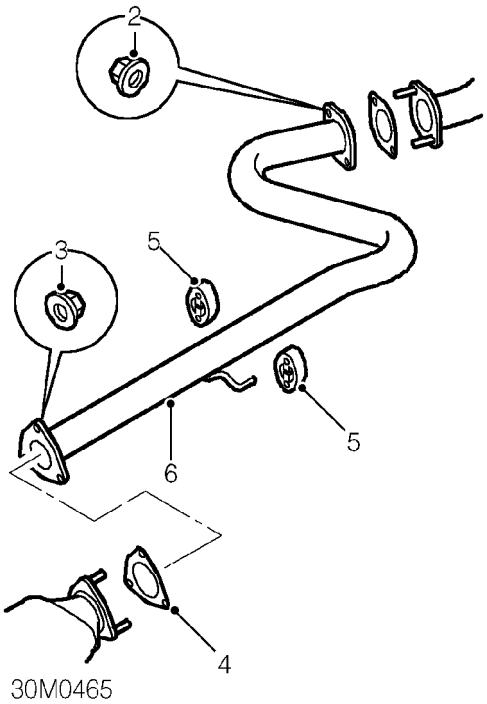

2. Remove 2 nuts securing tail pipe to intermediate pipe.
3. Remove 3 nuts securing intermediate pipe to catalytic converter.
4. Release intermediate pipe from catalytic converter. Remove and discard gasket
5. Release 2 rubber mountings securing intermediate pipe to body.
6. Release and remove intermediate pipe. remove and discard gasket from tail pipe flange end of intermediate pipe.

Refit

1. Clean mating faces of intermediate pipe, catalytic converter and tail pipe.
2. Fit new gaskets to tail pipe flange end of intermediate pipe and catalytic converter flange.
3. Fit intermediate pipe to tail pipe, align and connect to catalytic converter flange.
4. Fit nuts securing intermediate pipe to catalytic converter and tighten to 50 Nm.
5. Fit nuts securing intermediate pipe to tail pipe and tighten to 50 Nm.
6. Secure intermediate pipe mounting rubbers to body.
7. Lower vehicle.

TAIL PIPE - 'K' SERIES

Service repair no - 30.10.22

Remove

1. Raise vehicle on 4 post ramp.

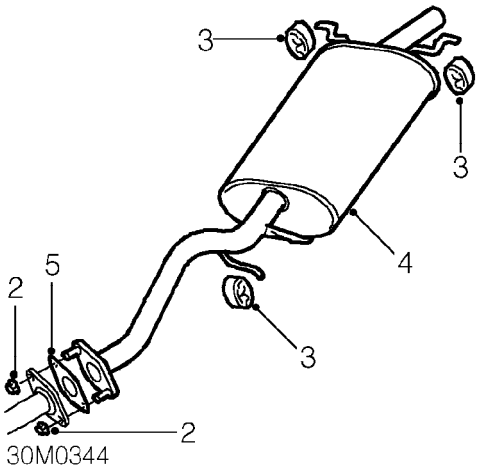

2. Remove 2 nuts securing intermediate pipe to tail pipe.
3. Release 3 rubber mountings securing tail pipe to body.
4. Remove tail pipe.
5. Remove and discard gasket.

Refit

1. Clean intermediate pipe and tail pipe mating faces.
2. Fit new gasket to intermediate pipe flange studs.
3. Fit tail pipe and secure rubber mountings to body.
4. Fit nuts to flange and tighten to 50 Nm.
5. Lower vehicle.

TAIL PIPE - 'L' SERIES

Service repair no - 30.10.22

Remove

1. Raise vehicle on 4 post ramp.

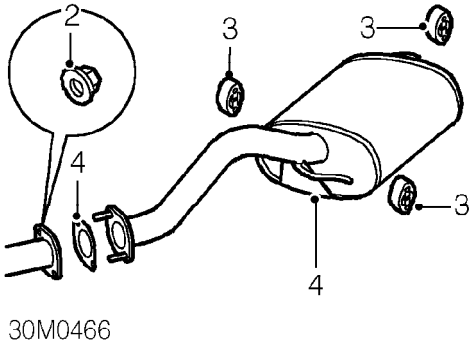

2. Remove 2 nuts securing intermediate pipe to tail pipe.
3. Release 3 rubber mountings securing tail pipe to body.
4. Remove tail pipe.
5. Remove and discard gasket.

Refit

1. Clean intermediate pipe and tail pipe mating faces.
2. Fit new gasket to intermediate pipe flange studs.
3. Fit tail pipe and secure rubber mountings to body.
4. Fit nuts to flange and tighten to 50 Nm.
5. Lower vehicle.

FRONT PIPE TO MANIFOLD GASKET - 'K8'

Service repair no - 30.10.26

Remove

1. Raise front of vehicle.

WARNING: Support on safety stands.

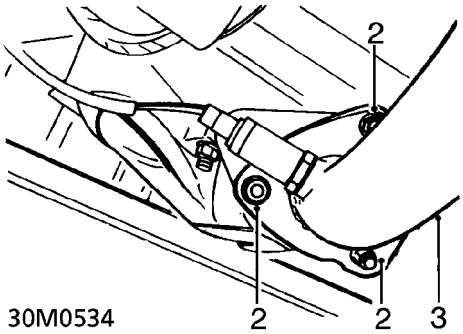

2. Remove 3 nuts securing front pipe to manifold.
3. Release front pipe from manifold.
4. Remove gasket from manifold flange.

Refit

1. Clean manifold and front pipe flanges.
2. Fit new gasket to manifold flange.
3. Position front pipe to manifold, fit nuts and tighten to 50 Nm.
4. Remove stand(s) and lower vehicle.

FRONT PIPE TO MANIFOLD GASKET - 'K16'

Service repair no - 30.10.26

Remove

1. Raise front of vehicle.

WARNING: Support on safety stands.

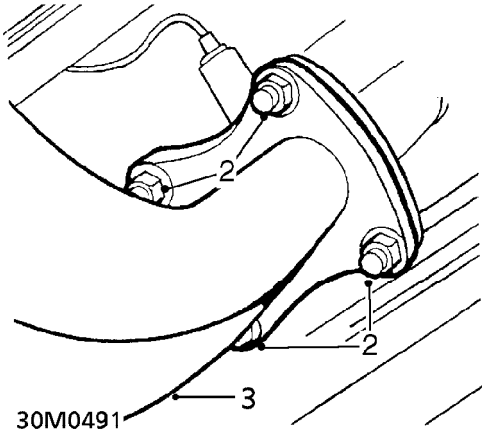

2. Remove 4 nuts securing front pipe to manifold.
3. Release front pipe from manifold.
4. Remove gasket from manifold flange.

Refit

1. Clean manifold and front pipe flanges.
2. Fit new gasket to manifold flange.
3. Position front pipe to manifold, fit nuts and tighten to 50 Nm.
4. Remove stand(s) and lower vehicle.

FRONT PIPE TO MANIFOLD GASKET - 'L' SERIES

Service repair no - 30.10.26

Remove

1. Raise front of vehicle.

WARNING: Support on safety stands.

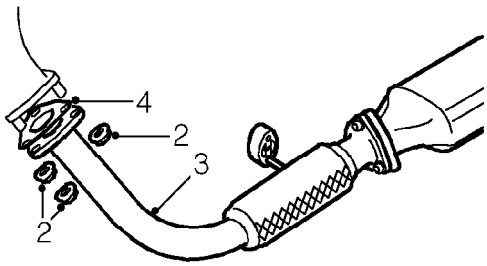

30M0467

2. Remove 3 nuts securing front pipe to manifold.
3. Release front pipe from manifold.
4. Remove gasket from manifold flange.

Refit

1. Clean manifold and front pipe flanges.
2. Fit new gasket to manifold flange.
3. Position front pipe to manifold, fit nuts and tighten to 50 Nm.
4. Remove stand(s) and lower vehicle.

TAIL PIPE HEAT SHIELD

Service repair no - 30.10.44

Remove

1. Raise rear of vehicle.

WARNING: Support on safety stands.

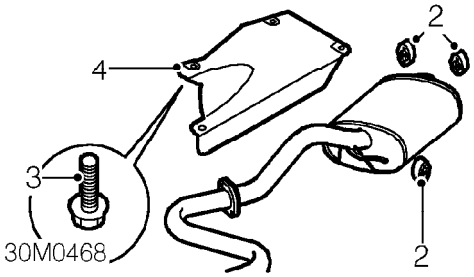

30M0468

2. Release exhaust tailpipe from 3 mounting rubbers.
3. Remove 4 bolts securing heat shield to body.
4. Remove tail pipe heat shield.

Refit

1. Position tail pipe heat shield, fit bolts and tighten to 9 Nm.
2. Secure exhaust tailpipe to mounting rubbers.
3. Remove stand(s) and lower vehicle.

INLET MANIFOLD - 'L' SERIES WITHOUT INTERCOOLER

Service repair no - 30.15.02

Remove

1. Remove inlet and exhaust manifold assembly. ***See this section.***

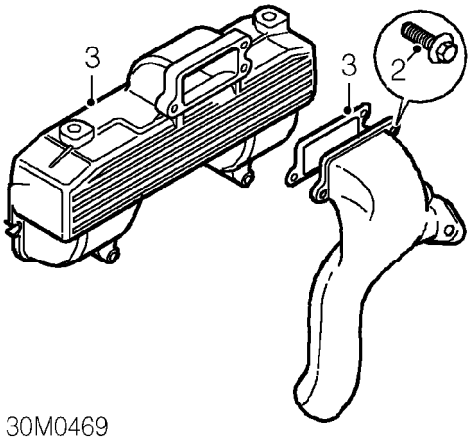

2. Remove 3 bolts securing inlet manifold to intake pipe.
3. Remove inlet manifold and discard gasket.

Refit

1. Clean mating faces of inlet manifold and intake pipe.
2. Using a new gasket, fit inlet manifold to intake pipe.
3. Fit bolts securing inlet manifold to intake pipe and tighten to 25 Nm.
4. Fit inlet and exhaust manifold assembly. ***See this section.***

INLET MANIFOLD GASKET - 'K8'

Service repair no - 30.15.08

Remove

1. Disconnect battery earth lead.
2. Drain cooling system. ***See COOLING SYSTEM - 'K' SERIES, Adjustments.***

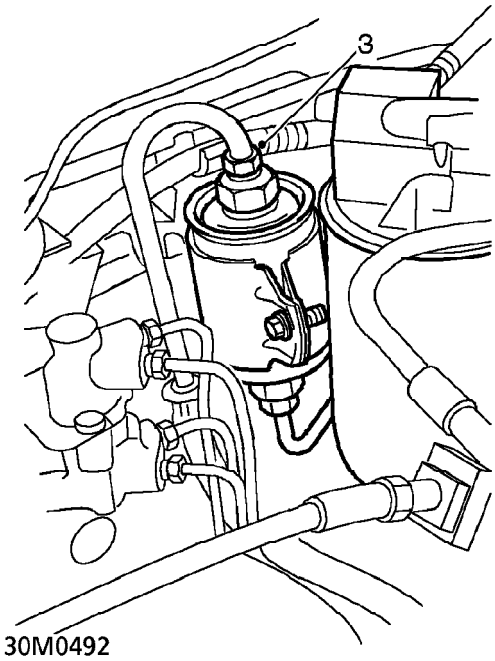

3. Position absorbent cloth around fuel filter outlet union. Loosen union to relieve fuel pressure. Retighten union to 30 Nm.

CAUTION: To prevent damage to fuel system pipes and components, use two spanners when loosening or tightening unions.

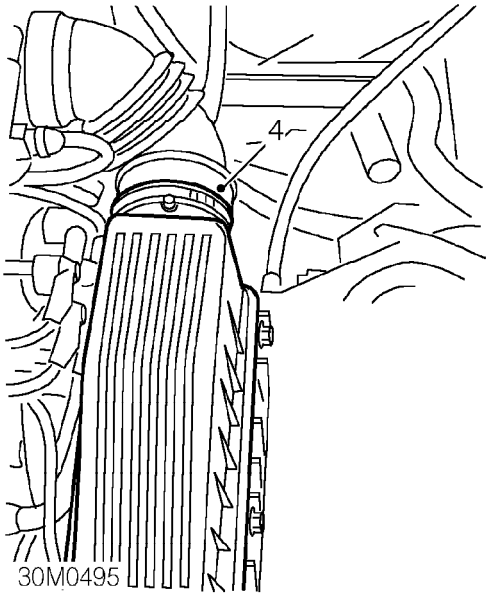

4. Remove clip and disconnect air intake hose from air cleaner.

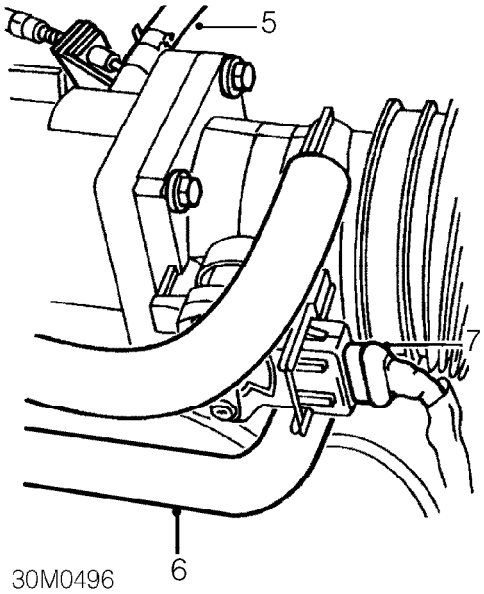

5. Release clip and disconnect purge hose from inlet manifold.
6. Release clip and disconnect breather hose from throttle body.

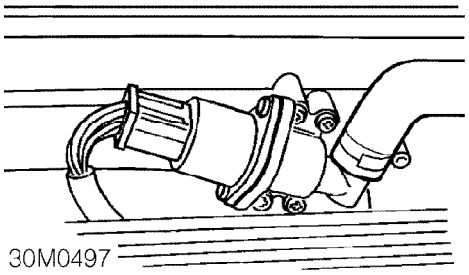

7. Disconnect multiplug from TP sensor.
8. Release clip and disconnect hose from IACV.
9. Disconnect multiplug from IACV.

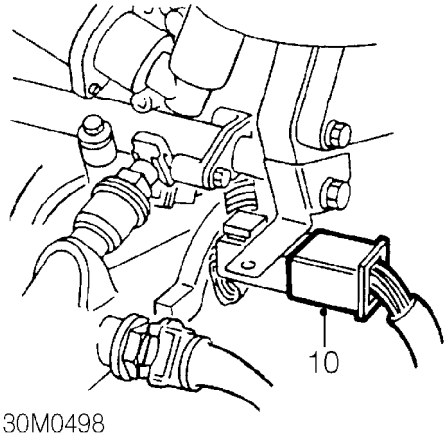

10. Release injector harness multiplug from bracket and disconnect multiplug.
11. Remove 4 bolts securing throttle body to inlet manifold. Remove throttle body and place aside. Collect multiplug bracket.
12. Remove and discard 'O' ring from throttle body.

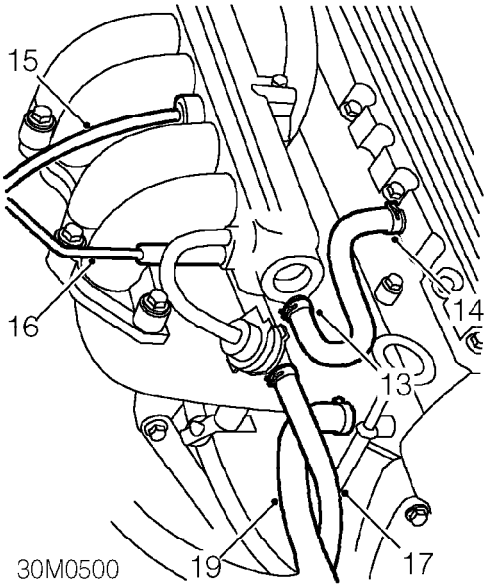

13. Disconnect breather hose from inlet manifold.
14. Release clip and disconnect breather hose from camshaft cover.
15. Depress plastic collar and disconnect brake servo hose from inlet manifold.
16. Disconnect ECM vacuum hose from inlet manifold.
17. Release clip and disconnect fuel return hose from fuel rail.

CAUTION: Plug the connections.

18. Release fuel return hose from 2 clips on underside of inlet manifold.
19. Loosen clip and disconnect coolant hose from inlet manifold.

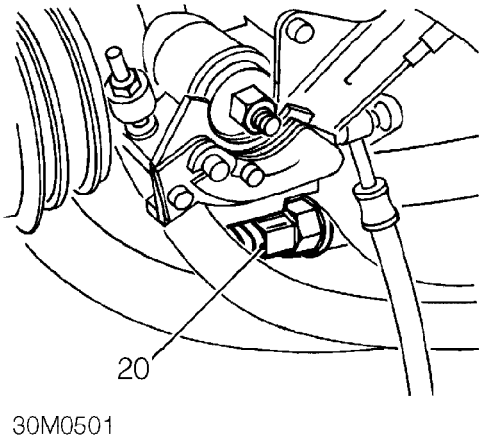

20. Disconnect multiplug from IAT sensor.

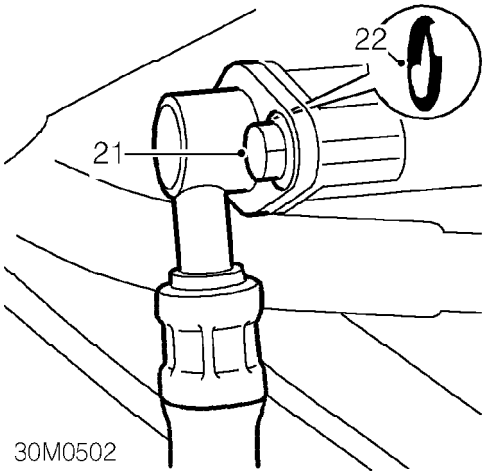

21. Remove 2 bolts securing fuel feed pipe to fuel rail.
22. Release fuel feed pipe from fuel rail, remove and discard 'O' ring.

CAUTION: Plug the connections.

23. Remove bolt securing support stay to inlet manifold.

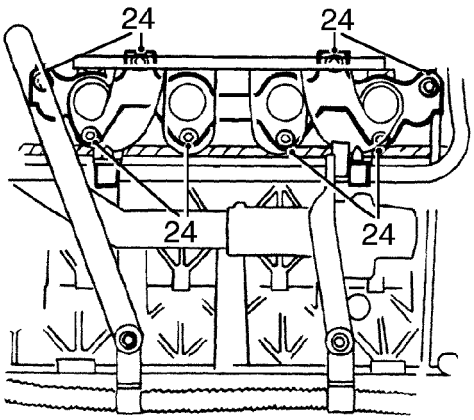

30M0504

24. Working from the centre outwards, progressively slacken then remove 6 bolts and 2 nuts securing inlet manifold to cylinder head.

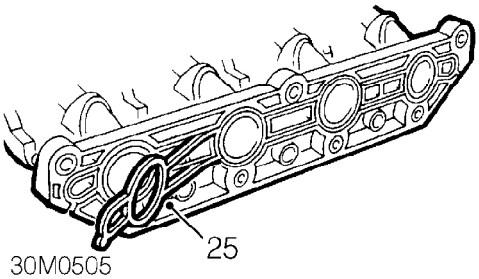

30M0505

25. Remove inlet manifold, remove and discard gasket.

Refit

1. Ensure inlet manifold and cylinder head mating faces are clean.
2. Fit new gasket to inlet manifold.

CAUTION: Gasket must be fitted dry.

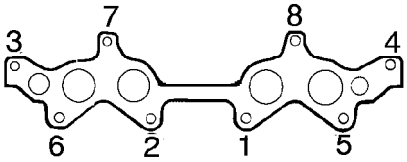

30M0543

3. Fit inlet manifold, fit bolts and nuts and tighten to 25 Nm in the sequence shown.
4. Fit bolt securing support stay to inlet manifold and tighten to 25 Nm.
5. Connect coolant hose to inlet manifold and tighten clip.
6. Remove plugs from fuel hoses.
7. Lubricate new 'O' ring with silicone grease and fit to fuel feed pipe.
8. Fit fuel feed pipe to fuel rail, fit bolts and tighten to 10 Nm.
9. Connect multiplug to IAT sensor.
10. Connect fuel return hose to fuel rail and secure with clip.
11. Secure fuel return hose to clips on underside of inlet manifold.
12. Connect ECM vacuum pipe and brake servo vacuum hose to inlet manifold.
13. Fit breather pipe between inlet manifold and camshaft cover and secure with clips.
14. Connect multiplug to IACV.
15. Clean mating faces of inlet manifold and throttle body.
16. Lubricate new 'O' ring with silicone grease and fit to throttle body.
17. Position multiplug bracket and throttle body, fit bolts and tighten to 7 Nm.
18. Connect multiplug to injector harness and secure multiplug to bracket.
19. Connect multiplug to TP sensor.
20. Connect breather hose to throttle body and secure with clip.
21. Connect hose to IACV and secure with clip.
22. Connect purge hose to inlet manifold and secure with clip.
23. Connect air intake hose to air cleaner and secure with clip.
24. Refill cooling system. ***See COOLING SYSTEM - 'K' SERIES, Adjustments.***
25. Connect battery earth lead.

INLET MANIFOLD GASKET - 'K16 WITH VVC'

Service repair no - 30.15.08

Remove

1. Remove inlet manifold chamber. ***See this section.***
2. Drain cooling system. ***See COOLING SYSTEM - 'K' SERIES, Adjustments.***
3. Position cloth to catch fuel spillage.

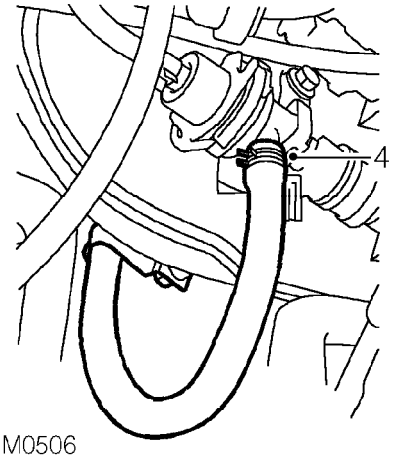

4. Release clip and disconnect fuel return hose from fuel rail.

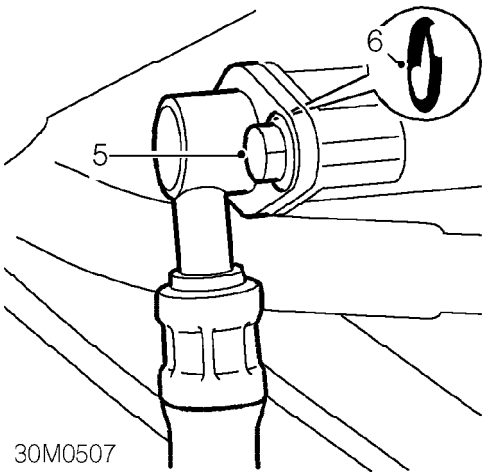

5. Remove 2 bolts securing fuel feed pipe to fuel rail.
6. Release fuel feed pipe and remove and discard 'O' ring.

CAUTION: Plug the connections.

7. Position drain tray to collect coolant spillage.

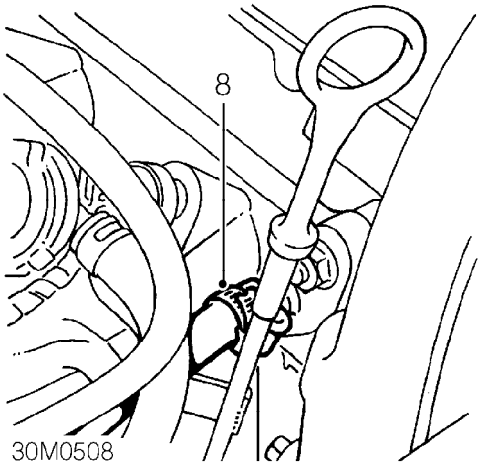

8. Loosen clip and disconnect coolant hose from inlet manifold.

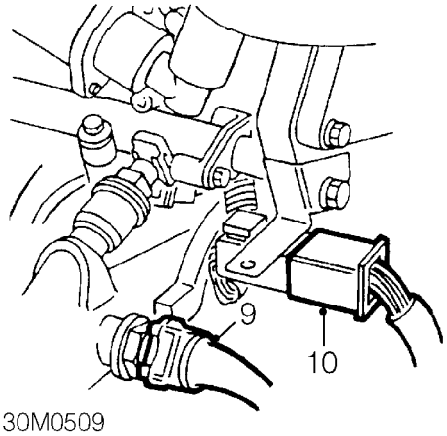

9. Disconnect multiplug from IAT sensor.
10. Disconnect injector harness multiplug from engine harness.
11. Release injector multiplug from bracket.

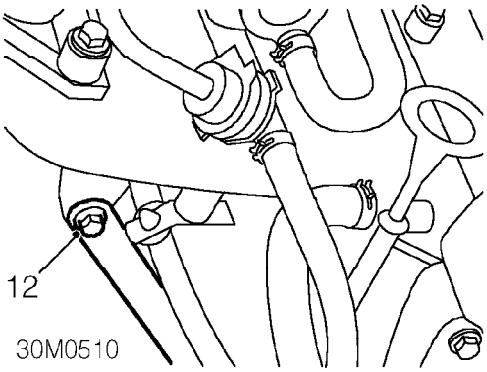

12. Remove bolt securing support stay to inlet manifold.

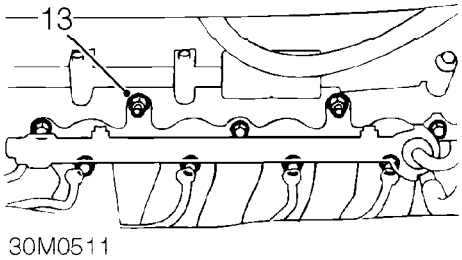

13. Remove 2 nuts and 7 bolts securing inlet manifold to cylinder head.
14. Remove inlet manifold from cylinder head.
15. Remove and discard inlet manifold gasket.

Refit

1. Clean manifold and cylinder head mating surfaces.
2. Fit new inlet manifold gasket to cylinder head.
3. Fit inlet manifold to cylinder head.

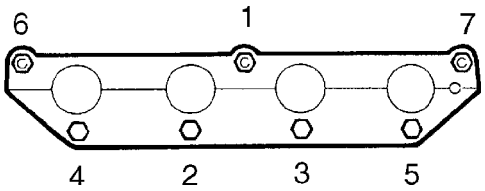

30M0322

4. Fit nuts and bolts securing inlet manifold to cylinder head and tighten in sequence shown to 25 Nm.
5. Align support stay to inlet manifold, fit bolt and tighten to 25 Nm.
6. Lubricate new 'O' ring with silicone grease and fit to fuel feed pipe.
7. Connect fuel feed pipe to fuel rail and tighten bolts to 10 Nm.
8. Connect fuel return pipe to fuel rail and secure with clip.
9. Connect multiplug to IAT sensor.
10. Connect injector harness multiplug to engine harness.
11. Connect coolant hose to inlet manifold and tighten clip.
12. Fit inlet manifold chamber. ***See this section.***
13. Refill cooling system. ***See COOLING SYSTEM - 'K' SERIES, Adjustments.***

INLET MANIFOLD GASKET - 'K16'

Service repair no - 30.15.08

Remove

1. Disconnect battery earth lead.
2. Drain cooling system. ***See COOLING SYSTEM - 'K' SERIES, Adjustments.***

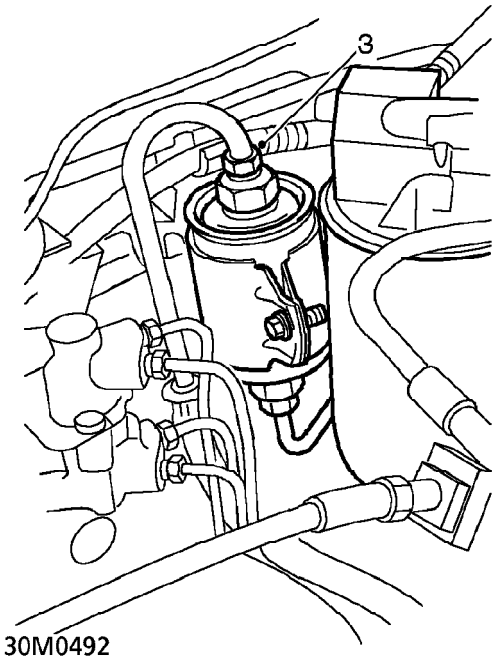

30M0492

3. Position absorbent cloth around fuel filter outlet union. Loosen union to relieve fuel pressure. Retighten union to 30 Nm.

CAUTION: To prevent damage to fuel system pipes and components, use two spanners when loosening or tightening unions.

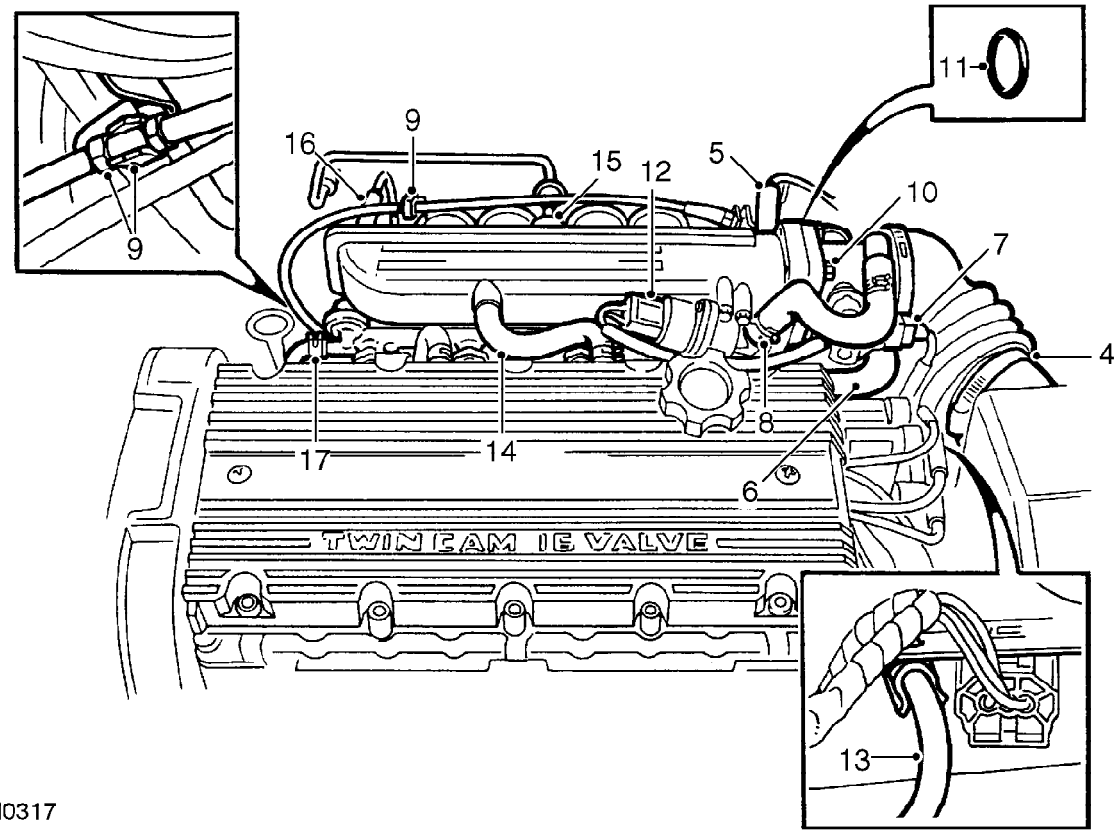

30M0317

4. Remove clip and disconnect air intake hose from air cleaner.
5. Release clip and disconnect purge hose from inlet manifold.
6. Release clip and disconnect breather hose from throttle body.
7. Disconnect multiplug from TP sensor.
8. Release clip and disconnect hose from IACV.
9. Release throttle cable from clip on manifold.
10. Remove 4 bolts securing throttle body to inlet manifold, remove throttle body and place aside.
11. Remove and discard 'O' ring.
12. Disconnect multiplug from IACV.
13. Release distributor h.t. lead from manifold bracket.
14. Disconnect breather hose from inlet manifold.
15. Depress plastic collar and disconnect brake servo hose from inlet manifold.
16. Disconnect ECM vacuum hose from manifold.
17. Release clip and disconnect fuel return hose from fuel rail.

CAUTION: Plug the connections.

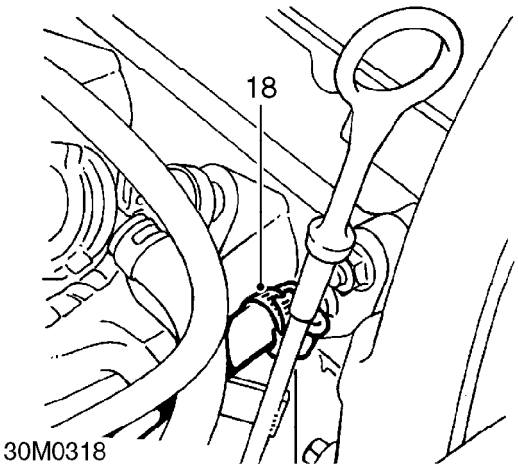

18. Loosen clip and disconnect coolant hose from inlet manifold.

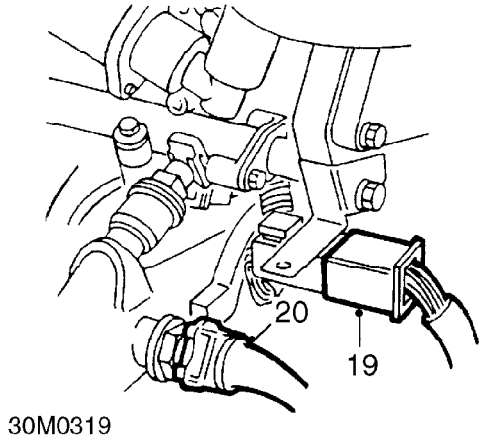

19. Release injector harness multiplug from bracket and disconnect multiplug.
20. Disconnect multiplug from IAT sensor.

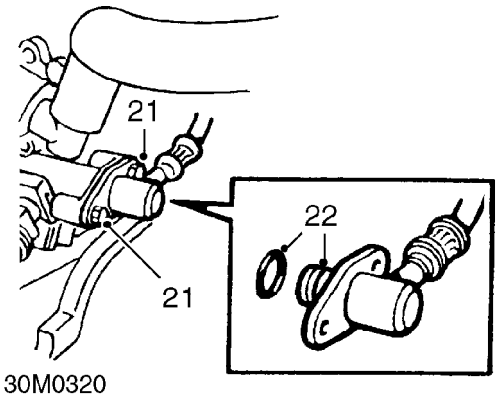

21. Remove 2 bolts securing fuel feed pipe to fuel rail.
22. Release fuel feed pipe from fuel rail, remove and discard 'O' ring.

CAUTION: Plug the connections.

23. Working from the centre outwards, progressively loosen then remove 3 nuts and 4 bolts securing inlet manifold to cylinder head.
24. Remove inlet manifold.

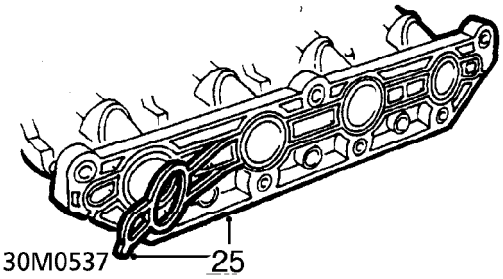

25. Remove and discard manifold gasket.

Refit

1. Ensure mating surfaces are clean and that metal inserts are fitted in inlet manifold stud and bolt holes.
2. Fit new gasket to inlet manifold.

CAUTION: Gasket must be fitted dry.

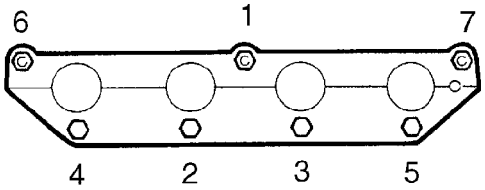

30M0322

3. Fit inlet manifold, fit bolts and nuts and tighten to 17 Nm in the sequence shown.
4. Connect coolant hose to inlet manifold and tighten clip.
5. Remove plugs from fuel hoses.
6. Lubricate a new 'O' ring with silicone grease and fit to fuel feed pipe.
7. Position fuel feed pipe to fuel rail, fit bolts and tighten to 10 Nm.
8. Connect multiplug to injector harness and secure multiplug to bracket.
9. Connect multiplug to IAT sensor.
10. Connect fuel return hose to fuel rail and secure with clip.
11. Connect ECM vacuum pipe and brake servo vacuum hoses to inlet manifold.
12. Connect breather pipe to inlet manifold.
13. Secure distributor h.t. cable in clip.
14. Connect multiplug to IACV.
15. Clean inlet manifold and throttle body mating surfaces.
16. Lubricate a new 'O' ring with silicone grease and fit to throttle body.
17. Position throttle body to inlet manifold, fit bolts and tighten to 7 Nm.
18. Secure throttle cable to clip on inlet manifold.
19. Connect multiplug to TP sensor.
20. Connect breather hose to throttle body and tighten clip.
21. Connect hose to IACV and secure with clip.
22. Connect purge hose to inlet manifold and tighten clip.
23. Connect air hose to air cleaner and secure with clip.
24. Refill cooling system. ***See COOLING SYSTEM - 'K' SERIES, Adjustments.***
25. Connect battery earth lead.

EXHAUST MANIFOLD - 'L' SERIES WITHOUT INTERCOOLER

Service repair no - 30.15.10

Remove

1. Remove inlet and exhaust manifold assembly. ***See this section.***

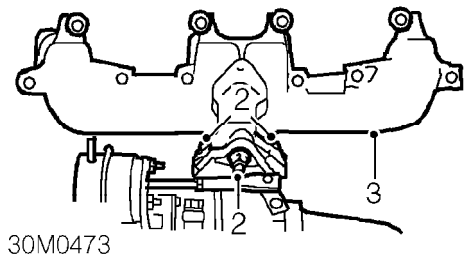

2. Remove 3 nuts securing exhaust manifold to turbocharger.
3. Remove exhaust manifold.

Refit

1. Clean mating faces of exhaust manifold and turbocharger.
2. Fit exhaust manifold to turbocharger, fit nuts and tighten to 25 Nm.
3. Fit inlet and exhaust manifold assembly. ***See this section.***

EXHAUST MANIFOLD - 'L' SERIES WITH INTERCOOLER

Service repair no - 30.15.10

Remove

1. Disconnect battery earth lead.
2. Remove engine acoustic cover. ***See BODY, Exterior fittings.***

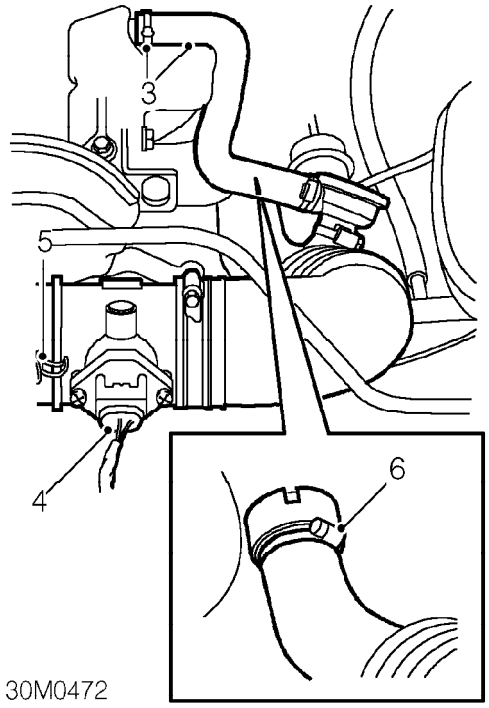

3. Loosen clip and disconnect breather hose from camshaft cover.
4. Disconnect multiplug from MAF sensor.
5. Release 2 clips securing MAF sensor to air filter.
6. Loosen clip and disconnect air intake hose from turbocharger.

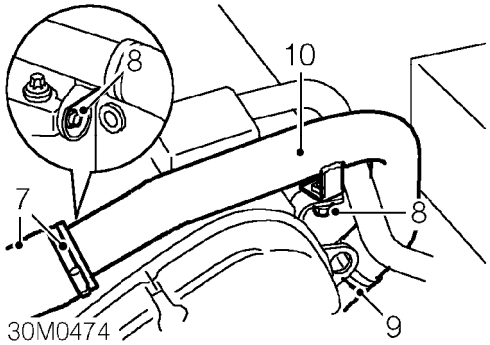

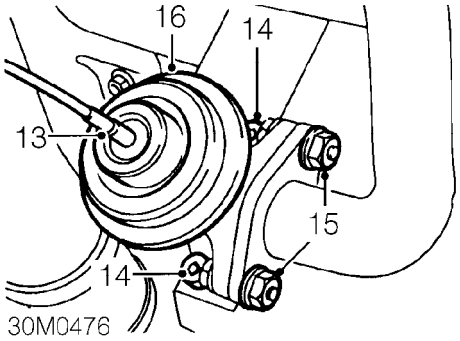

7. Loosen clip and disconnect intercooler top hose from turbocharger pipe.
8. Remove 2 bolts securing turbocharger pipe to cylinder head.
9. Loosen clip and disconnect hose from turbocharger.
10. Remove turbocharger pipe.

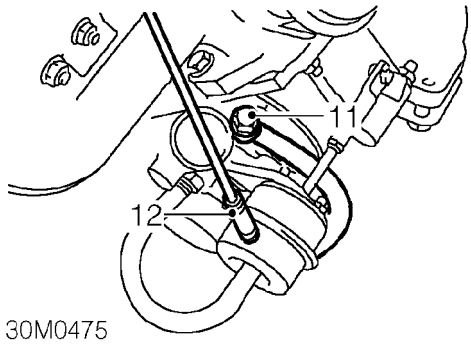

11. Remove banjo bolt securing oil feed pipe to turbocharger, collect 2 sealing washers.
12. Disconect boost pressure sensing pipe from turbocharger.

13. Disconnect vacuum pipe from EGR valve.
14. Remove 2 bolts securing recirculation pipe to inlet manifold
15. Remove 2 Allen bolts securing EGR valve to exhaust manifold.
16. Release and remove EGR valve.
17. Remove and discard gasket.
18. Disconnect exhaust front pipe from manifold flange. ***See this section.***

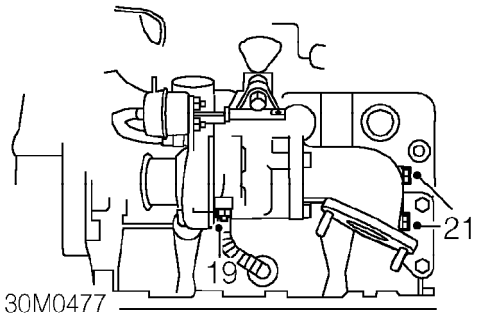

19. Remove 2 bolts securing oil drain pipe flange to turbocharger.
20. Remove and discard gasket.
21. Remove 2 bolts securing exhaust manifold to mounting bracket.

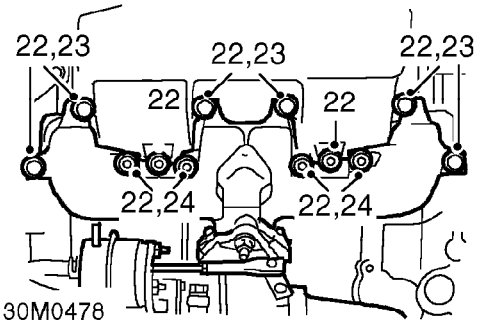

22. Loosen the 6 bolts and 6 nuts securing inlet manifold and the exhaust manifold to cylinder head.
23. Remove 6 bolts securing exhaust manifold to cylinder head, collect 4 washers.
24. Remove 4 nuts securing exhaust manifold to cylinder head.
25. Release and remove exhaust manifold and turbocharger assembly.
Do not carry out further dismantling if component is removed for access only.

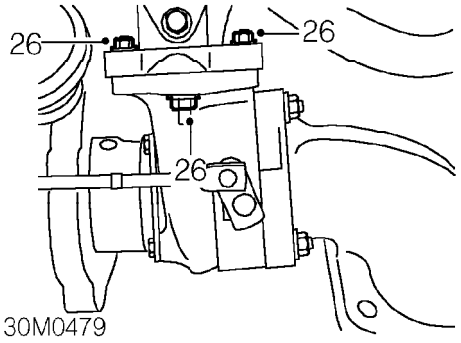

26. Remove 3 nuts securing turbocharger to exhaust manifold.
27. Remove exhaust manifold.
28. Clean mating faces of turbocharger and exhaust manifold.
29. Fit turbocharger to exhaust manifold, fit nuts and tighten 25 Nm.

Refit

1. Replace inlet and exhaust manifold gasket. ***See this section.***
2. Clean mating faces of exhaust manifold and cylinder head.
3. Clean mating faces of exhaust manifold and exhaust front pipe.
4. Manouvre exhaust manifold and turbocharger assembly in position on cylinder head.

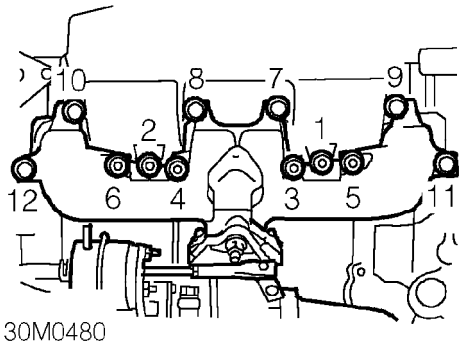

5. Fit nuts, bolts and washers securing exhaust manifold to cylinder head. Working in the sequence illustrated, tighten exhaust manifold nuts to 25 Nmand the bolts to 33 Nm.
6. Fit bolts securing exhaust manifold to mounting bracket and tighten to 25 Nm.
7. Clean mating faces of oil drain pipe and turbocharger.
8. Fit new gasket to turbocharger oil drain pipe. Align pipe to turbocharger, fit bolts and tighten to 10 Nm.
9. Connect exhaust front pipe to manifold. ***See this section.***
10. Clean mating faces of EGR valve, inlet manifold and exhaust manifold.
11. Fit new gasket to EGR valve. Align EGR valve to inlet manifold and exhaust manifold.
12. Fit Allen bolts securing EGR valve to exhaust manifold and tighten to 25 Nm.

13. Fit 2 bolts securing EGR recirculation pipe to inlet manifold and tighten to 10 Nm.
14. Connect vacuum pipe from EGR solenoid to EGR valve.
15. Connect boost pressure sensing pipe to turbocharger.
16. Clean turbocharger oil feed pipe union and banjo bolt.
17. Fit new sealing washers to banjo bolt. connect oil feed pipe to turbocharger and tighten union to 20 Nm.
18. Connect turbocharger pipe hose to turbocharger and tighten clip.
19. Align turbocharger pipe to cylinder head, fit and tighten bolts as follows;
    M6 bolt to 10 Nm.
    M8 bolt to 25 Nm.
20. Connect intercooler top hose to turbocharger pipe and tighten clip.
21. Fit air intake pipe to turbocharger and tighten clip.
22. Connect MAF sensor to air cleaner and secure clips.
23. Connect breather hose to camshaft cover and tighten clip.
24. Connect multiplug to MAF sensor.
25. Fit engine acoustic cover. ***See BODY, Exterior fittings.***
26. Connect battery earth lead.

EXHAUST MANIFOLD GASKET - 'K8'

Service repair no - 30.15.12

Remove

1. Remove front pipe to manifold gasket. ***See this section.***

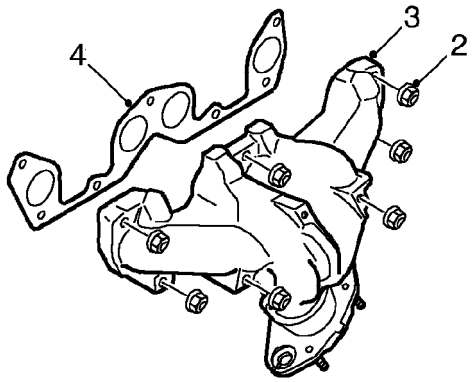

30M0345

2. Remove 7 nuts securing exhaust manifold to cylinder head.
3. Remove exhaust manifold.
4. Remove and discard exhaust manifold gasket.

Refit

1. Clean mating faces of cylinder head and manifold.
2. Fit new gasket to manifold studs.

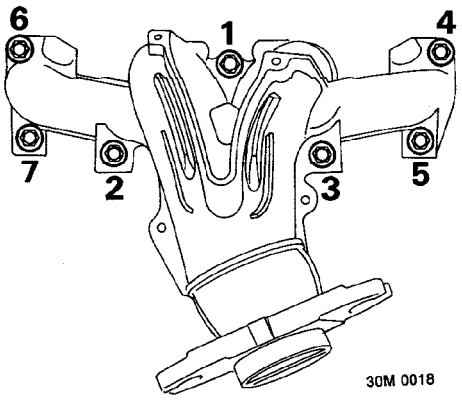

3. Position manifold on studs, fit nuts and tighten in the sequence illustrated to 45 Nm.
4. Fit front pipe to manifold gasket. ***See this section.***

EXHAUST MANIFOLD GASKET - 'K16' WITHOUT AIR CONDITIONING

Service repair no - 30.15.12

Remove

1. Remove front pipe to manifold gasket. ***See this section.***

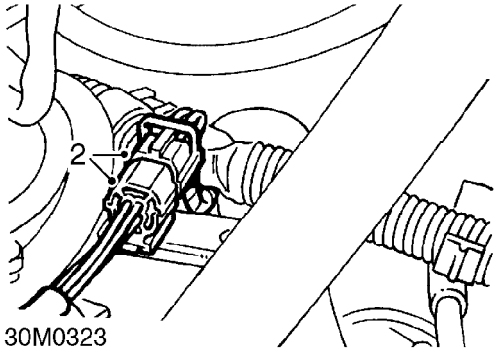

2. Release HO2S multiplug from bracket.
3. Disconnect HO2S multiplug from harness.

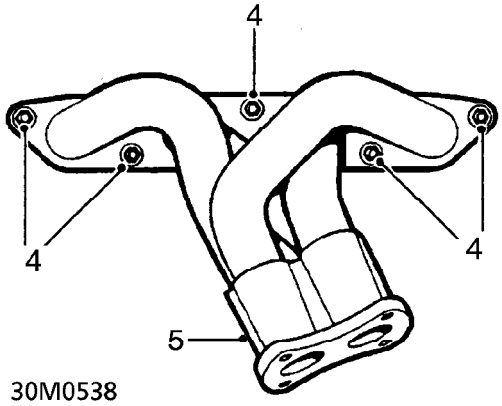

4. Remove 5 nuts securing exhaust manifold to cylinder head.
5. Remove exhaust manifold.
6. Remove and discard exhaust manifold gasket.

Refit

1. Clean manifold mating faces.
2. Fit new gasket to manifold studs.

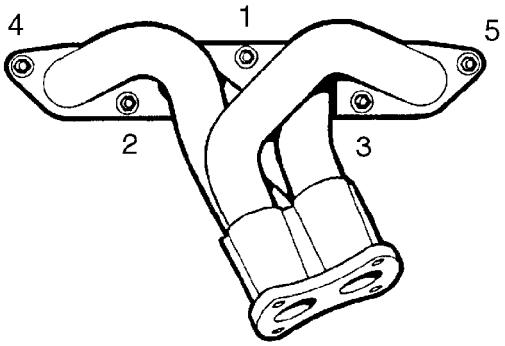

30M0325

3. Position manifold on studs. Fit nuts and tighten in the sequence illustrated to 45 Nm.
4. Connect HO2S multiplug to harness and secure to bracket.
5. Fit front pipe to manifold gasket, ***See this section.***

EXHAUST MANIFOLD GASKET - 'K16' WITH AIR CONDITIONING

Service repair no - 30.15.12.20

Remove

1. Remove alternator. ***See ELECTRICAL, Repairs.***
2. Remove front pipe to manifold gasket. ***See this section.***

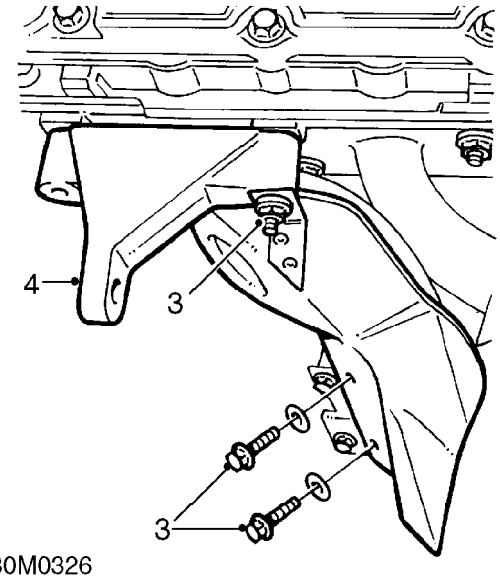

30M0326

3. Remove nut and 2 bolts securing alternator heat shield and remove heat shield.
4. Remove alternator top mounting bracket.

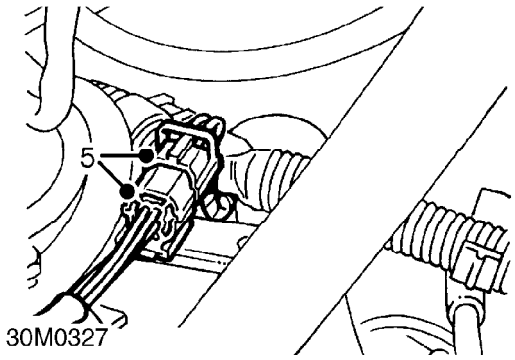

5. Release HO2S multiplug from bracket.
6. Disconnect HO2S multiplug from harness.

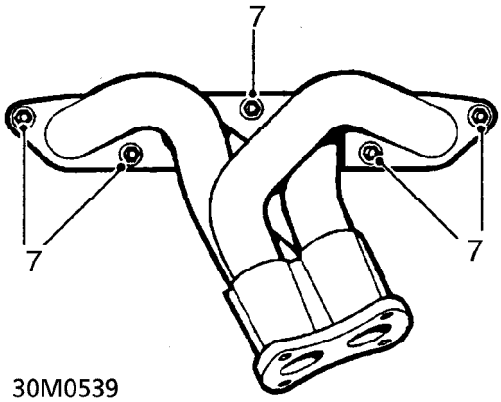

7. Remove 5 nuts securing exhaust manifold to cylinder head.
8. Remove exhaust manifold.
9. Remove and discard exhaust manifold gasket.

Refit

1. Clean manifold mating faces.
2. Fit new gasket to manifold studs.

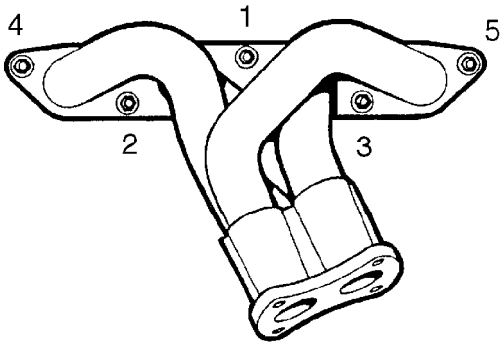

3. Fit manifold on studs and tighten nuts in the sequence illustrated to 45 Nm.
4. Connect HO2S multiplug to harness and secure to bracket.
5. Fit alternator top mounting bracket and alternator heat shield.
6. Fit nut and bolts. Tighten heatshield bolts to 10 Nm.
7. Fit front pipe to manifold gasket. ***See this section.***
8. Fit alternator. ***See ELECTRICAL, Repairs.***

INLET AND EXHAUST MANIFOLD GASKET - 'L' SERIES WITHOUT INTERCOOLER

Service repair no - 30.15.15

Remove

1. Disconnect battery earth lead.
2. Remove engine acoustic cover. ***See BODY, Exterior fittings.***

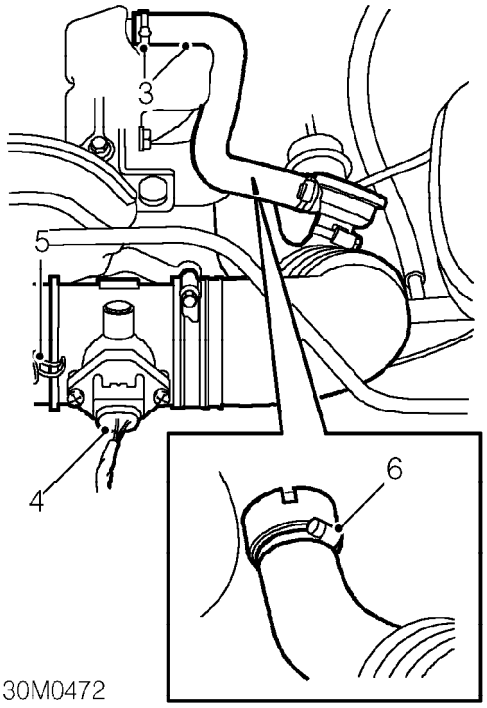

3. Loosen clip and disconnect breather hose from camshaft cover.
4. Disconnect multiplug from MAF sensor.
5. Release 2 clips securing MAF sensor to air cleaner.
6. Loosen clip and disconnect air intake pipe from turbocharger.
7. Remove air intake pipe and MAF sensor.
8. Disconnect exhaust front pipe from manifold flange. ***See this section.***

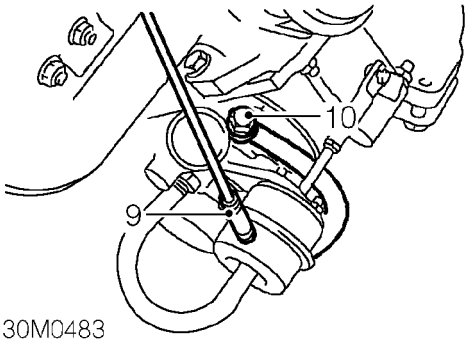

9. Disconnect vacuum pipe from turbocharger actuator.
10. Remove banjo bolt securing oil feed pipe to turbocharger; collect 2 sealing washers.

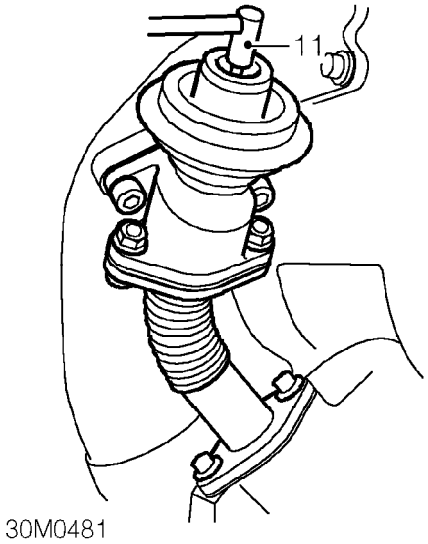

11. Disconnect vacuum pipe from EGR valve.

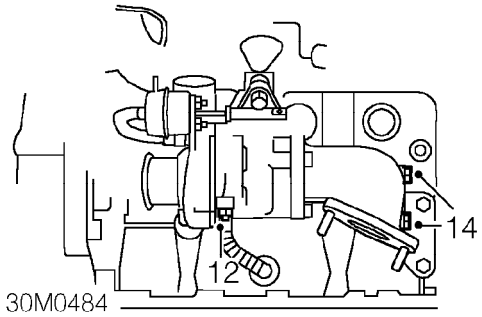

12. Remove 2 bolts securing oil drain pipe to turbocharger.
13. Remove and discard gasket.
14. Remove 2 bolts securing exhaust manifold to support bracket.

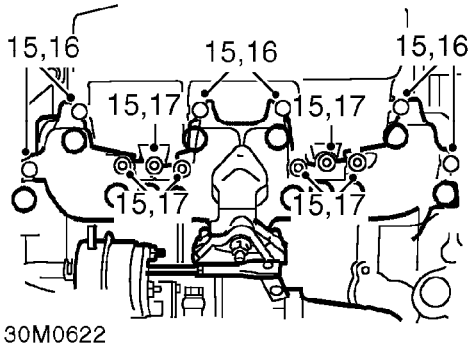

15. Loosen 6 nuts and 6 bolts securing inlet and exhaust manifolds to cylinder head.
16. Remove 6 bolts securing manifolds to cylinder head and collect 4 washers.
17. Remove 6 nuts securings manifold to cylinder head.
18. Release and remove inlet and exhaust manifolds as an assembly.
19. Remove and discard manifold gasket.

Refit

1. Clean mating faces of inlet manifold, exhaust manifold and cylinder head.
2. Fit new manifold gasket to cylinder head.
3. Manoeuvre inlet and exhaust manifolds into position on cylinder head.

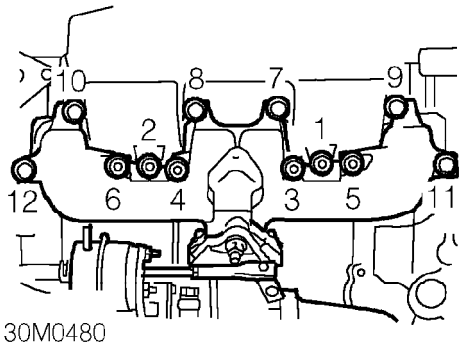

4. Fit nuts, bolts and washers securing manifolds to cylinder head. Working in the sequence illustrated. Tighten nuts to 25 Nm, and bolts to 33 Nm.
5. Fit 2 bolts securing exhaust manifold to support bracket and tighten to 25 Nm.
6. Fit new gasket to turbocharger oil drain pipe. Align pipe to turbocharger, fit bolts and tighten to 10 Nm.
7. Clean turbocharger oil feed pipe union and banjo bolt.
8. Fit new sealing washers to banjo bolt. connect oil feed pipe to turbo charger and tighten to 20 Nm.
9. Connect vacuum pipe to EGR valve.
10. Connect vacuum pipe to turbocharger actuator.
11. Connect exhaust front pipe to manifold. ***See this section.***
12. Position air intake pipe and connect to turbocharger, tighten clip.
13. Connect MAF sensor to air cleaner and secure with clips.
14. Connect multiplug to MAF sensor.
15. Connect breather hose to camshaft cover and tighten clip.
16. Fit engine acoustic cover. ***See BODY, Exterior fittings.***
17. Connect battery earth lead.

INLET AND EXHAUST MANIFOLD GASKET - 'L' SERIES WITH INTERCOOLER

Service repair no - 30.15.15

Remove

1. Remove exhaust manifold. ***See this section.***

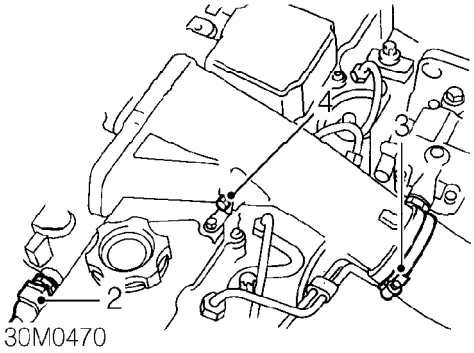

2. Disconnect multiplug from IAT sensor.
3. Loosen clip and disconnect intercooler top hose from inlet manifold intake pipe.
4. Remove bolt securing inlet manifold inlet manifold to bracket on camshaft cover.

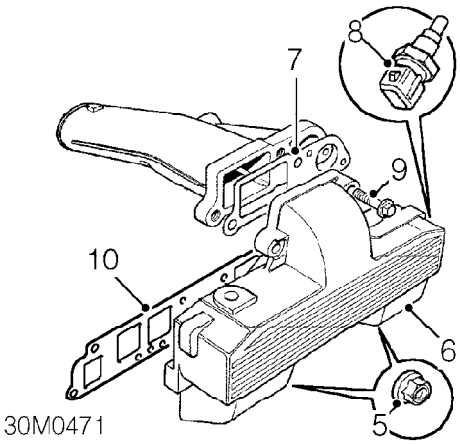

5. Remove 2 nuts securing inlet manifold to cylinder head.
6. Remove inlet manifold.
7. Remove and discard gasket.

Do not carry out further dismantling if component is removed for access only.

8. Remove IAT sensor.
9. Remove 2 bolts securing intake pipe to inlet manifold.
10. Remove and discard gasket.
11. Clean mating faces of inlet manifold and intake pipe.
12. Fit new gasket and align intake pipe to inlet manifold, fit bolts and tighten to 25 Nm.
13. Clean threads of IAT sensor and apply Loctite 577.
14. Fit sensor to inlet manifold and tighten to 14 Nm.

Refit

1. Clean mating faces of inlet manifold and cylinder head.
2. Fit new manifold gasket.
3. Fit inlet manifold to cylinder head, fit nuts but do not fully tighten.
4. Align intake pipe to bracket on camshaft cover, fit bolt and tighten to 9 Nm.
5. Connect intercooler top hose to intake pipe and tighten clip.
6. Connect multiplug to IAT sensor.
7. Fit exhaust manifold. ***See this section.***

INLET MANIFOLD CHAMBER GASKET - 'K8'

Service repair no - 30.15.37

Remove

1. Disconnect battery earth lead.

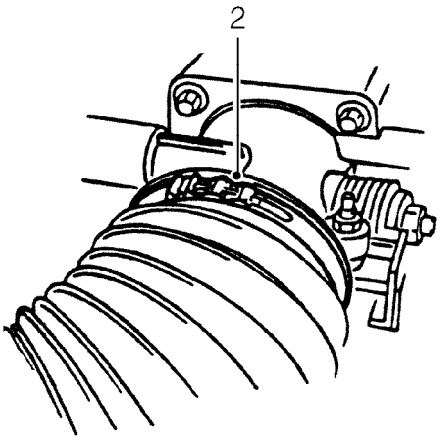

30M0512

2. Release clip and disconnect air intake hose from throttle housing.

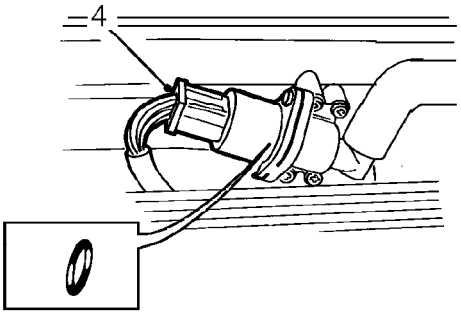

30M0514

3. Disconnect multiplug from IACV.

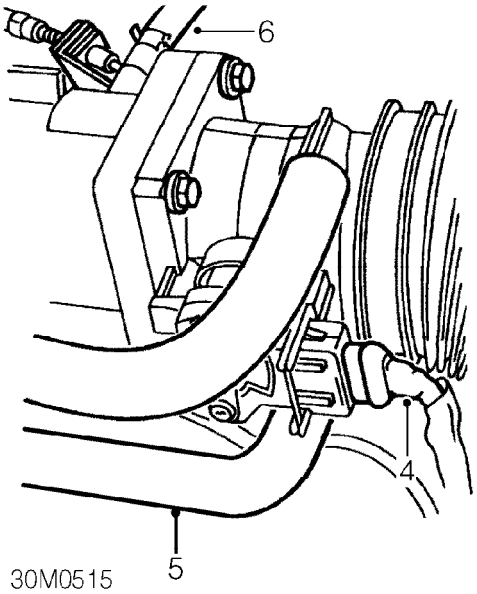

30M0515

4. Disconnect multiplug from TP sensor.
5. Release clip and disconnect breather hose from throttle housing.
6. Release clip and disconnect purge hose from manifold chamber.

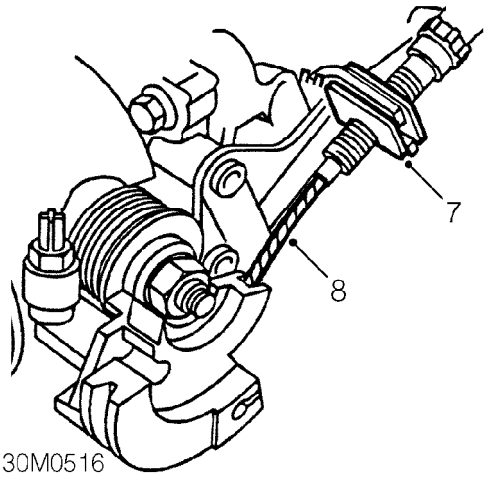

30M0516

7. Release throttle cable adjusting nut from abutment bracket.
8. Disconnect throttle cable from throttle cam.

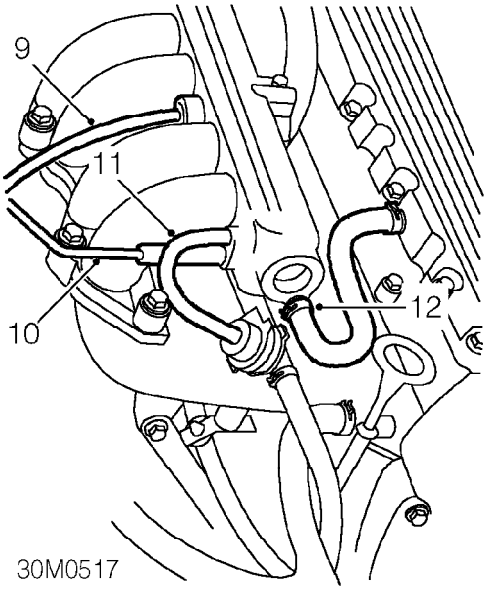

9. Depress plastic collar and disconnect brake servo vacuum hose from manifold chamber.
10. Disconnect ECM vacuum hose from manifold chamber.
11. Disconnect fuel pressure regulator vacuum hose from manifold chamber.
12. Release clip and disconnect breather from manifold chamber.

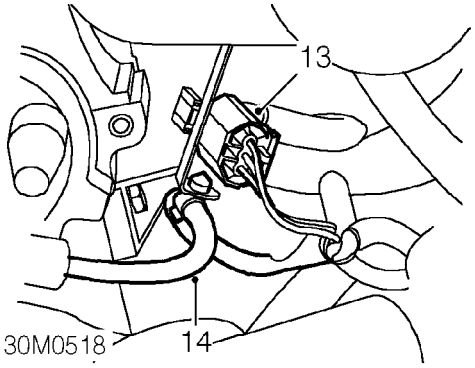

13. Release injector harness multiplug from mounting bracket beneath throttle housing.
14. Release coil h.t. lead from mounting bracket beneath throttle housing.

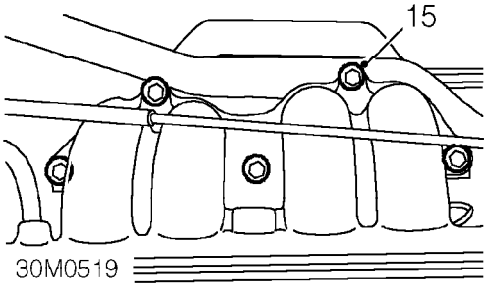

15. Remove 5 bolts securing manifold chamber to inlet manifold.
16. Remove inlet manifold chamber.
17. Remove and discard inlet manifold chamber gasket.

Refit

1. Clean mating surfaces of inlet manifold and manifold chamber gasket.
2. Position new gasket to inlet manifold.
3. Fit manifold chamber to inlet manifold and align.
4. Fit bolts securing manifold chamber to inlet manifold and tighten progressively to 25 Nm.
5. Secure coil h.t. lead and injector harness multiplug to mounting bracket beneath throttle housing.
6. Connect breather hose to manifold chamber and secure with clip.
7. Connect fuel pressure regulator vacuum hose to manifold chamber.
8. Connect ECM vacuum hose to manifold chamber.
9. Connect brake servo vacuum hose to manifold chamber.
10. Connect throttle cable to throttle cam.
11. Locate throttle cable adjusting nut in abutment bracket.
12. Connect purge hose to manifold chamber and secure with clip.
13. Connect breather hose to throttle housing and secure with clip.
14. Connect multiplug to IACV.
15. Connect multiplug to TP sensor.
16. Connect air intake hose to throttle housing and secure with clip.
17. Connect battery earth lead.
18. Adjust throttle cable. ***See ENGINE MANAGEMENT SYSTEM - MEMS, Adjustments.***

INLET MANIFOLD CHAMBER GASKET - 'K16 WITH VVC'

Service repair no - 30.15.37

Remove

1. Disconnect battery earth lead.

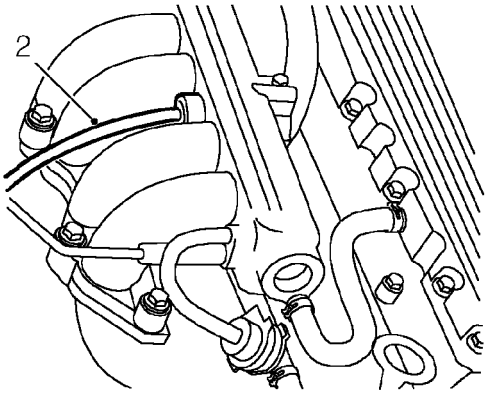

30M0521

2. Disconnect brake servo vacuum pipe from manifold chamber.

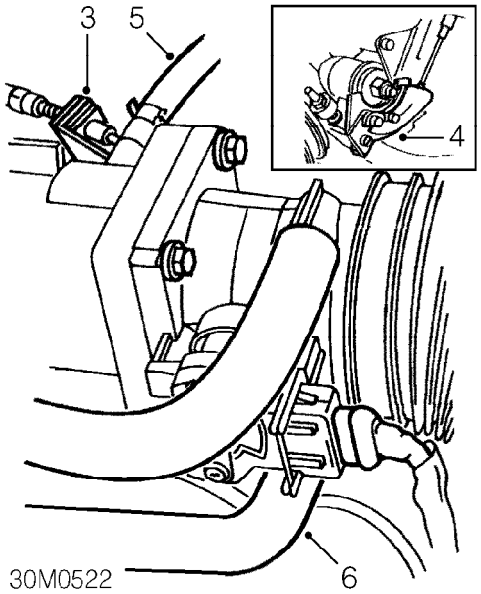

30M0522

3. Release throttle cable adjusting nut from abutment bracket.
4. Release throttle cable from throttle cam.
5. Release clip and disconnect purge hose from manifold chamber.
6. Release clip and disconnect breather hose from manifold chamber.

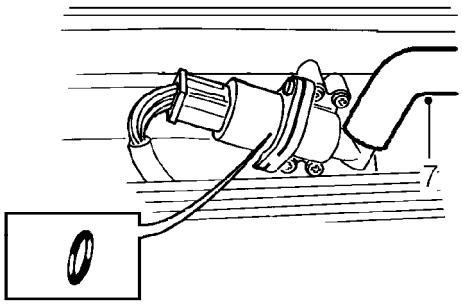

30M0523

7. Disconnect hose from IACV.

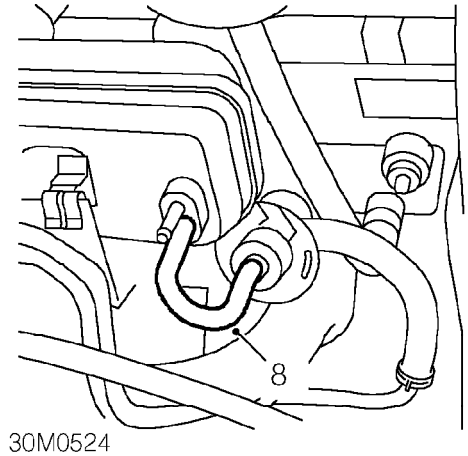

8. Disconnect fuel pressure regulator vacuum pipe from inlet manifold chamber.

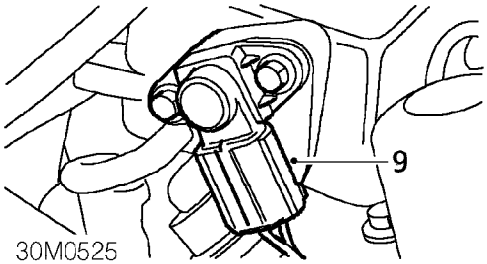

9. Disconnect multiplug from MAP sensor.

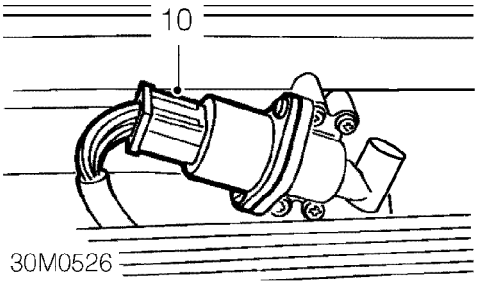

10. Disconnect multiplug from IACV.

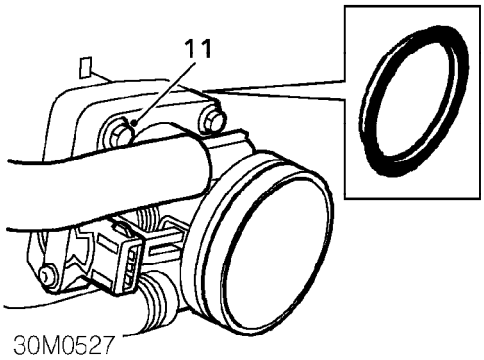

11. Remove 4 bolts securing throttle housing to manifold chamber.

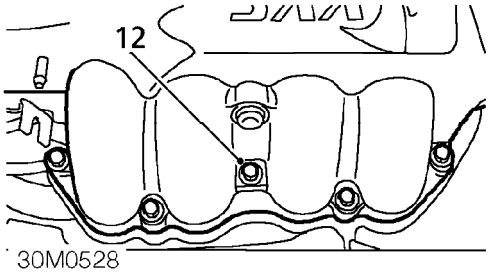

12. Remove 5 bolts securing manifold chamber to inlet manifold.
13. Remove inlet manifold chamber.
14. Remove and discard gasket from inlet manifold.
15. Remove and discard 'O' ring from throttle housing.

Refit

1. Clean mating faces of inlet manifold and manifold chamber.
2. Fit new 'O' ring to throttle housing.
3. Fit new gasket to inlet manifold and position manifold chamber.
4. Progressively tighten bolts securing manifold chamber to inlet manifold to 25 Nm.
5. Align throttle housing to manifold chamber and bracket to housing.
6. Fit bolts securing throttle housing to manifold chamber and tighten to 7 Nm.
7. Connect multiplug to MAP sensor.
8. Connect multiplug to IACV.
9. Connect breather hose to manifold. chamber and secure with clip.
10. Connect hose to IACV.
11. Connect throttle cable to throttle cam.
12. Secure throttle cable adjusting nut to abutment bracket.
13. Secure throttle cable to clip on manifold.
14. Connect purge hose to manifold and secure with clip.
15. Connect brake servo vacuum hose to manifold chamber
16. Connect battery earth lead.
17. Adjust throttle cable. ***See ENGINE MANAGEMENT SYSTEM - MEMS, Adjustments.***

PLASTIC MANIFOLD STUB PIPES - RENEW

Service repair no - 30.15.42

In the event of one of the plastic manifold stub pipes breaking during a repair operation they can be replaced using the following procedure. Read and study the procedure before commencing a repair.

Renew

1. Remove plastic inlet manifold. ***See this section.***
2. Position manifold on a work surface and clamp on manifold flange.

NOTE: Support manifold chamber.

3. If the damaged pipe has broken above the boss face, file the pipe level with the boss face.
4. Using a vernier caliper, micrometer or similar, measure the diameter of the stub pipe which has broken.

5 mm stub pipe (Part No. UKC 2487)

5. Select a 5 mm drill.

NOTE: The drill must be clean and free of grease and oil.

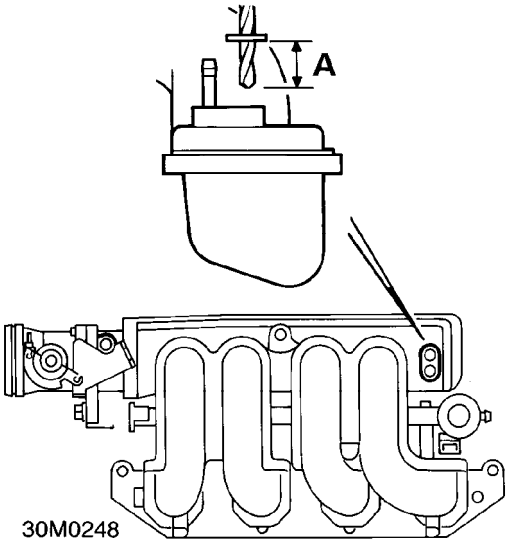

6. Position a fibre washer on drill shaft, 13 mm from tip of drill (dimension A in illustration).

6 mm stub pipe (Part No. JZX 2000)

7. Select a 6 mm drill.

NOTE: The drill must be clean and free of grease and oil.

8. Position a fibre washer on drill shaft, 15 mm from tip of drill (dimension A in illustration).

Both stub pipes

9. Carefully drill hole to depth.

WARNING: Safety goggles must be worn when drilling.

10. Lightly chamfer edge of drilled hole.
11. Select replacement stub pipe, spray stub and drilled hole with Loctite activator N.
12. Allow activator to fully dry and DO NOT contaminate surfaces.
13. Lightly smear drilled hole and stub pipe with Loctite 648.
14. Fit stub pipe into platic manifold.

NOTE: Leave manifold for one hour to allow Loctite to partially cure.

15. Un-clamp manifold from work bench and using an air line, blow out any excess Loctite from stub pipe and swarf from manifold.
16. Fit plastic inlet manifold. ***See this section.***

NOTE: When connecting hose to repaired stub pipe, avoid twisting or excessive bending.

NOTE: The vehicle is fit for service, but full strength of joint will be achieved after approximately ten hours.

CONTENTS

Page

DESCRIPTION AND OPERATION

CLUTCH COMPONENTS - ’R65’ GEARBOX 1
CLUTCH COMPONENTS - ’PG1’ GEARBOX 2
CLUTCH SYSTEM OPERATION 4

REPAIRS

CLUTCH ASSEMBLY AND RELEASE BEARING - ’R65’ GEARBOX 1
CLUTCH ASSEMBLY AND RELEASE BEARING - ’K16 1.8 & K16 WITH VVC’ 3
CLUTCH ASSEMBLY AND RELEASE BEARING - ’L’ SERIES 6
CLUTCH CABLE - ’R65’ GEARBOX 9
CLUTCH CABLE - ’PG1’ GEARBOX 11
CLUTCH RELEASE FORK AND BUSHES - ’R65’ GEARBOX 13
CLUTCH RELEASE FORK - ’PG1’ GEARBOX 14

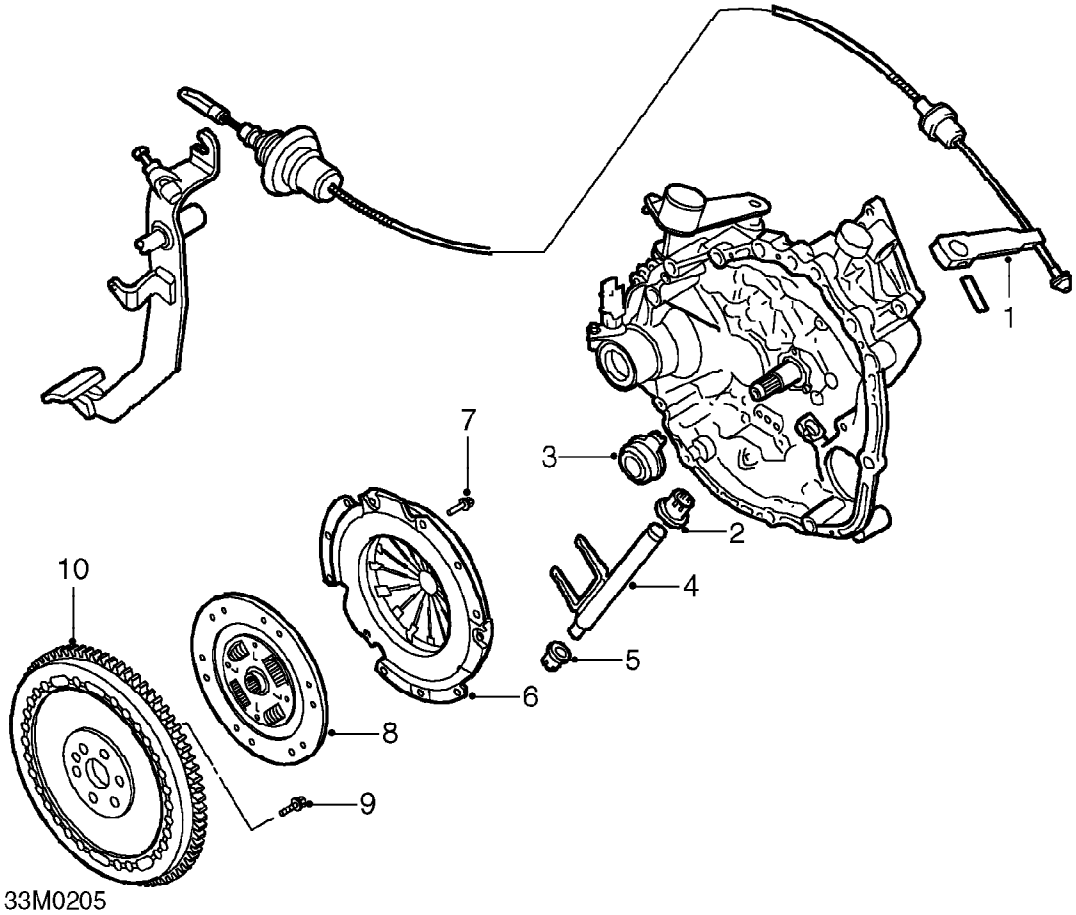

CLUTCH COMPONENTS - 'R65' GEARBOX

1. Release lever
2. Release fork upper bush
3. Release bearing
4. Release fork and shaft
5. Release fork lower bush
6. Clutch pressure plate
7. Clutch pressure plate bolts
8. Clutch drive plate
9. Flywheel bolts
10. Flywheel

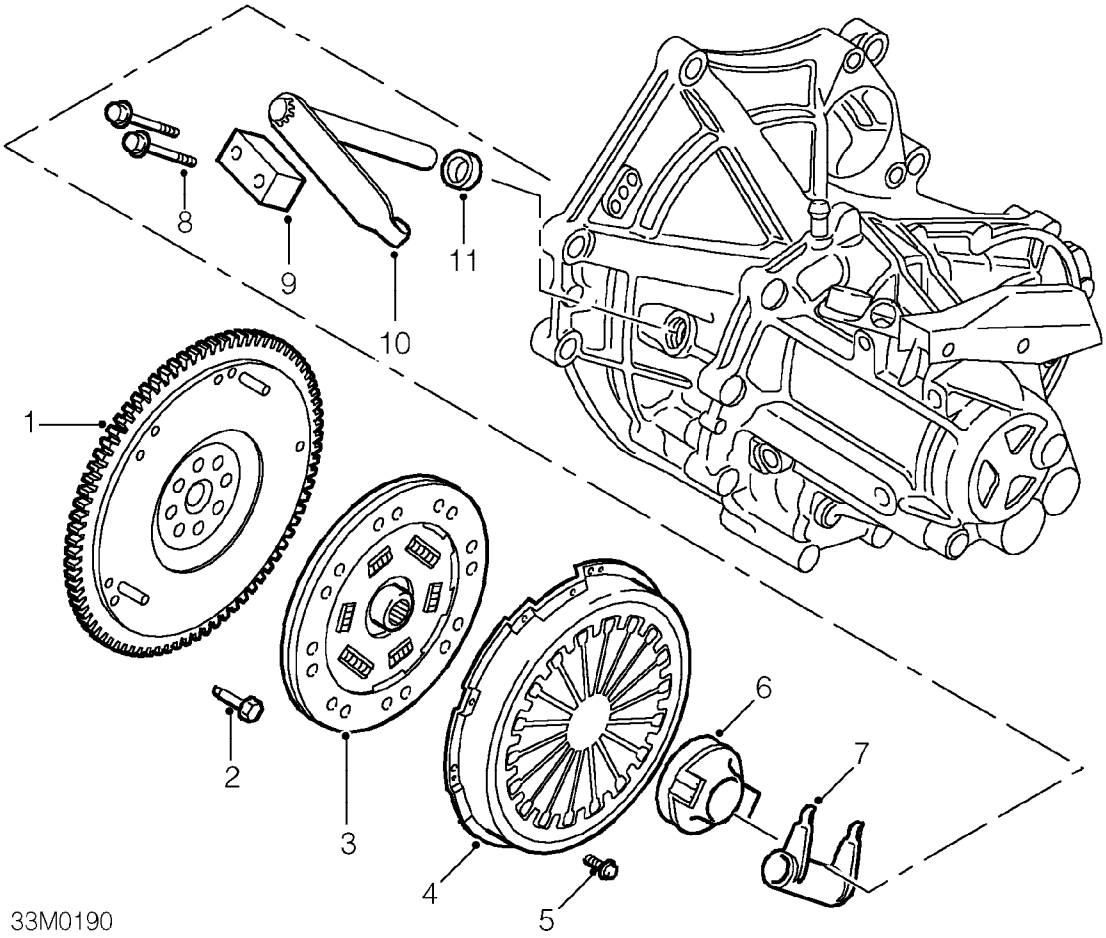

CLUTCH COMPONENTS - 'PG1' GEARBOX

1. Flywheel
2. Flywheel bolts
3. Clutch drive plate
4. Clutch pressure plate
5. Clutch pressure plate bolts
6. Release bearing
7. Release fork
8. Bolt - damper
9. Damper
10. Release lever
11. Oil seal - release shaft

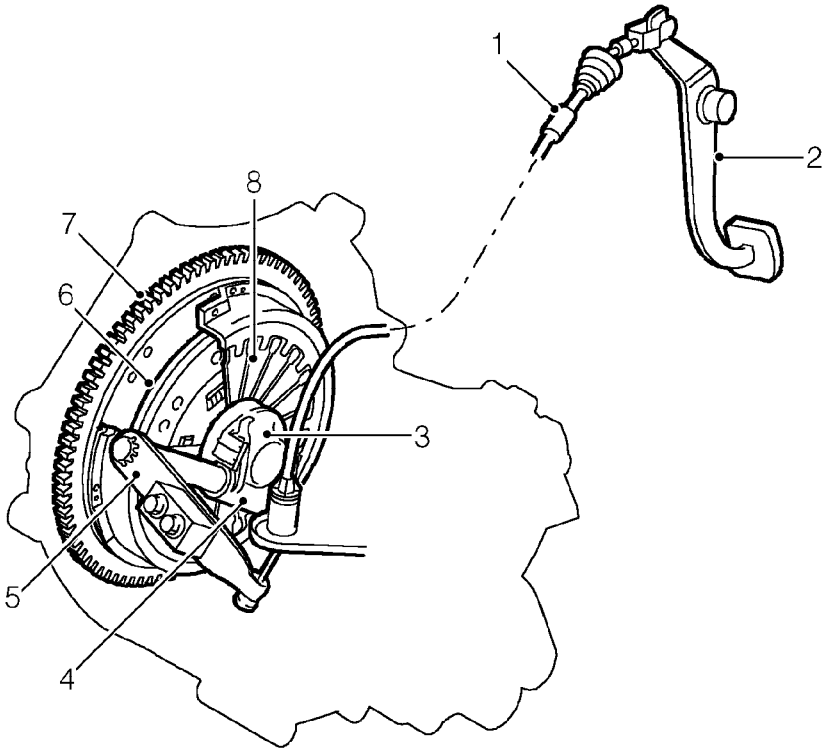

33M0236

Clutch system

1. Clutch cable
2. Clutch pedal
3. Release bearing
4. Release fork
5. Release lever
6. Drive plate
7. Flywheel
8. Diaphragm fingers

CLUTCH SYSTEM OPERATION

The diaphragm spring clutch is operated via a self-adjusting cable attached at one end to the clutch pedal and at the other end to the release lever.

When the clutch pedal is depressed the clutch cable transmits movement to the relases lever. The release fork attached to the release lever shaft converts the rotary movement into linear movement pushing the release bearing against the pressure plate diaphragm fingers. The movement of the diaphragm fingers releases pressure from the the clutch plate.

When pressure is released from the clutch pedal the diaphragm fingers push the release bearing back forcing the clutch plate against the flywheel.

CLUTCH ASSEMBLY AND RELEASE BEARING - 'R65' GEARBOX

Service repair no - 33.10.07

Remove

1. Remove gearbox assembly. ***See MANUAL GEARBOX - 'R65', Repairs.***

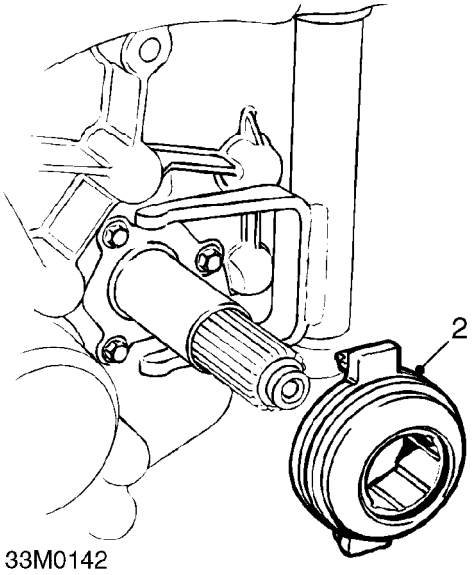

2. Remove release bearing from guide sleeve and release fork.
3. Examine release bearing for signs of wear or damage, renew if necessary.

CAUTION: Bearing is packed with grease, DO NOT wash in solvent.

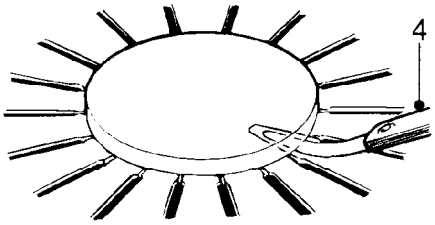

4. Place a circular piece of flat plate across diaphragm fingers and insert feeler gauges between plate and fingers.
   Diaphragm finger clearance limit = 1.0 mm
5. Measure diaphragm finger height above bolted surface of pressure plate.
   Diaphragm finger height:
   New clutch plate = 29.1 - 32.0 mm
   Service limit = 36.5 mm
   Renew pressure plate if clearances are outside service limit.

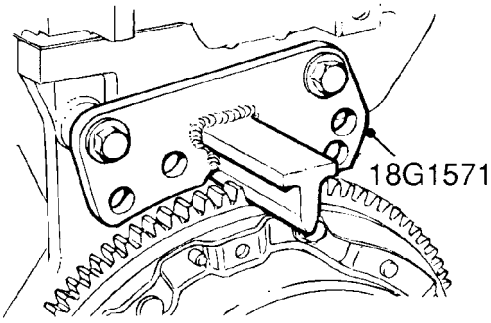

6. Fit flywheel locking tool **18G 1571** and secure with bolts.

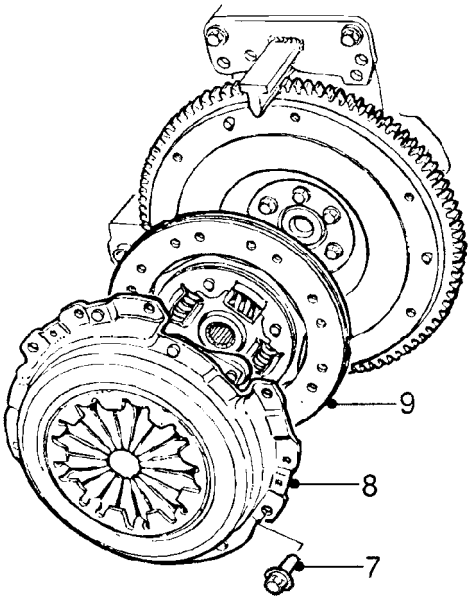

33M0245

7. Progressively loosen and then remove 6 Tx30 Torx bolts securing pressure plate to flywheel.
8. Remove clutch pressure plate and collect drive plate.
9. Inspect clutch drive plate for signs of wear or oil contamination. Check for broken or loose springs and signs of cracking at spring windows. Renew drive plate if necessary.
10. Measure depth of rivets on drive plate, renew drive plate if less than service limit.

    Drive plate rivet depth:
    New clutch plate = 0.9 mm minimum
    Service limit = 0.1 - 0.2 mm

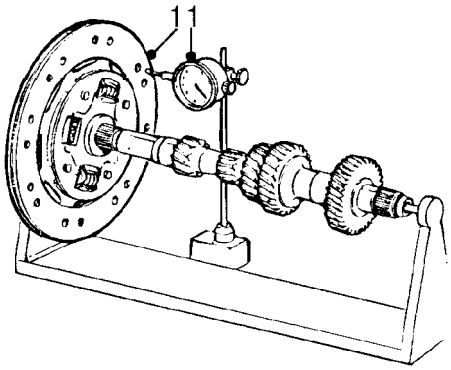

33M0146

11. Measure drive plate run-out by fitting drive plate to a gearbox mainshaft and use a dial gauge as drive plate is rotated.
12. Check pressure plate for signs of wear or damage. Check for signs of overheating on drive straps (deep yellow to blue colour), renew pressure plate if necessary.

NOTE: Renew a pressure plate which has been accidentally dropped.

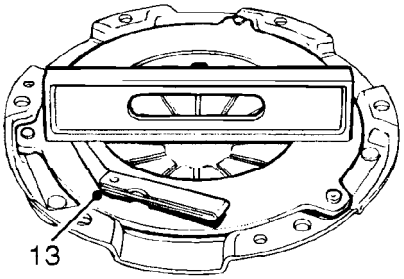

33M0147

13. Using a straight edge and feeler gauges check the surface of the pressure plate for flatness at 4 separate points. Renew pressure plate if warping exceeds service limit.

    Pressure plate warping:
    Service limit = 0.20 mm maximum

Refit

1. Clean pressure plate and flywheel, dowels and dowel holes.
2. Inspect flywheel for signs of scoring or other damage. Renew if worn or damaged.
3. Smear clutch drive plate splines with Molybdenum disulphide grease.
4. Position drive plate to flywheel with 'FLYWHEEL SIDE' marking towards flywheel.

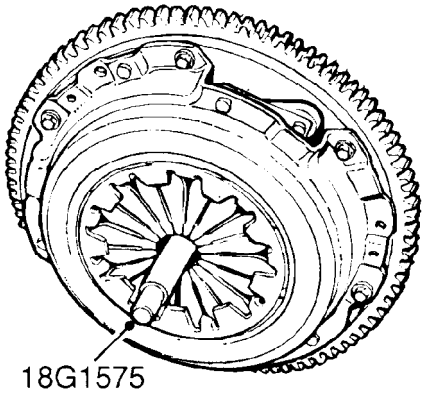

33M0148

5. Fit pressure plate to flywheel and fit alignment tool **18G 1575** .
6. Fit 6 Torx bolts securing pressure plate to flywheel finger tight.
7. Working in a diagonal sequence, progressively tighten Torx bolts to 18 Nm.
8. Remove drive plate alignment tool **18G 1575** .
9. Remove 2 bolts securing flywheel locking tool **18G 1571** to engine and remove flywheel locking tool.
10. Clean clutch release fork and release bearing guide sleeve.
11. Smear release fork shaft and bore of release bearing with Molybdenum disulphide grease.
12. Fit release bearing to release fork and slide onto guide sleeve.
13. Operate release lever to ensure that release bearing is correctly located on release fork and slides smoothly on guide sleeve.
14. Fit gearbox assembly. ***See MANUAL GEARBOX - 'R65', Repairs.***

CLUTCH ASSEMBLY AND RELEASE BEARING - 'K16 1.8 & K16 WITH VVC'

Service repair no - 33.10.07

Remove

1. Remove gearbox assembly. ***See MANUAL GEARBOX - 'PG1', Repairs.***

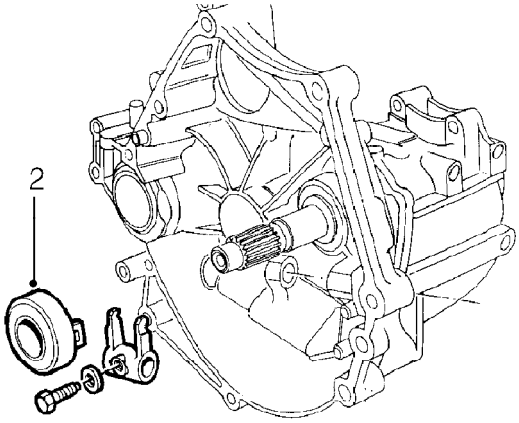

33M0198

2. Remove release bearing from guide sleeve and release fork.
3. Examine release bearing for signs of wear or damage, renew if necessary.

CAUTION: Bearing is packed with grease, DO NOT wash in solvent.

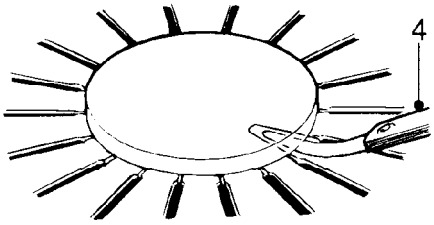

33M0143

4. Place a circular piece of flat plate across diaphragm fingers and insert feeler gauges between plate and fingers.

   Diaphragm finger clearance limit = 1.0 mm

5. Measure diaphragm finger height above bolted surface of pressure plate.

   Diaphragm finger height:
   New clutch plate = 29.1 - 32.0 mm
   Service limit = 36.5 mm

   Renew pressure plate if clearances are outside service limit.

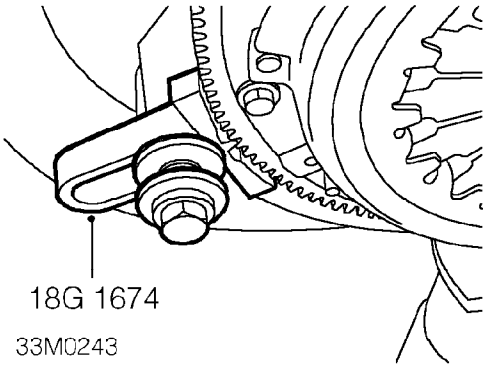

33M0243

6. Fit flywheel locking tool **18G 1674** and secure with bolt.

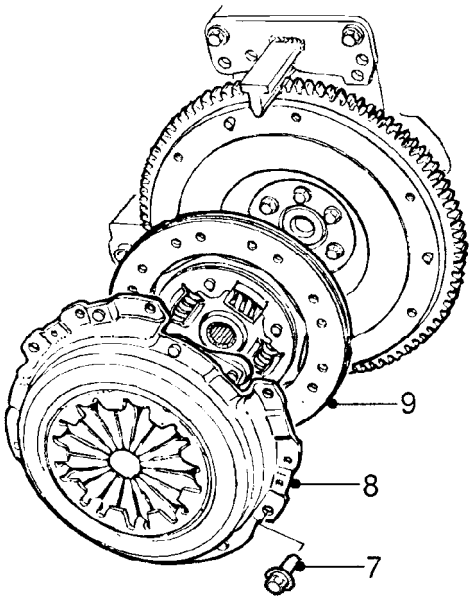

33M0245

7. Progressively loosen and then remove 6 bolts securing pressure plate to flywheel.
8. Remove clutch pressure plate and collect drive plate.
9. Inspect clutch drive plate for signs of wear or oil contamination. Check for broken or loose springs and signs of cracking at spring windows. Renew drive plate if necessary.
10. Measure depth of rivets on drive plate, renew drive plate if less than service limit.

    Drive plate rivet depth:
    New clutch plate = 1.0 mm minimum
    Service limit = 0.2 mm

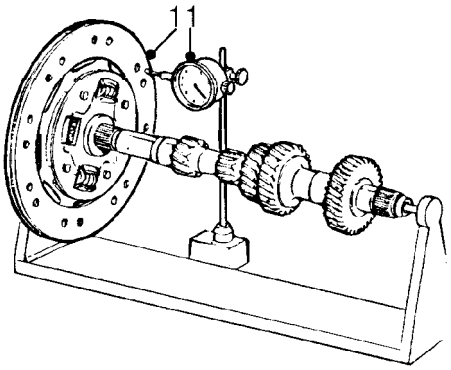

33M0146

11. Measure drive plate run-out by fitting drive plate to a gearbox mainshaft and use a dial gauge as drive plate is rotated. Renew drive plate if outside service limit.

    Drive plate run-out:
    New clutch plate = 0.8 mm
    Service limit = 1.0 mm

12. Check pressure plate for signs of wear or damage. Check for signs of overheating on drive straps (deep yellow to blue colour), renew pressure plate if necessary.

NOTE: Renew a pressure plate which has been accidentally dropped.

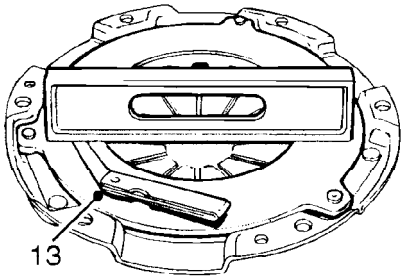

33M0147

13. Using a straight edge and feeler gauges check the surface of the pressure plate for flatness at 4 separate points. Renew pressure plate if warping exceeds service limit.

    Pressure plate warping:
    Service limit = 0.18 mm maximum

Refit

1. Clean pressure plate and flywheel, dowels and dowel holes.
2. Inspect flywheel for signs of scoring or other damage. Renew if worn or damaged.
3. Smear clutch drive plate splines with Molybdenum disulphide grease.
4. Position drive plate to flywheel with 'FLYWHEEL SIDE' marking towards flywheel.

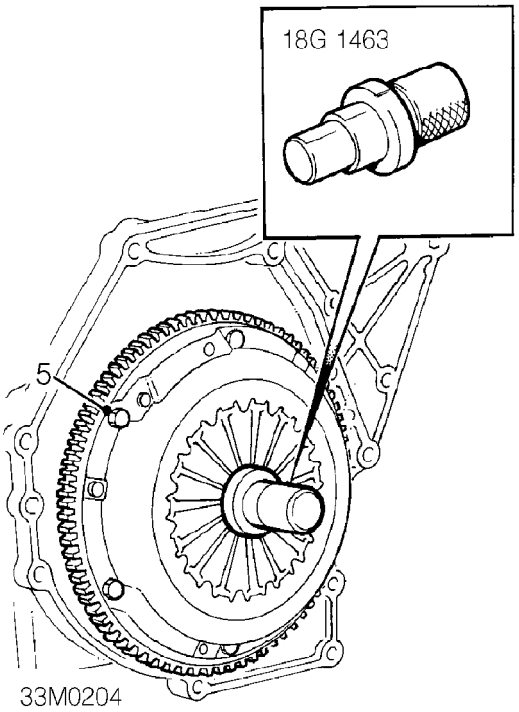

5. Fit pressure plate to flywheel and fit alignment tool **18G 1483.**
6. Fit 6 bolts securing pressure plate to flywheel finger tight.
7. Working in a diagonal sequence, progressively tighten bolts to 26 Nm.
8. Remove drive plate alignment tool **18G 1483.**
9. Remove flywheel locking tool **18G 1674.**
10. Clean clutch release fork and release bearing guide sleeve.
11. Smear release fork shaft and bore of release bearing with Molybdenum disulphide grease.
12. Fit release bearing to release fork and slide onto guide sleeve.
13. Operate release lever to ensure that release bearing is correctly located on release fork and slides smoothly on guide sleeve.
14. Fit gearbox assembly. ***See MANUAL GEARBOX - 'PG1', Repairs.***

CLUTCH ASSEMBLY AND RELEASE BEARING - 'L' SERIES

Service repair no - 33.10.07

Remove

1. Remove gearbox assembly. ***See MANUAL GEARBOX - 'PG1', Repairs.***

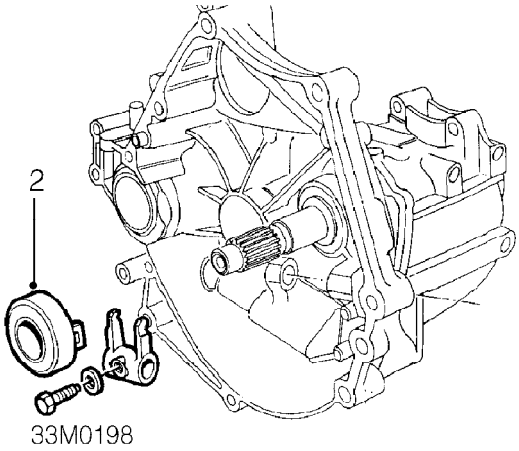

2. Remove release bearing from guide sleeve and release fork.
3. Examine release bearing for signs of wear or damage, renew if necessary.

CAUTION: Bearing is packed with grease, DO NOT wash in solvent.

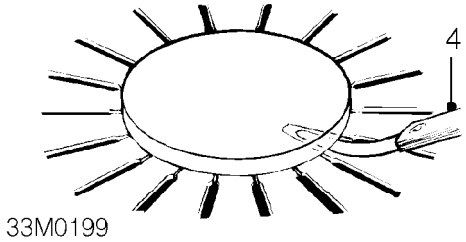

4. Place a circular piece of flat plate across diaphragm fingers and insert feeler gauges between plate and fingers.

   Diaphragm finger clearance limit = 1.0 mm

5. Measure diaphragm finger height above bolted surface of pressure plate.

   Diaphragm finger height:
   New clutch plate = 29.1 - 32.0 mm
   Service limit = 36.5 mm

   Renew pressure plate if clearances are outside service limit.

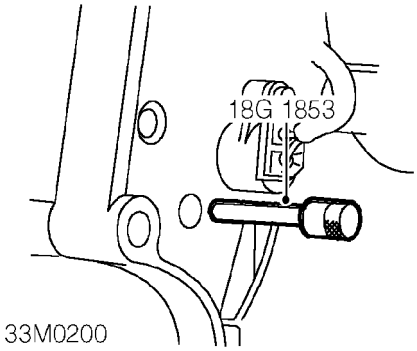

6. Using a socket and extension bar on crankshaft pulley bolt, rotate crankshaft until flywheel locking pin **18G 1523** can be inserted through hole in gearbox mounting plate and into hole in flywheel.

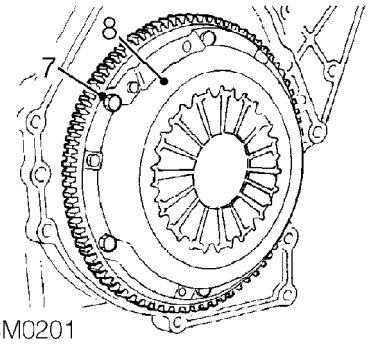

7. Progressively loosen and then remove 6 bolts securing pressure plate to flywheel.
8. Remove clutch pressure plate and collect drive plate.
9. Inspect clutch drive plate for signs of wear or oil contamination. Check for broken or loose springs and signs of cracking at spring windows. Renew drive plate if necessary.
10. Measure depth of rivets on drive plate, renew drive plate if less than service limit.

    Drive plate rivet depth:
    New clutch plate = 1.0 mm minimum
    Service limit = 0.2 mm

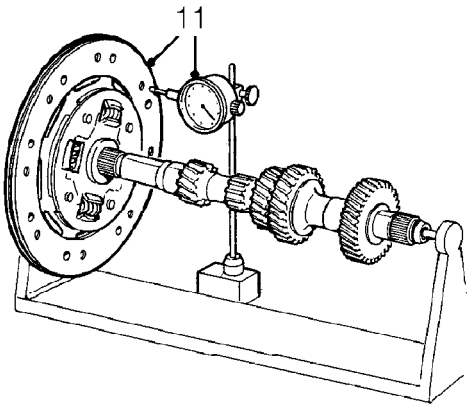

33M0242

11. Measure drive plate run-out by fitting drive plate to a gearbox mainshaft and use a dial gauge as drive plate is rotated. Renew drive plate if outside service limit.

    Drive plate run-out:
    New clutch plate = 0.8 mm
    Service limit = 1.0 mm

12. Check pressure plate for signs of wear or damage. Check for signs of overheating on drive straps (deep yellow to blue colour), renew pressure plate if necessary.

NOTE: Renew a pressure plate which has been accidentally dropped.

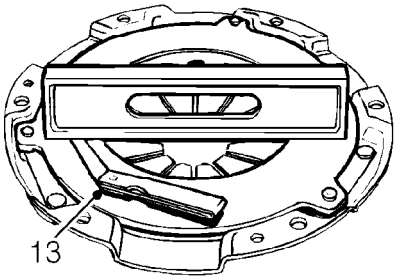

33M0203

13. Using a straight edge and feeler gauges check the surface of the pressure plate for flatness at 4 separate points. Renew pressure plate if warping exceeds service limit.

    Pressure plate warping:
    Service limit = 0.18 mm maximum

Refit

1. Clean pressure plate and flywheel, dowels and dowel holes.
2. Inspect flywheel for signs of scoring or other damage. Renew if worn or damaged.
3. Smear clutch drive plate splines with Molybdenum disulphide grease.
4. Position drive plate to flywheel with 'FLYWHEEL SIDE' marking towards flywheel.

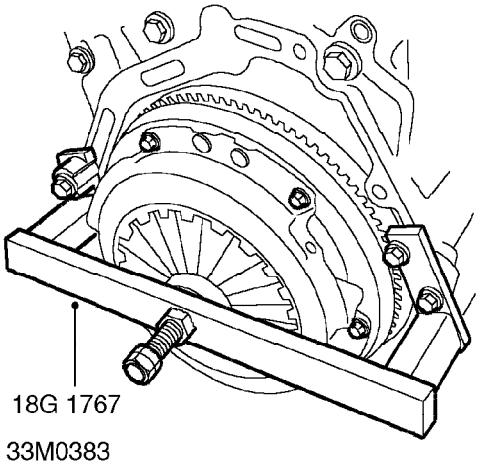

5. Fit pressure plate to flywheel ensuring it is located on dowels and fit but do not tighten bolts.
6. Fit alignment tool **18G 1767** and secure to gearbox adapter plate using 3 slave bolts.
7. Tighten centre screw of tool **18G 1767** until clutch is fully depressed.
8. Working in a diagonal sequence, progressively tighten bolts to 26 Nm.
9. Remove slave bolts and alignment tool **18G 1767.**
10. Remove flywheel locking pin tool **18G 1523.**
11. Clean clutch release fork and release bearing guide sleeve.
12. Smear release fork shaft and bore of release bearing with Molybdenum disulphide grease.
13. Fit release bearing to release fork and slide onto guide sleeve.
14. Operate release lever to ensure that release bearing is correctly located on release fork and slides smoothly on guide sleeve.
15. Fit gearbox assembly. ***See MANUAL GEARBOX - 'PG1', Repairs.***

CLUTCH CABLE - 'R65' GEARBOX

Service repair no - 33.25.05

Remove

1. Remove air cleaner. ***See ENGINE MANAGEMENT SYSTEM - MEMS, Repairs.***

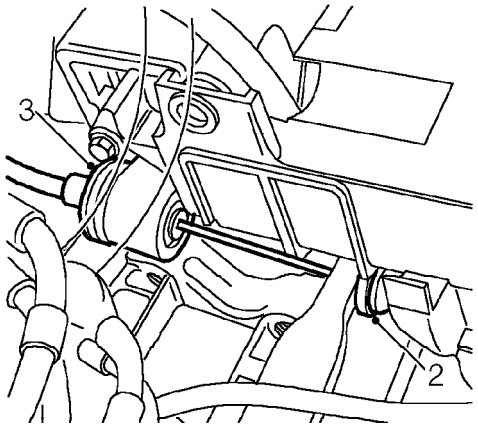

2. Disconnect clutch cable from clutch release lever.
3. Release cable from abutment bracket.

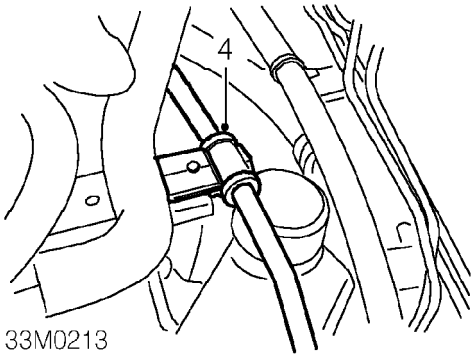

4. *RHD models only:* Release clutch cable from clip on bracket.

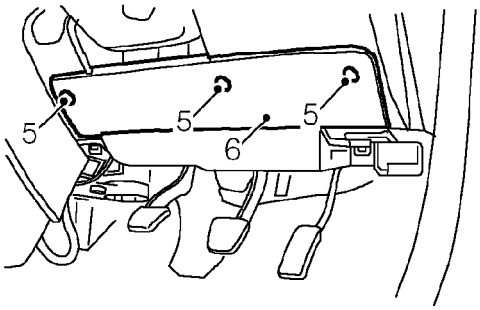

33M0214

5. Release 3 turnbuckles securing fuse box cover to lower fascia.
6. Remove fuse box cover.

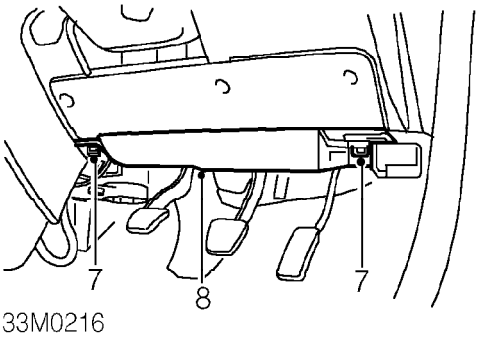

33M0216

7. Release 2 turnbuckles securing closing panel to underside of fascia.
8. Remove closing panel.

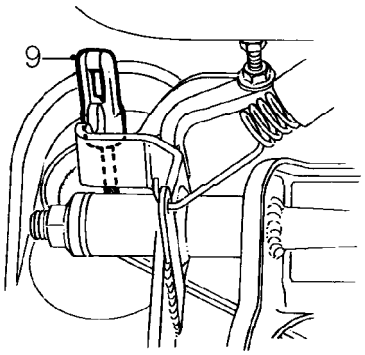

33M0184

9. Release inner cable from clutch pedal and withdraw cable through bulkhead into engine compartment.
10. Release clutch cable from between hoses and cables and remove.

Refit

1. Lubricate rubber bush on clutch cable with RED rubber grease.
2. Route cable between hoses and cables at rear of engine and through bulkhead.
3. Connect inner cable to clutch pedal. press rubber bush fully into bulkhead tube so that steel washer on cable is abutted.
4. Position closing panel to underside of fascia and secure with turnbuckles.
5. Fit fuse box cover and secure with turnbuckles.
6. *RHD models only:* Secure clutch cable to clip on bracket.
7. Feed clutch cable through abutment bracket and connect to clutch release lever.
8. To check operation of self adjust mechanism, pull clutch release lever through its full stroke and then release.
9. Fit air cleaner. ***See ENGINE MANAGEMENT SYSTEM - MEMS, Repairs.***

CLUTCH CABLE - 'PG1' GEARBOX

Service repair no - 33.25.05

Remove

1. Remove air cleaner.
   'L' series models: ***See ENGINE MANAGEMENT SYSTEM - EDC, Repairs.***
   'K' series models with 'VVC': ***See ENGINE MANAGEMENT SYSTEM - MEMS, Repairs.***
2. Raise front of vehicle.

WARNING: Support on safety stands.

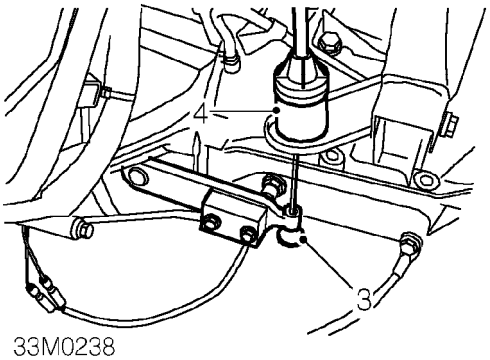

3. Disconnect clutch cable from clutch release lever.
4. Release cable from abutment bracket.

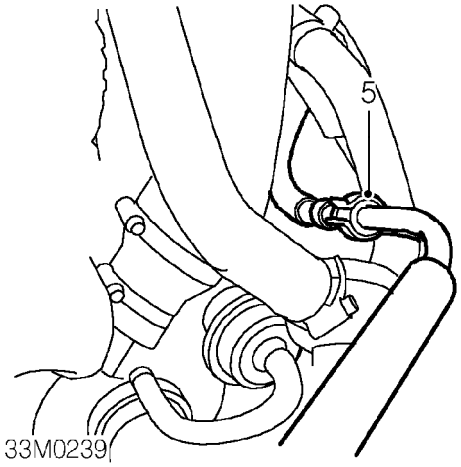

5. *RHD models only:* Release clutch cable from clip on coolant hose.

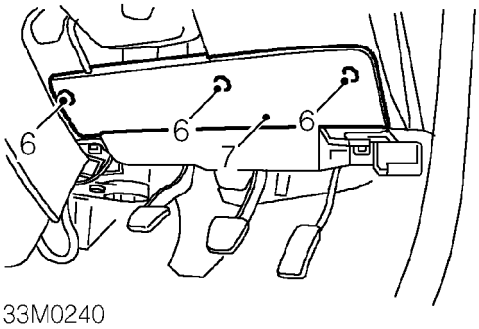

6. Release 3 turnbuckles securing fuse box cover to lower fascia.
7. Remove fuse box cover.

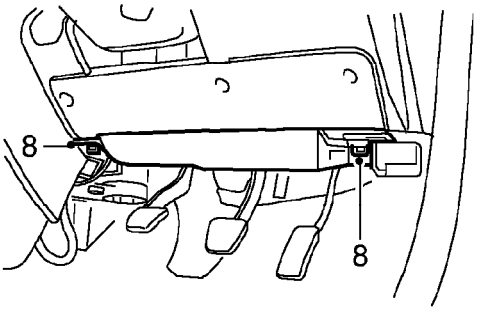

33M0244

8. Release 2 turnbuckles securing closing panel to underside of fascia.
9. Remove closing panel.

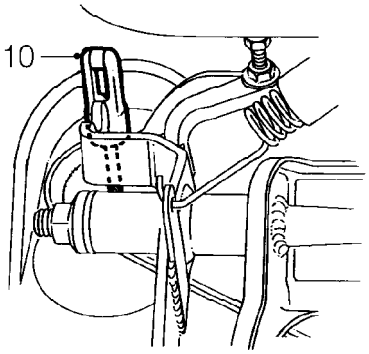

33M0241

10. Release inner cable from clutch pedal and withdraw cable through bulkhead into engine compartment.
11. Release clutch cable from between hoses and cables and remove.

Refit

1. Lubricate rubber bush on clutch cable with RED rubber grease.
2. Route cable between hoses and cables at rear of engine and through bulkhead.
3. Connect inner cable to clutch pedal. press rubber bush fully into bulkhead tube so that steel washer on cable is abutted.
4. Position closing panel to underside of fascia and secure with turnbuckles.
5. Fit fuse box cover and secure with turnbuckles.
6. *RHD models only:* Secure clutch cable to clip on coolant hose.
7. Feed clutch cable through abutment bracket and connect to clutch release lever.
8. To check operation of self adjust mechanism, pull clutch release lever through its full stroke and then release.
9. Remove stand(s) and lower vehicle.
10. Fit air cleaner.
    'L' series models: ***See ENGINE MANAGEMENT SYSTEM - EDC, Repairs.***
    'K' series with 'VVC': ***See ENGINE MANAGEMENT SYSTEM - MEMS, Repairs.***

CLUTCH RELEASE FORK AND BUSHES - 'R65' GEARBOX

Service repair no - 33.25.18

Remove

1. Remove gearbox assembly. ***See MANUAL GEARBOX - 'R65', Repairs.***

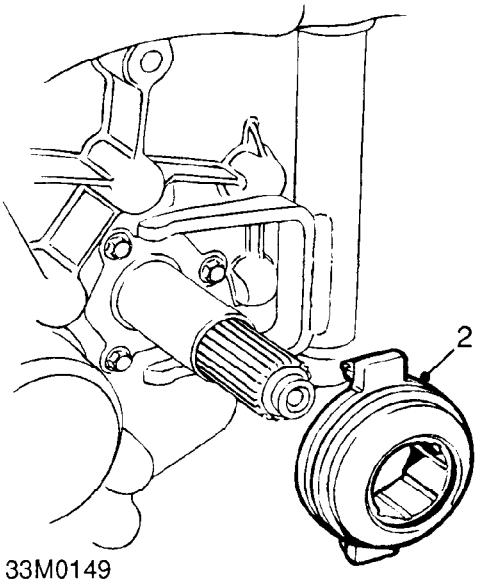

2. Remove release bearing from guide sleeve and release fork.

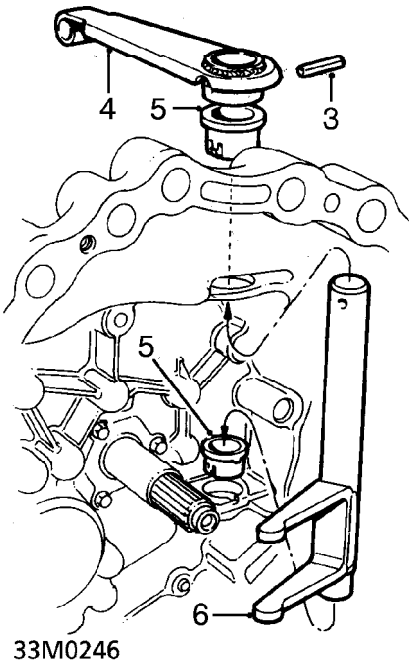

3. Remove roll pin securing release lever to release fork shaft.
4. Remove release lever from release fork shaft.
5. Extract and discard both release fork bushes from flywheel housing.
6. Withdraw release fork shaft from flywheel housing.
7. Examine release bearing for signs of wear or damage and renew if necessary.

CAUTION: Bearing is packed with grease, DO NOT wash in solvent.

Refit

1. Clean clutch release fork and release bearing guide sleeve.
2. Smear release fork shaft and bore of release bearing with Molybdenum disulphide grease.
3. Position release fork in flywheel housing.
4. Fit 2 new bushes ensuring that locating tags on bushes engage in slots on housing.
5. Fit release lever to release fork shaft, align holes in lever and shaft and secure with new roll pin.
6. Fit release bearing to release fork and slide onto guide sleeve.
7. Operate release lever to ensure that release bearing is correctly located on release fork and slides smoothly on guide sleeve.
8. Fit gearbox assembly. ***See MANUAL GEARBOX - 'R65', Repairs.***

CLUTCH RELEASE FORK - 'PG1' GEARBOX

Service repair no - 33.25.18

Remove

1. Remove gearbox assembly. ***See MANUAL GEARBOX - 'PG1', Repairs.***

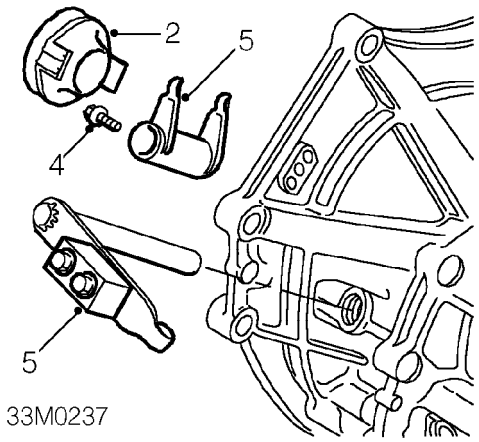

2. Remove release bearing from guide sleeve and release fork.
3. Examine release bearing for signs of wear or damage; renew if necessary.

CAUTION: Bearing is packed with grease, DO NOT wash in solvent.

4. Remove bolt and washer securing fork to release shaft.
5. Withdraw clutch release shaft from gearbox and remove fork.
6. Examine clutch release shaft for signs of scoring or damage; renew if necessary.
7. Renew clutch release shaft bushes if necessary. ***See PG1/PG2 MANUAL GEARBOX OVERHAUL MANUAL.***

Refit

1. Position relase fork and fit clutch release shaft.
2. Align holes in release fork and shaft.
3. Fit bolt and washer securing release fork to shaft and tighten to 29 Nm.
4. Fit release bearing to release fork and slide onto guide sleeve.
5. Operate release lever to ensure that release bearing is correctly located on release fork and slides smoothly on guide sleeve.
6. Fit gearbox assembly. ***See MANUAL GEARBOX - 'PG1', Repairs.***

CONTENTS

Page

ADJUSTMENTS

OIL DRAIN AND REFILL 1

REPAIRS

GEAR SELECTOR MOUNTING 1
MANUAL GEARBOX - ’K8’ 1
MANUAL GEARBOX - ’K16’ 6
INPUT SHAFT OIL SEAL 12
SELECTOR SHAFT OIL SEAL 13
REVERSE LAMP SWITCH 14
DIFFERENTIAL OIL SEAL 14

OIL DRAIN AND REFILL

Service repair no - 37.24.01

Drain

The oil should be drained when the gearbox is warm and the vehicle is standing on a level surface.

WARNING: Observe due care when draining gearbox as oil can be very hot.

1. Position container beneath gearbox to catch fluid loss.

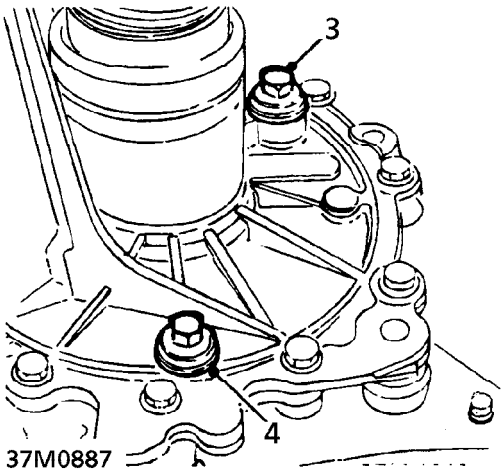

2. Clean area around gearbox filler/level plug.
3. Remove filler/level plug.
4. Remove gearbox drain plug and discard sealing washer.
5. Allow gearbox oil to drain.

Refill

1. Clean gearbox drain plug and fit new sealing washer.
2. Fit drain plug and tighten to 25 Nm.
3. Fill gearbox through filler level hole, until oil is level with filler/level hole. Allow sufficient time for oil to reach a common level within gearbox. Use the correct specification oil. ***See INFORMATION, Capacities, fluids and lubricants.***
4. Fit filler level plug and tighten to 25 Nm.
5. Remove container positioned to collect gearbox fluid.

GEAR SELECTOR MOUNTING

Service repair no - 37.16.25

Remove

1. Raise front of vehicle.

WARNING: Support on safety stands.

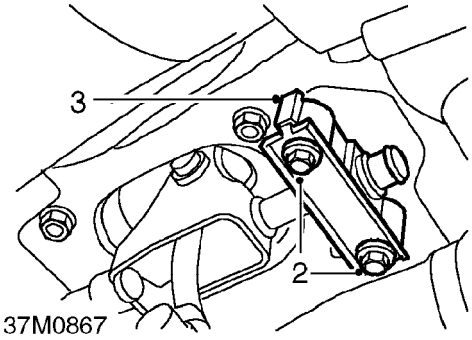

2. Remove 2 bolts securing mounting to body.
3. Remove mounting plate and rubber from gear selector.

Refit

1. Position mounting rubber and plate, fit and tighten bolts to 22 Nm.
2. Remove stand(s) and lower vehicle.

MANUAL GEARBOX - ’K8’

Service repair no - 37.20.02.99

Remove

1. Raise front of vehicle.

WARNING: Support on safety stands.

2. Remove vehicle speed sensor. ***See INSTRUMENTS, Repairs.***
3. Remove starter motor. ***See ELECTRICAL, Repairs.***
4. Remove ECM. ***See ENGINE MANAGEMENT SYSTEM - MEMS, Repairs.***
5. Remove engine management relay module. ***See ENGINE MANAGEMENT SYSTEM - MEMS, Repairs.***

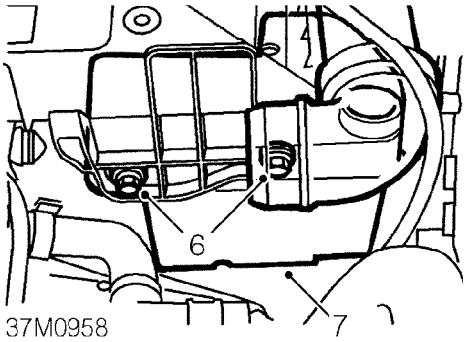

6. Remove 2 bolts securing resonator to battery tray.
7. Remove resonator.

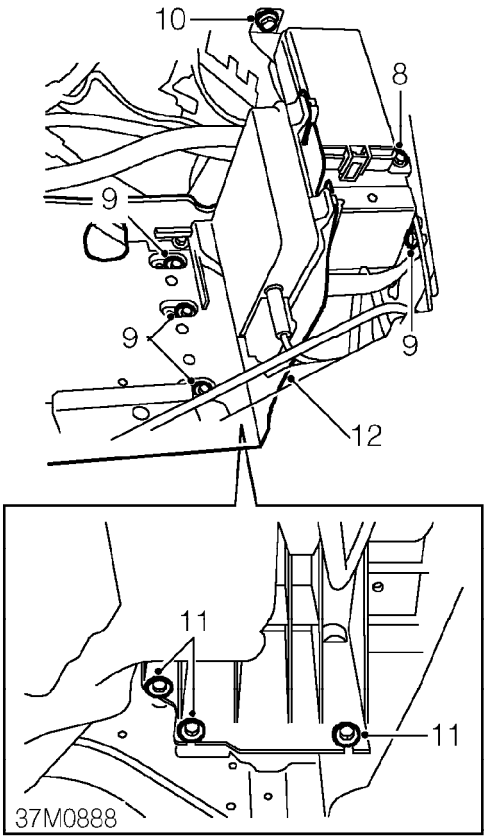

8. Remove bolt securing engine compartment fuse box to battery tray.
9. Remove 4 bolts securing battery tray to body.
10. Remove bolt securing engine compartment fuse box to body and position fuse box aside.
11. Loosen 3 bolts securing battery tray to body.
12. Remove battery tray from vehicle.

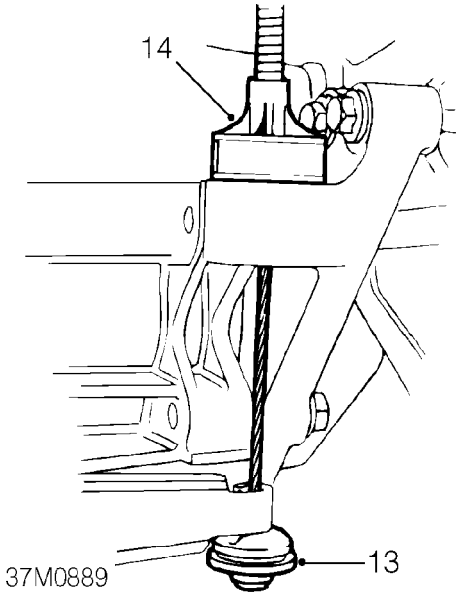

13. Disconnect clutch cable from clutch release lever.
14. Release clutch cable from abutment bracket on gearbox and position aside.

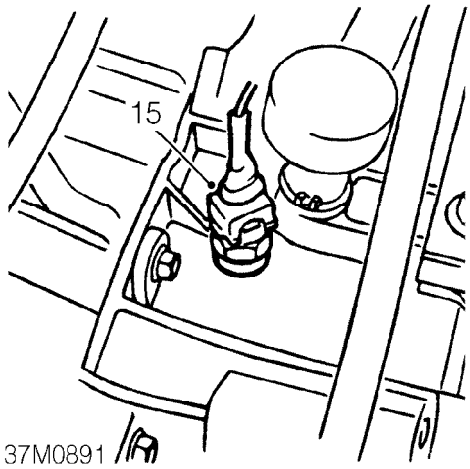

15. Disconnect multiplug from reverse lamp switch.

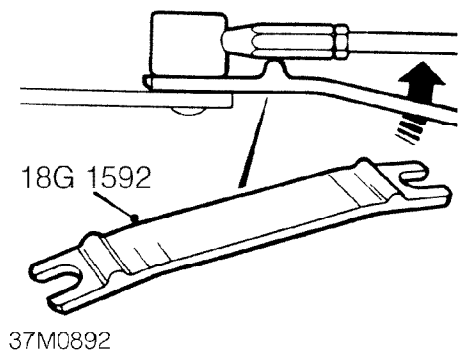

16. Using tool **18G 1592** release gear selector linkage ball joint from gear selector lever.
17. Using tool **18G 1592** release gear change linkage ball joint from gear change lever.

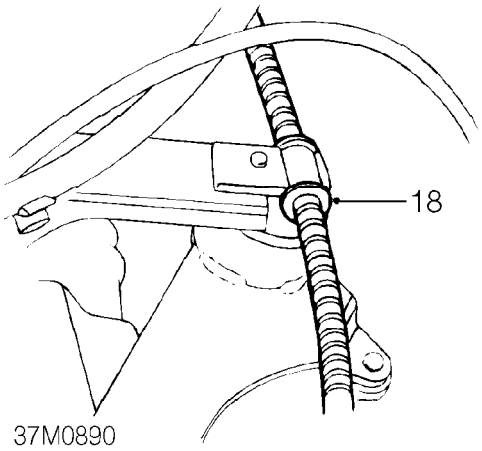

18. Release clutch cable from clip on mounting bracket.

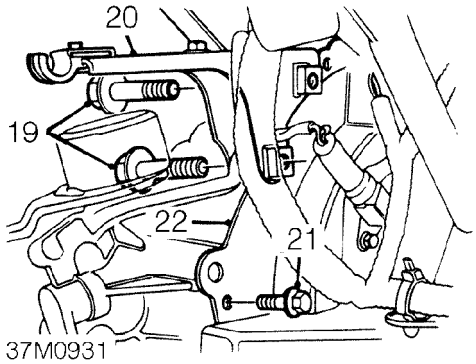

19. Remove 2 bolts securing mounting bracket to flywheel housing.
20. Remove mounting bracket from flywheel housing.
21. Remove bolt securing flywheel rear cover plate to flywheel housing.
22. Remove flywheel rear cover plate.
23. Drain gearbox oil. ***See Adjustments.***
24. Release both drive shafts from gearbox, as detailed in Differential oil seal. ***See this section.***
25. Remove LH front tie rod. ***See FRONT SUSPENSION, Repairs.***

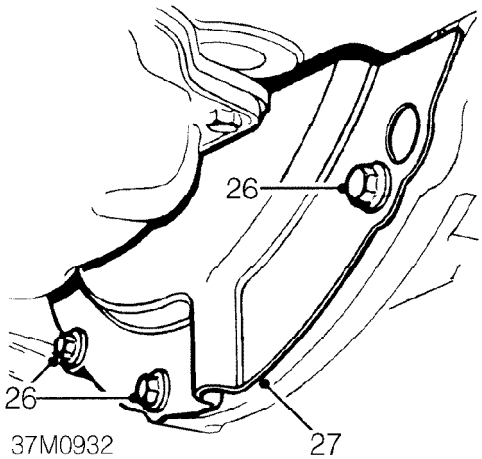

26. Remove 3 bolts securing flywheel lower cover plate to flywheel housing.
27. Remove flywheel lower cover plate.

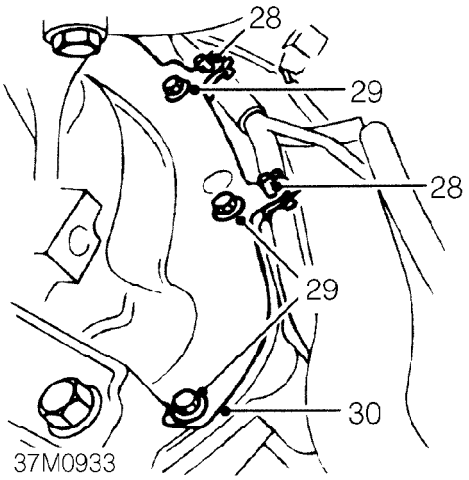

28. Release 2 clips securing starter motor cable to flywheel front cover plate.
29. Remove 3 bolts securing flywheel front cover plate to flywheel housing.
30. Remove flywheel front cover plate.

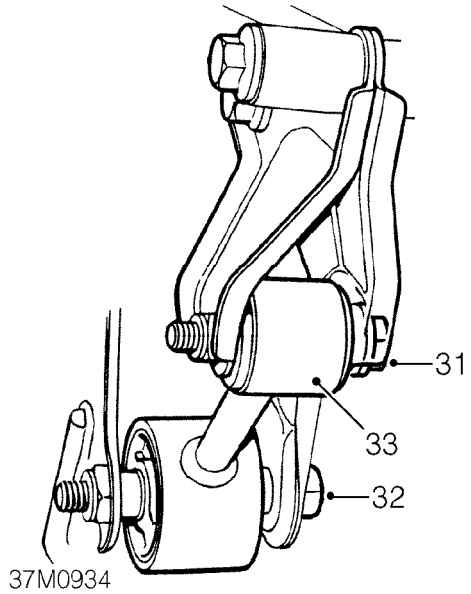

31. Loosen bolt securing engine steady bar to body.
32. Remove through bolt securing engine steady bar to mounting bracket on gearbox.
33. Release engine steady bar from gearbox mounting bracket.

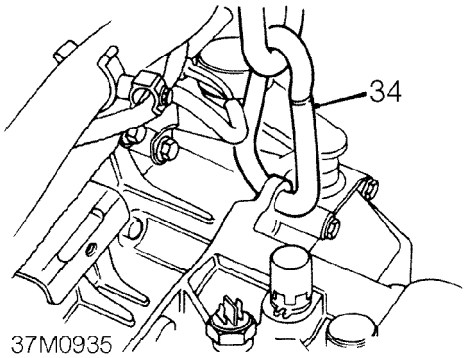

34. Fit lifting eye to gearbox and connect suitable lifting equipment to lifting eye.
35. Take weight of gearbox with lifting equipment.

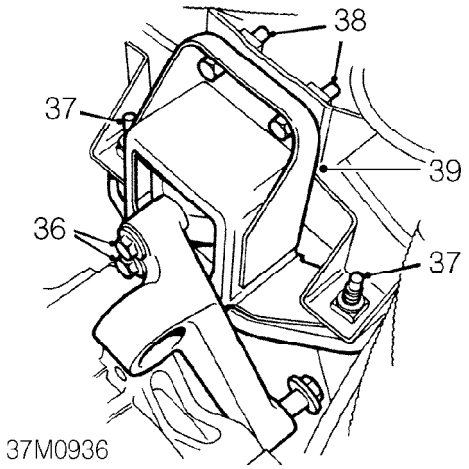

36. Remove 2 bolts securing engine LH mounting to gearbox mounting bracket.
37. Remove 2 bolts securing engine LH mounting to body.
38. Remove 2 bolts securing engine LH mounting to mounting bracket.
39. Remove engine LH mounting.
40. Fit wooden block to jack and position jack to support engine.

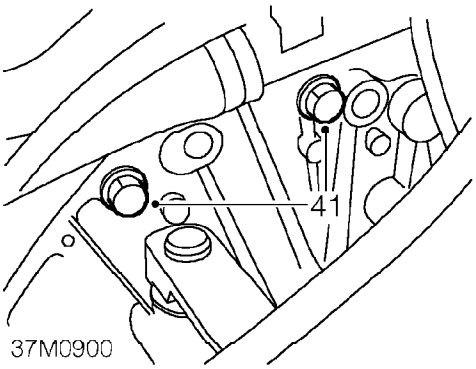

41. Remove 2 upper bolts securing gearbox to engine.

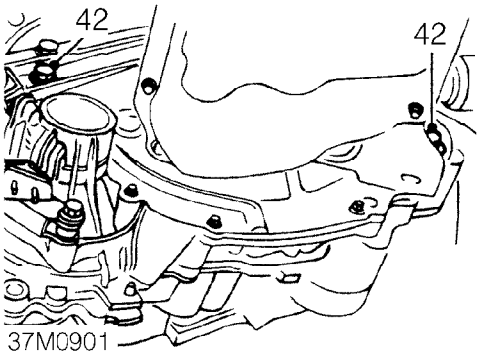

42. Remove 2 lower bolts securing gearbox to engine.
43. Using assistance, release gearbox from engine.
44. Manoeuvre gearbox from engine and lower from vehicle.
45. Disconnect lifting equipment from gearbox and remove gearbox from beneath vehicle.

Refit

1. Clean mating faces of engine and flywheel housing.
2. Lightly grease gearbox splines.
3. Position gearbox beneath vehicle and connect lifting equipment.
4. Using assistance, raise gearbox and manoeuvre into position, locate on 2 engine dowels.
5. Fit 2 lower bolts securing gearbox to engine.
6. Clean and degrease threads of 2 upper bolts securing gearbox to engine.
7. Apply Loctite 243 to threads of 2 upper bolts.
8. Fit 2 upper bolts securing gearbox to engine and tighten to 85 Nm.
9. Tighten 2 lower bolts securing gearbox to engine to 85 Nm.
10. Position engine LH mounting.
11. Raise engine, align gearbox mounting bracket to engine mounting, fit bolts and tighten to 60 Nm.
12. Fit bolts securing engine LH mounting to body and tighten to 55 Nm.
13. Fit bolts securing engine LH mounting to mounting bracket and tighten to 55 Nm.
14. Remove jack and disconnect lifting equipment.
15. Connect engine steady bar to bracket on gearbox, fit through bolt and tighten to 45 Nm.
16. Tighten through bolt, engine steady bar body, to 85 Nm.
17. Fit flywheel front cover plate and tighten bolts to 9 Nm.
18. Secure starter motor cable clip to flywheel front cover plate.
19. Fit flywheel lower cover plate and tighten bolts to 9 Nm.
20. Fit flywheel rear cover plate and tighten bolt to 9 Nm.
21. Fit mounting bracket to flywheel housing and secure with bolts.
22. Secure clutch cable to clip on mounting bracket.
23. Fit LH front tie rod. ***See FRONT SUSPENSION, Repairs.***
24. Connect both drive shafts to gearbox, as detailed in Differential oil seal. ***See this section.***

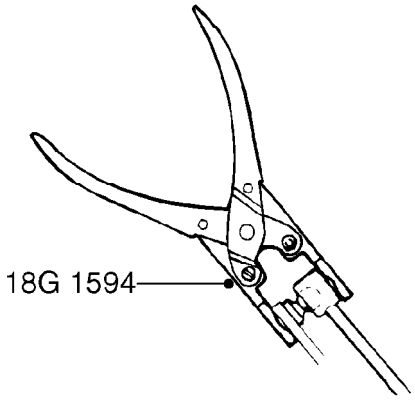

37M0747

25. Using tool **18G 1594** connect gear change linkage ball joint to gear change lever.
26. Using tool **18G 1594** connect gear selector linkage ball joint to gear selector lever.
27. Connect multiplug to reverse lamp switch.
28. Feed clutch cable through abutment bracket and connect to clutch release lever.
29. Position battery tray in vehicle.
30. Tighten 3 bolts, battery tray to body, to 10 Nm.
31. Position engine compartment fuse box to body, fit bolt and tighten to 10 Nm.
32. Fit 4 bolts securing battery tray to body and tighten to 10 Nm.
33. Fit and tighten bolt securing engine compartment fuse box to battery tray.
34. Fit resonator to air intake pipe.
35. Fit bolts securing resonator to battery tray and tighten to 9 Nm.
36. Fit engine management relay module. ***See ENGINE MANAGEMENT SYSTEM - MEMS, Repairs.***
37. Fit ECM. ***See ENGINE MANAGEMENT SYSTEM - MEMS, Repairs.***
38. Fit starter motor. ***See ELECTRICAL, Repairs.***
39. Fit vehicle speed sensor. ***See INSTRUMENTS, Repairs.***
40. Remove stand(s) and lower vehicle.
41. Refill gearbox with oil. ***See Adjustments.***

MANUAL GEARBOX - 'K16'

Service repair no - 37.20.02.99

Remove

1. Raise front of vehicle.

WARNING: Support on safety stands.

2. Remove vehicle speed sensor. ***See INSTRUMENTS, Repairs.***
3. Remove starter motor. ***See ELECTRICAL, Repairs.***
4. Remove ECM. ***See ENGINE MANAGEMENT SYSTEM - MEMS, Repairs.***
5. Remove engine management relay module. ***See ENGINE MANAGEMENT SYSTEM - MEMS, Repairs.***

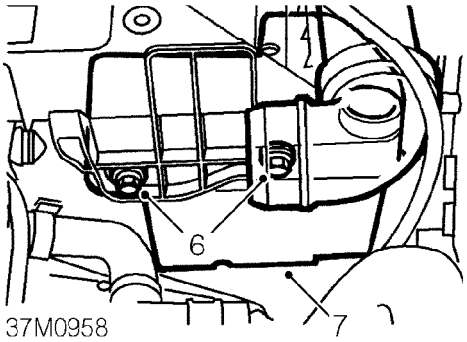

37M0958

6. Remove 2 bolts securing resonator to battery tray.
7. Remove resonator.

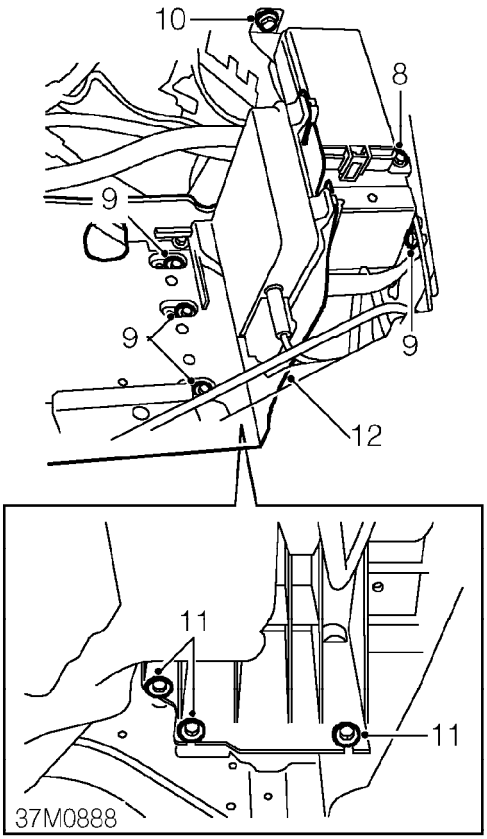

8. Remove bolt securing engine compartment fuse box to battery tray.
9. Remove 4 bolts securing battery tray to body.
10. Remove bolt securing engine compartment fuse box to body and position fuse box aside.
11. Loosen 3 bolts securing battery tray to body.
12. Remove battery tray from vehicle.

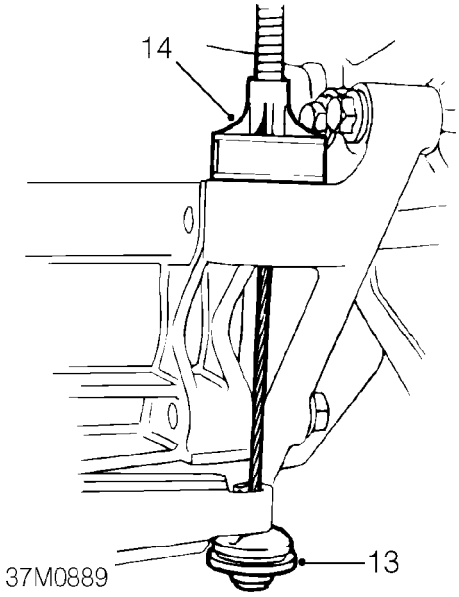

13. Disconnect clutch cable from clutch release lever.
14. Release clutch cable from abutment bracket on gearbox and position aside.

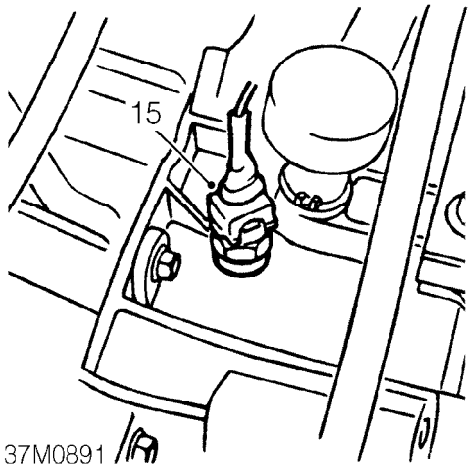

15. Disconnect multiplug from reverse lamp switch.

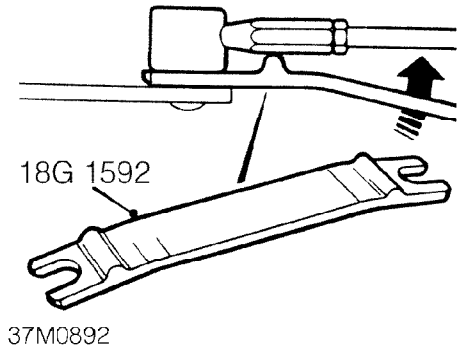

16. Using tool **18G 1592** release gear selector linkage ball joint from gear selector lever.
17. Using tool **18G 1592** release gear change linkage ball joint from gear change lever.

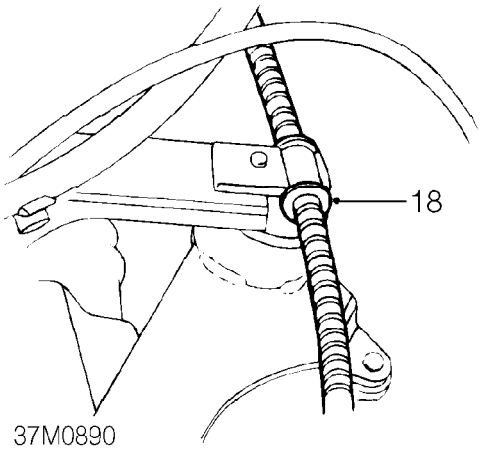

18. Release clutch cable from clip on mounting bracket.

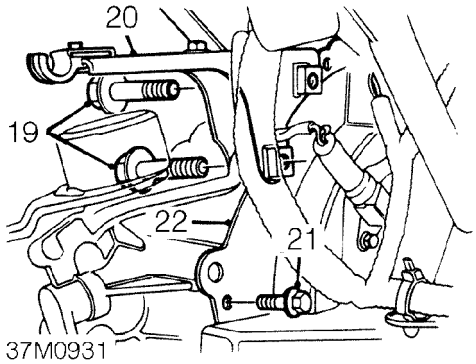

19. Remove 2 bolts securing mounting bracket to flywheel housing.
20. Remove mounting bracket from flywheel housing.
21. Remove bolt securing flywheel rear cover plate to flywheel housing.
22. Remove flywheel rear cover plate.
23. Drain gearbox oil. ***See Adjustments.***
24. Release both drive shafts from gearbox, as detailed in Differential oil seal. ***See this section.***
25. Remove LH front tie rod. ***See FRONT SUSPENSION, Repairs.***

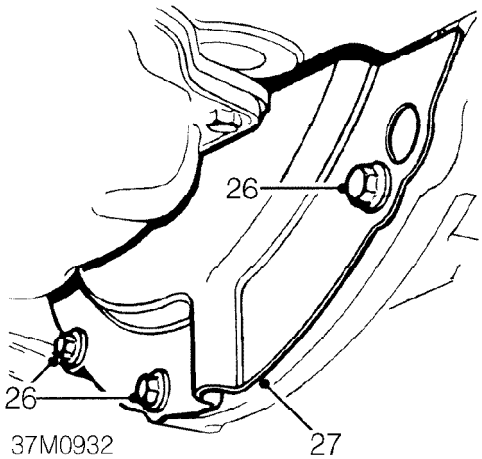

26. Remove 3 bolts securing flywheel lower cover plate to flywheel housing.
27. Remove flywheel lower cover plate.

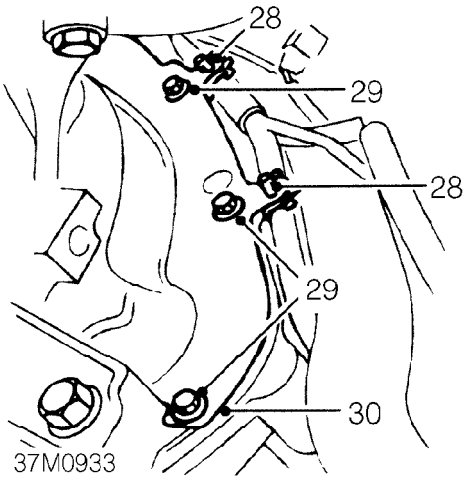

28. Release 2 clips securing starter motor cable to flywheel front cover plate.
29. Remove 3 bolts securing flywheel front cover plate to flywheel housing.
30. Remove flywheel front cover plate.

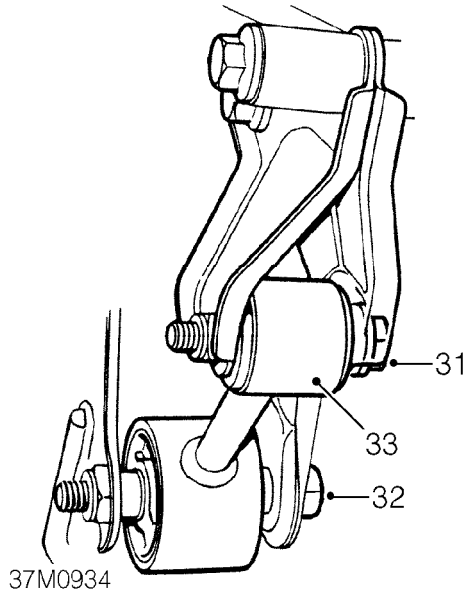

31. Loosen bolt securing engine steady bar to body.
32. Remove through bolt securing engine steady bar to mounting bracket on gearbox.
33. Release engine steady bar from gearbox mounting bracket.

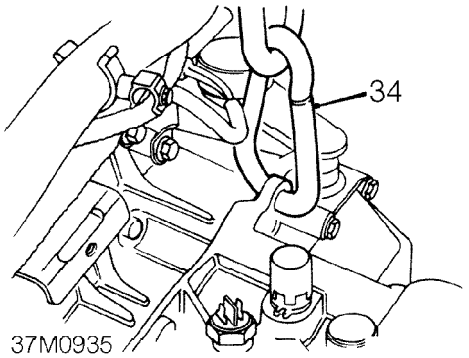

34. Fit lifting eye to gearbox and connect suitable lifting equipment to lifting eye.
35. Take weight of gearbox with lifting equipment.

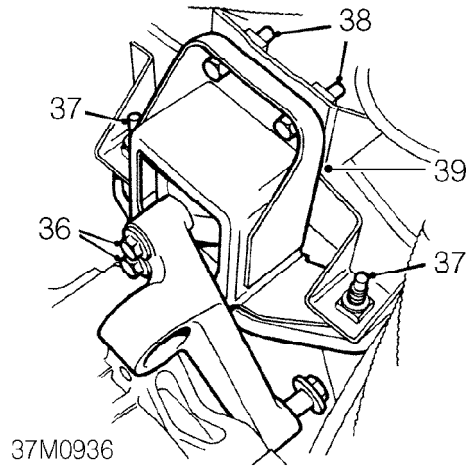

36. Remove 2 bolts securing engine LH mounting to gearbox mounting bracket.
37. Remove 2 bolts securing engine LH mounting to body.
38. Remove 2 bolts securing engine LH mounting to mounting bracket.
39. Remove engine LH mounting.
40. Fit wooden block to jack and position jack to support engine.

Models with air conditioning

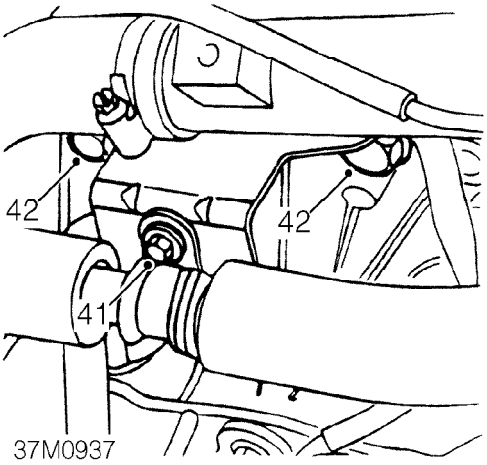

41. Remove bolt securing air conditioning pipe to bracket.
42. Remove 2 bolts securing air conditioning pipe bracket to engine and gearbox.

Models without air conditioning

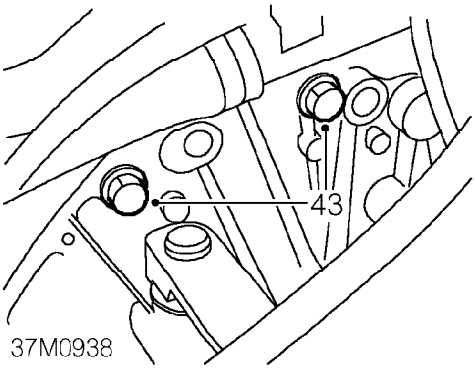

43. Remove 2 upper bolts securing gearbox to engine.

All models

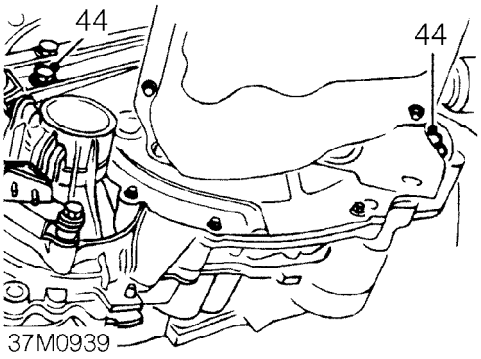

44. Remove 2 lower bolts securing gearbox to engine.
45. Using assistance, release gearbox from engine.
46. Manoeuvre gearbox from engine and lower from vehicle.
47. Disconnect lifting equipment from gearbox and remove gearbox from beneath vehicle.

Refit

1. Clean mating faces of engine and flywheel housing.
2. Lightly grease gearbox splines.
3. Position gearbox beneath vehicle and connect lifting equipment.
4. Using assistance, raise gearbox and manoeuvre into position, locate on 2 engine dowels.
5. Fit 2 lower bolts securing gearbox to engine.
6. Clean and degrease threads of 2 upper bolts securing gearbox to engine.
7. Apply Loctite 243 to threads of 2 upper bolts.
8. *Models with air conditioning:* Position air conditioning pipe bracket to flywheel housing.
9. Fit 2 upper bolts securing gearbox to engine and tighten to 85 Nm.
10. Tighten 2 lower bolts securing gearbox to engine to 85 Nm.
11. Position engine LH mounting.
12. Raise engine, align gearbox mounting bracket to engine mounting, fit bolts and tighten to 60 Nm.

13. Fit bolts securing engine LH mounting to body and tighten to 55 Nm.
14. Fit bolts securing engine LH mounting to mounting bracket and tighten to 55 Nm.
15. Remove jack and disconnect lifting equipment.
16. Connect engine steady bar to bracket on gearbox, fit through bolt and tighten to 45 Nm.
17. Tighten through bolt, engine steady bar body, to 85 Nm.
18. Fit flywheel front cover plate and tighten bolts to 9 Nm.
19. Secure starter motor cable clip to flywheel front cover plate.
20. Fit flywheel lower cover plate and tighten bolts to 9 Nm.
21. Fit flywheel rear cover plate and tighten bolt to 9 Nm.
22. Fit mounting bracket to flywheel housing and secure with bolts.
23. Secure clutch cable to clip on mounting bracket.
24. Fit LH front tie rod. ***See FRONT SUSPENSION, Repairs.***
25. Connect both drive shafts to gearbox, as detailed in Differential oil seal. ***See this section.***

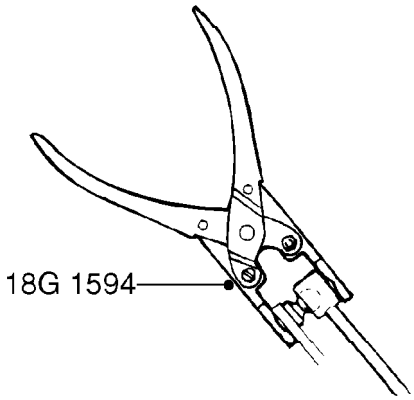

37M0747

26. Using tool **18G 1594** connect gear change linkage ball joint to gear change lever.
27. Using tool **18G 1594** connect gear selector linkage ball joint to gear selector lever.
28. *Models with air conditioning:* Align air conditioning pipe to bracket, fit bolt and tighten to 9 Nm.
29. Connect multiplug to reverse lamp switch.
30. Feed clutch cable through abutment bracket and connect to clutch release lever.
31. Position battery tray in vehicle.
32. Tighten 3 bolts, battery tray to body, to 10 Nm.
33. Position engine compartment fuse box to body, fit bolt and tighten to 10 Nm.
34. Fit 4 bolts securing battery tray to body and tighten to 10 Nm.
35. Fit and tighten bolt securing engine compartment fuse box to battery tray.
36. Fit resonator to air intake pipe.
37. Fit and tighten bolts securing resonator to battery tray.
38. Fit engine management relay module. ***See ENGINE MANAGEMENT SYSTEM - MEMS, Repairs.***
39. Fit ECM. ***See ENGINE MANAGEMENT SYSTEM - MEMS, Repairs.***
40. Fit starter motor. ***See ELECTRICAL, Repairs.***
41. Fit vehicle speed sensor. ***See INSTRUMENTS, Repairs.***
42. Remove stand(s) and lower vehicle.
43. Refill gearbox with oil. ***See Adjustments.***

INPUT SHAFT OIL SEAL

Service repair no - 37.23.06

Remove

1. Remove gearbox assembly. ***See this section.***

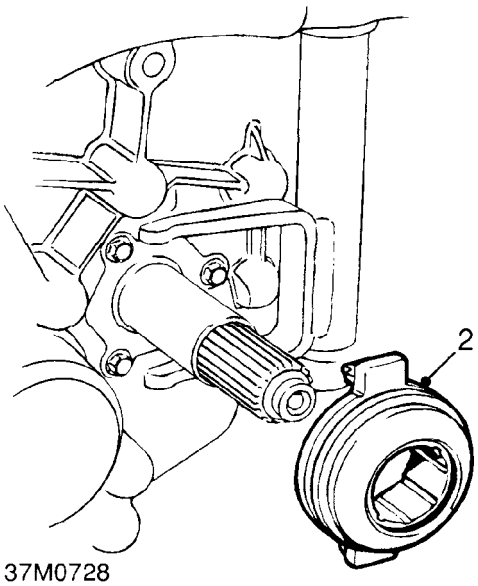

2. Remove clutch release bearing from guide sleeve and release fork.

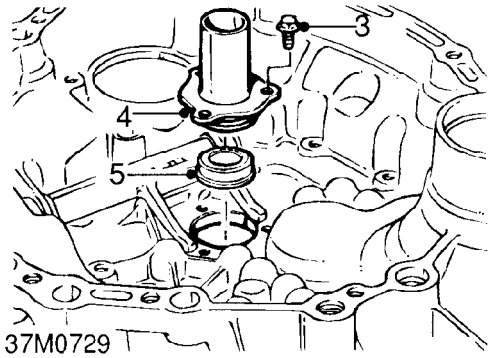

3. Remove and discard 3 bolts securing release bearing guide sleeve to gearbox.
4. Remove release bearing guide sleeve from gearbox.
5. Remove and discard input shaft oil seal from guide sleeve.

Refit

1. Clean guide sleeve bolt holes using Loctite Chisel and an M5 x 0.8 tap.
2. Degrease guide sleeve bolt holes with Loctite 706, rinse with hot water and dry thoroughly.

CAUTION: Never use petrol or paraffin as a cleaning/degreasing agent.

3. Lubricate new input shaft oil seal with clean gearbox oil. ***See INFORMATION, Capacities, fluids and lubricants.***
4. Fit input shaft oil seal to guide sleeve.
5. Fit guide sleeve onto input shaft and align bolt holes to those in gearbox.
6. Fit 3 new bolts securing guide sleeve to gearbox.
7. Fit clutch release bearing to release fork.
8. Fit gearbox assembly. ***See this section.***

SELECTOR SHAFT OIL SEAL

Service repair no - 37.23.10

Remove

1. Raise front of vehicle.

WARNING: Support on safety stands.

2. Remove LH front wheel.
3. Remove engine LH mounting. ***See ENGINE - ’K16’, Repairs.***

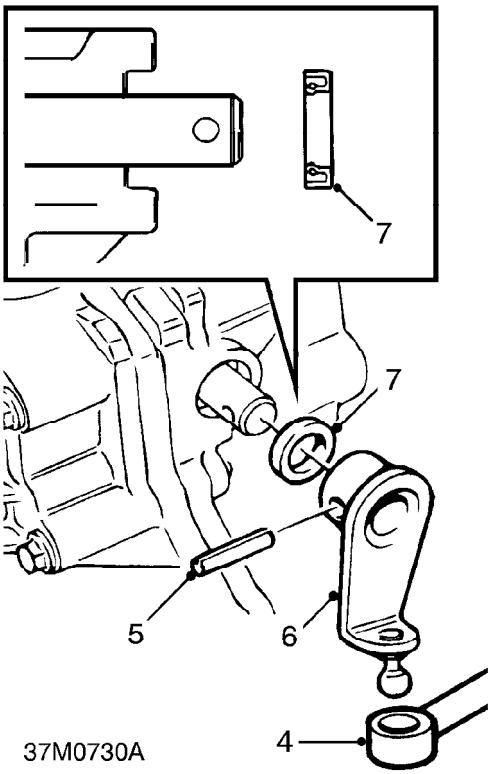

4. Using tool **18G 1592** release gear selector linkage ball joint from gear selector lever.
5. Accessed from under the LH wheel arch and requiring assistance, use a punch and extension pieces to drive out roll pin retaining selector lever to selector shaft. Discard roll pin.
6. Lower engine and remove selector lever from selector shaft.
7. Raise engine, remove and discard selector shaft oil seal.

Refit

1. Clean oil seal recess and gearbox casing around oil seal location.
2. Clean gearbox selector shaft and selector lever.
3. Lubricate new oil seal with clean gearbox oil.
4. Locate oil seal on shaft with sealing lip towards casing.
5. Press seal fully home into recess of gearbox housing using a 10 mm plug socket.
6. Lower engine, fit selector lever to selector shaft.
7. Align holes in shaft and lever and fit new roll pin.
8. Using assistance, drift new roll pin into position to retain lever on shaft.
9. Fit engine LH mounting. ***See ENGINE - ’K16’, Repairs.***
10. Fit LH front wheel.
11. Remove stand(s) and lower vehicle.

REVERSE LAMP SWITCH

Service repair no - 37.27.01

Remove

1. Remove air cleaner. ***See ENGINE MANAGEMENT SYSTEM - MEMS, Repairs.***

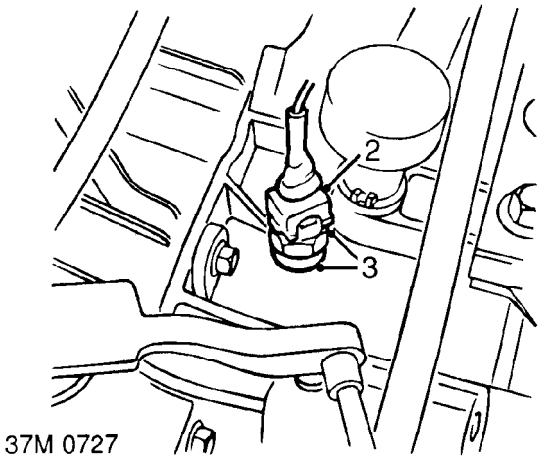

2. Disconnect multiplug from reverse lamp switch.
3. Remove reverse lamp switch and discard sealing washer.

Refit

1. Clean mating faces of reverse lamp switch and gearbox.
2. Fit new sealing washer to reverse lamp switch.
3. Fit reverse lamp switch and tighten to 25 Nm.
4. Connect multiplug to reverse lamp switch
5. Fit air cleaner. ***See ENGINE MANAGEMENT SYSTEM - MEMS, Repairs.***

DIFFERENTIAL OIL SEAL

Service repair no - 54.10.18

Remove

1. Raise front of vehicle.

WARNING: Support on safety stands.

2. Remove front road wheel.
3. Position container to collect fluid loss from gearbox.

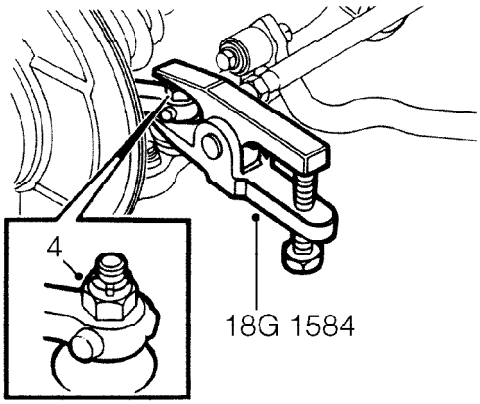

4. Remove nut securing steering rack track rod end to front hub.
5. Break taper joint using tool **18G 1584.**
6. Disconnect track rod end from front hub.

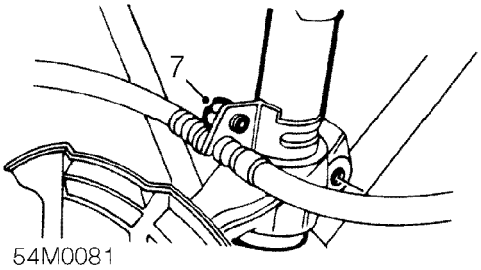

7. Remove bolt securing brake hose to front damper.

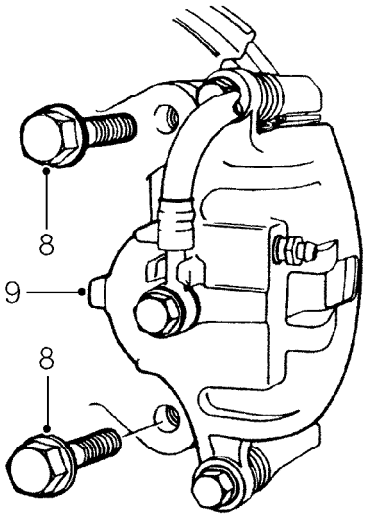

8. Remove 2 bolts and collect washers securing brake caliper to front hub.
9. Release brake caliper from front hub and tie aside.

CAUTION: Do not allow caliper to hang on brake hose.

Models with ABS

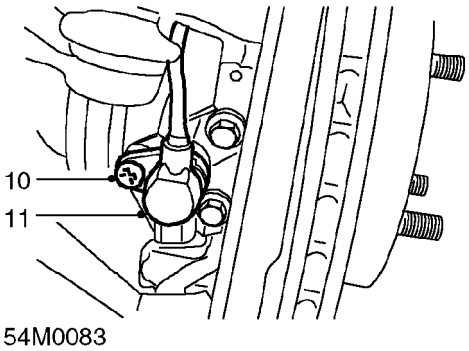

10. Remove Tx30 Torx bolt securing ABS sensor to front hub.
11. Release ABS sensor from front hub and position aside.

All models

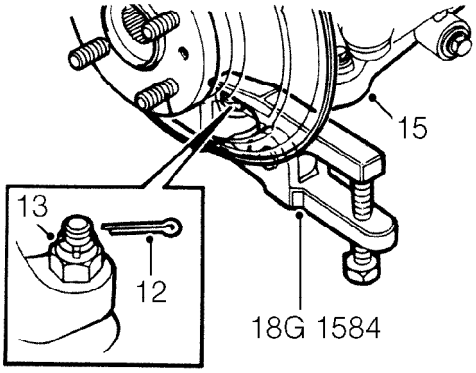

12. Remove and discard split pin from castellated nut securing front hub to suspension lower arm.
13. Loosen castellated nut securing front hub to suspension lower arm, until flush with the end of the joint. If necessary, apply penetrating oil to joint.
14. Break taper joint using tool **18G 1584.**

CAUTION: Be careful not to damage the rubber boot on lower ball joint.

15. Remove nut from lower ball joint and release suspension lower arm from front hub.

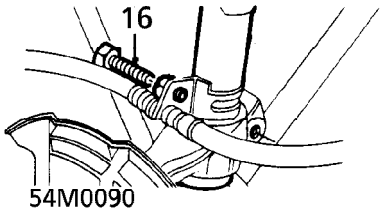

16. Remove pinch bolt securing front hub to damper.

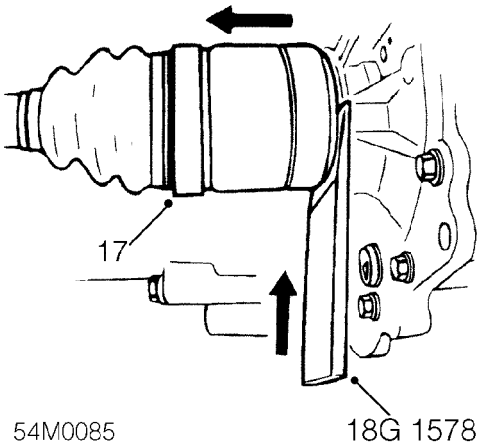

17. With an assistant carefully pulling hub assembly outwards, use tool **18G 1578,** to release drive shaft from differential.

CAUTION: Pull drive shaft horizontally to avoid damaging differential oil seal.

18. Remove drive shaft and front hub assembly.

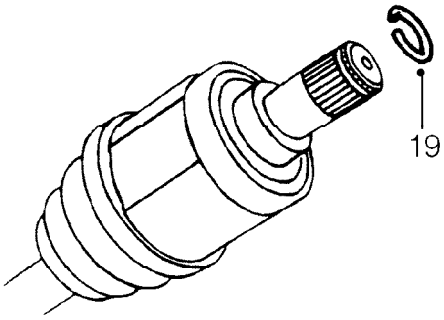

19. Remove and discard circlip from drive shaft.

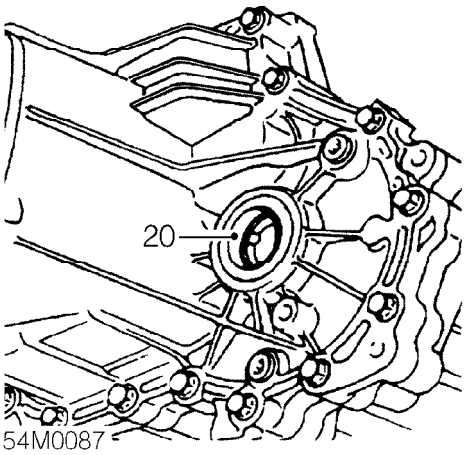

20. Carefully prise oil seal out of differential housing and discard oil seal.

Refit

1. Thoroughly clean oil seal recess and splines of drive shaft.
2. Lubricate new oil seal with gearbox oil. ***See INFORMATION, Capacities, fluids and lubricants.***

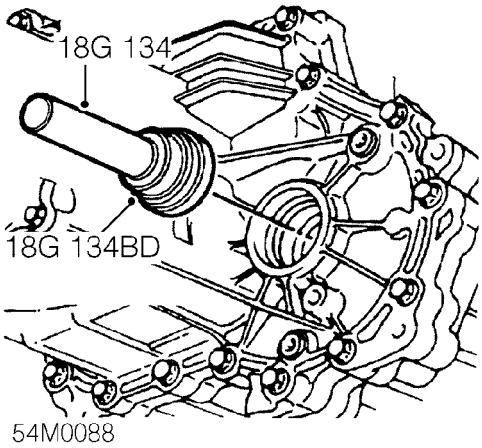

3. Locate new seal on tool **18G 134** and replacer **18G 134BD** with sealing lip facing toward housing.
4. Carefully drift oil seal into differential housing until it is fully seated in recess.
5. Remove tool **18G 134BD.**
6. Fit new circlip to drive shaft.
7. Engage drive shaft in differential and push fully home.

CAUTION: Pull drive shaft to ensure circlip is fully engaged and retains shaft.

8. Clean lower ball joint and mating face of front hub.

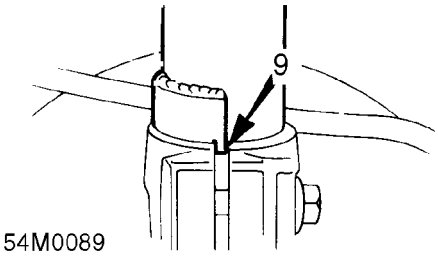

9. Connect front hub to front damper. Ensure locating lug on damper engages in slot on hub.
10. Locate front hub on suspension lower arm ball joint.
11. Fit castellated nut securing hub to suspension lower arm and tighten to 55 Nm, then align next slot in nut with split pin hole.
12. Fit new split pin through castellated nut and secure
13. Fit pinch bolt securing damper to front hub and tighten to 80 Nm.
14. Fit brake caliper to front hub.
15. Fit 2 bolts and washer securing brake caliper to front hub and tighten to 108 Nm.
16. *Models with ABS:* Fit ABS sensor to front hub, fit Torx bolt and tighten to 10 Nm.
17. Align brake hose bracket to front damper , fit bolt and tighten to 10 Nm.
18. Connect steering rack track rod end to front hub, fit nut and tighten to 45 Nm.
19. Fit road wheel(s) and tighten nuts to correct torque. ***See INFORMATION, Torque wrench settings.***
20. Remove container positioned to collect gearbox fluid.
21. Remove stand(s) and lower vehicle.
22. Top-up gearbox fluid. ***See MAINTENANCE.***

CONTENTS

Page

ADJUSTMENTS

OIL DRAIN AND REFILL 1

REPAIRS

GEAR SELECTOR MOUNTING 1
MANUAL GEARBOX - ’K16 1.8 & K16 WITH VVC’ 1
MANUAL GEARBOX - ’L’ SERIES 6
SELECTOR SHAFT OIL SEAL 10
REVERSE LAMP SWITCH 11
DIFFERENTIAL OIL SEAL 12
RH DIFFERENTIAL OIL SEAL - ’L’ SERIES 16

OIL DRAIN AND REFILL

Service repair no - 37.24.01

Drain

The oil should be drained when the gearbox is warm and the vehicle is standing on a level surface.

WARNING: Observe due care when draining gearbox as oil can be very hot.

1. *’L’ series models:* Remove undertray. ***See BODY, Exterior fittings.***
2. Position container beneath gearbox to catch fluid loss.

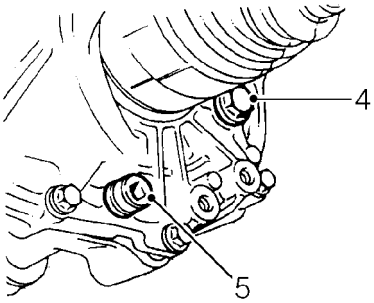

37M1004

3. Clean area around gearbox filler/level plug.
4. Remove filler/level plug.
5. Remove gearbox drain plug and discard sealing washer.
6. Allow gearbox oil to drain.

Refill

1. Clean gearbox drain plug and fit new sealing washer.
2. Fit drain plug and tighten to 45 Nm.
3. Fill gearbox through filler level hole, until oil is level with filler/level hole. Allow sufficient time for oil to reach a common level within gearbox. Use the correct specification oil. ***See INFORMATION, Capacities, fluids and lubricants.***
4. Fit filler level plug and tighten to 40 Nm.
5. Remove container positioned to collect gearbox fluid.
6. *’L’ series models:* Fit undertray. ***See BODY, Exterior fittings.***

GEAR SELECTOR MOUNTING

Service repair no - 37.16.25

Remove

1. Raise front of vehicle.

WARNING: Support on safety stands.

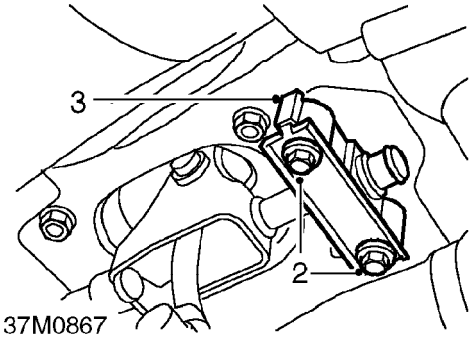

2. Remove 2 bolts securing mounting to body.
3. Remove mounting plate and rubber from gear selector.

Refit

1. Position mounting rubber and plate, fit and tighten bolts to 22 Nm.
2. Remove stand(s) and lower vehicle.

MANUAL GEARBOX - 'K16 1.8 & K16 WITH VVC'

Service repair no - 37.20.02.99

Remove

1. Drain gearbox oil. ***See Adjustments.***
2. Raise front of vehicle.

WARNING: Support on safety stands.

3. Remove starter motor. ***See ELECTRICAL, Repairs.***
4. Remove ECM. ***See ENGINE MANAGEMENT SYSTEM - EDC, Repairs.***

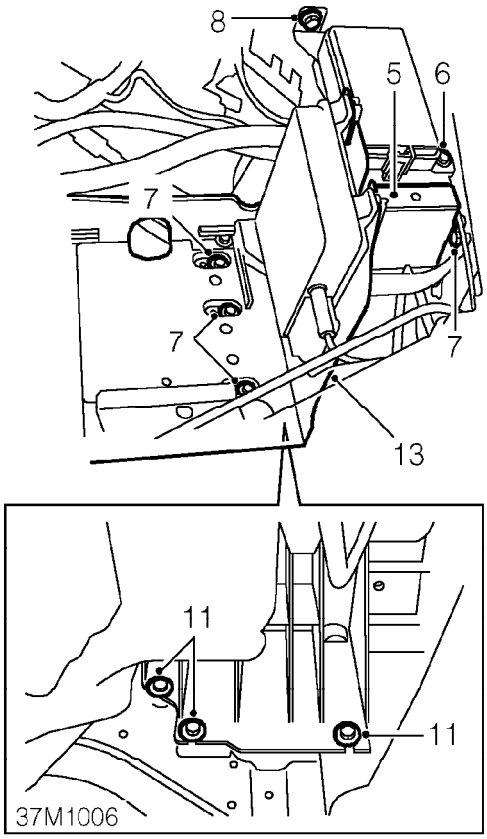

5. Release engine management relay module from bracket and position aside.
6. Remove bolt securing engine compartment fuse box to battery tray.
7. Remove 4 bolts securing battery tray to body.
8. Remove bolt securing engine compartment fuse box to body and position fuse box aside.

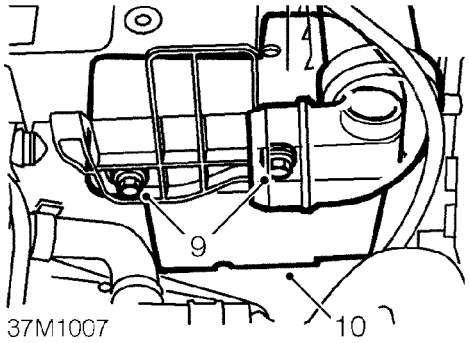

9. Remove 2 bolts securing resonator to battery tray.
10. Release resonator from air intake pipe and remove.
11. Loosen 3 bolts securing battery tray to body.
12. Release ABS fuse holder from battery tray.
13. Remove battery tray from vehicle.

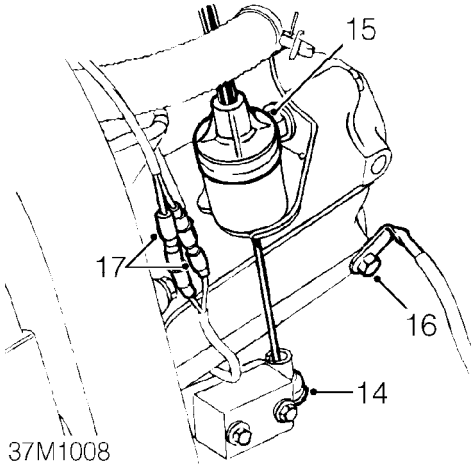

14. Disconnect clutch cable from clutch release lever.
15. Release clutch cable from abutment bracket on gearbox and position aside.
16. Remove bolt securing earth lead to gearbox.
17. Disconnect 2 reverse lamp switch leads from engine harness.
18. Release exhaust front pipe from manifold. ***See MANIFOLD & EXHAUST SYSTEMS, Repairs.***

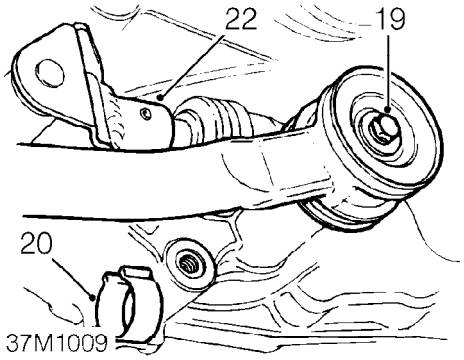

19. Remove bolt and disconnect gear change steady bar from gearbox, collect 2 washers.
20. Remove clip retaining selector rod roll pin.
21. Using a suitable punch, drive out roll pin securing selector rod to selector shaft.
22. Release selector rod from selector shaft.
23. Tie selector rod and steady bar aside.
24. Release both drive shafts from gearbox, as detailed in Differential oil seal. ***See this section.***
25. Remove LH front tie rod. ***See FRONT SUSPENSION, Repairs.***

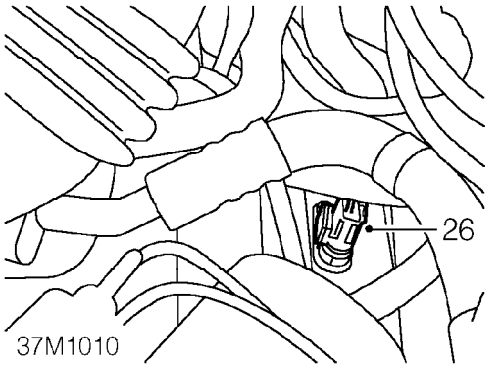

26. Disconnect multiplug from vehicle speed sensor.

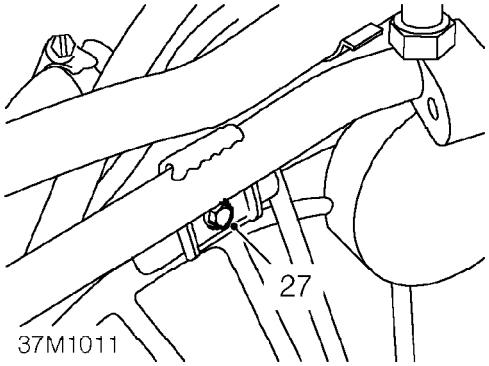

27. Remove bolt securing air conditioning pipe to bracket on gearbox.
28. Fit wooden block to jack and position jack to support engine.

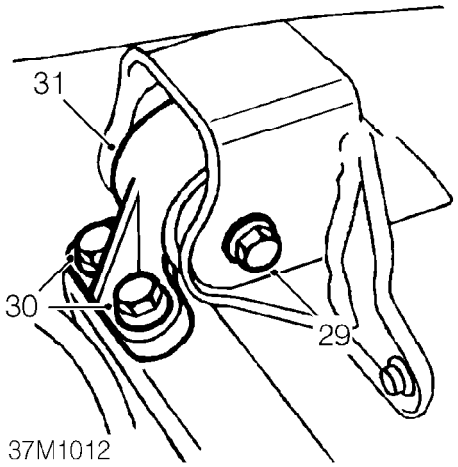

29. Remove through bolt securing engine LH mounting to bracket on body.
30. Remove 2 bolts securing engine LH mounting to bracket on gearbox.
31. Remove engine mounting.
32. Lower engine and gearbox assembly slightly.

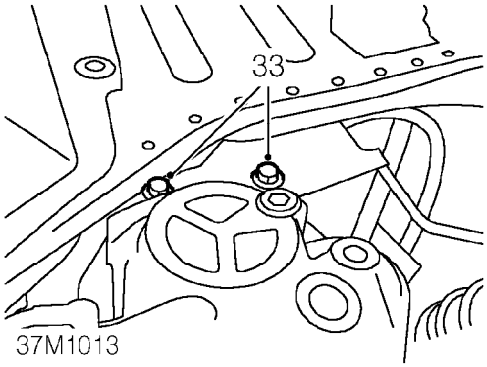

33. Remove 2 bolts securing mounting bracket to gearbox and remove gearbox mounting bracket.

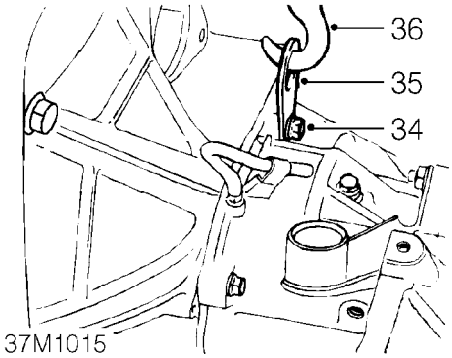

34. Remove bolt securing gearbox casing to differential housing.
35. Position a suitable lifting eye to gearbox and secure with bolt.
36. Connect suitable lifting equipment to lifting eye.
37. Take weight of gearbox with lifting equipment.

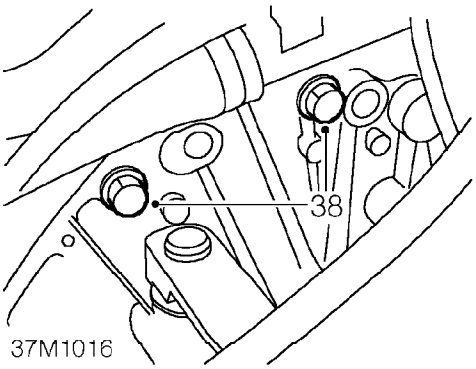

38. Remove 2 upper bolts securing gearbox to engine and remove mounting bracket.

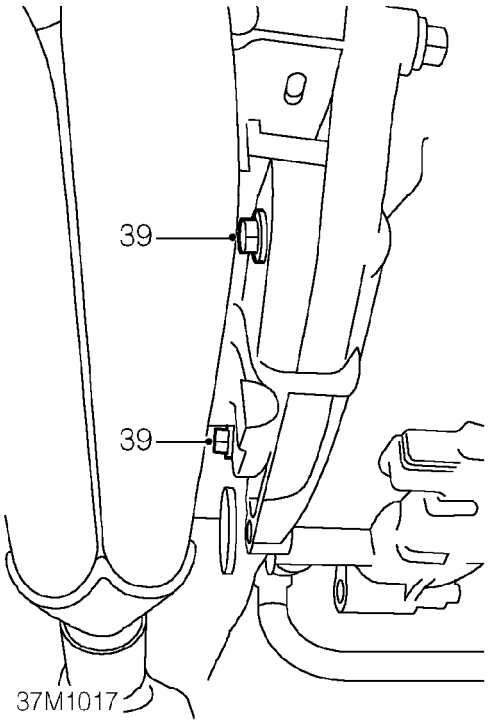

39. Remove 2 lower bolts securing gearbox to engine.

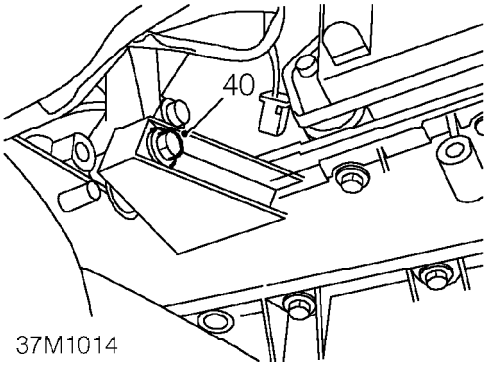

40. Remove bolt at rear of engine securing gearbox to mounting plate.

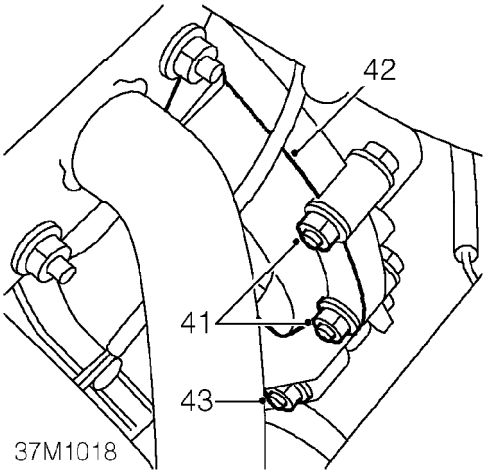

41. Remove 2 nuts and bolts securing flywheel front cover plate to flywheel housing.
42. Remove flywheel front cover plate.
43. Remove nut and bolt securing gearbox to engine.
44. Using assistance, release gearbox from locating dowels on mounting plate.
45. Manoeuvre gearbox from engine and lower from vehicle.
46. Disconnect lifting equipment from gearbox and remove gearbox from beneath vehicle.

Refit

1. Clean mating face of engine and flywheel housing.
2. Inspect differential oil seals for signs of damage; renew if necessary.
3. Lightly grease gearbox splines.
4. Position gearbox beneath vehicle and connect lifting equipment.
5. Using assistance, raise gearbox and manoeuvre into position. Locate gearbox on 2 dowels on mounting plate.
6. Fit nut and bolt securing gearbox to engine and tighten to 85 Nm.
7. Fit rear bolt securing gearbox to engine and tighten to 85 Nm.
8. Fit 2 lower bolts securing gearbox to engine and tighten to 85 Nm.
9. Position flywheel front cover plate, fit nuts and bolts and tighten to 80 Nm.
10. Clean and degrease threads of 2 upper bolts securing gearbox to engine.
11. Apply Loctite 243 to threads of upper bolts.
12. Position air conditioning pipe bracket to flywheel housing, fit bolts and tighten to 85 Nm.
13. Disconnect lifting equipment from lifting eye and remove bolt securing lifting eye to gearbox.
14. Remove lifting eye, fit and tighten bolt to 27 Nm.
15. Position mounting bracket to gearbox, fit bolts and tighten to 60 Nm.
16. Position engine LH mounting to gearbox mounting bracket, fit bolts and tighten to 100 Nm.
17. Raise engine and gearbox and align engine LH mounting to bracket on body.
18. Fit through bolt and tighten to 85 Nm.
19. Remove jack supporting engine and gearbox.
20. Align air conditioning pipe to bracket, fit bolt and tighten to 9 Nm.
21. Fit exhaust front pipe to manifold. ***See MANIFOLD & EXHAUST SYSTEMS, Repairs.***
22. Connect multiplug to vehicle speed sensor.
23. Fit LH front tie rod. ***See FRONT SUSPENSION, Repairs.***
24. Connect both drive shafts to gearbox, as detailed in Differential oil seal. ***See this section.***
25. Connect selector rod to shaft and align holes.
26. Fit new roll pin securing selector rod to shaft and fit roll pin retaining clip.
27. Fit washers to gear change steady bar and connect to gearbox.
28. Fit bolt securing gear change steady bar to gearbox and tighten to 10 Nm.
29. Connect reverse lamp switch leads to engine harness.
30. Position earth lead to gearbox, fit bolt and tighten to 9 Nm.
31. Feed clutch cable through abutment bracket and connect to clutch release lever.
32. Position battery tray in vehicle.
33. Tighten 3 bolts securing battery tray to body, to 10 Nm.
34. Position engine compartment fuse box to body, fit bolt and tighten to 10 Nm.
35. Fit 4 bolts securing battery tray to body and tighten to 10 Nm.
36. Fit and tighten bolt securing engine compartment fuse box to battery tray.
37. Position engine management relay module and engage to bracket.
38. Fit ECM. ***See ENGINE MANAGEMENT SYSTEM - EDC, Repairs.***
39. Secure ABS fuse holder to battery tray.
40. Fit resonator to air intake pipe.
41. Fit and tighten bolts securing resonator to battery tray.
42. Fit starter motor. ***See ELECTRICAL, Repairs.***
43. Remove stand(s) and lower vehicle.
44. Fill gearbox with oil. ***See Adjustments.***

MANUAL GEARBOX - ’L’ SERIES

Service repair no - 37.20.02.99

Remove

1. Drain gearbox oil. ***See Adjustments.***
2. Raise front of vehicle.

WARNING: Support on safety stands.

3. Remove starter motor. ***See ELECTRICAL, Repairs.***
4. Remove ECM. ***See ENGINE MANAGEMENT SYSTEM - EDC, Repairs.***
5. Remove engine management relay module. ***See ENGINE MANAGEMENT SYSTEM - EDC, Repairs.***

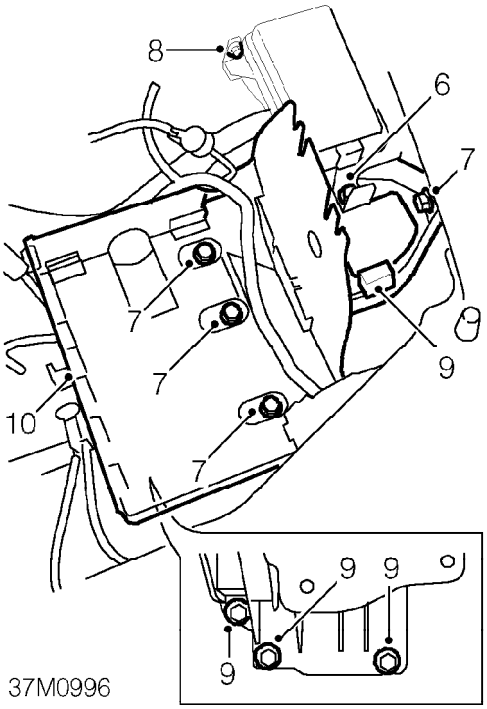

6. Remove bolt securing engine compartment fuse box to battery tray.
7. Remove 4 bolts securing battery tray to body.
8. Remove bolt securing engine compartment fuse box to body and position fuse box aside.
9. Loosen 3 bolts securing battery tray to body.
10. Remove battery tray from vehicle.

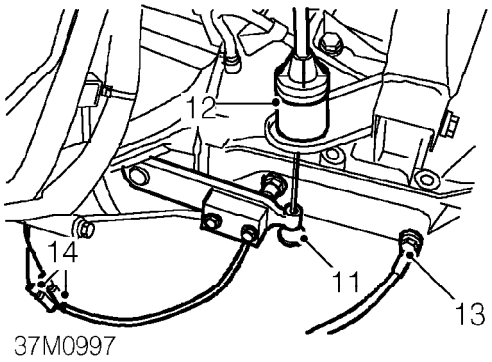

11. Disconnect clutch cable from clutch release lever.
12. Release clutch cable from abutment bracket on gearbox and position aside.
13. Remove bolt securing earth lead to gearbox.
14. Disconnect 2 reverse lamp switch leads from engine harness.

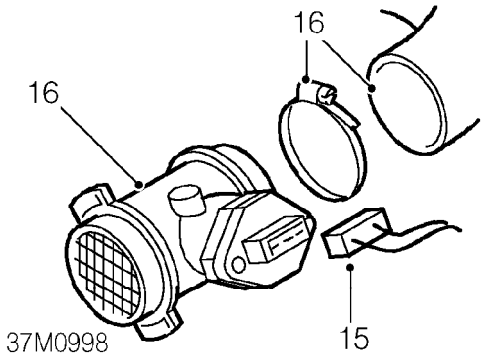

15. Disconnect multiplug from MAF sensor.
16. Loosen clip securing MAF sensor to air intake pipe and remove MAF sensor.

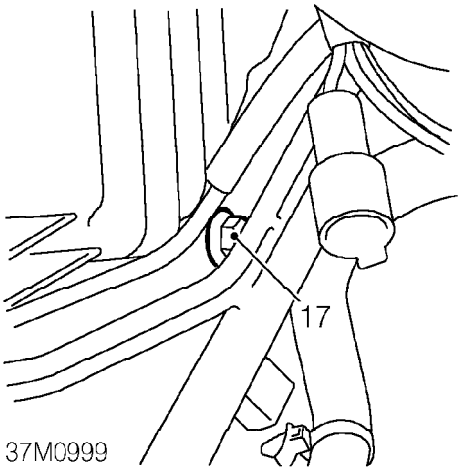

17. Remove nut securing coolant rail to gearbox mounting plate.

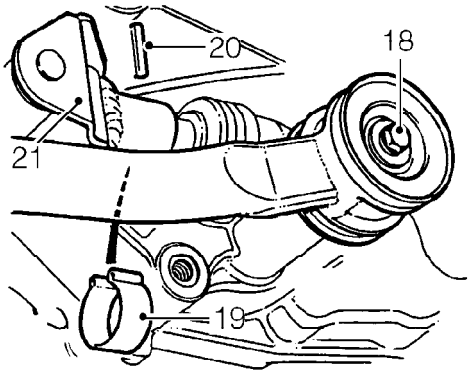

18. Remove bolt and disconnect gear change steady bar from gearbox, collect 2 washers.
19. Remove clip retaining selector rod roll pin.
20. Using a suitable punch, drive out roll pin securing selector rod to selector shaft.
21. Release selector rod from selector shaft.
22. Tie selector rod and steady bar aside.
23. Release LH driveshaft from gearbox as detailed in Differential oil seal. ***See this section.***
24. Release RH driveshaft from gearbox as detailed in RH differential oil seal. ***See this section.***
25. Remove LH front tie rod. ***See FRONT SUSPENSION, Repairs.***

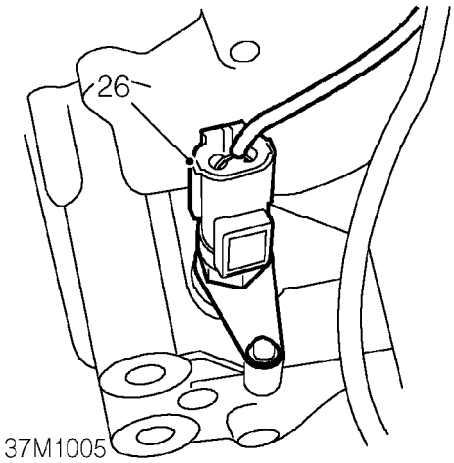

26. Disconnect multiplug from vehicle speed sensor.
27. Fit wooden block to jack and position jack to support engine.

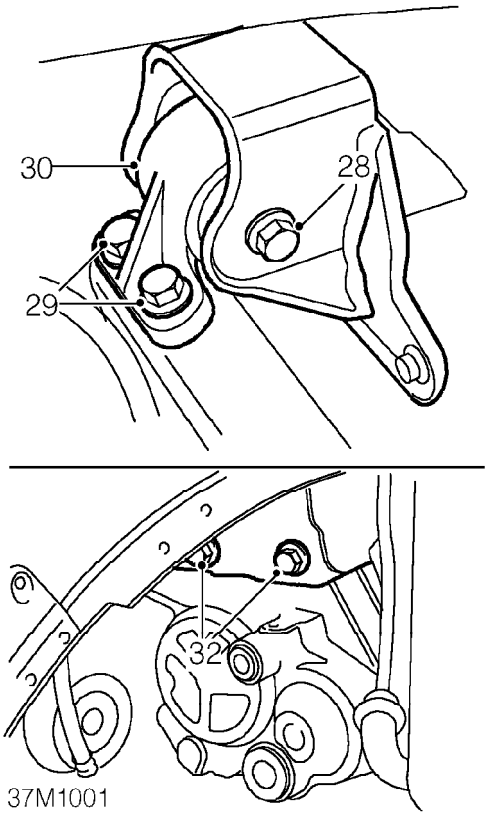

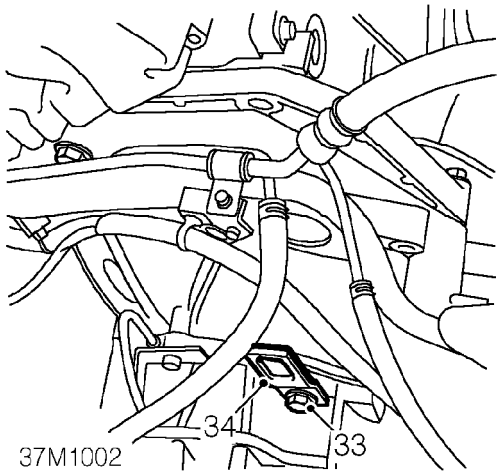

28. Remove through bolt securing engine LH mounting to bracket on body.
29. Remove 2 bolts securing engine LH mounting to bracket on gearbox.
30. Remove engine mounting.
31. Lower engine and gearbox assembly slightly.
32. Remove 2 bolts securing mounting bracket to gearbox and remove gearbox mounting bracket.

33. Remove bolt securing gearbox casing to differential housing.
34. Position a suitable lifting eye to gearbox and secure with bolt.
35. Connect suitable lifting equipment to lifting eye.
36. Take weight of gearbox with lifting equipment.

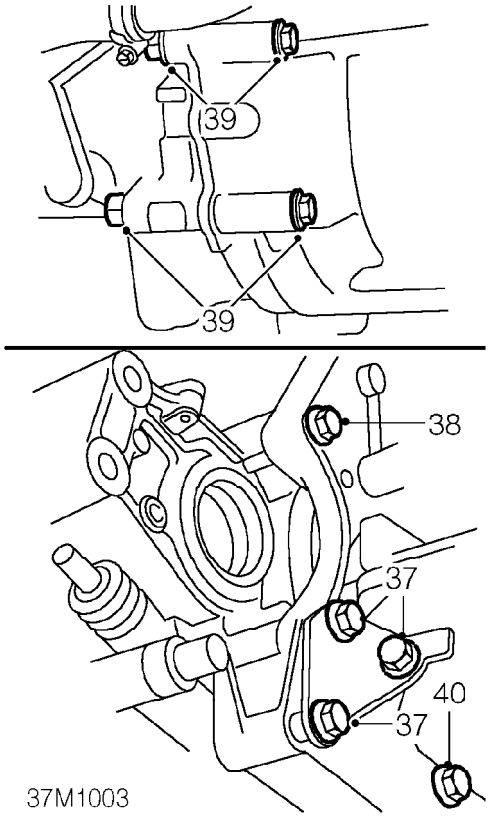

37. Remove 3 lower bolts securing gearbox to mounting plate.
38. Remove bolt at rear of engine securing gearbox to mounting plate.
39. Remove 2 nuts and bolts securing gearbox to mounting plate.
40. Remove bolt securing gearbox to mounting plate.
41. Using assistance, release gearbox from locating dowels on mounting plate.
42. Manoeuvre gearbox from engine and lower from vehicle.
43. Disconnect lifting equipment from gearbox and remove gearbox from beneath

Refit

1. Clean mating face of gearbox and mounting plate.
2. Inspect differential oil seals for signs of damage; renew if necessary.
3. Lightly grease gearbox splines.
4. Position gearbox beneath vehicle and connect lifting equipment.
5. Using assistance, raise gearbox and manoeuvre into position. Locate gearbox on 2 dowels on mounting plate.
6. Fit upper bolt securing gearbox to mounting plate and tighten to 85 Nm.
7. Fit 2 nuts and bolts securing gearbox to mounting plate and tighten to 85 Nm.
8. Fit bolt at rear of engine securing gearbox to mounting plate and tighten to 85 Nm.
9. Fit 3 lower bolts securing gearbox to mounting plate and tighten to 85 Nm.
10. Disconnect lifting equipment from lifting eye and remove bolt securing lifting eye to gearbox.
11. Remove lifting eye, fit and tighten bolt to 27 Nm.
12. Position mounting bracket to gearbox, fit bolts and tighten to 60 Nm.
13. Position engine LH mounting to gearbox mounting bracket, fit bolts and tighten to 100 Nm.
14. Raise engine and gearbox and align engine LH mounting to bracket on body.
15. Fit through bolt and tighten to 85 Nm.
16. Remove jack supporting engine and gearbox.
17. Connect multiplug to vehicle speed sensor.
18. Fit LH front tie rod. ***See FRONT SUSPENSION, Repairs.***
19. Connect LH drive shaft to gearbox as detailed in Differential oil seal. ***See this section.***
20. Connect RH drive shaft to gearbox detailed in RH differential oil seal. ***See this section.***

21. Connect selector rod to shaft and align holes.
22. Fit new roll pin securing selector rod to shaft and fit roll pin retaining clip.
23. Fit washers to gear change steady bar and connect to gearbox.
24. Fit bolt securing gear change steady bar to gearbox and tighten to 10 Nm.
25. Align coolant rail to mounting plate and secure with nut.
26. Fit MAF sensor to air intake pipe and tighten clip.
27. Connect multiplug to MAF sensor.
28. Connect reverse lamp switch leads to engine harness.
29. Position earth lead to gearbox, fit bolt and tighten to 35 Nm.
30. Feed clutch cable through abutment bracket and connect to clutch release lever.
31. Position battery tray in vehicle.
32. Tighten 3 bolts, battery tray to body, to 10 Nm.
33. Position engine compartment fuse box to body, fit bolt and tighten to 10 Nm.
34. Fit 4 bolts securing battery tray to body and tighten to 10 Nm.
35. Fit and tighten bolt securing engine compartment fuse box to battery tray.
36. Fit engine management relay module. ***See ENGINE MANAGEMENT SYSTEM - EDC, Repairs.***
37. Fit ECM. ***See ENGINE MANAGEMENT SYSTEM - EDC, Repairs.***
38. Fit starter motor. ***See ELECTRICAL, Repairs.***
39. Remove stand(s) and lower vehicle.
40. Fill gearbox with oil. ***See Adjustments.***

SELECTOR SHAFT OIL SEAL

Service repair no - 37.23.10

Remove

1. Raise front of vehicle.

WARNING: Support on safety stands.

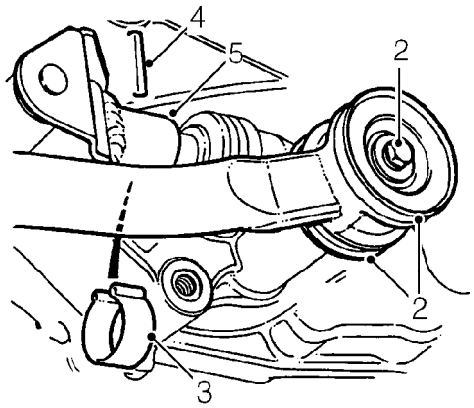

37M0879

2. Remove bolt and disconnect gear change steady bar from gearbox; collect 2 washers.
3. Remove clip retaining selector rod roll pin.
4. Using a suitable punch, drive out roll pin securing selector rod to selector shaft. Discard roll pin.
5. Release selector rod from selector shaft.
6. Position container beneath gearbox to catch fluid loss.

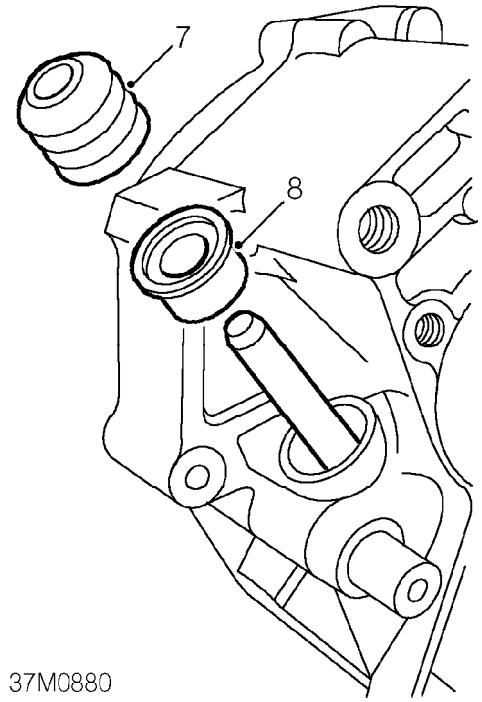

7. Remove gaiter from selector shaft.
8. Remove and discard selector shaft oil seal.

Refit

1. Clean selector shaft.
2. Using a suitable piece of tubing, fit new selector shaft oil seal.
3. Fit gaiter to selector shaft and ensure lip on gaiter is located on oil seal.
4. Remove container from beneath gearbox.
5. Connect selector rod to shaft and align holes.
6. Fit new roll pin securing selector rod to shaft and fit roll pin retaining clip.
7. Fit washers to gear change steady bar and connect to gearbox.
8. Fit bolt securing gear change steady bar to gearbox and tighten to 10 Nm.
9. Remove stand(s) and lower vehicle.
10. Top-up gearbox oil. ***See MAINTENANCE.***

REVERSE LAMP SWITCH

Service repair no - 37.27.01

Remove

1. Raise front of vehicle.

WARNING: Support on safety stands.

2. *’L’ series models:* Remove undertray. ***See BODY, Exterior fittings.***

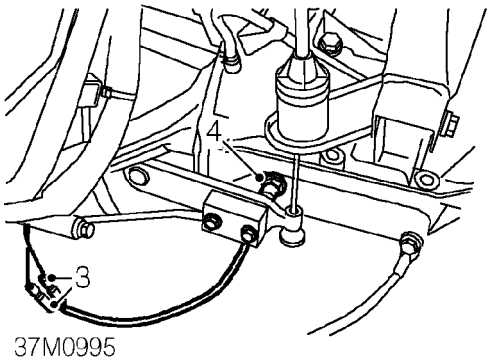

3. Disconnect 2 reverse lamp switch leads from engine harness.
4. Remove reverse lamp switch and discard sealing washer.

Refit

1. Clean reverse lamp switch and fit new sealing washer.
2. Fit reverse lamp switch and tighten to 25 Nm.
3. Connect reverse lamp switch leads to engine harness.
4. Remove stand(s) and lower vehicle.
5. *’L’ series models:* Fit undertray. ***See BODY, Exterior fittings.***

DIFFERENTIAL OIL SEAL

Service repair no - 54.10.18

Remove

1. Raise front of vehicle.

WARNING: Support on safety stands.

2. Remove front road wheel.
3. *’L’ series models:* Remove undertray. ***See BODY, Exterior fittings.***
4. Position container to collect fluid loss from gearbox.

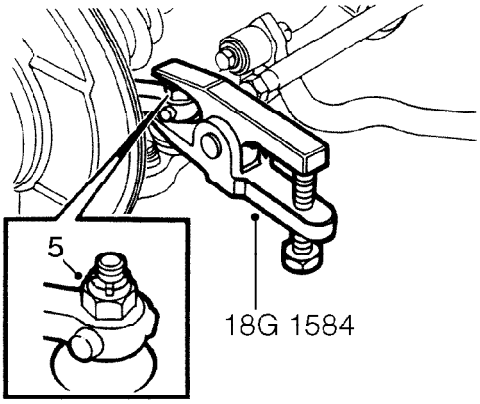

54M0097

5. Remove nut securing steering rack track rod end to front hub.
6. Break taper joint using tool **18G 1584.**
7. Disconnect track rod end from front hub.

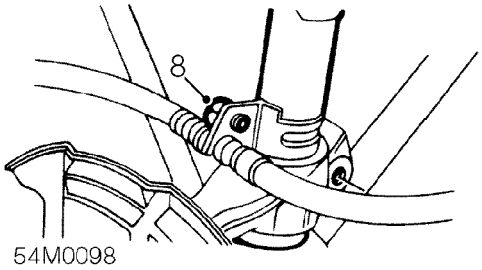

54M0098

8. Remove bolt securing brake hose to front damper.

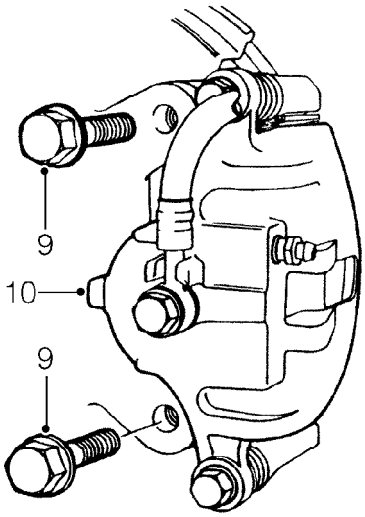

54M0099

9. Remove 2 bolts and collect washers securing brake caliper to front hub.
10. Release brake caliper from front hub and tie aside.

CAUTION: Do not allow caliper to hang on brake hose.

Models with ABS

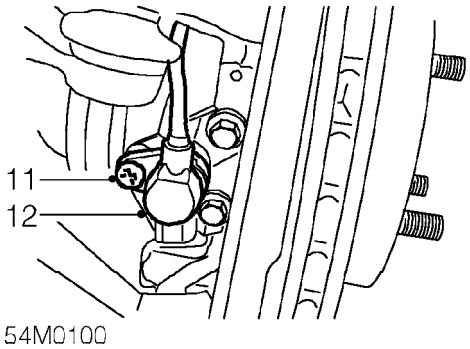

11. Remove Tx30 Torx bolt securing ABS sensor to front hub.
12. Release ABS sensor from front hub and position aside.

All models

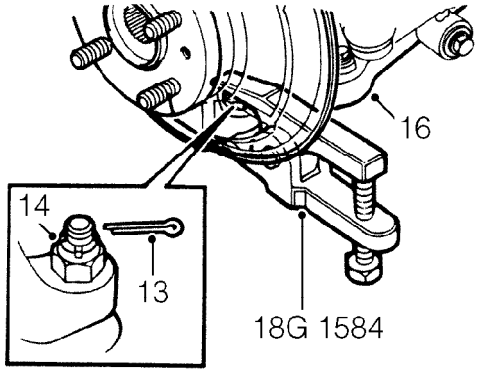

13. Remove and discard split pin from castellated nut securing front hub to suspension lower arm.
14. Loosen castellated nut securing front hub to suspension lower arm, until flush with the end of the joint. If necessary, apply penetrating oil to joint.
15. Break taper joint using tool **18G 1584** .

CAUTION: Be careful not to damage the rubber boot on lower ball joint.

16. Remove nut from lower ball joint and release suspension lower arm from front hub.

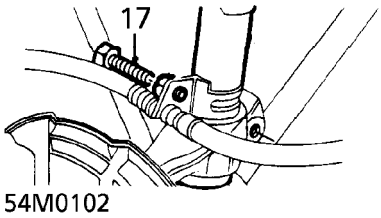

17. Remove pinch bolt securing front hub to damper.

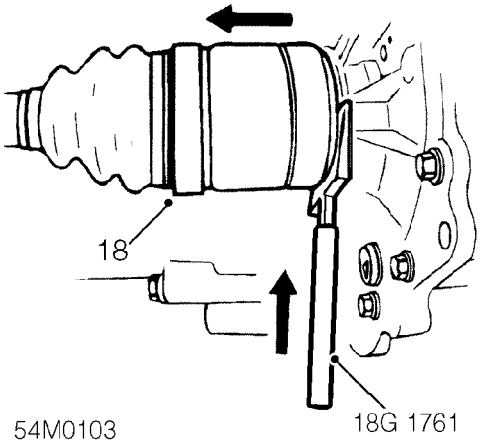

18. With an assistant carefully pulling hub assembly outwards, use tool **18G 1761,** to release drive shaft from differential.

CAUTION: Pull drive shaft horizontally to avoid damaging differential oil seal.

19. Remove drive shaft and front hub assembly.

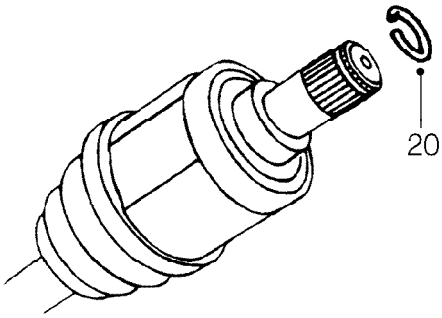

20. Remove and discard circlip from drive shaft.
21. Carefully prise out oil seal from differential housing. Retain seal removed for reference.

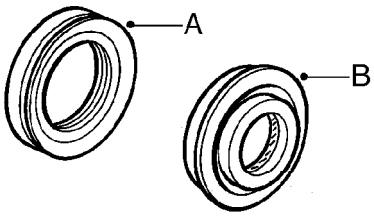

’A’ - original type oil seal
’B’ - later type oil seal

NOTE: The differential oil seals have been modified on later gearboxes. These seals are identified above and the gearboxes can be identified by machined seal location faces. Later type oil seals MUST NOT be fitted to early gearboxes without machined faces.

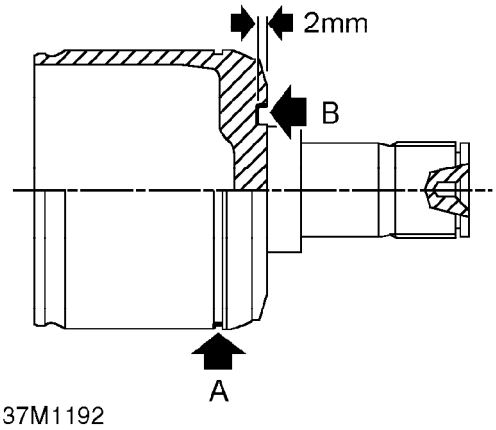

22. The drive shaft inboard joint has also been modified for use with later type oil seals. The modified drive shaft is identified by a groove ’A’ above which indicates that additional oil seal clearance has been added at point ’B’ above. Modified drive shafts can be used with either type of oil seal but later type oil seal CANNOT be used with original type driveshaft.

Refit

1. Thoroughly clean oil seal recess with an approved cleaning agent and allow to dry.
2. Lubricate original type oil seal with clean gearbox oil.

CAUTION: Later type oil seal is waxed on outer diameter and MUST NOT be lubricated before fitting.

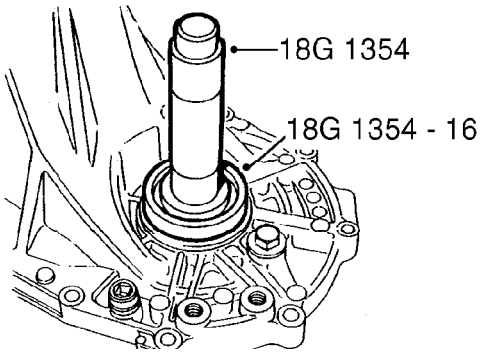

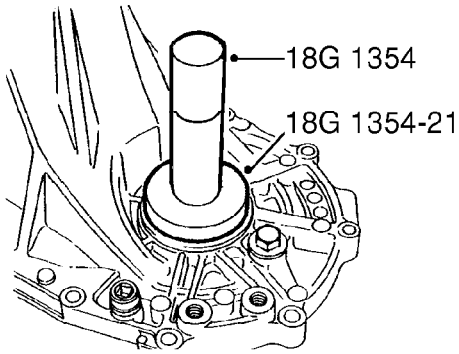

37M1146

3. With sealing lip facing towards differential housing, carefully drift oil seal into housing until it fully seats in recess using appropriate tools:
   Original type seal **’A’**- use tool **18G 1354** and **18G 1354-16.**
   Later type seal **’B’**- use tool **18G 1354** and **18G 1354-21**

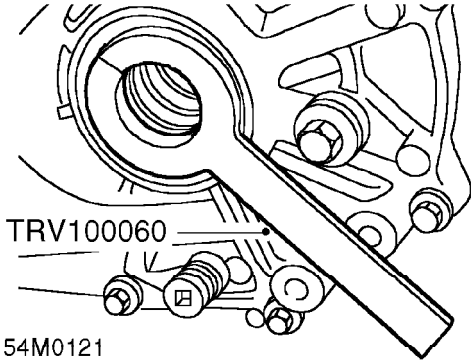

54M0121

4. Fully insert oil seal protector tool (Unipart TRV 100060) into differential oil seal so that oil seal lip is protected, ensure split end is butted correctly.
5. Fit new circlip to drive shaft.
6. Engage drive shaft in differential and push fully home.

CAUTION: Pull drive shaft to ensure circlip is fully engaged and retains shaft.

7. Clean lower ball joint and mating face of front hub.

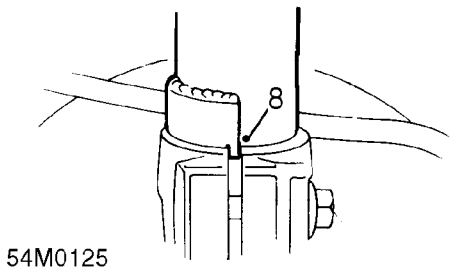

8. Connect front hub to front damper. Ensure locating lug on damper engages in slot on hub.
9. Locate front hub on suspension lower arm ball joint.
10. Fit castellated nut securing hub to suspension lower arm and tighten to 55 Nm, then align next slot in nut with split pin hole.
11. Secure castellated nut with new split pin.
12. Fit pinch bolt securing damper to front hub and tighten to 80 Nm.
13. Fit brake caliper to front hub.
14. Fit 2 bolts and washer securing brake caliper to front hub and tighten to 108 Nm.
15. *Models with ABS:* Fit ABS sensor to front hub, fit Torx bolt and tighten to 10 Nm.
16. Align brake hose bracket to front damper , fit bolt and tighten to 10 Nm.
17. Connect steering rack track rod end to front hub, fit nut and tighten to 45 Nm.
18. Fit road wheel(s) and tighten nuts to correct torque. ***See INFORMATION, Torque wrench settings.***
19. Remove container positioned to collect gearbox fluid.
20. *'L' series models:* Fit undertray. ***See BODY, Exterior fittings.***
21. Remove stand(s) and lower vehicle.
22. Top-up gearbox fluid. ***See MAINTENANCE.***

RH DIFFERENTIAL OIL SEAL - 'L' SERIES

Service repair no - 54.10.21

Remove

1. Remove exhaust front pipe. ***See MANIFOLD & EXHAUST SYSTEMS, Repairs.***
2. Remove front road wheel.
3. Position container to collect fluid loss from gearbox.

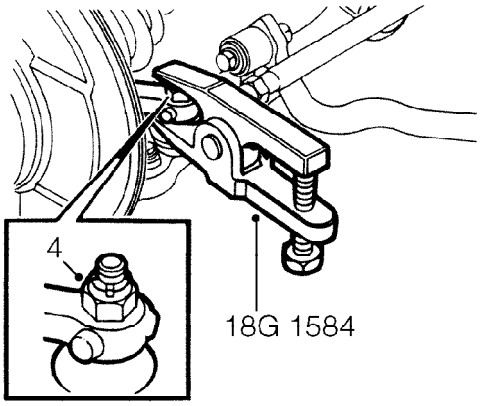

4. Remove nut securing steering rack track rod end to front hub.
5. Break taper joint using tool **18G 1584.**
6. Disconnect track rod end from front hub.

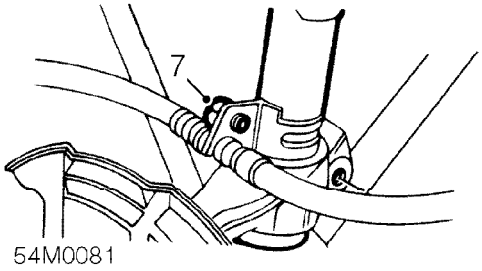

7. Remove bolt securing brake hose to front damper.

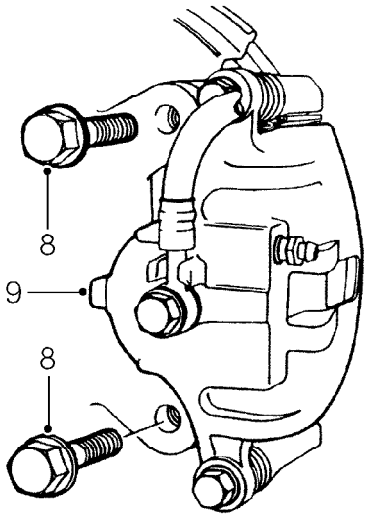

54M0082

8. Remove 2 bolts and collect washers securing brake caliper to front hub.
9. Release brake caliper from front hub and tie aside.

CAUTION: Do not allow caliper to hang on brake hose.

Models with ABS

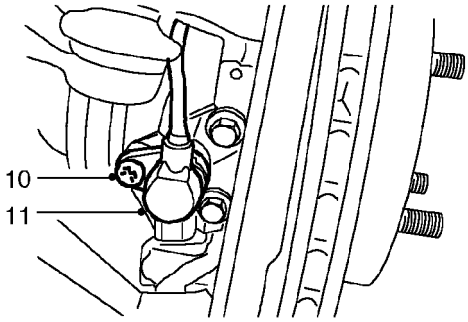

54M0083

10. Remove Tx30 Torx bolt securing ABS sensor to front hub.
11. Release ABS sensor from front hub and position aside.

All models

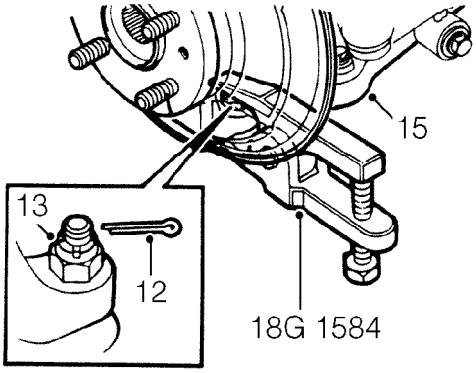

54M0084

12. Remove and discard split pin from castellated nut securing front hub to suspension lower arm.
13. Loosen castellated nut securing front hub to suspension lower arm, until flush with the end of the joint. If necessary, apply penetrating oil to joint.
14. Break taper joint using tool **18G 1584** .

CAUTION: Be careful not to damage the rubber boot on lower ball joint.

15. Remove nut from lower ball joint and release suspension lower arm from front hub.

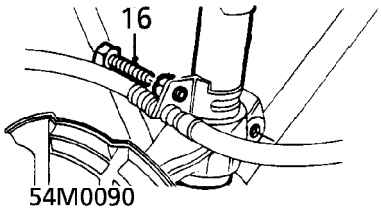

54M0090

16. Remove pinch bolt securing front hub to damper.

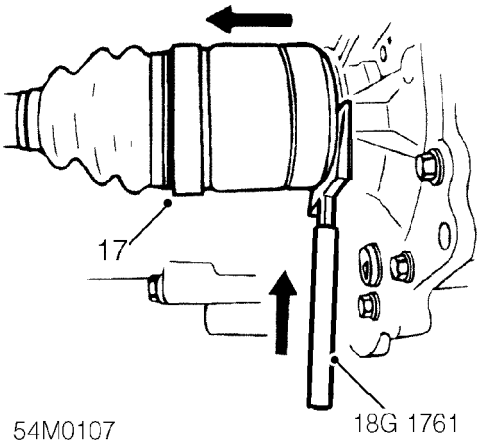

17. With an assistant carefully pulling hub assembly outwards, use tool **18G 1761,** to release drive shaft from differential.

CAUTION: Pull drive shaft horizontally to avoid damaging differential oil seal.

18. Remove drive shaft and front hub assembly.

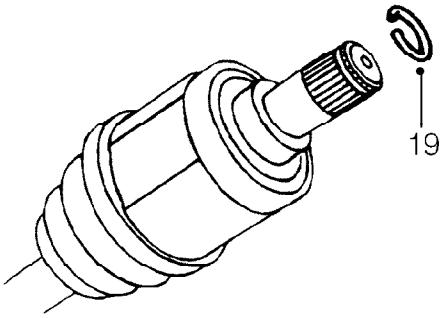

19. Remove and discard circlip from drive shaft.
20. Carefully prise out oil seal from differential housing. Retain seal removed for reference.

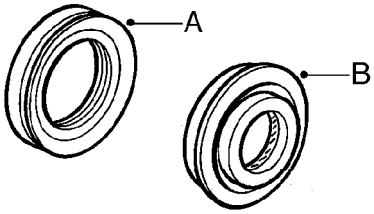

’A’ - original type oil seal
’B’ - later type oil seal

NOTE: The differential oil seals have been modified on later gearboxes. These seals are identified above and the gearboxes can be identified by machined seal location faces. Later type oil seals MUST NOT be fitted to early gearboxes without machined faces.

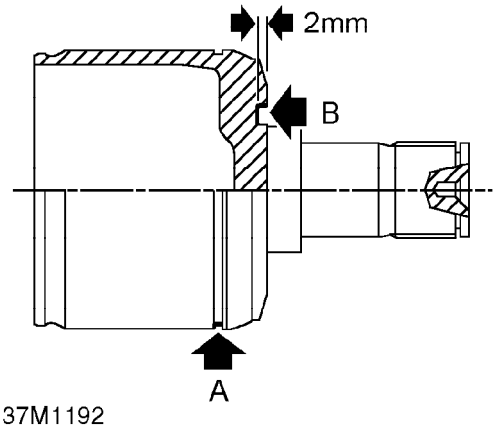

21. The drive shaft inboard joint has also been modified for use with later type oil seals. The modified drive shaft is identified by a groove ’A’ above which indicates that additional oil seal clearance has been added at point ’B’ above. Modified drive shafts can be used with either type of oil seal but later type oil seal CANNOT be used with original type driveshaft.

Refit

1. Thoroughly clean oil seal recess with an approved cleaning agent and allow to dry.
2. Lubricate original type oil seal with clean gearbox oil.

CAUTION: Later type oil seal is waxed on outer diameter and MUST NOT be lubricated before fitting.

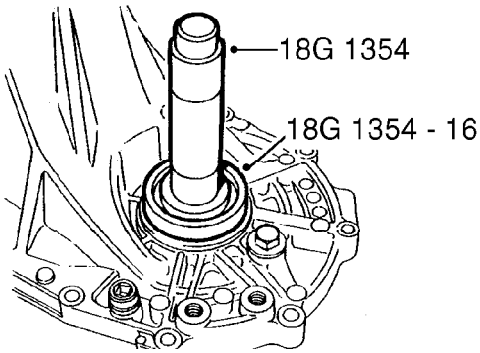

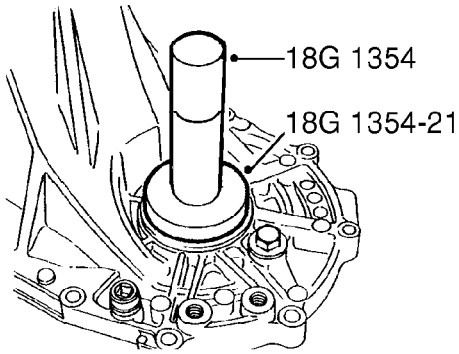

37M1146

3. With sealing lip facing towards differential housing, carefully drift oil seal into housing until it fully seats in recess using appropriate tools:
   Original type seal **’A’**- use tool **18G 1354** and **18G 1354-16.**
   Later type seal **’B’**- use tool **18G 1354** and **18G 1354-21**

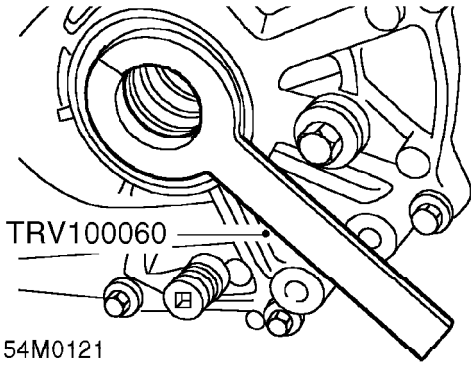

54M0121

4. Fully insert oil seal protector tool (Unipart TRV 100060) into differential oil seal so that oil seal lip is protected, ensure split end is butted correctly.
5. Fit new circlip to drive shaft.
6. Engage drive shaft in differential and push fully home.

CAUTION: Pull drive shaft to ensure circlip is fully engaged and retains shaft.

7. Clean lower ball joint and mating face of front hub.

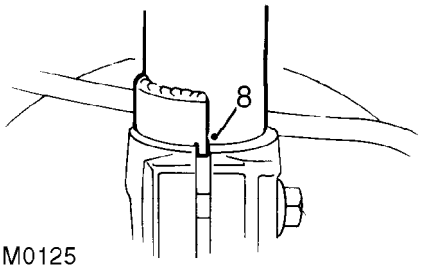

54M0125

8. Connect front hub to front damper. Ensure locating lug on damper engages in slot on hub.
9. Locate front hub on suspension lower arm ball joint.
10. Fit castellated nut securing hub to suspension lower arm and tighten to 55 Nm, then align next slot in nut with split pin hole.
11. Secure castellated nut with new split pin.
12. Fit pinch bolt securing damper to front hub and tighten to 80 Nm.

13. Fit brake caliper to front hub.
14. Fit 2 bolts and washer securing brake caliper to front hub and tighten to 108 Nm.
15. *Models with ABS:* Fit ABS sensor to front hub, fit Torx bolt and tighten to 10 Nm.
16. Align brake hose bracket to front damper, fit bolt and tighten to 10 Nm.
17. Connect steering rack track rod end to front hub, fit nut and tighten to 45 Nm.
18. Fit road wheel(s) and tighten nuts to correct torque. ***See INFORMATION, Torque wrench settings.***
19. Remove container positioned to collect gearbox fluid.
20. Fit exhaust front pipe. ***See MANIFOLD & EXHAUST SYSTEMS, Repairs.***
21. Remove stand(s) and lower vehicle.
22. Top-up gearbox fluid. ***See MAINTENANCE.***

CONTENTS

Page

DESCRIPTION AND OPERATION
GEARBOX COMPONENTS 1
DESCRIPTION 2
OPERATION 2

ADJUSTMENTS
DRAIN AND REFILL 1
THROTTLE AND KICKDOWN CABLE 2
SELECTOR CABLE 3

REPAIRS
KICKDOWN CABLE 1
SELECTOR CABLE 2
STARTER INHIBITOR/REVERSE SWITCH 4
SELECTOR SHAFT SEAL 5
AUTOMATIC GEARBOX 6
INPUT SHAFT SEAL 10
PRIMARY COVER 11
SECONDARY COVER SEALS 11
DIPSTICK TUBE SEAL 16
FLUID PAN GASKET 17
FLUID COOLER 18
FLUID COOLER FEED HOSE/PIPE 19
FLUID COOLER RETURN HOSE/PIPE 20
DIFFERENTIAL OIL SEAL 21
PRIMARY BEARING 24

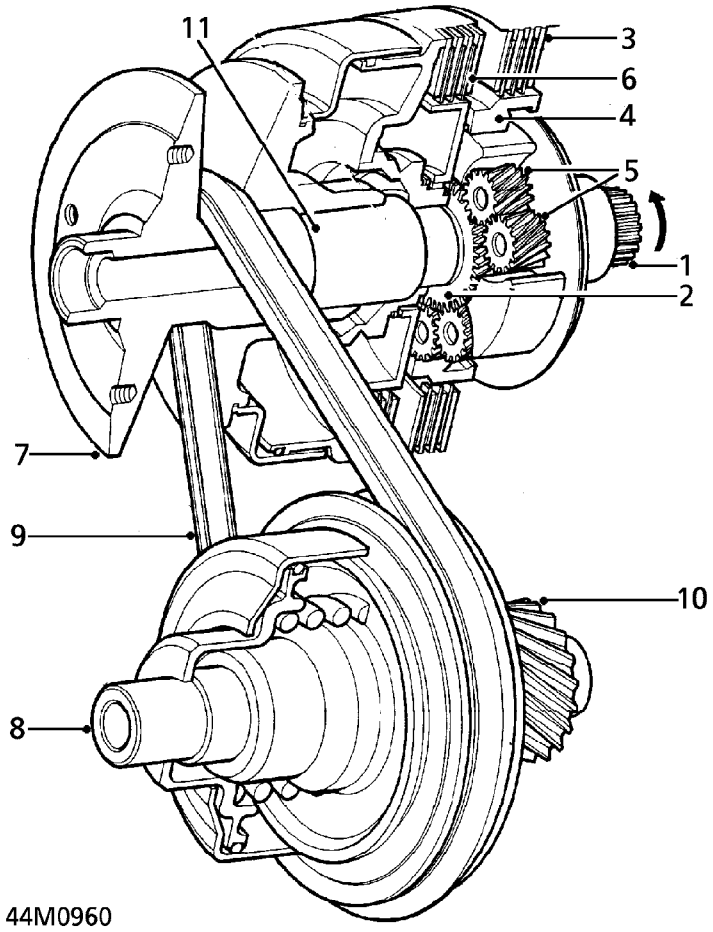

GEARBOX COMPONENTS

1. Input shaft
2. Sun wheel
3. Reverse clutch
4. Annulus gear
5. Planet carrier and gears
6. Forward clutch
7. Primary pulley
8. Secondary pulley
9. Drive belt
10. Secondary reduction and final drive gear.
11. Primary shaft

DESCRIPTION

The automatic transmission which is used with the 'K' series engine is a continuously variable transmission (CVT) and different to conventional automatic transmissions. This compact transmission has been specifically designed for front wheel drive vehicles with transverse engines.

Unlike conventional automatic transmissions that provide a limited number of gear ratios, usually three or four which change in steps, the continuously variable transmission has an infinite number of gear ratios within it's operating range. The stepless shifting pattern of the transmission, provides a smoother transfer of power to the road wheels as well as having full vehicle performance available at all times.

OPERATION

The transmission is driven from the engine via a torsion damper bolted to the flywheel. The torsion damper drives the input shaft which in turn drives the planet carrier. Depending upon whether forward or reverse gear is selected the primary pulley will rotate transferring torque to the secondary pulley which causes the vehicle to move in the desired direction.

At the heart of the transmission is a steel belt consisting of two steel bands made of 10 steel strips. These two bands carry approximately 350 steel segments which butt against each other to allow the belt to transmit torque by compression. The belt has several different thicknesses of steel segments intermingled which reduce the noise of the segments hitting the pulleys by changing the harmonic frequencies.

The steel belt is fitted between the primary and secondary pulleys. Each pulley consists of one fixed half and one axially movable half. The moving pulley halves are situated diagonally opposite to each other to reduce misalignment of the belt during shifting. Each moving pulley half is connected to a hydraulic cylinder controlled by hydraulic pressure generated by an integral fluid pump running at engine speed. By moving the pulley halves together their effective diameter is increased and by moving them apart it is decreased thus altering the gearing of the unit due to the conical faces of the pulleys. The belt is lubricated by fluid sprayed from a nozzle mounted in the casing.

To pull away a low ratio is required. To provide for this, the primary pulley is open, allowing the belt to sit down into the pulley and forcing it to run on the larger diameter of the closed secondary pulley.

As vehicle speed increases, a higher ratio is required. As engine speed increases the fluid pressure increases and the primary pulley gradually closes increasing its effective diameter as it does so the secondary pulley opens decreasing its effective diameter giving a higher ratio. An overdrive ratio is obtained when the primary pulley is fully closed and the secondary pulley is fully open. The secondary pulley is now forced to rotate approximately two and a half times that of the primary pulley.

The transmission has two multiplate wet clutch packs; one forward and one reverse. Each pack has 3 friction plates and hence 6 friction surfaces. The clutches are controlled so the vehicle can move from rest very smoothly regardless of the degree of throttle opening. During this operation the clutches are cooled by cool fluid fed from the fluid cooler to prevent them overheating.

The transmission takes its control inputs from the selector lever, throttle position, engine speed and output speed. The latter two inputs are derived from pitot tubes mounted in side the transmission casing. The pitot tubes transmit centrifugal pressure generated by the rotation of the primary and the secondary pulleys to the valve block.

Selector mechanism

The vehicle is fitted with a 5 position selector lever.
P = Park
R = Reverse
N = Neutral
D = Drive
L = Low drive

Selection of one of the above positions activates a selector shaft inside the transmission. The lever and the shaft are connected by a push and pull type cable. A cam fitted to the selector shaft is further connected to the manual valve of the control system and sets it in one of its 5 discrete positions (P, R, N, D, L).

- **'P'** - A spring and cone operated pawl mechanically locks the secondary pulley, thereby locking the front wheels. If the selection is made while the vehicle is moving the pawl will simply rattle ineffectively until the vehicle speed drops below a threshold of approximately 7 km/h.

- **'R'** - The reverse clutch is activated and the forward clutch is inhibited. The reverse clutch holds the annulus of the planetary gear set stationary. The planet carrier drives three pairs of planet gears, forcing the sun wheel to rotate in the opposite direction moving the vehicle in reverse. The car will reverse without upshifting. When the driver selects reverse at a high forward vehicle speed, an inhibitor valve makes sure that the reverse clutch is not engaged unless the vehicle speed has dropped to an acceptable level.

- **'N'** - Both forward and reverse clutches are inhibited. The fluid pump is running at engine speed but the rest of the transmission is standing still.

- **'D'** - The forward clutch is activated and the reverse clutch is inhibited. The epicyclic gear set rotates as one unit, and the engine torque is transmitted directly to the primary pulley which drives the secondary pulley moving the vehicle forward. Can be used for all driving situations from take-off to top speed. The driver simply controls the vehicle speed by means of the accelerator pedal.

- **'L'** - Using the low drive option results in a different shift pattern to the normal drive position. The **'L'** position is best selected for mountain driving, towing conditions and for sporty driving but switching between **'D'** and **'L'** is possible at any speed. Selecting the low drive option provides additional engine braking when the accelerator pedal is released. Top speed can also be achieved in this position.

Starter inhibitor switch

The transmission selector shaft cam is used to activate an inhibitor switch which is connected into the vehicles starter and reverse lamp circuits. The inhibitor switch will only allow the vehicle to be started in **'N'** or **'P'**. In **'R'** the reversing lights are switched on.

DRAIN AND REFILL

Service repair no - 44.24.02

Drain

NOTE: The fluid should be drained with the gearbox at normal operating temperature.

WARNING: Observe due care when draining gearbox fluid, as the fluid will be very hot.

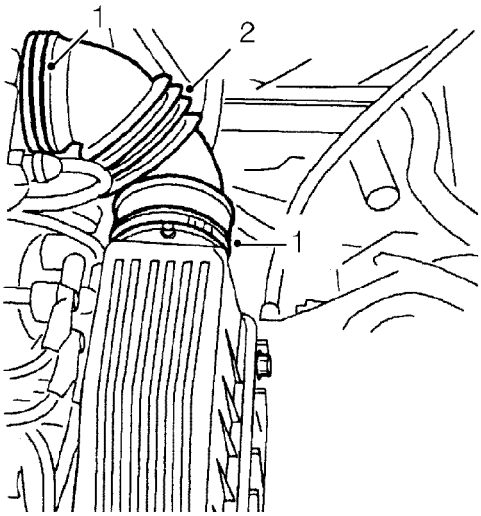

44M0946

1. Release 2 clips securing hose to air cleaner and thottle body.
2. Remove air intake hose.
3. Remove dipstick.
4. Raise front of vehicle.

WARNING: Support on safety stands.

5. Position container to collect fluid from gearbox.

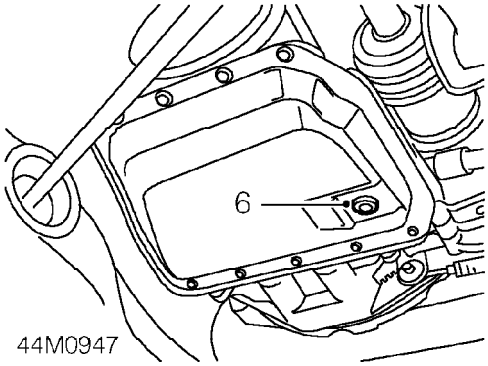

44M0947

6. Remove drain plug using an 8 mm Allen key and discard sealing washer.
7. Allow fluid to drain into container.

NOTE: Approximately 1 litre of fluid is retained in the primary and secondary cylinders of the gearbox.

Refill

1. Clean drain plug and sealing face of gearbox.
2. Fit new sealing washer to drain plug, fit drain plug and tighten to 30 Nm.
3. Remove stand(s) and lower vehicle.

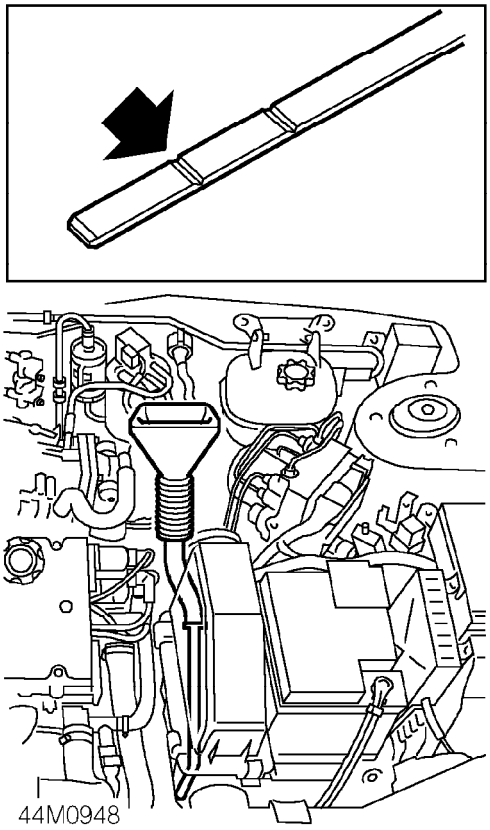

4. Using a funnel on the end of the dipstick tube, carefully fill gearbox to the minimum mark with new CVT fluid. ***See INFORMATION, Capacities, fluids and lubricants.***
5. Replace dipstick tube.
6. Start engine and run until normal operating temperature is achieved.
7. Operate gearbox through full range of selector positions 3 times to ensure fluid is in all parts of the system.
8. With the vehicle on horizontal ground, the selector lever in the 'N' position and the engine running at idle speed, check the oil level and add oil until the level lies between the minimum and maximum marks on the dipstick.
9. Fit hose between air cleaner and throttle body and secure with clips.

THROTTLE AND KICKDOWN CABLE

Service repair no - 44.30.02

Adjust

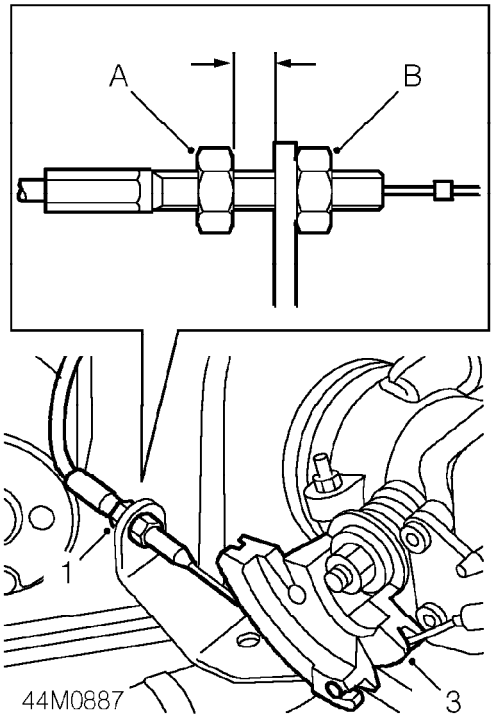

1. Loosen kickdown cable adjusting nut and locknut.
2. Adjust throttle cable. ***See ENGINE MANAGEMENT SYSTEM - MEMS, Adjustments.***
3. Rotate and hold throttle cam in its fully open position.
4. With assistance, insert a 1 mm thick feeler gauge between the kickdown cable adjusting nut (A) and abutment bracket.
5. Tighten adjusting nut (A) to remove all free play from kickdown cable. Ensure throttle cam is still in its fully open position.
6. Remove feeler gauge and tighten kickdown cable locknut (B).
7. Release throttle cam and check that full movement of throttle cam is achievable.

SELECTOR CABLE

Service repair no - 44.30.04

Adjust

1. Raise front of vehicle.

WARNING: Support on safety stands.

2. Move gear selector lever to position ’P’.

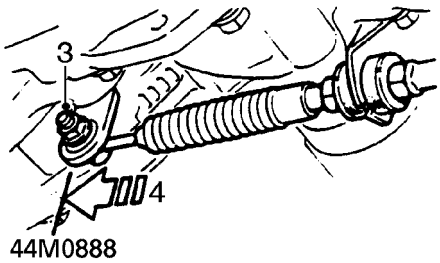

3. Loosen nut securing selector cable rod to selector lever.
4. Push selector lever fully forwards.
5. Ensure the park mechanism is engaged by trying to rotate both front wheels.
6. Tighten nut securing selector cable rod to selector lever to 7 Nm.
7. Remove stand(s) and lower vehicle.
8. Check that vehicle will only start in position ’P’ and ’N’.
9. Check that forward drive is achieved in position ’D’ and ’L’, and reverse drive in position ’R’.

KICKDOWN CABLE

Service repair no - 44.15.01

Remove

1. Raise front of vehicle.

WARNING: Support on safety stands.

2. Remove starter motor. ***See ELECTRICAL, Repairs.***
3. Remove fluid pan as detailed in Fluid pan gasket. ***See AUTOMATIC GEARBOX - 'CVT', Repairs.***

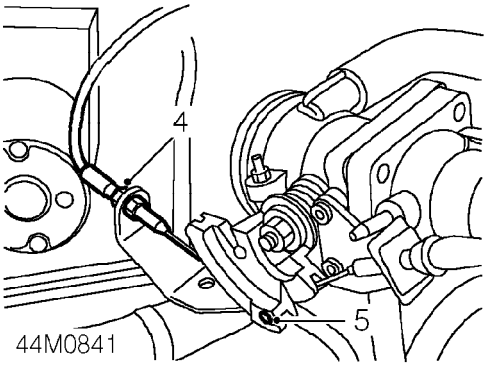

4. Loosen nuts securing kickdown cable to abutment bracket.
5. Release kickdown inner cable from throttle cam.
6. Release kickdown cable from abutment bracket.

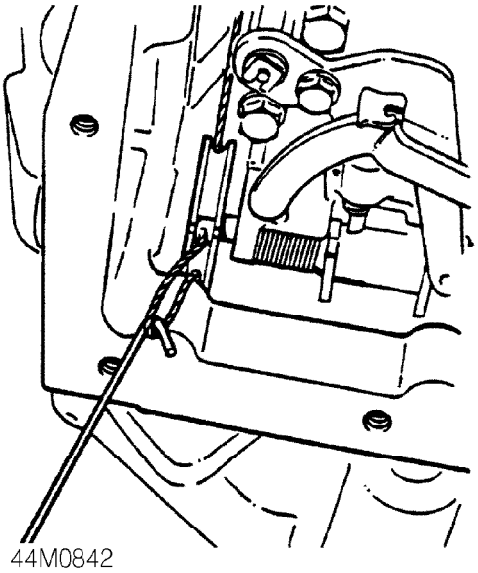

7. Using a piece of stiff wire with a hook on the end, release kickdown inner cable from valve cam inside gearbox.

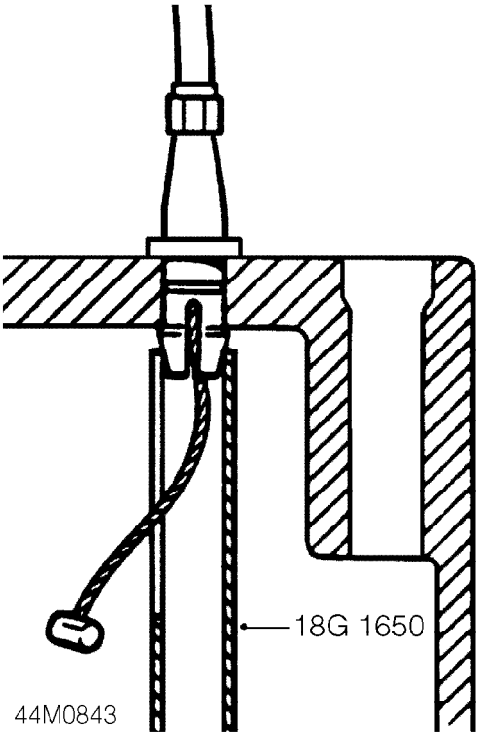

8. Using tool **18G 1650** release kickdown outer cable from gearbox housing.
9. Remove kickdown cable from vehicle.

Refit

1. Position kickdown cable in vehicle.
2. Secure kickdown outer cable to gearbox housing.
3. Using a piece of stiff wire with a hook on the end, connect inner cable to valve cam inside gearbox.

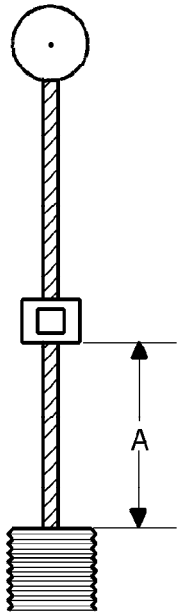

44M1037

4. Holding kickdown cable as straight as possible, fully extent inner cable and secure crimp at distance **A.**
   Distance **A**= 57.0 mm ± 0.5 mm
5. Fit kickdown cable to abutment bracket.
6. Connect inner cable to throttle cam.
7. Fit fluid pan as detailed in Fluid pan gasket. ***See AUTOMATIC GEARBOX - 'CVT', Repairs.***
8. Fit starter motor. ***See ELECTRICAL, Repairs.***

NOTE: The kickdown cable should be routed over the hose between the air cleaner and throttle body.

9. Remove stand(s) and lower vehicle.
10. Adjust throttle and kickdown cables. ***See AUTOMATIC GEARBOX - 'CVT', Adjustments.***

SELECTOR CABLE

Service repair no - 44.15.08

Remove

1. Remove front console. ***See BODY, Interior trim components.***

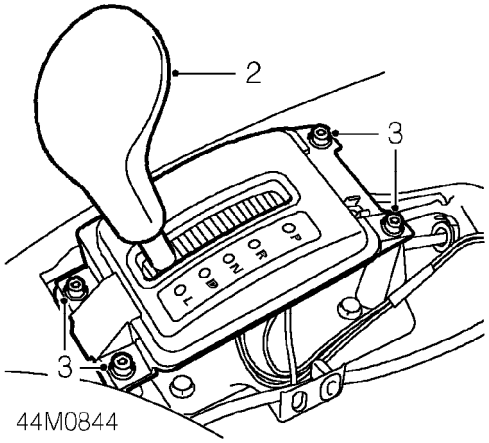

44M0844

2. Position selector lever in 'L'.
3. Remove 4 Allen screws securing selector lever nacelle to body and collect washers.

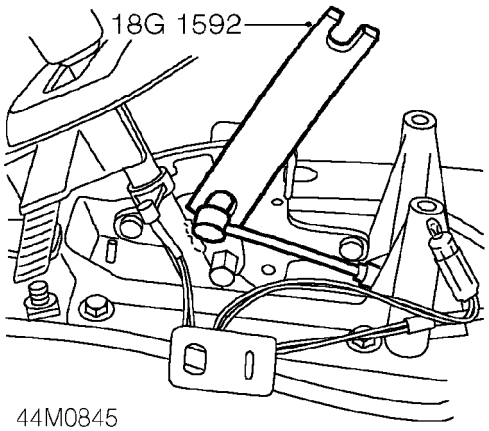

44M0845

4. Using tool **18G 1592** disconnect selector cable ball joint from selector lever.

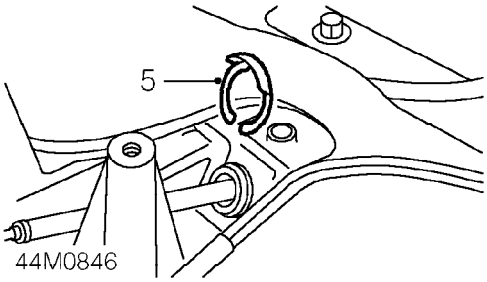

5. Remove 'C' clip securing selector cable to body.
6. Raise front of vehicle.

WARNING: Support on safety stands.

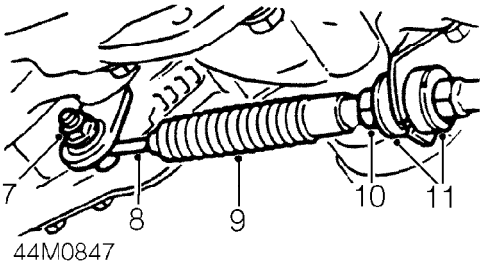

7. Remove nut securing selector cable rod to lever.
8. Release selector cable rod from selector lever.
9. Slide rubber sleeving back from lock nut on selector cable rod.
10. Loosen lock nut securing selector cable to abutment bracket.
11. Seperate anti-vibration rubbers and release cable from abutment bracket.

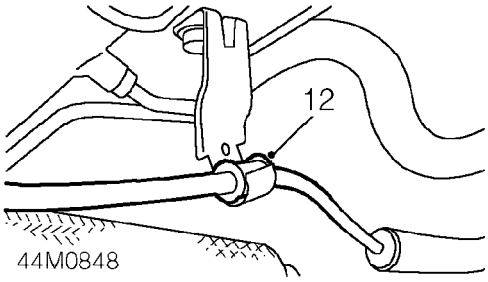

12. Release selector cable from bracket on rear beam.
13. Remove selector cable from vehicle.

Refit

1. Position selector cable in vehicle and secure to bracket on rear beam.
2. Fit selector cable to abutment bracket and push anti-vibration dampers into position.
3. Tighten selector cable lock nut to abutment bracket.
4. Slide selector cable rod rubber sleeving into position.
5. Connect selector cable rod to selector lever but DO NOT tighten nut.
6. Fit 'C' clip securing selector cable to body.
7. Connect selector cable ball joint to selector lever.
8. Position selector lever nacelle, fit and tighten Allen screws with washers fitted.

CAUTION: Do not over tighten screws.

9. Fit front console. ***See BODY, Interior trim components.***
10. Adjust selector cable. ***See AUTOMATIC GEARBOX - 'CVT', Adjustments.***

STARTER INHIBITOR/REVERSE SWITCH

Service repair no - 44.15.19

Remove

1. Raise front of vehicle.

WARNING: Support on safety stands.

2. Position container to collect fluid loss from gearbox.

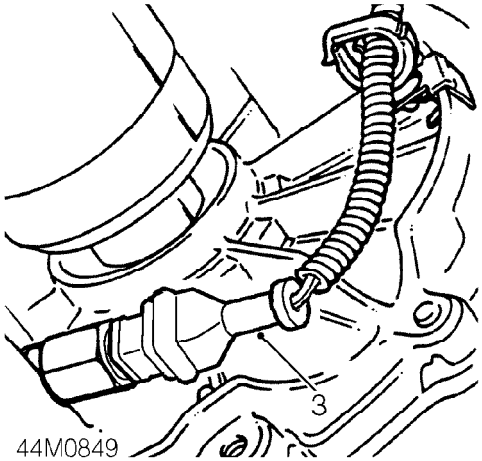

3. Disconnect multiplug from switch.

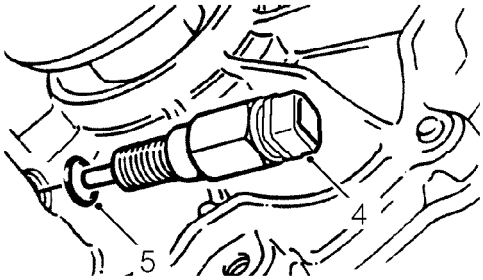

4. Loosen and remove switch from gearbox.
5. Remove and discard 'O' ring from switch.

Refit

1. Clean switch and mating face of gearbox.
2. Lubricate new 'O' ring with gearbox fluid and fit to switch.
3. Fit switch to gearbox and tighten to 12 Nm.
4. Connect multiplug to switch.
5. Remove stand(s) and lower vehicle.
6. Top-up gearbox fluid level. ***See AUTOMATIC GEARBOX - 'CVT', Adjustments.***

SELECTOR SHAFT SEAL

Service repair no - 44.15.34

Remove

1. Remove sump as detailed in Sump gasket - 1.6 models. ***See ENGINE - 'K16', Repairs.***
2. Move gear selector lever to position 'P'.

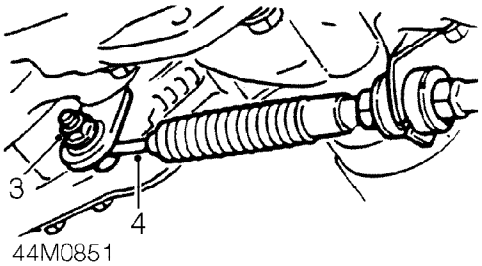

3. Remove nut securing selector cable rod to selector lever.
4. Release selector cable rod from selector lever.

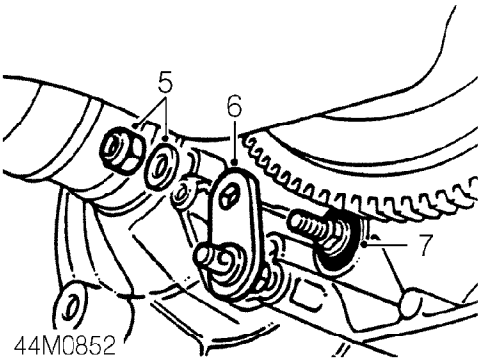

5. Remove nut and washer securing selector lever to selector shaft.
6. Release and remove lever from selector shaft.
7. Remove and discard selector shaft seal.

Refit

1. Clean selector shaft and seal register.
2. Lubricate oil seal with gearbox fluid and fit over selector shaft.
3. Push oil seal into place in gearbox casing using suitable size socket.
4. Clean selector lever.
5. Fit nut securing selector lever to selector shaft and tighten to 8 Nm.
6. Connect selector cable rod to selector lever but DO NOT tighten nut.
7. Fit sump as detailed in Sump gasket - 1.6 models. ***See ENGINE - 'K16', Repairs.***
8. Top-up gearbox fluid ***See AUTOMATIC GEARBOX - 'CVT', Adjustments.***
9. Adjust selector cable. ***See AUTOMATIC GEARBOX - 'CVT', Adjustments.***

AUTOMATIC GEARBOX

Service repair no - 44.20.02.99

Remove

1. Raise front of vehicle.

WARNING: Support on safety stands.

2. Remove starter motor. ***See ELECTRICAL, Repairs.***
3. Remove ECM. ***See ENGINE MANAGEMENT SYSTEM - MEMS, Repairs.***
4. Remove engine management relay module. ***See ENGINE MANAGEMENT SYSTEM - MEMS, Repairs.***

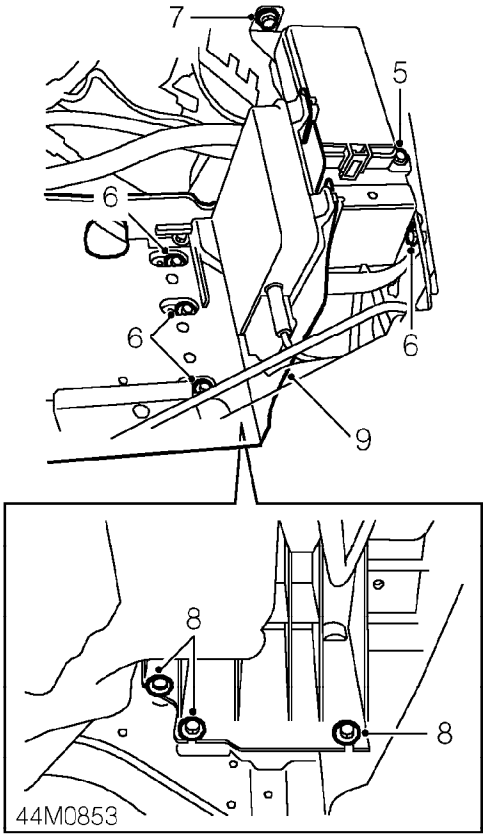

5. Remove bolt securing engine compartment fuse box to battery tray.
6. Remove 4 bolts securing battery tray to body.
7. Remove bolt securing engine compartment fuse box to body and position fuse box aside.
8. Loosen 3 bolts securing battery tray to body.
9. Remove battery tray from vehicle.

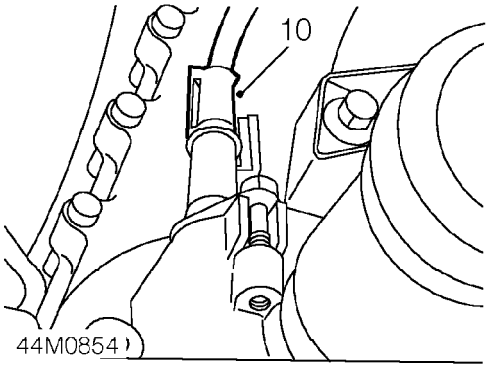

10. Disconnect multiplug from vehicle speed sensor.

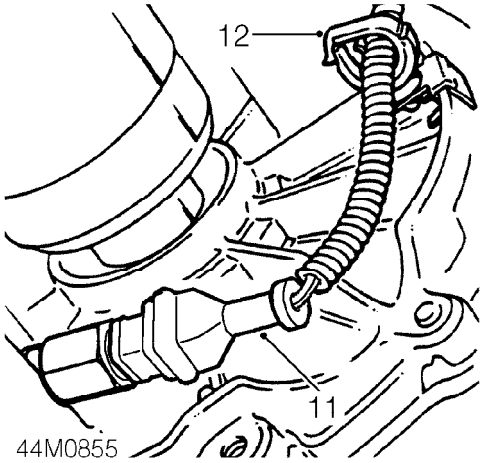

11. Disconnect multiplug from starter inhibitor/reverse switch.
12. Release clip securing harness to gearbox.

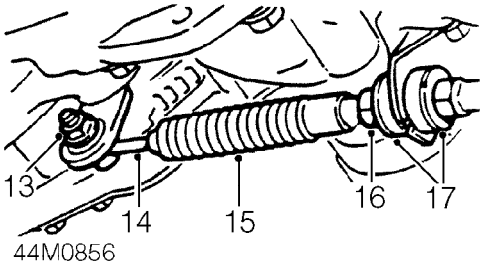

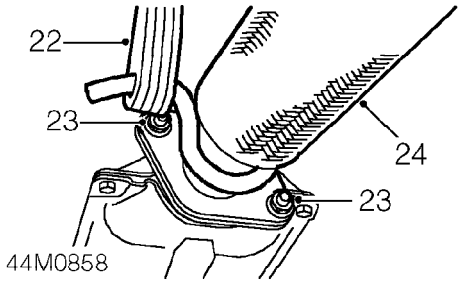

13. Remove nut securing selector cable rod to selector lever.
14. Release selector cable rod from selector lever.
15. Slide rubber sleeving back from lock nut on selector cable rod.
16. Loosen lock nut securing selector cable to abutment bracket.
17. Seperate anti-vibration rubbers and release cable from abutment bracket.

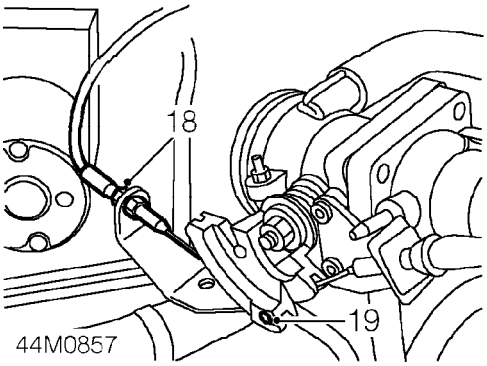

18. Loosen nuts securing kickdown cable to abutment bracket.
19. Release kickdown inner cable from throttle cam.
20. Release kickdown cable from abutment bracket.
21. Drain gearbox fluid. ***See AUTOMATIC GEARBOX - 'CVT', Adjustments.***

22. Disconnect rubber mounting securing front pipe to body.
23. Remove 2 nuts securing front pipe to catalytic converter.
24. Disconnect front pipe from catalytic converter and remove flange gasket.

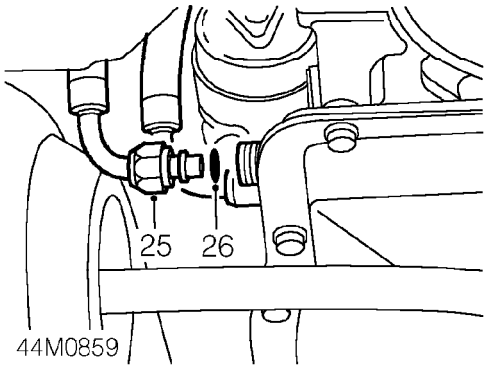

25. Loosen unions and disconnect 2 fluid cooler hoses from gearbox.
26. Remove and discard 'O' rings from fluid cooler hose unions.

CAUTION: Plug the connections.

27. Release both drive shafts from gearbox as detailed in Differential oil seal. ***See AUTOMATIC GEARBOX - 'CVT', Repairs.***

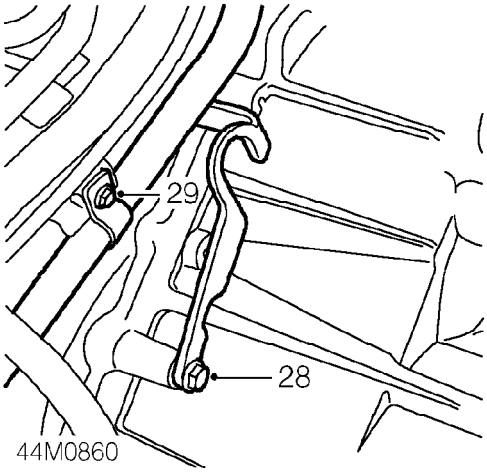

28. Fit bolt securing lifting bracket to gearbox.
29. *Models with air conditioning:* Remove bolt securing air conditioning pipe to mounting bracket.

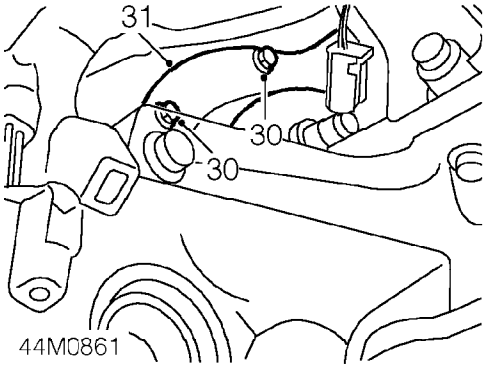

30. Remove 2 bolts securing flywheel rear cover plate to flywheel housing.
31. Remove flywheel rear cover plate.
32. Fit wooden block to jack and position jack to support engine.

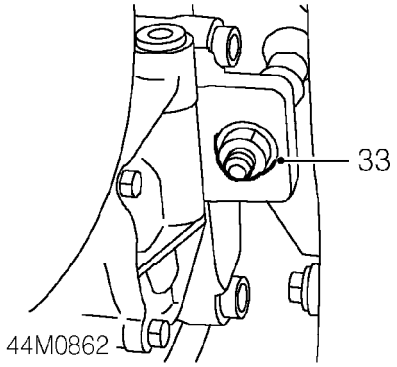

33. Remove and discard nut securing gearbox mounting bracket to engine LH mounting.
34. Connect suitable lifting equipment to mounting bracket on gearbox.
35. Take weight of gearbox with lifting equipment.

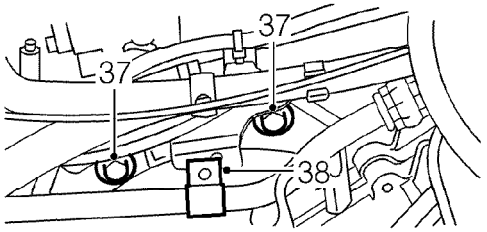

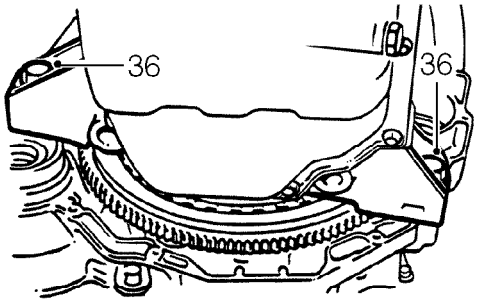

36. Remove 2 lower bolts securing gearbox to engine.
37. Remove 2 upper bolts securing gearbox to engine.
38. *Models with air conditioning:* Collect mounting bracket.
39. With assistance, release gearbox from engine.
40. Manoeuvre gearbox from engine and lower from vehicle.
41. Disconnect lifting equipment from gearbox and remove gearbox from beneath vehicle.

Refit

1. Clean mating faces of engine and flywheel housing.

CAUTION: Do not apply grease to gearbox input shaft splines.

2. Position gearbox beneath vehicle and connect lifting equipment.
3. With assistance, raise gearbox and manoeuvre into position. Locate on 2 dowels.
4. Fit 2 lower bolts securing gearbox to engine.
5. Clean and degrease threads of 2 upper bolts securing gearbox to engine.
6. Apply Loctite 243 to threads of 2 upper bolts.
7. *Models with air conditioning:* Position air conditioning pipe bracket to flywheel housing.
8. Fit 2 upper bolts securing gearbox to engine and tighten to 85 Nm.
9. Tighten 2 lower bolts securing gearbox to engine to 85 Nm.
10. Raise engine and gearbox into position and locate on engine LH mounting.
11. Fit new Nylock nut securing engine LH mounting to bracket on gearbox and tighten to 160 Nm.
12. Remove jack positioned to support engine.
13. Fit flywheel rear cover plate to flywheel housing, fit bolts and tighten to 9 Nm.
14. Connect both drive shafts to gearbox, as detailed in Differential oil seal. ***See AUTOMATIC GEARBOX - 'CVT', Repairs.***
15. *Models with air conditioning:* Align air conditioning pipe to bracket, fit bolt and tighten to 9 Nm.
16. Remove bolt securing lifting bracket to gearbox.
17. Remove plugs from fluid cooler hose unions, lubricate new 'O' rings with gearbox fluid and fit to unions.
18. Connect fluid cooler hoses to gearbox and tighten unions to 37 Nm.
19. Clean mating faces of front pipe and catalytic converter.
20. Fit new gasket to catalytic converter flange.
21. Connect front pipe to catalytic converter, fit nuts and tighten to 50 Nm.
22. Secure front pipe rubber mounting to bracket on body.
23. Fit kickdown cable to abutment bracket.
24. Connect kickdown inner cable to throttle cam.
25. Fit selector cable to abutment bracket and push anti-vibration rubbers into position.
26. Tighten selector cable lock nut to abutment bracket.
27. Slide selector cable rod to sleeving into position.
28. Connect selector cable rod to selector lever but DO NOT tighten nut.
29. Connect multiplug to starter inhibitor/reverse switch and secure harness to clip on gearbox.
30. Connect multiplug to vehicle speed sensor.
31. Position battery tray in vehicle.
32. Tighten 3 bolts securing battery tray to body to 10 Nm.
33. Position engine compartment fuse box to body, fit bolt and tighten to 10 Nm.
34. Fit 4 bolts securing battery tray to body and tighten to 10 Nm.
35. Fit and tighten bolt securing engine compartment fuse box to battery tray.
36. Fit engine management relay module. ***See ENGINE MANAGEMENT SYSTEM - MEMS, Repairs.***
37. Fit ECM. ***See ENGINE MANAGEMENT SYSTEM - MEMS, Repairs.***
38. Fit starter motor. ***See ELECTRICAL, Repairs.***
39. Adjust selector cable. ***See AUTOMATIC GEARBOX - 'CVT', Adjustments.***
40. Adjust throttle and kickdown cables. ***See AUTOMATIC GEARBOX - 'CVT', Adjustments.***
41. Refill gearbox with fluid. ***See AUTOMATIC GEARBOX - 'CVT', Adjustments.***
42. Remove stand(s) and lower vehicle.

INPUT SHAFT SEAL

Service repair no - 44.20.17

Remove

1. Remove gearbox assembly. ***See AUTOMATIC GEARBOX - 'CVT', Repairs.***

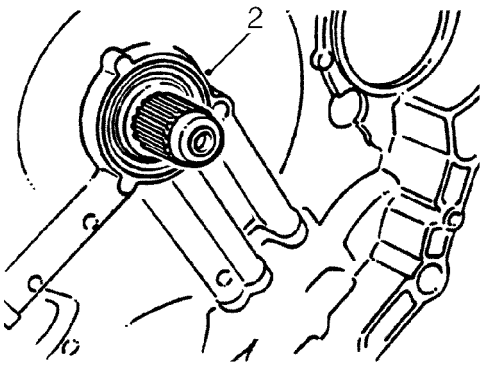

44M0864

2. Remove and discard input shaft seal using suitable lever.

Refit

1. Clean seal housing and input shaft.
2. Lubricate new 'O' ring with gearbox fluid and fit onto input shaft.

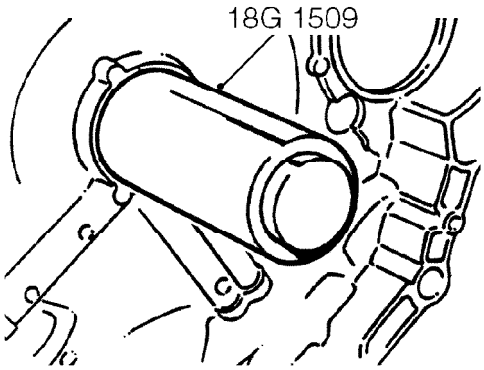

44M0865

3. Push seal into place using tool **18G 1509.**
4. Refit gearbox assembly. ***See AUTOMATIC GEARBOX - 'CVT', Repairs.***

PRIMARY COVER

Service repair no - 44.20.28

Remove

1. Raise front of vehicle.

WARNING: Support on safety stands.

2. Remove LH front road wheel.
3. Clean area around primary cover.
4. Position container to collect fluid loss.

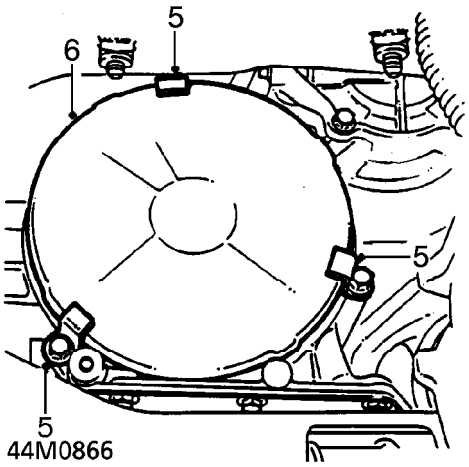

5. Remove 3 bolts and brackets securing primary cover to gearbox.
6. Remove primary cover from gearbox.

Refit

1. Clean primary cover and mating face of gearbox.
2. Fit primary cover to gearbox.
3. Fit primary cover bolts and brackets and tighten to 10 Nm.
4. Fit road wheel(s) and tighten nuts to correct torque. ***See INFORMATION, Torque wrench settings.***
5. Remove stand(s) and lower vehicle.
6. Top-up gearbox fluid. ***See AUTOMATIC GEARBOX - 'CVT', Adjustments.***

SECONDARY COVER SEALS

Service repair no - 44.20.33

Remove

1. Raise front of vehicle.

WARNING: Support on safety stands.

2. Remove LH front road wheel.

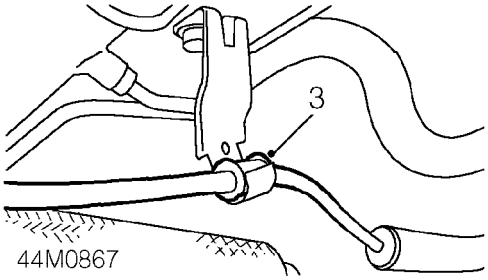

3. Release selector cable from bracket on rear beam.

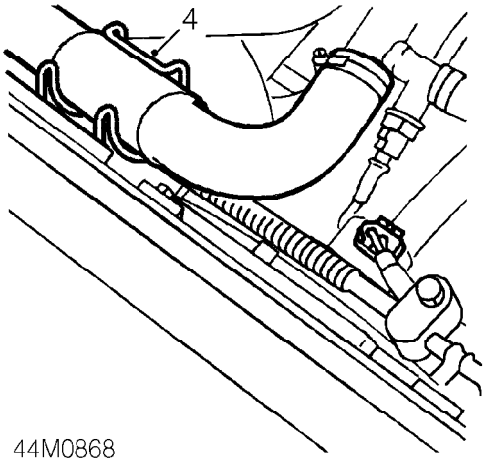

4. Release radiator top hose from clip on radiator cooling fan.
5. Remove air cleaner. ***See ENGINE MANAGEMENT SYSTEM - MEMS, Repairs.***

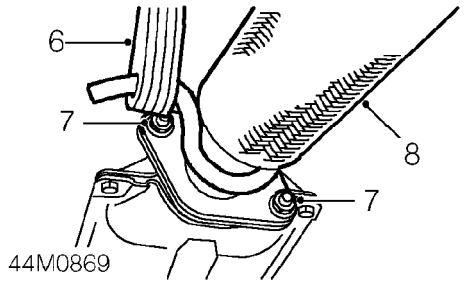

6. Disconnect rubber mounting securing front pipe to body.
7. Remove 2 nuts securing front pipe to catalytic converter.
8. Disconnect front pipe from catalytic converter and remove flange gasket.
9. Position container to collect fluid loss from gearbox.

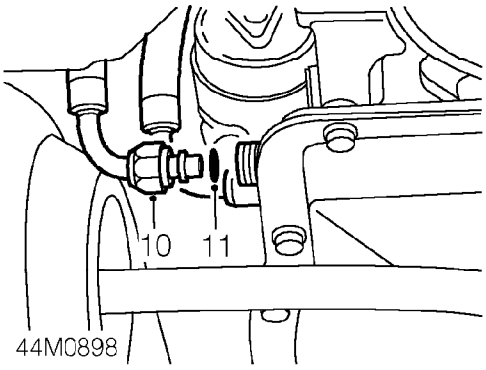

10. Loosen unions and disconnect 2 fluid cooler hoses from gearbox.
11. Remove and discard 'O' rings from fluid cooler hose unions.

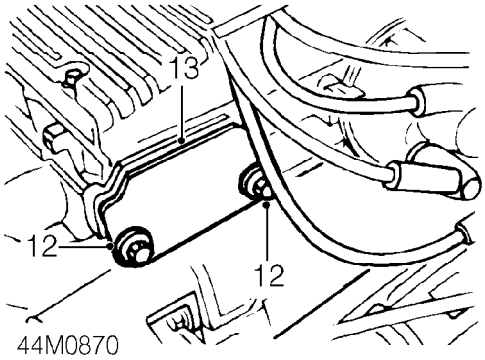

12. Remove 2 bolts securing camshaft rear cover plate to cylinder head.
13. Remove camshaft rear cover plate.

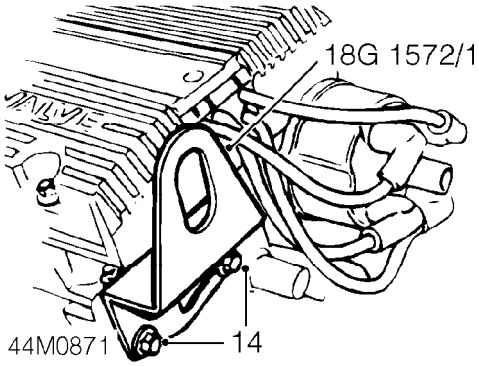

14. Fit lifting bracket to **18G 1572/1** to cylinder head. Fit bolts and tighten to 9 Nm.

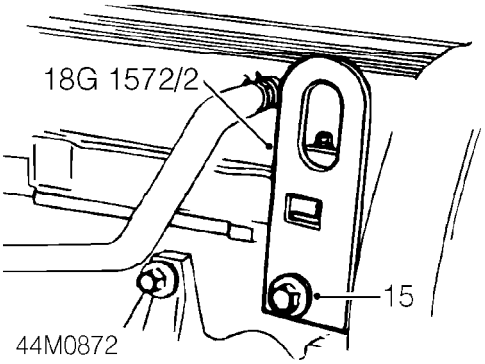

15. Fit lifting bracket tool **18G 1572/2** to cylinder head and tighten bolt to 9 Nm.

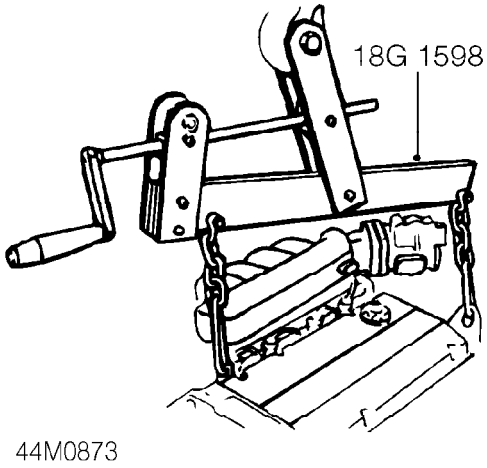

16. Connect adjustable lifting bracket tool **18G 1598** to lifting brackets.

17. Connect hoist to tool **18G 1598** and raise hoist to take weight of engine without exerting load on engine mounting bolts.

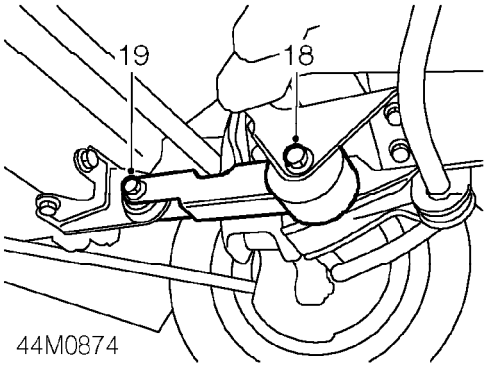

18. Loosen through bolt securing engine steady bar to body.

19. Remove through bolt securing engine steady bar to bracket on sump.

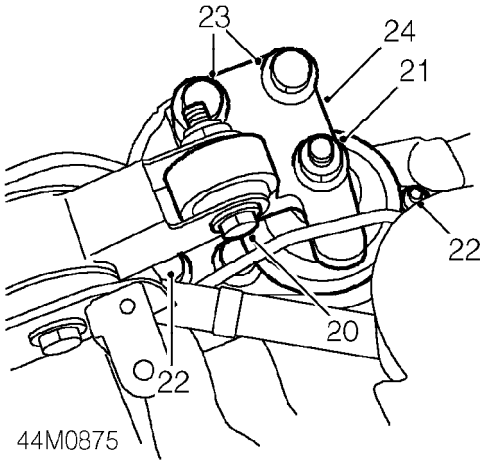

20. Remove bolt securing RH steady bar to engine mounting bracket.

21. Remove nut securing mounting bracket to engine mounting.

22. Loosen 2 nuts securing engine mounting restraint bar to body.

23. Remove 2 bolts securing mounting bracket to engine.

24. Remove engine mounting bracket.

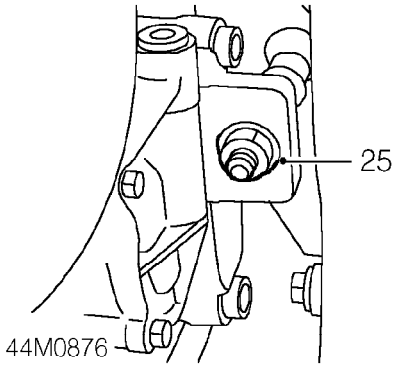

25. Remove and discard nut securing gearbox mounting bracket to engine mounting.
26. Adjust tool **18G 1598** to tilt engine with gearbox as low as possible.

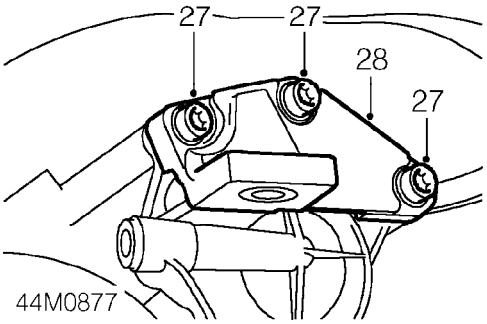

27. Remove 3 Tx55 Torx bolts securing mounting bracket to gearbox.
28. Remove mounting bracket from gearbox.

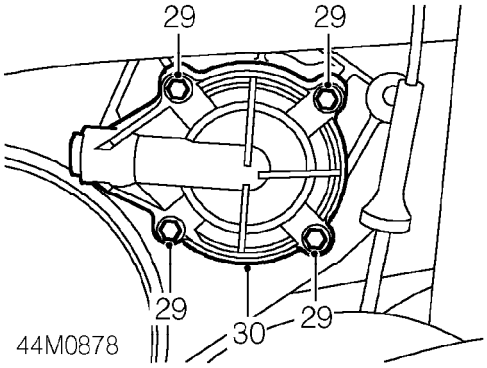

29. Remove 4 bolts securing secondary cover to gearbox.
30. Remove secondary cover.

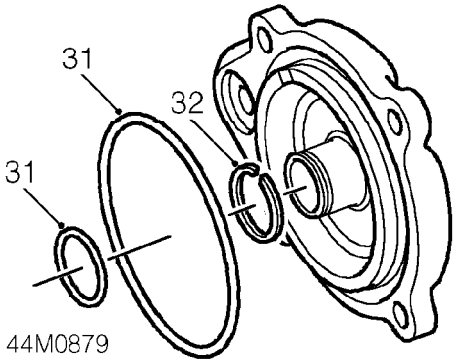

31. Remove and discard 2 ’O’ rings from cover.
32. Remove and discard split ring.

Refit

1. Clean secondary cover and mating faces of cover and gearbox.
2. Lubricate new 'O' rings with gearbox fluid and fit to secondary cover.
3. Fit new split ring to secondary cover.
4. Fit and align secondary cover to gearbox.
5. Fit bolts securing secondary cover to gearbox and tighten to 10 Nm.
6. Position mounting bracket to gearbox, fit Torx bolts and tighten to 55 Nm.
7. Adjust lifting bracket tool so engine is horizontal in engine compartment.
8. Fit new Nylock nut securing engine LH mounting to bracket on gearbox and tighten to 160 Nm.
9. Fit mounting bracket to engine RH mounting, steady bar and engine.
10. Align mounting bracket to engine and tighten bolts to 160 Nm.Tighten nuts securing restraint bar to body to 45 Nm.
11. Fit nut securing mounting bracket to engine mounting and tighten to 85 Nm.
12. Fit bolt securing steady bar to mounting bracket and tighten to 80 Nm.
13. Connect engine steady bar to bracket on sump and tighten bolt to 80 Nm.
14. Tighten through bolt, engine steady bar to body, to 80 Nm.
15. Lower hoist and disconnect lifting bracket tool **18G 1598** from engine lifting brackets.
16. Remove bolt securing engine lifting bracket tool **18G 1572/2** to cylinder head and remove lifting bracket.
17. Remove 2 bolts securing lifting bracket tool **18G 1572/1** to cylinder head and remove lifting bracket.
18. Clean camshaft rear cover plate.
19. Position camshaft rear cover plate to cylinder head and tighten bolts to 25 Nm.
20. Clean fluid cooler hose and gearbox unions.
21. Lubricate and fit new 'O' rings to fluid cooler hose unions.
22. Connect fluid cooler hoses to gearbox and tighten unions to 37 Nm.
23. Clean mating faces of front pipe and catalytic converter.
24. Fit new gasket to catalytic converter flange.
25. Connect front pipe to catalytic converter, fit nuts and tighten to 50 Nm.
26. Secure front pipe rubber mounting to bracket on body.
27. Fit air cleaner. ***See ENGINE MANAGEMENT SYSTEM - MEMS, Repairs.***
28. Secure radiator top hose to clip on radiator cooling fan.
29. Secure selector cable to clip on rear beam.
30. Fit road wheel(s) and tighten nuts to correct torque. ***See INFORMATION, Torque wrench settings.***
31. Remove stand(s) and lower vehicle.
32. Top-up gearbox fluid. ***See AUTOMATIC GEARBOX - 'CVT', Adjustments.***

DIPSTICK TUBE SEAL

Service repair no - 44.24.01

Remove

1. Remove air cleaner. ***See ENGINE MANAGEMENT SYSTEM - MEMS, Repairs.***

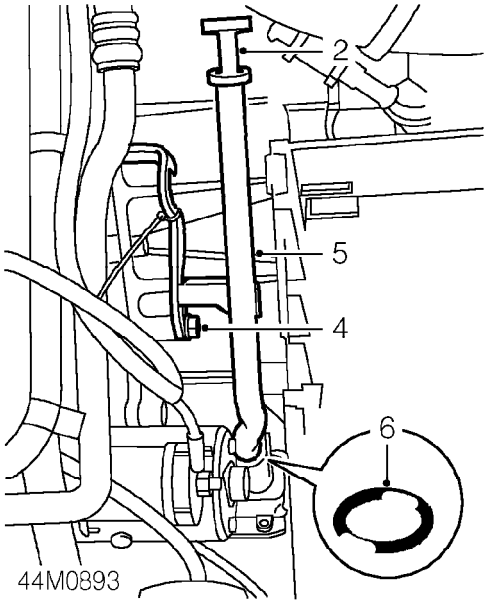

2. Remove dipstick from tube.
3. Clean gearbox case around dipstick tube entry point.
4. Remove bolt securing dipstick tube bracket to gearbox.
5. Remove dipstick tube from gearbox.
6. Remove and discard 'O' ring from gearbox.

Refit

1. Clean dipstick tube and its mating face on gearbox.
2. Lubricate new 'O' ring with gearbox fluid and fit to end of dipstick tube.
3. Fit and align dipstick tube to gearbox.
4. Fit bolt securing dipstick tube to gearbox and tighten to 25 Nm.
5. Fit dipstick.
6. Fit air cleaner. ***See ENGINE MANAGEMENT SYSTEM - MEMS, Repairs.***

FLUID PAN GASKET

Service repair no - 44.24.04

Remove

1. Raise front of vehicle.

WARNING: Support on safety stands.

2. Drain gearbox fluid. ***See AUTOMATIC GEARBOX - 'CVT', Adjustments.***

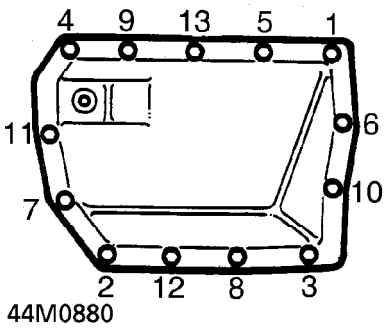

3. Working in the sequence illustrated, loosen then remove 13 bolts securing fluid pan to gearbox.
4. Release gasket from gearbox, remove fluid pan and discard gasket.

Refit

1. Clean mating faces of fluid pan and gearbox.
2. Lubricate new gasket with gearbox fluid and fit to fluid pan.

CAUTION: Do not apply adhesive to gasket.

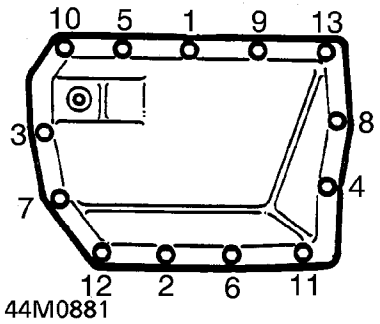

3. Fit 13 bolts securing fluid pan to gearbox and working in the sequence illustrated, tighten to 10 Nm.
4. Refill gearbox with fluid. ***See AUTOMATIC GEARBOX - 'CVT', Adjustments.***
5. Remove stand(s) and lower vehicle.

FLUID COOLER

Service repair no - 44.24.10

Remove

1. Remove front bumper. ***See BODY, Exterior fittings.***
2. Position container to collect fluid loss.

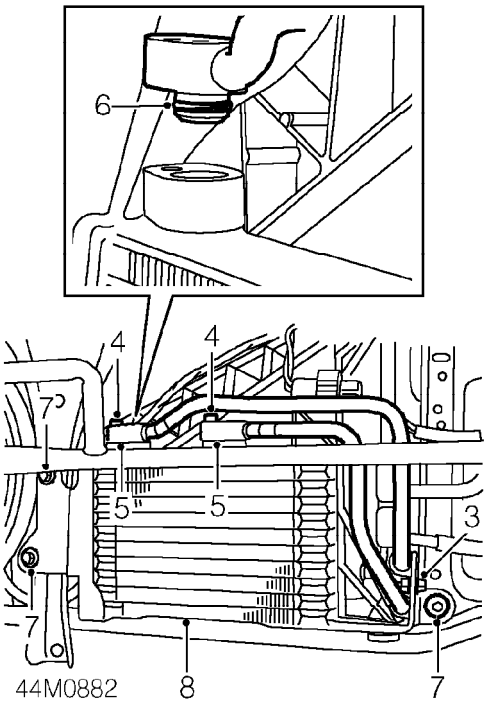

3. Remove nut and bolt securing pipe clamp to fluid cooler.
4. Remove two 5 mm Allen bolts securing feed and return pipes to fluid cooler.
5. Release feed and return pipes from fluid cooler.
6. Remove and discard 'O' rings from pipe connections.
7. Remove 3 bolts securing fluid cooler to body.
8. Remove fluid cooler and collect spacer.

Refit

1. Position fluid cooler and spacer to body, fit bolts and tighten to 10 Nm.
2. Clean feed and return pipe unions.
3. Lubricate and fit new 'O' rings to feed and return pipe connections.
4. Connect feed and return pipes to fluid cooler.
5. Fit Allen bolts securing feed and return pipes to fluid cooler and tighten to 5 Nm.
6. Position pipe clamp, fit nut and bolt and tighten to 10 Nm.
7. Fit front bumper. ***See BODY, Exterior fittings.***
8. Top-up gearbox fluid. ***See AUTOMATIC GEARBOX - 'CVT', Adjustments.***

FLUID COOLER FEED HOSE/PIPE

Service repair no - 44.24.13

Remove

1. Remove front bumper. ***See BODY, Exterior fittings.***
2. Position container to collect fluid loss.

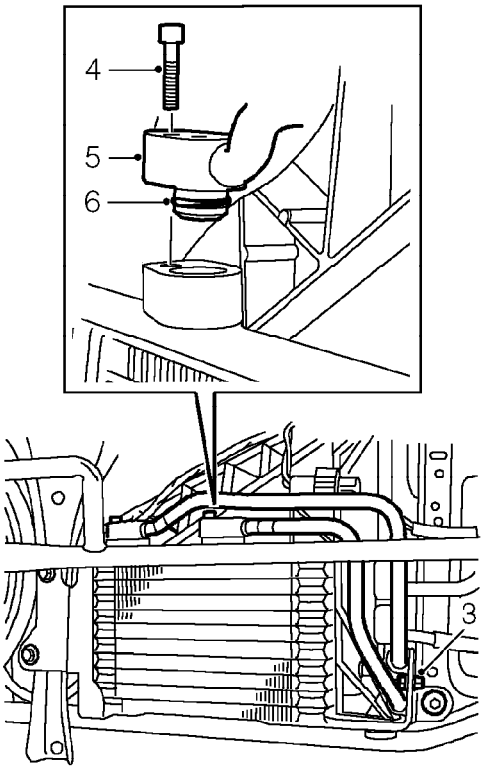

44M0883A

3. Remove nut and bolt securing pipe clamp to fluid cooler.
4. Remove 5mm Allen bolt securing pipe to fluid cooler.
5. Release pipe connection from fluid cooler.
6. Remove and discard 'O' ring from pipe connection.

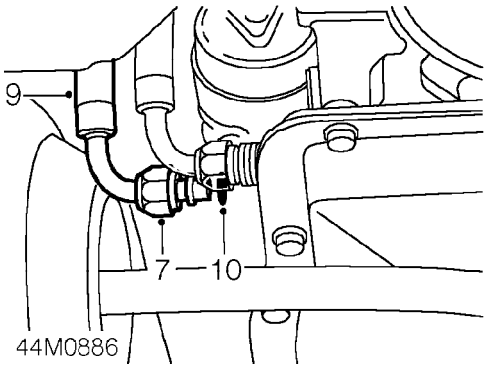

7. Loosen union securing fluid cooler feed hose to gearbox.
8. Disconnect feed hose union from gearbox.
9. Remove fluid cooler feed hose.
10. Remove and discard 'O' ring from union.

Refit

1. Clean unions on fluid cooler, feed hose and gearbox.
2. Lubricate and fit new 'O' rings to fluid cooler feed hose.
3. Position fluid cooler feed hose.
4. Connect feed hose to gearbox and tighten union to 37 Nm.
5. Connect feed hose to fluid cooler, fit Allen bolt and tighten to 5 Nm.
6. Position pipe clamp, fit nut and bolt and tighten to 10 Nm.
7. Fit front bumper. ***See BODY, Exterior fittings.***
8. Top-up gearbox fluid. ***See Adjustments.***

FLUID COOLER RETURN HOSE/PIPE

Service repair no - 44.24.14

Remove

1. Remove front bumper. ***See BODY, Exterior fittings.***
2. Position container to collect fluid loss.

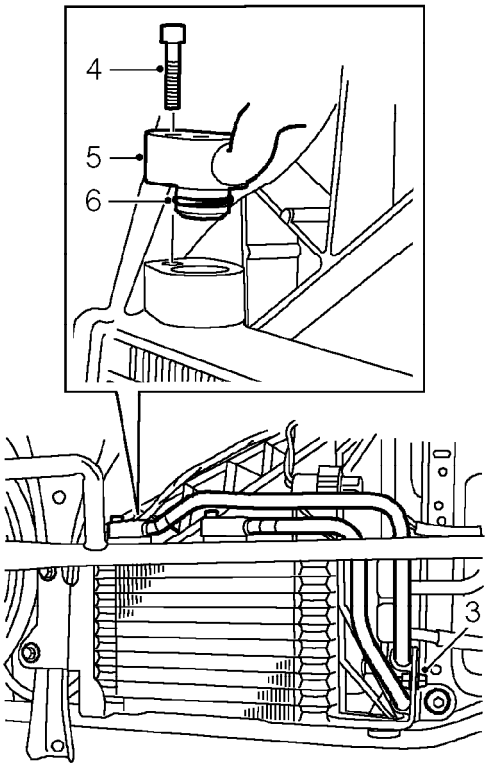

3. Remove nut and bolt securing pipe clamp to fluid cooler.
4. Remove 5 mm Allen bolt securing pipe to fluid cooler.
5. Release pipe connection from fluid cooler.
6. Remove and discard 'O' ring from pipe connection.

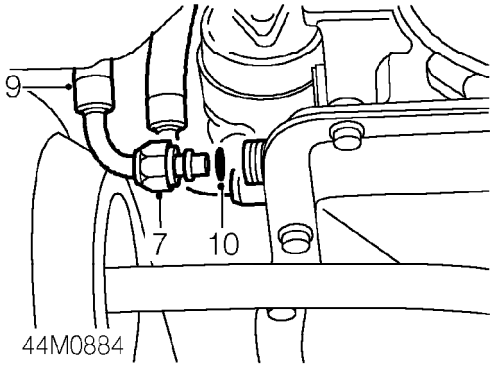

7. Loosen union securing fluid cooler return hose to gearbox.
8. Disconnect return hose union from gearbox.
9. Remove fluid cooler return hose.
10. Remove and discard 'O' ring from union.

Refit

1. Clean unions on fluid cooler, return hose and gearbox.
2. Lubricate and fit new 'O' rings to fluid cooler return hose.
3. Position fluid cooler return hose.
4. Connect return hose to gearbox and tighten union to 37 Nm.
5. Connect return hose to fluid cooler, fit Allen bolt and tighten to 5 Nm.
6. Position pipe clamp, fit nut and bolt and tighten to 10 Nm.
7. Fit front bumper. ***See BODY, Exterior fittings.***
8. Top-up gearbox fluid. ***See Adjustments.***

DIFFERENTIAL OIL SEAL

Service repair no - 54.10.18

Remove

1. Raise front of vehicle.

WARNING: Support on safety stands.

2. Remove front road wheel.
3. Disconnect multiplug from starter inhibitor/reverse switch.
4. Position container to collect fluid loss from gearbox.

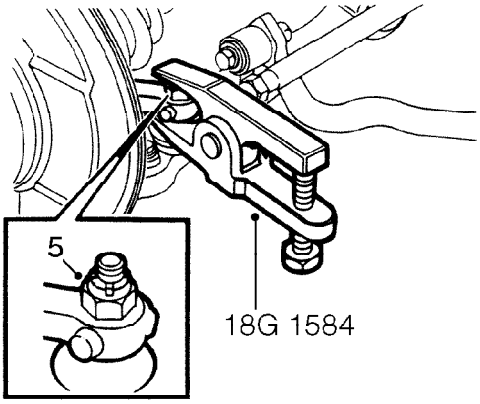

54M0097

5. Remove nut securing steering rack track rod end to front hub.
6. Break taper joint using tool **18G 1584.**
7. Disconnect track rod end from front hub.

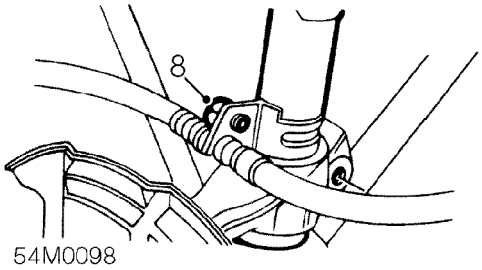

54M0098

8. Remove bolt securing brake hose to front damper.

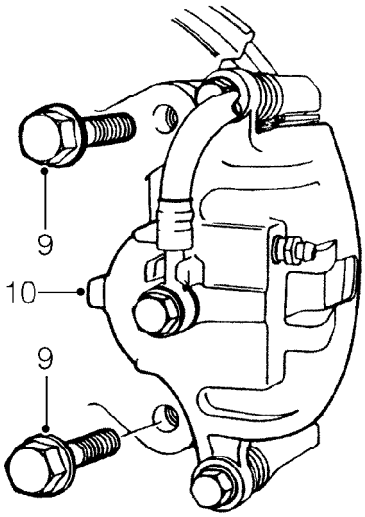

54M0099

9. Remove 2 bolts and collect washers securing brake caliper to front hub.
10. Release brake caliper from front hub and tie aside.

CAUTION: Do not allow caliper to hang on brake hose.

Models with ABS

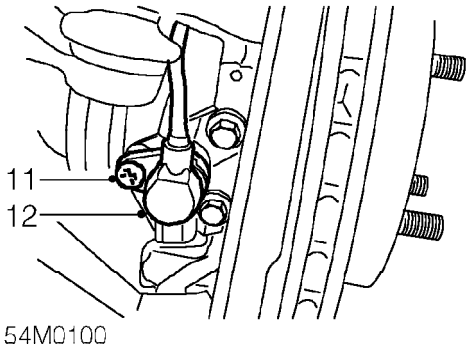

11. Remove Tx30 Torx bolt securing ABS sensor to front hub.
12. Release ABS sensor from front hub and position aside.

All models

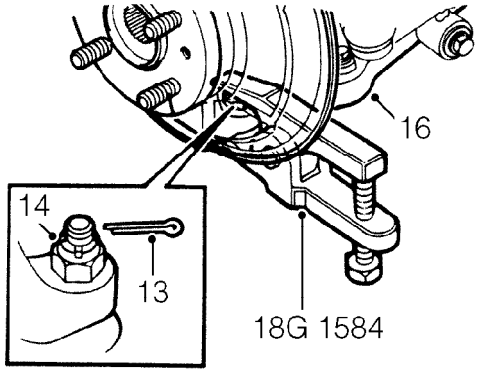

13. Remove and discard split pin from castellated nut securing front hub to suspension lower arm.
14. Loosen castellated nut securing front hub to suspension lower arm, until flush with the end of the joint. If necessary, apply penetrating oil to joint.
15. Break taper joint using tool **18G 1584** .

CAUTION: Be careful not to damage the rubber boot on lower ball joint.

16. Remove nut from lower ball joint and release suspension lower arm from front hub.

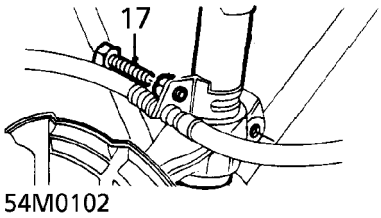

17. Remove pinch bolt securing front hub to damper.

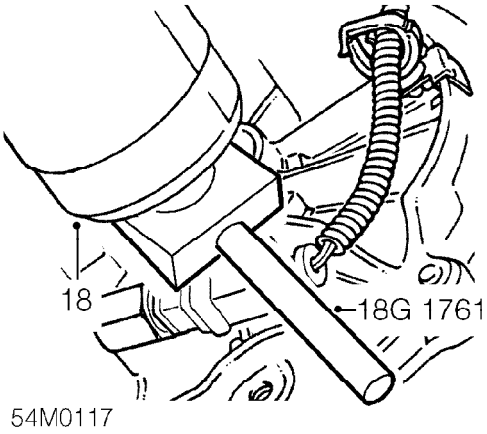

18. With an assistant carefully pulling hub assembly outwards, use tool **18G 1761,** to release drive shaft from differential.

CAUTION: Pull drive shaft horizontally to avoid damaging differential oil seal.

19. Remove drive shaft and front hub assembly.

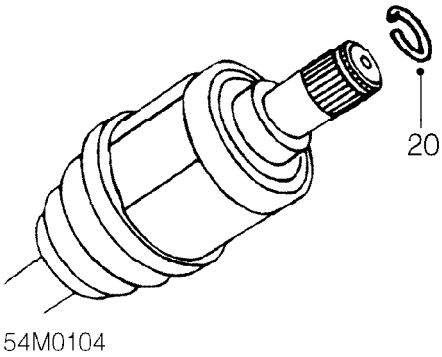

20. Remove and discard circlip from drive shaft.

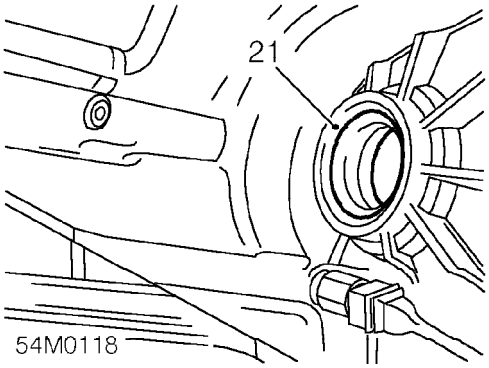

21. Carefully prise oil seal out of differential housing and discard oil seal.

Refit

1. Thoroughly clean oil seal recess and splines of drive shaft.
2. Lubricate new oil seal with gearbox fluid. ***See INFORMATION, Capacities, fluids and lubricants.***

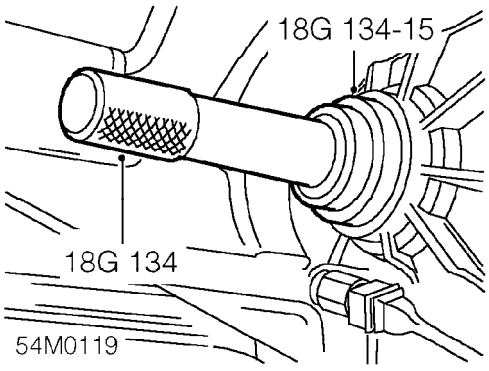

3. Locate new seal on tools **18G 134-15** and **18G 134** with sealing lip facing towards differential housing.
4. Carefully drift oil seal into differential housing until it is fully seated in recess.
5. Remove tools **18G 134-15** and **18G 134.**
6. Fit new circlip to drive shaft.
7. Engage drive shaft in differential and push fully home.

CAUTION: Pull drive shaft to ensure circlip is fully engaged and retains shaft.

8. Clean lower ball joint and mating face of front hub.

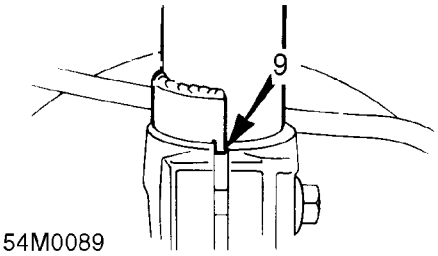

9. Connect front hub to front damper. Ensure locating lug on damper engages in slot on hub.
10. Locate front hub on suspension lower arm ball joint.
11. Fit castellated nut securing hub to suspension lower arm and tighten to 55 Nm, then align next slot in nut with split pin hole.
12. Secure castellated nut with new split pin.
13. Fit pinch bolt securing damper to front hub and tighten to 80 Nm.
14. Fit brake caliper to front hub.
15. Fit 2 bolts and washer securing brake caliper to front hub and tighten to 108 Nm.
16. *Models with ABS:* Fit ABS sensor to front hub, fit Torx bolt and tighten to 10 Nm.
17. Align brake hose bracket to front damper , fit bolt and tighten to 10 Nm.
18. Connect steering rack track rod end to front hub, fit nut and tighten to 45 Nm.
19. Fit road wheel(s) and tighten nuts to correct torque. ***See INFORMATION, Torque wrench settings.***
20. Remove container positioned to collect gearbox fluid.
21. Connect multiplug to starter inhibitor/reverse switch.
22. Remove stand(s) and lower vehicle.
23. Top-up gearbox fluid. ***See AUTOMATIC GEARBOX - 'CVT', Adjustments.***

PRIMARY BEARING

Service repair no - 44.36.14

Remove

1. Remove air cleaner. ***See ENGINE MANAGEMENT SYSTEM - MEMS, Repairs.***

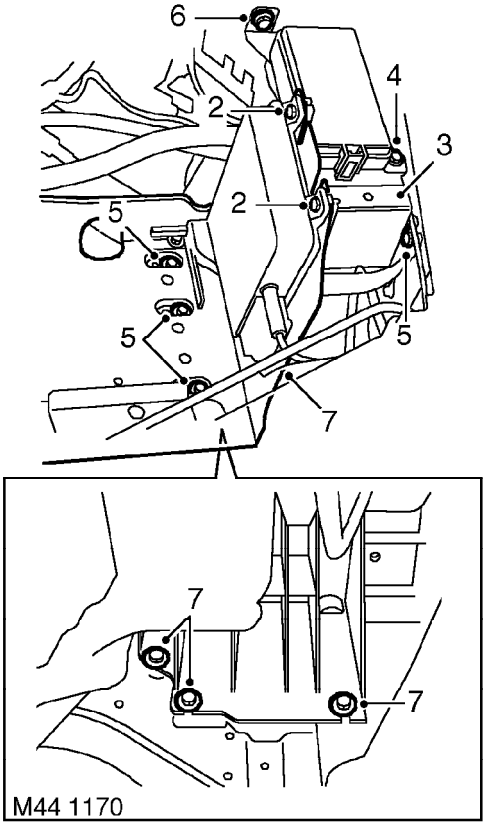

2. Loosen 2 bolts and release engine management ECM from battery tray and move aside.
3. Release relay module and ABS fuse holder from battery tray and move aside.
4. Remove bolt securing engine compartment fuse box to battery tray.
5. Remove 4 bolts securing battery tray to body.
6. Remove bolt securing engine compartment fuse box to body and move fuse box aside.
7. Loosen 3 bolts securing battery tray to body and remove battery tray.

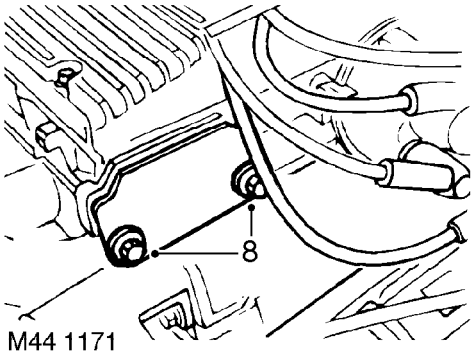

8. Remove 2 bolts securing camshaft rear cover plate to cylinder head and remove plate.

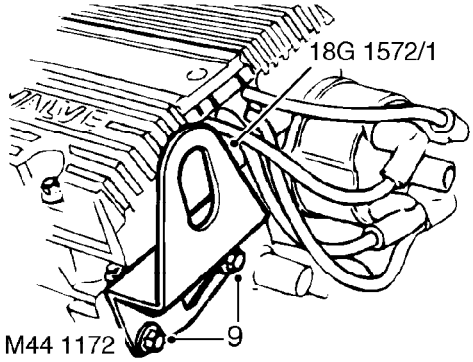

9. Fit lifting bracket**18G 1572/1** to cylinder head, fit and tighten bolts to 10 Nm.
10. Remove gearbox primary cover. ***See this section.***
11. Connect hoist to lifting bracket and support weight of engine/gearbox.
12. Remove nut securing LH gearbox mounting to bracket, remove keyed washer.
13. Lower engine/gearbox sufficient to gain access to primary housing.

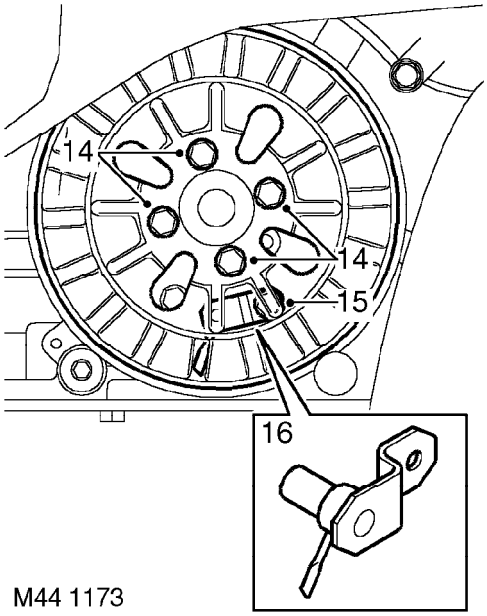

14. Remove and discard 4 bolts securing engine pitot chamber to oil pump drive.
15. Rotate pitot chamber sufficient to remove lower RH oil pump bolt which secures the engine pitot tube.
16. Rotate pitot tube 180°anti-clockwise and remove pitot chamber, collect pitot tube.

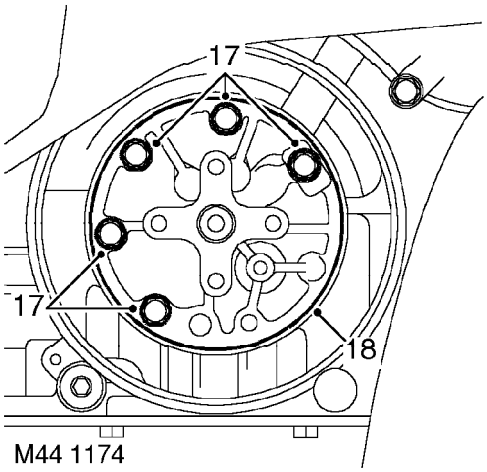

17. Remove 5 remaining bolts securing oil pump.
18. With care, position 2 levers 180 °apart and remove oil pump.

NOTE: To prevent damage to primary housing, place 2 pieces of wood between levers and primary housing when removing oil pump.

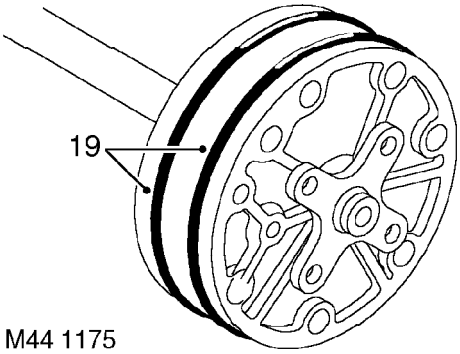

M44 1175

19. Remove and discard 2 'O' rings from oil pump.

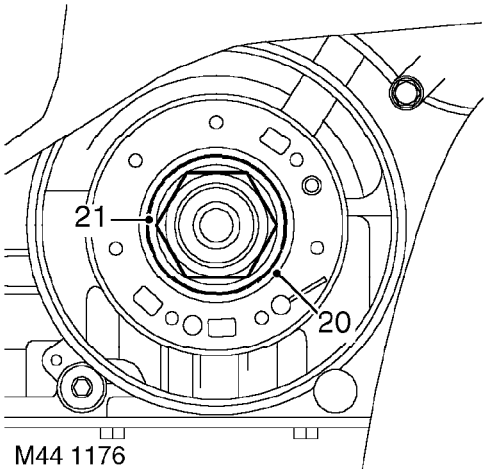

M44 1176

20. Remove and discard Belleville washer.
21. Using an air impact wrench with a torque capacity of ±300 Nm, remove primary bearing nut.

NOTE: Initially start to undo nut in the minimum position of the impact wrench, increase torque until nut is released.

22. Using a small screwdriver, lever out seal from primary bearing.

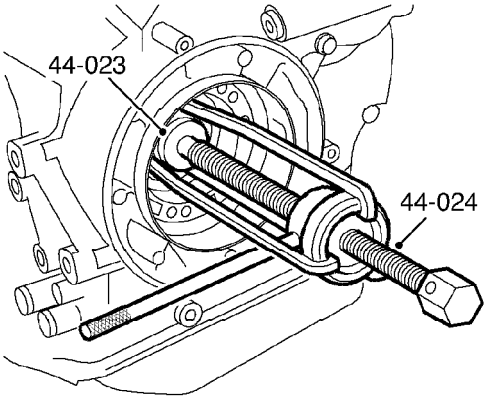

M44 1177A

23. Position thrust button **44-023** into primary shaft.
24. Assemble tool **44-024** underneath the exterior ring of primary bearing.
25. Tighten centre bolt of tool **44-024** and remove primary bearing.

Refit

1. Clean primary bearing bore and shaft.
2. Clean sealant from threads in oil pump drive shaft and clean oil pump housing.
3. Position primary bearing, numbers on bearing facing outwards.

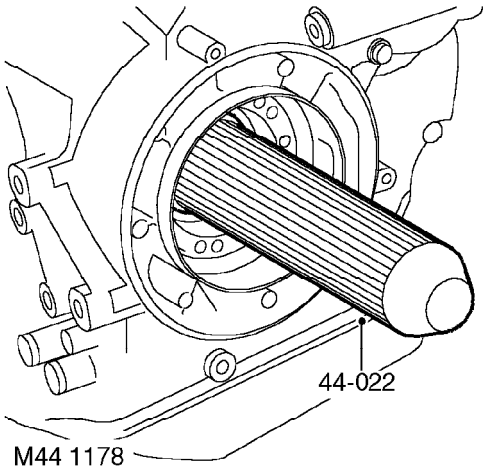

M44 1178

4. Drift in primary bearing using tool **44-022.**
5. Fit and tighten nut using an air impact wrench for sufficient duration until a minimum torque of 180 Nm is achieved.
6. Fit new Belleville washer.

7. Lubricate and fit new ’O’ rings to oil pump.
8. Position oil pump into gearbox, aligning feeder and pitot tube channels.
9. Fit 5 bolts and tighten in a diagonal sequence to 10 Nm.
10. Lubricate and fit new primary cover ’O’ ring to gearbox housing.
11. Position pitot tube in oil pump, fit pitot chamber ensuring pitot tube is located in oil pick-up channel in pitot chamber.
12. Rotate pitot chamber sufficient to align pitot tube, fit remaining oil pump bolt and tighten to 10 Nm.
13. Align pitot chamber to oil pump drive, fit new bolts and tighten to 10 Nm.
14. Fit primary cover. ***See this section.***
15. Raise engine/gearbox with hoist to align lH gearbox mounting to bracket.
16. Fit special washer and nut, tighten nut.
17. Release hoist from lifting bracket.
18. Remove lifting bracket from cylinder head.
19. Clean camshaft rear cover plate and mating face.
20. Fit camshaft cover plate and tighten bolts to 10 Nm.
21. Position battery tray and tighten 3 bolts securing battery tray to body to 10 Nm.
22. Position engine compartment fuse box to body, fit and tighten bolt to 10 Nm.
23. Fit 4 bolts securing battery tray to body and tighten to 10 Nm.
24. Fit and tighten bolt securing engine compartment fuse box to battery tray.
25. Position relay module and ABS fuse holder to battery tray.
26. Position engine management ECM to battery tray and tighten bolts to 10 Nm.
27. Fit air cleaner. ***See ENGINE MANAGEMENT SYSTEM - MEMS, Repairs.***

CONTENTS

Page

DESCRIPTION AND OPERATION
DRIVE SHAFT COMPONENTS 1
OPERATION 2

REPAIRS
DRIVE SHAFT 1
DRIVE SHAFT GAITER - OUTER 2
DRIVE SHAFT JOINT - OUTER 3
DRIVE SHAFT GAITER - INNER 4
DRIVE SHAFT AND INNER JOINT 4
DRIVE SHAFT DAMPER 5

DRIVE SHAFT COMPONENTS

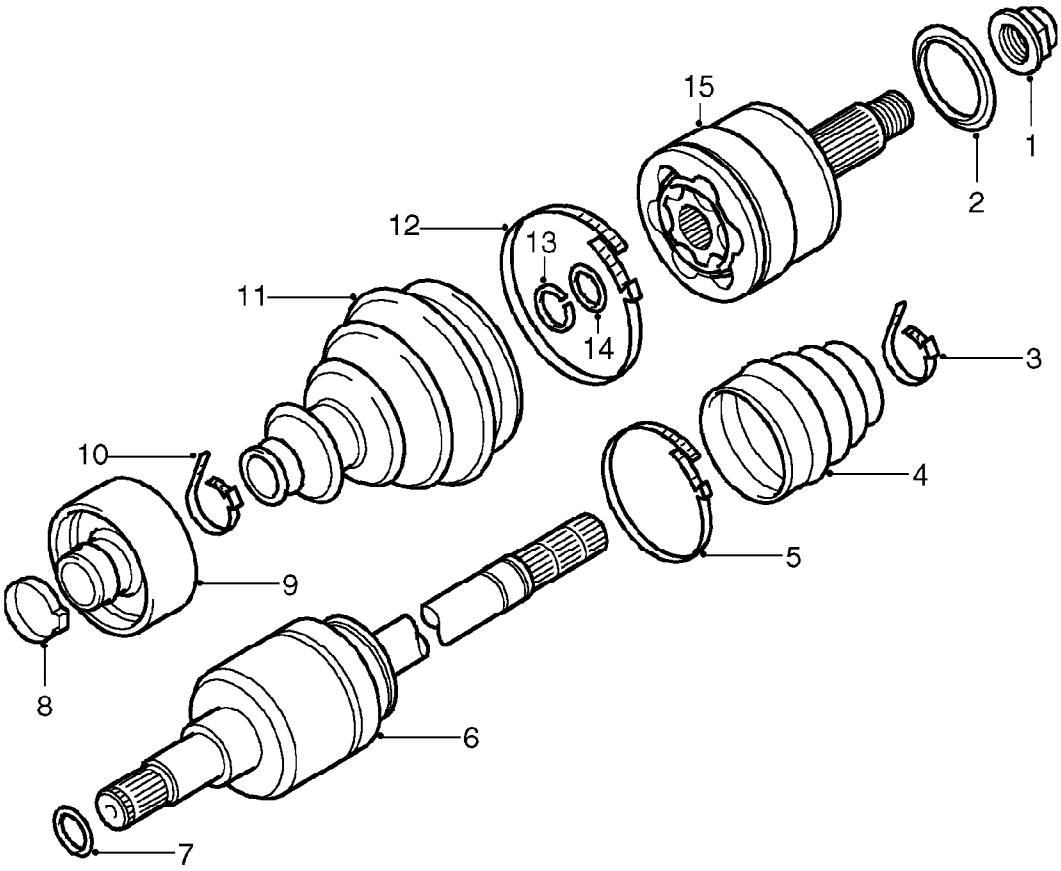

47M0173

1. Drive shaft nut
2. Seal
3. Small clip - inner joint gaiter
4. Gaiter
5. Large clip - inner joint gaiter
6. Inner joint and shaft
7. Circlip
8. Damper clip
9. Dynamic damper
10. Small clip - outer joint gaiter
11. Gaiter
12. Large clip - outer joint gaiter
13. Stopper ring
14. Circlip
15. Outer joint

OPERATION

Drive from the power unit is transmitted to the front wheels by the drive shafts. Both drive shafts are fitted with dynamic dampers to reduce harmonic vibration.

The inner joint is of the tripode type with spherical bushing to reduce sliding resistance. The shaft and inner joint are serviced as an assembly. The outer joint is of the ball and socket type and can be serviced independently. The joints are sealed and pre-packed with grease.

DRIVE SHAFT

Service repair no - 47.10.01

Remove

1. Raise front of vehicle.

WARNING: Support on safety stands.

2. Remove front road wheel.
3. Remove front hub. ***See FRONT SUSPENSION, Repairs.***

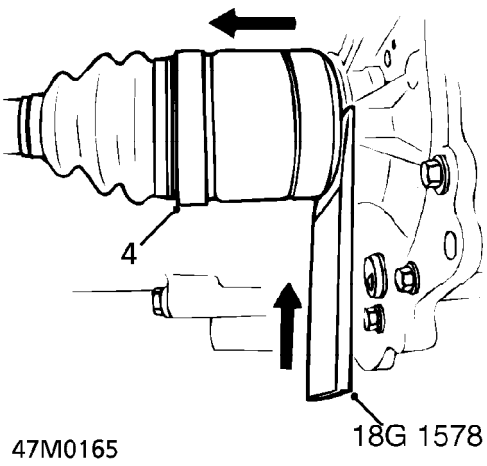

47M0165

4. Release drive shaft from differential.
   'R65' gearbox use tool **18G 1578.**
   'PG1' gearbox use tool **18G 1761.**

CAUTION: Pull the drive shaft joint horizontally to avoid damaging differential oil seal.

5. Remove drive shaft.

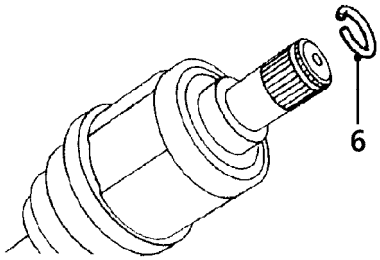

47M0166

6. Remove circlip from drive shaft and discard.
7. Inspect seal adjacent to outer joint and renew if worn or damaged.

Refit

1. Wipe drive shaft ends, hub and differential oil seal.
2. Lubricate oil seal running surfaces.
3. Fit new circlip to drive shaft.
4. Fit drive shaft to differential and push fully home to engage circlip.
5. Fit front hub. ***See FRONT SUSPENSION, Repairs.***
6. Fit road wheel(s) and tighten nuts to correct torque. ***See INFORMATION, Torque wrench settings.***
7. Remove stand(s) and lower vehicle.
8. Check and top up gearbox oil. ***See MAINTENANCE.***

DRIVE SHAFT GAITER - OUTER

Service repair no - 47.10.03

Remove

1. Raise front of vehicle.

WARNING: Support on safety stands.

2. Remove drive shaft outer joint. ***See this section.***
3. Slide gaiter from shaft.

Refit

1. Clean drive shaft and gaiter.
2. Fit new gaiter to shaft.
3. Fit drive shaft outer joint. ***See this section.***
4. Remove stand(s) and lower vehicle.

DRIVE SHAFT JOINT - OUTER

Service repair no - 47.10.04

Remove

1. Raise front of vehicle.

WARNING: Support on safety stands.

2. Remove drive shaft. ***See this section.***
3. Place drive shaft in vice.

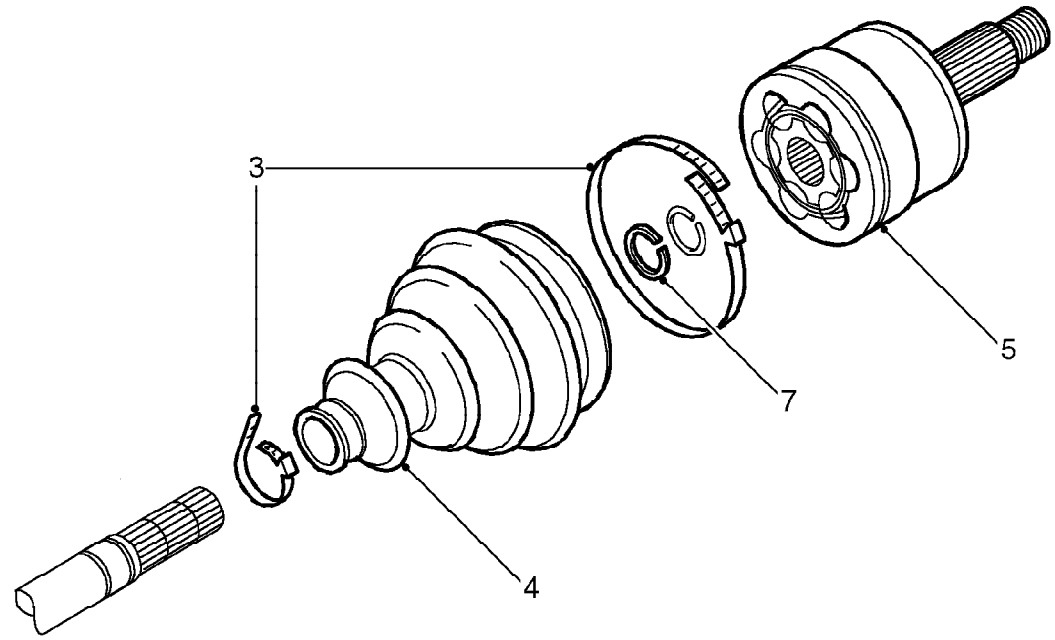

47M0162

4. Release both gaiter clips and discard.
5. Slide gaiter along shaft to gain access to outer joint.
6. Using a suitable drift against the inner part of joint, remove joint from shaft.
7. Inspect gaiter for damage and renew if necessary.
8. Remove circlip from shaft and discard.

Refit

1. Clean drive shaft and gaiter.
2. Fit new circlip to shaft.
3. Position outer joint to shaft, use a screwdriver to press circlip into its groove and push joint fully onto shaft.
4. Apply grease from the sachet to the joint.
5. Position gaiter to joint and use a Band-it thriftool to secure the 2 new clips.
6. Fit drive shaft. ***See this section.***
7. Remove stand(s) and lower vehicle.

DRIVE SHAFT GAITER - INNER

Service repair no - 47.10.16

Remove

1. Raise front of vehicle.

WARNING: Support on safety stands.

2. Remove drive shaft damper. ***See this section.***
3. Release both gaiter clips and discard.
4. Slide gaiter from shaft.

Refit

1. Clean shaft and gaiter.
2. Fit gaiter to shaft.
3. Secure gaiter with clips.
4. Fit drive shaft damper. ***See this section.***
5. Remove stand(s) and lower vehicle.

DRIVE SHAFT AND INNER JOINT

Service repair no - 47.10.25

Remove

1. Raise front of vehicle.

WARNING: Support on safety stands.

2. Remove drive shaft outer joint. ***See this section.***

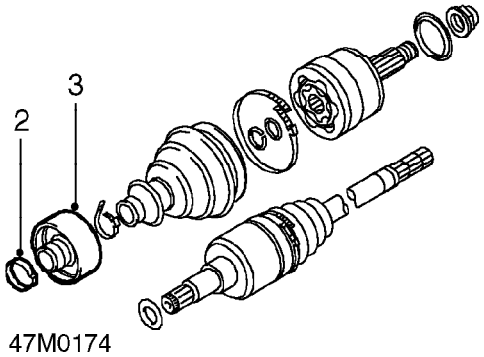

3. Release damper securing clip and discard.
4. Slide damper from shaft.
5. Fit new drive shaft to vice.

Refit

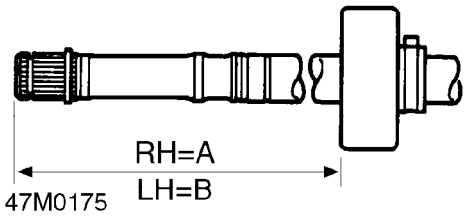

1. Measure along shaft for fitting of the new damper.
   1.4 Models:
   R.H. shaft **'A'**= 405 mm - 411 mm
   L.H. shaft **'B'**= 148 mm - 154 mm
2. Mark the shaft for fitting position.
3. Lubricate shaft to aid fitting of damper.
4. Position new clip on shaft.
5. Fit new damper to shaft with flange facing inner joint.

NOTE: Dampers for L.H. and R.H. shafts are not interchangeable.

6. Fit clip around damper flange and secure.
7. Clean lubricant from shaft.
8. Fit drive shaft outer joint. ***See this section.***
9. Remove stand(s) and lower vehicle.

DRIVE SHAFT DAMPER

Service repair no - 47.10.33

The procedure for renewing the drive shaft damper is identical to that for renewing the drive shaft and inner joint. Refer to Drive shaft and inner joint for further details. ***See this section.***

CONTENTS

Page

DESCRIPTION AND OPERATION

STEERING WHEEL COMPONENTS 1
STEERING COLUMN COMPONENTS 2
MANUAL STEERING RACK COMPONENTS 3
POWER STEERING RACK COMPONENTS 4
STEERING COLUMN OPERATION 5
POWER STEERING OPERATION 6

ADJUSTMENTS

FRONT WHEEL ALIGNMENT 1
REAR WHEEL ALIGNMENT 2
POWER STEERING SYSTEM BLEED - 'K' SERIES 3
POWER STEERING SYSTEM BLEED - 'L' SERIES 4
POWER STEERING PUMP DRIVE BELT - 'K' SERIES 5

REPAIRS

MANUAL STEERING RACK 1
POWER STEERING RACK - 'K' SERIES 3
POWER STEERING RACK - 'L' SERIES 6
POWER STEERING PUMP DRIVE BELT - 'K' SERIES - WITH MANUAL TENSIONER 9
POWER STEERING PUMP DRIVE BELT - 'L' SERIES 9
POWER STEERING PUMP - 'K' SERIES 10
POWER STEERING PUMP - 'L' SERIES MODELS WITHOUT AIR CONDITIONING 11
POWER STEERING PUMP - 'L' SERIES MODELS WITH AIR CONDITIONING 13
STEERING RACK GAITER 15
STEERING COLUMN ASSEMBLY 16
STEERING COLUMN NACELLE 18
STEERING LOCK 19
TRACK ROD END 20
STEERING WHEEL 21
POWER STEERING PUMP DRIVE BELT - 'K' SERIES - WITH AUTOMATIC TENSIONER 22

STEERING WHEEL COMPONENTS

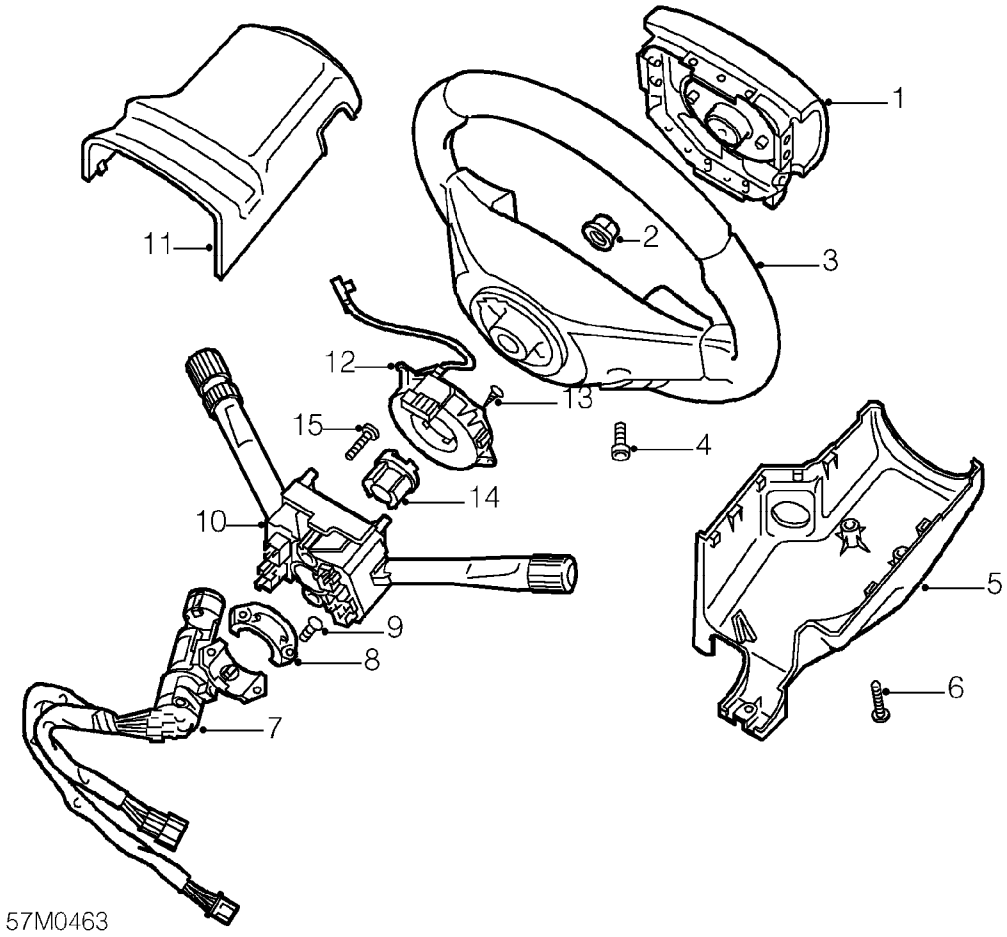

1. Driver's airbag module
2. Self-locking nut
3. Steering wheel
4. Torx bolt
5. Nacelle - lower half
6. Screw
7. Steering lock assembly
8. Bracket - steering lock assembly
9. Shear bolt
10. Lighting, turn and wiper switch assembly
11. Nacelle - upper half
12. Rotary coupler
13. Screw - self-tapping
14. Cancel cam - indicator switch
15. Screw

STEERING COLUMN COMPONENTS

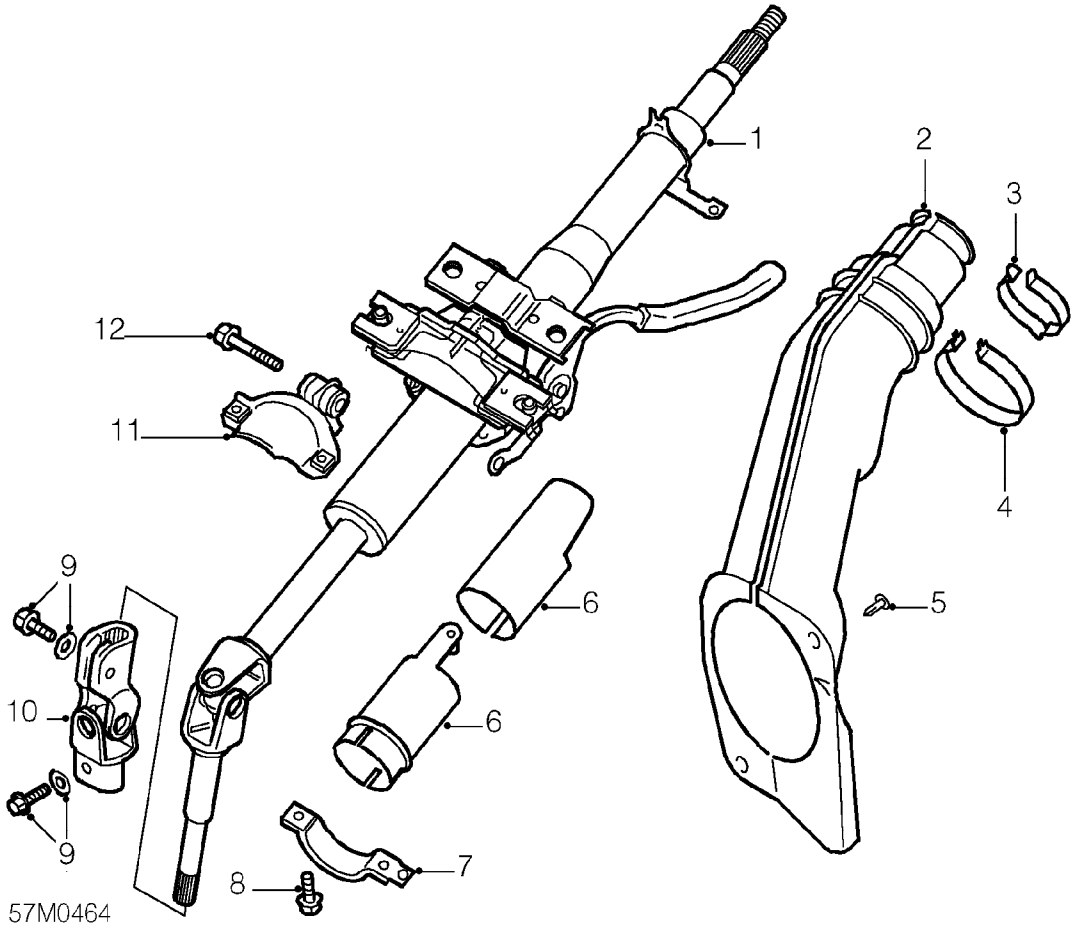

1. Steering column assembly
2. Cover - steering joint
3. Clip - cover
4. Clip - cover
5. Trim clip - cover
6. Retainer collar - steering column
7. Lower clamp - upper half
8. Bolt - lower clamp
9. Bolt and lock washer - internal
10. Universal joint
11. Lower clamp - lower half
12. Bolt

MANUAL STEERING RACK COMPONENTS

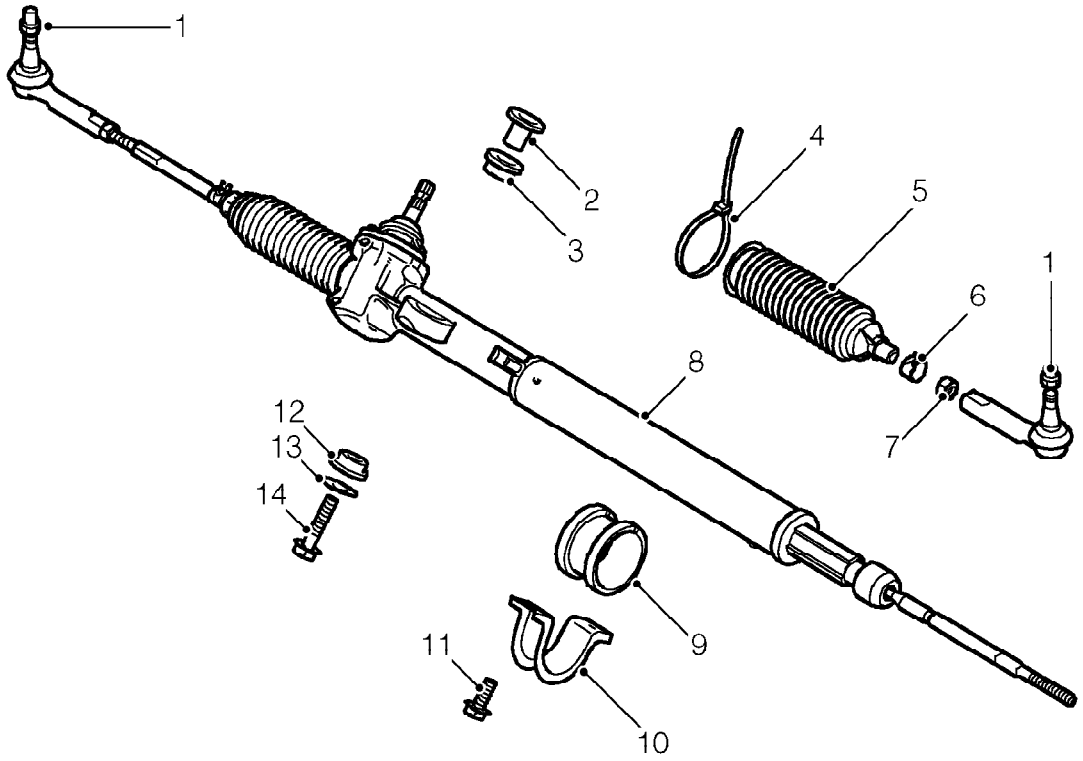

1. Nut
2. Collar - mounting bush
3. Mounting bush
4. Cable tie
5. Gaiter
6. Clip - gaiter to track rod
7. Locknut - track rod end
8. Steering gear assembly
9. Mounting rubber - cushion
10. Clamp
11. Bolt - clamp
12. Mounting bush
13. Plain washer
14. Bolt - mounting

POWER STEERING RACK COMPONENTS

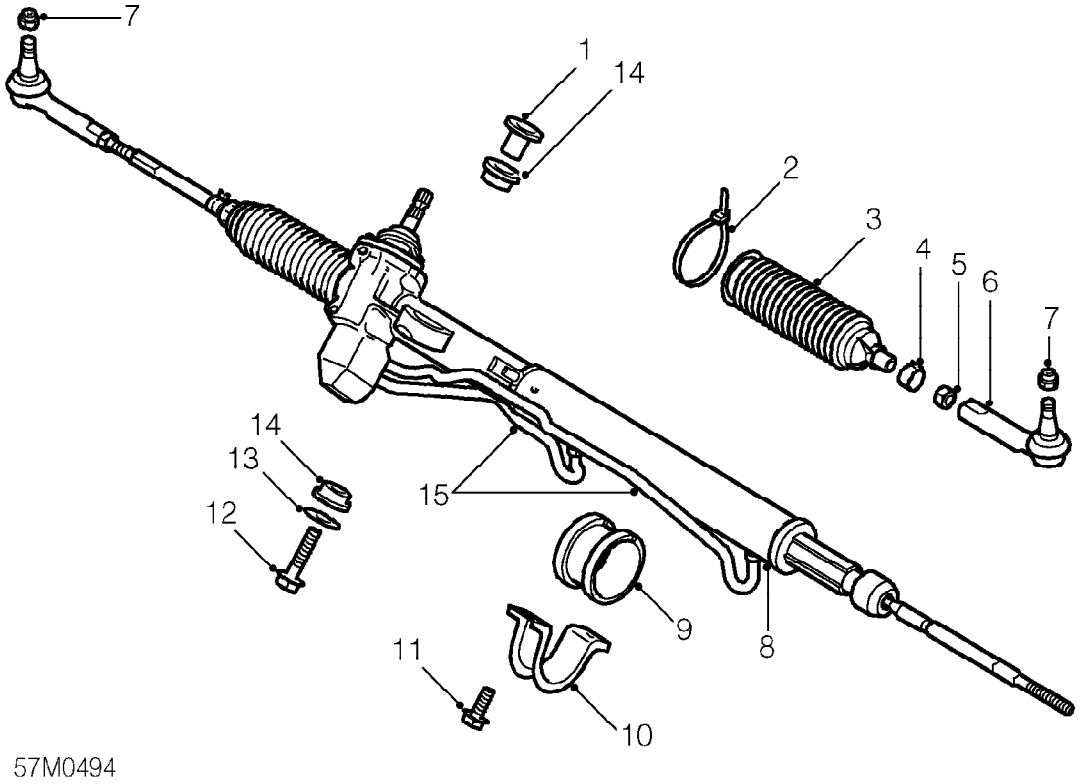

1. Collar - mounting bush
2. Cable tie
3. Gaiter
4. Clip - gaiter to track rod
5. Locknut - track rod end
6. Track rod end
7. Nut
8. Power steering gear assembly
9. Mounting rubber - cushion
10. Clamp
11. Bolt - clamp
12. Bolt - mounting
13. Plain washer
14. Mounting bush
15. Pipes - valve body to power cylinders

STEERING COLUMN OPERATION

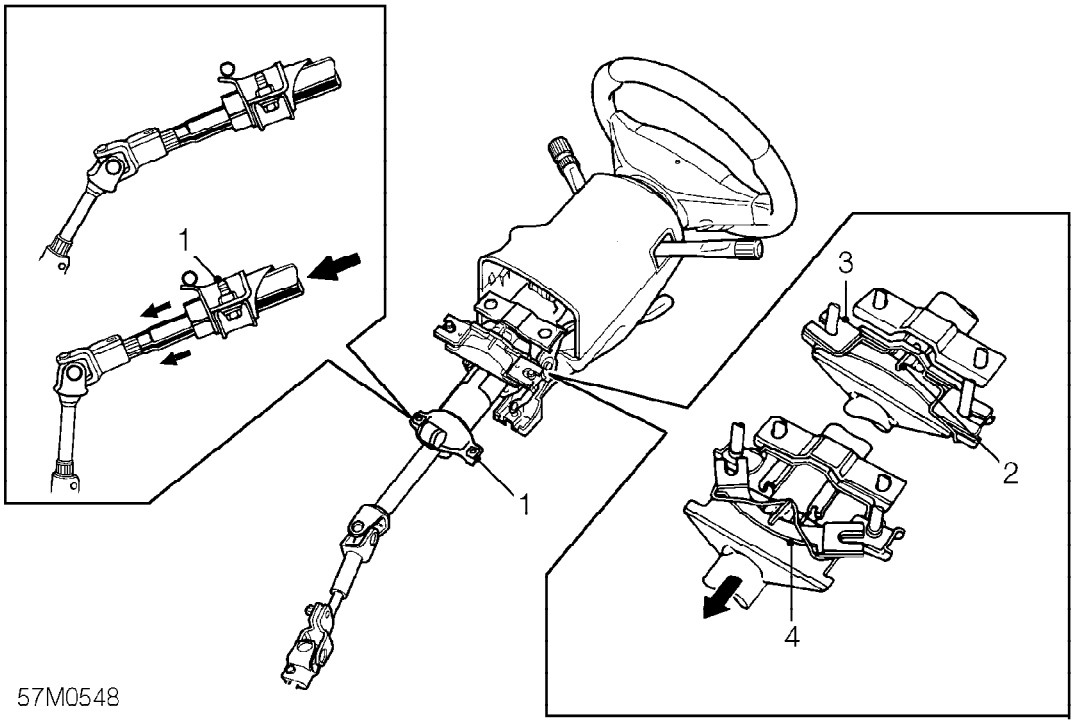

1. Clamp - lower column
2. Claw - upper column
3. Energy absorbing plate (before)
4. Energy absorbing plate (after)

The steering column contains a 2 piece collapsible steering shaft running in a bearing at its upper end and a bush at its base.

The steering column mountings are designed to deform and or move to absorb energy in the event of an impact. At its base, the clamp securing the column will allow it to slide when under load while at the opposite end of the column, a claw welded to the column engages upon an energy absorbing plate secured to the vehicle body. In the event of an impact, the column moves forward, bending the plate which absorbs energy as it deforms. Additional protection to the driver's face and upper torso is provided by the SRS airbag in the centre of the steering wheel. In the event of frontal impact, if the vehicle is exceeding a set speed, the airbag will inflate.

The upper end of the column is supported by a single bolt, held captive in the bracket by a locking plate. Releasing the column adjustment lever slackens the nut securing this bolt and allows movement along the slots in the support bracket thus providing adjustment of the column height.

When the steering wheel is moved, the turning effort of the shaft is transmitted to the pinion shaft of the steering rack by an intermediate shaft mounted between two universal joints. These joints allow for adjustments made to the column position and for the movement of the column in an impact.

POWER STEERING OPERATION

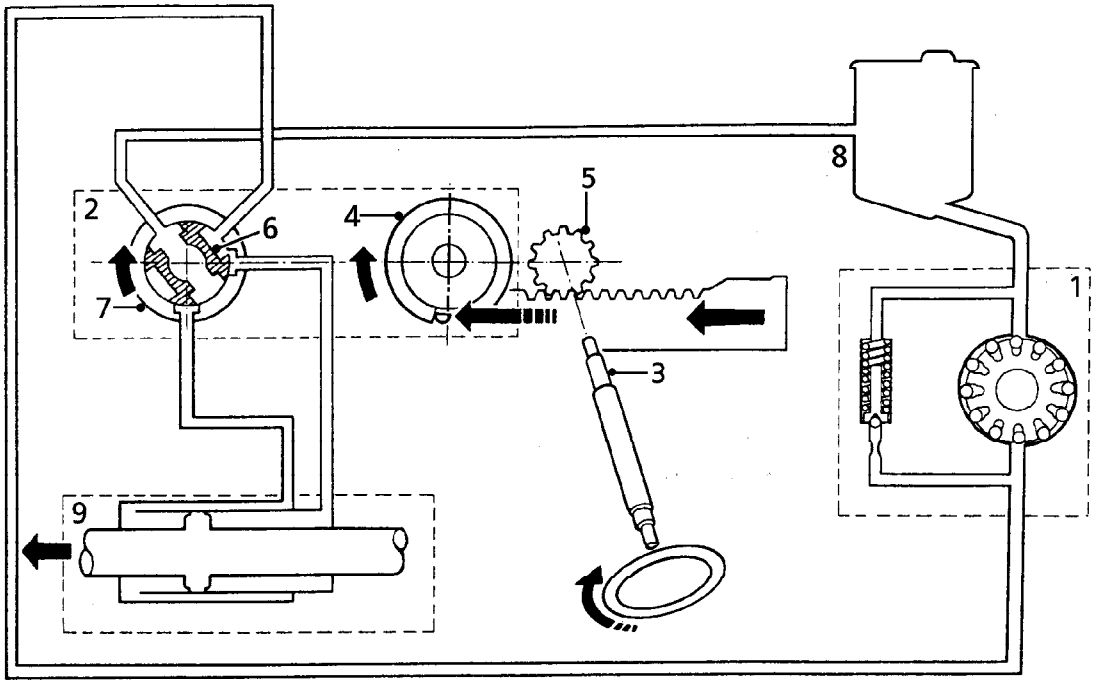

57M0566

1. Roller vane pump
2. Power valve
3. Pinion shaft
4. Spring ring
5. Pinion
6. Inner spool
7. Outer spool
8. Fluid reservoir
9. Steering rack

Operation

Power assistance is integral with the steering gear. Hydraulic pressure to operate the system is generated by a roller vane pump driven by a belt from the crankshaft pulley. Fluid direction is controlled by the steering gear power valve, the position of which is governed by a drive pin attached to the pinion shaft.

Between the pinion and shaft, drive is transmitted through a pre-loaded spring ring driven by a peg on the pinion shaft and riding on a similar peg on the pinion. When the steering wheel is turned at high steering loads the reaction force created by the rack against the pinion causes the spring ring to open out allowing the pinion to be left slightly behind the pinion shaft.

This change in alignment cause the power valve inner spool (attached to the pinion shaft) and the outer spool (attached to the pinion) to move in relation to each other, so opening ports and directing fluid.

Power steering fluid flows from the reservoir to the steering pump, from where it is pumped to the power valve on the steering rack. Depending upon which directional port is open, pressurised fluid is diverted to left or right chambers in the steering rack to provide power assisted steering.

The amount of assistance provided is dependent upon the steering effort required.

When driving at high speeds where the steering wheel movements are small and forces are low, such as lane changing, the reaction forces of the rack are insufficient to cause deflection of the spring ring and as a result the power valve does not operate. The steering gear is operating in its positive centre phase and responds as a manual steering system.

FRONT WHEEL ALIGNMENT

Service repair no - 57.65.01

Check

1. Ensure tyre pressures are correct and vehicle is at kerbside weight.
2. Roll vehicle backwards and forwards to relieve stresses in steering and suspension.
3. Ensure that equipment is properly calibrated and take an average of 3 readings.

NOTE: Only use equipment recommended in the STEP (Service Tools and Equipment Programme) Manual.

4. Check front wheel alignment is within tolerance.

NOTE: The following steering geometry settings are given in A - degrees and minutes, B - decimal parts of a degree and C - millimetres. Steering and Suspension geometry settings are for a vehicle at unladen weight.

DATA - EXCEPT BRM:
Front wheel alignment - toe-out - per side:
A- 0° 5' ±7.5'
B- 0.10° ±0.12°
C- 5J x 14 wheel = 0.53 mm ±0.80 mm
C- $5^1/_2$ J x 15 wheel = 0.60 mm ±0.84 mm

DATA - BRM:
Front wheel alignment - toe-out - per side:
A- 0° 5' ±7.5'
B- 0.10° ±0.12°
C- 0.61 mm ±0.85 mm

Adjust

1. Mark position of track rod ends for reference.

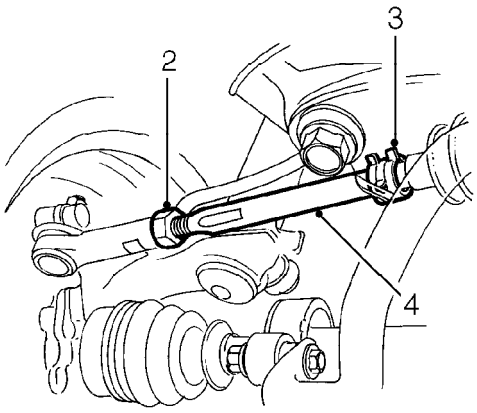

57M0478

2. Loosen track rod end locknuts.
3. Release clip securing gaiter to track rod.
4. Rotate track rod to obtain correct alignment.

CAUTION: Both track rods mut be rotated an equal amount.

5. Recheck front wheel alignment.
6. Tighten track rod end locknuts to 45 Nm.
7. Ensure gaiters are not strained or twisted, then secure with clip.

REAR WHEEL ALIGNMENT

Service repair no - 57.65.06

Check

1. Ensure tyre pressures are correct and vehicle is at unladen weight.
2. Roll vehicle backwards and forwards to relieve stresses in suspension.

NOTE: Only use equipment recommended in the STEP (Service Tools and Equipment Programme) Manual.

3. Ensure that equipment is properly calibrated and take an average of 3 readings.
4. Check rear wheel alignment is within tolerance.

NOTE: The following settings are given in A - degrees and minutes, B - decimal parts of a degree and C - millimetres. Settings are for a vehicle at unladen weight.

DATA - EXCEPT BRM:
Rear wheel alignment - toe-in - per side:
A- 0° 8' ± 0° 10'
B- 0.13° ± 0.21°
C- 5J x 14 wheel = 0.82 mm ± 1.03 mm
C- $5^1/_2$ J x 15 wheel = 0.88 mm ± 1.10 mm

Camber - negative:
A- 0° 20' ± 0° 10'
B- 0.33° ± 0.21°
C- 5J x 14 wheel = 2.10 mm ± 1.03 mm
C- $5^1/_2$ J x 15 wheel = 2.20 mm ± 1.10 mm

DATA - BRM:
Rear wheel alignment - toe-in - per side:
A- 0° 8' ± 0° 7.5'
B- 0.13° ± 0.12°
C- 0.93 mm ± 0.85 mm

Camber - negative:
A- 0° 20' ± 0° 45'
B- 0.33° ± 0.75°
C- 2.41 mm ± 5.32 mm

Adjust

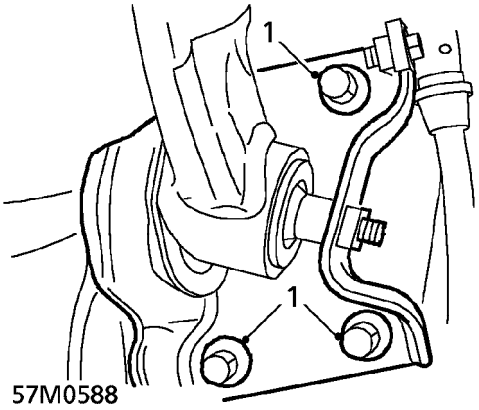

1. Loosen 3 bolts securing LH 'H' frame mounting bracket to body.
2. Adjust 'H' frame in the required direction to achieve correct wheel alignment.
   If LH wheel value is greater than RH, move LH side of 'H' frame rearwards.
   If LH wheel value is less than RH, move LH side of 'H' frame forwards.

CAUTION: Take care to avoid damaging wheel arch.

3. Maintain force on 'H' frame and tighten bolts, mounting bracket to body, to 100 Nm.
4. Recheck rear wheel alignment.
5. Repeat steps 1 to 4 if alignment is not within specific tolerances.

POWER STEERING SYSTEM BLEED - 'K' SERIES

Service repair no - 57.15.02

Check

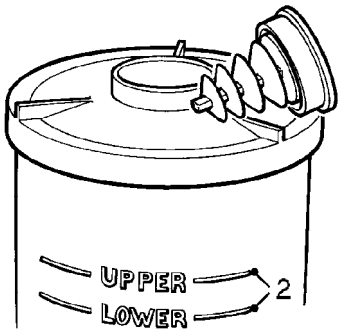

57M0353

1. Clean reservoir around filler cap and fluid level indicators.
2. Visually check fluid level is between 'UPPER' and 'LOWER' indicators

Adjust

1. Remove filler cap from reservoir and fill reservoir to 'UPPER' mark with the recommended fluid. ***See INFORMATION, Capacities, fluids and lubricants.***
2. Disconnect coil h.t. lead from distributor to prevent engine starting.
3. Crank engine for 5 seconds to prime power steering pump.
4. Top-up power steering fluid reservoir.
5. Turn steering to full RH lock and crank engine for 5 seconds.
6. Top-up power steering fluid reservoir.
7. Turn steering to full LH lock and crank engine for 5 seconds.
8. Top-up power steering fluid reservoir.
9. Connect coil h.t. lead to distributor.
10. Start and run engine for 2 minutes to circulate fluid through the system.
11. Turn steering to LH then RH full lock.

CAUTION: Do not hold steering at full lock for longer than 10 seconds.

12. Switch off engine.
13. Check power steering fluid, if aerated, wait until fluid is free from bubbles then top-up reservoir to 'UPPER' level mark.
14. Fit reservoir filler cap.

POWER STEERING SYSTEM BLEED - 'L' SERIES

Service repair no - 57.15.02

Check

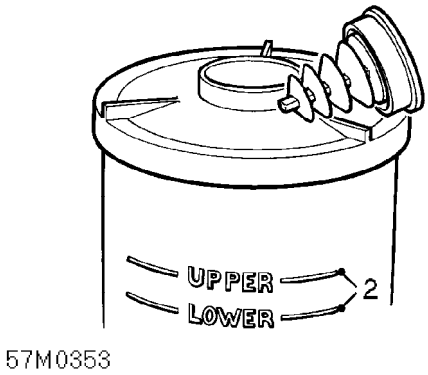

1. Clean reservoir around filler cap and fluid level indicators.
2. Visually check fluid level is between 'UPPER' and 'LOWER' indicators

Adjust

1. Remove filler cap from reservoir and fill reservoir to 'UPPER' mark with the recommended fluid. ***See INFORMATION, Capacities, fluids and lubricants.***

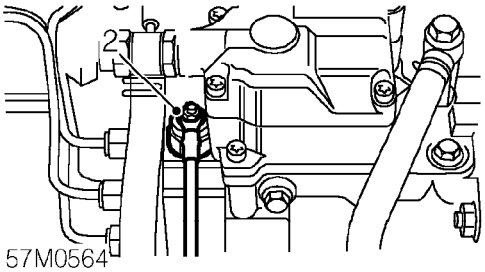

2. Remove nut and disconnect lead from fuel shut-off solenoid.
3. Crank engine for 5 seconds to prime power steering pump.
4. Top-up power steering fluid reservoir.
5. Turn steering to full RH lock and crank engine for 5 seconds.
6. Top-up power steering fluid reservoir.
7. Turn steering to full LH lock and crank engine for 5 seconds.
8. Top-up power steering fluid reservoir.
9. Connect lead to fuel shut-off solenoid and secure with nut.
10. Start and run engine for 2 minutes to circulate fluid through the system.
11. Turn steering to LH then RH full lock.

CAUTION: Do not hold steering at full lock for longer than 10 seconds.

12. Switch off engine.
13. Check power steering fluid, if aerated, wait until fluid is free from bubbles then top-up reservoir to 'UPPER' level mark.
14. Fit reservoir filler cap.

POWER STEERING PUMP DRIVE BELT - 'K' SERIES

Service repair no - 57.20.01

Check

1. Raise front of vehicle.

WARNING: Support on safety stands.

2. Check condition of drive belt, renew a drive belt that shows signs of wear and splitting.

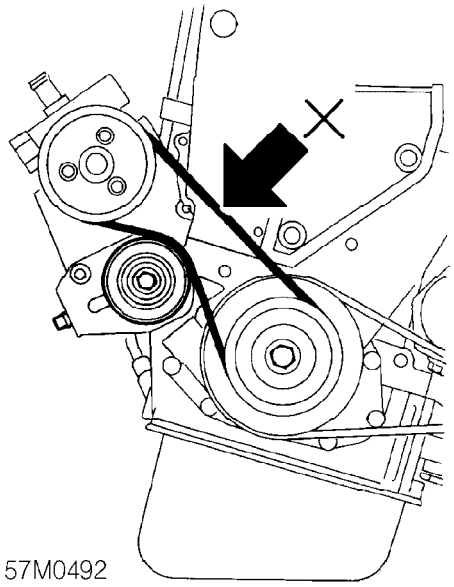

3. Apply a force of 98 Nm, 10 kg to the steering drive belt at position 'X' and measure the deflection between the crankshaft pulley and power steering pump pulley.
   Drive belt deflection:
   Used belt = 7.5 - 8.5 mm
   New belt = 5.5 - 8.5 mm

Adjust

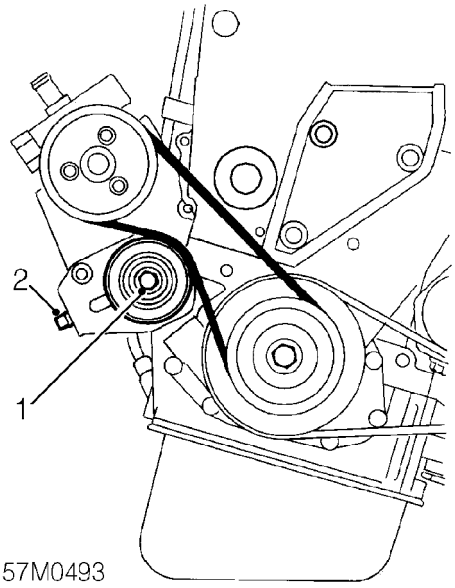

1. Loosen drive belt tensioner pulley securing bolt.
2. Increase drive belt tension by turning the tension adjusting bolt anti-clockwise.
3. Tighten drive belt tensioner pulley securing bolt to 25 Nm.
4. Recheck drive belt tension.
5. Remove stand(s) and lower vehicle.

MANUAL STEERING RACK

Service repair no - 57.25.01

Remove

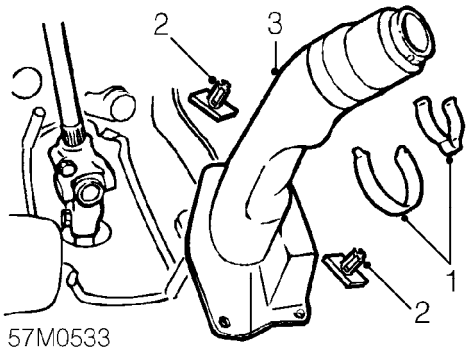

1. Remove 2 clips securing steering column universal joint cover.
2. Pull back drivers footwell carpet and remove 2 studs securing cover to floor.
3. Remove cover.
4. Align road wheel to straight ahead position and remove starter key from steering lock.

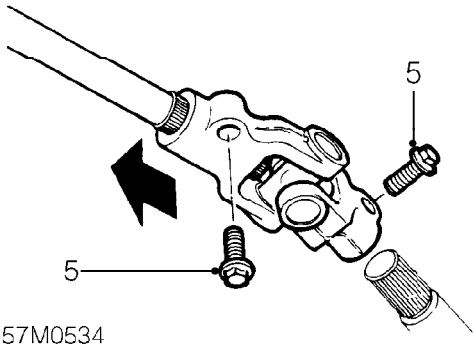

5. Remove 2 bolts securing column universal joint. Slide joint up column and disconnect from steering rack pinion shaft.
6. Raise front of vehicle.

WARNING: Support on safety stands.

7. Remove road wheel(s).

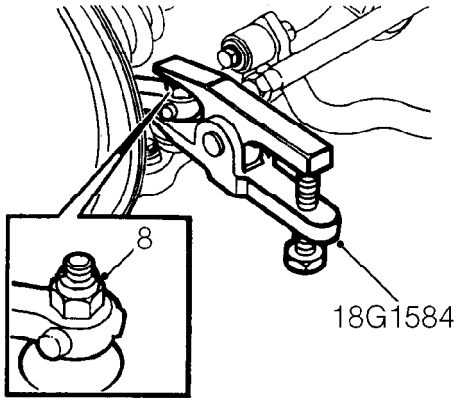

8. Remove nuts securing LH and RH track rod ends to front hubs, break taper joints using tool **18G 1584.** Discard nuts.
9. Note number of threads exposed from each track rod end locknut for reference.

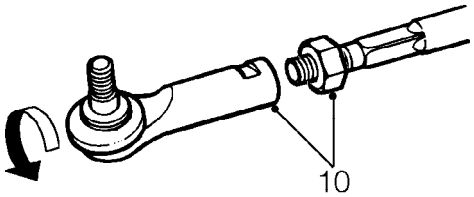

10. Loosen locknuts and remove track rod ends from steering rack.

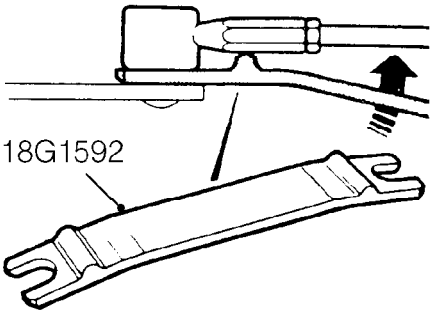

57M0543

11. Using tool **18G 1592** release gear selector linkage ball joint from gear selector lever.
12. Using tool **18G 1592** release gear change linkage ball joint from gear change lever.
13. Remove engine steady bar. ***See ENGINE - 'K8', Repairs.***

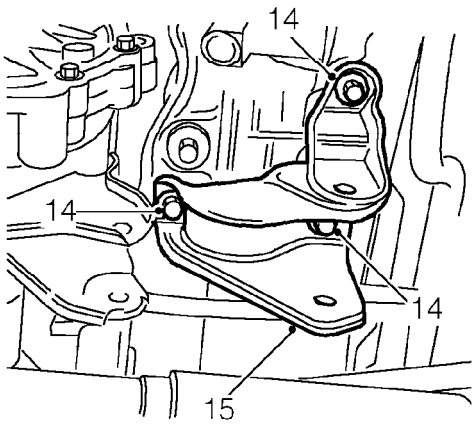

57M0544

14. Remove 3 bolts securing engine steady bar mounting to rear beam.
15. Remove mounting.

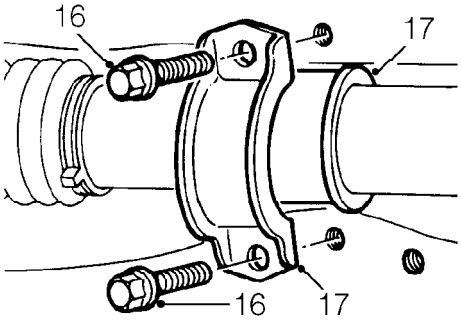

57M0545

16. Remove 2 bolts securing steering rack clamp.
17. Remove clamp and collect rubber.

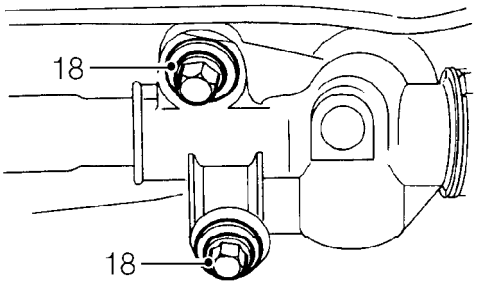

57M0546

18. Remove 2 flange bolts securing steering rack to rear beam.
19. Lower steering rack sufficiently to release pinion shaft from body aperture.
20. Manoeuvre rack free of vehicle.

Refit

1. Ensure body aperture seal is seated correctly in rear beam.
2. Feed rack into passenger side first, then manoeuvre pinion end into position.

CAUTION: Ensure slot in aperture seal is located to tab on pinion housing.

3. Raise rack and locate pinion through body aperture.

CAUTION: Take care not to dislodge aperture seal.

4. Align rack and loosely fit flange bolts securing rack to rear beam. DO NOT tighten.
5. Fit steering rack clamp and rubber, fit bolts and tighten to 38 Nm.
6. Tighten flange bolts securing steering rack to rear beam to 58 Nm.
7. Position engine steady bar mounting bracket to rear beam and tighten bolts to 60 Nm.
8. Fit engine steady bar. ***See ENGINE - 'K8', Repairs.***
9. Clean gear selector linkage and gear selector linkage ball joints.
10. Using tool **18G 1594** connect gear selector linkage ball joint to gear selector lever.
11. Using tool **18G 1594** connect gear change linkage ball joint to gear change lever.
12. Position each locknut on track rods with same amount of thread exposed as noted during removal.
13. Centralise steering rack and screw both track rod ends up to locknuts, with ball pins facing upwards.
14. Connect track rod ends and tighten NEW nuts to 45 Nm.
15. Fit road wheel(s) and tighten nuts to correct torque. ***See INFORMATION, Torque wrench settings.***
16. Remove stand(s) and lower vehicle.
17. Connect column universal joint ensuring bolts are located in grooves. Tighten bolts to 28 Nm.
18. Fit universal joint cover and secure with studs and clips.
19. Reposition drivers footwell carpet.
20. Check and adjust front wheel alignment. ***See Adjustments.***

POWER STEERING RACK - 'K' SERIES

Service repair no - 57.10.01

Remove

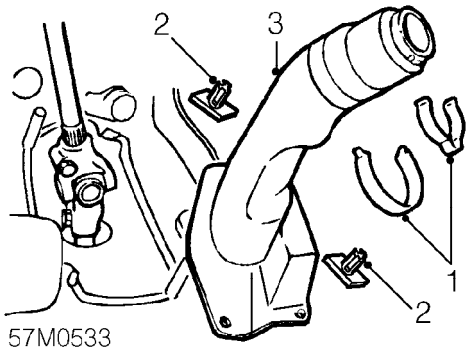

1. Remove 2 clips securing column universal joint cover.
2. Pull back drivers footwell carpet and remove 2 studs securing cover to floor.
3. Remove cover.
4. Align road wheels to straight ahead position and remove starter key from steering lock.

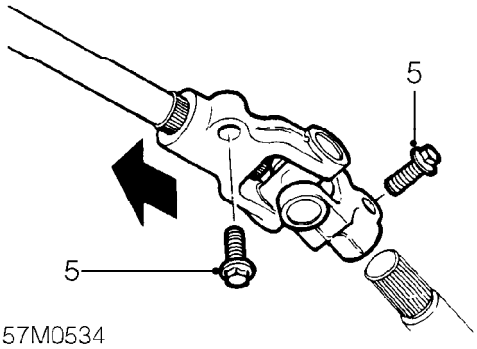

5. Remove 2 bolts securing column universal joint. Slide joint up column and disconnect from steering rack pinion shaft.
6. Raise front of vehicle.

WARNING: Support on safety stands.

7. Remove road wheel(s).

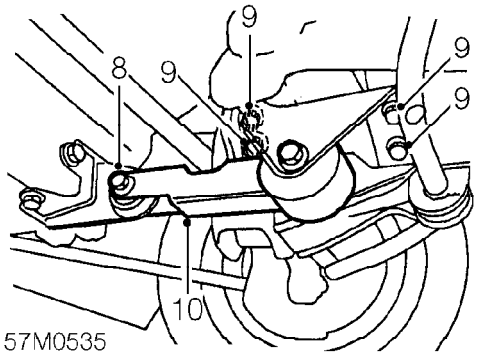

8. Remove bolt securing engine steady bar to engine.
9. Move steady bar aside and remove 4 bolts securing steady bar mounting bracket to rear beam.
10. Remove steady bar and mounting bracket.
11. Position container beneath steering rack.

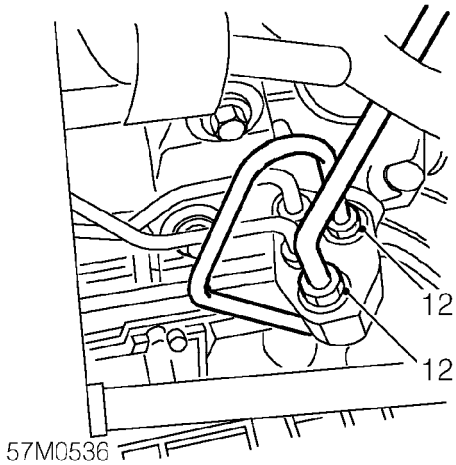

12. Disconnect feed and return pipe unions from steering rack.

CAUTION: Plug the connections.

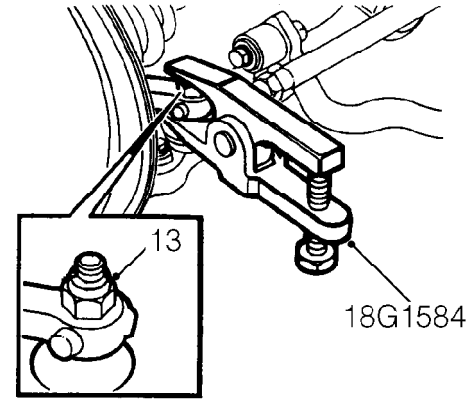

13. Remove nuts securing LH and RH track rod ends to front hubs, break taper joints using tool **18G 1584.** Discard nuts.
14. Note number of threads exposed from each track rod end locknut for reference.

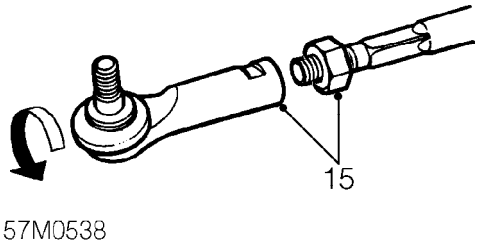

15. Loosen locknuts and remove track rod ends from steering rack.

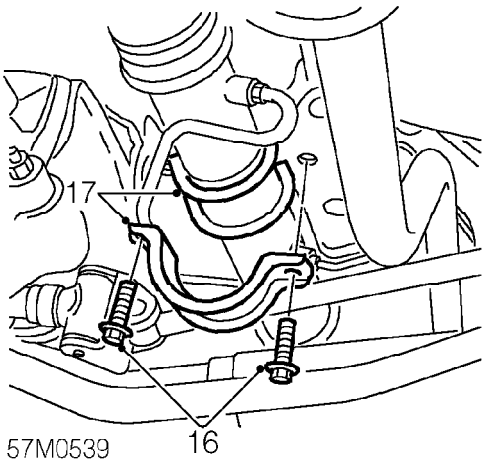

16. Remove 2 bolts securing steering rack clamp.
17. Remove clamp and collect rubber.

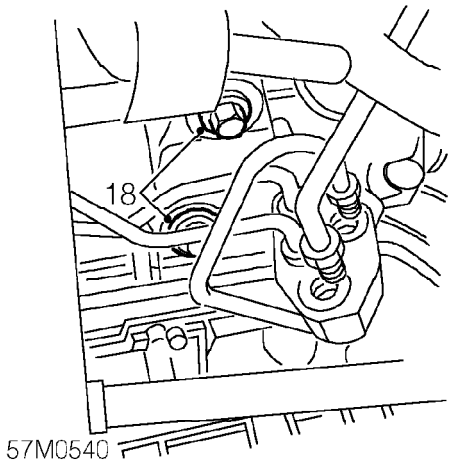

18. Remove 2 flange bolts securing steering rack to rear beam.
19. Lower steering rack sufficiently to release pinion shaft from body aperture.
20. Manoeuvre rack free of vehicle.

Refit

1. Ensure body aperture seal is seated correctly in rear beam.
2. Feed rack into passenger side first, then manoeuvre pinion end into position.

CAUTION: Ensure slot in aperture seal is located to tab on pinion housing.

3. Raise rack and locate pinion through body aperture.

CAUTION: Take care not to dislodge aperture seal.

4. Align rack and loosely fit flange bolts securing rack to rear beam. DO NOT tighten.
5. Fit steering rack clamp and rubber, fit bolts and tighten to 38 Nm.
6. Tighten flange bolts securing steering rack to rear beam to 58 Nm.
7. Position each locknut on track rods with same amount of thread exposed as noted during removal.
8. Centralise steering rack and screw both track rod ends onto track rods up to locknuts, with ball pins facing upwards.
9. Connect track rod ends and tighten NEW nuts to 45 Nm.
10. Position steady bar mounting bracket to rear beam and tighten bolts to 60 Nm.
11. Align steady bar to engine sump and tighten bolt to 45 Nm.
12. Clean feed and return pipe unions .
13. Connect pipes to steering rack. Tighten feed pipe union to 37 Nm and return pipe to 28 Nm.
14. Fit road wheel(s) and tighten nuts to correct torque. ***See INFORMATION, Torque wrench settings.***
15. Remove stand(s) and lower vehicle.
16. Connect column universal joint ensuring bolts are located in grooves. Tighten bolts to 28 Nm.
17. Fit universal joint cover and secure with clips and studs.
18. Position footwell carpet.
19. Check and adjust front wheel alignment. ***See Adjustments.***
20. Bleed power steering system. ***See this section.***

POWER STEERING RACK - 'L' SERIES

Service repair no - 57.10.01

Remove

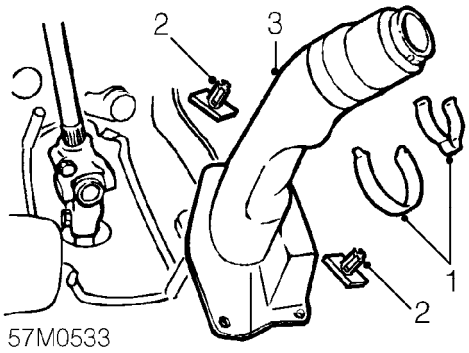

1. Remove 2 clips securing column universal joint cover.
2. Pull back drivers footwell carpet and remove 2 studs securing cover to floor.
3. Remove cover.
4. Align road wheels to straight ahead position and remove starter key from steering lock.

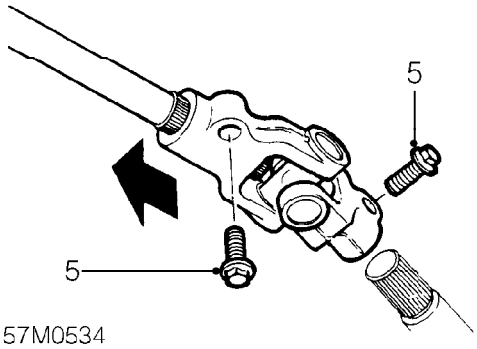

5. Remove 2 bolts securing column universal joint. Slide joint up column and disconnect from steering rack pinion shaft.
6. Raise front of vehicle.

WARNING: Support on safety stands.

7. Remove road wheel(s).
8. Remove undertray. ***See BODY, Exterior fittings.***

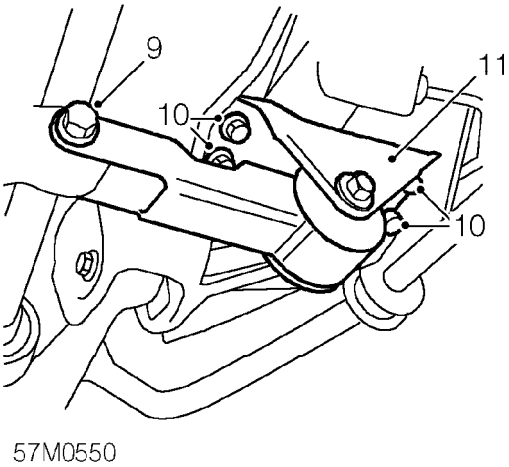

9. Remove bolt securing engine steady bar to engine.
10. Move steady bar aside and remove 4 bolts securing steady bar mounting bracket to rear beam.
11. Remove steady bar and mounting bracket.
12. Position container beneath steering rack.

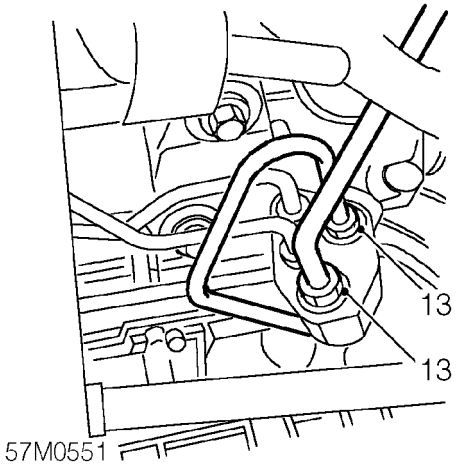

13. Disconnect feed and return pipe unions from steering rack.

CAUTION: Plug the connections.

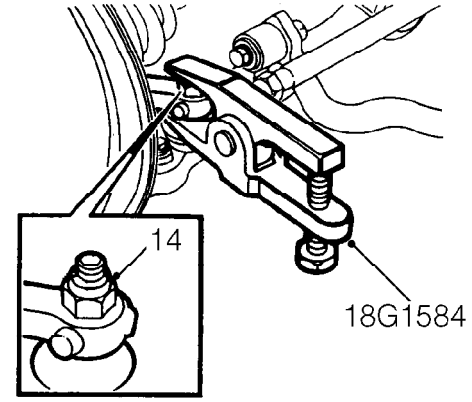

57M0552

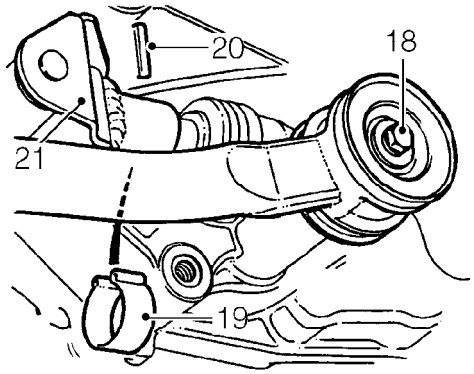

57M0565

14. Remove nuts securing LH and RH track rod ends to front hubs, break taper joints using tool **18G 1584.** Discard nuts.
15. Note number of threads exposed from each track rod end locknut for reference.

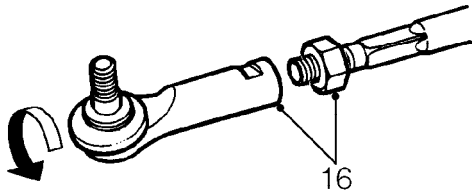

57M0553

16. Loosen locknuts and remove track rod ends from steering rack.
17. Remove exhaust front pipe. ***See MANIFOLD & EXHAUST SYSTEMS, Repairs.***

18. Remove bolt and disconnect gear change steady bar from gearbox, collect 2 washers.
19. Remove clip securing selector rod roll pin.
20. Using a suitable punch, drive out roll pin securing selector rod to selector shaft.
21. Release selector rod from selector shaft.

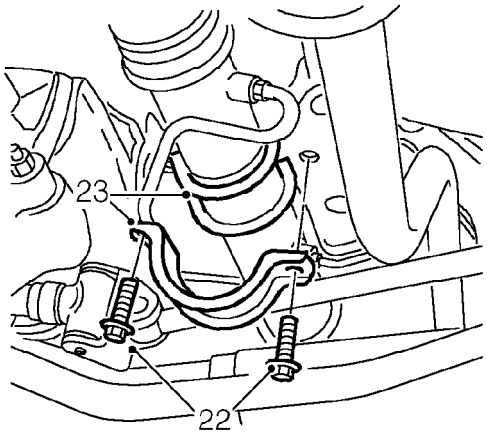

57M0554

22. Remove 2 bolts securing steering rack clamp.
23. Remove clamp and collect rubber.

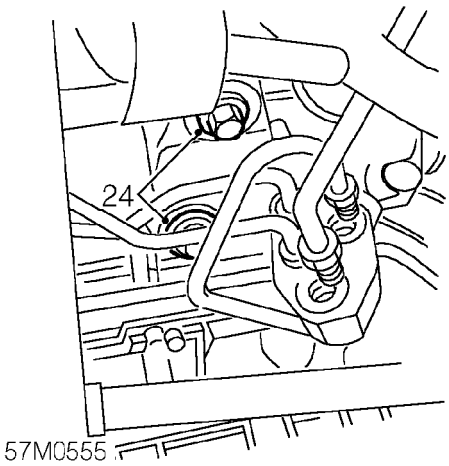

24. Remove 2 flange bolts securing steering rack to rear beam.
25. Lower steering rack sufficiently to release pinion shaft from body aperture.
26. Manoeuvre rack free of vehicle.

Refit

1. Ensure body aperture seal is seated correctly in rear beam.
2. Feed rack into passenger side first, then manoeuvre pinion end into position.

CAUTION: Ensure slot in aperture seal is located to tab on pinion housing.

3. Raise rack and locate pinion through body aperture.

CAUTION: Take care not to dislodge aperture seal.

4. Align rack and loosely fit flange bolts securing rack to rear beam. DO NOT tighten.
5. Fit steering rack clamp and rubber, fit bolts and tighten to 38 Nm.
6. Tighten flange bolts securing steering rack to rear beam to 58 Nm.
7. Connect selector rod to shaft and align holes.
8. Fit new roll pin securing selector rod to selector shaft and fit roll pin retaining clip.
9. Fit washers to gear change steady bar and connect to gearbox.
10. Fit bolt securing gear change steady bar to gearbox and tighten to 10 Nm.
11. Fit exhaust front pipe. ***See MANIFOLD & EXHAUST SYSTEMS, Repairs.***
12. Position each locknut on track rods with same amount of thread exposed as noted during removal.
13. Centralise steering rack and screw both track rod ends onto track rods up to locknuts, with ball pins facing upwards.
14. Connect track rod ends and tighten NEW nuts to 45 Nm.
15. Position steady bar mounting bracket to rear beam and tighten bolts to 60 Nm.
16. Align steady bar to engine sump and tighten bolt to 45 Nm.
17. Clean feed and return pipe unions .
18. Connect pipes to steering rack. Tighten feed pipe union to 37 Nm and return pipe to 28 Nm.
19. Fit undertray. ***See BODY, Exterior fittings.***
20. Fit road wheel(s) and tighten nuts to correct torque. ***See INFORMATION, Torque wrench settings.***
21. Remove stand(s) and lower vehicle.
22. Connect column universal joint ensuring bolts are located in grooves. Tighten bolts to 28 Nm.
23. Fit universal joint cover and secure with clips and studs.
24. Position footwell carpet.
25. Check and adjust front wheel alignment. ***See Adjustments.***
26. Bleed power steering system. ***See this section.***

POWER STEERING PUMP DRIVE BELT - 'K' SERIES - WITH MANUAL TENSIONER

Service repair no - 57.20.02

Remove

1. Raise front of vehicle.

WARNING: Support on safety stands.

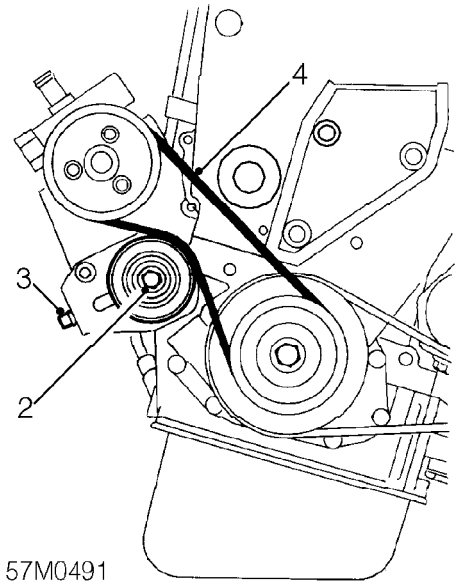

2. Loosen drive belt tensioner pulley securing bolt.
3. Release drive belt tension by turning the tension adjusting bolt clockwise.
4. Remove and discard drive belt.

Refit

1. Clean pulley 'V's.
2. Fit new drive belt to crankshaft pulley and connect to power steering pump pulley. ensure pulley and belt grooves are correctly located.
3. Adjust drive belt tension. ***See Adjustments.***
4. Rotate crankshaft one complete revolution clockwise.
5. Re-tension drive belt by turning the tension adjusting bolt one complete turn anti-clockwise.
6. Remove stand(s) and lower vehicle.

POWER STEERING PUMP DRIVE BELT - 'L' SERIES

Service repair no - 57.20.02

The power steering pump is driven by the auxiliary drive belt. ***See ELECTRICAL, Repairs.***

POWER STEERING PUMP - 'K' SERIES

Service repair no - 57.20.14

Remove

1. Raise front of vehicle.

WARNING: Support on safety stands.

2. Loosen bolt securing engine steady bar to subframe.
3. Remove bolt securing engine steady bar to bracket on gearbox. Release steady bar from gearbox bracket.
4. Disconnect engine RH mounting.
   See ENGINE - 'K8', Repairs.
   See ENGINE - 'K16', Repairs.
   See ENGINE - 'K16 WITH VVC', Repairs.
5. Raise engine.

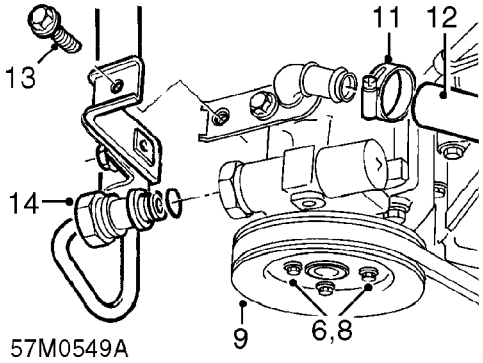

6. Loosen 3 bolts securing pulley to power steering pump.
7. Remove power steering pump drive belt. ***See this section.***
8. Remove 3 bolts securing pulley to power steering pump.
9. Remove pulley.
10. Position container to collect fluid loss.
11. Loosen clip securing fluid inlet hose to power steering pump.
12. Disconnect fluid inlet hose from power steering pump.
13. Remove bolt securing fluid outlet hose clamp to bracket.
14. Loosen union and disconnect fluid outlet hose from power steering pump.

CAUTION: To prevent damage to components, use two spanners when loosening or tightening unions.

15. Plug hose and power steering pump connections to prevent excess fluid loss and the ingress of dirt and moisture into the system.

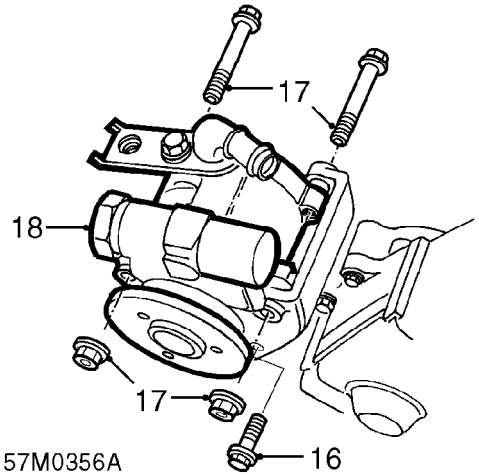

16. Remove bolt securing power steering pump to mounting bracket.
17. Remove 2 through bolts and nuts securing power steering pump to mounting bracket.
18. Remove power steering pump.

Refit

1. Remove plugs from hose connections on new power steering pump and fit to old pump.
2. Position power steering pump and align to mounting bracket.
3. Fit nuts and bolts securing power steering pump to mounting bracket and tighten to 25 Nm.
4. Remove plug from fluid outlet hose.

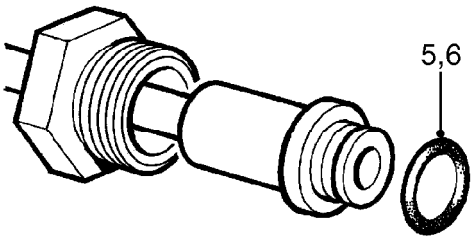

5. Remove and discard 'O' ring from fluid outlet hose.
6. Lubricate and fit NEW 'O' ring to fluid outlet hose.
7. Connect fluid outlet hose to power steering pump and tighten union to 55 Nm.

CAUTION: To prevent damage to components, use two spanners when loosening or tightening unions.

8. Align fluid outlet hose clamp to bracket and secure with bolt.
9. Remove plug from fluid inlet hose and connect to power steering pump.
10. Tighten clip securing fluid inlet hose to power steering pump.
11. Remove container positioned to collect fluid loss.
12. Position pulley to power steering pump.
13. Fit 3 bolts securing pulley to power steering pump.
14. Fit power steering pump drive belt. ***See this section.***
15. Tighten 3 bolts securing pulley to power steering pump to 9 Nm.
16. Lower engine.
17. Connect engine RH mounting.
    See ENGINE - 'K8', Repairs.
    See ENGINE - 'K16', Repairs.
    See ENGINE - 'K16 WITH VVC', Repairs.
18. Connect engine steady bar to bracket on gearbox, fit bolt and tighten to 45 Nm.
19. Tighten bolt securing steady bar to subframe to 80 Nm.
20. Bleed power steering system. ***See Adjustments.***
21. Remove stand(s) and lower vehicle.

POWER STEERING PUMP - 'L' SERIES MODELS WITHOUT AIR CONDITIONING

Service repair no - 57.20.14

Remove

1. Remove alternator. ***See ELECTRICAL, Repairs.***
2. Remove front beam. ***See FRONT SUSPENSION, Repairs.***
3. Position container to collect fluid loss from power steering system.

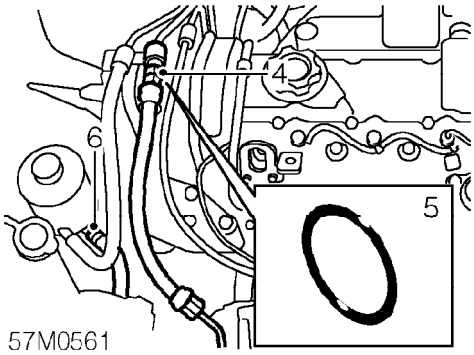

4. Loosen union securing high pressure hose to power steering pump.

CAUTION: To prevent damage to components, use two spanners when loosening or tightening unions.

5. Disconnect high pressure hose from pump, remove and discard 'O' ring.
6. Release clip and disconnect power steering pump feed hose from fluid reservoir.

CAUTION: Plug the connections.

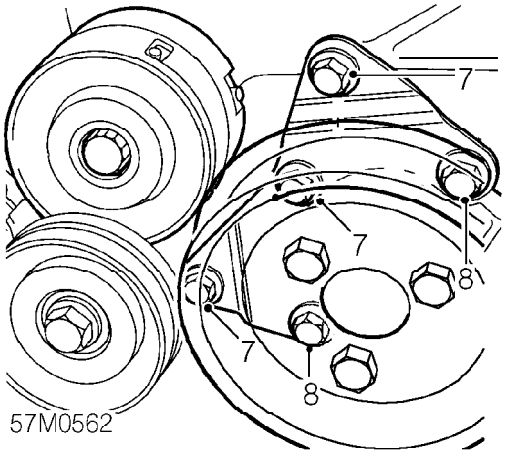

7. Remove 3 short bolts securing support bracket to power steering pump and coolant pump housing.
8. Loosen 2 long bolts securing power steering pump to coolant pump.
9. Remove power steering pump.

Do not carry out further dismantling if component is removed for access only.

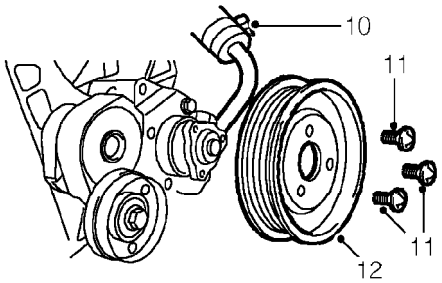

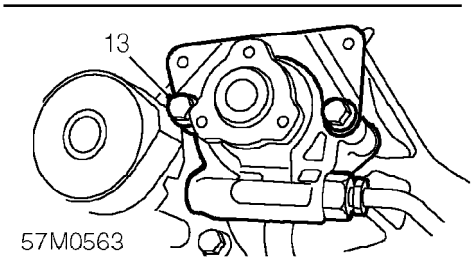

10. Release clip and remove hose from pump.
11. Holding power steering pump in a soft jawed vice, restrain pulley and remove 3 Tx30 Torx screws securing pulley to pump.
12. Remove pulley from pump.
13. Remove 2 long mounting bolts and support bracket from old pump and fit to new.
14. Hold new pump in a soft jawed vice.
15. Fit pulley to new pump. Fit Torx screws securing pulley to pump, restrain pulley and tighten Torx screws to 10 Nm.
16. Fit hose to pump and secure with clip.

Refit

1. Clean mating face of power steering pump and coolant pump housing.
2. Position power steering pump to coolant pump housing and align drive lugs with those on the coolant pump.
3. Tighten 2 long bolts securing power steering pump to coolant pump housing until finger tight.
4. Fit 3 short bolts securing support bracket to power steering pump and coolant pump housing.
5. Tighten power steering pump to coolant pump housing bolts to 25 Nm.
6. Remove plugs from power steering pump and hoses.
7. Lubricate and fit new 'O' ring to high pressure hose union.
8. Connect high pressure hose to pump and tighten union to 20 Nm.
9. Connect power steering pump feed hose to fluid reservoir and secure with clip.
10. Fit front beam. ***See FRONT SUSPENSION, Repairs.***
11. Fit alternator. ***See ELECTRICAL, Repairs.***
12. Refill power steering reservoir and bleed system. ***See Adjustments.***

POWER STEERING PUMP - 'L' SERIES MODELS WITH AIR CONDITIONING

Service repair no - 57.20.14/20

Remove

1. Remove undertray. ***See BODY, Exterior fittings.***
2. Fit wooden block to jack and position jack to support engine.

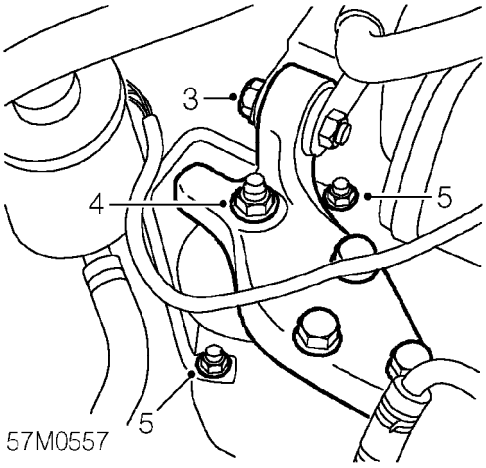

3. Remove through bolt securing RH steady bar to engine mounting bracket.
4. Remove nut securing mounting bracket to engine mounting.
5. Loosen 2 nuts securing restraint bar to body.
6. Raise engine to gain access to Torx screws securing pulley to power steering pump.

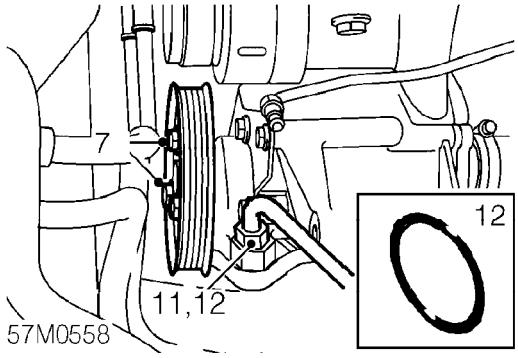

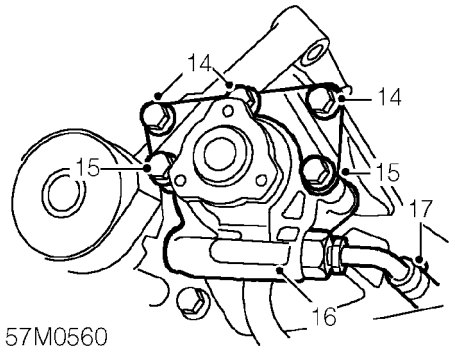

7. Loosen 3 Tx30 Torx screws securing pulley to pump.
8. Remove auxiliary drive belt. ***See ELECTRICAL, Repairs.***
9. Remove 3 Torx screws securing pulley to pump and remove pulley.
10. Position container to collect fluid loss from power steering system.
11. Loosen union securing high pressure to power steering pump.

CAUTION: To prevent damage to components, use two spanners when loosening or tightening unions.

12. Disconnect high pressure hose from pump and discard 'O' ring.

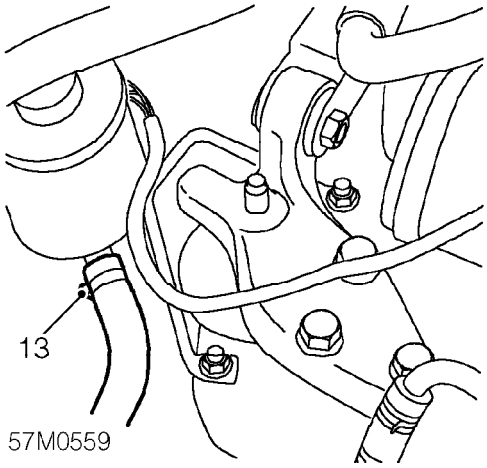

13. Release clip and disconnect power steering pump feed hose from fluid reservoir.

CAUTION: Plug the connections.

14. Remove 3 short bolts securing support bracket to power steering pump and coolant pump housing.
15. Remove 2 long bolts and support bracket securing power steering pump to coolant pump housing.
16. Remove power steering pump.

Do not carry out further dismantling if component is removed for access only.

17. Release clip and remove hose from power steering pump.
18. Fit hose to new pump and secure with clip.

Refit

1. Clean mating faces of power steering pump and coolant pump housing.
2. Position power steering pump to coolant pump housing and align drive lugs with those on coolant pump.
3. Fit 2 long bolts and support bracket securing power steering pump to coolant pump housing and tighten until finger tight.
4. Fit 3 short bolts securing support bracket to power steering pump.
5. Tighten power steering pump to coolant pump housing bolts to 20 Nm.
6. Remove plugs from power steering pump and hoses.
7. Lubricate and fit new 'O' ring to high pressure hose union.
8. Connect high pressure hose to power steering pump and tighten union to 20 Nm.
9. Connect power steering pump feed hose to fluid reservoir and secure with clip.
10. Fit pulley to power steering pump and fit Torx screws.
11. Fit auxiliary drive belt. ***See ELECTRICAL, Repairs.***
12. Tighten 3 Torx screws, pulley to power steering pump, to 10 Nm.
13. Lower engine, fit nut securing mounting bracket to engine mounting and tighten to 85 Nm.
14. Tighten nuts securing engine mounting restraint bar to body, to 85 Nm.
15. Connect steady bar to engine mounting bracket, fit through bolt and tighten to 85 Nm.
16. Remove jack positioned to support engine.
17. Refill power steering system fluid reservoir and bleed system. ***See Adjustments.***
18. Fit undertray. ***See BODY, Exterior fittings.***

STEERING RACK GAITER

Service repair no - 57.25.03

Remove

1. Raise front of vehicle.

WARNING: Support on safety stands.

2. Remove track rod end. ***See this section.***

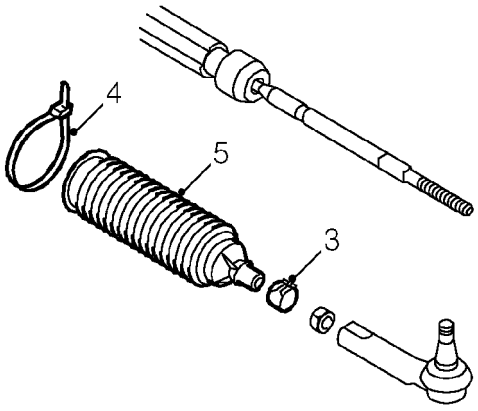

57M0481

3. Remove clip securing outer end of gaiter to steering rack.
4. Cut cable tie securing inner end of gaiter to steering rack.
5. Remove gaiter from rack.

Refit

1. Fit gaiter to rack.
2. Secure inner end of gaiter with cable tie.
3. Fit clip securing outer end of gaiter.
4. Fit track rod end. ***See this section.***
5. Remove stand(s) and lower vehicle.

STEERING COLUMN ASSEMBLY

Service repair no - 57.40.01

Remove

WARNING: SRS procedures must be followed and all precautions observed. ***See RESTRAINT SYSTEMS, Precautions.***

1. Remove rotary coupler. ***See ELECTRICAL, Repairs.***

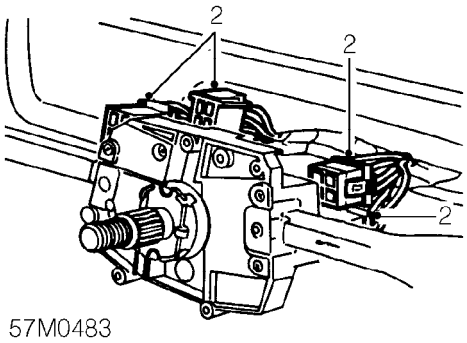

2. Disconnect 4 multiplugs from switch pack.

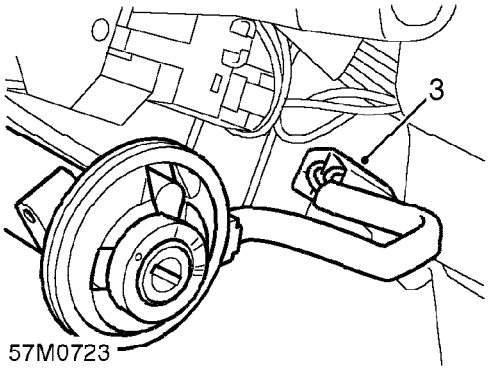

3. *98MY on:* Disconnect passive coil multiplug.

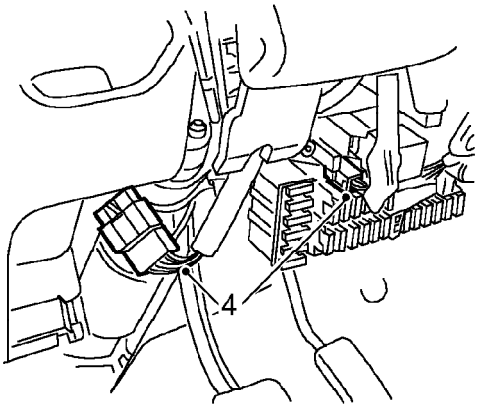

4. Disconnect starter switch multiplugs from fuse box and main harness.

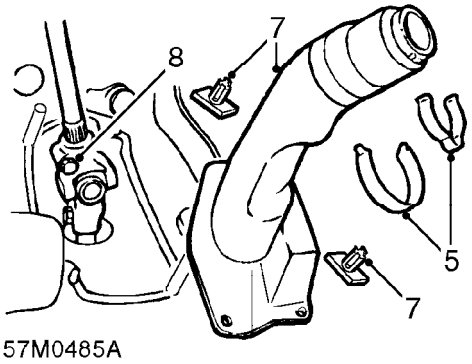

5. Remove 2 clips securing universal joint cover to column.
6. Pull back drivers footwell carpet.
7. Remove studs securing universal joint cover to floor and remove cover.
8. Remove bolt securing universal joint to column.
9. Remove nut and bolt securing lower column clamp to pivot bracket.
10. Remove clamp.
11. Remove 2 flange nuts and 2 bolts securing column upper bracket to underside of fascia.
12. Remove column assembly.

Do not carry out further dismantling if component is removed for access only.

13. *98 MY on:* Remove passive coil ***See ELECTRICAL, Repairs.***

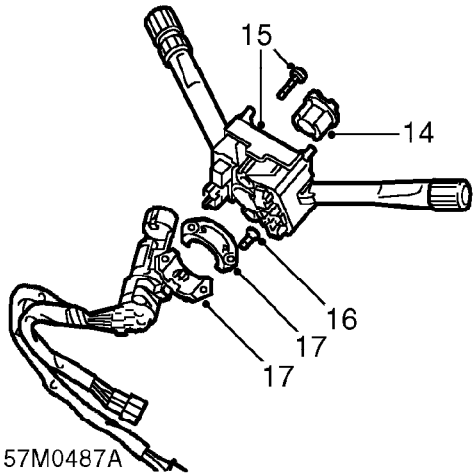

14. Remove indicator cancelling cam.
15. Remove 2 screws and withdraw column switch assembly.
16. Centre punch and using a 5 mm drill remove 2 shear bolts securing steering lock to steering column.

CAUTION: Take care not to damage lock body if lock is to be refitted.

17. Remove steering lock and bracket.

Refit

1. Position steering lock to column and fit shear bolts loosely.
2. Insert starter key, check operation of steering lock and ensure the key turns freely.
3. Tighten shear bolts fully and shear heads off.
4. Fit column switch assembly and tighten screws.
5. Fit indicator cancelling cam, set engagement tangs.
6. *98MY on:* Fit passive coil. ***See ELECTRICAL, Repairs.***
7. Position column assembly, engage universal joint splines aligning the bolt hole with the flat on the shaft and fit bolt securing column to universal joint, DO NOT tighten.
8. Raise column and engage top bracket on studs and fit nuts and bolts. DO NOT tighten.
9. Fit lower clamp, and tighten nut and bolt to 22 Nm.
10. Tighten top bracket nuts and bolts to 15 Nm.
11. Tighten universal joint bolt to 28 Nm.
12. Position universal joint cover and fit cover retaining clips and studs.
13. Refit drivers footwell carpet.
14. Connect starter switch multiplugs.
15. Connect switch pack multiplugs.
16. *98MY on:* Connect passive coil multiplug.
17. Fit rotary coupler. ***See ELECTRICAL, Repairs.***

STEERING COLUMN NACELLE

Service repair no - 57.40.29

Remove

1. Disconnect battery earth lead.
2. Remove steering wheel. ***See this section.***
3. Remove keys from starter switch.

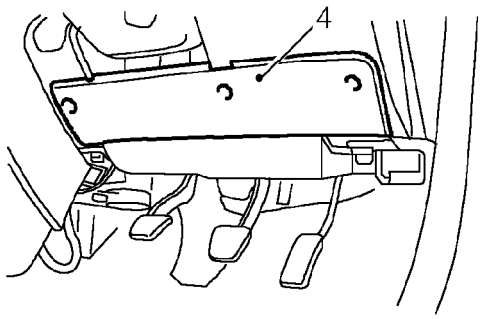

57M0474

4. Release 3 turnbuckles and remove fusebox cover.

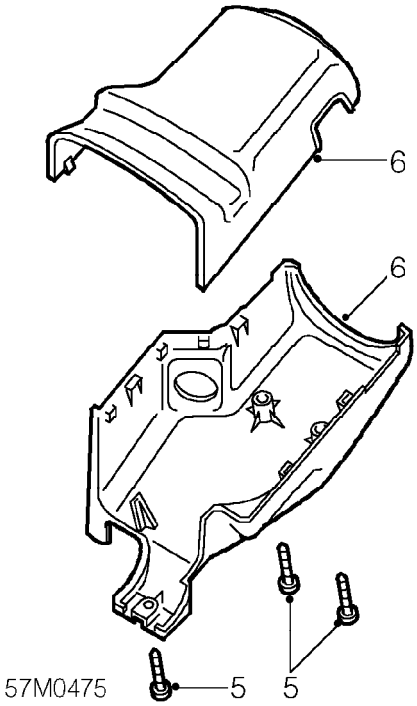

57M0475

5. Remove 3 screws securing lower half of nacelle to steering column.
6. Remove lower and upper halves of nacelle.

Refit

1. Fit upper and lower halves of nacelle to steering column.
2. Fit and tighten screws securing lower half of nacelle to steering column.
3. Fit fuse box cover and secure turnbuckles.
4. Fit steering wheel. ***See this section.***
5. Connect battery earth lead.

STEERING LOCK

Service repair no - 57.40.31

Remove

WARNING: SRS procedures must be followed and all precautions observed. ***See RESTRAINT SYSTEMS, Precautions.***

1. Remove steering column nacelle. ***See this section.***
2. *98MY on:* Remove passive coil. ***See ELECTRICAL, Repairs.***

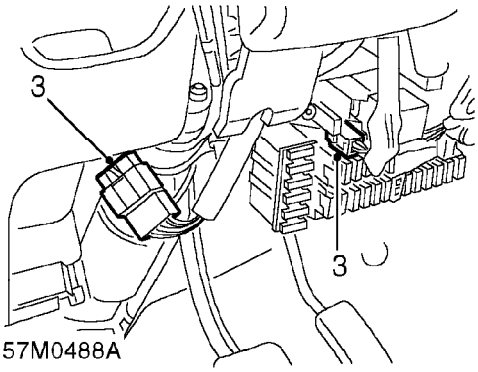

3. Disconnect starter switch multiplugs from fuse box and main harness.

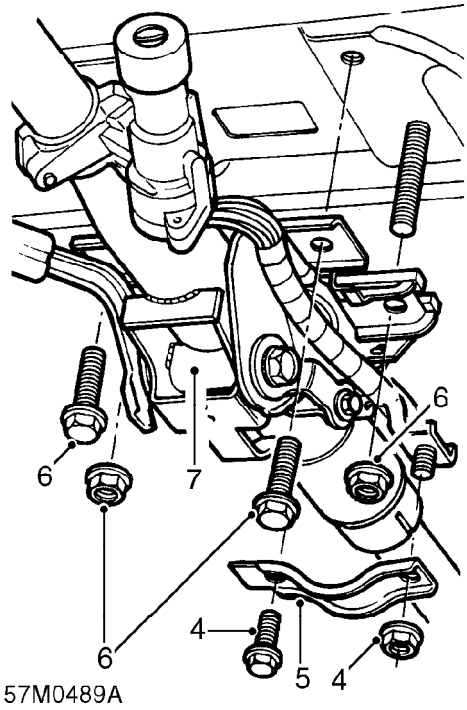

4. Remove nut and bolt securing lower column clamp to pivot bracket.
5. Remove clamp.
6. Remove 2 flange nuts and 2 bolts securing column upper bracket.
7. Lower the steering column assembly.

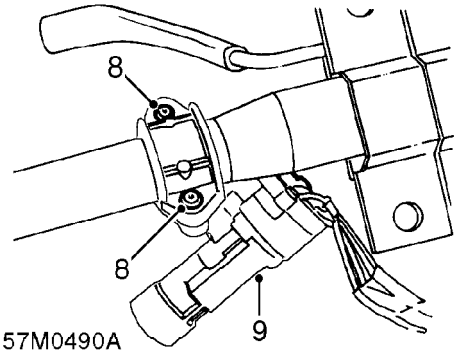

8. Centre punch and drill out 2 shear bolts using a 5 mm drill.

CAUTION: Take care not to damage lock body if lock is to be refitted.

9. Remove steering lock and bracket.

Refit

1. Position steering lock to column and fit shear bolts loosely.
2. Insert starter key, check operation of steering lock and key turns freely.
3. Tighten shear bolts until heads shear off.
4. Raise column and engage top bracket on studs and fit nuts and bolts. DO NOT tighten.
5. Fit lower clamp, tighten nut and bolt to 22 Nm.
6. Tighten top bracket nuts and bolts to 15 Nm.
7. Connect starter switch multiplugs to fuse box and main harness.
8. *98MY on:* Fit passive coil. ***See ELECTRICAL, Repairs.***
9. Fit steering column nacelle. ***See this section.***

TRACK ROD END

Service repair no - 57.55.02

Remove

1. Raise front of vehicle.

WARNING: Support on safety stands.

2. Remove road wheel(s).

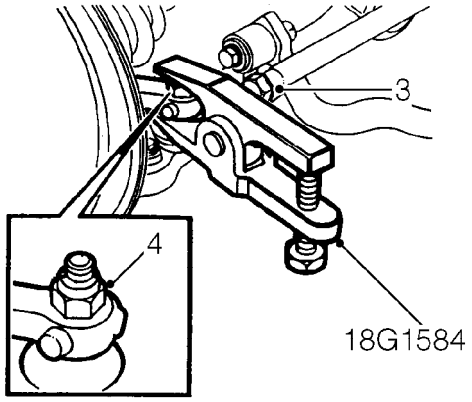

57M0479

3. Loosen track rod end locknut.
4. Remove nut from ball pin and discard.
5. Fit M10 nut to ball pin, flush with end of pin.
6. Using tool **18G 1584,** separate ball pin from knuckle arm.
7. Unscrew track rod end from track rod.

NOTE: Retain the track rod locknut in position as fitting reference.

Refit

1. Screw track rod end onto track rod up to locknut with ball pin facing upwards.
2. Connect ball pin to front hub. Tighten NEW nut to 45 Nm.
3. Fit road wheel(s) and tighten nuts to correct torque. ***See INFORMATION, Torque wrench settings.***
4. Remove stand(s) and lower vehicle.
5. Check and adjust front wheel alignment. ***See Adjustments.***

STEERING WHEEL

Service repair no - 57.60.01

Remove

1. Remove driver's airbag module. ***See RESTRAINT SYSTEMS, Repairs.***

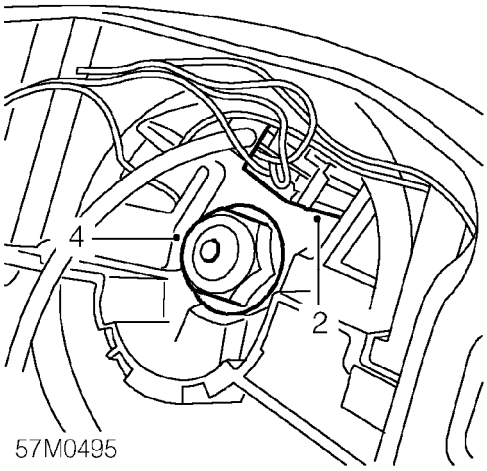

2. Disconnect multiplug from rotary coupler.
3. Centralise steering wheel with road wheels in straight ahead position.
4. Restrain steering wheel and loosen self-locking nut securing steering wheel to column.
5. Release steering wheel from column splines by rocking steering wheel from side-to-side and pulling with both hands.
6. Remove and discard self-locking nut.
7. Remove steering wheel.

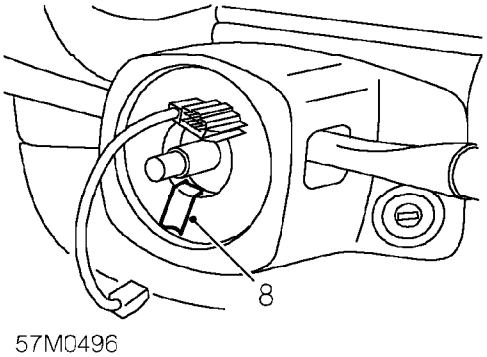

8. Attach tape across edge of rotary coupler to retain correct setting.

Refit

1. Remove retaining tape from rotary coupler.
2. Ensure road wheels are in straight ahead position and indicator cancelling cam are aligned horizontally.
3. Engage rotary coupler and fit steering wheel to column, ensure wheel spokes are horizontal.
4. Fit NEW self-locking nut, tighten to 50 Nm.
5. Connect multiplug to rotary coupler.
6. Fit driver's airbag module. ***See RESTRAINT SYSTEMS, Repairs.***

POWER STEERING PUMP DRIVE BELT - 'K' SERIES - WITH AUTOMATIC TENSIONER

Service repair no - 57.20.02

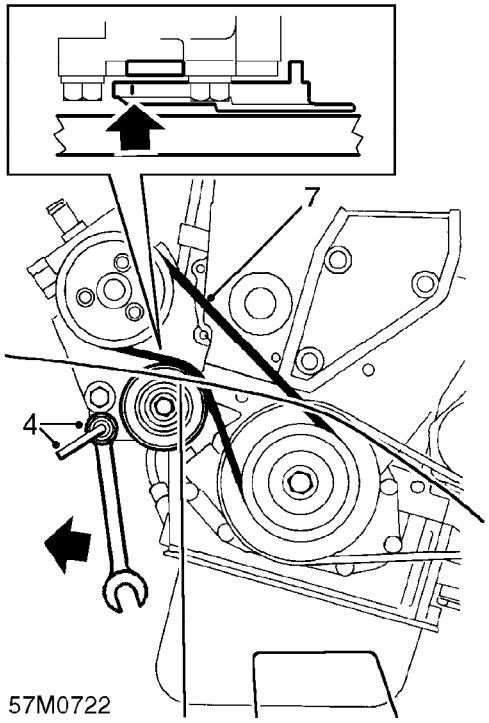

1. Check condition of drive belt, renew a belt that shows signs of wear and splitting. Belt must be renewed before indicator reaches LH end of recess in tensioner backplate casting, see illustration.
2. Disconnect battery earth lead.
3. Turn steering on to RH lock.
4. Using a 13 mm spanner, rotate tensioner and insert a suitable 4 mm diameter pin through centre of hexagon into tensioner backplate.

WARNING: Ensure pin is fully located in tensioner backplate before releasing tensioner.

5. Release belt from tensioner pulley.
6. Release belt from PAS pump pulley and crankshaft pulley.
7. Remove drive belt.

Refit

1. Clean pulleys.
2. Fit belt to crankshaft pulley, over tensioner pulley and connect belt to PAS pulley.

CAUTION: Ensure drive belt is correctly located in pulley vees.

3. Relieve tensioner pressure, remove pin and release tensioner.
4. Align steering to straight ahead position.
5. Connect battery earth lead.

CONTENTS

Page

DESCRIPTION AND OPERATION

FRONT SUSPENSION COMPONENTS 1
FRONT SUSPENSION OPERATION 3

REPAIRS

FRONT SPRING 1
FRONT DAMPER 1
FRONT HUB 4
FRONT HUB BEARING 6
ANTI-ROLL BAR 8
ANTI-ROLL BAR LINK 9
ANTI-ROLL BAR BUSHES 9
SUSPENSION LOWER ARM ASSEMBLY 10
SUSPENSION LOWER ARM BUSH 11
FRONT TIE ROD 11
FRONT BEAM 12
REAR BEAM - WITH POWER STEERING RACK 12
REAR BEAM - WITH MANUAL STEERING RACK 15

FRONT SUSPENSION COMPONENTS

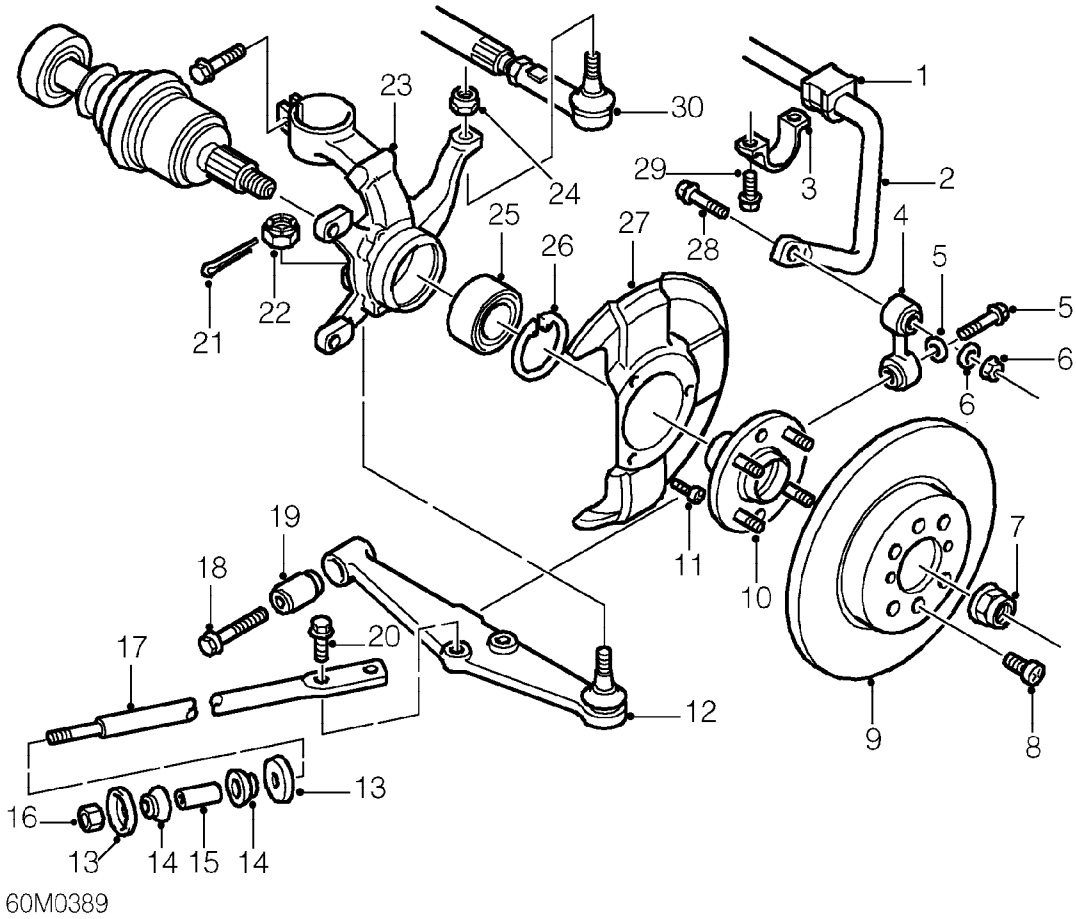

1. Anti-roll bar bush
2. Anti-roll bar
3. Bush clamp
4. Link - anti-roll bar to lower arm
5. Flange bolt and washer
6. Flange nut and washer
7. Drive shaft nut - locking
8. Screw - brake disc to drive flange
9. Brake disc
10. Drive flange
11. Screw - disc shield to hub
12. Lower arm
13. Washer
14. Bush
15. Spacer
16. Nut - tie rod to front beam
17. Tie rod
18. Bolt - lower arm to body
19. Bush - lower arm to body
20. Bolt - tie rod to lower arm
21. Split pin
22. Nut - lower ball joint
23. Swivel hub
24. Nut - steering arm ball joint
25. Hub bearing
26. Circlip - bearing
27. Disc shield
28. Bolt - anti-roll bar to link
29. Bolt - bush clamp
30. Steering arm

Front damper and spring

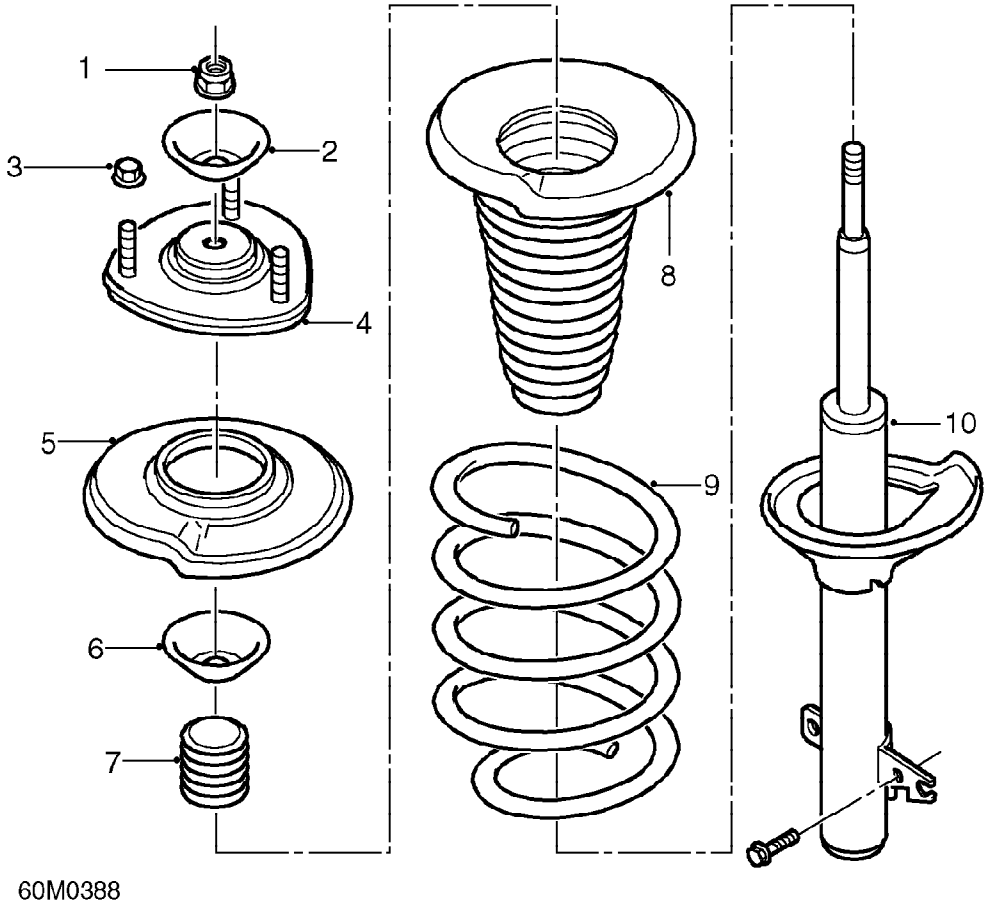

1. Self locking nut
2. Washer - cup
3. Nut flanged
4. Damper mounting base plate
5. Spring seat - upper
6. Washer - cup
7. Bump stop rubber
8. Spring mounting rubber
9. Coil spring
10. Damper unit

FRONT SUSPENSION OPERATION

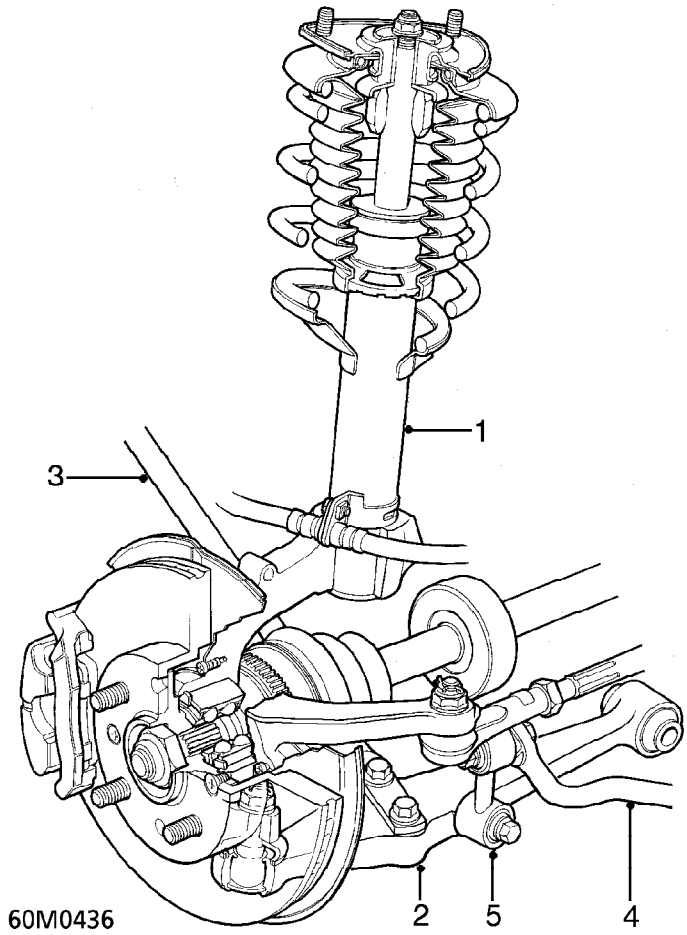

1. MacPherson strut unit
2. Lower arm
3. Tie rod
4. Anti-roll bar
5. Anti-roll bar link

The front suspension has been carefully developed to combine refinement with robustness.

The independent MacPherson struts are located by a transverse lower arm and radius arm assembly. The swivel hubs are located at the top by a wishbone type upper arm. The anti-roll bar is secured to the lower arms via rubber bushed links and is 19 mm diameter on 1.4 and 1.6 models, 23 mm diameter on diesel models and 25 mm diameter on 200 vi models.

On the MacPherson strut, the spring centre line is offset from the damper centre line to compensate for side loads inherent in a MacPherson strut. This reduces damper friction resulting in improved ride characteristics.

High longitudinal compliance gives cabin isolation, over high frequency large amplitude inputs (e.g. pot holes), on a par with much larger cars. Geometry is well controlled to give good handling responses. The suspension bump stop is at the top of the damper strut.

FRONT SPRING

Service repair no - 60.20.01

The procedure for renewing the front spring is identical to renewing the front damper. ***See this section.***

FRONT DAMPER

Service repair no - 60.30.02

Remove

1. Raise front of vehicle.

WARNING: Support on safety stands.

2. Remove front road wheel.

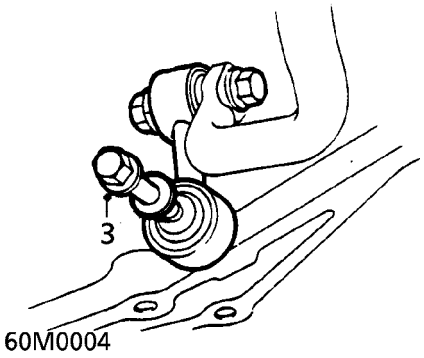

3. Remove bolt securing anti-roll bar link to suspension lower arm.

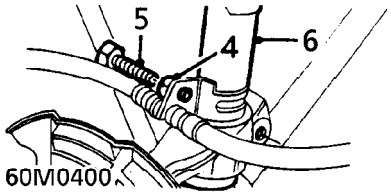

4. Remove bolt securing brake hose to front damper.
5. Remove pinch bolt securing front hub to damper.
6. Disconnect front hub from damper.

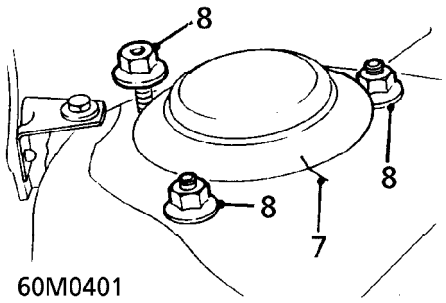

7. Mark relationship of body and top of front damper.
8. Remove 3 nuts securing front damper and spring assembly to body.
9. Remove front damper from vehicle.
   Do not carry out further dismantling if component is removed for access only.
10. Position spring compressor tool **18G 1516** in vice.

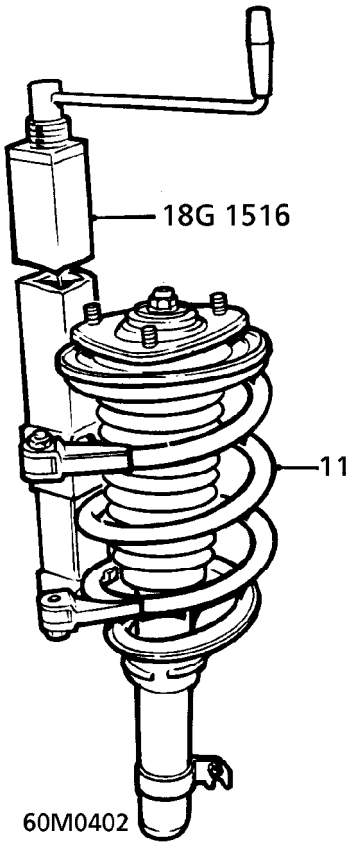

11. Position spring and damper assembly on spring compressor and ensure lugs and arms on compressor firmly hold spring, refer to illustration.

12. Compress spring approximately 5-8 cm.

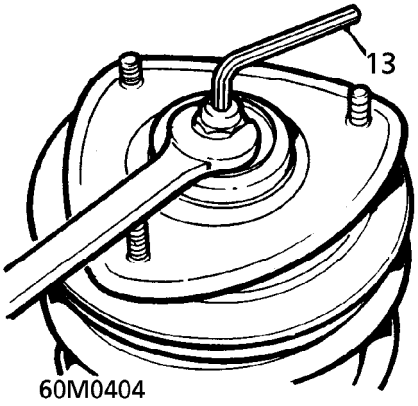

13. Restrain damper shaft using a 6 mm Allen key, remove the damper shaft nut using a 19 mm spanner.

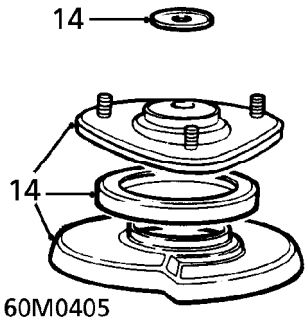

14. Remove washer, mounting base and spring mounting plate.

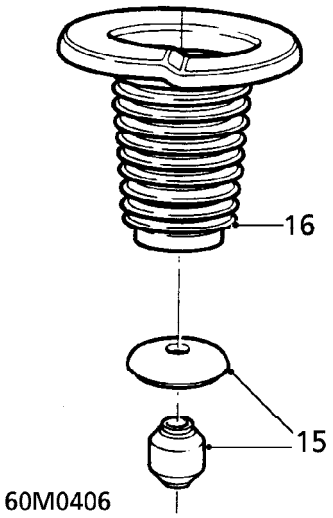

15. Remove washer and bump stop from damper shaft.
16. Remove dust cover from damper.
17. Remove damper from spring.
18. Remove spring from spring compressor tool **18G 1516.**
19. Inspect damper dust cover and bump stop for signs of deterioration or damage.
20. Clean damper dust cover, spring mounting plate and mounting base.
21. Position spring on spring compressor and ensure lugs and arms on compressor firmly hold spring. Compress spring.
22. Fit damper to spring and ensure base of spring is correctly located on damper.
23. Fit damper dust cover, bump stop and washer. Ensure dust cover is pushed fully down damper shaft.
24. Fit spring mounting plate, mounting base and washer to damper and spring assembly.
25. Fit damper shaft nut, restrain damper shaft using a 6 mm Allen key and tighten nut to 40 Nm.
26. Remove damper and spring assembly from spring compressor tool.

Refit

1. Fit and align front damper and spring assembly to body.
2. Fit 3 nuts, securing damper and front spring assembly to body and tighten to to 30 Nm.

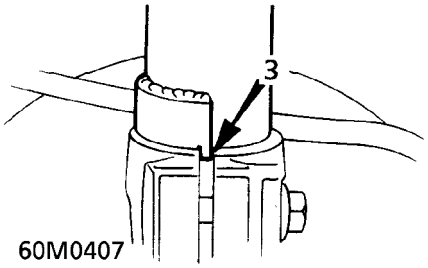

3. Locate base of front damper in hub. ensure locating lug on damper engages in slot on hub.
4. Fit pinch bolt securing front hub to damper and tighten to 80 Nm.
5. Align anti-roll bar link to suspension lower arm, fit bolt and tighten to 60 Nm.
6. Fit road wheel(s) and tighten nuts to correct torque. ***See INFORMATION, Torque wrench settings.***
7. Remove stand(s) and lower vehicle.

FRONT HUB

Service repair no - 60.25.01

Remove

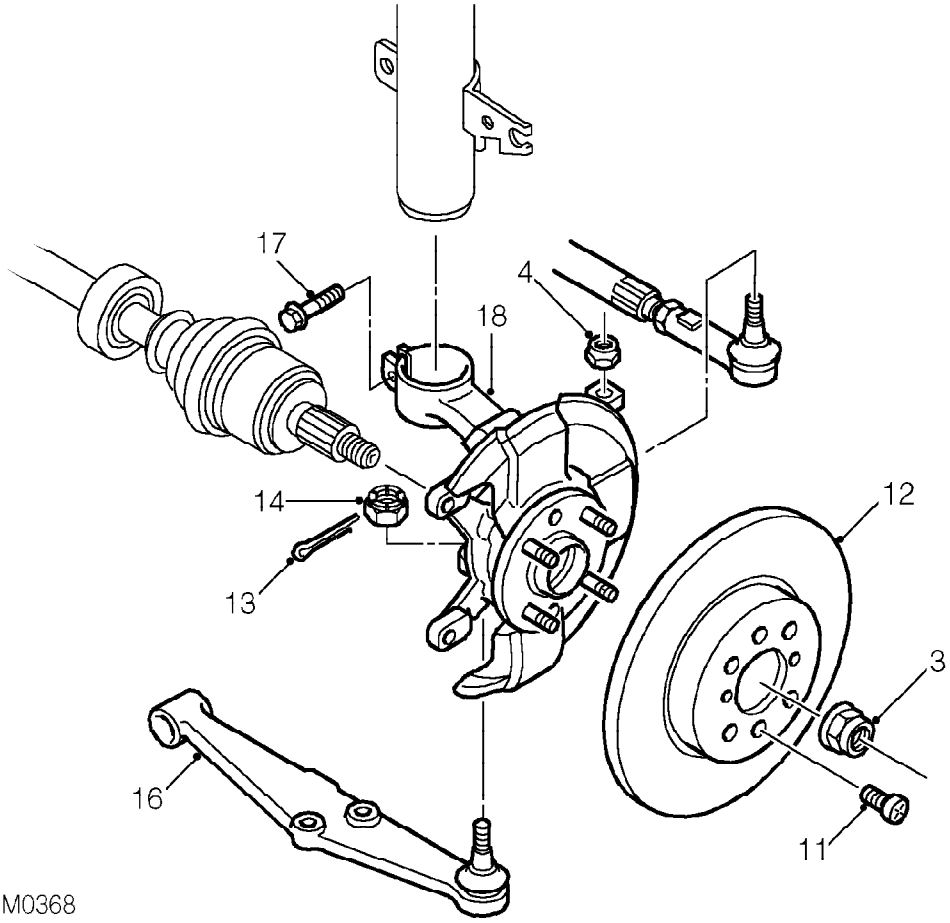

1. Raise front of vehicle.

WARNING: Support on safety stands.

2. Remove front road wheel.
3. Remove and discard drive shaft nut.
4. Remove nut securing track rod end to front hub.

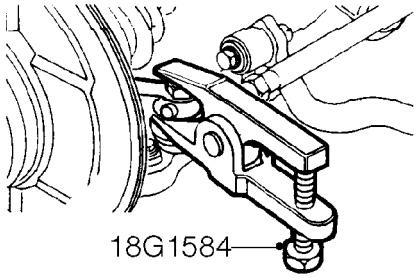

60M0369

5. Break taper joint using tool **18G 1584.**
6. Disconnect track rod end from front hub.

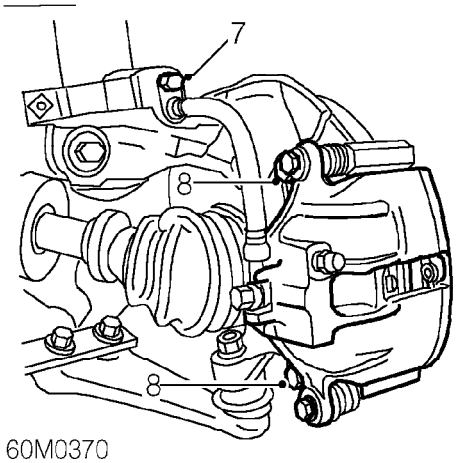

60M0370

7. Remove bolt securing brake hose to front damper.
8. Remove 2 bolts and collect washers securing brake caliper to front hub.
9. Release brake caliper from front hub and tie aside.

CAUTION: Do not allow caliper to hang on brake hose.

10. Mark relationship of brake disc and front hub for refitment.
11. Remove 2 screws securing brake disc to front hub.
12. Remove brake disc from front hub.
13. Remove and discard split pin from castellated nut securing front hub to lower arm.
14. Loosen castellated nut securing front hub to lower arm, until flush with the end of the joint. If necessary, apply penetrating oil to joint.

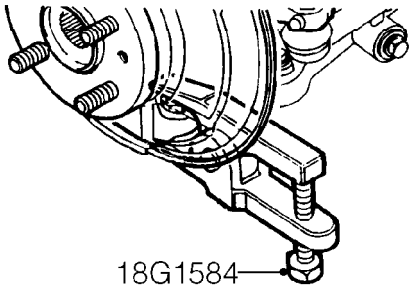

60M0371

15. Break taper joint using tool **18G 1584** .

CAUTION: Be careful not to damage the rubber boot on lower ball joint.

16. Remove nut from lower ball joint and release lower arm from front hub.
17. Remove pinch bolt securing front hub to damper.
18. Remove front hub assembly.

Refit

1. Fit front hub assembly onto drive shaft.
2. Locate base of front damper in hub. Ensure locating lug on damper engages in slot on hub.
3. Clean lower ball joint and mating face of front hub.
4. Locate front hub on lower arm ball joint.
5. Fit castellated nut securing hub to lower arm and tighten to 55 Nm, then align next slot in nut with split pin hole.
6. Fit new split pin through castellated nut and secure.
7. Fit pinch bolt securing damper to front hub and tighten to 80 Nm.
8. Clean mating surfaces of brake disc and front hub.
9. Align reference marks and fit brake disc to front hub.
10. Fit screws securing brake disc to front hub and tighten to 10 Nm.
11. Fit brake caliper to front hub.
12. Fit bolts securing brake caliper to front hub and tighten to 108 Nm.
13. Align brake hose bracket to front damper, fit bolt and tighten to 25 Nm.
14. Connect track rod end to front hub, fit NEW nut and tighten to 45 Nm.
15. Fit road wheel(s) and tighten nuts to correct torque. ***See INFORMATION, Torque wrench settings.***
16. Remove stand(s) and lower vehicle.
17. Fit new nut securing front hub to drive shaft and tighten to 180 Nm. Stake nut to drive shaft.

FRONT HUB BEARING

Service repair no - 60.25.14

Remove

1. Raise front of vehicle.

WARNING: Support on safety stands.

2. Remove front road wheel.
3. Remove front hub. ***See this section.***

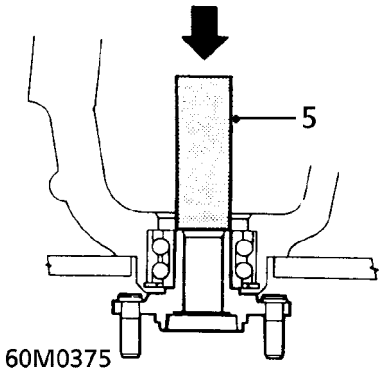

4. Position hub beneath press.
5. Using a suitable size drift, press out drive flange from front hub.

NOTE: Part of the bearing inner track will remain on the drive flange.

6. Remove front hub from press.

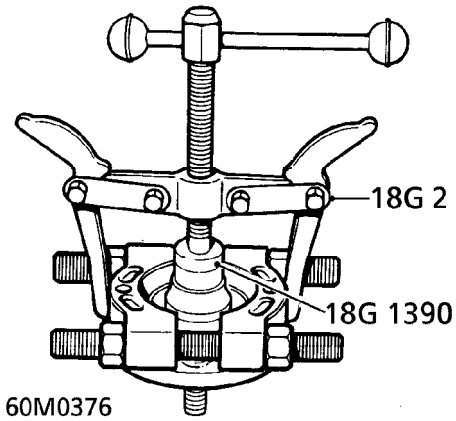

7. Hold drive flange securely in vice.
8. Clamp 2 halves of bearing separator tool around the bearing inner track on drive flange, ensure inner lip of tool engages behind inner track.
9. Using tool **18G 2** and thrust pad **18G 1390** withdraw bearing inner track from drive flange.

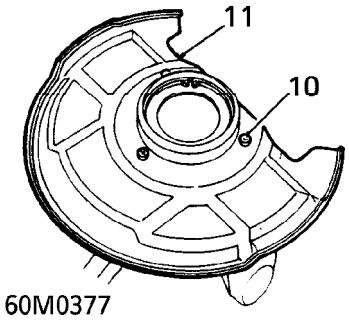

10. Remove 3 screws securing brake disc shield to front hub.
11. Remove brake disc shield.

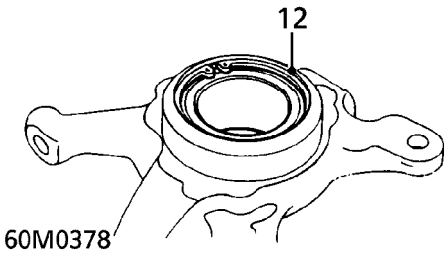

12. Remove circlip securing bearing in front hub.

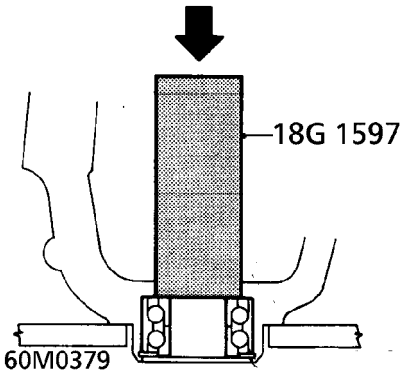

13. Position front hub beneath press.
14. Position tool **18G 1597** to bearing and press out bearing from front hub. Discard bearing.

CAUTION: Never re-use an existing bearing.

Refit

1. Thoroughly clean front hub and drive flange.
2. Position front hub beneath press.

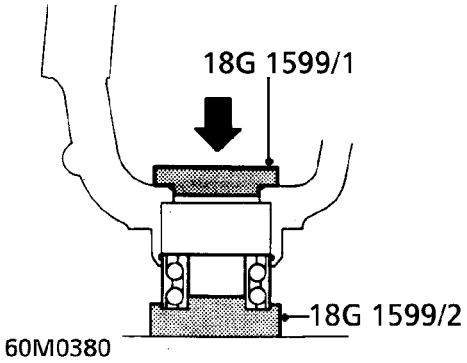

3. Locate new bearing on tool **18G 1599/1.**
4. Fit tool **18G 1599/2** to front hub and carefully press hub onto new bearing.
5. Fit circlip securing bearing in hub.
6. Fit brake disc shield to front hub.
7. Fit 3 screws securing brake disc shield to front hub and tighten to 9 Nm.

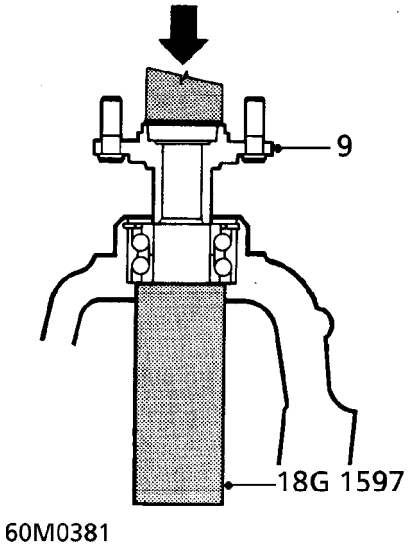

8. Support front hub on tool **18G 1597.**
9. Press drive flange into front hub.
10. Fit front hub. ***See this section.***
11. Fit road wheel(s) and tighten nuts to correct torque. ***See INFORMATION, Torque wrench settings.***
12. Remove stand(s) and lower vehicle.

ANTI-ROLL BAR

Service repair no - 60.10.01

Remove

1. Raise front of vehicle.

WARNING: Support on safety stands.

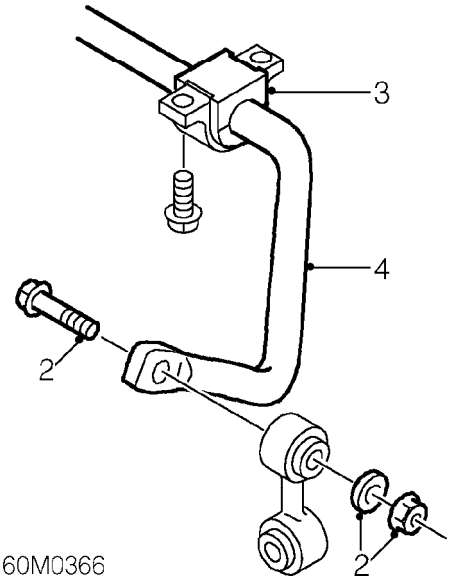

2. Remove bolts securing anti-roll bar to anti-roll bar links and collect nuts and washers.
3. Remove anti-roll bar bushes. ***See this section.***
4. Remove anti-roll bar.

Refit

1. Fit anti-roll bar.
2. Fit anti-roll bar bushes. ***See this section.***
3. Fit bolts, nuts and washers securing anti-roll bar to anti-roll bar links and tighten bolts to 110 Nm.
4. Remove stand(s) and lower vehicle.

ANTI-ROLL BAR LINK

Service repair no - 60.10.02

Remove

1. Raise front of vehicle.

WARNING: Support on safety stands.

2. Remove front road wheel.

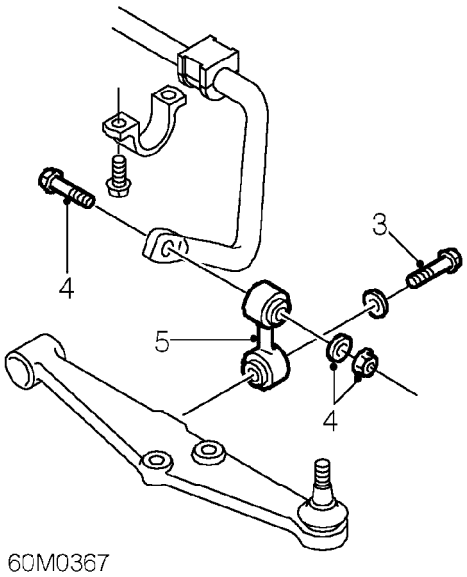

3. Remove bolt and washer securing anti-roll bar link to lower arm.
4. Remove nut, washer and bolt securing link to anti-roll bar.
5. Remove anti-roll bar link.

Refit

1. Position link to anti-roll bar and lower arm.
2. Fit bolt, washer and nut securing link to anti-roll bar, but do not tighten.
3. Fit bolt and washer securing link to lower arm and tighten to 60 Nm.
4. Tighten nut and bolt securing link to anti-roll bar to 45 Nm.
5. Fit road wheel(s) and tighten nuts to correct torque. ***See INFORMATION, Torque wrench settings.***
6. Remove stand(s) and lower vehicle.

ANTI-ROLL BAR BUSHES

Service repair no - 60.10.05

Remove

1. Raise front of vehicle.

WARNING: Support on safety stands.

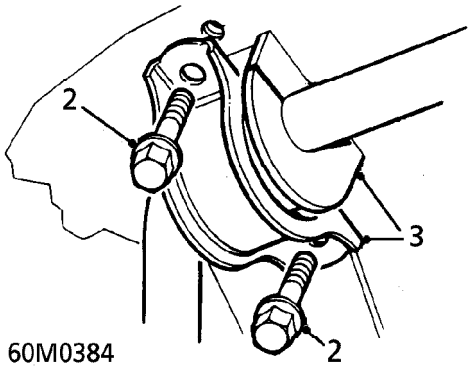

2. Remove 2 bolts securing anti-roll bar bush clamp to rear beam.
3. Remove clamp and bush.
4. Remove bush from clamp.

Refit

1. Clean bush mating surfaces.
2. Smear bore of bush with rubber grease.
3. Fit bush to anti-roll bar, ensuring split faces rearwards.
4. Fit clamp to bush.
5. Fit and tighten bolts to 22 Nm.
6. Repeat remove and refit operations on second bush.
7. Remove stand(s) and lower vehicle.

SUSPENSION LOWER ARM ASSEMBLY

Service repair no - 60.35.02

Remove

1. Raise front of vehicle.

WARNING: Support on safety stands.

2. Remove front road wheel.

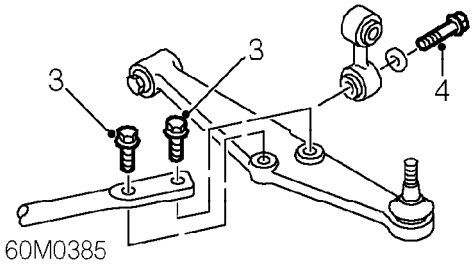

3. Remove 2 bolts securing tie rod to lower arm.
4. Remove bolt securing anti-roll bar link to lower arm.

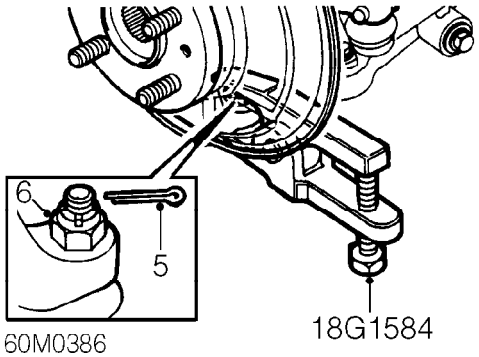

5. Remove and discard split pin from castellated nut securing front hub to lower arm.
6. Loosen castellated nut securing hub to lower arm, until flush with the end of the joint. If necessary apply penetrating oil to joint.
7. Break taper joint using tool **18G 1584.**

CAUTION: Be careful not to damage the rubber boot on lower ball joint.

8. Remove nut from lower ball joint and release lower arm from front hub.

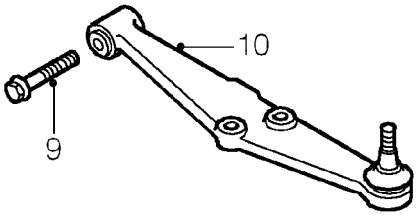

9. Remove bolt securing lower arm to rear beam.
10. Remove lower arm.

Refit

1. Clean mating surfaces of lower arm and rear beam.
2. Clean lower arm ball joint.
3. Position lower arm to rear beam, fit bolt but do not tighten.
4. Locate front hub on lower arm ball joint.
5. Fit castellated nut securing hub to lower arm and tighten to 55 Nm, then align next slot in nut with split pin hole.
6. Secure castellated nut with new split pin.
7. Align tie rod to lower arm, fit bolts and tighten to 80 Nm.
8. Align anti-roll bar link to lower arm, fit bolt and tighten to 60 Nm.
9. Tighten through bolt securing lower arm to rear beam to 45 Nm.
10. Fit road wheel(s) and tighten nuts to correct torque. ***See INFORMATION, Torque wrench settings.***
11. Remove stand(s) and lower vehicle.

SUSPENSION LOWER ARM BUSH

Service repair no - 60.35.26

Remove

1. Remove suspension lower arm. ***See this section.***

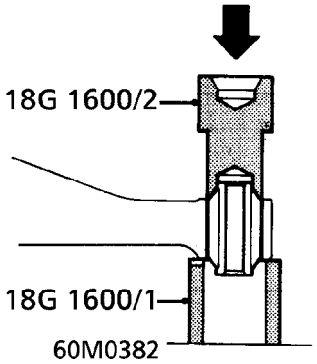

2. Hold tool **18G 1600/1** securely in a vice.
3. Position lower arm to tool **18G 1600/1.**
4. Using the small diameter end of tool **18G 1600/2,** press out bush from lower arm.

Refit

1. Clean hole in lower arm where bush will be situated.

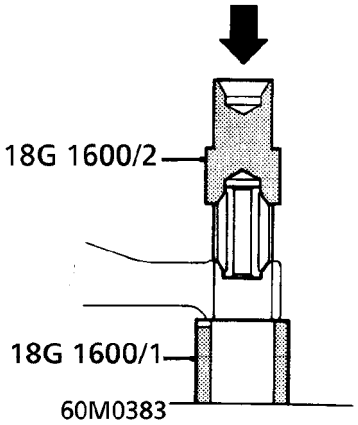

2. Position lower arm to tool **18G 1600/1.** Hold securely in a vice.
3. Using the larger diameter end of tool **18G 1600/2** press new bush into lower arm.
4. Fit suspension lower arm. ***See this section.***

FRONT TIE ROD

Service repair no - 60.40.09

Remove

1. Raise front of vehicle.

WARNING: Support on safety stands.

2. Remove front road wheel.

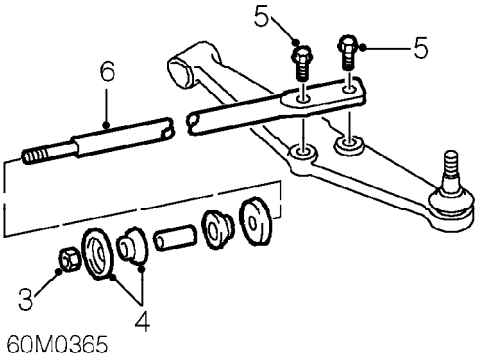

3. Remove nut securing tie rod to front beam.
4. Remove flanged washer and bush.
5. Remove 2 bolts securing tie rod to lower arm.
6. Remove tie rod.
7. Remove spacer, bush and flanged washer from tie rod.

Refit

1. Clean threads of tie rod bolts and holes in lower suspension arm.
2. Fit flanged washer, bush and spacer to tie rod.
3. Locate tie rod in front beam, fit bush and flanged washer.
4. Fit nut securing tie rod to front subframe, but do not tighten.
5. Fit bolts securing tie rod to lower arm and tighten to 80 Nm.
6. Fit nut securing tie rod to front beam and tighten to 45 Nm.
7. Fit road wheel(s) and tighten nuts to correct torque. ***See INFORMATION, Torque wrench settings.***
8. Remove stand(s) and lower vehicle.

FRONT BEAM

Service repair no - 60.35.21

Remove

1. Raise front of vehicle.

WARNING: Support on safety stands.

2. *'L' Series:* Remove undertray. ***See BODY, Exterior fittings.***
   'K16 with VVC': Remove splash shield. ***See BODY, Exterior fittings.***

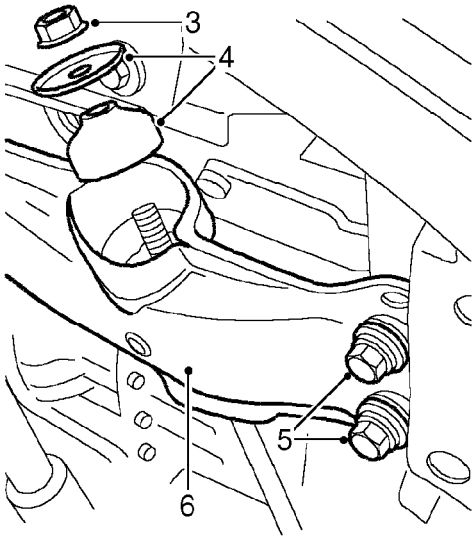

60M0374A

3. Remove nut securing each tie rod to front beam.
4. Remove 2 flanged washers and 2 bushes.
5. Remove 4 bolts securing front beam to body.
6. Remove front beam.

Refit

1. Clean mating faces of front beam and body.
2. Position front beam to body.
3. Fit 4 bolts securing front beam to body and tighten to 100 Nm.
4. Fit bushes and flanged washers to tie rods, fit nuts and tighten to 45 Nm.
5. *'L' Series:* Fit undertray. ***See BODY, Exterior fittings.***
   'K16 with VVC': Fit splash shield. ***See BODY, Exterior fittings.***
6. Remove stand(s) and lower vehicle.

REAR BEAM - WITH POWER STEERING RACK

Service repair no - 60.35.23

Remove

1. Raise front of vehicle.

WARNING: Support on safety stands.

2. Remove road wheel(s).
3. Remove exhaust front pipe. ***See MANIFOLD & EXHAUST SYSTEMS, Repairs.***
4. Remove steering rack. ***See STEERING, Repairs.***

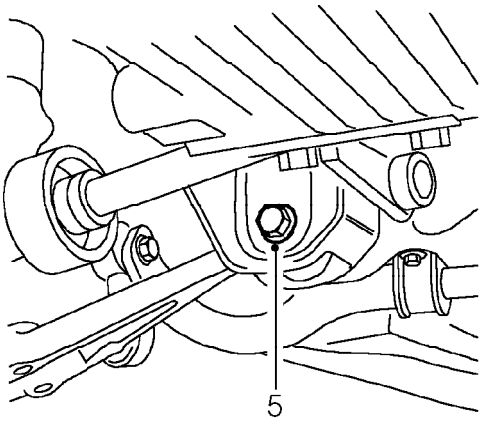

60M0441

5. Remove 2 bolts securing both lower arms to rear beam.

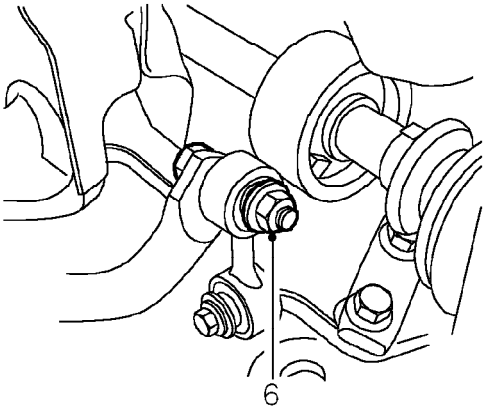

60M0442

6. Remove 2 bolts securing both anti-roll bar links to anti-roll bar.

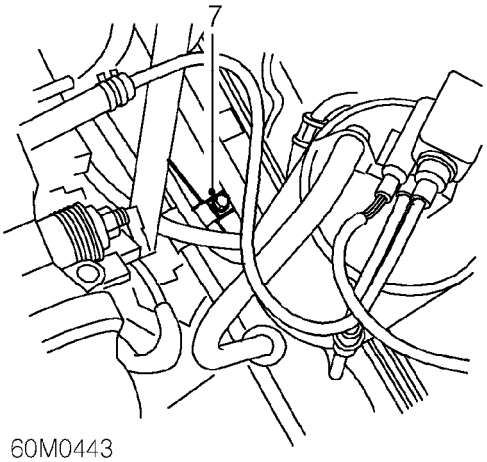

60M0443

7. Remove bolt securing power steering pipe to rear beam.
8. Remove bolt securing clutch cable bracket to rear beam.

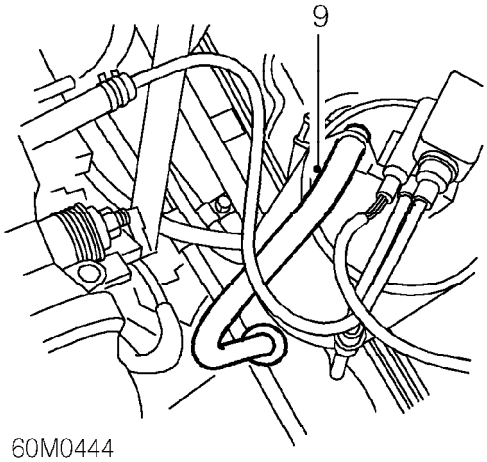

60M0444

9. *'K' Series only:* Release evaporative emission canister vent hose from rear beam.

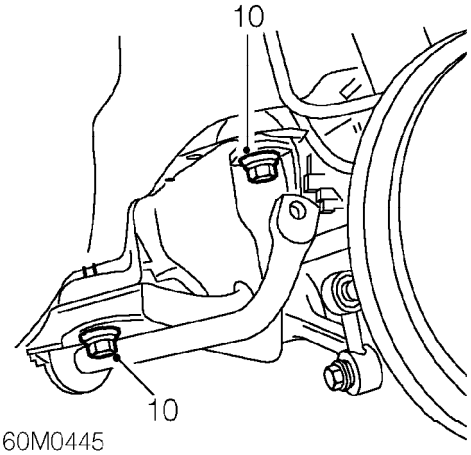

60M0445

10. Loosen 4 bolts securing rear beam to body.

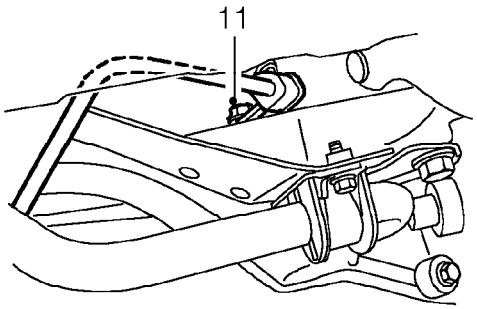

60M0446

11. Lower beam to gain access to bolt securing PAS pipe to beam.
12. Remove bolt securing pipe to beam.

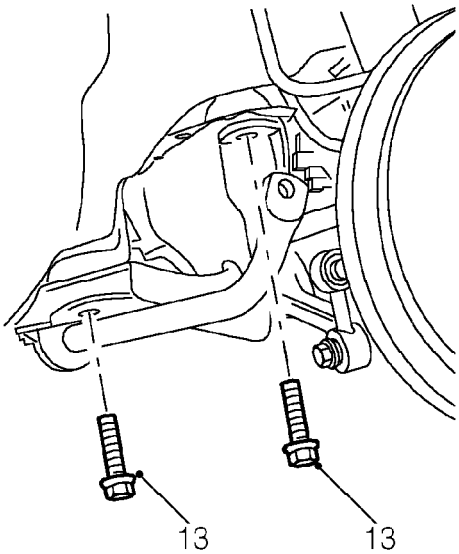

60M0447

13. With assistance, remove 4 bolts securing beam to body. Release beam from lower arms and lower to floor.

Do not carry out further dismantling if component is removed for access only.

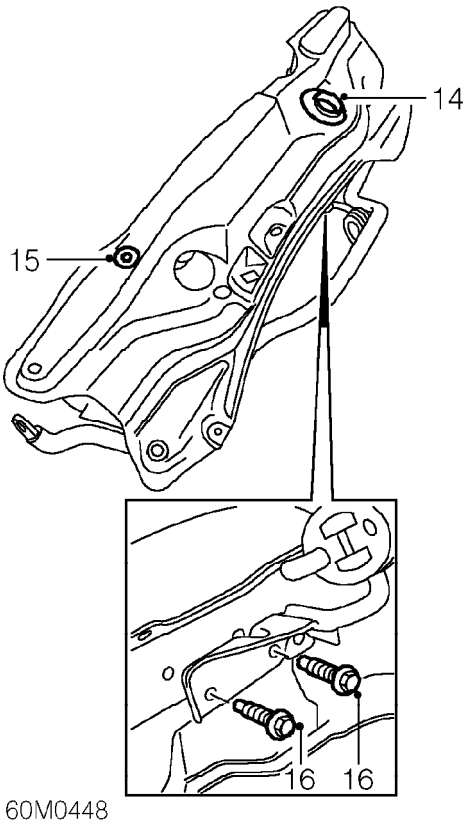

60M0448

14. Remove steering column mounting rubber.
15. *'K' Series only:* Remove evaporative emission canister vent hose plastic collar from beam.
16. Remove 2 bolts securing exhaust front pipe mounting bracket to beam.
17. Remove anti-roll bar bushes. ***See this section.***
18. Remove anti-roll bar and position to new beam.
19. Fit anti-roll bar bushes. ***See this section.***
20. Position exhaust front pipe mounting bracket to beam and secure with bolts.
21. Fit steering column mounting rubber to beam.
22. *'K' Series only:* Fit evaporative emission canister vent hose plastic collar to beam.

Refit

1. With assistance, offer beam to body and engage lower arms.
2. Fit bolts securing beam to body. DO NOT tighten bolts.
3. Position PAS pipe to beam and secure with bolt.
4. Tighten bolts securing beam to body to 100 Nm.
5. *'K' Series only:* Fit evaporative emission canister vent hose to beam.
6. Position clutch cable to beam and secure with bolt.
7. Position PAS pipe to beam and secure with bolt.
8. Fit bolts securing anti-roll bar to anti-roll bar links and tighten to 45 Nm.
9. Fit bolts securing lower arms to beam and tighten to 45 Nm.
10. Fit steering rack. ***See STEERING, Repairs.***
11. Fit exhaust front pipe. ***See MANIFOLD & EXHAUST SYSTEMS, Repairs.***
12. Fit road wheel(s) and tighten nuts to correct torque. ***See INFORMATION, Torque wrench settings.***
13. Remove stand(s) and lower vehicle.

REAR BEAM - WITH MANUAL STEERING RACK

Service repair no - 60.35.23

Remove

1. Raise front of vehicle.

WARNING: Support on safety stands.

2. Remove road wheel(s).
3. Remove exhaust front pipe. ***See MANIFOLD & EXHAUST SYSTEMS, Repairs.***
4. Remove steering rack. ***See STEERING, Repairs.***

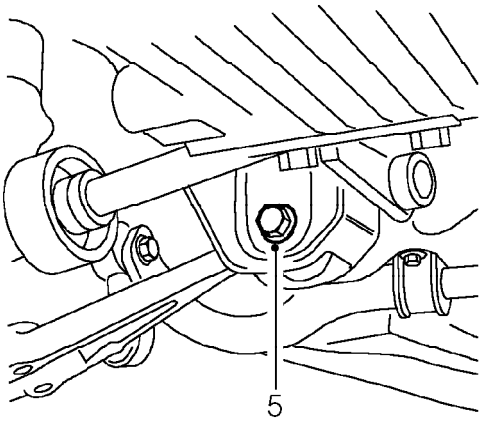

60M0441

5. Remove 2 bolts securing both lower arms to rear beam.

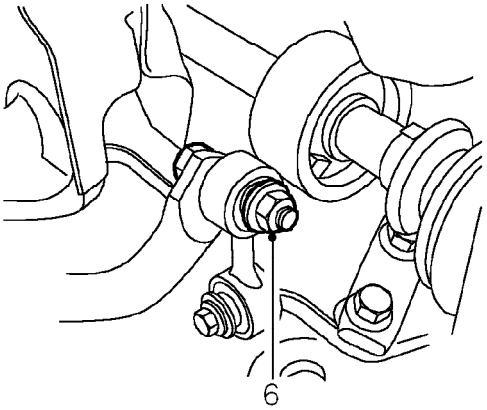

60M0442

6. Remove 2 bolts securing both anti-roll bar links to anti-roll bar.

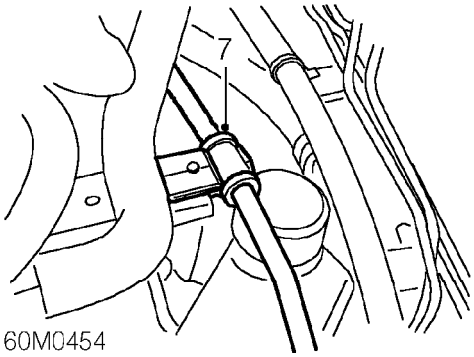

60M0454

7. Remove bolt securing clutch cable bracket to rear beam.

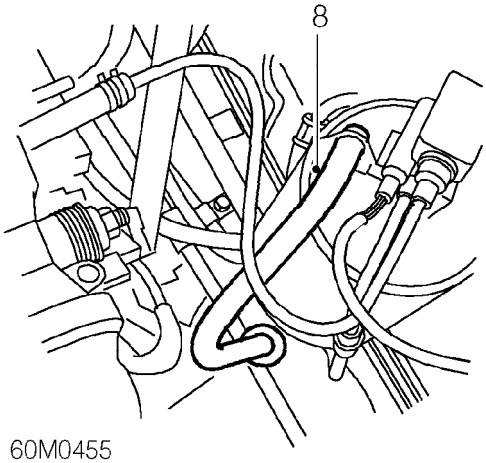

60M0455

8. *'K' Series only:* Release evaporative emission canister vent hose from rear beam.

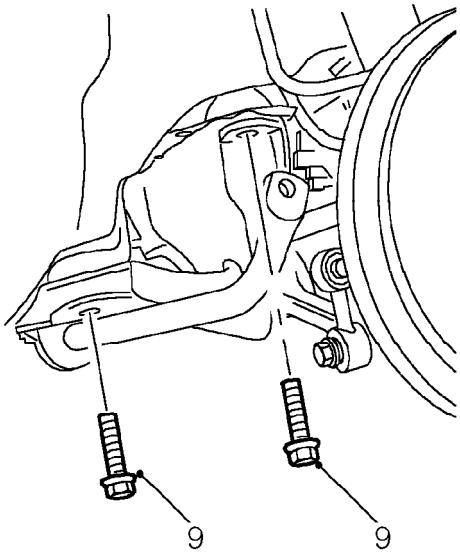

60M0456

9. With assistance, remove 4 bolts securing beam to body. Release beam from lower arms and lower to floor.

Do not carry out further dismantling if component is removed for access only.

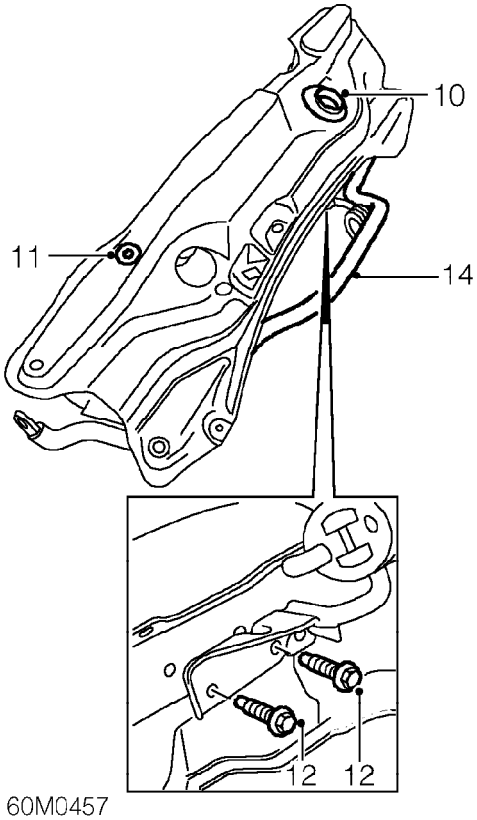

10. Remove steering column mounting rubber.
11. *'K' Series only:* Remove evaporative emission canister vent hose plastic collar from beam.
12. Remove 2 bolts securing exhaust front pipe mounting bracket to beam.
13. Remove anti-roll bar bushes. ***See this section.***
14. Remove anti-roll bar and position to new beam.
15. Fit anti-roll bar bushes. ***See this section.***
16. Position exhaust front pipe mounting bracket to beam and secure with bolts.
17. Fit steering column mounting rubber to beam.
18. *'K' Series only:* Fit evaporative emission canister vent hose collar to beam.

Refit

1. With assistance, offer beam to body and engage lower arms.
2. Fit bolts securing beam to body and tighten to 100 Nm.
3. *'K' Series only:* Fit evaporative emission canister vent hose to beam.
4. Position clutch cable to beam and secure with bolt.
5. Fit bolts securing anti-roll bar to anti-roll bar links and tighten to 45 Nm.
6. Fit bolts securing lower arms to beam and tighten to 60 Nm.
7. Fit steering rack. ***See STEERING, Repairs.***
8. Fit exhaust front pipe. ***See MANIFOLD & EXHAUST SYSTEMS, Repairs.***
9. Fit road wheel(s) and tighten nuts to correct torque. ***See INFORMATION, Torque wrench settings.***
10. Remove stand(s) and lower vehicle.

CONTENTS

Page

DESCRIPTION AND OPERATION

REAR SUSPENSION COMPONENTS 1
REAR SUSPENSION OPERATION 4

REPAIRS

REAR SPRING 1
REAR DAMPER 1
REAR ANTI-ROLL BAR 3
REAR HUB AND BEARING - MODELS WITH DISC BRAKES 4
REAR HUB AND BEARING - MODELS WITH DRUM BRAKES WITHOUT ABS 4
REAR STUB AXLE - MODELS WITH DISC BRAKES 5
REAR STUB AXLE - MODELS WITH DRUM BRAKES 6
'H' FRAME BUSH 11
'H' FRAME - MODELS WITH DISC BRAKES 13
'H' FRAME - MODELS WITH DRUM BRAKES 17
'H' FRAME MOUNTING BRACKET 22
REAR HUB AND BEARING - MODELS WITH DRUM BRAKES AND ABS 24

REAR SUSPENSION COMPONENTS

Rear hub and bearing - models with disc brakes

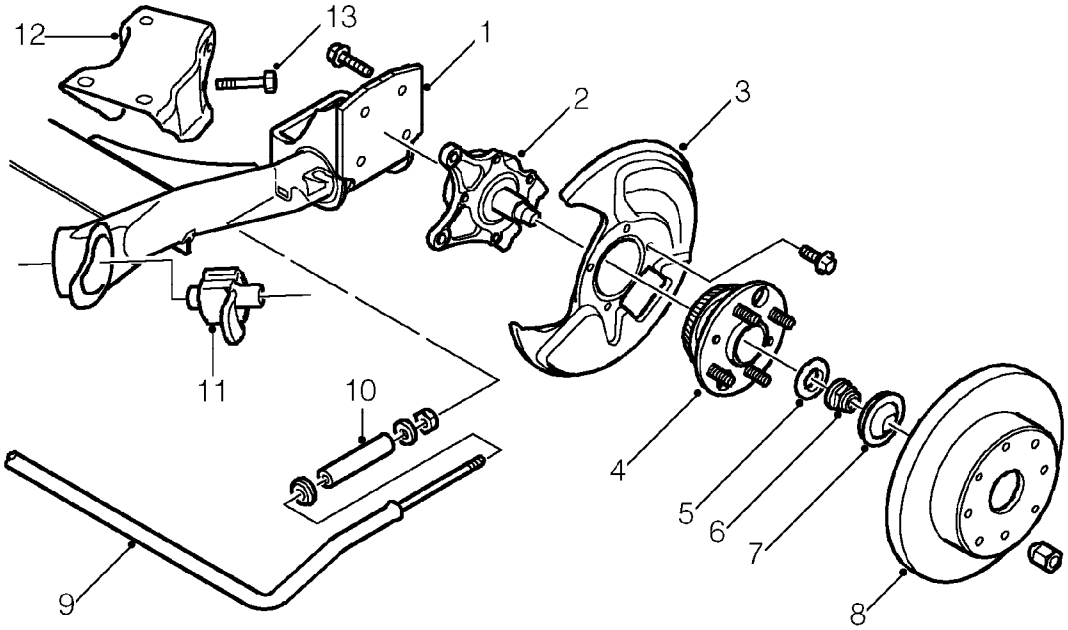

60M0398A

1. 'H' frame
2. Stub axle
3. Shield - disc
4. Hub
5. Spacer
6. Nut
7. Dust cover
8. Brake disc
9. Anti-roll bar (where fitted)
10. Collar - anti-roll bar
11. Pivot bush - 'H' frame
12. 'H' frame mounting bracket
13. Bolt - pivot bush to mounting bracket

Rear hub and bearing - models with drum brakes

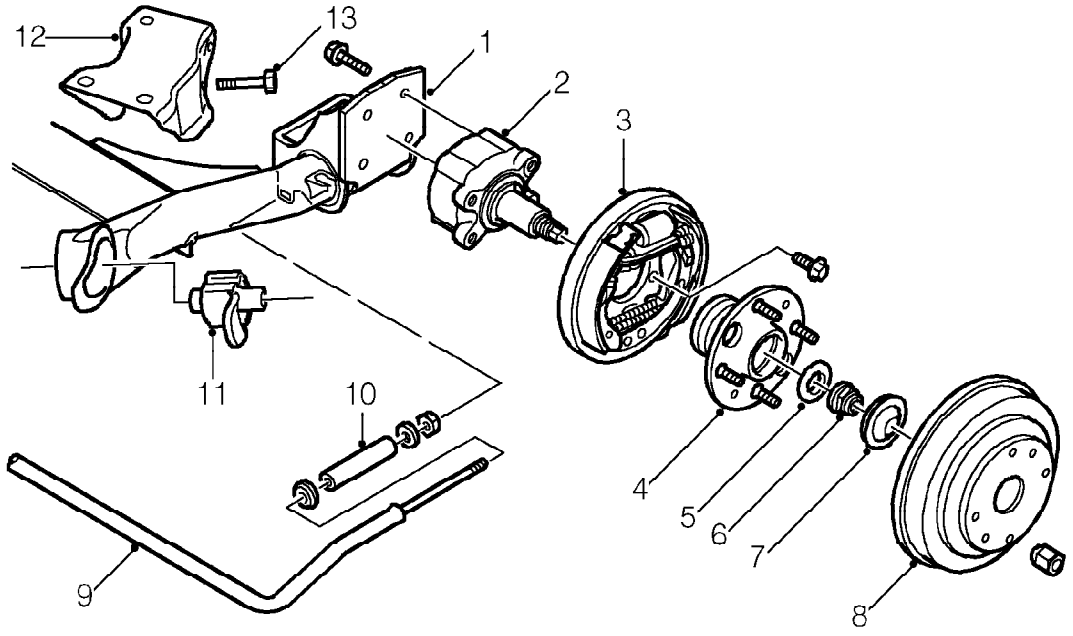

60M0397

Model without ABS illustrated

1. 'H' frame
2. Stub axle
3. Brake shoes and backplate assembly
4. Hub
5. Spacer
6. Nut
7. Dust cover
8. Brake drum
9. Anti-roll bar (where fitted)
10. Collar - anti-roll bar
11. Pivot bush - 'H' frame
12. 'H' frame mounting bracket
13. Bolt - pivot bush to mounting bracket

Rear damper and spring

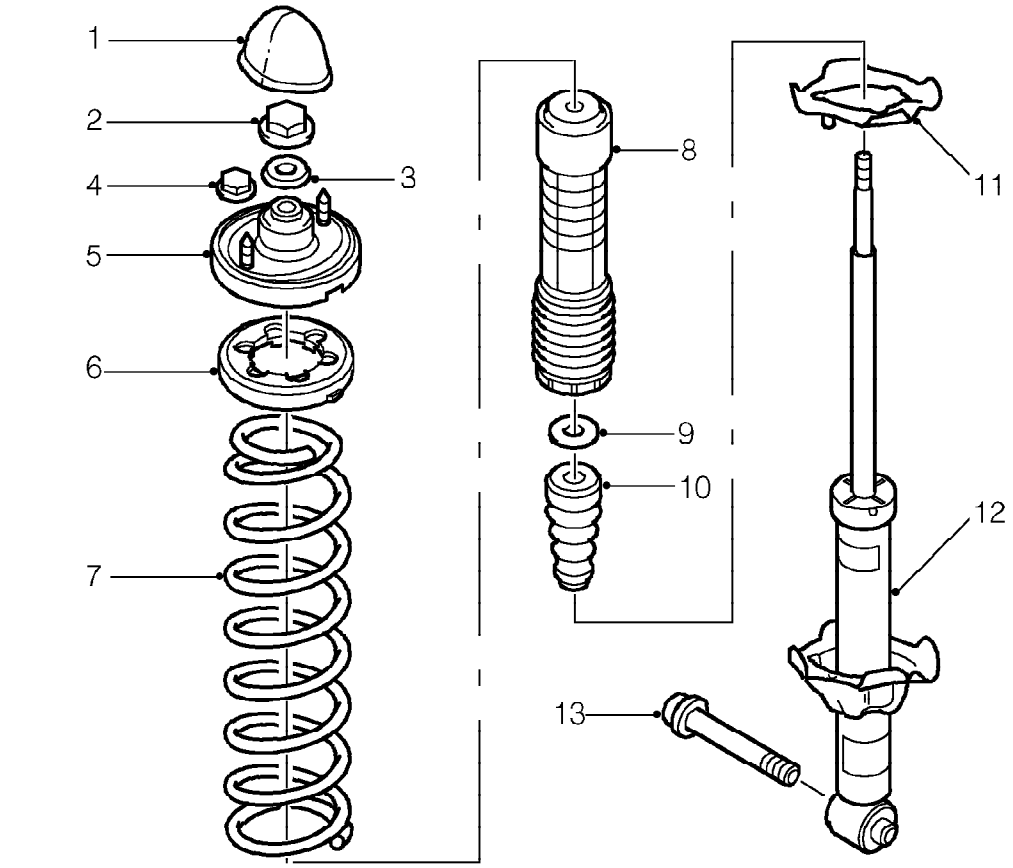

1. Mounting cap - damper
2. Locknut - damper
3. Washer - damper mounting
4. Locknut - damper to body
5. Plate - upper assembly mounting
6. Rubber - upper spring mounting
7. Coil spring
8. Dust cover assembly
9. Plate - bump stop
10. Bump stop
11. Rubber - lower spring mounting
12. Damper unit
13. Bolt - damper to ’H’ frame

REAR SUSPENSION OPERATION

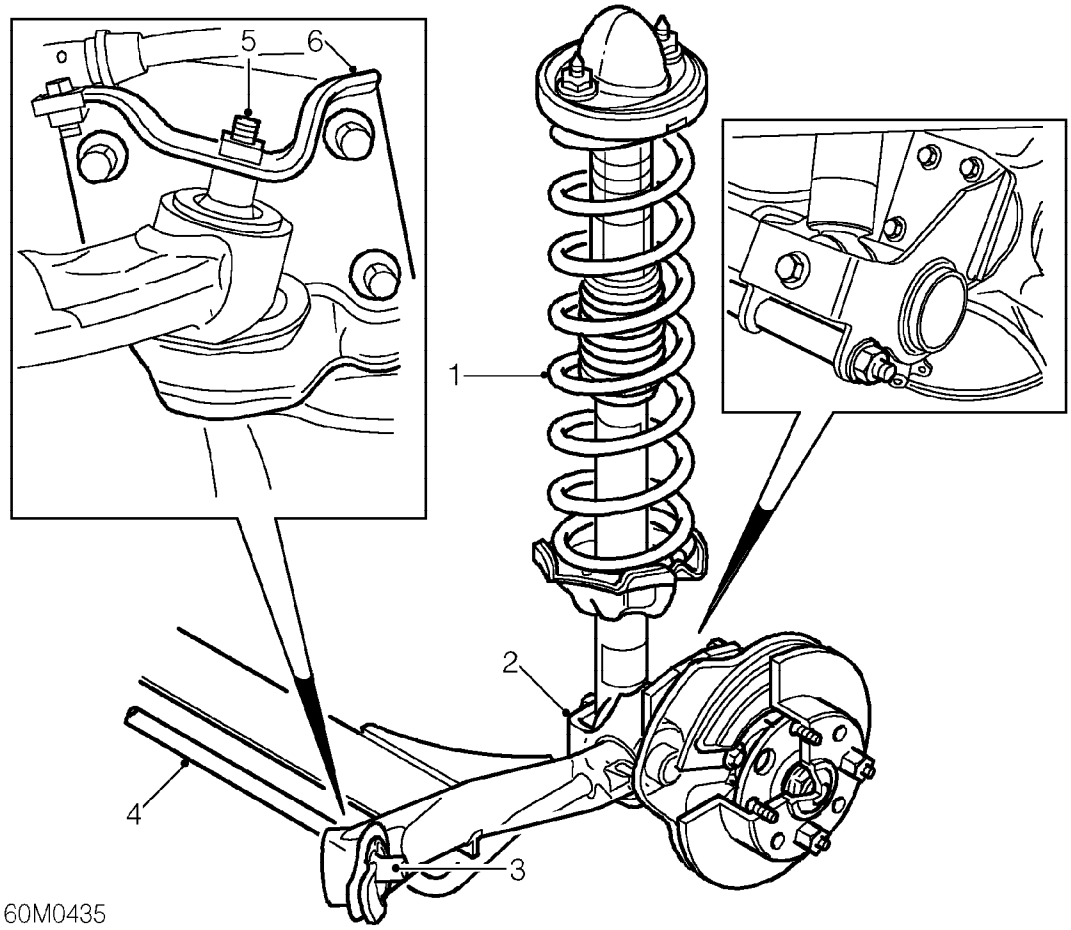

Rear suspension - model with disc brakes illustrated

1. Coil spring and damper assembly
2. 'H' frame
3. Pivot bush
4. Anti-roll bar (where fitted)
5. Pivot bush bolt
6. 'H' frame mounting bracket

The rear suspension consists of a 'H' frame with coil springs and telescopic shock absorbers. The widely used 'twist beam' principle has been refined; instead of laterally aligned pivot bushes, they are angled and have a special construction. Each bush consists of a combination of rubber, steel interleaving and voids which results in precisely tuned responses in different directions; the forward/rearward rate is substantially higher than the vertical and lateral rates.

Additional stiffening is provided by a 16 mm diameter anti-roll bar on diesel models and an 18 mm diameter anti-roll bar on 200 *vi* and 1.8 models. Vertical suspension movements are absorbed and controlled by the spring and damper arrangement. Under hard cornering conditions, the slight sideways displacement of the twist beam assembly is gradually arrested by a 'snubber' which is an integral part of the bush. The effect is that, the rear wheels start to steer in phase with the front wheels.

The kerb height of the 200 *vi* and 1.8 models is 20 mm lower than the diesel and standard models.

REAR SPRING

Service repair no - 64.20.01

The procedure for renewing the rear spring is identical to renewing the rear damper. ***See this section.***

REAR DAMPER

Service repair no - 64.30.02

Remove

1. Raise rear of vehicle.

WARNING: Support on safety stands.

2. Remove road wheel(s).

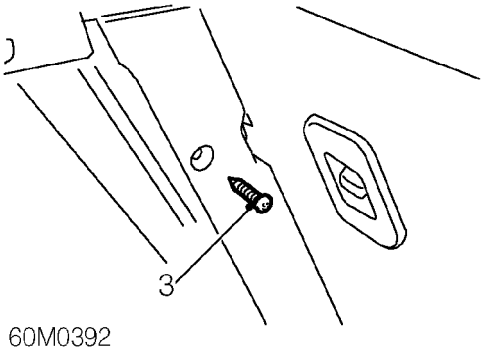

60M0392

3. Remove screw securing side carpet and pull aside for access.

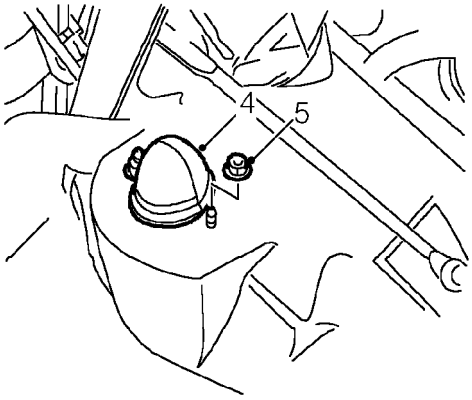

60M0393

4. Remove upper cover from damper.
5. Remove 2 nuts securing damper to body.
6. Support 'H' frame on jack.

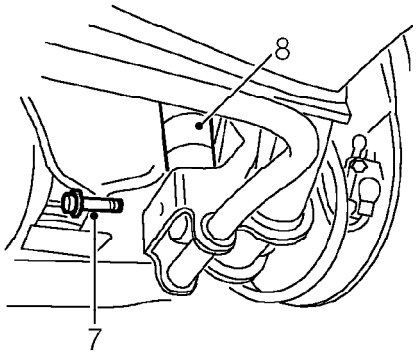

60M0394

7. Remove bolt securing damper to 'H' frame.
8. Release and remove spring and damper assembly.

Do not carry out further dismantling if component is removed for access only.

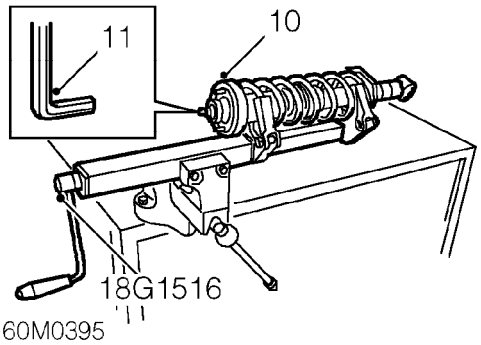

60M0395

9. Position spring compressor tool **18G 1516** in vice.
10. Position spring and damper assembly to spring compressor with lower mounting and upper mounting studs vertical and spring stop to rear, as illustrated.
11. Compress spring 2 - 3 cm, hold shaft with 5 mm Allen key and remove spring mounting plate nut. Discard nut.

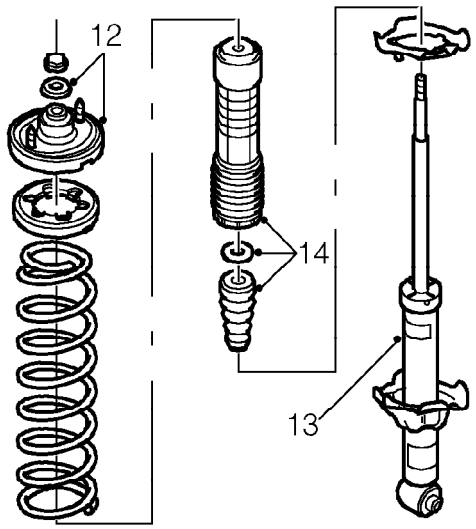

60M0396

12. Remove washer and mounting plate.
13. Remove damper from spring.
14. Remove bump stop plate, bump stop and dust cover.
15. Inspect damper and spring mounting rubbers for deterioration and damage.
16. Inspect dust cover for damage.

Refit

1. Fit bump stop, bump stop plate and dust cover to damper.
2. Fit damper to spring ensuring lower mounting is vertical and spring stop is to rear.
3. Compress spring and fit spring mounting plate ensuring studs are vertical, fit washer and new nut.
4. Hold shaft with Allen key and tighten nut to 29 Nm.
5. Release tension ensuring spring mounting plate and damper are aligned.
6. Remove spring and damper assembly from spring compressor.
7. Remove spring compressor from vice.
8. Fit and align spring and damper assembly to vehicle. Fit new top mounting nuts but DO NOT tighten.
9. Raise 'H' frame and fit damper bolt, DO NOT tighten.
10. Raise jack to support weight of vehicle, tighten damper top mounting nuts to 38 Nm and fit cover.
11. Tighten bolt securing damper to 'H' frame to 80 Nm.
12. Remove jack.
13. Fit road wheel(s) and tighten nuts to correct torque. ***See INFORMATION, Torque wrench settings.***
14. Remove stand(s) and lower vehicle.
15. Position boot side carpet and secure with screw.

REAR ANTI-ROLL BAR

Service repair no - 64.35.08

Remove

1. Raise rear of vehicle.

WARNING: Support on safety stands.

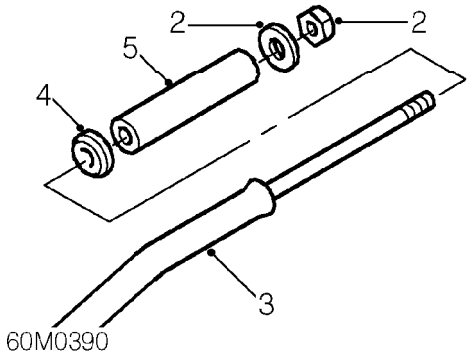

2. Remove 2 nuts and washers securing anti- roll bar to 'H' frame.
3. Release anti-roll bar spigots from 'H' frame and remove anti-roll bar.
4. Remove 2 washers from anti-roll bar.
5. Remove spacers from 'H' frame.

Refit

1. Inspect 'H' frame spacers for signs of damage; renew if necessary.
2. Fit spacers to 'H' frame.
3. Lightly grease anti-roll bar spigots.
4. Fit washers to anti-roll bar.
5. Fit anti-roll bar to 'H' frame.
6. Fit washers and nuts securing anti-roll bar to 'H' frame and tighten to 100 Nm.
7. Remove stand(s) and lower vehicle.

REAR HUB AND BEARING - MODELS WITH DISC BRAKES

Service repair no - 64.15.14

The rear hub and bearings are serviced as an assembly and cannot be individually renewed.

Remove

1. Raise rear of vehicle.

WARNING: Support on safety stands.

2. Remove brake disc. ***See BRAKES, Repairs.***

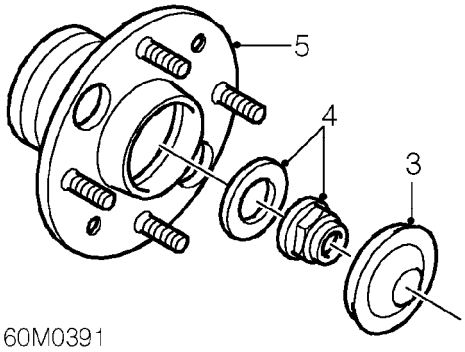

3. Remove dust cover from centre of hub.
4. Knock back staking and remove hub nut and washer. Discard nut.

NOTE: The nut threads are handed, i.e the hub nut on the LH side has a LH thread.

5. Remove hub assembly.

Refit

1. Clean hub and stub axle.
2. Lubricate seal running surface with grease.
3. Fit hub assembly.
4. Fit washer and new nut. Tighten nut to 180 Nm.
5. Stake the nut to stub axle and fit dust cover.
6. Fit brake disc. ***See BRAKES, Repairs.***
7. Remove stand(s) and lower vehicle.
8. Apply foot brake several times and then check handbrake operation.

REAR HUB AND BEARING - MODELS WITH DRUM BRAKES WITHOUT ABS

Service repair no - 64.15.14

The rear hub and bearings are serviced as an assembly and cannot be individually renewed.

Remove

1. Raise rear of vehicle.

WARNING: Support on safety stands.

2. Remove brake drum. ***See BRAKES, Repairs.***

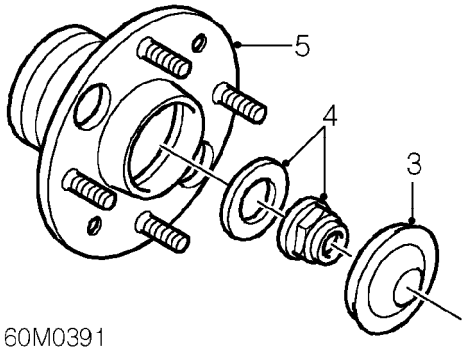

3. Remove dust cover from centre of hub.
4. Knock back staking and remove hub nut and washer. Discard nut.

NOTE: The nut threads are handed, i.e the hub nut on the LH side has a LH thread.

5. Remove hub assembly.

Refit

1. Clean hub and stub axle.
2. Lubricate seal running surface with grease.
3. Fit hub assembly.
4. Fit washer and new nut. Tighten nut to 180 Nm.
5. Stake the nut to stub axle and fit dust cover.
6. Fit brake drum. ***See BRAKES, Repairs.***
7. Remove stand(s) and lower vehicle.
8. Apply foot brake several times and then check handbrake operation.

REAR STUB AXLE - MODELS WITH DISC BRAKES

Service repair no - 64.15.20

Remove

1. Raise rear of vehicle.

WARNING: Support on safety stands.

2. Remove road wheel(s).
3. Remove rear brake disc. ***See BRAKES, Repairs.***

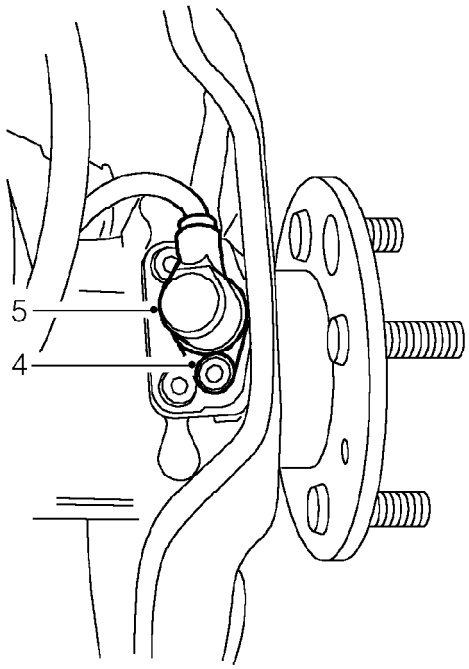

60M0437

4. Remove Torx screw securing ABS sensor to stub axle.
5. Remove ABS sensor.

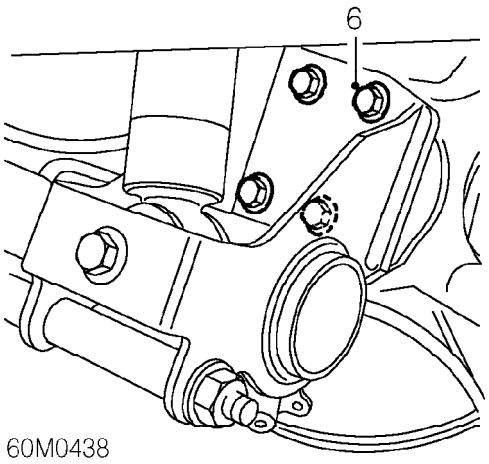

60M0438

6. Remove 4 bolts securing stub axle to 'H' frame.
7. Remove stub axle.

Do not carry out further dismantling if component is removed for access only.

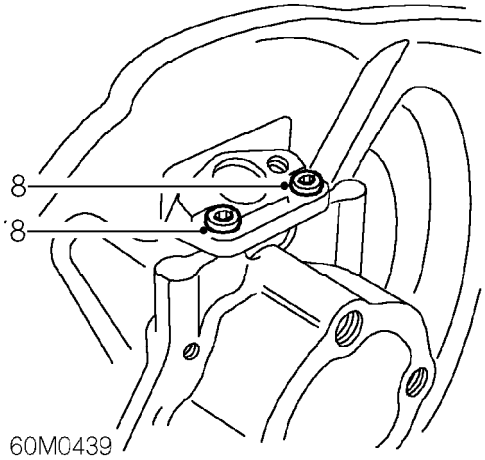

60M0439

8. Remove 2 Torx screws securing ABS sensor mounting to stub axle and remove mounting.

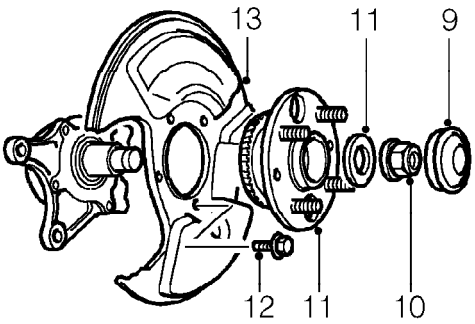

60M0440

9. Remove dust cover from centre of hub.
10. Knock back staking and remove nut securing hub to stub axle. Discard nut.
11. Remove hub from stub axle and collect spacer.
12. Remove 4 bolts securing backplate to stub axle.
13. Remove backplate and position to new stub axle.
14. Fit and tighten bolts securing backplate to stub axle to 45 Nm.
15. Fit hub to stub axle.
16. Fit spacer to hub.
17. Fit new nut to hub and tighten to 185 Nm. Stake the nut to stub axle.
18. Fit dust cover to hub.
19. Position ABS sensor mounting to stub axle and tighten Torx screws to 10 Nm.

Refit

1. Fit stub axle to 'H' frame and secure with bolts. Tighten bolts to 45 Nm.
2. Fit ABS sensor to stub axle and tighten torx screw to 6 Nm.
3. Fit rear brake disc. ***See BRAKES, Repairs.***
4. Fit road wheel(s) and tighten nuts to correct torque. ***See INFORMATION, Torque wrench settings.***
5. Remove stand(s) and lower vehicle.

REAR STUB AXLE - MODELS WITH DRUM BRAKES

Service repair no - 64.15.20

Remove

1. Raise rear of vehicle.

WARNING: Support on safety stands.

2. Remove road wheel(s).
3. Remove rear brake drum. ***See BRAKES, Repairs.***

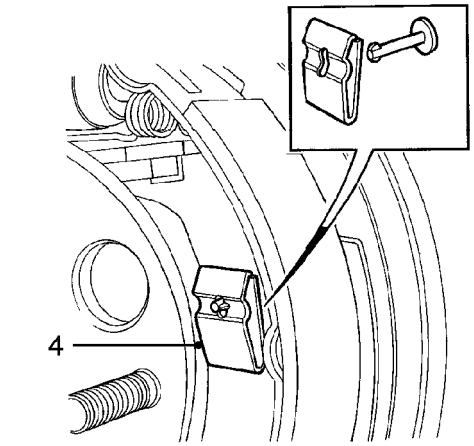

60M0517

4. Remove 2 clips and 2 pins retaining brake shoes.

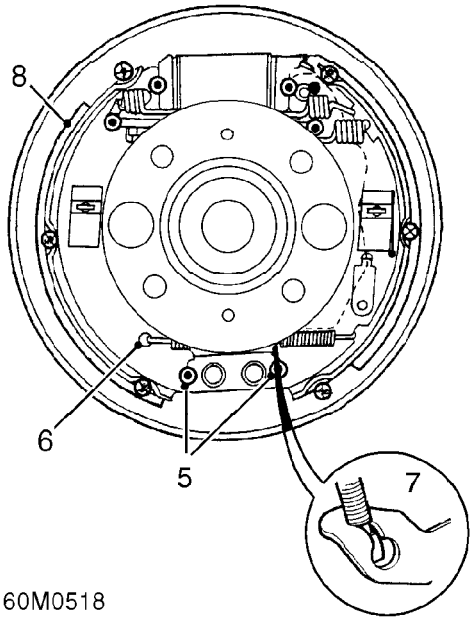

60M0518

5. Ease one brake shoe out of retaining groove in abutment followed by other shoe.
6. Detach return spring from leading shoe end and remove spring.

NOTE: The forward shoe is the LEADING shoe, the TRAILING shoe has the handbrake lever attached to it.

7. Disconnect handbrake cable from brake lever.
8. Manoeuvre shoe assembly around wheel cylinder and remove.

CAUTION: Ensure edges of brake shoes do not damage wheel cylinder dust covers.

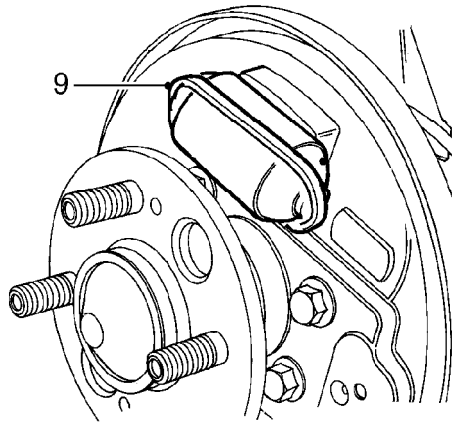

60M0519

9. Fit an elastic band around wheel cylinder to retain pistons.

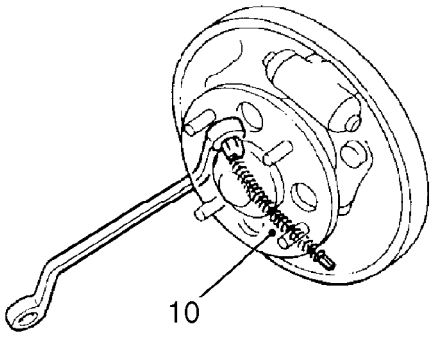

60M0452A

10. Using a 12 mm ring spanner, release handbrake cable retainer from backplate and withdraw handbrake cable.

11. Position container to collect any fluid spillage.

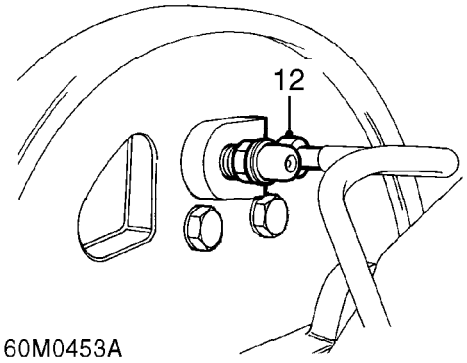

12. Disconnect brake pipe union from wheel cylinder.

CAUTION: Plug the connections.

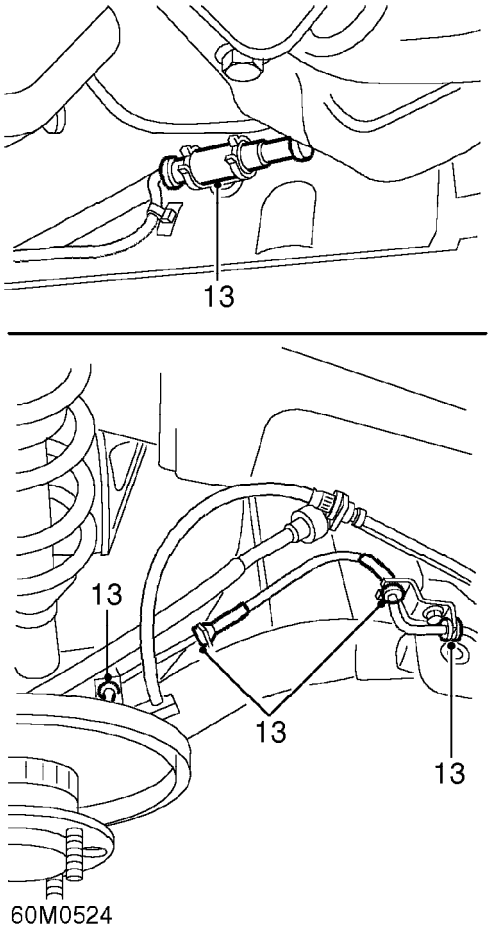

13. *Models with ABS:* Release ABS sensor multiplug from clip. Disconnect multiplug and release harness from 'H' frame.

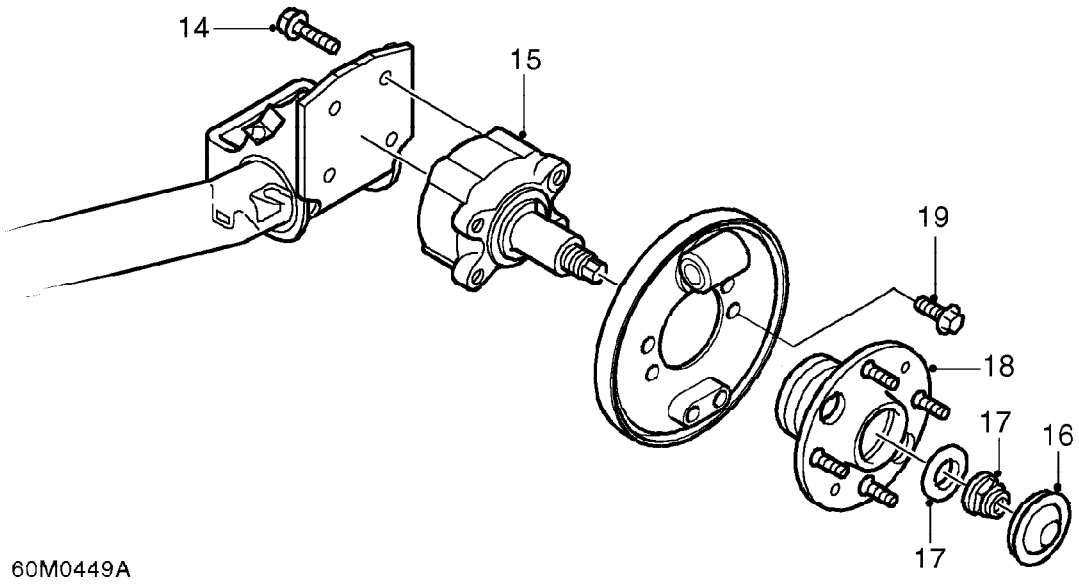

Model without ABS illustrated

14. Remove 4 bolts securing stub axle to 'H' frame.
15. Remove stub axle.
Do not carry out further dismantling if component is removed for access only.
16. Remove dust cover from centre of hub.
17. Knock back staking and remove hub nut and washer. Discard nut.

NOTE: The nut threads are handed, i.e the hub nut on the LH side has a LH thread.

18. Remove hub assembly.
19. Remove 4 bolts securing backplate to stub axle. Release and remove backplate.
20. Fit backplate to stub axle.
21. *Models with ABS:* Align ABS sensor adapter to backplate.
22. Fit bolts securing backplate and tighten to 45 Nm.
23. Clean hub and stub axle.
24. Lubricate seal running surface with grease.
25. Fit hub assembly.
26. Fit washer and new nut. Tighten nut to 180 Nm.
27. Stake nut to stub axle and fit dust cover.

Refit

1. Position stub axle to 'H' frame, fit bolts and tighten to 45 Nm.
2. *Models with ABS:* Connect harness multiplug. Secure multiplug to clip and harness to 'H' frame.
3. Connect brake pipe to wheel cylinder and tighten union to 19 Nm.

Models with ABS:

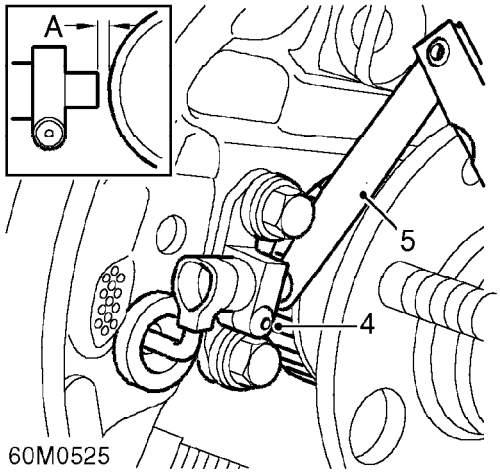

4. Loosen ABS adapter clamp screw.
5. Using a feeler gauge, set clearance **'A'** between sensor and reluctor ring. Clearance **'A'**= 0.5 mm.
6. Tighten adapter clamp screw to 0.5 Nm.

All models:

7. Secure handbrake cable to backplate.
8. Manoeuvre shoe assembly into position between hub and wheel cylinder and connect hand brake cable to brake shoe lever.
9. Fit lower return spring to trailing shoe and connect spring to leading shoe.
10. Remove elastic band from wheel cylinder.
11. Engage leading shoe to wheel cylinder followed by trailing shoe and align both shoes to wheel cylinder.

NOTE: During this operation the adjuster may become extended, this is not important but it must be reset prior to fitting brake drum.

12. Fit trailing shoe into abutment bracket followed by leading shoe.

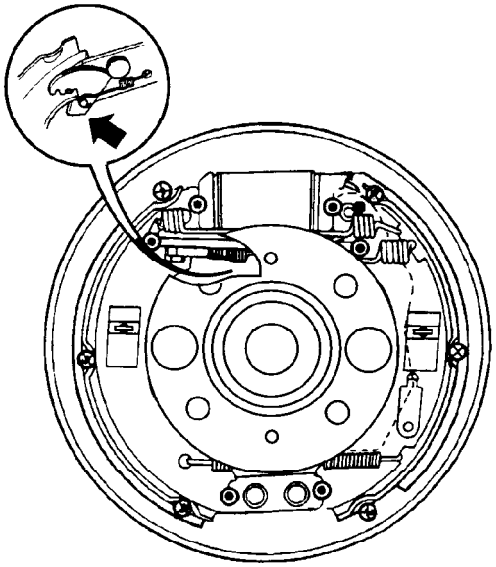

13. Check adjuster cam and if necessary set to minimum adjustment position as follows: lever leading shoe away from wheel cylinder, move adjuster cam back fully and ease shoe back into position.
14. Fit brake shoe retaining pins and clips.
15. Fit rear brake drum. ***See BRAKES, Repairs.***
16. Bleed brakes. ***See BRAKES, Adjustments.***
17. Check handbrake operation, adjust if necessary. ***See BRAKES, Adjustments.***
18. Fit road wheel(s) and tighten nuts to correct torque. ***See INFORMATION, Torque wrench settings.***
19. Remove stand(s) and lower vehicle.

Models with ABS:

20. To ensure correct operation, the system MUST be checked using TestBook.

'H' FRAME BUSH

Service repair no - 64.35.68

Remove

NOTE: The 'H' frame bush should be inspected at regular intervals. Twist the inner of the bush relative to the housing to check for splits. If any exceed 5 mm in depth the bush must be replaced.

1. Raise rear of vehicle.

WARNING: Support on safety stands.

2. Remove rear road wheel.

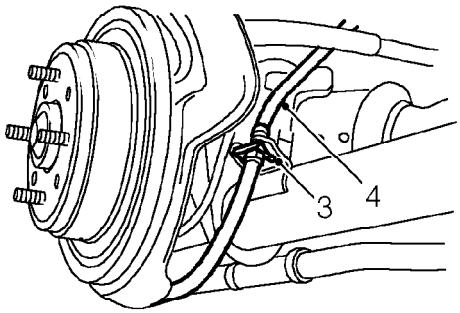

60M0408

3. Remove clip securing brake pipe to 'H' frame.
4. Release brake pipe from 'H' frame.
5. Support hub with trolley jack.

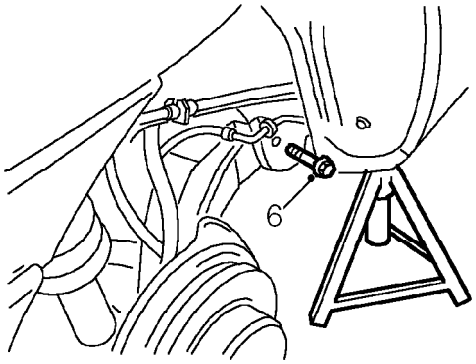

60M0409

6. Remove 'H' frame pivot bolt.

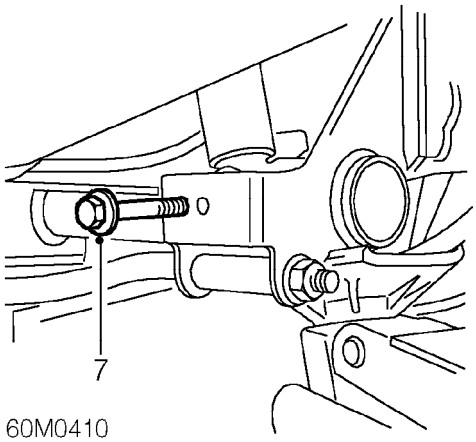

60M0410

7. Remove bolt securing rear damper assembly to 'H' frame.

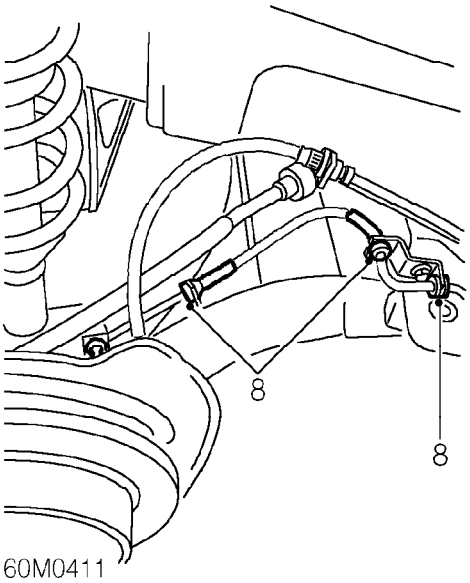

8. *Models with ABS:* Release ABS harness from 'H' frame.
9. Lower 'H' frame and release bush from mounting bracket.

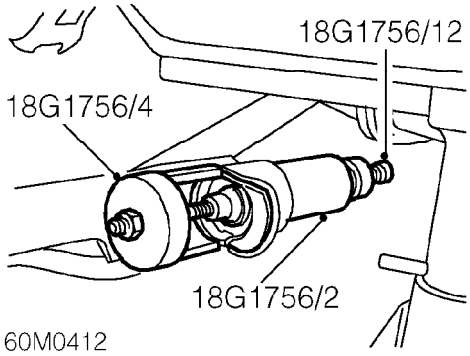

10. Fit tools **18G 1756/12, 18G 1756/2,** and **18G 1756/4** to bush as shown in illustration.
11. Rotate handle of tool to withdraw bush.

Refit

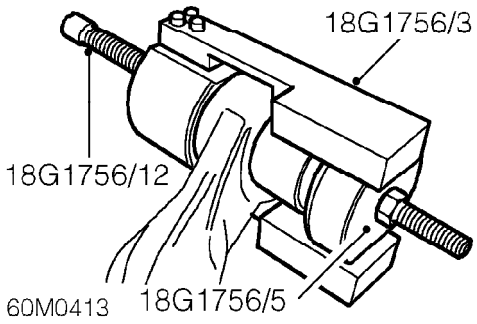

1. Position bush to 'H' frame and fit tools **18G 1756/12, 18G 1756/3,** and **18G 1756/5** as shown in illustration.
2. Rotate handle of tool to press bush into 'H' frame.
3. Raise 'H' frame on jack and fit bolt securing damper assembly and tighten to 80 Nm.
4. Position 'H' frame and fit pivot bolt. Tighten bolt to 100 Nm.
5. Position brake hose to 'H' frame and secure with clip.
6. Fit road wheel(s) and tighten nuts to correct torque. ***See INFORMATION, Torque wrench settings.***
7. Remove stand(s) and lower vehicle.

'H' FRAME - MODELS WITH DISC BRAKES

Service repair no - 64.35.67

Remove

1. Raise rear of vehicle.

WARNING: Support on safety stands.

2. Remove road wheel(s).
3. Remove rear console. ***See BODY, Interior trim components.***

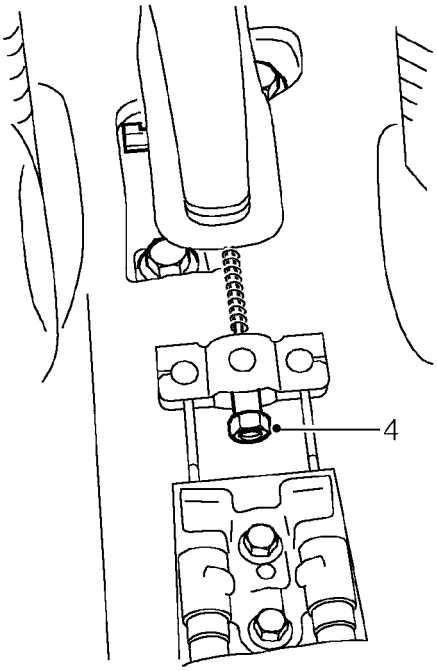

60M0425

4. Remove handbrake cable adjusting nut.

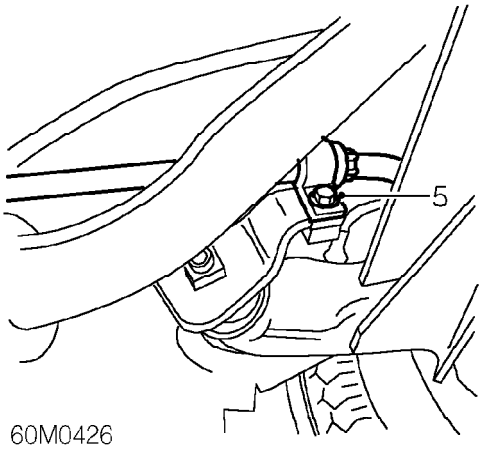

60M0426

5. Remove 2 bolts securing handbrake cables to 'H' frame and release cables.

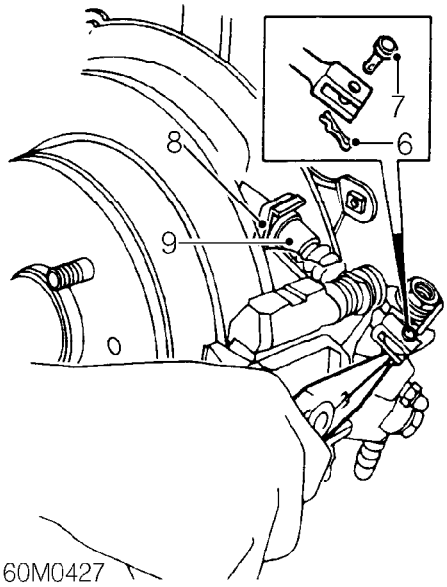

60M0427

6. Remove handbrake cable clevis pin spring clips and discard.
7. Remove handbrake cable clevis pins.
8. Remove retaining clips from cable abutments.
9. Release handbrake cables from abutment brackets.
10. Position container under hub to collect spillage.
11. Clamp brake hoses to prevent fluid loss.

CAUTION: A brake hose clamp must be used.

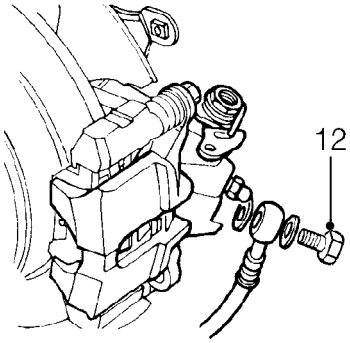

60M0428

12. Remove brake hose banjo bolts and discard sealing washers.

CAUTION: Plug the connections.

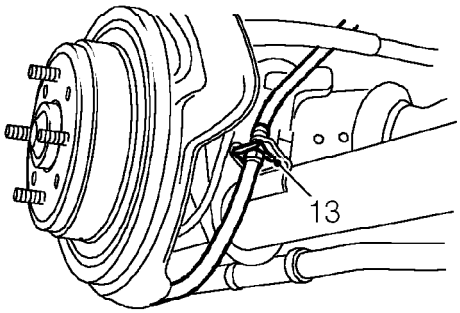

60M0429

13. Remove clips securing brake pipes to ’H’ frame and release pipes.

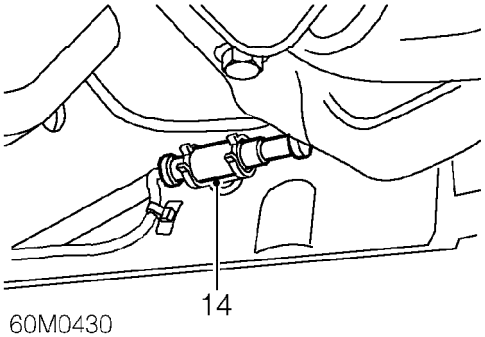

60M0430

14. Release ABS sensor multiplugs from clips and disconnect.

15. Position trolley jack to support centre of ’H’ frame.

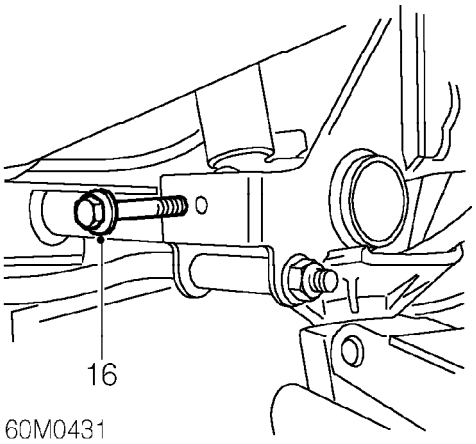

60M0431

16. Remove 2 bolts securing both damper assemblies to ’H’ frame.

17. Carefully lower trolley jack to disengage dampers from ’H’ frame.

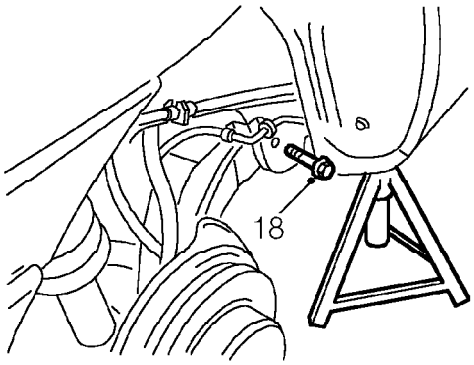

60M0432

18. With an assistant to support 'H' frame, remove 2 pivot bolts securing 'H' frame to body.
19. With assistance, remove 'H' frame from vehicle.

Do not carry out further dismantling if component is removed for access only.

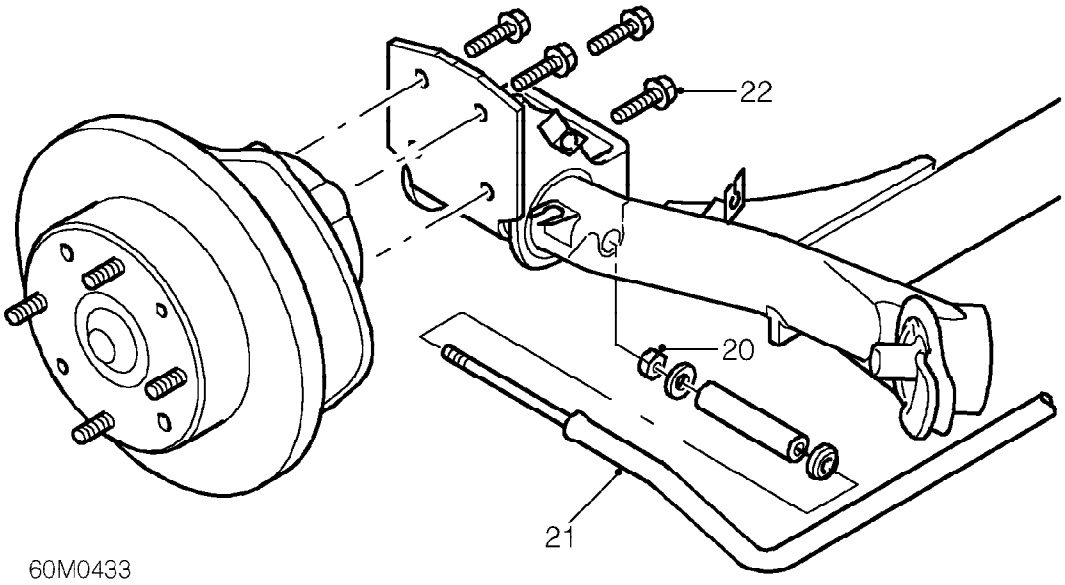

20. Remove 2 nuts securing anti-roll bar to 'H' frame.
21. Remove anti-roll bar from 'H' frame.
22. Remove 4 bolts securing each hub/stub axle assembly to 'H' frame and remove hubs.
23. Position hub/stub axle assembly to new 'H' frame and tighten bolts to 45 Nm.
24. Fit anti-roll bar to 'H' frame and tighten nuts to 80 Nm.

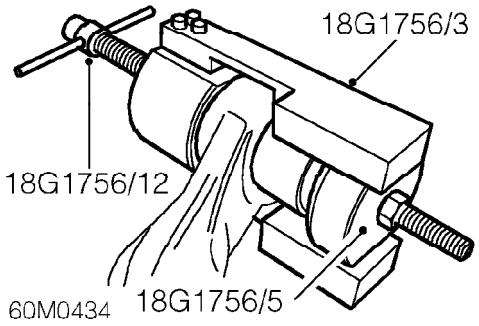

25. Position new pivot bush to 'H' frame and fit tools **18G 1756/12, 18G 1756/3** and **18G 1756/5** as shown in illustration.
26. Rotate handle of tool to press bush into 'H' frame and remove tools.
27. Fit second pivot bush to 'H' frame.

Refit

1. With assistance, position 'H' frame to vehicle and fit pivot bolts. DO NOT tighten.
2. Using a trolley jack, raise centre of 'H' frame and locate damper assemblies.
3. Tighten bolts securing damper assemblies to 'H' frame to 80 Nm.
4. Remove trolley jack.
5. Tighten 'H' frame pivot bolts to 100 Nm.
6. Manoeuvre handbrake cables into position with abutment brackets.
7. Fit cable retaining clips to abutments.
8. Align cables to levers. Fit clevis pins and secure with new spring clips.
9. Align handbrake cables to location points on 'H' frame and secure with bolts.
10. Fit brake pipes to mounting brackets and secure with clips.
11. Clean banjo bolts and fit new sealing washers.
12. Position hoses to calipers and tighten banjo bolts to 34 Nm.
13. Connect ABS sensor multiplugs and secure to body with clips.
14. Bleed brakes. ***See BRAKES, Adjustments.***
15. Connect handbrake cables to equaliser.
16. Ensure spring is in place and engage equaliser on adjusting rod.
17. Fit cable adjusting nut.
18. Adjust handbrake cable. ***See BRAKES, Adjustments.***
19. Fit rear console. ***See BODY, Interior trim components.***
20. Fit road wheel(s) and tighten nuts to correct torque. ***See INFORMATION, Torque wrench settings.***
21. Remove stand(s) and lower vehicle.
22. Check rear wheel alignment and adjust if necessary. ***See STEERING, Adjustments.***

'H' FRAME - MODELS WITH DRUM BRAKES

Service repair no - 64.35.67

Remove

1. Raise rear of vehicle.

WARNING: Support on safety stands.

2. Remove road wheel(s).
3. Remove rear console. ***See BODY, Interior trim components.***

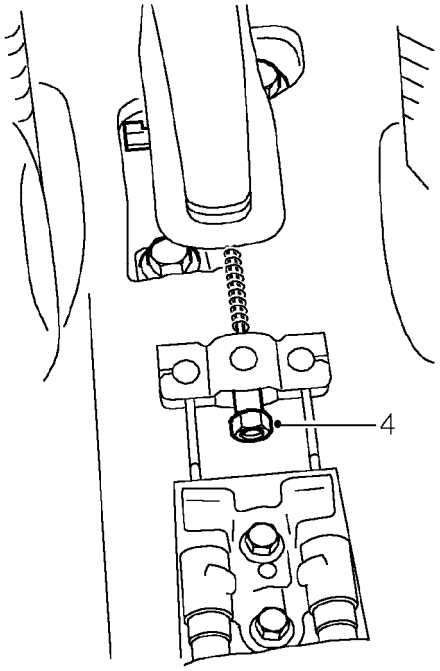

4. Remove handbrake cable adjusting nut.

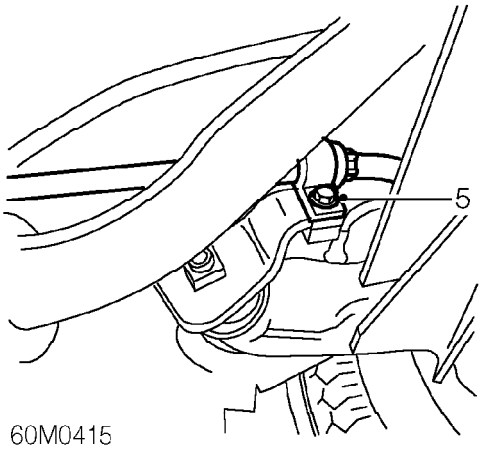

5. Remove 2 bolts securing handbrake cables to 'H' frame and release cables.
6. Remove both rear drums. ***See BRAKES, Repairs.***

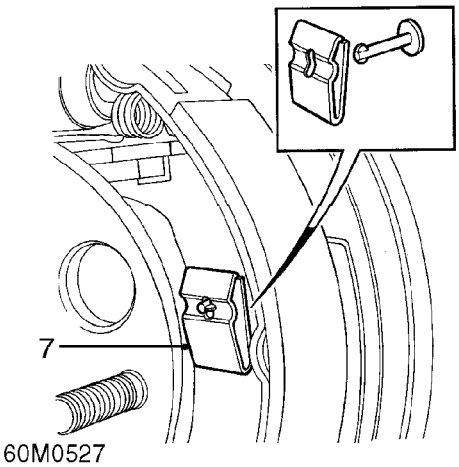

7. Remove 4 clips and 4 pins retaining LH and RH brake shoe assemblies.

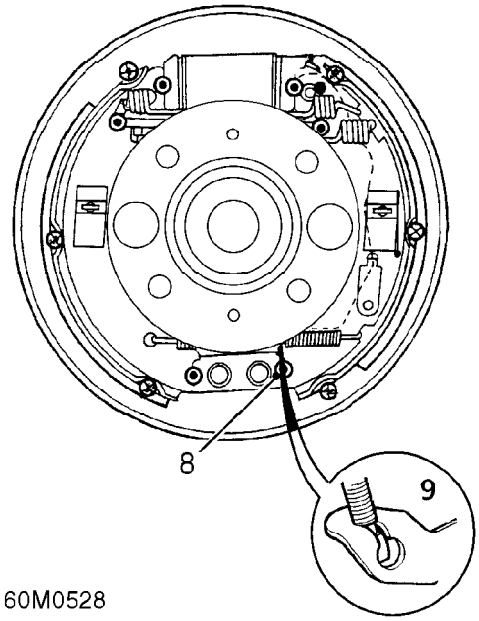

8. Disconnect both trailing shoes from abutment brackets.
9. Disconnect both handbrake cables from brake levers.

CAUTION: Ensure edges of brake shoes do not damage wheel cylinder dust covers.

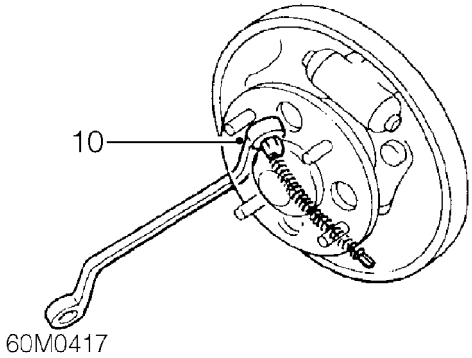

10. Using a 12 mm ring spanner, release cables from backplates and withdraw cables.
11. Position container to collect fluid spillage.

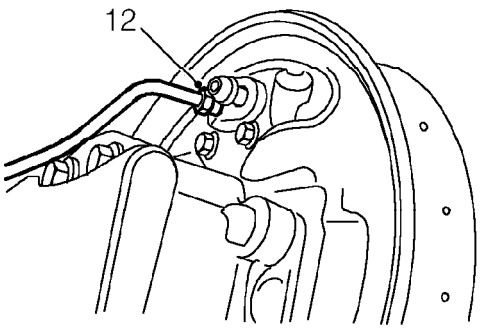

60M0418

12. Disconnect brake pipe unions from wheel cylinders.

CAUTION: Plug the connections.

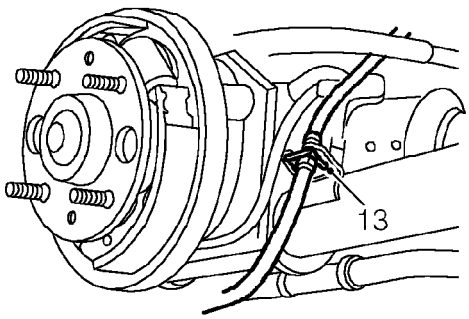

60M0419

13. Remove clips securing brake pipes to 'H' frame and release pipes.

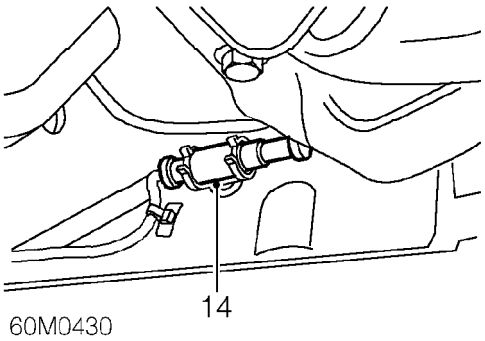

60M0430

14. *Models with ABS:* Release ABS sensor multiplugs from clips. Disconnect multiplugs.
15. Position trolley jack to support centre of 'H' frame.

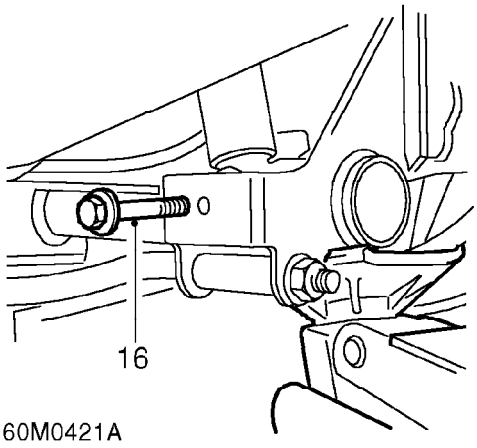

60M0421A

16. Remove 2 bolts securing both damper assemblies to 'H' frame.
17. Carefully lower trolley jack to disengage dampers from 'H' frame.

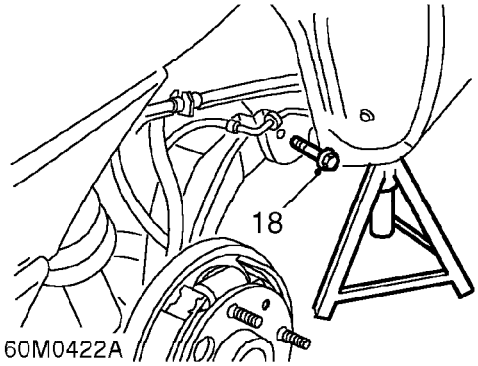

18. With an assistant to support 'H' frame, remove 2 pivot bolts securing 'H' frame to body.

19. With assistance, remove 'H' frame from vehicle.
Do not carry out further dismantling if component is removed for access only.

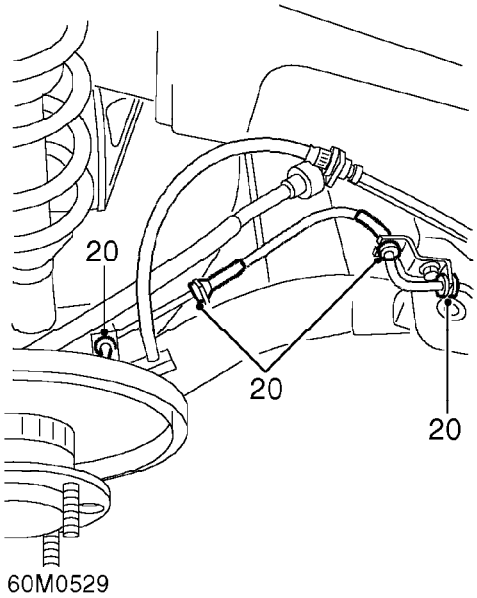

20. *Models with ABS:* Release ABS sensor harnesses from 'H' frame.

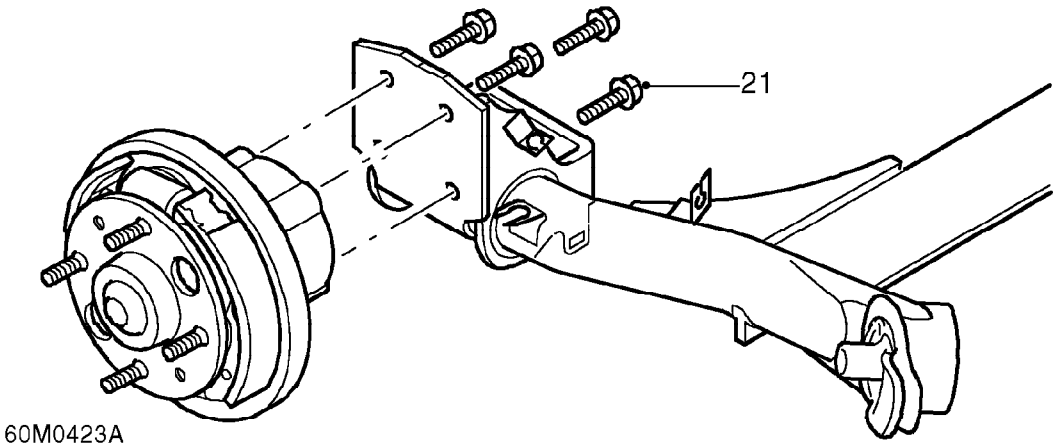

21. Remove 4 bolts securing each hub/stub axle assembly to 'H' frame.
22. Remove each hub/stub axle assembly.
23. Position each hub/sub axle assembly to new 'H' frame and tighten bolts to 45 Nm.
24. *Models with ABS:* Secure ABS sensor harnesses to 'H' frame.

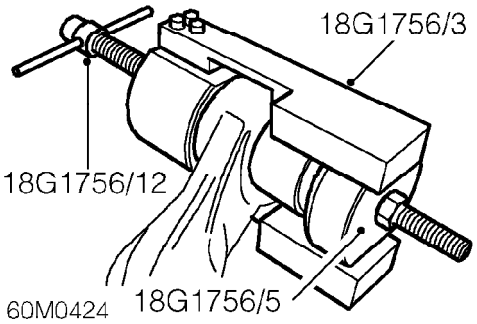

25. Position new pivot bush to 'H' frame and fit tools **18G 1756/12, 18G 1756/3** and **18G 1756/5** as shown in illustration.
26. Rotate handle of tool to press bush into 'H' frame and remove tools.
27. Fit second pivot bush to 'H' frame.

Refit

1. With assistance, position 'H' frame to vehicle and fit pivot bolts. DO NOT tighten.
2. Using a trolley jack, raise centre of 'H' frame and locate damper assemblies.
3. Tighten bolts securing damper assemblies to 'H' frame to 80 Nm.
4. Remove trolley jack.
5. Tighten 'H' frame pivot bolts to 100 Nm.
6. *Models with ABS:* Connect sensor multiplugs and secure to clips.
7. Manoeuvre handbrake cables into position and connect to handbrake levers.
8. Connect lower springs and fit trailing shoes onto abutments.
9. Fit brake shoe retaining pins and secure with clips.
10. Fit brake drums. ***See BRAKES, Repairs.***
11. Align handbrake cables to location points on 'H' frame and secure with bolts.
12. Fit brake pipes to mounting brackets and secure with clips.
13. Connect brake pipes to wheel cylinders and tighten unions to 19 Nm.
14. Bleed brakes. ***See BRAKES, Adjustments.***
15. Connect handbrake cables to equaliser.
16. Ensure spring is in place and engage equaliser on adjusting rod.
17. Fit cable adjusting nut.
18. Adjust handbrake cable. ***See BRAKES, Adjustments.***
19. Fit rear console. ***See BODY, Interior trim components.***
20. Fit road wheel(s) and tighten nuts to correct torque. ***See INFORMATION, Torque wrench settings.***
21. Remove stand(s) and lower vehicle.
22. Check rear wheel alignment and adjust if necessary. ***See STEERING, Adjustments.***

'H' FRAME MOUNTING BRACKET

Service repair no - 64.35.69

Remove

1. Raise rear of vehicle.

WARNING: Support on safety stands.

2. Remove rear road wheel.

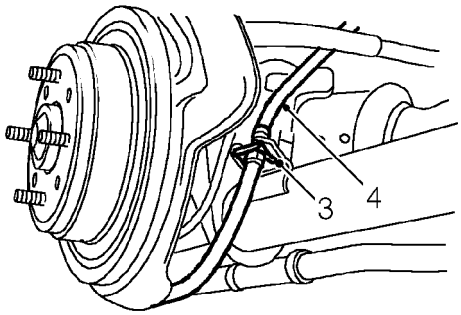

60M0408

3. Remove clip securing brake pipe to 'H' frame.
4. Release brake pipe from 'H' frame.
5. Support hub with trolley jack.

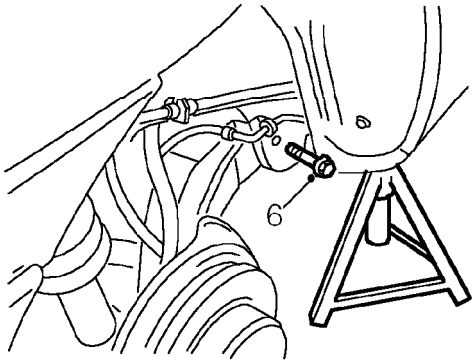

60M0409

6. Remove 'H' frame pivot bolt.

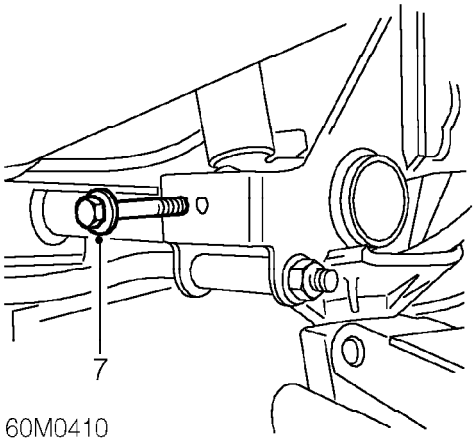

7. Remove bolt securing rear damper assembly to 'H' frame.

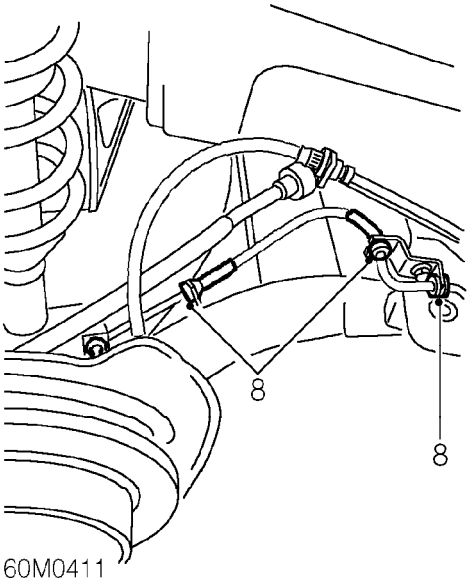

8. *Models with ABS:* Release ABS harness from 'H' frame.
9. Lower 'H' frame and release bush from mounting bracket.

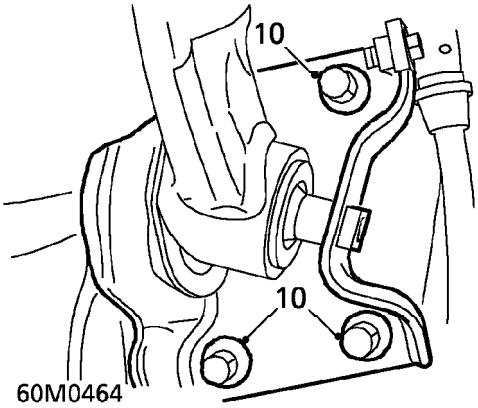

10. Remove 3 bolts securing mounting bracket to body.
11. Remove mounting bracket.

Refit

1. Position mounting bracket to body.
2. Fit bolts securing mounting bracket to body and tighten to 100 Nm.
3. Raise 'H' frame on jack and fit bolt securing damper assembly and tighten to 80 Nm.
4. *Models with ABS:* Secure ABS sensor harness to 'H' frame.
5. Position 'H' fame and fit pivot bolt. Tighten bolt to 100 Nm.
6. Position brake hose to 'H' frame and secure with clip.
7. Fit road wheel(s) and tighten nuts to correct torque. ***See INFORMATION, Torque wrench settings.***
8. Remove stand(s) and lower vehicle.
9. Check rear wheel alignment. ***See STEERING, Adjustments.***

REAR HUB AND BEARING - MODELS WITH DRUM BRAKES AND ABS

Service repair no - 64.15.14

The rear hub and bearings are serviced as an assembly and cannot be individually renewed.

Remove

1. Raise rear of vehicle.

WARNING: Support on safety stands.

2. Remove brake drum. ***See BRAKES, Repairs.***

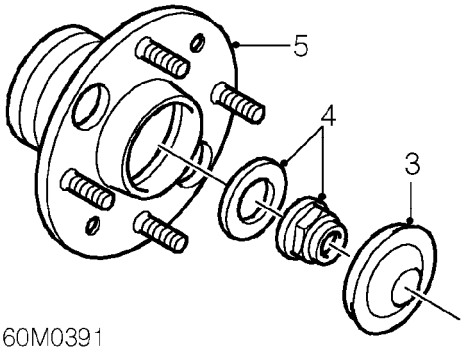

3. Remove dust cover from centre of hub.
4. Knock back staking and remove hub nut and washer. Discard nut.

NOTE: The nut threads are handed, i.e the hub nut on the LH side has a LH thread.

5. Remove hub assembly.

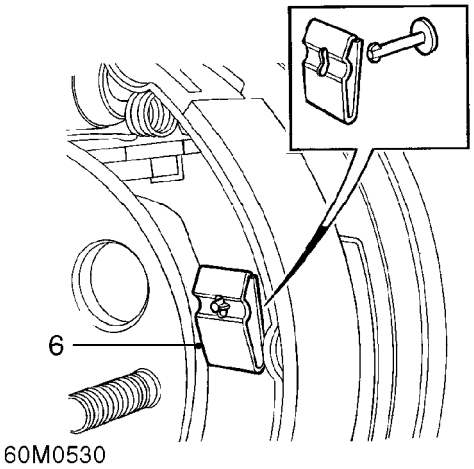

6. Remove 2 clips and 2 pins retaining brake shoes.

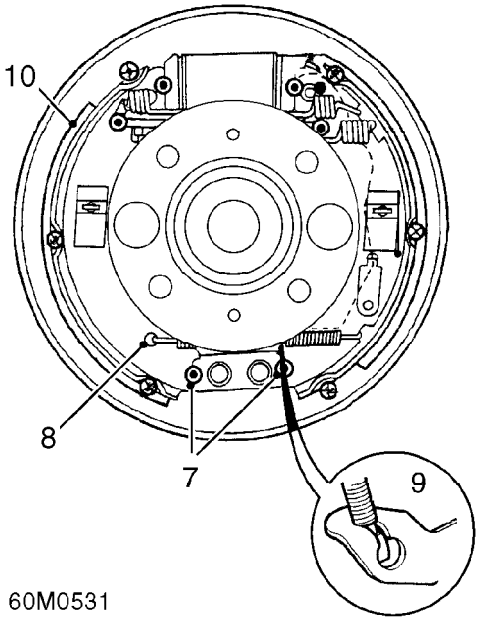

7. Ease one shoe out of retaining groove in abutment followed by other shoe.
8. Detach return spring from leading shoe end and remove spring.

NOTE: The forward shoe is the LEADING shoe, the TRAILING shoe has the handbrake lever attached to it.

9. Disconnect handbrake cable from brake lever.
10. Remove brake shoe assembly.

CAUTION: Ensure edges of brake shoes do not damage wheel cylinder dust covers.

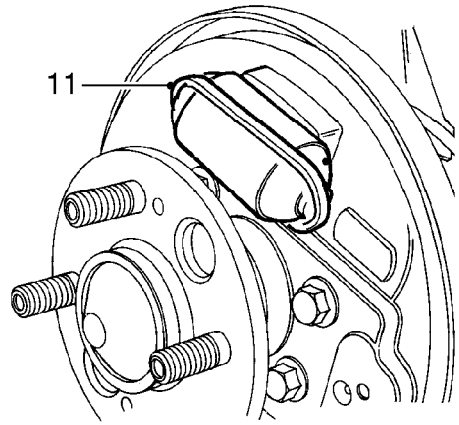

60M0532

11. Fit an elastic band around wheel cylinder to retain pistons.

Refit

1. Clean hub and stub axle.
2. Lubricate seal running surface with grease.
3. Fit hub assembly.
4. Fit washer and new nut. Tighten nut to 180 Nm.
5. Stake the nut to stub axle and fit dust cover.

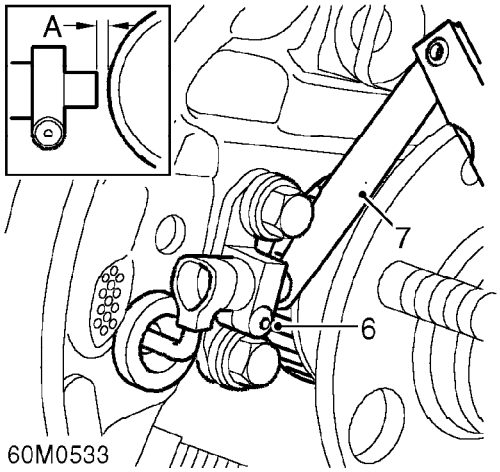

60M0533

6. Loosen ABS adapter clamp screw.
7. Using a feeler gauge, set clearance **'A'**between sensor and reluctor ring. Clearance **'A'**= 0.5 mm.
8. Tighten adapter clamp screw to 0.5 Nm.
9. Manoeuvre shoe assembly into position between hub and wheel cylinder and connect hand brake cable to brake shoe lever.
10. Fit lower return spring to trailing shoe and connect spring to leading shoe.
11. Remove elastic band from wheel cylinder.
12. Engage leading shoe to wheel cylinder followed by trailing shoe and align.

NOTE: During this operation the adjuster may become extended, this is not important but it must be reset prior to fitting brake drum.

13. Fit trailing shoe into abutment bracket followed by leading shoe.

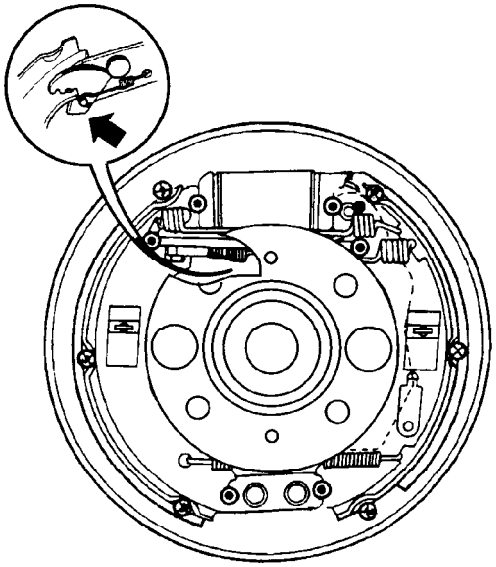

60M0526

14. Check adjuster cam and if necessary set to minimum adjustment position as follows: lever leading shoe away from wheel cylinder, move adjuster cam back fully and ease shoe back into position.
15. Fit brake shoe retaining pins and clips.
16. Fit brake drum. ***See BRAKES, Repairs.***
17. Remove stand(s) and lower vehicle.
18. Apply foot brake several times and then check handbrake operation.
19. To ensure correct operation, the ABS MUST be checked using TestBook.

CONTENTS

Page

DESCRIPTION AND OPERATION

MASTER CYLINDER COMPONENTS - ABS 1
MASTER CYLINDER COMPONENTS - NON ABS 2
FRONT BRAKE CALIPER COMPONENTS 3
REAR BRAKE CALIPER COMPONENTS 4
REAR DRUM BRAKE COMPONENTS 6
ABS5 ANTI-LOCK BRAKING SYSTEM 7
HANDBRAKE OPERATION 10

ADJUSTMENTS

BRAKE BLEED 1
HANDBRAKE CABLE 2
BRAKE LIGHT SWITCH 3
BRAKE LIGHT SWITCH - MODELS WITH BOSCH ECM 5

REPAIRS

HANDBRAKE WARNING SWITCH 1
BRAKE LIGHT SWITCH 1
FLUID LEVEL SWITCH 3
HANDBRAKE LEVER 3
ABS ECU - UP TO 98MY 4
ABS HYDRAULIC MODULATOR - UP TO 98MY 5
ABS SENSOR - FRONT 7
ABS SENSOR - REAR - MODELS WITH DISC BRAKES 9
BRAKE PROPORTIONING VALVE - ABS 10
BRAKE PROPORTIONING VALVE - NON ABS 11
BRAKE MASTER CYLINDER 12
SERVO ASSEMBLY 13
BRAKE SERVO VACUUM PUMP - ’L’ SERIES 14
FRONT BRAKE PADS 14
REAR BRAKE SHOES 16
REAR BRAKE PADS 19
FRONT BRAKE CALIPER 21
REAR BRAKE CALIPER 22
REAR WHEEL BRAKE CYLINDER 24
FRONT BRAKE DISC 25
REAR BRAKE DISC 27
REAR BRAKE DRUM 28
ABS HYDRAULIC MODULATOR - 98MY ON 30
ABS SENSOR - REAR - MODELS WITH DRUM BRAKES 31

MASTER CYLINDER COMPONENTS - ABS

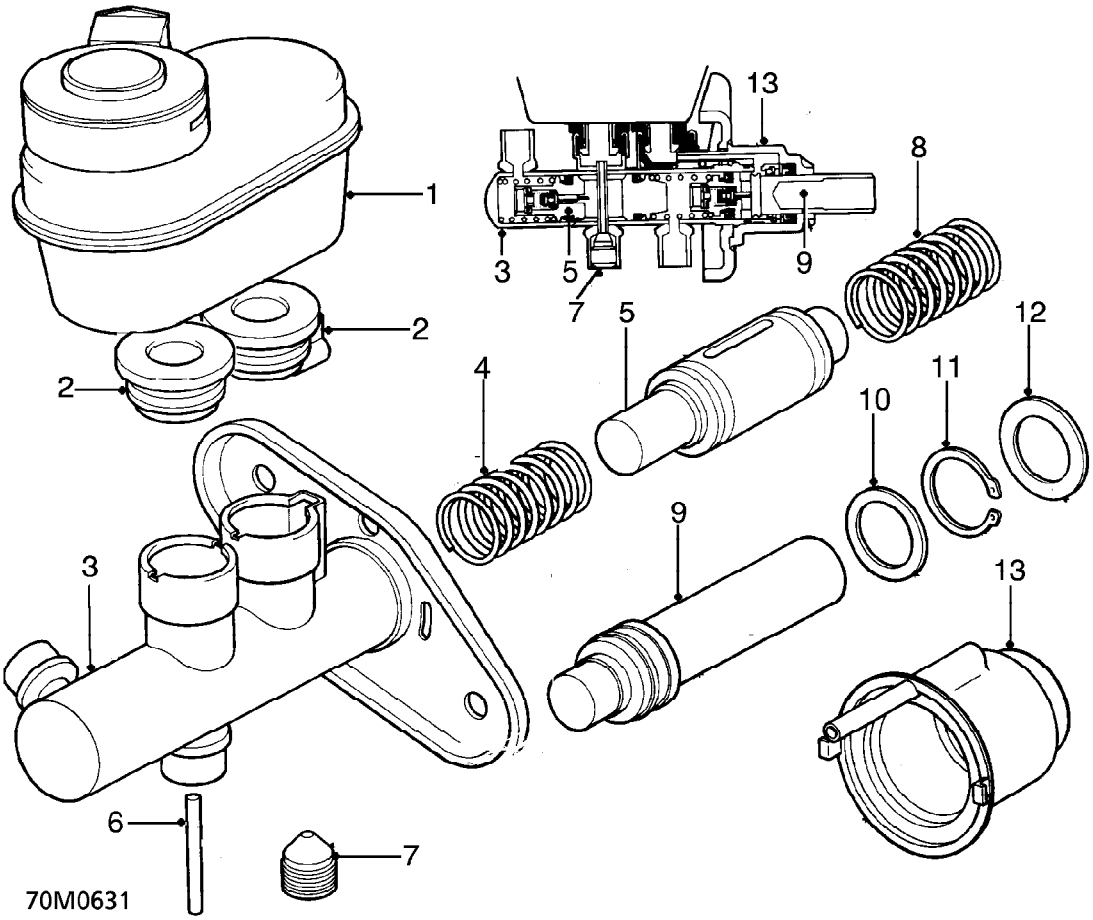

1. Brake fluid reservoir
2. Seals
3. Cylinder body
4. Spring
5. Secondary piston assembly
6. Stop pin - secondary piston
7. Pin securing screw
8. Spring
9. Primary piston assembly
10. Washer
11. Circlip
12. Flat washer
13. Transfer housing

MASTER CYLINDER COMPONENTS - NON ABS

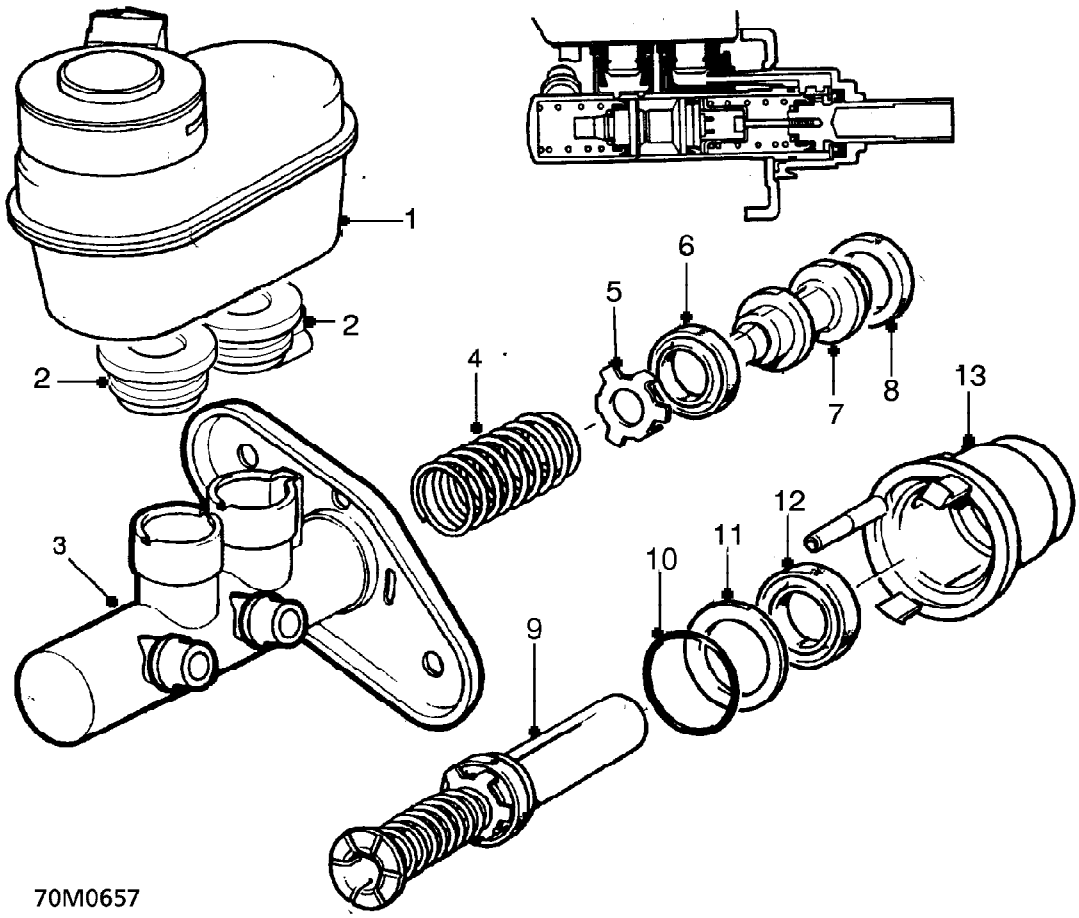

1. Brake fluid reservoir
2. Seals
3. Cylinder body
4. Spring
5. Seal support
6. Seal
7. Secondary piston
8. Seal
9. Primary piston assembly
10. 'O' ring
11. Vacuum seal backing ring
12. Vacuum seal
13. Transfer housing

FRONT BRAKE CALIPER COMPONENTS

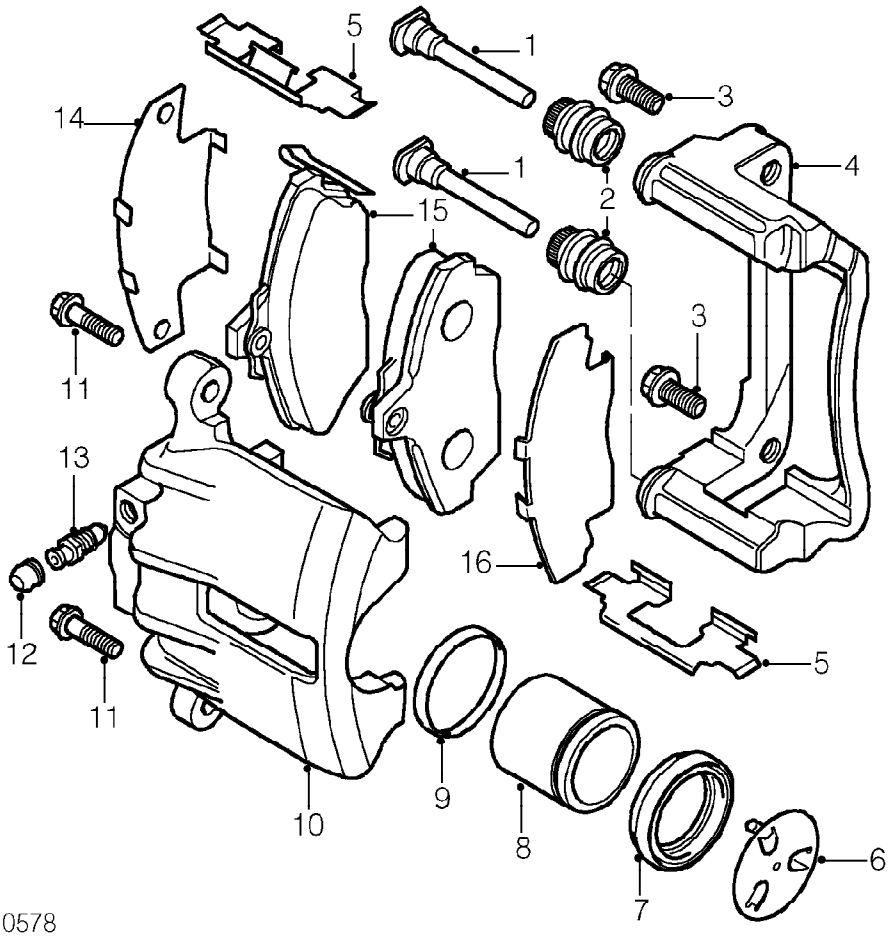

1. Guide pin
2. Boot
3. Bolt - caliper mounting
4. Caliper carrier
5. Pad retainer
6. Shim
7. Dust cover
8. Piston
9. Piston seal
10. Caliper body
11. Guide pin bolt
12. Dust cover - bleed screw
13. Bleed screw
14. Inner pad shim
15. Brake pads
16. Outer pad shim

REAR BRAKE CALIPER COMPONENTS

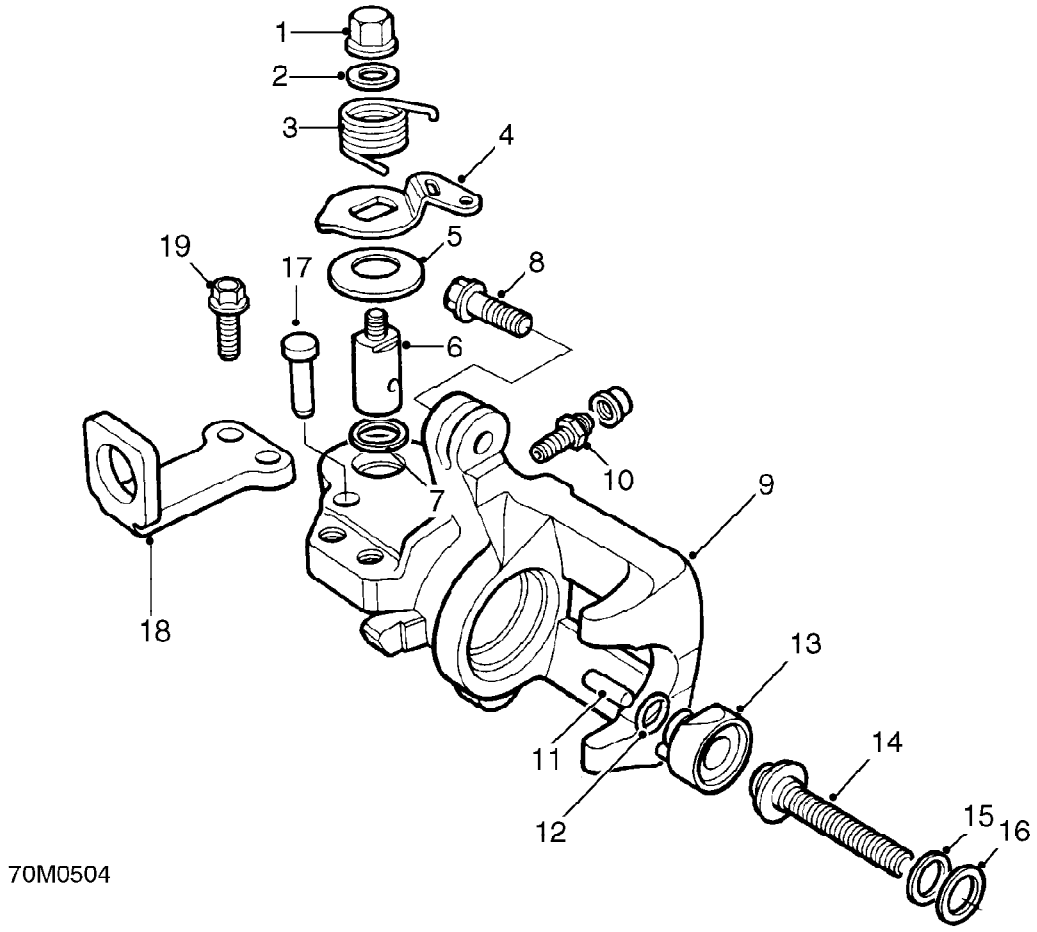

1. Parking nut
2. Spring washer
3. Return spring
4. Lever
5. Cam boot
6. Cam
7. Cam washer
8. Caliper screw
9. Caliper body
10. Bleed screw
11. Rod
12. ’O’ ring
13. Sleeve piston
14. Adjusting bolt
15. Bearing
16. Spacer
17. Bracket pin
18. Handbrake cable abutment
19. Bracket bolt

Rear brake caliper components continued

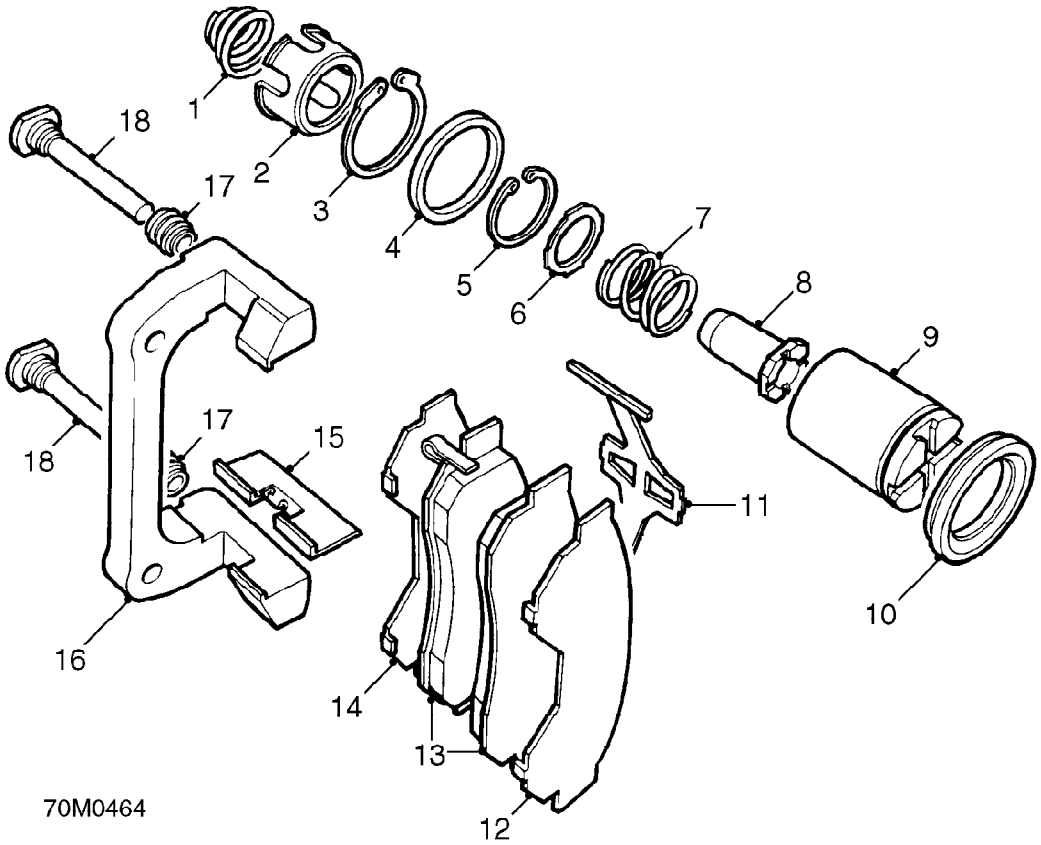

1. Adjusting spring ’A’
2. Spring cover
3. Retaining ring, large
4. Piston seal
5. Retaining ring, small
6. Thrust washer
7. Adjusting spring ’B’
8. Adjusting nut
9. Piston assembly, outer
10. Piston boot
11. Pad spring
12. Outer pad shim
13. Brake pads
14. Inner pad shim
15. Pad retainer - 2 off
16. Caliper bracket
17. Guide pin boot - 2 off
18. Guide pin - 2 off

REAR DRUM BRAKE COMPONENTS

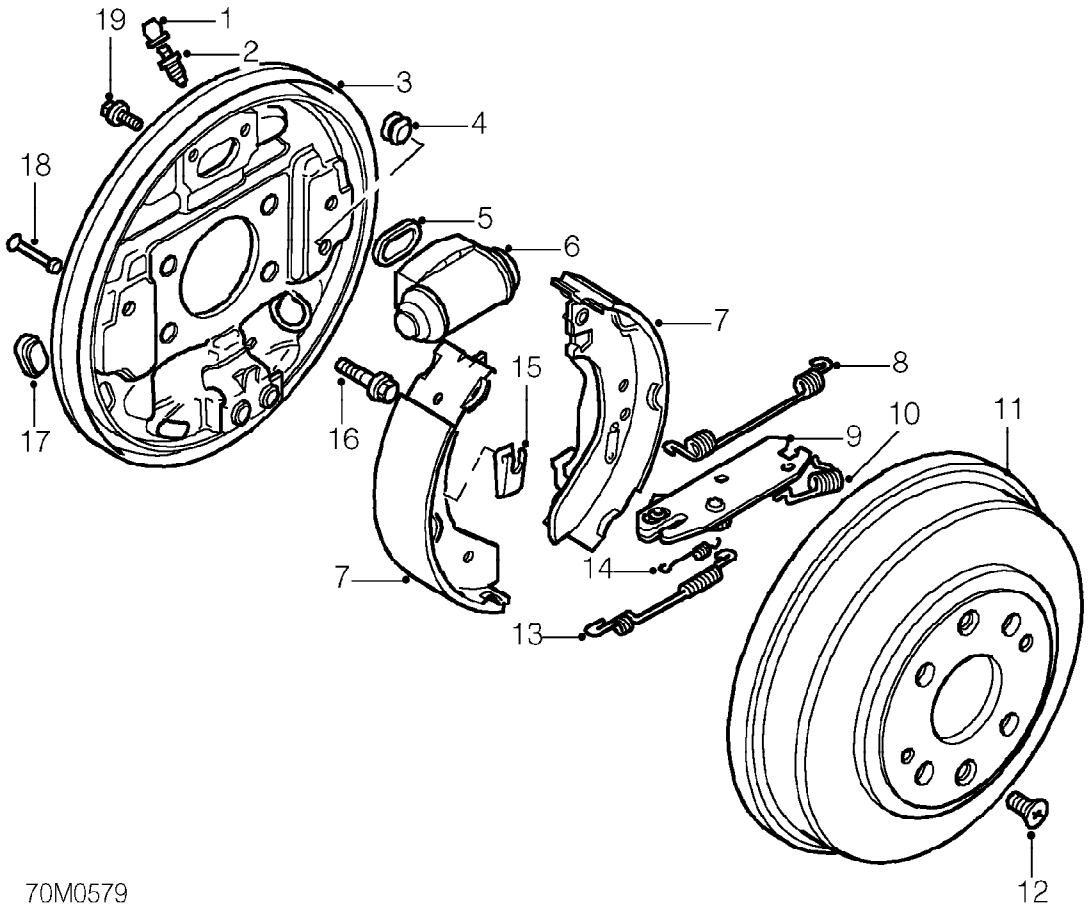

1. Dust cover - bleed screw
2. Bleed screw
3. Backplate
4. Plug - access to brake shoe release spring
5. Seal - wheel cylinder to backplate
6. Wheel cylinder
7. Brake shoes
8. Spring - upper shoe return
9. Strut - quadrant assembly
10. Spring - strut return
11. Brake drum
12. Screw - drum to hub
13. Spring - lower shoe return
14. Spring - quadrant
15. Spring clip - retaining pin
16. Bolt - backplate to hub
17. Inspection plug
18. Retaining pin
19. Bolt - wheel cylinder to backplate

ABS5 ANTI-LOCK BRAKING SYSTEM

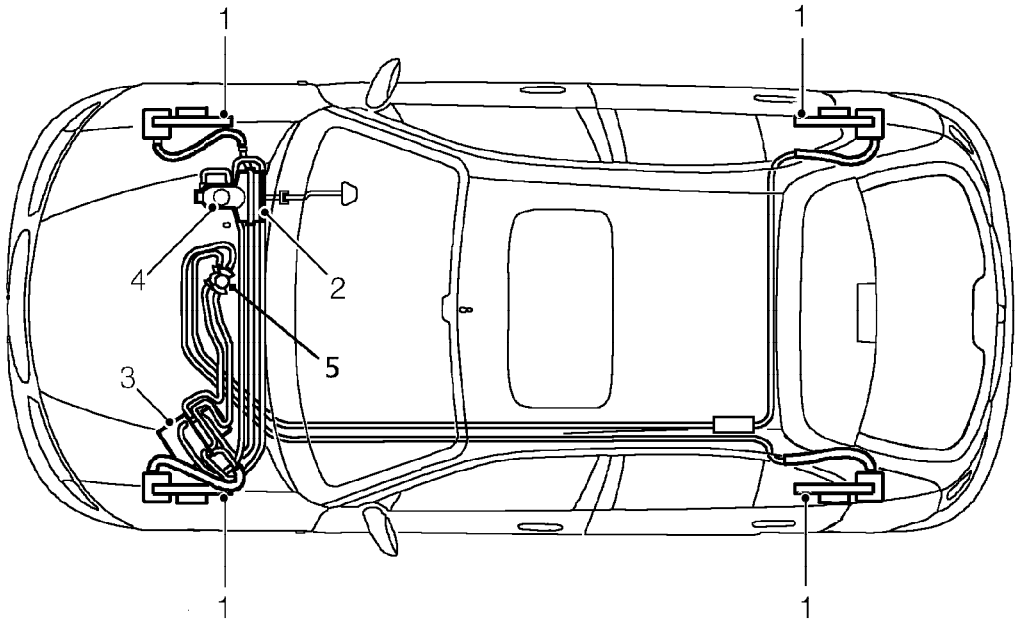

70M0633

Model with rear disc brakes illustrated

1. Reluctor ring and wheel sensor
2. Servo unit
3. ABS modulator unit
4. Master cylinder
5. Brake pressure proportioning valve

Description

The ABS5 system is an ECU controlled system deriving its input from four speed sensors mounted at the wheels which allow it to control the hydraulic modulator preventing the wheels locking during braking.

The operation of the ABS system is completely dependent upon electronic signals. To prevent the system responding to any inaccurate signals, a built in safety circuit monitors all electric and electronic signals, including battery voltage. If an inaccurate signal or low battery voltage is detected, the ABS system is shut down immediately and the warning light on the fascia is illuminated to inform the driver that the brake system will respond to pedal pressure in the same manner as a non ABS system.

Operation

Servo

Inlet manifold vacuum (generated by a vacuum pump in the case of diesel models) is transmitted through a hose and non-return valve to the servo.

Inside the servo, this vacuum is felt on both sides of the diaphragm. When the brake pedal is pressed, the servo push rod opens a valve and allows atmospheric pressure to be drawn through the filter into the pedal side of the diaphragm. The pressure differential, acting on the diaphragm, increases the pressure being applied at the brake pedal and transmits it to the master cylinder through a push rod.

Master cylinder

When the foot brake is applied the primary plunger moves up the bore of the cylinder and the pressure created acts in conjunction with the primary spring to overcome the secondary spring, thus moving the secondary plunger up the bore of the cylinder simultaneously. Initial movement of both plungers causes them to be pushed off their stop pins, thus closing both primary and secondary centre valves. Further movement of the plungers pressurises the fluid which is directed into the two separate hydraulic circuits connected to the hydraulic modulator.

The primary circuit operates the LH front and RH rear brakes and the secondary circuit operates the RH front and LH rear brakes.

The fluid in the chambers behind the plungers is unaffected by any movement of the plungers and can flow unrestricted between chamber and reservoir both before and during brake application.

When the brake pedal is released, the primary and secondary springs force their respective pistons back down the bore of the cylinder. As the plungers contact the stop pins the primary and secondary centre valves are opened allowing fluid to circulate unrestricted between the two hydraulic circuits and the fluid reservoir.

The movement of fluid during brake application/release is compensated for by fluid from the separate reservoirs within the supply tank moving through the feed holes in the cylinder. Conversely the final movement of the plungers causes any surplus fluid to move through the cut-off holes in the fluid reservoirs.

Should a failure occur in one system, the remaining system will still operate effectively, although the brake pedal travel will increase.

Calipers

Pressure at the caliper forces the caliper piston against the inner brake pad and, in turn, against the disc. The caliper body reacts and slides on the guide pins to bring the outer pad into contact with the disc.

ABS5 Modulator operation

ABS 5.0 up to 98MY
ABS 5.3 98MY on

With the vehicle in motion, the ECU receives signals from the four wheel sensors. From these signals the ECU can determine the speed of the vehicle. This is the speed which the ECU uses as a reference when evaluating the deceleration of each wheel.

This reference speed is continually calculated, even during braking. If one or more of the wheels are decelerating faster than the others, indicating a wheel is near the point of locking, the anti-lock sequence will be initiated.

The hydraulic modulator has three operation phases:

1. Increase pressure phase: the ABS system is at rest and fluid pressure from the master cylinder is allowed to pass through the solenoid valves in the hydraulic modulator to operate the caliper on each wheel.
2. Maintain pressure phase: The caliper is isolated from the master cylinder preventing any pressure increase due to increased pedal pressure.
3. Decrease pressure phase: The caliper is connected to the return pump which pumps the fluid back to the master cylinder.

Brake pressure proportioning valve

The fluid lines for both hydraulic circuits are connected to the valve, but the circuit for the front brakes uses the valve purely for distribution.

Pressure to the rear brakes passes through a piston sleeve, past a poppet valve and out to the rear brakes. The same pressure is also felt on the top of the piston, forcing the piston against spring pressure, towards the valve centre until the piston sleeve contacts the poppet valve and forms a seal. Input pressure is now balanced with output pressure. As further input pressure is applied from the master cylinder, it overcomes output pressure being felt on the piston and forces the piston outwards slightly away from the poppet valve allowing pressure past the poppet valve until output pressure is again balanced with input pressure.

HANDBRAKE OPERATION

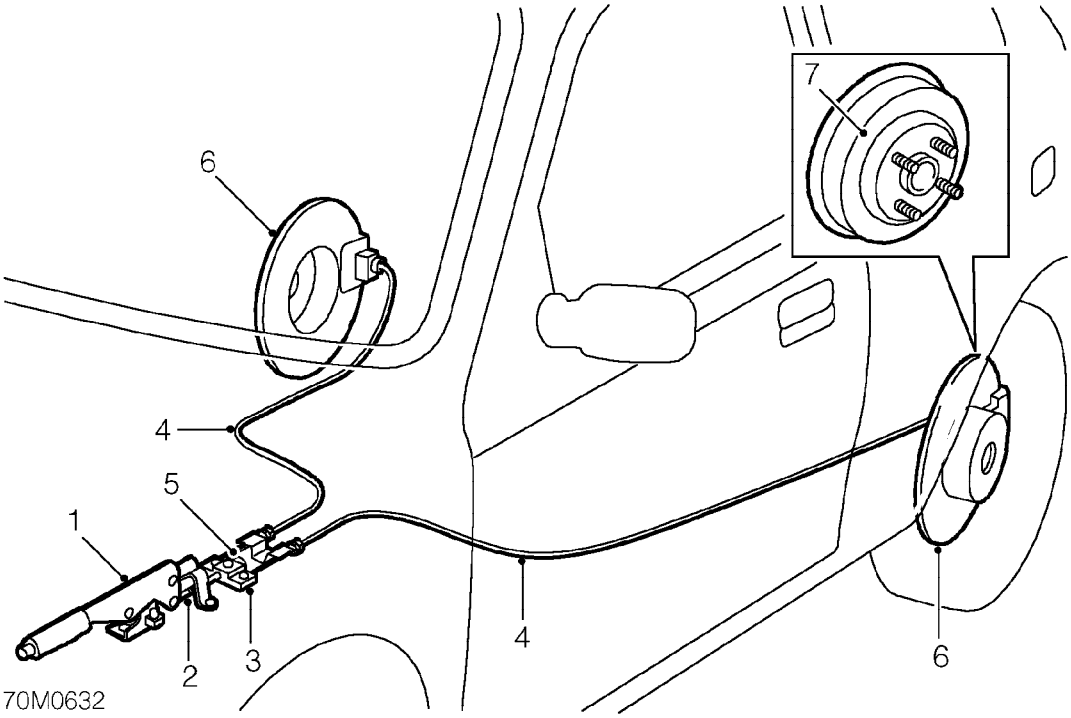

1. Handbrake lever
2. Intermediate rod
3. Compensator
4. Rear cables
5. Adjusting nut
6. Rear disc brake
7. Rear drum brake

The handbrake operates on both rear discs or rear drums via 2 rear cables, a compensator and an intermediate rod which connects to the handbrake lever.

As the handbrake lever is applied, movement is transmitted through the intermediate rod to the compensator which, in turn, transmits movement to the 2 rear cables. Each rear cable pulls on a lever on the rear caliper (or brake shoe). On rear disc brakes, rotational movement of the lever is changed to linear movement by a strut which, via a push rod, pushes the piston along its bore to force the brake pads into contact with the disc. On rear drum brakes, the lever operates a cam which forces the brake shoes apart to bring the brake linings into contact with the drum.

Automatic adjustment of the disc brake pads (or the brake shoes) is maintained by operation of the foot brake. Manual adjustment of the handbrake cables is effected via the adjusting nut on the threaded intermediate rod bearing upon the compensator.

BRAKE BLEED

Service repair no - 70.25.02

The following procedure covers bleeding the complete system but where only the primary or secondary circuit have been disturbed in isolation, it should only be necessary to bleed that system. Partial bleeding of the hydraulic system is only permissable if a brake pipe or hose has been disconnected with only minor loss of fluid.

CAUTION: Never reuse fluid that has been bled from the brake system. Do not allow fluid level in master cylinder to fall below 'MIN' mark during bleeding. Do not fill reservoir above 'MAX' mark.

CAUTION: Do not allow brake fluid to contact paint finished surfaces as paint may be damaged. If spilled, remove fluid and clean area with clean warm water.

Bleed

1. Raise front and rear of vehicle.

WARNING: Support on safety stands.

2. Check all pipe and hose connections are tight and there are no signs of leakage.
3. Top-up fluid level in brake reservoir to 'MAX' mark. ***See INFORMATION, Capacities, fluids and lubricants.***

CAUTION: Use only new brake fluid of the recommended grade.

Bleed sequence.

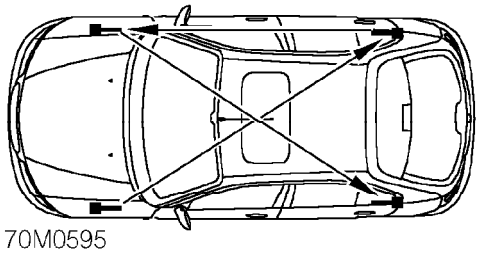

LH front.	**RH rear.**
RH front.	**LH rear.**

4. Attach bleed tube to LH front brake caliper bleed screw, submerge free end in a clear container containing brake fluid.

NOTE: Bleed brakes with engine running and handbrake in OFF position.

5. Apply pressure to brake pedal several times, then apply steady pressure.
6. Loosen bleed screw to release brake fluid and air.
7. Depress brake pedal steadily through its full stroke and allow to return unassisted. Repeat procedure until a flow of clean air-free fluid is purged into container then, whilst holding pedal at end of downward stroke, tighten bleed screw to 10 Nm on calipers and 7 Nm on wheel cylinders.

CAUTION: Maintain brake fluid level above 'MIN' mark during this procedure.

8. Top-up brake fluid level.
9. Repeat procedure at each wheel in the sequence shown.

CAUTION: Braking efficiency may be seriously impaired if wrong bleed sequence is used.

10. Remove bleed tube. Apply brakes and check for leakage.
11. Remove stand(s) and lower vehicle.
12. Road test vehicle. Check brake pedal for short firm travel when brakes are applied.

HANDBRAKE CABLE

Service repair no - 70.35.10

Check

1. Apply handbrake lever one notch at a time and count number of notches required to apply the brakes firmly, equivalent to a pull of 20 kgf, 44 lbf applied 50 mm (2 in) from the end of the lever.

DATA: Handbrake lever travel = 7 - 11 notches

2. Adjust handbrake cable tension if travel is outside limits.

Adjust

NOTE: If carrying out handbrake adjustment after installation of new pads/shoes, loosen handbrake cable adjusting nut, start engine and depress brake pedal several times to set self adjust mechanism.

1. Raise rear of vehicle.

WARNING: Support on safety stands.

Models with disc brakes fitted

2. Remove road wheel(s).

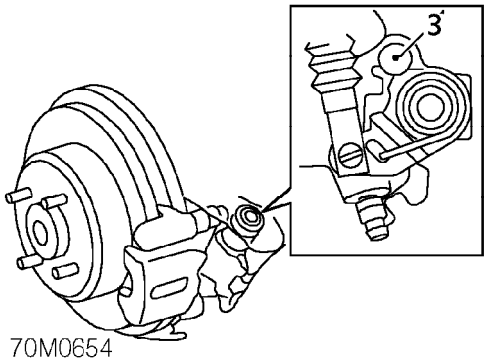

3. Ensure handbrake arm on each caliper contacts the brake caliper pin.
4. Fit road wheel(s) and tighten nuts to correct torque. ***See INFORMATION, Torque wrench settings.***

All Models

5. Remove ash tray from rear console.
6. Check handbrake cable connections for free movement in handbrake equaliser.
7. Apply handbrake one notch.

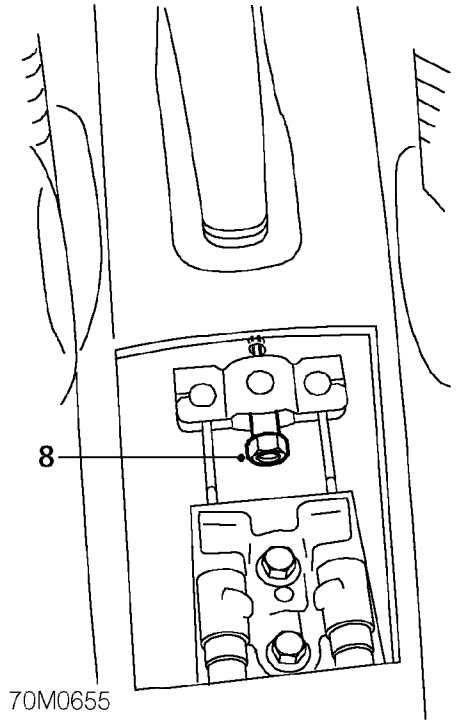

8. Tighten equaliser adjusting nut until rear wheels drag slightly when turned.
9. Release handbrake lever and check that rear wheels do not drag when turned. readjust if necessary.
10. Apply handbrake one notch at a time and count the number of notches until both rear wheels lock. Readjust if necessary.
11. Release handbrake lever.
12. Fit ash tray to rear console.
13. Remove stand(s) and lower vehicle.

BRAKE LIGHT SWITCH

Service repair no - 70.35.41

Adjust

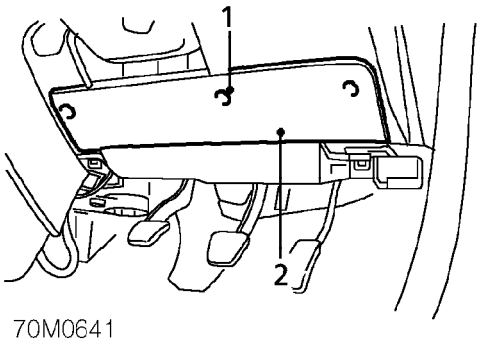

1. Release 3 turnbuckles securing fuse box cover to lower fascia.
2. Remove fuse box cover.

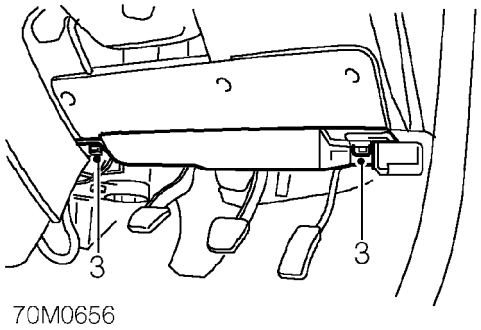

3. Release 2 turnbuckles securing closing panel to underside of fascia.
4. Remove closing panel.

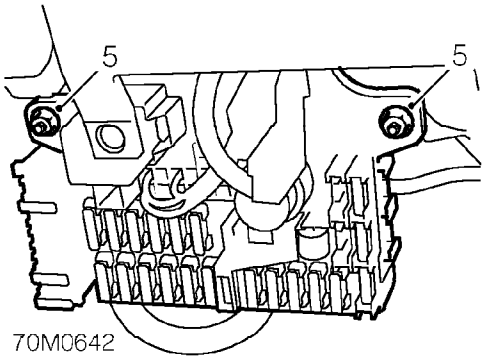

5. Remove 2 nuts securing passenger compartment fuse box to mounting bracket.
6. Release fuse box from mounting bracket.

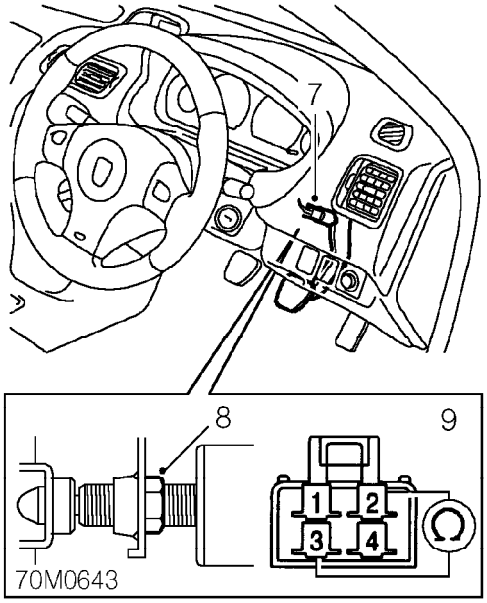

7. Disconnect multiplug from brake light switch.
8. Loosen locknut securing brake light switch to pedal box.
9. Connect an ohmmeter across switch terminal 2 and 3.
10. Screw switch in until an open circuit condition exists with the pedal released and a closed circuit condition exists with the pedal depressed.
11. Tighten brake light switch locknut.

CAUTION: Ensure the switch does not prevent the brake pedal returning fully.

12. Connect multiplug to brake light switch.
13. Fit fuse box to mounting bracket, fit nuts and tighten to 10 Nm.
14. Position closing panel to underside of fascia and secure with turnbuckles.
15. Fit fuse box cover and secure with turnbuckles.

BRAKE LIGHT SWITCH - MODELS WITH BOSCH ECM

Service repair no - 70.35.41

Adjust

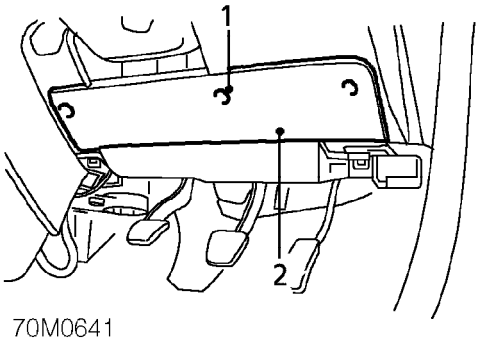

1. Release 3 turnbuckles securing fuse box cover to lower fascia.
2. Remove fuse box cover.

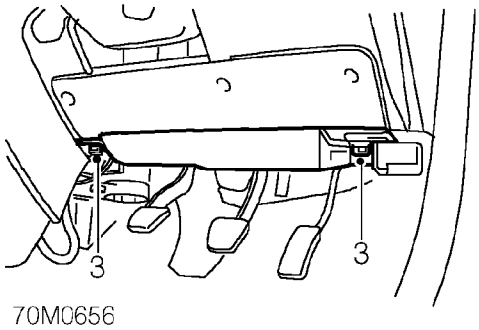

3. Release 2 turnbuckles securing closing panel to underside of fascia.
4. Remove closing panel.

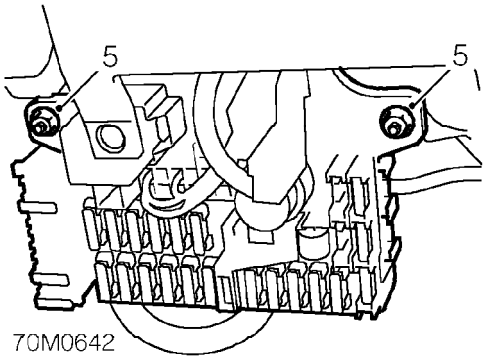

5. Remove 2 nuts securing passenger compartment fuse box to mounting bracket.
6. Release fuse box from mounting bracket.

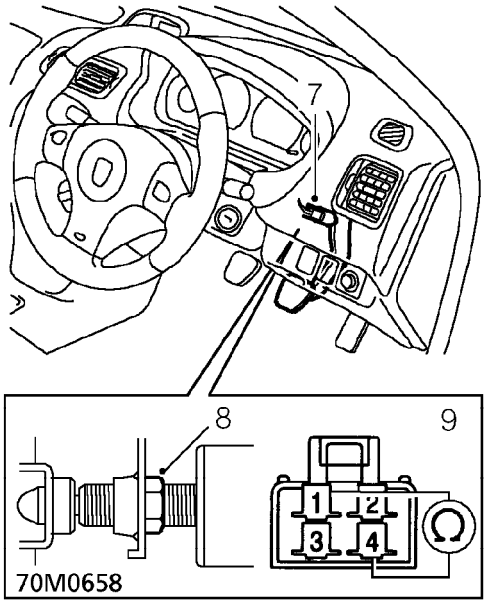

7. Disconnect multiplug from brake light switch.
8. Loosen locknut securing brake light switch to pedal box.
9. Connect an ohmmeter across switch terminal 1 and 4.

10. Screw switch in until a closed circuit condition exists with the pedal released and an open circuit condition exists with the pedal depressed.
11. Screw switch in one further turn.
12. Tighten brake light switch locknut.
13. Recheck switch operation. Ohmmeter should read open circuit with brake pedal depressed, closed circuit with brake pedal released.

CAUTION: Ensure the switch does not prevent the brake pedal returning fully.

14. Connect multiplug to brake light switch.
15. Fit fuse box to mounting bracket, fit nuts and tighten to 10 Nm.
16. Position closing panel to underside of fascia and secure with turnbuckles.
17. Fit fuse box cover and secure with turnbuckles.

HANDBRAKE WARNING SWITCH

Service repair no - 70.35.40

Remove

1. Remove rear console. ***See BODY, Interior trim components.***

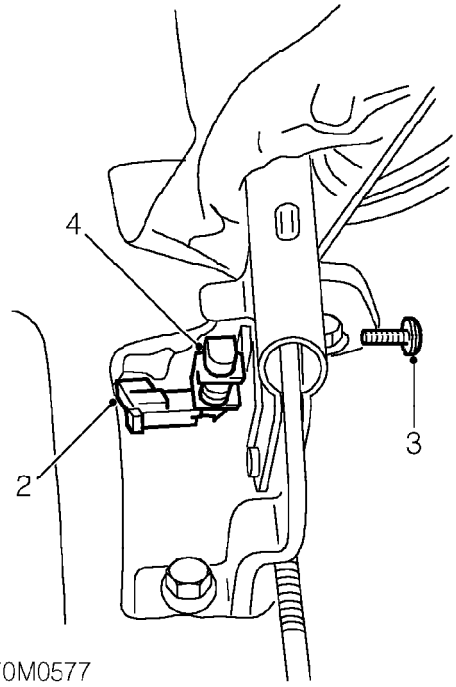

2. Disconnect Lucar from switch.
3. Remove screw securing switch to handbrake.
4. Remove switch from handbrake.

Refit

1. Fit switch to handbrake and tighten screw to 5 Nm.
2. Connect Lucar to switch.
3. Fit rear console. ***See BODY, Interior trim components.***

BRAKE LIGHT SWITCH

Service repair no - 70.35.42

Remove

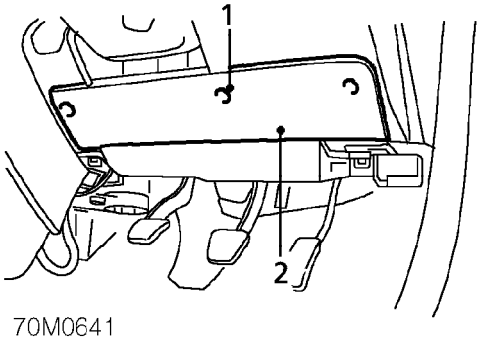

1. Release 3 turnbuckles securing fuse box cover to lower fascia.
2. Remove fuse box cover.

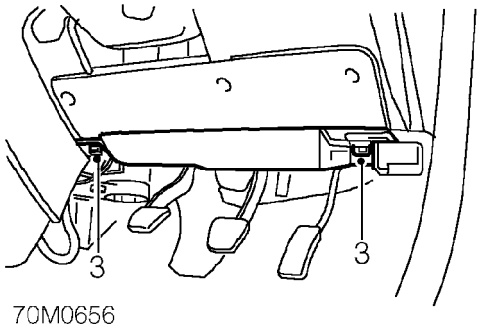

3. Release 2 turnbuckles securing closing panel to underside of fascia.
4. Remove closing panel.

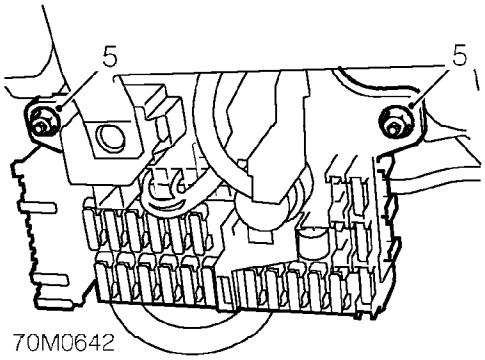

5. Remove 2 nuts securing passenger compartment fuse box to mounting bracket.
6. Release fuse box from mounting bracket.

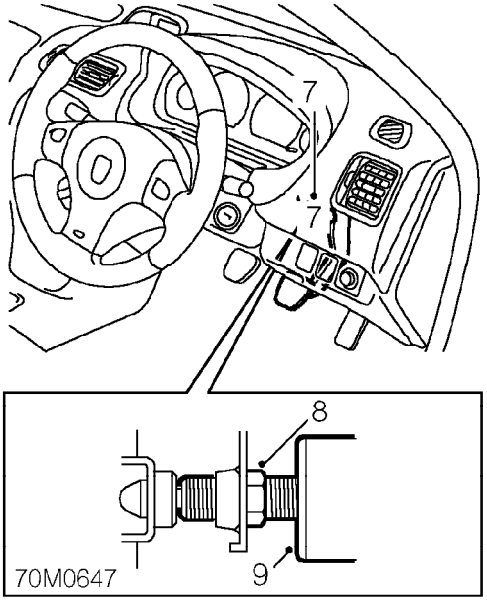

7. Disconnect multiplug from brake light switch.
8. Loosen locknut securing brake light switch to pedal box.
9. Remove brake light switch.

Refit

1. Fit brake light switch.
2. Adjust brake light switch. ***See Adjustments.***
3. Connect multiplug to brake light switch.
4. Fit fuse box to mounting bracket, fit nuts and tighten to 10 Nm.
5. Position closing panel to underside of fascia and secure with turnbuckles.
6. Fit fuse box cover and secure with turnbuckles.

FLUID LEVEL SWITCH

Service repair no - 70.25.08

Remove

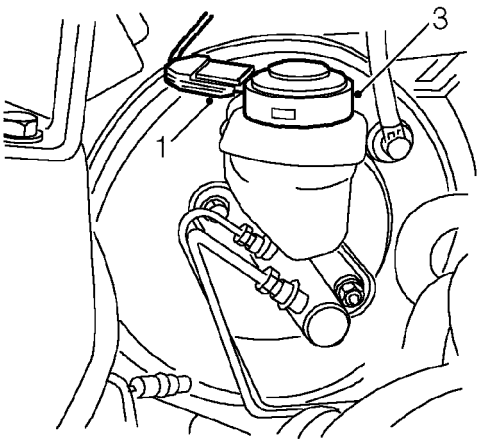

70M0603

1. Disconnect switch lead.
2. Clean area around reservoir cap.
3. Remove cap/switch assembly.

CAUTION: Do not allow brake fluid to contact paint finished surfaces as paint may be damaged. If spilled, remove fluid and clean area with clean warm water.

Refit

1. Check and top-up fluid level.
2. Fit cap/switch assembly.
3. Connect switch lead.

HANDBRAKE LEVER

Service repair no - 70.35.08

Remove

1. Remove rear console. ***See BODY, Interior trim components.***

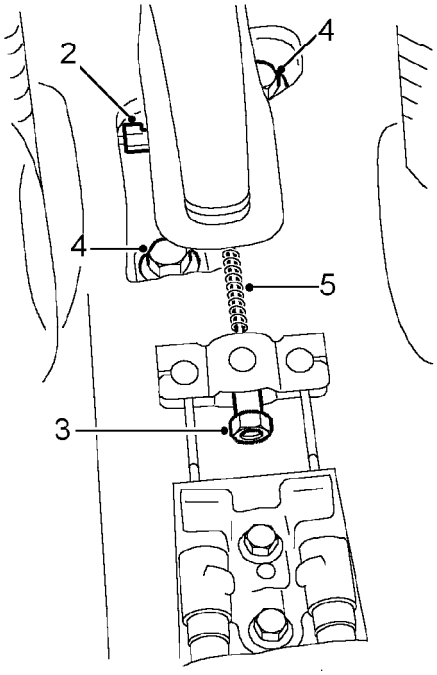

70M0792

2. Disconnect Lucar from handbrake warning switch.
3. Remove cable adjusting nut.
4. Remove 2 bolts securing handbrake lever assembly.
5. Remove spring from adjusting rod.

Refit

1. Fit spring to adjusting rod.
2. Position handbrake. Fit and tighten bolts to 22 Nm.
3. Fit cable adjusting nut.
4. Connect Lucar to handbrake warning switch.
5. Adjust handbrake cable. ***See Adjustments.***
6. Fit rear console. ***See BODY, Interior trim components.***

ABS ECU - UP TO 98MY

Service repair no - 70.25.34

Remove

1. Disconnect battery earth lead.

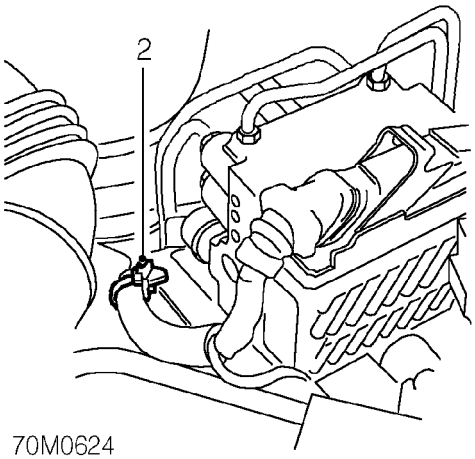

2. Release ABS ECU harness from mounting bracket.

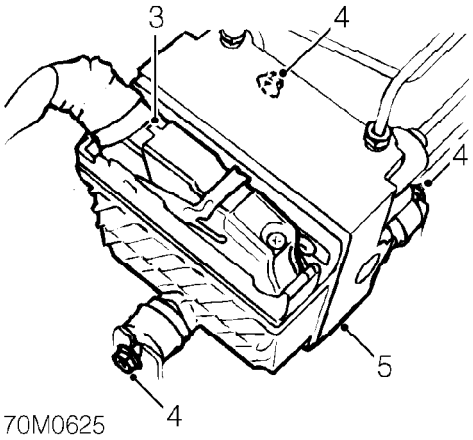

3. Lift clip and disconnect multiplug from ABS ECU.
4. Loosen 3 nuts securing ABS modulator and ECU assembly to mounting bracket.
5. Release ABS modulator and ECU assembly from mounting bracket.

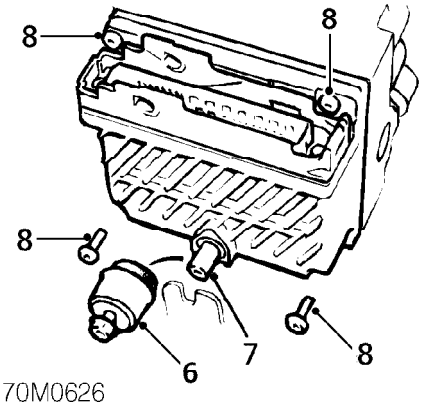

6. Remove rubber mounting from spigot on ECU.
7. Remove mounting spigot from ECU using a TX30 adaptor.
8. Remove 4 TX25 screws securing ECU to modulator.
9. Remove ECU from modulator.

CAUTION: Take great care to prevent the entry of foreign matter into the rear of the modulator.

Refit

1. Fit ECU to modulator.
2. Fit mounting spigot to ECU. DO NOT tighten.
3. Fit screws securing ECU to modulator and tighten to 8 Nm.
4. Tighten spigot to 15 Nm.
5. Fit mounting rubber to spigot.
6. Locate ECU and modulator assembly in mounting bracket and tighten nuts to 10 Nm.
7. Connect multiplug to ECU and secure clip.
8. Secure ECU harness to mounting bracket.
9. Connect battery earth lead.

ABS HYDRAULIC MODULATOR - UP TO 98MY

Service repair no - 70.25.12

Remove

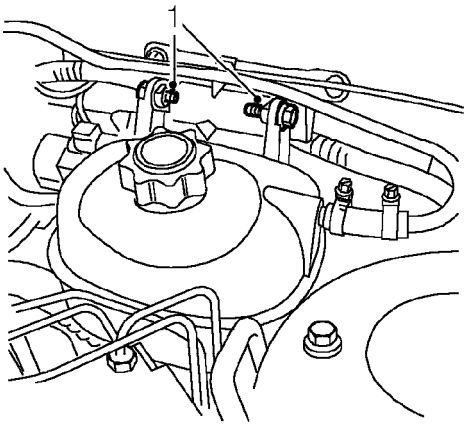

70M0617

1. Remove 2 bolts securing coolant expansion tank and move aside.
2. Disconnect battery earth lead.
3. Position cloth under modulator to absorb fluid spillage.

CAUTION: Do not allow brake fluid to contact paint finished surfaces as paint may be damaged. If spilled, remove fluid and clean area with clean warm water.

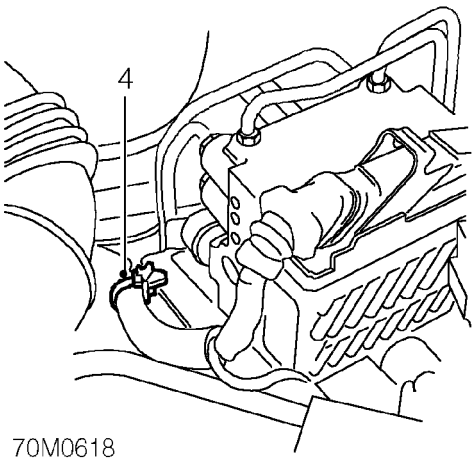

70M0618

4. Release ABS ECU harness from mounting bracket.

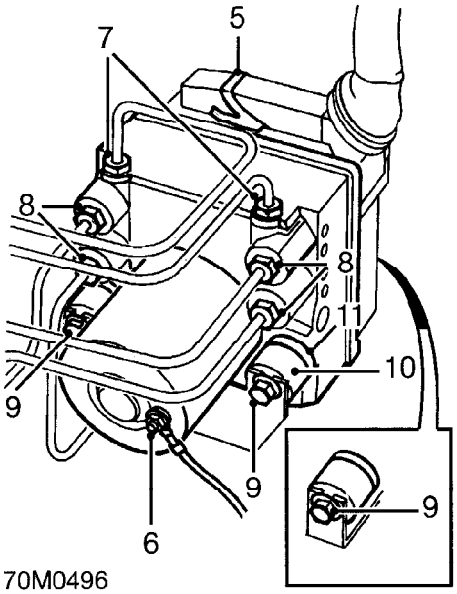

70M0496

5. Lift clip and disconnect multiplug from ABS ECU.
6. Remove nut securing earth lead to modulator and disconnect lead.
7. Disconnect 2 inlet brake pipe unions from top of modulator.

CAUTION: Plug the connections.

8. Disconnect 4 outlet brake pipe unions from rear of modulator.

CAUTION: Plug the connections.

9. Loosen 3 nuts securing modulator and ECU assembly to mounting bracket.
10. Release modulator and ECU assembly from mounting bracket and remove.
    Do not carry out further dismantling if component is removed for access only.
11. Remove 3 mounting rubbers from modulator and ECU assembly and fit to new.

Refit

1. Fit modulator and ECU assembly to mounting bracket and tighten mounting nuts to 10 Nm.
2. Connect brake pipe unions to modulator, ensuring pipes are connected to their correct ports.

NOTE:
MC1 = Master cylinder primary.
MC2 = Master cylinder secondary.
RF = Right hand front.
LF = Left hand front.
RR = Right hand rear.
LR = Left hand rear.

3. Tighten unions to 14 Nm.
4. Connect earth lead to modulator and fit and tighten nut.
5. Connect multiplug to ABS ECU and secure clip.
6. Secure ABS ECU harness to mounting bracket.
7. Position coolant expansion tank to body and fit and tighten bolts to 5 Nm.
8. Bleed brakes. ***See Adjustments.***
9. Connect battery earth lead.
10. To ensure correct operation, the system MUST be tested using TestBook.

ABS SENSOR - FRONT

Service repair no - 70.25.32

Remove

1. Raise front of vehicle.

WARNING: Support on safety stands.

2. Remove road wheel(s).

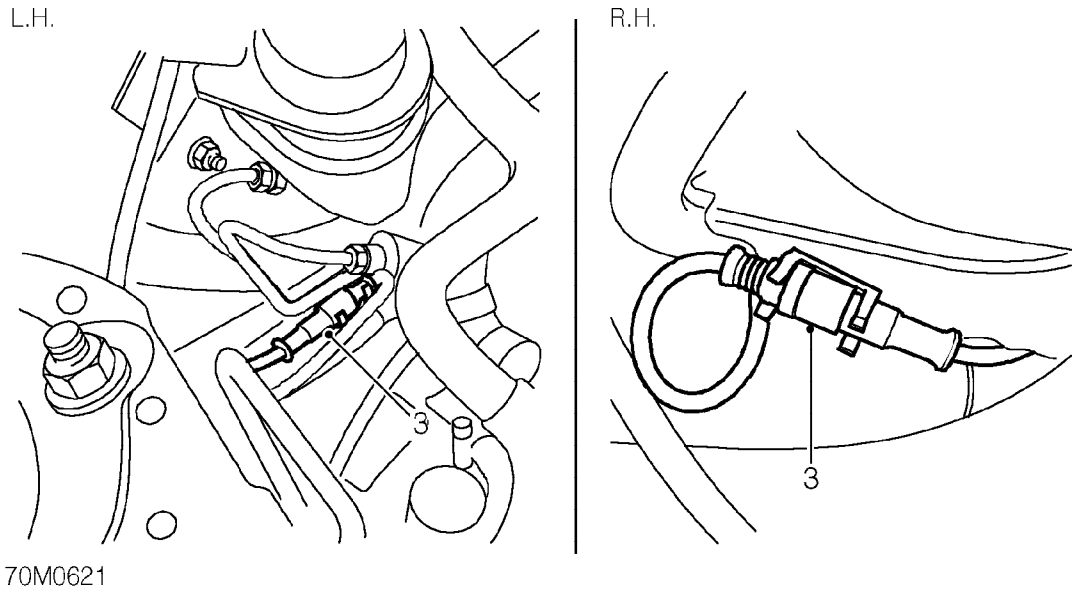

Located on ABS modulator bracket.

Located below brake servo.

3. Release sensor multiplug from clip on body and disconnect multiplug.

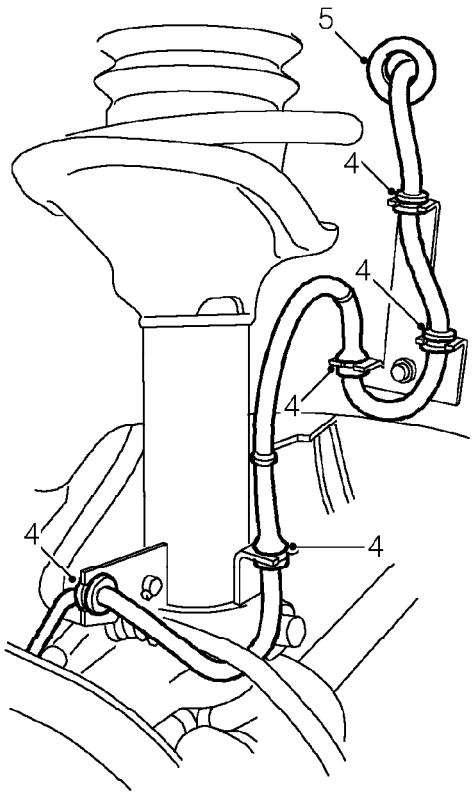

4. Release sensor harness from 5 clips in wheel arch.
5. Release grommet and withdraw harness into wheel arch.

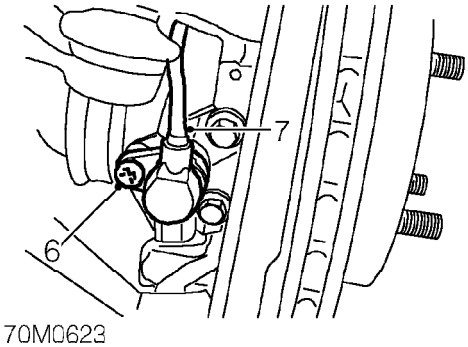

6. Remove screw securing sensor to hub.
7. Remove sensor and harness.

Refit

1. Clean mating surfaces of sensor and hub.
2. Fit sensor to hub and tighten screw to 6 Nm.
3. Pass harness through body and locate grommet.
4. Secure harness to clips in wheel arch.
5. Ensuring 'O' ring is in place, connect sensor harness multiplug and secure multiplug in clip.
6. Fit road wheel(s) and tighten nuts to correct torque. ***See INFORMATION, Torque wrench settings.***
7. Remove stand(s) and lower vehicle.
8. To ensure correct operation, the system MUST be tested using TestBook.

ABS SENSOR - REAR - MODELS WITH DISC BRAKES

Service repair no - 70.65.31

Remove

1. Raise rear of vehicle.

WARNING: Support on safety stands.

2. Remove rear road wheel.

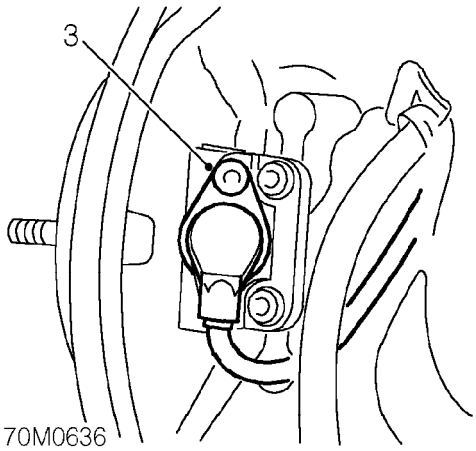

3. Remove Tx30 screw securing ABS sensor to hub and release sensor.

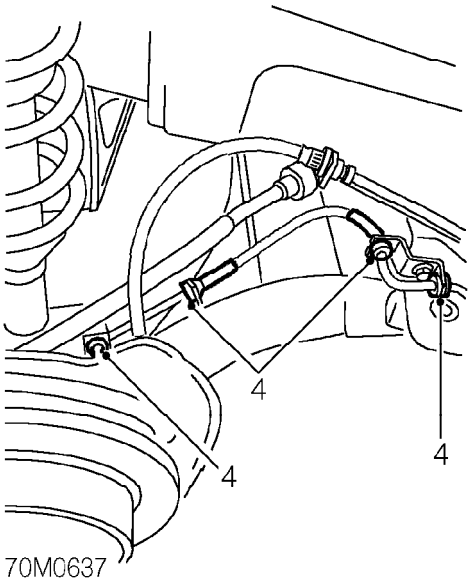

4. Release sensor harness from 4 clips on 'H' frame.

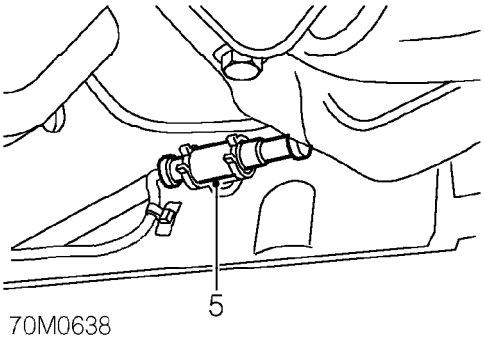

5. Release sensor multiplug from mounting clip.
6. Disconnect sensor multiplug and remove sensor.

Refit

1. Fit ABS sensor to hub and secure with screw. Tighten screw to 6 Nm.
2. Secure sensor harness to clips on 'H' frame.
3. Connect harness multiplug and secure to clip.
4. Fit road wheel(s) and tighten nuts to correct torque. ***See INFORMATION, Torque wrench settings.***
5. Remove stand(s) and lower vehicle.

BRAKE PROPORTIONING VALVE - ABS

Service repair no - 70.25.15

Remove

1. Position cloth to absorb fluid spillage.

CAUTION: Do not allow brake fluid to contact paint finished surfaces as paint may be damaged. If spilled, remove fluid and clean area with clean warm water.

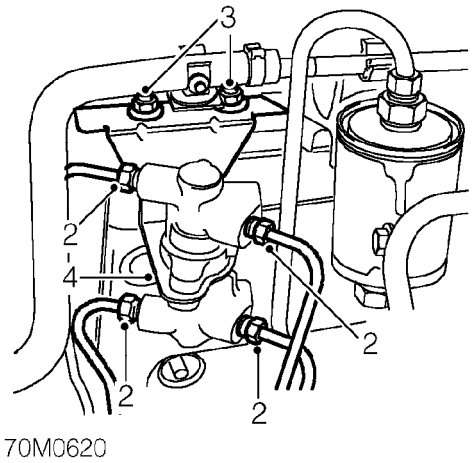

2. Disconnect 4 brake pipes from valve.

CAUTION: Plug the connections.

3. Remove 2 nuts securing valve bracket to bulkhead.
4. Remove valve and bracket assembly.

CAUTION: Do not remove screws securing valve to bracket.

Refit

1. Position valve and bracket assembly and align pipes to valve and start unions.
2. Align valve bracket to body and tighten nuts to 10 Nm.
3. Tighten pipe unions to 19 Nm.
4. Remove cloth.
5. Bleed brakes. ***See Adjustments.***

BRAKE PROPORTIONING VALVE - NON ABS

Service repair no - 70.25.15

Remove

1. Position cloth to absorb fluid spillage.

CAUTION: Do not allow brake fluid to contact paint finished surfaces as paint may be damaged. If spilled, remove fluid and clean area with clean warm water.

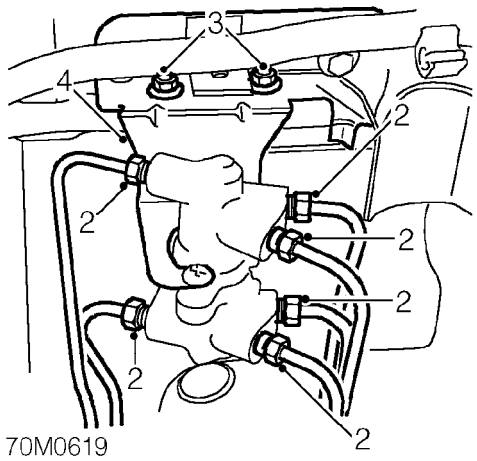

2. Disconnect 6 brake pipes from valve.

CAUTION: Plug the connections.

3. Remove 2 nuts securing valve bracket to bulkhead.
4. Remove valve and bracket assembly.

CAUTION: Do not remove screws securing valve to bracket.

Refit

1. Position valve and bracket assembly and align pipes to valve and start unions.
2. Align valve bracket to body and tighten nuts to 10 Nm.
3. Tighten pipe unions to 19 Nm.
4. Remove cloth.
5. Bleed brakes. ***See Adjustments.***

BRAKE MASTER CYLINDER

Service repair no - 70.30.08

Remove

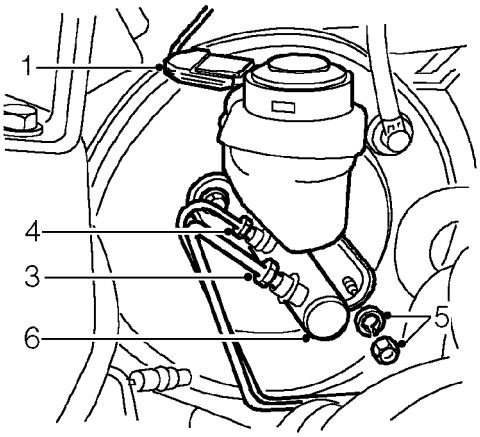

70M0598

1. Disconnect fluid level multiplug.
2. Position cloth under master cylinder to absorb spilled fluid.

CAUTION: Do not allow brake fluid to contact paint finished surfaces as paint may be damaged. If spilled, remove fluid and clean area with clean warm water.

3. Disconnect secondary system pipe union from master cylinder.
4. Disconnect primary system pipe union from master cylinder.

CAUTION: Plug the connections.

5. Remove 2 nuts and spring washers securing master cylinder.
6. Remove master cylinder.

Refit

1. Clean master cylinder and servo mating surfaces.
2. Ensure rod seal is fitted to master cylinder.
3. Align servo push rod and fit master cylinder to servo.
4. Fit nuts and spring washers, tighten to 15 Nm.
5. Connect primary and secondary brake pipes, tighten unions to 19 Nm.
6. Connect fluid level multiplug.
7. Bleed brake system. ***See this section.***

SERVO ASSEMBLY

Service repair no - 70.50.01

Remove

1. Remove brake master cylinder. ***See this section.***

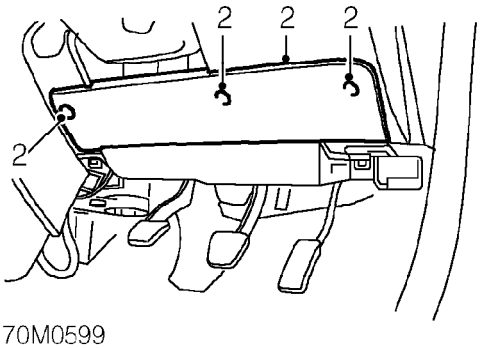

70M0599

2. Disengage 3 turnbuckles and remove fusebox cover.

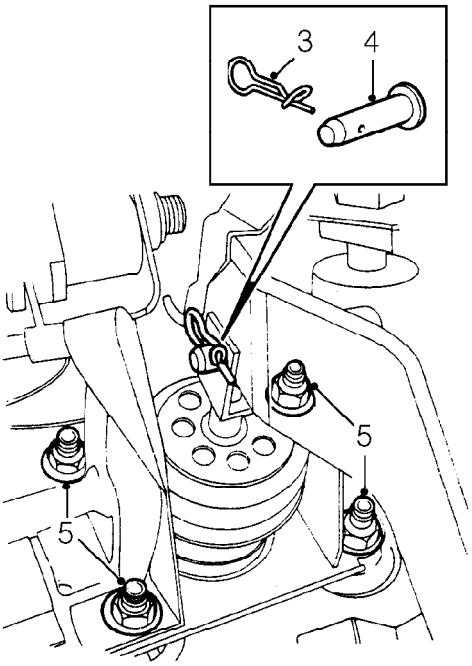

70M0600

3. Remove and discard spring clip from clevis pin.
4. Remove clevis pin securing brake pedal servo push rod.
5. Remove 4 flange nuts securing servo to body.

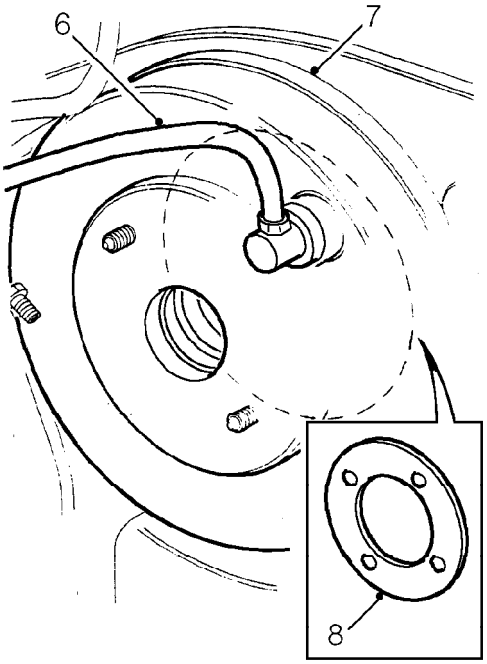

70M0610

6. Release vacuum hose from servo.
7. Remove servo assembly.
8. Remove gasket from servo.

Refit

CAUTION: The domed nut on the push rod must not be adjusted. The servo gasket acts as a spacer, the correct gasket must be fitted.

1. Fit gasket to servo.
2. Fit servo to bulkhead, vacuum connection uppermost, tighten nuts to 13 Nm.
3. Align push rod to brake pedal, fit clevis pin and secure with NEW spring clip.
4. Grease clevis pin.
5. Fit fuse box cover and secure turnbuckles.
6. Connect brake vacuum hose to servo. Fit brake master cylinder. ***See this section.***

BRAKE SERVO VACUUM PUMP - 'L' SERIES

Service repair no - 70.50.19

Remove

1. Remove alternator. ***See ELECTRICAL, Repairs.***

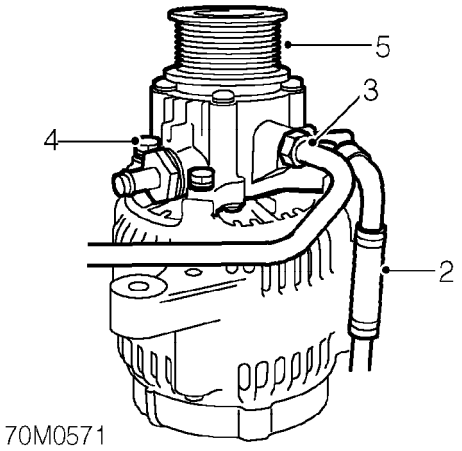

2. Remove clip and disconnect oil return hose from vacuum pump.
3. Loosen union and disconnect oil feed pipe from vacuum pump.
4. Remove 4 bolts securing vacuum pump to alternator.
5. Remove vacuum pump.

Refit

1. Clean mating face of alternator and vacuum pump.
2. Fit vacuum pump to alternator, fit bolts and tighten to 8 Nm.
3. Connect oil feed pipe to vacuum pump but do not tighten union.
4. Connect oil return hose to vacuum pump and secure with clip.
5. Fit alternator. ***See ELECTRICAL, Repairs.***

FRONT BRAKE PADS

Service repair no - 70.40.02

Remove

1. Raise front of vehicle.

WARNING: Support on safety stands.

2. Remove road wheel(s).

WARNING: Brake pads must be renewed in axle sets only. Braking efficiency may otherwise be impaired.

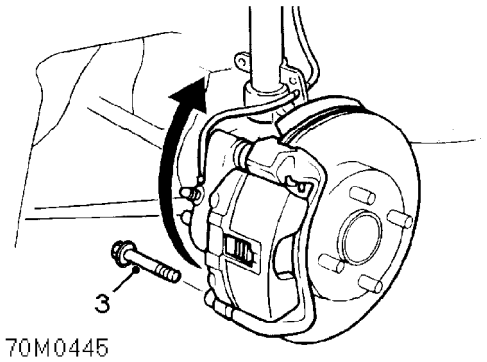

3. Remove lower guide pin bolt from caliper and pivot caliper upwards.

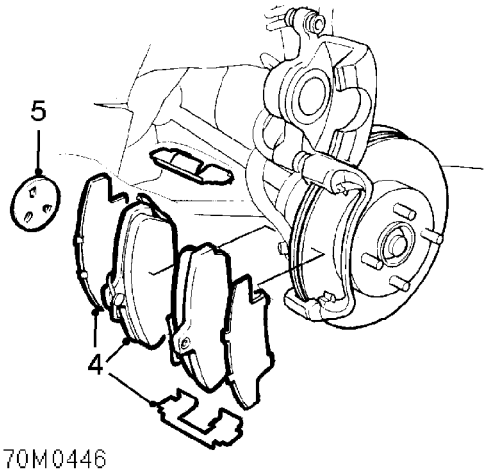

4. Remove 2 brake pads, shims and retainers from caliper bracket.
5. Remove inner shim from caliper piston.

Refit

1. Rotate disc by hand and scrape all scale and rust from around edge of disc.
2. Scrape rust from pad locating surfaces on caliper.
3. Clean dust from calipers using brake cleaning fluid or industrial alcohol.

WARNING: Do not use an air line to blow dust from brake assembly. Do not use petroleum based fluid as damage will occur to rubber components.

4. Position bleed bottle, connect bleed hose to bleed screw and loosen screw.
5. Press piston back into housing.
6. Tighten bleed screw to 10 Nm.
7. Remove bleed bottle.

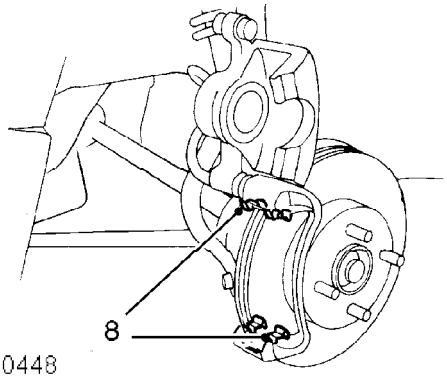

70M0448

8. Fit pad retainers to caliper bracket.
9. Apply Molykote M77 to both sides of shims.
10. Fit inner shim to piston.
11. Fit shims to pads and fit pads to caliper bracket.

NOTE: Fit pad with wear indicator on the inside.

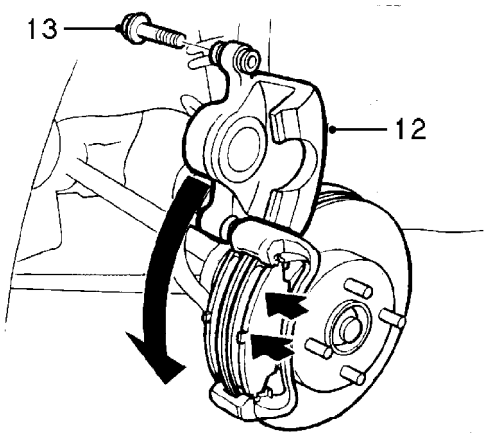

70M0449

12. Lower caliper housing over pads.
13. Ensure flats **'A'** on guide pins locate with lugs on caliper housing. Fit bolt and tighten to 27 Nm.
14. Repeat procedure for other side.
15. Fit road wheel(s) and tighten nuts to correct torque. ***See INFORMATION, Torque wrench settings.***
16. Remove stand(s) and lower vehicle.
17. Depress brake several times to set pad to disc clearance.
18. Check and top-up brake fluid. ***See INFORMATION, Capacities, fluids and lubricants.***

REAR BRAKE SHOES

Service repair no - 70.40.09

Remove

1. Raise rear of vehicle.

WARNING: Support on safety stands.

2. Remove road wheel(s).
3. Release handbrake.
4. Remove rear brake drum. ***See this section.***

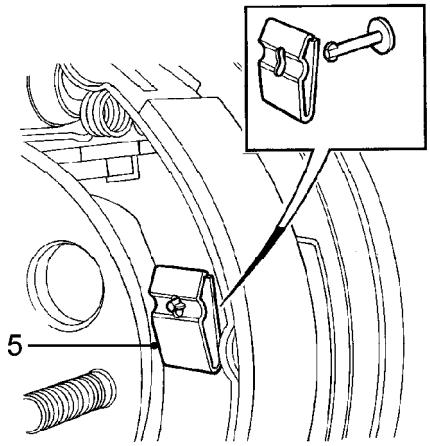

70M0443

5. Depress clips to release brake shoe retaining pins.
6. Remove retaining pins.

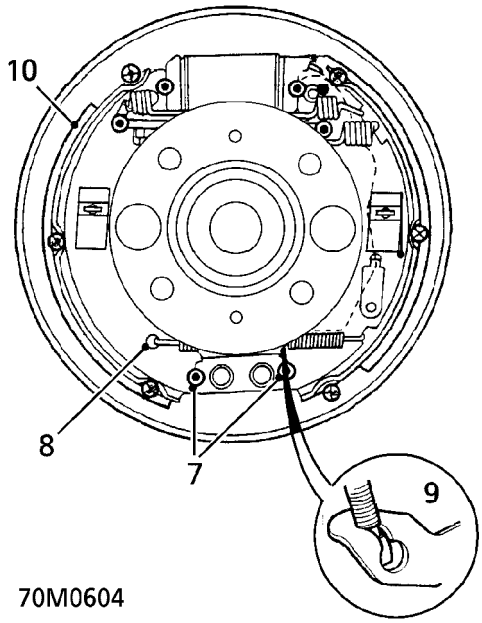

70M0604

7. Ease one shoe out of retaining groove in abutment followed by other shoe.
8. Detach shoe abutment return spring from leading shoe end and remove spring.

NOTE: The forward shoe is the LEADING shoe, the TRAILING shoe has the handbrake lever attached to it.

9. Release hand brake cable from brake shoe lever.
10. Manoeuvre shoe assembly around wheel cylinder and remove.

CAUTION: Ensure edges of brake shoes do not damage wheel cylinder dust covers.

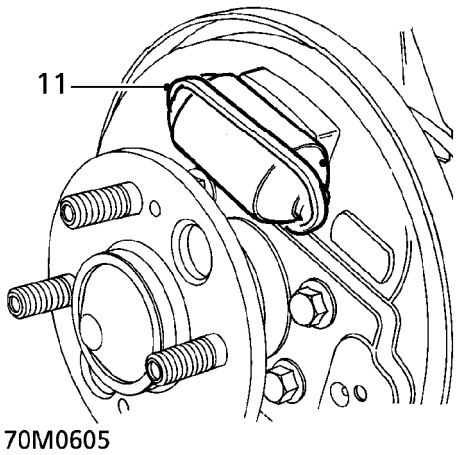

11. Fit an elastic band around wheel cylinder to retain pistons.

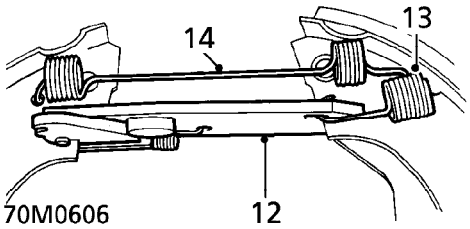

12. Position trailing shoe and ease strut from slot in shoe.
13. Detach short spring from strut and remove from trailing arm.
14. Remove trailing shoe from upper return spring and remove return spring from leading shoe.

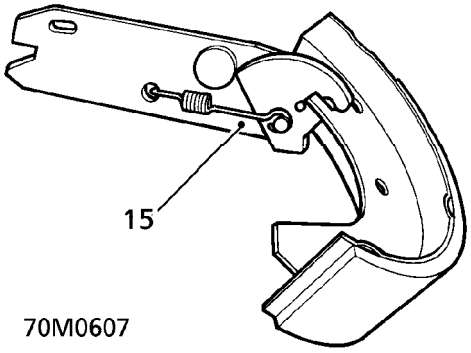

15. Remove adjuster strut from leading shoe by pulling on shoe and fully extending cam so that shoe pivots out of engagement.
16. Clean backplate and drum with brake cleaning fluid.

WARNING: Do not use an air line to blow dust from brake assembly.
Do not use petroleum based fluid as damage will occur to rubber components.

17. Use a wire brush to remove any corrosion taking care not to damage wheel cylinder covers.
18. Inspect all parts for wear or damage.
19. Examine adjuster strut to ensure it is in working order with no signs of wear or damage. The quadrant lever, when pulled away from the knurled wheel against spring pressure, should move smoothly and freely within its slot in the strut.
20. Ensure teeth on quadrant and knurled wheel are undamaged and wheel is firmly attached to strut.
21. Examine wheel cylinder dust seals for signs of brake fluid leakage, a certain amount of dampness is usual. However, if free fluid is apparent, lift dust seal and check for excessive leakage.
Renew wheel cylinder if brake linings have become contaminated.
22. Check wheel cylinder pistons for freedom of movement.
23. Check condition of springs, renew if necessary.

Refit

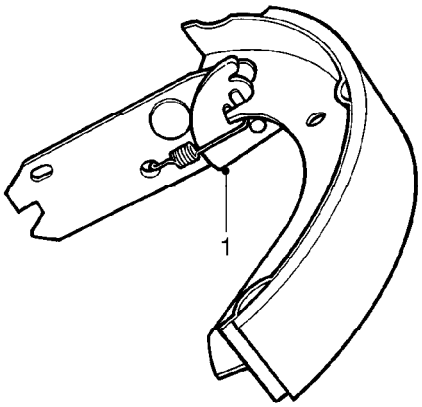

70M0530

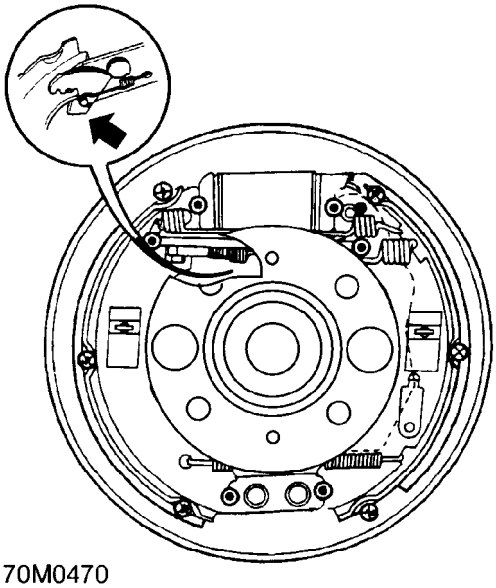

70M0470

1. Fully extend cam on strut and rotate leading shoe into strut slot, as illustrated.
2. Fit upper return spring to leading shoe and fit trailing shoe to return spring.
3. Engage trailing shoe to adjuster plate fit adjuster spring to trailing shoe and secure spring to adjuster plate.
4. Smear shoe contact points with Molykote 111 grease, ensure grease does not contact linings or dust covers.
5. Manoeuvre shoe assembly into position between hub and wheel cylinder and connect hand brake cable to brake shoe lever.
6. Fit lower return spring to trailing shoe and connect spring to leading shoe.
7. Remove elastic band from wheel cylinder.
8. Engage leading shoe in wheel cylinder followed by trailing shoe and align.

NOTE: During this operation the adjuster may become extended, this is not important but it must be reset prior to fitting brake drum.

9. Fit trailing shoe into abutment bracket followed by leading shoe.
10. Check adjuster cam and if necessary set to minimum adjustment position as follows: lever leading shoe away from wheel cylinder. Move adjuster cam back fully and ease shoe back into position.
11. Fit shoe steady pins through backplate, and secure with spring clips.
12. Clean brake drum, scrape ridge from edge of drum.
13. Fit brake drum and tighten screws to 7 Nm.
14. Repeat procedure and fit brake shoes and drum to opposite hub.
15. Fit road wheel(s) and tighten nuts to correct torque. ***See INFORMATION, Torque wrench settings.***
16. Remove stand(s) and lower vehicle.
17. Apply brake pedal several times to set self adjust mechanism.
18. Check and top up brake fluid. ***See INFORMATION, Capacities, fluids and lubricants.***
19. Check handbrake operation, adjust if necessary. ***See Adjustments.***

REAR BRAKE PADS

Service repair no - 70.40.10

Remove

1. Raise rear of vehicle.

WARNING: Support on safety stands.

2. Remove road wheel(s).

WARNING: Brake pads must be renewed in axle sets only. Braking efficiency may otherwise be impaired.

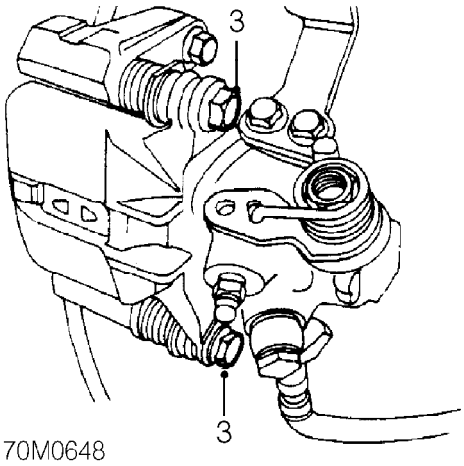

3. Remove 2 guide pin bolts securing caliper to carrier.

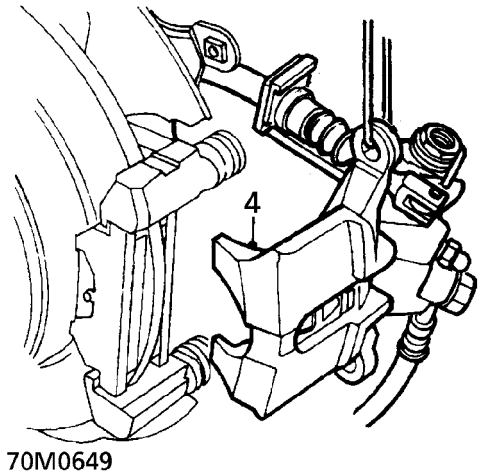

4. Release caliper from carrier and tie aside.

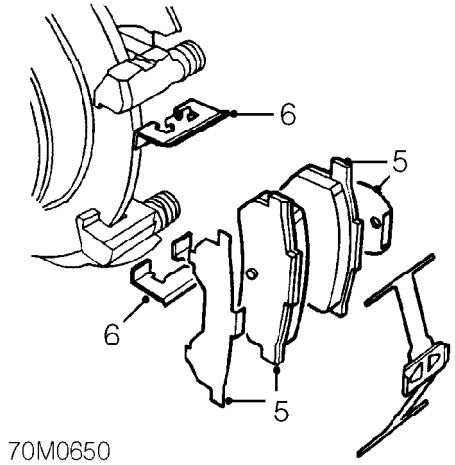

5. Remove brake pads and shims.
6. Remove pad abutment shims.
7. Examine disc for wear, cracking and scoring.
8. Clean dust from caliper using brake cleaning fluid or industrial alcohol.

WARNING: Do not use an air line to blow dust from brake assembly.
Do not use petroleum based fluid as damage will occur to rubber components.

9. Examine caliper for signs of fluid leakage.

10. Rotate disc by hand and scape all scale and rust from around edge of disc.
11. Clean rust from locating surfaces of
12. Position bleed bottle and connect bleed bottle hose to bleed screw.
13. Loosen bleed screw.

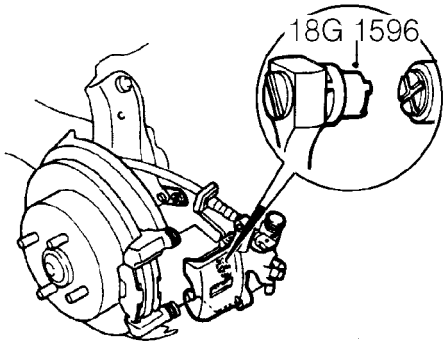

70M0651

14. Screw piston fully back into caliper using tool **18G 1596.**
15. Tighten bleed screw to 10 Nm, disconnect bleed hose and remove bleed bottle.
16. Fit pad retainer springs to carrier.
17. Apply Molykote M77 to both sides of pad shims and back of pads.
18. Fit shims to pads and position pads to carrier.
19. Untie caliper and position to carrier.

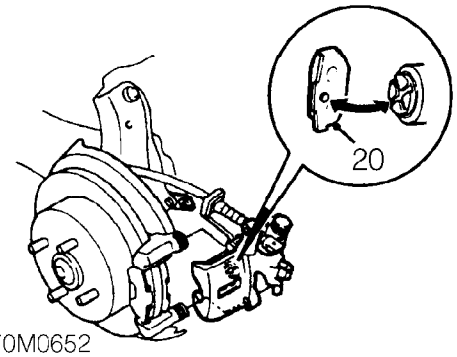

70M0652

20. Ensure that lug on brake pad locates in cruciform slot in piston.

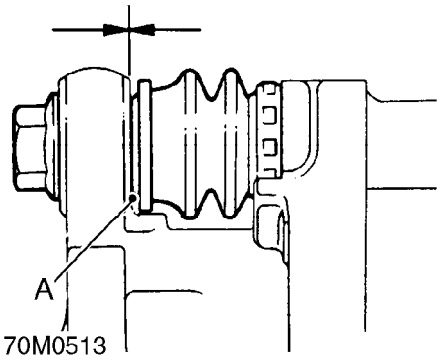

70M0513

21. Ensure flats **'A'** on guide pins locate with lugs on caliper housing.
22. Fit guide pin bolts and tighten to 27 Nm.
23. Repeat operations for other rear brake assembly.
24. Check and top-up brake fluid. ***See INFORMATION, Capacities, fluids and lubricants.***
25. Fit road wheel(s) and tighten nuts to correct torque. ***See INFORMATION, Torque wrench settings.***
26. Adjust handbrake cable. ***See Adjustments.***
27. Remove stand(s) and lower vehicle.

FRONT BRAKE CALIPER

Service repair no - 70.55.24

Remove

1. Raise front of vehicle, one side.

WARNING: Support on safety stands.

2. Remove road wheel(s).
3. Clamp brake hose to prevent fluid loss.

CAUTION: A brake hose clamp must be used.

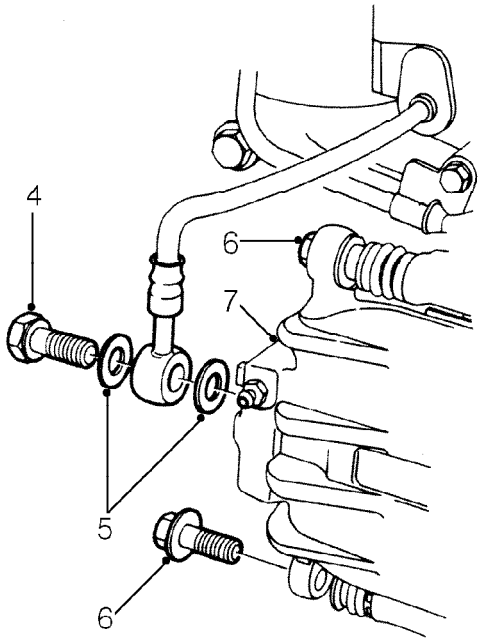

70M0615

4. Remove brake hose banjo bolt.
5. Discard 2 sealing washers

CAUTION: Plug the connections.

6. Remove 2 guide pin bolts.
7. Remove caliper housing from carrier.

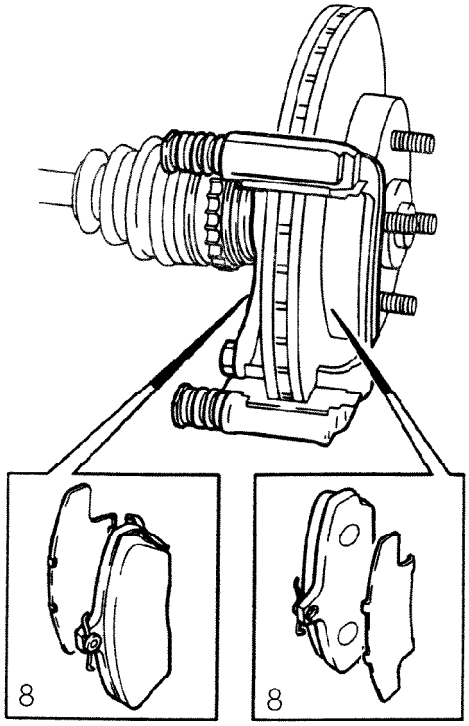

70M0616

8. Remove 2 brake pads, shims and retainers from caliper bracket.
9. Remove inner shim from caliper piston.

Refit

1. Rotate disc by hand and scrape all scale and rust from around edge of disc. Scrape clean location surfaces on caliper bracket.
2. Clean dust from brake parts using brake cleaning fluid or industrial alcohol.

WARNING: Do not use an air line to blow dust from brake assembly. Do not use petroleum based fluid as damage will occur to rubber components.

3. Fit pad retainers to caliper bracket.
4. Apply Molykote M77 to both sides of shims.
5. Fit inner shim to piston. Fit shims to pads and fit pads to caliper carrier.

NOTE: Fit pad with wear indicator strip on the inside.

6. Position caliper housing to carrier, align flats **'A'** on guide pins with caliper housing.
7. Fit and tighten guide pin bolts to 27 Nm.
8. Clean banjo bolt and fit NEW sealing washers.
9. Position hose to caliper and tighten banjo bolt to 34 Nm.
10. Remove clamp from brake hose.
11. Bleed brakes. ***See Adjustments.***
12. Fit road wheel(s) and tighten nuts to correct torque. ***See INFORMATION, Torque wrench settings.***
13. Remove stand(s) and lower vehicle.

REAR BRAKE CALIPER

Service repair no - 70.55.25

Remove

1. Raise rear of vehicle.

WARNING: Support on safety stands.

2. Remove road wheel(s).

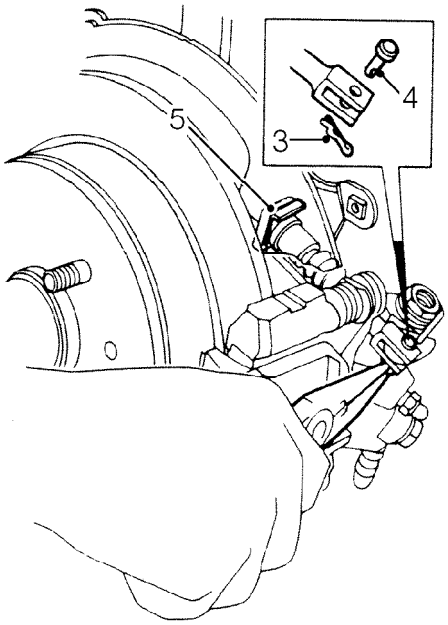

70M0627

3. Remove handbrake cable clevis pin clip. Discard clip.
4. Remove clevis pin.
5. Remove handbrake cable clip and release cable from abutment.
6. Clamp brake hose to prevent fluid loss.

CAUTION: A brake hose clamp must be used.

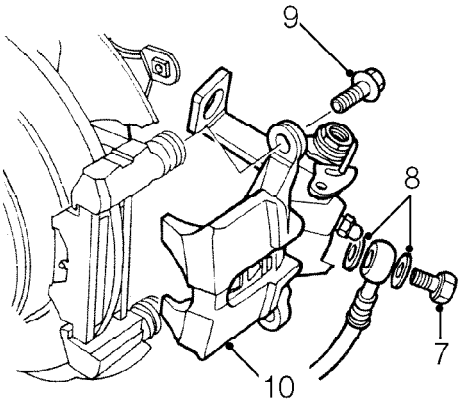

70M0613

7. Remove brake hose banjo bolt.
8. Discard 2 sealing washers.

CAUTION: Plug the connections.

9. Remove 2 guide pin bolts.
10. Remove caliper housing from carrier.

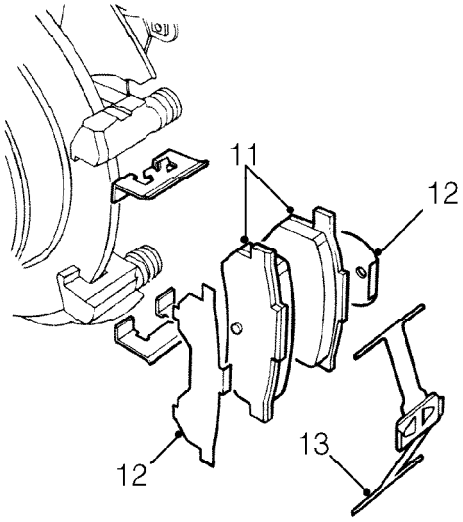

70M0614

11. Remove 2 brake pads.
12. Noting their fitted positions, remove 2 shims from pads. Remove 2 pad abutment shims from carrier.
13. Remove spring from caliper.

Refit

1. Clean carrier, shims, retainers and spring.

WARNING: Do not use an air line to blow dust from brake assembly. Do not use petroleum based fluids as damage will occur to rubber components.

2. Fit retainers to carrier.
3. Apply Molykote M77 to both sides of shims.
4. Fit shims to pads and fit pads to carrier, ensuring lug on inner pad locates with cruciform slot in piston.

NOTE: Fit pad with wear indicator on the inside.

5. Fit spring to caliper housing and fit housing.
6. Ensure flats **'A'** on guide pins locate with lugs on caliper housing. Fit bolts and tighten to 27 Nm .
7. Clean banjo bolt and fit new sealing washers.
8. Position hose to caliper and tighten banjo bolt to 34 Nm.
9. Fit handbrake cable to abutment and fit clip.
10. Clean handbrake cable clevis pin and smear with grease.
11. Align handbrake cable yoke to lever, fit clevis pin and NEW clevis pin clip.
12. Remove clamp from brake hose.
13. Bleed brakes. ***See Adjustments.***
14. Adjust handbrake cable. ***See Adjustments.***
15. Fit road wheel(s) and tighten nuts to correct torque. ***See INFORMATION, Torque wrench settings.***
16. Remove stand(s) and lower vehicle.

REAR WHEEL BRAKE CYLINDER

Service repair no - 70.60.19

Remove

1. Raise rear of vehicle.

WARNING: Support on safety stands.

2. Remove road wheel(s).
3. Release handbrake.
4. Remove rear brake shoes. ***See this section.***

CAUTION: Ensure edges of brake shoes do not damage wheel cylinder dust covers.

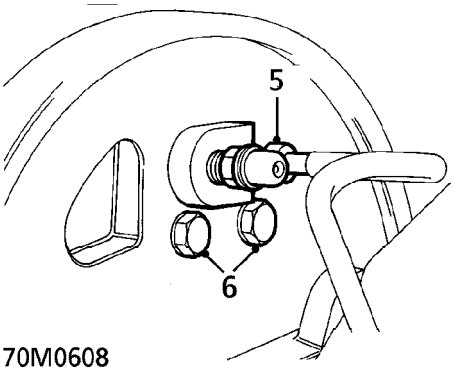

5. Disconnect pipe union from wheel cylinder.

CAUTION: Plug the connections.

6. Remove 2 bolts securing wheel cylinder to backplate.

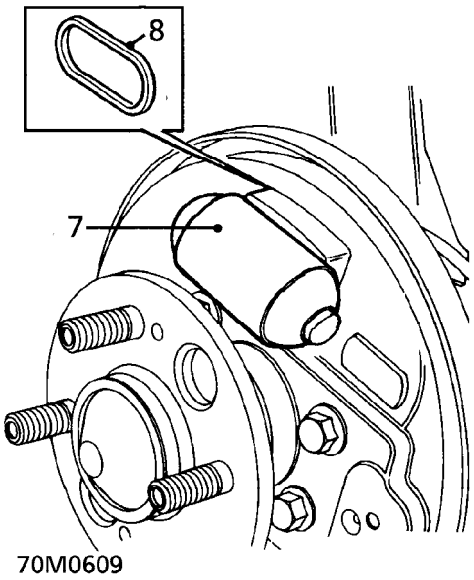

7. Remove wheel cylinder.
8. Remove and discard sealing ring.
9. Clean backplate and drum with brake cleaning fluid.

WARNING: Do not use an air line to blow dust from brake assembly. Do not use petroleum based fluid as damage will occur to rubber components.

10. Use a wire brush to remove any corrosion.
11. Examine wheel cylinder dust seals for signs of brake fluid leakage, a certain amount of dampness is usual. However, if free fluid is apparent, lift dust seal and check for excessive leakage.
    Renew wheel cylinder if brake linings have become contaminated.
12. Check wheel cylinder pistons for freedom of movement.

Refit

1. Fit NEW sealing ring to wheel cylinder.
2. Fit wheel cylinder to backplate, tighten bolts to 8 Nm.
3. Connect brake pipe to wheel cylinder, tighten union to 19 Nm.
4. Smear shoe contact points with Molykote 111 grease, ensure grease does not contact linings or dust covers.
5. Fit rear brake shoes. ***See this section.***
6. Bleed brakes. ***See Adjustments.***
7. Fit road wheel(s) and tighten nuts to correct torque. ***See INFORMATION, Torque wrench settings.***
8. Remove stand(s) and lower vehicle.
9. Check handbrake operation and adjust if necessary. ***See Adjustments.***

FRONT BRAKE DISC

Service repair no - 70.10.10

Remove

CAUTION: Brake discs must be renewed in pairs, unless one disc requires changing before 1000 miles (1500 km) from new.

1. Raise front of vehicle.

WARNING: Support on safety stands.

2. Remove road wheel(s).

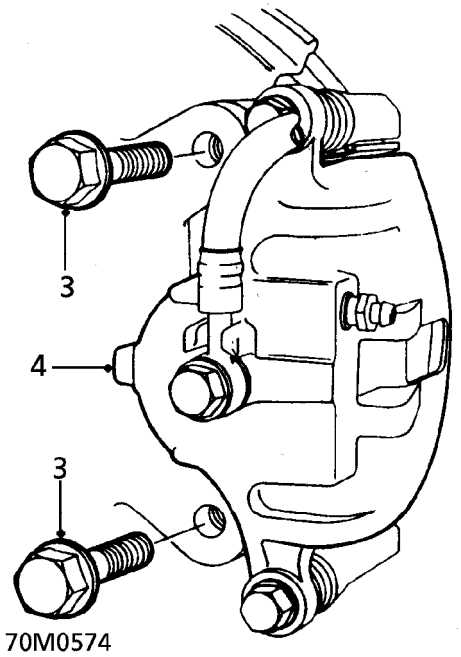

3. Remove 2 bolts securing brake caliper to swivel hub.
4. Release caliper and tie aside clear of brake disc.

CAUTION: Do not allow caliper to hang on brake hose.

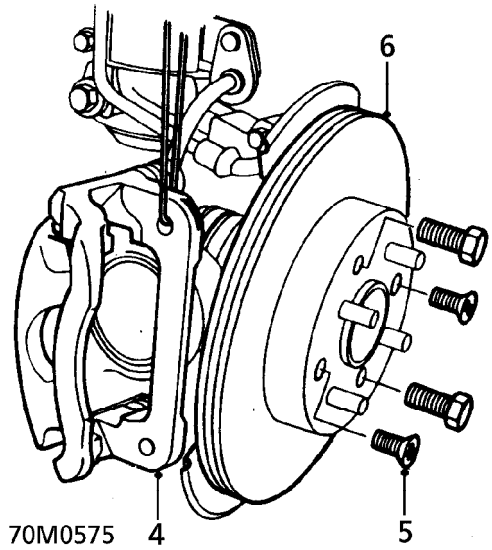

5. Remove 2 screws securing disc to drive flange.
6. Remove brake disc from drive flange using jacking screws if necessary.

Refit

CAUTION: Excessive disc run-out can exist after fitting a new disc, with no immediate symptoms being evident whilst driving. The most likely cause of run-out is the presence of contaminants (e.g. rust or paint) or damage to the mating faces of disc and flange, and disc and wheel. Excessive run-out will cause progressive uneven wear of the disc, leading to disc thickness variation, which is the cause of judder. Always ensure that the disc run-out check given here is strictly adhered to.

1. Inspect mating surfaces of new disc and drive flange and clean throughly using a wire brush.
2. Fit brake disc to drive flange.
3. Fit and tighten screws to 5 Nm.
4. Fit caliper and finger tighten top mounting bolt.

Disc run-out check

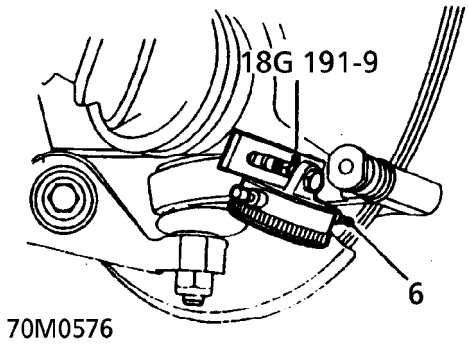

5. Mount a dial test indicator to caliper lower mounting using tool **18G 191-9** and tighten bolt. Tighten top mounting bolt.
6. Position dial test indicator probe 5 mm from disc outer edge.
7. Rotate disc at least one turn and measure disc run-out.

DATA:
Disc run-out limit with wheel on = 0.040 mm.

Run-out exceeds limit

8. Mark wheel to stud relationship. remove wheel, again check mating surfaces for contaminants, then refit wheel 90° from previous position and recheck run-out.
9. If run-out is still excessive, move wheel through a further 90° and recheck run-out.
10. If run-out is still excessive, fit a new road wheel.

Run-out within limit

11. Remove dial test indicator and tool **18G 191-9**
12. Fit caliper lower mounting bolt and tighten both bolts to 108 Nm
13. Remove stand(s) and lower vehicle.

REAR BRAKE DISC

Service repair no - 70.10.33

Remove

1. Raise rear of vehicle.

WARNING: Support on safety stands.

2. Remove road wheel(s).

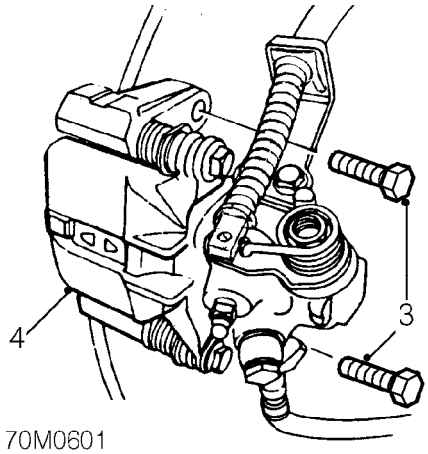

3. Remove 2 bolts securing caliper to stub axle.
4. Release caliper and tie aside.

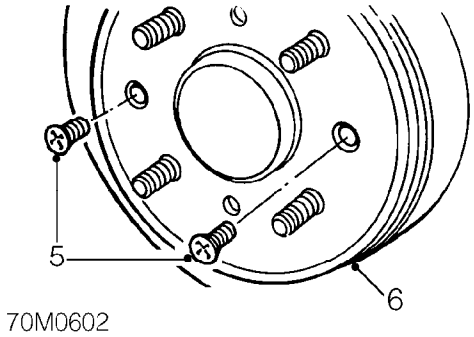

5. Remove 2 screws securing brake disc to hub.
6. Remove disc from hub, use jacking screws if necessary.

Refit

1. Clean hub and disc mating surfaces.
2. Fit disc to hub. Fit and tighten screws to 10 Nm.
3. Clean caliper and stub axle mating faces.
4. Fit caliper to stub axle ensuring brake pads are correctly located each side of disc. Fit bolts and tighten to 108 Nm.
5. Fit road wheel(s) and tighten nuts to correct torque. ***See INFORMATION, Torque wrench settings.***
6. Remove stand(s) and lower vehicle.

REAR BRAKE DRUM

Service repair no - 70.10.03

Remove

1. Raise rear of vehicle.

WARNING: Support on safety stands.

2. Remove road wheel(s).
3. Release handbrake.

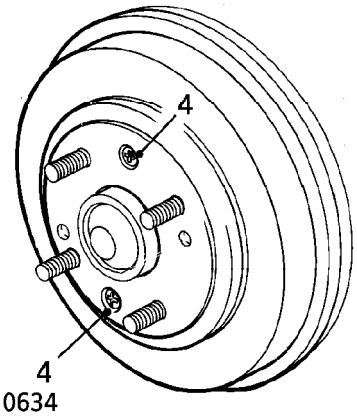

70M0634

4. Remove 2 screws securing brake drum.
5. Screw 2 screws into drum, tightening equally to ease drum from hub.

CAUTION: If drum is held, release the shoes to increase clearance as follows:

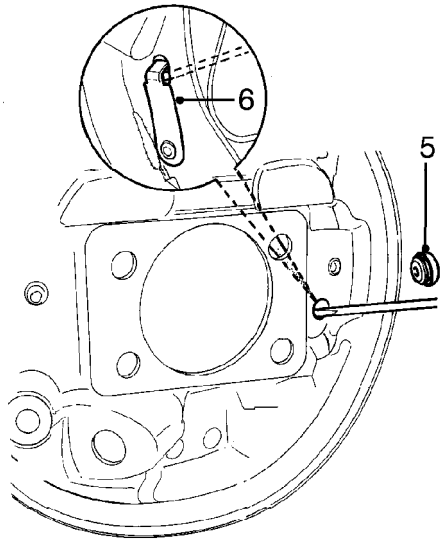

70M0635

6. Remove rubber grommet from rear of backplate.
7. Using a flat screwdriver, disengage handbrake lever stop to increase shoe to drum clearance. If drum is still held, loosen handbrake cable adjuster.

Inspect

1. Clean backplate and brake drum with brake cleaning fluid.

WARNING: Do not use an air line to blow dust from brake assembly.
Do not use petroleum based fluid as damage will occur to rubber components.

2. Renew brake drum if scored, grooved or cracked.

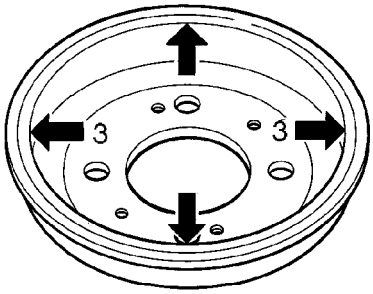

70M0514

3. Measure inside diameter of drum at 2 points.
   Drum internal diameter:
   New = 203.20 - 203.33 mm
   Service limit = 204 mm
   Drum ovality limit = 0.012 mm
   Renew drum if outside limits.
4. Examine wheel cylinder dust seals for signs of brake fluid leakage, a certain amount of dampness is usual. However, if free fluid is apparent, lift dust seal and check for excessive leakage.
   Renew wheel cylinder if brake linings have become contaminated.
5. Check wheel cylinder pistons for freedom of movement.

Refit

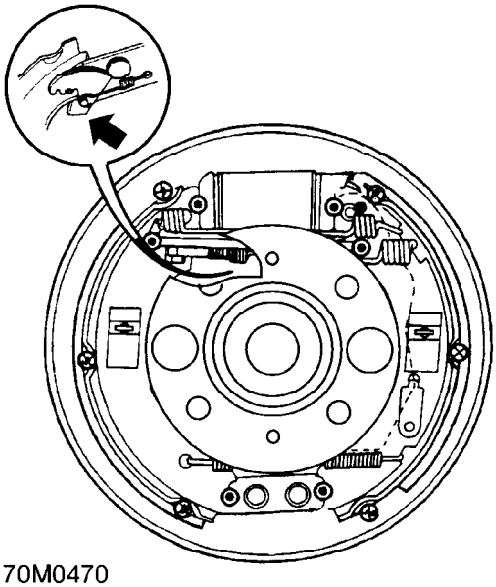

70M0470

1. Check adjuster cam and if necessary set to minimum adjustment position as follows: Lever leading shoe away from wheel cylinder. Move adjuster cam back fully and ease shoe back into position.
2. Apply Molykote 111 grease to brake shoe and spring contact points.
3. Fit brake drum, tighten screws to 7 Nm.

NOTE: Clean inside of NEW brake drum with brake cleaning fluid.

4. Fit road wheel(s) and tighten nuts to correct torque. ***See INFORMATION, Torque wrench settings.***
5. Remove stand(s) and lower vehicle.
6. Check handbrake operation, adjust if necessary. ***See Adjustments.***

ABS HYDRAULIC MODULATOR - 98MY ON

Service repair no - 70.25.12

Remove

1. Disconnect battery earth lead.
2. Connect bleed tube to bleed screw, front RH caliper. Open bleed screw and pump brake fluid from master cylinder. Tighten bleed screw.
3. Connect bleed tube to bleed screw, front LH caliper. Repeat above operation.

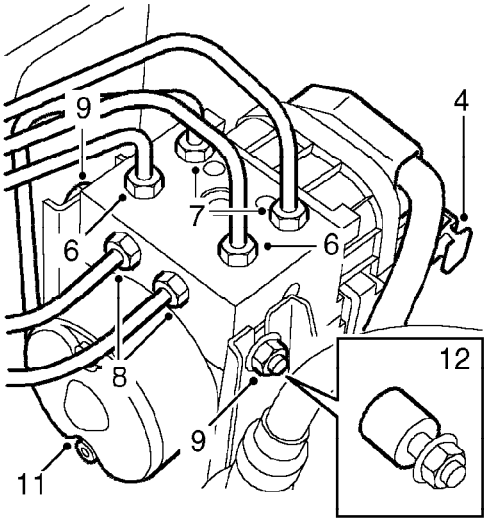

70M0784

4. Pull clip outwards and disconnect multiplug from modulator ECU.
5. Position cloth under modulator to absorb fluid spillage.

CAUTION: Do not allow brake fluid to contact paint finished surfaces as paint may be damaged. If spilled, remove fluid and clean area with clean warm water.

6. Disconnect 2 inlet brake pipe unions from top of modulator.

CAUTION: Plug the connections.

7. Disconnect 2 front outlet brake pipe unions from top of modulator.

CAUTION: Plug the connections.

8. Disconnect 2 rear outlet brake pipe unions from front of modulator.

CAUTION: Plug the connections.

9. Loosen 2 nuts securing modulator to mounting bracket.
10. Release modulator lower bush from mounting bracket spigot.
11. Extract ABS modulator from mounting bracket.

    Do not carry out further dismantling if component is removed for access only.
12. Remove mounting rubber assembly from each side of modulator and mounting rubber from underneath.
13. Fit parts to new modulator.

Refit

1. Engage spigot and fit modulator to mounting bracket and tighten mounting nuts to 21 Nm.
2. Connect brake pipe unions to modulator, ensuring pipes are connected to their correct ports:
   MC 1 = Master cylinder primary
   MC 2 = Master cylinder secondary
   RF = Right hand front
   LF = Left hand front
   RR = Right hand rear
   LR = Left hand rear
3. Tighten unions to 14 Nm.
4. Connect multiplug to modulator and press clip in fully to secure.
5. Bleed brakes. ***See Adjustments.***
6. Connect battery earth lead.
7. To ensure correct operation, the system MUST be tested using TestBook.

ABS SENSOR - REAR - MODELS WITH DRUM BRAKES

Service repair no - 70.65.31

Remove

1. Raise rear of vehicle.

WARNING: Support on safety stands.

2. Remove road wheel(s).
3. Remove rear brake drum. ***See this section.***

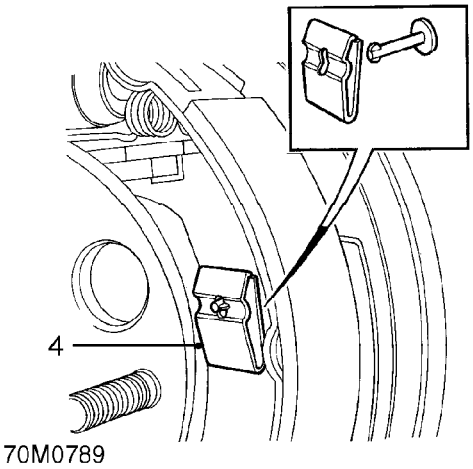

4. Remove 2 clips and 2 pins retaining brake shoes.

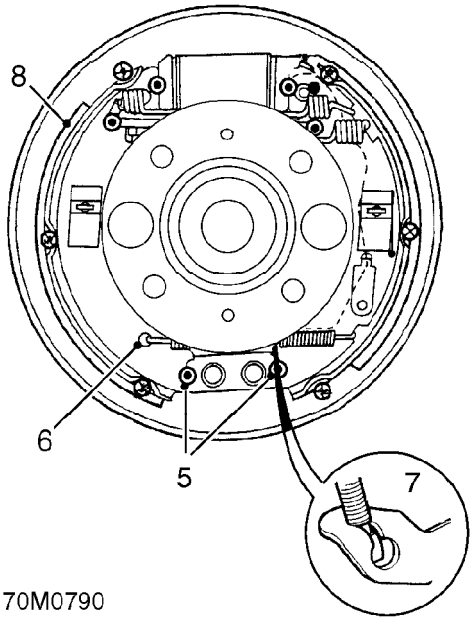

5. Ease one brake shoe out of retaining groove in abutment followed by other shoe.
6. Detach return spring from leading shoe end and remove spring.

NOTE: The forward shoe is the LEADING shoe, the TRAILING shoe has the handbrake lever attached to it.

7. Release hand brake cable from brake shoe lever.
8. Manoeuvre shoe assembly around wheel cylinder and remove.

CAUTION: Ensure edges of brake shoes do not damage wheel cylinder dust covers.

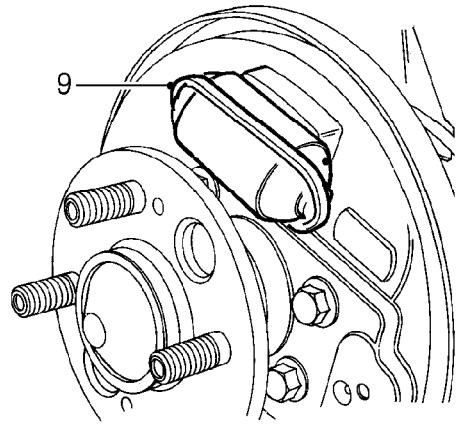

9. Fit an elastic band around wheel cylinder to retain pistons.

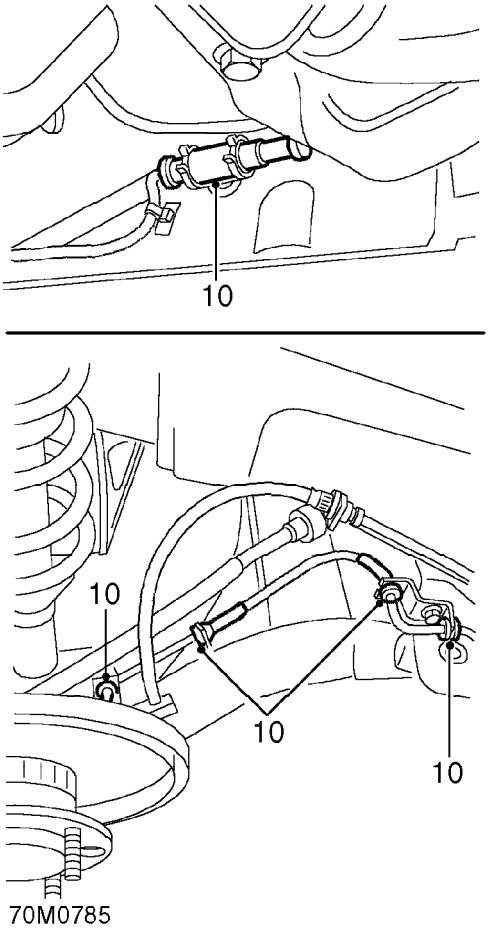

10. Release ABS sensor multiplug from from clip. Disconnect multiplug and release harness from 'H' frame.

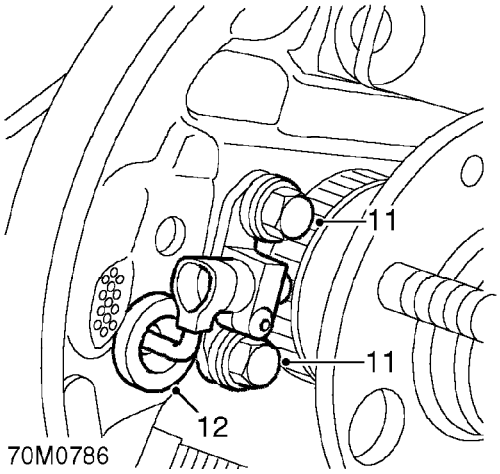

11. Remove 2 bolts securing sensor adaptor.
12. Release sensor harness grommet from backplate and withdraw sensor harness.
13. Remove sensor and adapter assembly.

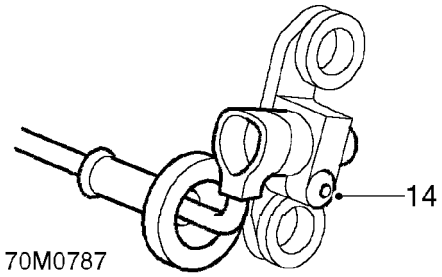

14. Loosen adapter clamp screw and remove sensor from adapter.

Refit

1. Fit sensor to adapter, DO NOT tighten clamp screw at this stage.
2. Position sensor, feed harness through backplate and secure grommet.
3. Align sensor, fit bolts and tighten to 45 Nm.

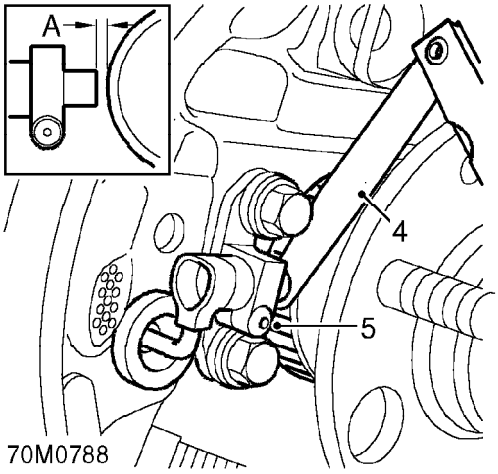

4. Using a feeler gauge, set clearance **'A'** between sensor and reluctor ring. Clearance **'A'**= 0.5 mm.
5. Tighten adapter clamp screw to 0.5 Nm.
6. Connect multiplug, secure multiplug to clip and harness to 'H' frame.
7. Manoeuvre shoe assembly into position between hub and wheel cylinder and connect hand brake cable to brake shoe lever.
8. Fit lower return spring to trailing shoe and connect spring to leading shoe.
9. Remove elastic band from wheel cylinder.
10. Engage leading shoe to wheel cylinder followed by trailing shoe and align.

NOTE: During this operation the adjuster may become extended, this is not important but it must be reset prior to fitting brake drum.

11. Fit trailing shoe into abutment bracket followed by leading shoe.

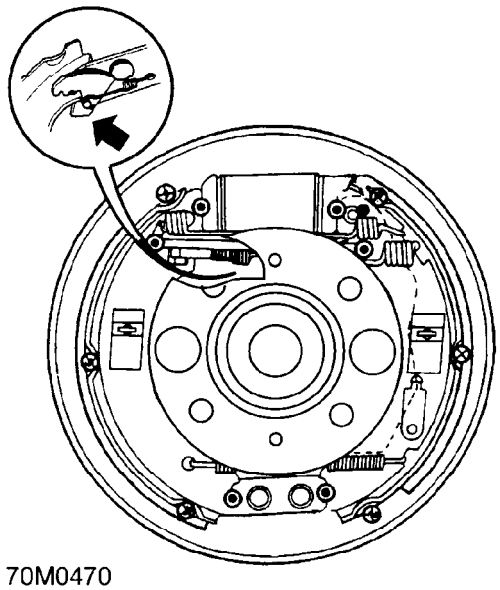

70M0470

12. Check adjuster cam and if necessary set to minimum adjustment position as follows: lever leading shoe away from wheel cylinder. move adjuster cam back fully and ease shoe back into position.
13. Fit brake shoe retaining pins through backplate and secure with spring clips.
14. Fit brake drum. ***See this section.***
15. Check handbrake operation, adjust if necessary.
16. Fit road wheel(s) and tighten nuts to correct torque. ***See INFORMATION, Torque wrench settings.***
17. Remove stand(s) and lower vehicle.
18. To ensure correct operation, the system MUST be checked using TestBook.

CONTENTS

Page

DESCRIPTION AND OPERATION
COMPONENT LOCATION 1
DESCRIPTION 2
OPERATION 3

PRECAUTIONS
PRECAUTIONS 1
WARNING LABELS 4
AIRBAG AND PRE-TENSIONER, MANUAL DEPLOYMENT 6
COMPONENT REPLACEMENT POLICY 11

REPAIRS
DRIVER AIRBAG 1
PASSENGER AIRBAG 2
AIRBAG CONTROL AND DIAGNOSTIC UNIT 3
AIRBAG HARNESS 4
PASSENGER AIRBAG HARNESS 8
SEAT BELT PRE-TENSIONER 9
FRONT SEAT BELT AND PRE-TENSIONER - 3 DOOR 10
FRONT SEAT BELT AND PRE-TENSIONER - 5 DOOR 12

COMPONENT LOCATION

NOTE: LHD type is symmetrical to RHD type.

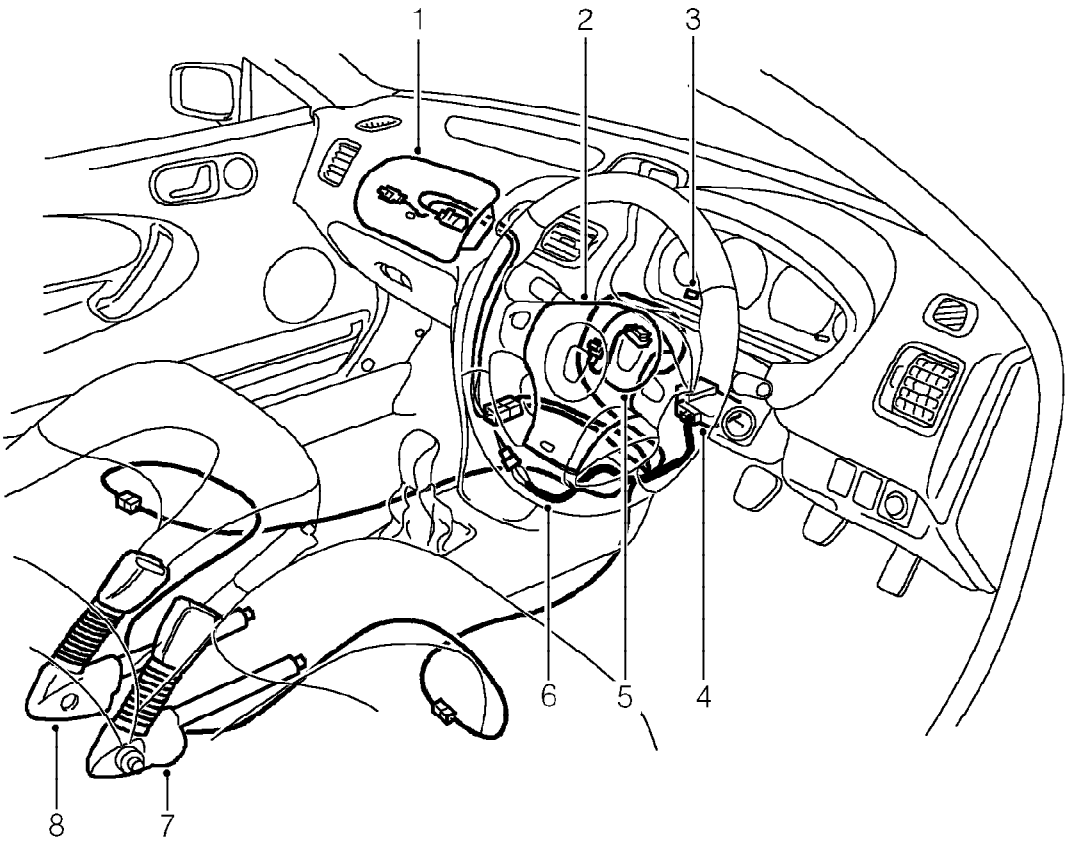

76M2030

1. Passenger's airbag module *
2. Driver's airbag module *
3. SRS warning lamp
4. Diagnostic control unit *
5. Rotary coupler *
6. SRS harness (YELLOW) *

* Components to be renewed following system deployment.

NOTE: Following deployment of the Supplementary Restraint System (SRS) within the vehicle, under any circumstances, all system components including the yellow harnesses MUST be replaced.

DESCRIPTION

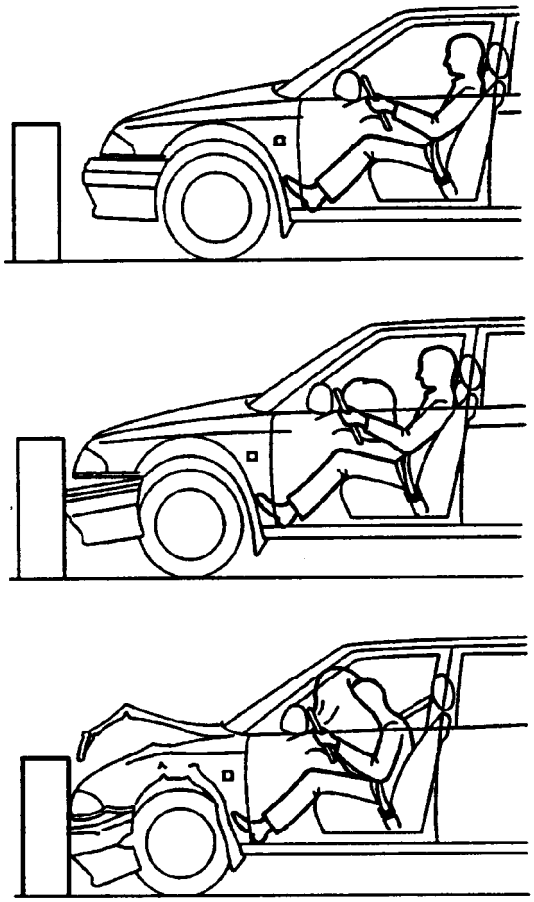

The airbag Supplementary Restraint System (SRS) is a safety device which, when deployed in the event of a severe frontal impact, provides additional protection to the driver's face and upper torso. The airbag is designed to inflate when the vehicle is exceeding a set speed and receives a frontal impact within the area shaded.

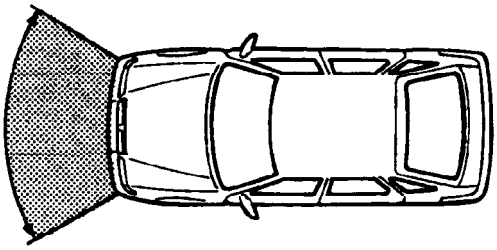

76M1310

The pretensioner consists of the seat belt buckle and stalk, a piston and a pyrotechnic device. The pretensioners, fitted to both driver and passenger seat belt mechanisms are designed to remove any play in the the lap and diagonal belts in the event of a severe frontal impact.

OPERATION

CAUTION: The diagnostic control unit is a non-serviceable component and no attempt should be made to repair or modify the unit.

The diagnostic control unit (DCU) which is mounted within the passenger compartment performs two functions:

1. It continually monitors the airbag system for faults;
2. It provides a fire signal to the airbag(s) and pretensioners in the event of a crash.

The SRS warning lamp illuminates to inform the driver of any airbag system faults.

The diagnostic control unit comprises of the following circuits which control the airbag system:

1. The crash sensor determines the severity of any impact and can discriminate between rough road conditions and an actual crash.
2. The safing sensor is wired in series with the crash sensor. The fire signal from the crash sensor therefore, passes through the safing sensor which confirms a crash is taking place.
3. The regulator circuit maintains stability of the system in the event of battery voltage drop.
4. The back-up power supply provides power to the system in the event of the battery being damaged or disconnected during the impact.

When triggered, the fire signal from the diagnostic control unit passes via the airbag harness to the airbag modules. Grains of Nitrocellulose and Nitroglycerine inside the airbag module, ignite and combine in a chemical reaction to form a large amount of Nitrogen gas leading to inflation of the airbag in approximately 30 milli-seconds. A similar gas explosion forces pistons along the length of the pretensioner modules which pull the seat buckles downwards, removing any slack in the belt mechanism.

As the occupant moves forward into the airbag it immediately deflates to provide progressive deceleration and reduce the risk of injuries.

Sequence of operation:

1. The main sensor and the safing sensor are activated.
2. Power is supplied to the airbag igniter(s) and pretensioners by the battery or the back-up circuit.
3. Airbag and pretensioners deploy.

It takes about 0.1 seconds from the beginning of the airbag deployment until it is completely deflated.

System check

The SRS warning lamp, located in the instrument pack, illuminates when the electrical circuits are switched on whilst the system performs a self diagnosis test. If the system finds no fault during self diagnosis the light will extinguish after approximately 5 seconds and remain extinguished.

In the event of a fault in the system, the warning light will either:

1. Illuminate continuously;
2. Illuminate for 0.5 second, extinguish, then illuminate continuously;
3. Fail to illuminate during the self diagnosis test.

Fault diagnosis

Diagnosis is accomplished using TestBook connected to the diagnostic socket which is located on a bracket on the right hand side behind the centre console.

PRECAUTIONS

Making the system safe

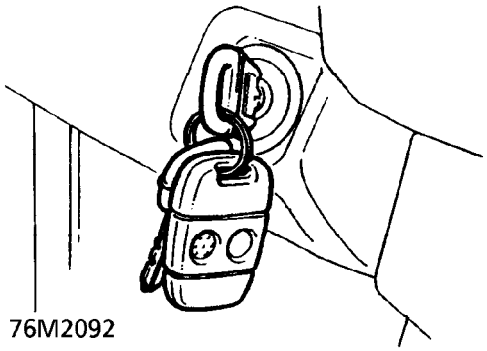

- Always remove the key from the starter switch and wait 10 minutes to allow the SRS back-up circuit to fully discharge before disconnecting the battery.

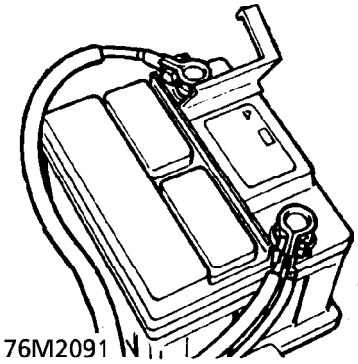

- Always disconnect both the battery leads, earth lead first before beginning work.

Care Points

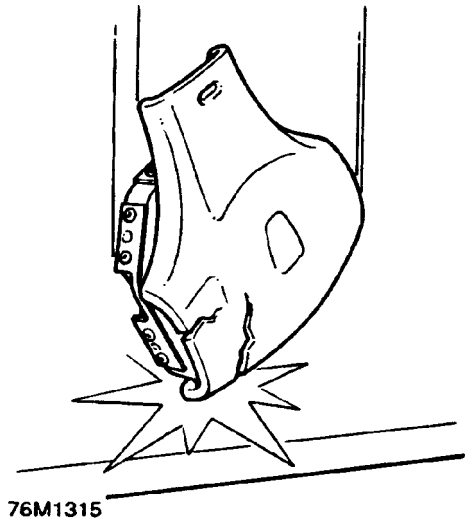

NEVER:

- Drop any component.

NOTE: The airbag diagnostic control unit is a shock sensitive device and must be handled with extreme care.

- Wrap arms around an airbag module.
- Attach anything to the airbag cover.
- Attempt to repair any component.
- Apply electrical power to a component except as part of an approved test procedure.
- Transport airbag modules in the passenger compartment of a car. Use the luggage compartment.
- Install any SRS component that shows signs of being dropped or improperly handled, such as dents, cracks or deformation.
- Install used SRS parts from another car. When repairing an SRS, use only genuine new parts.

ALWAYS:

- Carefully inspect any SRS part before installation.
- Use a digital circuit tester to check the system.

WARNING: Using an analogue circuit tester may cause an accidental deployment and possible injury.

- Check SRS harness is correctly routed.
- Check SRS connectors are installed correctly after completion of work.

Airbag Handling and Storage

- Do not try to disassemble the airbag assembly. It has no serviceable parts. Once an airbag has been deployed, it cannot be repaired or reused.
- Be careful that the airbag assembly receives no strong shocks; it could deploy.
- Special bolts are necessary for installing the airbag assembly. Do not use other bolts.

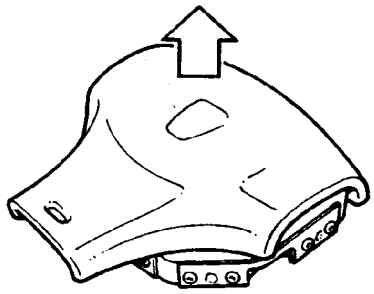

76M1316

For temporary storage of the airbag assembly during service, observe the following precautions:

- Always keep components dry.
- Always carry the airbag module with the pad surface face up.
- Store the removed airbag assembly with the pad surface face up.
- Do not allow anything to rest on the airbag module.
- Place the airbag module in a designated storage area.
- If no designated storage area is available, then the boot of the vehicle should be used. Always lock the boot when a module is stored in it and inform the workshop supervisor.

WARNING: If the airbag is improperly stored face down, accidental deployment could propel the unit with enough force to cause serious injury.

- Store the removed airbag assembly on a secure flat surface away from any electrical equipment or high heat source (exceeding 85°C/185°F) and free of any oil, grease, detergent or water.

CAUTION: Improper handling or storage can internally damage the airbag assembly, making it inoperative. If you suspect the airbag assembly has been damaged, install a new unit and refer to the Deployment/Disposal Procedures for disposing of the damaged airbag.

Overnight storage

Airbag modules are classed as explosive articles and as such must be stored in an approved secure steel cabinet which has been registered by the local authority.

Wiring and connectors

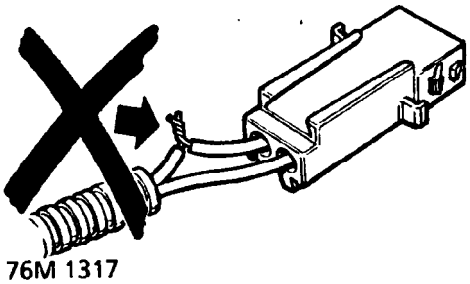

76M 1317

- Never attempt to modify, splice or repair SRS wiring. Never install electronic equipment such as; a mobile telephone, two way radio or in-car entertainment system in such a way that it interferes electrically with the airbag harness.

NOTE: SRS wiring can be identified by special yellow outer protective covering.

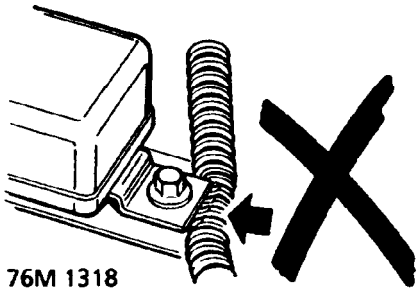

76M 1318

- Always ensure SRS harnesses are routed correctly. Be careful to avoid trapping or pinching the SRS harness. Look out for possible points of chafing.
- Always use specified earth fixings tightened to the correct torque. Poor earthing can cause intermittent problems that are difficult to diagnose.

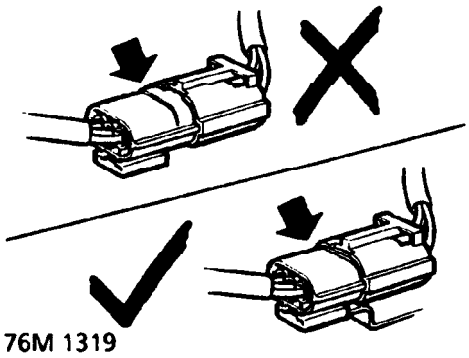

76M 1319

- Ensure all airbag harness connectors are mated correctly and securely fastened. Do not leave the connectors hanging loose.

WARNING LABELS

76M1670

A combination of symbols/icons is displayed (either in a suitable, prominent position or is attached to the component itself) to indicate:

(a) The need for caution when working in close proximity to SRS components.

(b) The publication where suitable reference and advice can be found (usually Workshop Manual or Owner's Handbook).

NOTE: It is imperative that before any work is undertaken on the SRS system, the appropriate publication is read thoroughly.

The following list indicates current locations for warning labels. Exact positions may vary dependent on legislation and market trends.

1. Bonnet locking platform

   Refer to the Owner's Handbook for information on the airbag system.

2. Driver and passenger door glass

   Refer to the Owner's Handbook for information on the airbag system.

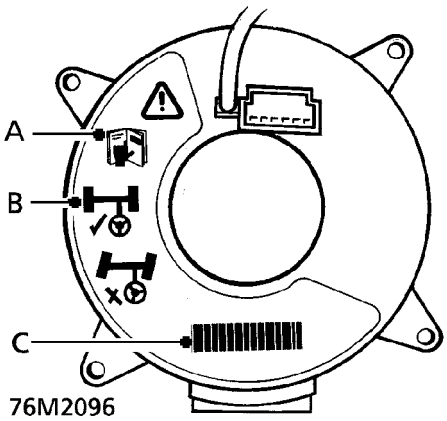

76M2096

3. Rotary coupler

   A - Refer to the Workshop Manual for detailed instructions.
   B - Ensure wheels are in the straight ahead position before removal and refitting.
   C - ROVER Part Number/Bar code - The code must be recorded and quoted for ordering purposes.

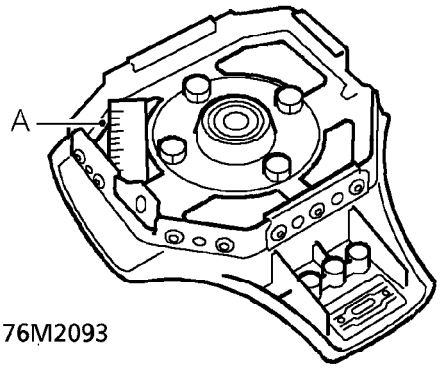

4. Airbag module - driver

A - ROVER Part Number/Bar code - If the airbag module is to be replaced, the code must be recorded and quoted for ordering purposes.

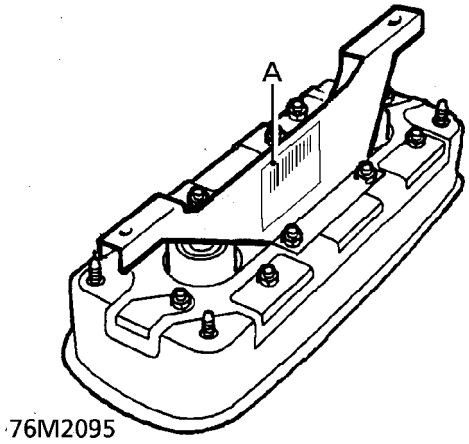

5. Airbag module - passenger

A - ROVER Part Number/Bar code - If the airbag module is to be replaced, the code must be recorded and quoted for ordering purposes.

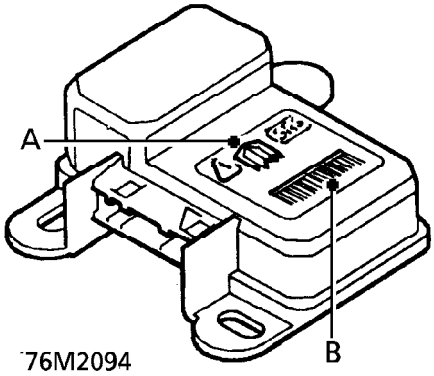

6. Diagnostic control unit.

A - Refer to the Workshop Manual for information on the airbag system.
B - ROVER Part Number/Bar Code - If the airbag diagnostic control unit is to be replaced, the code must be recorded and quoted for ordering purposes.

AIRBAG AND PRE-TENSIONER, MANUAL DEPLOYMENT

NOTE: Pre-tensioner deployment is done in car only.

If a vehicle is to be scrapped and contains an undeployed airbag module, or pre-tensioner, the components must be manually deployed. This operation should only be carried out using the following recommended manual deployment procedure.

Before deployment is started the deployment tool self test procedure should be carried out.

Deployment tool SMD 4082/1 self test procedure

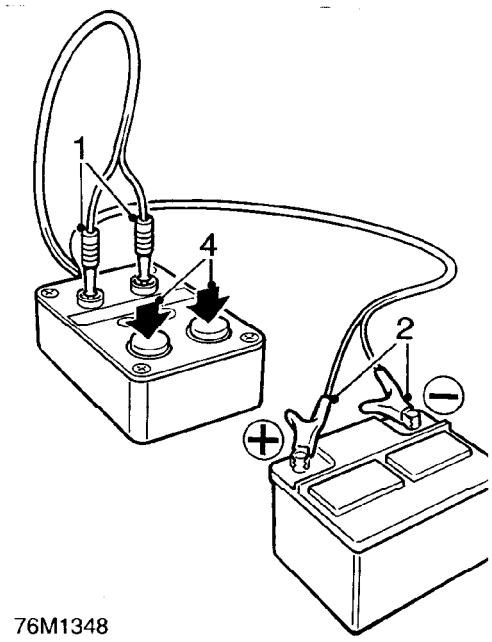

1. Insert blue and yellow connectors of tool lead into corresponding sockets on face of tool.
2. Connect crocodile clips of second tool lead to battery, red to positive and black to negative.
3. Red "READY" light should illuminate.
4. Press and hold both operating buttons.
5. Green "DEFECTIVE" light should illuminate.
6. Release both operating buttons.
7. Red "READY" light should illuminate.
8. Disconnect tool from battery.
9. Disconnect blue and yellow connectors from tool face sockets.
10. Self test now complete.

Deployment of pre-tensioner

These guidelines are written to aid authorised personnel to carry out the safe disposal of the pre-tensioner.

WARNING:

- **Only use the Rover approved deployment equipment.**
- **Deploy pre-tensioner in a designated area.**
- **Ensure pre-tensioner is not damaged or ruptured before deploying.**
- **Notify relevant authorities.**

1. Carry out deployment tool self test.
2. Slide seat fully forward to access pre-tensioner harness connector.
3. Disconnect pre-tensioner harness connector.

WARNING: Ensure deployment tool SMD 4082/1 is not connected to battery.

4. Connect flylead **SMD 4082/5** to pre-tensioner connector.
5. Connect flylead **SMD 4082/5** to tool **SMD 4082/1.**

WARNING: Ensure pre-tensioner is secured tightly to seat.

6. Connect tool **SMD 4082/1** to battery.

WARNING: Ensure all personnel are standing at least 15 metres away from vehicle.

7. Press both operating buttons to deploy pre-tensioner.
8. Using gloves, remove pre-tensioner from seat and place pre-tensioner in plastic bag, and seal bag.
9. Transport deployed pre-tensioner to designated area for incineration.

NOTE: DO NOT transport pre-tensioner in the vehicle passenger compartment.

Deployment of driver airbag module

These guidelines are written to aid authorised personnel to carry out the safe disposal of airbag modules when removed from the vehicle.

WARNING:

- **Only use the Rover approved deployment equipment.**
- **Deploy airbag modules in a well ventilated designated area.**
- **Ensure airbag module is not damaged or ruptured before deploying.**
- **Notify relevant authorities.**

1. Carry out deployment tool self test.
2. Remove airbag module from steering wheel. ***See Repairs.***

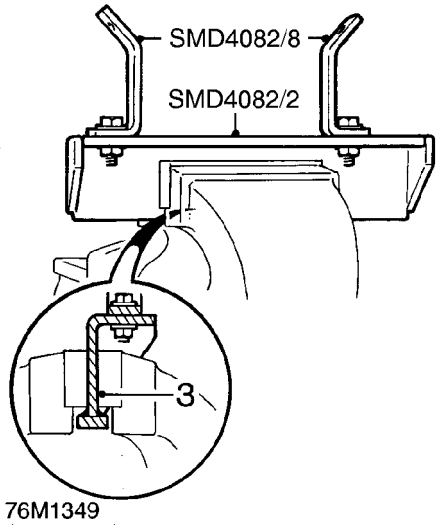

3. Position tool **SMD 4082/2** in vice, ensuring that vice jaws grip tool above bottom flange to prevent possibility of tool being forced upwards from vice. Tighten vice.

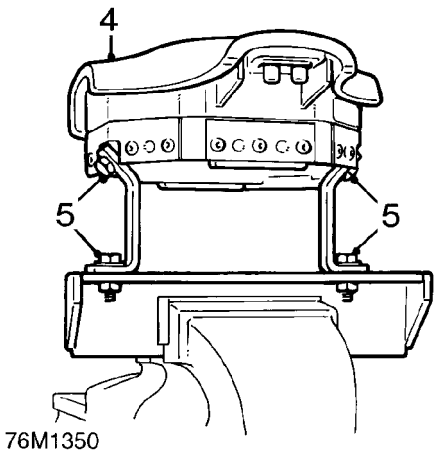

4. Secure airbag module to tool **SMD 4082/2.** Ensure module is correctly secured using both fixings.
5. Ensure airbag module mounting brackets are secure.

WARNING: Ensure deployment tool SMD 4082/1 is not connected to battery.

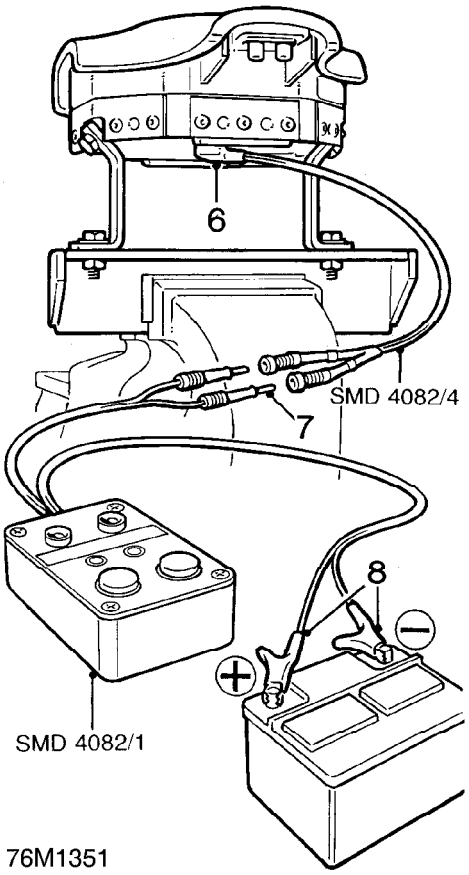

76M1351

6. Connect flylead **SMD 4082/4** to airbag module.
7. Connect flylead **SMD 4082/4** to tool **SMD 4082/1.**

WARNING: Do not lean over airbag module whilst connecting.

8. Connect tool **SMD 4082/1** to battery.

WARNING: Ensure all personnel are standing at least 15 metres away from module.

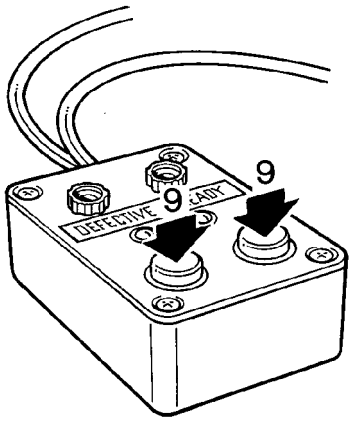

76M1352

9. Press both operating buttons to deploy airbag module.
10. **DO NOT** return to airbag module for 30 minutes.

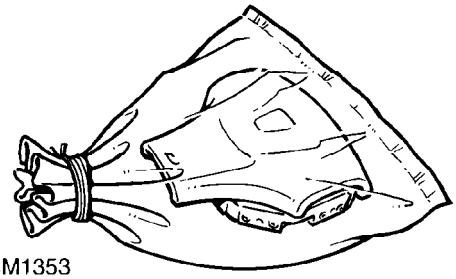

76M1353

11. Using gloves and face mask, remove airbag module from tool, place airbag module in plastic bag, and seal bag.
12. Wipe down tool with damp cloth.
13. Transport deployed airbag module to designated area for incineration.

NOTE: DO NOT transport airbag module in the vehicle passenger compartment.

14. Scrap all remaining parts of airbag system. **DO NOT** re-use or salvage any parts of the airbag system.

Deployment of passenger airbag module

These guidelines are written to aid authorised personnel to carry out the safe disposal of airbag modules when removed from the vehicle.

WARNING:

- **Only use the Rover approved deployment equipment.**
- **Deploy airbag modules in a well ventilated designated area.**
- **Ensure airbag module is not damaged or ruptured before deploying.**
- **Notify relevant authorities.**

1. Carry out deployment tool self test.
2. Remove passenger airbag module. ***See Repairs.***

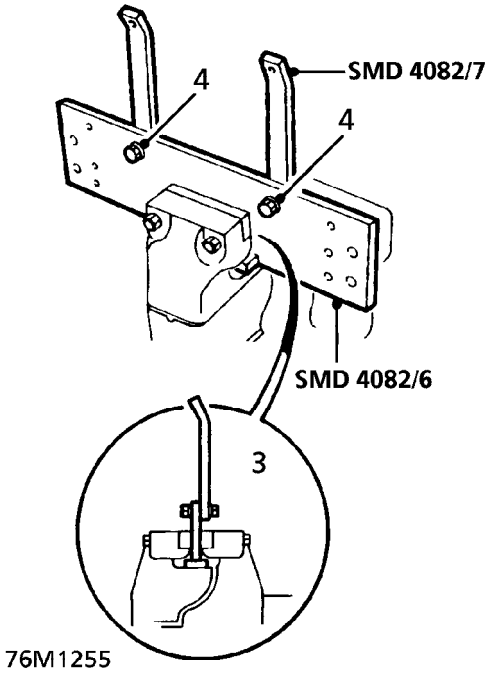

3. Position tool **SMD 4082/6** in vice, ensuring that vice jaws grip tool above bottom flange to prevent possibility of tool being forced upwards from vice. Tighten vice.
4. Position brackets **SMD 4082/7** to tool, lightly tighten bolts.

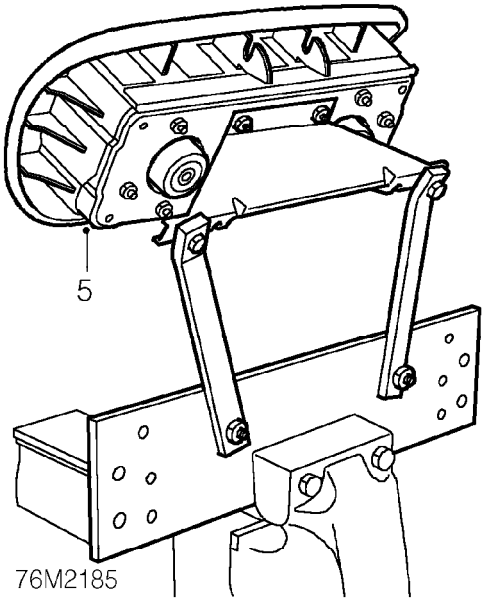

5. Position airbag module to tool **SMD 4082/6**. Ensure module is correctly secured using all fixings.
6. Ensure airbag module mounting brackets are secure.

WARNING: Ensure tool SMD 4082/1 is not connected to battery.

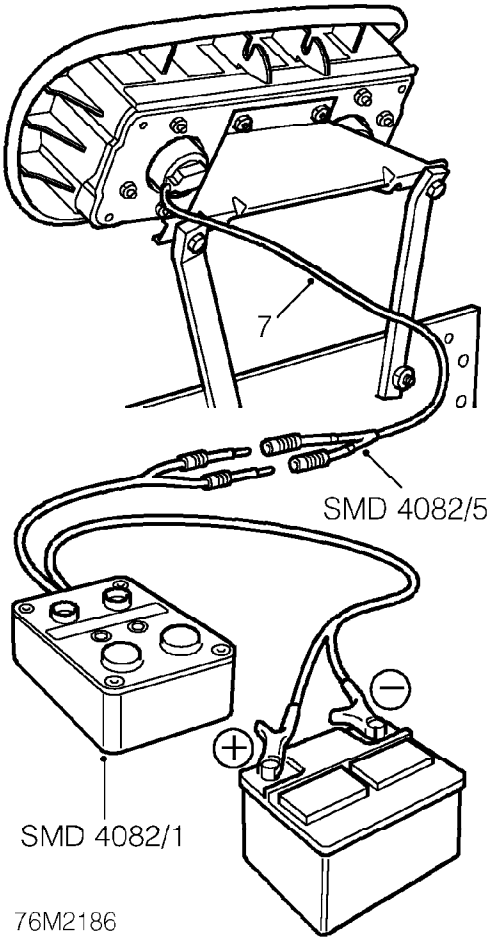

7. Connect flylead **SMD 4082/5** to airbag module.
8. Connect flylead **SMD 4082/5** to tool **SMD 4082/1.**

WARNING: Do not lean over airbag module whilst connecting.

9. Connect tool **SMD 4082/1** to battery.

WARNING: Ensure all personnel are standing at least 15 metres away from module.

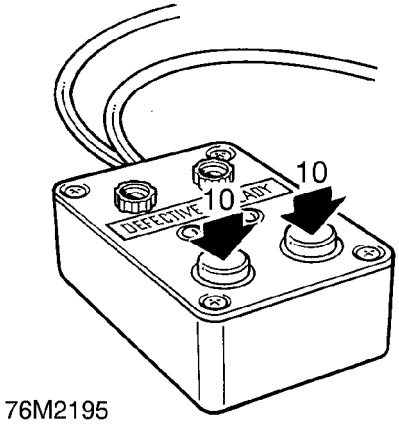

10. Press both operating buttons to deploy airbag module.
11. **DO NOT** return to airbag module for 30 minutes.

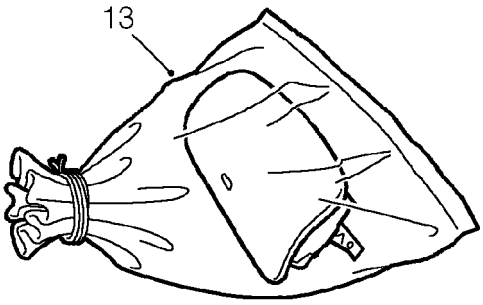

12. Using gloves and face mask, remove airbag module from tool, place airbag module in plastic bag and seal bag.
13. Wipe down tool with damp cloth.
14. Transport deployed airbag module to designated area for incineration.

NOTE: DO NOT transport airbag module in the vehicle passenger compartment.

15. Scrap all remaining parts of airbag system. **DO NOT** re-use or salvage any parts of the airbag system.

COMPONENT REPLACEMENT POLICY

IMPACTS WHICH DO NOT DEPLOY AIRBAGS

CAUTION: Check for structural damage in the area of the impact, paying particular attention to bumper armatures, longitudinals, crash cans and bracketry.

IMPACTS WHICH DEPLOY AIRBAGS

CAUTION: Renew the following components:

- Airbag control and diagnostic unit.
- Airbag module(s).
- Airbag harness.
- Pretensioners.

NOTE: Rotary coupler and link harness are not subject to the firing current, so do not need replacing.

DRIVER AIRBAG

Service repair no - 76.73.71

CAUTION:
- **Replace the airbag every 10 years.**
- **Do not install used SRS parts from another car. When repairing an SRS system, always use genuine new Rover parts.**
- **Carefully inspect the airbag assembly before installing it. Do not install an airbag assembly that shows signs of being dropped or improperly handled, such as dents, cracks, or deformation.**
- **Do not try to disassemble, or tamper with the airbag assembly.**
- **Special bolts are necessary for installing the airbag assembly. Do not use other bolts.**

Remove

1. Remove key from starter switch and wait 10 minutes to allow SRS back-up power circuit to discharge before commencing work.
2. Disconnect both battery leads, earth lead first.

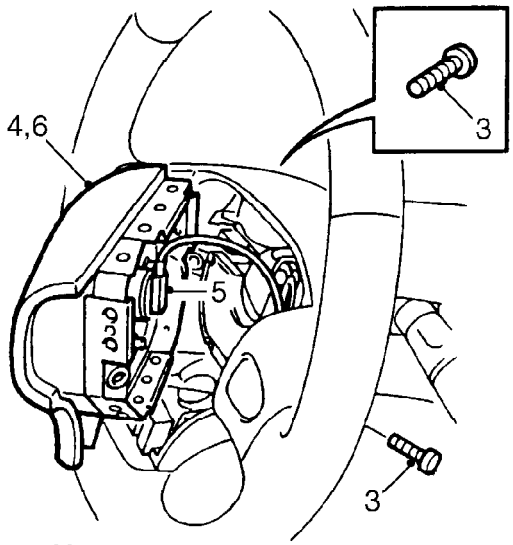

76M1663

3. Remove 2 Torx bolts securing the air bag module to steering wheel.
4. Release air bag module from steering wheel.

CAUTION: Do not allow the air bag module to hang by the air bag harness.

5. Disconnect harness connector from air bag module.
6. Remove air bag module.

CAUTION: Store the air bag module in accordance with the storage procedures outlined in the precautions part of this section.

NOTE: If airbag is to be replaced, bar code of new airbag must be recorded.

Refit

1. Position air bag module and make connection with harness upwards as shown in illustration.
2. Fit air bag to steering wheel and hand start the 2 Torx screws. Tighten screws to 9 Nm.
3. Connect battery leads, earth lead last.
4. Carry out system check by turning the ignition on and checking that the SRS warning light illuminates then extinguishes after 3 seconds.

PASSENGER AIRBAG

Service repair no - 76.73.69

CAUTION:

- **Replace the airbag every 10 years.**
- **Do not install used SRS parts from another car. When repairing an SRS system, always use genuine new Rover parts.**
- **Carefully inspect the airbag assembly before installing it. Do not install an airbag assembly that shows signs of being dropped or improperly handled, such as dents, cracks, or deformation.**
- **Do not try to disassemble, or tamper with the airbag assembly.**
- **Special bolts are necessary for installing the airbag assembly. Do not use other bolts.**

Remove

1. Remove key from starter switch and wait 10 minutes to allow SRS back-up power circuit to discharge before commencing work.
2. Disconnect both battery leads, earth lead first.
3. Remove glove box. ***See BODY, Interior trim components.***

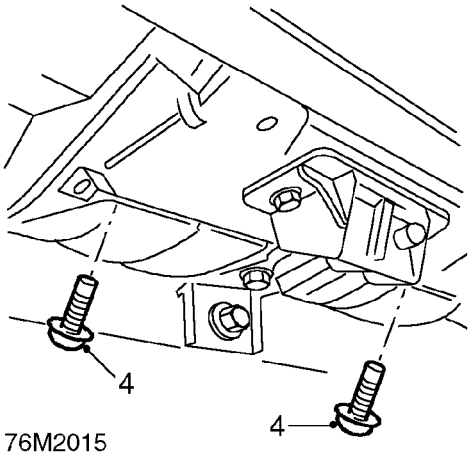

76M2015

4. Remove 2 Torx screws securing airbag to support panel.

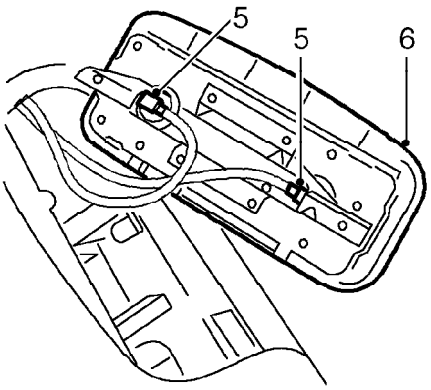

76M2016

5. Release airbag from fascia and disconnect 2 harness multiplugs.

CAUTION: Do not allow the airbag module to hang by the airbag harness.

6. Remove airbag.

CAUTION: Store the airbag module in accordance with the storage procedures outlined in the precautions part of this section.

NOTE: If airbag is to be replaced, bar code of new airbag must be recorded.

Refit

1. Position airbag to fascia and connect harness multiplugs.
2. Fit airbag to fascia.
3. Fit Torx screws securing airbag to fascia and tighten to 9 Nm.
4. Fit glovebox. ***See BODY, Interior trim components.***
5. Connect battery leads, earth lead last.
6. Carry out systems check by turning the ignition on and checking that the SRS warning light illuminates then extinguishes after 3 seconds.

AIRBAG CONTROL AND DIAGNOSTIC UNIT

Service repair no - 76.73.72

Remove

CAUTION: See safety precautions before commencement of repair.

1. Remove key from starter switch and wait 10 minutes to allow SRS back-up power circuit to discharge before commencing work.
2. Disconnect both battery leads, earth lead first.

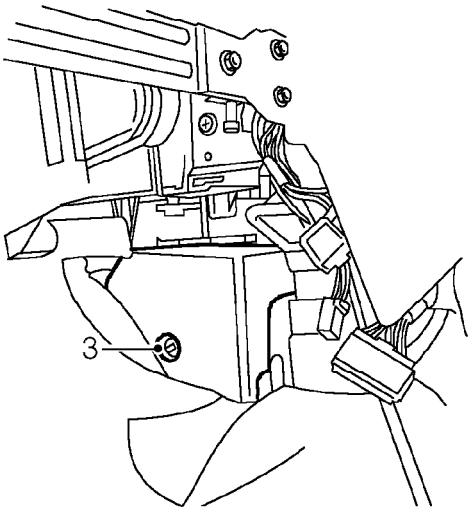

76M1977

3. Remove 2 scrivets securing control and diagnostic unit cover.

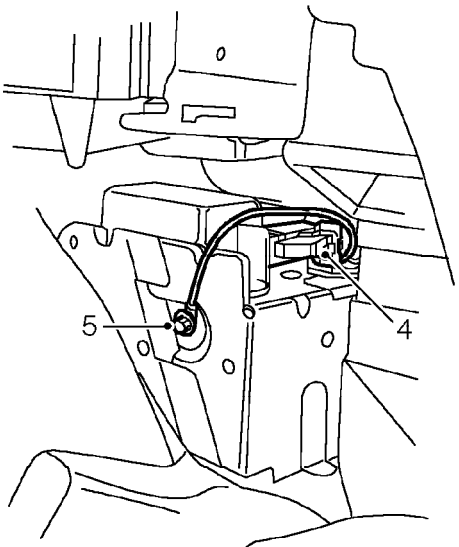

76M1978

4. Disconnect multiplug from unit.
5. Remove bolt securing earth lead to body.

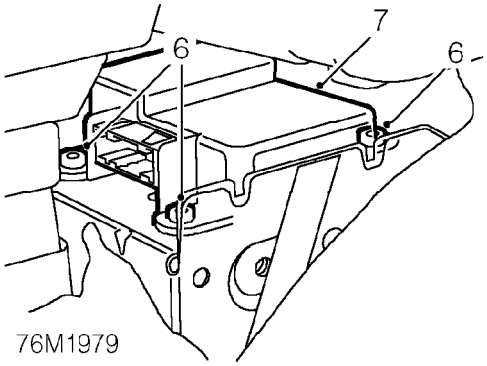

76M1979

6. Remove and discard 3 TX30 screws securing unit to body.
7. Remove control and diagnostic unit.

Refit

CAUTION: Ensure unit and bracket faces are clean and free from burrs. An incorrectly mounted unit could cause the system to malfunction.

1. Position unit, fit NEW Torx screws and tighten to 9 Nm.
2. Connect multiplug.
3. Fit bolt securing earth lead to body.
4. Fit unit cover and secure with scrivets.
5. Connect both battery leads, earth lead last.
6. Carry out system check by turning the ignition on and checking that the SRS warning light illuminates then extinguishes after 3 seconds.

AIRBAG HARNESS

Service repair no - 76.73.73

Remove

CAUTION:

- **Do not install used SRS parts from another car. When repairing an SRS, use only genuine new Rover parts.**
- **Never attempt to modify, splice, or repair SRS wiring.**

NOTE: SRS wiring can be identified by its yellow or black with yellow stripe outer protective covering.

1. Remove key from ignition switch and wait 10 minutes to allow SRS back-up power circuit to discharge before commencing work.
2. Disconnect both battery leads, earth lead first.
3. Remove passenger airbag harness. ***See this section.***
4. Remove drivers airbag. ***See this section.***

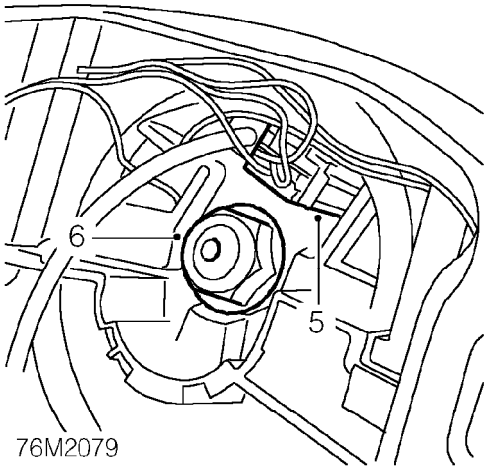

5. Disconnect horn multiplug from rotary coupler.
6. Remove nut securing steering wheel to column and remove wheel.

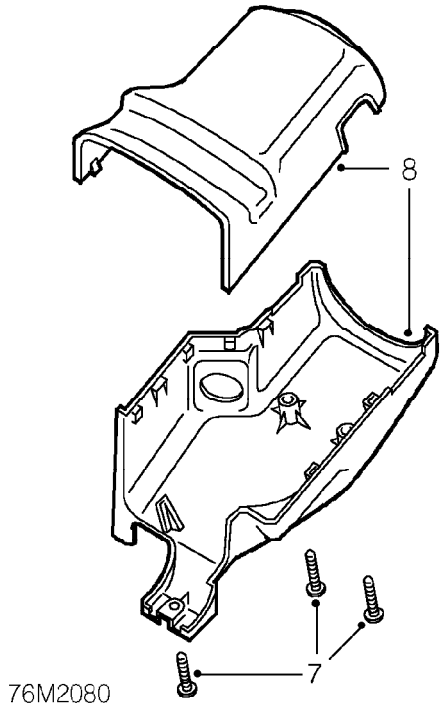

7. Remove 3 screws securing nacelle to steering column.
8. Remove nacelle.

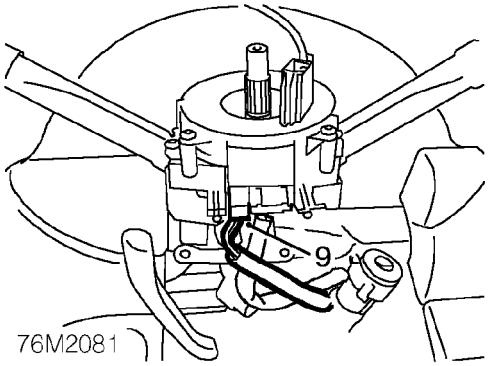

9. Disconnect airbag harness multiplug from rotary coupler.
10. Remove front console. ***See BODY, Interior trim components.***

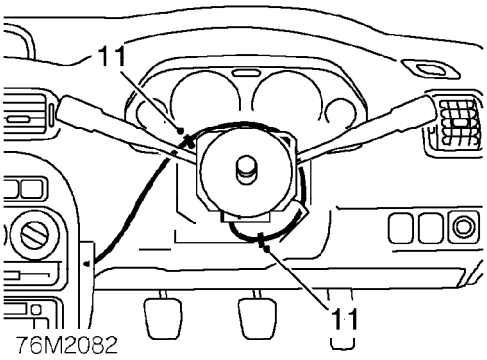

11. Release 2 clips securing drivers airbag harness to fascia.
12. Release drivers airbag harness from fascia.

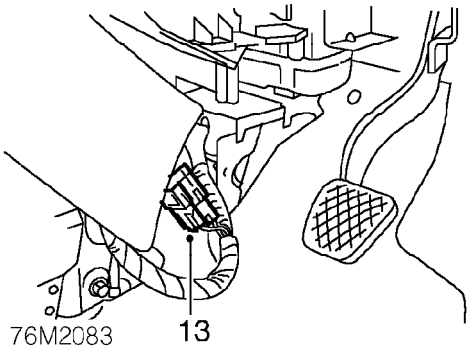

13. Disconnect yellow main harness to SRS harness multiplug.

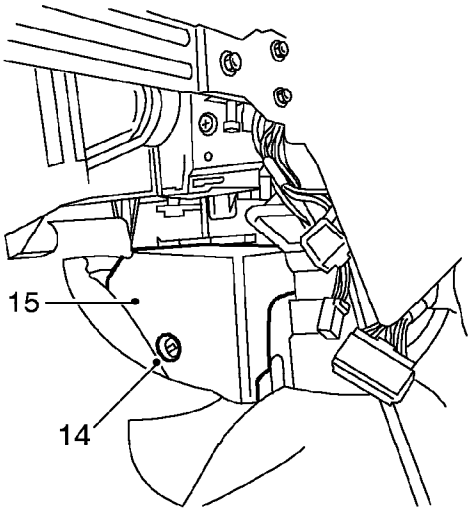

76M2084

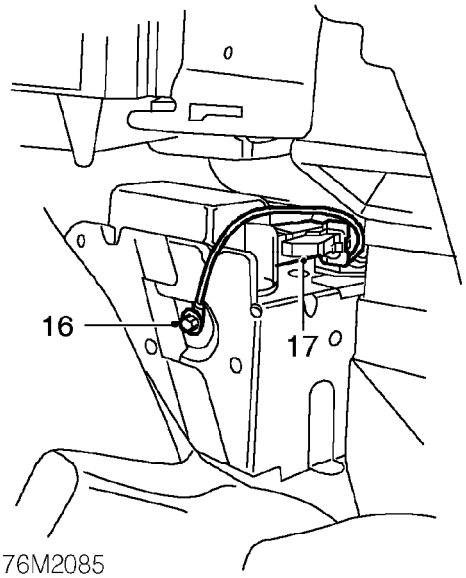

76M2085

14. Remove 2 scrivets securing SRS control unit cover.
15. Remove cover from SRS control unit.

16. Remove bolt securing earth lead to body.
17. Disconnect multiplug from SRS control unit.
18. Remove both front seats. ***See BODY, Seats and seat belts.***

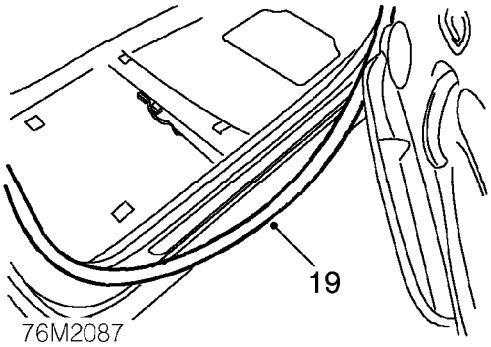

76M2087

19. Release seals from bottom of both front door apertures.
20. Move floor carpets aside to gain access to seat belt pre-tensioner harnesses.

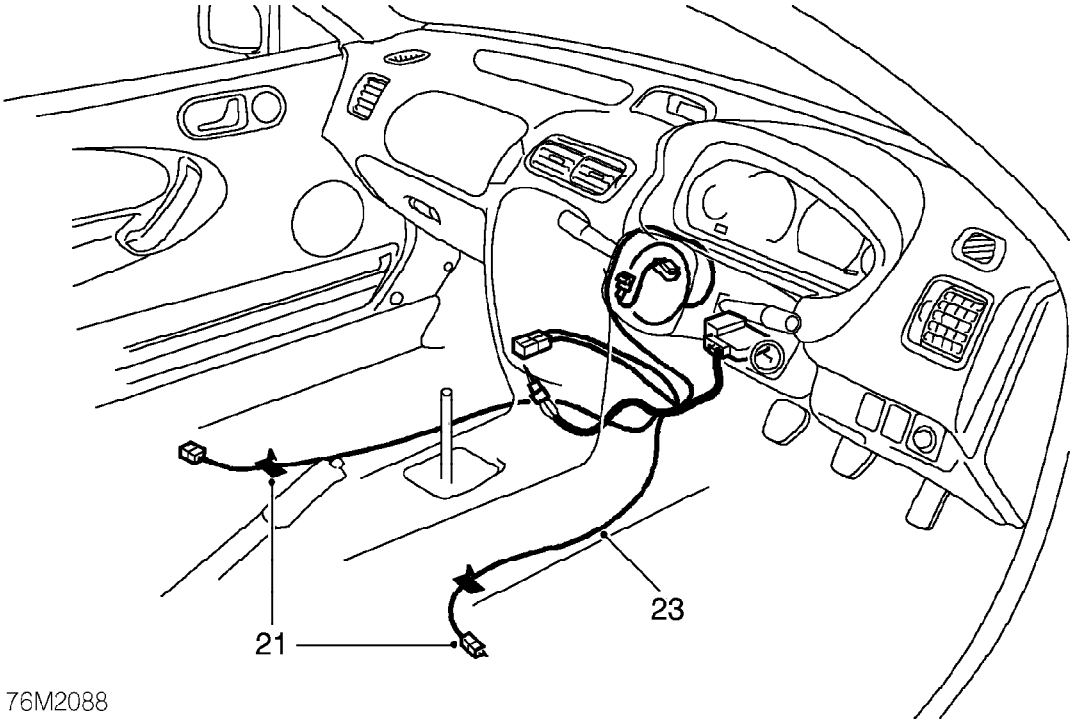

21. Release clips securing pre-tensioner harnesses to body.
22. Withdraw pre-tensioner harnesses towards fascia.
23. Remove airbag harness.

Refit

1. Position airbag harness in vehicle.

CAUTION: Always ensure SRS harness is routed correctly. Avoid trapping or pinching the SRS harness. Look out for possible points of chafing.

2. Route pre-tensioner harnesses under floor carpets towards front seats.
3. Secure pre-tensioner harnesses to body with clips.
4. Reposition floor carpets.
5. Fit seals to front door apertures.
6. Fit front seats. ***See BODY, Seats and seat belts.***
7. Connect multiplug to SRS control unit.

CAUTION: Ensure all SRS harness connectors are mated correctly and securely fastened. Do not leave the connectors hanging loose.

8. Fit bolt securing earth lead to body and tighten to 9 Nm.
9. Fit cover to control unit and secure with scrivets.
10. Connect yellow main harness to SRS harness multiplug.
11. Route drivers airbag harness towards steering column and secure to fascia with clips.
12. Fit front console. ***See BODY, Interior trim components.***
13. Connect SRS harness to rotary coupler.
14. Fit nacelle to steering column and secure with screws.
15. Fit steering wheel to column and tighten new nut to 50
16. Connect horn multiplug to rotary coupler.
17. Fit drivers airbag. ***See this section.***
18. Fit passenger airbag harness. ***See this section.***
19. Connect battery leads, earth lead last.
20. Carry out system check by turning the ignition on and checking that the SRS warning light illuminates then extinguishes after 3 seconds.

PASSENGER AIRBAG HARNESS

Service repair no - 76.73.67

Remove

CAUTION:

- Do not install used SRS parts from another car. When repairing an SRS, use only genuine new Rover parts.
- Never attempt to modify, splice, or repair SRS wiring.

NOTE: SRS wiring can be identified by its yellow or black with yellow stripe outer protective covering.

1. Remove key from starter switch and wait 10 minutes for SRS back-up power circuit to discharge before commencing work.
2. Disconnect both battery leads, earth lead first.
3. Remove passenger airbag. ***See this section.***
4. Remove front console. ***See BODY, Interior trim components.***

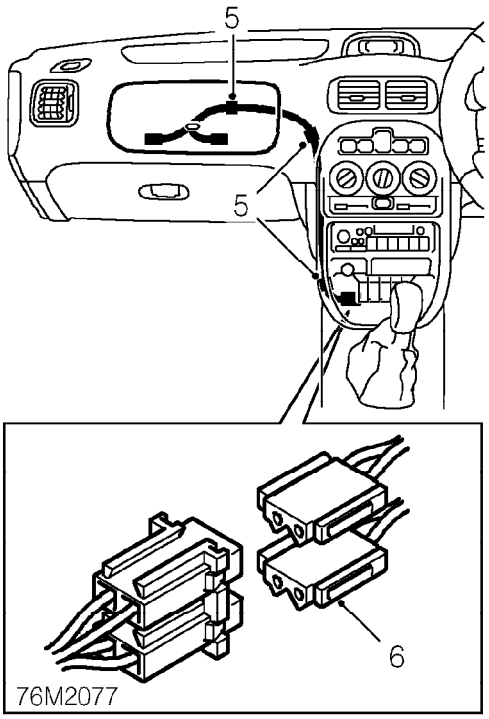

5. Release 3 clips securing passenger airbag harness to fascia.
6. Disconnect 2 harness multiplugs.
7. Remove passenger airbag harness.

Refit

1. Position airbag harness to fascia and secure with clips.

CAUTION: Always ensure the SRS harness is routed correctly. Avoid trapping or pinching the SRS harness. Look out for possible points of chafing.

2. Connect harness multiplugs.

CAUTION: Ensure all SRS connectors are mated correctly and securely fastened. Do not leave the connectors hanging loose.

3. Fit front console. ***See BODY, Interior trim components.***
4. Fit passenger airbag. ***See this section.***
5. Connect both battery leads, earth lead last.
6. Carry out system check by turning the ignition on and checking that the SRS warning light illuminates then extinguishes after 3 seconds.

SEAT BELT PRE-TENSIONER

Service repair no - 76.73.75

Remove

CAUTION: See safety precautions in SRS section before starting work.

1. Disconnect battery earth lead.
2. Remove front seat. ***See BODY, Seats and seat belts.***

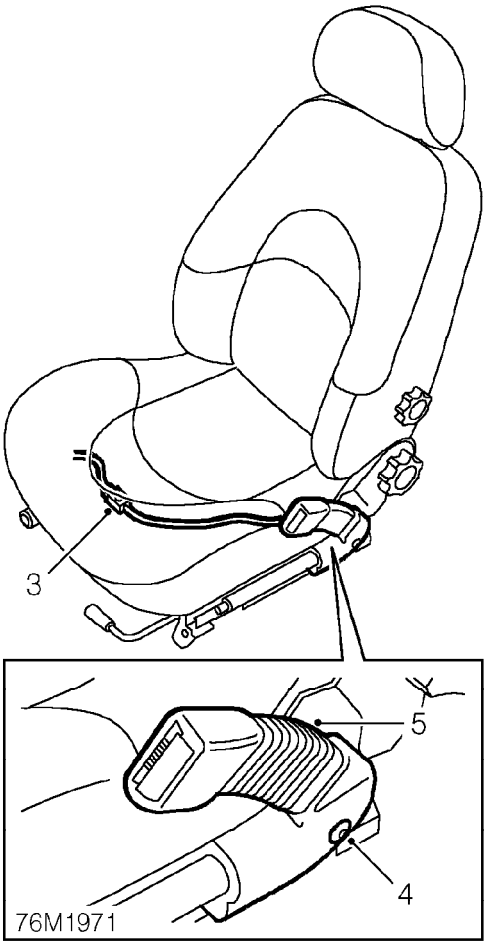

3. Release pre-tensioner harness from clip on underside of seat cushion.
4. Remove bolt securing pre-tensioner to seat.
5. Remove pre-tensioner from seat.

Refit

1. Fit pre-tensioner to seat.
2. Fit bolt securing pre-tensioner to seat and tighten to 30 Nm.
3. Secure pre-tensioner harness to clip.
4. Fit front seat. ***See BODY, Seats and seat belts.***
5. Connect battery earth lead.

FRONT SEAT BELT AND PRE-TENSIONER - 3 DOOR

Service repair no - 76.73.13

CAUTION: See safety precautions in SRS section before starting work.

Remove

1. Disconnect battery earth lead.
2. Remove rear quarter lower trim casing. ***See BODY, Interior trim components.***

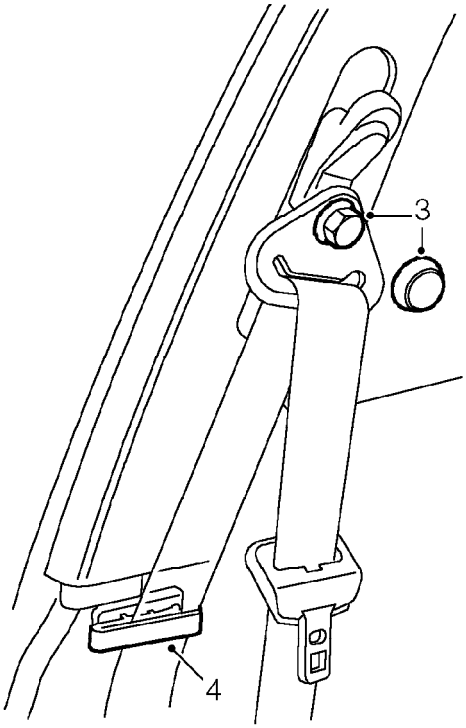

76M1989

3. Remove seat belt upper bolt cover and remove bolt.
4. Release seat belt guide from 'B' post.

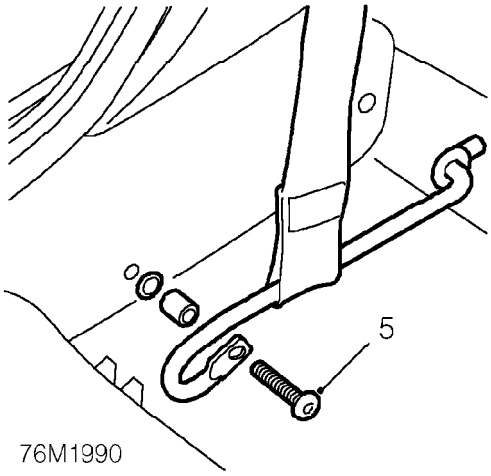

76M1990

5. Remove Torx bolt securing lower seat belt guide.
6. Remove belt from guide.

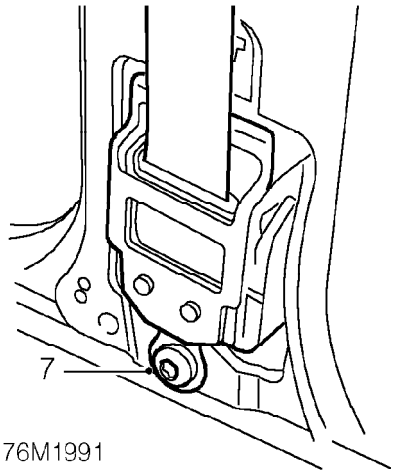

76M1991

7. Remove bolt securing seat belt reel to 'B' post and remove reel.
8. Remove front seat. ***See BODY, Seats and seat belts.***

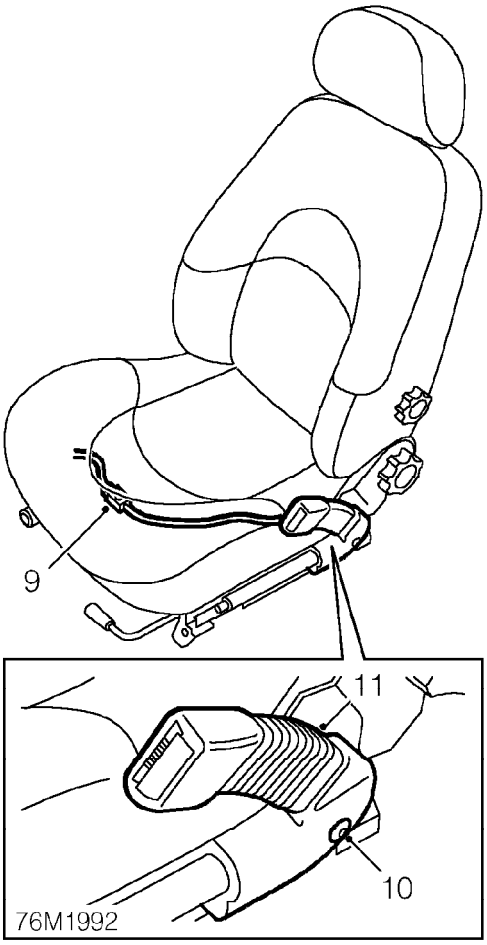

9. Release pre-tensioner harness from clip on seat cushion.
10. Remove Torx bolt securing pre-tensioner to seat.
11. Remove pre-tensioner.

Refit

1. Position pre-tensioner to seat and tighten Torx bolt to 30 Nm.
2. Secure pre-tensioner harness to clip on seat cushion.
3. Fit front seat. ***See BODY, Seats and seat belts.***
4. Position seat belt reel to 'B' post and tighten bolt to 50 Nm.
5. Fit seat belt to lower guide and tighten torx bolt to 50 Nm.
6. Fit seat belt guide to 'B' post.
7. Fit seat belt upper bolt and tighten to 50 Nm.
8. Fit cover to bolt.
9. Fit rear quarter lower trim casing. ***See BODY, Interior trim components.***
10. Connect battery earth lead.

FRONT SEAT BELT AND PRE-TENSIONER - 5 DOOR

Service repair no - 76.73.13

CAUTION: See safety precautions in SRS section before starting work.

Remove

1. Disconnect battery earth lead.
2. Remove 'B' post lower trim casing. ***See BODY, Interior trim components.***

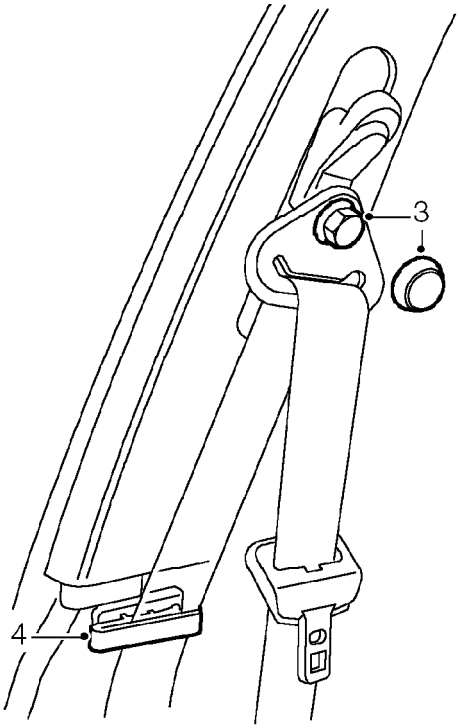

76M1993

3. Remove seat belt upper bolt cover and remove bolt.
4. Release seat belt guide from 'B' post.

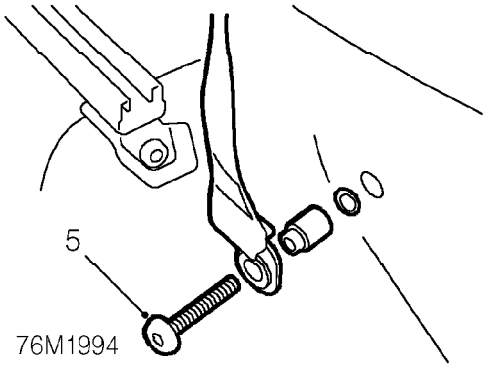

76M1994

5. Remove seat belt lower Torx bolt.

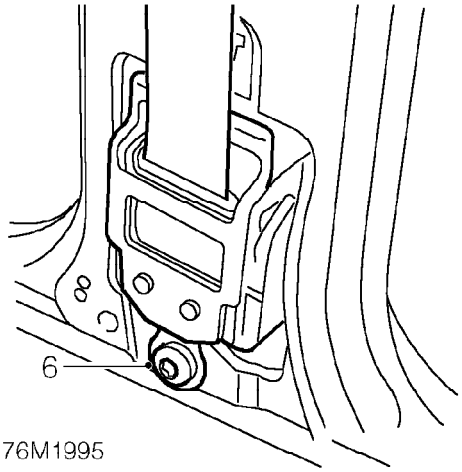

76M1995

6. Remove bolt securing seat belt reel to 'B' post and remove reel.
7. Remove front seat. ***See BODY, Seats and seat belts.***

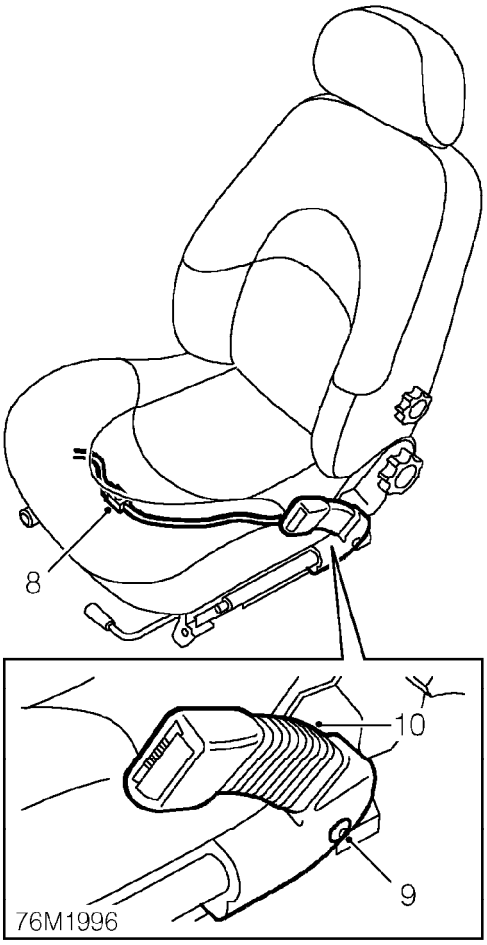

8. Release pre-tensioner harness from clip on seat cushion.
9. Remove Torx bolt securing pre-tensioner to seat.
10. Remove pre-tensioner.

Refit

1. Position pre-tensioner to seat and tighten bolt to 30 Nm.
2. Secure pre-tensioner harness to clip on seat cushion.
3. Fit front seat. ***See BODY, Seats and seat belts.***
4. Position seat belt reel to 'B' post and tighten bolt to 50 Nm.
5. Fit seat belt lower Torx bolt and tighten to 50 Nm.
6. Fit seat belt guide to 'B' post.
7. Fit seat belt upper bolt and tighten to 50 Nm.
8. Fit cover to bolt.
9. Fit 'B' post lower trim casing. ***See BODY, Interior trim components.***
10. Connect battery earth lead.

CONTENTS

Page

DOORS

ELECTRIC WINDOW LIFT COMPONENTS 1
REAR WINDOW LIFT COMPONENTS 2
ELECTRIC WINDOW OPERATION 3
FRONT DOOR CENTRAL LOCKING COMPONENTS 4
REAR DOOR CENTRAL LOCKING COMPONENTS 5
ELECTRIC DOOR LOCK OPERATION 6
DOOR STRIKER - ADJUST 7
TAILGATE STRIKER - ADJUST 7
TAILGATE ALIGNMENT 8
EXTERIOR MIRROR GLASS 9
EXTERIOR MIRROR - MANUAL 10
EXTERIOR MIRROR - ELECTRIC 11
FRONT DOOR TRIM CASING 12
REAR DOOR TRIM CASING 13
FRONT DOOR PLASTIC SHEET 14
REAR DOOR PLASTIC SHEET 15
FRONT DOOR GLASS 16
REAR DOOR GLASS 17
REAR QUARTER GLASS - 5 DOOR 18
FRONT DOOR GLASS REGULATOR 18
REAR DOOR GLASS REGULATOR 20
TAILGATE TRIM CASING 20
TAILGATE SIDE FINISHER 21
TAILGATE UPPER FINISHER 21
FRONT DOOR OUTSIDE HANDLE 22
REAR DOOR OUTSIDE HANDLE 23
FRONT DOOR INTERIOR HANDLE 24
REAR DOOR INTERIOR HANDLE 24
FRONT DOOR LATCH 25
REAR DOOR LATCH 25
TAILGATE LATCH 26
DRIVERS DOOR LOCK 27
TAILGATE LOCK 27
TAILGATE STRUT 28

EXTERIOR FITTINGS

BONNET ALIGNMENT 1
WHEEL ARCH LINER 1
UNDERTRAY - 'L' SERIES 2
SPLASH SHIELD - 'K16 WITH VVC' 2
ENGINE ACOUSTIC COVER 3
BONNET 3
BONNET LOCK 4
BONNET RELEASE CABLE 5
FRONT BUMPER 6
FRONT BUMPER ARMATURE 7
FRONT GRILLE 8
REAR BUMPER 8
TAILGATE SPOILER 9
TAILGATE APPLIQUE 10
FRONT DOOR RUBBING STRIP 11

CONTENTS

Page

REAR DOOR RUBBING STRIP 13
REAR QUARTER RUBBING STRIP 14
FRONT TREAD PLATE 14
REAR TREAD PLATE 15
REAR QUARTER GLASS - 3 DOOR 15

INTERIOR TRIM COMPONENTS
REAR CONSOLE 1
FRONT CONSOLE 2
FRONT CONSOLE TRIM PAD - BRM 4
FASCIA 5
FASCIA VENEERED PANEL 9
GLOVE BOX 9
GLOVE BOX LATCH 10
FUSE BOX COVER 10
'A' POST UPPER TRIM CASING 11
'A' POST LOWER TRIM CASING 11
'B' POST LOWER TRIM CASING - 5 DOOR 12
REAR QUARTER TRIM CASING - 3 DOOR 12
REAR QUARTER TRIM CASING - 5 DOOR 14
HEADLINING 15
PARCEL TRAY SUPPORT PANEL - 3 DOOR 17
PARCEL TRAY SUPPORT PANEL - 5 DOOR 18
REAR QUARTER LOWER TRIM CASING - 3 DOOR 19
REAR QUARTER LOWER TRIM CASING - 5 DOOR 20
LUGGAGE COMPARTMENT SIDE CARPET 20
LUGGAGE COMPARTMENT TRIM CASING 21
PARCEL TRAY 21

SCREENS
WINDSCREEN 1
REAR SCREEN 5

SEATS AND SEAT BELTS
CHILD RESTRAINTS 1
FRONT SEAT 2
FRONT SQUAB COVER 3
FRONT SEAT AND SQUAB FRAME 4
OUTER VALANCE - FRONT CUSHION 6
INNER VALANCE - FRONT CUSHION 7
LUMBAR SUPPORT MECHANISM 8
SEAT HEIGHT ADJUSTMENT HANDLE 9
REAR SEAT CUSHION 10
REAR SEAT SQUAB 10
REAR SQUAB LATCH 11
REAR SEAT BELT - SIDE - 3 DOOR 13
REAR SEAT BELT - SIDE - 5 DOOR 14
REAR SEAT BELT - CENTRE 15

SUNROOF
SUN ROOF COMPONENTS 1
SUN ROOF OPERATION 2

CONTENTS

Page
SUN ROOF GLASS HEIGHT ADJUSTMENT 4
SUN ROOF GLASS 4
SUN ROOF SUNSHADE 5
SUN ROOF SWITCH 5
SUN ROOF MOTOR 6
SUN ROOF DRAIN TUBE 6
SUN ROOF 8

ELECTRIC WINDOW LIFT COMPONENTS

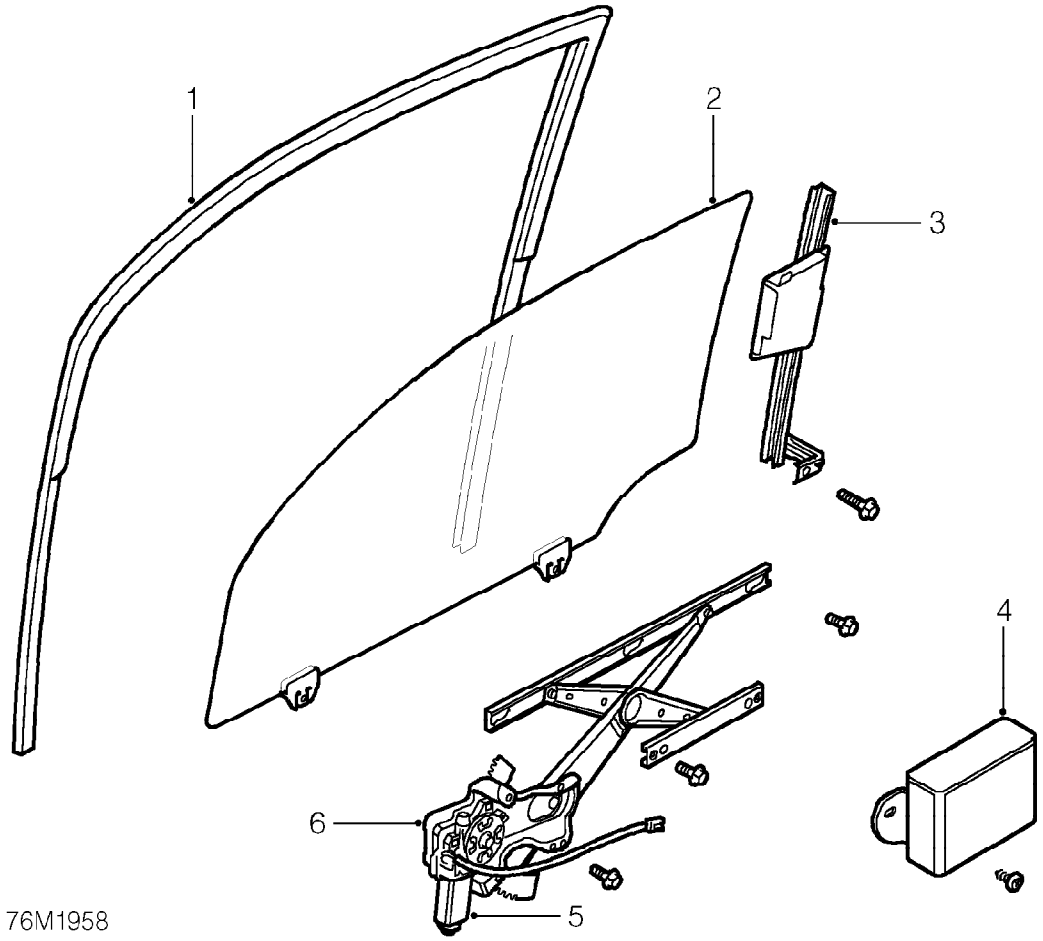

1. Seal
2. Door glass
3. Channel - rear
4. Window lift control unit
5. Window lift motor
6. Door glass regulator

REAR WINDOW LIFT COMPONENTS

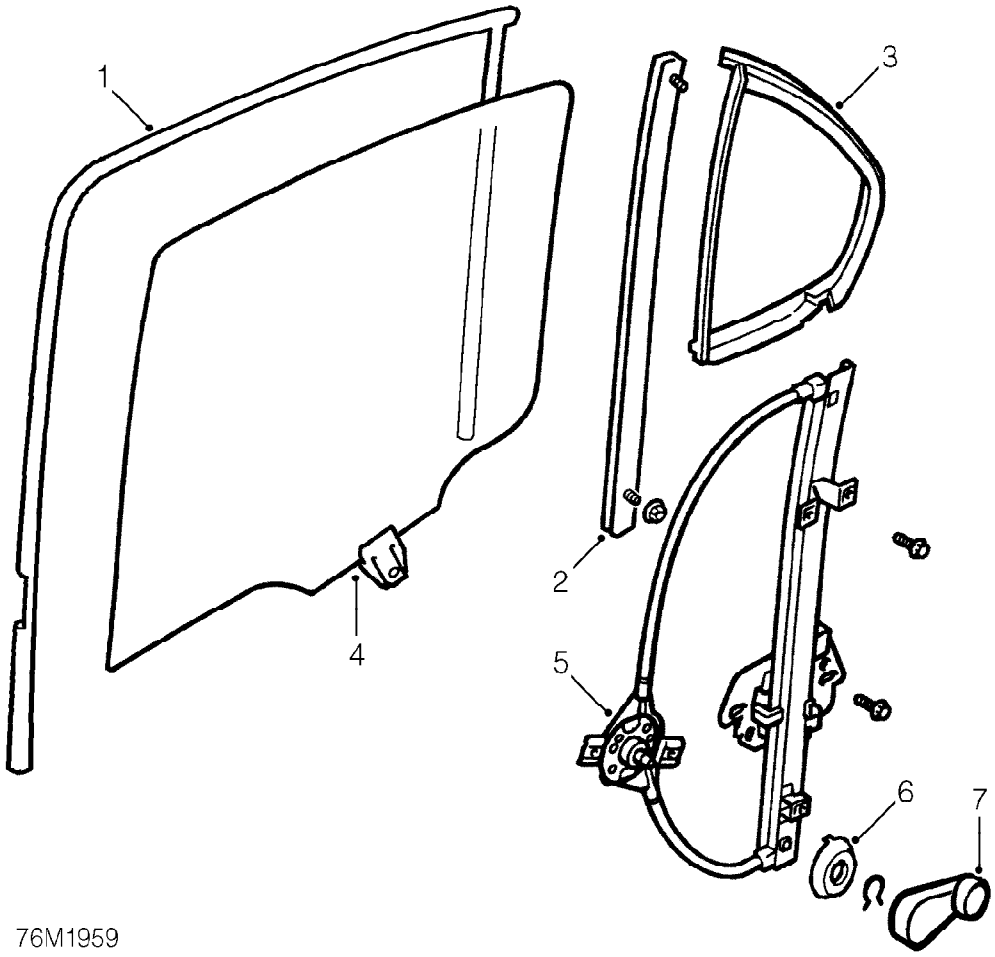

1. Seal
2. Channel - rear
3. Quarter glass
4. Door glass
5. Regulator - door glass
6. Escutcheon
7. Handle

ELECTRIC WINDOW OPERATION

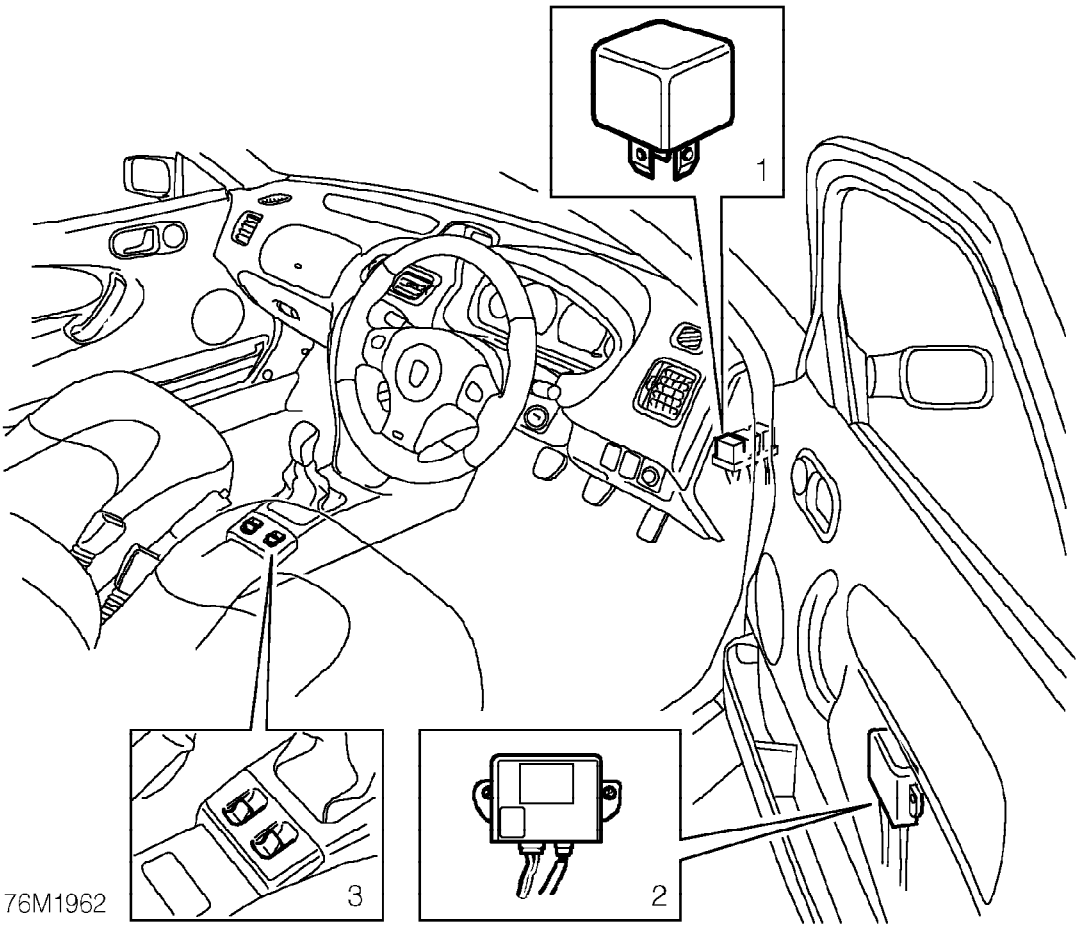

1. Window relay
2. Window lift control unit
3. Window lift switches

The two window lift system is controlled by switches fitted in the base of the centre console. When the starter switch is turned to position I the multi-function unit provides an earth to the window lift relay which feeds battery voltage to the driver and passenger switches. Subsequent operation of either switch provides power to the respective window motor causing the window regulator assembly to lift or lower the window glass accordingly.

Battery supply from the electric window relay to the door window switches is via fuses (20 A), one for each door which are located in the satellite section of the passenger compartment fusebox.

For detailed electrical information refer to ERL (Electrical Reference Library) and circuit diagrams.

FRONT DOOR CENTRAL LOCKING COMPONENTS

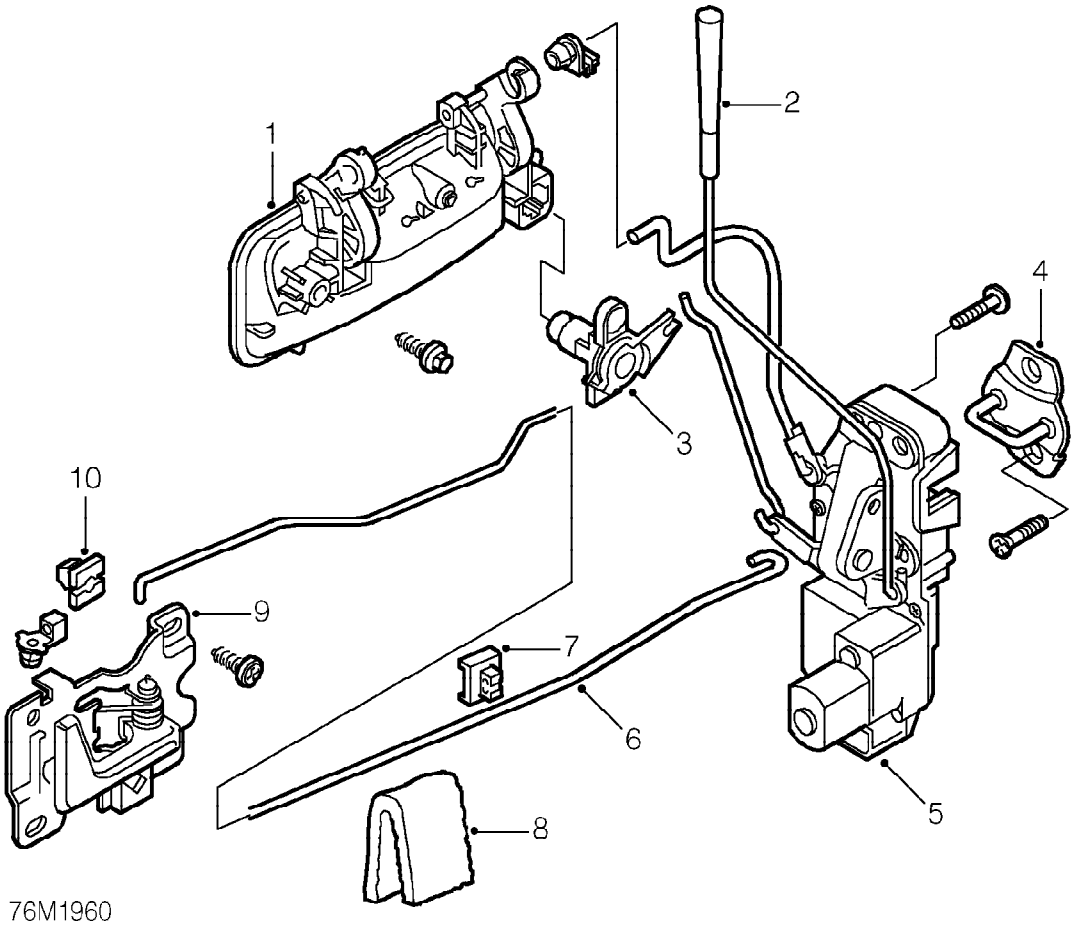

1. Outer door handle assembly
2. Sill button link
3. Cylinder lock
4. Striker - door lock
5. Latch assembly
6. Lock rod - inside handle
7. Holder - lock rod
8. Cushion - lock rod
9. Inside door handle assembly
10. Fixing - inside door handle assembly

REAR DOOR CENTRAL LOCKING COMPONENTS

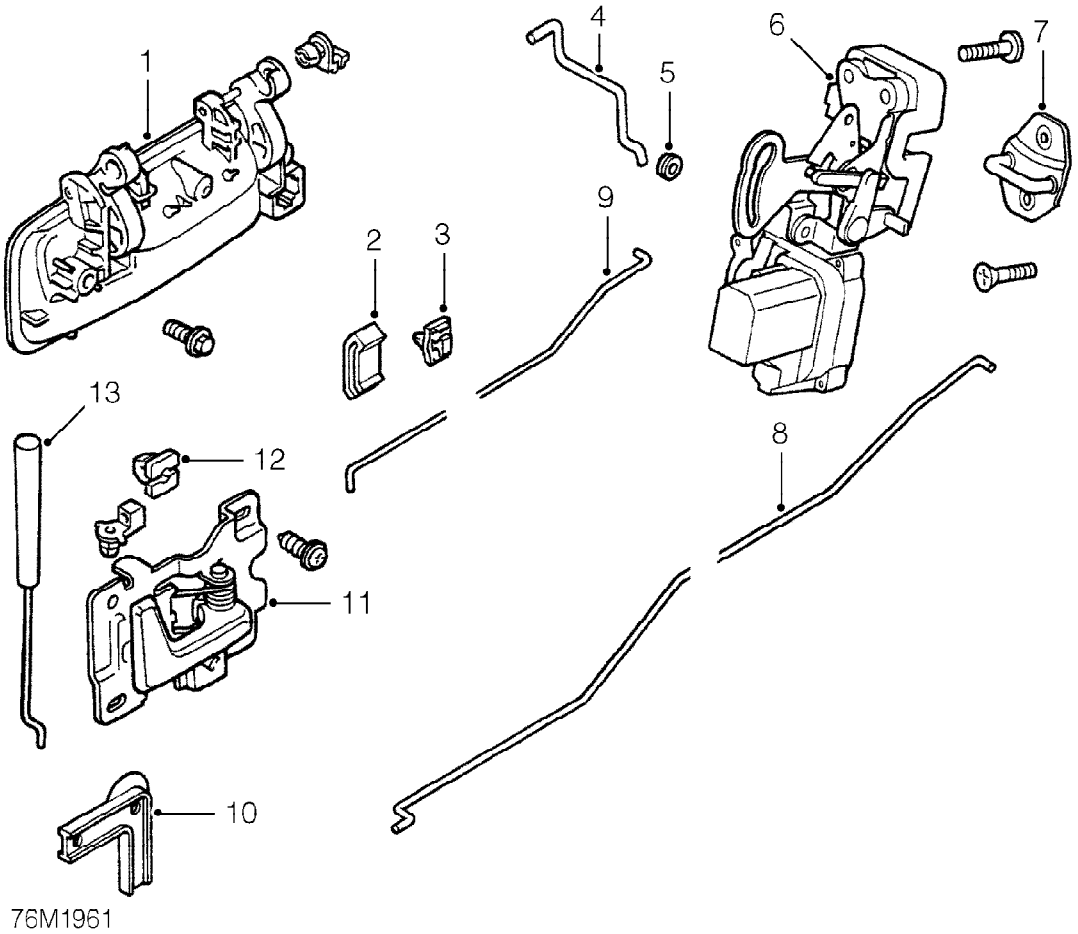

1. Outer door handle assembly
2. Cushion - lock rod
3. Holder - lock rod
4. Link rod - handle
5. Bush - joint
6. Latch assembly
7. Striker - door lock
8. Link rod - latch assembly to pivot
9. Rod - inside handle
10. Pivot - sill button link to link rod
11. Inside door handle assembly
12. Fixing - inside door handle assembly
13. Sill button link

ELECTRIC DOOR LOCK OPERATION

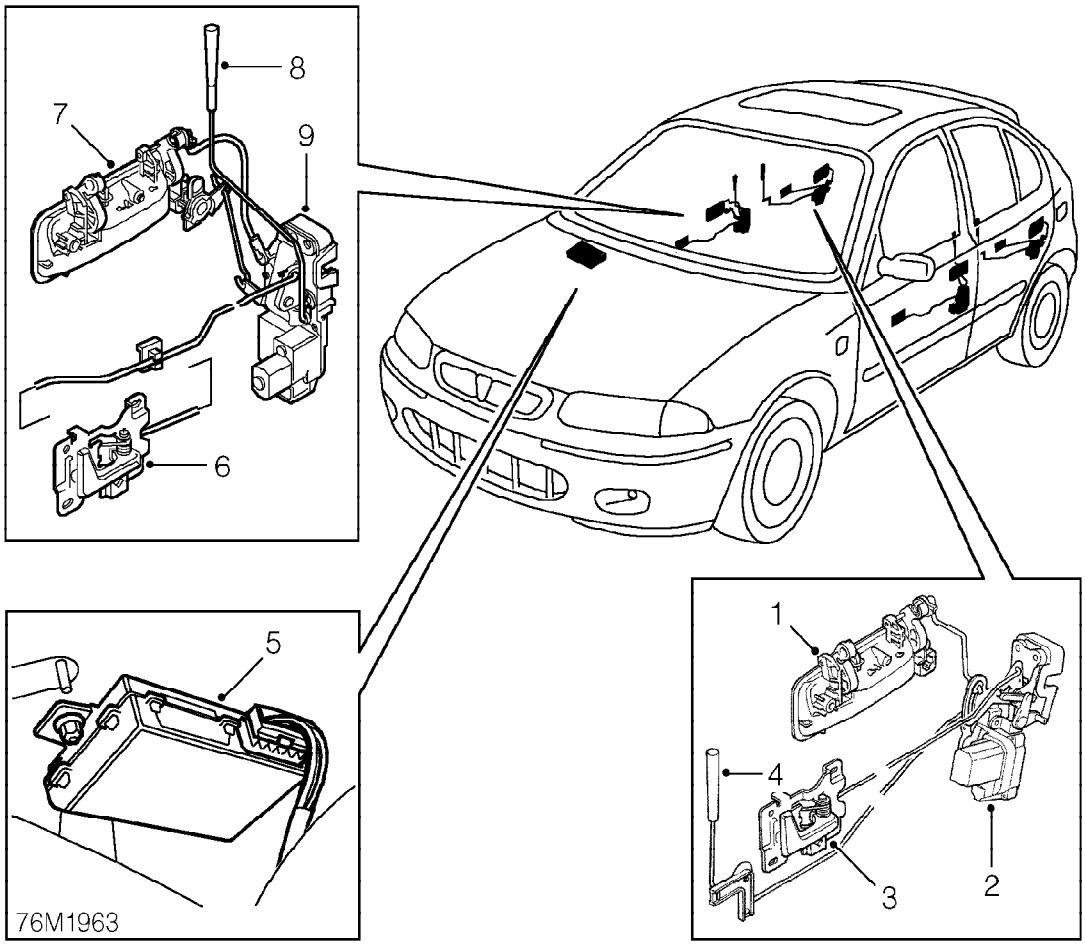

1. Outer door handle assembly
2. Latch assembly
3. Inside door handle assembly
4. Sill button link
5. Anti-theft alarm ECU
6. Inside door handle assembly
7. Outer door handle assembly
8. Sill button link
9. Latch assembly

Central door locking is operated by using any one of the following:
- Remote handset,
- Key in the driver's door lock,
- Driver's door sill button.

Door locks are operated by separate integral lock motors which function simultaneously. They are controlled by the alarm ECU mounted behind the fascia centre console.

A signal from the remote handset is received by the alarm ECU. Depending on this signal the ECU will either lock or unlock the doors by controlling the direction of electrical current sent to the lock motors.

When the driver's door key is turned or the sill button is depressed, the driver's door is mechanically locked by the door latch which triggers the latch switch. The latch switch sends an earth signal to the alarm ECU, which in turn controls the electrical current sent to the passenger door motor to lock the door.

Operation of the passenger door sill button will lock or unlock the passenger door but will not operate the central door locking system.

DOOR STRIKER - ADJUST

Service repair no - 76.28.05

Adjust

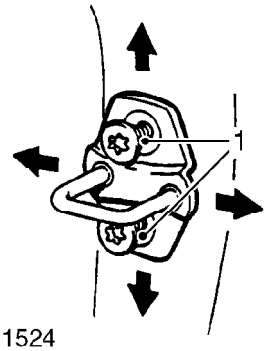

76M1524

1. Loosen 2 TX40 Torx screws securing striker and close door.
2. Check door for flush fit to adjacent panels and edges for equal gap.
3. Open door and tighten striker screws to 18 Nm.

TAILGATE STRIKER - ADJUST

Service repair no - 76.28.28

Adjust

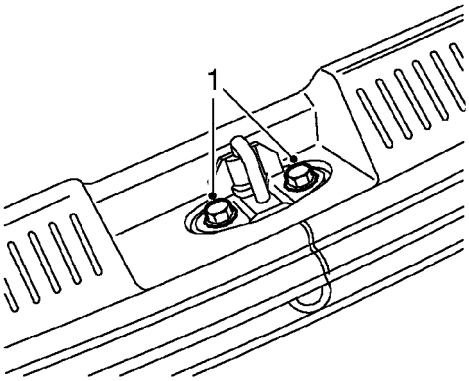

76M1871

1. Loosen striker bolts and close tailgate.
2. Check for equal gap and alignment to adjacent panels.
3. Open tailgate and tighten striker screws to 9 Nm.

TAILGATE ALIGNMENT

Service repair no - 76.28.25

Adjust

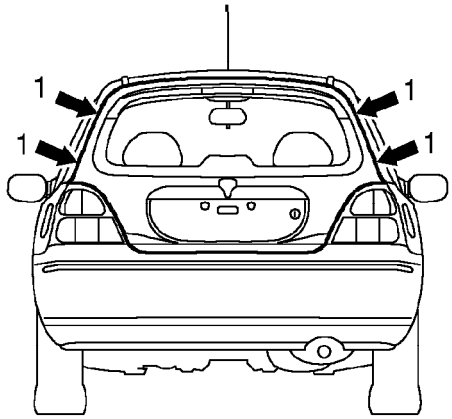

76M1872

1. Check alignment of tailgate against both rear quarter panels.
2. Open tailgate and mark outline of hinges.

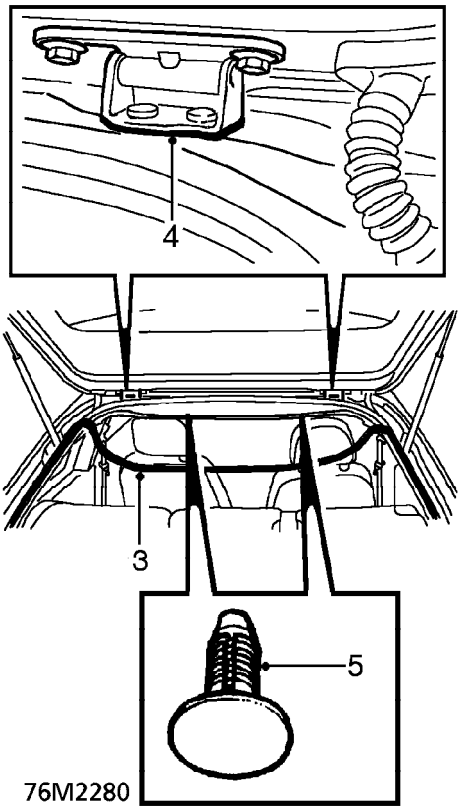

76M2280

3. Release seal from top of tailgate aperture.
4. Remove sealant from around tailgate hinges.
5. Remove 2 trim studs securing rear of headlining to roof.

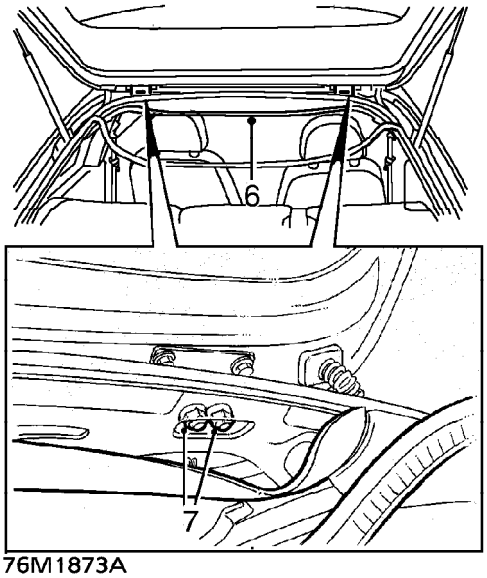

76M1873A

6. Lower rear of headlining to gain access to hinge bolts.
7. Loosen 4 bolts and adjust position of tailgate.
8. Tighten bolts.
9. Close tailgate and check alignment against both rear quarter panels.
10. Open tailgate and re-adjust tailgate position if necessary.
11. Close tailgate and check alignment against both rear quarter panels.
12. Apply sealant to both hinges.
13. Wipe away any excess sealant with thinners.
14. Reposition headlining and secure with trim studs.
15. Fit seal to tailgate to aperture.

EXTERIOR MIRROR GLASS

Service repair no - 76.11.08

Remove

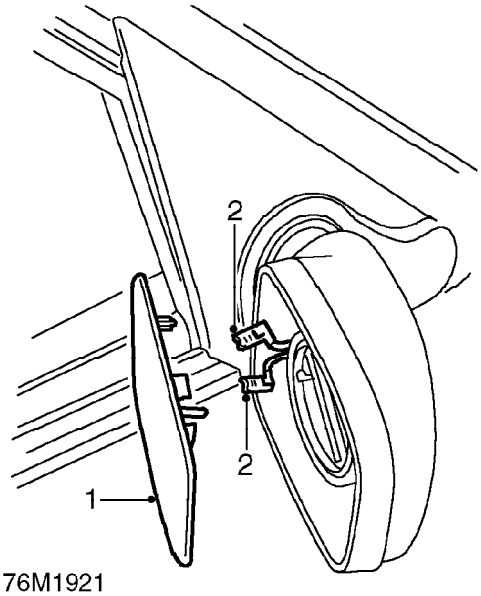

76M1921

1. Carefully release mirror glass from clips.
2. Disconnect 2 Lucar connectors.
3. Remove mirror glass.

Refit

1. Position glass to mirror and connect lucars.
2. Fit glass to mirror and secure clips.

EXTERIOR MIRROR - MANUAL

Service repair no - 76.10.52

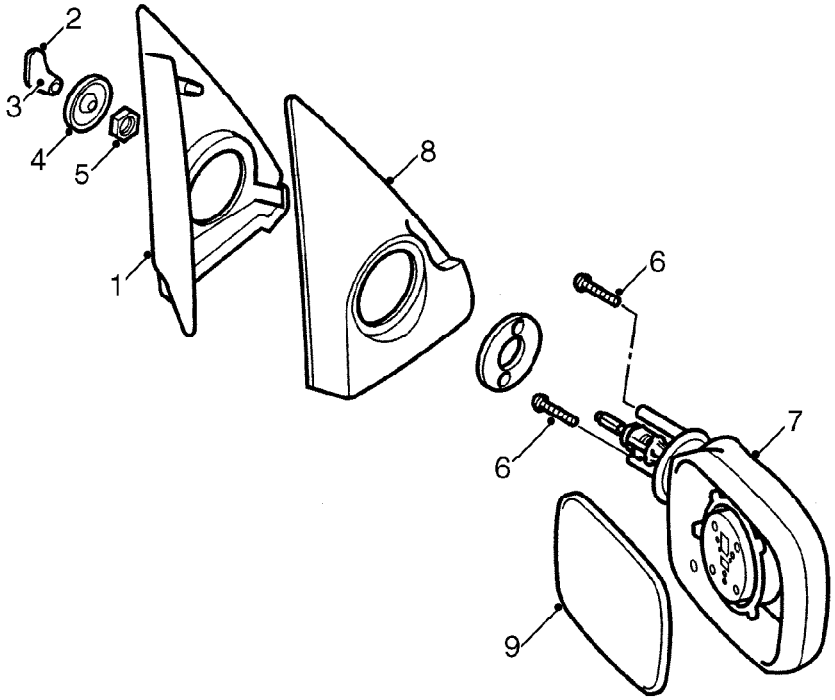

76M1919

Remove

1. Remove interior trim from cheater panel.
2. Remove escutcheon from remote lever handle.
3. Release clips and remove remote lever handle.
4. Remove grommet from lever.
5. Remove nut securing lever to cheater panel.
6. Remove 2 screws securing exterior mirror to cheater.
7. Remove exterior mirror.
   Do not carry out further dismantling if component is removed for access only.
8. Remove cheater panel exterior trim from mirror.
9. Release clips and remove mirror glass.
10. Fit mirror glass and secure to clips.
11. Fit cheater panel exterior trim to mirror.

Refit

1. Fit exterior mirror to cheater and secure with screws.
2. Fit and tighten nut securing remote lever to cheater.
3. Fit grommet to lever.
4. Fit handle to remove lever.
5. Fit escutcheon to remote lever handle.
6. Fit interior trim to cheater panel.

EXTERIOR MIRROR - ELECTRIC

Service repair no - 76.10.57

Remove

1. Remove front door trim casing. ***See Interior trim components.***

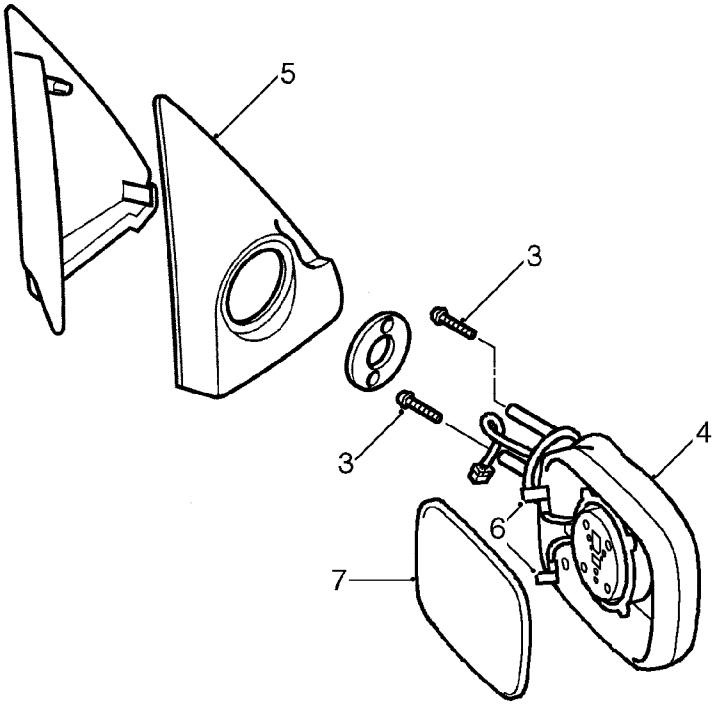

76M1920

2. Disconnect multiplug from exterior mirror.
3. Remove 2 screws securing exterior mirror to cheater panel.
4. Remove exterior mirror.
   Do not carry out further dismantling if component is removed for access only.
5. Remove cheater panel exterior trim from mirror.
6. Release mirror glass from clips and disconnect 2 Lucar connectors.
7. Remove mirror glass.
8. Position glass to mirror and connect Lucars.
9. Fit glass to mirror and secure clips.
10. Fit cheater panel exterior trim to mirror.

Refit

1. Fit mirror to cheater panel and secure with screws.
2. Connect multiplug to exterior mirror.
3. Fit front door trim casing. ***See Interior trim components.***

FRONT DOOR TRIM CASING

Service repair no - 76.34.01

Remove

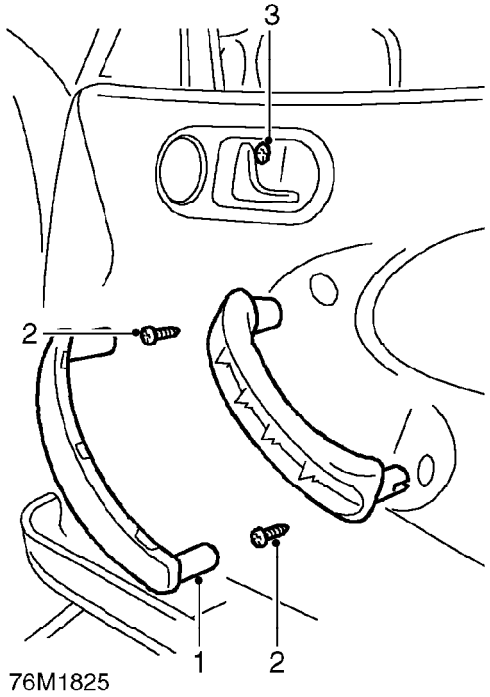

1. Carefully prize door pull escutcheon from door pull - if fitted.
2. Remove 2 screws securing door pull to door.
3. Remove screw securing door handle escutcheon to door.

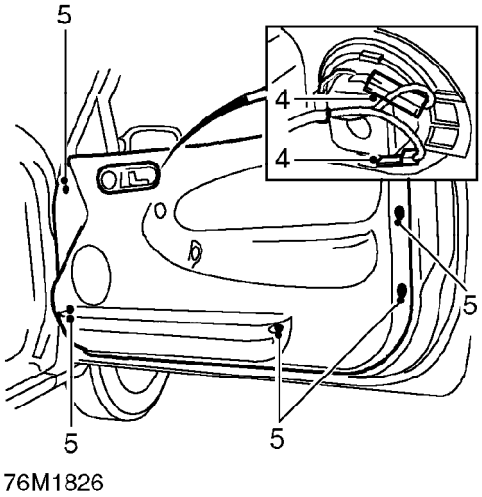

4. Move door handle escutcheon rearwards, release escutcheon from door and disconnect 2 Lucar connectors from tweeter.
5. Remove 5 screws securing trim casing to door.
6. Release trim casing clips from door, release casing from sill button and remove casing.

Refit

1. Position trim casing over sill button and secure to door with clips.
2. Fit and tighten screws securing trim casing to door.
3. Fit door pull and tighten screws.
4. Fit door pull escutcheon - if fitted.
5. Connect Lucar connectors to tweeter and fit door handle escutcheon to door handle.
6. Fit and tighten screw securing door handle escutcheon.

REAR DOOR TRIM CASING

Service repair no - 76.34.04

Remove

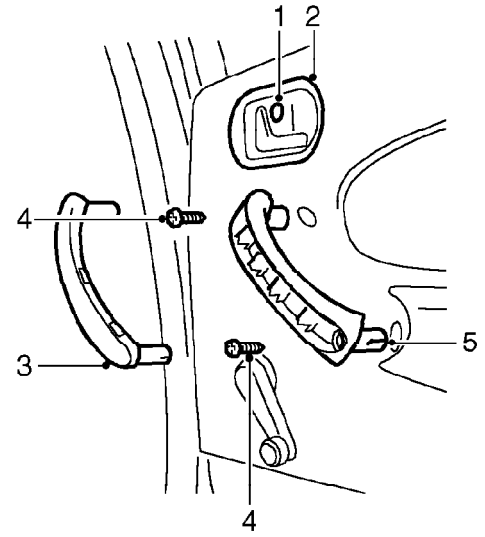

76M1827

1. Remove screw securing door handle escutcheon to door.
2. Remove escutcheon from door handle.
3. Remove escutcheon from door pull.
4. Remove 2 screws securing door pull to door.
5. Remove door pull.

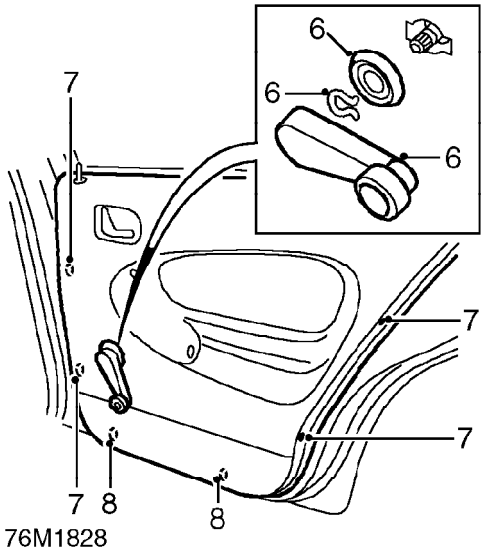

76M1828

6. Release spring clip securing regulator handle and collect handle and finisher.
7. Remove 4 screws securing trim casing to door.
8. Release trim casing from 2 clips and guide over sill button.

Refit

1. Guide trim casing over sill button and secure to clips on door.
2. Fit and tighten screws securing trim casing to door.
3. Fit regulator handle and finisher to door and secure with spring clip.
4. Fit door pull to door and secure with screws.
5. Fit escutcheon to door pull.
6. Fit handle escutcheon to door and secure with screw.

FRONT DOOR PLASTIC SHEET

Service repair no - 76.34.26

Remove

1. Remove front door trim casing. ***See Interior trim components.***

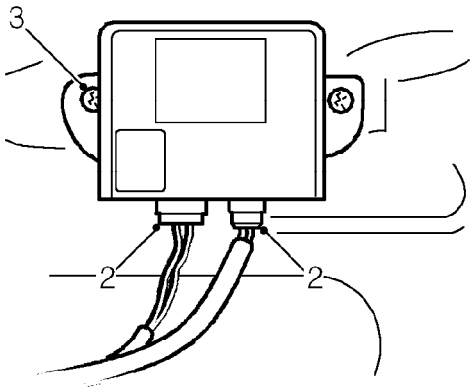

76M1974

2. Disconnect 2 multiplugs from window lift ECU.
3. Remove 2 screws and remove window lift ECU.

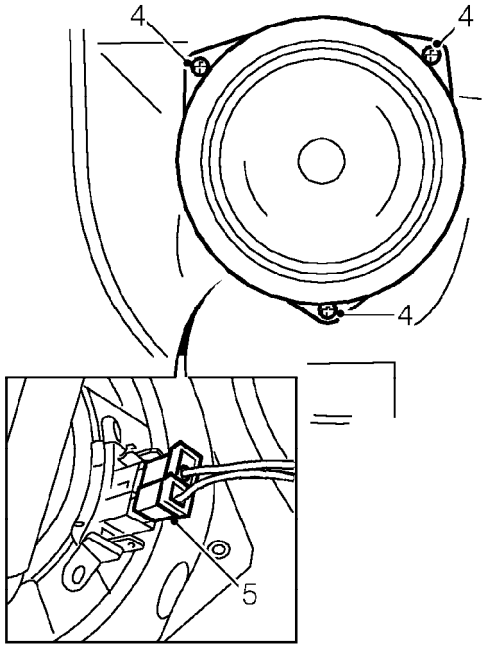

76M1975

4. Remove 3 screws securing speaker to door.
5. Disconnect multiplug and remove speaker.

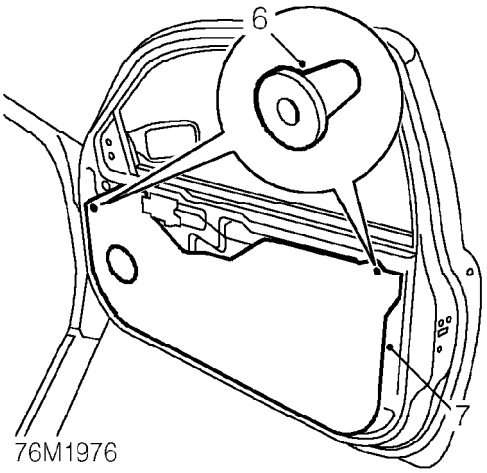

76M1976

6. Remove locating dowels from plastic sheet.
7. Release and remove plastic sheet from door.

Refit

1. Fit plastic sheet to door and fit locating dowels.
2. Position speaker to door and connect multiplug.
3. Fit screws securing speaker to door.
4. Position window lift ECU to door and connect multiplugs.
5. Fit screws securing ECU to door.
6. Fit front door trim casing. ***See Interior trim components.***

REAR DOOR PLASTIC SHEET

Service repair no - 76.34.28

Remove

1. Remove rear door trim casing. ***See Interior trim components.***

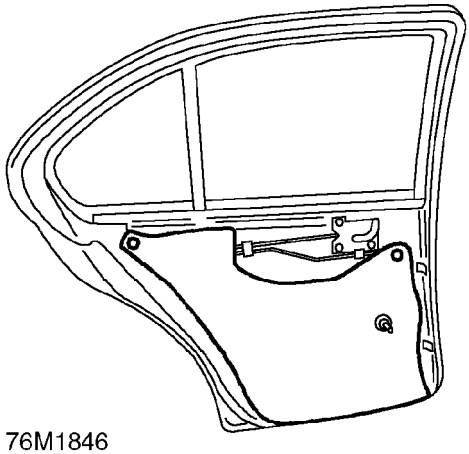

76M1846

2. Remove 2 locating dowels from plastic sheet.
3. Release and remove plastic sheet from door.

Refit

1. Fit plastic sheet to door and fit locating dowels.
2. Fit rear door trim casing. ***See Interior trim components.***

FRONT DOOR GLASS

Service repair no - 76.31.01

Remove

1. Remove front door plastic sheet. ***See Interior trim components.***
2. Move window glass to gain access to fixing bolts.

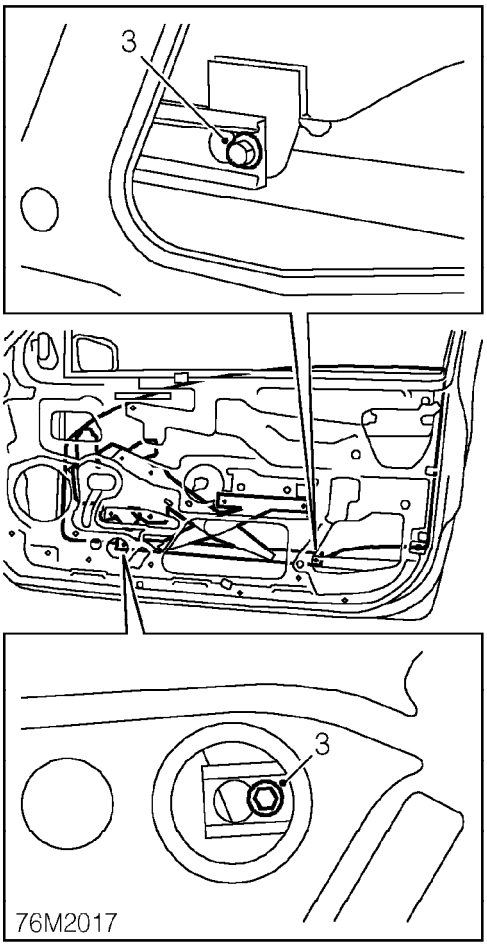

3. Loosen bolts securing glass to regulator.
4. Release glass from regulator and remove glass from door.

Refit

1. Position glass to door, align to regulator and tighten bolts to 9 Nm.
2. Fit front door plastic sheet. ***See Interior trim components.***

REAR DOOR GLASS

Service repair no - 76.31.02

Remove

1. Remove rear door plastic sheet. ***See Interior trim components.***

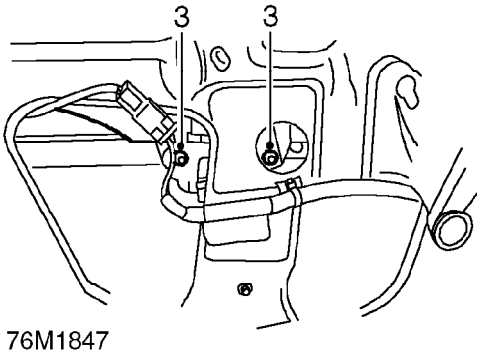

76M1847

2. Position glass to gain access to fixing bolts.
3. Remove bolts securing glass to regulator.
4. Release glass from regulator and move glass to bottom of door.

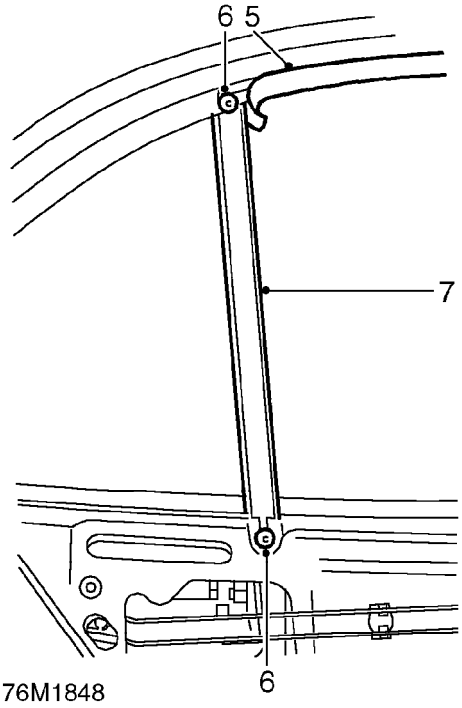

76M1848

5. Release rubber from glass rear channel.
6. Remove 2 nuts securing rear channel to door.
7. Remove channel from door.
8. Raise glass and remove from door.

Refit

1. Position glass to door.
2. Fit glass rear channel to door and tighten nuts to 8 Nm.
3. Fit rubber to channel.
4. Position glass to regulator and fit and tighten bolts to 9 Nm.
5. Fit rear door plastic sheet. ***See Interior trim components.***

REAR QUARTER GLASS - 5 DOOR

Service repair no - 76.31.31

Remove

1. Remove rear door glass. ***See Interior trim components.***

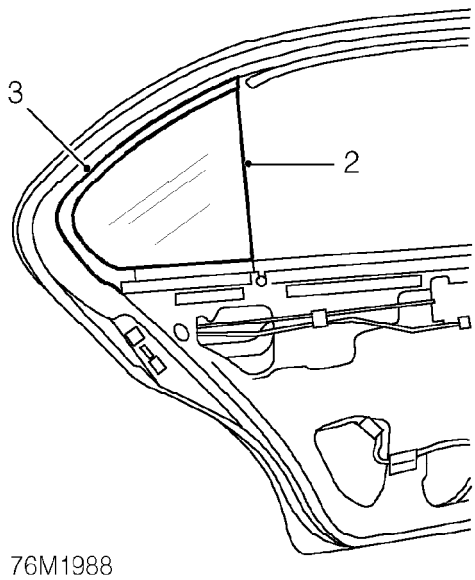

2. Remove rear quarter glass, complete with seal, from door.
3. Remove seal from glass.

Refit

1. Fit rubber seal to glass.
2. Apply soap solution to rubber to aid refitment.
3. Fit glass and rubber to door.
4. Fit rear door glass. ***See Interior trim components.***

FRONT DOOR GLASS REGULATOR

Service repair no - 76.31.45

Remove

1. Remove front door glass. ***See Interior trim components.***

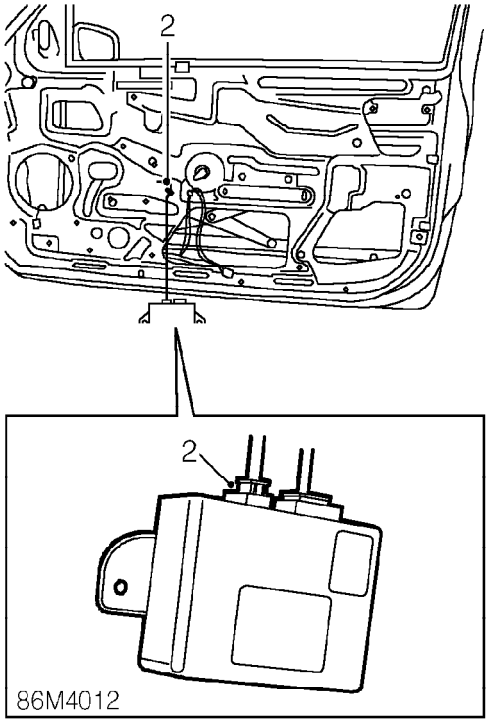

Models with power windows

2. Disconnect multiplug from front door glass motor and release harness clip from door.

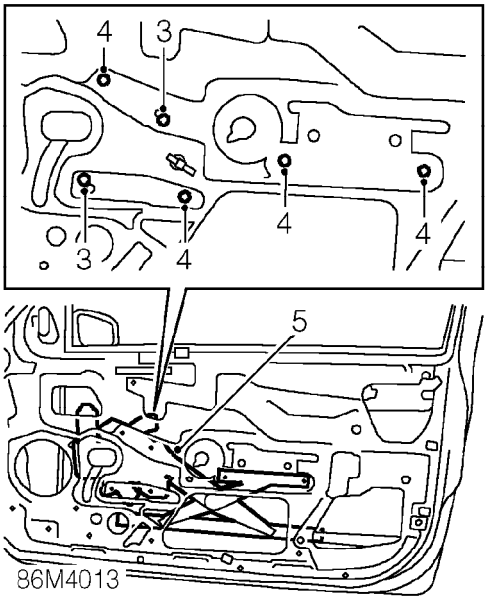

NOTE: Mark position of roller guide bolts on door before removal.

3. Loosen 2 bolts securing regulator to door.
4. Remove 4 bolts securing regulator to door.
5. Release and remove regulator assembly from door.

NOTE: Before removing power window motor mark the location by scribing a line across the sector gear and regulator.

Models with power windows

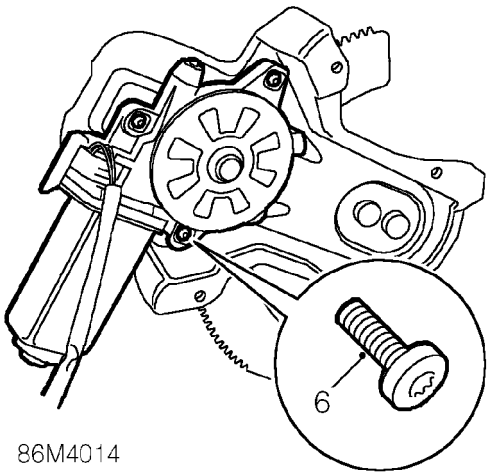

6. Using a Torx bit remove 3 screws securing motor to regulator, then remove the motor.

Refit

Models with power windows

1. Apply grease to motor gear and regulator pivot points.
2. Ensure regulator marks are aligned, position motor to regulator and tighten screws to 7 Nm.

All models

3. Position and align regulator assembly to door.
4. Fit bolts to secure regulator, tighten to 8 Nm.
5. Align roller guide, fit bolts to align with original marks and tighten to 8 Nm.
6. *Models with power windows:* Connect multiplug to motor and secure clip to door.
7. Refit front door glass. ***See Interior trim components.***

REAR DOOR GLASS REGULATOR

Service repair no - 76.31.46

Remove

1. Remove rear door glass. ***See Interior trim components.***

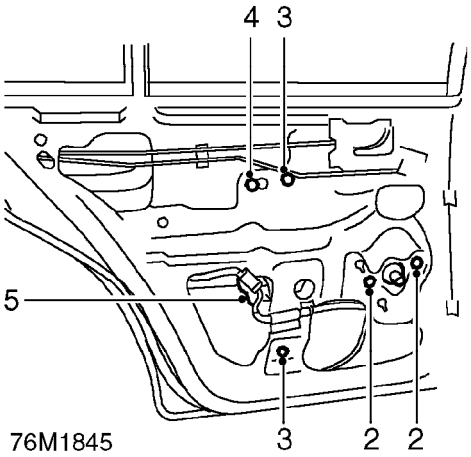

2. Remove 2 bolts securing regulator to door.
3. Remove 2 bolts securing glass channel to door.
4. Loosen bolt securing channel to door.
5. Remove regulator and channel assembly from door.

Refit

1. Position regulator and channel assembly to door.
2. Fit bolts securing channel to door and tighten to 8 Nm.
3. Tighten bolt securing channel to door to 8 Nm.
4. Fit and tighten bolts securing regulator to door to 8 Nm.
5. Fit rear door glass. ***See Interior trim components.***

TAILGATE TRIM CASING

Service repair no - 76.34.10

Remove

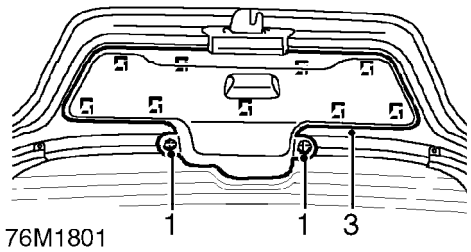

1. Remove 2 screws securing tailgate trim casing to tailgate.
2. Release 9 clips securing trim casing to tailgate.
3. Remove trim casing from tailgate.

Refit

1. Position trim casing to tailgate and secure with clips.
2. Fit and tighten screws securing tailgate trim casing to tailgate.

TAILGATE SIDE FINISHER

Service repair no - 76.34.11

Remove

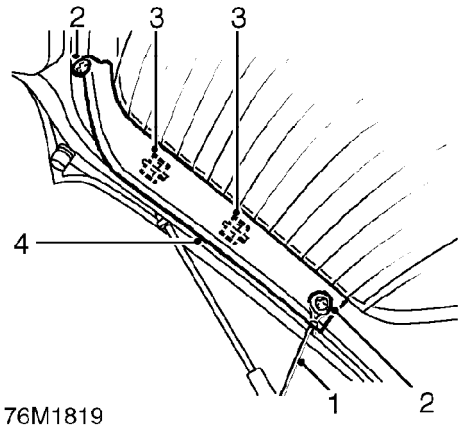

1. Release parcel shelf ties from tailgate.
2. Remove 2 screws securing side finisher to tailgate.
3. Release 2 clips securing side finisher to tailgate.
4. Remove side finisher.

Refit

1. Fit side finisher to tailgate and secure with clips.
2. Fit screws securing side finisher to tailgate.
3. Secure parcel shelf ties to side finishers.

TAILGATE UPPER FINISHER

Service repair no - 76.34.37

Remove

1. Remove tailgate side finishers. ***See Interior trim components.***

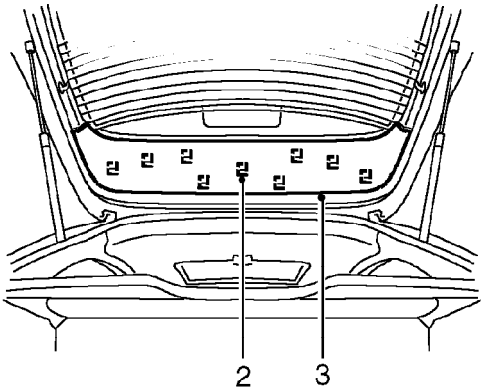

2. Release 8 clips securing upper finisher to tailgate.
3. Remove upper finisher.

Refit

1. Fit upper finisher to tailgate and secure clips.
2. Fit tailgate side finishers. ***See Interior trim components.***

FRONT DOOR OUTSIDE HANDLE

Service repair no - 76.58.07

Remove

NOTE: Raise door glass fully. Fit protection on door to avoid damage to paintwork.

1. Remove front door plastic sheet. ***See Interior trim components.***

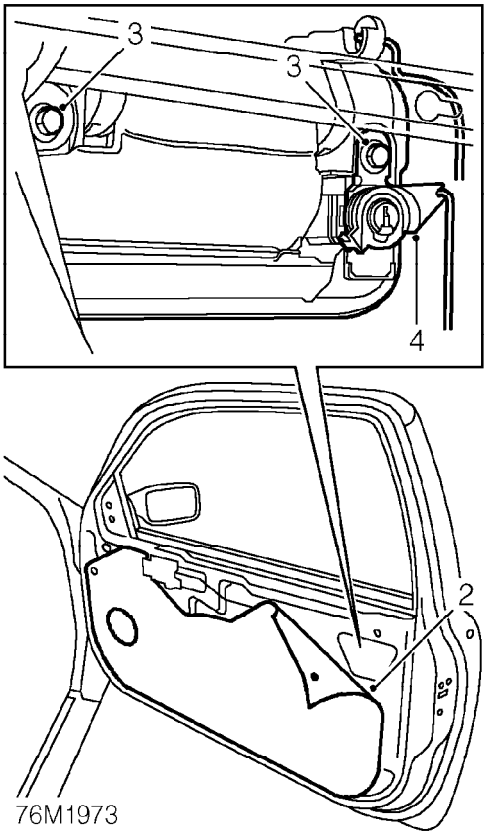

2. Remove 2 bolts securing outside handle to door.
3. Release control rod and private lock rod from handle.
4. Remove handle from door.

Refit

1. Position handle to door and connect control rods.
2. Fit bolts and tighten to 9 Nm.
3. Fit front door plastic sheet. ***See Interior trim components.***

REAR DOOR OUTSIDE HANDLE

Service repair no - 76.58.02

Remove

1. Remove rear door plastic sheet. ***See Interior trim components.***

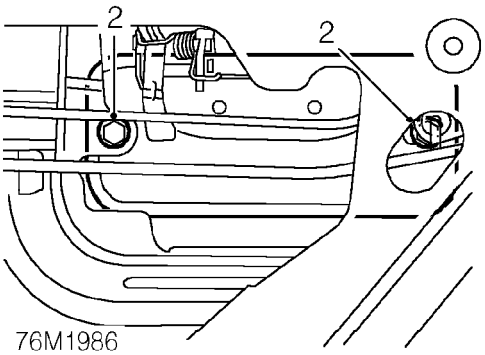

2. Remove 2 bolts securing outside handle to door.

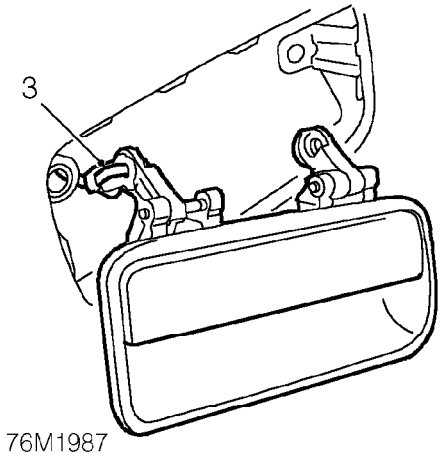

3. Release handle from door and disconnect control rod.
4. Remove outside door handle.

Refit

1. Position handle to door and connect control rod.
2. Fit handle to door and tighten screws to 9 Nm.
3. Fit rear door plastic sheet. ***See Interior trim components.***

FRONT DOOR INTERIOR HANDLE

Service repair no - 76.58.20

Remove

1. Remove front door trim casing. ***See Interior trim components.***

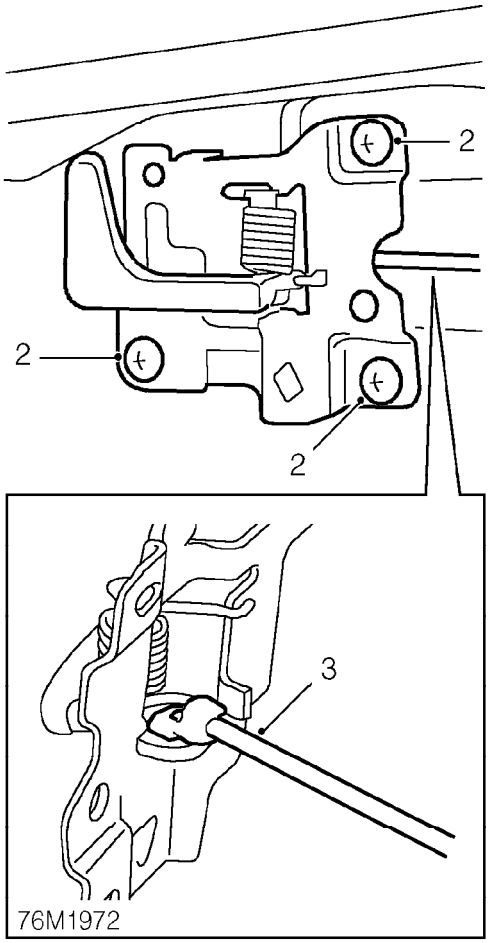

2. Remove 3 screws securing handle to door.
3. Release control rod and remove handle from door.

Refit

1. Connect control cable to handle and position handle to door.
2. Fit and tighten screws securing handle to door.
3. Fit front door trim casing. ***See Interior trim components.***

REAR DOOR INTERIOR HANDLE

Service repair no - 76.58.19

Remove

1. Remove rear door trim casing. ***See Interior trim components.***

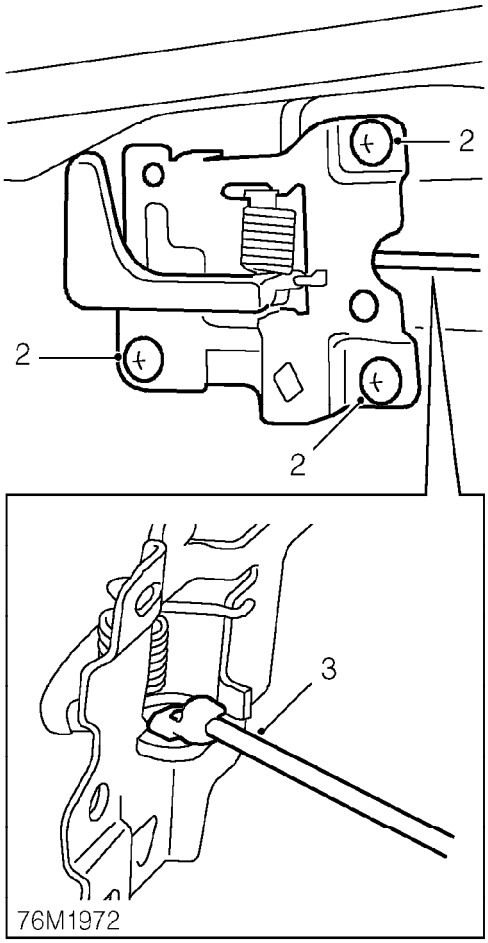

2. Remove 3 screws securing handle to door.
3. Release control rod and remove handle from door.

Refit

1. Connect control cable to handle and position handle to door.
2. Fit and tighten screws securing handle to door.
3. Fit rear door trim casing. ***See Interior trim components.***

FRONT DOOR LATCH

Service repair no - 76.37.12

Remove

1. For removal of front door latch, refer to Front door lock motor. ***See ELECTRICAL, Repairs.***

REAR DOOR LATCH

Service repair no - 76.37.13

Remove

1. For removal of rear door latch refer to Rear door lock motor. ***See ELECTRICAL, Repairs.***

TAILGATE LATCH

Service repair no - 76.37.17

Remove

1. Remove tailgate trim casing. ***See Interior trim components.***

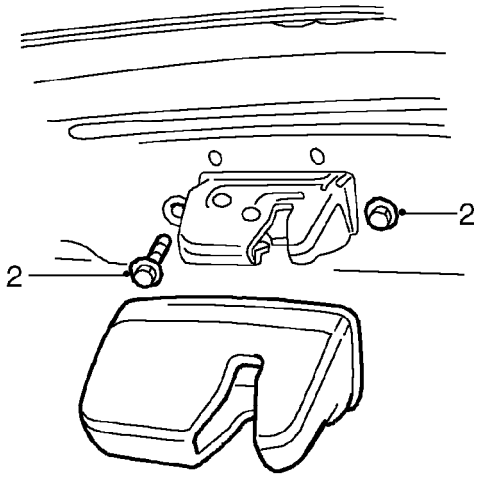

76M1914

2. Remove 2 bolts securing latch to tailgate.

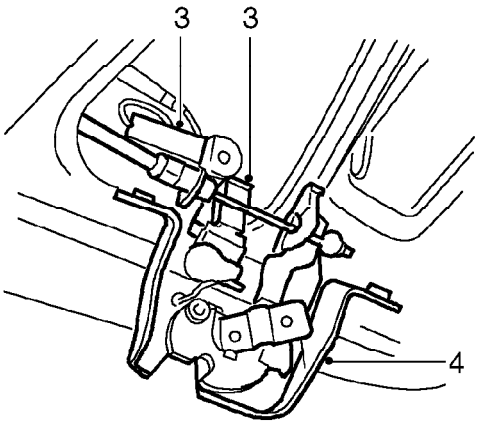

76M1915

3. Release latch from tailgate and disconnect 2 Lucars and release cable.
4. Remove latch from tailgate.

Refit

1. Position latch to tailgate and connect release cable and Lucars.
2. Fit bolts securing latch to tailgate and tighten to 7 Nm.
3. Fit tailgate trim casing. ***See Interior trim components.***

DRIVERS DOOR LOCK

Service repair no - 76.37.39

Remove

1. Remove front door trim casing. ***See Interior trim components.***

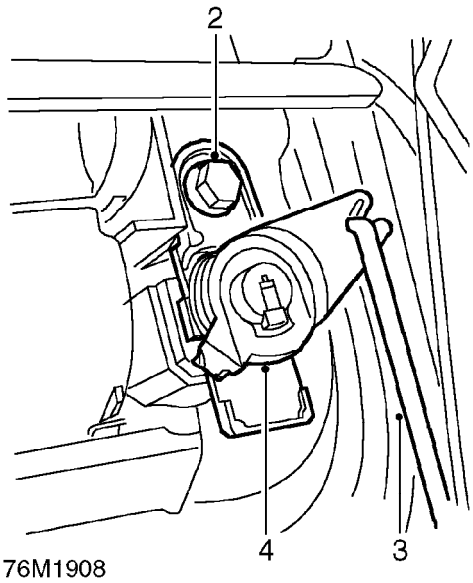

2. Remove bolt securing lock to outside door handle.
3. Release control rod from lock.
4. Remove lock from door.

Refit

1. Position lock in door and fit control rod.
2. Fit lock to handle and tighten bolt to 9 Nm.
3. Fit front door trim casing. ***See Interior trim components.***

TAILGATE LOCK

Service repair no - 76.37.41

Remove

1. Remove tailgate trim casing. ***See Interior trim components.***

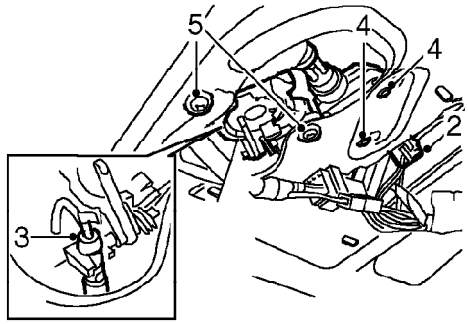

2. Disconnect multiplug from motor.
3. Release tailgate release cable from lock.
4. Loosen 2 screws securing lock motor to tailgate.
5. Remove 2 screws securing lock to tailgate.
6. Remove lock and motor from tailgate.
7. Release lock from motor.

Refit

1. Fit lock to motor and position to tailgate.
2. Fit and tighten screws securing lock to tailgate.
3. Tighten screws securing motor to tailgate to 9 Nm.
4. Connect release cable to lock.
5. Connect multiplug to motor.
6. Fit tailgate trim casing. ***See Interior trim components.***

TAILGATE STRUT

Service repair no - 76.40.33

Remove

1. Open and support tailgate.

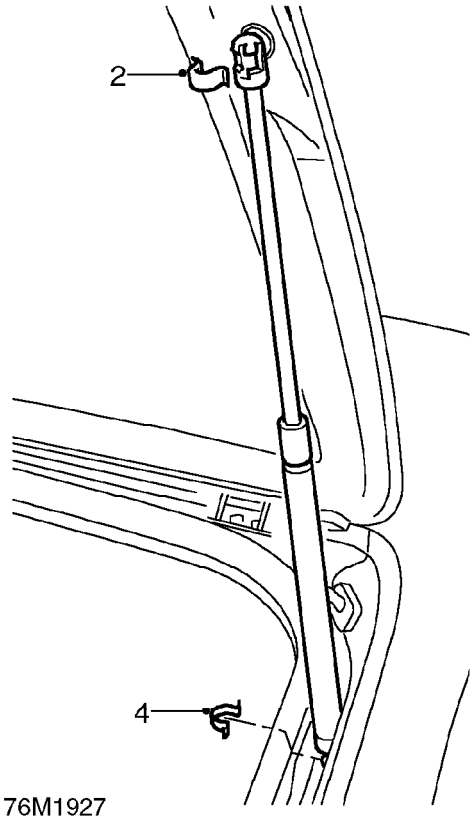

2. Release clip securing strut to tailgate.
3. Release strut from tailgate.
4. Release clip securing strut to body.
5. Release strut from body.

Refit

1. Fit new strut to body and secure with clip.
2. Fit strut to tailgate and secure with clip.
3. Remove tailgate support.

BONNET ALIGNMENT

Service repair no - 76.16.02

Adjust

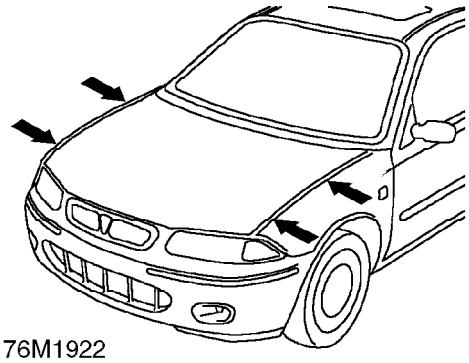

76M1922

1. Check alignment of bonnet against both wings.

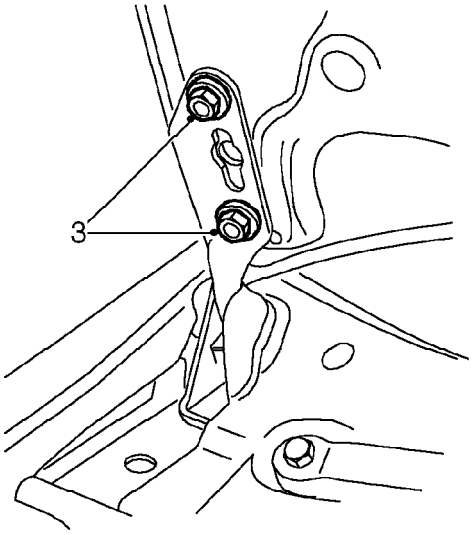

76M1923

2. Open bonnet and mark outline of hinges.
3. Loosen 4 bolts and adjust position of bonnet.
4. Tighten bolts to 9 Nm.
5. Close bonnet and check alignment against both wings.
6. Open bonnet and re-adjust bonnet position if necessary.
7. Close bonnet and check alignment against both wings.

WHEEL ARCH LINER

Service repair no - 76.10.48

Remove

1. Raise front of vehicle.

WARNING: Support on safety stands.

2. Remove road wheel(s).

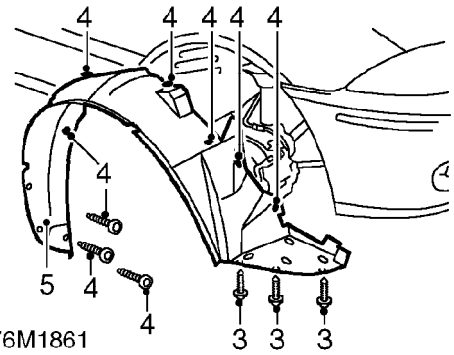

76M1861

3. Remove 3 screws securing wheel arch liner to front bumper.
4. Remove 3 screws and 6 scrivets securing liner to wheel arch.
5. Remove wheel arch liner.

Refit

1. Fit liner to wheel arch.
2. Fit and tighten screws and scrivets securing liner to wheel arch.
3. Fit and tighten screws securing liner to front bumper.
4. Fit road wheel(s) and tighten nuts to correct torque. ***See INFORMATION, Torque wrench settings.***
5. Remove stand(s) and lower vehicle.

UNDERTRAY - 'L' SERIES

Service repair no - 76.10.50

Remove

WARNING: Support on safety stands.

1. Raise front of vehicle.

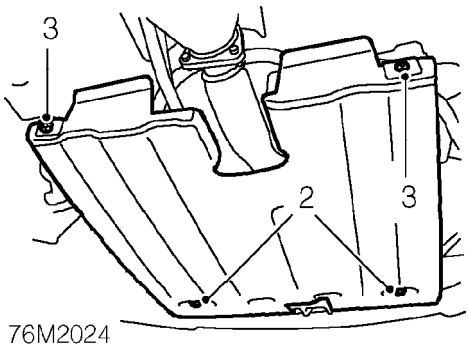

2. Remove 2 bolts securing undertray to front beam.
3. Remove 2 nuts securing undertray to rear beam.
4. Release and remove undertray.

Refit

1. Position undertray and locate on studs on rear beam.
2. Fit nuts securing undertray to rear beam and tighten to 10 Nm.
3. Fit bolts securing undertray to front beam and tighten to 10 Nm.
4. Remove stand(s) and lower vehicle.

SPLASH SHIELD - 'K16 WITH VVC'

Service repair no - 76.10.50

Remove

1. Raise front of vehicle.

WARNING: Support on safety stands.

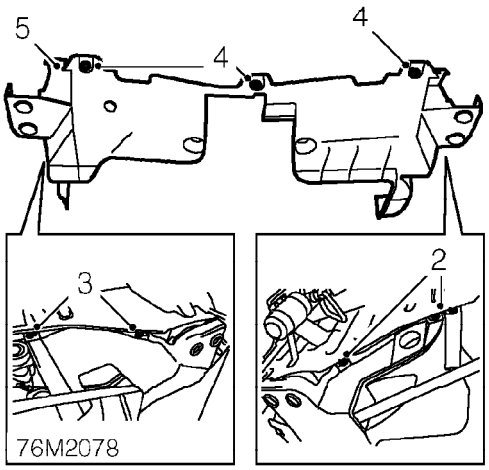

2. Remove 3 bolts securing LH end of splash shield to body.
3. Remove 2 bolts securing RH end of splash shield to body.
4. Remove 3 bolts securing front edge of splash shield to body.
5. Remove splash shield.

Refit

1. Position splash shield to vehicle and secure front edge to body with screws. Tighten screws to 5 Nm.
2. Fit bolts securing RH end of splash shield to body and tighten to 5 Nm.
3. Fit bolts securing LH end of splash shield to body and tighten to 5 Nm.
4. Remove stand(s) and lower vehicle.

ENGINE ACOUSTIC COVER

Service repair no - 76.11.06

Remove

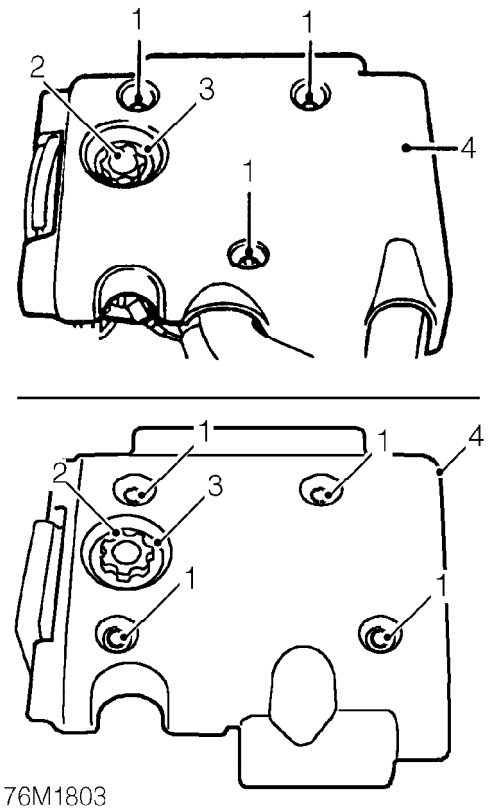

1. Remove bolts securing acoustic cover to engine.
2. Remove engine oil filler cap.
3. Remove rubber seal from acoustic cover.
4. Remove engine acoustic cover.

Refit

1. Fit engine acoustic cover.
2. Fit and tighten securing bolts.
3. Fit rubber seal.
4. Fit engine oil filler cap.

BONNET

Service repair no - 76.16.01

Remove

1. Support bonnet in open position.
2. Fit protection covers to wings.
3. If bonnet is to be refitted, mark outline of hinges.

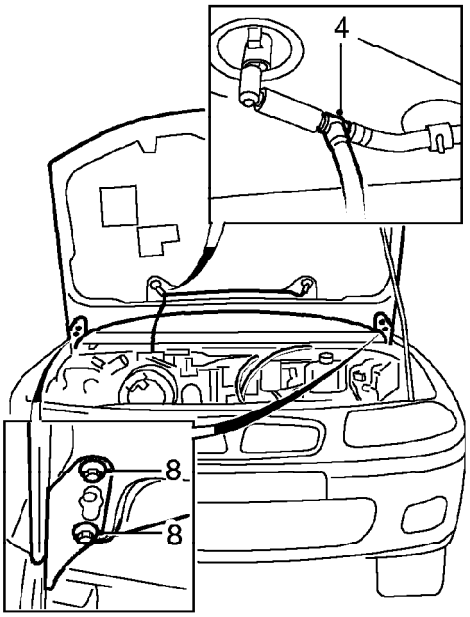

4. Disconnect washer tube at 'T' piece.

Vehicles fitted with heated washer jets:

5. Disconnect heated washer jet multiplugs.
6. Release 2 trim studs securing sound deadening pad to bonnet.
7. Move pad aside and release washer jet harness from bonnet.

All models:

8. With assistance, remove 4 bolts securing hinges to bonnet
9. Remove bonnet.

Refit

1. With assistance position bonnet to hinges and finger tighten bolts.
2. Connect washer tube.

Vehicles fitted with heated washer jets:

3. Connect heated washer jet multiplugs.
4. Position harness to bonnet and secure sound deadening pad with trim studs.

All models:

5. Remove protection covers.
6. Close bonnet to safety catch position and check that bonnet is aligned to both front wings and that gaps are equal.
7. Tighten hinge bolts to 9 Nm.

BONNET LOCK

Service repair no - 76.16.21

Remove

1. Remove 2 nuts securing bonnet lock cover.
2. Remove cover.

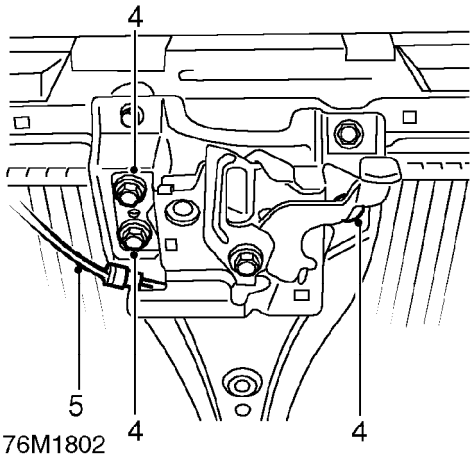

3. Mark position of bonnet lock.
4. Remove 3 bolts securing lock to body.
5. Release cable from lock.

Refit

1. Fit cable to bonnet lock.
2. Align lock to marks made during remove.
3. Fit and tighten bolts to 10 Nm.
4. Close and open bonnet to check lock operation and alignment.
5. Slacken bolts securing lock and adjust lock alignment.
6. Tighten bolts to 10 Nm.
7. Close and open bonnet to check lock operation and alignment.
8. Fit lock cover and tighten nuts to 3 Nm.

BONNET RELEASE CABLE

Service repair no - 76.16.29

Remove

1. Remove bonnet lock. ***See this section.***

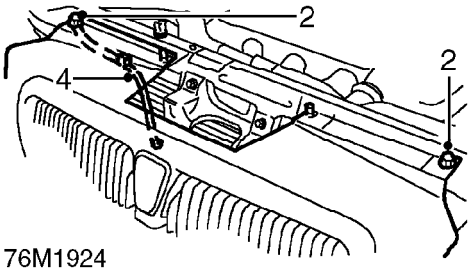

76M1924

2. Remove remaining nuts securing bumper to bonnet locking platform.
3. Carefully release top of bumper from bonnet locking platform to gain access to clip securing cable to locking platform.
4. Release clip securing cable to locking platform and collect clip.
5. Feed cable through aperture in locking panel valance.

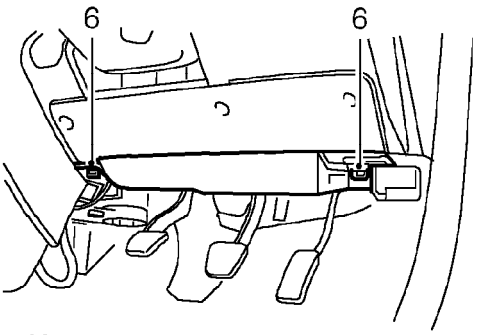

76M1925

6. Release 2 turnbuckles and remove fascia lower cover.

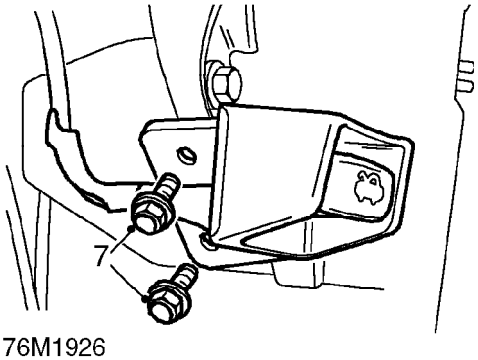

76M1926

7. Remove 2 bolts securing bonnet pull to mounting bracket to body.
8. Release bonnet pull from mounting bracket.
9. Release cable grommet from bulkhead and feed cable into car.

Refit

1. Feed cable through bulkhead and secure grommet.
2. Feed cable through aperture in locking platform valance.
3. Fit clip securing cable to bonnet locking platform.
4. Fit bonnet pull to mounting bracket.
5. Position mounting bracket to body and tighten bolts to 10 Nm.
6. Fit fascia lower cover and secure turnbuckles.
7. Align bonnet to locking platform and tighten 2 outer nuts to 10 Nm.
8. Fit bonnet lock. ***See this section.***

FRONT BUMPER

Service repair no - 76.22.08

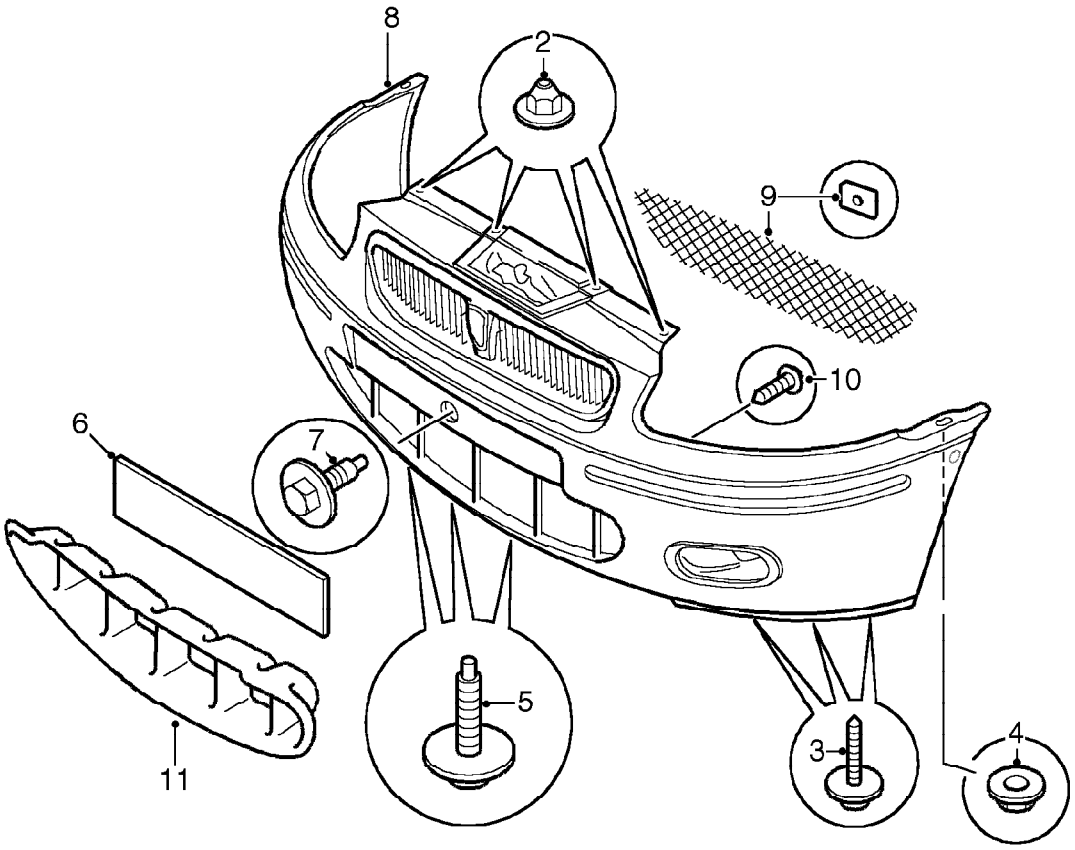

76M 1842A

Remove

1. Remove front fog lights - if fitted. ***See ELECTRICAL, Repairs.***
2. Remove 4 nuts securing bumper to bonnet locking platform.
3. Remove 6 screws securing bottom edge of bumper to wheel arch liners.
4. Move liners aside and remove flange nut securing each end of bumper to front wings.
5. Remove 3 bolts securing lower edge of bumper to body.
6. Remove number plate.
7. Remove bolt securing centre of bumper to body.
8. Remove bumper.
   Do not carry out further dismantling if component is removed for access only.
9. Remove 6 clips securing air intake grille to bumper, remove grille.

BRM

10. Remove 12 screws securing air intake moulding to bumper.
11. Release adhesive tape securing air intake moulding to bumper, remove moulding.

Refit

BRM

1. Position air intake moulding to bumper.

CAUTION: Do not remove backing strip from adhesive tape at this stage.

2. Make suitable alignment marks between bumper and air intake moulding.
3. Remove backing strip from adhesive tape.
4. Position air intake moulding to bumper, align reference marks and press moulding on to bumper.
5. Fit and tighten 12 screws.

All models

6. Position air intake grille to bumper, fit retaining clips.
7. Position bumper to body.
8. Fit bolt securing centre of bumper to body and tighten to 6 Nm.
9. Fit bolts securing lower edge of bumper to body and tighten to 6 Nm.
10. Move wheel arch liners aside, fit flange nuts securing bumper to both wings and tighten to 10 Nm..
11. Fit screws securing bumper to wheel arch liners.
12. Fit nuts securing bumper to bonnet locking platform and tighten to 3 Nm.
13. Fit front fog lights - if fitted. ***See ELECTRICAL, Repairs.***
14. Clean mating faces of number plate and bumper to ensure both are free from grease and dirt.
15. Attach adhesive pads to rear of number plate.
16. Fit number plate to bumper.

FRONT BUMPER ARMATURE

Service repair no - 76.22.49

Remove

1. Remove front bumper. ***See this section.***

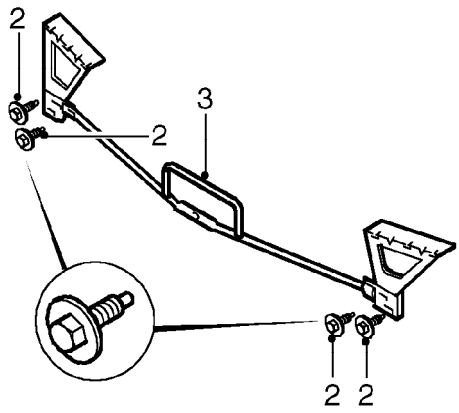

76M1844

2. Remove 4 bolts securing armature to body.
3. Remove armature.

Refit

1. Position armature to body and fit and tighten bolts to 10 Nm.
2. Fit front bumper. ***See this section.***

FRONT GRILLE

Service repair no - 76.55.03

Remove

1. Remove front bumper. ***See this section.***

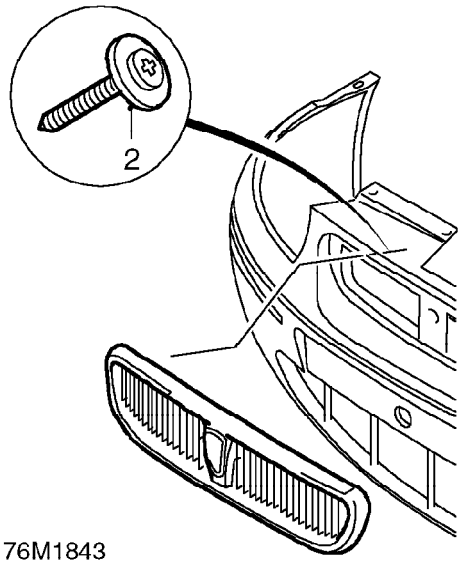

2. Remove 10 screws and remove grille.

Refit

1. Fit grille and secure with screws.
2. Refit front bumper. ***See this section.***

REAR BUMPER

Service repair no - 76.22.15

Remove

1. Open tailgate.

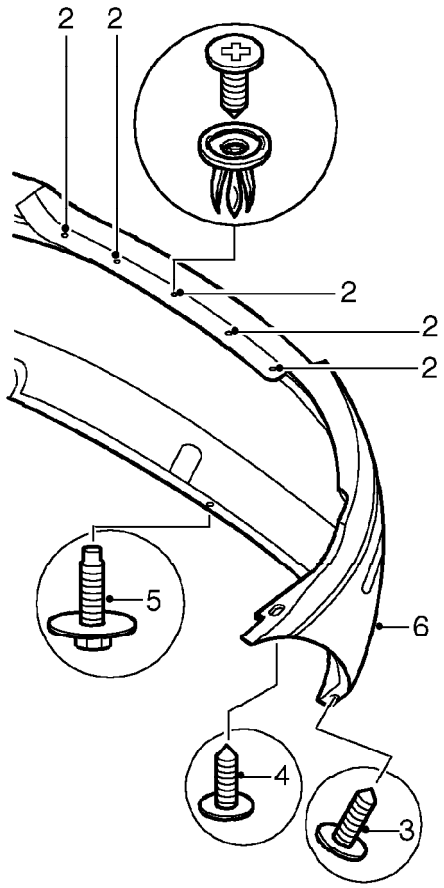

2. Remove 5 scrivets securing upper edge of bumper to body.
3. Remove screw either side securing bumper to wheel arch liner.
4. Remove screw either side securing bumper to rear wing.
5. Remove bolt securing lower edge of bumper to underbody.
6. Remove rear bumper.

Refit

1. Fit rear bumper to body.
2. Fit bolt securing lower edge and tighten to 6 Nm.
3. Fit screws securing ends of bumper to rear wing.
4. Fit screws securing ends of bumper to wheel arch liners.
5. Fit scrivets securing upper edge of bumper.

TAILGATE SPOILER

Service repair no - 76.10.93

Remove

1. Remove tailgate upper finisher. ***See Interior trim components.***

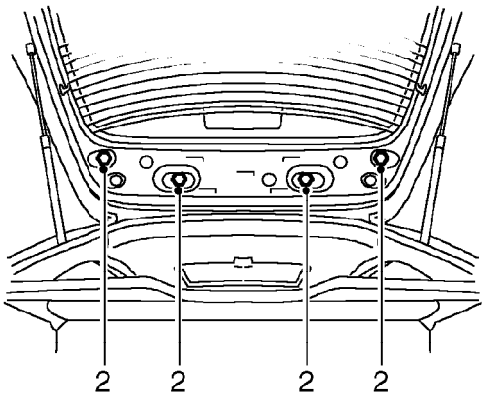

76M1821

2. Remove 4 bolts securing spoiler to tailgate.

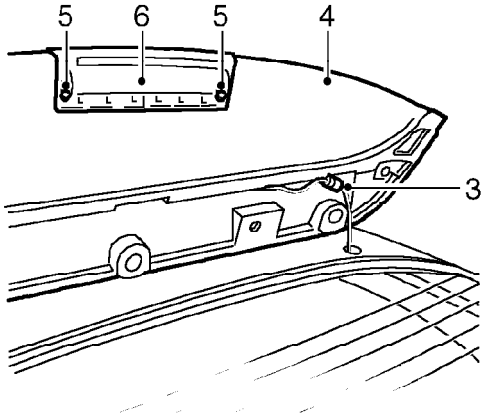

76M1822

3. Lower tailgate and move spoiler aside to gain access to centre high mounted stop light multiplug.
4. Disconnect centre high mounted stop light multiplug and remove spoiler.

Do not carry out further dismantling if component is removed for access only.

5. Remove 2 screws securing centre high mounted stop light to spoiler.
6. Remove centre high mounted stop light.

Refit

1. Fit centre high mounted stop light to spoiler and secure with screws.
2. Position spoiler to tailgate and connect centre high mounted stop light multiplug.
3. Fit bolts securing spoiler to tailgate and tighten to 6 Nm.
4. Fit tailgate upper finisher. ***See Interior trim components.***

TAILGATE APPLIQUE

Service repair no - 76.28.76

Remove

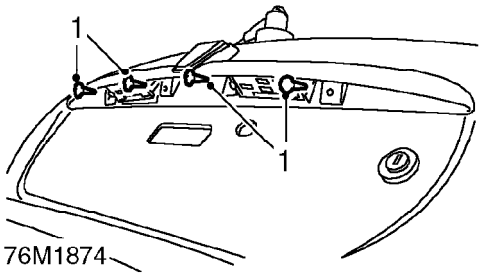

1. Using special tool **18G 1766** , remove 4 fixings securing applique to tailgate.

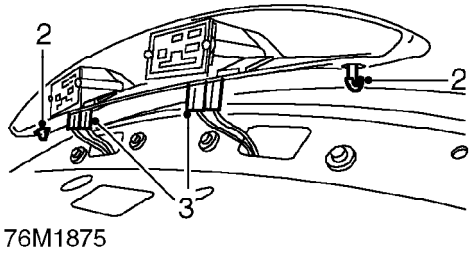

2. Release 2 clips securing applique to tailgate.
3. Disconnect 4 Lucars from number plate lights and remove applique.

Do not carry out further dismantling if component is removed for access only.

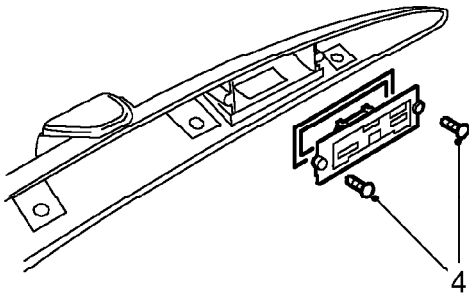

76M1876

4. Remove 4 screws securing number plate lights.
5. Remove tailgate lights and fit to new applique.
6. Fit and tighten screws securing lights to applique.
7. Fit self adhesive badge to applique.

Refit

1. Position applique to tailgate and connect number plate light Lucars.
2. Fit applique to tailgate and secure with clips.
3. Fit and tighten screws securing applique to tailgate to 2 Nm.

FRONT DOOR RUBBING STRIP

Service repair no - 76.43.66

Remove

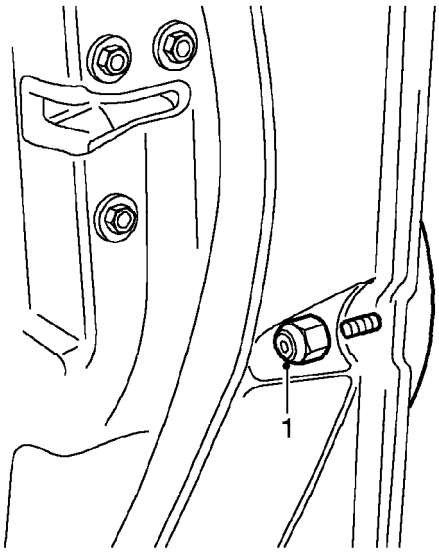

76M1928

1. Remove nut securing rear edge of rubbing strip to door.
2. Remove plastic sheet from door. ***See Interior trim components.***

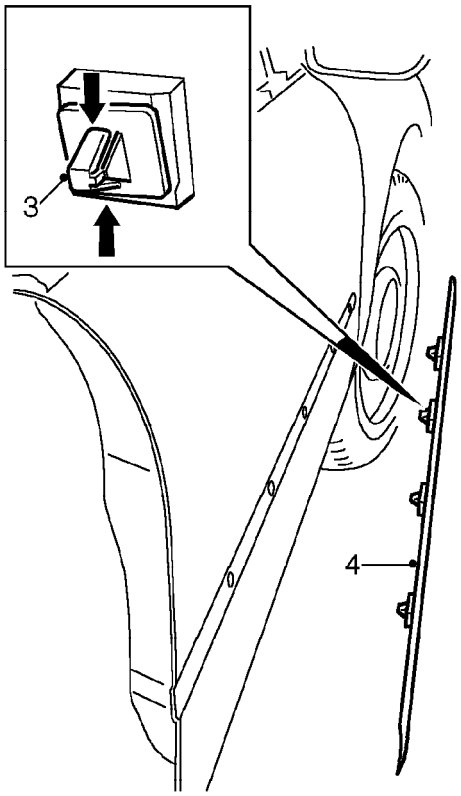

76M1929

3. Compress tags on clips and release rubbing strip from door.
4. Remove rubbing strip from door.

Do not carry out further dismantling if component is removed for access only.

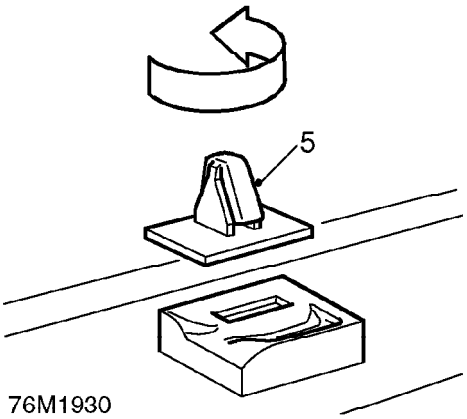

76M1930

5. Rotate clips to remove from rubbing strip.
6. Fit clips to new rubbing strip.

Refit

1. Fit rubbing strip to door and secure with clips.
2. Fit and tighten nut securing rubbing strip to door to 0.5 Nm.
3. Fit plastic sheet to door. ***See Interior trim components.***

REAR DOOR RUBBING STRIP

Service repair no - 76.43.86

Remove

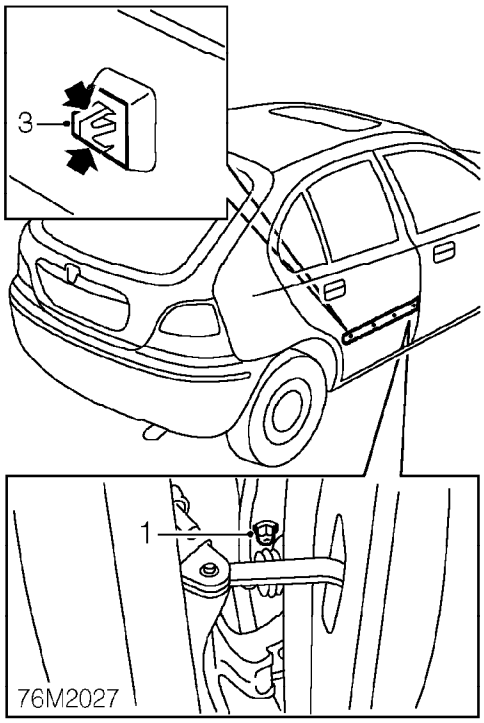

1. Remove nut securing forward edge of rubbing strip to door.
2. Remove rear door plastic sheet. ***See Interior trim components.***
3. Compress tags on 3 clips and release rubbing strip from door.
   Do not carry out further dismantling if component is removed for access only.

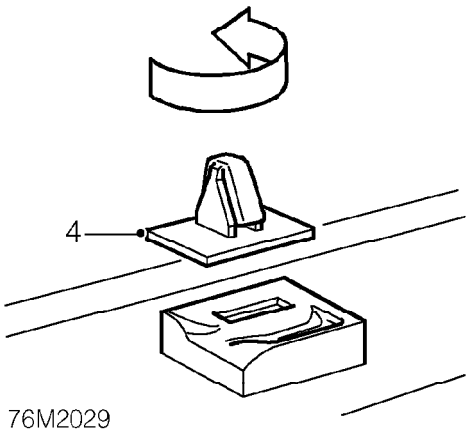

4. Remove clips from rubbing strip by rotating and fit to new.

Refit

1. Fit rubbing strip to door and secure with clips.
2. Fit and tighten nut securing forward edge of rubbing strip to door.
3. Fit rear door plastic sheet. ***See Interior trim components.***

REAR QUARTER RUBBING STRIP

Service repair no - 76.43.87

Remove

1. Remove rear quarter lower trim casing. ***See Interior trim components.***

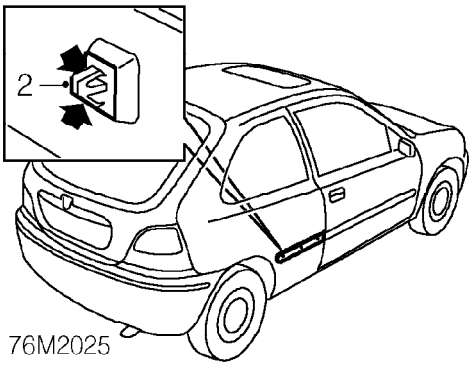

2. Compress tags on 3 clips and release rubbing strip from rear quarter panel.
   Do not carry out further dismantling if component is removed for access only.

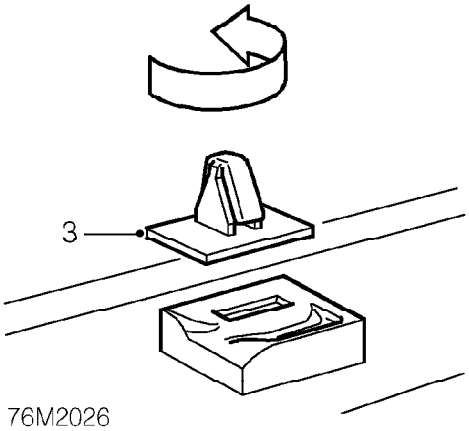

3. Remove clips from rubbing strip by rotating and fit to new.

Refit

1. Fit rubbing strip to rear quarter panel and secure with clips.
2. Fit rear quarter lower trim casing. ***See Interior trim components.***

FRONT TREAD PLATE

Service repair no - 76.76.01

Remove

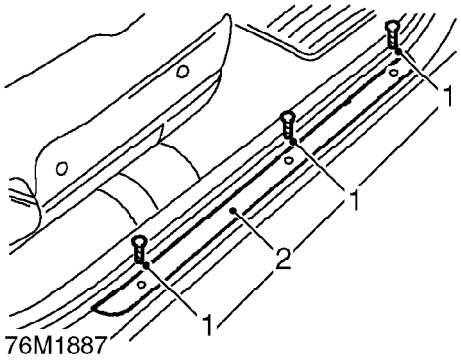

1. Remove 3 screws securing tread plate to sill.
2. Release tread plate from door seal and remove.

Refit

1. Fit tread plate to door sill and seal.
2. Secure tread plate with screws.

REAR TREAD PLATE

Service repair no - 76.76.02

Remove

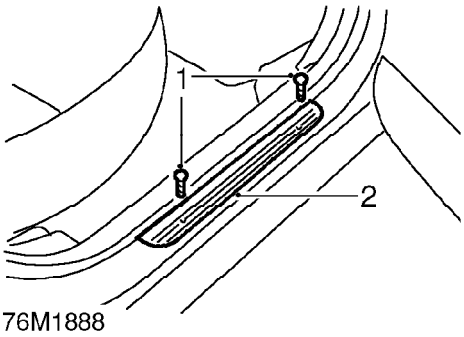

1. Remove 2 screws securing tread plate to sill.
2. Release tread plate from door seal and remove.

Refit

1. Fit tread plate to door sill and seal.
2. Secure tread plate with screws.

REAR QUARTER GLASS - 3 DOOR

Service repair no - 76.81.24

Remove

1. Remove rear quarter trim casing. ***See Interior trim components.***

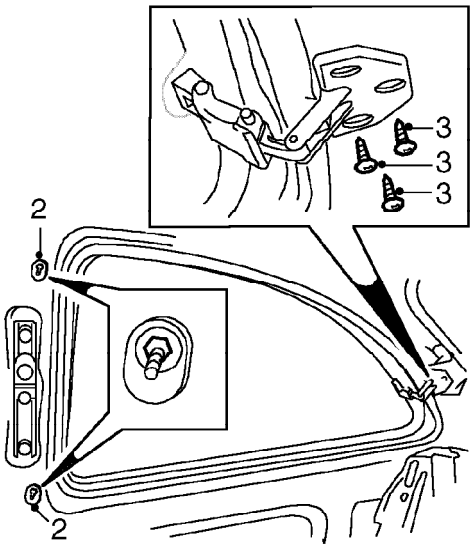

2. Remove 2 nuts securing window to body.
3. Remove 3 screws securing window latch to body.

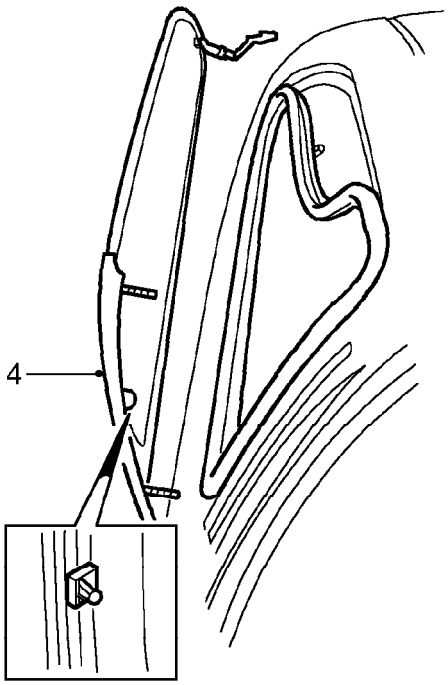

76M1913

4. Release window from clip on ’B’ post and remove.
   Do not carry out further dismantling if component is removed for access only.
5. Remove screw securing latch to window.
6. Remove latch and fit to new glass.
7. Fit and tighten screw securing latch to glass.

Refit

1. Position window to body and secure to clip on ’B’ post.
2. Fit nuts securing window to body and tighten to 9 Nm.
3. Fit screws securing window latch to body and tighten to 4 Nm.
4. Fit rear quarter trim casing. ***See Interior trim components.***

REAR CONSOLE

Service repair no - 76.25.04

Remove

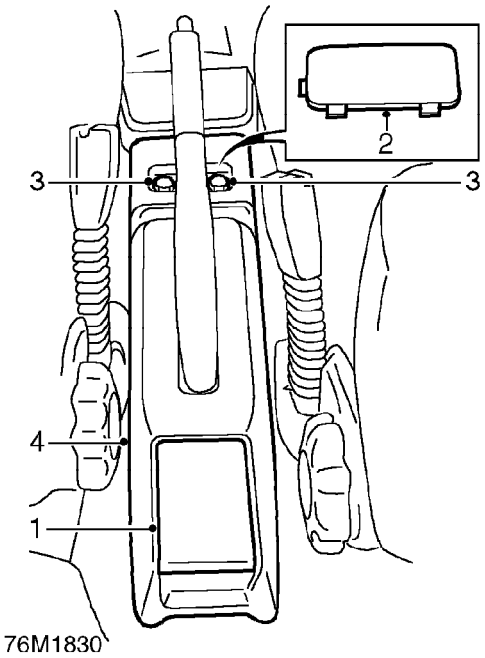

1. Remove rear ash tray.
2. Remove finisher from console.
3. Remove 2 bolts securing console to body.
4. Remove rear console.

Refit

1. Align rear console to front console.
2. Fit bolts securing rear console to body and tighten to 3 Nm.
3. Fit finisher to console.
4. Fit rear ash tray.

FRONT CONSOLE

Service repair no - 76.25.01

Remove

1. Remove rear console. ***See this section.***
2. Remove radio. ***See ELECTRICAL, Repairs.***
3. *BRM :-* Unscrew gear knob.
4. *Except BRM :-* Release gaiter and remove gear knob.
5. *Manual windows :-* Remove trim finisher from console.
6. *Electric windows :-* Remove trim finisher from console and noting their fitted positions, disconnect multiplugs from switches.
7. Remove 4 screws securing front console to fascia.
8. Release front console from fascia to gain access to multiplugs.
9. Release fog light, hazard and heated rear screen multiplugs.
10. Release Lucar and multiplug from cigar lighter.
11. Remove front console.
    Do not carry out further dismantling if component is removed for access only.
12. Remove fog light, hazard, and heated rear screen switches.
13. Remove 2 switch blanks from console.
14. Remove 4 screws and collect switch bezel.
15. Bend 8 tabs to release radio cage from console.
16. Remove ashtray.
17. Remove 3 screws and collect ashtray mounting bracket.
18. Remove cigar lighter element from holder.
19. Remove bulb holder from cigar lighter holder.
20. Depress clips and release cigar lighter holder from console.
21. Remove 4 screws and collect cassette tray.

Except BRM

22. Remove 2 screws securing gaiter clamp to console.
23. Remove gaiter clamp and gaiter.

BRM

24. Remove 5 screws and self-locking nuts securing gaiter finisher, discard nuts.
25. Remove gaiter and finisher.
26. Remove 2 screws securing clamp to console, remove clamp.

Except BRM

27. Position gaiter and clamp to console.
28. Fit and tighten 2 screws.

BRM

29. Fit clamp, fit and tighten 2 screws
30. Position gaiter and finisher to console.
31. Fit 5 screws and new self-locking nuts, tighten nuts to 3 Nm.

All models

32. Fit cassette tray to console and secure with screws.
33. Fit cigar lighter holder to console.
34. Fit bulb holder and element to cigar lighter.
35. Fit ashtray mounting bracket to console and secure with screws.
36. Fit ashtray to console.
37. Fit radio cage to console and bend tabs to secure.
38. Fit switch bezel to console and secure with screws.
39. Fit switch blanks to console.
40. Fit fog light, hazard, and heated rear window switches to console.

Refit

1. Position front console to fascia and connect multiplugs to fog light, hazard, and heated rear screen switches.
2. Connect Lucar and multiplug to cigar lighter.
3. Fit screws securing front console to fascia.
4. *Electric windows :-* Connect multiplugs to switches, fit trim finisher to console.
5. *Manual windows :-* Fit trim finisher to console.
6. *BRM :-* Fit and tighten gear knob.
7. *Except BRM :-* Fit gear knob and secure gaiter.

NOTE: For correct fitment of gear knob, turn through 13 complete revolutions.

8. Fit radio. ***See ELECTRICAL, Repairs.***
9. Fit rear console. ***See this section.***

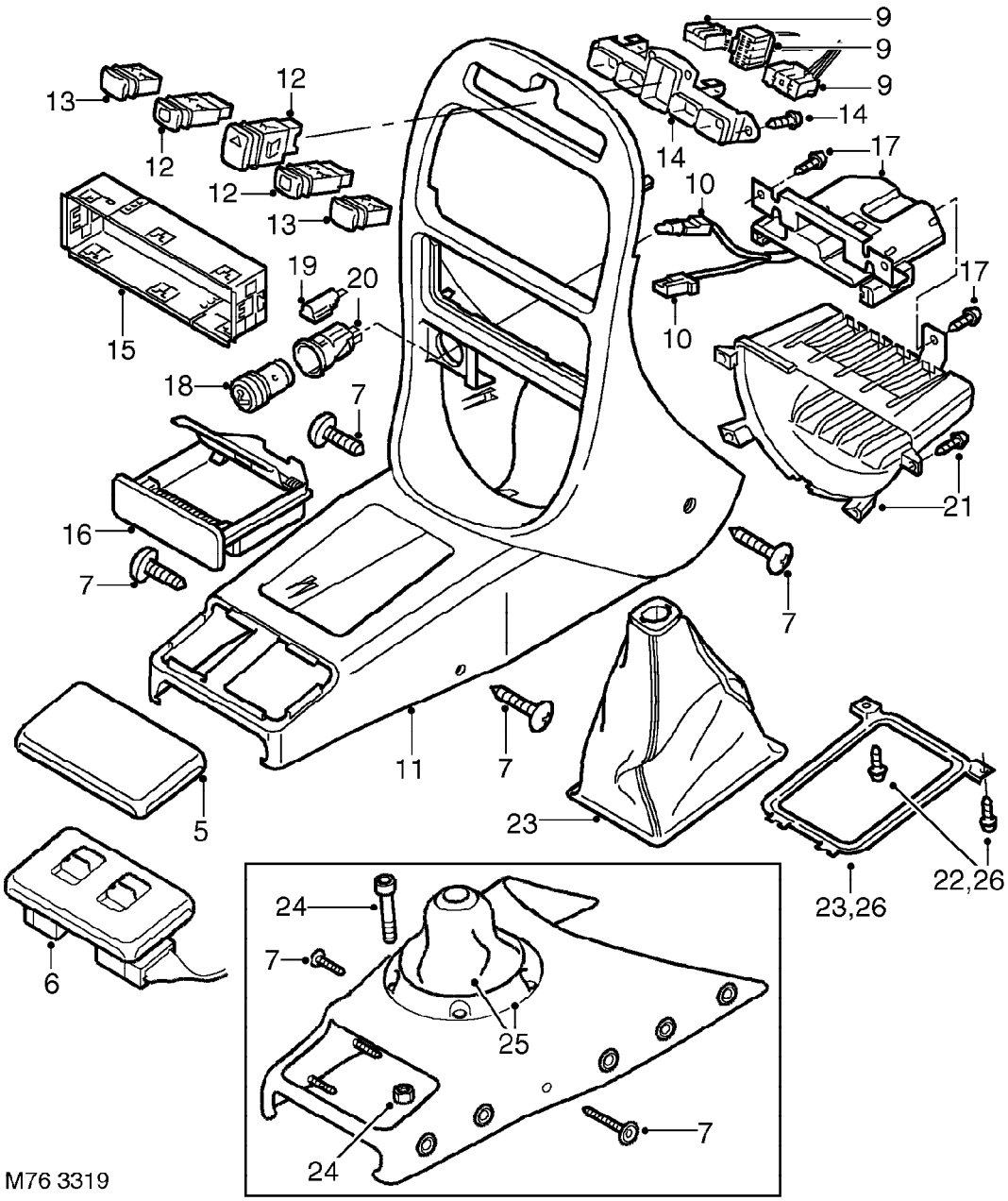

NOTE: BRM components shown in inset.

FRONT CONSOLE TRIM PAD - BRM

Service repair no - 76.25.25

Remove

1. Remove front console. ***See this section.***

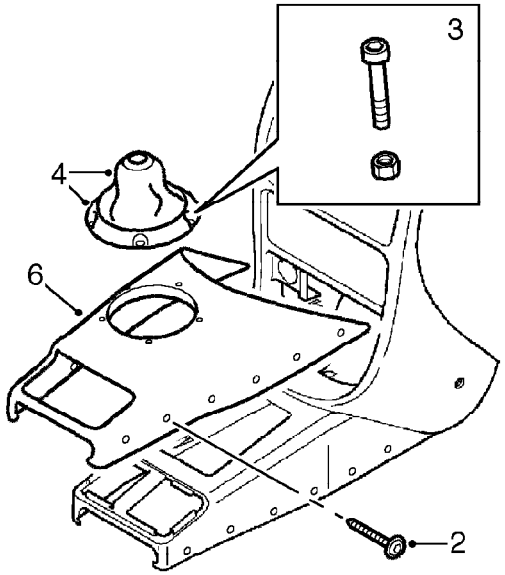

M76 3320

2. Remove 5 screws and cup washers securing trim pad to each side of console.
3. Remove 5 screws and self-locking nuts securing gaiter finisher, discard nuts.
4. Remove finisher and gaiter.
5. Make suitable reference marks to enable replacement trim pad to be positioned correctly on console.
6. Carefully release trim pad from adhesive, remove trim pad.

Refit

1. Remove all traces of adhesive from console using suitable solvent.

CAUTION: Ensure that solvent used does not react adversely with console material.

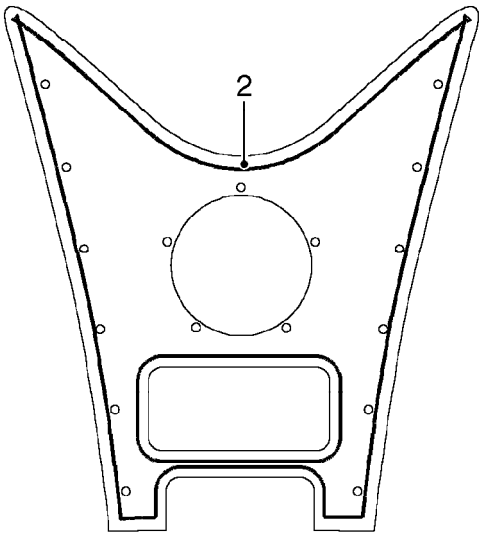

M76 3429

2. Apply continuous bead of suitable adhesive to replacement trim pad as shown.
3. Position trim pad to console ensuring that reference marks are aligned.
4. Fit gaiter and finisher to console, fit 5 screws and new self-locking nuts.
5. Tighten nuts to 3 Nm.
6. Fit 5 screws and cup washers to secure each side of trim pad to console.

NOTE: Do not fit console securing screws at this stage.

7. Fit front console. ***See this section.***

FASCIA

Service repair no - 76.46.23.99

Remove

WARNING: Refer to SRS section for safety precautions.

1. Disconnect both battery leads, earth lead first.
2. Remove front console. ***See this section.***

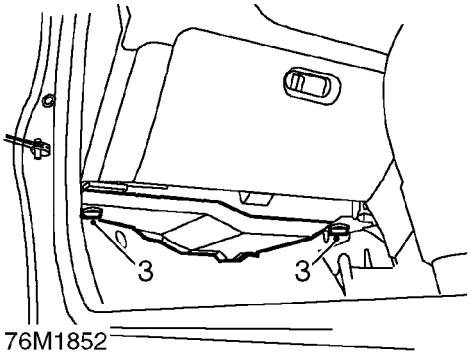

3. Release 2 turnbuckles and remove passengers side lower cover.
4. Remove glove box. ***See this section.***

Models fitted with passenger airbag:

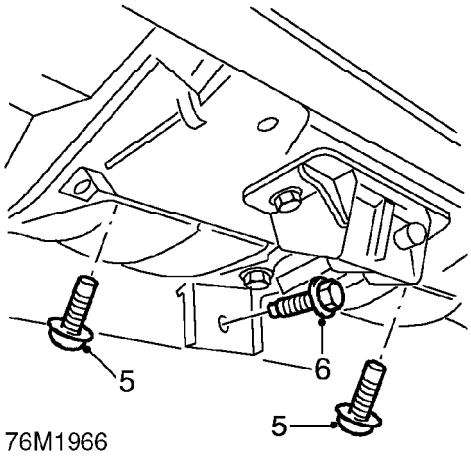

5. Remove 2 Torx screws securing passenger airbag to fascia.
6. Remove bolt securing passenger airbag support bracket to support arm.

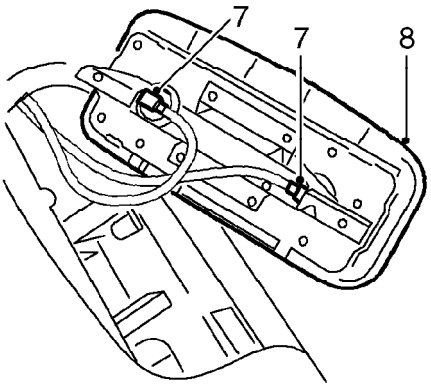

7. Release passenger airbag from fascia and disconnect 2 multiplugs.
8. Remove passenger airbag.

All models:

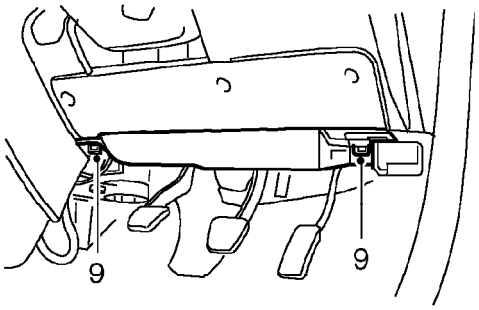

76M1853

9. Release 2 turnbuckles and remove drivers side lower cover.
10. Remove heater controls. ***See HEATING & VENTILATION, Repairs.***
11. Remove steering column. ***See STEERING, Repairs.***

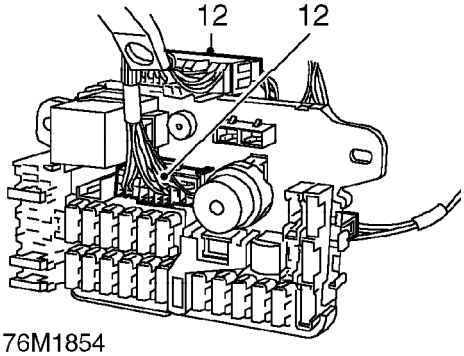

76M1854

12. Disconnect 2 fascia harness multiplugs from fusebox.

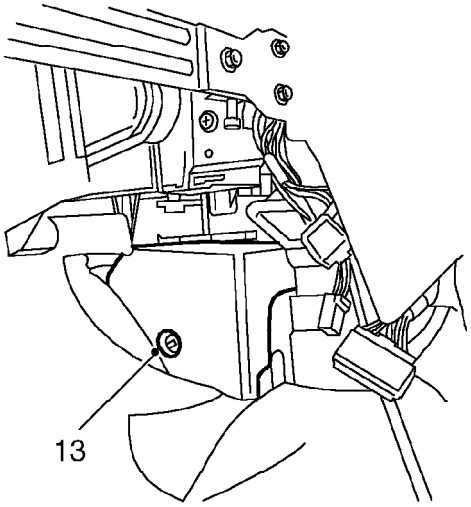

76M1855

13. Remove 2 scrivets securing cover to SRS control unit and remove cover.

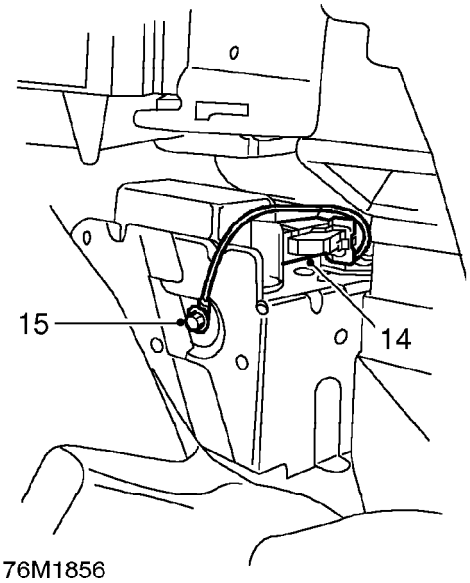

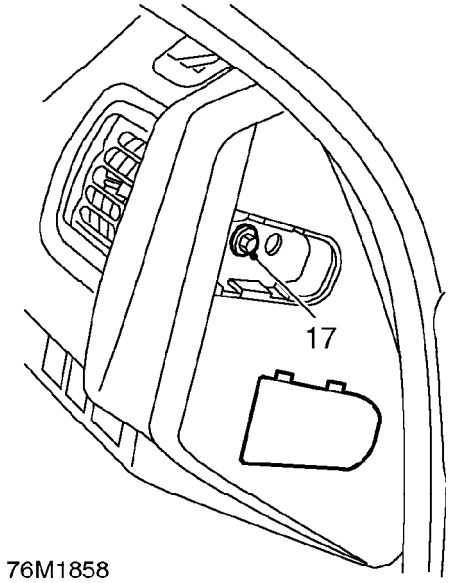

14. Disconnect multiplug from SRS control unit.
15. Remove bolt securing SRS harness earth strap to body.

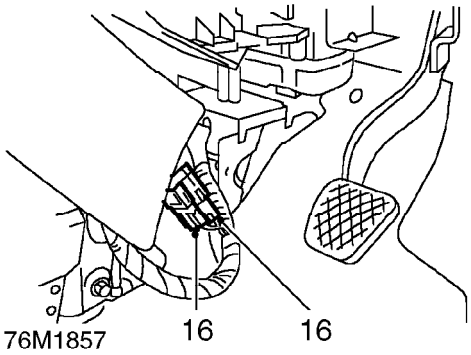

16. Disconnect 2 multiplugs from SRS harness.

17. Remove end covers from fascia and remove bolts securing fascia to body.

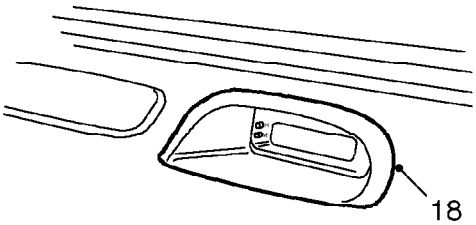

18. Remove finisher from clock.

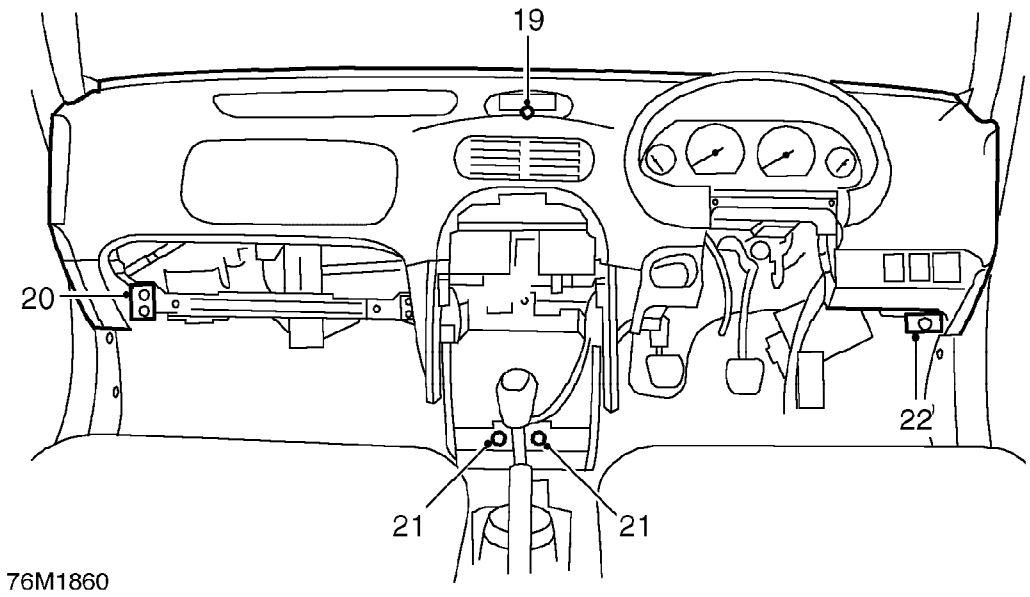

19. Remove nut securing fascia to body.
20. Remove bolt securing passengers side of fascia to mounting bracket.
21. Remove 2 bolts securing centre of fascia to mounting bracket.
22. Remove bolt securing drivers side of fascia to mounting bracket.
23. Remove fascia.

Refit

1. Position fascia to vehicle.
2. Fit centre mounting nut and tighten to 9 Nm.
3. Fit bolt securing drivers side of fascia to mounting bracket and tighten to 9 Nm.
4. Fit bolts securing centre of fascia to mounting bracket and tighten to 9 Nm.
5. Fit bolt securing passengers side of fascia to mounting bracket and tighten to 9 Nm.
6. Fit bolts securing ends of fascia to body.
7. Fit end covers to fascia.
8. Fit finisher to clock.
9. Connect SRS harness multiplugs.
10. Fit bolt securing SRS harness earth strap and tighten to 9 Nm.
11. Connect multiplug to SRS control unit.
12. Fit cover to SRS control unit and secure with scrivets.
13. Connect multiplugs to interior fusebox.
14. Fit steering column. ***See STEERING, Repairs.***
15. Fit heater controls. ***See HEATING & VENTILATION, Repairs.***
16. Fit drivers side lower cover and secure turnbuckles.

Models fitted with passenger airbag:

17. Fit bolt securing passenger airbag support bracket to support arm and tighten to 9 Nm.
18. Position passenger airbag to fascia and connect multiplugs.
19. Fit passenger airbag to fascia. Fit and tighten Torx screws to 9 Nm.

All models:

20. Fit glove box. ***See this section.***
21. Fit passengers side lower cover and secure turnbuckles.
22. Fit front console. ***See this section.***
23. Connect both battery leads, earth lead last.

FASCIA VENEERED PANEL

Service repair no - 76.46.24

CAUTION: Fit protection to fascia before removing veneered panel.

Remove

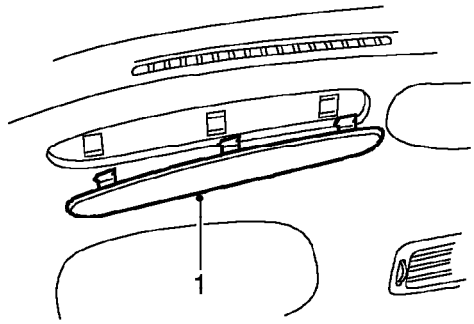

76M1931

1. Using a flat blade, carefully release veneered panel from fascia and remove.

Refit

1. Position panel to fascia and secure clips.

GLOVE BOX

Service repair no - 76.52.02

Remove

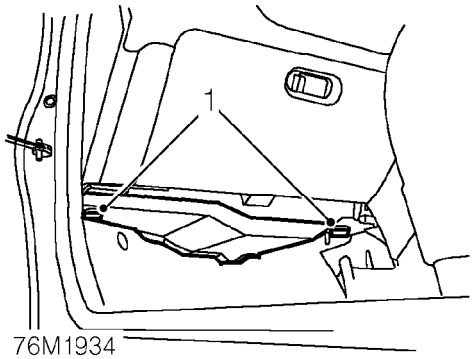

76M1934

1. Release 2 turnbuckles and remove lower closing panel.

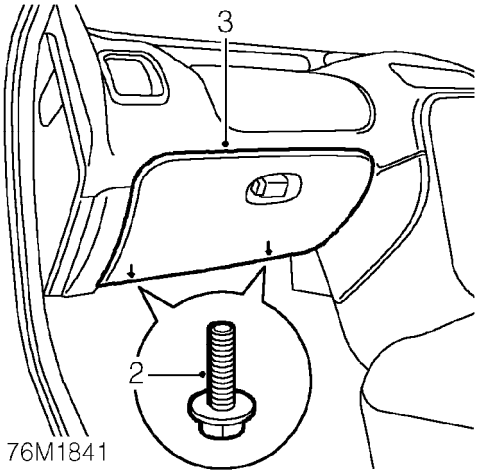

76M1841

2. Remove 2 screws securing glove box to fascia.
3. Remove glove box.

Refit

1. Fit glove box to fascia and tighten screws to 10 Nm.
2. Fit lower closing panel to fascia and secure turnbuckles.

GLOVE BOX LATCH

Service repair no - 76.52.08

Remove

1. Open glove box.

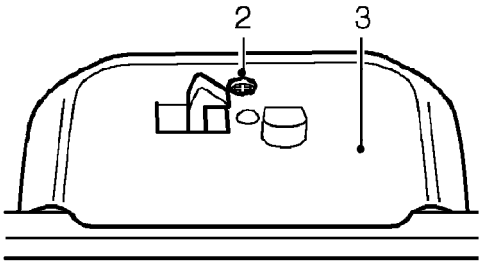

76M1840

2. Remove screw securing latch to glove box.
3. Remove latch.

Refit

1. Fit latch to glove box and secure with screw.
2. Close glove box.

FUSE BOX COVER

Service repair no - 76.46.30

Remove

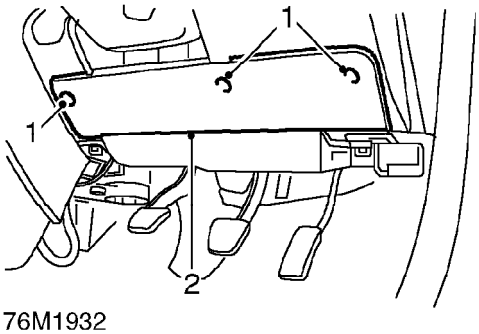

76M1932

1. Release 2 turnbuckles and remove fascia lower cover.
2. Release 3 turnbuckles securing fuse box cover to fascia.
3. Release cover from fascia.

Refit

1. Fit fuse box cover to fascia and secure turnbuckles.
2. Position fascia lower cover and secure turnbuckles.

'A' POST UPPER TRIM CASING

Service repair no - 76.13.26

Remove

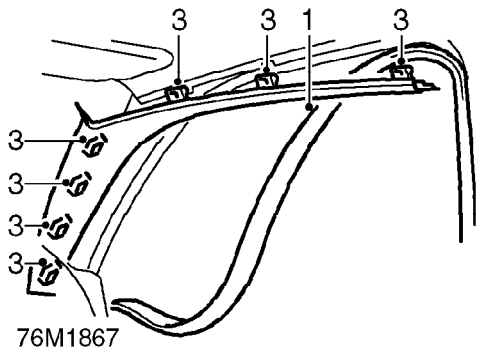

1. Open front door and pull seal away from aperture to gain access to trim casing.
2. Release 'A' post trim casing from behind 'B' post trim.
3. Release 'A' post trim from 7 clips and remove.

Refit

1. Position 'A' post trim to body, 'B' post trim, and fascia.
2. Secure 'A' post trim to clips.
3. Fit front door seal to aperture.

'A' POST LOWER TRIM CASING

Service repair no - 76.13.27

Remove

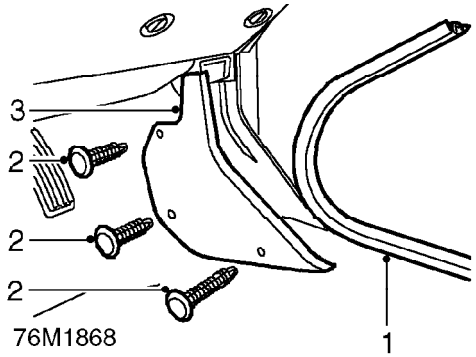

1. Open door and remove seal from front door aperture to gain access to trim casing.
2. Remove 3 trim studs securing trim casing to 'A' post.
3. Remove trim casing.

Refit

1. Fit trim casing to 'A' post and secure with trim studs.
2. Fit seal to front door aperture.

’B’ POST LOWER TRIM CASING - 5 DOOR

Service repair no - 76.13.29

Remove

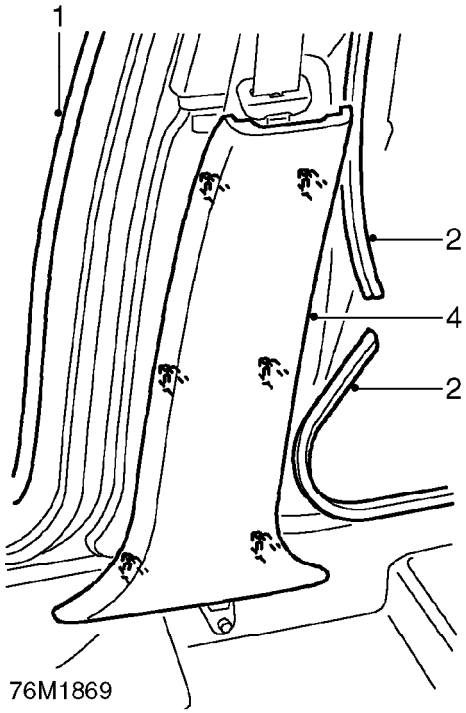

1. Open front door and remove seal from aperture to gain access to ’B’ post trim casing.
2. Open rear door and remove seal from aperture to gain access to ’B’ post trim casing.
3. Release trim casing from 6 clips.
4. Remove trim casing.

Refit

1. Fit trim casing to ’B’ post and secure with clips.
2. Fit rear door seal to aperture.
3. Fit front door seal to aperture.

REAR QUARTER TRIM CASING - 3 DOOR

Service repair no - 76.13.13

Remove

1. Remove rear quarter lower trim casing. ***See this section.***

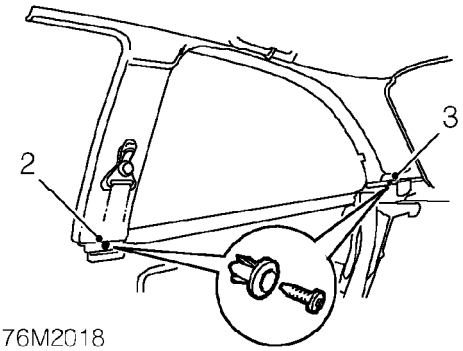

2. Remove scrivet securing trim casing to ’B’ post.
3. Remove scrivet securing trim casing to ’D’ post.

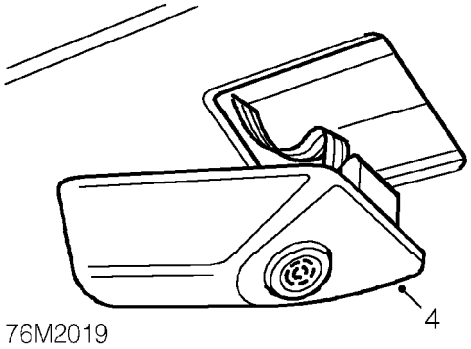

4. Release volumetric sensor from trim casing and disconnect multiplug.

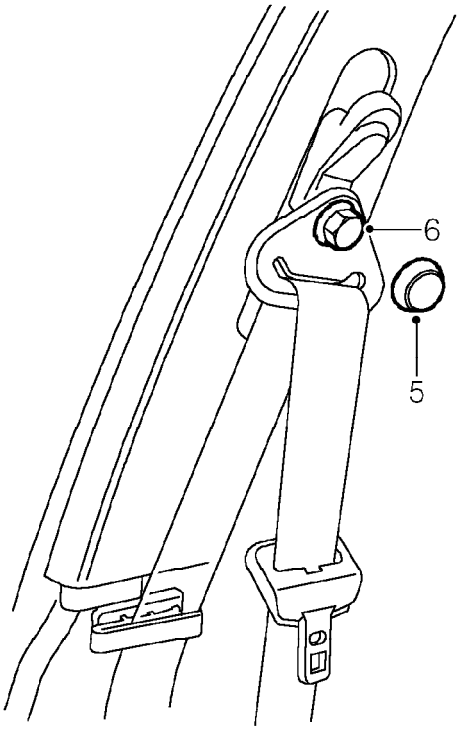

76M2020

5. Remove cover from seat belt upper anchorage bolt.
6. Remove seat belt upper anchorage bolt and discard.

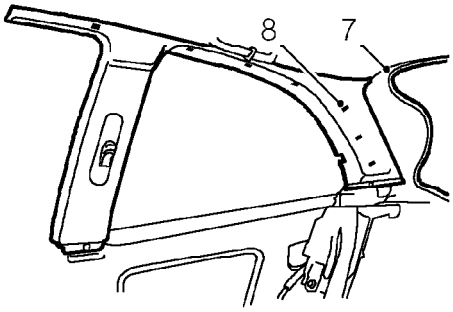

76M2021

7. Remove tailgate aperture seal.
8. Release trim casing from 7 clips and remove.

Refit

1. Fit trim casing and secure clips.
2. Fit scrivet securing trim casing to ’D’ post.
3. Fit tailgate aperture seal.
4. Fit seat belt upper anchorage bolt and tighten to 50 Nm.
5. Fit cover to anchorage bolt.
6. Connect multiplug to volumetric sensor and secure to trim casing.
7. Fit scrivet securing trim casing to ’B’ post.
8. Fit rear quarter lower trim casing. ***See this section.***

REAR QUARTER TRIM CASING - 5 DOOR

Service repair no - 76.13.13

Remove

1. Remove 'B' post lower trim casing. ***See this section.***

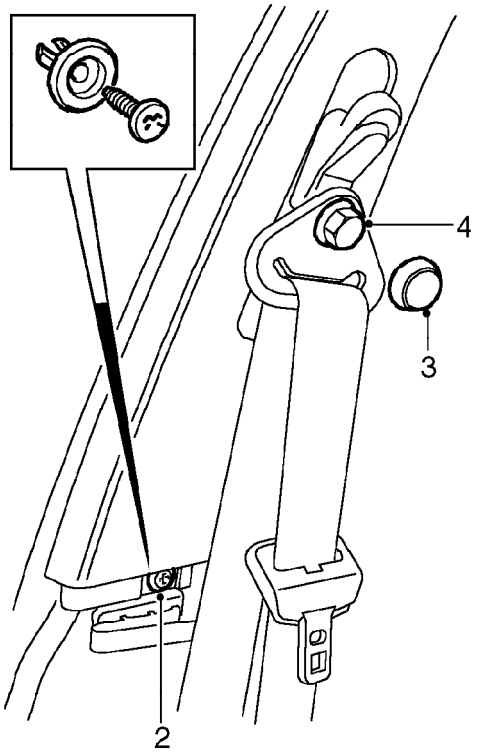

76M1864

2. Remove scrivet securing trim casing to 'B' post.
3. Remove cover from seat belt upper anchorage bolt.
4. Remove seat belt upper anchorage bolt and discard.

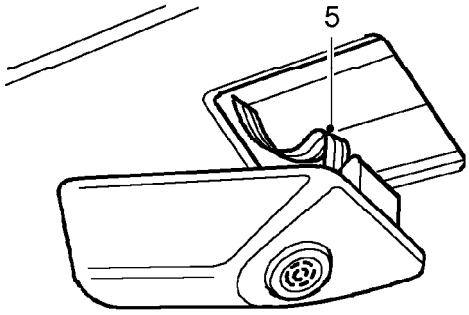

76M1865

5. Release volumetric sensor from trim casing and disconnect multiplug.

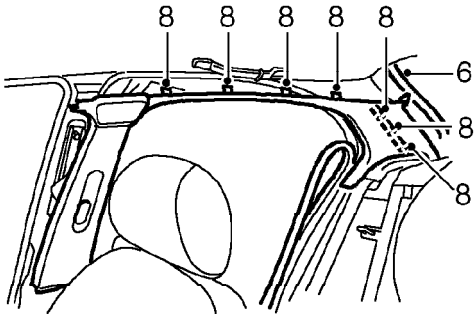

76M1866

6. Open tailgate and remove seal from aperture.
7. Fold rear seat forward.
8. Release trim casing from 7 clips and remove.

Refit

1. Position trim casing to body and secure to clips.
2. Fit tailgate aperture seal and reposition rear seat.
3. Fit seat belt upper anchorage bolt and tighten to 50 Nm.
4. Fit cover to upper anchorage bolt.
5. Connect multiplug to volumetric sensor and secure to trim casing.
6. Fit scrivet securing trim casing to 'B' post.
7. Fit 'B' post lower trim casing. ***See this section.***

HEADLINING

Service repair no - 76.64.15

Remove

1. Remove both 'A' post upper trim casings. ***See this section.***
2. Remove both rear quarter trim casings. ***See this section.***

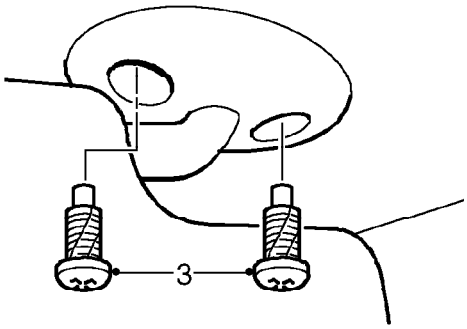

76M1877

3. Release sun visors from clips and remove 2 screws securing each sun visor.
4. Remove sun visors.

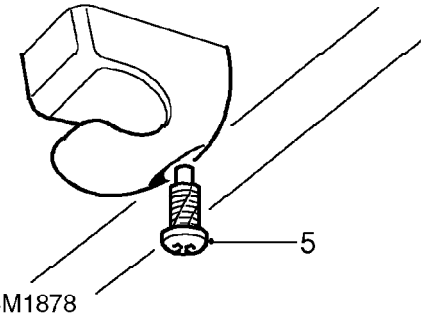

76M1878

5. Remove 2 screws securing sun visor clips.
6. Remove both clips.
7. Remove interior light. ***See ELECTRICAL, Repairs.***

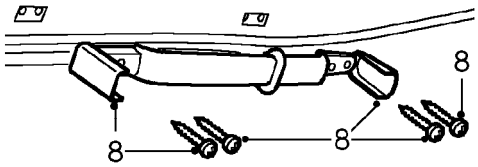

76M1879

8. Remove 2 covers and 4 screws securing each grab handle.
9. Remove both grab handles.

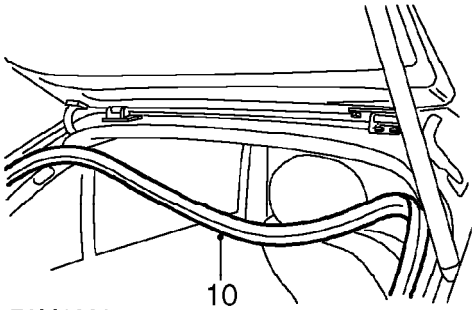

76M1880

10. Release sealing rubber from top of tailgate aperture.

Models fitted with sun roof:

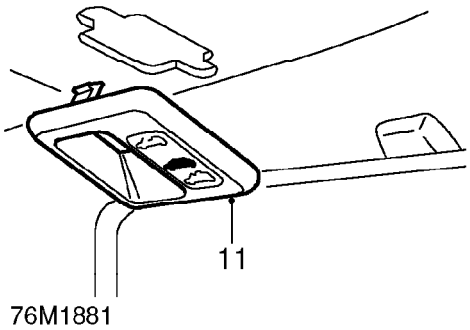

11. Remove sun roof switch escutcheon.

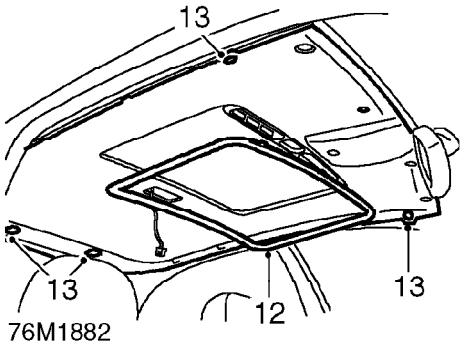

12. Remove trim finisher from sun roof aperture.

All models:

13. Release 4 trim clips securing headlining to roof.
14. Remove headlining.

NOTE: Take care not to bend headlining on removal and refitting.

Refit

1. With assistance position headlining to roof.
2. Fit trim clips securing headlining to roof.

Models fitted with sun roof:

3. Fit trim finisher to sun roof aperture.
4. Fit sun roof switch escutcheon.

All models:

5. Fit sealing rubber to top of tailgate aperture.
6. Fit grab handles to roof and secure with screws.
7. Fit interior light. ***See ELECTRICAL, Repairs.***
8. Fit sun visor clips to roof and secure with screws.
9. Fit sun visors to roof and secure with screws.
10. Fit both rear quarter trim casings. ***See this section.***
11. Fit both 'A' post upper trim casings. ***See this section.***

PARCEL TRAY SUPPORT PANEL - 3 DOOR

Service repair no - 76.67.11

Remove

1. Remove parcel tray.

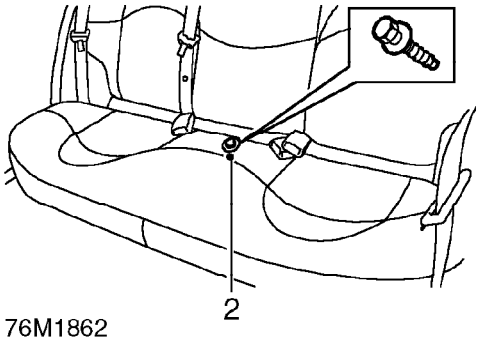

76M1862

2. Remove rear seat cushion. ***See Seats and seat belts.***

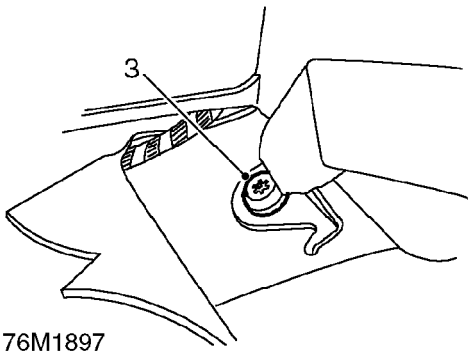

76M1897

3. Remove rear seat belt lower anchorage bolt and discard.

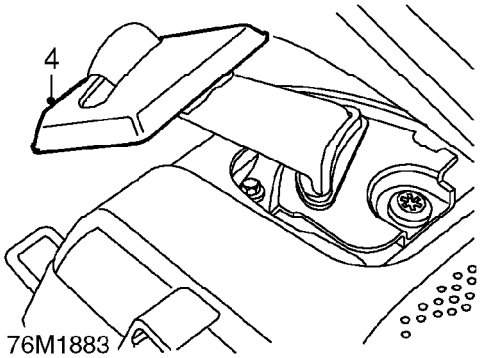

76M1883

4. Remove seat belt upper anchorage trim finisher from parcel tray support panel.

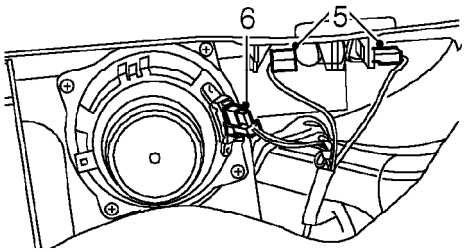

76M1884

5. Disconnect 2 Lucars from luggage compartment light.
6. Disconnect multiplug from rear speaker.

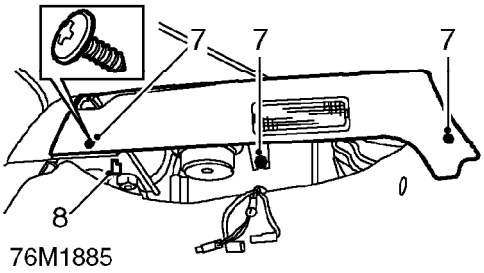

76M1885

7. Remove 2 screws and scrivet securing support panel.
8. Release support panel from clip and remove.

Do not carry out further dismantling if component is removed for access only.

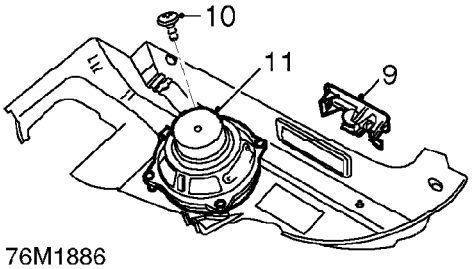

76M1886

9. Remove luggage compartment light from support panel.
10. Remove 4 screws securing rear speaker to support panel.
11. Remove rear speaker and fit to new support panel.
12. Secure speaker with screws.
13. Fit luggage compartment light to support panel.

Refit

1. Fit support panel over rear seat belt and secure to body with clip.
2. Fit screws and scrivet securing support panel to body.
3. Connect multiplug to rear speaker.
4. Connect Lucars to luggage compartment light.
5. Fit upper seat belt anchorage trim finisher.
6. Fit seat belt lower anchorage bolt and tighten to 50 Nm.
7. Fit rear seat cushion. ***See Seats and seat belts.***
8. Fit parcel tray.

PARCEL TRAY SUPPORT PANEL - 5 DOOR

Service repair no - 76.67.11

Remove

1. Remove parcel tray.

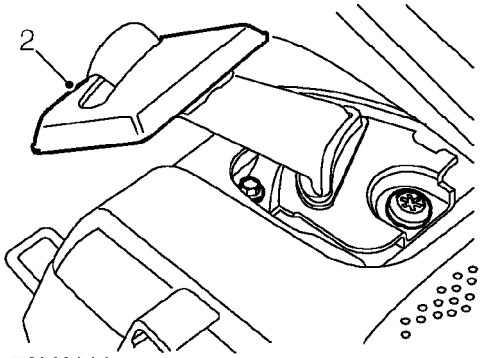

76M2000

2. Remove seat belt upper anchorage trim finisher from parcel tray support panel.

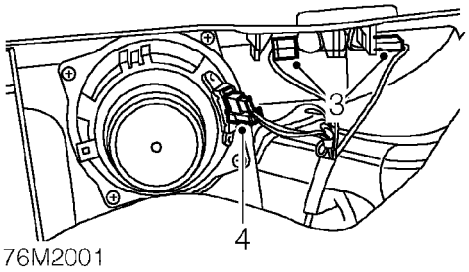

76M2001

3. Disconnect 2 Lucars from luggage compartment light.
4. Disconnect multiplug from rear speaker.

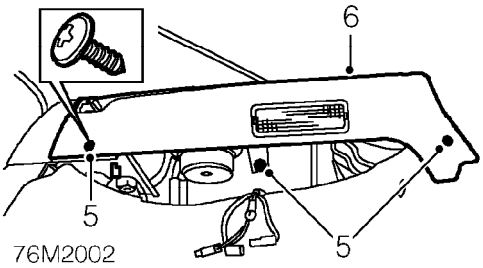

5. Remove 2 screws and scrivet securing support panel.
6. Release support panel from clip and remove.

Do not carry out further dismantling if component is removed for access only.

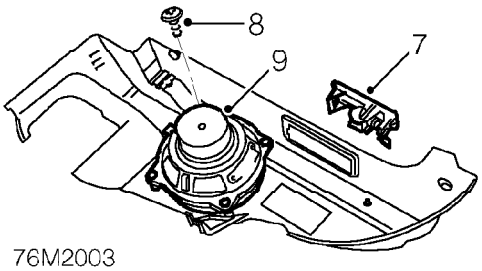

7. Remove luggage compartment light from support panel.
8. Remove 4 screws securing rear speaker to support panel.
9. Remove rear speaker and fit to new.
10. Secure speaker with screws.
11. Fit luggage compartment light to support panel.

Refit

1. Fit support panel over rear seat belt and secure to body with clip.
2. Fit screws and scrivet securing support panel to body.
3. Connect multiplug to rear speaker.
4. Connect Lucars to luggage compartment light.
5. Fit upper seat belt anchorage trim finisher.
6. Fit parcel tray.

REAR QUARTER LOWER TRIM CASING - 3 DOOR

Service repair no - 76.13.12

Remove

1. Remove parcel tray support panel. ***See this section.***
2. Remove rear seat squab. ***See Seats and seat belts.***

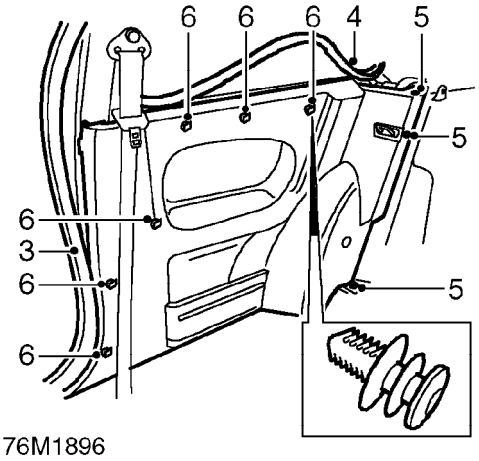

3. Open front door and remove seal from aperture.
4. Open rear window and remove seal from aperture.
5. Remove 3 screws securing trim casing to body.
6. Release trim casing from 6 clips and remove.

Refit

1. Fit trim casing and secure with clips.
2. Fit and tighten screws securing trim casing to body.
3. Fit seal to rear window aperture.
4. Fit seal to front door aperture.
5. Fit rear seat squab. ***See Seats and seat belts.***
6. Fit parcel shelf support panel. ***See this section.***

REAR QUARTER LOWER TRIM CASING - 5 DOOR

Service repair no - 76.13.12

Remove

1. Remove parcel tray support panel. ***See this section.***
2. Remove rear seat squab. ***See Seats and seat belts.***

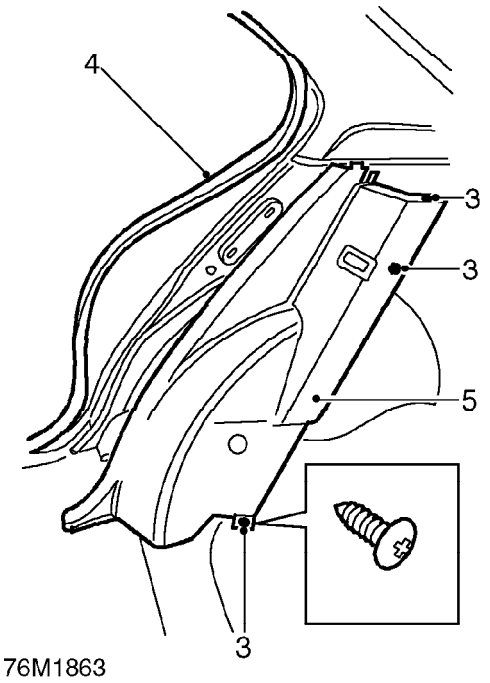

3. Remove 3 screws securing trim casing to body.
4. Remove seal from door aperture.
5. Remove trim casing.

Refit

1. Fit trim casing to body and secure with screws.
2. Fit door seal to aperture.
3. Fit rear seat squab. ***See Seats and seat belts.***
4. Fit rear seat cushion to body.
5. Fit bolts securing cushion to floor and tighten to 10 Nm.
6. Fit parcel shelf support panel. ***See this section.***

LUGGAGE COMPARTMENT SIDE CARPET

Service repair no - 76.49.15

Remove

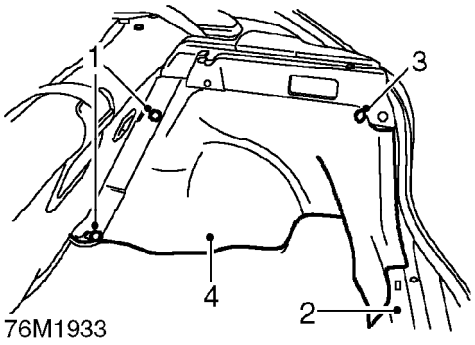

1. Remove 2 screws securing carpet to rear seat squab support panel.
2. Remove luggage compartment trim casing. ***See this section.***
3. Release side carpet from trim stud.
4. Remove carpet.

Refit

1. Fit carpet to vehicle and secure with clip.
2. Fit luggage compartment trim casing. ***See this section.***
3. Fit screws securing carpet to rear seat squab support panel.

LUGGAGE COMPARTMENT TRIM CASING

Service repair no - 76.13.53

Remove

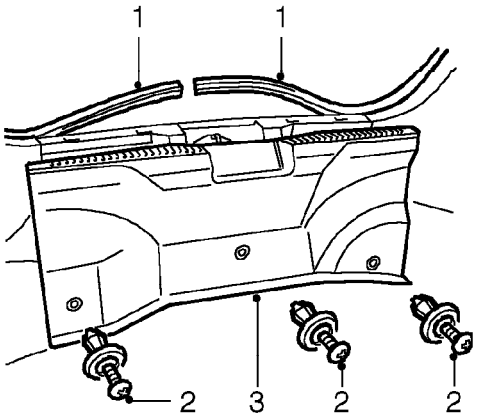

76M1870

1. Remove seal from tailgate aperture.
2. Remove 3 scrivets securing trim casing.
3. Remove trim casing.

Refit

1. Fit trim casing and secure with scrivets.
2. Fit seal to tailgate aperture.

PARCEL TRAY

Service repair no - 76.67.06

Remove

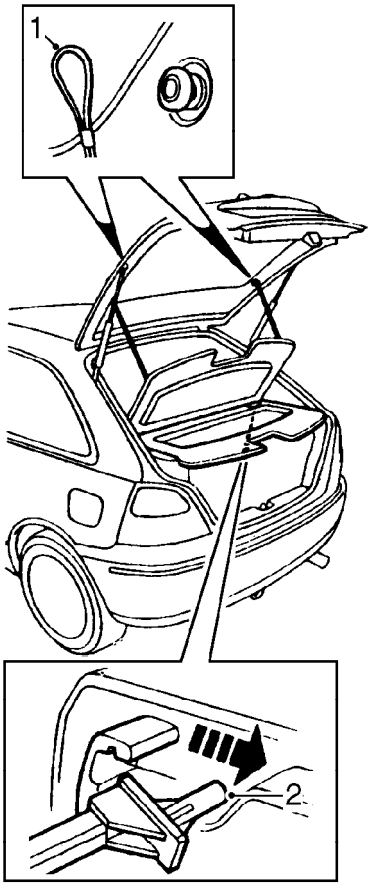

76M1910

1. Release parcel tray cables from tailgate.
2. Release parcel tray from support panels.
3. Remove parcel tray.

Refit

1. Fit parcel tray and secure to support panels.
2. Attach parcel tray cables to tailgate.

WINDSCREEN

Service repair no - 76.81.01

NOTE: The following equipment is required:

Cutting wire and handles.
Windscreen repair kit.
Sealer applicator gun.
Suction cups.

WARNING: Wear protective gloves when handling glass, solvents, and primers.

WARNING: Wear suitable eye protection when removing and refitting glass.

Remove

1. Remove rear view mirror from windscreen.
2. Remove both 'A' post upper trim casings. ***See Interior trim components.***

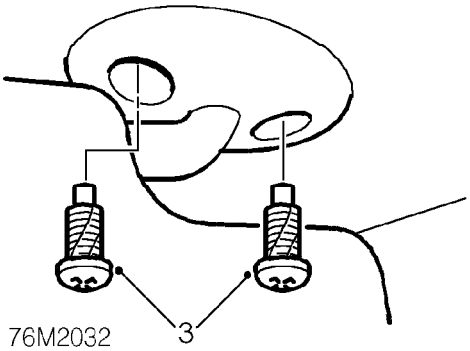

76M2032

3. Remove 4 screws securing both sun visors to headlining.
4. Release sun visors from catches and remove.

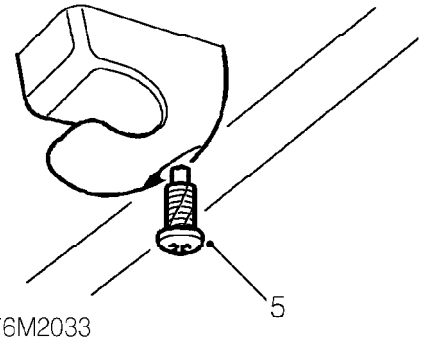

76M2033

5. Remove 2 screws securing both sun visor catches to headlining and remove catches.

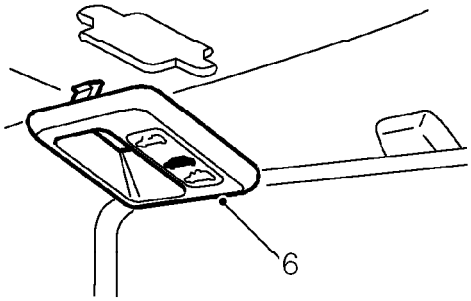

76M2034

6. Remove sun roof switch escutcheon.

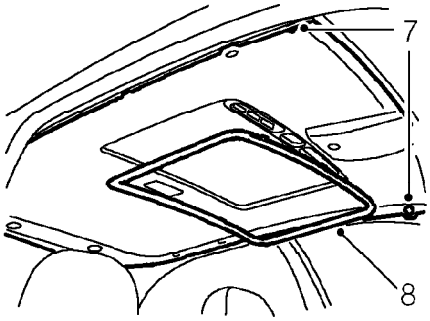

76M2035

7. Remove 2 trim studs securing headlining to roof.
8. Remove sun roof aperture finisher.
9. Remove plenum air intake. ***See HEATING & VENTILATION, Repairs.***
10. Fit protection to bonnet and areas around screen.
11. Apply masking tape to heater vents.
12. Fit protective cover to interior of vehicle.

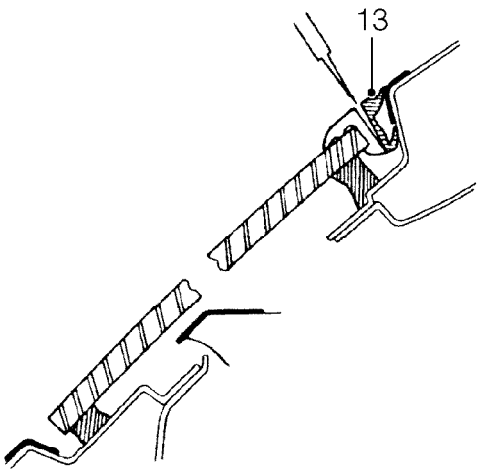

76M2036

13. Carefully run a sharp blade around screen and remove outer lip of screen finisher.

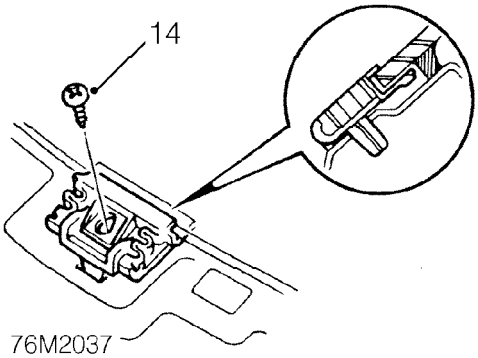

76M2037

14. Remove 2 screws securing spacers to body.

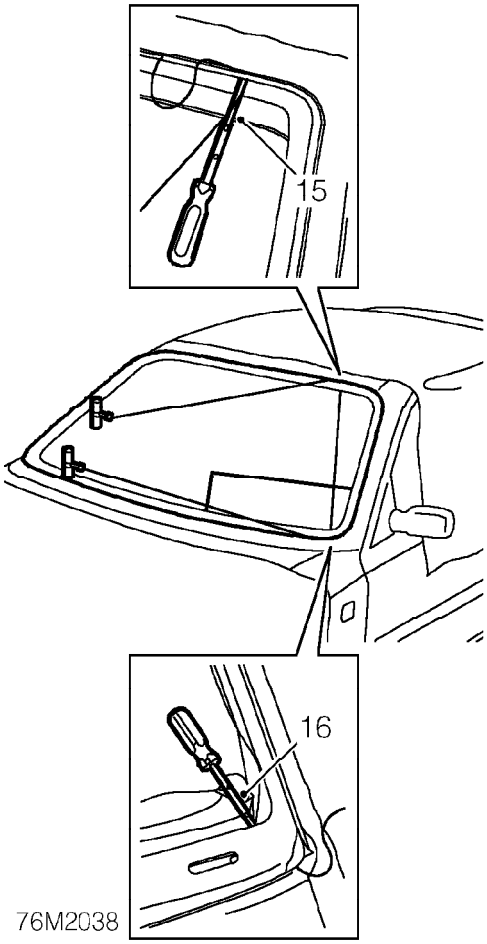

76M2038

15. Insert cutting wire through sealant at top of 'A' post.
16. Insert cutting wire through sealant at bottom of 'A' post.
17. Fit handles to cutting wire.
18. Fit dash guard to interior of vehicle.
19. Make a double cut along top and bottom of screen, and down 'A' post.

NOTE: If multi-strand cutting wire is used, a sawing action can be used to cut through heavy sealant deposits around corners.

CAUTION: Use of a sawing action may overheat and break single strand wire.

20. Insert cutting wire through sealant at top and bottom of remaining 'A' post.
21. Make a double cut down remaining 'A' post.
22. Attach suction cups to screen and use assistance to remove glass from body.

CAUTION: Lay glass on felt covered supports. Do not stand on edge. Any chipping of glass edge may develop into cracks.

Refit

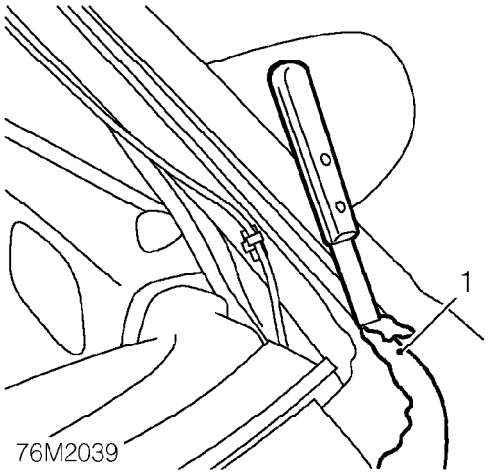

1. Carefully remove excess sealer from body leaving a smooth surface approximately 1 to 2 mm thick.
2. Remove masking near screen aperture.
3. Use a vacuum cleaner to clear away any waste.
4. Apply T-Cut around screen aperture to erase any witness marks made by old screen finisher.

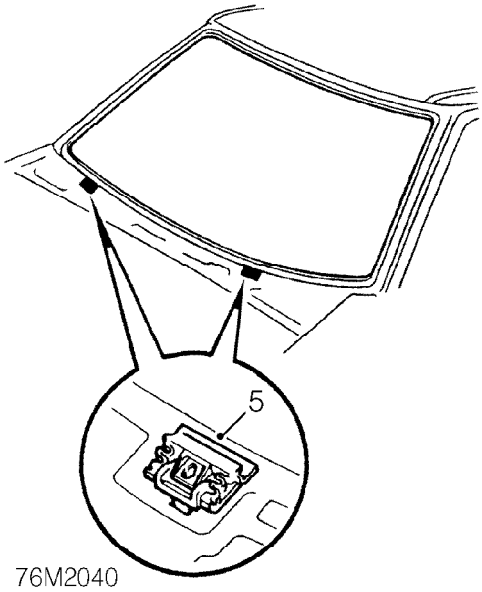

5. Fit spacers to aperture. DO NOT fit screws.
6. With assistance, locate screen to aperture.
7. Apply masking tape reference marks to aid fitment.
8. With assistance, remove screen and place aside.
9. Apply de-greasant agent (yellow top) around screen aperture.

CAUTION: Do not touch cleaned or primed surfaces with fingers.

10. Apply etch primer to any bare metal around screen aperture.
11. Clean and polish new glass.
12. Apply de-greasant agent (yellow top) to screen obscuration band.
13. Apply primer (green top) to screen obscuration band.

NOTE: Allow 15 minutes for primer to cure.

14. Apply primer (red top) to screen aperture.

NOTE: At this point, sealant re-activator (blue top) may be applied to old sealant band around screen aperture.

15. Fit pre-cut nozzle to sealer cartridge, remove lid and shake out crystals. Install in applicator gun.

NOTE: Nozzle will need modification to achieve required bead section.

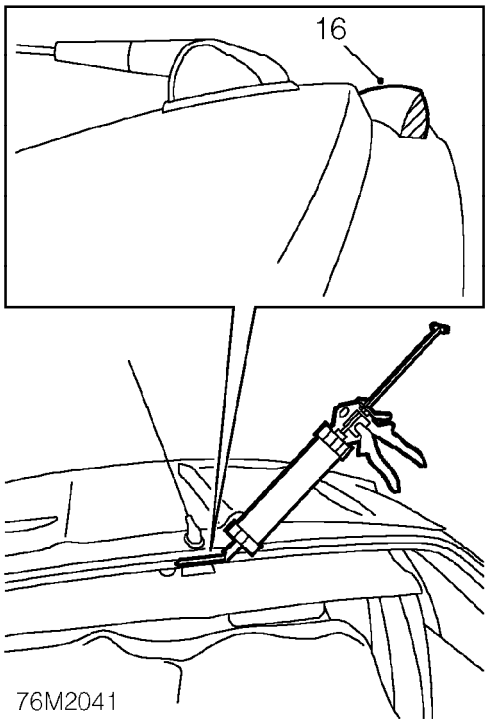

16. Apply a continuous bead of sealant around aperture as shown. Make bead slightly thicker at each corner.
17. Check for breaks or air bubbles in sealant.
18. With assistance, lift screen into place and align to tape. Lightly press glass to seat sealer.
19. Fit and tighten screws to spacers.
20. Remove protective covers and tape.
21. Test screen for leaks and apply additional sealant if necessary. If water is used, allow sealant to dry before testing.
22. Fit plenum air intake. ***See HEATING & VENTILATION, Repairs.***
23. Fit trim studs securing headlining to roof.
24. Fit sunroof aperture finisher.
25. Fit sunroof switch escutcheon.
26. Fit sun visor catches to headlining and secure with screws.
27. Fit sun visors to headlining and secure with screws.
28. Fit both 'A' post upper trim casings. ***See Interior trim components.***
29. Fit rear view mirror to windscreen.

CAUTION: Vehicles fitted with drivers or passenger airbags should NOT be driven for 24 hours. During this time leave a window open and do not slam the doors.

REAR SCREEN

Service repair no - 76.81.10

NOTE: The following equipment is required:

Cutting wire and handles.
Windscreen repair kit.
Sealer applicator gun.
Suction cups.

WARNING: Wear protective gloves when handling glass, solvents, and primers.

WARNING: Wear suitable eye protection when removing and refitting glass.

Remove

1. Remove rear screen wiper motor. ***See WIPERS & WASHERS, Repairs.***
2. Remove tailgate spoiler. ***See Exterior fittings.***

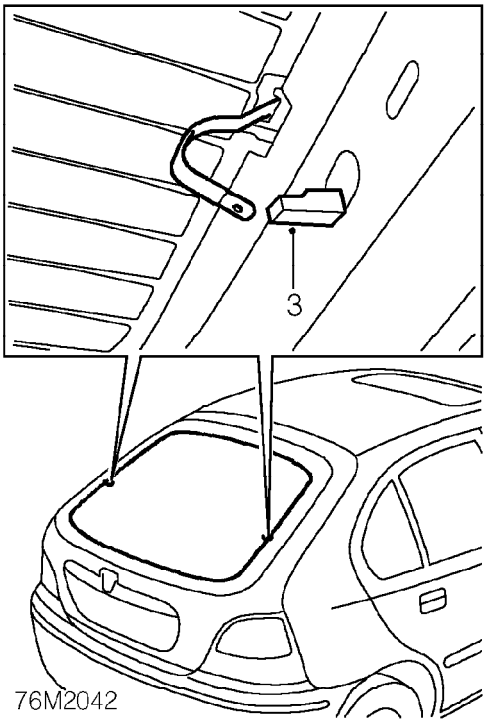

3. Disconnect 2 leads from rear screen demister.
4. Fit protection to rear of vehicle.
5. Fit protective cover to interior of vehicle.

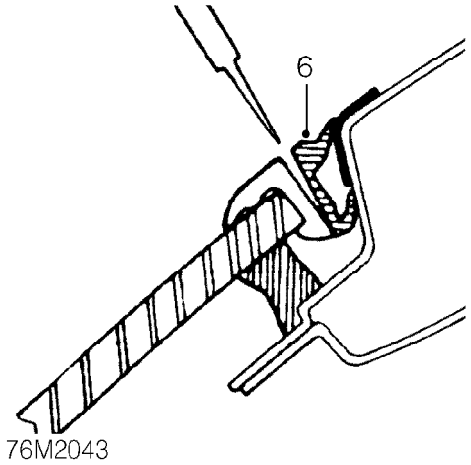

6. Carefully run a sharp blade around rear screen and remove outer lip of screen finisher.
7. Insert cutting wire through sealant at bottom corner of screen.

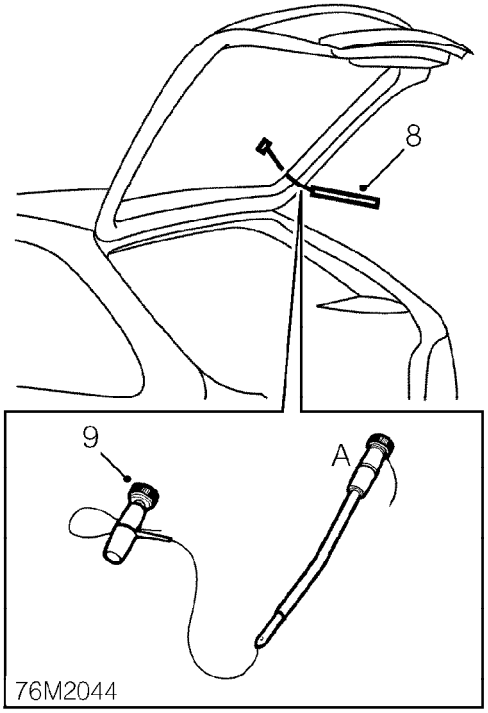

8. Fit handles as shown, with approximately 200 mm of wire between handles.
9. With assistance, wedge tube of handle **'A'**between glass and body, ahead of cutting position. Carefully cut sealant from screen aperture.

NOTE: If multi-strand cutting wire is used, a sawing action can be used to cut through heavy sealant deposits around corners.

CAUTION: Use of a sawing action may overheat and break single strand wire.

10. Attach suction cups to screen and use assistance to remove glass from body.

CAUTION: Lay glass on felt covered supports. Do not stand on edge. Any chipping of glass edge may develop into cracks.

Refit

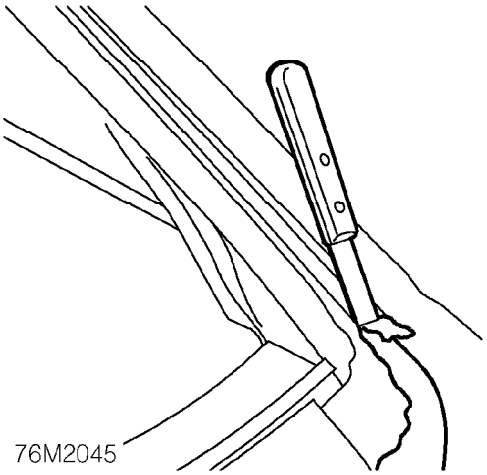

1. Carefully remove excess sealer from body leaving a smooth surface approximately 1 to 2 mm thick.
2. Use a vacuum cleaner to clear away any waste.
3. Apply T-Cut around screen aperture to erase any witness marks made by old screen finisher.
4. With assistance, locate screen to aperture.
5. Apply masking tape reference marks to aid fitment.
6. With assistance, remove screen and place aside.
7. Apply de-greasant agent (yellow top) around screen aperture.

CAUTION: Do not touch cleaned or primed surfaces with fingers.

8. Apply etch primer to any bare metal around screen aperture.
9. Clean and polish new glass.
10. Apply de-greasant agent (yellow top) to screen obscuration band.
11. Apply primer (green top) to screen obscuration band.

NOTE: Allow 15 minutes for primer to cure.

12. Apply primer (red top) to screen aperture.

NOTE: At this point, sealant re-activator (blue top) may be applied to old sealant band around screen aperture.

13. Fit pre-cut nozzle to sealer cartridge, remove lid and shake out crystals. Install in applicator gun.

NOTE: Nozzle will need modification to achieve required bead section.

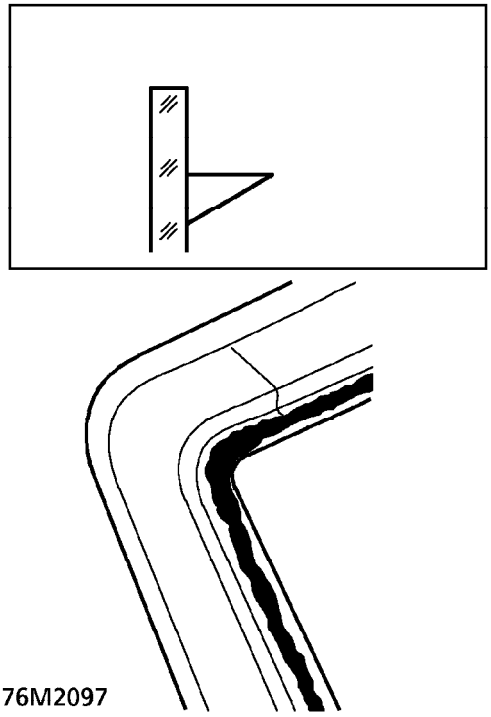

14. Apply a continuous bead of sealant around aperture as shown. Make bead slightly thicker at each corner.
15. Check for breaks or air bubbles in sealant.
16. With assistance, lift screen into place and align to tape. Lightly press glass to seat sealer.
17. Remove protective covers and tape.
18. Test screen for leaks and apply additional sealant if necessary. If water is used, allow sealant to dry before testing.
19. Connect 2 leads to rear screen demister.
20. Fit tailgate spoiler. ***See Exterior fittings.***
21. Fit rear screen wiper motor. ***See WIPERS & WASHERS, Repairs.***

CAUTION: A curing time of 6 hours is desirable, during this time leave a window open and do not slam the doors.

CHILD RESTRAINTS

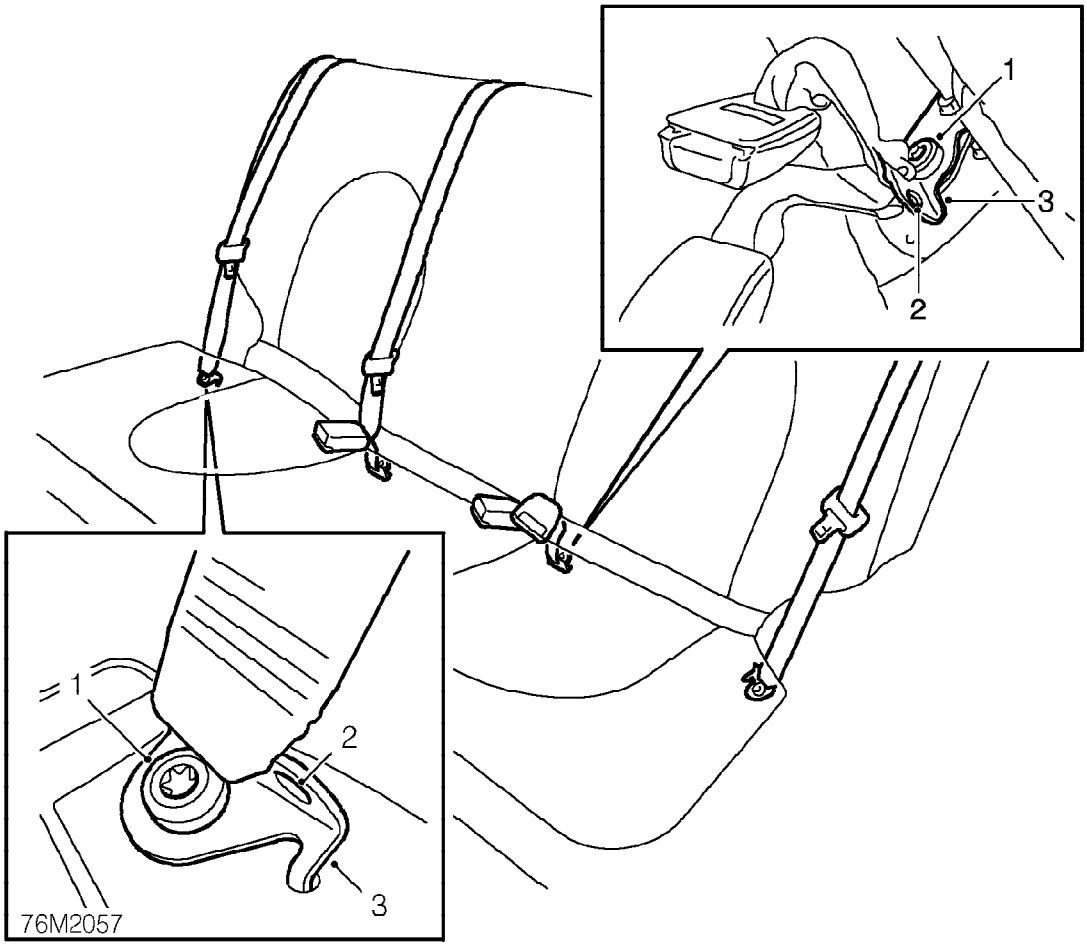

1. Bolt - Seat belt anchorage - rear seat
2. Eyes - seat belt bracket
3. Seat belt anchorage

Anchorage points for the fitting of approved child safety seats and restraints to the rear seats are provided as standard. This type of anchorage allows the seat or restraints to be hooked through the eye in the seat belt bracket. It is advisable to use the centre position whenever possible.

CAUTION: It is important that the installation instructions provided with approved child safety seats are followed.

FRONT SEAT

Service repair no - 78.10.44.99

Remove

CAUTION: See safety precautions in SRS section before starting work.

1. Disconnect battery earth lead.
2. Move seat fully forward.

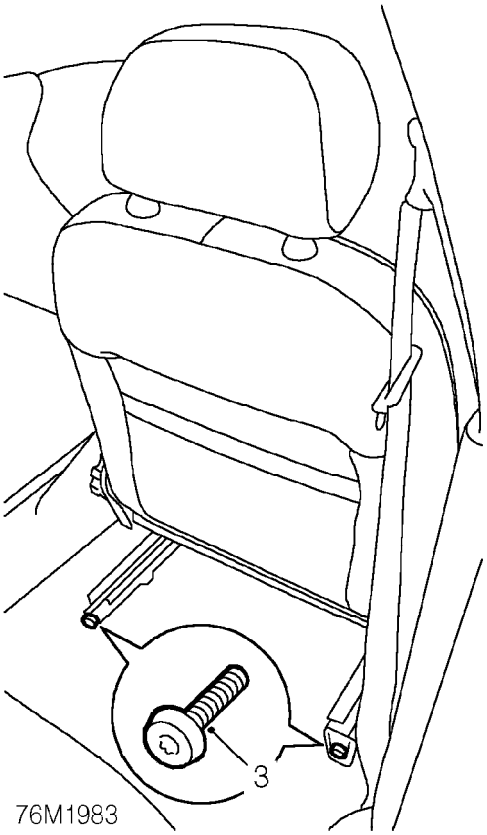

3. Remove 2 bolts securing rear of runners.

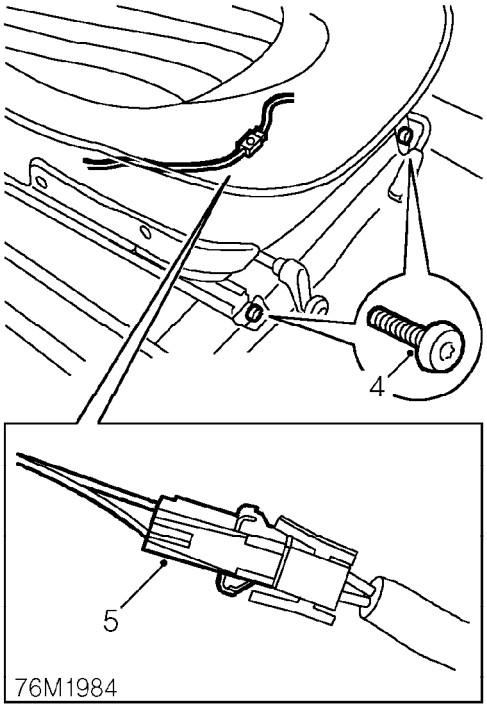

4. Move seat fully rearwards and remove 2 bolts securing front of runners.
5. Move seat aside and disconnect SRS pre-tensioner multiplug.
6. Remove seat.

Refit

1. Position seat to vehicle and connect pre-tensioner multiplug.
2. Fit bolts securing front of runners to floor and tighten to 34 Nm.
3. Move seat fully forwards.
4. Fit bolts securing rear of runners to floor and tighten to 34 Nm.
5. Connect battery earth lead.

FRONT SQUAB COVER

Service repair no - 78.90.08

Remove

1. Remove front seat. ***See this section.***

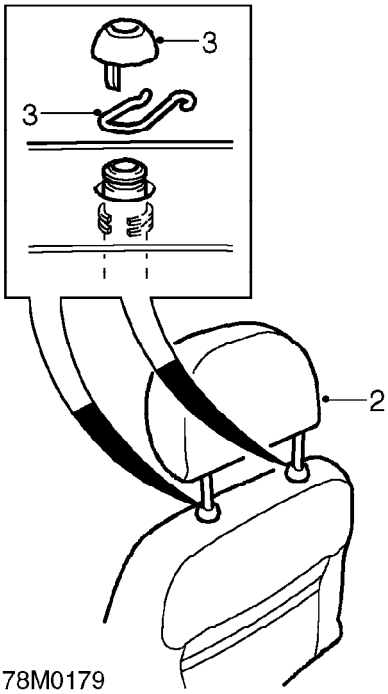

78M0179

2. Remove head restraint.
3. Release spring clips and remove head restraint guides from squab frame.

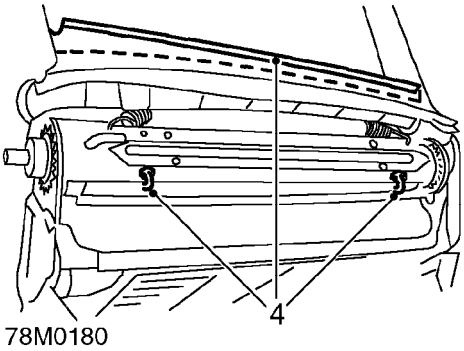

78M0180

4. Release cover hooks and retainer from rear bar.

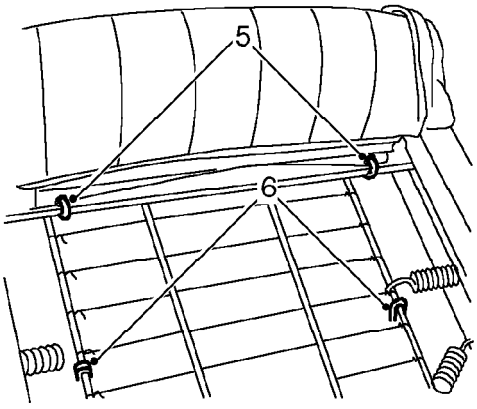

78M0181

5. Remove 2 rear hog rings from squab.
6. Release cover hooks from squab suspension and pass through cushion.

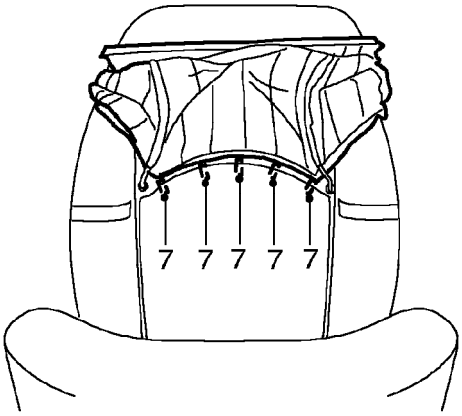

78M0182

7. Remove 5 front hog rings from squab.
8. Remove cover from squab.

Refit

1. Position squab cover, fit head restraint escutcheons and secure with clips.
2. Pull cover to position and secure front with new hog rings.
3. Pass cover hooks through cushion and secure to squab frame.
4. Position cover and secure rear with new hog rings.
5. Pass cover hooks under base of squab and secure to frame.
6. Secure lower retainer to frame rear bar.
7. Fit head restraint.
8. Fit front seat. ***See this section.***

FRONT SEAT AND SQUAB FRAME

Service repair no - 78.30.18

Remove

1. Remove front squab cover. ***See this section.***

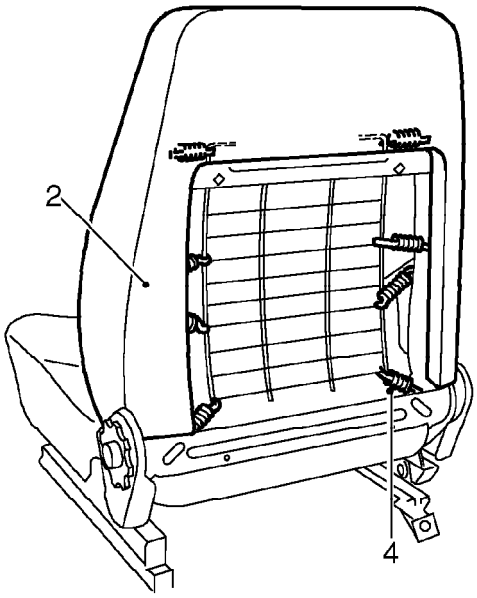

78M0173

2. Remove front squab pad.
3. Release spring clips and remove head restraint escutcheons from squab frame.
4. Release 8 springs securing squab suspension to frame and remove suspension.

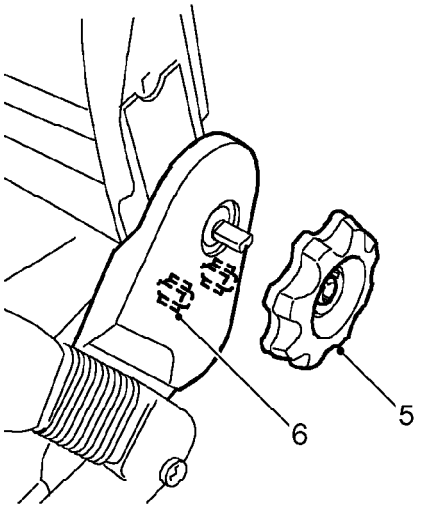

78M0174

5. Release adjustment wheel from seat valance.
6. Release inner valance from 2 clips and remove from seat.

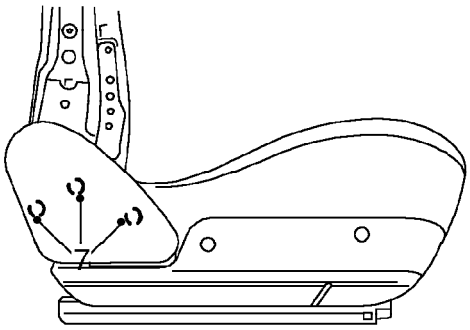

78M0175

7. Release outer upper cushion valance from 3 clips and remove.

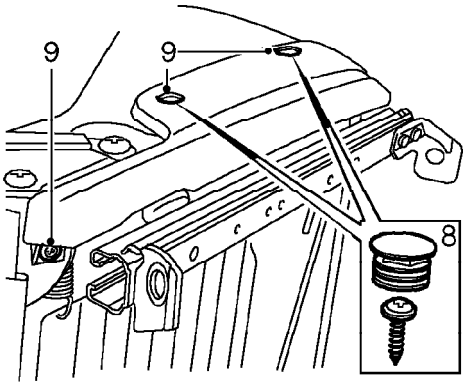

78M0176

8. Remove 2 escutcheons from side of lower valance.
9. Remove 3 screws securing lower valance to seat.
10. Remove outer valance from seat.
11. Release SRS pre-tensioner harness from seat cushion.

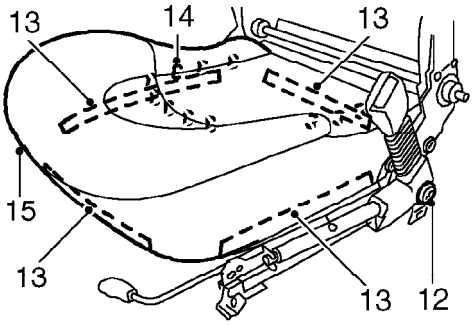

78M0177

12. Remove bolt securing pre-tensioner to seat frame and remove pre-tensioner.
13. Release 4 cushion cover retainers.
14. Release 11 hog rings securing cushion cover to frame.
15. Remove cushion cover.
16. Remove cushion pad.

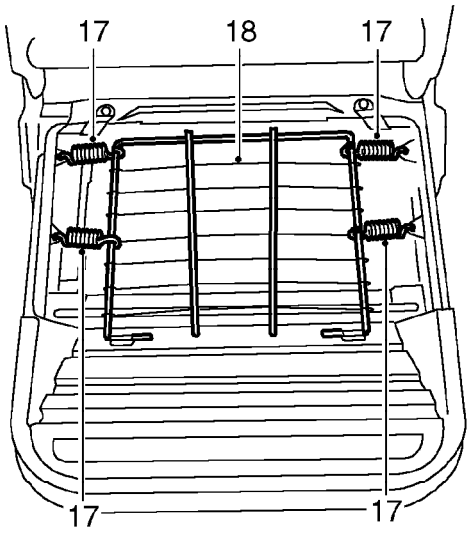

78M0178

17. Release 4 springs securing cushion suspension to seat frame.
18. Remove suspension.

Refit

1. Position cushion suspension to seat frame and secure with springs.
2. Fit cushion pad to seat frame.
3. Fit cushion cover over pad.
4. Secure cover to pad using new hog rings.
5. Secure cushion cover retainers.
6. Fit pre-tensioner to seat and tighten bolt to 30 Nm.
7. Secure pre-tensioner harness to seat cushion with clip.
8. Fit outer valance to seat frame and secure with screws.
9. Fit escutcheons to valance.
10. Fit upper valance to seat.
11. Fit inner valance to seat.
12. Fit adjustment wheel to valance.
13. Position squab suspension to seat frame and secure with springs.
14. Fit head restraint escutcheons to squab frame and secure spring clips.
15. Fit squab pad to frame.
16. Fit front squab cover. ***See this section.***

OUTER VALANCE - FRONT CUSHION

Service repair no - 78.30.42

Remove

1. Remove front seat. ***See this section.***

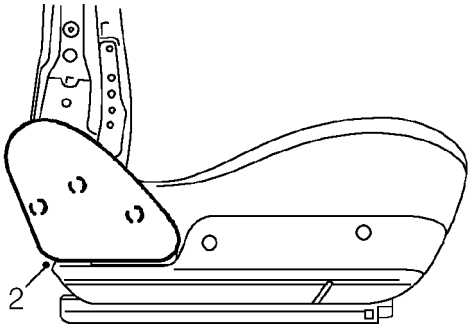

78M0186

2. Release upper valance from 3 clips and remove.

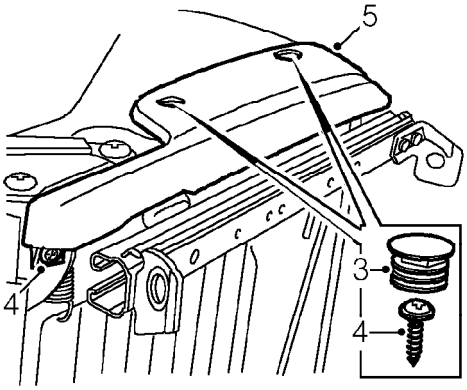

78M0187

3. Remove 2 escutcheons from side of lower valance.
4. Remove 3 screws securing lower valance to seat.
5. Remove valance from seat.

Refit

1. Fit lower valance to seat and secure with screws.
2. Fit escutcheons to lower valance.
3. Fit upper valance to seat and secure clips.
4. Fit front seat. ***See this section.***

INNER VALANCE - FRONT CUSHION

Service repair no - 78.30.46

Remove

1. Remove front seat. ***See this section.***

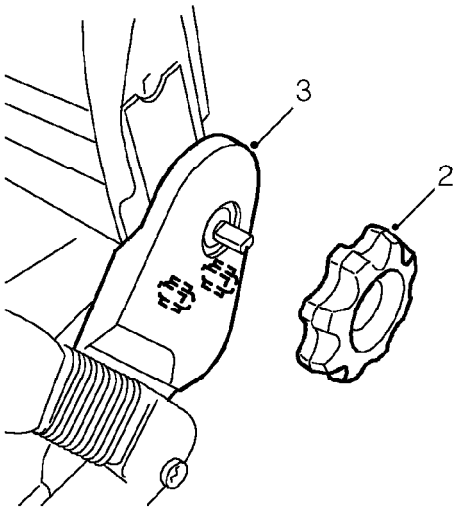

78M0188

2. Release adjustment wheel from seat.
3. Release valance from 2 clips and remove from seat.

Refit

1. Fit valance to seat and secure with clips.
2. Fit adjustment wheel to seat.
3. Fit front seat. ***See this section.***

LUMBAR SUPPORT MECHANISM

Service repair no - 78.60.07

Remove

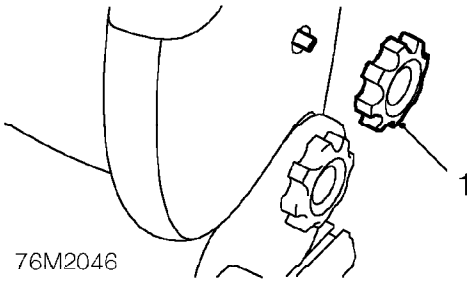

1. Remove lumbar support adjustment wheel.

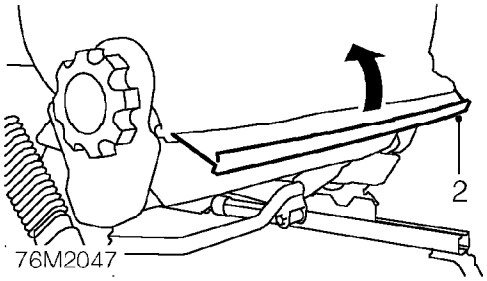

2. Release seat squab retainer.
3. Pull seat squab cover upwards to gain access to lumbar mechanism.

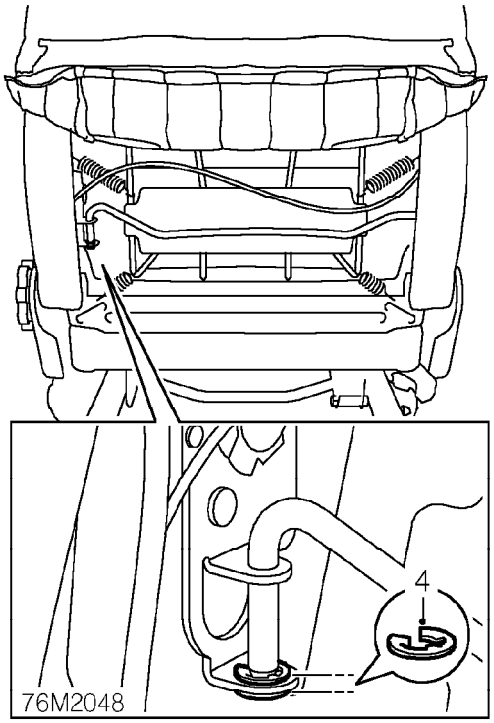

4. Remove 2 spring clips securing lumber bar to mechanism.

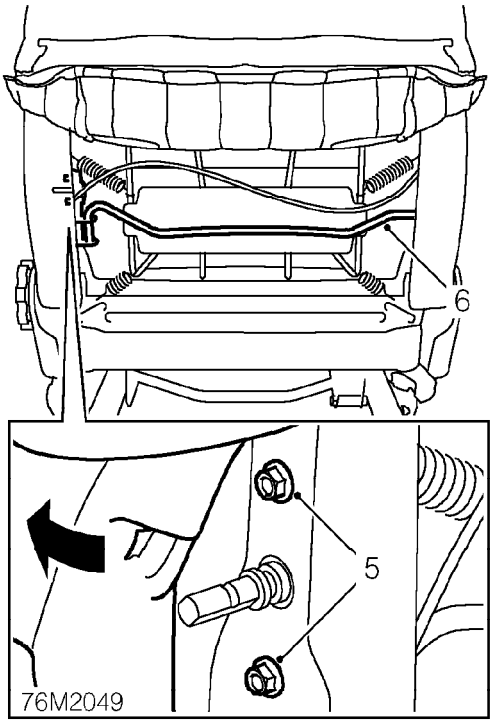

5. Pull squab cushion aside to gain access to 2 bolts securing mechanism to frame and remove bolts.
6. Release bar from seat frame and remove mechanism and bar.

Refit

1. Locate bar in seat frame and position mechanism and bar assembly.
2. Fit bolts securing mechanism to frame and tighten to10 Nm.
3. Fit spring clips securing bar to mechanism.
4. Pull squab cover back into position and secure retainer.
5. Fit Lumbar support adjustment wheel.

SEAT HEIGHT ADJUSTMENT HANDLE

Service repair no - 78.80.07

Remove

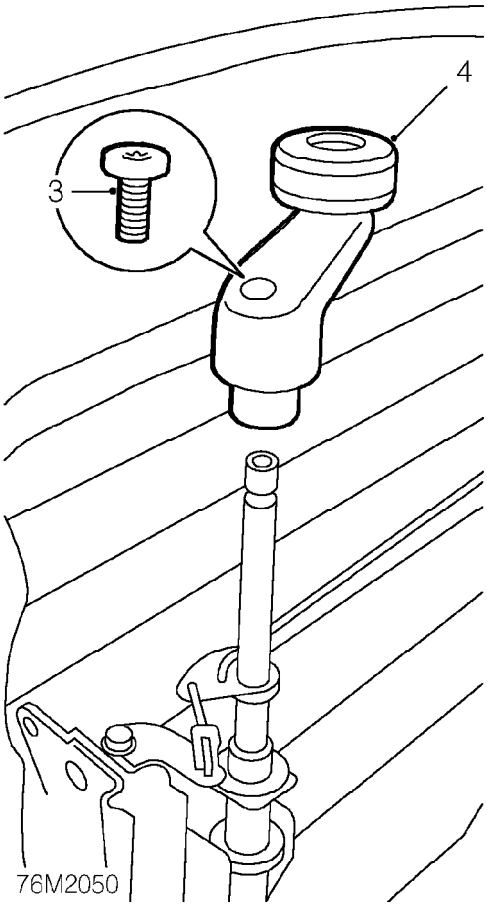

1. Remove screw securing handle to height adjustment mechanism.
2. Remove height adjustment handle.

Refit

1. Fit handle to mechanism and secure with screw.

REAR SEAT CUSHION

Service repair no - 78.10.17.99

Remove

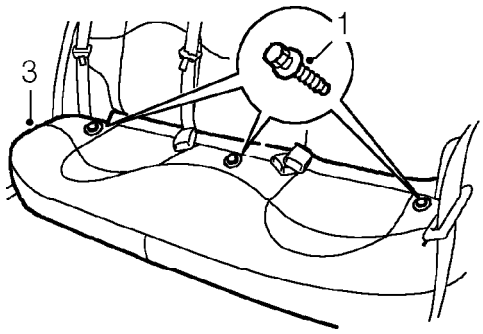

78M0189

1. Remove 3 bolts securing seat cushion to body.
2. Pull seat cushion forward and release from body.
3. Remove seat cushion from vehicle.

Refit

1. Position seat cushion in vehicle and locate tongues along forward edge.
2. Fit bolts securing cushion to floor and tighten to 10 Nm.

REAR SEAT SQUAB

Service repair no - 78.10.58.99

Remove

1. Remove rear seat cushion. ***See this section.***

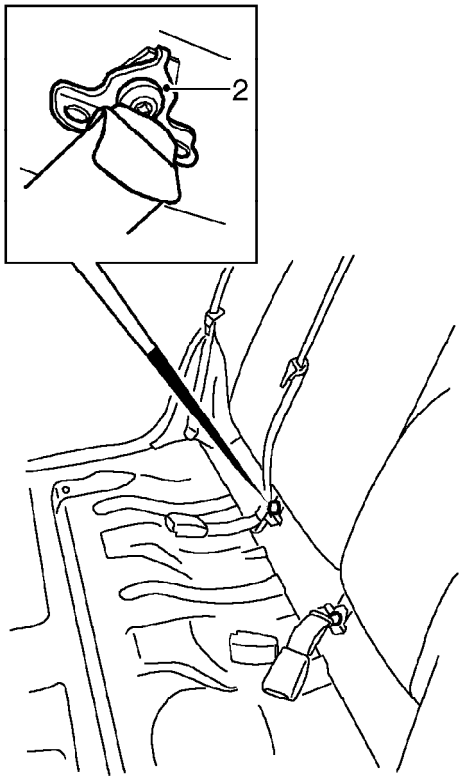

78M0183

2. Remove bolt from lower seat belt anchorage.

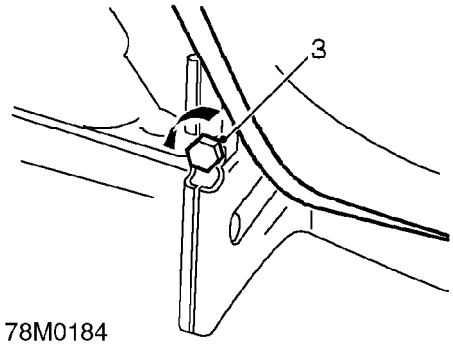

3. Turn hinge clamping bolt anti-clockwise until hinge pin can be removed from hinge.
4. Release outer hinge pin and remove seat squab.

Refit

1. Position squab outer hinge pin.
2. Fit inner pin to centre hinge.
3. Fully tighten centre hinge clamping bolt.
4. Fit seat belt lower anchorage bolt and tighten to 50 Nm.
5. Fit rear seat cushion. ***See this section.***

REAR SQUAB LATCH

Service repair no - 78.80.16

Remove

1. Open tailgate.

RH latch only:

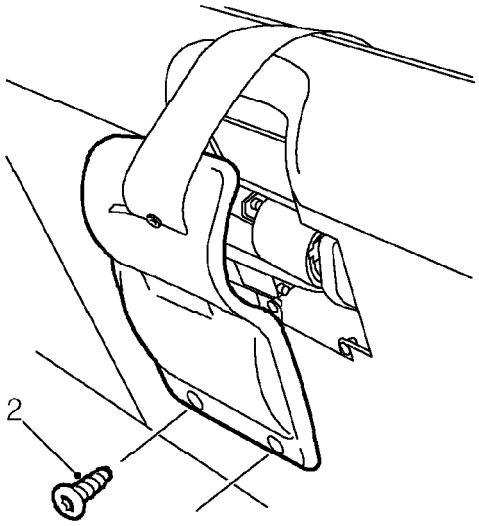

2. Remove 2 screws securing centre seat belt reel cover and move cover aside.

Both latches:
Remove escutcheon from top of squab cover.

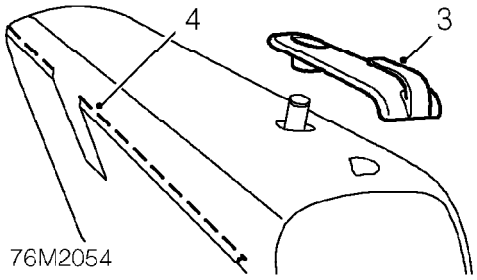

3. Release retainer securing squab cover to rear carpet.
4. Fold rear seat slightly forward and place block of wood between squab and squab support panel.
5. Move squab cover and cushion aside to gain access to latch mechanism.

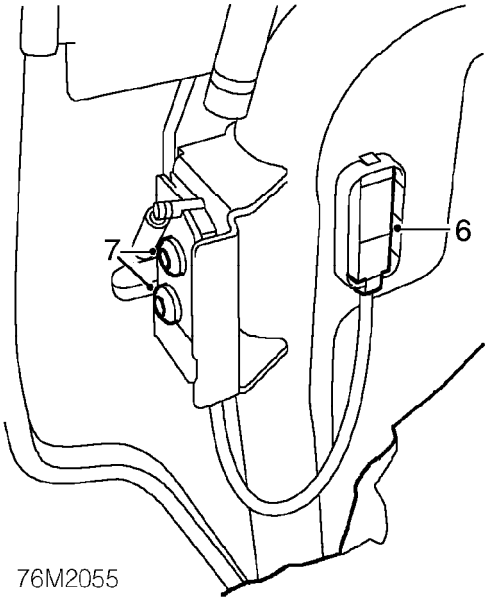

6. Remove squab release handle from rear squab panel.
7. Remove 2 Torx screws securing latch to seat frame.

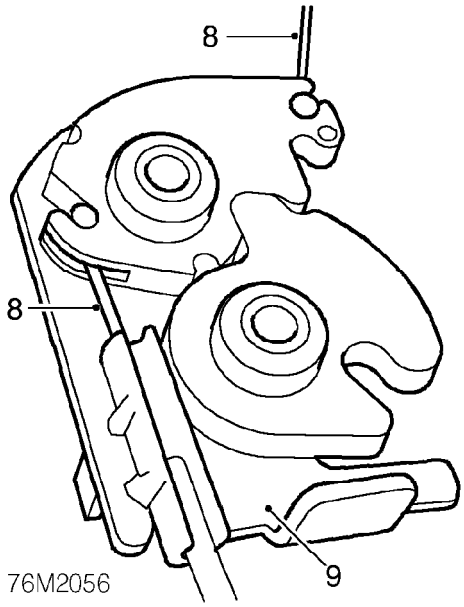

8. Release cables from latch.
9. Remove latch assembly.

Refit

1. Position latch assembly to seat frame and connect cable.
2. Fit and tighten Torx screws securing latch to seat frame.
3. Secure squab release handle to rear squab panel.
4. Reposition squab cushion and cover to frame and secure retainer.
5. Fit escutcheon to top of seat squab.
6. Reposition rear seat.

RH latch only:

7. Position seat belt reel cover to seat and secure with screws.

REAR SEAT BELT - SIDE - 3 DOOR

Service repair no - 76.73.23

Remove

1. Remove rear quarter lower trim casing. ***See Interior trim components.***

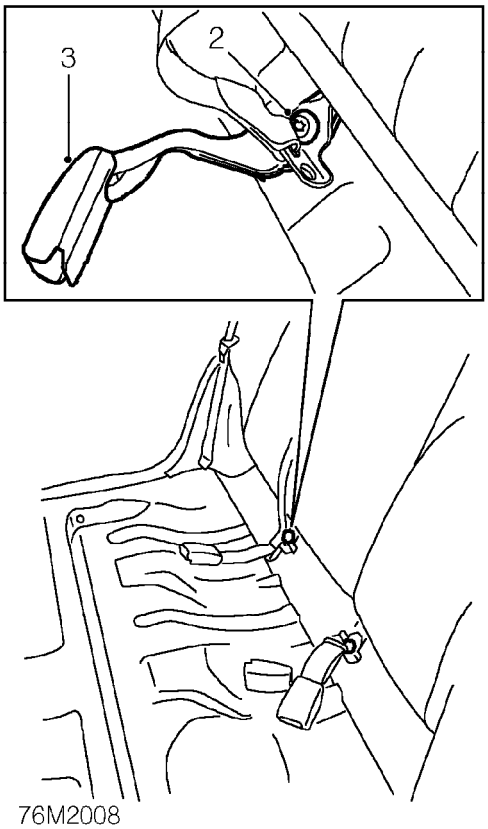

2. Remove Torx screw securing seat belt stalk to body.
3. Remove seat belt stalk.

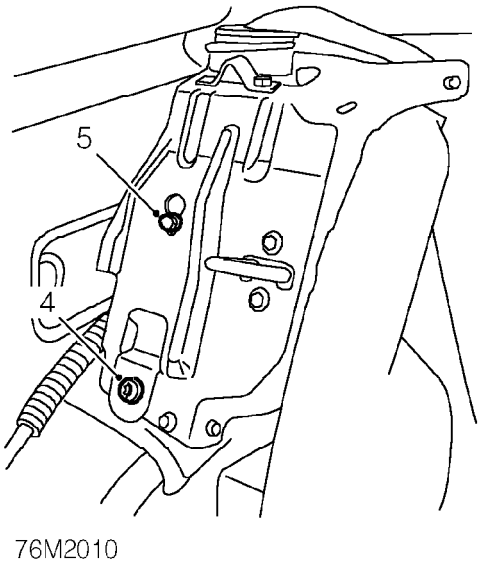

4. Remove Torx screw securing seat belt reel to rear squab support panel.
5. Remove seat belt reel locating bolt.
6. Remove seat belt.

Refit

1. Fit seat belt reel to squab support panel and fit locating bolt. DO NOT tighten.
2. Fit Torx screw securing reel to squab support panel and tighten to 50 Nm.
3. Tighten locating bolt to 10 Nm.
4. Position seat belt stalk to floor and tighten Torx screw to 50 Nm.
5. Fit rear quarter lower trim casing. ***See Interior trim components.***

REAR SEAT BELT - SIDE - 5 DOOR

Service repair no - 76.73.23

Remove

1. Remove rear quarter lower trim casing. ***See Interior trim components.***

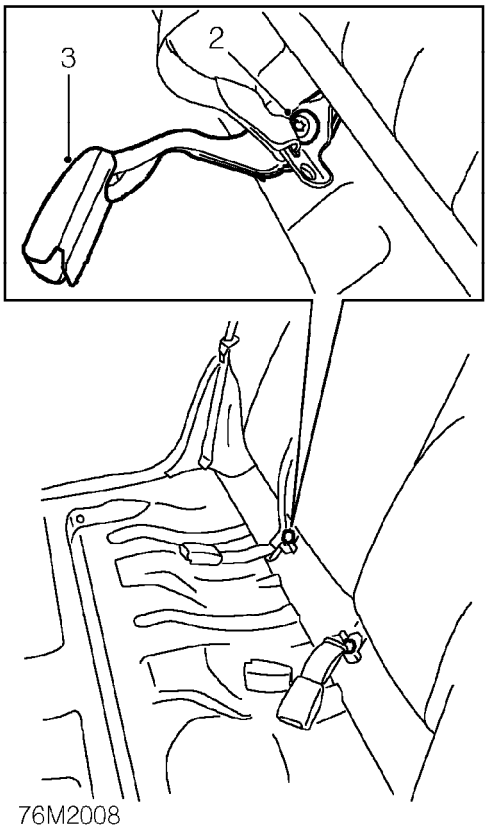

2. Remove Torx screw securing seat belt stalk to body.
3. Remove seat belt stalk.

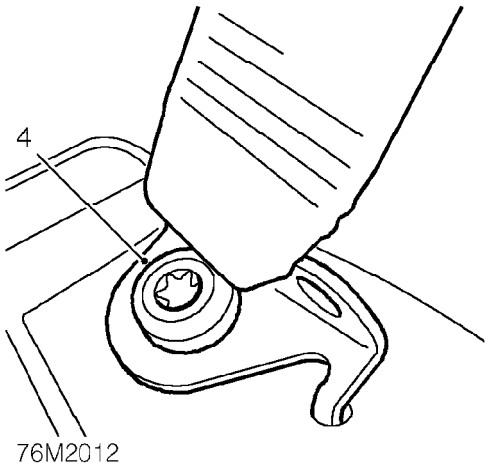

4. Remove Torx screw securing seat belt to floor.

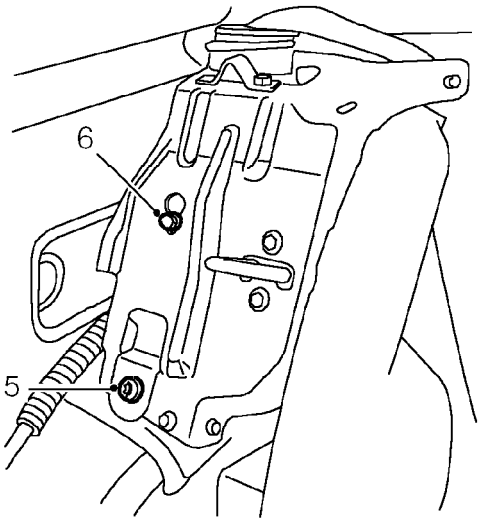

5. Remove Torx screw securing seat belt reel to rear squab support panel.
6. Remove seat belt reel locating bolt.
7. Remove seat belt.

Refit

1. Fit seat belt reel to squab support panel and fit locating bolt. DO NOT tighten.
2. Fit Torx screw securing reel to squab support panel and tighten to 50 Nm.
3. Tighten locating bolt to 10 Nm.
4. Fit Torx screw securing seat belt to floor and tighten to 50 Nm.
5. Position seat belt stalk to floor and tighten Torx screw to 50 Nm.
6. Fit rear quarter lower trim casing. ***See Interior trim components.***

REAR SEAT BELT - CENTRE

Service repair no - 76.73.20

Remove

1. Remove rear seat cushion. ***See this section.***

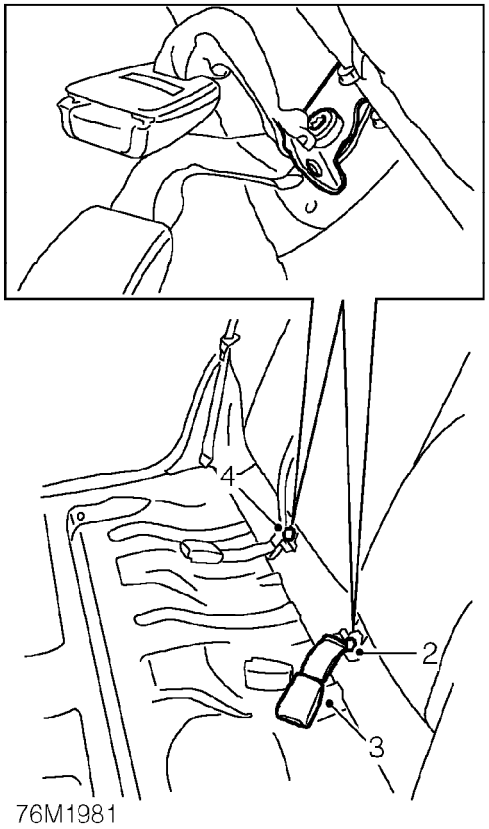

2. Remove Torx screw securing seat belt stalk to body.
3. Remove seat belt stalk.
4. Remove Torx screw securing seat belt to body.
5. Remove parcel shelf. ***See Interior trim components.***

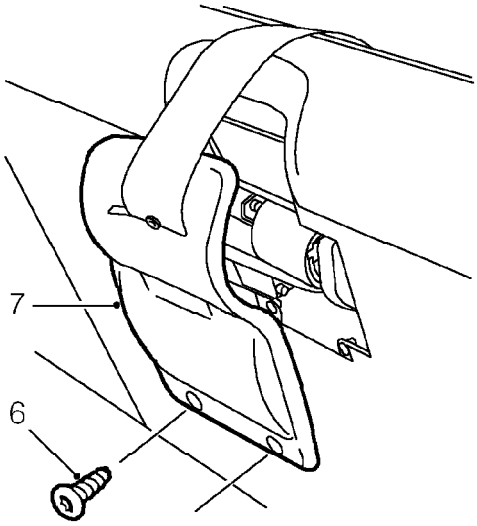

76M1982

6. Remove 2 screws securing seat belt reel cover to rear seat squab.
7. Move cover aside.

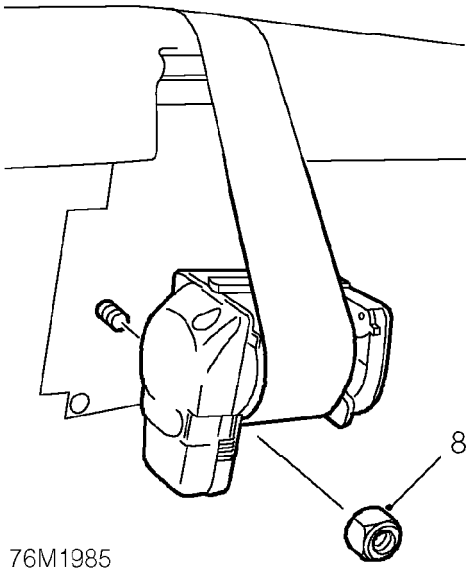

76M1985

8. Remove nut securing reel to rear seat squab.
9. Remove seat belt.
10. Release seat belt reel cover from seat belt.

Refit

1. Fit seat belt reel cover to seat belt.
2. Fit seat belt reel to rear seat squab.
3. Fit nut securing reel to squab and tighten to 30 Nm.
4. Fit reel cover to squab and tighten screws.
5. Fit parcel shelf. ***See Interior trim components.***
6. Fit Torx screw securing seat belt to body and tighten to 50 Nm.
7. Position seat belt stalk to floor and tighten Torx screw to 50 Nm.
8. Fit rear seat cushion. ***See this section.***

SUN ROOF COMPONENTS

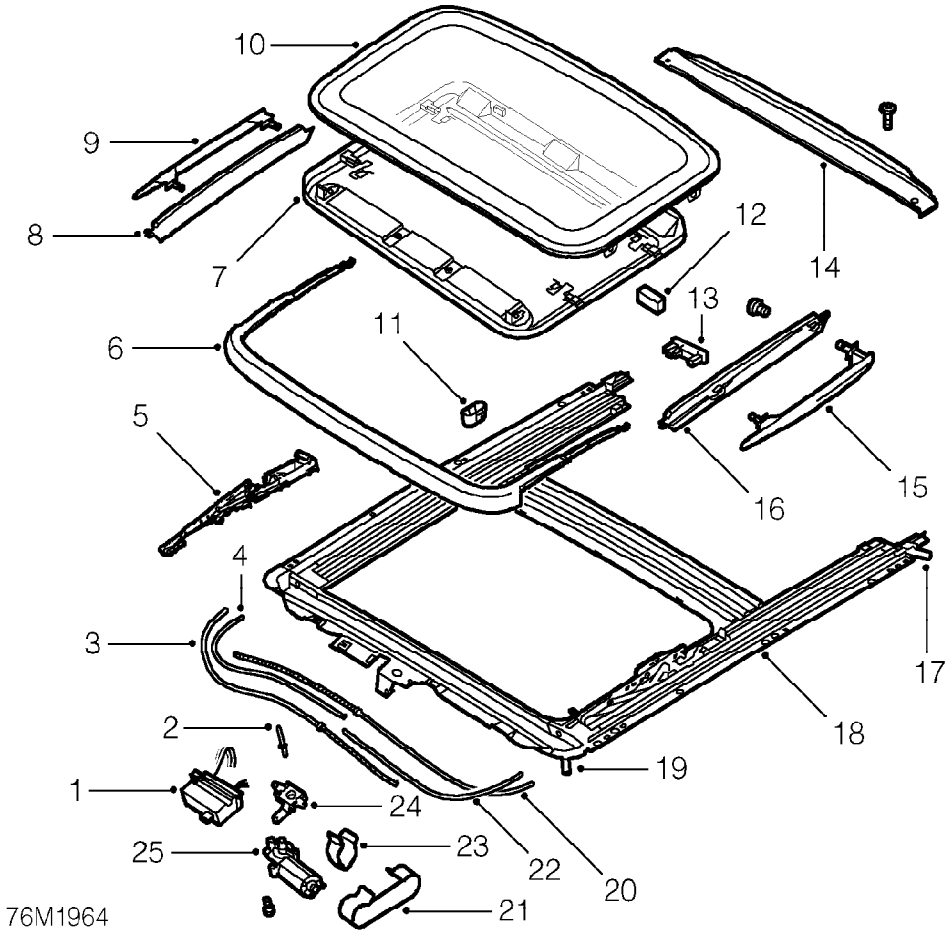

1. Position sensor
2. Locating pin
3. Drive cable
4. Tube - drive cable
5. Assembly mechanism
6. Wind deflector
7. Sunshade
8. Mechanism cover - inner
9. Mechanism cover - outer
10. Glass panel
11. Stop
12. Buffer - sunshade
13. Guide plug
14. Drain channel
15. Mechanism cover - outer
16. Mechanism cover - inner
17. Drain tube - rear
18. Frame
19. Drain tube - front
20. Drive cable
21. Clip - inner tubes
22. Tube - drive cable
23. Clip - outer tubes
24. Location bracket
25. Motor and drive gear assembly

SUN ROOF OPERATION

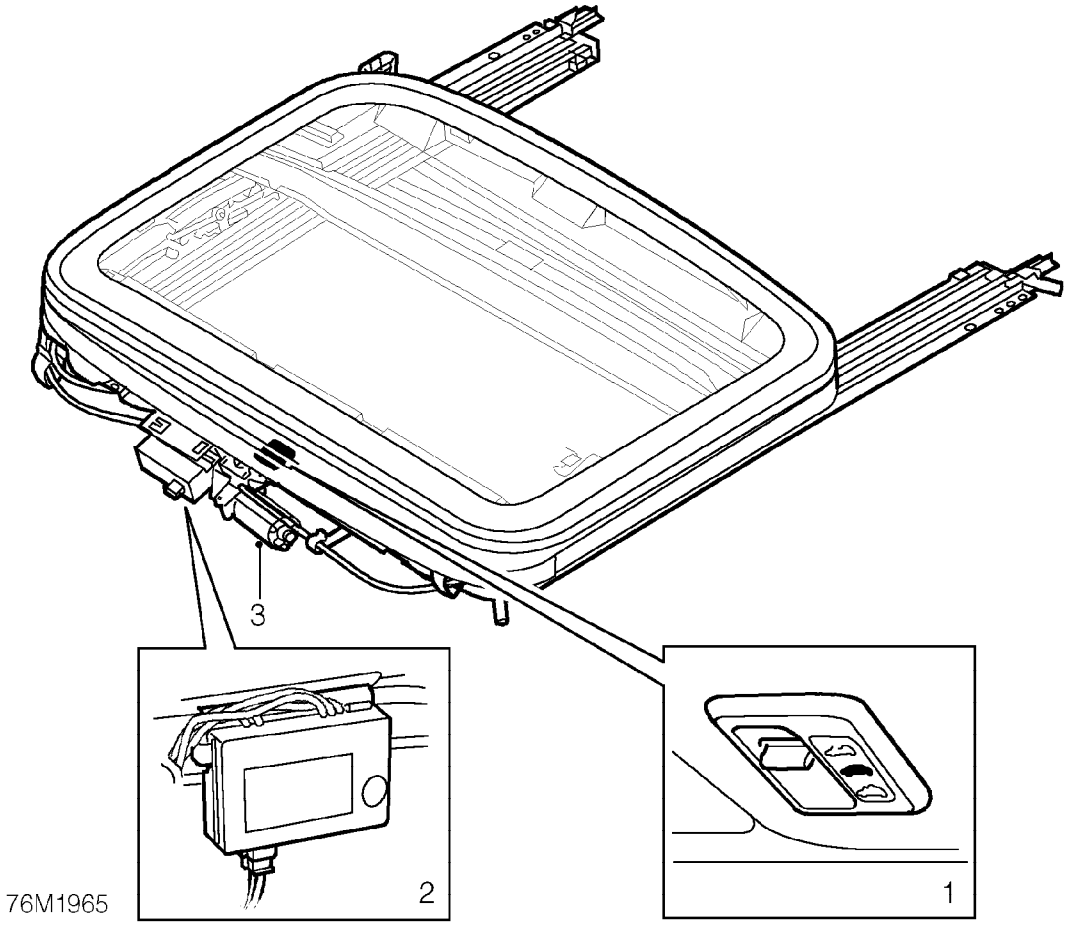

1. Switch
2. Sun roof relay module
3. Motor and drive assembly

Operation

Sun roof operation is controlled by a switch mounted in the headlining.

NOTE: The switch must be released before operation in the alternative mode is allowed, i.e. when switching from tilt to slide or vice versa.

The sun roof can be operated when the starter switch is turned to position 'II' and for up to 30 seconds after the starter switch is turned off, unless the driver's door is opened in the meantime. To open the sun roof, pull the switch rearward, to close the sunroof, push the switch forward.

If the sun roof is in the closed position, to raise the rear edge, push the switch forward. To return the tilted roof to the closed position, pull the switch rearward.

Initial movement of the sun roof from the closed position will release its contact with the spring loaded front deflector. The deflector rises above roof level to minimise draughts and reduce air buffeting.

Sun roof failure

In the event of an electrical failure it may be necessary to manually move the sunroof. This can be achieved by removal of the plug from the headlining to expose the drive spindle, which can then be operated by a crank key.

For detailed electrical information refer to ERL (Electrical Reference Library) and circuit diagrams.

SUN ROOF GLASS HEIGHT ADJUSTMENT

Service repair no - 76.82.04

Adjust

1. Sun roof glass should sit within its aperture as follows:
   i.Front corners - Flush with roof to 1 mm low.
   ii. Rear corners - Flush with roof to 1 mm high.
   iii. Equal seal pressure front and rear.
   If outside these limits, carry out the following procedure.
2. Move sun roof glass to tilt position.

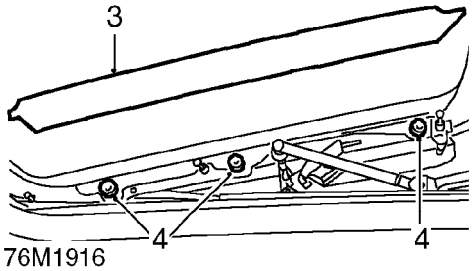

3. Remove 2 finishers from sun roof glass frame.
4. Close sun roof from tilt position.
5. Slide sun roof to open position and then close.
6. Loosen 6 Torx screws securing glass to sun roof frame.
7. Adjust glass as required.
8. Tighten Torx screws to 5 Nm.

NOTE: Apply thread locking fluid to the screws.

9. Move sun roof glass to tilt position.
10. Fit finishers to sun roof glass frame.

SUN ROOF GLASS

Service repair no - 76.82.05

Remove

1. Open the sunshade and tilt up the glass.

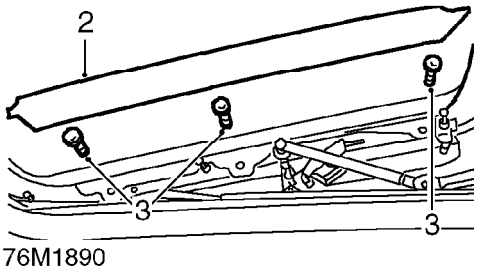

2. Remove 2 finishers from sun roof glass frame.
3. Remove 6 TX25 Torx screws securing glass to frame.
4. Remove glass.

Refit

1. Position glass to sunroof.

NOTE: Apply thread locking fluid to the screws.

2. Finger tighten screws securing glass to frame.
3. Adjust height of sun roof glass. ***See this section.***
4. Fit finishers to sun roof glass frame.

SUN ROOF SUNSHADE

Service repair no - 76.82.03

Remove

1. Remove sun roof glass. ***See this section.***
2. Close sunshade.

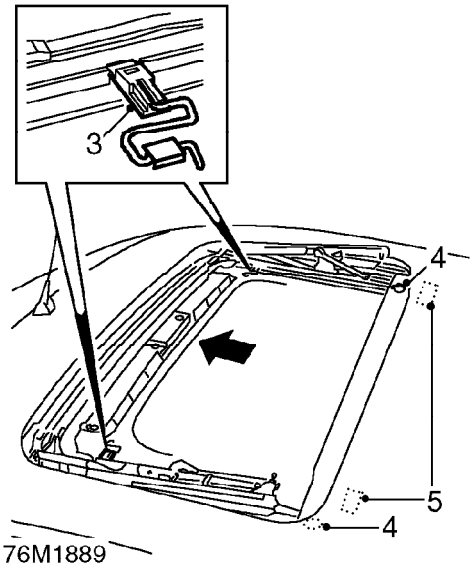

3. Depress front sunshade plungers and release front of sunshade from sun roof frame.
4. Remove 2 screws securing frame cross beam to gain access to rear plungers.
5. Depress rear sunshade plungers.
6. Remove sunshade from frame by pulling forwards and upwards.

Refit

1. Fit sunshade to frame and secure all 4 plungers.

NOTE: Ensure plungers are fully engaged.

2. Fit and tighten screws securing cross beam to frame.
3. Fit sun roof glass. ***See this section.***

SUN ROOF SWITCH

Service repair no - 76.82.59

Remove

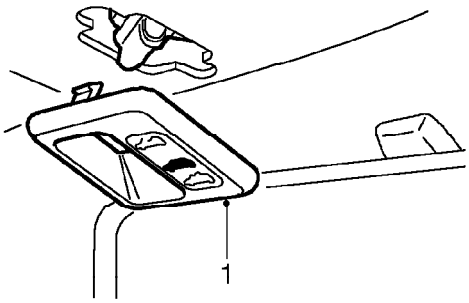

1. Remove finisher from switch.

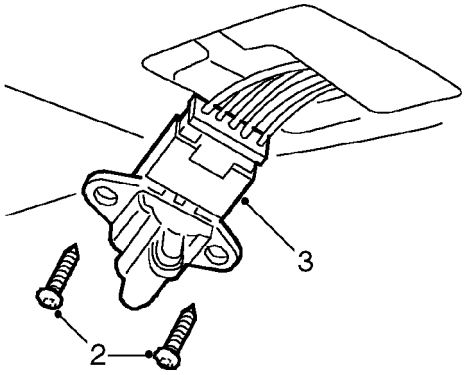

2. Remove 2 screws securing switch to roof.
3. Release from roof and disconnect multiplug.
4. Remove switch.

Refit

1. Position switch to roof and connect multiplug.
2. Fit switch to roof and secure with screws.
3. Fit finisher to switch.

SUN ROOF MOTOR

Service repair no - 76.82.53

Remove

1. Remove headlining. ***See Interior trim components.***

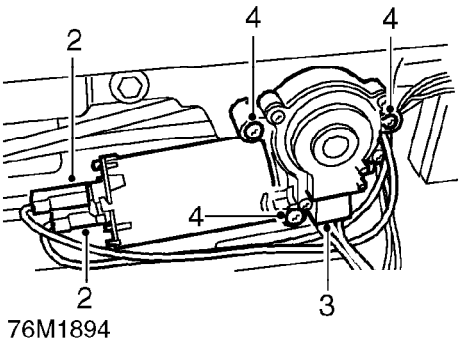

2. Remove 2 Lucars from sun roof motor.
3. Remove multiplug from sun roof motor.
4. Remove 3 screws securing motor to sun roof tray.
5. Remove motor.

Refit

1. Position motor to sun roof tray and tighten bolts to 9 Nm.
2. Fit multiplug and Lucars to motor.
3. Fit headlining. ***See Interior trim components.***

SUN ROOF DRAIN TUBE

Service repair no - 76.82.21

Remove

1. Remove headlining. ***See Interior trim components.***

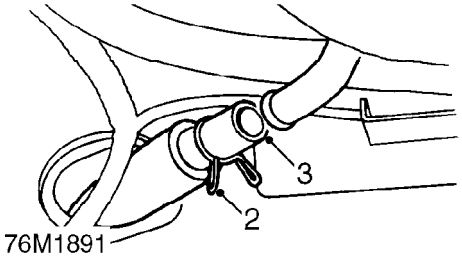

2. Release clip securing drain tube to sun roof tray.
3. Release drain tube from sun roof tray.
4. Raise vehicle.

WARNING: Support on safety stands.

5. Remove road wheel(s).
6. Remove wheel arch liner. ***See Exterior fittings.***

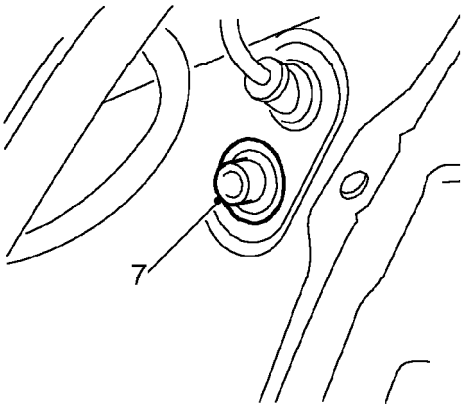

76M1892

7. Release drain tube grommet from body.
8. Withdraw drain tube down through wheel arch.

Refit

1. Feed drain tube through aperture in wheel arch and up 'A' post.
2. Fit grommet to lower end of drain tube and secure to wheel arch.
3. Fit wheel arch liner. ***See Exterior fittings.***
4. Fit road wheel(s) and tighten nuts to correct torque. ***See INFORMATION, Torque wrench settings.***
5. Remove stand(s) and lower vehicle.
6. Fit drain tube to sun roof tray and secure with clip.
7. Fit headlining. ***See Interior trim components.***

SUN ROOF

Service repair no - 76.82.44

Remove

1. Remove headlining. ***See Interior trim components.***

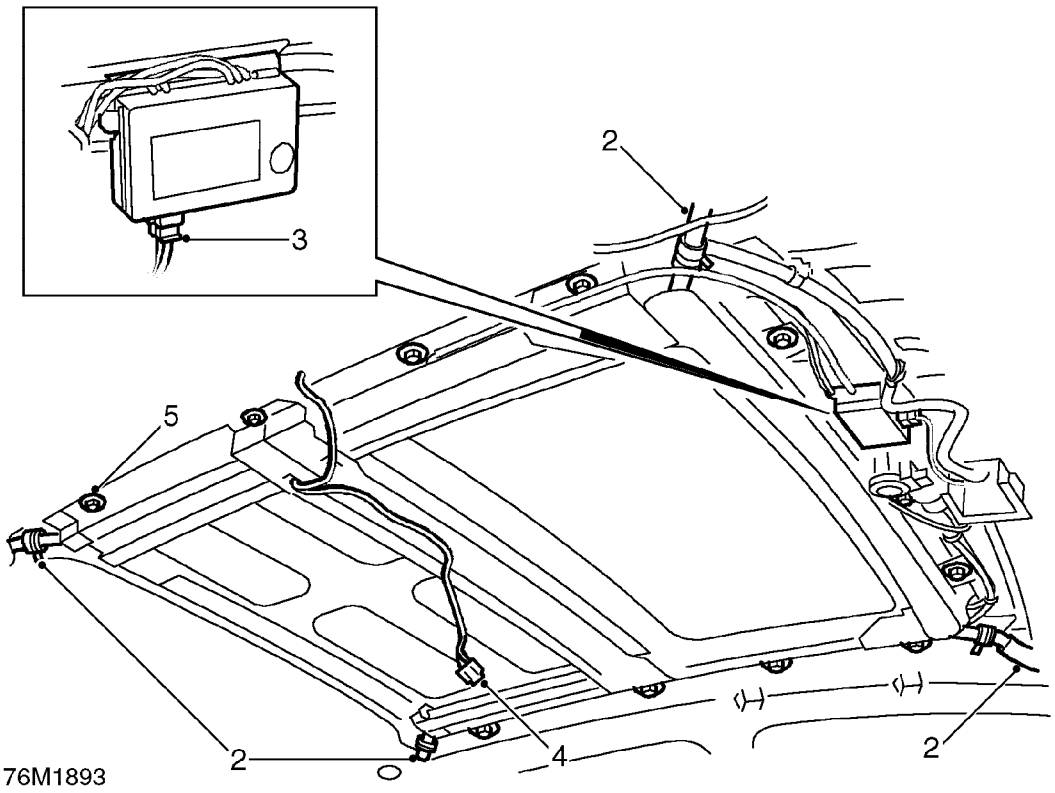

2. Release 4 clips and disconnect drain tubes.
3. Disconnect multiplug from sun roof control unit.
4. Release interior lamp harness from sun roof tray.
5. Remove 11 bolts securing sun roof assembly to roof and remove sun roof.

NOTE: Assistance may be required to remove sun roof assembly.

Refit

1. Fit sun roof assembly and tighten bolts to 9 Nm.
2. Secure interior lamp harness to sun roof tray.
3. Connect multiplug to sun roof control unit.
4. Connect drain tubes to sun roof and secure with clips.
5. Fit headlining. ***See Interior trim components.***

CONTENTS

Page

DESCRIPTION AND OPERATION

HEATER UNIT 1
BLOWER UNIT 2
OPERATION 4

REPAIRS

INTAKE AIR FILTER 1
AIR INTAKE PLENUM 2
RESISTOR UNIT 3
HEATER CONTROLS 3
CONTROL CABLE - AIR DISTRIBUTION 7
CONTROL CABLE - AIR RECIRCULATION 7
HEATER VALVE 8
HEATER 8
HEATER MATRIX 9
BLOWER ASSEMBLY 10
BLOWER ASSEMBLY MOTOR 11
HEATER FAN SWITCH 12

A/C

HEATER UNIT

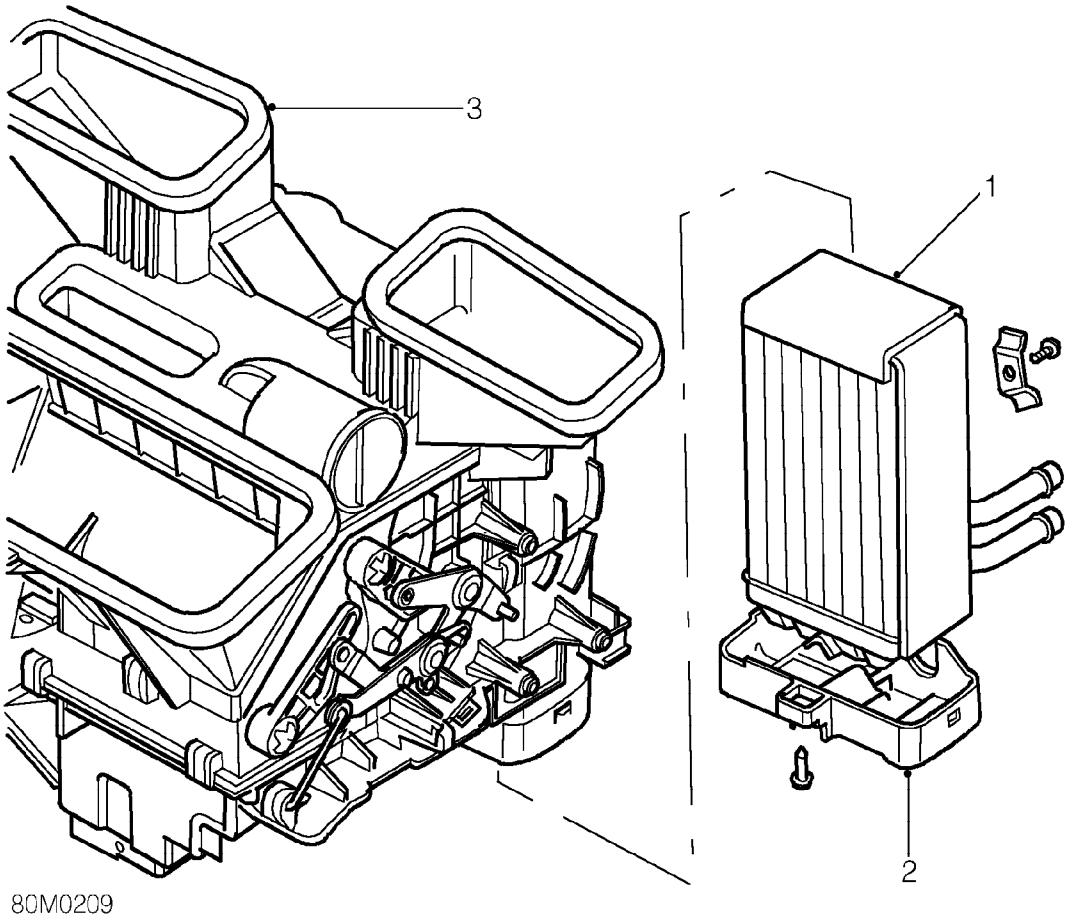

1. Heater matrix
2. Cover - heater matrix
3. Case - heater

BLOWER UNIT

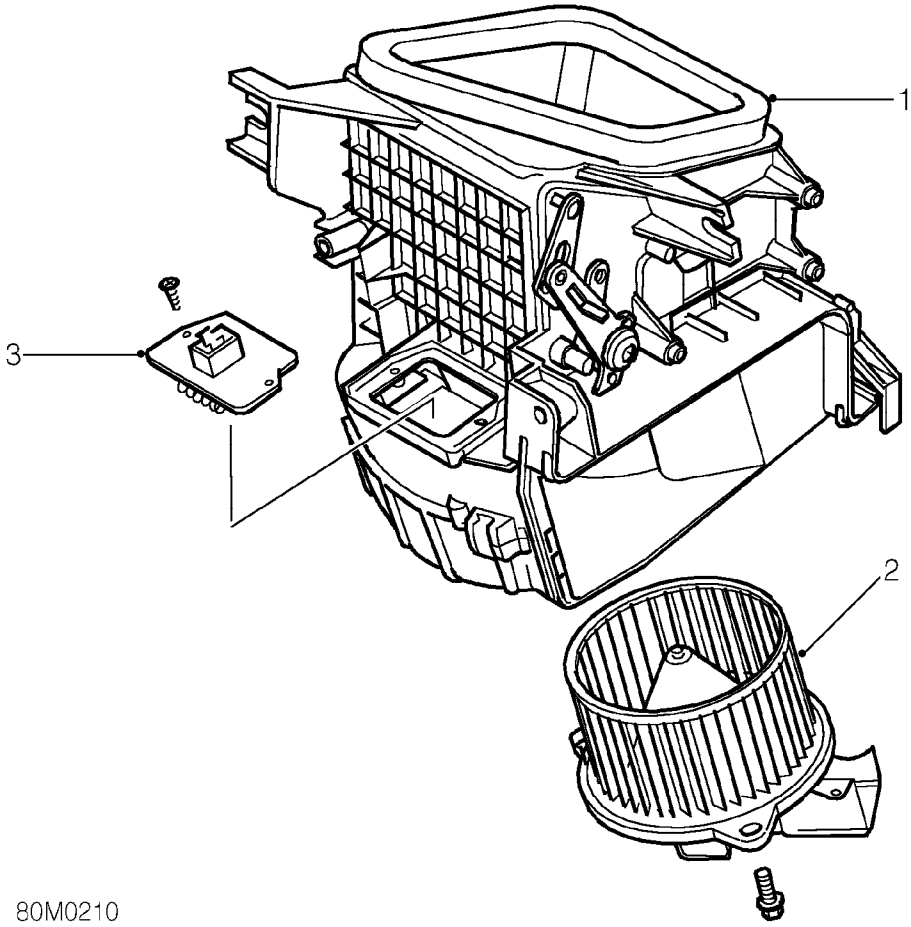

1. Air box
2. Fan assembly
3. Resistor unit

This page is intentionally left blank

OPERATION

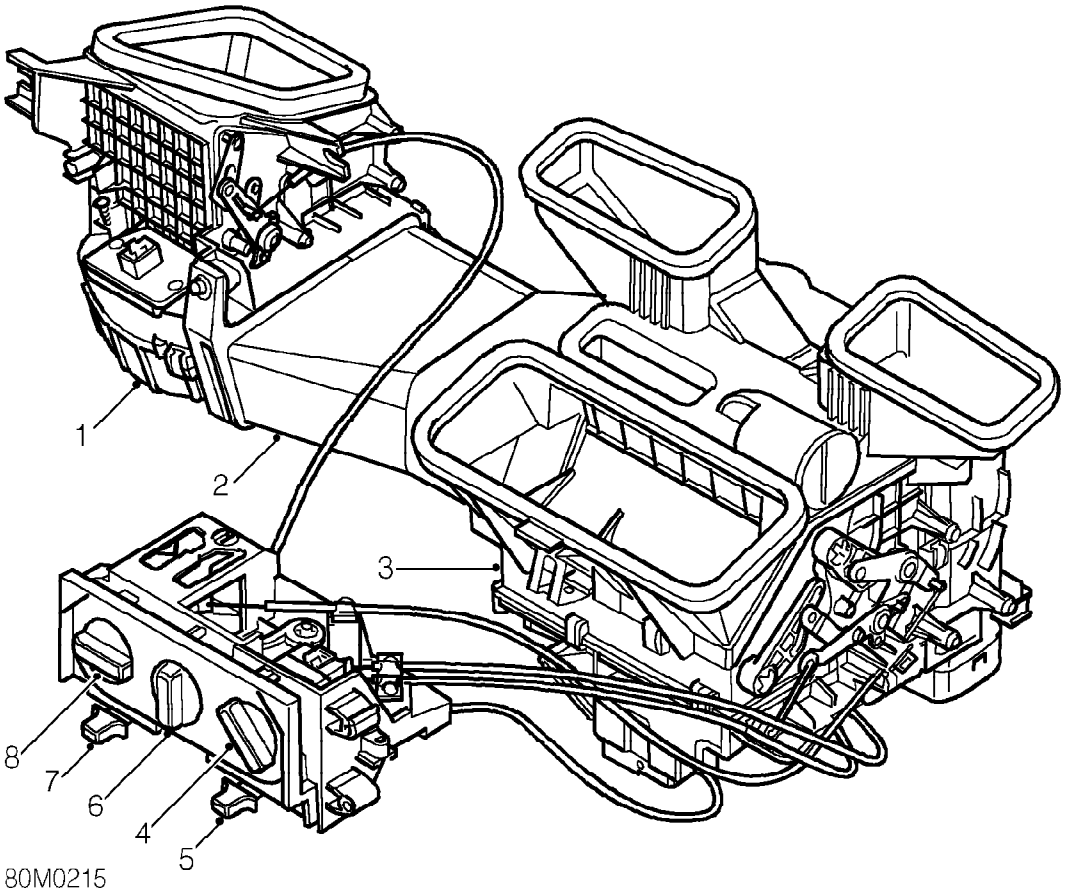

1. Blower unit
2. Heater duct
3. Heater unit
4. Blower switch
5. Face level air flow control
6. Air temperature control
7. Recirculated air supply control
8. Air distribution control

Operation

Air, drawn through the intake below the windscreen, passes through the blower unit, heater duct and heater unit to enter the interior of the car.

When the temperature control is rotated towards the heated air position it opens a water valve in the engine cooling system allowing hot water from the engine to circulate through the heater matrix. Rotation of the temperature control also adjusts the position of the blend flap in the heater unit to direct all, or a proportion of, the intake air through the heater matrix to be heated before entering the car interior.

The distribution of air entering the car through the heater is dependent on the positions of distribution flaps inside the heater unit. The distribution flaps are adjusted by rotation of the distribution control to direct the air in various proportions to the vents at face level, foot level and windscreen.

When the blower switch is switched off, the volume of air entering the blower unit depends on the ram effect of the car's forward motion. Four fan speeds are also available on the switch to supplement the ram effect.

The air supply control provides the facility to recirculate air inside the car in conditions when it is desirable not to draw in outside air. The control operates a recirculation motor in the blower unit.

Operation of the face level air flow control will provide unheated blown air at the centre face level vents, provided the distribution control is set not to supply air at face level.

When the distribution control is set to supply air at face level, the unheated air supplied by the face level air flow control will blend with the air supplied by the air distribution control.

INTAKE AIR FILTER

Service repair no - 80.15.42

The intake air filter should be renewed every 12,000 miles (20,000 km) or 12 months, whichever comes first. In hot or dusty climates the filter may require renewing more frequently.

Remove

1. Remove glove box. ***See BODY, Interior trim components.***

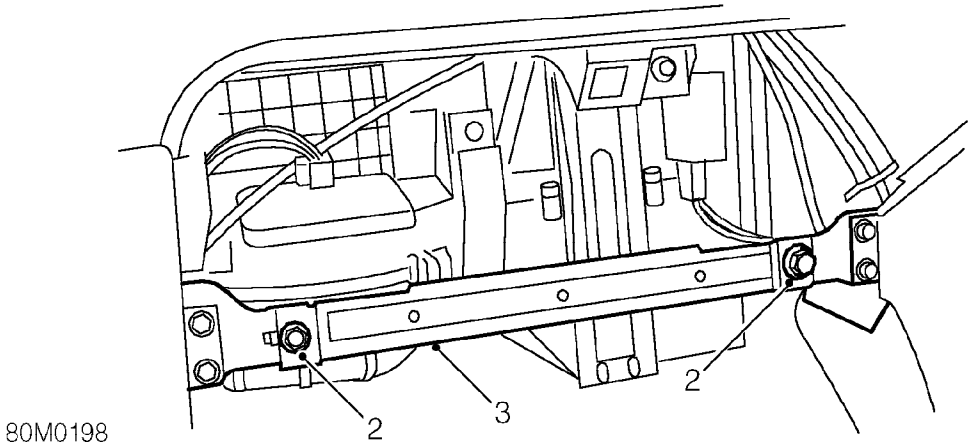

2. Remove 1 screw and loosen second screw securing glove box support bar to fascia.
3. Move glove box support bar aside.

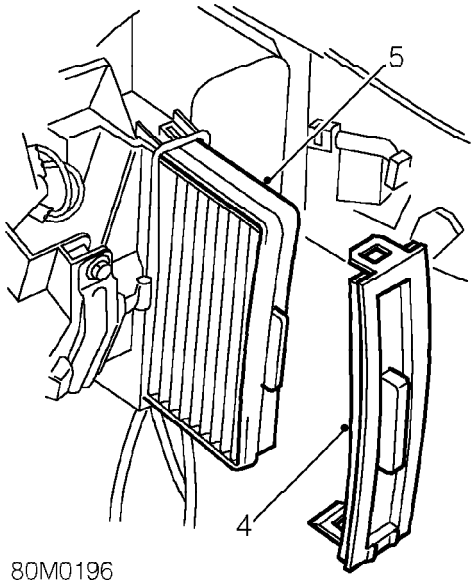

4. Release 2 clips and remove cover from heater housing.
5. Remove and discard intake air filter.

Refit

1. Fit new intake air filter to heater housing. Ensure arrow indicating direction of air flow is facing the correct way.
2. Clean intake air filter cover and fit to heater housing.
3. Fit glove box support bar to fascia and secure with screws.
4. Fit glove box. ***See BODY, Interior trim components.***

AIR INTAKE PLENUM

Service repair no - 80.15.62

Remove

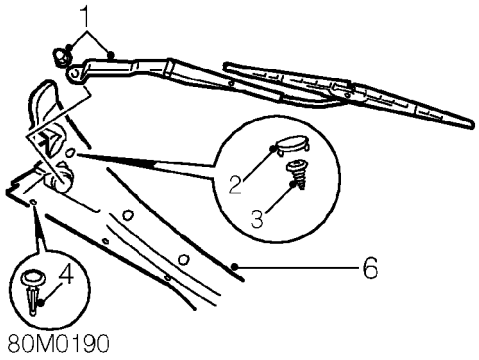

1. Remove wiper arms. ***See WIPERS & WASHERS, Repairs.***
2. Remove 7 screw covers and screws along upper edge of plenum.
3. Release 8 studs securing lower edge of plenum to body.
4. Release plenum from bonnet hinges and 'A' post finishers.
5. Remove air intake plenum.

Refit

1. Fit air intake plenum.
2. Fit trim clips securing lower edge of plenum to body.
3. Fit and tighten screws securing upper edge of plenum to body.
4. Fit screw covers along upper edge of plenum.
5. Fit wiper arms. ***See WIPERS & WASHERS, Repairs.***

RESISTOR UNIT

Service repair no - 80.20.17

Remove

1. Remove glove box. ***See BODY, Interior trim components.***

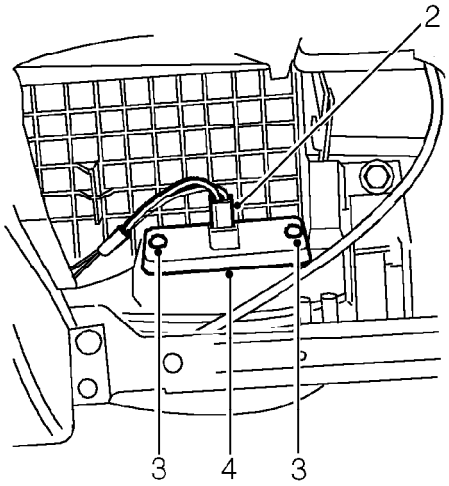

80M0197

2. Disconnect multiplug from resistor unit.
3. Remove 2 screws securing resistor unit to heater.
4. Remove resistor unit.

Refit

1. Fit resistor unit to heater and secure with screws.
2. Connect multiplug to resistor unit.
3. Fit glove box. ***See BODY, Interior trim components.***

HEATER CONTROLS

Service repair no - 80.10.02

Remove

1. Remove front console. ***See BODY, Interior trim components.***
2. Remove glove box. ***See BODY, Interior trim components.***

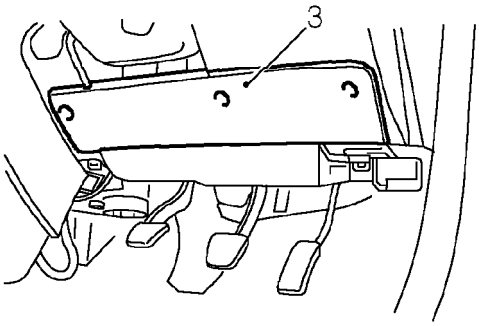

80M0200

3. Release 3 turnbuckles and remove fascia lower cover.

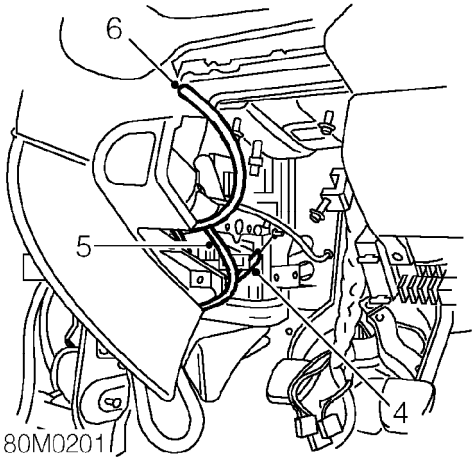

80M0201

4. Disconnect air distribution control cable from heater unit.
5. Disconnect heater control cable from heater unit.
6. Disconnect fresh air vent control cable from heater unit.

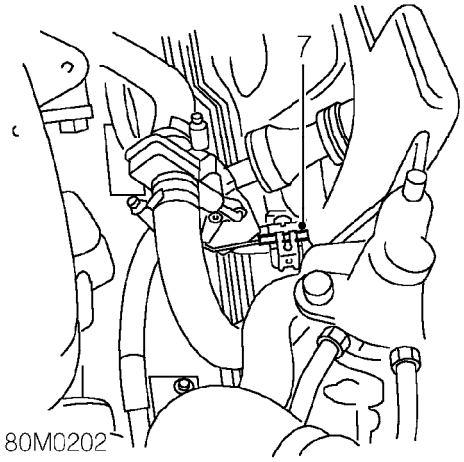

7. Disconnect heater control cable from heater valve and release from bulkhead.

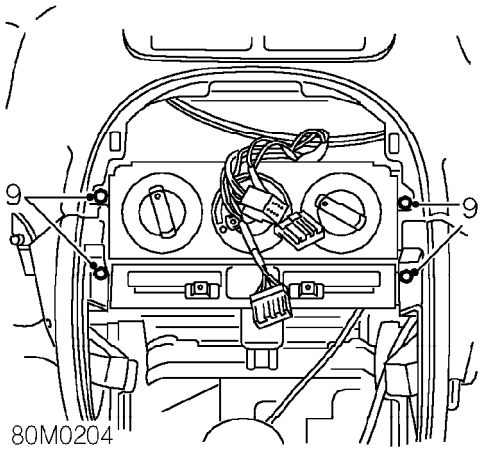

9. Remove 4 screws securing heater controls and withdraw from fascia.

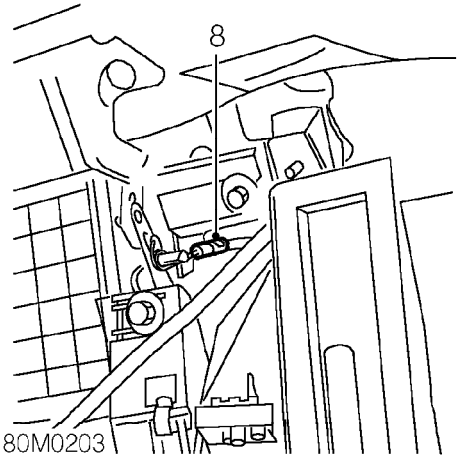

8. Disconnect air recirculation control cable from blower assembly.

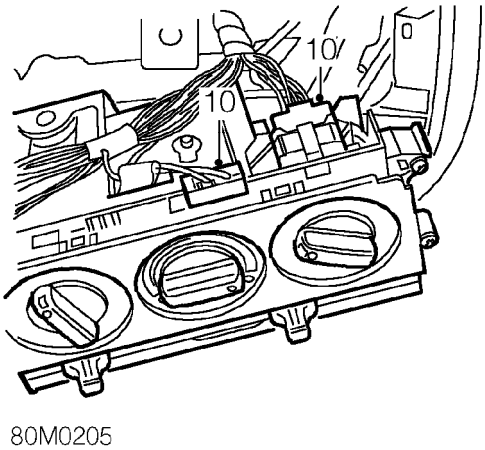

10. *Models with heater:* Disconnect 2 multiplugs from heater controls.
11. *Models with air conditioning:* Disconnect 3 multiplugs from heater controls.

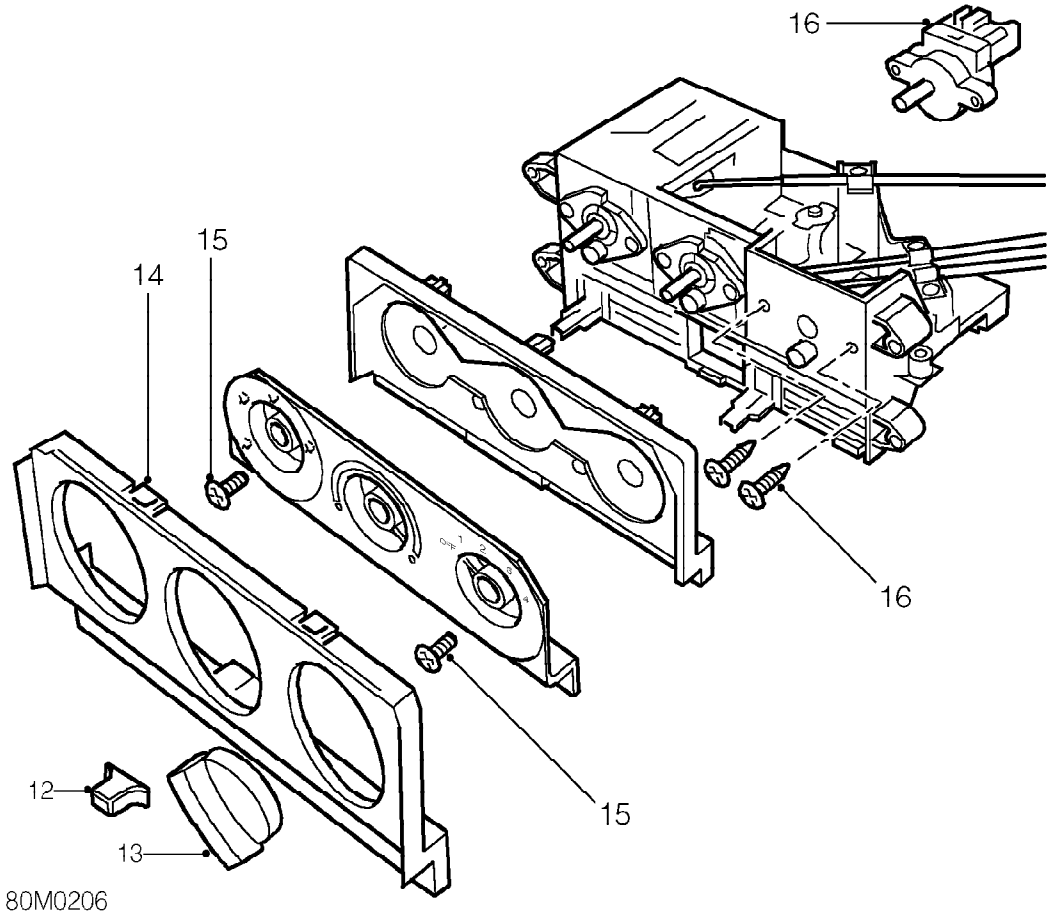

12. Remove heater controls from fascia.
Do not carry out further dismantling if component is removed for access only.
13. Carefully prize knobs from heater controls.
14. Release 6 clips securing trim finisher to heater controls.
15. Remove 2 screws securing bezel to heater controls and remove.
16. Remove 2 screws securing heater fan switch and remove.

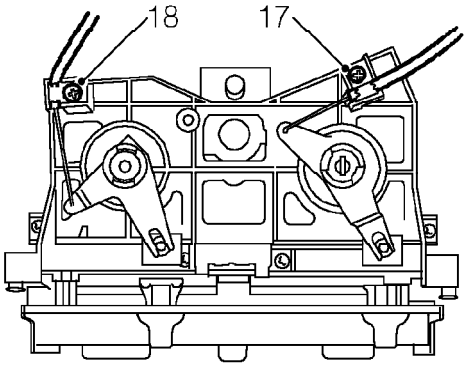

17. Remove screw securing air recirculation cable and release from heater controls.
18. Remove screw securing air distribtuion cable and release from heater controls.

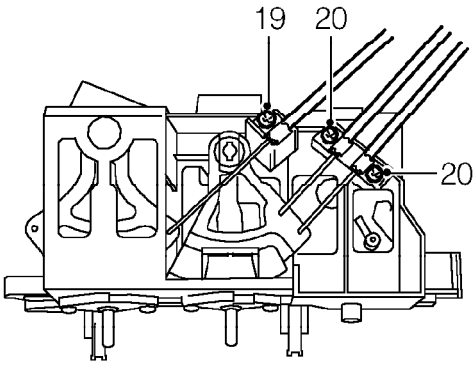

80M0208

19. Remove 2 screws securing heater control cables and release from heater controls.
20. Remove screw securing fresh air vent control cable to heater controls and fit to new heater controls. Secure with screw.
21. Fit heater control cables to heater controls and secure with screws.
22. Fit air distribution cable to heater controls and secure with screw.
23. Fit air recirculation cable to heater controls and secure with screw.
24. Fit fan switch to heater controls and secure with screws.
25. Fit bezel to heater controls and secure with screws.
26. Fit trim finisher to heater controls.
27. Fit knobs to heater controls.

Refit

1. Position heater controls to fascia and connect multiplugs.
2. Fit and tighten screws securing heater controls to fascia.
3. Rotate heater control and control lever on heater assembly to cool positions.
4. Connect heater control cable to lever and secure with clip.
5. Set heater valve to closed position.
6. Feed heater control cable through bulkhead and connect to heater valve. Secure with clip.
7. Set air distribution control and lever on heater assembly to vent positions.
8. Connect air distribution cable to lever and secure with clip.
9. Feed air recirculation cable behind blower assembly and connect to lever. Secure with clip.
10. Fit fresh air vent control cable to heater assembly and secure with clip.
11. Fit fascia lower cover and secure turnbuckles.
12. Fit glove box. ***See BODY, Interior trim components.***
13. Fit front console. ***See BODY, Interior trim components.***

CONTROL CABLE - AIR DISTRIBUTION

Service repair no - 80.10.12

Remove

1. Remove heater controls. ***See this section.***

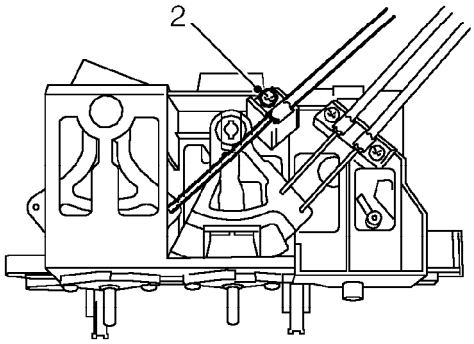

80M0213

2. Remove screw securing air distribution cable and remove from heater controls.

Refit

1. Fit air distribution cable to heater controls and secure with screw.
2. Fit heater controls. ***See this section.***

CONTROL CABLE - AIR RECIRCULATION

Service repair no - 80.10.17

Remove

1. Remove heater controls. ***See this section.***

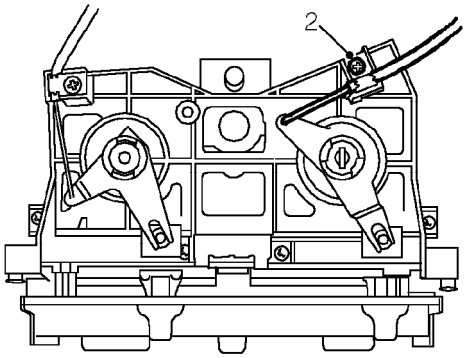

80M0214

2. Remove screw securing air recirculation cable and remove from heater controls.

Refit

1. Fit air recirculation cable to heater controls and secure with screw.
2. Fit heater controls. ***See this section.***

HEATER VALVE

Service repair no - 80.10.16

Remove

1. Position drain tin to collect any spillage.

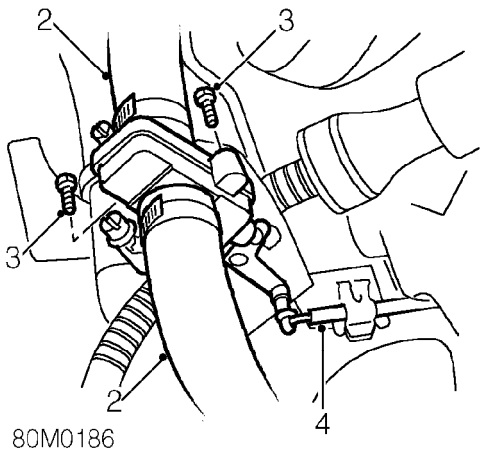

2. Release coolant hoses from either side of heater valve.
3. Undo 2 screws securing heater valve to mounting bracket.
4. Release heater valve from cable and remove.

Refit

1. Fit heater valve to mounting bracket and tighten screws.
2. Connect heater cable to heater valve.
3. Connect both coolant hoses to heater valve.
4. Top-up cooling system. ***See MAINTENANCE.***

HEATER

Service repair no - 80.20.01

Remove

1. Disconnect battery earth lead.
2. Position drain tray to collect any coolant spillage.

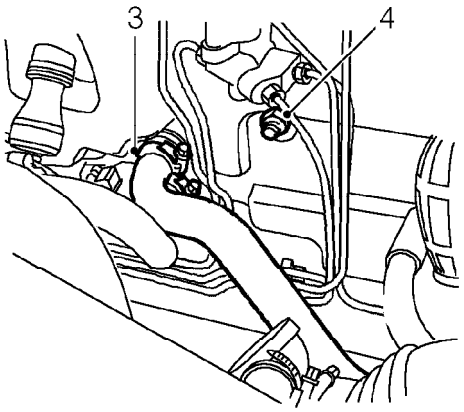

3. Release clips and remove coolant hoses from heater pipes.
4. Remove nut securing heater to bulkhead.
5. Remove fascia. ***See BODY, Interior trim components.***

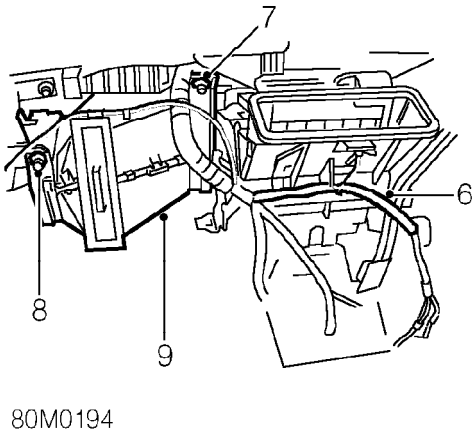

6. Release harness from heater.
7. Remove screw securing heater to heater duct.
8. Remove screw securing heater duct to blower assembly.
9. Remove heater duct.

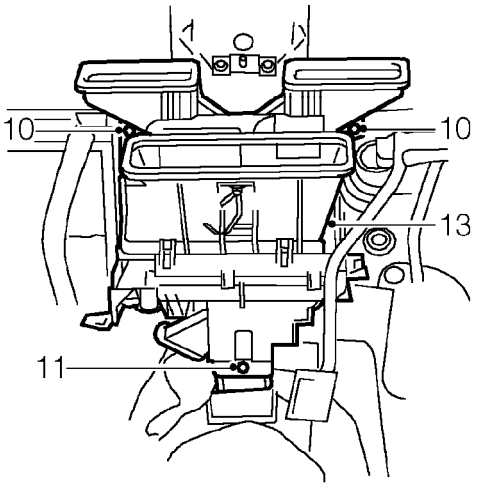

80M0195

10. Remove nuts securing heater to bulkhead.
11. Remove trim stud securing heater to centre console duct.
12. Release duct from heater.
13. Remove heater from vehicle.

CAUTION: Be careful not to allow any coolant in the heater matrix to spill into the interior of the vehicle.

Refit

1. Position heater to vehicle.
2. Fit nuts securing heater to bulkhead and tighten to 22 Nm.
3. Position duct to heater and secure with trim stud.
4. Fit heater duct between blower assembly and heater and secure with screws.
5. Secure harness to heater.
6. Fit fascia. ***See BODY, Interior trim components.***
7. Fit nut securing heater to bulkhead and tighten to 22 Nm.
8. Fit coolant hoses to heater pipes and secure with clips.
9. Top-up cooling system. ***See MAINTENANCE.***
10. Connect battery earth lead.

HEATER MATRIX

Service repair no - 80.20.29

Remove

1. Remove heater. ***See this section.***

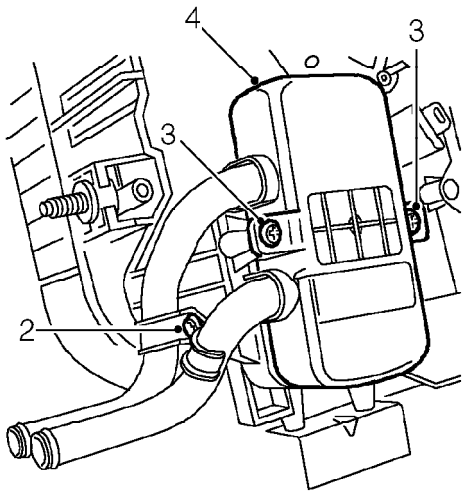

80M0191

2. Remove screw securing heater pipe bracket to heater and collect bracket.
3. Remove 2 screws securing matrix cover to heater.
4. Withdraw heater matrix from heater.

Refit

1. Fit matrix to heater.
2. Position cover to matrix and secure with screws.
3. Fit bracket to heater pipes and secure with screw.
4. Fit heater. ***See this section.***

BLOWER ASSEMBLY

Service repair no - 80.20.12

Remove

1. Disconnect battery earth lead.
2. Remove fascia. ***See BODY, Interior trim components.***

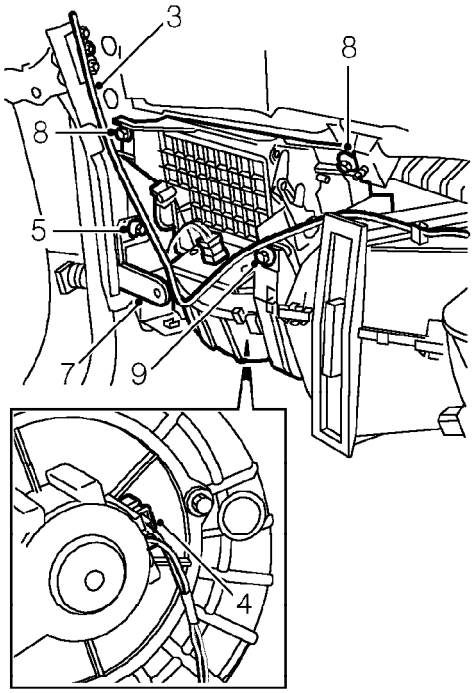

80M0192

3. Release coaxial cable from heater/blower assembly.
4. Disconnect 2 multiplugs from blower assembly.
5. Remove 3 bolts securing fascia end support panel to body.
6. Remove bolt securing blower assembly to support panel.
7. Remove support panel.
8. Remove 2 nuts securing blower assembly to body.
9. Remove screw securing blower assembly to heater duct.
10. Release blower assembly from heater duct and remove.

Refit

1. Fit blower assembly to heater duct and position to body.
2. Fit and tighten screw securing blower assembly to heater duct.
3. Fit and tighten nuts securing blower assembly to body.
4. Fit fascia support panel and tighten bolts to body to 20 Nm.
5. Fit and tighten bolt securing blower assembly to support panel.
6. Connect multiplugs to blower assembly.
7. Secure coaxial cable to clips on heater/blower assembly.
8. Fit fascia. ***See BODY, Interior trim components.***
9. Connect battery earth lead.

BLOWER ASSEMBLY MOTOR

Service repair no - 80.20.15

Remove

1. Remove blower assembly. ***See this section.***

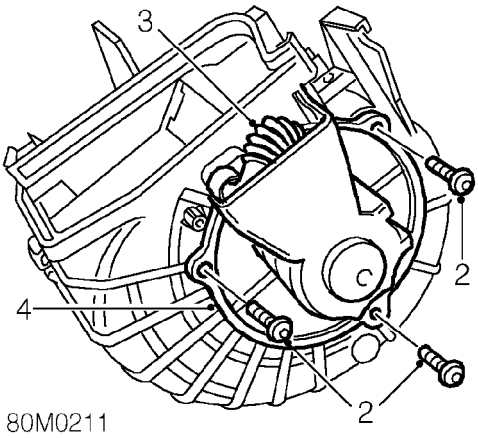

2. Remove 3 screws securing motor to blower assembly.
3. Release pipe from motor.
4. Remove motor from blower assembly.

Refit

1. Fit motor to blower assembly and secure pipe.
2. Fit screws securing motor to blower assembly and tighten to 9 Nm.
3. Fit blower assembly. ***See this section.***

HEATER FAN SWITCH

Service repair no - 80.10.22

Remove

1. Remove heater controls ***See this section.***

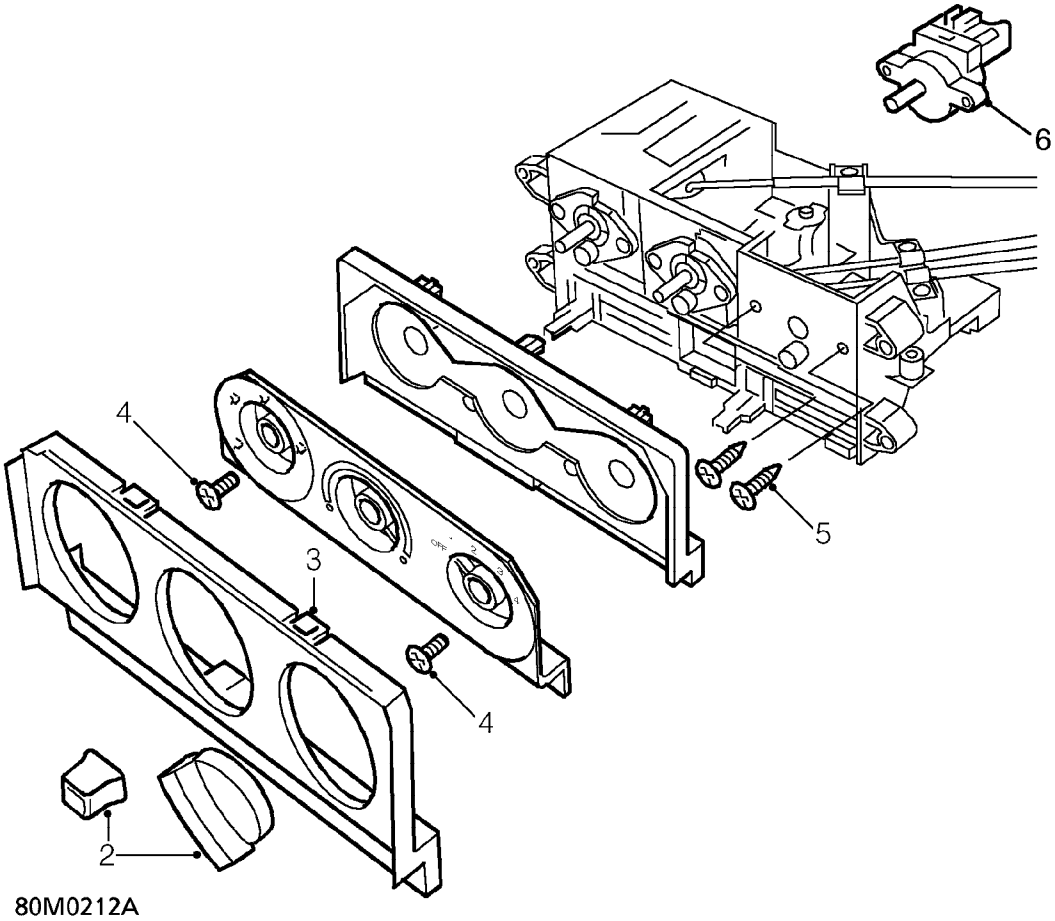

2. Carefully prize knobs from heater controls.
3. Release 6 clips securing trim finisher to heater controls.
4. Remove 2 screws securing bezel to heater controls and remove.
5. Remove 2 screws securing heater fan switch heater controls.
6. Remove heater fan switch.

Refit

1. Fit fan switch to heater controls and secure with screws.
2. Fit bezel to heater controls and secure with screws.
3. Fit trim finisher to heater controls.
4. Fit knobs to heater controls.
5. Fit heater controls. ***See this section.***

CONTENTS

Page

DESCRIPTION AND OPERATION

AIR CONDITIONING COMPONENTS - 'K' SERIES 1
AIR CONDITIONING COMPONENTS - 'L' SERIES 2
AIR CONDITIONING ELECTRICAL COMPONENTS - 'K' SERIES 3
AIR CONDITIONING ELECTRICAL COMPONENTS - 'L' SERIES 4
SCHEMATIC LAYOUT OF AIR CONDITIONING SYSTEM 5
AIR CONDITIONING SYSTEM OPERATION 6
AIR CONDITIONING CONTROL SYSTEM 7

ADJUSTMENTS

GENERAL PRECAUTIONS 1
REMEDIAL ACTIONS 1
SERVICE PRECAUTIONS 2
REFRIGERANT RECOVERY, RECYCLING AND RECHARGING 4

REPAIRS

AIR CONDITIONING RELAY MODULE 1
COMPRESSOR - 'K' SERIES 1
COMPRESSOR - 'L' SERIES 3
CONDENSER COOLING FAN 7
CONDENSER 10
RECEIVER/DRYER 11
AIR CONDITIONING SWITCH 12
ENGINE OVERHEAT SENSOR - 'L' SERIES 13
TRINARY PRESSURE SWITCH 13
EVAPORATOR 14

A/C

AIR CONDITIONING COMPONENTS - 'K' SERIES

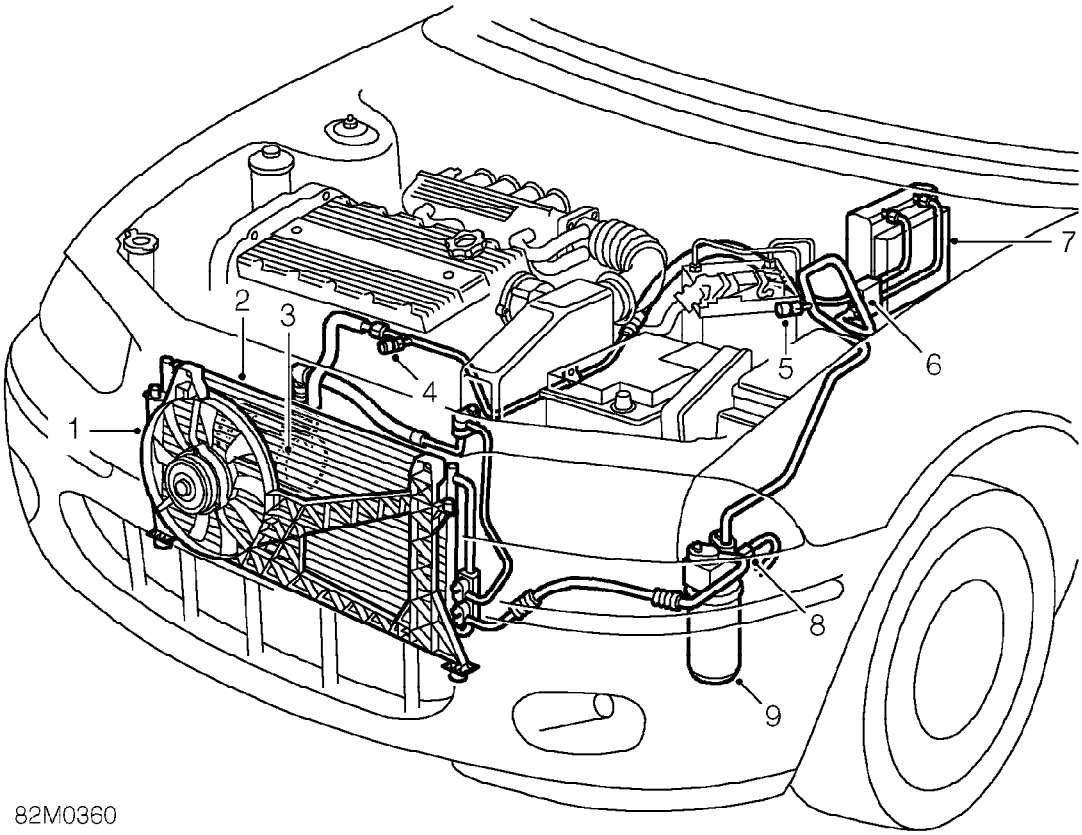

1. Cooling fan - condenser
2. Condenser
3. Compressor
4. Low pressure servicing connection
5. High pressure servicing connection
6. Thermostatic expansion valve
7. Evaporator
8. Trinary pressure switch
9. Receiver/dryer

AIR CONDITIONING COMPONENTS - 'L' SERIES

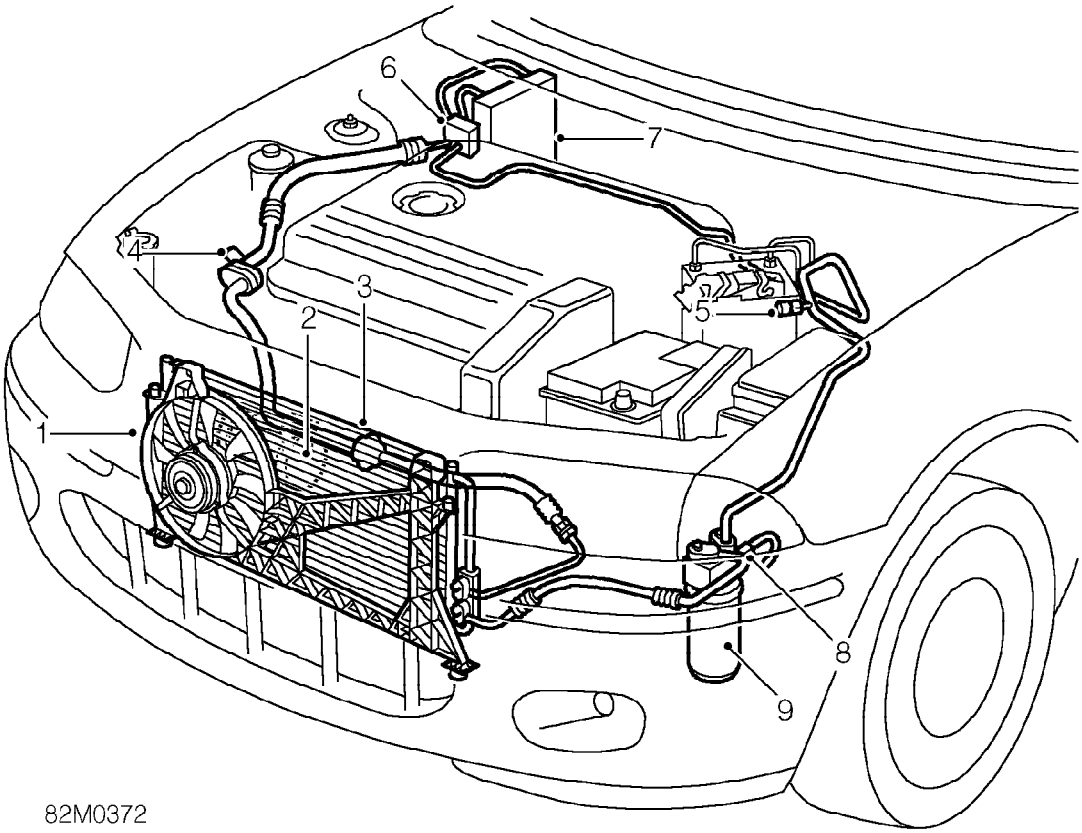

1. Cooling fan - condenser
2. Compressor
3. Condenser
4. Low pressure servicing connection
5. High pressure servicing connection
6. Thermostatic expansion valve
7. Evaporator
8. Trinary pressure switch
9. Receiver/dryer

AIR CONDITIONING ELECTRICAL COMPONENTS - 'K' SERIES

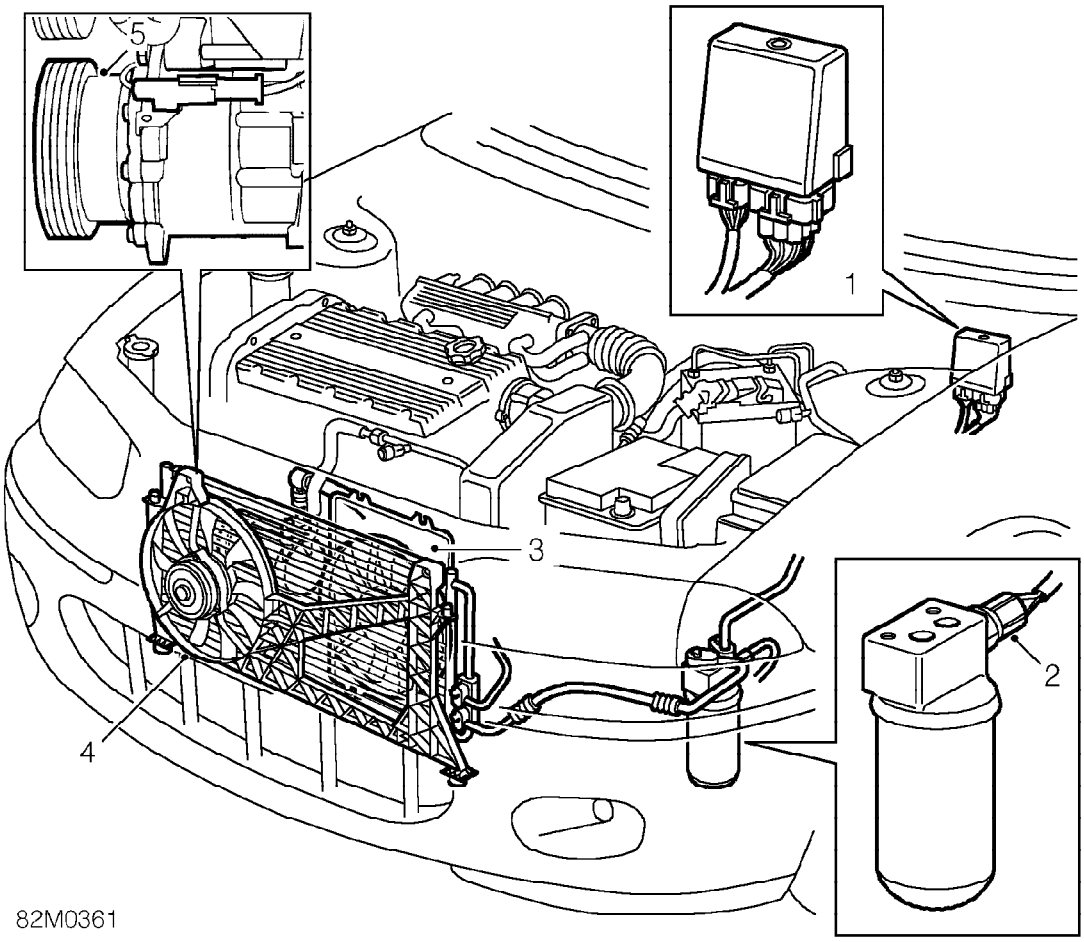

1. Air conditioning relay module
2. Trinary pressure switch
3. Inboard (radiator) cooling fan
4. Cooling fan - condenser
5. Compressor clutch

AIR CONDITIONING ELECTRICAL COMPONENTS - 'L' SERIES

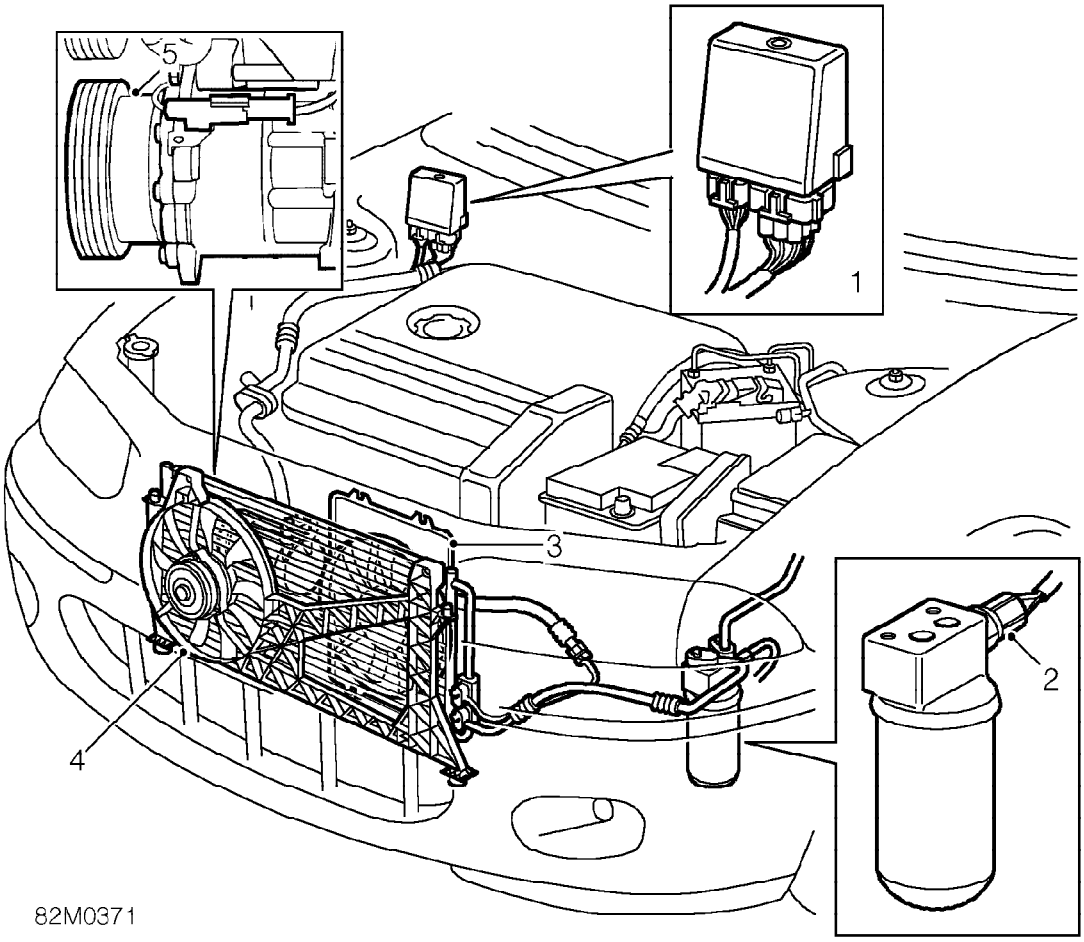

1. Air conditioning relay module
2. Trinary pressure switch
3. Inboard (radiator) cooling fan
4. Cooling fan - condenser
5. Compressor clutch

SCHEMATIC LAYOUT OF AIR CONDITIONING SYSTEM

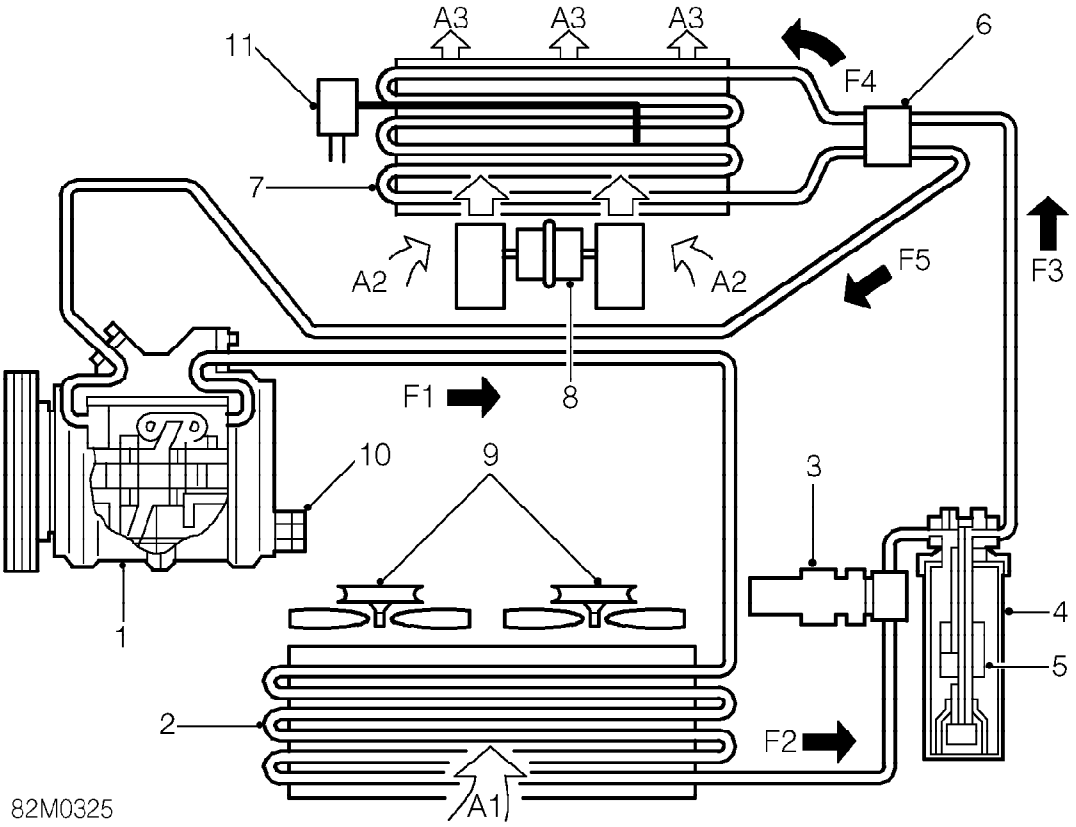

1. Compressor
2. Condenser
3. Trinary pressure switch
4. Receiver/dryer
5. Drying agent - receiver/dryer
6. Thermostatic expansion valve
7. Evaporator
8. Heater blower motor
9. Condenser cooling fans
10. Compressor high pressure relief valve
11. Thermostat and sensing tube

A1. Ambient air flow through condenser
A2. Ambient air flow through fan and evaporator
A3. Cooled air flow to vehicle interior
F1. High pressure, high temperature refrigerant vapour
F2. High pressure, slightly subcooled refrigerant liquid
F3. High pressure, slightly subcooled refrigerant liquid with moisture, vapour bubbles and foreign matter removed
F4. Low pressure, low temperature mixed liquid and vapour
F5. Low pressure, slightly superheated refrigerant vapour

AIR CONDITIONING SYSTEM OPERATION

The air conditioning system provides the means of supplying cooled and dehumidified, fresh or recirculated air to the interior of the vehicle. The cooling effect is obtained by blowing air through the matrix of an evaporator unit and when required, mixing that air with heated air by means of the heater distribution and blend unit, to provide the conditions required inside the vehicle. The volume of the conditioned air being supplied is controlled by a variable speed blower.

Sealed refrigerant

A sealed system, charged with Refrigerant R134a, together with a blower unit, blend unit and control system combine to achieve the cooled air condition.

The sealed system comprises of the following main components:

1. Compressor
2. Condenser
3. Receiver/dryer
4. Thermostatic expansion valve
5. Evaporator

Refrigeration cycle

The compressor is driven by a belt from the crankshaft pulley. The compressor pressurises and circulates the refrigerant through the system. Mounted on the compressor, an electro-mechanical clutch maintains the correct temperature and pressure of the refrigerant by engaging or disengaging the compressor to support the systems requirements. Operation of the clutch is controlled by the engine control module (ECM), the trinary (triple) pressure switch and a thermostatic switch located on the exterior fins of the evaporator.

If the temperature at the evaporator falls low enough for ice to form on the fins, the thermostatic switch will open, breaking the circuit to the clutch and releasing the drive on the compressor. The ECM detects that the air conditioning system is not operating and switches off the condenser cooling fan. When the temperature at the evaporator rises sufficiently for the thermostatic switch to close, the air conditioning system will be restarted.

If the system pressure becomes excessive or drops sufficiently to cause damage to the compressor, a trinary pressure switch located in the high pressure line at the receiver dryer will break the electrical circuit to the compressor clutch, releasing drive from the compressor.

The two cooling fans are controlled by the ECM and dependent upon engine coolant temperature and air conditioning system pressure. With the air conditioning system switched off, only the inboard (radiator) cooling fan is operational with the ECM controlling the fan speed according to engine temperature. With the air conditioning system switched on, both the inboard and condenser cooling fans are connected in series by the ECM and operate at low speed. As the pressure of the air conditioning refrigerant rises above the threshold of the medium pressure setting on the trinary pressure switch, the cooling fans are connected in parallel and operate at high speed.

If engine coolant temperature continues to rise with both cooling fans running at high speed, the ECM will break the circuit to the compressor clutch releasing drive to the compressor. This reduces the load on the engine whilst maintaining a high cooling fan speed to lower the engine coolant temperature. Once engine coolant temperature has dropped sufficiently the air conditioning system will be reinstated.

From the compressor, which has an emergency high pressure relief valve fitted, high pressure vaporised refrigerant is passed to the condenser which is mounted in front of the radiator.

Ram air passing through the condenser, supplemented by the cooling fans, cools the refrigerant vapour in the condenser sufficiently to form a high pressure slightly subcooled liquid.

This subcooled liquid then passes to the receiver/dryer which extracts moisture from the refrigerant as well as acting as a reservoir.

From the receiver/dryer the moisture free refrigerant liquid passes through a thermostatic expansion valve to the evaporator unit. The thermostatic expansion valve (block valve) incorporates a restrictor which converts the liquid refrigerant into a low temperature, low pressure liquid vapour mixture (fine spray). The valve has an internally located temperature sensing bulb for precise control of superheat. If high temperatures are sensed, the valve opens wider and vice versa.

Fan blown air is passed through the evaporator where it is cooled by absorption due to the low temperature refrigerant in the evaporator. Most of the moisture being held in the air is condensed into water by the evaporator and drains away beneath the vehicle via a drain tube.

The compressor receives low pressure, warm, vaporised coolant from the evaporator to complete the cycle. The compressor pressurises the refrigerant vapour which becomes very hot and is passed to the condenser to be converted into a liquid.

AIR CONDITIONING CONTROL SYSTEM

The air conditioning control system comprises of relays, a thermostatic switch, a trinary pressure switch and a control panel. Together these controls, in conjunction with the cooling fans, compressor clutch, blower and heater distribution and blend unit enable minimal input to maintain the required environment inside the vehicle.

When air conditioning is not selected, air is supplied by ram effect or blower to the areas selected by the air distribution control. The air mix flap on the blend unit controls the temperature of the air being delivered. No cooled air is available.

Selecting air conditioning provides the added facility of cooled air available to be mixed with heated air in the blend unit. When required a fully cold condition can be selected by turning the temperature control to cold, which automatically closes the heated coolant access to the heater matrix. Mixtures of cooled, fresh, and hot air can be selected to give the required interior environmental conditions by selection at the control panel.

Trinary pressure switch

The trinary (triple) pressure switch which is located on top of the receiver dryer detects refrigerant pressure and by means of the ECM controls the following system functions:

1. Refrigerant pressure drops below 2.0 bar (due to possible leakage), the compressors electro-mechanical clutch is disengaged. When pressure rises above 2.4 bar the compressors clutch is re-engaged.
2. Refrigerant pressure exceeds 19 bar the cooling fan speed is increased by the ECM switching the relays in the relay module to connect the cooling fans in parallel supplying a direct feed to each fan motor.
3. Refrigerant pressure rises above 27 bar even with maximum cooling fan operation (due to possible blockage), the compressor electro-mechanical clutch is disengaged. The high pressure switch resets when the pressure drops to approximately 21 bar.

Condenser cooling fans

The condenser cooling fans operate automatically whenever the air conditioning system is switched on, providing the system pressure is correct.

The cooling fans are controlled by the ECM, thermostatic switch and trinary pressure switch. If engine coolant temperature and air conditioning system pressure are normal then the cooling fans operate at low speed.

If the engine coolant temperature reaches 112°C or the air conditioning refrigerant pressure exceeds 19 bar then the cooling fans will operate at high speed.

Blower control

The blower can be operated at any one of five speeds by rotating the blower switch to the required position. When the blower is switched off the air conditioning system will not operate.

The fresh air/recirculation flap has two positions and is operated by sliding the knob in the centre console. In the recirculation position, air is drawn into the heater from the vehicle by closing the exterior air inlet and opening the interior inlet. In the fresh air position, air is drawn into the heater from outside the vehicle by opening the exterior air inlet and closing the interior inlet.

Heater distribution and blend unit control

Blower unit air flow, having passed through the evaporator passes into the heater blend unit to be heated, if required. It is then directed into the vehicle interior in accordance with the flap positions, which are designated by the air distribution control on the fascia panel. A heater flap controls the amount of air flowing through the heater matrix. This flap is moved by the temperature control.

A cable connected to the bleed flap linkage moves the coolant valve, allowing engine coolant to flow through the heater matrix back to the engine when the control is moved towards the hot position. The temperature of the heated air flow into the vehicle interior is controlled by the blend flap.

The distribution control moves the flaps which control the direction of the air flow into the interior of the vehicle.

GENERAL PRECAUTIONS

The refrigerant used in the air conditioning system is HFC (Hydrofluorocarbon) R134a.

WARNING:

- **R134a is a hazardous liquid and when handled incorrectly can cause serious injury. Suitable protective clothing must be worn when carrying out service operations on the air conditioning system.**
- **Do not allow a refrigerant container to be heated by direct flame or to be placed near any heating appliance. A refrigerant container must not be heated above 50°C.**
- **Do not leave a container of refrigerant without its cap fitted. Do not transport a container of refrigerant that is unrestrained, especially in boot of a car.**
- **R134a is odourless and colourless. Do not handle or discharge in an enclosed area, or any area where the vapour and liquid can come in contact with a naked flame or hot metal. R134a is not flammable but can cause a highly toxic gas.**
- **Do not smoke or weld in areas where R134a is in use. inhalation of concentrations of vapour can cause dizziness, disorientation, incoordination, narcosis, nausea or vomiting.**
- **Do not allow fluids other than R134a or compressor lubricant to enter the air conditioning system. Spontaneous combustion may occur.**
- **R134a splashed on any part of the body will cause immediate freezing of that area. Also refrigerant cylinders and replenishment trolleys when discharging will freeze skin to them if contact is made.**
- **The refrigerant used in an air conditioning system must be reclaimed in accordance with the recommendations given by a Refrigerant Recovery Recycling Recharging Station.**

NOTE: Suitable protective clothing comprises:
Wrap round safety glasses or helmet, heat proof gloves, rubber apron, or waterproof overalls and rubber boots.

REMEDIAL ACTIONS

1. If liquid R134a strikes the eye, do not rub it. Gently run large quantities of eye wash off it to raise the temperature. If eye wash is not available, cool, clean water may be used. Cover eye with a clean pad and seek immediate medical attention.
2. If liquid R134a is splashed on the skin run large quantities of water over the area as soon as possible to raise the temperature. Carry out the same action if the skin comes in contact with discharging cylinders. Wrap affected parts in blankets or similar material and seek immediate medical attention.
3. If suspected of being overcome by inhalation of R134a vapour seek fresh air. If unconscious move to fresh air. Apply artificial respiration and/or oxygen and seek immediate medical attention.

NOTE: Due to its low evaporating temperature of -30°C, R134a should be handled with care.

SERVICE PRECAUTIONS

Care should be taken when handling the components in the refrigeration system. Units must not be lifted by their hoses, pipes or capillary lines. Hoses and lines must not be subjected to any twist or stress. Ensure that hoses are positioned in their correct run before tightening couplings, and ensure that all clips and supports are used. Torque wrenches of the correct type must be used when tightening refrigerant connections to the stated value. An additional spanner must be used to hold the union to prevent twisting of the pipe.

Before connecting any hose or pipe ensure that refrigerant oil is applied to the seat of the new 'O' ring seals but not to the threads.

Check the oil trap for the amount of oil lost.

All protective plugs must be left in place until immediately prior to connection.

The receiver/dryer contains desiccant which absorbs moisture. It must be positively sealed at all times.

CAUTION: Whenever the refrigerant system is opened, the receiver/dryer must be renewed immediately before evacuating and recharging the system.

Use alcohol and a clean cloth to clean dirty connections.

Ensure that all new parts fitted are marked for use with **R134a.**

Refrigerant oil

Use an approved refrigerant lubricating oil:

Sanden SP-10
Unipart SP-10

CAUTION: Do not use any other type of refrigerant oil.

Refrigerant oil easily absorbs water and must not be stored for long periods. Do not pour unused oil back into the container.

When renewing system components, add the following quantities of refrigerant oil:

Condenser 30cm^3
Evaporator 30cm^3
Pipe or hose 10cm^3
Receiver dryer 30cm^3

Total amount of oil in the system: 135 cc

A new compressor is sealed and pressurised with Nitrogen gas, slowly release the sealing cap, gas pressure should be heard to release as the seal is broken.

NOTE: A new compressor should always have its sealing cap in place and must not be removed until immediately prior to fitting the compressor air conditioning pipes.

Rapid refrigerant discharge

If the air conditioning system is involved in accident damage and the circuit is punctured, the refrigerant will discharge rapidly. The rapid discharge of refrigerant will also result in the loss of most of the oil from the system. The compressor must be removed and all the remaining oil in the compressor drained and refilled as follows:

1. Remove the drain plug and gravity drain all the oil, assisted by rotating the clutch plate(not the pulley).
2. Refit the compressor with the following amount of new refrigerant oil: 100cm^3
3. Refit the drain plug and plug the inlet and outlet port.

This page is intentionally left blank

REFRIGERANT RECOVERY, RECYCLING AND RECHARGING

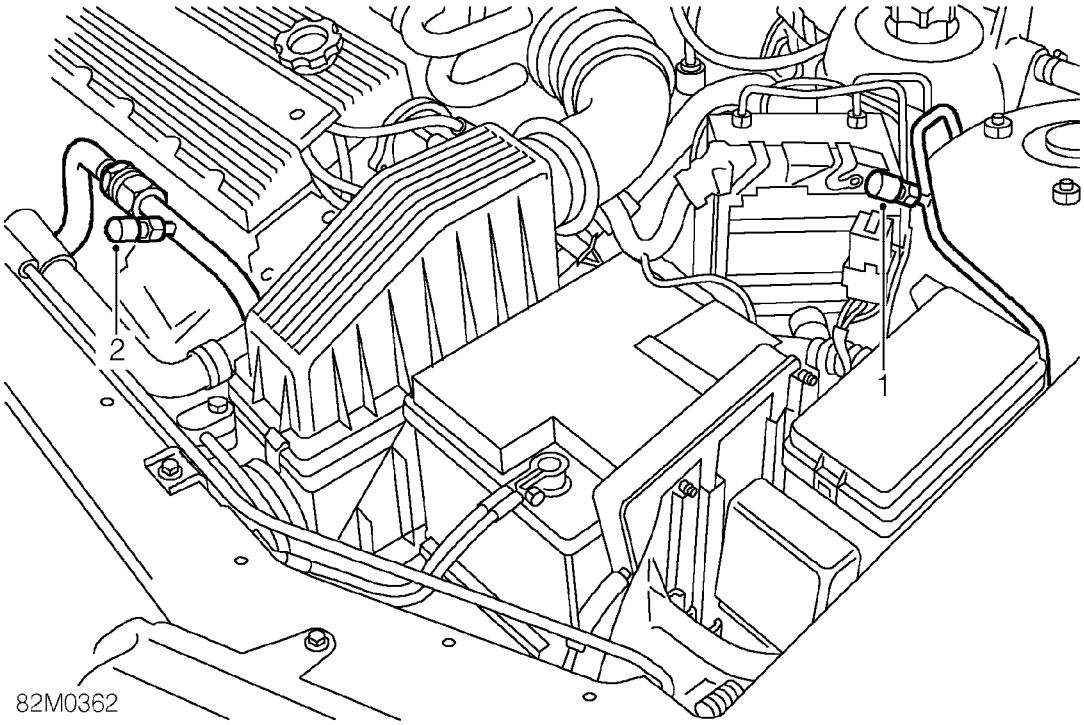

Service connections - 'K' series

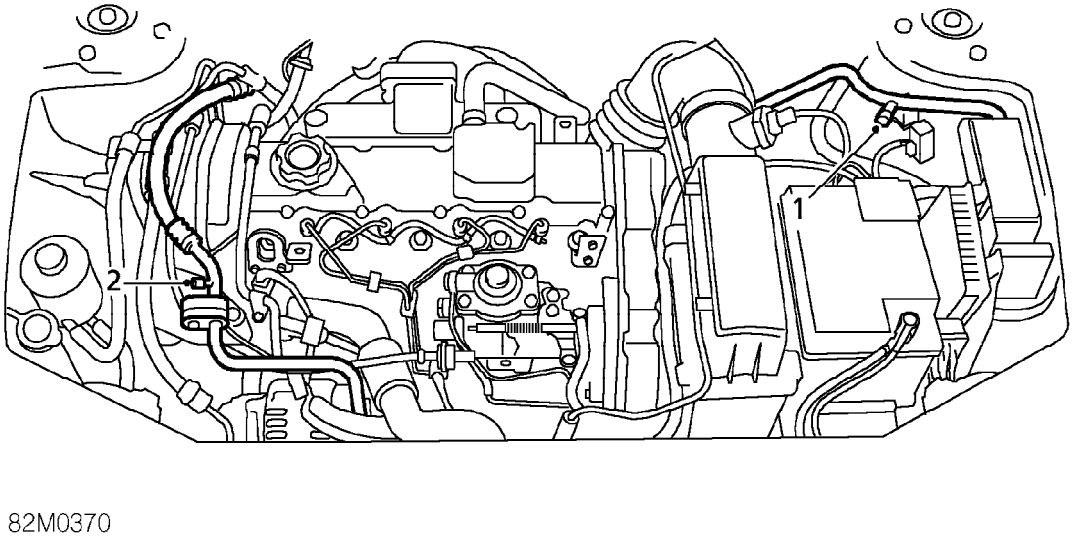

Service connections - 'L' series

1. High pressure

2. Low pressure

NOTE: An air conditioning portable Refrigerant Recovery, Recycling and Recharging Station for use with R134a refrigerant incorporates all the features necessary to recover refrigerant R134a from the A/C system, to filter and remove moisture, to evacuate and recharge with reclaimed refrigerant. The unit can also be used for performance testing and air conditioning system analysis.

Recovery and recycling

1. Connect a refrigerant station to high and low pressure servicing connections.
2. Operate the refrigerant recovery system in accordance with the manufacturer's instructions.

WARNING: Refrigerant must always be recycled before re-use, to ensure that the purity of the refrigerant is high enough for safe use in the air conditioning system.

Recycling should always be carried out with equipment which is design certified by Underwriter Laboratory Inc. for compliance with SAE - J1991. Other equipment may not recycle refrigerant to the required level of purity.

A R134a Refrigerant Recovery Recycling Recharging Station must not be used with any other type of refrigerant.

Refrigerant R134a from domestic and commercial sourses must not be used in motor vehicle air conditioning systems.

Evacuation and recharging

WARNING: Servicing must be carried out by personnel familiar with both the vehicle system and the charging and testing equipment. All operations must be carried out in a well ventilated area away from open flame and heat source.

1. Add calculated refrigerant oil to the compressor as necessary.
2. Renew receiver/dryer. ***See Repairs.***
3. Connect a Refrigerant Station to the high and low pressure servicing connections.

CAUTION: Whenever the refrigerant system is opened, the receiver/dryer must be renewed immediately before evacuating and recharging the system.

4. Operate the refrigerant evacuation system according to the manufacturers instructions.

NOTE: If the vacuum reading is below 700 mm/Hg after 15 minutes, suspect a leak in the system. Partially recharge the system and check for leaks using an electronic leak tester.

CAUTION: The system must be evacuated immediately before recharging commences. Delay between evacuation and recharging is not permitted.

5. Operate the refrigerant recharging system according to the manufacturers instructions. Amount of refrigerant required to charge system is:
   RHD - 0.56kg ± 0.025kg.
   LHD - 0.64kg ± 0.025kg.
6. If the full charge has not been accepted by the system, start the engine and run it at 1500 rev/min for a minimum of 2 minutes.
7. Switch on the air conditioning system, open the car windows, set the temperature control to cold and switch the blower to maximum speed.
8. Consult the Refrigerant Station Manual for the correct procedure to complete the charge.
9. Carry out the air conditioning system performance test.
10. Switch off air conditioning and wait for pressures to equalize, before disconnecting charging hoses from vehicle.

Performance Guide-lines

Carry out this test with bonnet, doors or windows open; air conditioning switched on, temperature control set to cold, face vent mode and blower at maximum speed. Set the air supply control to supply fresh air.

1. Close low pressure valve on Refrigerant Station.
2. Close high pressure valve on Refrigerant Station.
3. Connect Refrigerant Station to the high and low pressure servicing connections.
4. With a thermometer measure the air intake temperature, close to the outside air inlet at the plenum.
5. With a thermometer measure the air outlet temperature, at the centre vent outlet.
6. Run the engine at idle speed for 10 minutes or until normal operating temperature is reached.
7. Read both pressure gauges and thermometers. Check readings against the guide-lines shown in the table below.

	Ambient Temperature °C			
	20 - 24	**25 - 29**	**30 - 34**	**35 - 40**
Intake Temperature (˚C)	35 - 37	33 - 40	44 - 46	46 - 45
Outlet Temperature (˚C)	11 - 13	13 - 15	16 - 21	18 - 20
Low Pressure (Bar)	2.5 - 2.68	2.66 - 2.76	2.88 - 3.16	3.06 - 3.25
High Pressure (Bar)	18.75 - 18.32	18.14 - 17.89	18.41 - 18.97	18.51 - 19.83

NOTES

- The temperatures and pressures may be slightly increased for high humidity conditions.

- The varying air conditioner pressure will dictate whether the fans operate in series or parallel, which will itself cause the temperatures and pressures to fluctuate. Fans could operate as follows:

1. Condenser and cooling fan both running at half speed (series).

2. Condenser and cooling fan both running at full speed (parallel).

3. Fans switching from series to parallel.

AIR CONDITIONING RELAY MODULE

Service repair no - 82.20.01

Remove

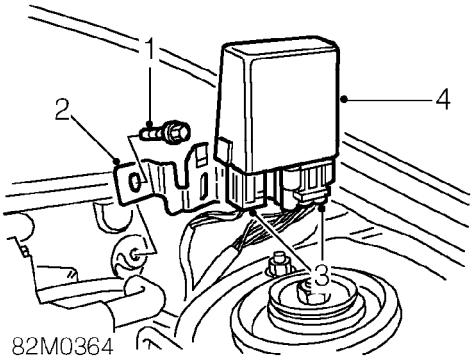

1. Remove bolt securing relay module mounting bracket to body.
2. Release mounting bracket from body.
3. Disconnect 2 multiplugs from relay module.
4. Remove relay module from vehicle.
5. Remove mounting bracket from relay module.

Refit

1. Fit mounting bracket to relay module.
2. Position relay module and connect multiplugs.
3. Fit relay module to body, fit bolt and tighten to 9 Nm.

COMPRESSOR - 'K' SERIES

Service repair no - 82.10.20

Remove

1. Recover refrigerant from air conditioning system. ***See Adjustments.***
2. Disconnect battery earth lead.
3. Raise front of vehicle.

WARNING: Support on safety stands.

4. Remove front beam. ***See FRONT SUSPENSION, Repairs.***
5. Remove alternator. ***See ELECTRICAL, Repairs.***

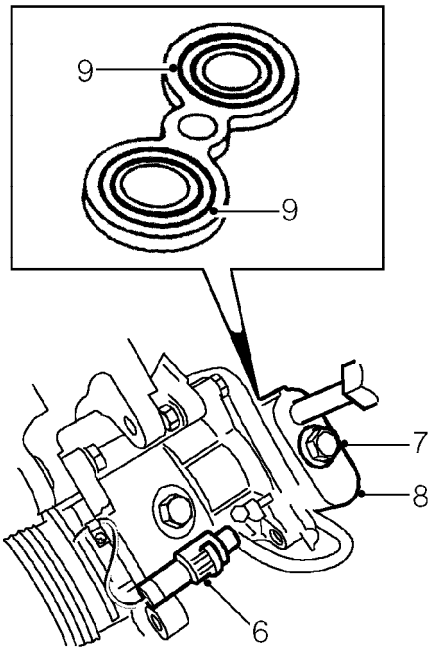

6. Disconnect multiplug from compressor clutch.
7. Remove bolt securing air conditioning pipe union to compressor.
8. Release air conditioning pipe union from compressor.
9. Remove and discard 2 'O' rings from compressor.

CAUTION: Immediately cap all air conditioning pipes to prevent ingress of dirt and moisture into the system.

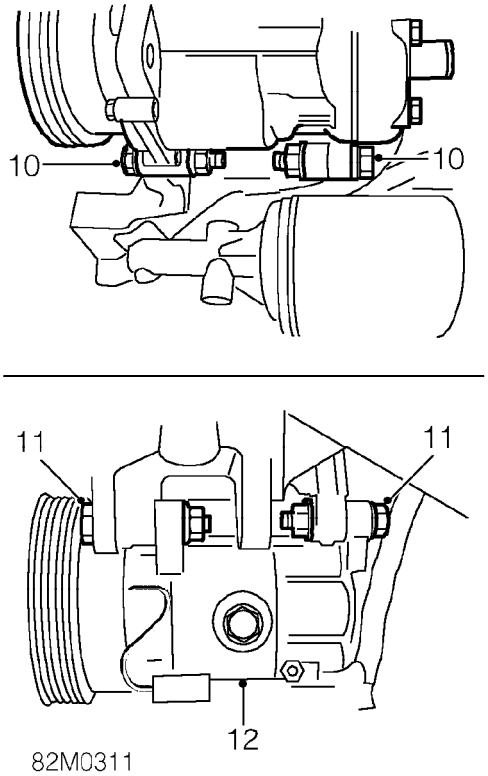

10. Remove 2 lower through bolts and nuts securing compressor to engine.
11. Remove 2 upper through bolts and nuts securing compressor to engine.
12. Manoeuvre compressor from mounting bracket and remove from beneath vehicle.

Fitting a new compressor

A new compressor is sealed and pressurised with Nitrogen gas, slowly release the sealing cap, gas pressure should be heard to release as the seal is broken.

NOTE: A new compressor should always have it's sealing cap in place and must not be removed until immediately prior to fitting.

A new compressor is supplied with an oil fill quantity (Xcm^3) of 135 cm^3. A calculated quantity of oil must be drained from a new compressor before fitting.

To calculate the quantity to be drained:

1. Remove the drain plug from the old compressor.
2. Invert compressor and gravity drain the oil into a calibrated measuring cylinder. Rotating the compressor clutch plate will assist complete draining.
3. Note the quantity of oil drained (Ycm^3)
4. Calculate the quantity of oil to be drained from the NEW compressor using the following formula:

   X cm^3- (Y cm^3 + 20 cm^3) = Q cm^3

5. Remove drain plug from new compressor and drain Q cm^{3}of oil. Fit and tighten compressor drain plug.

Fitting an existing compressor

When refitting an existing compressor a quantity of refrigerant oil equivilent to the amount obtained when the system was discharged must be added to the compressor.

Use only an approved refrigerant lubricating oil:

Sanden SP-10
Unipart SP-10

CAUTION: Do not use any other type of refrigerant oil.

Refrigerant oil easily absorbs water and must not be stored for long periods. Do not pour unused oil back into the container.

Refit

1. Position compressor and manoeuvre onto mounting bracket.
2. Fit 2 upper through bolts and nuts securing compressor to mounting bracket.
3. Fit 2 lower through bolts and nuts securing compressor to mounting bracket.
4. Tighten compressor mounting bolts to 45 Nm.
5. Clean compressor and pipe connections.
6. Remove caps from compressor and pipe connections.
7. Lubricate 2 new 'O' rings with refrigerant oil and fit to compressor.
8. Position air conditioning pipe union to compressor, fit securing bolt and tighten to 35 Nm.
9. Connect multiplug to compressor clutch.
10. Fit front beam. ***See FRONT SUSPENSION, Repairs.***
11. Fit alternator. ***See ELECTRICAL, Repairs.***
12. Replace receiver/dryer. ***See this section.***
13. Remove stand(s) and lower vehicle.
14. Connect battery earth lead.
15. Recharge air conditioning system. ***See Adjustments.***

COMPRESSOR - 'L' SERIES

Service repair no - 82.10.20

Remove

1. Remove radiator. ***See COOLING SYSTEM - 'L' SERIES, Repairs.***
2. Remove auxiliary drive belt. ***See ELECTRICAL, Repairs.***
3. Recover refrigerant from air conditioning system. ***See Adjustments.***

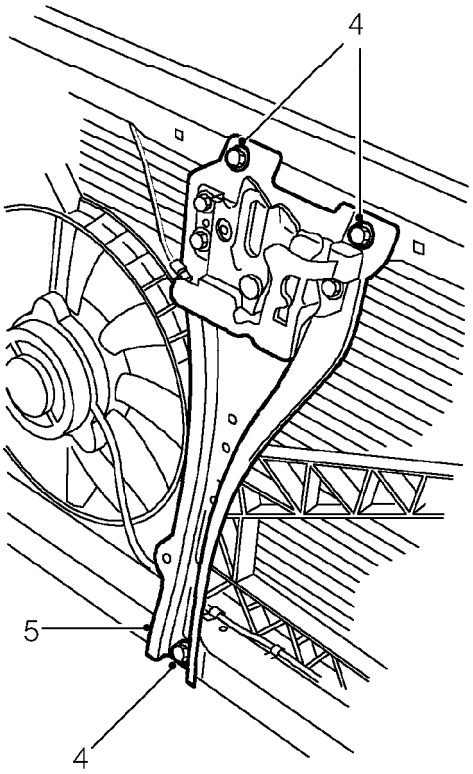

4. Remove 3 bolts securing support stay to bonnet platform and body.
5. Position bonnet platform support stay aside.

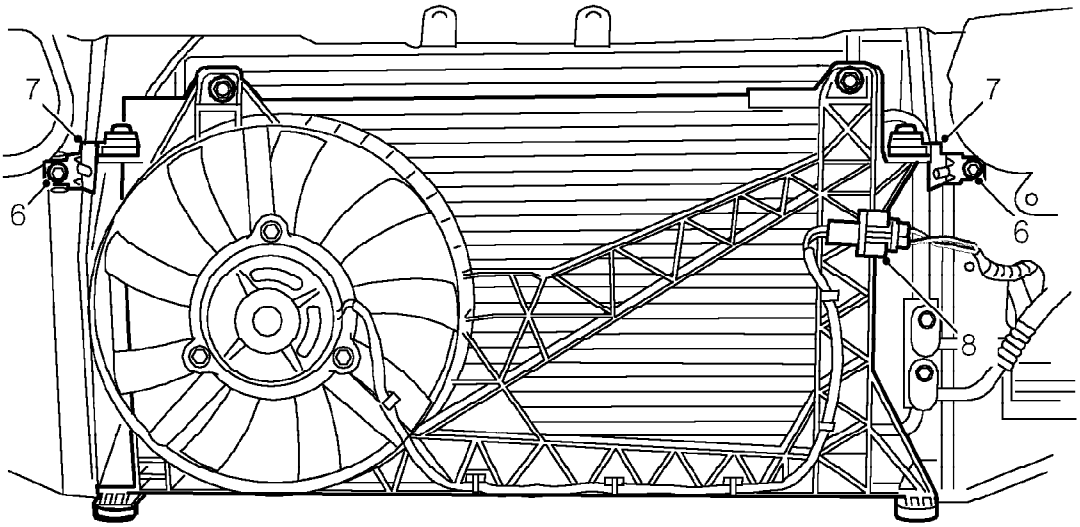

82M0374

6. Remove 2 bolts securing cooling fan housing mounting brackets to body.
7. Remove 2 mounting brackets.
8. Disconnect cooling fan multiplug from harness.

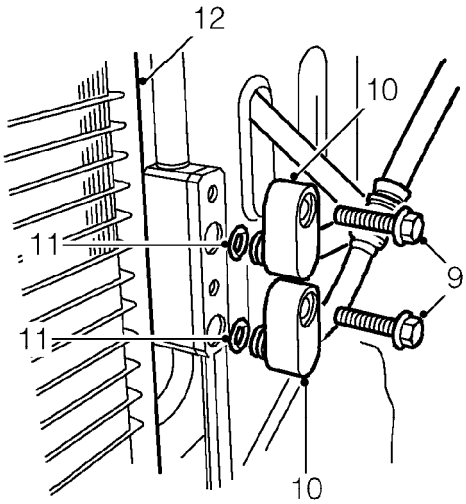

82M0375

9. Remove 2 bolts securing air conditioning pipes to condenser.
10. Disconnect 2 air conditioning pipes from condenser.
11. Remove and discard 2 'O' rings from air conditioning pipe connections.

CAUTION: Immediately cap all air conditioning pipes to prevent ingress of dirt and moisture into the system.

12. Remove condenser.

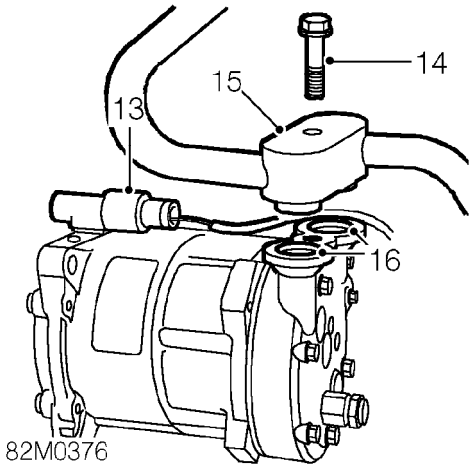

82M0376

13. Disconnect multiplug from compressor.
14. Remove bolt securing air conditioning pipe union to compressor.
15. Release pipe union and position aside.
16. Remove and discard 2 'O' ring seals from compressor.

CAUTION: Immediately cap all air conditioning pipes to prevent ingress of dirt and moisture into the system.

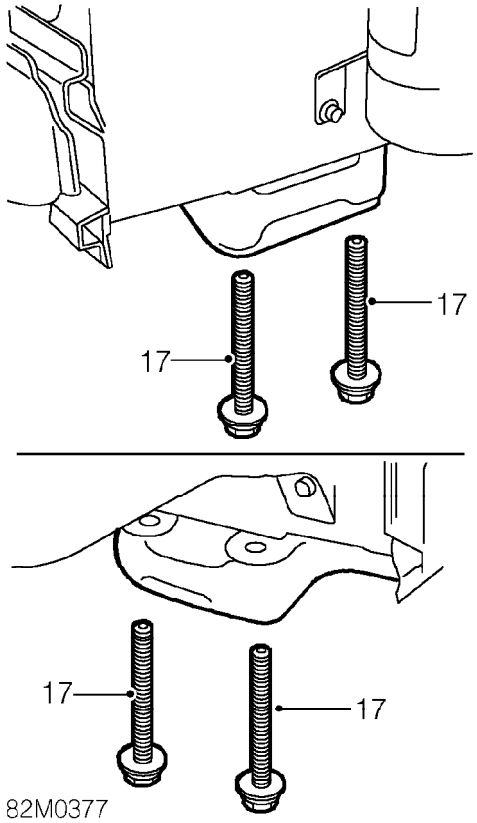

17. Remove 4 bolts securing front beam to body and lower beam.

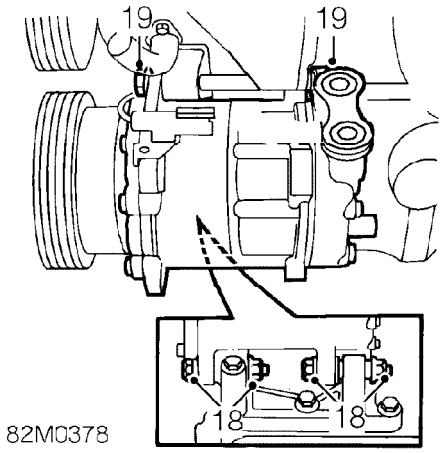

18. Remove 2 nuts and through bolts securing compressor to lower bracket.
19. Remove nut and through bolt securing compressor to upper mounting bracket.

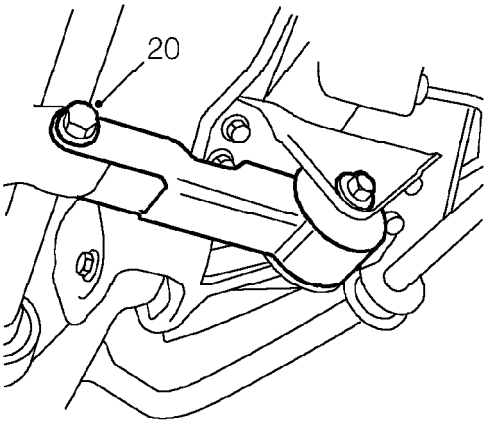

20. Remove bolt securing lower steady bar to engine.
21. Support engine on jack.

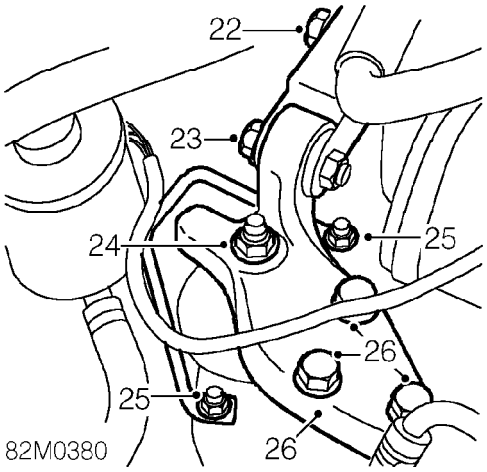

22. Loosen bolt securing RH steady bar to body.
23. Remove bolt securing RH steady bar to engine mounting bracket.
24. Remove nut securing RH engine mounting to bracket.
25. Loosen 2 nuts securing RH engine mounting restraining bar to body and position aside.
26. Remove 3 bolts securing engine mounting bracket to engine and remove bracket.
27. Raise engine to allow access to upper compressor bolt.
28. Remove bolt securing compressor to upper bracket and remove compressor.
29. Restore engine to correct height.

Fitting a new compressor

A new compressor is sealed and pressurised with Nitrogen gas, slowly release the sealing cap, gas pressure should be heard to release as the seal is broken.

NOTE: A new compressor should always have it's sealing cap in place and must not be removed until immediately prior to fitting.

A new compressor is supplied with an oil fill quantity (Xcm^3) of 135 cm^3. A calculated quantity of oil must be drained from a new compressor before fitting.

To calculate the quantity to be drained:

1. Remove the drain plug from the old compressor.
2. Invert compressor and gravity drain the oil into a calibrated measuring cylinder. rotating the compressor clutch plate will assist complete draining.
3. Note the quantity of oil drained (Ycm^3)
4. Calculate the quantity of oil to be drained from the NEW compressor using the following formula:

   X cm^3- (Y cm^3 + 20 cm^3) = Q cm^3

5. Remove drain plug from new compressor and drain Q$cm^3$of oil. Fit and tighten compressor drain plug.

Fitting an existing compressor

When refitting an existing compressor a quantity of refrigerant oil equivalent to the amount obtained when the system was discharged must be added to the compressor.

Use only an approved refrigerant lubricating oil:

Sanden SP-10
Unipart SP-10

CAUTION: Do not use any other type of refrigerant oil.

Refrigerant oil easily absorbs water and must not be stored for long periods. Do not pour unused oil back into the container.

Refit

1. Position compressor and manoeuvre onto mounting bracket.
2. Fit 2 lower through bolts and nuts securing compressor to mounting bracket.
3. Raise engine and fit upper bolts and nut securing compressor to mounting bracket.
4. Tighten compressor mounting bolts to 45 Nm.
5. Restore engine to correct height.
6. Fit RH engine mounting bracket to engine and tighten bolts to 80 Nm.
7. Fit nut securing engine mounting to bracket and tighten to 80 Nm.
8. Position restraining bar and tighten nuts to 80 Nm.
9. Align RH steady bar to engine mounting bracket, fit and tighten bolt to 45 Nm.
10. Tighten bolt, RH steady bar to body to 80 Nm.
11. Align lower steady bar to engine, fit and tighten bolt to 45 Nm.
12. Remove jack.
13. Position front beam, fit bolts and tighten to 100 Nm.
14. Clean compressor and pipe connections.
15. Remove caps from compressor and pipe connections.
16. Lubricate 2 new 'O' rings seals with refrigerant oil and fit to compressor.
17. Position air conditioning pipe union to compressor, fit securing bolt and tighten to 45 Nm.
18. Connect multiplug to compressor.
19. Clean air conditioning pipe connections.
20. Remove caps from condenser air conditioning pipes.
21. Lubricate new 'O' rings with refrigerant oil and fit to air conditioning pipes.
22. Remove caps from condenser.
23. Position condenser to body and engage air conditioning pipes.
24. Fit bolts securing air conditioning pipes to condenser and tighten to 9 Nm.
25. Fit 2 mounting brackets to cooling fan housing.
26. Align mounting brackets to body, fit bolts and tighten to 9 Nm.
27. Position support stay to bonnet platform and body, fit bolts and tighten to 9 Nm.
28. Replace receiver/dryer. ***See this section.***
29. Recharge air conditioning system. ***See Adjustments.***
30. Fit auxiliary drive belt. ***See ELECTRICAL, Repairs.***
31. Fit radiator. ***See COOLING SYSTEM - 'L' SERIES, Repairs.***

CONDENSER COOLING FAN

Service repair no - 82.15.01

Remove

1. Remove front bumper. ***See BODY, Exterior fittings.***

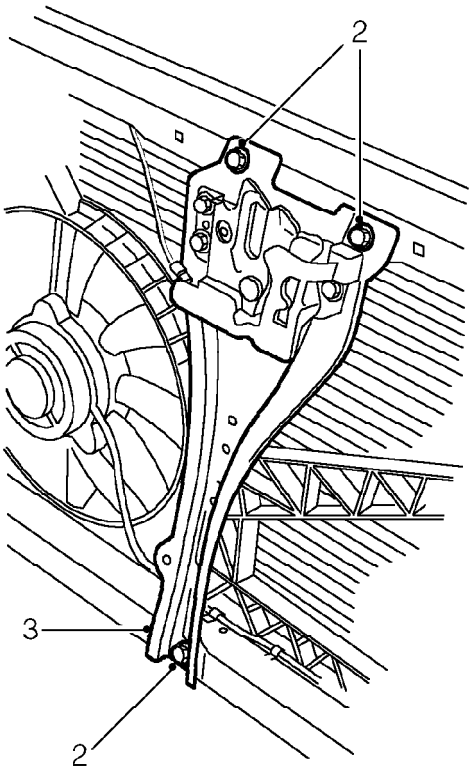

82M0312

2. Remove 3 bolts securing support stay to bonnet platform and body.
3. Position bonnet platfrom support stay aside.

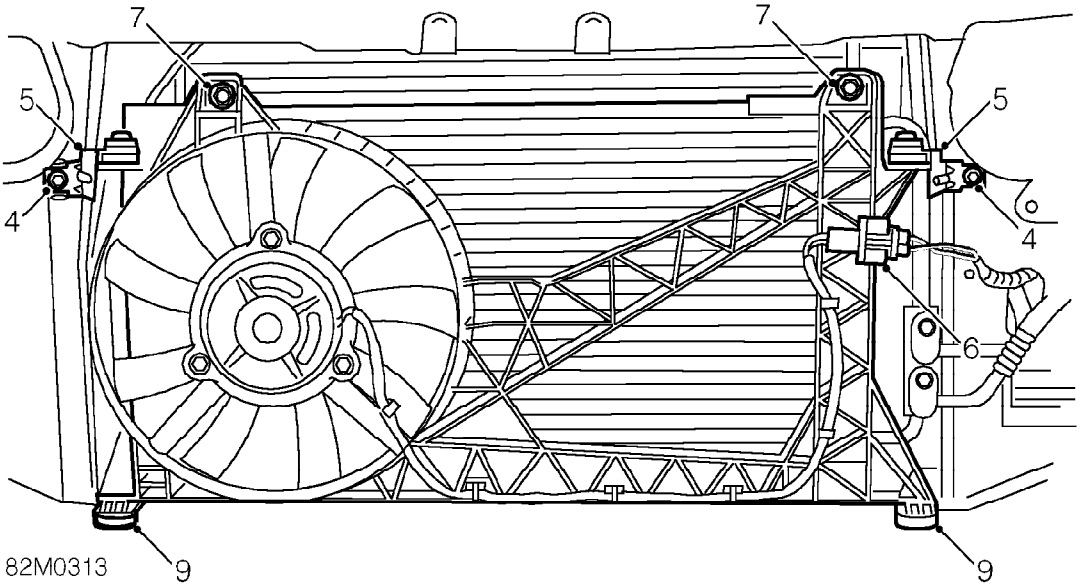

4. Remove 2 bolts securing cooling fan housing mounting brackets to body.
5. Remove 2 mounting brackets.
6. Disconnect cooling fan multiplug from harness.
7. Remove 2 bolts securing cooling fan housing to condenser.
8. Release condenser from cooling fan housing.
9. Release lower mountings from body and remove cooling fan housing.

Do not carry out further dismantling if component is removed for access only.

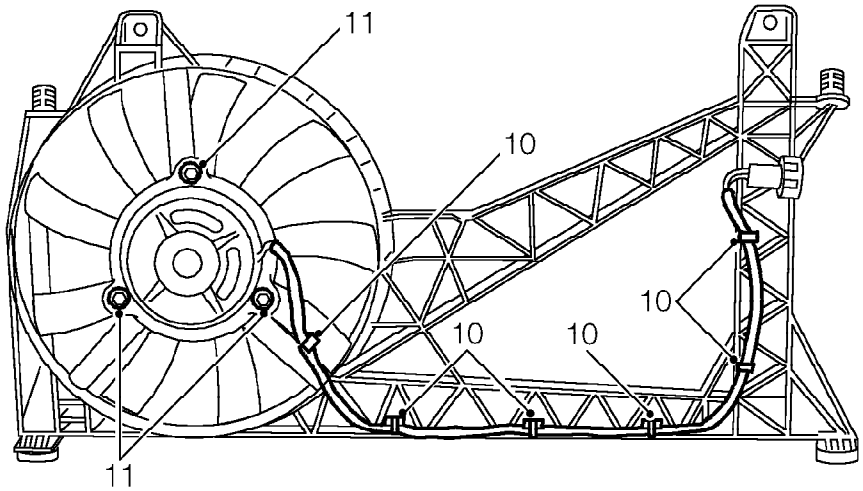

82M0314

10. Release cooling fan harness from 6 clips on housing.
11. Remove 3 nuts securing cooling fan to housing.
12. Remove cooling fan.
13. Fit cooling fan to housing, fit nuts and tighten to 9 Nm.
14. Secure cooling fan harness to clips on housing.

Refit

1. Position cooling fan housing and locate lower mountings in body.
2. Fit condenser to cooling fan housing.
3. Fit 2 bolts securing condenser to cooling fan housing and tighten to 9 Nm.
4. Fit 2 mounting brackets to cooling fan housing.
5. Align mounting brackets to body, fit bolts and tighten to 9 Nm.
6. Position support stay to bonnet platform and body, fit bolts and tighten to 9 Nm.
7. Fit front bumper. ***See BODY, Exterior fittings.***

CONDENSER

Service repair no - 82.15.07

Remove

1. Recover refrigerant from air conditioning system. ***See Adjustments.***
2. Remove condenser cooling fan housing. ***See this section.***

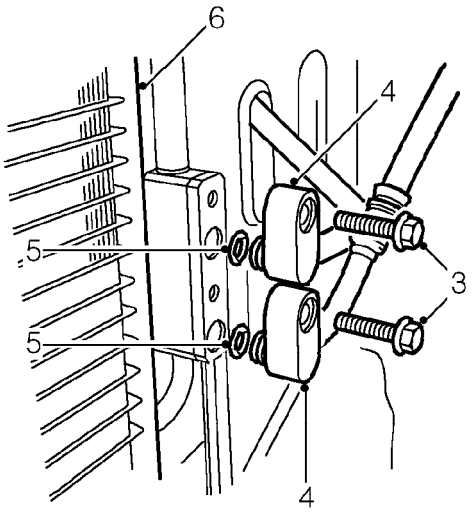

82M0315

3. Remove 2 bolts securing air conditioning pipes to condenser.
4. Disconnect 2 air conditioning pipes from condenser.
5. Remove and discard 2 'O' rings from air conditioning pipe connections.
6. Remove condenser.

CAUTION: Immediately cap all air conditioning pipes to prevent ingress of dirt and moisture into the system.

Refit

1. Clean air conditioning pipe connections.
2. Lubricate new 'O' rings with refrigerant oil and fit to air conditioning pipes.
3. Remove caps from new condenser and fit to old condenser.
4. Position condenser to body, remove caps from air conditioning pipes and connect to condenser.
5. Fit bolts securing air conditioning pipes to condenser and tighten to 6 Nm.
6. Fit condenser cooling fan housing. ***See this section.***
7. Replace receiver/dryer. ***See this section.***
8. Recharge air conditioning system. ***See Adjustments.***

RECEIVER/DRYER

Service repair no - 82.17.03

Remove

1. Recover refrigerant from air conditioning system. ***See Adjustments.***
2. Remove front bumper. ***See BODY, Exterior fittings.***

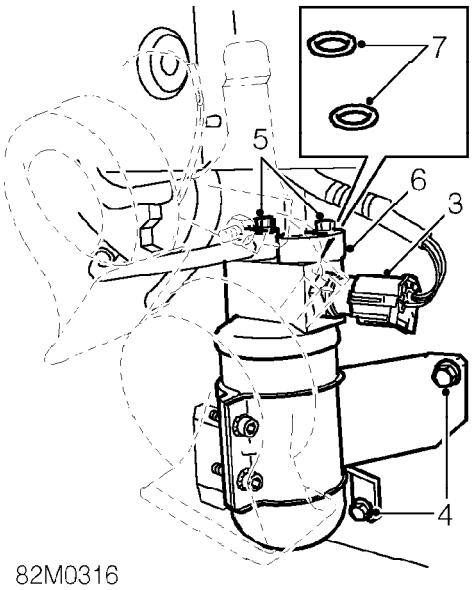

3. Disconnect multiplug from trinary pressure switch.
4. Remove 2 bolts securing receiver/dryer mounting bracket to body.
5. Remove 2 bolts securing air conditioning pipe connection to receiver/dryer.
6. Disconnect air conditioning pipe connections from receiver/dryer and remove receiver dryer.
7. Remove and discard 2 'O' rings from air conditioning pipe connections.

CAUTION: Immediately cap all air conditioning pipe connections to prevent the ingress of dirt and moisture into the system.

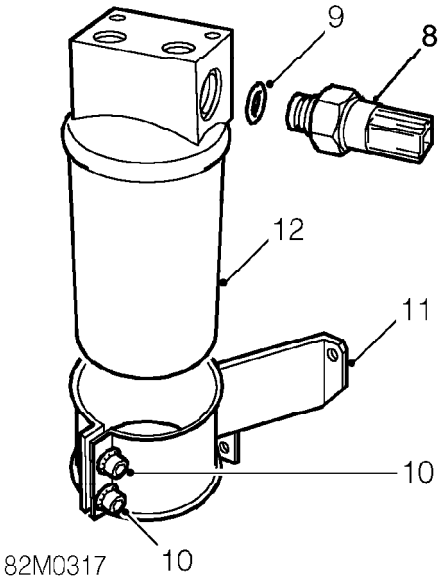

8. Remove trinary pressure switch.
9. Remove and discard 'O' ring from trinary pressure switch.
10. Loosen 2 Allen screws securing mounting bracket to receiver/dryer.
11. Remove mounting bracket from receiver/dryer.
12. Discard receiver/dryer.

Refit

1. Fit mounting bracket to receiver/dryer and tighten Allen screws.
2. Remove caps from new receiver/dryer.
3. Crean mating faces of trinary pressure switch and receiver/dryer.
4. Lubricate new 'O' ring with refrigerant oil and fit to trinary pressure switch.
5. Fit trinary pressure switch to receiver/dryer and tighten to 12 Nm.
6. Clean receiver/dryer and air conditioning pipe connections.
7. Lubricate 2 new 'O' rings with refrigerant oil and fit to air conditioning pipe connections.
8. Remove caps from air conditioning pipe connections.
9. Position receiver/dryer and connect air conditioning pipes.
10. Fit bolts securing air conditioning pipes to receiver/dryer and tighten to 5 Nm.
11. Align receiver/dryer mounting bracket to body, fit bolts and tighten to 10 Nm.
12. Connect multiplug to trinary pressure switch.
13. Fit front bumper. ***See BODY, Exterior fittings.***
14. Recharge air conditioning system. ***See Adjustments.***

AIR CONDITIONING SWITCH

Service repair no - 82.20.07

Remove

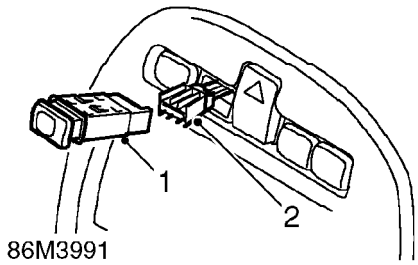

1. Release air conditioning switch from centre console.
2. Disconnect multiplug from rear of switch.
3. Remove switch.

Refit

1. Position switch to centre console and connect multiplug.
2. Fit switch to centre console.

ENGINE OVERHEAT SENSOR - 'L' SERIES

Service repair no - 82.20.30

Remove

1. Disconnect battery earth lead.
2. Raise front of vehicle.

WARNING: Support on safety stands.

3. Disconnect engine overheat sensor multiplug from engine harness.

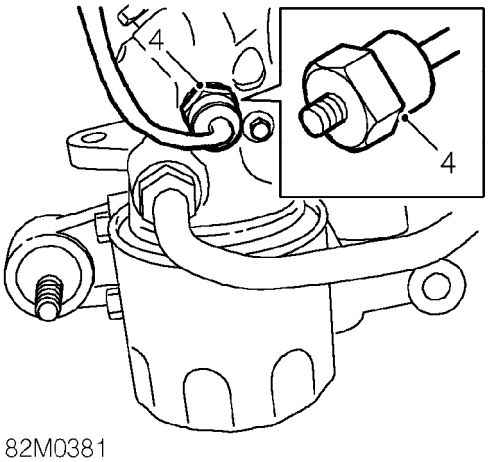

4. Using a 22 mm crowsfoot spanner, remove engine overheat sensor.

Refit

1. Clean temperature switch threads.
2. Fit temperature switch and tighten to 15 Nm.
3. Connect switch multiplug to engine harness
4. Remove stand(s) and lower vehicle.
5. Connect battery earth lead.

TRINARY PRESSURE SWITCH

Service repair no - 82.20.86

NOTE: Because the receiver/dryer has to be replaced whenever the air conditioning system is opened, the trinary pressure switch is included in the procedure for renewing the receiver/dryer. ***See this section.***

EVAPORATOR

Service repair no - 82.25.20

Remove

1. Recover refrigerant from air conditioning system. ***See Adjustments.***

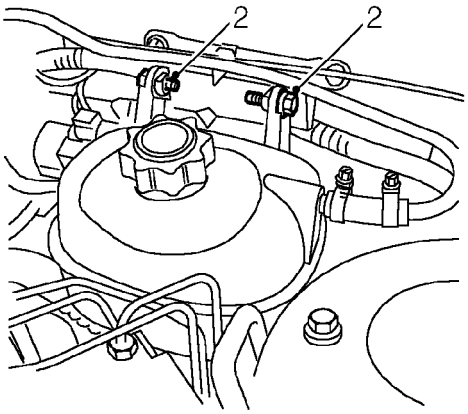

82M0318

2. Remove bolts securing expansion tank to bulkhead and move aside.

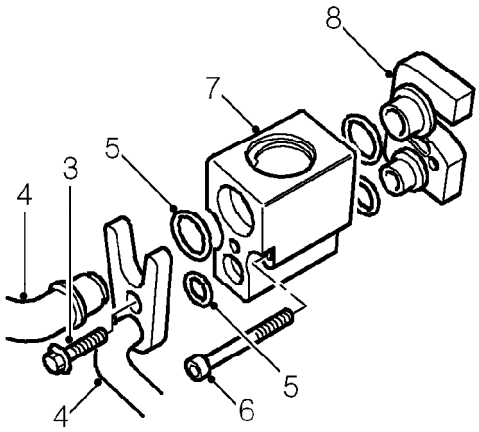

82M0319

3. Remove bolt securing air conditioning pipes to thermostatic expansion valve.
4. Release pipes from valve.
5. Remove and discard 2 ’O’ rings from air conditioning pipes.
6. Remove 2 Allen screws securing thermostatic expansion valve to evaporator pipes.
7. Remove valve.
8. Remove expansion valve clamping bracket from evaporator pipes.
9. Remove glovebox. ***See BODY, Interior trim components.***

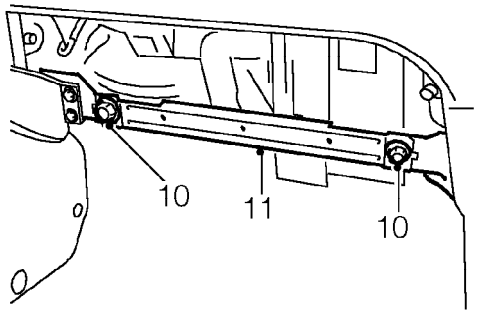

82M0320

10. Remove 2 bolts securing rail to fascia.
11. Remove rail.

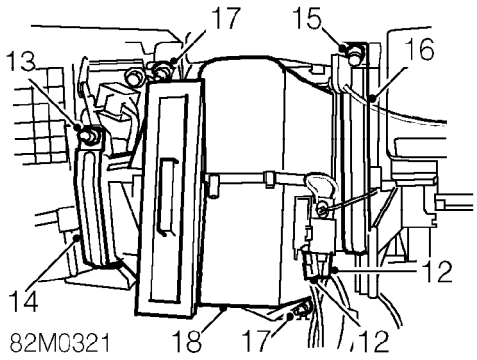

12. Disconnect 2 Lucars from evaporator thermostat.
13. Remove screw securing evaporator to blower assembly strap.
14. Remove strap.
15. Remove screw securing evaporator to heater assembly strap.
16. Remove strap.
17. Remove 2 nuts securing evaporator to bulkhead.
18. Remove evaporator.

Do not carry out further dismantling if component is removed for access only.

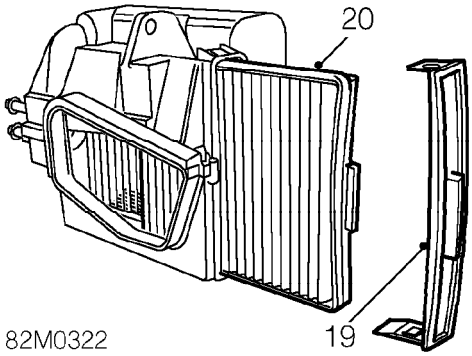

19. Remove air filter cover.
20. Remove air filter from evaporator.

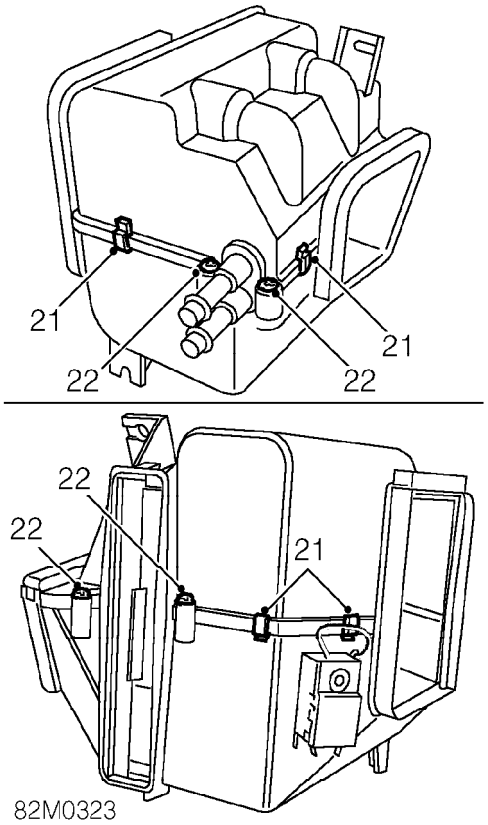

21. Remove 5 clips securing casing.
22. Remove 4 screws securing casing.
23. Using a sharp blade, cut foam seals across casing mating faces.

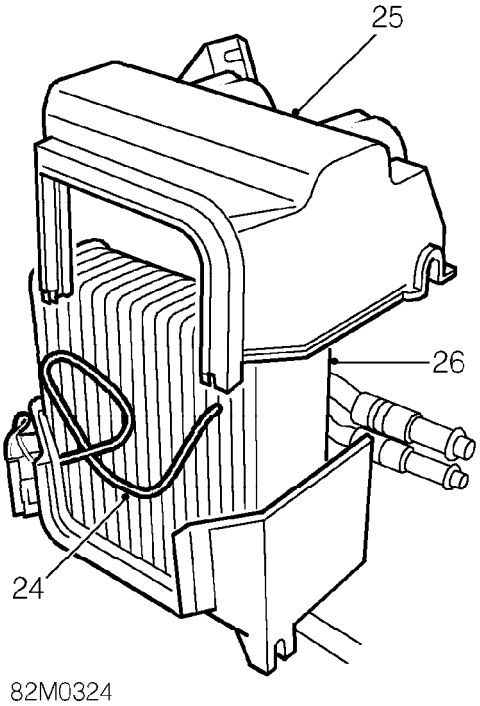

24. Withdraw temperature sensor probe from evaporator.
25. Remove upper casing from evaporator.
26. Remove evaporator assembly from lower casing.
27. Clean air conditioning pipe connections.
28. Remove caps from new evaporator.
29. Locate evaporator in lower casing.
30. Insert temperature sensor probe 30 mm into vanes at centre of evaporator.
31. Fit upper casing and secure with clips and screws.
32. Insert air filter into casing.
33. Fit air filter cover.

Refit

1. Manoeuvre evaporator into position between heater and blower assemblies.
2. Feed drain tube through bulkhead and locate grommet.
3. Fit nuts securing evaporator casing to bulkhead and tighten to 10 Nm.
4. Fit strap securing evaporator to heater and tighten screw.
5. Fit strap securing evaporator to blower and tighten screw.
6. Connect Lucars to evaporator thermostat.
7. Position fascia rail, fit and tighten bolts to;
   M6 bolt to 10 Nm.
   M8 bolt to 20 Nm.
8. Fit glove box. ***See BODY, Interior trim components.***
9. Fit expansion valve clamping bracket to evaporator pipes.
10. Fit thermostatic expansion valve to evaporator pipes and tighten Allen screws to 10 Nm.
11. Lubricate new 'O' rings with refrigerant oil and fit to air conditioning pipes.
12. Fit air conditioning pipes to valve and tighten bolt to 6 Nm.
13. Position expansion tank to bulkhead and tighten bolts to 5 Nm.
14. Replace receiver/dryer. ***See this section.***
15. Recharge air conditioning system. ***See Adjustments.***

CONTENTS

Page

DESCRIPTION AND OPERATION

WINDSCREEN WIPER COMPONENTS 1
REAR SCREEN WIPER COMPONENTS 2
WASHER COMPONENTS 3
WINDSCREEN WASHER AND WIPER OPERATION 4
REAR SCREEN WIPER AND WASHER OPERATION 5

REPAIRS

WINDSCREEN WASHER RESERVOIR 1
WASHER JET - WINDSCREEN 2
WASHER PUMP - WINDSCREEN 2
WINDSCREEN WIPER ARM 3
WINDSCREEN WIPER BLADE 3
WINDSCREEN WIPER MOTOR 4
WINDSCREEN WIPER LINKAGE 5
WINDSCREEN WASHER AND WIPER SWITCH 5
REAR SCREEN WASHER JET 6
REAR SCREEN WASHER PUMP 6
REAR SCREEN WIPER ARM 7
REAR SCREEN WIPER BLADE 7
REAR SCREEN WIPER MOTOR 8

WINDSCREEN WIPER COMPONENTS

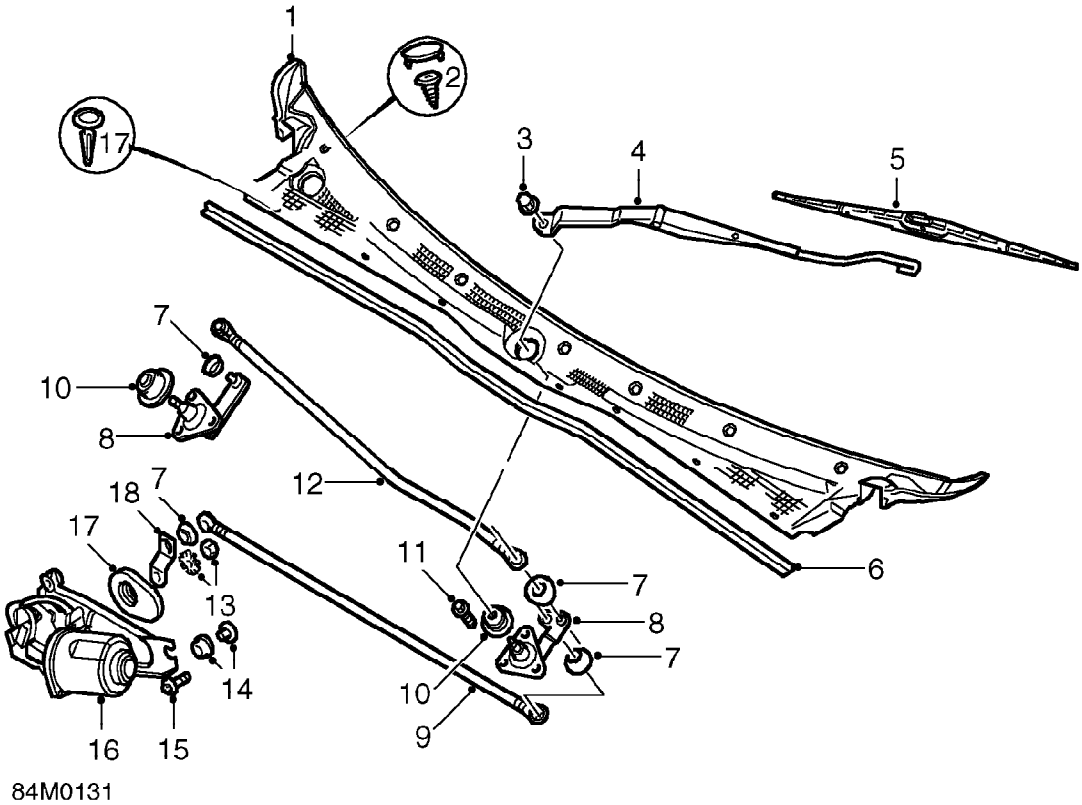

1. Plenum air intake
2. Retaining screw and cover
3. Nut - windscreen wiper arm
4. Arm - windscreen wiper
5. Blade - windscreen wiper
6. Seal - plenum intake
7. Dust shield
8. Wheelbox
9. Operating rod
10. Spindle cap
11. Mounting bolt
12. Connecting rod
13. Nut and washer
14. Ferrule and mounting rubber
15. Mounting bolt
16. Wiper motor
17. Water shield
18. Rotary link

REAR SCREEN WIPER COMPONENTS

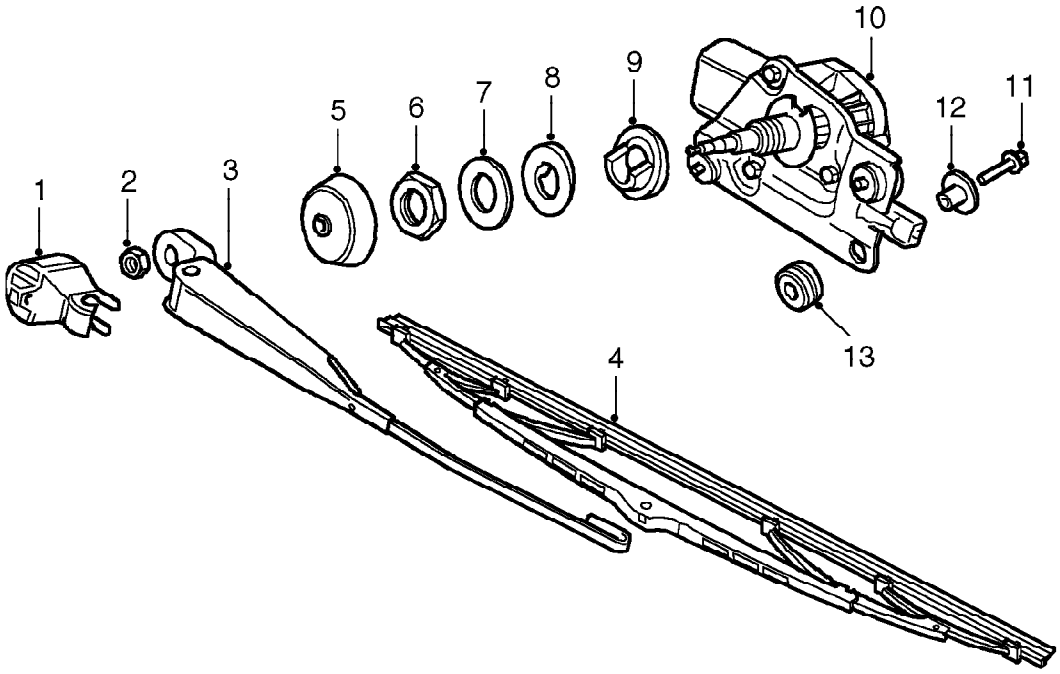

84M0132

1. Rear screen washer jet
2. Wiper arm nut
3. Wiper arm
4. Wiper blade
5. Cover - spindle nut
6. Spindle nut
7. Thrust washer
8. Spacer - spindle
9. Mounting plate
10. Wiper motor
11. Bolt - wiper motor
12. Ferrule - mounting
13. Mounting rubber - wiper motor

WASHER COMPONENTS

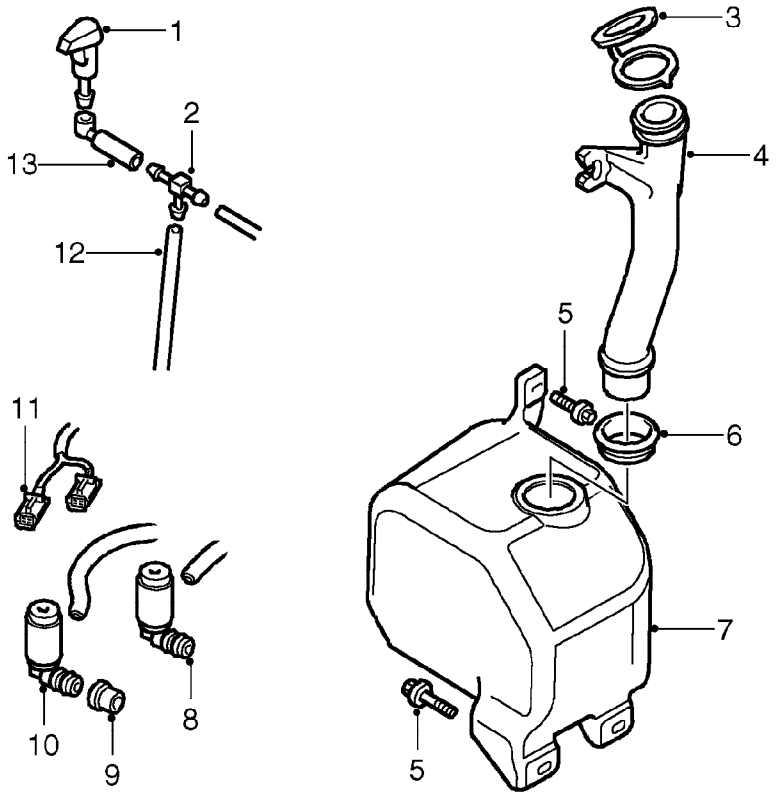

84M0133

1. Jet
2. Tee-connector - washer tube
3. Reservoir cap
4. Filler neck
5. Bolts - reservoir
6. Seals - filler neck
7. Reservoir
8. Pump - windscreen washer
9. Seals - reservoir
10. Pump - rear screen washer
11. Harness connector
12. Washer tube
13. Hose - jet to tee-connector

WINDSCREEN WASHER AND WIPER OPERATION

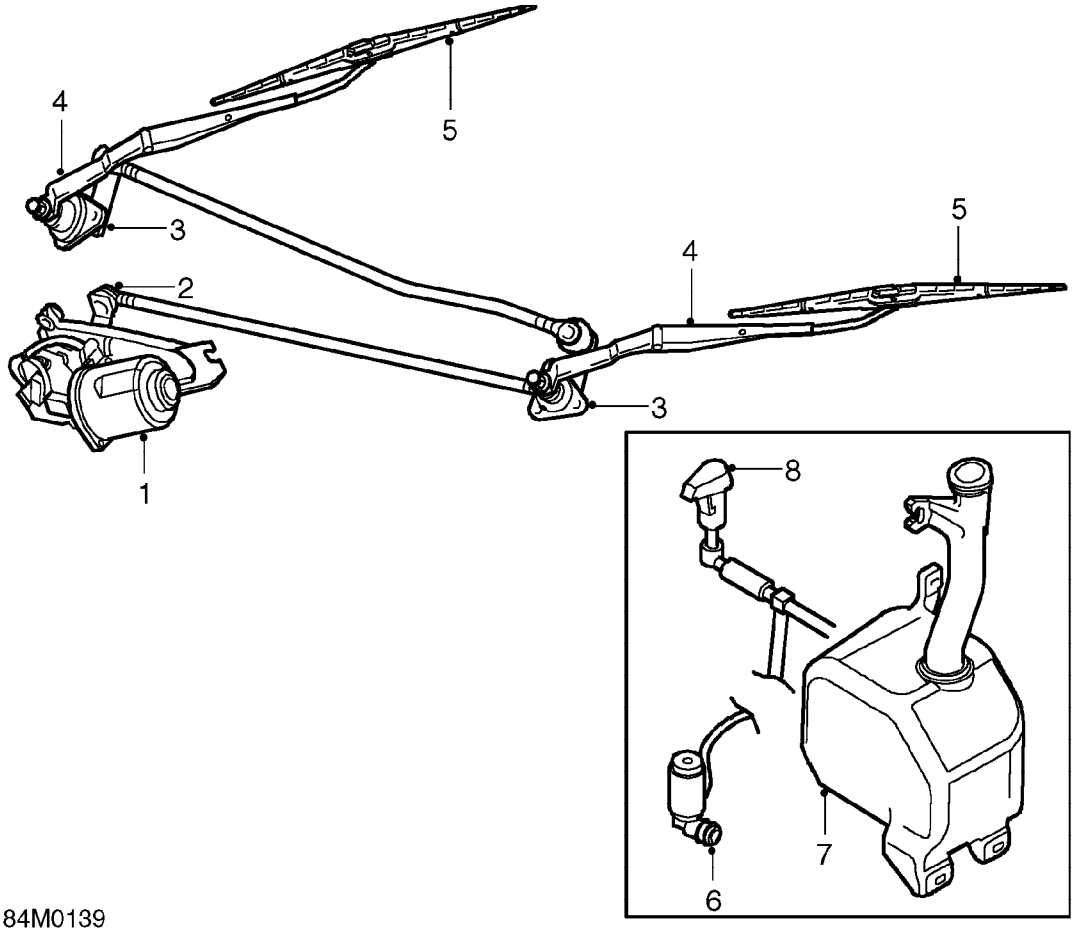

Operation of the windscreen wipers and washers is controlled by the wash/wipe switch mounted on the stalk on the RH side of the steering column. The wiper switch may be rotated from the OFF position to selected positions; Intermittent, Normal or Fast wipe speeds. Single wipe is obtained by a downward movement of the stalk from the OFF position. The windscreen washer will operate when the stalk is pulled towards the steering wheel.

When any wiper function is selected, a 2 speed wiper motor (1) provides drive through a rotary link (2) to 2 wiper mechanisms (3) which convert the lateral motion of the links into the sweeping motion of the wiper arm (4) and blade (5).

The fast, normal and intermittent speeds, when selected, are controlled by the multi-function unit.

When the windscreen washer is operated, washer fluid is drawn by an electric pump (6), from the reservoir (7) located behind the front bumper on the RH side and is sprayed against the windscreen by jets (8). The wipers will continue to operate for a period of 6 seconds after the washer switch has been released.

Certain model derivatives are fitted with heated washer jets. The integral heaters are activated simultaneously with vehicle ignition, rising rapidly to a self-regulated temperature.

NOTE: It is still necessary to add a mixture of screenwash and water to the washer reservoir to prevent freezing in cold weather.

REAR SCREEN WIPER AND WASHER OPERATION

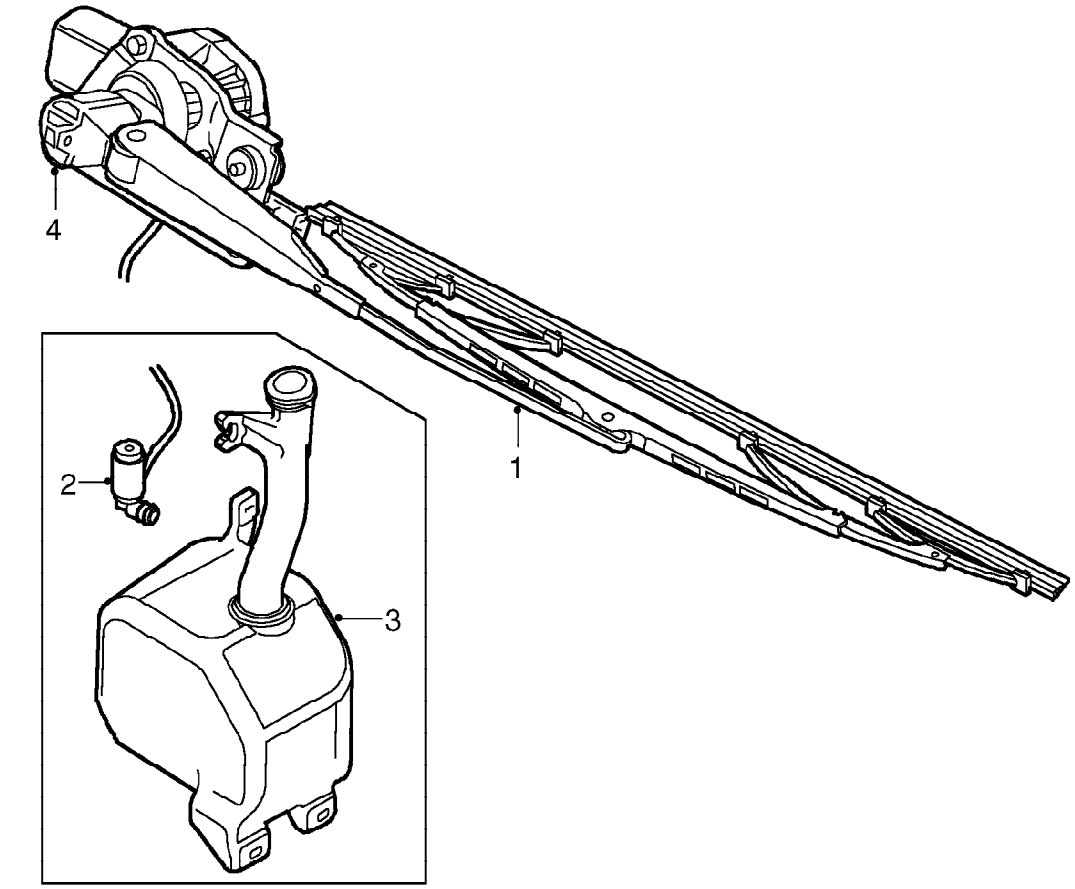

84M0140

The rear screen wiper (1) will operate by rotating the rear wash/wiper switch mounted on the RH side of the steering column to the on position, further movement will operate the washer. The washer pump (2) will draw washer fluid from the reservoir (3) and spray on the rear screen through a jet (4) until the switch is released. After the washer switch is released, the wipers will operate for 6 seconds and then wipe intermittently until switched off. If the switch is rotated rearward the washer will operate until the switch is released and the wipers will operate for 6 seconds and then switch off.

Operation with reverse gear

Provided the front wiper switch is in the on position, selection of reverse gear will automatically cause the rear wiper to operate. On automatic vehicles a half second delay after selection of reverse gear is incorporated to prevent inadvertent operation when traversing through the reverse gear.

WINDSCREEN WASHER RESERVOIR

Service repair no - 84.10.01

Remove

1. Remove front bumper. ***See BODY, Exterior fittings.***
2. Position container to collect any fluid loss.

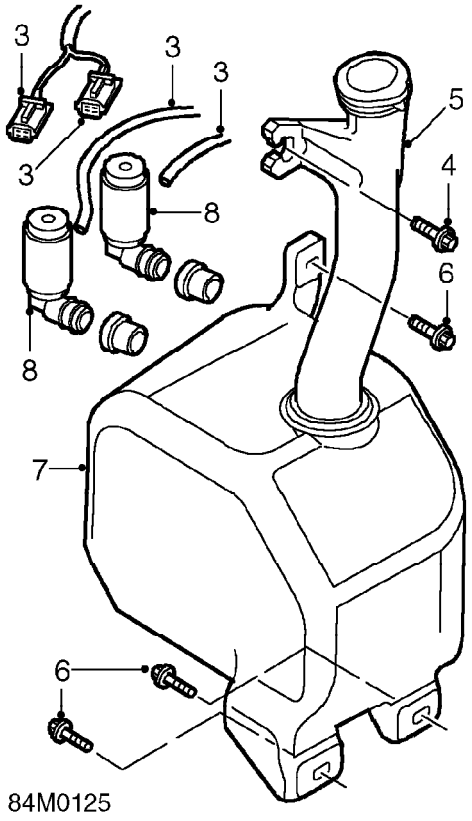

3. Disconnect multiplugs and hoses from washer pumps.
4. Remove bolt securing reservoir filler neck to body.
5. Remove filler neck from reservoir.
6. Remove 3 bolts securing washer reservoir to body.
7. Remove washer reservoir.
8. Release pumps from reservoir and remove seals.

Refit

1. Lubricate and fit pump seals to reservoir.
2. Fit pumps to reservoir.
3. Position reservoir and secure with bolts.
4. Connect hoses and multiplugs to pumps.
5. Position filler neck to reservoir and secure to body with bolt.
6. Fit front bumper. ***See BODY, Exterior fittings.***

WASHER JET - WINDSCREEN

Service repair no - 84.10.08

Remove

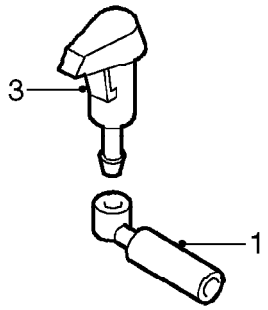

84M0127

1. Disconnect tube from washer jet.
2. *Models with heated washer jets:* Disconnect multiplug from washer jet.
3. *All models:* Depress plastic lugs and remove washer jets from bonnet.

Refit

1. Fit washer jet to bonnet and connect tube.
2. *Models with heated washer jets:* Connect multiplug to washer jet.
3. *All models:* Adjust jet so that the inside spray is to the centre of the screen, and the outer spray is to the top of the screen.

WASHER PUMP - WINDSCREEN

Service repair no - 84.10.21

Remove

1. Remove front bumper. ***See BODY, Exterior fittings.***
2. Position container to collect any fluid loss.

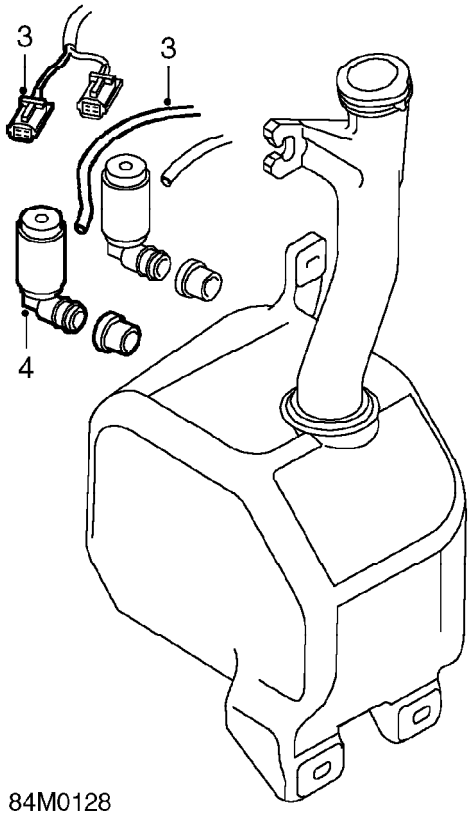

84M0128

3. Disconnect multiplug and hose from windscreen washer pump.
4. Release pump from reservoir and remove seal.

Refit

1. Lubricate and fit pump seal to reservoir.
2. Fit pump to reservoir.
3. Connect hose and multiplug to pump.
4. Refit front bumper. ***See BODY, Exterior fittings.***
5. Refill washer reservior.

WINDSCREEN WIPER ARM

Service repair no - 84.15.02

Remove

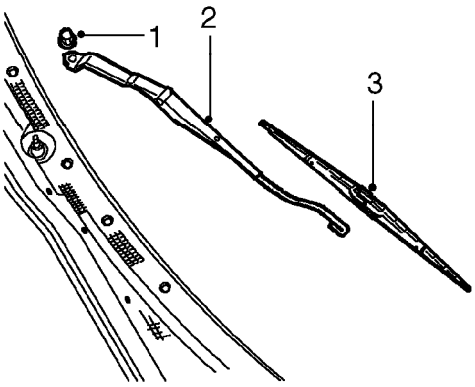

84M0137

1. Remove wiper spindle nut.
2. Remove wiper arm from spindle.
   Do not carry out further dismantling if component is removed for access only.
3. Remove wiper blade. ***See this section.***

Refit

1. Fit wiper blade to arm, check blade is retained.
2. Fit wiper arm to spindle. Set blades to dimension 'A' 37 mm, or dimension 'B' 40 mm.
3. Fit nut and tighten to 10 Nm.

WINDSCREEN WIPER BLADE

Service repair no - 84.15.06

Remove

1. Lift wiper arm from screen.

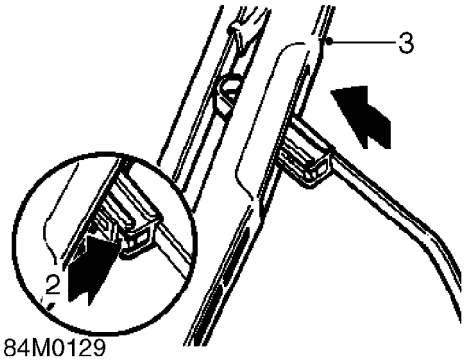

84M0129

2. Press retaining lever.
3. Slide blade down arm and withdraw.

Refit

1. Position new blade to wiper arm.
2. Push blade into engagement with arm. check blade is retained.
3. Lower wiper arm onto screen.

WINDSCREEN WIPER MOTOR

Service repair no - 84.15.12

Remove

1. Disconnect battery earth lead.

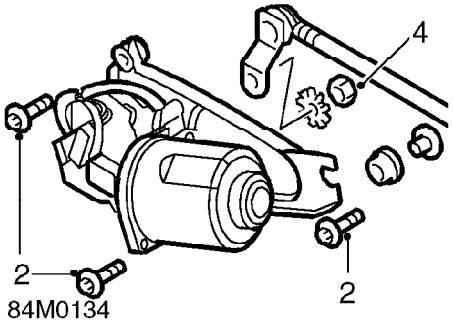

2. Remove 3 bolts securing wiper motor bracket to bulkhead.
3. Move wiper motor and bracket aside to gain access to nut securing linkage to motor.
4. Remove nut securing linkage to motor.

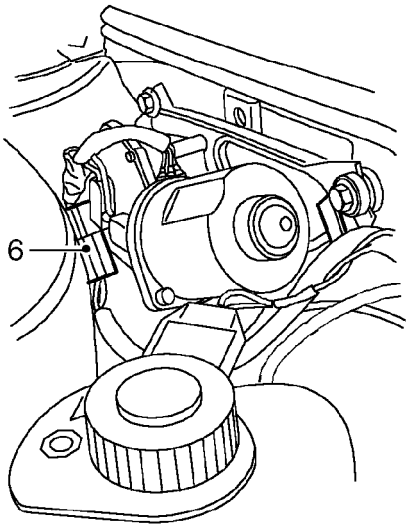

5. Release clip securing harness to wiper motor bracket.
6. Disconnect harness multiplug from wiper motor.

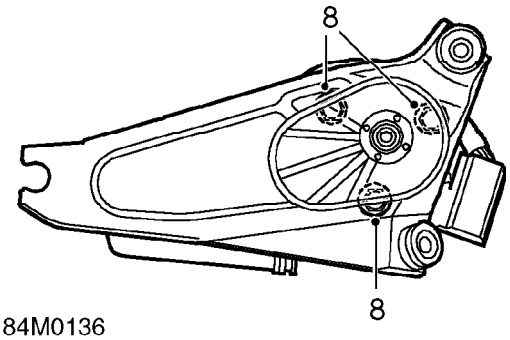

7. Remove wiper motor and bracket.
8. Remove 3 bolts securing wiper motor to bracket.
9. Remove wiper motor from bracket.

Refit

1. Fit wiper motor to bracket and tighten bolts to 5 Nm.
2. Connect harness multiplug to wiper motor.
3. Secure harness to wiper motor bracket with clip.
4. Fit linkage to wiper motor and tighten nut to 10 Nm.
5. Fit bolts securing wiper motor bracket to bulkhead.
6. Connect battery earth lead.

WINDSCREEN WIPER LINKAGE

Service repair no - 84.15.26

Remove

1. Remove air intake plenum. ***See HEATING & VENTILATION, Repairs.***

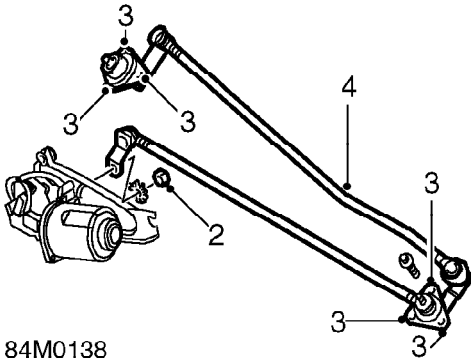

2. Remove nut securing wiper linkage to wiper motor.
3. Remove 6 bolts securing wiper linkage to bulkhead.
4. Withdraw wiper linkage from body.

Refit

1. Position wiper linkage in body.
2. Fit bolts securing wiper linkage to scuttle and tighten to 10 Nm.
3. Fit nut securing linkage to wiper motor and tighten to 10 Nm.
4. Fit air intake plenum. ***See HEATING & VENTILATION, Repairs.***

WINDSCREEN WASHER AND WIPER SWITCH

Service repair no - 84.15.34

Remove

1. Remove steering column switch pack. ***See ELECTRICAL, Repairs.***

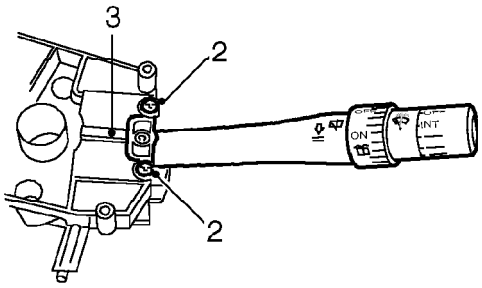

2. Remove 2 screws securing washer and wiper switch to switch pack.
3. Depress retaining tag and remove washer and wiper switch assembly.

Refit

1. Fit washer and wiper switch assembly and secure with screws.
2. Fit steering column switch pack. ***See ELECTRICAL, Repairs.***

REAR SCREEN WASHER JET

Service repair no - 84.30.09

Remove

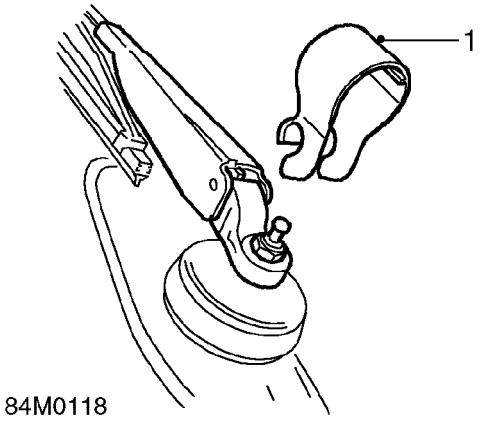

1. Release washer jet from spindle and remove from wiper arm.

Refit

1. Fit washer jet to rear wiper arm.

REAR SCREEN WASHER PUMP

Service repair no - 84.30.21

Refer to Washer pump - windscreen. ***See this section.***

REAR SCREEN WIPER ARM

Service repair no - 84.35.01

Remove

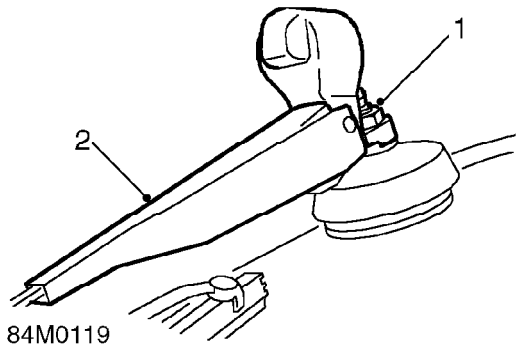

1. Raise rear screen washer jet and remove nut.
2. Remove wiper arm.
3. Remove wiper blade. ***See this section.***

Refit

1. Fit wiper blade. ***See this section.***
2. Operate the motor and then switch off. ensure spindle is in 'park' position.
3. Fit wiper arm, tighten nut to 10 Nm. Fit rear screen washer jet.

NOTE: Position end of wiper blade to alignment mark on screen.

REAR SCREEN WIPER BLADE

Service repair no - 84.35.02

Remove

1. Lift wiper arm from rear screen.

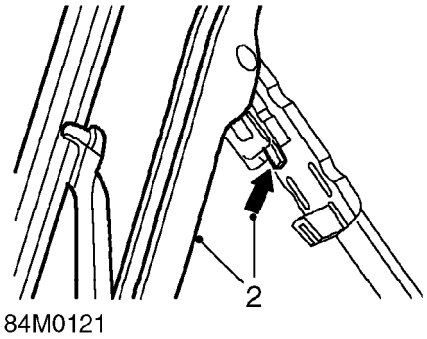

2. Press retaining lever and slide blade down arm.

Refit

1. Position new blade to wiper arm.
2. Push blade into engagement with arm. Check blade is retained.
3. Lower wiper arm onto rear screen.

REAR SCREEN WIPER MOTOR

Service repair no - 84.35.12

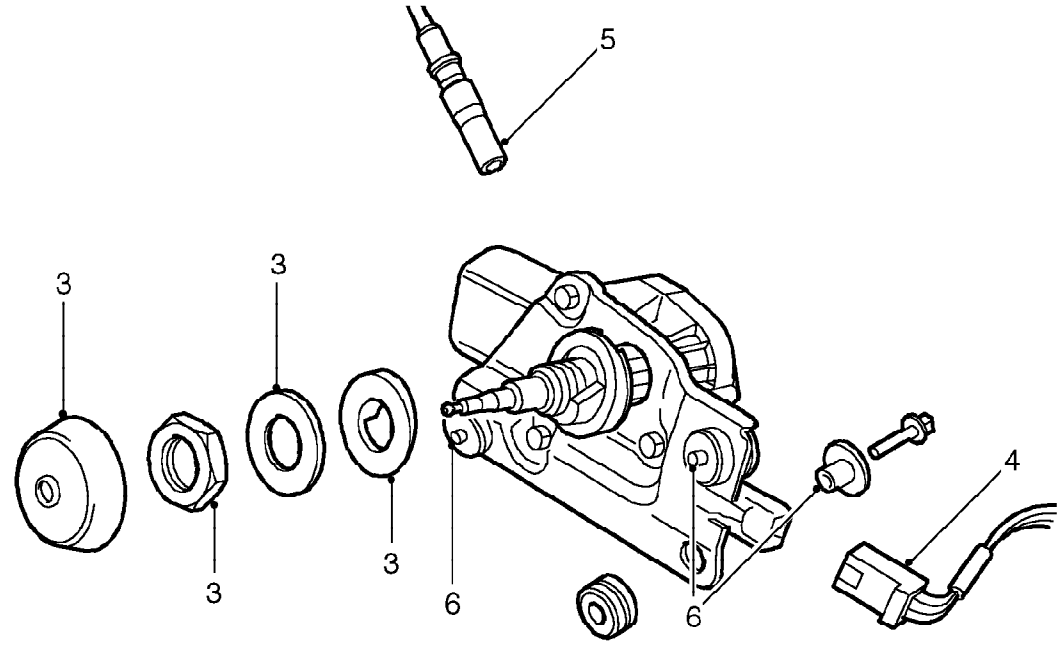

Remove

1. Remove tailgate trim casing. ***See BODY, Interior trim components.***
2. Remove rear wiper arm. ***See this section.***
3. Remove spindle nut cover, spindle nut, flat washer and rubber seal.
4. Disconnect tailgate harness from wiper motor.
5. Disconnect washer jet tube from wiper motor.
6. Remove 3 bolts and remove wiper motor from tailgate.

Refit

1. Fit wiper motor to tailgate and tighten bolts to 8 Nm.
2. Connect multiplug to wiper motor.
3. Connect washer jet tube to wiper motor.
4. Fit rubber seal and then flat washer. Tighten nut to 2 Nm.
5. Fit nut cover.
6. Fit rear screen wiper arm. ***See this section.***
7. Fit tailgate trim casing. ***See BODY, Interior trim components.***

CONTENTS

Page

DESCRIPTION AND OPERATION

ELECTRICAL COMPONENTS - BEHIND FASCIA/CENTRE CONSOLE 1

ADJUSTMENTS

HEADLAMPS ADJUST 1
AUXILIARY DRIVE BELT - 'K' SERIES WITHOUT AIR CONDITIONING 1
AUXILIARY DRIVE BELT - 'K' SERIES WITH AIR CONDITIONING 2
AUXILIARY DRIVE BELT - 'L' SERIES WITHOUT AIR CONDITIONING 3

REPAIRS

ALTERNATOR - 'K' SERIES WITHOUT AIR CONDITIONING 1
ALTERNATOR - 'K' SERIES WITH AIR CONDITIONING 2
ALTERNATOR - 'L' SERIES WITHOUT AIR CONDITIONING 3
ALTERNATOR - 'L' SERIES WITH AIR CONDITIONING 5
AUXILIARY DRIVE BELT - 'K' SERIES WITHOUT POWER STEERING 8
AUXILIARY DRIVE BELT - 'K' SERIES WITH POWER STEERING 9
AUXILIARY DRIVE BELT - 'K' SERIES WITH AIR CONDITIONING 10
AUXILIARY DRIVE BELT - 'L' SERIES 11
AUXILIARY DRIVE BELT TENSIONER - 'L' SERIES 11
BATTERY 12
FRONT DOOR GLASS MOTOR 12
ELECTRIC WINDOW SWITCH 14
WINDOW LIFT ECU 14
CENTRAL DOOR LOCKING (CDL) ECU 15
FRONT DOOR LOCK MOTOR 15
REAR DOOR LOCK MOTOR 16
HORN SWITCH 17
HORN 17
HEADLAMP ASSEMBLY 18
SIDE REPEATER 18
TAIL LAMP 19
NUMBER PLATE LAMP 19
FRONT FOG LIGHT 20
CENTRE HIGH MOUNTED STOP LIGHT 20
INTERIOR LIGHT 21
GLOVEBOX LAMP 21
LUGGAGE COMPARTMENT LAMP 22
HEATER CONTROL ILLUMINATION BULB 22
INSTRUMENT PACK ILLUMINATION BULB 23
RADIO 24
REAR SPEAKER 24
REMOTE ICE CONTROLS 25
FRONT SPEAKER 25
AERIAL 26
COAXIAL CABLE 28
TWEETER - FRONT DOOR 31
CD PLAYER 31
FLASHER UNIT 32
ANTI-THEFT ALARM ECU 33
DOOR SWITCH 34
BONNET SWITCH 34

CONTENTS

Page

DIM-DIP RELAY 35
DIM-DIP RESISTOR 36
INTEGRATED CIRCUIT UNIT (ICU) 36
ANTI-THEFT ALARM LED 37
STARTER MOTOR - 'K8 & K16' 38
STARTER MOTOR - 'K16 1.8 & K16 WITH VVC' 39
STARTER MOTOR - 'L' SERIES 40
STARTER SOLENOID - 'K8' AND 'K16' 40
STARTER SWITCH 41
FRONT FOG LIGHT SWITCH 43
HEATED REAR SCREEN SWITCH 43
HAZARD WARNING LIGHT SWITCH 44
INDICATOR/HEADLAMP SWITCH 44
STEERING COLUMN SWITCH ASSEMBLY 45
REAR FOG LIGHT SWITCH 46
DOOR MIRROR SWITCH 46
ROTARY COUPLER 47
ENGINE COMPARTMENT FUSEBOX 47
AUTOMATIC GEAR SELECTOR BULB 49
STARTER MOTOR - AUTOMATIC GEARBOX 49
PASSENGER COMPARTMENT FUSE BOX 51
SWITCH - HEADLAMP LEVELLING 52
MOTOR - HEADLAMP LEVELLING 52
PASSIVE COIL 53

ELECTRICAL COMPONENTS - BEHIND FASCIA/CENTRE CONSOLE

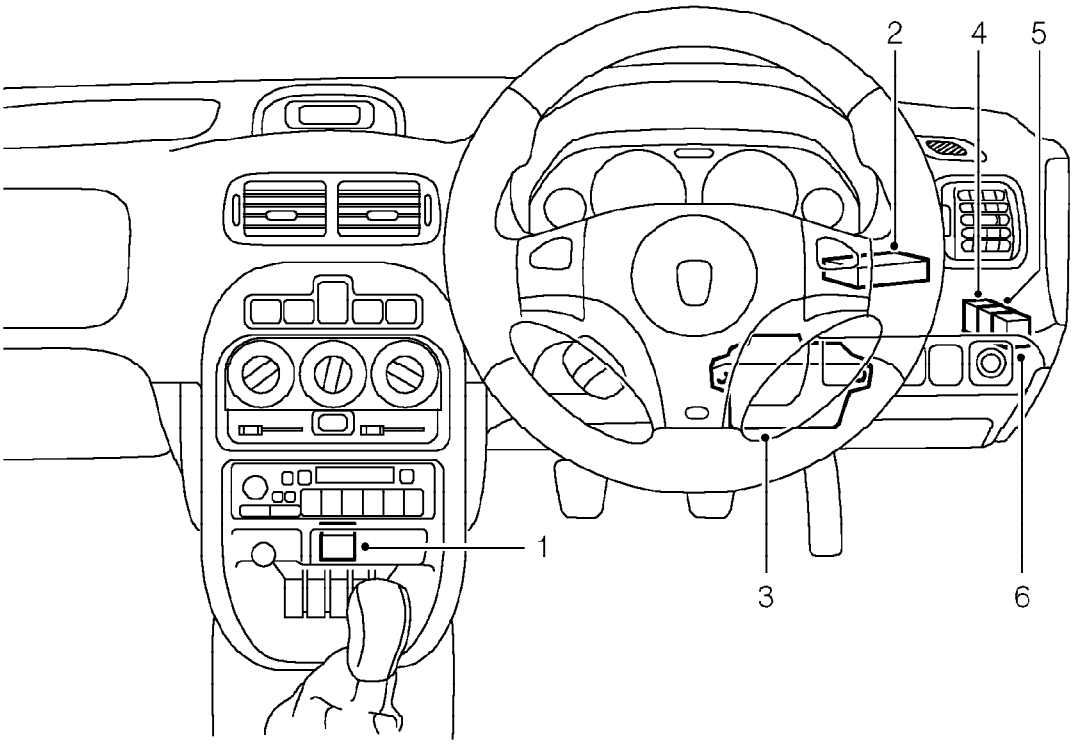

86M3997

1. Front fog light relay - RHD
2. Anti-theft alarm/central door locking control unit
3. Integrated circuit unit (ICU)/passenger compartment fusebox
4. Dim-dip relay - RHD
   Front fog light relay - LHD
5. Window lift relay
6. Sunroof relay

HEADLAMPS ADJUST

Service repair no - 86.40.17

Inspect

1. Align suitable beam setting equipment to headlamp.
   97.5 MY on: If necessary, set headlamp levelling switch to zero, turn starter switch to position 'II' and allow headlamps to reset. Turn ignition off.
2. Switch on headlamps.
   Headlamp setting = 1.2% below horizontal and parallel.

Adjust

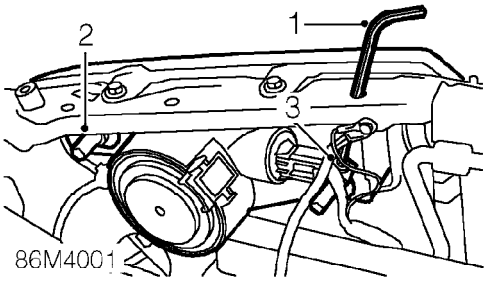

1. Adjust headlamp using a 6 mm Allen key.
2. Turn Allen screw for vertical alignment.
3. Turn Allen screw for horizontal alignment.
4. Align beam setting equipment to 2nd headlamp.
5. Adjust 2nd headlamp as detailed in steps 1 to 3 above.
6. Switch off headlamps.
7. Remove beamsetter.

AUXILIARY DRIVE BELT - 'K' SERIES WITHOUT AIR CONDITIONING

Service repair no - 86.10.05

Check

1. Check condition of drive belt, renew a drive belt that shows signs of wear and splitting.

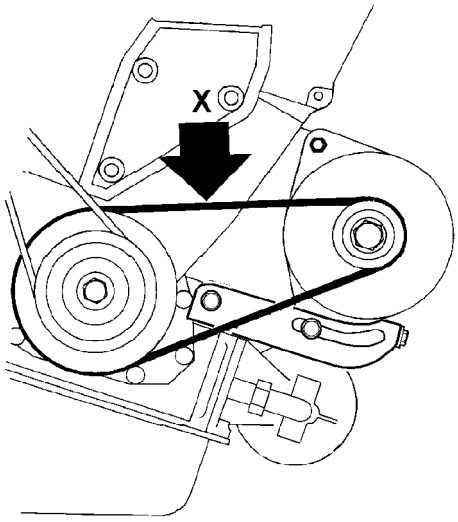

86M3631

2. Apply a force of 10 kg to the drive belt at position 'X' and measure the deflection between the crankshaft pulley and alternator pulley.
   Deflection must be 6 - 8 mm.

Adjust

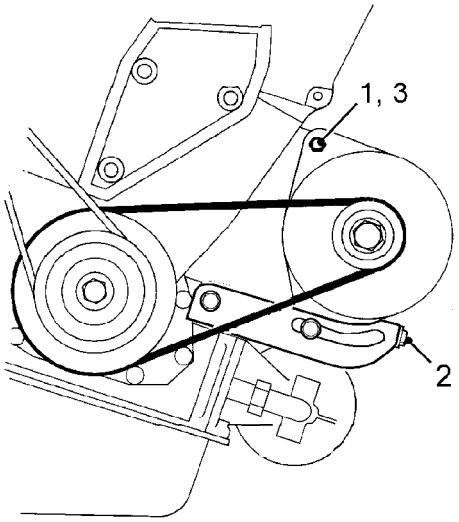

86M3632

1. Loosen 2 alternator mounting bolts.

CAUTION: Ensure that bolts are loosened sufficiently for alternator to move freely.

2. Increase drive belt tension by turning the tension adjusting bolt clockwise.

CAUTION: Do not apply excessive torque to adjusting bolt or damage to bolt will result. If bolt appears to be seized or is difficult to turn, apply suitable anti-seize lubricant to bolt.

3. Tighten alternator mounting bolts to 25 Nm.
4. Recheck drive belt tension.

AUXILIARY DRIVE BELT - 'K' SERIES WITH AIR CONDITIONING

Service repair no - 86.10.05.20

Check

1. Check condition of drive belt, renew a drive belt that shows signs of wear and splitting.

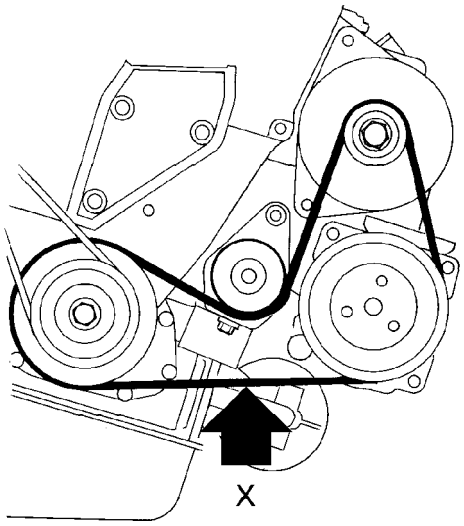

86M3629

2. Apply a force of 10 kg to the drive belt at position 'X' and measure the deflection between the crankshaft pulley and air conditioning compressor pulley. Deflection must be 9 - 10 mm.

Adjust

1. Raise front of vehicle.

WARNING: Support on safety stands.

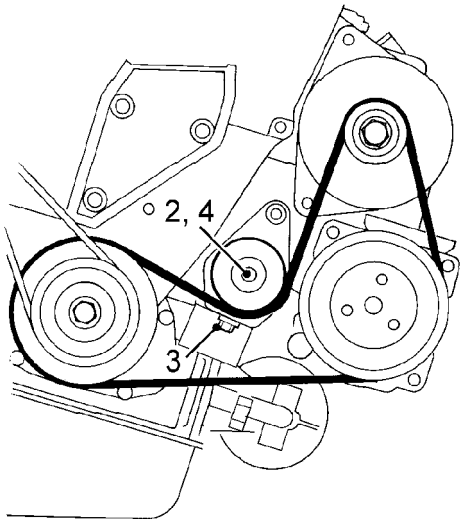

86M3630

2. Loosen drive belt tensioner pulley securing bolt.
3. Increase drive belt tension by turning the tension adjusting bolt clockwise.
4. Tighten drive belt tensioner pulley securing bolt to 25 Nm.
5. Recheck drive belt tension.
6. Remove stand(s) and lower vehicle.

AUXILIARY DRIVE BELT - 'L' SERIES WITHOUT AIR CONDITIONING

Service repair no - 86.10.05

Check

1. Turn steering to RH lock.
2. Using a socket and extension bar on the crankshaft pulley bolt, rotate engine a sufficient number of turns to check condition of drive belt. Renew a drive belt that shows signs of wear, splitting or oil contamination.

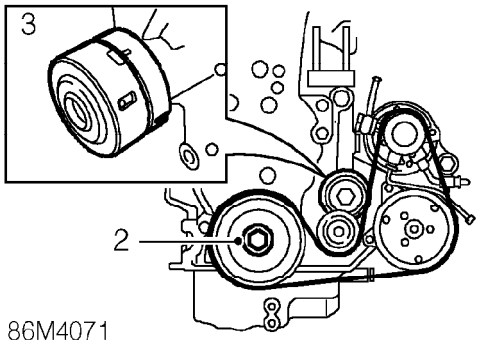

86M4071

3. Check belt length, belt must be renewed before indicator reaches RH end of slot.

ALTERNATOR - 'K' SERIES WITHOUT AIR CONDITIONING

Service repair no - 86.10.02

Remove

1. Disconnect battery earth lead.

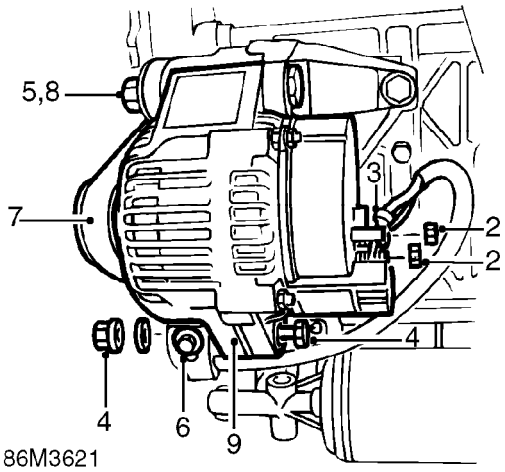

2. Loosen 2 nuts securing cables to alternator.
3. Disconnect 2 cables from alternator.
4. Remove nut and bolt securing alternator to adjustment bracket.
5. Loosen bolt securing alternator to engine.

CAUTION: Ensure that bolt is loosened sufficiently for alternator to move freely.

6. Release drive belt tension by turning the tension adjusting bolt anti-clockwise.

CAUTION: Do not apply excessive torque to adjusting bolt or damage to bolt will result. If bolt appears to be seized or is difficult to turn, apply suitable anti-seize lubricant to bolt.

7. Disconnect drive belt from alternator pulley.
8. Remove nut and bolt securing alternator to engine.
9. Remove alternator.

Do not carry out further dismantling if component is removed for access only.

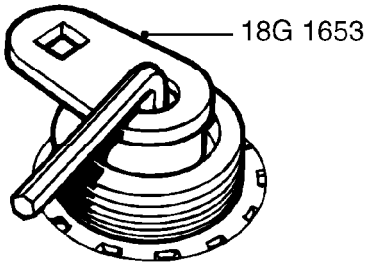

10. Restrain the alternator shaft with an 8 mm Allen key and remove nut securing pulley to alternator shaft using tool **18G 1653.**
11. Remove pulley from alternator.
12. Clean pulley and alternator shaft.
13. Fit pulley to alternator shaft.
14. Fit alternator pulley nut, hold shaft with an 8 mm Allen key and using tool **18G 1653,** tighten nut to 25 Nm.

Refit

1. Position alternator to engine.
2. Fit nut and bolt securing alternator to engine, but do not tighten.
3. Connect drive belt to alternator pulley. Ensure grooves on drive belt and pulleys are correctly located.
4. Fit nut and bolt securing alternator to adjustment bracket.
5. Adjust drive belt tension. ***See Adjustments.***
6. Connect cables to alternator and secure with nuts.
7. Connect battery earth lead.

ALTERNATOR - 'K' SERIES WITH AIR CONDITIONING

Service repair no - 86.10.02.20

Remove

1. Disconnect battery earth lead.
2. Raise front of vehicle.

WARNING: Support on safety stands.

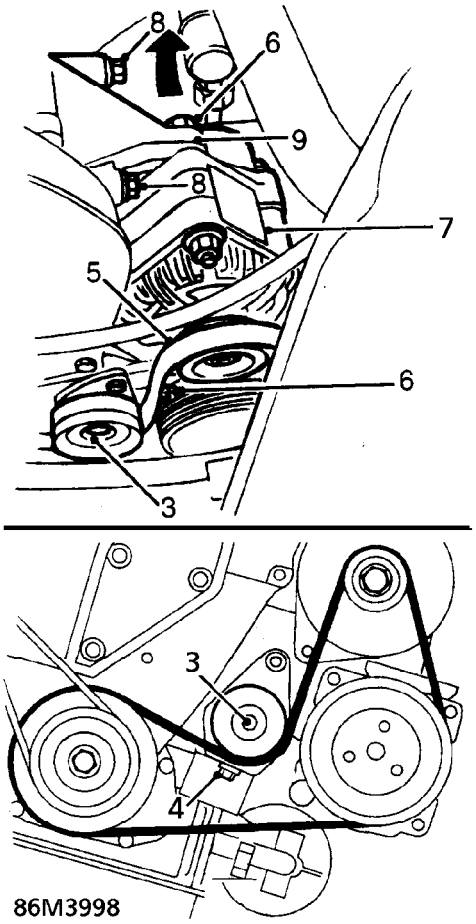

3. Loosen drive belt tensioner pulley securing bolt.
4. Release drive belt tension by turning the tension adjusting bolt anti-clockwise.
5. Disconnect drive belt from alternator pulley.
6. Remove 2 nuts and bolts securing alternator to engine.
7. Release alternator from mounting brackets.
8. Remove bolt and loosen nut securing alternator top mounting bracket to engine.
9. Pivot alternator mounting bracket out of the way.

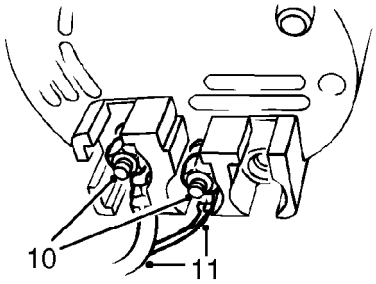

10. Loosen 2 nuts securing cables to alternator.
11. Disconnect 2 cables from alternator.
12. Remove alternator from vehicle.
    Do not carry out further dismantling if component is removed for access only.

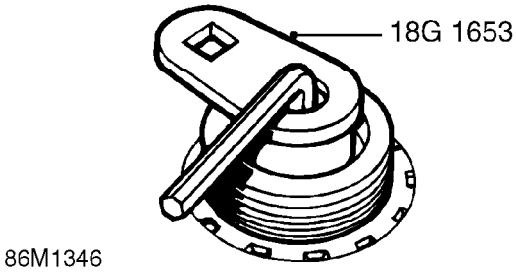

13. Restrain the alternator shaft with an 8 mm Allen key and remove nut securing pulley to alternator shaft using tool **18G 1653.**
14. Remove pulley from alternator.
15. Clean pulley and alternator shaft.
16. Fit pulley to alternator shaft.
17. Fit alternator pulley nut, hold shaft with an 8 mm Allen key and using tool **18G 1653,** tighten nut to 25 Nm.

Refit

1. Position alternator in vehicle.
2. Connect 2 cables to alternator and secure with nuts.
3. Position alternator top mounting bracket
4. Fit bolt securing alternator top mounting bracket to engine and tighten to 25 Nm.
5. Tighten nut securing alternator top mounting bracket to engine to 25 Nm .
6. Manoeuvre alternator onto mounting brackets.
7. Fit 2 through bolts securing alternator to mounting brackets, fit 2 nuts and tighten to 45 Nm.
8. Connect drive belt to alternator pulley Ensure grooves on drive belt and pulleys are correctly located.
9. Adjust drive belt tension. ***See Adjustments.***
10. Remove stand(s) and lower vehicle.
11. Connect battery earth lead.

ALTERNATOR - 'L' SERIES WITHOUT AIR CONDITIONING

Service repair no - 86.10.02

Remove

1. Disconnect battery earth lead.
2. Raise front of vehicle.

WARNING: Support on safety stands.

3. Remove auxiliary drive belt. ***See this section.***
4. Remove engine acoustic cover. ***See BODY, Exterior fittings.***
5. Fit wooden block to jack and position jack to support engine.

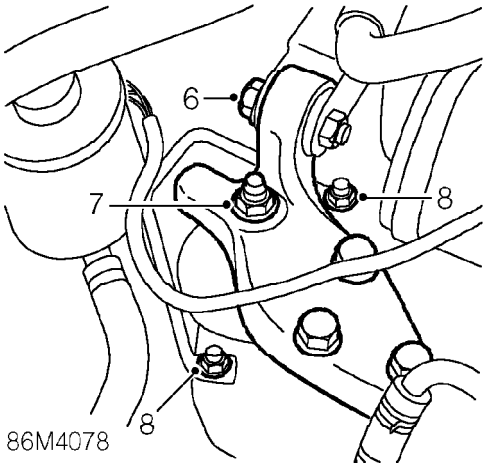

6. Remove through bolt securing RH steady bar to engine mounting bracket.
7. Remove nut securing mounting bracket to engine mounting.
8. Loosen 2 nuts securing restraint bar to body.

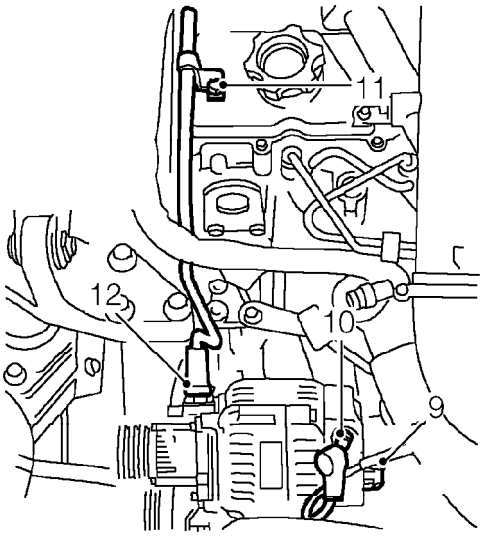

86M3924

9. Disconnect multiplug from alternator.
10. Release cover, remove nut and disconnect battery cable from alternator.
11. Remove bolt securing brake servo vacuum pipe to camshaft cover.
12. Release clip and disconnect vacuum hose from vacuum pump.
13. Position drain tin to collect oil spillage.

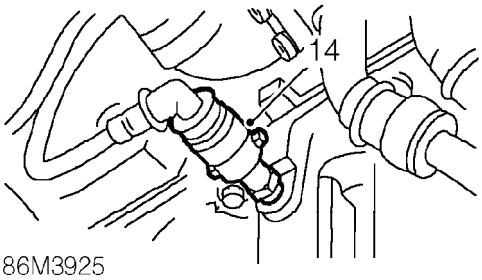

86M3925

14. Disconnect vacuum pump oil return pipe from sump.

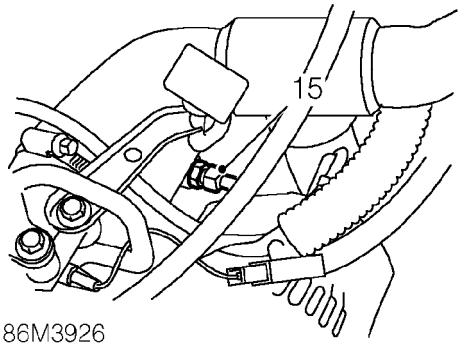

86M3926

15. Disconnect vacuum pump oil feed pipe union from cylinder block.
16. Raise engine on jack to remove alternator bolt.

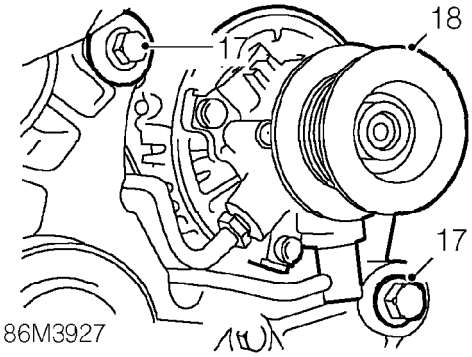

86M3927

17. Remove 2 bolts securing alternator to mounting bracket.
18. Remove alternator from vehicle.

CAUTION: Plug the connections.

Do not carry out further dismantling if component is removed for access only.

19. Transfer vacuum pump to new alternator. ***See BRAKES, Repairs.***

Refit

1. Remove plugs from connections.
2. Clean all pipe connections.
3. Position alternator to mounting bracket.
4. Connect oil feed pipe to cylinder block and tighten union.
5. Fit bolts securing alternator to mounting bracket and tighten the lower bolt to 45 Nm and the upper bolt to 25 Nm.
6. Tighten oil feed pipe union to vacuum pump.
7. Connect vacuum hose to vacuum pump and secure hose with clip.
8. Align vacuum pipe bracket to camshaft cover and tighten bolt.
9. Connect oil return pipe to sump.
10. Remove drain tin from beneath vehicle.
11. Remove stand(s) and lower vehicle.
12. Connect battery cable to alternator stud tighten nut to 4 Nm and position cover.
13. Connect multiplug to alternator.
14. Lower engine, fit nut securing mounting bracket to engine mounting and tighten to 85 Nm.
15. Tighten nuts, engine mounting restraint bar to body, to 45 Nm.
16. Connect steady bar to engine mounting bracket, fit through bolt and tighten to 80 Nm.
17. Remove jack positioned to support engine.
18. Fit auxiliary drive belt. ***See this section.***
19. Fit engine acoustic cover. ***See BODY, Exterior fittings.***
20. Connect battery earth lead.

ALTERNATOR - 'L' SERIES WITH AIR CONDITIONING

Service repair no - 86.10.02.20

Remove

1. Disconnect battery earth lead.
2. Raise front of vehicle.

WARNING: Support on safety stands.

3. Remove undertray. ***See BODY, Exterior fittings.***
4. Remove auxiliary drive belt. ***See this section.***
5. Remove engine acoustic cover. ***See BODY, Exterior fittings.***

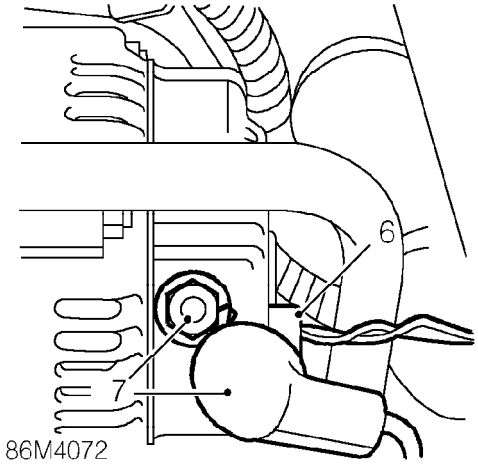

6. Disconnect multiplug from alternator.
7. Release cover, remove nut and disconnect battery cable from alternator.

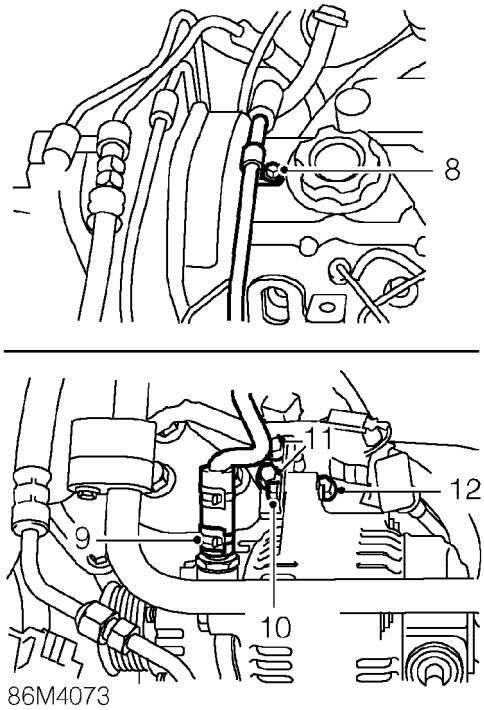

8. Remove bolt securing brake servo vacuum pipe to camshaft cover.
9. Release clip and disconnect vacuum hose from vacuum pump.
10. Remove bolt securing alternator to top mounting bracket.
11. Remove 2 bolts securing alternator top mounting bracket to coolant outlet elbow and remove mounting bracket.
12. Remove bolt securing dipstick tube to coolant outlet elbow.
13. Fit wooden block to jack and position jack to support engine.

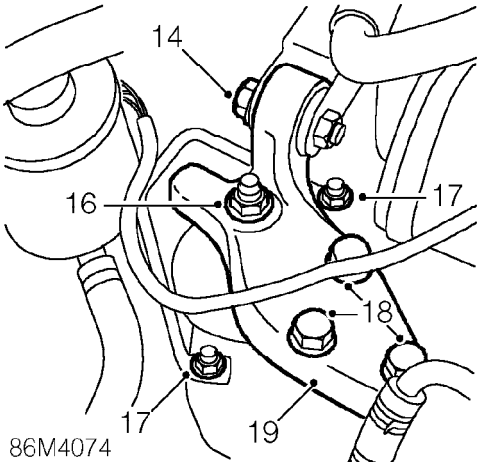

14. Loosen through bolt securing RH steady bar to body.
15. Remove through bolt securing RH steady bar to engine mounting bracket.
16. Remove nut securing engine mounting bracket to engine mounting.
17. Loosen 2 nuts securing engine mounting restraint bar to body.
18. Remove 3 bolts securing engine mounting bracket to engine.
19. Remove engine mounting bracket.
20. Position drain tin to collect oil spillage.

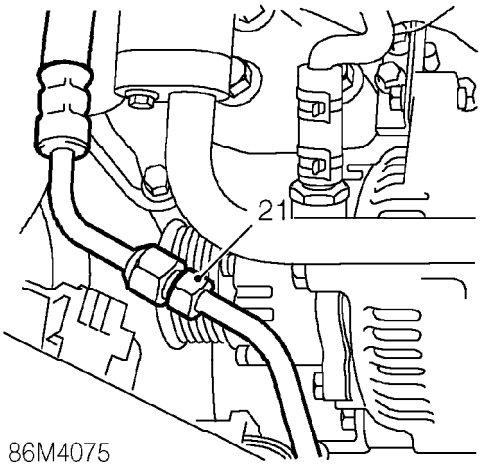

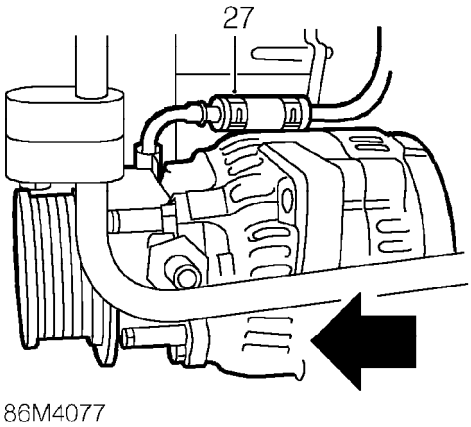

21. Loosen union and disconnect high pressure hose from PAS pump.

CAUTION: To prevent damage to pipes or components, use two spanners when loosening or tightening unions.

22. Raise engine to gain access to alternator lower mounting bolt.

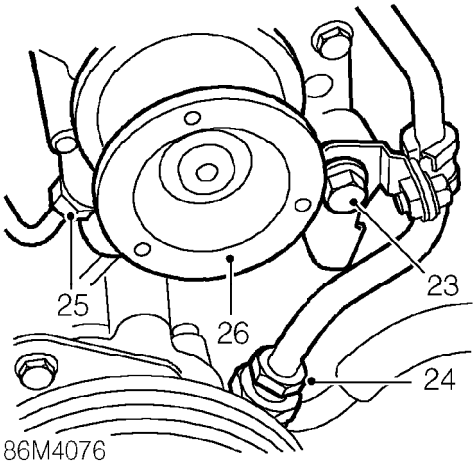

23. Remove alternator lower mounting bolt.
24. Loosen union and remove pipe from PAS pump.
25. Loosen union and disconnect oil feed pipe from brake servo vacuum pump.
26. Release alternator from mounting bracket.
27. Release clip and disconnect oil drain pipe from vacuum pump.
28. Manoeuvre alternator out between air conditioning pipe and power steering pump.

CAUTION: Plug the connections.

Do not carry out further dismantling if component is removed for access only.

29. Transfer vacuum pump to new alternator. ***See BRAKES, Repairs.***

Refit

1. Remove plugs from connections.
2. Clean all pipe connections.
3. Position alternator on mounting bracket.
4. Connect oil drain pipe to brake servo vacuum pump and secure with clip.
5. Connect oil feed pipe to brake servo vacuum pump and tighten union to 18 Nm.

CAUTION: To prevent damage to pipes or components, use two spanners when loosening or tightening unions.

6. Remove and discard 2 ’O’ rings from PAS high pressure pipe and hose.
7. Lubricate new ’O’ rings with clean power steering fluid and fit to power steering pipe and hose.
8. Fit PAS pipe to pump and tighten union to 20 Nm.
9. Align alternator to mounting bracket and fit alternator lower mounting bolt.

10. Lower engine on jack until horizontal in engine compartment
11. Fit engine mounting bracket to engine mounting and engine.
12. Fit bolts securing engine mounting bracket to engine and tighten to 100 Nm.
13. Fit nut securing mounting bracket to engine mounting and tighten to 85 Nm.
14. Tighten nuts, engine mounting restraint bar to body, to 80 Nm.
15. Connect RH steady bar to engine mounting bracket, fit through bolt and tighten to 85 Nm.
16. Tighten bolt, RH steady bar to body, to 80 Nm.
17. Remove jack positioned to support engine.
18. Align dipstick tube to coolant outlet elbow, fit bolt and tighten to 10 Nm.
19. Position alternator top mounting bracket to coolant outlet elbow, fit bolts and tighten to 25 Nm.
20. Align alternator to top mounting bracket, fit bolt and tighten to 25 Nm.
21. Tighten alternator lower mounting bolt to 45 Nm.
22. Connect PAS high pressure hose to pump and tighten union to 20 Nm.
23. Connect hose to brake servo vacuum pump and secure hose with clip.
24. Align vacuum pipe to camshaft cover and tighten bolt to 10 Nm.
25. Remove drain tin from beneath vehicle.
26. Connect battery cable to alternator stud, tighten nut to 4 Nm and position cover.
27. Connect multiplug to alternator.
28. Fit engine acoustic cover. ***See BODY, Exterior fittings.***
29. Fit auxiliary drive belt. ***See this section.***
30. Fit undertray. ***See BODY, Exterior fittings.***
31. Remove stand(s) and lower vehicle.
32. Connect battery earth lead.
33. Bleed power steering system. ***See STEERING, Adjustments.***

AUXILIARY DRIVE BELT - 'K' SERIES WITHOUT POWER STEERING

Service repair no - 86.10.03

Remove

1. Raise front of vehicle.

WARNING: Support on safety stands.

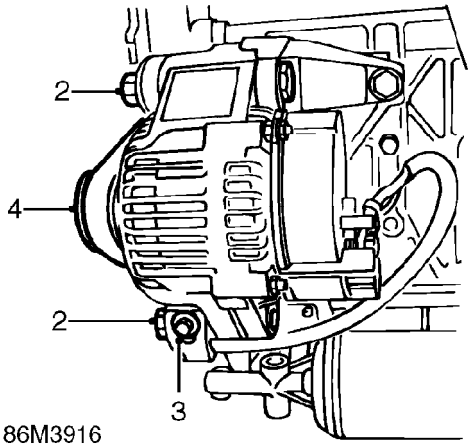

2. Loosen 2 alternator mounting bolts.

CAUTION: Ensure that bolts are loosened sufficiently for alternator to move freely.

3. Release drive belt tension by turning the tension adjusting bolt anti-clockwise.

CAUTION: Do not apply excessive torque to adjusting bolt or damage to bolt will result. If bolt appears to be seized or is difficult to turn, apply suitable anti-seize lubricant to bolt.

4. Release drive belt from alternator pulley.
5. Remove drive belt.

Refit

1. Clean pulley 'V's.
2. Fit drive belt to crankshaft pulley and connect to alternator pulley. Ensure grooves on pulleys and drive belt are correctly located.
3. Adjust drive belt tension. ***See Adjustments.***
4. Remove stand(s) and lower vehicle.

AUXILIARY DRIVE BELT - 'K' SERIES WITH POWER STEERING

Service repair no - 86.10.03.10

Remove

1. Raise front of vehicle.

WARNING: Support on safety stands.

2. Remove power steering pump drive belt. ***See STEERING, Repairs.***

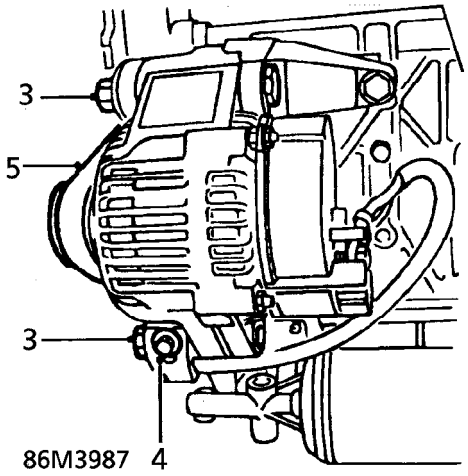

3. Loosen 2 alternator mounting bolts.

CAUTION: Ensure that bolts are loosened sufficiently for alternator to move freely.

4. Release drive belt tension by turning the tension adjusting bolt anti-clockwise.

CAUTION: Do not apply excessive torque to adjusting bolt or damage to bolt will result. If bolt appears to be seized or is difficult to turn, apply suitable anti-seize lubricant to bolt.

5. Release drive belt from alternator pulley.
6. Remove and discard drive belt.

Refit

1. Clean pulley 'V's.
2. Fit new drive belt to crankshaft pulley and connect to alternator pulley. Ensure grooves on pulleys and drive belt are correctly located.
3. Adjust drive belt tension. ***See Adjustments.***
4. Fit and adjust power steering pump drive belt. ***See STEERING, Adjustments.***
5. Remove stand(s) and lower vehicle.

AUXILIARY DRIVE BELT - 'K' SERIES WITH AIR CONDITIONING

Service repair no - 86.10.03.20

Remove

1. Raise front of vehicle.

WARNING: Support on safety stands.

2. Remove power steering pump drive belt. ***See STEERING, Repairs.***

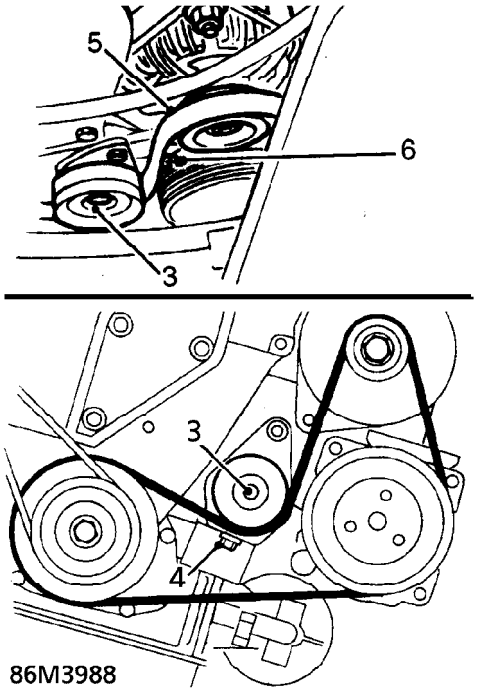

3. Loosen drive belt tensioner pulley securing bolt.
4. Release drive belt tension by turning the tension adjusting bolt anti-clockwise.
5. Release drive belt from alternator and compressor pulleys.
6. Remove and discard drive belt.

Refit

1. Clean pulley 'V's.
2. Fit new drive belt to crankshaft pulley and connect to alternator and compressor pulleys. Ensure grooves on drive belt and pulleys are correctly located.
3. Adjust drive belt tension. ***See Adjustments.***
4. Fit and adjust power steering pump drive belt. ***See STEERING, Repairs.***
5. Remove stand(s) and lower vehicle.

AUXILIARY DRIVE BELT - 'L' SERIES

Service repair no - 86.10.03

Remove

1. Raise front of vehicle.

WARNING: Support on safety stands.

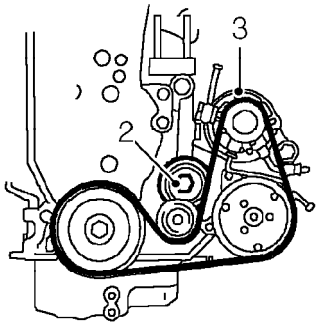

86M3923

2. Using a 15 mm ring spanner on drive belt tensioner pulley bolt, rotate pulley fully clockwise and hold.
3. With assistance, release drive belt from alternator pulley.
4. Remove drive belt from remaining pulleys and remove from vehicle.

Refit

1. Clean drive belt pulley grooves and ensure grooves are not damaged.
2. Fit new drive belt around pulleys, except alternator pulley, ensure belt is correctly aligned in pulley grooves.
3. Hold tensioner pulley fully clockwise, with assistance fit drive belt around alternator pulley.
4. Remove stand(s) and lower vehicle.

AUXILIARY DRIVE BELT TENSIONER - 'L' SERIES

Service repair no - 86.10.06

Remove

1. Remove auxiliary drive belt. ***See this section.***

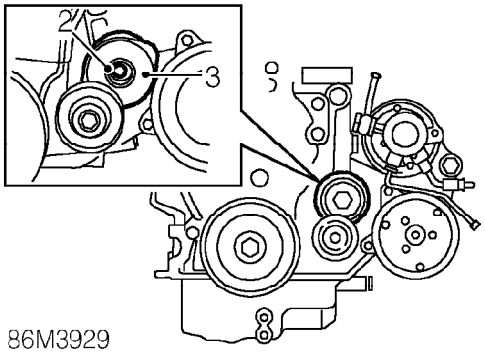

86M3929

2. Remove centre bolt securing tensioner to mounting bracket.
3. Remove tensioner.

Refit

1. Clean tensioner and mating face.
2. Locate tensioner on dowel. Fit and tighten centre bolt to 45 Nm.
3. Fit auxiliary drive belt. ***See this section.***

BATTERY

Service repair no - 86.15.01

Remove

1. Disconnect both battery leads, earth lead first.

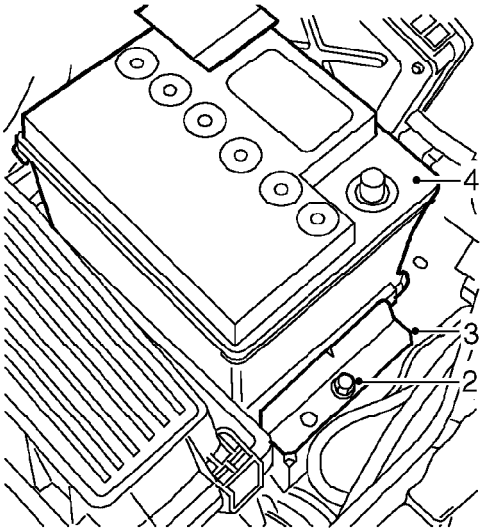

86M3912

2. Remove bolt securing battery clamp to battery tray.
3. Remove battery clamp.
4. Release and remove battery from vehicle.

Refit

1. Clean battery terminals and coat with petroleum jelly.
2. Position battery to battery tray.
3. Fit battery clamp and secure with bolt.
4. Position and connect battery leads, earth lead last

FRONT DOOR GLASS MOTOR

Service repair no - 86.25.04

Remove

1. Remove front door glass. ***See BODY, Interior trim components.***

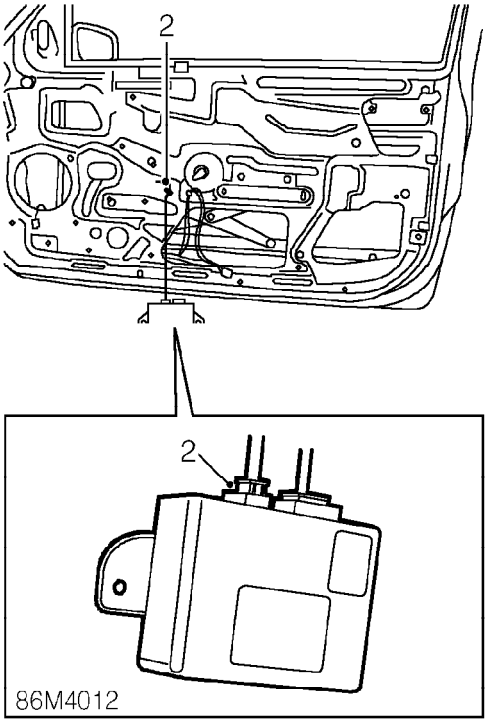

86M4012

2. Disconnect door glass motor multiplug and release harness clip from door.

NOTE: Mark position of roller guide bolts on door before removal.

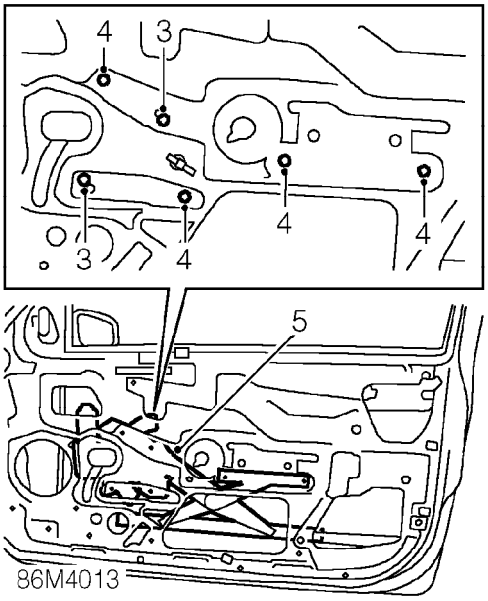

3. Loosen 2 bolts securing regulator to door.
4. Remove 4 bolts securing regulator to door.
5. Release and remove regulator assembly from door.

NOTE: Before removing power window motor mark the location by scribing a line across the sector gear and regulator.

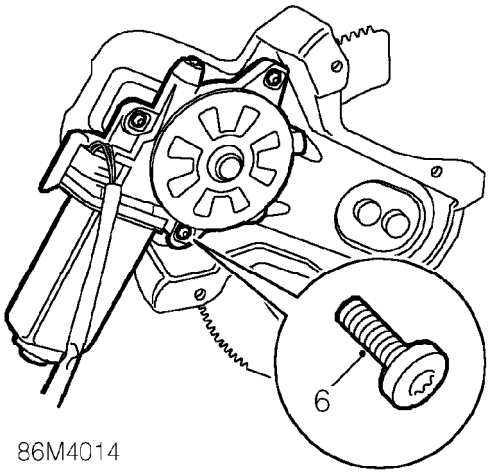

6. Using a Torx bit remove 3 screws securing motor to regulator, then remove the motor.

Refit

1. Apply grease to motor gear and regulator pivot points.
2. Ensure regulator marks are aligned, position motor to regulator and tighten screws to 7 Nm.
3. Position and align regulator assembly to door.
4. Fit bolts to secure regulator, tighten to 8 Nm.
5. Align roller guide, fit bolts to align with original marks and tighten to 8 Nm.
6. Connect motor multiplug, secure clip to door.
7. Refit front door glass. ***See BODY, Interior trim components.***

ELECTRIC WINDOW SWITCH

Service repair no - 86.25.07

Remove

1. Remove finisher from centre console.

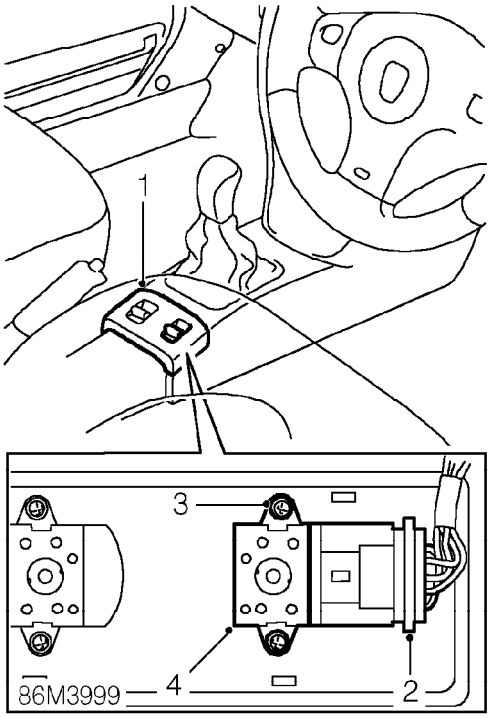

2. Disconnect multiplug from switch.
3. Remove 2 screws securing switch to finisher.
4. Remove switch from finisher.

Refit

1. Fit switch to finisher and secure with screws.
2. Connect multiplug to switch.
3. Fit finisher to centre console.

WINDOW LIFT ECU

Service repair no - 86.25.39

Remove

1. Remove drivers door trim casing. ***See BODY, Interior trim components.***

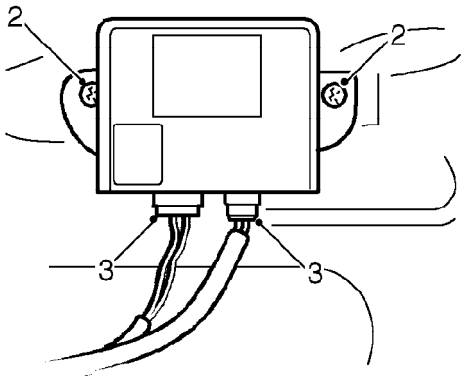

2. Remove 2 screws securing window lift ECU to door.
3. Disconnect 2 multiplugs from ECU.

Refit

1. Connect multiplugs to ECU.
2. Position ECU to door, fit and tighten screws.
3. Fit door trim casing. ***See BODY, Interior trim components.***

CENTRAL DOOR LOCKING (CDL) ECU

Service repair no - 86.26.01

The central door locking system and the Anti-theft alarm are controlled by a common ECU. Refer to the Anti-theft alarm ECU for further details. ***See this section.***

FRONT DOOR LOCK MOTOR

Service repair no - 86.26.08

Remove

1. Remove front door outside handle. ***See BODY, Exterior fittings.***

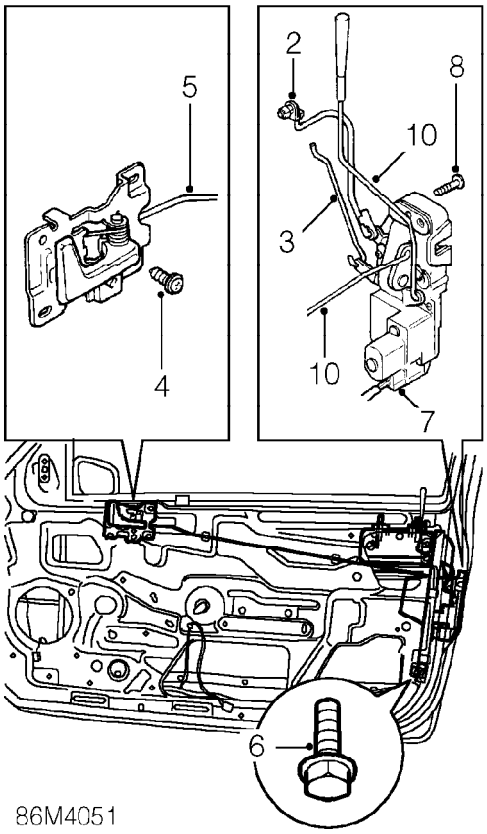

2. Release clip and remove outside handle control rod from latch.
3. Release private lock control rod from latch.
4. Remove 3 screws securing inside door handle to door.
5. Release inside door handle control rod from handle.
6. Remove bolt securing door glass rear channel to door.
7. Disconnect multiplug from lock.
8. Remove 3 Torx screws securing latch to door.
9. Push rear channel forward and remove latch from door.
10. Remove inside door handle and sill button control rod from latch.

Refit

1. Fit inside door handle and sill button control rod to latch.
2. Position latch to door and tighten Torx screws to 6 Nm.
3. Align rear channel and tighten bolt to 8 Nm.
4. Connect lock multiplug.
5. Fit control rod to inside door handle.
6. Fit inside handle to door and tighten screws.
7. Fit private lock control rod to latch.
8. Fit outside handle control rod to latch and secure with clip.
9. Fit front door outside handle. ***See BODY, Exterior fittings.***

REAR DOOR LOCK MOTOR

Service repair no - 86.26.09

Remove

1. Remove rear door outside handle. ***See BODY, Exterior fittings.***

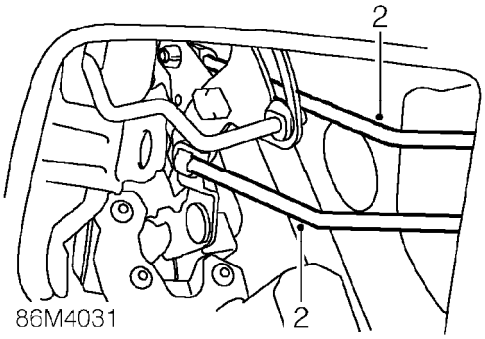

2. Release interior handle and sill locking button control rods from lock motor.

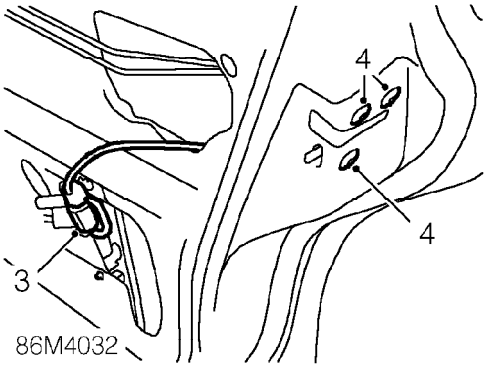

3. Release lock motor multiplug from door and disconnect from motor.
4. Remove 3 Tx25 screws securing lock motor to door.
5. Remove lock motor from door.

Refit

1. Position lock motor in door. Fit Torx screws and tighten to 7 Nm.
2. Connect multiplug to door lock and secure to door.
3. Connect interior handle and sill locking button control rods to lock motor.
4. Fit rear door outside handle. ***See BODY, Exterior fittings.***

HORN SWITCH

Service repair no - 86.30.01

Remove

1. Remove drivers airbag module. ***See RESTRAINT SYSTEMS, Repairs.***

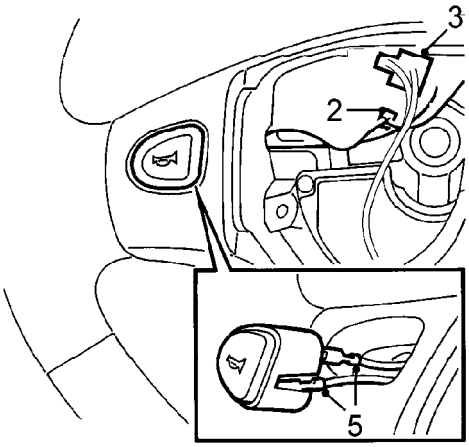

86M3756

2. Release earth connector from steering wheel base.
3. Disconnect multiplug from steering column rotary coupler.
4. Using a flat blade carefully ease switch from steering wheel.
5. Disconnect 2 Lucars from switch.
6. Remove horn switch.

Refit

1. Position horn switch and connect 2 Lucars to switch.
2. Fit switch to steering wheel.
3. Connect multiplug to rotary coupler.
4. Secure earth connector to steering wheel base.
5. Fit drivers airbag module. ***See RESTRAINT SYSTEMS, Repairs.***

HORN

Service repair no - 86.30.10

Remove

1. Remove front bumper. ***See BODY, Exterior fittings.***

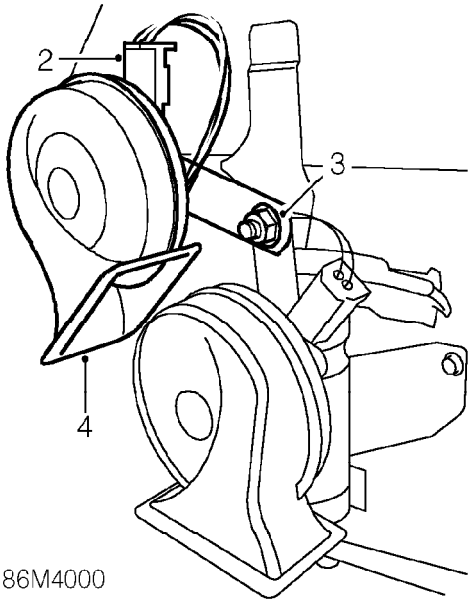

86M4000

2. Disconnect multiplug from horn.
3. Remove nut securing horn to mounting bracket.
4. Remove horn.

Refit

1. Position horn to mounting bracket and tighten nut to 10 Nm.
2. Connect multiplug to horn.
3. Fit front bumper. ***See BODY, Exterior fittings.***

HEADLAMP ASSEMBLY

Service repair no - 86.40.49

Remove

1. Remove front bumper. ***See BODY, Exterior fittings.***

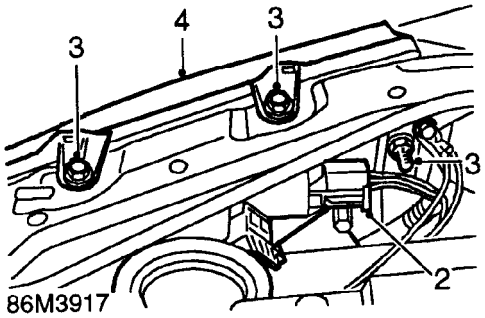

2. Disconnect multiplug from headlamp. *97.5 MY on:* Disconnect multiplug from headlamp levelling motor.
3. Remove 2 bolts and nut securing headlamp to body.
4. Release headlamp from clip and remove.

Refit

1. Position headlamp to body and secure to clip.
2. Fit bolts and nut securing headlamp to body and tighten to 5 Nm.
3. Connect multiplug to headlamp.
4. Fit front bumper. ***See BODY, Exterior fittings.***

SIDE REPEATER

Service repair no - 86.40.53

Remove

1. Pull wheel arch liner aside to gain access to rear of side repeater.

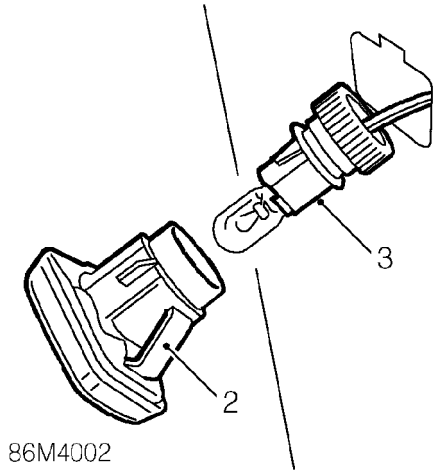

2. Squeeze lugs on repeater to release from wing.
3. Release bulb holder from repeater.

Refit

1. Connect bulb holder to repeater.
2. Fit repeater to wing.
3. Replace wheel arch liner.

TAIL LAMP

Service repair no - 86.40.70

Remove

1. Release trim stud by rotating through 90° and move luggage compartment carpet aside.

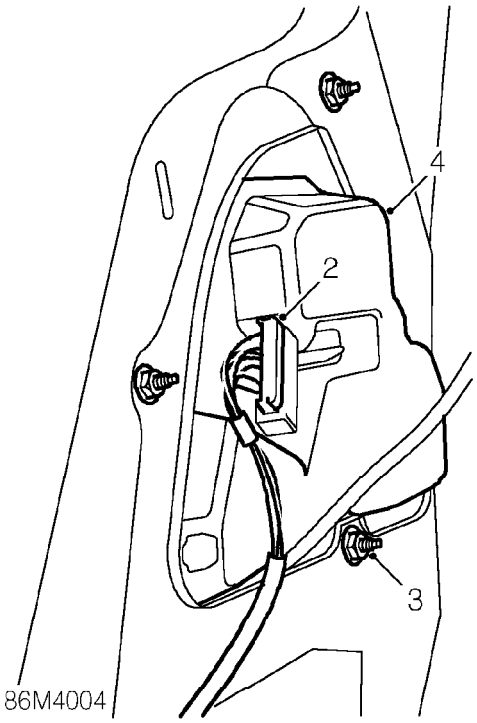

2. Disconnect multiplug from tail lamp.
3. Remove 3 screws securing tail lamp to body.
4. Remove tail lamp.

Refit

1. Fit tail lamp to body.
2. Fit screws securing tail lamp to body and tighten evenly.
3. Connect multiplug to tail lamp.
4. Reposition luggage compartment carpet and secure with trim stud.

NUMBER PLATE LAMP

Service repair no - 86.40.86

Remove

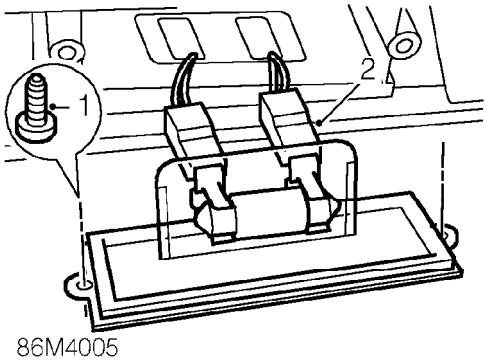

1. Remove 2 screws securing lamp to applique.
2. Withdraw lamp from applique and disconnect 2 Lucar connectors.

Refit

1. Position lamp to applique and connect lucars.
2. Fit and tighten screws securing lamp to applique.

FRONT FOG LIGHT

Service repair no - 86.40.96

Remove

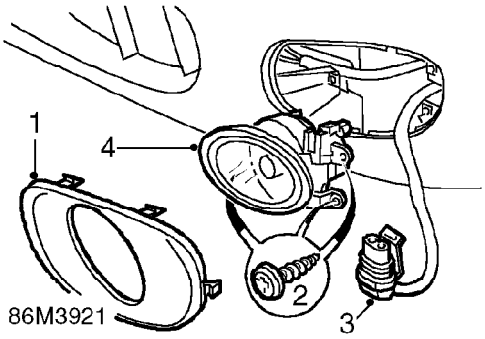

1. Remove finisher from front bumper.
2. Remove 3 screws securing light to front bumper.
3. Release light from bumper and disconnect multiplug.
4. Remove fog light.

Refit

1. Connect multiplug to fog light.
2. Fit light to bumper and secure with screws.
3. Fit fog light finisher to bumper.

CENTRE HIGH MOUNTED STOP LIGHT

Service repair no - 86.41.32

Remove

1. Remove tailgate spoiler. ***See BODY, Interior trim components.***

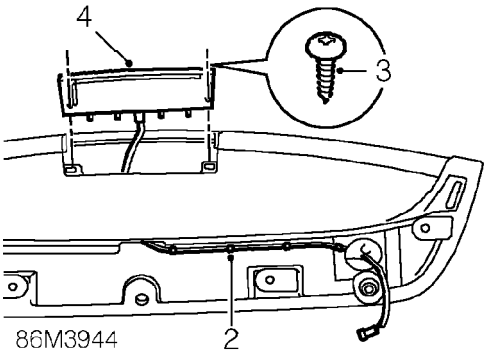

2. Release stop light harness from 3 clips on tailgate spoiler.
3. Remove 2 screws securing stop light to tailgate spoiler.
4. Remove stop light.

Refit

1. Fit stop light to tailgate spoiler and secure with screws.
2. Secure stop light harness to clips on tailgate spoiler.
3. Fit tailgate spoiler. ***See BODY, Interior trim components.***

INTERIOR LIGHT

Service repair no - 86.45.02

Remove

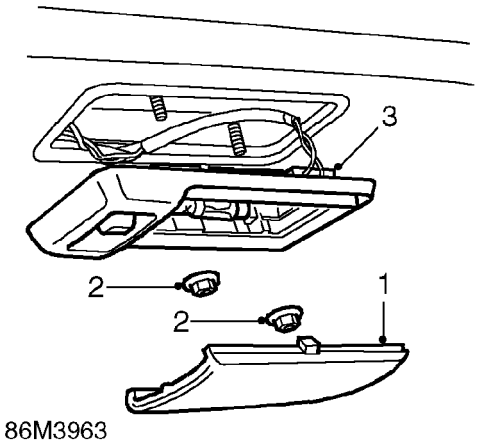

1. Carefully prise out the lens from the light housing.
2. Remove 2 nuts securing interior light to roof.
3. Disconnect multiplug and remove interior light.

Refit

1. Position interior light to roof and connect multiplug.
2. Fit and tighten nuts securing interior light to roof.
3. Fit lens to interior light.

GLOVEBOX LAMP

Service repair no - 86.45.08

Remove

1. Open glovebox.

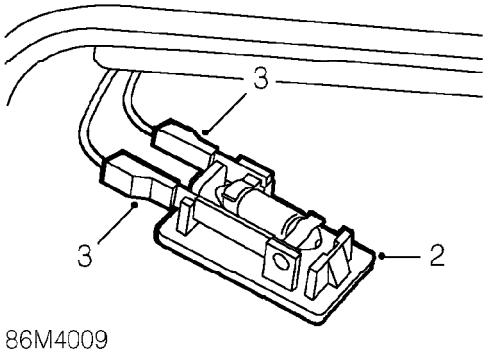

2. Release lamp from fascia.
3. Disconnect 2 Lucar connectors and remove lamp.

Refit

1. Position lamp to fascia and connect Lucars.
2. Fit lamp to fascia.
3. Close glovebox.

LUGGAGE COMPARTMENT LAMP

Service repair no - 86.45.16

Remove

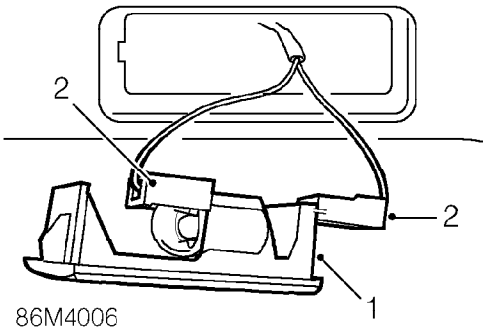

1. Release luggage compartment lamp from parcel tray support panel.
2. Disconnect 2 Lucar connectors and remove lamp.

Refit

1. Position lamp to support panel and connect Lucars.
2. Fit lamp to support panel.

HEATER CONTROL ILLUMINATION BULB

Service repair no - 86.45.41

Remove

1. Remove front console. ***See BODY, Interior trim components.***

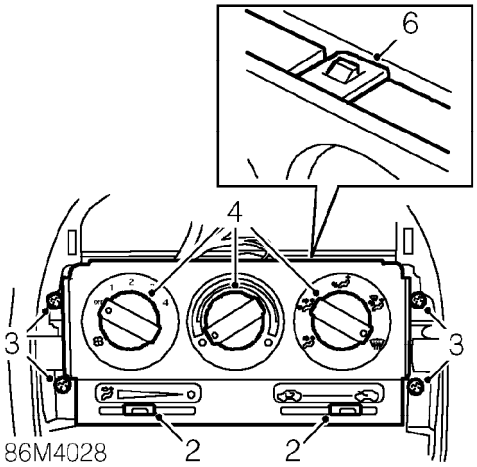

2. Remove knobs from fresh air and air recirculation controls.
3. Remove 4 screws securing heater control panel to fascia and lower control panel.
4. Remove knobs from heater controls.

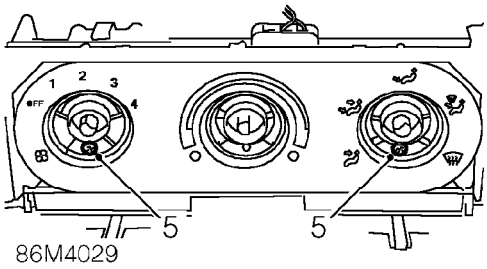

5. Remove 2 screws securing faceplate to heater controls.
6. Release 6 clips securing faceplate to heater controls and release faceplate.

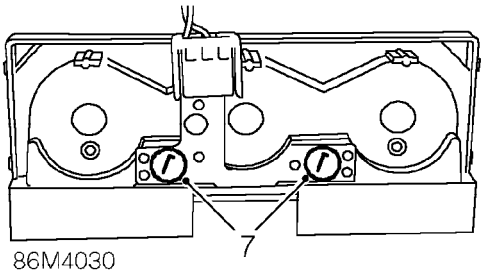

7. Remove bulbs from rear of faceplate.

Refit

1. Fit bulbs to rear of heater control faceplate.
2. Position faceplate to heater control and secure with clips.
3. Fit and tighten screws securing faceplate to heater controls.
4. Fit and tighten screws securing heater controls to fascia.
5. Fit knobs to heater controls.
6. Fit front console. ***See BODY, Interior trim components.***

INSTRUMENT PACK ILLUMINATION BULB

Service repair no - 86.45.48

Remove

1. Remove instrument pack. ***See INSTRUMENTS, Repairs.***

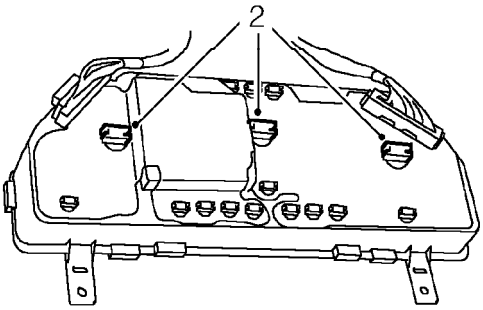

2. Remove bulb from rear of instrument pack.

Refit

1. Fit bulb to rear of instrument pack.
2. Fit instrument pack. ***See INSTRUMENTS, Repairs.***

RADIO

Service repair no - 86.50.03

Remove

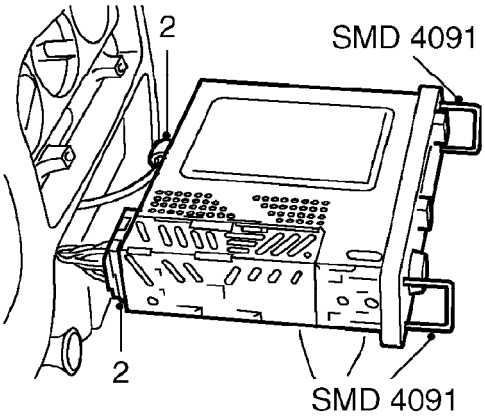

86M3957

1. Fit radio removal tools **SMD 4091** to release retaining clips. Pull on tool to release radio from fascia.
2. Disconnect multiplugs and aerial lead. Remove radio.

Refit

1. Position radio to aperture. Connect multiplugs and aerial lead.
2. Slide radio into fascia until retaining clips engage.
3. Enter security code and check radio for correct operation.

REAR SPEAKER

Service repair no - 86.50.12

Remove

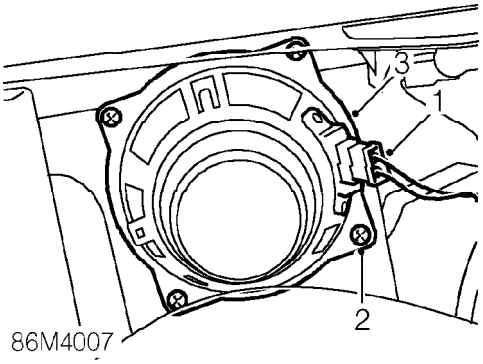

1. Disconnect multiplug from rear speaker.
2. Remove 4 screws securing rear speaker to parcel tray support panel.
3. Remove speaker.

Refit

1. Position speaker to parcel tray support panel and fit and tighten screws.
2. Connect multiplug to speaker.

REMOTE ICE CONTROLS

Service repair no - 86.50.13

Remove

1. Disconnect battery earth lead.
2. Remove both horn switches. ***See this section.***

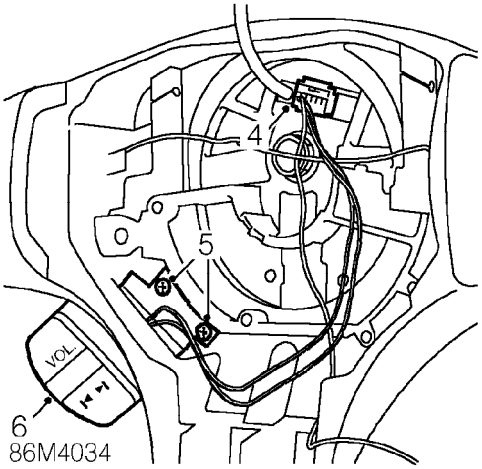

3. Release multiplug from rotary coupler.
4. Remove 2 screws securing remote controls to steering wheel.
5. Release remote controls from steering wheel.
6. Remove controls and harness from steering wheel.

Refit

1. Fit harness to steering wheel and secure remote controls to steering wheel.
2. Fit and tighten screws securing controls to steering wheel.
3. Connect multiplug to rotary coupler.
4. Fit both horn switches. ***See this section.***
5. Connect battery earth lead.

FRONT SPEAKER

Service repair no - 86.50.15

Remove

1. Remove front door trim casing. ***See BODY, Interior trim components.***

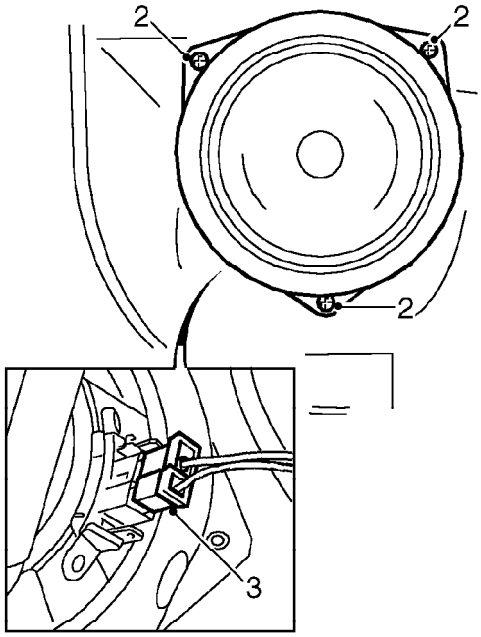

86M3930

2. Remove 3 screws securing speaker to door.
3. Release speaker from door and disconnect multiplug.

Refit

1. Connect multiplug to speaker and position to door.
2. Fit screws securing speaker to door.
3. Fit front door trim casing. ***See BODY, Interior trim components.***

AERIAL

Service repair no - 86.50.18

Remove

1. Remove aerial from aerial base.
2. Remove both 'A' post upper trim casings. ***See BODY, Interior trim components.***

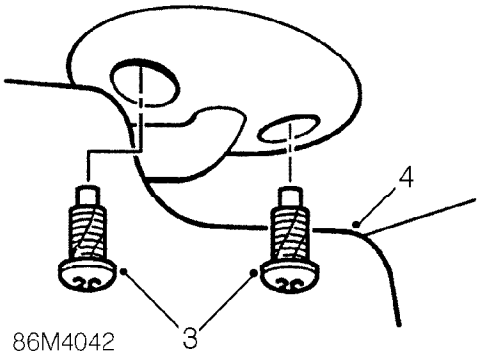

3. Remove 2 screws securing each sun visor to roof.
4. Remove both sun visors.

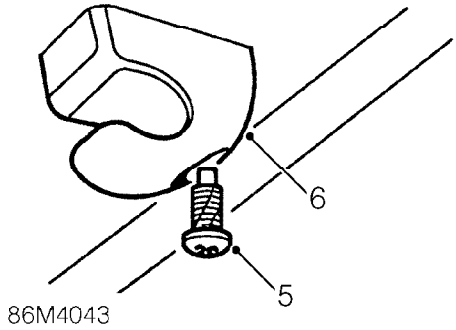

5. Remove 2 screws securing both sun visor clips.
6. Remove clips.

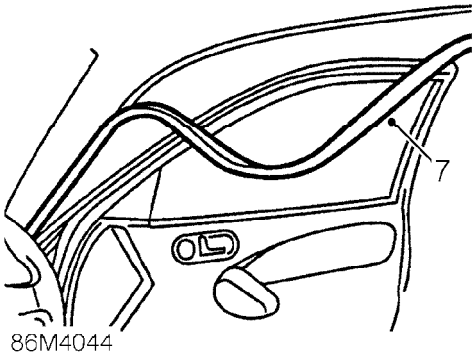

7. Remove seals from top of both front door apertures.

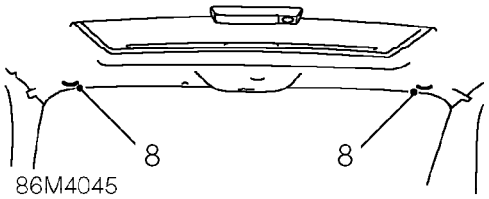

8. Remove 2 trim studs securing headlining to roof.

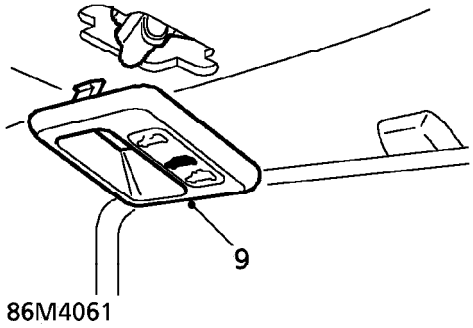

9. *Models with sun roof:* release sun roof switch finisher from headlining and remove.
10. Carefully lower front edge of headlining to gain access to aerial.

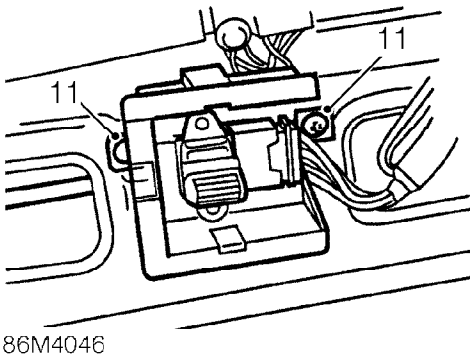

11. *Models with sun roof:* Remove 2 screws securing sun roof switch mounting to roof and remove mounting.

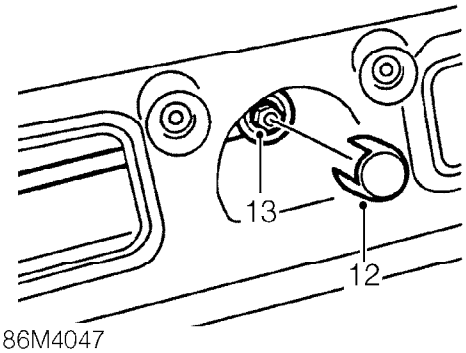

12. Remove cover from end of coaxial cable.
13. Remove nut securing coaxial cable to aerial base.
14. Remove aerial base.

Refit

1. Fit aerial base to roof.
2. Fit and tighten nut securing aerial base to roof.
3. Connect coaxial cable to aerial base and fit cover.
4. *Models with sun roof:* Position sun roof switch mounting and secure with screws.
5. Position front of headlining to roof and secure with trim studs.
6. *Models with sun roof:* Position sun roof switch finisher and secure to headlining.
7. Fit sun visor clips to headlining and secure with screws.
8. Fit sun visors to headlining and secure with screws.
9. Fit 'A' post upper trim casings. ***See BODY, Interior trim components.***
10. Fit seals to front door apertures.
11. Fit aerial to aerial base.

COAXIAL CABLE

Service repair no - 86.50.24

Remove

1. Fit radio removal tools **SMD 4091** to release retaining clips. Pull on tools to release radio from fascia.

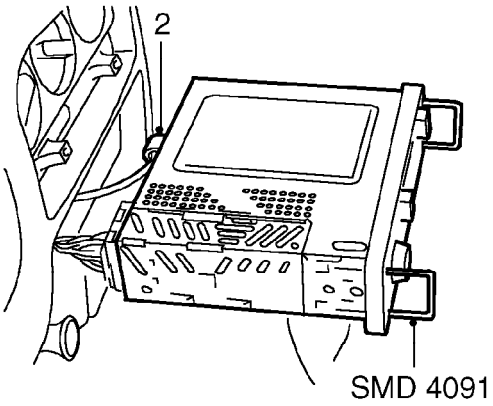

86M3969

2. Disconnect coaxial cable from radio.
3. Remove glove box. ***See BODY, Interior trim components.***

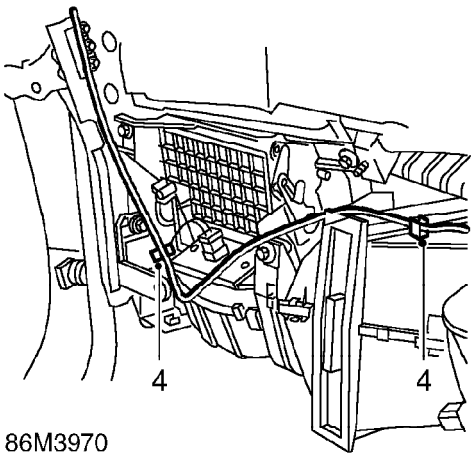

86M3970

4. Release coaxial cable from 2 clips on heater/blower assembly.
5. Remove both 'A' post upper trim casings. ***See BODY, Interior trim components.***

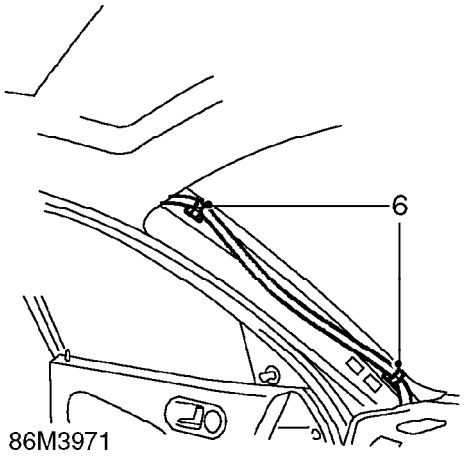

86M3971

6. Release coaxial cable from 2 clips on LH 'A' post.

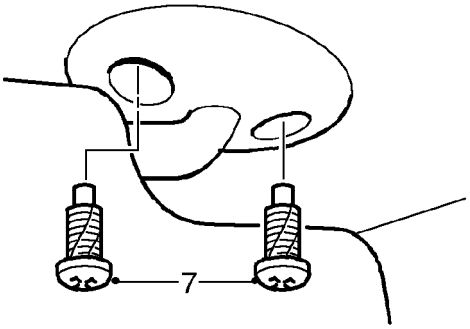

86M3972

7. Remove 2 screws securing each sun visor to roof.
8. Remove both sun visors.

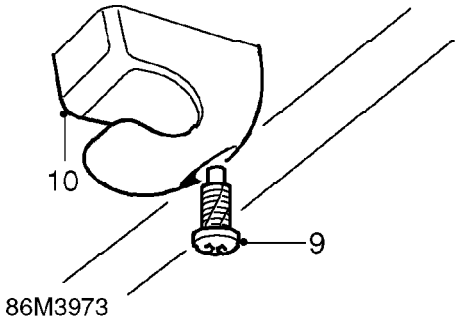

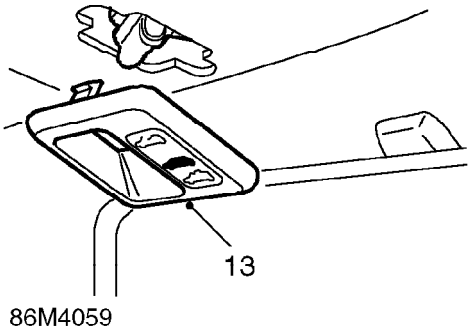

9. Remove 2 screws securing both sun visor clips.
10. Remove clips.

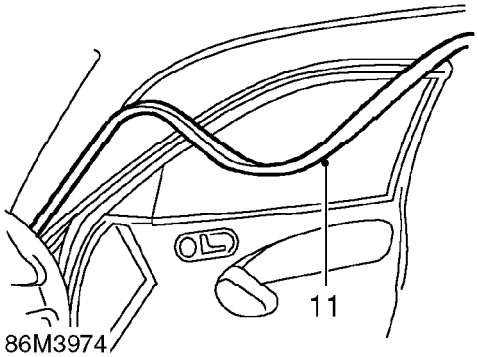

11. Remove seals from top of both front door apertures.
12. Remove 2 trim studs securing headlining to roof.

13. *Models with sun roof:* Release sun roof switch finisher from headlining and remove.
14. Carefully lower front edge of headlining to gain access to aerial.

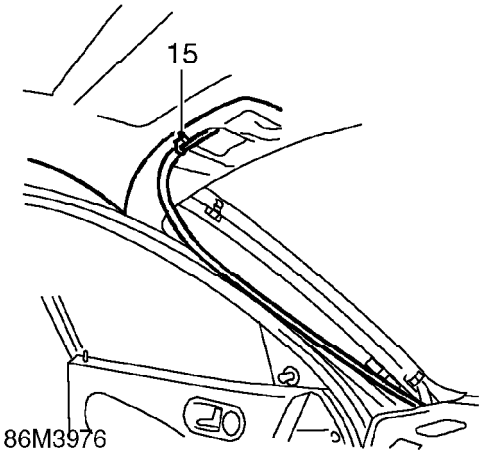

15. Release coaxial cable from clip on roof.

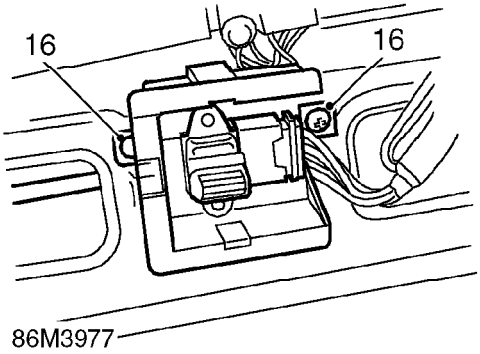

16. *Models with sun roof:* Remove 2 screws securing sun roof switch mounting to roof and remove mounting.

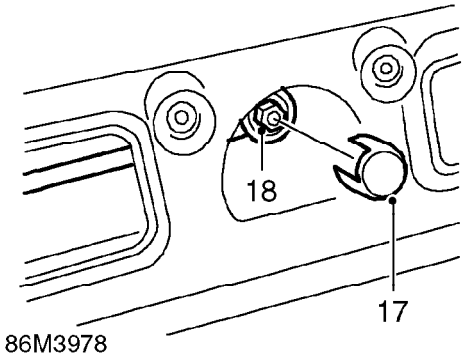

17. Remove cover from end of coaxial cable.
18. Remove nut securing coaxial cable to aerial base.
19. Release coaxial cable from aerial base.
20. Remove coaxial cable.

Refit

1. Feed coaxial cable through roof aperture, down LH 'A' post and behind fascia.
2. Fit and tighten nut securing coaxial cable to aerial base.
3. Fit cover to coaxial cable.
4. Secure coaxial cable to clip on roof.
5. *Models with sun roof:* Position sun roof switch mounting and secure with screws.
6. Position front of headlining to roof and secure with trim studs.
7. *Models with sun roof:* Position sun roof switch finisher and secure to headlining.
8. Fit sun visor clips to headlining and secure with screws.
9. Fit sun visors to headlining and secure with screws.
10. Secure coaxial cable to clips on 'A' post.
11. Fit 'A' post upper trim casings. ***See BODY, Interior trim components.***
12. Fit seals to front door apertures.
13. Secure coaxial cable to clips on heater blower assembly.
14. Connect coaxial cable to radio.
15. Slide radio into fascia until retaining clips engage.
16. Fit glove box. ***See BODY, Interior trim components.***

TWEETER - FRONT DOOR

Service repair no - 86.50.34

Remove

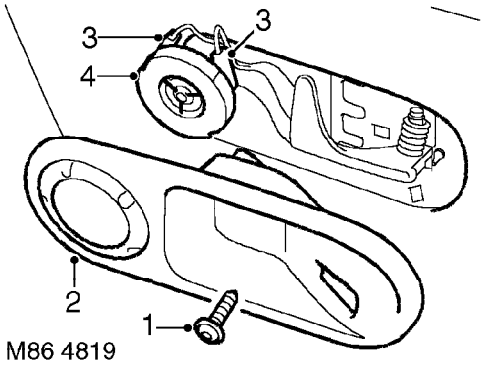

1. Remove screw securing door handle escutcheon to door.
2. Move escutcheon rearwards and release escutcheon from door.
3. Disconnect 2 Lucars from tweeter.
4. Rotate tweeter until retaining lugs are released from surround, remove tweeter.

Refit

1. Position tweeter to surround, rotate tweeter until retaining lugs are engaged.
2. Connect Lucars to tweeter.
3. Fit door handle escutcheon to door, fit and tighten screw.

CD PLAYER

Service repair no - 86.50.81

Remove

1. Disconnect battery earth lead.

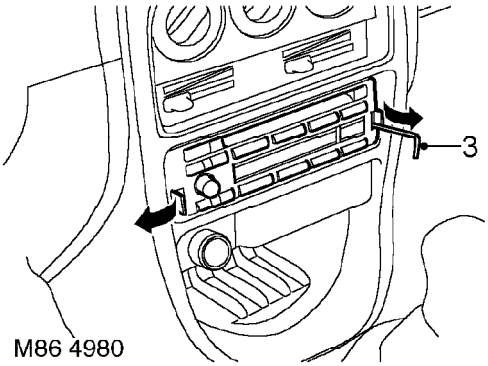

2. Release access tab from each side of unit.
3. Using a 2.5 mm Allen key, slacken 2 captive screws securing unit.

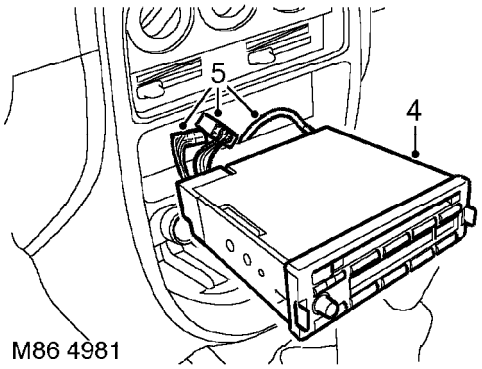

4. Withdraw unit sufficiently to gain access to multiplugs and aerial lead.

CAUTION: Take care not to damage face of unit.

5. Noting their fitted positions, disconnect 2 multiplugs and aerial lead plug; remove unit.

Refit

1. Position unit, connect 2 multiplugs and aerial lead plug.
2. Fit unit, tighten 2 captive screws.
3. Secure access tab to each side of unit.
4. Connect battery earth lead.
5. Enter security code and check unit for correct operation.

FLASHER UNIT

Service repair no - 86.55.68

Remove

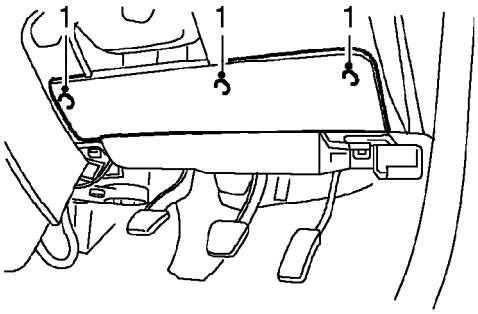

86M4056

1. Release 3 turnbuckles and remove passenger compartment fuse box cover.

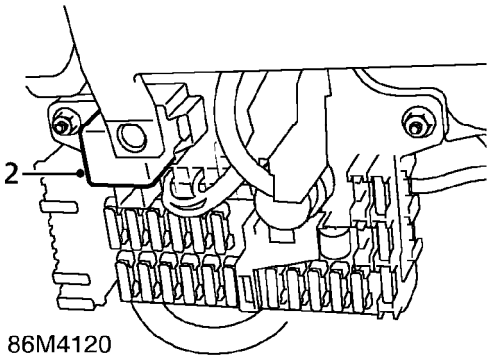

86M4120

2. Remove flasher unit from passenger compartment fuse box.

Refit

1. Fit flasher unit to fuse box.
2. Fit fuse box cover and secure with turnbuckles.

ANTI-THEFT ALARM ECU

Service repair no - 86.55.85

Remove

1. Disconnect battery earth lead.

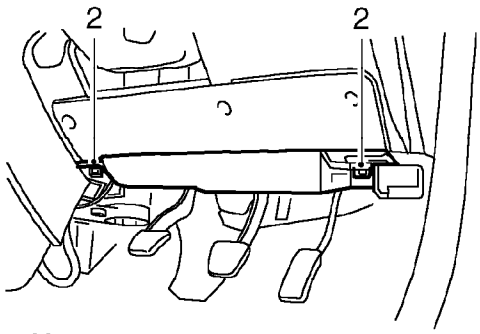

86M4040

2. Release 2 turnbuckles and remove closing panel.

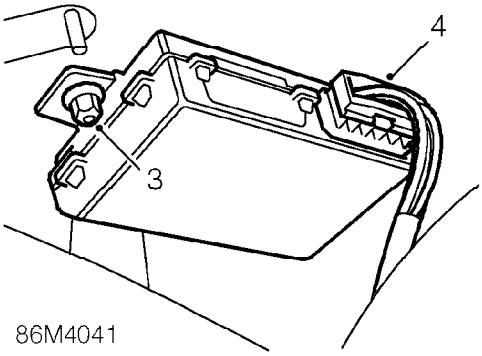

86M4041

3. Remove 2 nuts securing anti theft alarm ECU to body and release ECU.
4. Disconnect multiplug from anti-theft alarm ECU.

Refit

1. Connect multiplug to anti-theft alarm ECU.
2. Position anti-theft alarm ECU to body and secure with nuts.
3. Fit closing panel and secure with turnbuckles.
4. Connect battery earth lead.

NOTE: If a new anti-theft alarm ECU has been fitted, the ECM will need to be reprogrammed with TestBook.

DOOR SWITCH

Service repair no - 86.55.88

Remove

1. Disconnect battery earth lead.

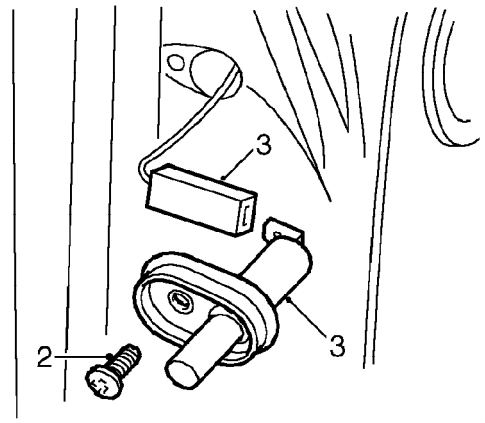

86M3964

2. Remove screw securing door switch to body.
3. Release door switch and disconnect Lucar.

Refit

1. Position switch to door and connect Lucar.
2. Fit switch to door and secure with screw.
3. Connect battery earth lead.

BONNET SWITCH

Service repair no - 86.55.89

Remove

1. Disconnect battery earth lead.

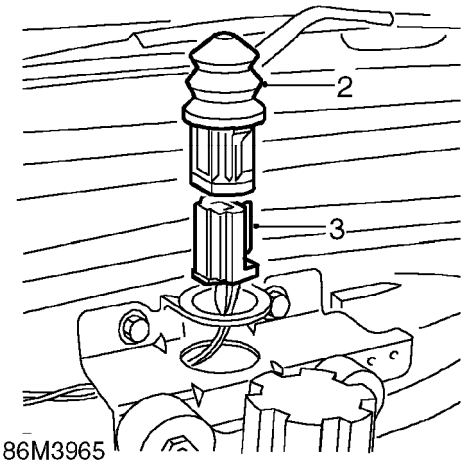

86M3965

2. Release bonnet switch from mounting bracket.
3. Disconnect multiplug from bonnet switch and remove switch.

Refit

1. Connect multiplug to bonnet switch.
2. Secure switch to mounting bracket.
3. Connect battery earth lead.

DIM-DIP RELAY

Service repair no - 86.55.91

Remove

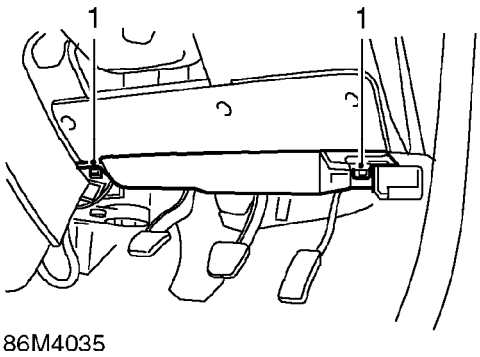

1. Release 2 turnbuckles securing closing panel to fascia and remove panel.

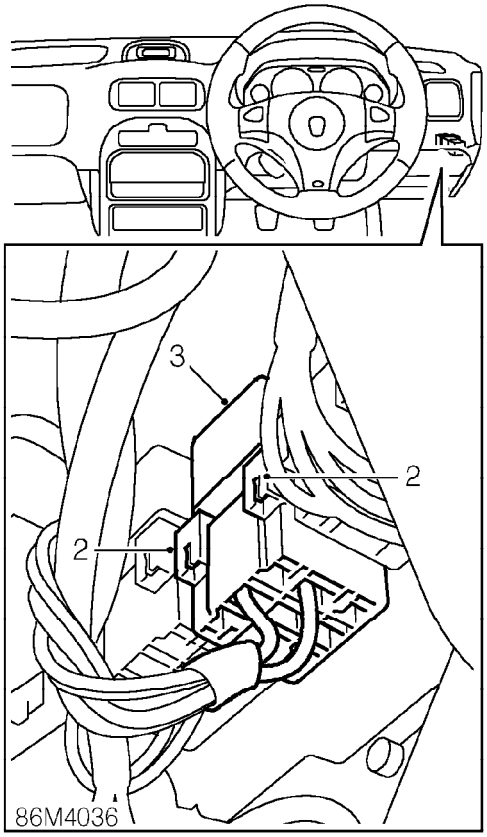

2. Release 2 clips securing dim-dip relay to harness.
3. Remove relay.

Refit

1. Fit relay to harness and engage to clips.
2. Fit closing panel to fascia and secure with turnbuckles.

DIM-DIP RESISTOR

Service repair no - 86.55.92

Remove

1. *Models with front fog lights:* Remove LH front fog light. ***See this section.***

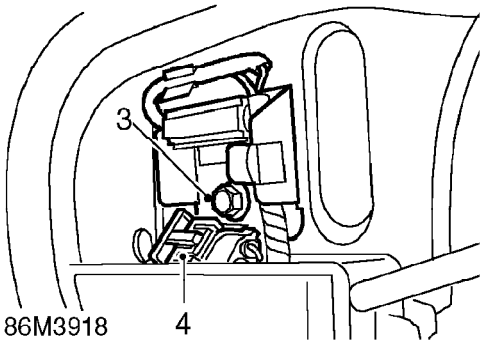

2. *Models without front fog lights:* Remove bumper LH blanking plate.
3. Remove bolt securing dim-dip resistor bracket to front valance.
4. Withdraw resistor and bracket assembly through aperture in bumper and disconnect multiplug.

Refit

1. Connect multiplug to dim-dip resistor.
2. Feed resistor through aperture in bumper and position to front valance.
3. Fit bolt securing resistor and bracket assembly to body and tighten to 8 Nm.
4. *Models without front fog lights:* Fit bumper LH blanking plate.
5. *Models with front fog lights:* Fit LH front fog light. ***See this section.***

INTEGRATED CIRCUIT UNIT (ICU)

Service repair no - 86.55.93

NOTE: The control unit directly affects the following functions:

Front and rear wipers
Courtesy lamp delay
Lights on alarm
Heated rear screen
Horn
Dim-dip
Rear fog guard lamps
Engine immobilisation
Catalyst overheat
Electric windows
Sunroof

Remove

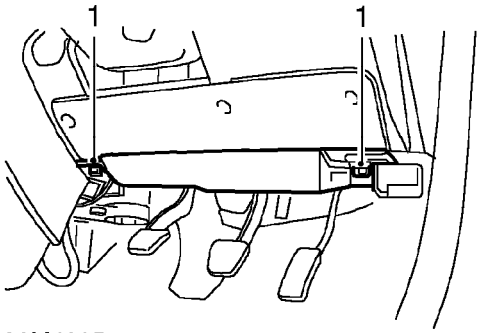

1. Release 2 turnbuckles and remove closing panel.

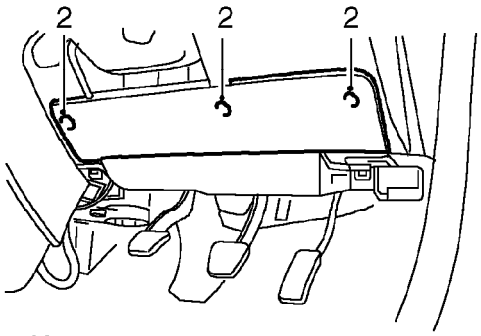

2. Release 3 turnbuckles and remove passenger compartment fuse box cover.

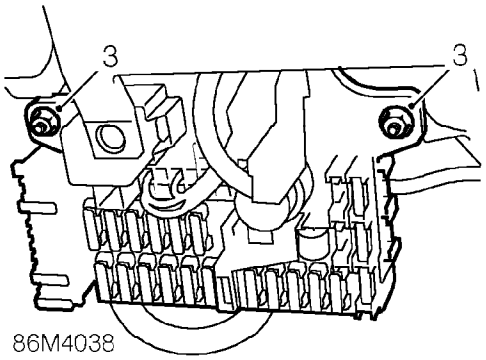

3. Remove 2 nuts securing passenger compartment fuse box to brackets and release fuse box.

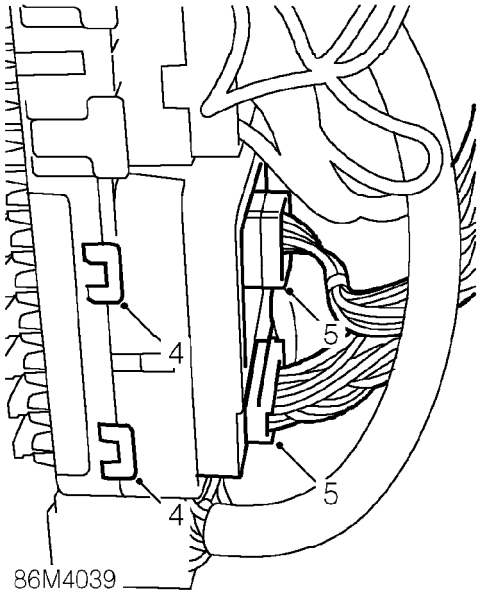

4. Release 2 clips securing ICU to rear of passenger compartment fuse box and release ICU.
5. Disconnect 2 multiplugs from ICU.

Refit

1. Connect multiplugs to ICU.
2. Position ICU and engage to fuse box clips.
3. Position fuse box and tighten nuts to 10 Nm.
4. Fit fuse box cover and secure with turnbuckles.
5. Fit closing panel and secure with turnbuckles.

ANTI-THEFT ALARM LED

Service repair no - 86.55.97

Remove

1. Remove instrument pack. ***See INSTRUMENTS, Repairs.***

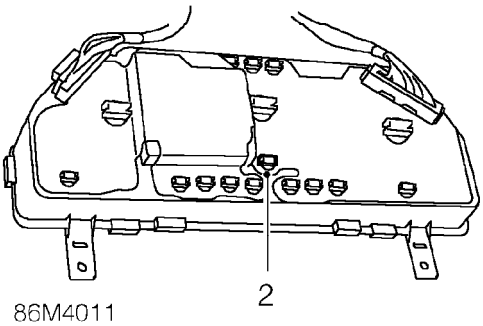

2. Remove anti-theft alarm LED from rear of instrument pack.

Refit

1. Fit LED to rear of instrument pack.
2. Fit instrument pack. ***See INSTRUMENTS, Repairs.***

STARTER MOTOR - 'K8 & K16'

Service repair no - 86.60.01

Remove

1. Remove air cleaner. ***See ENGINE MANAGEMENT SYSTEM - MEMS, Repairs.***
2. Raise front of vehicle.

WARNING: Support on safety stands.

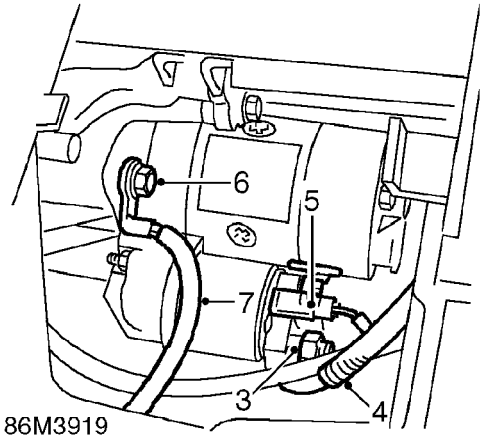

3. Remove nut securing battery lead to starter solenoid.
4. Disconnect battery lead from starter solenoid.
5. Disconnect Lucar from starter solenoid.
6. Remove upper bolt securing starter motor to engine.
7. Disconnect battery earth lead from bolt.

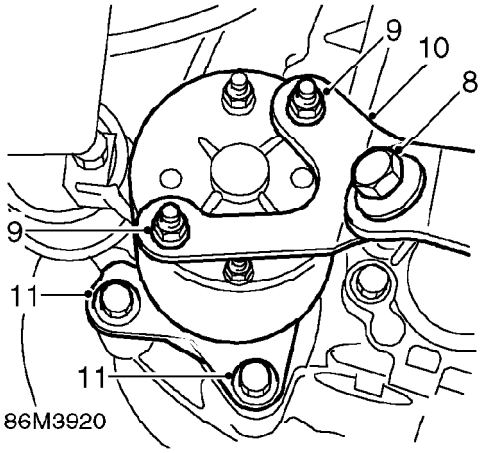

8. Remove bolt securing starter motor to gearbox mounting bracket.
9. Remove 2 nuts securing support bracket to starter motor.
10. Remove support bracket from starter motor.
11. Remove 2 lower bolts securing starter motor to engine.
12. Remove starter motor.

Refit

1. Clean starter motor and mating faces of starter motor and flywheel housing.
2. Fit and align starter motor to engine.
3. Fit 2 lower bolts securing starter motor engine, but do not tighten.
4. Fit support bracket to starter motor.
5. Fit nuts securing support bracket to starter motor and tighten to 25 Nm.
6. Connect battery earth lead to starter motor upper bolt.
7. Fit upper bolt securing starter motor to engine and tighten to 45 Nm.
8. Tighten lower bolts securing starter motor to engine to 45 Nm.
9. Fit bolt securing starter motor to gearbox support bracket and tighten to 25 Nm.
10. Connect Lucar to starter solenoid.
11. Connect battery lead to starter solenoid and secure with nut.
12. Remove stand(s) and lower vehicle.
13. Fit air cleaner. ***See ENGINE MANAGEMENT SYSTEM - MEMS, Repairs.***

STARTER MOTOR - 'K16 1.8 & K16 WITH VVC'

Service repair no - 86.60.01

Remove

1. Remove air cleaner. ***See ENGINE MANAGEMENT SYSTEM - MEMS, Repairs.***

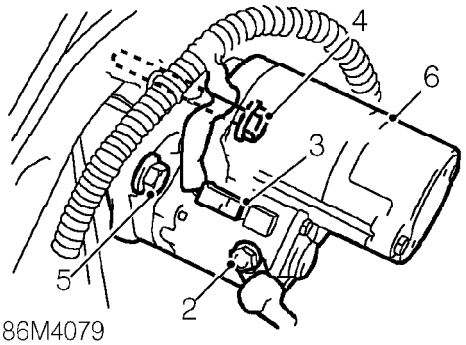

2. Remove nut and disconnect battery lead from starter solenoid.
3. Disconnect Lucar from starter solenoid.
4. Remove lower bolt securing starter motor to flywheel housing.
5. Remove upper bolt securing starter motor to flywheel housing.
6. Remove starter motor.
7. Remove rear cover plate from flywheel housing.

Refit

1. Clean starter motor and mating faces of starter motor and flywheel housing.
2. Fit and align starter motor and rear cover plate to flywheel housing.
3. Fit 2 bolts securing starter motor to flywheel housing and tighten to nuts to 55 Nm.
4. Connect Lucar to starter solenoid.
5. Connect battery lead to starter solenoid and secure with nut.
6. Fit air cleaner. ***See ENGINE MANAGEMENT SYSTEM - MEMS, Repairs.***

STARTER MOTOR - 'L' SERIES

Service repair no - 86.60.01

Remove

1. Remove air cleaner. ***See ENGINE MANAGEMENT SYSTEM - EDC, Repairs.***

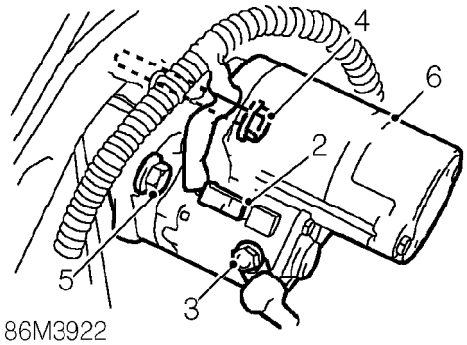

2. Disconnect Lucar from starter solenoid.
3. Remove nut and disconnect battery lead from starter solenoid.
4. Remove lower bolt securing starter motor to flywheel housing.
5. Remove upper bolt securing starter motor to flywheel housing.
6. Remove starter motor.

Refit

1. Clean mating faces of starter motor and flywheel housing.
2. Position starter motor to flywheel housing and fit upper bolt.
3. Fit lower bolt securing starter motor to flywheel housing and tighten to 55 Nm.
4. Tighten upper bolt, starter motor to flywheel housing, to 55 Nm.
5. Connect battery cable to starter solenoid, fit nut and tighten to 4 Nm.
6. Connect Lucar to starter solenoid.
7. Fit air cleaner. ***See ENGINE MANAGEMENT SYSTEM - EDC, Repairs.***

STARTER SOLENOID - 'K8' AND 'K16'

Service repair no - 86.60.08

Remove

1. Disconnect battery earth lead.
2. Remove starter motor. ***See this section.***

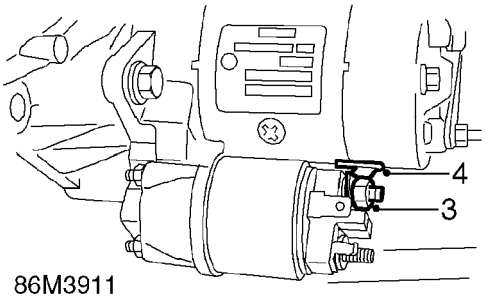

3. Remove nut securing starter motor cable to solenoid.
4. Disconnect starter motor cable from starter solenoid.

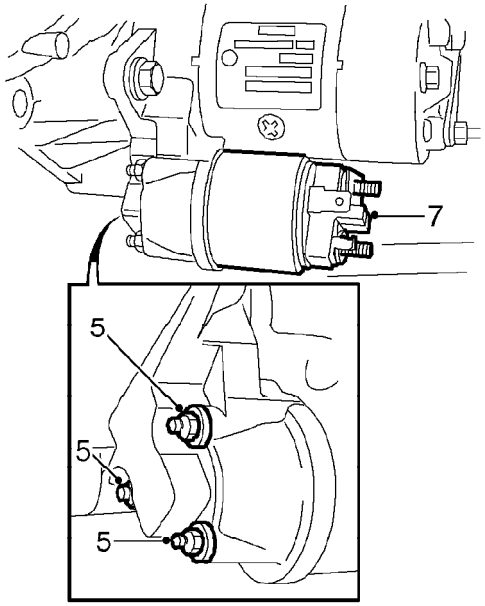

5. Remove 3 nuts securing starter solenoid to starter motor.
6. Release solenoid operating plunger from starter lever.
7. Remove starter solenoid.

Refit

1. Clean starter solenoid and mating face of starter motor.
2. Lubricate solenoid operating plunger
3. Position starter solenoid to starter motor and engage solenoid operating plunger to starter lever.
4. Fit starter solenoid to starter motor and secure with nuts.
5. Connect starter motor cable to starter solenoid and secure with nut.
6. Fit starter motor. ***See this section.***
7. Connect battery earth lead.

STARTER SWITCH

Service repair no - 86.65.03

Remove

CAUTION: See SRS safety precautions before commencement of repair. *See RESTRAINT SYSTEMS, Precautions.*

1. Remove steering column nacelle. ***See STEERING, Repairs.***
2. *98MY on:* Remove passive coil. ***See this section.***

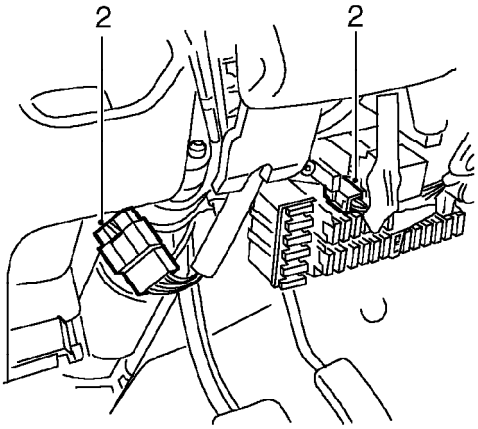

86M4048

3. Disconnect starter switch multiplugs from fuse box and main harness.

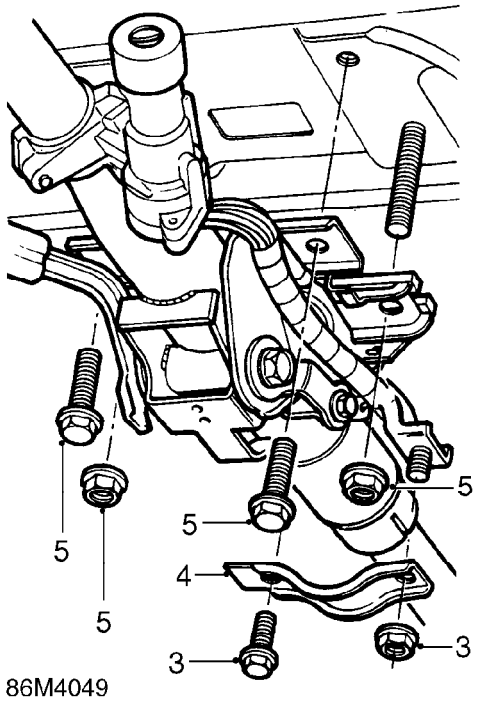

4. Remove nut and bolt securing lower column clamp to pivot bracket.
5. Remove clamp.
6. Remove 2 flange nuts and 2 bolts securing column upper bracket to body.
7. Lower the steering column assembly.

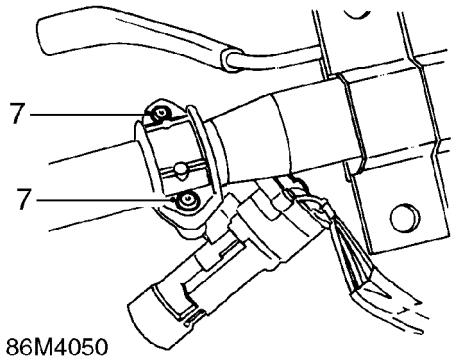

8. Centre punch and drill out 2 shear bolts using a 5 mm drill.

CAUTION: Take care not to damage switch body if switch is to be refitted.

9. Remove starter switch and bracket.

Refit

1. Position starter switch to column and fit shear bolts loosely.
2. Insert starter key, check operation of steering lock and key turns freely.
3. Tighten shear bolts fully and shear heads off.
4. Raise column and engage top bracket on studs and fit nuts, DO NOT tighten.
5. Fit lower clamp, tighten nut and bolt to 22 Nm.
6. Tighten top bracket nuts and bolts to 16 Nm.
7. Connect ignition switch multiplugs to fuse box and harness.
8. *98MY on:* Fit passive coil. ***See this section.***
9. Fit steering column nacelle. ***See STEERING, Repairs.***

FRONT FOG LIGHT SWITCH

Service repair no - 86.65.19

Remove

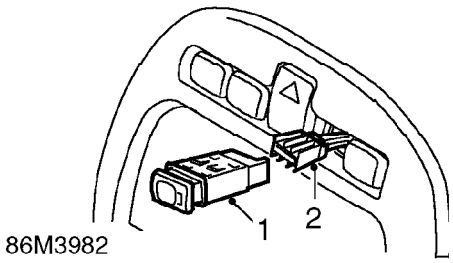

1. Release front fog light switch from centre console.
2. Disconnect multiplug from rear of switch.
3. Remove switch.

Refit

1. Position switch to centre console and connect multiplug.
2. Fit switch to centre console.

HEATED REAR SCREEN SWITCH

Service repair no - 86.65.36

Remove

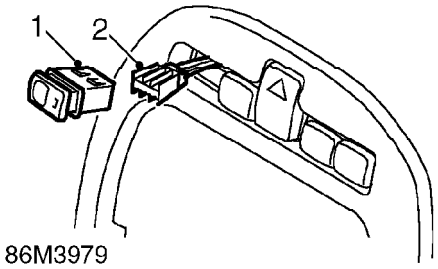

1. Release heated rear screen switch from centre console.
2. Disconnect multiplug from rear of switch.
3. Remove switch.

Refit

1. Position switch to centre console and connect multiplug.
2. Fit switch to centre console.

HAZARD WARNING LIGHT SWITCH

Service repair no - 86.65.50

Remove

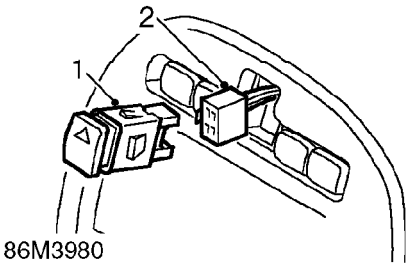

1. Release hazard warning light switch from centre console.
2. Disconnect multiplug from rear of switch.
3. Remove switch.

Refit

1. Position switch to centre console and connect multiplug.
2. Fit switch to centre console.

INDICATOR/HEADLAMP SWITCH

Service repair no - 86.65.55

Remove

1. Remove rotary coupler. ***See this section.***

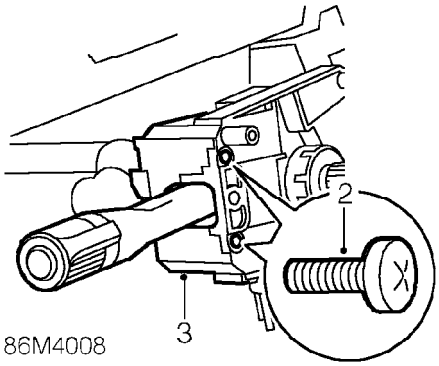

2. Remove 2 screws securing indicator/headlamp switch to switch pack.
3. Depress retaining tag and remove switch assembly.

Refit

1. Fit indicator/headlamp switch assembly and secure with screws.
2. Fit rotary coupler. ***See this section.***

STEERING COLUMN SWITCH ASSEMBLY

Service repair no - 86.65.64

Remove

1. Remove rotary coupler. ***See this section.***

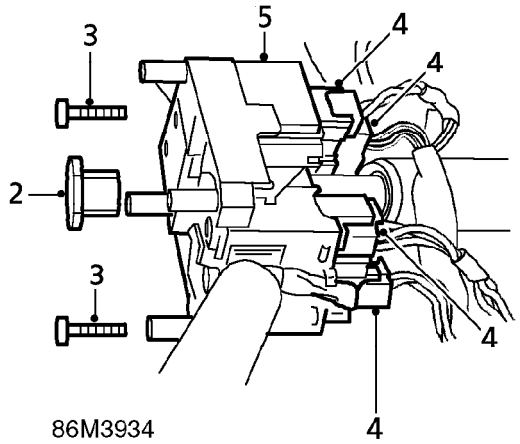

86M3934

2. Remove indicator cancelling cam from column.
3. Remove 2 screws securing switch assembly to steering column.
4. Release switch assembly from column and disconnect 4 multiplugs.
5. Remove switch assembly.
   Do not carry out further dismantling if component is removed for access only.

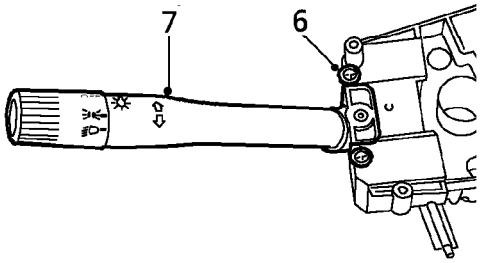

86M3935

6. Remove 2 screws securing direction indicator/headlamp stalk to switch assembly.
7. Remove direction indicator/headlamp stalk from switch assembly.

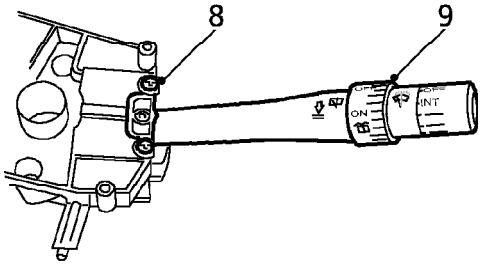

86M3936

8. Remove 2 screws securing wash/wipe stalk to switch assembly.
9. Remove wash/wipe stalk from switch assembly.
10. Fit wash/wipe stalk to switch assembly and secure with screws.
11. Fit direction indicator/headlamp stalk to switch assembly and secure with screws.

Refit

1. Position switch assembly to steering column, connect multiplugs and tighten retaining screws.
2. Fit direction indicator cancelling cam to steering column.
3. Fit rotary coupler. ***See this section.***

REAR FOG LIGHT SWITCH

Service repair no - 86.65.65

Remove

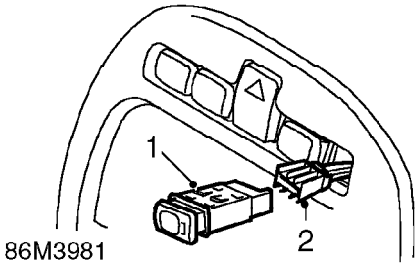

1. Release rear fog light switch from centre console.
2. Disconnect multiplug from rear of switch.
3. Remove switch.

Refit

1. Position switch to centre console and connect multiplug.
2. Fit switch to centre console.

DOOR MIRROR SWITCH

Service repair no - 86.65.75

Remove

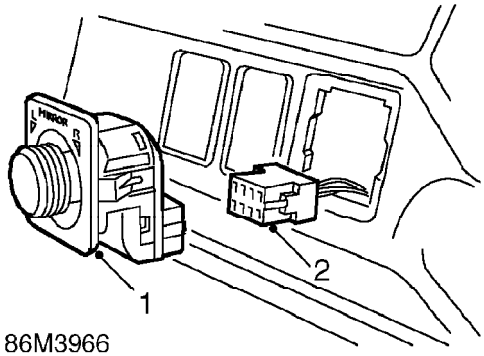

1. Release door mirror switch from fascia.
2. Disconnect multiplug from rear of switch.
3. Remove switch.

Refit

1. Position switch to fascia and connect multiplug.
2. Fit switch to fascia.

ROTARY COUPLER

Service repair no - 86.65.85

CAUTION: See SRS safety precautions before commencement of repair. *See RESTRAINT SYSTEMS, Precautions.*

- **Ensure wheels are aligned straight ahead.**

Remove

1. Remove key from starter switch and wait 10 minutes to allow the SRS back-up power circuit to discharge before commencing work.
2. Disconnect both battery leads, earth lead first.
3. Remove steering column nacelle. ***See STEERING, Repairs.***

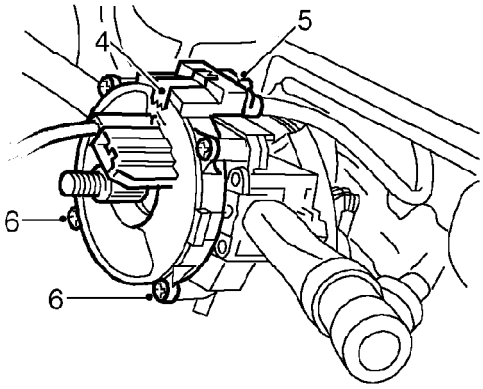

4. If the rotary coupler is being re-used place adhesive tape around moulding to prevent rotation.
5. Disconnect 2 multiplugs from rotary coupler.
6. Remove 4 screws and remove rotary coupler.

CAUTION: Do not dismantle the rotary coupler; it has no serviceable parts and must be replaced as a complete assembly.

Refit

1. Fit rotary coupler and secure with screws.
2. Connect multiplugs to coupler.
3. Remove retaining tape from rotary coupler.
4. Fit steering column nacelle. ***See STEERING, Repairs.***

ENGINE COMPARTMENT FUSEBOX

Service repair no - 86.70.01

Remove

1. Disconnect both battery leads, earth lead first.

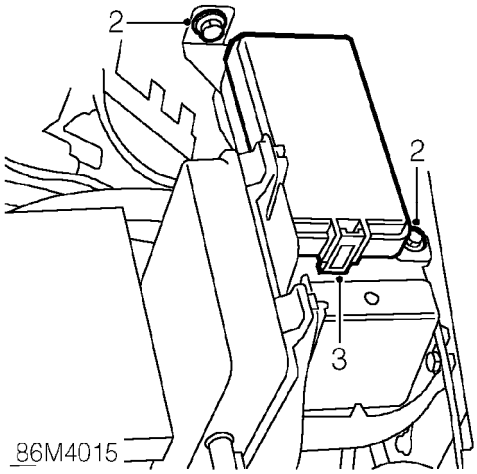

2. Remove 2 bolts securing fusebox to body.
3. Release clip and remove fusebox cover.

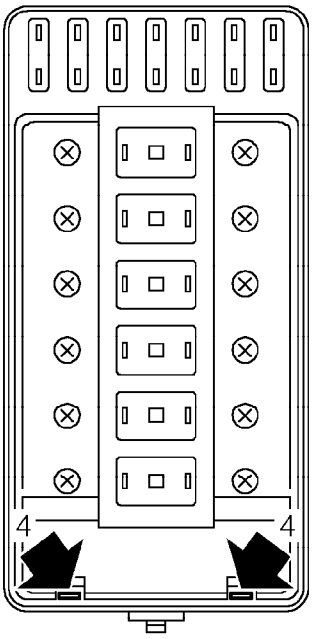

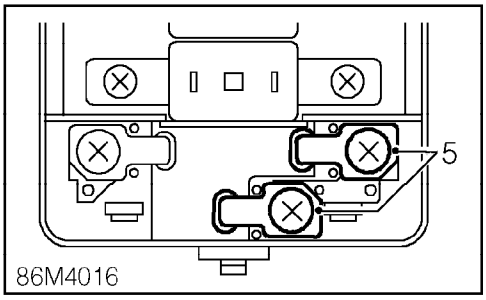

4. Release 2 clips and remove fusebox inner cover.
5. Remove 2 screws securing positive leads to fusebox.

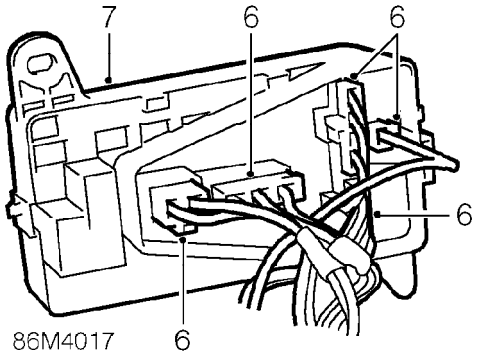

6. Disconnect 5 multiplugs from fuse box.
7. Remove fuse box.

Refit

1. Position fuse box and connect multiplugs.
2. Fit positive leads to fuse box and secure with screws.
3. Fit fuse box inner cover.
4. Fit fuse box cover.
5. Position fuse box to body, fit bolts and tighten to 10 Nm.
6. Connect both battery leads, earth lead last.

AUTOMATIC GEAR SELECTOR BULB

Service repair no - 86.45.40

Remove

1. Remove front console. ***See BODY, Interior trim components.***

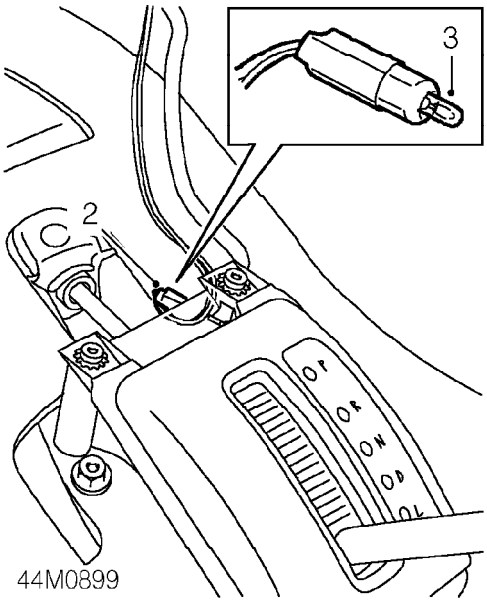

2. Release bulb holder from selector nacelle.
3. Remove bulb from holder.

Refit

1. Fit new bulb to holder and secure to selector nacelle.
2. Fit front console. ***See BODY, Interior trim components.***

STARTER MOTOR - AUTOMATIC GEARBOX

Service repair no - 86.60.01

Remove

1. Remove air cleaner. ***See ENGINE MANAGEMENT SYSTEM - MEMS, Repairs.***

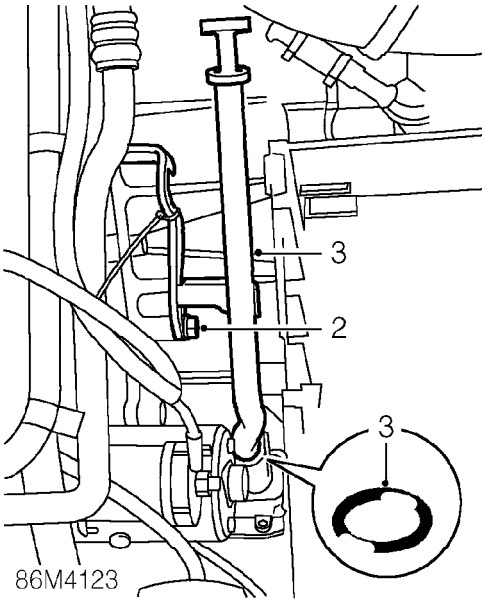

2. Remove bolt securing dipstick tube to gearbox.
3. Remove dipstick tube from gearbox and collect 'O' ring.

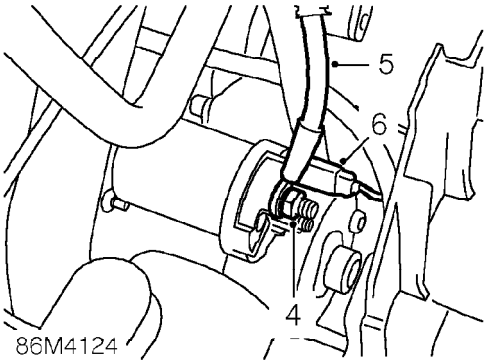

4. Remove nut securing positive battery lead to starter solenoid.
5. Release lead from solenoid and collect spring washer.
6. Disconnect Lucar from solenoid.

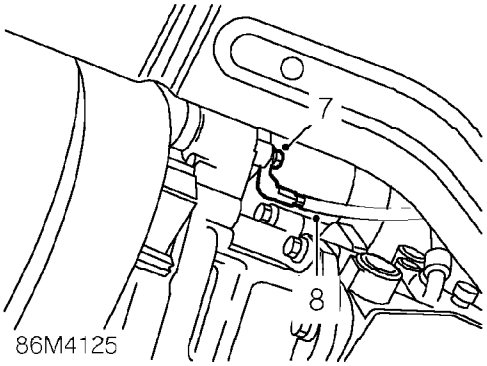

7. Remove nut securing earth lead to starter motor lower mounting bolt.
8. Release earth lead from mounting bolt.

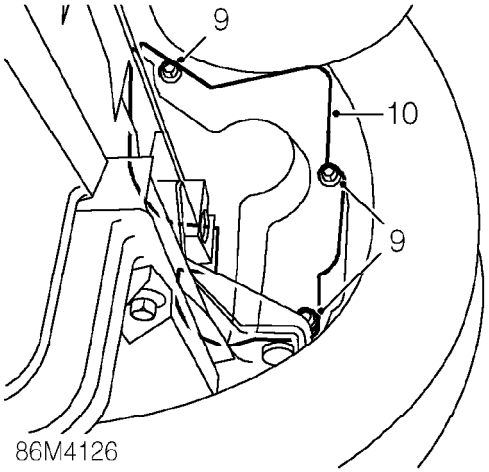

9. Remove 3 bolts securing starter motor closing plate to gearbox.
10. Remove closing plate.

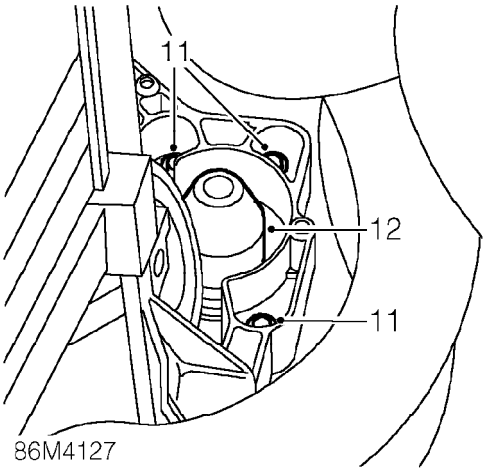

11. Remove 3 bolts securing starter motor to gearbox.
12. Remove starter motor.

Refit

1. Position starter motor to gearbox.
2. Fit bolts securing starter motor to gearbox and tighten to 25 Nm.
3. Position closing plate to gearbox and secure with bolts. Tighten bolts to 9 Nm.
4. Fit earth lead to starter motor lower mounting bolt and tighten nut to 10 Nm.
5. Connect Lucar to starter solenoid.
6. Connect battery positive lead to starter solenoid.
7. Fit NEW spring washer and tighten nut securing battery positive lead to starter solenoid.
8. Lubricate 'O' ring with gearbox oil and fit to dipstick tube.
9. Fit dipstick tube to gearbox.
10. Fit bolt securing dipstick tube to gearbox and tighten to 25 Nm.
11. Fit air cleaner. ***See ENGINE MANAGEMENT SYSTEM - MEMS, Repairs.***

PASSENGER COMPARTMENT FUSE BOX

Service repair no - 86.70.04

Remove

1. Disconnect battery earth lead.

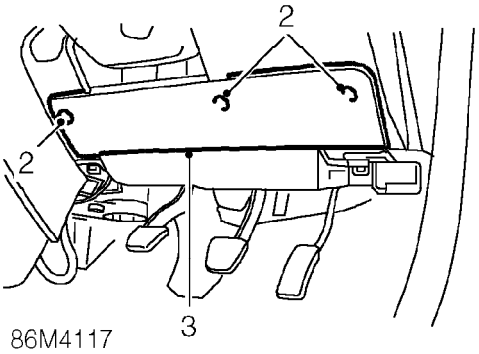

2. Release 3 turnbuckles securing fuse box cover to fascia.
3. Remove fuse box cover.

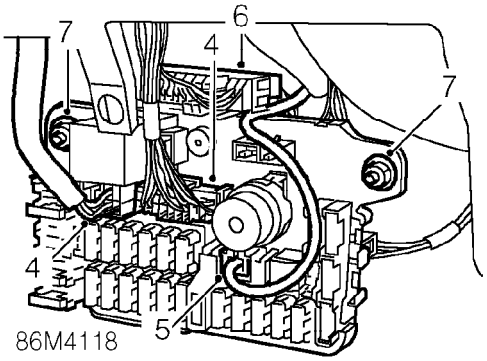

4. Disconnect 2 starter switch multiplugs from fuse box.
5. Disconnect SRS multiplug from fusebox.
6. Release multiplug secured to top edge of fuse box.
7. Remove 2 nuts securing fuse box to mounting bracket.

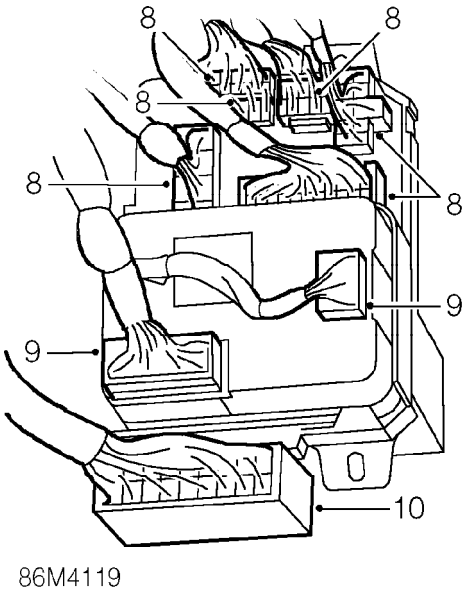

8. Disconnect 6 multiplugs from rear of fuse box.
9. Disconnect 2 multiplugs from ICU.
10. Release satellite fuse box from fuse box.
11. Remove passenger compartment fuse box.

Refit

1. Position passenger compartment fuse box and secure satellite fuse box to it.
2. Connect multiplugs to ICU.
3. Connect multiplugs to rear of fuse box.
4. Position fuse box to mounting bracket and secure with nuts.
5. Connect SRS multiplug to fuse box.
6. Connect starter switch multiplugs to fuse box.
7. Secure multiplug to top of fuse box.
8. Fit fuse box cover and secure with turnbuckles.
9. Connect battery earth lead.

SWITCH - HEADLAMP LEVELLING

Service repair no - 86.65.16

Remove

.

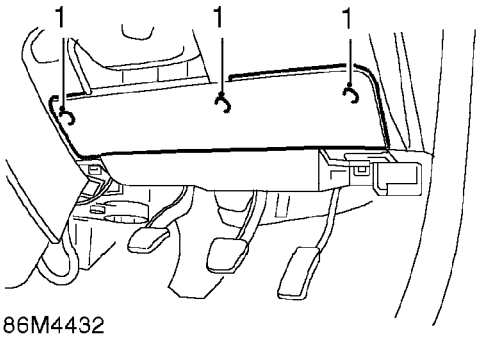

1. Release 3 turnbuckles and remove passenger compartment fuse box cover.

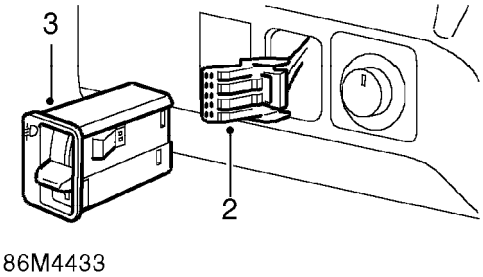

2. Disconnect multiplug from switch.
3. Release and remove switch.

Refit

1. Fit switch and secure multiplug.
2. Position fuse box cover and secure turnbuckles.

MOTOR - HEADLAMP LEVELLING

Service repair no - 86.41.44

Remove

1. Remove headlamp. ***See this section.***

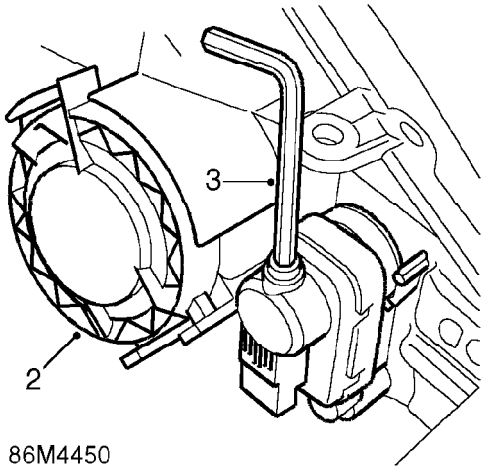

2. Remove headlamp bulb access cover.
3. Rotate headlamp adjuster clockwise to fully extend motor link rod.

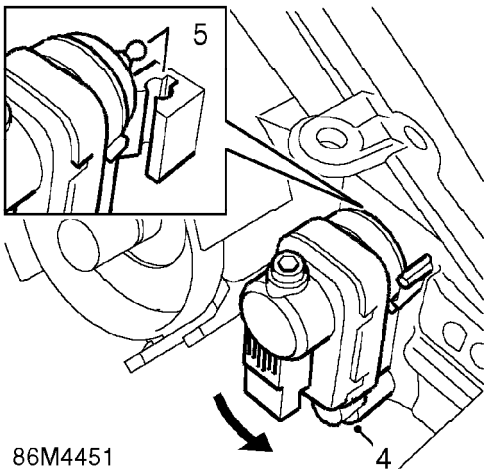

4. Rotate motor assembly 45° to release from headlamp casing.
5. Lift motor to release link rod ball end from its location in rear of headlamp lens and remove motor.

Refit

1. Rotate adjusting screw of NEW motor to fully extend pin.
2. Fit motor to lamp engaging ball end of pin into location at rear of lens.
3. Fit bulb access cover to lamp.
4. Fit headlamp ***See this section.***
5. Adjust headlamp alignment. ***See Adjustments.***

PASSIVE COIL

Service repair no - 86.77.35

Remove

1. Remove steering column nacelle. ***See STEERING, Repairs.***

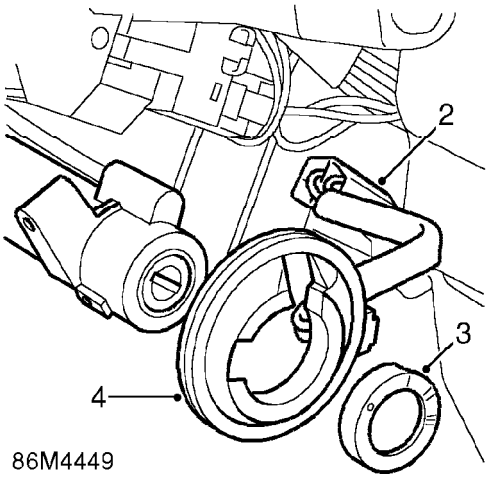

2. Disconnect passive coil multiplug.
3. Carefully remove bezel from column switch.
4. Remove passive coil.

Refit

1. Fit passive coil.
2. Fit switch bezel ensuring cut-out in bezel is aligned with lug on switch.
3. Connect multiplug.
4. Fit steering column nacelle. ***See STEERING, Repairs.***

CONTENTS

Page

DESCRIPTION AND OPERATION

INSTRUMENT PACK COMPONENTS - REAR VIEW 1
INSTRUMENT PACK COMPONENTS - EXPLODED VIEW 2
INSTRUMENT PACK 3

REPAIRS

CLOCK 1
INSTRUMENT PACK 1
INSTRUMENT PANEL WINDOW AND FACE PLATE 2
COOLANT TEMPERATURE GAUGE 3
ENGINE COOLANT TEMPERATURE GAUGE SENSOR - 'K' SERIES 3
ENGINE COOLANT TEMPERATURE GAUGE SENSOR - 'L' SERIES WITHOUT AIR CONDITIONING 4
ENGINE COOLANT TEMPERATURE GAUGE SENSOR - 'L' SERIES WITH AIR CONDITIONING 4
FUEL GAUGE 5
FUEL GAUGE TANK UNIT - 'K' SERIES 5
FUEL GAUGE TANK UNIT - 'L' SERIES 6
SPEEDOMETER 7
VEHICLE SPEED SENSOR - 'R65' GEARBOX 7
VEHICLE SPEED SENSOR - 'PG1' GEARBOX 8
TACHOMETER 9

INSTRUMENT PACK COMPONENTS - REAR VIEW

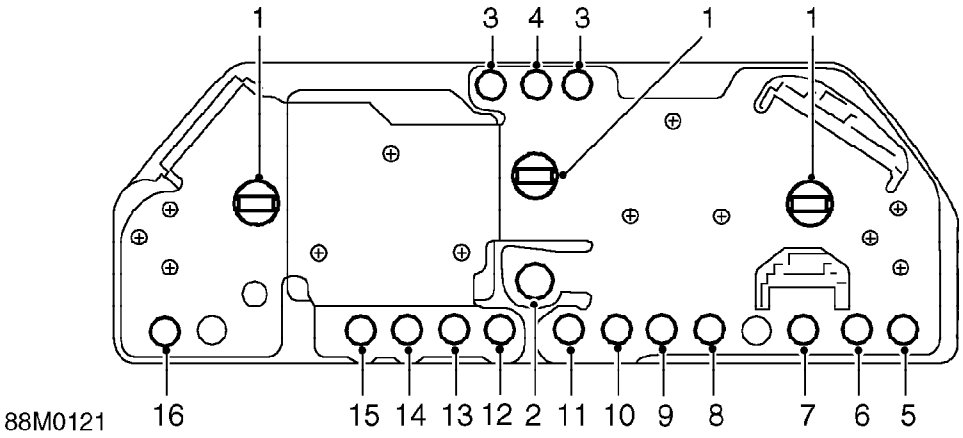

1. Panel rear illumination bulbs
2. Alarm warning indicator led
3. Direction indicator warning light bulb
4. Main beam warning light bulb
5. Catalyst overheat warning light bulb
6. Seat belt warning light bulb
7. SRS warning light bulb
8. ABS warning light bulb
9. Boot open warning light bulb
10. Hazard warning light bulb
11. Brake fail/handbrake warning light bulb
12. Low oil pressure warning light bulb
13. Glow plug warning light bulb
14. Ignition/no charge warning light bulb
15. Check engine warning light bulb
16. Rear fog guard warning light bulb

INSTRUMENT PACK COMPONENTS - EXPLODED VIEW

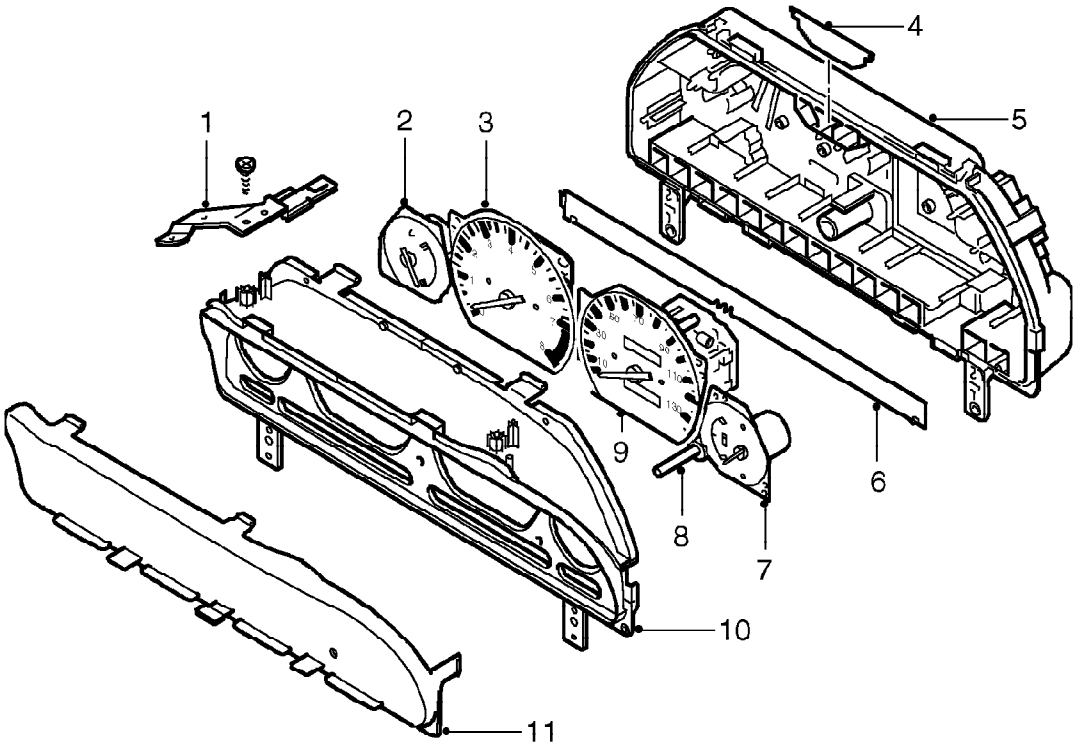

88M0122

1. Support bracket
2. Coolant temperature gauge
3. Tachometer
4. Warning light filter
5. Instrument pack housing
6. Warning light filter
7. Fuel gauge
8. Control knob - trip distance
9. Speedometer
10. Instrument pack
11. Instrument pack faceplate

INSTRUMENT PACK

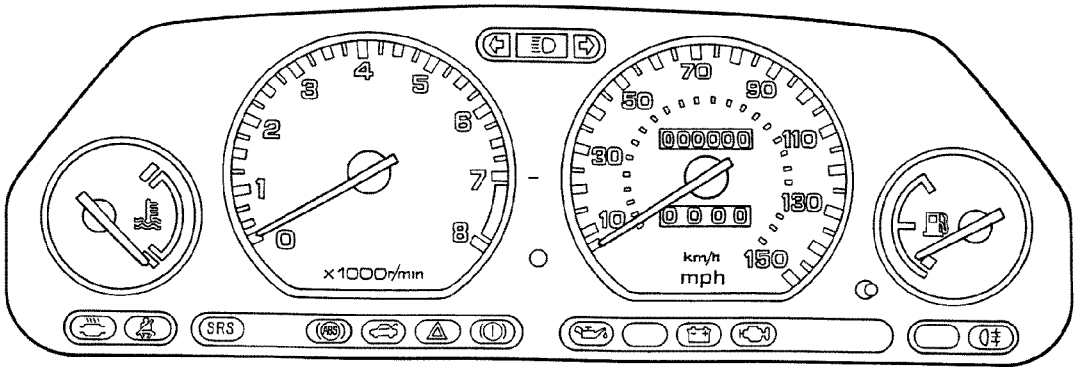

88M0136

Petrol model illustrated

The instrument pack is a totally electronic device receiving electrical signals from sender units and transposing them into analogue gauge readouts.

Speedometer

The speedometer is electronic and contains a six digit odometer and a four digit trip distance readout up to 999.9 miles or Km. The speedometer is driven by a transducer mounted in the gearbox and is calibrated to 990.5 rev/min at 60 mph (615.6 rev/min at 60 km/h) on 'K' series models (not VVC) , or 1000 rev/min at 60 mph (621.5 rev/min at 60 km/h) on 'L' series models and VVC.

Tachometer

The tachometer signal consists of 2 pulses per revolution and is taken from the ignition coil.

The tachometer maximum scale reading is 6000 rev/min for 'L' series and 8000 rev/min for all other models.

Instrument illumination

Instrument illumination in the form of backlighting is provided by 3 x 14v, 3.4w t10 bulbs.

Fuel gauge

The fuel gauge pointer will display level of fuel in the tank when the ignition was last switched off.

When the gauge unit float is at its lowest point, indicating an empty fuel tank, the resistance to earth is at its greatest. The resistance value to fuel gauge position is:

Sender resistance	Fuel gauge position
105 ohms	Empty
32.5 ohms	Half full
5 ohms	Full

Coolant temperature gauge

The temperature gauge is fitted with a return magnet causing the gauge to return to zero when the ignition is switched off.

Thermistor resistance	Temperature	Gauge position
142 ohms	56°C	No movement
49 - 98 ohms	65°C - 85°C	Approximately one third
24.6 - 32.1 ohms	100°C - 110°C	Approximately halfway
16.9 ohms	125°C	Enters red sector

Operation

For operation of the instrument pack. See **ELECTRICAL REFERENCE LIBRARY, Description and Operation.**

CLOCK

Service repair no - 88.15.07

Remove

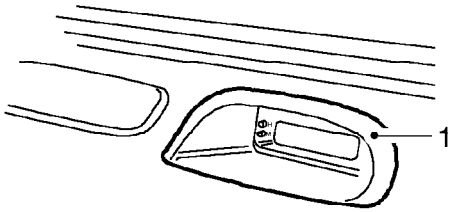

88M0133

1. Remove clock finisher from fascia.

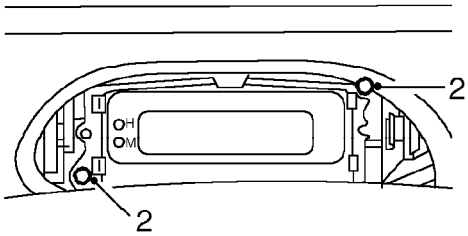

88M0134

2. Remove 2 screws securing clock to fascia.
3. Move clock to gain access to multiplug.

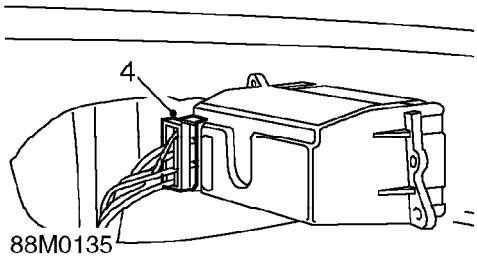

88M0135

4. Disconnect multiplug from clock and remove clock.

Refit

1. Position clock to fascia and connect multiplug.
2. Fit and tighten screws securing clock to fascia.
3. Fit finisher to fascia.

INSTRUMENT PACK

Service repair no - 88.20.01

Remove

1. Disconnect battery earth lead.
2. Release clamp and lower steering column.

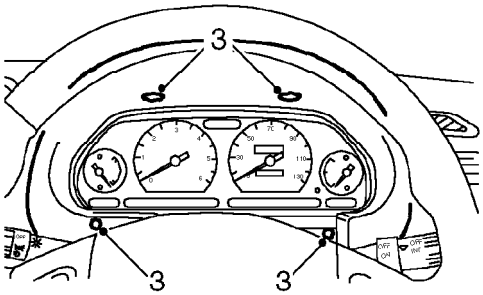

88M0131

3. Remove 4 screws securing instrument pack surround to fascia.
4. Remove instrument pack surround.

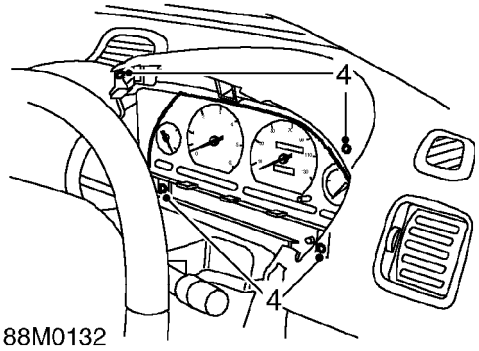

88M0132

5. Remove 4 screws securing instrument pack to fascia.
6. Move instrument pack to gain access to multiplugs.

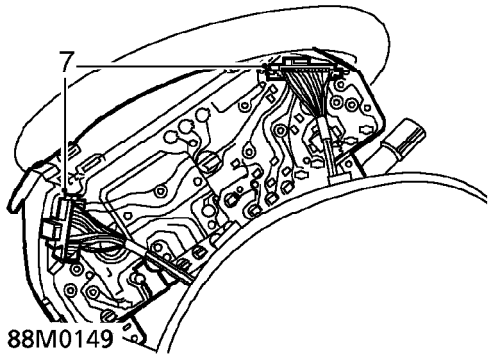

7. Disconnect 2 multiplugs from rear of instrument pack.
8. Remove instrument pack.

Refit

1. Position instrument pack in fascia and connect multiplugs.
2. Fit and tighten screws securing instrument pack to fascia.
3. Fit instrument pack surround to fascia and fit and tighten screws.
4. Connect battery earth lead.

INSTRUMENT PANEL WINDOW AND FACE PLATE

Service repair no - 88.20.06

Remove

1. Remove instrument pack. ***See this section.***

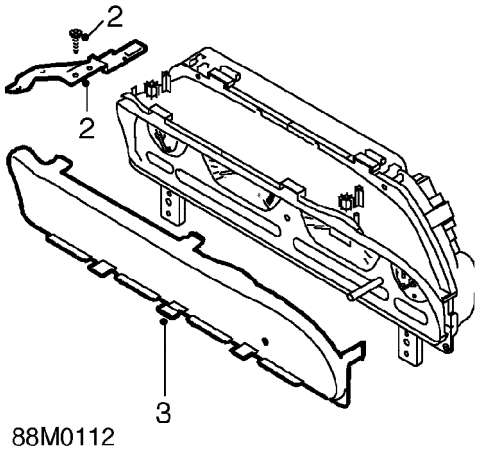

2. Remove screws and support brackets from housing.
3. Release 4 clips securing face plate to housing and remove face plate.

Refit

1. Fit face plate to housing.
2. Fit support brackets and tighten screws.
3. Fit instrument pack. ***See this section.***

COOLANT TEMPERATURE GAUGE

Service repair no - 88.25.14

Remove

1. Remove instrument pack. ***See this section.***

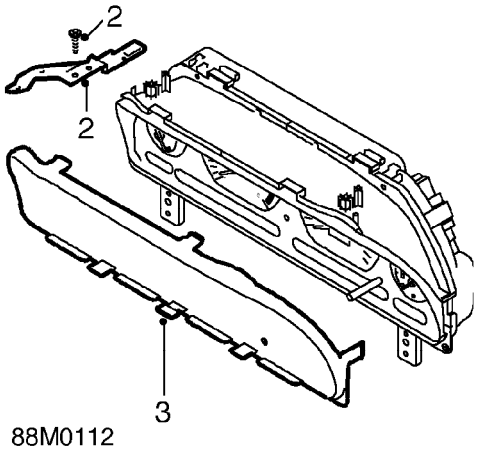

2. Remove screws and support brackets from housing.
3. Release 4 clips securing face plate to housing and remove face plate.

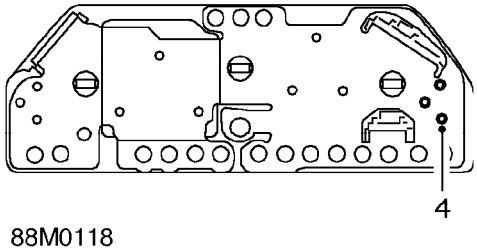

4. Remove 3 screws and remove coolant temperature gauge.

Refit

1. Fit coolant temperature gauge and secure with screws.
2. Fit face plate to housing.
3. Fit support brackets and tighten screws.
4. Fit instrument pack. ***See this section.***

ENGINE COOLANT TEMPERATURE GAUGE SENSOR - 'K' SERIES

Service repair no - 88.25.20

Remove

1. Disconnect battery earth lead.

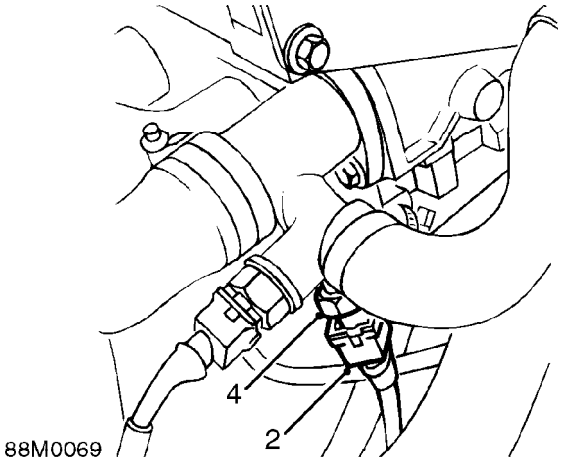

2. Disconnect multiplug from engine coolant temperature gauge sensor.
3. Position container below sensor to collect coolant spillage.
4. Remove engine coolant temperature gauge sensor.

Refit

1. Clean threads of engine coolant temperature gauge sensor.
2. Apply Loctite 577 to threads of engine coolant temperature gauge sensor.
3. Fit engine coolant temperature gauge sensor and tighten to 10 Nm.
4. Connect multiplug to engine coolant temperature gauge sensor.
5. Connect battery earth lead.
6. Top-up coolant. ***See MAINTENANCE.***

ENGINE COOLANT TEMPERATURE GAUGE SENSOR - 'L' SERIES WITHOUT AIR CONDITIONING

Service repair no - 88.25.20

Remove

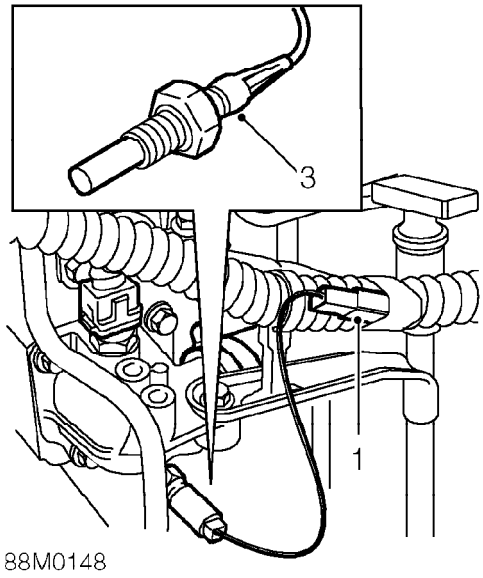

1. Disconnect engine coolant temperature gauge sensor Lucar from harness.
2. Position container below sensor to collect coolant spillage.
3. Remove engine coolant temperature gauge sensor.

Refit

1. Clean threads of engine coolant temperature gauge sensor.
2. Apply Loctite 577 to threads of engine coolant temperature gauge sensor.
3. Fit engine coolant temperature gauge sensor and tighten to 5 Nm.
4. Connect engine coolant temperature gauge sensor Lucar to harness.
5. Top-up coolant level. ***See MAINTENANCE.***

ENGINE COOLANT TEMPERATURE GAUGE SENSOR - 'L' SERIES WITH AIR CONDITIONING

Service repair no - 88.25.20.20

Remove

1. Remove alternator. ***See ELECTRICAL, Repairs.***

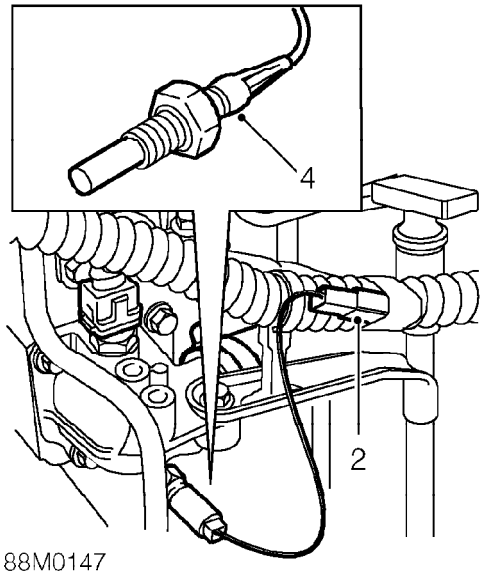

2. Disconnect engine coolant temperature gauge sensor Lucar from harness.
3. Position container below sensor to collect coolant spillage.
4. Remove engine coolant temperature gauge sensor.

Refit

1. Clean threads of engine coolant temperature gauge sensor.
2. Apply Loctite 577 to threads of engine coolant temperature gauge sensor.
3. Fit engine coolant temperature gauge sensor and tighten to 5 Nm.
4. Connect engine coolant temperature gauge sensor Lucar to harness.
5. Top-up coolant level. ***See MAINTENANCE.***
6. Fit alternator. ***See ELECTRICAL, Repairs.***

FUEL GAUGE

Service repair no - 88.25.26

Remove

1. Remove instrument pack. ***See this section.***

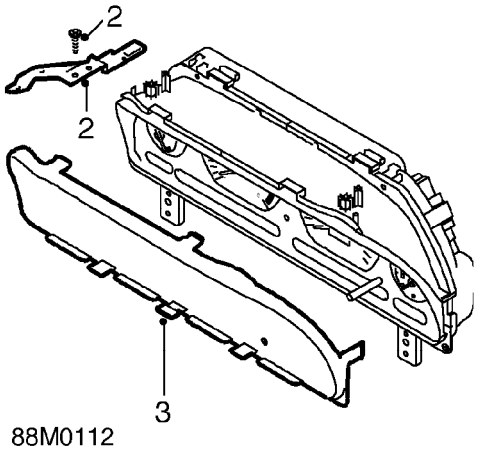

88M0112

2. Remove screws and support brackets from housing.
3. Release 4 clips securing face plate to housing and remove face plate.

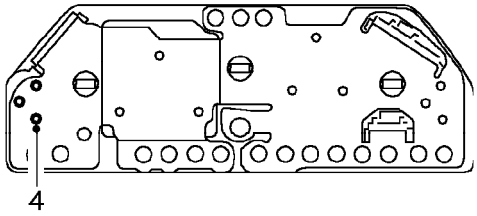

88M0119

4. Remove 3 screws and remove fuel gauge.

Refit

1. Fit fuel gauge and secure with screws.
2. Fit face plate to housing.
3. Fit support brackets and tighten screws.
4. Fit instrument pack. ***See this section.***

FUEL GAUGE TANK UNIT - 'K' SERIES

Service repair no - 88.25.32

NOTE: The fuel gauge tank unit and fuel pump are integral parts of the fuel pump housing and cannot be renewed separately. ***See FUEL DELIVERY SYSTEM, Repairs.***

FUEL GAUGE TANK UNIT - 'L' SERIES

Service repair no - 88.25.32

Remove

1. Remove fuel tank assembly. ***See FUEL DELIVERY SYSTEM, Repairs.***

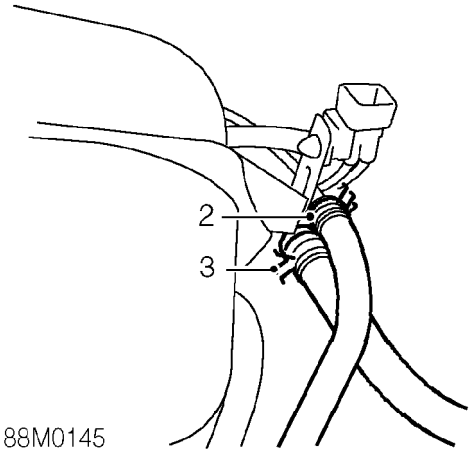

2. Release clip and disconnect fuel feed hose from sender unit.
3. Release clip and disconnect fuel return hose from sender unit.

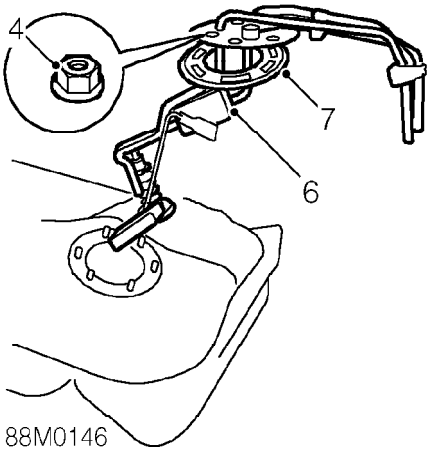

4. Remove 6 nuts securing sender unit to fuel tank.
5. Release sender unit from fuel tank.
6. Remove sender unit from fuel tank.
7. Remove seal from sender unit.

Refit

1. Clean mating face of sender unit and fuel tank.
2. Clean seal and fit to sender unit.
3. Fit sender unit to fuel tank.
4. Fit nuts securing sender unit to fuel tank and tighten to 9 Nm.
5. Connect fuel return hose to sender unit and secure with clip.
6. Connect fuel feed hose to sender unit and secure with clip.
7. Refit fuel tank assembly. ***See FUEL DELIVERY SYSTEM, Repairs.***

SPEEDOMETER

Service repair no - 88.30.01

Remove

1. Remove instrument pack. ***See this section.***

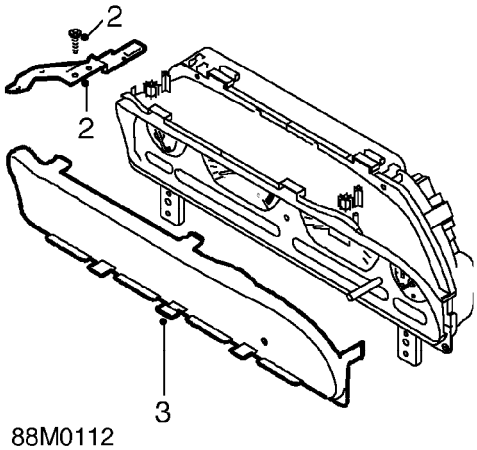

88M0112

2. Remove screws and support brackets from housing.
3. Release 4 securing clips face plate to housing and remove face plate.

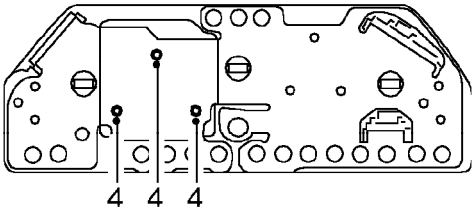

88M0120

4. Remove 3 screws and remove speedometer.

Refit

1. Fit speedometer to instrument pack and secure with screws.
2. Fit face plate to housing.
3. Fit support brackets and tighten screws.
4. Fit instrument pack. ***See this section.***

VEHICLE SPEED SENSOR - 'R65' GEARBOX

Service repair no - 88.30.14

Remove

1. Disconnect battery earth lead.
2. Raise front of vehicle.

WARNING: Support on safety stands.

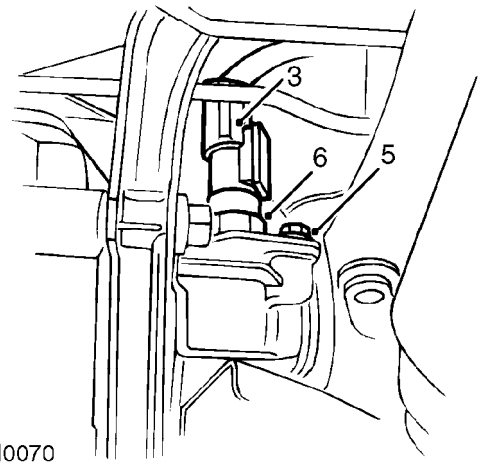

88M0070

3. Disconnect multiplug from vehicle speed sensor.
4. Position container beneath sensor to collect any oil spillage.
5. Remove bolt securing speedometer drive pinion housing to gearbox.
6. Release speedometer drive pinion housing from gearbox.
7. Remove speedometer drive pinion housing.

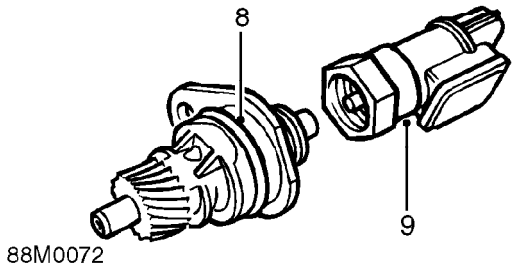

8. Remove and discard 'O' ring from speedometer drive pinion housing.
9. Remove vehicle speed sensor.

Refit

1. Fit and tighten vehicle speed sensor to speedometer drive pinion housing.
2. Clean mating faces of gearbox and speedometer drive pinion housing.
3. Lubricate with gearbox oil and fit new 'O' ring to speedometer drive pinion housing.
4. Fit speedometer drive pinion housing to gearbox and align bolt holes.
5. Fit bolt securing speedometer drive pinion housing to gearbox and tighten to 9 Nm.
6. Connect multiplug to vehicle speed sensor.
7. Top-up gearbox oil level. ***See MAINTENANCE.***
8. Remove stand(s) and lower vehicle.
9. Connect battery earth lead.

VEHICLE SPEED SENSOR - 'PG1' GEARBOX

Service repair no - 88.30.14

Remove

1. Disconnect battery earth lead.

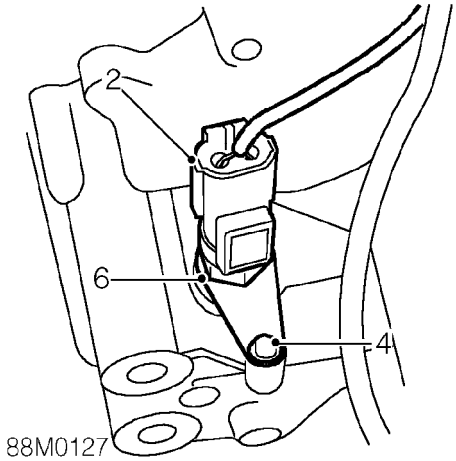

2. Disconnect multiplug from vehicle speed sensor.
3. Position container to collect fluid loss from gearbox.
4. Remove bolt securing speedometer drive pinion housing to gearbox.
5. Release speedometer drive pinion housing from gearbox.
6. Remove speedometer drive pinion housing.

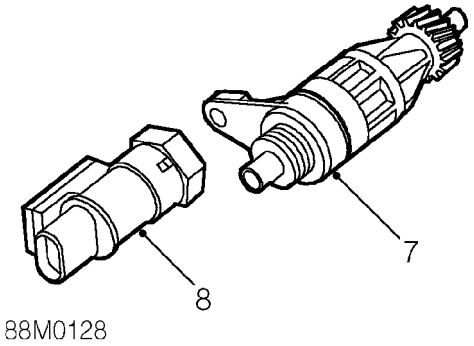

7. Remove and discard 'O' ring from speedometer drive pinion housing.
8. Remove vehicle speed sensor.

Refit

1. Fit and tighten vehicle speed sensor to speedometer drive pinion housing.
2. Clean mating faces of gearbox and speedometer drive pinion housing.
3. Lubricate with gearbox oil and fit new 'O' ring to speedometer drive pinion housing.
4. Fit speedometer drive pinion housing to gearbox and align bolt holes.
5. Fit bolt securing speedometer drive pinion housing to gearbox and tighten to 9 Nm.
6. Connect multiplug to vehicle speed sensor.
7. Top-up gearbox oil level. ***See MAINTENANCE.***
8. Connect battery earth lead.

TACHOMETER

Service repair no - 88.30.21

Remove

1. Remove instrument pack. ***See this section.***

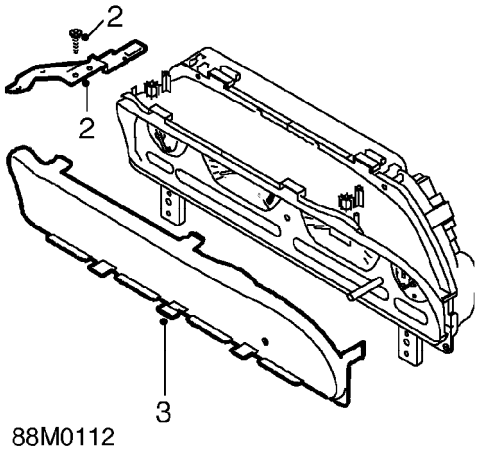

2. Remove screws and support brackets from housing.
3. Release 4 clips securing face plate to housing and remove face plate.

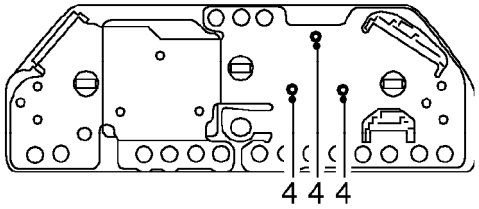

4. Remove 3 screws and remove tachometer.

Refit

1. Fit tachometer and secure with screws.
2. Fit face plate to housing.
3. Fit support brackets and tighten screws.
4. Fit instrument pack. ***See this section.***