SUZUKI

GSX-R600

SERVICE MANUAL

99500-35090-01E

FOREWORD

This manual contains an introductory description on the SUZUKI GSX-R600 and procedures for its inspection/service and overhaul of its main components.
Other information considered as generally known is not included.
Read the GENERAL INFORMATION section to familiarize yourself with the motorcycle and its maintenance. Use this section as well as other sections to use as a guide for proper inspection and service.
This manual will help you know the motorcycle better so that you can assure your customers of fast and reliable service.

- *This manual has been prepared on the basis of the latest specifications at the time of publication. If modifications have been made since then, differences may exist between the content of this manual and the actual motorcycle.*
- *Illustrations in this manual are used to show the basic principles of operation and work procedures. They may not represent the actual motorcycle exactly in detail.*
- *This manual is written for persons who have enough knowledge, skills and tools, including special tools, for servicing SUZUKI motorcycles. If you do not have the proper knowledge and tools, ask your authorized SUZUKI motorcycle dealer to help you.*

⚠ WARNING

Inexperienced mechanics or mechanics without the proper tools and equipment may not be able to properly perform the services described in this manual.
Improper repair may result in injury to the mechanic and may render the motorcycle unsafe for the rider and passenger.

SUZUKI MOTOR CORPORATION

© COPYRIGHT SUZUKI MOTOR CORPORATION 2003

GROUP INDEX

GENERAL INFORMATION	1
PERIODIC MAINTENANCE	2
ENGINE	3
FI SYSTEM DIAGNOSIS	4
FUEL SYSTEM AND THROTTLE BODY	5
EXHAUST SYSTEM	6
COOLING AND LUBRICATION SYSTEM	7
CHASSIS	8
ELECTRICAL SYSTEM	9
SERVICING INFORMATION	10
EMISSION CONTROL INFORMATION	11
WIRING DIAGRAM	12

HOW TO USE THIS MANUAL

TO LOCATE WHAT YOU ARE LOOKING FOR:

1. The text of this manual is divided into sections.
2. The section titles are listed in the GROUP INDEX.
3. Holding the manual as shown at the right will allow you to find the first page of the section easily.
4. The contents are listed on the first page of each section to help you find the item and page you need.

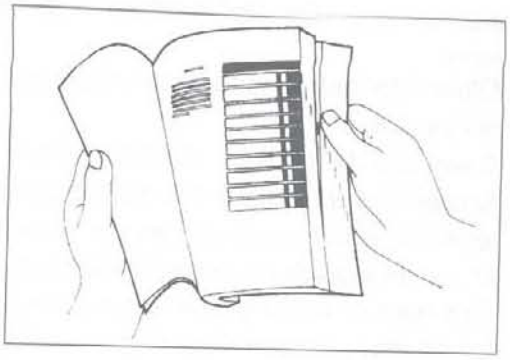

COMPONENT PARTS AND WORK TO BE DONE

Under the name of each system or unit, is its exploded view. Work instructions and other service information such as the tightening torque, lubricating points and locking agent points, are provided.

Example: Front wheel

①	Brake disc
②	Dust seal
③	Bearing
④	Spacer
⑤	Spacer nut
⑥	Front wheel
Ⓐ	Front axle
Ⓑ	Brake disc bolt (Front)

ITEM	N·m	kgf-m	lb-ft
Ⓐ	100	10.0	72.5
Ⓑ	23	2.3	16.5

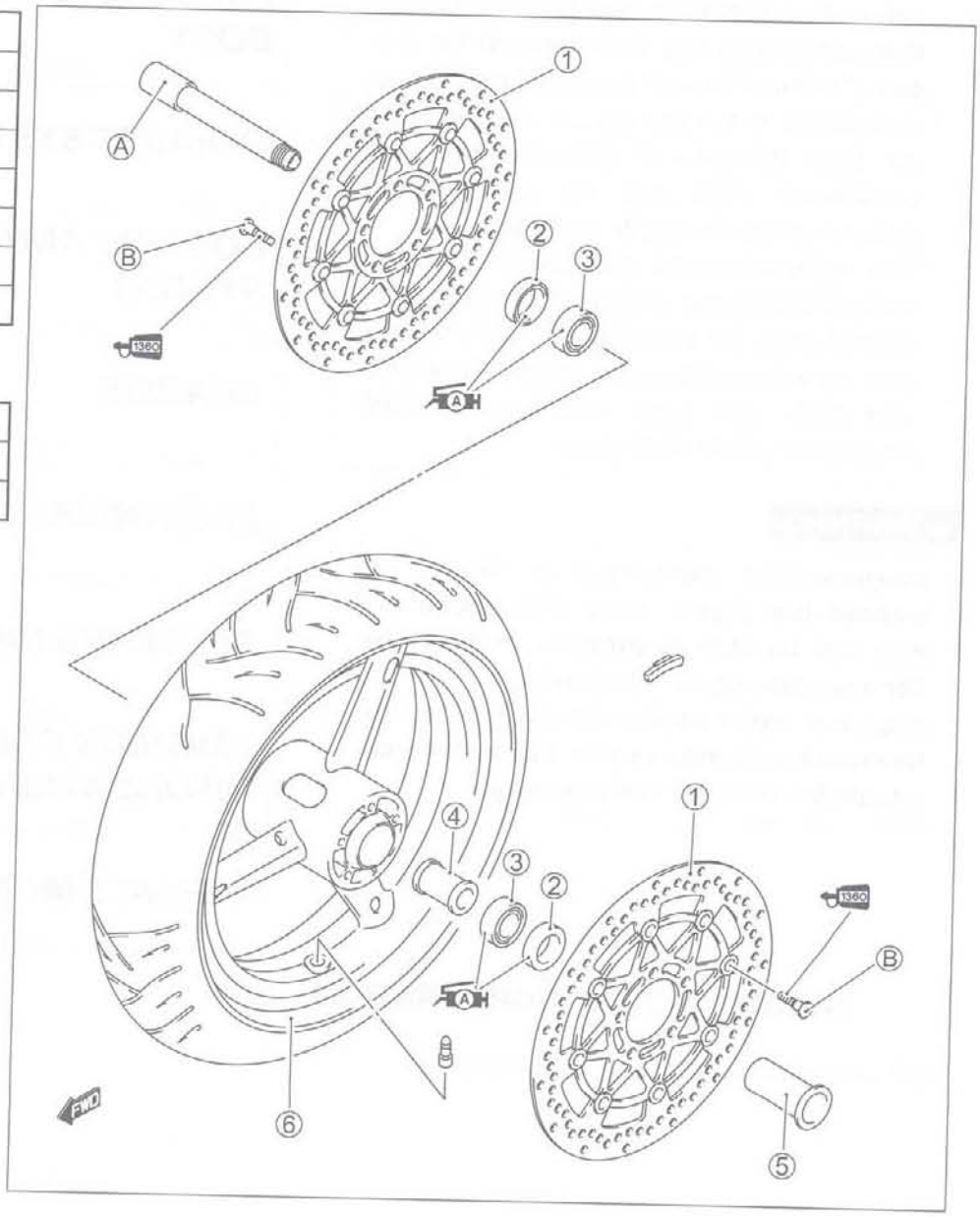

SYMBOL

Listed in the table below are the symbols indicating instructions and other information necessary for servicing. The meaning of each symbol is also included in the table.

SYMBOL	DEFINITION	SYMBOL	DEFINITION
	Torque control required. Data beside it indicates specified torque.	1360	Apply THREAD LOCK SUPER "1360". 99000-32130
OIL	Apply oil. Use engine oil unless otherwise specified.	LLC	Use engine coolant. 99000-99032-11X
M/O	Apply molybdenum oil solution. (Mixture of engine oil and SUZUKI MOLY PASTE in a ratio of 1:1)	FORK	Use fork oil. 99000-59056-SS5
A	Apply SUZUKI SUPER GREASE "A". 99000-25010 (Others) 99000-25030 (USA)	BF	Apply or use brake fluid.
M	Apply SUZUKI MOLY PASTE. 99000-25140	V	Measure in voltage range.
S	Apply SUZUKI SILICONE GREASE. 99000-25100	A	Measure in current range.
1215	Apply SUZUKI BOND "1215". 99000-31110 (Except USA)	Ω	Measure in resistance range.
1207B	Apply SUZUKI BOND "1207B". 99104-31140 (USA) 99000-31140 (Others)		Measure in diode test range.
1303	Apply THREAD LOCK SUPER "1303". 99000-32030		Measure in continuity test range.
1322	Apply THREAD LOCK SUPER "1322". 99000-32110 (Except USA)	TOOL	Use special tool.
1342	Apply THREAD LOCK "1342". 99000-32050	DATA	Indication of service data.

ABBREVIATIONS USED IN THIS MANUAL

A

ABDC	: After Bottom Dead Center
AC	: Alternating Current
ACL	: Air Cleaner, Air Cleaner Box
API	: American Petroleum Institute
ATDC	: After Top Dead Center
ATM Pressure	: Atmospheric Pressure
	: Atmospheric Pressure sensor (APS, AP Sensor)
A/F	: Air Fuel Mixture

B

BBDC	: Before Bottom Dead Center
BTDC	: Before Top Dead Center
B+	: Battery Positive Voltage

C

CKP Sensor	: Crankshaft Position Sensor (CKPS)
CKT	: Circuit
CLP Switch	: Clutch Lever Position Switch (Clutch Switch)
CMP Sensor	: Camshaft Position Sensor (CMPS)
CO	: Carbon Monoxide
CPU	: Central Processing Unit

D

DC	: Direct Current
DMC	: Dealer Mode Coupler
DOHC	: Double Over Head Camshaft
DRL	: Daytime Running Light

E

ECM	: Engine Control Module Engine Control Unit (ECU) (FI Control Unit)
ECT Sensor	: Engine Coolant Temperature Sensor (ECTS), Water Temp. Sensor (WTS)
EVAP	: Evaporative Emission
EVAP Canister	: Evaporative Emission Canister (Canister)

F

FI	: Fuel Injection, Fuel Injector
FP	: Fuel Pump
FPR	: Fuel Pressure Regulator
FP Relay	: Fuel Pump Relay

G

GEN	: Generator
GND	: Ground
GP Switch	: Gear Position Switch

H

HC	: Hydrocarbons

I

IAP Sensor	: Intake Air Pressure Sensor (IAPS)
IAT Sensor	: Intake Air Temperature Sensor (IATS)
IG	: Ignition

L

LCD	: Liquid Crystal Display
LED	: Light Emitting Diode (Malfunction Indicator Lamp)
LH	: Left Hand

M

MAL-Code	: Malfunction Code (Diagnostic Code)
Max	: Maximum
MIL	: Malfunction Indicator Lamp (LED)
Min	: Minimum

N

NOX	: Nitrogen Oxides

O

OHC	: Over Head Camshaft
OPS	: Oil Pressure Switch

P

PCV	: Positive Crankcase Ventilation (Crankcase Breather)

R

RH	: Right Hand
ROM	: Read Only Memory

S

SAE	: Society of Automotive Engineers
SDS	: Suzuki Diagnosis System
STC System	: Secondary Throttle Control System (STCS)
STP Sensor	: Secondary Throttle Position Sensor (STPS)
ST Valve	: Secondary Throttle Valve (STV)
STV Actuator	: Secondary Throttle Valve Actuator (STVA)

T

TO Sensor	: Tip-Over Sensor (TOS)
TP Sensor	: Throttle Position Sensor (TPS)

WIRE COLOR

B	: Black	Gr	: Gray	R	: Red
Bl	: Blue	Lbl	: Light blue	W	: White
Br	: Brown	Lg	: Light green	Y	: Yellow
Dg	: Dark green	O	: Orange		
G	: Green	P	: Pink		

B/Bl	: Black with Blue tracer	B/Br	: Black with Brown tracer
B/G	: Black with Green tracer	B/Lg	: Black with Light green tracer
B/R	: Black with Red tracer	B/W	: Black with White tracer
B/Y	: Black with Yellow tracer	Bl/B	: Blue with Black tracer
Bl/G	: Blue with Green tracer	Bl/R	: Blue with Red tracer
Bl/W	: Blue with White tracer	Bl/Y	: Blue with Yellow tracer
G/B	: Green with Black tracer	G/Bl	: Green with Blue tracer
G/W	: Green with White tracer	G/Y	: Green with Yellow tracer
Gr/B	: Gray with Black tracer	Gr/R	: Gray with Red tracer
Gr/W	: Gray with White tracer	Gr/Y	: Gray with Yellow tracer
O/B	: Orange with Black tracer	O/G	: Orange with Green tracer
O/R	: Orange with Red tracer	O/W	: Orange with White tracer
O/Y	: Orange with Yellow tracer	P/B	: Pink with Black tracer
P/W	: Pink with White tracer	R/B	: Red with Black tracer
R/Bl	: Red with Blue tracer	R/W	: Red with White tracer
W/B	: White with Black tracer	W/Bl	: White with Blue tracer
W/R	: White with Red tracer	Y/B	: Yellow with Black tracer
Y/Bl	: Yellow with Blue tracer	Y/G	: Yellow with Green tracer
Y/R	: Yellow with Red tracer	Y/W	: Yellow with White tracer

GENERAL INFORMATION

1

CONTENTS

WARNING/CAUTION/NOTE 1- 2
GENERAL PRECAUTIONS 1- 2
SUZUKI GSX-R600K4 ('04-MODEL) 1- 4
SERIAL NUMBER LOCATION 1- 4
FUEL, OIL AND ENGINE COOLANT RECOMMENDATION 1- 5
- FUEL (FOR USA AND CANADA) 1- 5
- FUEL (FOR OTHER COUNTRIES) 1- 5
- ENGINE OIL (FOR USA) 1- 5
- ENGINE OIL (FOR OTHER COUNTRIES) 1- 5
- BRAKE FLUID 1- 5
- FRONT FORK OIL 1- 6
- ENGINE COOLANT 1- 6
- WATER FOR MIXING 1- 6
- ANTI-FREEZE/ENGINE COOLANT 1- 6
- LIQUID AMOUNT OF WATER/ENGINE COOLANT 1- 6

BREAK-IN PROCEDURES 1- 7
CYLINDER IDENTIFICATION 1- 7
INFORMATION LABELS 1- 8
SPECIFICATIONS 1- 9
- DIMENSIONS AND DRY MASS 1- 9
- ENGINE 1- 9
- DRIVE TRAIN 1- 9
- CHASSIS 1-10
- ELECTRICAL 1-10
- CAPACITIES 1-10

COUNTRY AND AREA CODES 1-11

WARNING/CAUTION/NOTE

Please read this manual and follow its instructions carefully. To emphasize special information, the symbol and the words WARNING, CAUTION and NOTE have special meanings. Pay special attention to the messages highlighted by these signal words.

⚠ WARNING

Indicates a potential hazard that could result in death or injury.

CAUTION

Indicates a potential hazard that could result in motorcycle damage.

NOTE:
Indicates special information to make maintenance easier or instructions clearer.

Please note, however, that the warnings and cautions contained in this manual cannot possibly cover all potential hazards relating to the servicing, or lack of servicing, of the motorcycle. In addition to the WARNINGS and CAUTIONS stated, you must use good judgement and basic mechanical safety principles. If you are unsure about how to perform a particular service operation, ask a more experienced mechanic for advice.

GENERAL PRECAUTIONS

⚠ WARNING

* **Proper service and repair procedures are important for the safety of the service mechanic and the safety and reliability of the motorcycle.**
* **When 2 or more persons work together, pay attention to the safety of each other.**
* **When it is necessary to run the engine indoors, make sure that exhaust gas in forced outdoors.**
* **When working with toxic or flammable materials, make sure that the area you work in is well-ventilated and that you follow all of the material manufacturer's instructions.**
* **Never use gasoline as a cleaning solvent.**
* **To avoid getting burned, do not touch the engine, engine oil, radiator and exhaust system until they have cooled.**
* **After servicing the fuel, oil, water, exhaust or brake systems, check all lines and fittings related to the system for leaks.**

CAUTION

* If parts replacement is necessary, replace the parts with Suzuki Genuine Parts or their equivalent.
* When removing parts that are to be reused, keep them arranged in an orderly manner so that they may be reinstalled in the proper order and orientation.
* Be sure to use special tools when instructed.
* Make sure that all parts used in reassembly are clean. Lubricate them when specified.
* Use the specified lubricant, bond, or sealant.
* When removing the battery, disconnect the negative cable first and then the positive cable.
* When reconnecting the battery, connect the positive cable first and then the negative cable, and replace the terminal cover on the positive terminal.
* When performing service to electrical parts, if the service procedures not require use of battery power, disconnect the negative cable the battery.
* When tightening the cylinder head and case bolts and nuts, tighten the larger sizes first. Always tighten the bolts and nuts diagonally from the inside toward outside and to the specified tightening torque.
* Whenever you remove oil seals, gaskets, packing, O-rings, locking washers, self-locking nuts, cotter pins, circlips and certain other parts as specified, be sure to replace them with new ones. Also, before installing these new parts, be sure to remove any left over material from the mating surfaces.
* Never reuse a circlip. When installing a new circlip, take care not to expand the end gap larger than required to slip the circlip over the shaft. After installing a circlip, always ensure that it is completely seated in its groove and securely fitted.
* Use a torque wrench to tighten fasteners to the specified torque. Wipe off grease and oil if a thread is smeared with them.
* After reassembling, check parts for tightness and proper operation.

* To protect the environment, do not unlawfully dispose of used motor oil, engine coolant and other fluids: batteries, and tires.
* To protect Earth's natural resources, properly dispose of used motorcycle and parts.

SUZUKI GSX-R600K4 ('04-MODEL)

RIGHT SIDE

LEFT SIDE

- Difference between photograph and actual motorcycle may exist dependsing on the markets.

SERIAL NUMBER LOCATION

The frame serial number or V.I.N. (Vehicle Identification Number) ① is stamped on the right side of the steering head pipe. The engine serial number ② is located on the rear side of the crankcase. These numbers are required especially for registering the machine and ordering spare parts.

FUEL, OIL AND ENGINE COOLANT RECOMMENDATION

FUEL (FOR USA AND CANADA)

Use only unleaded gasoline of at least 87 pump octane (R/2 + M/2) or 91 octane or higher rated by the research method.

Gasoline containing MTBE (Methyl Tertiary Butyl Ether), less than 10 % ethanol, or less than 5 % methanol with appropriate cosolvents and corrosion inhibitor is permissible.

FUEL (FOR OTHER COUNTRIES)

Gasoline used should be graded 91 octane (Research Method) or higher. Unleaded gasoline is recommended.

ENGINE OIL (FOR USA)

SUZUKI recommends the use of SUZUKI PERFORMANCE 4 MOTOR OIL or an oil which is rated SF or SG under the API (American Petroleum Institute) service classification. The recommended viscosity is SAE 10W-40. If an SAE 10W-40 oil is not available, select and alternative according to the following chart.

ENGINE OIL (FOR OTHER COUNTRIES)

Use a premium quality 4-stroke motor oil to ensure longer service life of your motorcycle. Use only oils which are rated SF or SG under the API service classification. The recommended viscosity is SAE 10W-40. If an SAE 10W-40 motor oil is not available, select an alternative according to the right chart.

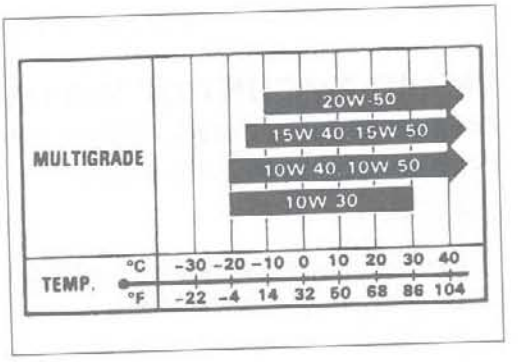

BRAKE FLUID

Specification and classification: DOT 4

⚠ WARNING

Since the brake system of this motorcycle is filled with a glycol-based brake fluid by the manufacturer, do not use or mix different types of fluid such as silicone-based and petroleum-based fluid for refilling the system, otherwise serious damage will result.

Do not use any brake fluid taken from old or used or unsealed containers.

Never re-use brake fluid left over from a previous servicing, which has been stored for a long period.

FRONT FORK OIL

Use fork oil SS-05 or an equivalent fork oil.

ENGINE COOLANT

Use an anti-freeze/engine coolant compatible with an aluminum radiator, mixed with distilled water only.

WATER FOR MIXING

Use distilled water only. Water other than distilled water can corrode and clog the aluminum radiator.

ANTI-FREEZE/ENGINE COOLANT

The engine coolant perform as a corrosion and rust inhibitor as well as anti-freeze. Therefore, the engine coolant should be used at all times even though the atmospheric temperature in your area does not go down to freezing point.

Suzuki recommends the use of SUZUKI COOLANT anti-freeze/engine coolant. If this is not available, use an equivalent which is compatible with an aluminum radiator.

LIQUID AMOUNT OF WATER/ENGINE COOLANT

Solution capacity (total): Approx. 2 950 ml (3.1/2.6 US/Imp qt)

For engine coolant mixture information, refer to cooling system section, page 7-2

CAUTION

Mixing of anti-freeze/engine coolant should be limited to 60 %. Mixing beyond it would reduce its efficiency. If the anti-freeze/engine coolant mixing ratio is below 50 %, rust inhabiting performance is greatly reduced. Be sure to mix it above 50 % even though the atmospheric temperature does not go down to the freezing point.

BREAK-IN PROCEDURES

During manufacture only the best possible materials are used and all machined parts are finished to a very high standard but it is still necessary to allow the moving parts to "BREAK-IN" before subjecting the engine to maximum stresses. The future performance and reliability of the engine depends on the care and restraint exercised during its early life. The general rules are as follows.

- Keep to these break-in engine speed limits:

Initial 800 km (500 miles): Below 7 500 r/min
Up to 1 600 km (1 000 miles): Below 11 000 r/min
Over to 1 600 km (1 000 miles): Below 15 500 r/min

- Upon reaching an odometer reading of 1 600 km (1 000 miles) you can subject the motorcycle to full throttle operation.
  However, do not exceed 15 500 r/min at any time.

CYLINDER IDENTIFICATION

The four cylinders of this engine are identified as No.1, No.2, No.3 and No.4 cylinder, as counted from left to right (as viewed by the rider on the seat.)

INFORMATION LABELS

	GSX-R600	GSX-R600UE	GSX-R600UF
① Noise label	A (For E-03, 24, 33)		
② Information label	A (For E-03, 28, 33)		
③ Vacuum hose routing label	A (For E-33)		
④ Fuel caution label	A (For E-02, 24)		
⑤ Manual notice label	A (For E-03, 33)		
⑥ Frame caution plate	A	A	A
⑦ Warning screen label	A	A	A
⑧ Warning steering label	A	A	A
⑨ Tire air pressure label	A	A	A
⑩ Warning safety label	A	A	A
⑪ ICES Canada label	A (For E-28)		
⑫ ID plate	A (Except E-03, 28, 33)	A	A
⑬ E-19 ID label			A (For E-19)
⑭ Safety plate	A (For E-03, 28, 33)		

A: Attached

*1: Except for E-28 *2: For E-28 (French) *3: For E-28

*4: This label is attached on the rear fender. *5: This label is attached on the right side of rear fender.

*6: This label is attached on the left side of rear fender.

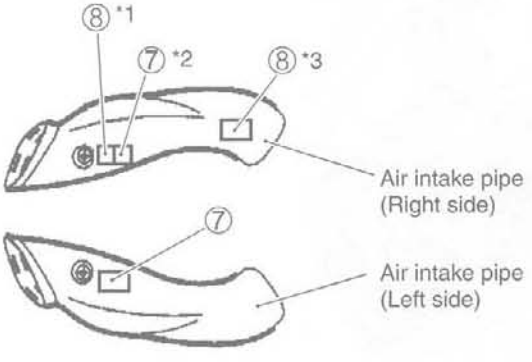

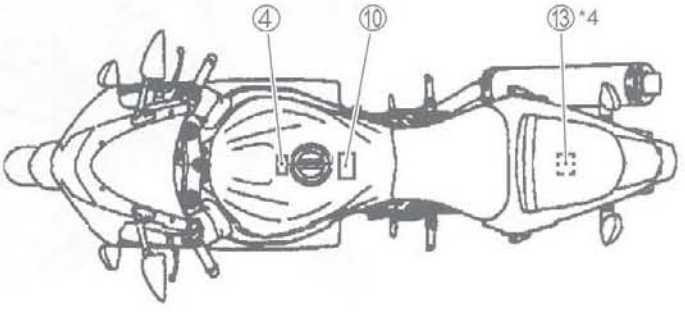

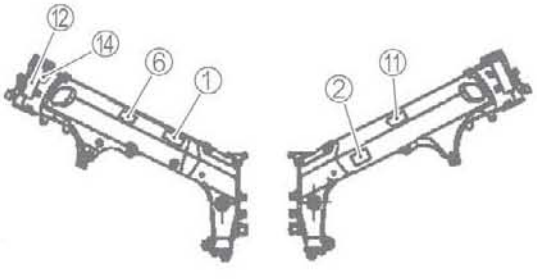

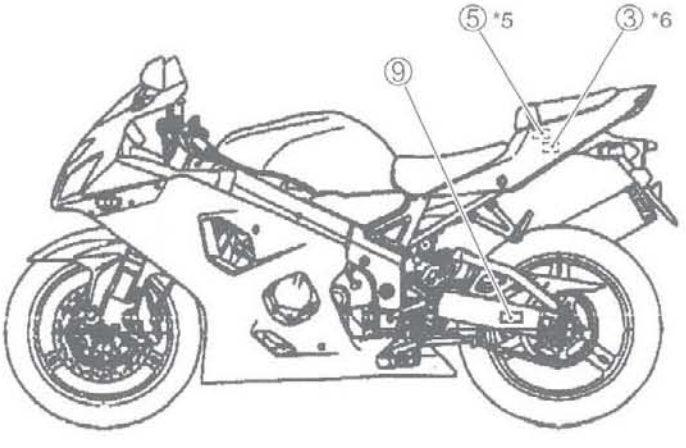

SPECIFICATIONS

DIMENSIONS AND DRY MASS

Overall length	2 055 mm (80.9 in)
Overall width	715 mm (28.1 in)
Overall height	1 150 mm (45.3 in)
Wheelbase	1 400 mm (55.1 in)
Ground clearance	135 mm (5.3 in)
Seat height	825 mm (32.5 in)
Dry mass	162 kg (357 lbs).....E-33 161 kg (354 lbs).....Others

ENGINE

Type	Four stroke, liquid-cooled, DOHC
Number of cylinders	4
Bore	67.0 mm (2.638 in)
Stroke	42.5 mm (1.673 in)
Displacement	599 cm³ (36.5 cu.in)
Compression ratio	12.5:1
Fuel system	Fuel injection
Air cleaner	Paper element
Starter system	Electric
Lubrication system	Wet sump
Idle speed	1 300 ± 100 r/min

DRIVE TRAIN

Clutch	Wet multi-plate type
Transmission	6-speed constant mesh
Gearshift pattern	1-down, 5-up
Primary reduction ratio	1.926 (79/41)
Gear ratios, Low	2.785 (39/14)
2nd	2.052 (39/19)
3rd	1.681 (37/22)
4th	1.450 (29/20)
5th	1.304 (30/23)
Top	1.181 (26/22)
Final reduction ratio	2.812 (45/16)
Drive chain	RK525SMOZ7, 110 links

CHASSIS

Front suspension	Telescopic, coil spring, oil damped
Rear suspension	Link type, coil spring, oil damped
Front fork stroke	120 mm (4.7 in)
Rear wheel travel	130 mm (5.1 in)
Steering angle	27 ° (Right and left)
Caster	23.15 °
Trail	93 mm (3.7 in)
Turning radius	3.4 m (11.2 ft)
Front brake	Disc brake, twin
Rear brake	Disc brake
Front tire size	120/70 ZR 17 M/C (58 W), tubeless
Rear tire size	180/55 ZR 17 M/C (73 W), tubeless

ELECTRICAL

Ignition type	Electronic ignition (Transistorized)
Ignition timing	6 ° B.T.D.C.at 1 300 r/min
Spark plug	NGK CR9E or DENSO U27ESR-N
Battery	12 V 28.8 kC (8 Ah)/10 HR
Generator	Three-phase A.C. generator
Main fuse	30 A
Fuse	10/10/15/10/10/10 A E-02, 19
	10/10/15/15/10/10 A E-03, 24, 28, 33
Headlight	12 V 60 + 55/55 W (H4 + H7) ...E-02, 19
	12 V 60 + 55/55 + 55 W (H4 + H7) E-03, 24, 28, 33
Turn signal light	12 V 18 W
License plate light	12 V 5 W
Brake light/Taillight	LED
Speedometer light	LED
Tachometer light	LED
Neutral indicator light	LED
High beam indicator light	LED
Turn signal indicator light	LED
Position light	12 V 5 W E-02, 19
Oil pressure/Engine coolant temperature/FI indicator light	LED
Fuel level indicator light	LED
Engine RPM indicator light	LED

CAPACITIES

Fuel tank, including reserve	16.5 L (4.4/3.6 US/Imp gal) E-33
	17.0 L (4.5/3.7 US/Imp gal) .....Others
Engine oil, oil change	2 800 ml (3.0/2.5 US/Imp qt)
with filter change	3 100 ml (3.3/2.7 US/Imp qt)
overhaul	3 600 ml (3.8/3.2 US/Imp qt)
Coolant	3.0 L (3.2/2.6 US/Imp qt)

These specifications are subject to change without notice.

PERIODIC MAINTENANCE

CONTENTS

PERIODIC MAINTENANCE SCHEDULE 2- 2
- PERIODIC MAINTENANCE CHART 2- 2
- LUBRICATION POINTS 2- 3

MAINTENANCE AND TUNE-UP PROCEDURES 2- 4
- AIR CLEANER 2- 4
- SPARK PLUG 2- 5
- VALVE CLEARANCE 2- 7
- ENGINE OIL AND OIL FILTER 2-12
- FUEL LINE 2-14
- ENGINE IDLE SPEED 2-14
- THROTTLE VALVE SYNCHRONIZATION 2-15
- EVAPORATIVE EMISSION CONTROL SYSTEM (E-33 ONLY) 2-15
- PAIR (AIR SUPPLY) SYSTEM 2-15
- THROTTLE CABLE PLAY 2-16
- CLUTCH 2-16
- COOLING SYSTEM 2-17
- DRIVE CHAIN 2-20
- BRAKE 2-23
- TIRES 2-27
- STEERING 2-28
- FRONT FORK 2-28
- REAR SUSPENSION 2-28
- EXHAUST PIPE BOLT AND MUFFLER BOLT AND NUT 2-29
- CHASSIS BOLTS AND NUTS 2-30

COMPRESSION PRESSURE CHECK 2-32
- COMPRESSION TEST PROCEDURE 2-32

OIL PRESSURE CHECK 2-33

PERIODIC MAINTENANCE SCHEDULE

The chart below lists the recommended intervals for all the required periodic service work necessary to keep the motorcycle operating at peak performance and economy. Mileages are expressed in terms of kilometers, miles and time for your convenience.

NOTE:
More frequent servicing may be required on motorcycles that are used under severe conditions.

PERIODIC MAINTENANCE CHART

Interval / Item	miles	600	4 000	7 500	11 000	14 500
	km	1 000	6 000	12 000	18 000	24 000
	months	2	12	24	36	48
Air cleaner element		—	I	I	R	I
Spark plug		—	I	R	I	R
Valve clearance		—	—	—	—	I
Engine oil		R	R	R	R	R
Engine oil filter		R	—	—	R	—
Fuel line		—	I	I	I	I
		Replace fuel hose every 4 years.				
Idle speed		I	I	I	I	I
Throttle valve synchronization		I (E-33 only)	—	I	—	I
Evaporative emission control system (E-33 only)		—	—	I	—	I
		Replace vapor hose every 4 years.				
PAIR (air supply) system		—	—	I	—	I
Throttle cable play		I	I	I	I	I
Clutch cable play		—	I	I	I	I
Radiator hose		—	I	I	I	I
		Replace every 4 years.				
Engine coolant		Replace every 2 years.				
Drive chain		I	I	I	I	I
		Clean and lubricate every 1 000 km (600 miles).				
Brake		I	I	I	I	I
Brake hose		—	I	I	I	I
		Replace every 4 years.				
Brake fluid		—	I	I	I	I
		Replace every 2 years.				
Tire		—	I	I	I	I
Steering		I	—	I	—	I
Front fork		—	—	I	—	I
Rear suspension		—	—	I	—	I
Exhaust pipe bolt and muffler bolt and nut		T	—	T	—	T
Chassis bolt and nut		T	T	T	T	T

NOTE:
I=Inspect and clean, adjust, replace or lubricate as necessary;
R=Replace; T=Tighten

LUBRICATION POINTS

Proper lubrication is important for smooth operation and long life of each working part of the motorcycle. Major lubrication points are indicated below.

①	Brake lever holder
②	Brake pedal pivot and footrest pivot
③	Clutch lever holder
④	Side-stand pivot and spring hook
⑤	Footrest pivot and gearshift lever pivot
⑥	Drive chain

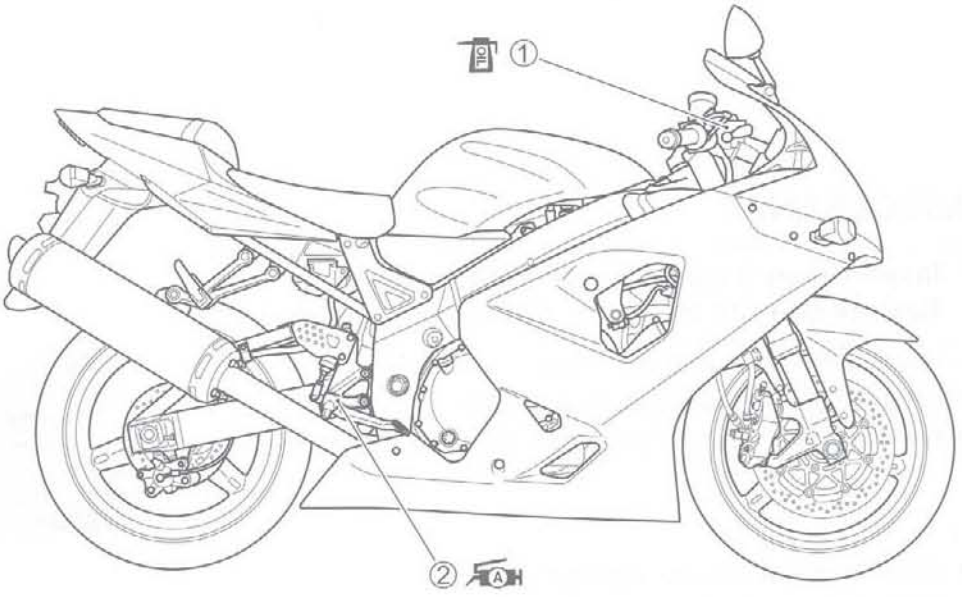

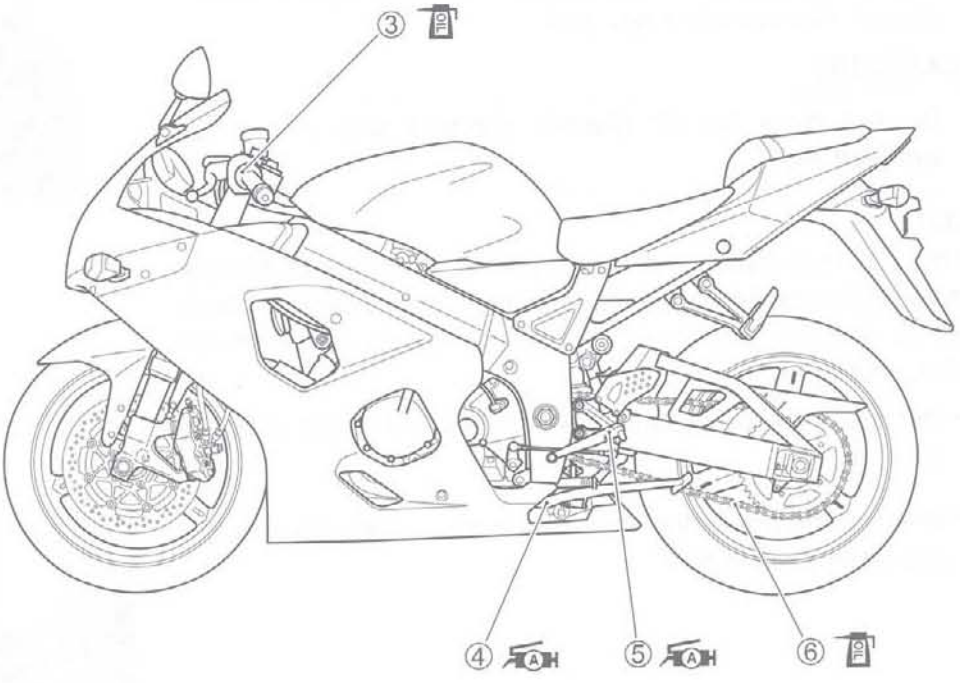

NOTE:

* *Before lubricating each part, clean off any rusty spots and wipe off any grease, oil, dirt or grime.*
* *Lubricate exposed parts which are subject to rust, with a rust preventative spray whenever the motorcycle has been operated under wet or rainy conditions.*

MAINTENANCE AND TUNE-UP PROCEDURES

This section describes the servicing procedures for each item of the Periodic Maintenance requirements.

AIR CLEANER

Inspect every 6 000 km (4 000 miles, 12 months).
Replace every 18 000 km (11 000 miles, 36 months).

- Remove the front seat. (☞8-6)
- Lift and support the fuel tank. (☞5-3)
- Remove the air cleaner box cover by removing the screws.

- Remove the air cleaner element.
- Inspect the air cleaner element for clogged.
  If the air cleaner element is clogged with dust, replace the air cleaner element with a new one.

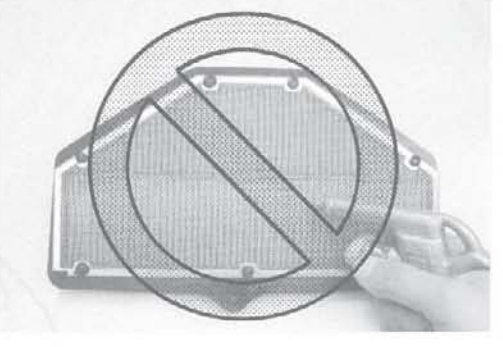

CAUTION

Do not blow the air cleaner element with a compressed air.

NOTE:
If driving under dusty conditions, replace the air cleaner element more frequently. Make sure that the air cleaner is in good condition at all times. The life of the engine depends largely on this component.

- Install a new air cleaner element in the reverse order of removal.

- Remove the drain plug ① from the air cleaner box to allow any water to drain out.

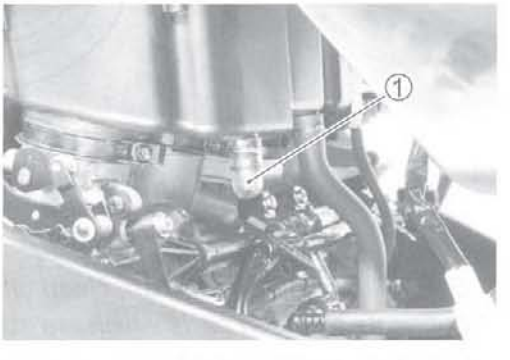

SPARK PLUG

Inspect every 6 000 km (4 000 miles, 12 months).
Replace every 12 000 km (7 500 miles, 24 months).

SPARK PLUG AND IGNITION COIL/PLUG CAP REMOVAL

- Remove the front seat. (☞8-6)
- Lift and support the fuel tank. (☞5-3)
- Remove the air cleaner box. (☞5-14)
- Disconnect all lead wire couplers ① from ignition coil/plug caps.

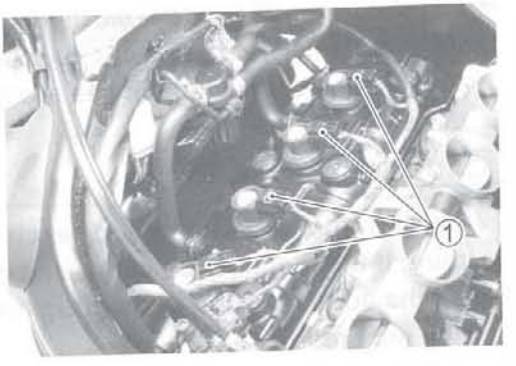

CAUTION

Disconnect the lead wire coupler before removing the ignition coil/plug cap to avoid lead wire coupler damage.

- Remove the ignition coils/plug caps.

CAUTION

*** Do not pry up the ignition coil/plug cap with a screw driver or a bar to avoid its damage.**
*** Be careful not to drop the ignition coil/plug cap to prevent short/open circuit.**

- Remove the spark plugs with a spark plug wrench.

HEAT RANGE

- Check spark plug heat range by observing electrode color. If the electrode of the spark plug is wet appearing or dark color, replace the spark plug with hotter type one. If it is white or glazed appearing, replace the spark plug with colder type one.

	Hot type	Standard	Cold type
NGK	CR8E	CR9E	CR10E
DENSO	U24ESR-N	U27ESR-N	U31ESR-N

NOTE:
"R" type spark plug has a resistor located at the center electrode to prevent radio noise.

CARBON DEPOSITS

- Check carbon deposits on the spark plug.
- If carbon is deposited, remove it using a spark plug cleaner machine or carefully use a tool with a pointed end.

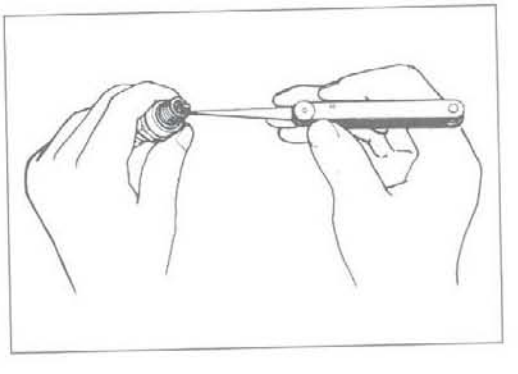

SPARK PLUG GAP

- Measure the spark plug gap with a thickness gauge.
- Adjust the spark plug gap if necessary.

DATA Spark plug gap:
Standard: 0.7 – 0.8 mm (0.028 – 0.031 in)

TOOL 09900-20803: Thickness gauge

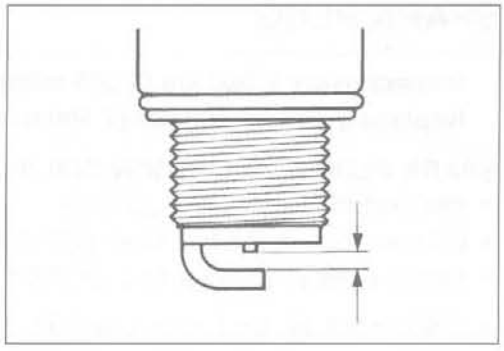

ELECTRODE'S CONDITION

- Check the condition of the electrode.
- If it is extremely worn or burnt, replace the spark plug. Replace the spark plug if it has a broken insulator, damaged thread, etc.

CAUTION

Confirm the thread size and reach when replacing the plug. If the reach is too short, carbon will be deposited on the screw portion of the plug hole and engine damage may result.

SPARK PLUG AND IGNITION COIL/PLUG CAP INSTALLATION

- Install the spark plugs to the cylinder head with fingers, and then tighten them to the specified torque.

Spark plug: 11 N·m (1.1 kgf-m, 8.0 lb-ft)

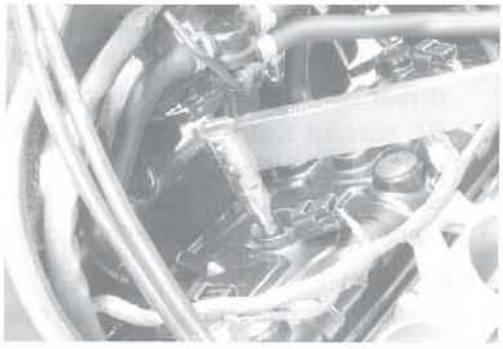

CAUTION

Do not cross thread or over tighten the spark plug, or the spark plug will damage the aluminum threads of the cylinder head.

- Install the ignition coils/plug caps and connect their lead wire couplers.

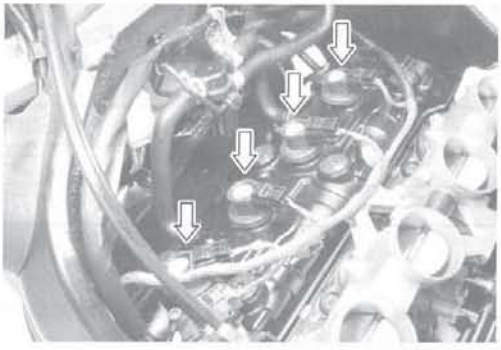

CAUTION

*** Do not hit the ignition coil/plug cap with a plastic hammer when installing it.**
*** Place the ignition coil/spark plug cap so that the coupler does not touch the cylinder head cover.**

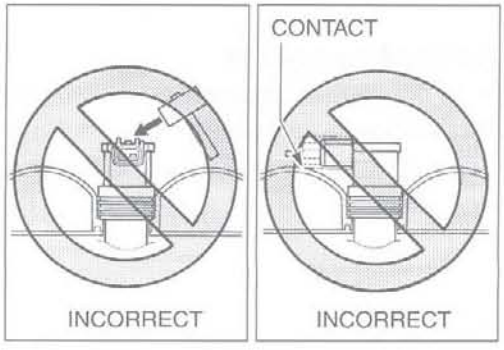

VALVE CLEARANCE

Inspect every 24 000 km (14 500 miles, 48 months).

- Remove the right under cowling. (☞8-3)
- Remove the front seat. (☞8-6)
- Lift and support the fuel tank. (☞5-3)
- Remove the spark plugs. (☞2-5)
- Remove the cylinder head cover. (☞3-16)

The valve clearance specification is different for intake and exhaust valves. Valve clearance must be checked and adjusted, 1) at the time of periodic inspection, 2) when the valve mechanism is serviced, and 3) when the camshafts are removed for servicing.

DATA Valve clearance (when cold):
Standard: IN. : 0.10 – 0.20 mm (0.004 – 0.008 in)
EX. : 0.20 – 0.30 mm (0.008 – 0.012 in)

NOTE:
- ** The cam must be at positions, Ⓐ or Ⓑ, in order to check the valve clearance, or to adjust valve clearance. Clearance readings should not be taken with the cam in any other position than these two positions.*
- ** The clearance specification is for COLD state.*
- ** To turn the crankshaft for clearance checking, be sure to use a wrench, and rotate in the normal running direction. All spark plugs should be removed.*

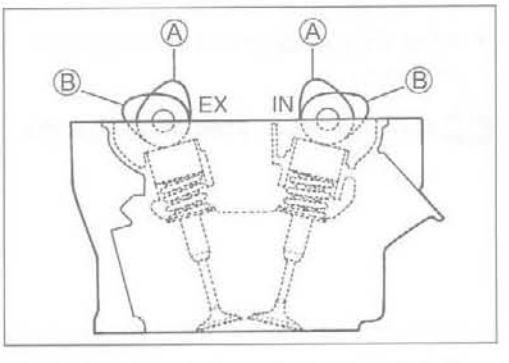

- Remove the valve timing inspection cap ①.

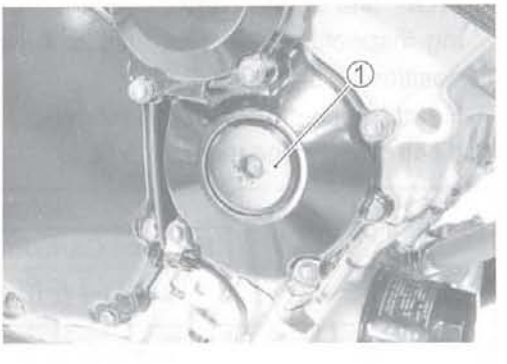

- Turn the crankshaft to bring the "Top" line on the starter clutch to the index mark and also to bring the notches Ⓐ on the left ends of both camshafts (Ex and In) to the positions as shown.

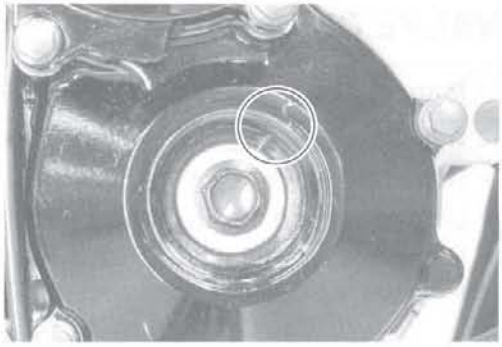

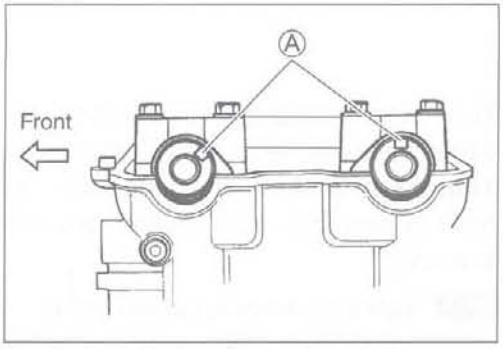

- In this condition, read the valve clearance at the valves Ⓑ (In and Ex of No.4 cylinder, Ex of No.3 and In of No.2).
- If the clearance is out of specification, adjust the clearance. (☞2-9)

TOOL 09900-20803: Thickness gauge

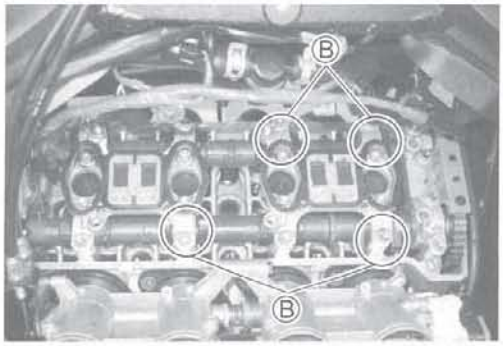

- Turn the crankshaft 360 degrees (one rotation) to bring the "TOP" line on the starter clutch to the index mark of valve timing inspection hole and also to bring the notches Ⓐ to the position as shown.
- Read the clearance at the remaining valves Ⓒ and adjust the clearance if necessary. (☞2-9)

Cam position	Notch Ⓐ position	
	Exhaust Camshaft	Intake Camshaft
Ⓑ	←Front	←Front
Ⓒ	←Front	←Front

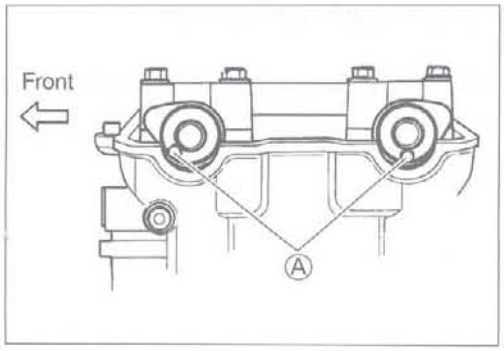

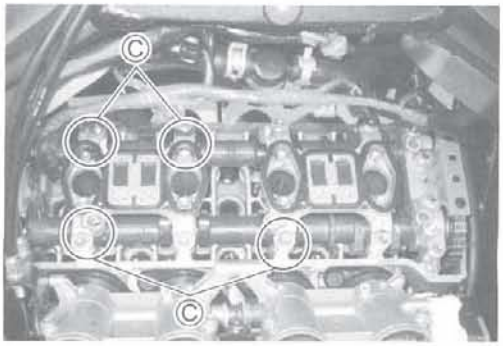

VALVE CLEARANCE ADJUSTMENT

The clearance is adjusted by replacing the existing tappet shim by a thicker or thinner one.

- Remove the intake or exhaust camshafts. (☞3-17)
- Remove the tappet and shim by fingers or magnetic hand.
- Check the figures printed on the shim. These figures indicate the thickness of the shim, as illustrated.
- Select a replacement shim that will provide a clearance within the specified range. For the purpose of this adjustment, a total of 21 sizes of tappet shim are available ranging from 1.20 to 2.20 mm in steps of 0.05 mm. Fit the selected shim to the valve stem end, with numbers toward tappet. Be sure to check shim size with micrometer to ensure its size. Refer to the tappet shim selection table (☞2-10, 2-11) for details.

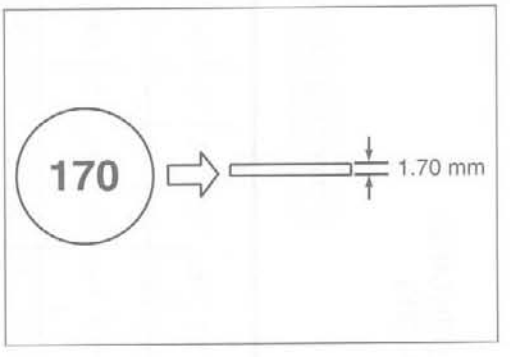

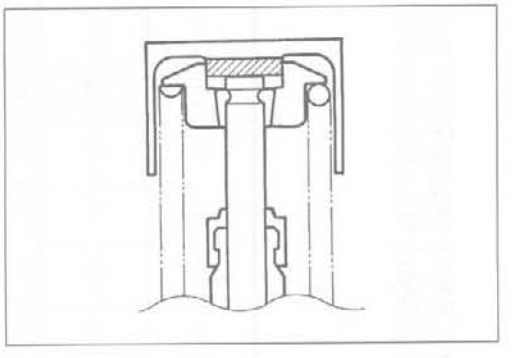

NOTE:

** Be sure to apply engine oil to tappet shim top and bottom faces.*

** When seating the tappet shim, be sure the figure printed surface faces the tappet.*

NOTE:

Reinstall the camshafts in the specified manner. (☞3-98)

- After replacing the tappet shim and camshafts, rotate the engine so that the tappet is depressed fully. This will squeeze out oil trapped between the shim and the tappet that could cause an incorrect measurement. Then check the clearance again to confirm that it is within the specified range.

- After finishing the valve clearance adjustment, reinstall the following items.

* Cylinder head cover (☞3-104)
* Spark plug and plug cap (☞2-6)
* Valve timing inspection plug (☞3-104)

(INTAKE SIDE)

TAPPET SHIM SELECTION TABLE [INTAKE]
TAPPET SHIM NO. (12892-05C00-XXX)

TAPPET SHIM SET (12800-05830)

MEASURED VALVE CLEARANCE (mm) / SUFFIX NO.	120	125	130	135	140	145	150	155	160	165	170	175	180	185	190	195	200	205	210	215	220
PRESENT SHIM SIZE (mm)	1.20	1.25	1.30	1.35	1.40	1.45	1.50	1.55	1.60	1.65	1.70	1.75	1.80	1.85	1.90	1.95	2.00	2.05	2.10	2.15	2.20
0.00-0.04			1.20	1.25	1.30	1.35	1.40	1.45	1.50	1.55	1.60	1.65	1.70	1.75	1.80	1.85	1.90	1.95	2.00	2.05	2.10
0.05-0.09		1.20	1.25	1.30	1.35	1.40	1.45	1.50	1.55	1.60	1.65	1.70	1.75	1.80	1.85	1.90	1.95	2.00	2.05	2.10	2.15
0.10-0.20	SPECIFIED CLEARANCE/NO ADJUSTMENT REQUIRED																				
0.21-0.25	1.30	1.35	1.40	1.45	1.50	1.55	1.60	1.65	1.70	1.75	1.80	1.85	1.90	1.95	2.00	2.05	2.10	2.15	2.20	2.20	
0.26-0.30	1.35	1.40	1.45	1.50	1.55	1.60	1.65	1.70	1.75	1.80	1.85	1.90	1.95	2.00	2.05	2.10	2.15	2.20			
0.31-0.35	1.40	1.45	1.50	1.55	1.60	1.65	1.70	1.75	1.80	1.85	1.90	1.95	2.00	2.05	2.10	2.15	2.20				
0.36-0.40	1.45	1.50	1.55	1.60	1.65	1.70	1.75	1.80	1.85	1.90	1.95	2.00	2.05	2.10	2.15	2.20					
0.41-0.45	1.50	1.55	1.60	1.65	1.70	1.75	1.80	1.85	1.90	1.95	2.00	2.05	2.10	2.15	2.20						
0.46-0.50	1.55	1.60	1.65	1.70	1.75	1.80	1.85	1.90	1.95	2.00	2.05	2.10	2.15	2.20							
0.51-0.55	1.60	1.65	1.70	1.75	1.80	1.85	1.90	1.95	2.00	2.05	2.10	2.15	2.20								
0.56-0.60	1.65	1.70	1.75	1.80	1.85	1.90	1.95	2.00	2.05	2.10	2.15	2.20									
0.61-0.65	1.70	1.75	1.80	1.85	1.90	1.95	2.00	2.05	2.10	2.15	2.20										
0.66-0.70	1.75	1.80	1.85	1.90	1.95	2.00	2.05	2.10	2.15	2.20											
0.71-0.75	1.80	1.85	1.90	1.95	2.00	2.05	2.10	2.15	2.20												
0.76-0.80	1.85	1.90	1.95	2.00	2.05	2.10	2.15	2.20													
0.81-0.85	1.90	1.95	2.00	2.05	2.10	2.15	2.20														
0.86-0.90	1.95	2.00	2.05	2.10	2.15	2.20															
0.91-0.95	2.00	2.05	2.10	2.15	2.20																
0.96-1.00	2.05	2.10	2.15	2.20																	
1.01-1.05	2.10	2.15	2.20																		
1.06-1.10	2.15	2.20																			
1.11-1.15	2.20																				

HOW TO USE THIS CHART:

I. Measure valve clearance. "ENGINE IS COLD"
II. Measure present shim size.
III. Match clearance in vertical column with present shim size in horizontal column.

EXAMPLE

Valve clearance is	0.23 mm
Present shim size	1.70 mm
Shim size to be used	1.80 mm

TAPPET SHIM SELECTION TABLE [EXHAUST]
TAPPET SHIM NO. (12892-05C00-XXX)

TAPPET SHIM SET (12800-05830)

MEASURED VALVE CLEARANCE (mm) \ SUFFIX NO.	120	125	130	135	140	145	150	155	160	165	170	175	180	185	190	195	200	205	210	215	220
PRESENT SHIM SIZE (mm)	1.20	1.25	1.30	1.35	1.40	1.45	1.50	1.55	1.60	1.65	1.70	1.75	1.80	1.85	1.90	1.95	2.00	2.05	2.10	2.15	2.20
0.05-0.09				1.20	1.25	1.30	1.35	1.40	1.45	1.50	1.55	1.60	1.65	1.70	1.75	1.80	1.85	1.90	1.95	2.00	2.05
0.10-0.14			1.20	1.25	1.30	1.35	1.40	1.45	1.50	1.55	1.60	1.65	1.70	1.75	1.80	1.85	1.90	1.95	2.00	2.05	2.10
0.15-0.19		1.20	1.25	1.30	1.35	1.40	1.45	1.50	1.55	1.60	1.65	1.70	1.75	1.80	1.85	1.90	1.95	2.00	2.05	2.10	2.15
0.20-0.30	SPECIFIED CLEARANCE/NO ADJUSTMENT REQUIRED																				
0.31-0.35	1.30	1.35	1.40	1.45	1.50	1.55	1.60	1.65	1.70	1.75	1.80	1.85	1.90	1.95	2.00	2.05	2.10	2.15	2.20	2.20	
0.36-0.40	1.35	1.40	1.45	1.50	1.55	1.60	1.65	1.70	1.75	1.80	1.85	1.90	1.95	2.00	2.05	2.10	2.15	2.20			
0.41-0.45	1.40	1.45	1.50	1.55	1.60	1.65	1.70	1.75	1.80	1.85	1.90	1.95	2.00	2.05	2.10	2.15	2.20				
0.46-0.50	1.45	1.50	1.55	1.60	1.65	1.70	1.75	1.80	1.85	1.90	1.95	2.00	2.05	2.10	2.15	2.20					
0.51-0.55	1.50	1.55	1.60	1.65	1.70	1.75	1.80	1.85	1.90	1.95	2.00	2.05	2.10	2.15	2.20						
0.56-0.60	1.55	1.60	1.65	1.70	1.75	1.80	1.85	1.90	1.95	2.00	2.05	2.10	2.15	2.20							
0.61-0.65	1.60	1.65	1.70	1.75	1.80	1.85	1.90	1.95	2.00	2.05	2.10	2.15	2.20								
0.66-0.70	1.65	1.70	1.75	1.80	1.85	1.90	1.95	2.00	2.05	2.10	2.15	2.20									
0.71-0.75	1.70	1.75	1.80	1.85	1.90	1.95	2.00	2.05	2.10	2.15	2.20										
0.76-0.80	1.75	1.80	1.85	1.90	1.95	2.00	2.05	2.10	2.15	2.20											
0.81-0.85	1.80	1.85	1.90	1.95	2.00	2.05	2.10	2.15	2.20												
0.86-0.90	1.85	1.90	1.95	2.00	2.05	2.10	2.15	2.20													
0.91-0.95	1.90	1.95	2.00	2.05	2.10	2.15	2.20														
0.96-1.00	1.95	2.00	2.05	2.10	2.15	2.20															
1.01-1.05	2.00	2.05	2.10	2.15	2.20																
1.06-1.10	2.05	2.10	2.15	2.20																	
1.11-1.15	2.10	2.15	2.20																		
1.16-1.20	2.15	2.20																			
1.21-1.25	2.20																				

HOW TO USE THIS CHART:

I. Measure valve clearance. "ENGINE IS COLD"
II. Measure present shim size.
III. Match clearance in vertical column with present shim size in horizontal column.

EXAMPLE

Valve clearance is	0.33 mm
Present shim size	1.70 mm
Shim size to be used	1.80 mm

ENGINE OIL AND OIL FILTER

(ENGINE OIL)
Replace initially at 1 000 km (600 miles, 2 months) and every 6 000 km (4 000 miles, 12 months).

(OIL FILTER)
Replace initially at 1 000 km (600 miles, 2 months) and every 18 000 km (11 000 miles, 36 months) thereafter.

ENGINE OIL REPLACEMENT

- Keep the motorcycle upright.
- Place an oil pan below the engine, and drain oil by removing the oil drain plug ① and filler cap ②.

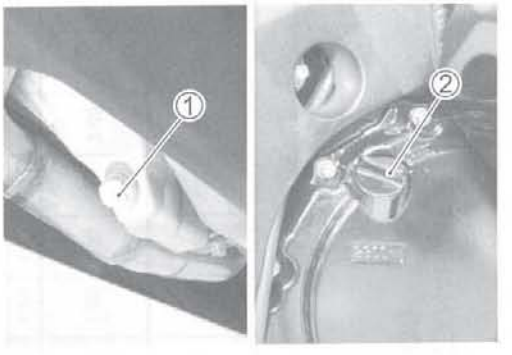

- Tighten the oil drain plug ③ to the specified torque, and pour fresh oil through the oil filler. The engine will hold about 2.8 L (3.0/2.5 US/Imp qt) of oil. Use an API classification of SF or SG oil with SAE 10 W/40 viscosity.

Oil drain plug: 23 N·m (2.3 kgf-m, 16.5 lb-ft)

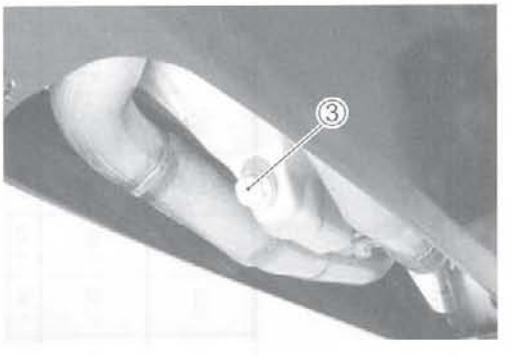

- Start up the engine and allow it to run for several minutes at idling speed.
- Turn off the engine and wait about three minutes, then check the oil level through the inspection window. If the level is below mark "L", add oil to "F" level. If the level is above mark "F", drain oil to "F" level.

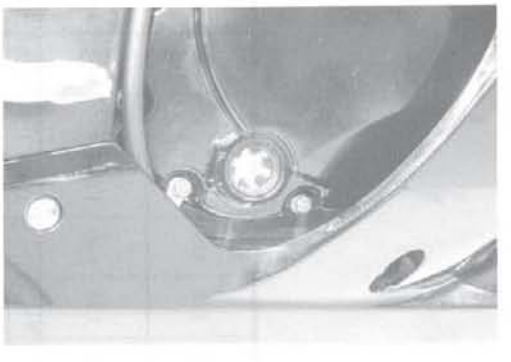

OIL FILTER REPLACEMENT

- Remove the under cowling. (☞8-3)
- Drain the engine oil as described in the engine oil replacement procedure.
- Remove the oil filter ① with the special tool.

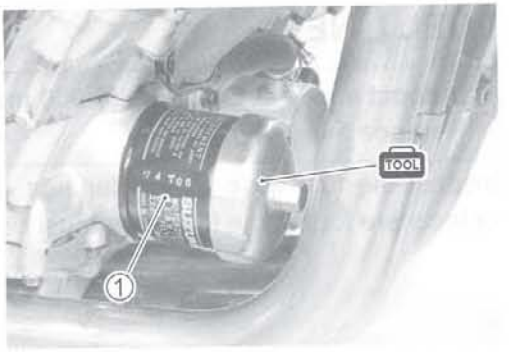

TOOL 09915-40610: Oil filter wrench

- Apply engine oil lightly to the gasket of the new oil filter before installation.

- Install the new oil filter. Turn it by hand until you feel that the oil filter gasket contacts the oil filter mounting surface. Then, tighten the oil filter two full turns with the special tool.

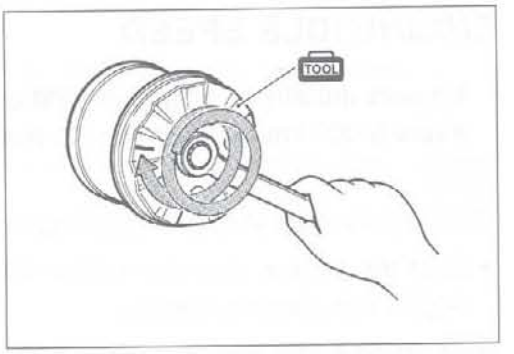

NOTE:

** To properly tighten the oil filter, use the special tool. Never tighten the oil filter by hand.*

** After contacting the gasket, tighten 2 turns.*

- Add new engine oil and check the oil level as described in the engine oil replacement procedure.

DATA NECESSARY AMOUNT OF ENGINE OIL:

Oil change: 2.8 L (3.0/2.5 US/Imp qt)
Oil and filter change: 3.1 L (3.3/2.7 US/Imp qt)
Engine overhaul: 3.6 L (3.8/3.2 US/Imp qt)

CAUTION

ONLY USE A GENUINE SUZUKI MOTORCYCLE OIL FILTER. Other manufacturer's oil filters may differ in thread specifications (thread diameter and pitch), filtering performance and durability which may lead to engine damage or oil leaks. Also, do not use a genuine Suzuki automobile oil filter on this motorcycle.

FUEL LINE

Inspect every at 6 000 km (4 000 miles, 12 months).
Replace every 4 years.

Inspect the fuel hose ① for damage and fuel leakage. If any defects are found, the fuel hose must be replaced.

ENGINE IDLE SPEED

Inspect initially at 1 000 km (600 miles, 2 months) and every 6 000 km (4 000 miles, 12 months).

NOTE:
Warm up the engine before adjusting the engine idle speed.

- Start the engine, turn the throttle stop screw ① and set the engine idle speed as follows.

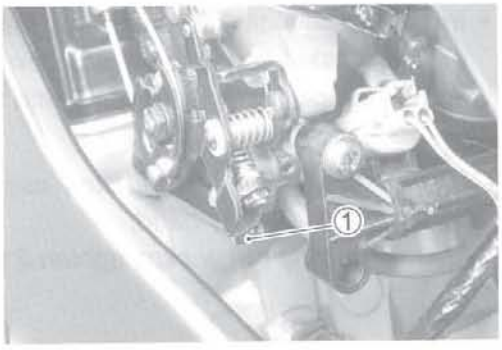

DATA **Engine idle speed: 1 300 ± 100 rpm**

THROTTLE VALVE SYNCHRONIZATION

Inspect initially at 1 000 km (600 miles, 2 months) (E-33 only) and every 12 000 km (7 500 miles, 24 moths).

Inspect the throttle valve synchronization periodically. (☞5-26)

EVAPORATIVE EMISSION CONTROL SYSTEM (E-33 ONLY)

Inspect every 12 000 km (7 500 miles, 24 months). Replace vapor hose every 4 years.

Inspect the evaporative emission control system periodically.

PAIR (AIR SUPPLY) SYSTEM

Inspect every 12 000 km (7 500 miles, 24 months).

Inspect the PAIR (air supply) system periodically. (☞11-6)

THROTTLE CABLE PLAY

Inspect initially at 1 000 km (600 miles, 2 months) and every 6 000 km (4 000 miles, 12 months).

Adjust the throttle cable play Ⓐ as follows.

- Remove the throttle cable clip ①.
- Loosen the lock-nut ② of the throttle pulling cable ③.
- Turn the adjuster ④ in or out until the throttle cable play (at the throttle grip) Ⓐ is between 2.0 – 4.0 mm (0.08 – 0.16 in).
- Tighten the lock-nut ② while holding the adjuster ④.

DATA Throttle cable play Ⓐ: 2.0 – 4.0 mm (0.08 – 0.16 in)

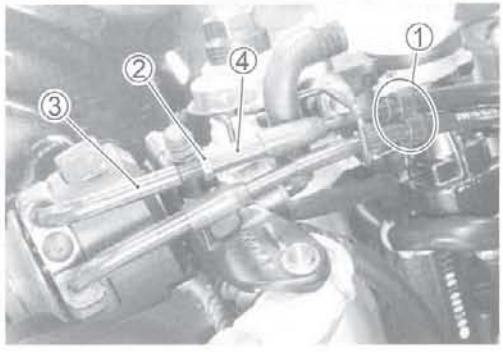

⚠ WARNING

After the adjustment is completed, check that handlebar movement does not raise the engine idle speed and that the throttle grip returns smoothly and automatically.

- Install the throttle cable clip ①.

CLUTCH

Inspect every 6 000 km (4 000 miles, 12 months).

- Remove the under cowling. (☞8-3)
- Turn in the adjuster ① all the way into the clutch lever assembly.
- Remove the clutch release cover.
- Loosen the lock-nut ② and turn out the adjusting screw ③ two or three rotations.
- From that position, slowly turn in the adjusting screw ③ until resistance is felt.
- From this position, turn out the adjusting screw ③ 1/4 rotation, and tighten the lock-nut ②.
- Loosen the lock-nut ④, and turn the cable adjuster ⑤ to obtain 10 – 15 mm (0.4 – 0.6 in) of free play Ⓐ at the clutch lever end.
- Tighten the lock-nut ④.

DATA Clutch lever play Ⓐ: 10 – 15 mm (0.4 – 0.6 in)
Clutch release screw: 1/4 turn out

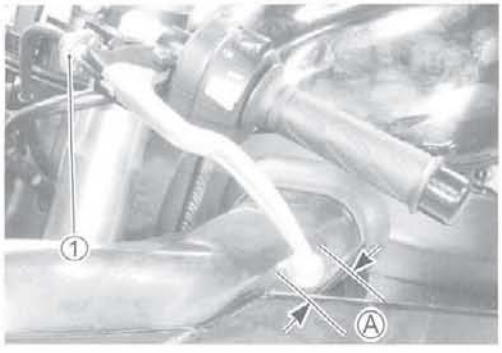

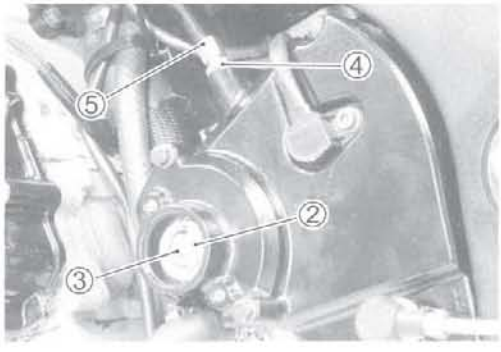

COOLING SYSTEM

Inspect every 6 000 km (4 000 miles, 12 months).
Replace engine coolant every 2 years.
Replace radiator hoses every 4 years.

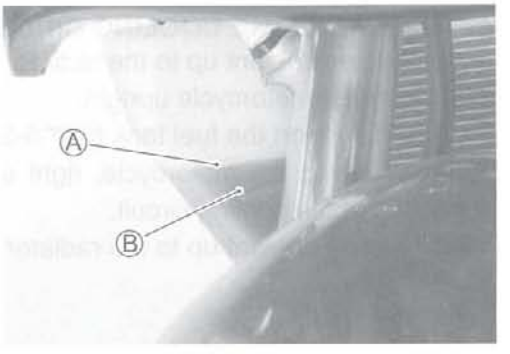

ENGINE COOLANT LEVEL CHECK

- Keep the motorcycle upright.
- Remove the under cowling. (☞8-3)
- Check the engine coolant level by observing the full and lower lines on the engine coolant reservoir.
  Ⓐ Full line Ⓑ Lower line
- If the level is below the lower line, add engine coolant to the full line from the engine coolant reservoir filler.

ENGINE COOLANT CHANGE

- Remove the under cowling. (☞8-3)
- Remove the radiator cap ①.
- Drain engine coolant by disconnecting the radiator hose ② from the pump.

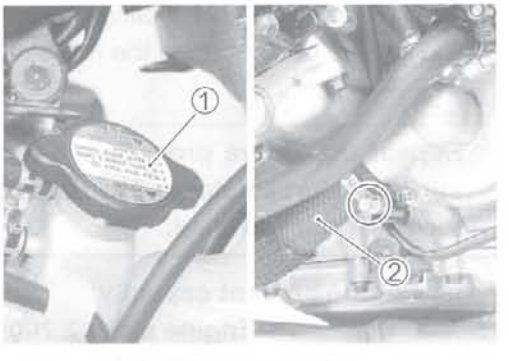

⚠ WARNING

- **Do not open the radiator cap when the engine is hot, as you may be injured by escaping hot liquid or vapor.**
- **Engine coolant may be harmful if swallowed or if it comes in contact with skin or eyes. If engine coolant gets into the eyes or in contact with the skin, flush thoroughly with plenty of water. If swallowed, induce vomiting and call physician immediately!**

- Flush the radiator with fresh water if necessary.
- Connect the radiator hose ③ securely.
- Pour the specified engine coolant up to the radiator inlet.

LLC Engine coolant capacity (excluding reservoir):
2 700 ml (2.9/2.4 US/Imp qt)

- Bleed the air from the engine coolant circuit in the following procedure. (☞2-18)

ENGINE COOLANT INFORMATION (☞7-2)

AIR BLEEDING THE COOLING CIRCUIT

- Add engine coolant up to the radiator inlet.
- Support the motorcycle upright.
- Lift and support the fuel tank (☞5-3)
- Slowly swing the motorcycle, right and left, to bleed the air trapped in the cooling circuit.
- Add engine coolant up to the radiator inlet.

- Start up the engine and bleed air from the radiator inlet completely.
- Add engine coolant up to the radiator inlet.
- Repeat the above procedure until bleed no air from the radiator inlet.
- Loosen the air bleeding bolt ① and check that the engine coolant flows out.

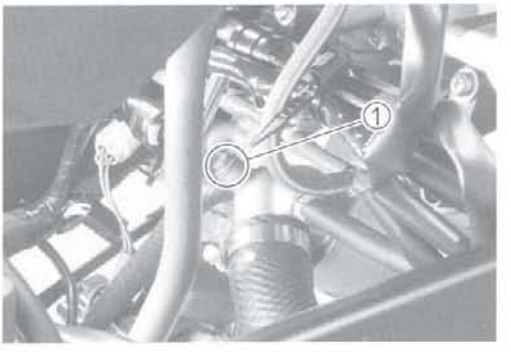

Air bleeding bolt: 5.5 N·m (0.55 kgf-m, 4.0 lb-ft)

- Close the radiator cap securely.
- After warming up and cooling down the engine several times, add engine coolant up to the full level of the reservoir.

CAUTION

Repeat the above procedure several times and make sure that the radiator is filled with engine coolant up to the reservoir full level.

LLC Engine coolant capacity:

Engine side: 2 700 ml (2.9/2.4 US/Imp qt)
Reservoir tank side: 250 ml (0.3/0.2 US/Imp qt)

RADIATOR HOSES

- Remove the under cowling. (☞8-3)
- Check the radiator hoses for crack, damage or engine coolant leakage.
- If any defect is found, replace the radiator hose with a new one.

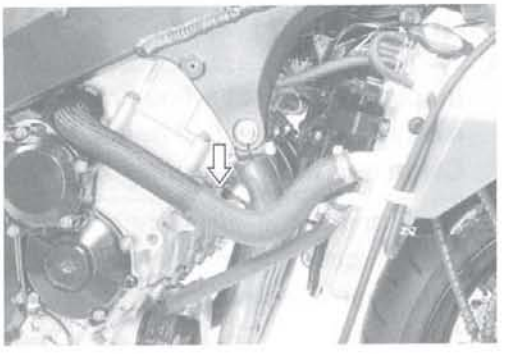

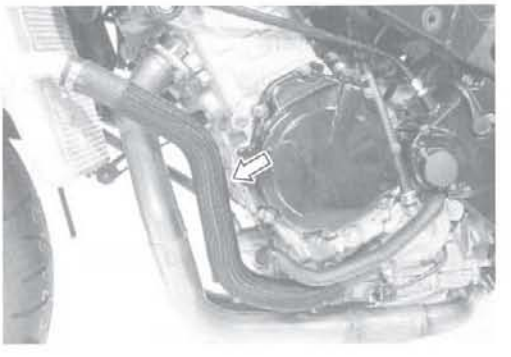

DRIVE CHAIN

Inspect initially at 1 000 km (600 miles, 2 months) and every 6 000 km (4 000 miles, 12 months).
Clean and lubricate every 1 000 km (600 miles).

Visually check the drive chain for the possible defects listed below. (Support the motorcycle by a jack and a wooden block, turn the rear wheel slowly by hand with the transmission shifted to Neutral.)

* Loose pins
* Damaged rollers
* Dry or rusted links
* Kinked or binding links
* Excessive wear
* Improper chain adjustment
* Missing O-ring seals

If any defect is found, the drive chain must be replaced.

NOTE:
When replacing the drive chain, replace the drive chain and sprockets as a set.

Ⓐ O-ring
Ⓑ Grease

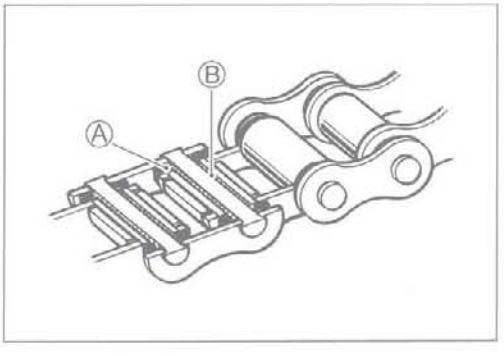

CHECKING

- Remove the axle cotter pin. (For E-03, 28 and 33)
- Loosen the axle nut ①.
- Loosen the chain adjuster lock-nuts ②.
- Tense the drive chain fully by turning both chain adjuster bolts ③.

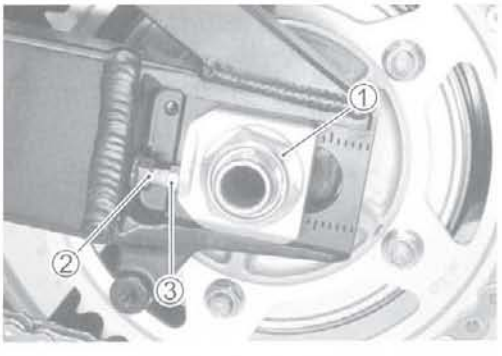

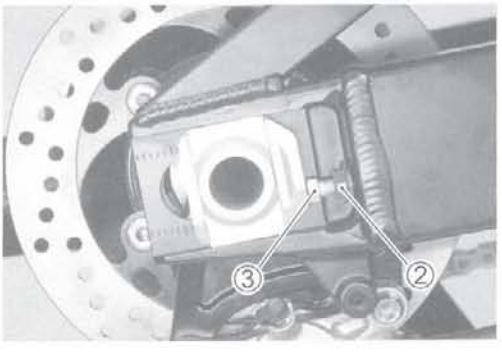

- Count out 21 pins (20 pitches) on the chain and measure the distance between the two points. If the distance exceeds the service limit, the chain must be replaced.

DATA Drive chain 20-pitch length:
Service limit: 336.5 mm (13.25 in)

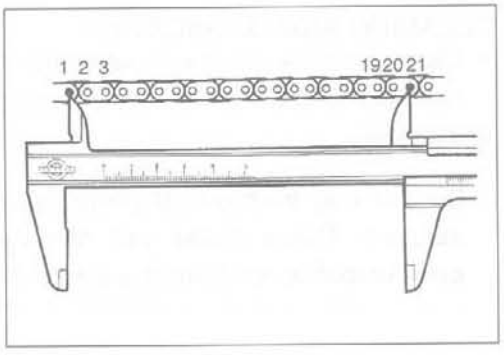

ADJUSTING

- Loosen or tighten both chain adjuster bolts ① until there is 20 – 30 mm (0.8 – 1.2 in) of slack at the middle of the chain between the engine and rear sprockets as shown. The chain adjuster position relative to the reference marks Ⓐ on both sides of the swingarm must be equal to ensure that the front and rear wheels are correctly aligned.

DATA Drive chain slack:
Standard: 20 – 30 mm (0.8 – 1.2 in)

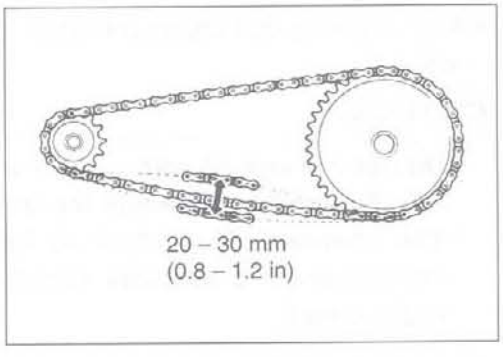

- Place the motorcycle on its side-stand for accurate adjustment.
- After adjusting the drive chain, tighten the axle nut ② to the specified torque.
- Tighten both chain adjuster lock-nuts ③ securely.

Rear axle nut: 100 N·m (10.0 kgf-m, 72.5 lb-ft)

- Install a new cotter pin. (For E-03, 28, 33)
- Recheck the drive chain slack after tightening the axle nut.

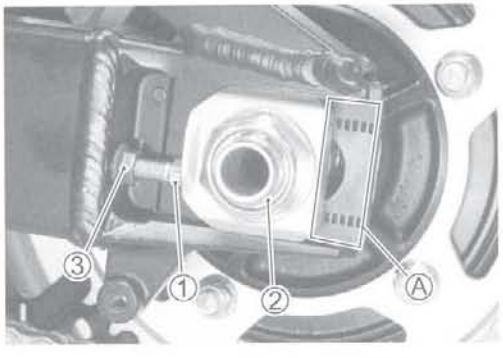

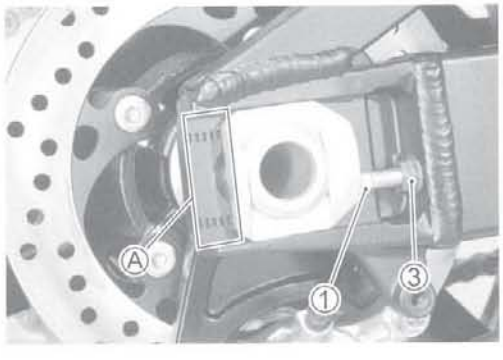

CLEANING AND LUBRICATING

- Clean the drive chain with kerosine. If the drive chain tends to rust quickly, the intervals must be shortened.

CAUTION

Do not use trichloroethylene, gasoline or any similar solvent. These fluids will damage the O-rings. Use only kerosine to clean the drive chain.

- After washing and drying the chain, oil it with a heavyweight motor oil.

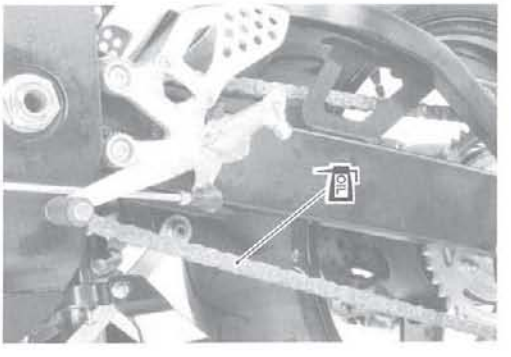

CAUTION

*** Do not use any oil sold commercially as "drive chain oil". Such oil can damage the O-rings.**
*** The standard drive chain is RK525SMOZ7. Suzuki recommends to use this standard drive chain as a replacement.**

BRAKE

(BRAKE)
Inspect initially at 1 000 km (600 miles, 2 months) and every 6 000 km (4 000 miles, 12 months).

(BRAKE HOSE AND BRAKE FLUID)
Inspect every 6 000 km (4 000 miles, 12 months). Replace hoses every 4 years. Replace fluid every 2 years.

BRAKE FLUID LEVEL CHECK

- Keep the motorcycle upright and place the handlebars straight.
- Check the brake fluid level relative to the lower limit lines on the front and rear brake fluid reservoirs.
- When the level is below the lower limit line, replenish with brake fluid that meets the following specification.

Specification and Classification: DOT 4

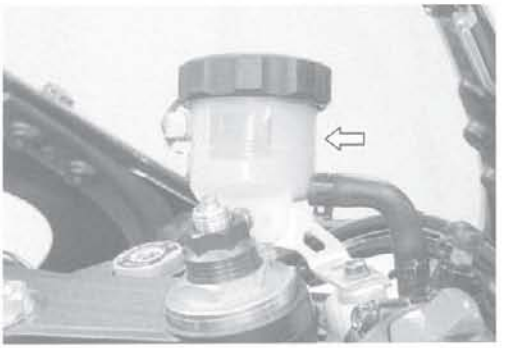

WARNING

*** The brake system of this motorcycle is filled with a glycol-based brake fluid. Do not use or mix different types of fluid such as silicone-based and petroleum-based fluids. Do not use any brake fluid taken from old, used or unsealed containers. Never re-use brake fluid left over from the last servicing or stored for a long period of time.**

*** Brake fluid, if it leaks, will interfere with safe running and immediately discolor painted surfaces. Check the brake hoses and hose joints for cracks and fluid leakage before riding.**

BRAKE PADS

Front brake

The extent of brake pad wear can be checked by observing the grooved limit line Ⓐ on the pad. When the wear exceeds the grooved limit line, replace the pads with the new ones. (☞8-60)

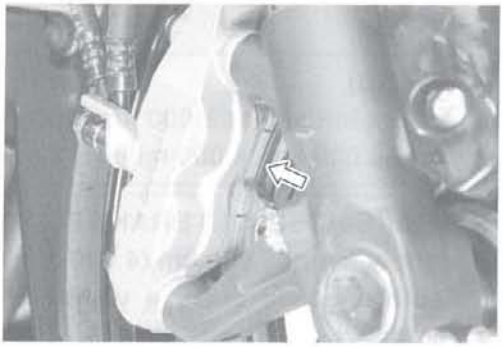

CAUTION

Replace the brake pads as a set, otherwise braking performance will be adversely affected.

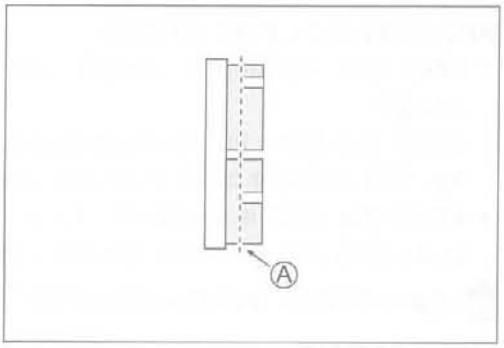

Rear brake

The extent of brake pad wear can be checked by observing the grooved limit line Ⓐ on the pad. When the wear exceeds the grooved limit line, replace the pads with the new ones. (☞8-72)

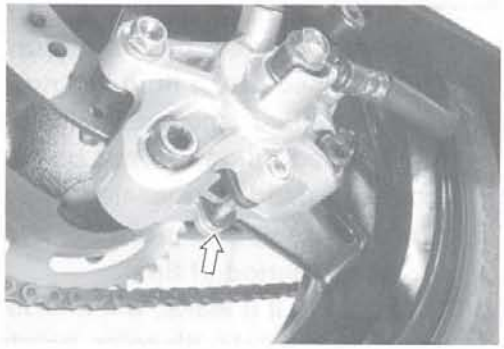

CAUTION

Replace the brake pads as a set, otherwise braking performance will be adversely affected.

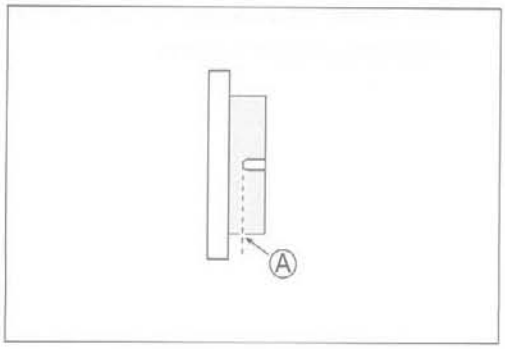

BRAKE PEDAL HEIGHT

- Loosen the lock-nut ①.
- Turn the push rod ② until the brake pedal height becomes 60 – 70 mm (2.4 – 2.8 in) Ⓐ below the top of footrest.
- Tighten the lock-nut ① securely.

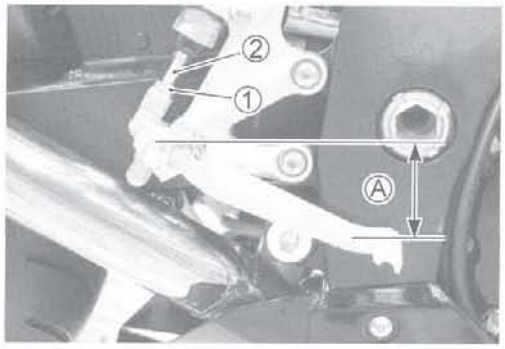

Rear brake master cylinder rod lock-nut:
18 N·m (1.8 kgf-m, 13.0 lb-ft)

DATA Brake pedal height Ⓐ:
Standard: 60 – 70 mm (2.4 – 2.8 in)

BRAKE LIGHT SWITCH

Adjust the rear brake light switch so that the brake light will come on just before pressure is felt when the brake pedal is depressed.

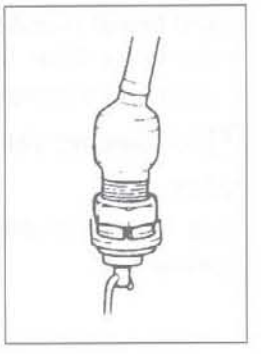

AIR BLEEDING FROM BRAKE FLUID CIRCUIT

Air trapped in the brake fluid circuit acts like a cushion to absorb a large proportion of the pressure developed by the master cylinder and thus interferes with the full braking performance of the brake caliper. The presence of air is indicated by "sponginess" of the brake lever and also by lack of braking force. Considering the danger to which such trapped air exposes the machine and rider, it is essential that after remounting the brake and restoring the brake system to the normal condition, the brake fluid circuit be purged of air in the following manner:

Front brake (Caliper side)

- Fill the master cylinder reservoir to the top of inspection window. Replace the reservoir cap to prevent dirt from entering.
- Attach a hose to the air bleeder valve and insert the free end of the hose into a receptacle.
- Squeeze and release the brake lever several times in rapid succession and squeeze the lever fully without releasing it. Loosen the air bleeder valve by turning it a quarter of a turn so that the brake fluid runs into the receptacle. This will remove the tension of the brake lever causing it to touch the handlebar grip. Then, close the air bleeder valve, pump and squeeze the lever, and open the valve. Repeat this process until fluid flowing into the receptacle no longer contains air bubbles.

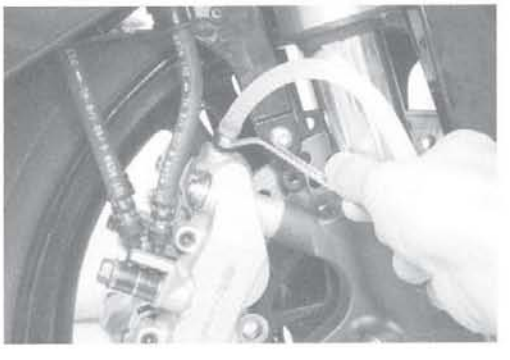

NOTE:

While bleeding the brake system, replenish the brake fluid in the reservoir as necessary. Make sure that there is always some fluid visible in the reservoir.

- Close the air bleeder valve and disconnect the hose. Fill the reservoir with brake fluid to the top of inspection window.

Air bleeder valve: 7.5 N·m (0.75 kgf-m, 5.5 lb-ft)

CAUTION

Handle brake fluid with care: the fluid reacts chemically with paint, plastics, rubber materials, etc.

Front brake (Master cylinder side)

- Bleed air from the master cylinder in the same manner as front brake (caliper side).

Air bleeder valve: 6.0 N·m (0.6 kgf-m, 4.3 lb-ft)

NOTE:
If air trapped in the master cylinder, bleed air from the master cylinder first.

Rear brake

- Bleed air from the rear brake system in the same manner as front brake.

Air bleeder valve: 6.0 N·m (0.6 kgf-m, 4.3 lb-ft)

NOTE:
The only difference of bleeding operation from the front brake is that the rear master cylinder is actuated by a pedal.

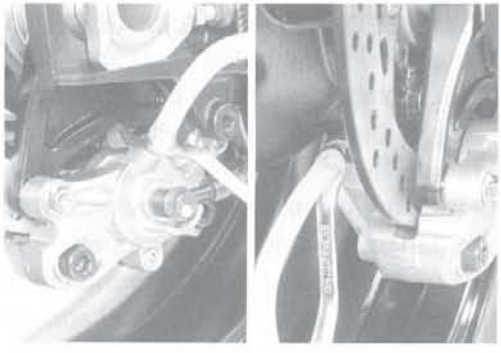

TIRES

Inspect every 6 000 km (4 000 miles, 12 months).

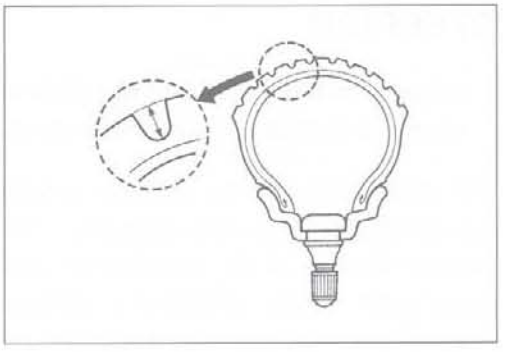

TIRE TREAD CONDITION

Operating the motorcycle with excessively worn tires will decrease riding stability and consequently invite a dangerous situation. It is highly recommended to replace a tire when the remaining depth of tire tread reaches the following specification.

TOOL 09900-20805: Tire depth gauge

DATA Tire tread depth:

Service Limit : FRONT 1.6 mm (0.06 in)
REAR 2.0 mm (0.08 in)

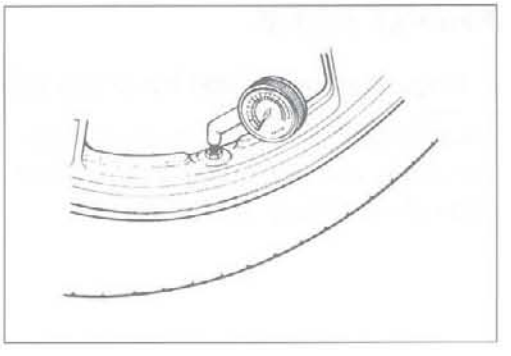

TIRE PRESSURE

If the tire pressure is too high or too low, steering will be adversely affected and tire wear will increase. Therefore, maintain the correct tire pressure for good roadability and a longer tire life. Cold inflation tire pressure is as follows.

DATA Cold inflation tire pressure

Solo riding: Front: 250 kPa (2.50 kgf/cm², 36 psi)
Rear : 250 kPa (2.50 kgf/cm², 36 psi)
Dual riding: Front: 250 kPa (2.50 kgf/cm², 36 psi)
Rear : 250 kPa (2.50 kgf/cm², 36 psi)

CAUTION

The standard tire fitted on this motorcycle is 120/70 ZR17 M/C (58 W) for the front and 180/55 ZR17 M/C (73 W) for the rear. The use of tires other than those specified may cause instability. It is highly recommended to use the specified tires.

DATA TIRE TYPE

DUNLOP (Front: D218F, Rear: D218).....E-03 ,28, 33
BRIDGESTONE (Front: BT014F SF, Rear: BT014R F)...Others

STEERING

Inspect initially at 1 000 km (600 miles, 2 months) and every 12 000 km (7 500 miles, 24 months) thereafter.

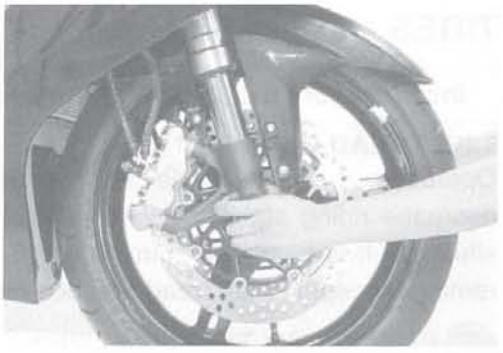

The steering should be adjusted properly for smooth turning of the handlebars and safe operation. Overtight steering prevents smooth turning of the handlebars and too loose steering will cause poor stability. Check that there is no play in the front fork. Support the motorcycle so that the front wheel is off the ground. With the wheel facing straight ahead, grasp the lower fork tubes near the axle and pull forward. If play is found, readjust the steering. (☞8-31)

FRONT FORK

Inspect every 12 000 km (7 500 miles, 24 months).

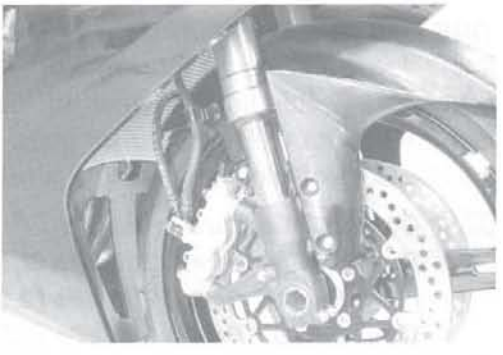

Inspect the front forks for oil leakage, scoring or scratches on the outer surface of the inner tubes. Replace any defective parts, if necessary. (☞8-15)

REAR SUSPENSION

Inspect every 12 000 km (7 500 miles, 24 months).

Inspect the rear shock absorber for oil leakage and check that there is no play in the swingarm. Replace any defective parts if necessary. (☞8-47)

EXHAUST PIPE BOLT AND MUFFLER BOLT AND NUT

Tighten initially at 1 000 km (600 miles, 2 months) and every 12 000 km (7 500 miles, 24 months) thereafter.

- Tighten the exhaust pipe bolts, muffler mounting bolt and nut to the specified torque.

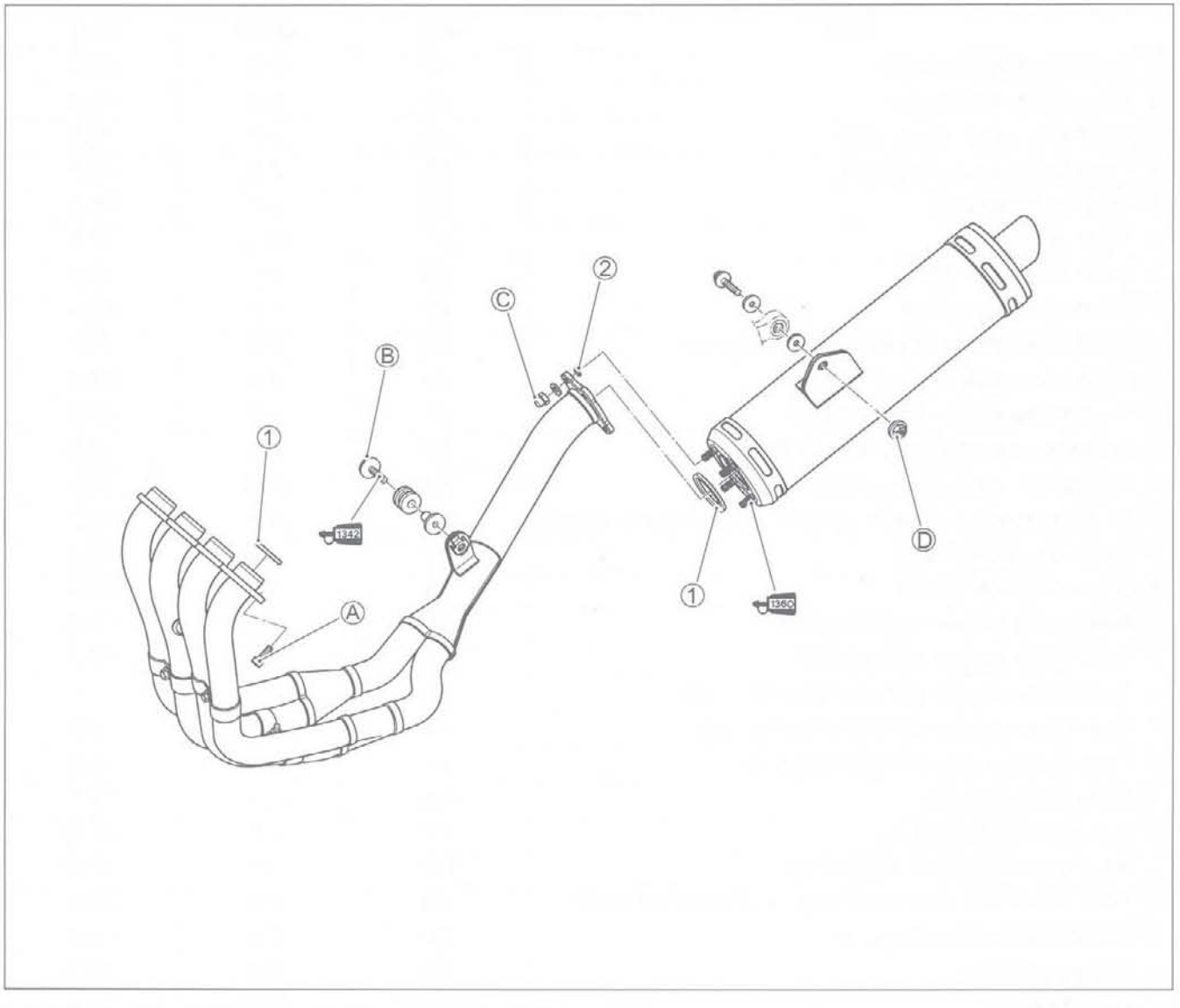

①	Gasket	Ⓑ	Exhaust pipe mounting bolt
②	O-ring	Ⓒ	Muffler connecting nut
Ⓐ	Exhaust pipe bolt	Ⓓ	Muffler mounting nut

ITEM	N·m	kgf-m	lb-ft
ⒶⒷⒹ	23	2.3	16.5
Ⓒ	25	2.5	18.0

CAUTION

Replace the gaskets and O-rings with the new ones.

CHASSIS BOLTS AND NUTS

Tighten initially at 1 000 km (600 miles, 2 months) and every 6 000 km (4 000 miles, 12 months).

Check that all chassis bolts and nuts are tightened to their specified torque. (Refer to page 2-31 for the locations of the following nuts and bolts on the motorcycle.)

Item	N·m	kgf-m	lb-ft
① Steering stem head nut	90	9.0	65.0
② Steering stem lock-nut	80	8.0	58.0
③ Front fork upper clamp bolt	23	2.3	16.5
④ Front fork lower clamp bolt	23	2.3	16.5
⑤ Front fork cap bolt	35	3.5	25.5
⑥ Front axle	100	10.0	72.5
⑦ Front axle pinch bolt	23	2.3	16.5
⑧ Handlebar clamp bolt	23	2.3	16.5
⑨ Front brake master cylinder mounting bolt	10	1.0	7.0
⑩ Front brake caliper mounting bolt	39	3.9	28.0
⑪ Front brake caliper housing bolt	22	2.2	16.0
⑫ Brake hose union bolt (Front & Rear)	23	2.3	16.5
⑬ Air bleeder valve (Front brake caliper)	7.5	0.75	5.5
⑭ Air bleeder valve (Master cylinder & Rear brake caliper)	6.0	0.6	4.3
⑮ Brake disc bolt (Front)	23	2.3	16.5
⑯ Brake disc bolt (Rear)	35	3.5	25.5
⑰ Rear brake caliper mounting bolt	25	2.5	18.0
⑱ Rear brake caliper housing bolt	37	3.7	27.0
⑲ Rear brake master cylinder mounting bolt	10	1.0	7.0
⑳ Rear brake master cylinder rod lock-nut	18	1.8	13.0
㉑ Front footrest bracket mounting bolt	23	2.3	16.5
㉒ Swingarm pivot nut	100	10.0	72.5
㉓ Swingarm pivot lock-nut	90	9.0	65.0
㉔ Rear shock absorber bracket nut	115	11.5	83.0
㉕ Rear shock absorber mounting nut (Upper & Lower)	50	5.0	36.0
㉖ Cushion lever mounting nut	78	7.8	56.5
㉗ Cushion rod nut	78	7.8	56.5
㉘ Rear axle nut	100	10.0	72.5
㉙ Rear sprocket nut	60	6.0	43.5
㉚ Steering damper bolt/nut	23	2.3	16.5

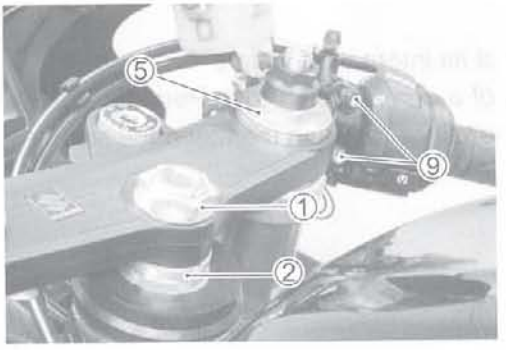
5
9
1
2

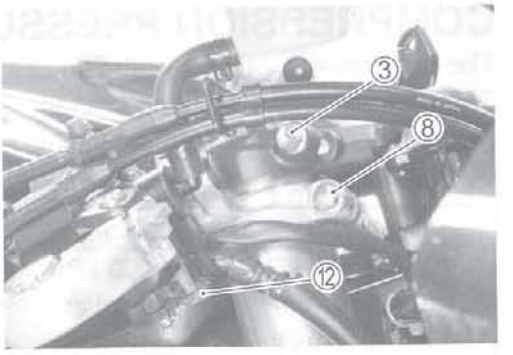
3
8
12

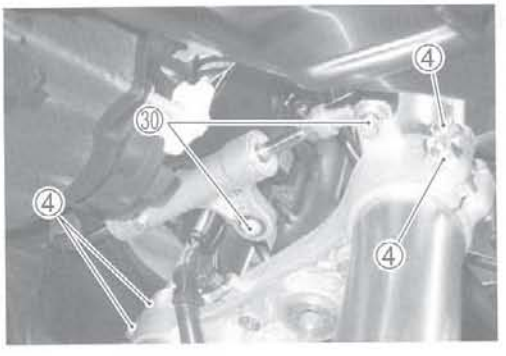
4
30
4
4

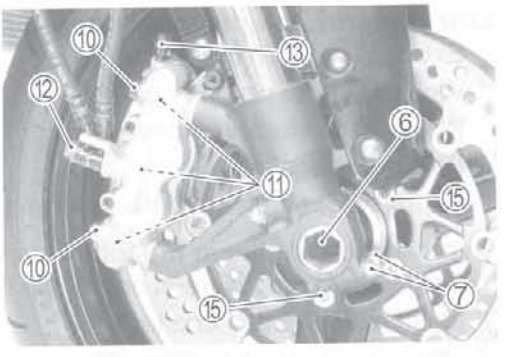
10
13
12
6
11
15
10
7
15

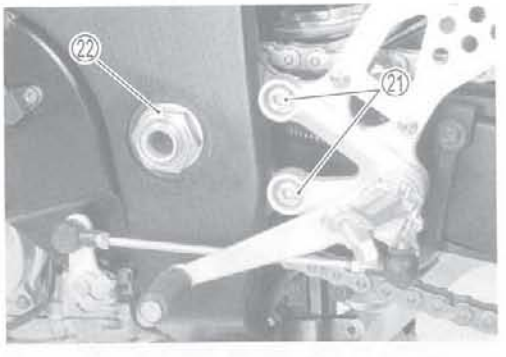
22
21

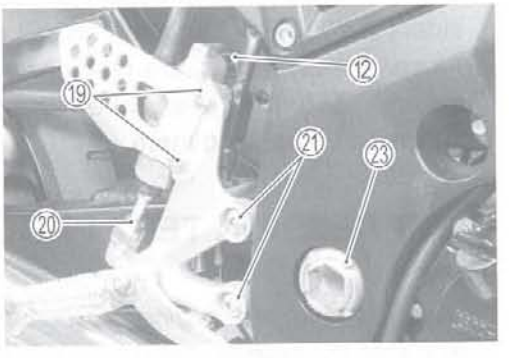
12
19
21
23
20

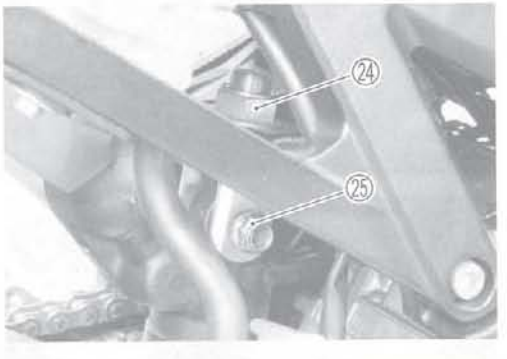
24
25

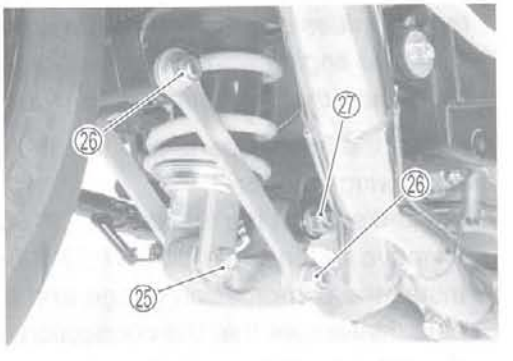
26
27
26
25

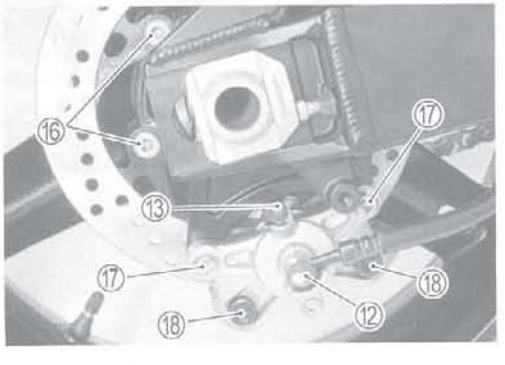
16
17
13
17
18
18
12

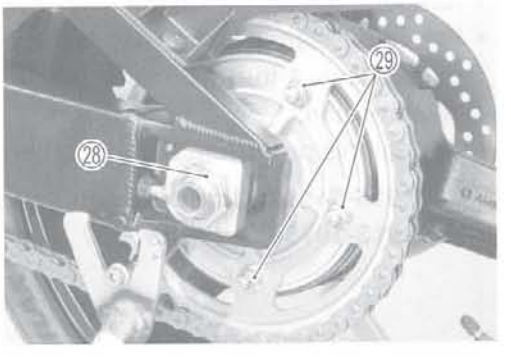
29
28

COMPRESSION PRESSURE CHECK

The compression pressure reading of a cylinder is a good indicator of its internal condition.
The decision to overhaul the cylinder is often based on the results of a compression test. Periodic maintenance records kept at your dealership should include compression readings for each maintenance service.

COMPRESSION PRESSURE SPECIFICATION

Standard	Limit	Difference
1 100 – 1 500 kPa (11 – 15 kgf/cm² 156 – 213 psi)	900 kPa (9 kgf/cm² 128 psi)	200 kPa (2 kgf/cm² 28 psi)

Low compression pressure can indicate any of the following conditions:

* Excessively worn cylinder walls
* Worn piston or piston rings
* Piston rings stuck in grooves
* Poor valve seating
* Ruptured or otherwise defective cylinder head gasket

Overhaul the engine in the following cases:

* Compression pressure in one of the cylinders is 900 kPa (9 kgf/cm², 128 psi) and less.
* The difference in compression pressure between any two cylinders is 200 kPa (2 kgf/cm², 28 psi) and more.
* All compression pressure readings are below 1 100 kPa (11 kgf/cm², 156 psi) even when they measure 900 kPa (9 kgf/cm², 128 psi) and more.

COMPRESSION TEST PROCEDURE

NOTE:

* *Before testing the engine for compression pressure, make sure that the cylinder head nuts are tightened to the specified torque values and the valves are properly adjusted.*
* *Have the engine warmed up before testing.*
* *Make sure that the battery is fully-charged.*

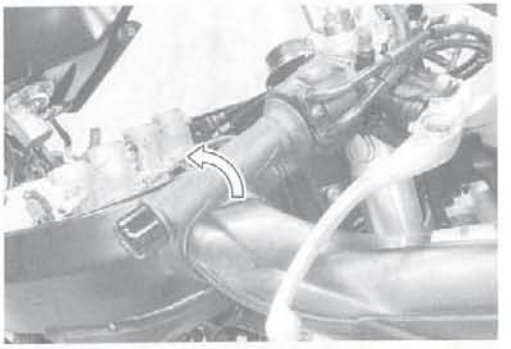

Remove the related parts and test the compression pressure in the following manner.

- Lift and support the fuel tank. (☞5-3)
- Remove all the spark plugs. (☞2-5)
- Install the compression gauge and adaptor in the spark plug hole. Make sure that the connection is tight.
- Keep the throttle grip in the fully opened position.
- Press the starter button and crank the engine for a few seconds. Record the maximum gauge reading as the cylinder compression.
- Repeat this procedure with the other cylinders.

TOOL 09915-64512: Compression gauge set
09913-10750: Adaptor

OIL PRESSURE CHECK

Check the engine oil pressure periodically. This will give a good indication of the condition of the moving parts.

OIL PRESSURE SPECIFICATION

200 – 500 kPa (2.0 – 5.0 kgf/cm², 28 – 71 psi) at 3 000 r/min., Oil temp. at 60 °C (140 °F)

If the oil pressure is lower or higher than the specification, the following causes may be considered.

LOW OIL PRESSURE

* Clogged oil filter
* Oil leakage from the oil passage
* Damaged O-ring
* Defective oil pump
* Combination of the above items

HIGH OIL PRESSURE

* Engine oil viscosity is too high
* Clogged oil passage
* Combination of the above items

OIL PRESSURE TEST PROCEDURE

Start the engine and check if the oil pressure indicator light is turned on. If the light stays on, check the oil pressure indicator light circuit. If the circuit is OK, check the oil pressure in the following manner.

- Remove the under cowling. (☞8-3)
- Remove the main oil gallery plug ①.
- Install the oil pressure gauge and adaptor into the main oil gallery.
- Warm up the engine as follows:
  Summer: 10 min. at 2 000 r/min.
  Winter: 20 min. at 2 000 r/min.
- After warming up, increase the engine speed to 3 000 r/min. (observe the tachometer), and read the oil pressure gauge.

TOOL 09915-74521: Oil pressure gauge hose
09915-74540: Oil pressure gauge attachment
09915-77331: Meter (for high pressure)

Oil gallery plug (M16): 35 N·m (3.5 kgf-m, 26.5 lb-ft)

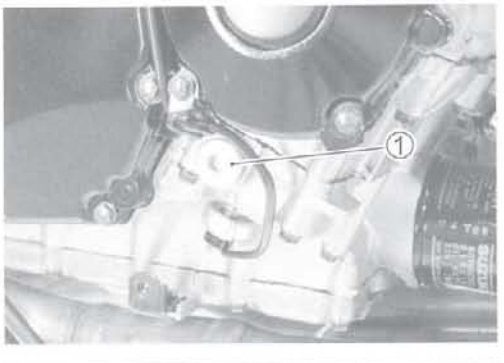

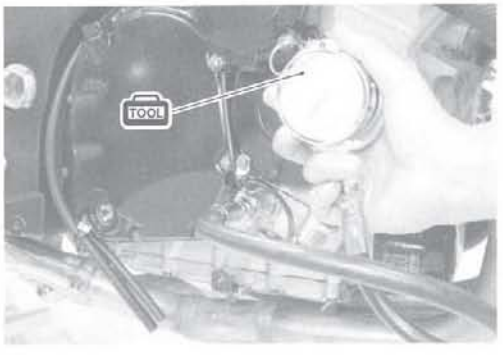

ENGINE

CONTENTS

ENGINE COMPONENTS REMOVABLE WITH ENGINE IN PLACE 3- 2
ENGINE REMOVAL AND INSTALLATION.....3- 3
ENGINE REMOVAL 3- 3
ENGINE INSTALLATION.....3-10
ENGINE DISASSEMBLY.....3-16
ENGINE COMPONENTS INSPECTION AND SERVICE 3-29
CYLINDER HEAD COVER.....3-29
CMP SENSOR.....3-29
PAIR REED VALVE 3-29
PCV HOSE 3-30
CAMSHAFT.....3-30
CAM CHAIN TENSION ADJUSTER.....3-32
CAM CHAIN TENSIONER 3-33
CAM CHAIN GUIDE.....3-33
CYLINDER HEAD AND VALVE.....3-33
CLUTCH 3-45
OIL PUMP.....3-46
STARTER CLUTCH 3-47
GENERATOR.....3-47
WATER PUMP 3-48
GEARSHIFT SYSTEM 3-48
OIL PRESSURE REGULATOR 3-49
OIL STRAINER.....3-49
TRANSMISSION 3-50
CYLINDER.....3-53
PISTON AND PISTON RING 3-54
CRANKCASE.....3-56
CRANKSHAFT AND CONROD 3-63
CRANKSHAFT JOURNAL BEARING.....3-67
CRANKSHAFT THRUST BEARING.....3-70
ENGINE REASSEMBLY.....3-72

ENGINE COMPONENTS REMOVABLE WITH ENGINE IN PLACE

The parts listed below can be removed and reinstalled without removing the engine from the frame. Refer to page listed in each section for removal and reinstallation instructions.

ENGINE CENTER

ITEM	REMOVAL	INSPECTION	REINSTALLATION
PAIR valve	☞3-16	☞3-29	☞3-104
Starter motor	☞3-16	☞9-14	☞3-105
Crankcase breather cover	☞3-25	——	☞3-84
Thermostat	☞3-18	☞7-10	☞7-10
Cylinder head cover	☞3-16	☞3-29	☞3-104
Camshaft	☞3-17	☞3-30	☞3-98
Intake pipe	☞3-44	——	☞3-44
Oil filter	☞3-25	——	☞3-83
Oil cooler	☞3-25	——	☞7-18
Oil pan	☞3-26	——	☞3-82

ENGINE RIGHT SIDE

ITEM	REMOVAL	INSPECTION	REINSTALLATION
Exhaust pipe and muffler	☞3-5	☞6-4	☞6-4
Cam chain tension adjuster	☞3-17	☞3-32	☞3-101
Clutch cover	☞3-19	——	☞3-95
Clutch (plates)	☞3-19	☞3-45	☞3-94
Primary driven gear	☞3-20	☞3-46	☞3-92
Oil pump	☞3-21	☞3-46	☞3-91
Gearshift shaft	☞3-21	☞3-48	☞3-90
Starter idle gear cover	☞3-22	——	☞3-89
Starter idle gear	☞3-22	——	☞3-88
Starter clutch cover	☞3-22	——	☞3-89
Starter clutch	☞3-23	☞3-47	☞3-88
CKP sensor	☞3-23	☞4-28	☞3-86
Oil pump driven gear	☞3-21	——	☞3-91
Cam chain tensioner	☞3-23	☞3-33	☞3-87
Cam chain guide	☞3-23	☞3-33	☞3-87

ENGINE LEFT SIDE

ITEM	REMOVAL	INSPECTION	REINSTALLATION
Engine sprocket	☞3-8	——	☞3-13
Gear position switch	☞3-25	☞4-50	☞3-84
Generator (cover)	☞3-24	☞3-47	☞3-86
Generator rotor	☞3-24	——	☞3-85
Water pump	☞3-24	☞7-14	☞3-85

ENGINE REMOVAL AND INSTALLATION

ENGINE REMOVAL

Before taking the engine out of the frame, wash the engine using a steam cleaner. Engine removal is sequentially explained in the following steps. Reinstall the engine by reversing the removal procedure.

- Remove the under cowlings. (☞8-3)
- Lift and support the fuel tank. (☞5-3)
- Remove the front seat. (☞8-6)

- Disconnect the battery ⊖ lead wire ①.

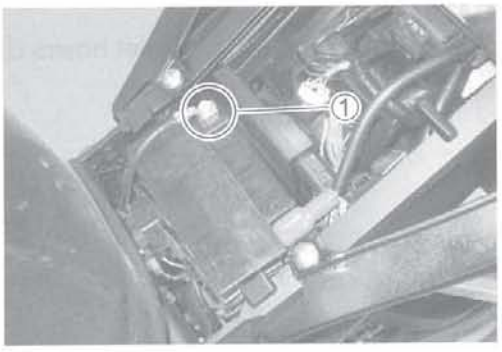

- Drain engine oil. (☞2-12)

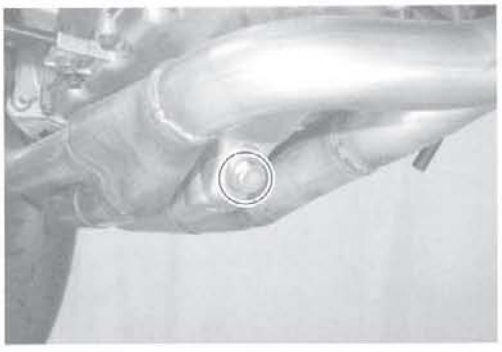

- Drain engine coolant by disconnecting the radiator hose. (☞2-17)

- Remove the air cleaner box ②. (☞5-14)

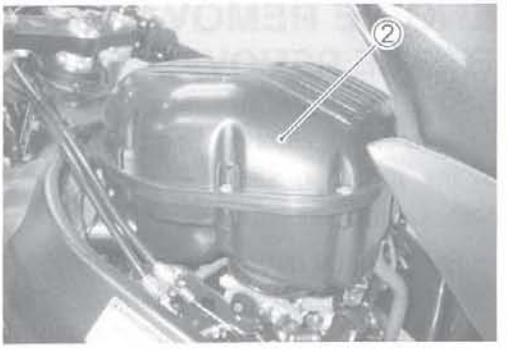

- Remove the throttle body assembly ③. (☞5-15)

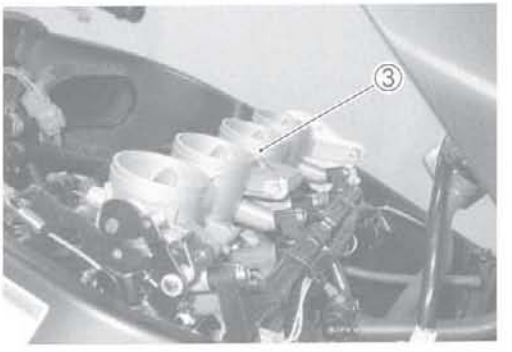

RADIATOR

- Disconnect the radiator inlet hoses ① and ②.

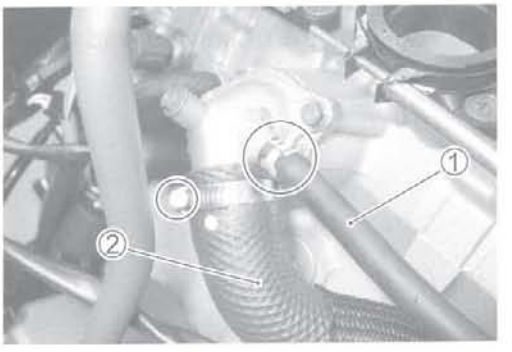

- Disconnect the oil cooler water hose ③.

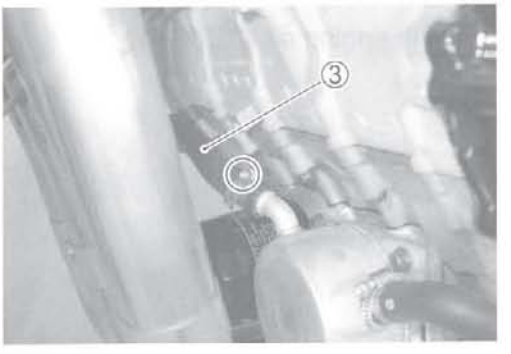

- Disconnect the cooling fan coupler ④.

- Remove the radiator mounting bolts.
- Remove the radiator.

CAUTION

Be careful not to bent the radiator fin.

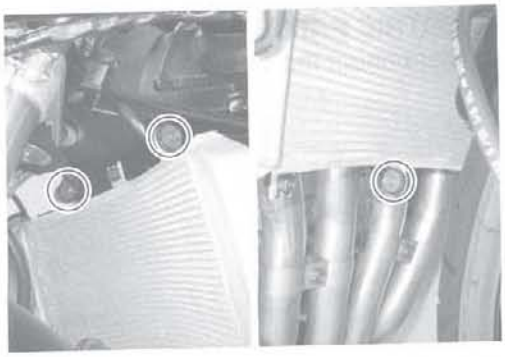

- Remove the front engine cover ⑤.

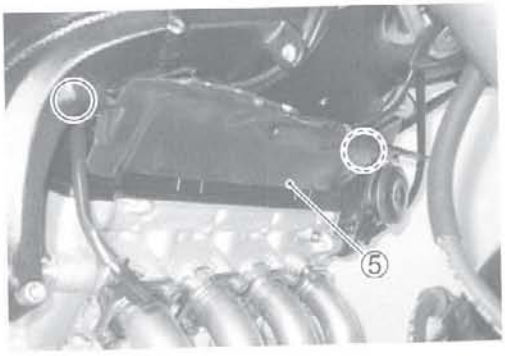

EXHAUST PIPE AND MUFFLER

- Remove the exhaust pipe bolts.

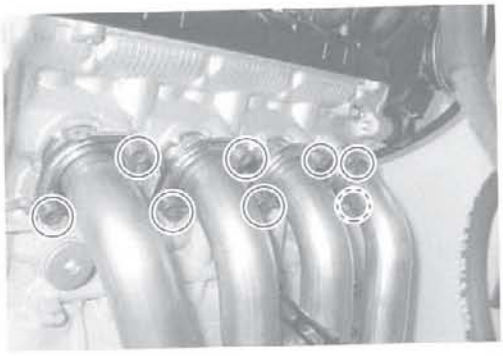

- Remove the exhaust pipe mounting bolt and muffler mounting bolt.
- Remove the exhaust pipe and muffler.

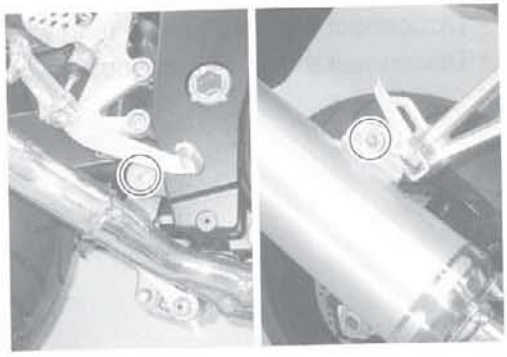

- Remove the radiator mounting bracket ①.

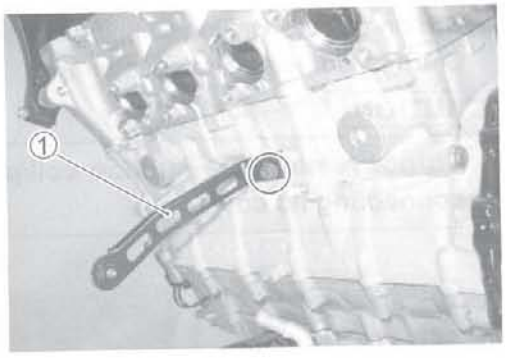

ELECTRIC PARTS AND PAIR HOSE

- Disconnect the oil pressure switch lead wire ①.

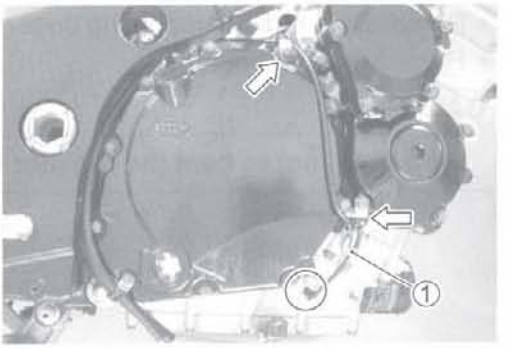

- Disconnect the starter motor lead wire ②.
- Disconnect the engine ground lead wire ③.

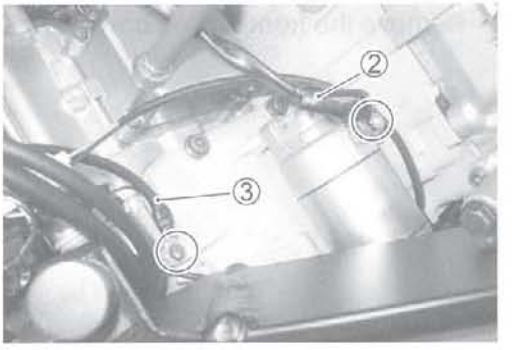

- Disconnect the gear position switch lead wire coupler ④.
- Disconnect the ECT sensor lead wire coupler ⑤.

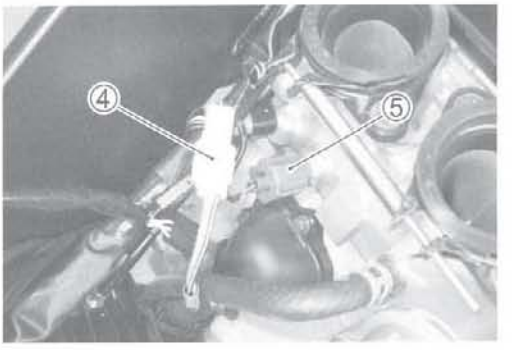

- Disconnect the CKP sensor lead wire coupler ⑥.
- Disconnect the generator coupler ⑦.

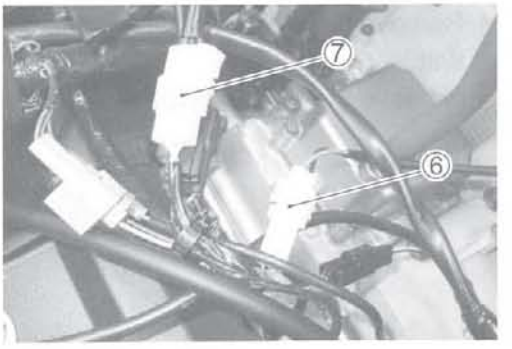

- Disconnect the ignition coil/plug cap lead wire couplers ⑧ and CMP sensor lead wire coupler ⑨.

CAUTION

Do not remove the ignition coil/plug cap before disconnecting its coupler.

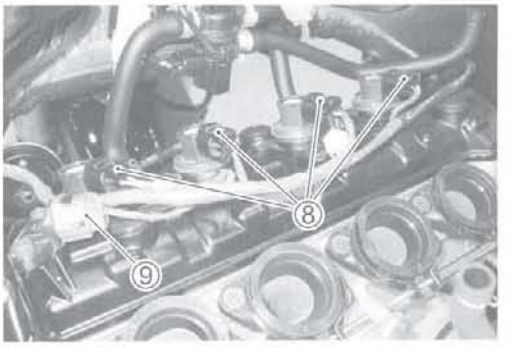

- Remove the ignition coils/plug caps ⑩.

CAUTION

> * **Do not pry up the ignition coil/plug cap with a screw driver or a bar to avoid its damage.**
> * **Be careful not to drop the ignition coil/plug cap to prevent its short or open circuit.**

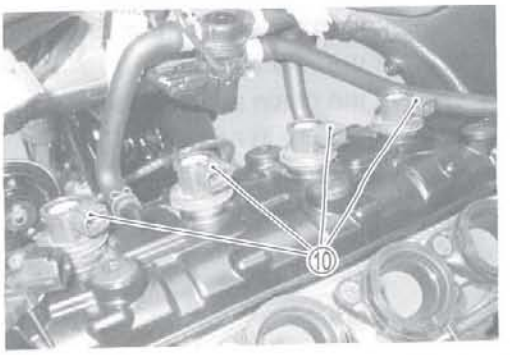

- Disconnect the PAIR hoses ⑪.

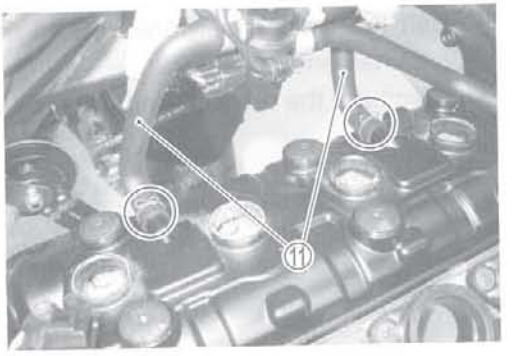

ENGINE SPROCKET AND GEAR SHIFT LEVER

- Remove the gearshift lever ①.
- Remove the engine sprocket cover ②.

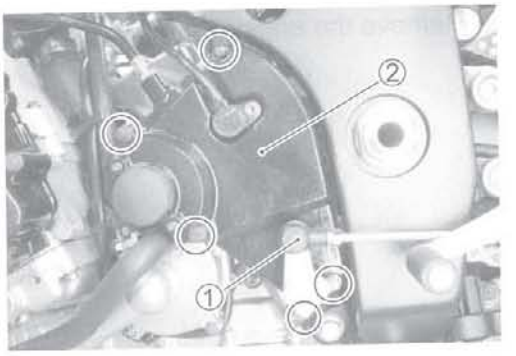

- Remove the clutch push rod ③.

- Remove the speed sensor rotor ④.
- Remove the engine sprocket nut and its washer ⑤.

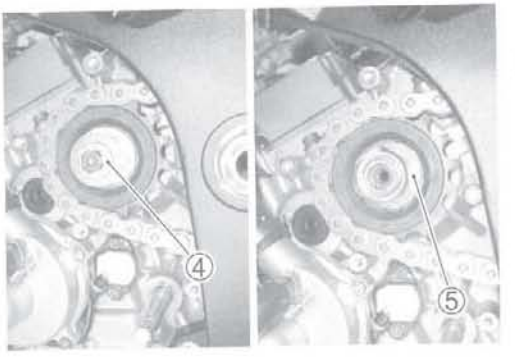

- Remove the cotter pin. (For E-03, 28, 33)
- Loosen the rear axle nut ⑥.
- Loosen the chain adjuster lock-nuts.
- Loosen the chain adjusters ⑦.

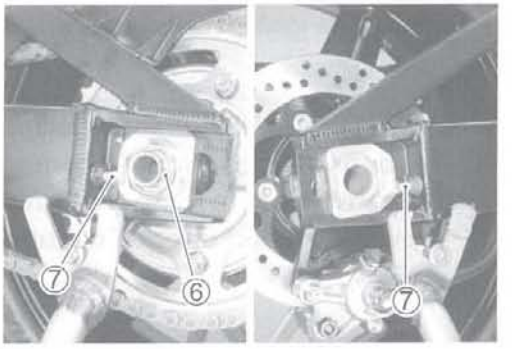

- Push the rear wheel forward and make sure that the drive chain has enough slack.
- Disengage the drive chain from the rear sprocket.

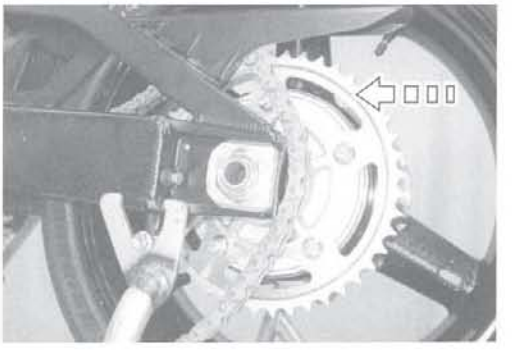

- Remove the engine sprocket ⑧.

ENGINE MOUNTING

- Support the engine using an engine jack.

- Remove the engine mounting bolts ①.

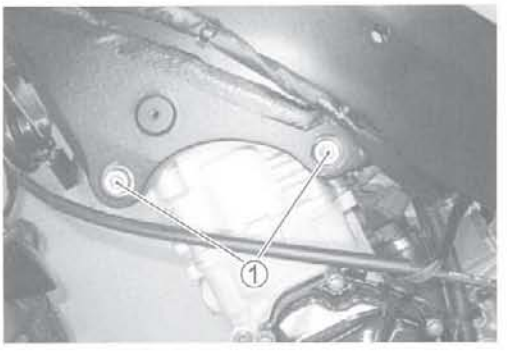

- Loosen the engine mounting pinch bolt ②.
- Remove the engine mounting bolt ③.

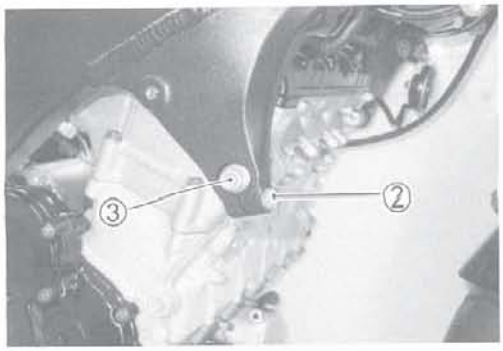

- Remove the engine mounting nut ④.
- Remove the engine mounting thrust adjuster lock-nut ⑤ with the special tool.
- Loosen the engine mounting thrust adjuster ⑥ fully.

TOOL 09940-14990: Engine mounting thrust adjuster socket wrench

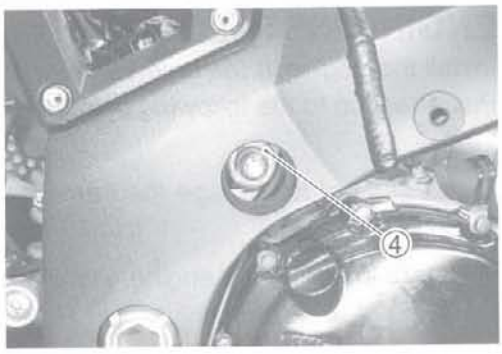

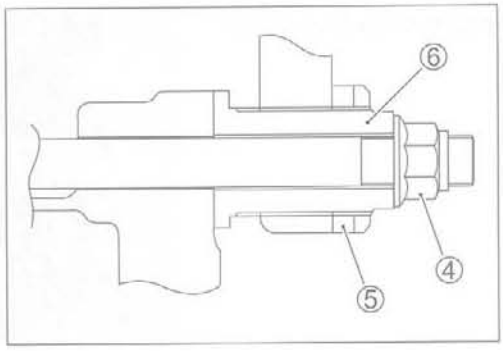

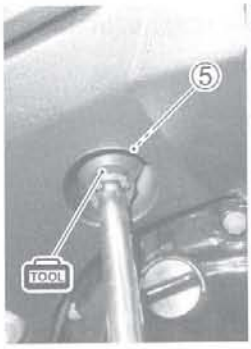

- Remove the engine mounting nut ⑦.
- Loosen the engine mounting thrust adjuster lock-nut ⑧ with the special tool.
- Loosen the engine mounting thrust adjuster ⑨.

TOOL 09940-14990: Engine mounting thrust adjuster socket wrench

NOTE:
Do not remove the engine mounting bolts at this stage.

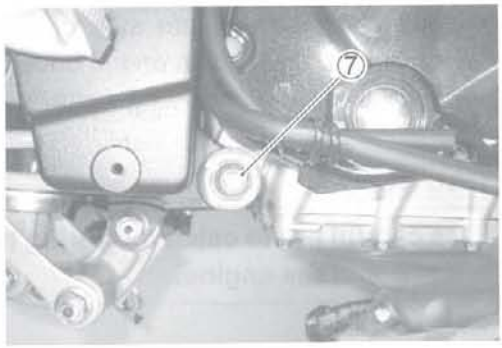

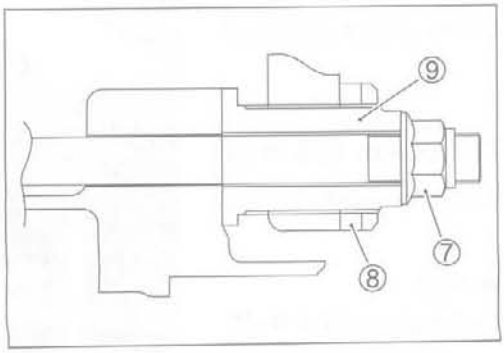

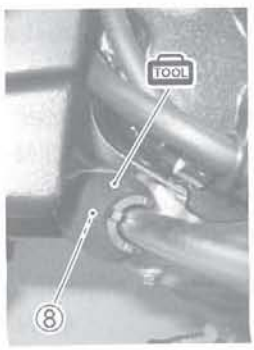

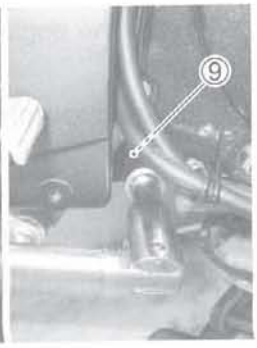

- Remove the engine mounting bolts. Then, take off the drive chain from the driveshaft.
- Remove the engine assembly.

ENGINE INSTALLATION

Install the engine in the reverse order of removal.
Pay attention to the following points:

NOTE:
Be careful not to damage the frame and engine when installing the engine.

- Before installing the engine, install the spacer ①.

- Before installing the engine, install the engine mounting thrust adjusters ② and ③.

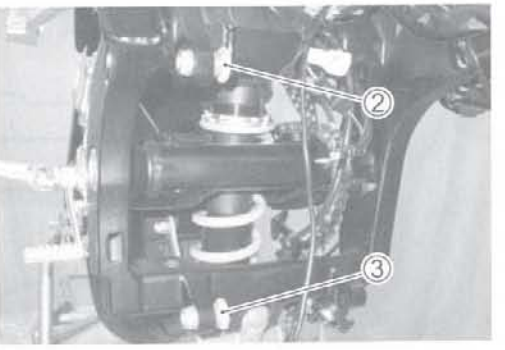

- Gradually raise the rear side of the engine assembly, and then put the drive chain on the driveshaft.
- Install all engine mounting bolts, spacers and tighten them temporarily. (☞3-12)

CAUTION

Be careful not to catch the wiring harness between the frame and the engine.

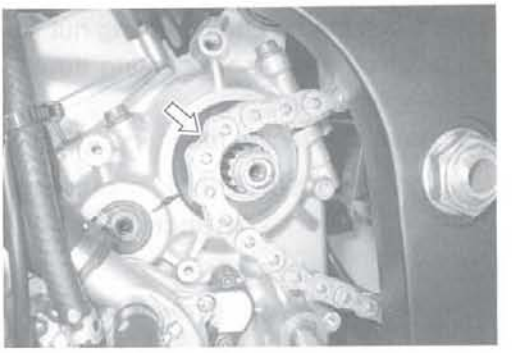

- Tighten the engine mounting thrust adjusters to the specified torque.

Engine mounting thrust adjuster:
23 N·m (2.3 kgf-m, 16.5 lb-ft)

- Tighten the engine mounting thrust adjuster lock-nuts to the specified torque with the special tool.

Engine mounting thrust adjuster lock-nut:
45 N·m (4.5 kgf-m, 32.5 lb-ft)

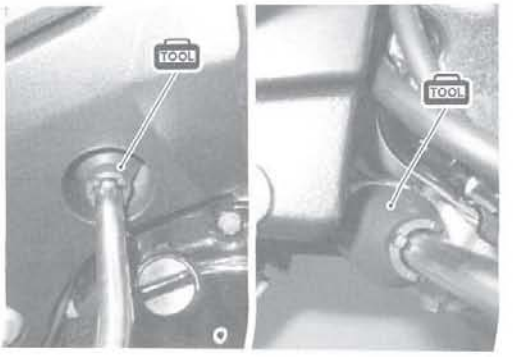

- Tighten all engine mounting bolts and nuts to the specified torque. (☞3-12)

NOTE:
The engine mounting nuts are self-locking. Once the nuts have been removed, they are no longer of any use.

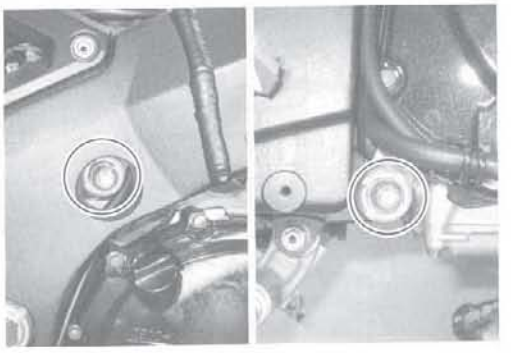

- Apply THREAD LOCK to the engine mounting pinch bolt ①.

1342 99000-32050: THREAD LOCK "1342"

- Tighten the engine mounting pinch bolt ① to the specified torque. (☞3-12)

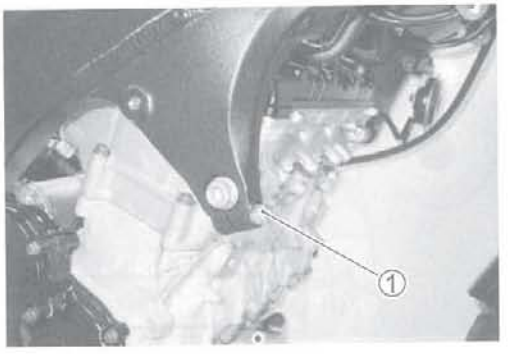

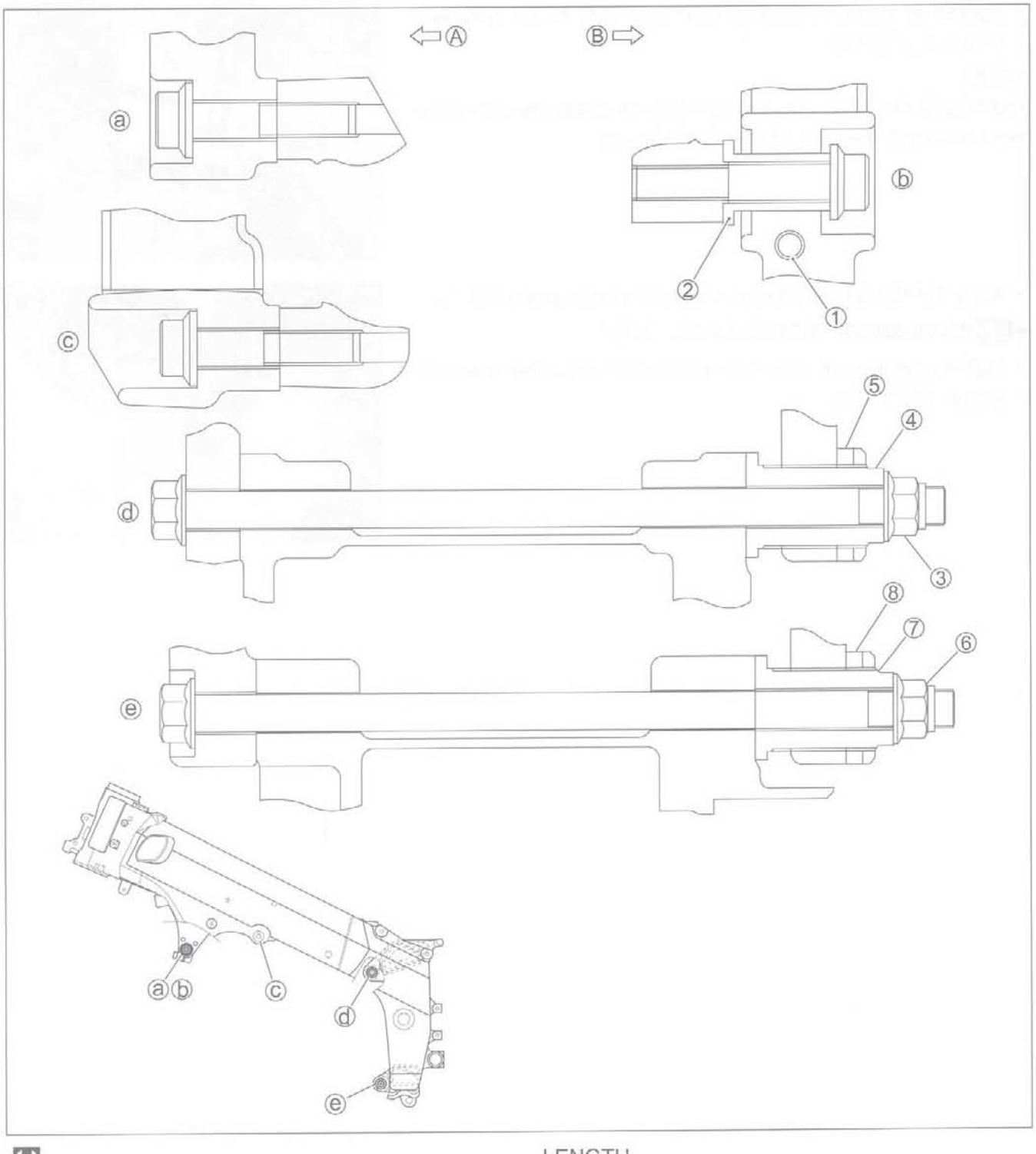

ITEM	N·m	kgf-m	lb-ft
ⓐⓑⓒ	55	5.5	39.8
①④⑦	23	2.3	16.5
③⑥	75	7.5	54.0
⑤⑧	45	4.5	32.5

LENGTH

ITEM		mm	in
Bolt	ⓐⓒ	45	1.77
	ⓑ	55	2.17
	ⓓⓔ	215	8.46
Spacer	②	30.5	1.20
Adjuster	④⑦	40	1.57

Ⓐ Left Ⓑ Right

- Install the engine sprocket and its washer.
- Apply a small quantity of THREAD LOCK to the driveshaft thread portion.

99000-32050: THREAD LOCK "1342"

- Tighten the engine sprocket nut ① to the specified torque.

Engine sprocket nut: 115 N·m (11.5 kgf-m, 83.2 lb-ft)

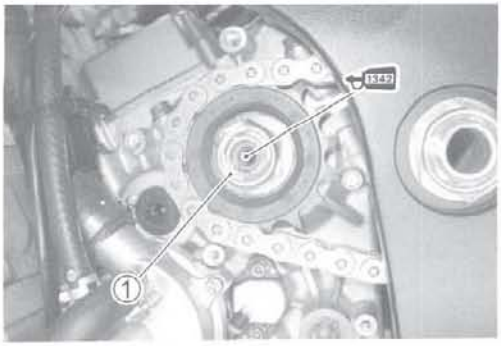

- Install the speed sensor rotor ②.
- Tighten the speed sensor rotor bolt ③ to the specified torque.

Speed sensor rotor bolt: 23 N·m (2.3 kgf-m, 16.5 lb-ft)

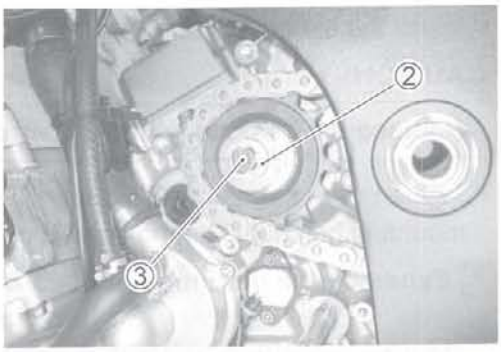

- Apply SUZUKI SUPER GREASE "A" to the clutch push rod end.

99000-25030: SUZUKI SUPER GREASE "A" (USA)
99000-25010: SUZUKI SUPER GREASE "A" (Others)

- Install the engine sprocket cover.

NOTE:
When installing the engine sprocket cover, align the clutch release cylinder hole with the end of clutch push push rod.

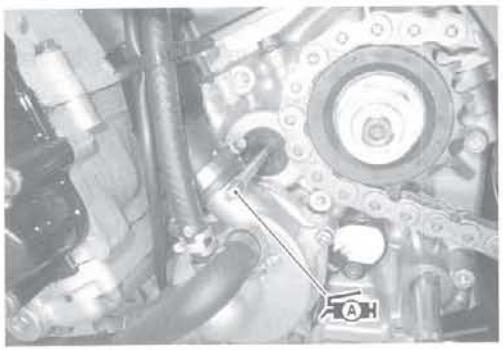

- Tighten the speed sensor bolt ④ to the specified torque.

Speed sensor bolt: 4.5 N·m (0.45 kgf-m, 3.0 lb-ft)

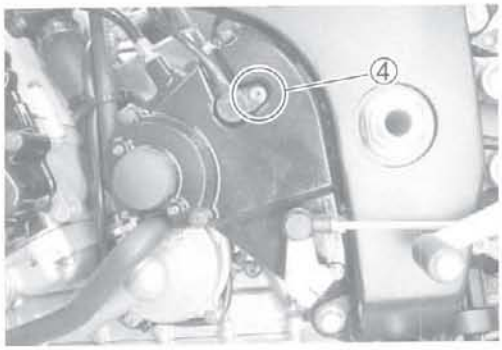

- Install the gearshift lever as shown.

Ⓐ Footrest
Ⓑ 60 – 70 mm (2.4 – 2.8 in)

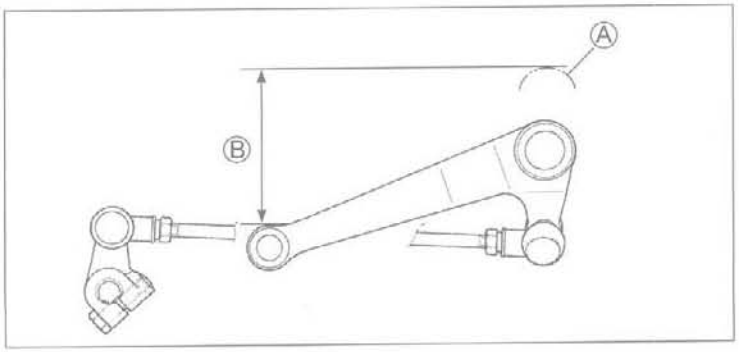

- Install the radiator mounting bracket ①.

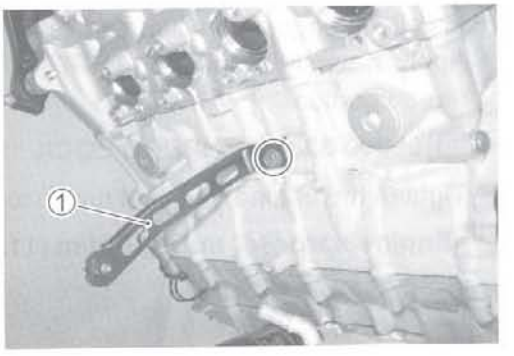

- Install the exhaust pipe and muffler.

CAUTION

Replace the gaskets with the new ones.

- Tighten the exhaust pipe mounting bolts ② and muffler mounting bolt/nut ③ to the specified torque.

Exhaust pipe mounting bolt: 23 N·m (2.3 kgf-m, 16.5 lb-ft)

Muffler mounting bolt/nut: 23 N·m (2.3 kgf-m, 16.5 lb-ft)

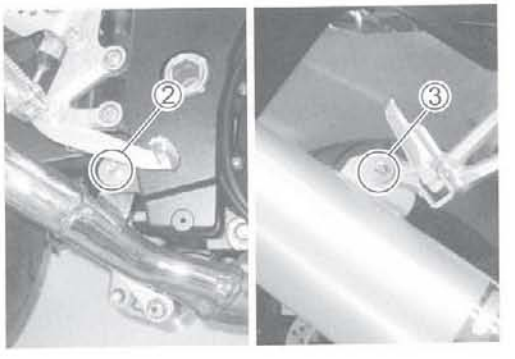

- Tighten the exhaust pipe bolts to the specified torque.

Exhaust pipe bolt: 23 N·m (2.3 kgf-m, 16.5 lb-ft)

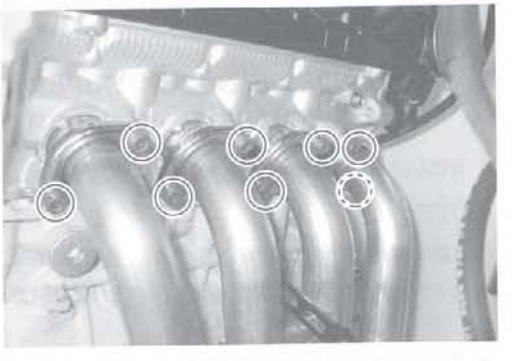

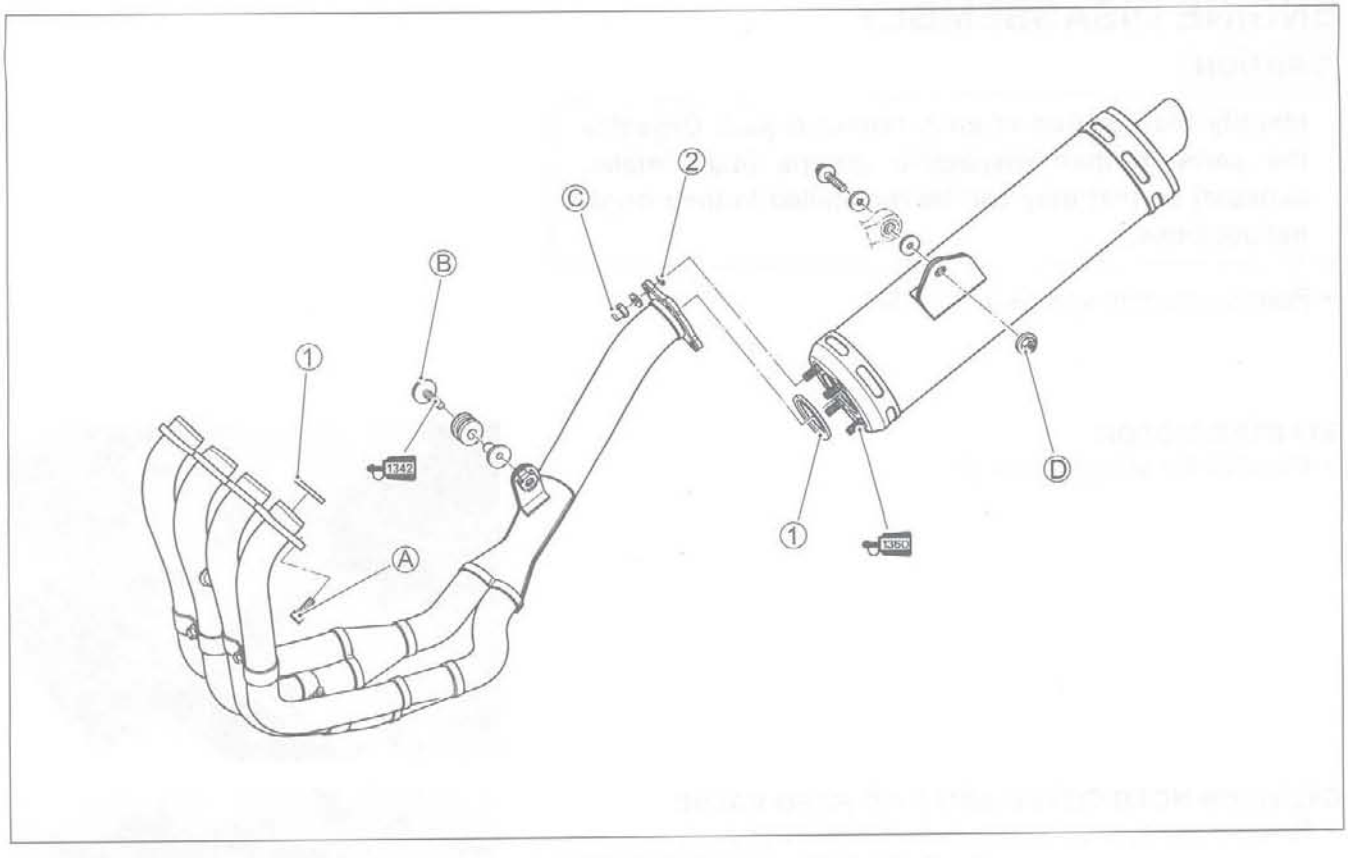

①	Gasket	Ⓑ	Exhaust pipe mounting bolt
②	O-ring	Ⓒ	Muffler connecting nut
Ⓐ	Exhaust pipe bolt	Ⓓ	Muffler mounting bolt/nut

ITEM	N·m	kgf-m	lb-ft
ⒶⒷⒹ	23	2.3	16.5
Ⓒ	25	2.5	18.0

CAUTION

Replace the gaskets and O-rings with the new ones.

- Perform service and adjustment in the following items.

* Engine oil (☞2-13)
* Engine coolant (☞2-18)
* Throttle cable play (☞2-16)
* Clutch (☞2-16)
* Idling adjustment (☞2-14)
* Throttle valve synchronization (☞5-26)
* Drive chain slack (☞2-21)
* Wiring harness, cables and hoses (☞10-16)

ENGINE DISASSEMBLY

CAUTION

Identify the position of each removed part. Organize the parts in their respective groups (e.g., intake, exhaust) so that they can be reinstalled in their original positions.

- Remove the spark plugs. (☞2-5)

STARTER MOTOR

- Remove the starter motor ①.

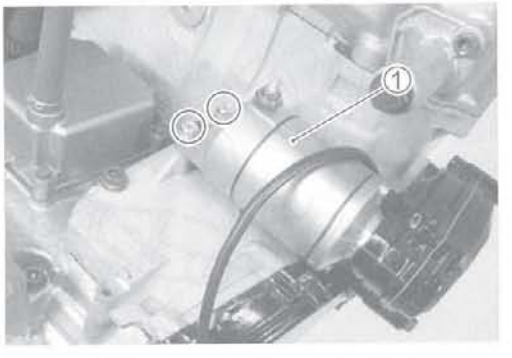

CYLINDER HEAD COVER AND PAIR REED VALVE

- Remove the cylinder head cover ① and its gaskets.

- Remove the PAIR reed valves ② and their gaskets.

CAMSHAFTS

- Remove the valve timing inspection cap ①.

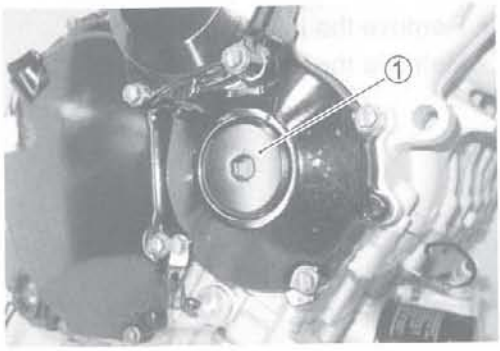

- Turn the crankshaft to bring the line Ⓐ on the starter clutch to the index mark Ⓑ of the valve timing inspection hole and also to bring the cams to the position as shown.

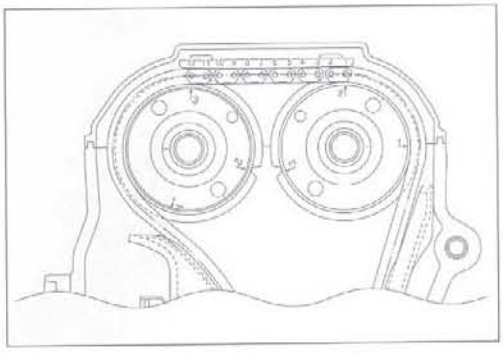

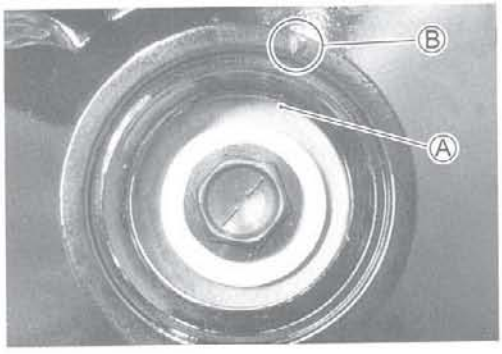

- Remove the cam chain tension adjuster cap bolt ②.
- Remove the cam chain tension adjuster ③ with the spring and ball.

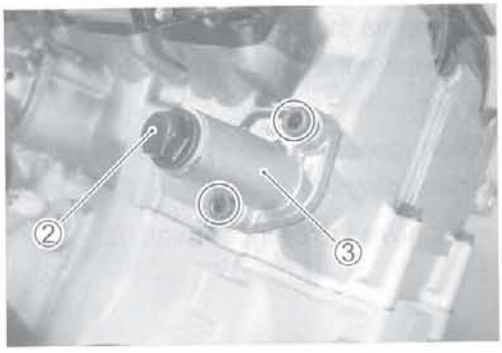

- Remove the cam chain guide ④.
- Remove the camshaft journal holders ⑤.
- Remove the dowel pins.

CAUTION

Be sure to loosen the camshaft journal holder bolts evenly by shifting the wrench in the descending order of numbers.

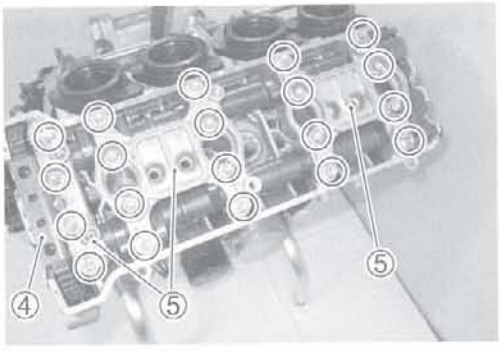

- Remove the intake camshaft ⑥.
- Remove the exhaust camshaft ⑦.

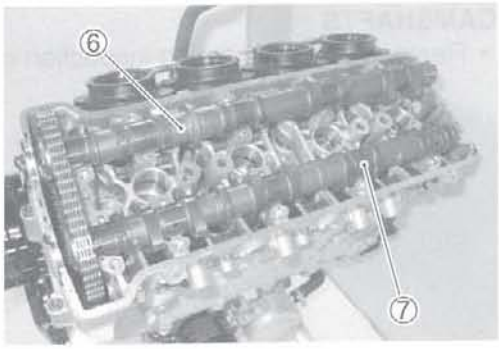

CYLINDER HEAD

- Remove the water hose ①.
- Remove the thermostat cover ② and thermostat.

THERMOSTAT INSPECTION (☞7-10)

- Remove the ECT sensor ③.

ECT SENSOR INSPECTION (☞7-8)

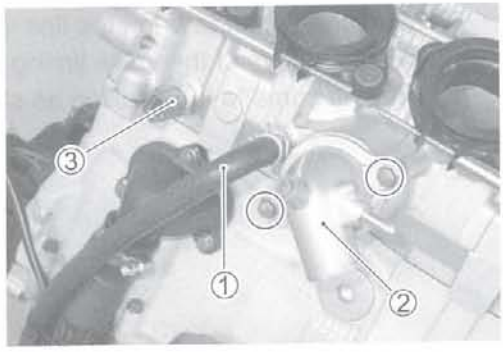

- Remove the cylinder head bolts (M6) ④.

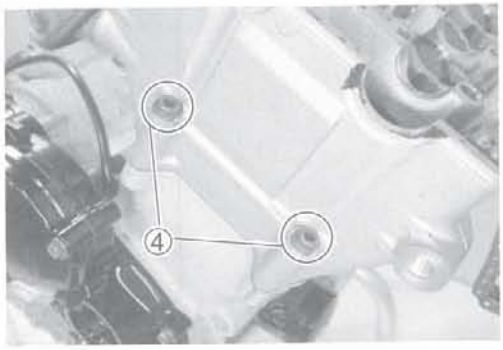

- Remove the O-rings ⑤.
- Remove the cylinder head bolts and washers.

NOTE:
When loosening the cylinder head bolts, loosen each bolt little by little diagonally.

- Remove the cylinder head ⑥.

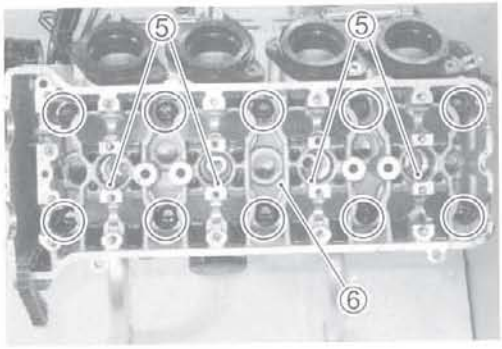

- Remove the dowel pins ⑦ and cylinder head gasket ⑧.

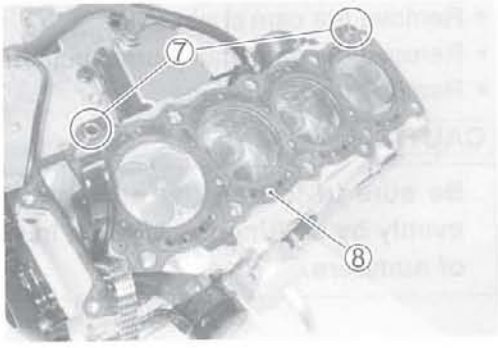

CLUTCH

- Remove the clutch cover.

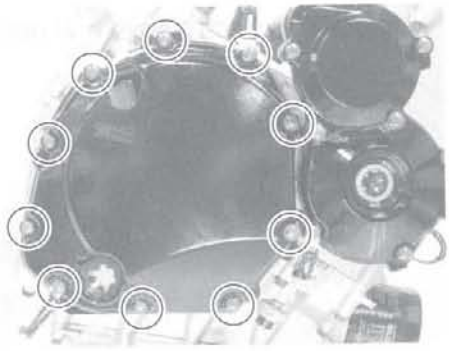

- Hold the clutch housing with the special tool.

CAUTION

Do not damage the clutch plates by the special tool.

TOOL 09920-53740: Clutch sleeve hub holder

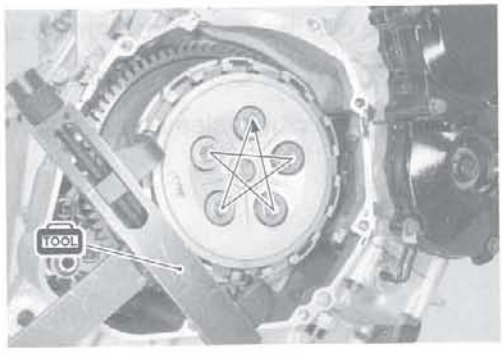

- Remove the clutch springs.

NOTE:
Loosen the clutch spring set bolts little by little and diagonally.

- Remove the pressure plate and clutch drive plates and driven plates.

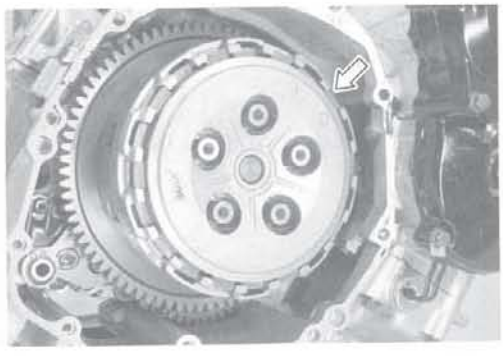

- Remove the spring washer ① and washer ②.
- Remove the clutch push piece ③, bearing ④ and thrust washer ⑤.

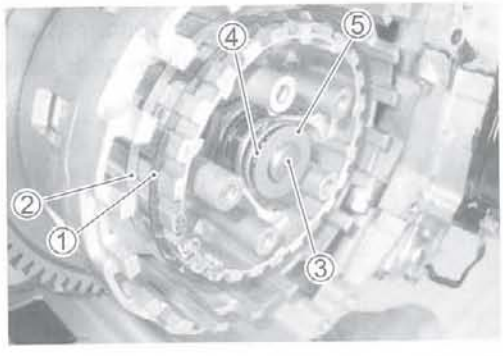

- Remove the clutch push rod ⑥.

NOTE:
If it is difficult to pull out the push rod ⑥, use a magnetic hand or a wire.

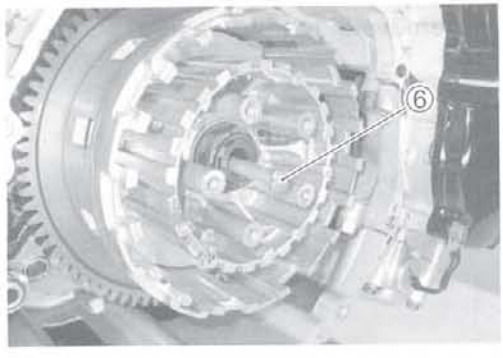

- Unlock the clutch sleeve hub nut.

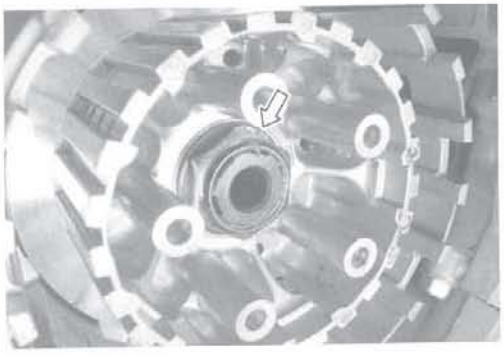

- Hold the clutch sleeve hub with the special tool.

TOOL 09920-53740: Clutch sleeve hub holder

- Remove the clutch sleeve hub nut.

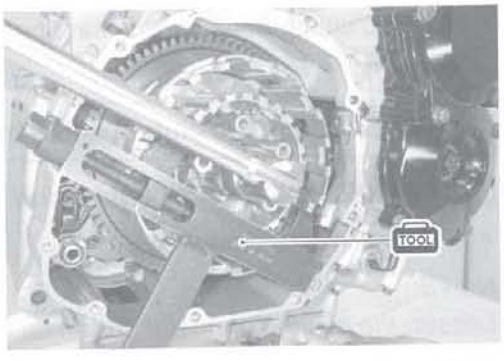

- Remove the concaved washer ⑦, washer ⑧ and clutch sleeve hub ⑨.

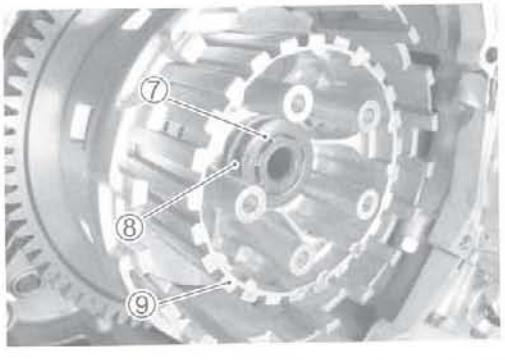

- Remove the washer ⑩, spacer ⑪ and bearing ⑫.
- Remove the primary driven gear assembly ⑬.

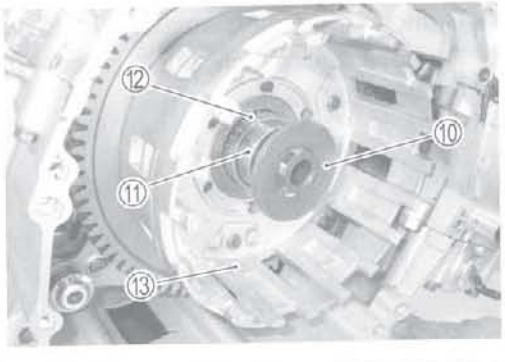

- Remove the thrust washer ⑭.

- Remove the oil pump drive gear ⑮ from the primary driven gear assembly ⑯.

OIL PUMP

- Remove the snap ring ①.
- Remove the oil pump driven gear ②.

NOTE:
Do not drop the snap ring ① into the crankcase.

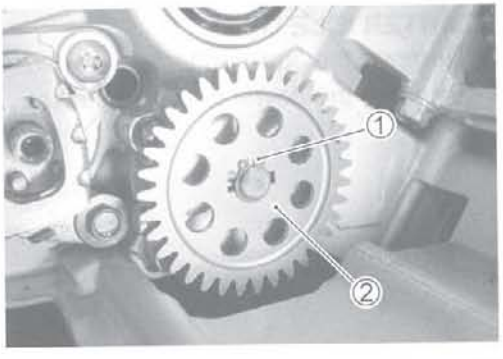

- Remove the pin ③ and washer ④.
- Remove the oil pump ⑤.

NOTE:
Do not drop the pin ③ and washer ④ into the crankcase.

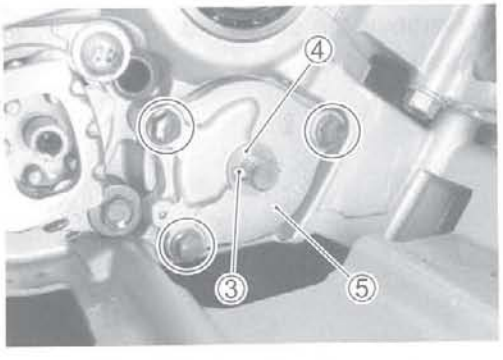

GEARSHIFT SYSTEM

- Remove the snap ring ① and washer ②.

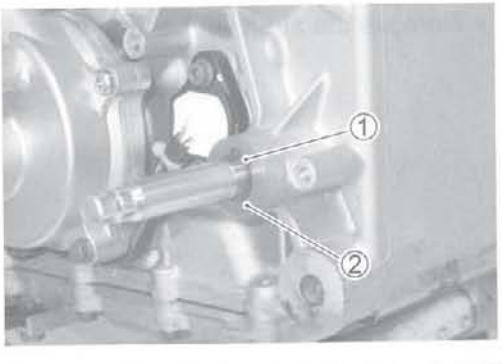

- Remove the gearshift shaft assembly ③ and washer ④.

NOTE:
Do not drop the washer ④ into the crankcase.

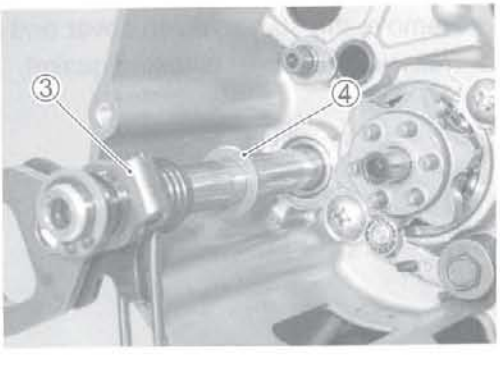

- Remove the gearshift cam plate bolt ⑤ and gearshift cam plate ⑥.
- Remove the gearshift cam stopper ⑦.

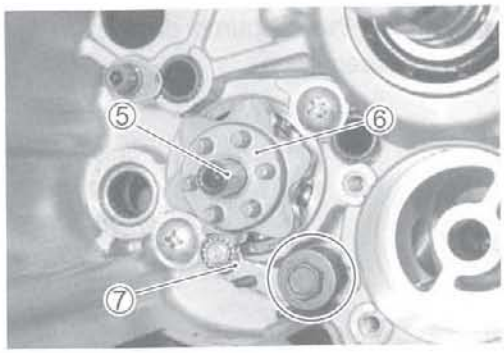

STARTER IDLE GEAR

- Remove the starter idle gear cover.
- Remove the dowel pins and gasket.

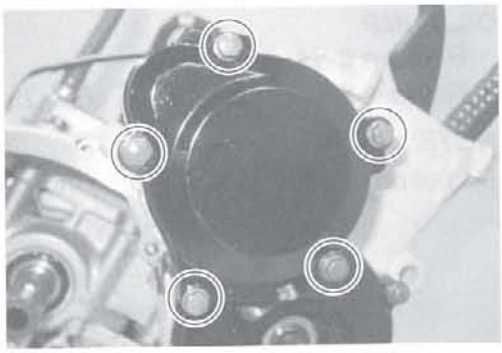

- Remove the concaved washer ①, washer ② and starter idle gear No.1 ③.

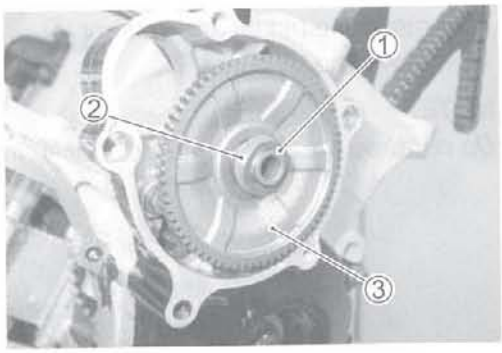

- Remove the shaft ④, bearing ⑤ and thrust washer ⑥.

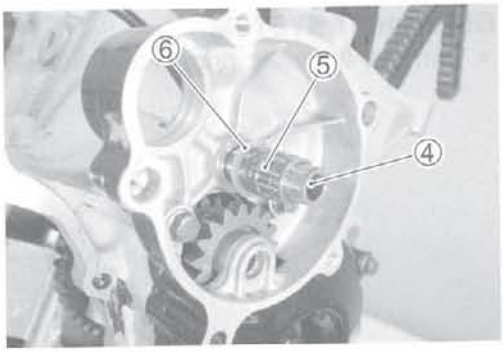

- Remove the starter clutch cover and clamp.
- Remove the dowel pins and gasket.

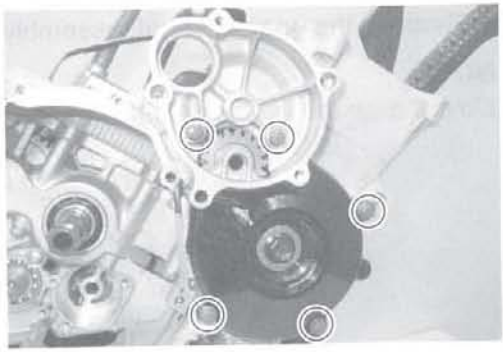

- Remove the concaved washer ⑦, starter idle gear No.2 ⑧ and shaft ⑨.

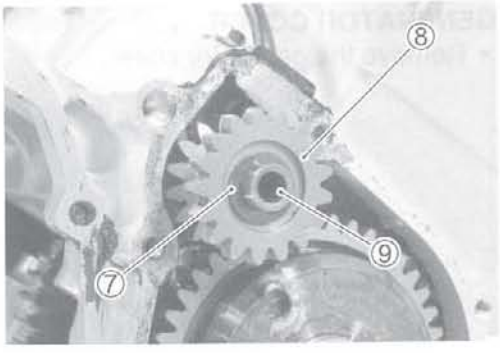

STARTER CLUTCH

- Hold the starter clutch with the special tool.

TOOL 09920-34830: Starter clutch holder

- Remove the starter clutch bolt and washer.
- Remove the starter clutch assembly and washer.

CAM CHAIN, CAM CHAIN TENSIONER AND CAM CHAIN GUIDE

- Remove the cam chain tensioner ①, washer ② and cam chain guide ③.
- Remove the cam chain ④ and cam chain drive sprocket ⑤.

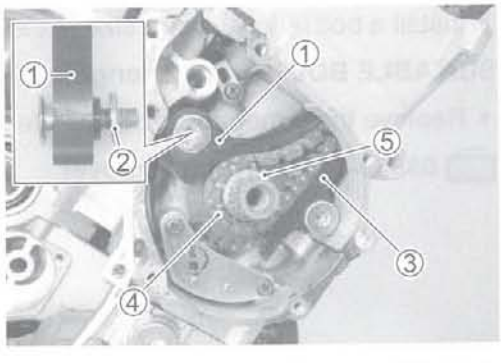

CKP SENSOR

- Remove the CKP sensor ①.

CKP SENSOR INSPECTION (☞4-28)

GENERATOR COVER

- Remove the generator cover.

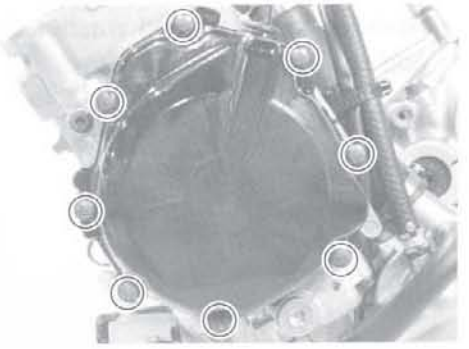

GENERATOR ROTOR

- Hold the generator rotor with the special tool.

TOOL 09930-44520: Rotor holder

- Remove the generator rotor bolt.

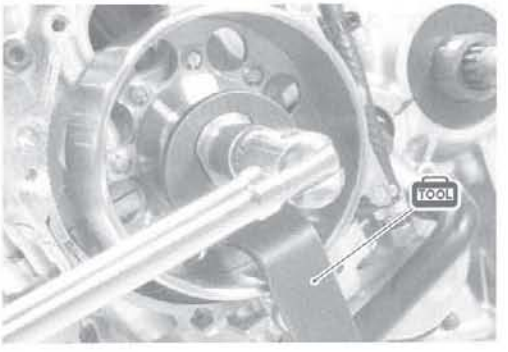

- Install a bolt Ⓐ of suitable size to the left end of crankshaft.

SUITABLE BOLT Ⓐ [M12, length: 28 – 38 mm]

- Remove the generator rotor with the special tool.

TOOL 09930-34980: Rotor remover

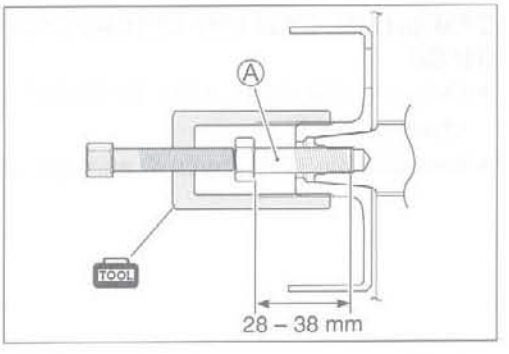

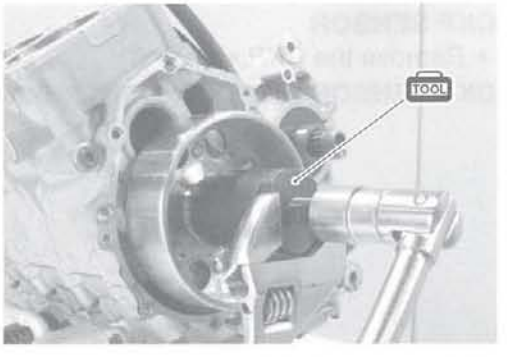

WATER PUMP

- Remove the hose clamp ①.
- Remove the water hose ② and water inlet cover ③.
- Remove the water pump ④.

WATER PUMP SERVICING (☞7-11)

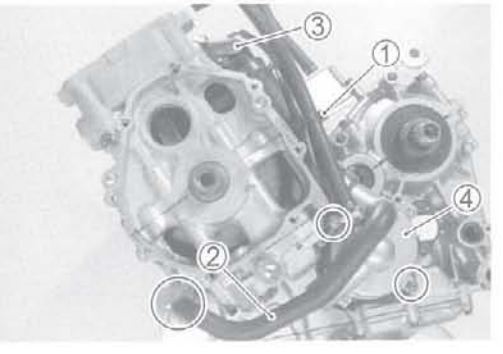

GEAR POSITION SWITCH

- Remove the gear position switch ①.

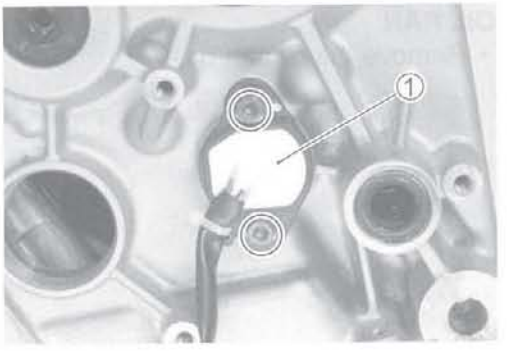

- Remove the switch contacts ② and springs ③.

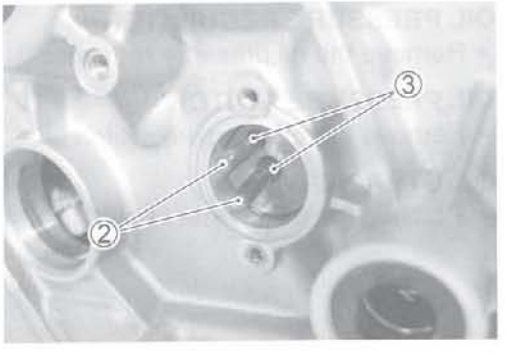

CRANKCASE BREATHER (PCV) COVER

- Remove the crankcase breather cover ①.

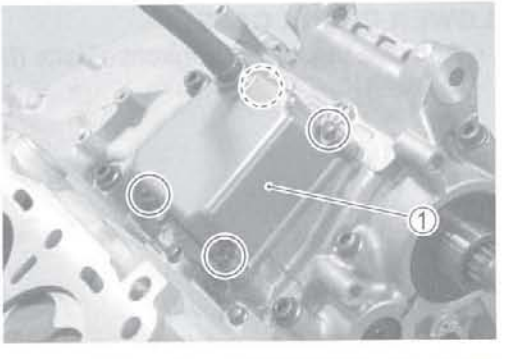

OIL FILTER

- Remove the oil filter with the special tool. (☞2-13)

TOOL 09915-40610: Oil filter wrench

OIL COOLER

- Remove the oil cooler ①.

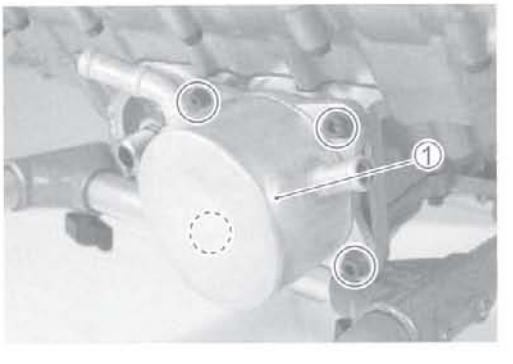

OIL PAN
- Remove the oil pan ①.

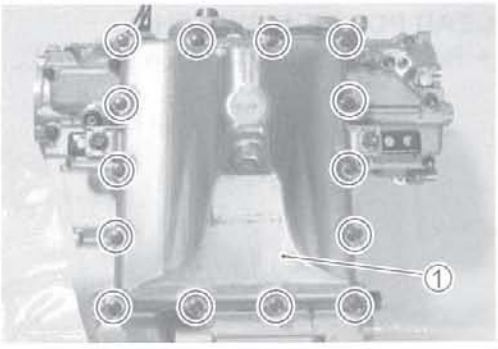

OIL PRESSURE REGULATOR
- Remove the oil pressure regulator ①.

OIL PRESSURE SWITCH
- Remove the oil pressure switch ②.

OIL STRAINER
- Remove the oil strainer ③ and its O-ring.

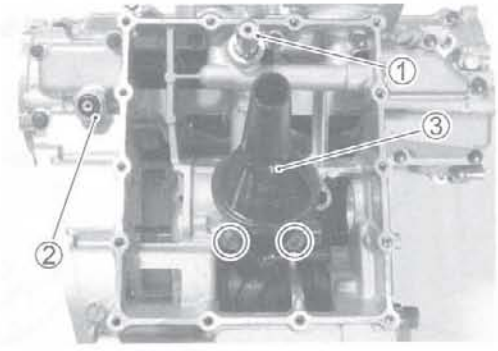

LOWER CRANK CASE
- Remove the lower crankcase bolts (M6).

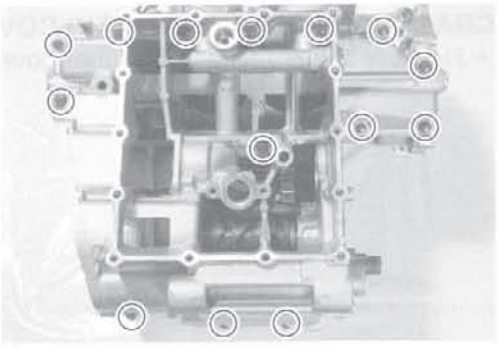

- Remove the lower crankcase bolts (M8).
- Remove the lower crankcase assembly.

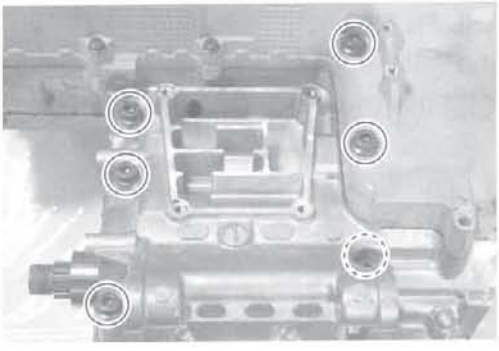

TRANSMISSION
- Remove the transmission ① and O-rings.
- Remove the dowel pins ②.

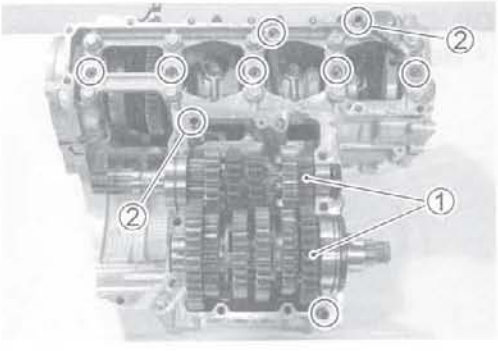

MIDDLE CRANKCASE

- Remove the crankcase bolts (M6).

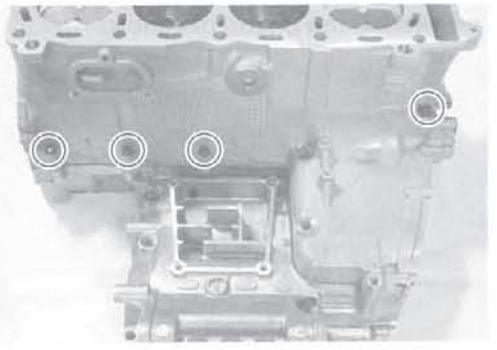

- Remove the crankcase bolts (M6) and clamp ①.
- Remove the crankshaft journal bolts (M9).

NOTE:
Loosen the crankcase bolts diagonally with the smaller sizes first.

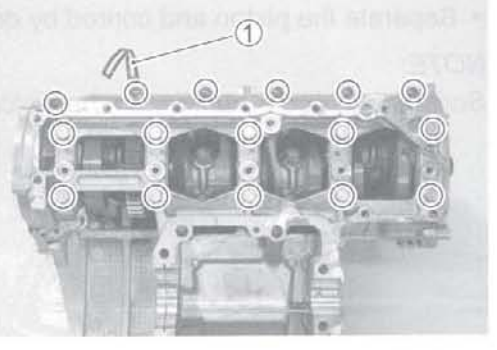

CRANKSHAFT

- Loosen the bearing cap bolts by using 10 mm, 12 point socket wrench, and tap the bearing cap bolt lightly with plastic hammer to remove the bearing cap.
- Remove the O-ring ①.
- Remove the crankshaft and thrust washers ②.

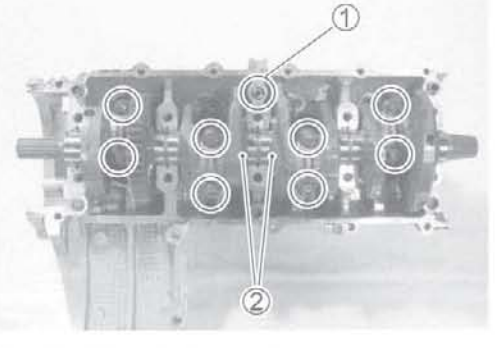

PISTON AND CONROD

- Push the conrod to cylinder head side and remove the piston and conrod from the upper crankcase.

CAUTION

Be careful not to damage the cylinder wall by the conrod.

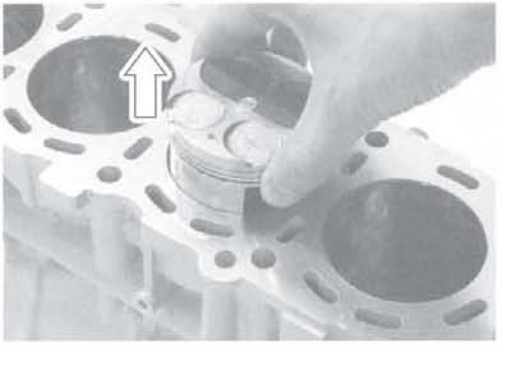

- Remove the piston pin circlip ①.

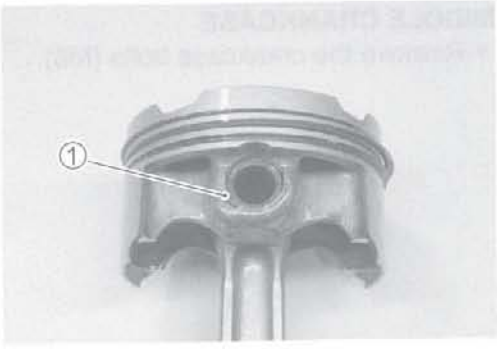

- Separate the piston and conrod by driving out the piston pin.

NOTE:
Scribe the cylinder number on the piston head.

ENGINE COMPONENTS INSPECTION AND SERVICE

CAUTION

Identify the position of each removed part. Organize the parts in their respective groups (i.e., intake, exhaust, No.1 or No.2) so that they can be installed in their original locations.

CYLINDER HEAD COVER

- Clean and check the gasket groove Ⓐ and PAIR reed valve gasket mating surfaces Ⓑ of cylinder head cover.
- If it is damaged, replace the cylinder head cover with a new one.

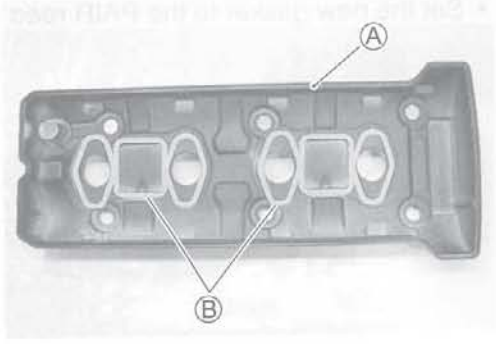

CMP SENSOR

REMOVAL

- Remove the CMP sensor ① from the cylinder head cover.

INSPECTION

- Inspect the CMP sensor. (☞4-26)

INSTALLATION

- Install the oil seal ② and CMP sensor ③.

NOTE:

When installing, clean the CMP sensor's face.

CMP sensor bolt: 8 N·m (0.8 kgf-m, 5.8 lb-ft)

PAIR REED VALVE

- Remove the PAIR reed valve ① from the gasket.

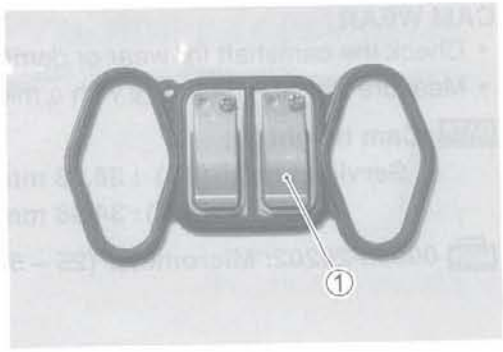

- Inspect the reed valve for the carbon deposit.
- If the carbon deposit is found in the reed valve, replace the PAIR reed valve with a new one.

- Set the new gasket to the PAIR reed valve as shown.

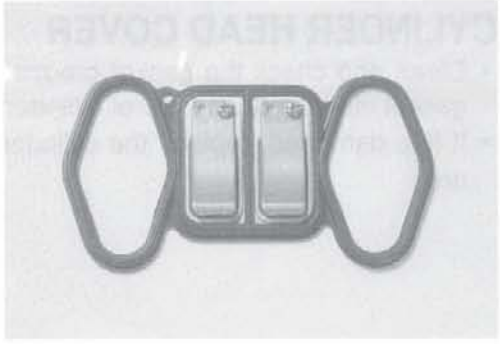

PCV HOSE

- Remove the PCV hose from the crankcase breather cover.
- Inspect the PCV hose for wear or damage.
- If it is worn or damaged, replace the PCV hose with a new one.

CAMSHAFT

CAMSHAFT IDENTIFICATION

The exhaust camshaft can be distinguished from that of the intake by the embossed letters "EX" (for exhaust) as against letters "IN" (for intake).

CAM WEAR

- Check the camshaft for wear or damage.
- Measure the cam height Ⓗ with a micrometer.

DATA Cam height Ⓗ:
Service Limit: (IN.) : 36.28 mm (1.428 in)
(EX.) : 34.98 mm (1.377 in)

TOOL 09900-20202: Micrometer (25 – 50 mm)

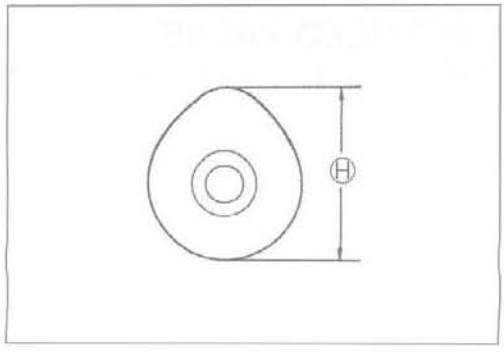

CAMSHAFT JOURNAL WEAR

- Determine whether or not each journal is worn down to the limit by measuring the oil clearance with the camshaft installed in place.
- Use the plastigauge ① to read the clearance at the widest portion, which is specified as follows:

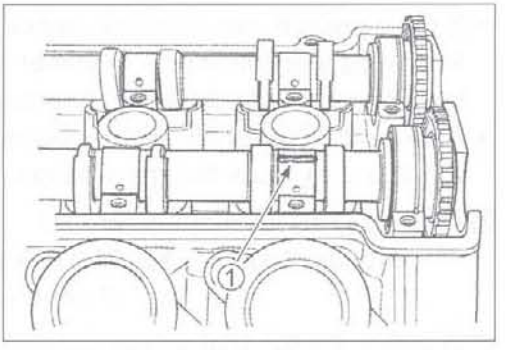

DATA Camshaft journal oil clearance:
Service Limit: (IN & EX): 0.150 mm (0.0059 in)

TOOL 09900-22301: Plastigauge
09900-22302: Plastigauge

NOTE:
Install camshaft journal holders to their original positions. (☞3-100)

- Tighten the camshaft journal holder bolts evenly and diagonally to the specified torque.

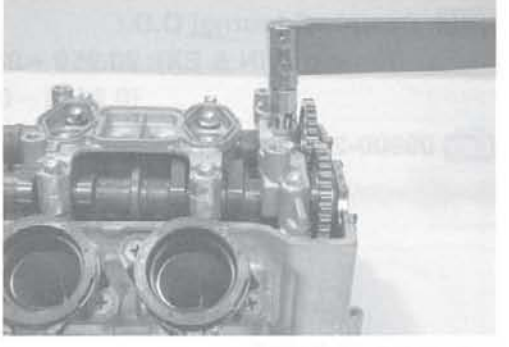

Camshaft journal holder bolt: 10 N·m
(1.0 kgf-m, 7.0 lb-ft)

NOTE:
Do not rotate the camshaft with the plastigauge in place.

- Remove the camshaft holders, and read the width of the compressed plastigauge with envelope scale.
- This measurement should be taken at the widest part.

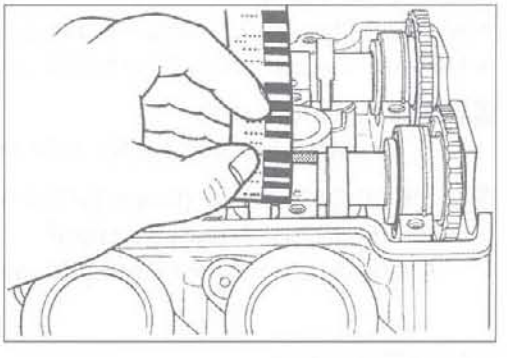

- If the camshaft journal oil clearance measured exceeds the limit, measure the inside diameter of the camshaft journal holder and outside diameter of the camshaft journal.
- Replace the camshaft or the cylinder head depending upon which one exceeds the specification.

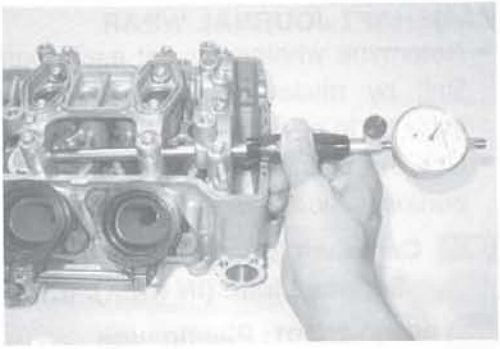

DATA Camshaft journal holder I.D.:
Standard: (IN & EX): 24.012 – 24.025 mm (0.9454 – 0.9459 in)

TOOL 09900-20602: Dial gauge (1/1000, 1 mm)
09900-22403: Small bore gauge (18 – 35 mm)

DATA Camshaft journal O.D.:
Standard (IN & EX): 23.959 – 23.980 mm (0.9433 – 0.9441 in)

TOOL 09900-20205: Micrometer (0 – 25 mm)

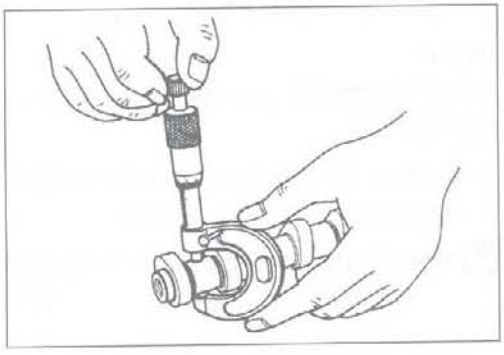

CAMSHAFT RUNOUT

- Measure the runout using the dial gauge.
- Replace the camshaft if the runout exceeds the limit.

DATA Camshaft runout:
Service Limit (IN & EX): 0.10 mm (0.004 in)

TOOL 09900-20607: Dial gauge (1/100 mm)
09900-20701: Magnetic stand
09900-21304: V-block set (100 mm)

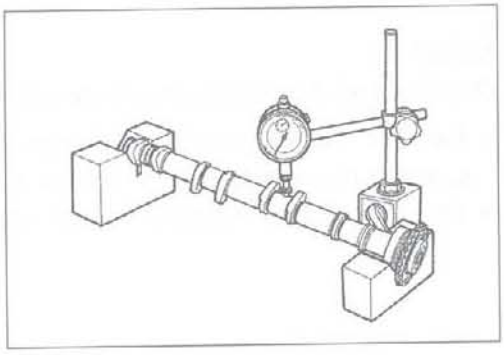

CAM SPROCKET

- Inspect the sprocket teeth for wear.
- If they are worn, replace the sprocket/camshaft assembly and cam chain as a set.

CAM CHAIN TENSION ADJUSTER

INSPECTION

- Remove the cam chain tension adjuster cap bolt, spring and ball.
- Check that the push rod slides smoothly when releasing stopper ①.
- *If it does not slide smoothly, replace the cam chain tension* adjuster with a new one.

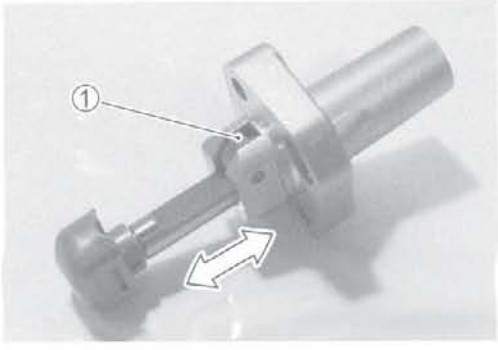

CAM CHAIN TENSIONER

INSPECTION

- Check the contacting surface of the cam chain tensioner.
- If it is worn or damaged, replace it with a new one.

CAM CHAIN GUIDE

INSPECTION

- Check the contacting surfaces of the cam chain guides.
- If they are worn or damaged, replace them with the new ones.

CYLINDER HEAD AND VALVE

VALVE AND VALVE SPRING DISASSEMBLY

- Remove the tappet ① and shim ② by fingers or magnetic hand.

CAUTION

Identify the position of each removed part.

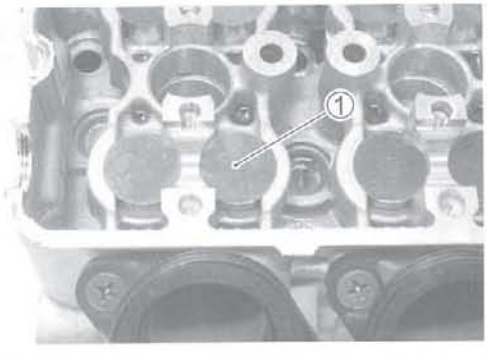

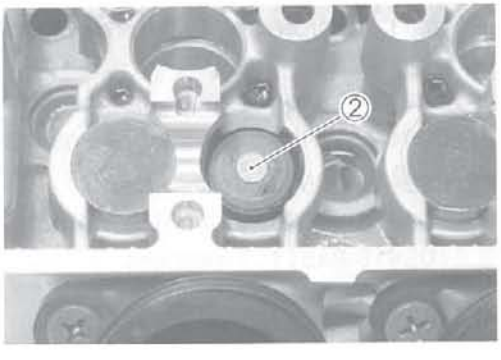

- Using special tools, compress the intake valve spring and remove the two cotter halves ③ from the valve stem.

TOOL 09916-14510: Valve lifter
09916-14521: Valve lifter attachment
09916-84511: Tweezers

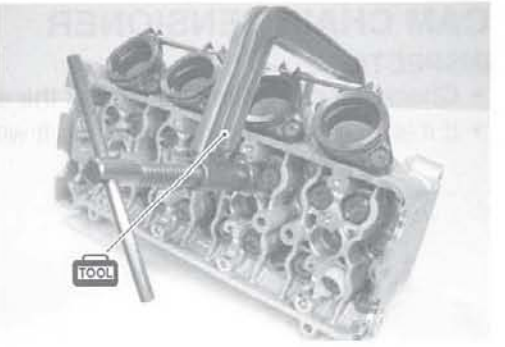

CAUTION

Be careful not to damage the tappet sliding surface with the special tool.

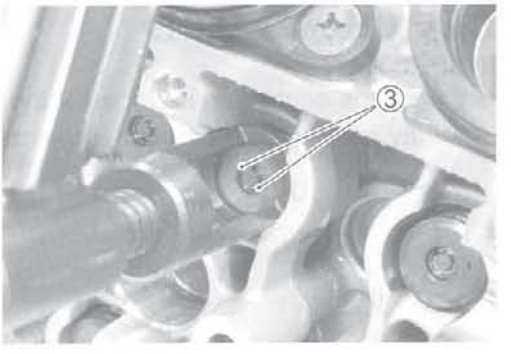

- When compressing the exhaust valve spring, use a protector that is handcrafted from a 35-mm film cartridge as shown in the right illustration.

Ⓐ 7 mm (0.28 in)
Ⓑ 46 mm (1.81 in)
Ⓒ 28 mm (1.10 in)
Ⓓ 25.12 mm (0.99 in)
Ⓔ 20 mm (0.79 in)

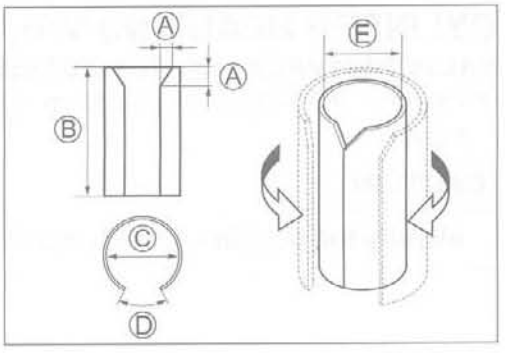

- Install the protector ④ between the valve spring and cylinder head.
- Using the special tools, compress the exhaust valve spring and remove the two cotter halves from the valve stem.

TOOL 09916-14510: Valve lifter
09916-14530: Valve lifter attachment
09916-84511: Tweezers

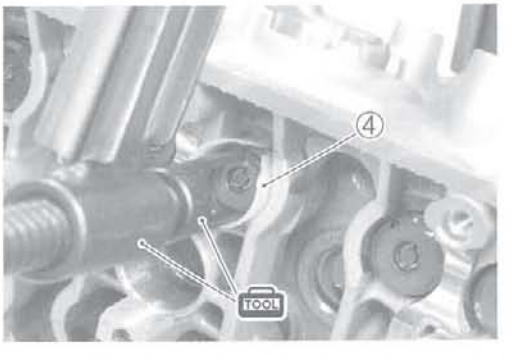

- Remove the valve spring retainer ⑤ and valve spring ⑥.
- Pull out the valve ⑦ from the combustion chamber side.

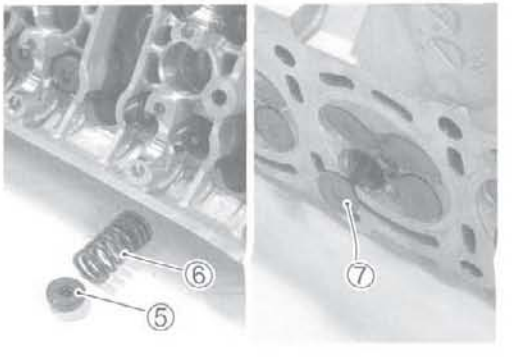

- Remove the oil seal ⑧ and spring seat ⑨.

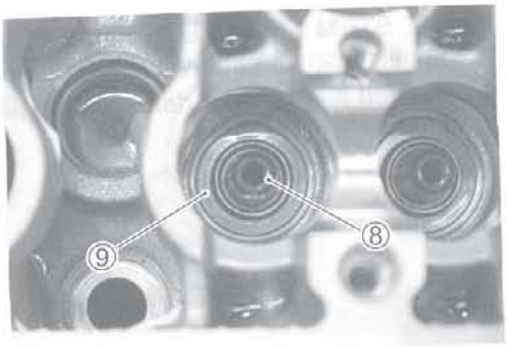

CAUTION

Do not reuse the removed oil seal.

- Remove the other valves in the same manner as described previously.

CYLINDER HEAD DISTORTION

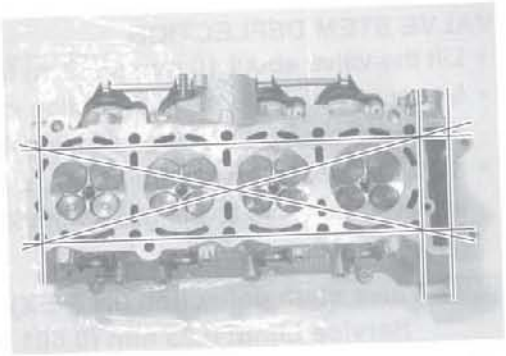

- Decarbonize the combustion chambers.
- Check the gasketed surface of the cylinder head for distortion with a straightedge and thickness gauge, taking a clearance reading at several places indicated.
- If the largest reading at any position of the straightedge exceeds the limit, replace the cylinder head.

DATA Cylinder head distortion:
Service Limit: 0.20 mm (0.008 in)

TOOL 09900-20803: Thickness gauge

VALVE STEM RUNOUT

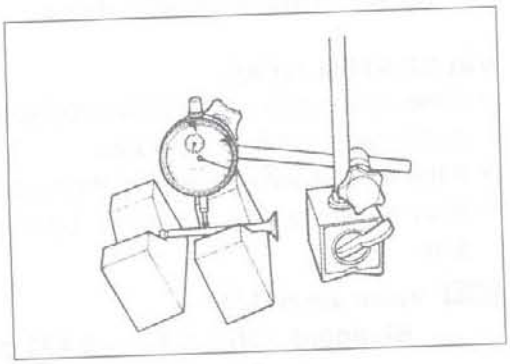

- Support the valve using V-blocks and check its runout using the dial gauge as shown.
- If the runout exceeds the service limit, replace the valve.

DATA Valve stem runout:
Service Limit: 0.05 mm (0.002 in)

TOOL 09900-20607: Dial gauge (1/100 mm)
09900-20701: Magnetic stand
09900-21304: V-block set (100 mm)

CAUTION

Be careful not to damage the valve and valve stem when handling it.

VALVE HEAD RADIAL RUNOUT

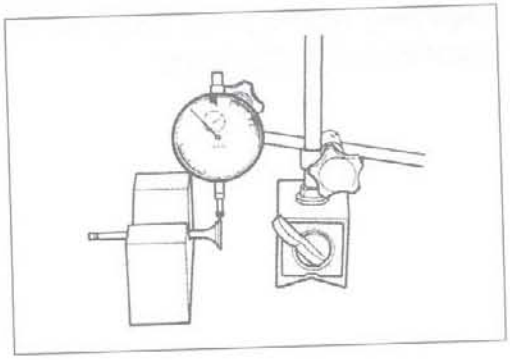

- Place the dial gauge at a right angle to the valve head face and measure the valve head radial runout.
- If it measures more than the service limit, replace the valve.

DATA Valve head radial runout:
Service Limit: 0.03 mm (0.001 in)

TOOL 09900-20607: Dial gauge (1/100 mm)
09900-20701: Magnetic stand
09900-21304: V-block set (100 mm)

CAUTION

Be careful not to damage the valve and valve stem when handling it.

VALVE STEM AND VALVE FACE WEAR CONDITION

- Visually inspect each valve stem and valve face for wear and pitting. If it is worn or damaged, replace the valve with a new one.

VALVE STEM DEFLECTION

- Lift the valve about 10 mm (0.39 in) from the valve seat.
- Measure the valve stem deflection in two directions, perpendicular to each other, by positioning the dial gauge as shown.
- If the deflection measured exceeds the limit, then determine whether the valve or the guide should be replaced with a new one.

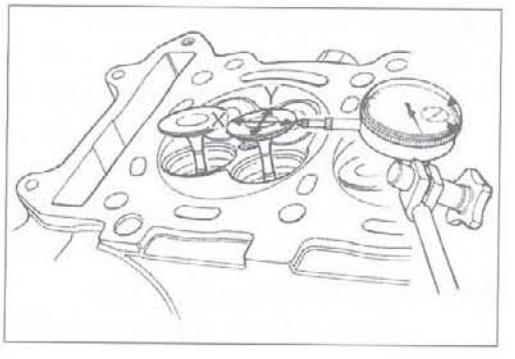

DATA Valve stem deflection (IN & EX):
Service Limit: 0.25 mm (0.001 in)

TOOL 09900-20607: Dial gauge (1/100 mm)
09900-20701: Magnetic stand

VALVE STEM WEAR

- If the valve stem is worn down to the limit, as measured with a micrometer, replace the valve.
- If the stem is within the limit, then replace the guide.
- After replacing valve or guide, be sure to recheck the deflection.

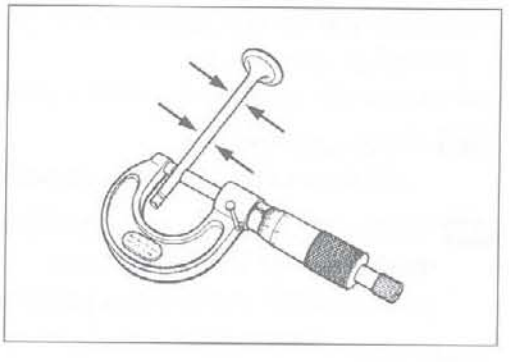

DATA Valve stem O.D.:
Standard (IN) : 4.475 – 4.490 mm (0.1762 – 0.1768 in)
(EX) : 4.455 – 4.470 mm (0.1754 – 0.1760 in)

TOOL 09900-20205: Micrometer (0 – 25 mm)

NOTE:
If valve guides have to be removed for replacement after inspecting related parts, carry out the steps shown in valve guide servicing. *(☞3-37)*

VALVE GUIDE SERVICING

- Using the valve guide remover, drive the valve guide out toward the intake or exhaust camshaft side.

TOOL 09916-43211: Valve guide remover/installer

NOTE:
** Discard the removed valve guide subassemblies.*
** Only oversized valve guides are available as replacement parts. (Part No. 11115-29G70)*

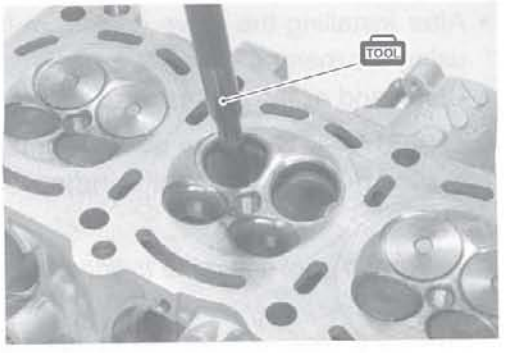

- Re-finish the valve guide holes in cylinder head with the reamer and handle.

TOOL 09916-33320: Valve guide reamer
09916-34542: Reamer handle

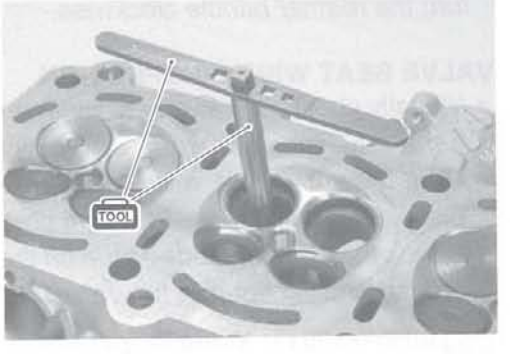

CAUTION

> **When refinishing or removing the reamer from the valve guide hole, always turn it clockwise.**

- Cool down the new valve guides in a freezer for about one hour and heat the cylinder head to 100 – 150 °C (212 – 302 °F) with a hot plate.

CAUTION

> **Do not use a burner to heat the valve guide hole to prevent cylinder head distortion.**

- Apply engine oil to the valve guide hole.
- Drive the valve guide into the hole using the valve guide installer ① and attachment ②.

TOOL 09916-43211: Valve guide installer/remover ①
09916-53330: Attachment ②

NOTE:
Install the valve guide until the attachment contacts with the cylinder head ③.

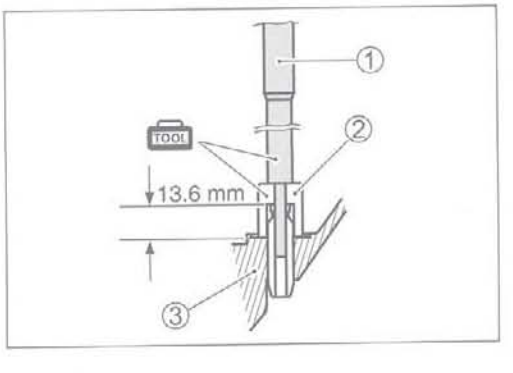

CAUTION

> **Failure to oil the valve guide hole before driving the new guide into place may result in a damaged guide or head.**

- After installing the valve guides, re-finish their guiding bores using the reamer.
- Clean and oil the guides after reaming.

TOOL 09916-33210: Valve guide reamer
09916-34542: Reamer handle

NOTE:
** Be sure to cool down the cylinder head to ambient air temperature.*
** Insert the reamer from the combustion chamber and always turn the reamer handle clockwise.*

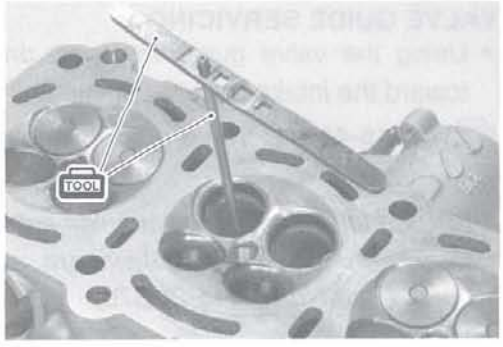

VALVE SEAT WIDTH INSPECTION

- Visually check for valve seat width on each valve face.
- If the valve face has worn abnormally, replace the valve.
- Coat the valve seat with Prussian Blue and set the valve in place. Rotate the valve with light pressure.
- Check that the transferred blue on the valve face is uniform all around and in center of the valve face.

TOOL 09916-10911: Valve lapper set

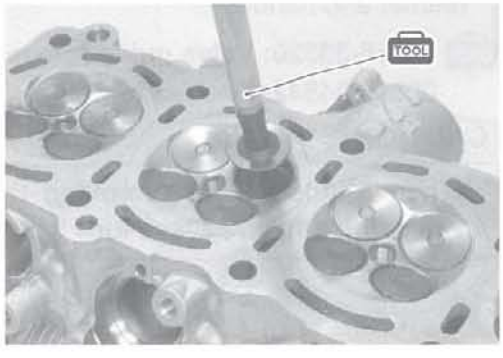

- If the seat width Ⓦ measured exceeds the standard value or seat width is not uniform, reface the seat using the seat cutter.

DATA Valve seat width Ⓦ:
Standard: 0.9 – 1.1 mm (0.035 – 0.043 in)

If the valve seat is out of specification, re-cut the seat.

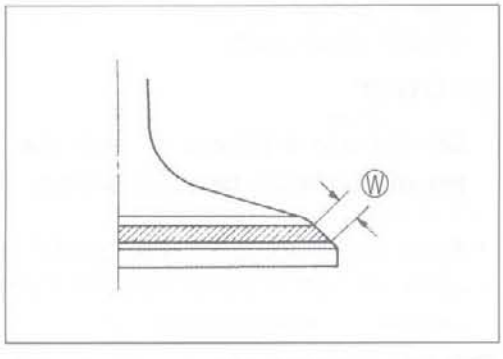

VALVE SEAT SERVICING

- The valve seats ① for both the intake valve ② and exhaust valve ③ are machined to four different angles. The seat contact surface is cut at 45 °.

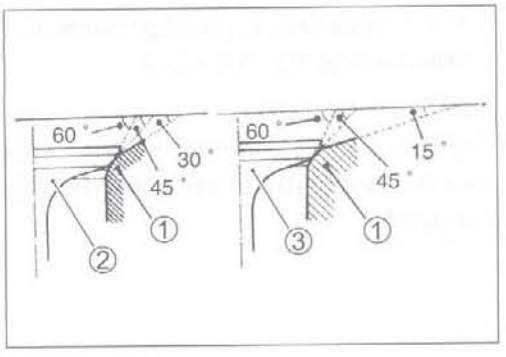

	INTAKE	EXHAUST
15 °		N-121
30 °	N-126	
45 °	N-122	N-122
60 °	N-111	N-111

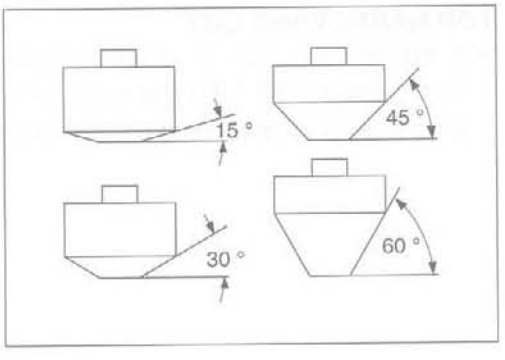

TOOL 09916-21111: Valve seat cutter set
09916-20630: Valve seat cutter (N-126)
09916-20640: Solid pilot (N-100-4.5)

NOTE:
The valve seat cutters (N-121), (N-122) and (N-111) are included in the valve seat cutter set (09916-21111).

CAUTION

The valve seat contact area must be inspected after each cut.

- When installing the solid pilot ①, rotate it slightly. Seat the pilot snugly. Install the 45 ° cutter, attachment and T-handle.

INITIAL SEAT CUT

- Using the 45 ° cutter, descale and clean up the seat. Rotate the cutter one or two turns.
- Measure the valve seat width Ⓦ after every cut.

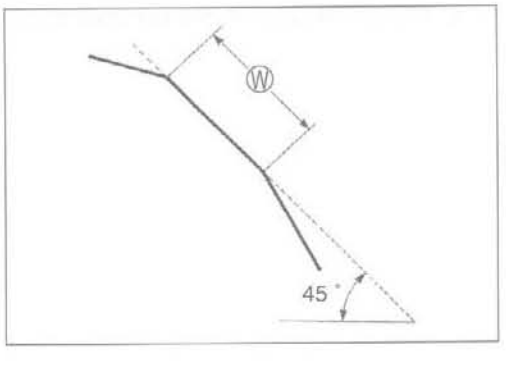

- If the valve seat is pitted or burned, use the 45 ° cutter to condition the seat some more.

NOTE:

Cut only the minimum amount necessary from the seat to prevent the possibility of the valve stem becoming too close to the camshaft.

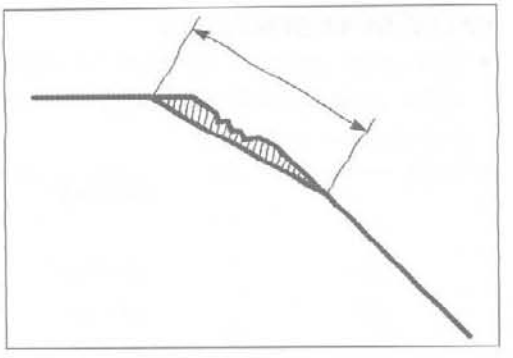

TOP NARROWING CUT

- If the contact area Ⓦ is too high on the valve, or if it is too wide, use the 15 ° (for the exhaust side) and the 30 ° (for the intake side) to lower and narrow the contact area.

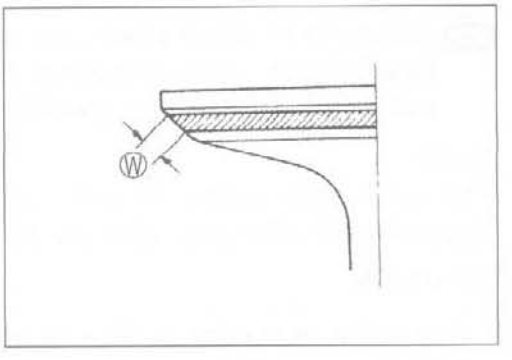

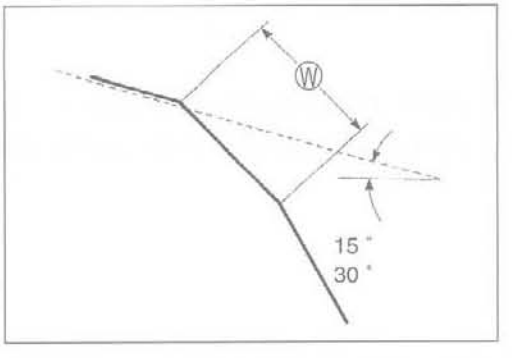

BOTTOM NARROWING CUT

- If the contact area Ⓦ is too wide or too low, use the 60 ° cutter to narrow and raise the contact area.

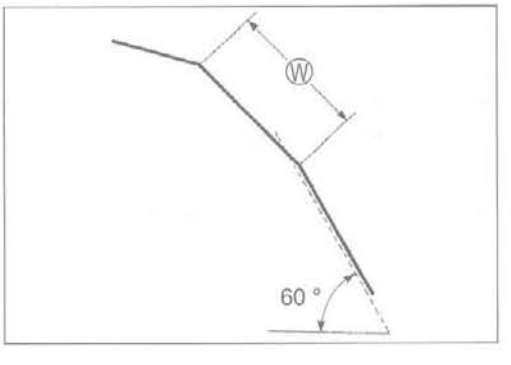

FINAL SEAT CUT

- If the contact area Ⓦ is too low or too narrow, use the 45 ° cutter to raise and widen the contact area.

NOTE:
After cutting the 15 °, 30 ° and 60 ° angles, it is possible that the valve seat (45 °) is too narrow. If so, re-cut the valve seat to the correct width.

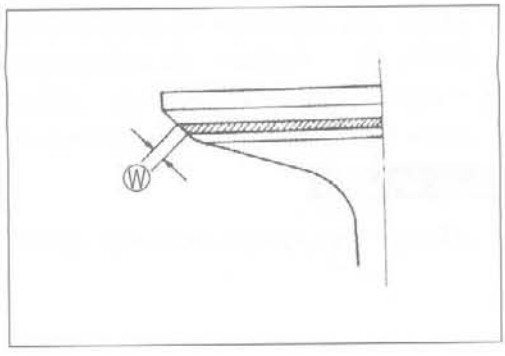

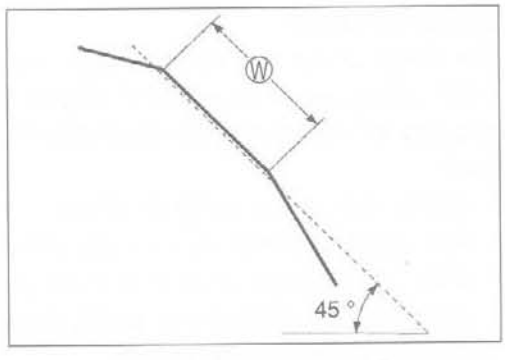

- After the desired seat position and width is achieved, use the 45 ° cutter very lightly to clean up any burrs caused by the previous cutting operations.

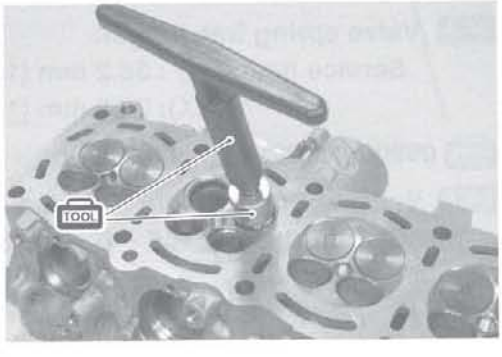

CAUTION

Do not use lapping compound after the final cut is made. The finished valve seat should have a velvety smooth finish but not a highly polished or shiny finish. This will provide a soft surface for the final seating of the valve which will occur during the first few seconds of engine operation.

CAUTION

The titanium valves are coated with an oxidized membrane treatment to resist wear but the membrane tend to be removed if lapped after valve seat servicing.

NOTE:
After servicing the valve seats, be sure to check the valve clearance after the cylinder head has been reinstalled. (☞2-7)

- Clean and assemble the head and valve components. Fill the intake and exhaust ports with gasoline to check for leaks.
- If any leaks occur, inspect the valve seat and face for burrs or other things that could prevent the valve from sealing.

⚠ WARNING

Always use extreme caution when handling gasoline.

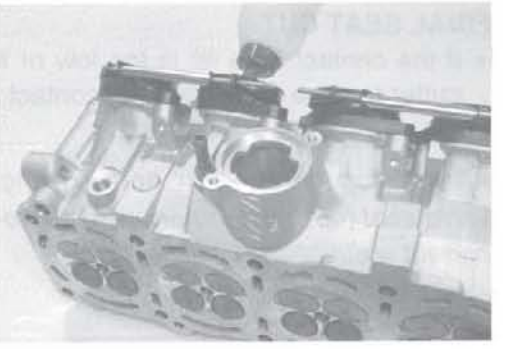

VALVE SPRING

The force of the coil spring keeps the valve seat tight. Weakened spring result in reduced engine power output, and often account for the chattering noise coming from the valve mechanism.

- Check the valve spring for proper strength by measuring its free length and also by the force required to compress it.
- If the spring length is less than the service limit, or if the force required to compress the spring does not fall within the range specified, replace the spring.

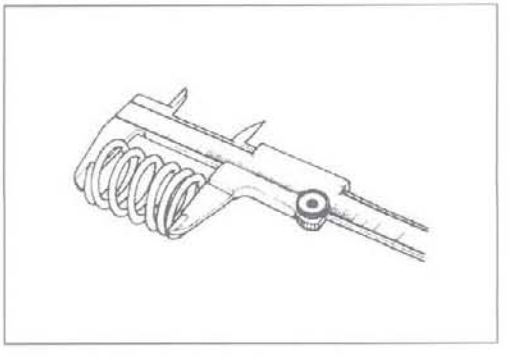

DATA Valve spring free length:
Service limit: (IN) : 36.2 mm (1.43 in)
(EX): 36.0 mm (1.42 in)

TOOL 09900-20102: Vernier calipers

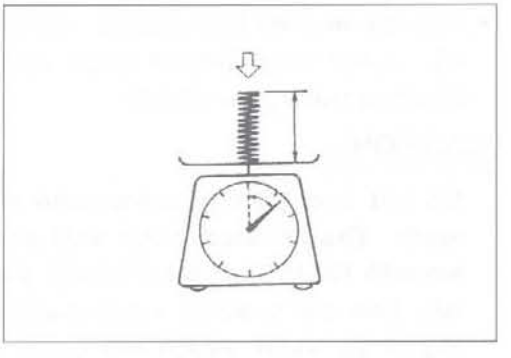

DATA Valve spring tension:
Standard: (IN) : 155 – 179 N, 15.8 – 18.3 kgf/32.55 mm (34.8 – 40.3 lbs/1.28 in)
(EX): 146 – 168 N, 14.9 – 17.1 kgf/32.55 mm (32.8 – 37.7 lbs/1.28 in)

VALVE AND VALVE SPRING REASSEMBLY

- Install the valve spring seat.
- Apply MOLYBDENUM OIL SOLUTION to the oil seal ①, and press-fit it into position.

MOLYBDENUM OIL SOLUTION

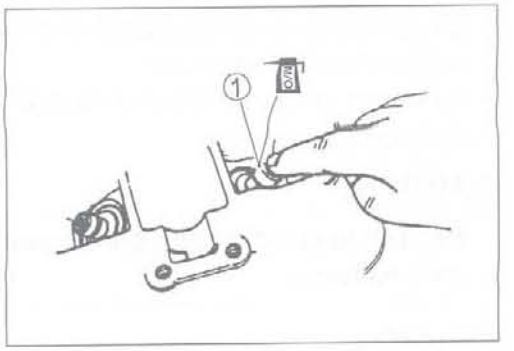

CAUTION

Do not reuse the removed oil seal.

- Insert the valve, with its stem coated with MOLYBDENUM OIL SOLUTION all around and along the full stem length without any break.

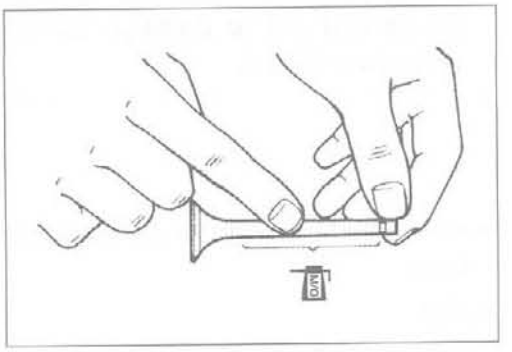

CAUTION

When inserting the valve, take care not to damage the lip of the oil seal.

MOLYBDENUM OIL SOLUTION

- Install the valve spring with the small-pitch portion Ⓐ facing cylinder head.

Ⓑ Large-pitch portion
Ⓒ UPWARD
Ⓓ Paint

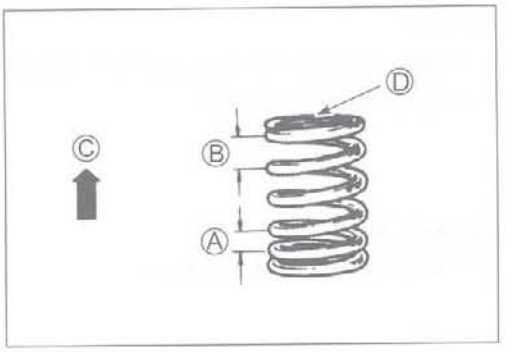

- Put on the valve spring retainer ②, and using the valve lifter (and protector ③ for the exhaust side), press down the spring, fit the cotter halves to the stem end, and release the lifter to allow the cotter ④ to wedge in between retainer and stem.

TOOL 09916-14510: Valve lifter
09916-14521: Valve lifter attachment (Intake side)
09916-14530: Valve lifter attachment (Exhaust side)
09916-84511: Tweezers

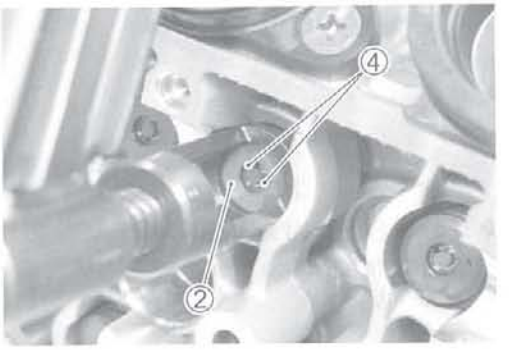

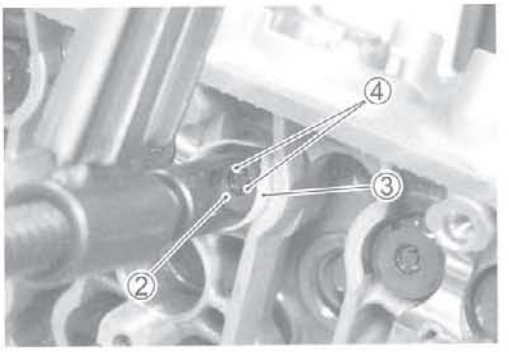

- Be sure that the rounded lip Ⓔ of the cotter fits snugly into the groove Ⓕ in the stem end.
- Install the other valves and springs in the same manner as described previously.

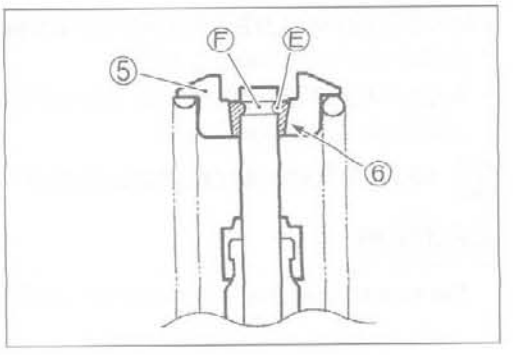

CAUTION

Be sure to restore each spring and valve to their original positions.

CAUTION

Be careful not to damage the valve and valve stem when handling it.

⑤ Valve spring retainer
⑥ Cotter

- Install the tappet shims and the tappets to their original positions.

NOTE:

** Apply engine oil to the stem end, shim and tappet before fitting them.*

** When seating the tappet shim, be sure the figure printed surface faces the tappet.*

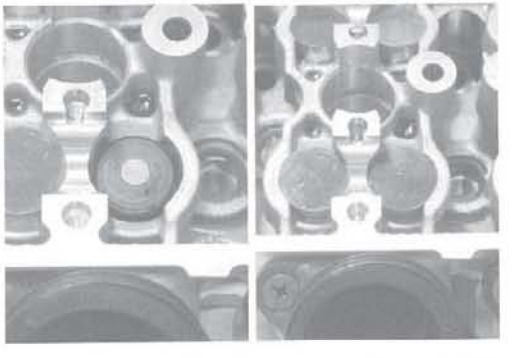

INTAKE PIPE

- Remove the intake pipes ①.

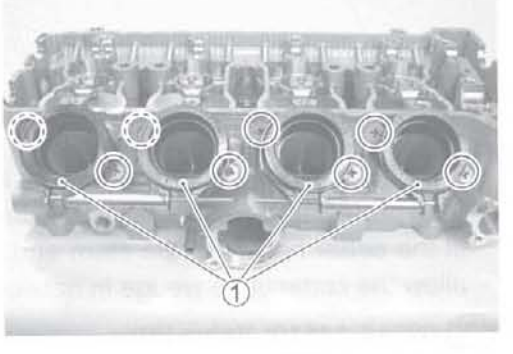

- Apply SUZUKI SUPER GREASE to the O-rings.
- Install the intake pipes.

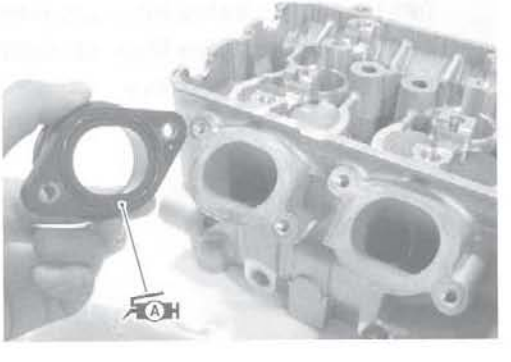

WATER BYPASS UNION

- Remove the water bypass union ①.

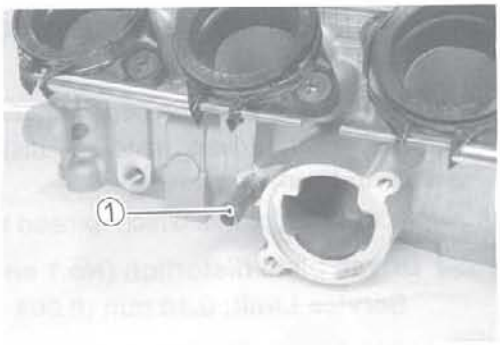

- Apply SUZUKI BOND to the thread part of water bypass union and tighten it to the specified torque.

1207B 99104-31140: SUZUKI BOND "1207B" (USA)
99000-31140: SUZUKI BOND "1207B" (Others)

Water bypass union: 12 N·m (1.2 kgf-m, 8.5 lb-ft)

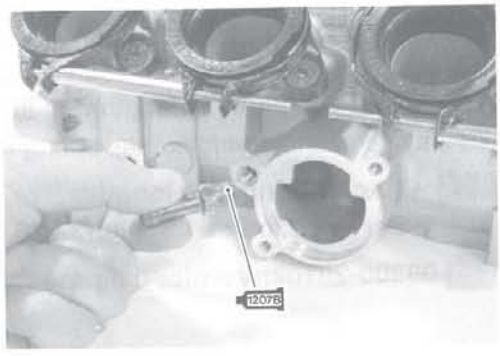

CLUTCH

CLUTCH DRIVE PLATES INSPECTION

NOTE:

** Wipe off engine oil from the clutch drive plates with a clean rag.*
** Clutch drive plate No.1: 40 friction pieces*
** Clutch drive plate No.2 and No.3: 48 friction pieces*

Ⓐ Friction piece

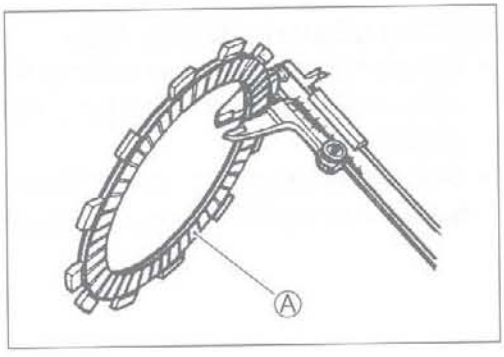

- Measure the thickness of drive plates with a vernier calipers.
- If each drive plate thickness is the limit and less, replace it with a new one.

DATA Drive plate thickness:
Service Limit: 2.62 mm (0.103 in)

TOOL 09900-20102: Vernier calipers

- Measure the claw width of drive plates with a vernier calipers.
- Replace the drive plates found to have worn down to the limit.

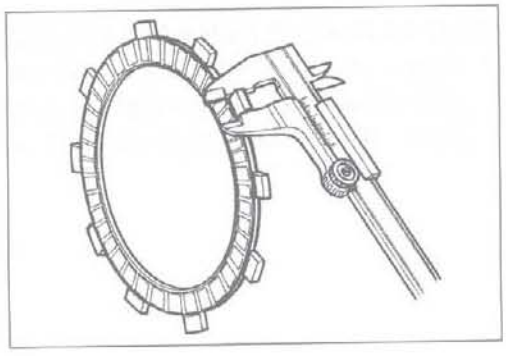

DATA Drive plate claw width:
Service Limit: 12.90 mm (0.5079 in)

TOOL 09900-20102: Vernier calipers

CLUTCH DRIVEN PLATES INSPECTION

NOTE:

Wipe off engine oil from the clutch driven plates with a clean rag.

- Measure each driven plate for distortion with a thickness gauge and surface plate.
- Replace driven plates which exceed the limit.

DATA Driven plate distortion (No.1 and No.2):
Service Limit: 0.10 mm (0.004 in)

TOOL 09900-20803: Thickness gauge

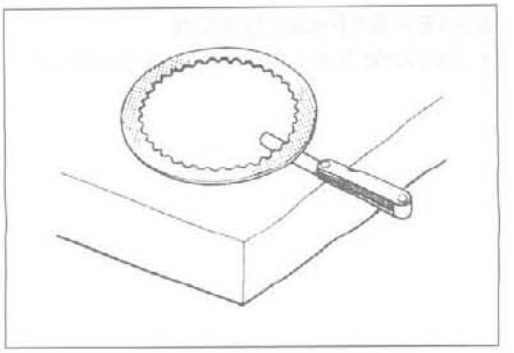

CLUTCH SPRING INSPECTION

- Measure the free length of each coil spring with a vernier calipers, and compare the length with the specified limit.
- Replace all the springs if any spring is not within the limit.

DATA Clutch spring free length:
Service Limit: 51.5 mm (2.028 in)

TOOL 09900-20102: Vernier calipers

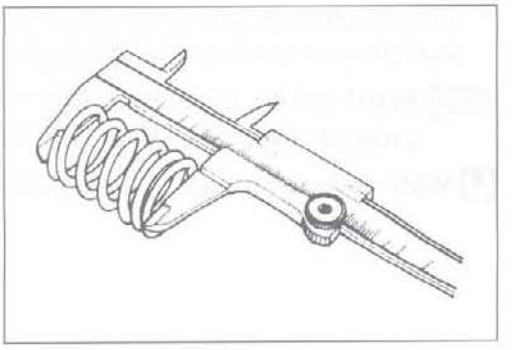

CLUTCH BEARING INSPECTION

- Inspect the clutch release bearing for any abnormality, particularly cracks, to decide whether it can be reused or should be replaced.
- Smooth engagement and disengagement of the clutch depends on the condition of this bearing.

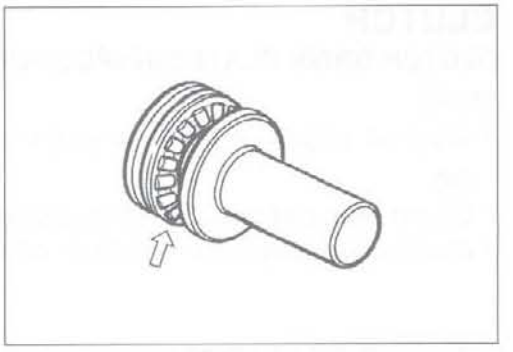

CLUTCH SLEEVE HUB/PRIMARY DRIVEN GEAR ASSEMBLY

- Inspect the slot of the clutch sleeve hub and primary driven gear assembly for damage or wear caused by the clutch plates. If necessary, replace it with a new one.

OIL PUMP

INSPECTION

- Rotate the oil pump by hand and check that it moves smoothly.
- If it does not move smoothly, replace the oil pump assembly.

CAUTION

*** Do not attempt to disassemble the oil pump assembly.**
**** The oil pump is available only as an assembly.***

STARTER CLUTCH

INSPECTION

- Install the starter driven gear ① onto the starter clutch ②.

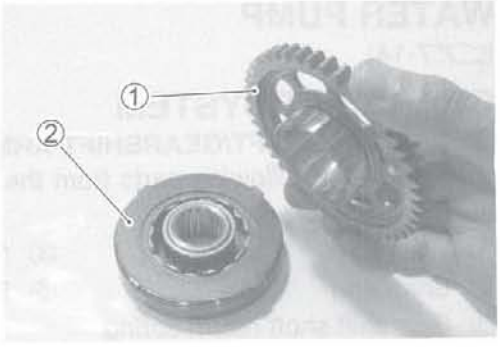

- Turn the starter driven gear by hand.
- Inspect the starter clutch for a smooth movement.
- Inspect that the gear turns one direction only.

- If a large resistance is felt for rotation, inspect the starter clutch bearing or the starter clutch contacting surface on the starter driven gear for wear and damage.
- If they are found to be damaged, replace them with the new ones.

GENERATOR

INSPECTION (☞9-9)

REASSEMBLY

- When installing the generator stator set bolts, tighten them to the specified torque.

Generator stator set bolt: 10 N·m (1.0 kgf-m, 7.0 lb-ft)

NOTE:
Be sure to install the grommet ① to the generator cover.

WATER PUMP

(☞7-14)

GEARSHIFT SYSTEM

GEARSHIFT SHAFT/GEARSHIFT ARM DISASSEMBLY

- Remove the following parts from the gearshift shaft/gearshift arm.

① Washer
② Snap ring
③ Gearshift shaft return spring
④ Gearshift cam drive plate
⑤ Plate return spring

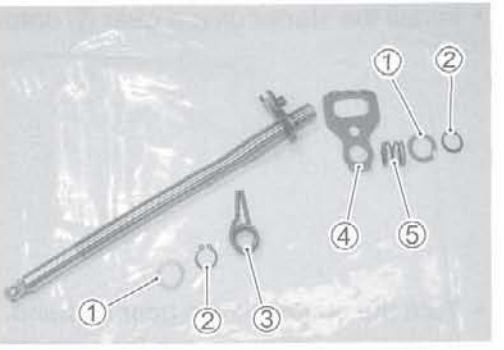

GEARSHIFT SHAFT/GEARSHIFT ARM INSPECTION

- Inspect the gearshift shaft/gearshift arm for wear or bend.
- Inspect the return springs for damage or fatigue.
- Replace the arm or spring if there is anything unusual.

GEARSHIFT SHAFT/GEARSHIFT ARM REASSEMBLY

- Install the following parts to the gearshift shaft/gearshift arm as shown in the illustration.

① Washer
② Snap ring
③ Gearshift shaft return spring
④ Gearshift cam drive plate
⑤ Plate return spring

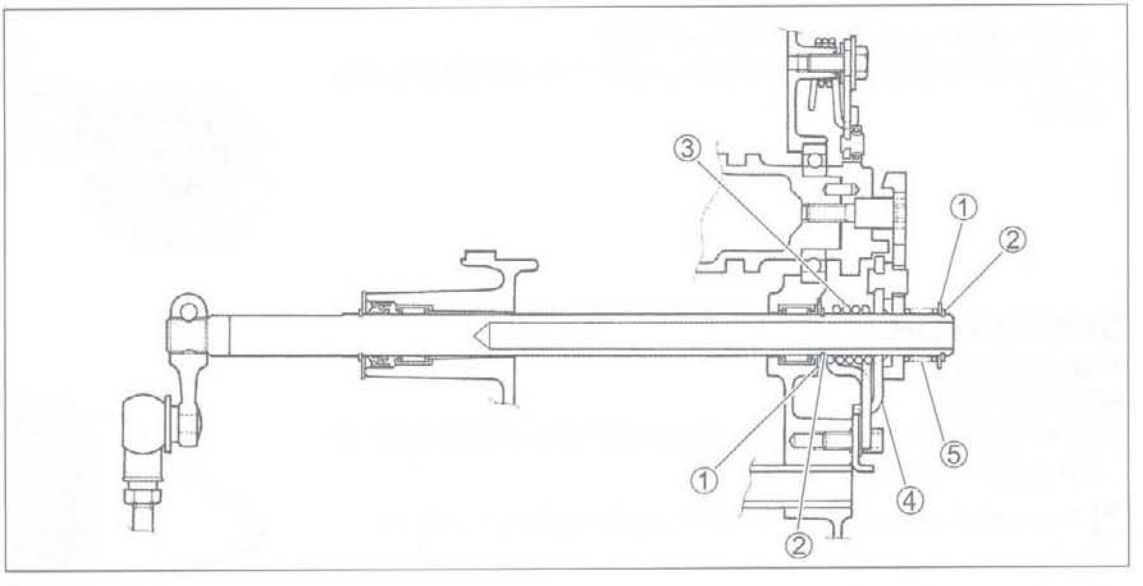

NOTE:
When installing the gearshift shaft return spring, position the stopper Ⓐ of gearshift arm between the shaft return spring ends Ⓑ.

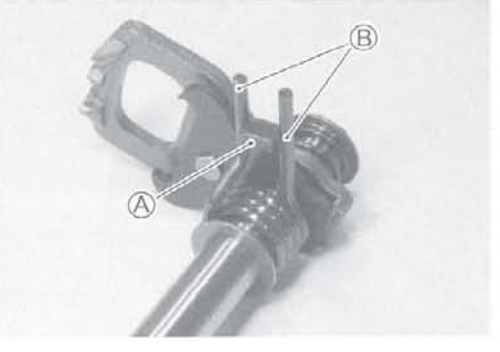

OIL PRESSURE REGULATOR

- Inspect the operation of the oil pressure regulator by pushing on the piston with a proper bar.
- If the piston does not operate, replace the oil pressure regulator with a new one.

OIL STRAINER

- Inspect the oil strainer body for damage.
- Clean the oil strainer if necessary.

TRANSMISSION

DISASSEMBLY

Disassemble the countershaft and driveshaft. Pay attention to the following points:

- Remove the 6th drive gear snap ring ① from its groove and slide it towards the 3rd/4th drive gears ②.
- Slide the 6th ③ and 2nd ④ drive gears toward the 3rd/4th drive gears ②, then remove the 2nd drive gear circlip ⑤.

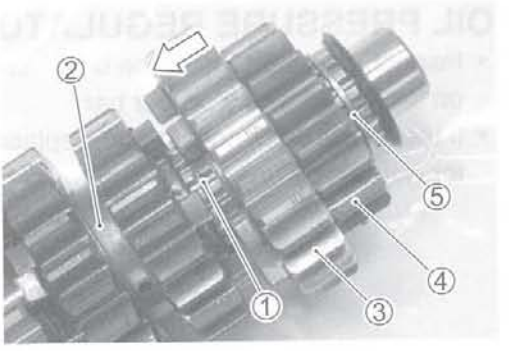

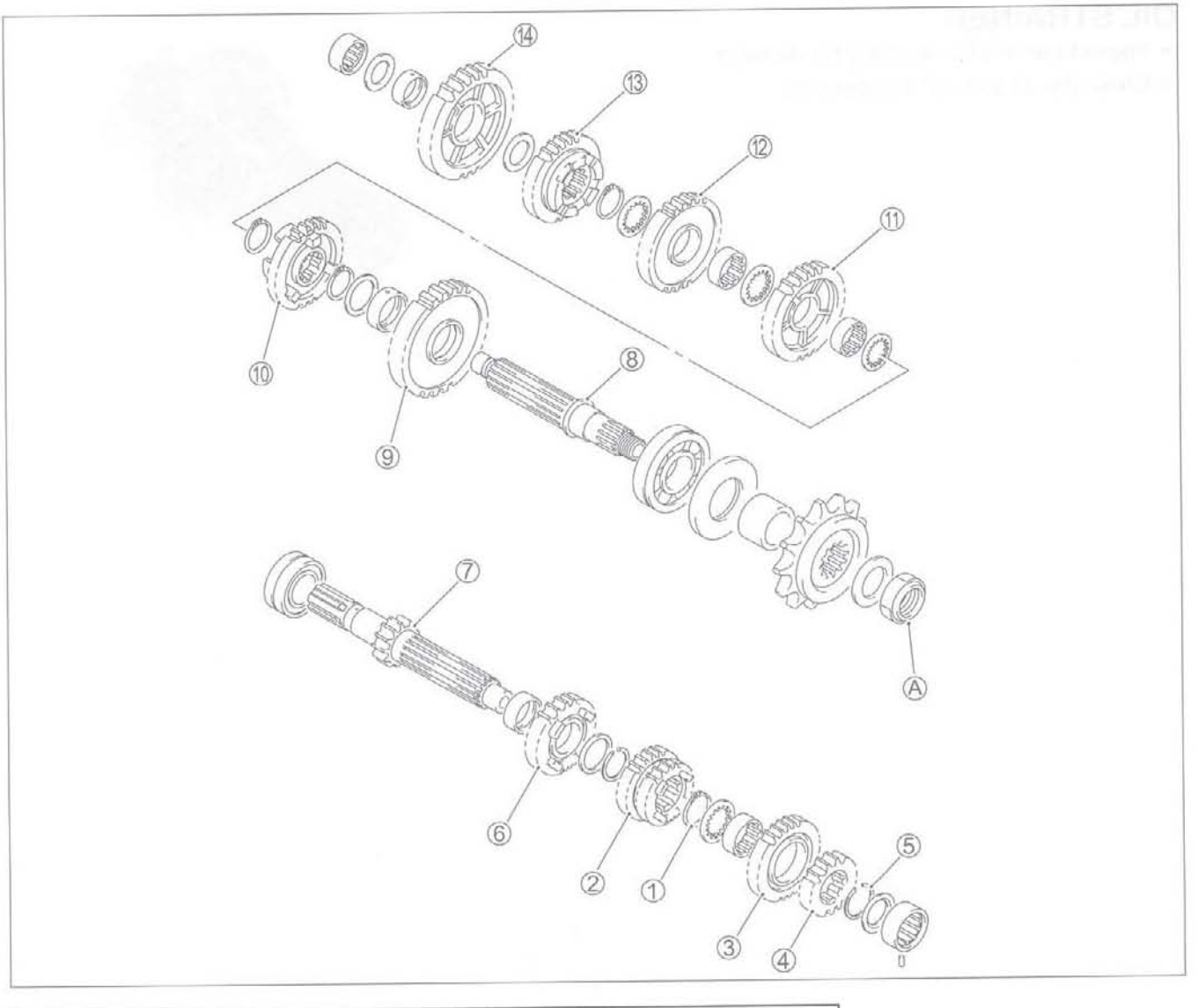

①	6th drive gear snap ring	⑨	2nd driven gear
②	3rd/4th drive gears	⑩	6th driven gear
③	6th drive gear	⑪	3rd driven gear
④	2nd drive gear	⑫	4th driven gear
⑤	2nd drive gear circlip	⑬	5th driven gear
⑥	5th drive gear	⑭	1st driven gear
⑦	Countershaft/1st drive gear	Ⓐ	Engine sprocket nut
⑧	Driveshaft		

ITEM	N·m	kgf-m	lb-ft
Ⓐ	115	11.5	83.2

REASSEMBLY

Assemble the countershaft and driveshaft in the reverse order of disassembly. Pay attention to the following points:

NOTE:

* *Rotate the bearings by hand to inspect for smooth rotation. Replace the bearings if there is anything unusual.*
* *Before installing the gears, apply engine oil to the driveshaft and countershaft.*
* *When installing the oil seal, apply SUZUKI SUPER GREASE " A" to it.*

99000-25030: SUZUKI SUPER GREASE "A" (USA)
99000-25010: SUZUKI SUPER GREASE "A" (Others)

CAUTION

* **Never reuse a snap ring. After a snap ring has been removed from a shaft, it should be discarded and a new snap ring must be installed.**
* **When installing a new snap ring, do not expand the end gap larger than required to slip the snap ring over the shaft.**
* **After installing a snap ring, make sure that it is completely seated in its groove and securely fitted.**

NOTE:

When reassembling the transmission, attention must be given to the locations and positions of washers and snap rings. The cross sectional view shows the correct position of the gears, bushings, washers and snap rings. (☞3-52)

- When installing a new snap ring, pay attention to its direction. Fit it to the side where the thrust is as shown in the illustration.

Ⓐ Thrust
Ⓑ Sharp edge

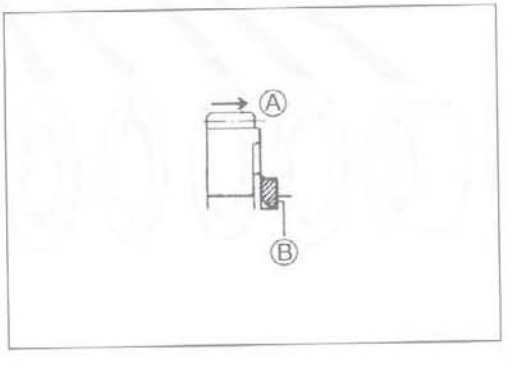

CAUTION

When installing the gear bushing onto the countershaft ① and driveshaft ②, align the shaft oil hole ③ with the bushing oil hole ④.

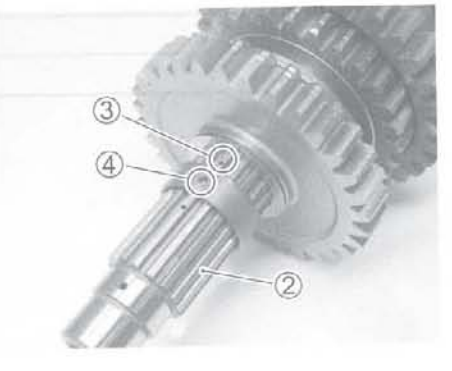

TRANSMISSION PARTS LOCATION

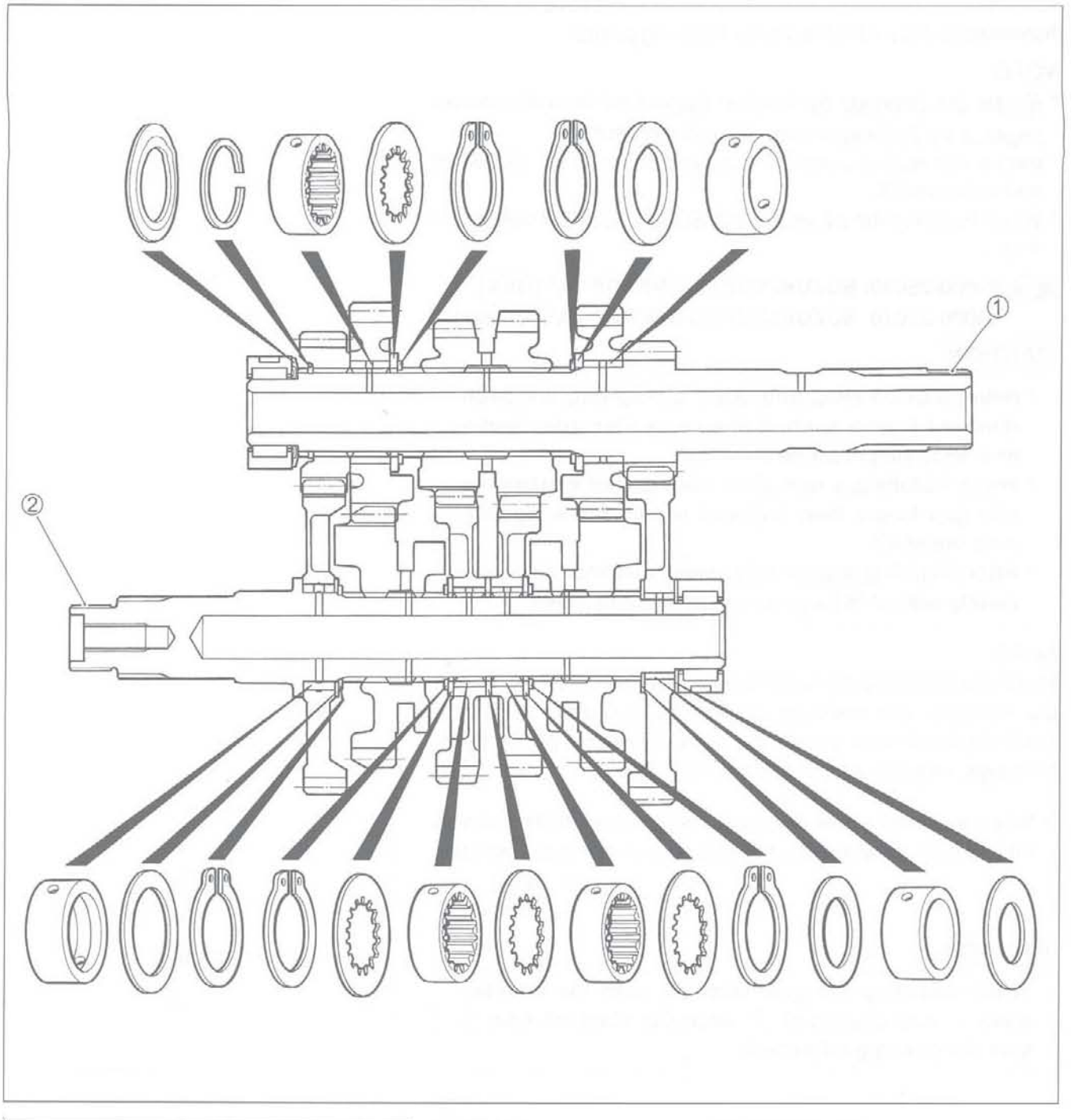

①	Countershaft
②	Driveshaft

CYLINDER

CRANKCASE SERVICING (☞3-56)

CYLINDER DISTORTION

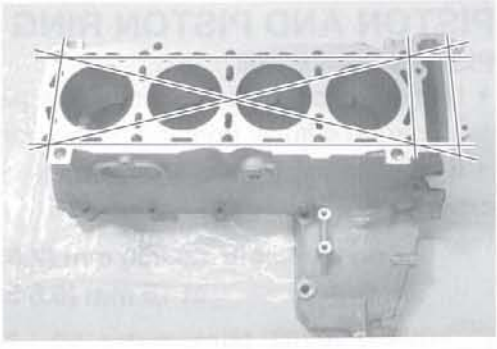

- Check the gasketed surface of the cylinder for distortion with a straightedge and thickness gauge, taking a clearance reading at several places as indicated.
- If the largest reading at any position of the straightedge exceeds the limit, replace the crankcase set.

DATA Cylinder distortion:
Service Limit: 0.02 mm (0.008 in)

TOOL 09900-20803: Thickness gauge

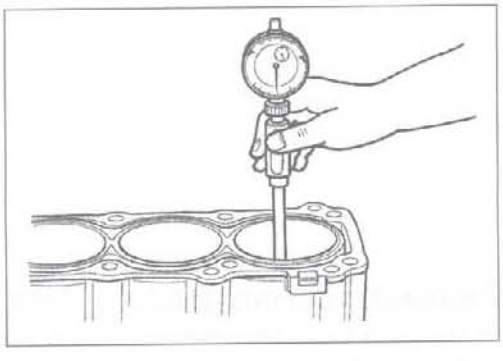

CYLINDER BORE

- Inspect the cylinder wall for any scratches, nicks or other damage.
- Measure the cylinder bore diameter at six places.

DATA Cylinder bore:
Standard: 67.000 – 67.015 mm (2.6378 – 2.6384 in)

TOOL 09900-20508: Cylinder gauge set

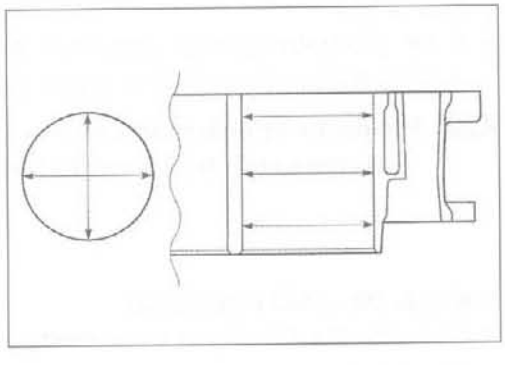

PISTON AND PISTON RING

PISTON DIAMETER

- Using a micrometer, measure the piston outside diameter at 15 mm (0.6 in) Ⓐ from the piston skirt end.
- If the measurement is less than the limit, replace the piston.

DATA Piston diameter:
Service Limit: 66.880 mm (2.6331 in)
at 15 mm (0.6 in) from the skirt end

TOOL 09900-20203: Micrometer (50 – 75 mm)

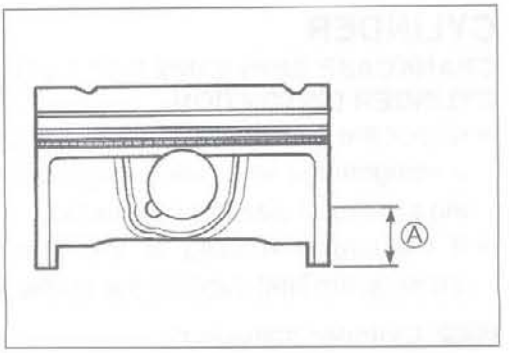

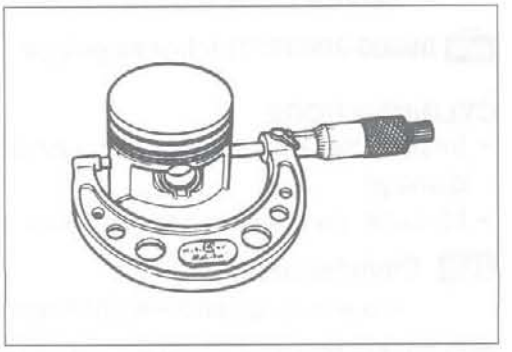

PISTON-TO-CYLINDER CLEARANCE

- Subtract the piston diameter from the cylinder bore diameter. (☞3-53)
- If the piston-to-cylinder clearance exceeds the service limit, replace the crankcase set or the piston, or both.

DATA Piston-to-cylinder clearance:
Service Limit: 0.120 mm (0.0047 in)

PISTON PIN AND PIN BORE

- Measure the piston pin bore inside diameter using the small bore gauge.
- If the measurement is out of specifications replace the piston.

DATA Piston pin bore I.D.:
Service Limit: 14.030 mm (0.5524 in)

TOOL 09900-20602: Dial gauge (1/1000 mm)
09900-22401: Small bore gauge (10 – 18 mm)

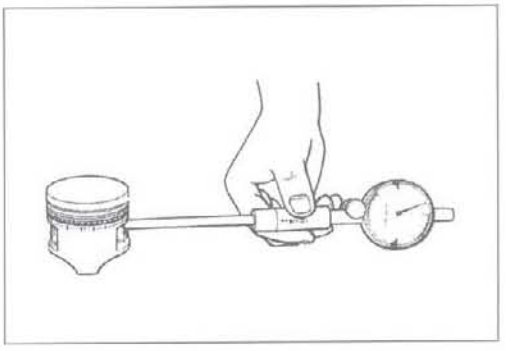

- Measure the piston pin outside diameter at three positions using the micrometer.
- If any of the measurements are out of specification, replace the piston pin.

DATA Piston pin O.D.:
Service Limit: 13.980 mm (0.5504 in)

TOOL 09900-20205: Micrometer (0 – 25 mm)

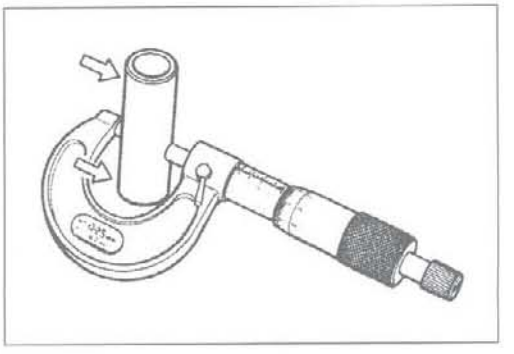

PISTON RING-TO-GROOVE CLEARANCE

- Measure the side clearances of the 1st and 2nd piston rings using the thickness gauge.
- If any of the clearances exceed the limit, replace both the piston and piston rings.

TOOL 09900-20803: Thickness gauge
09900-20205: Micrometer (0 – 25 mm)

DATA Piston ring-to-groove clearance:
Service Limit (1st) : 0.180 mm (0.0071 in)
(2nd): 0.150 mm (0.0059 in)

DATA Piston ring groove width:
Standard (1st) : 1.01 – 1.03 mm (0.0398 – 0.0406 in)
(2nd): 0.81 – 0.83 mm (0.0319 – 0.0327 in)
(Oil) : 1.51 – 1.53 mm (0.0594 – 0.0602 in)

DATA Piston ring thickness:
Standard (1st) : 0.97 – 0.99 mm (0.0382 – 0.0390 in)
(2nd): 0.77 – 0.79 mm (0.0303 – 0.0311 in)

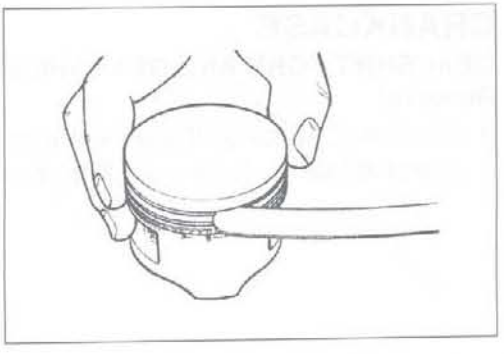

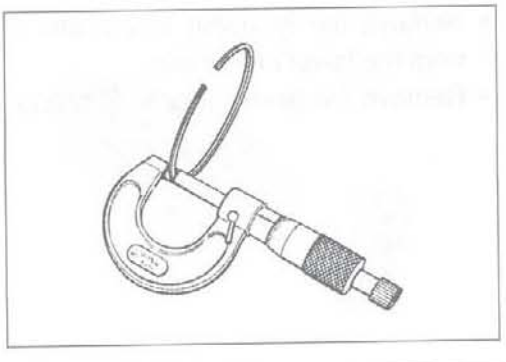

PISTON RING FREE END GAP AND PISTON RING END GAP

- Measure the piston ring free end gap using the vernier calipers.
- Next, fit the piston ring squarely into the cylinder and measure the piston ring end gap using the thickness gauge.
- If any of the measurements exceed the service limit, replace the piston ring with a new one.

DATA Piston ring free end gap:
Service Limit (1st) : 4.4 mm (0.17 in)
(2nd): 8.0 mm (0.31 in)

TOOL 09900-20102: Vernier calipers

DATA Piston ring end gap:
Service Limit (1st) : 0.50 mm (0.020 in)
(2nd): 0.50 mm (0.020 in)

TOOL 09900-20803: Thickness gauge

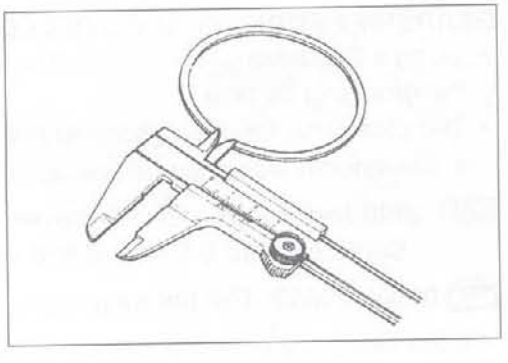

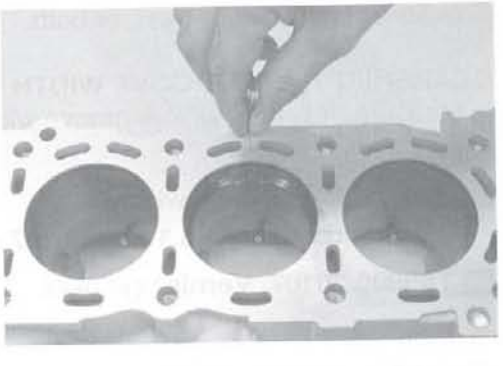

CRANKCASE

GEARSHIFT FORK AND GEARSHIFT CAM

Removal

- Remove the gearshift cam bearing retainer screws ① and gearshift fork shaft retainer ② from the lower crankcase.

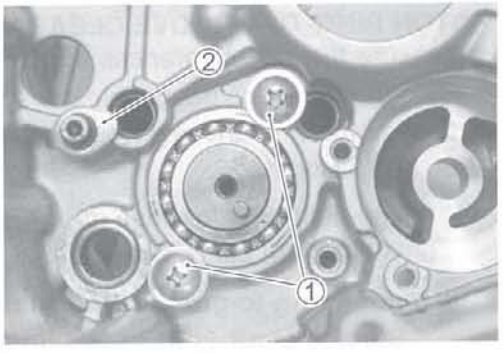

- Remove the gearshift fork shafts ③ and gearshift ④ forks from the lower crankcase.
- Remove the gearshift cam ⑤ and its bearing ⑥.

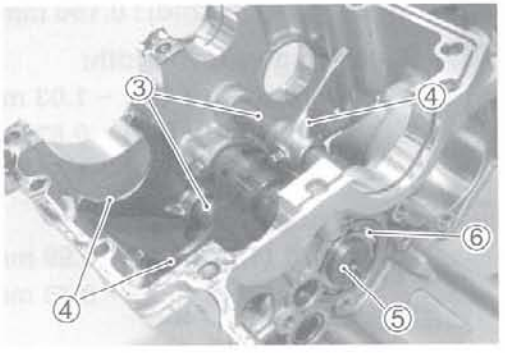

GEARSHIFT FORK-TO-GROOVE CLEARANCE

- Using a thickness gauge, check the gearshift fork clearance in the groove of its gear.
- The clearance for each gearshift fork plays an important role in the smoothness and positiveness of the shifting action.

DATA Shift fork-to-groove clearance:
Service Limit: 0.5 mm (0.020 in)

TOOL 09900-20803: Thickness gauge

- If the clearance checked is noted to exceed the limit specified, replace the fork or its gear, or both.

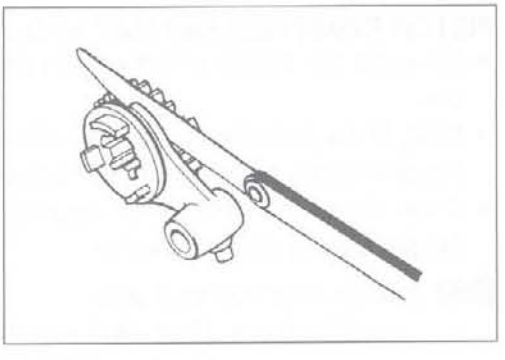

GEARSHIFT FORK GROOVE WIDTH

- Measure the gearshift fork groove width using the vernier calipers.

DATA Shift fork groove width:
Standard: 5.0 – 5.1 mm (0.197 – 0.201 in)

TOOL 09900-20102: Vernier calipers

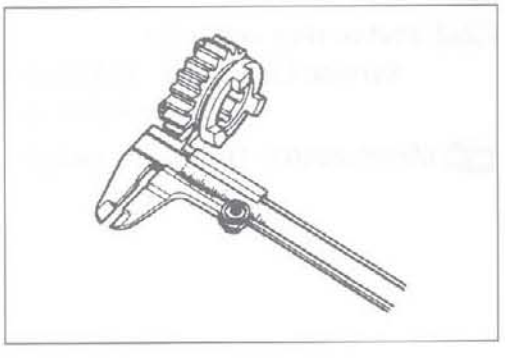

GEARSHIFT FORK THICKNESS

- Measure the gearshift fork thickness using the vernier calipers.

DATA Shift fork thickness:
Standard: 4.8 – 4.9 mm (0.189 – 0.193 in)

TOOL 09900-20102: Vernier calipers

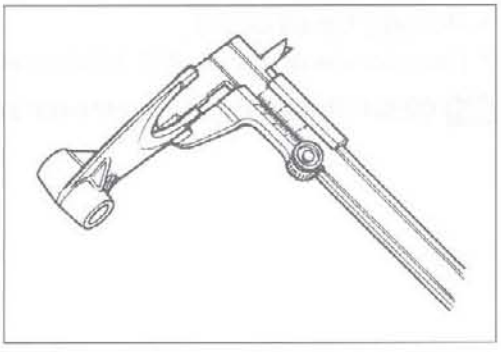

GEARSHIFT CAM BEARING AND GEARSHIFT SHAFT BEARING

Bearing inspection

- Inspect the gearshift cam bearing for abnormal noise and smooth rotation.
- Replace the bearings if there is anything unusual.

- Inspect the gearshift cam bearing ①, gearshift shaft bearings ② and ③ for abnormal noise and smooth rotation while they are in the crankcase.
- Replace a bearing if there is anything unusual.

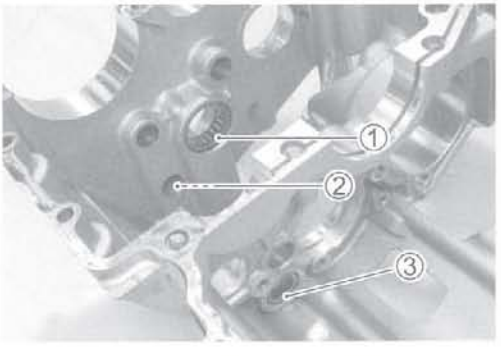

Bearing removal

- Remove the gearshift shaft bearing with the special tools.

TOOL 09921-20210: Bearing remover
09930-30104: Sliding shaft

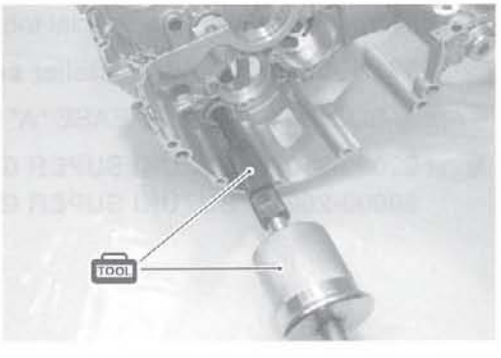

- Remove the gearshift cam bearing with the special tools.

TOOL 09921-20240: Bearing remover set (25 mm)
09910-20115: Conrod stopper

CAUTION

> *** Do not damage the crankcase by conrod stopper.**
> *** Be careful not to lean the bearing remover.**

- Remove the oil seal ①.
- Remove the gearshift shaft bearing with the special tool.

TOOL 09921-20240: Bearing remover set (15 mm)

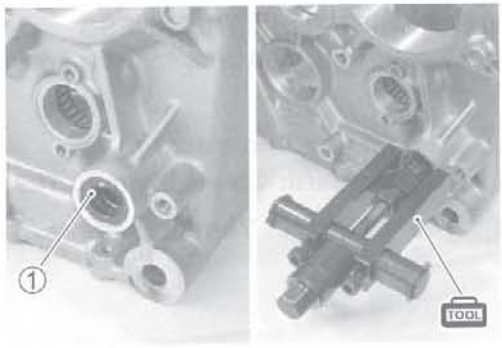

Installation

- Install the bearings with the special tool.

TOOL 09913-70210: Bearing installer set (①, ② ϕ 22)
(③ ϕ 32)

NOTE:
The stamped mark side of the gearshift shaft bearing faces outside.

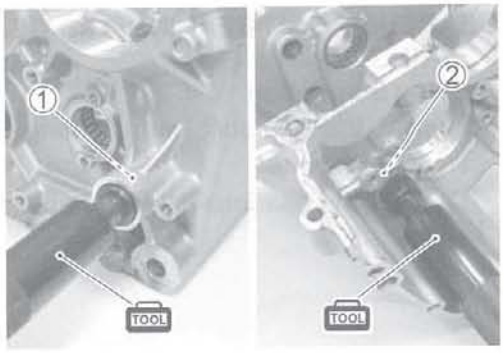

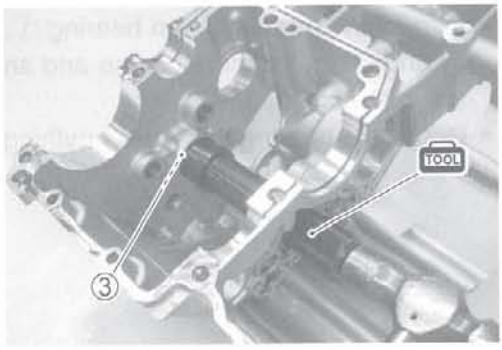

- Install the oil seal with the special tool.

TOOL 09913-70210: Bearing installer set (ϕ 22)

- Apply SUZUKI SUPER GREASE "A" to the oil seal lip.

A 99000-25030: SUZUKI SUPER GREASE "A" (USA)
99000-25010: SUZUKI SUPER GREASE "A" (Others)

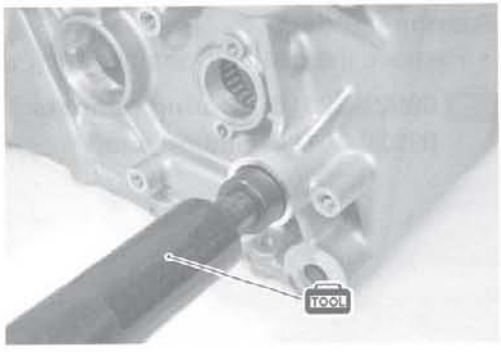

- Install the gearshift cam ④ with the bearing ⑤.

NOTE:
The stamped mark side of the gearshift cam bearing faces outside.

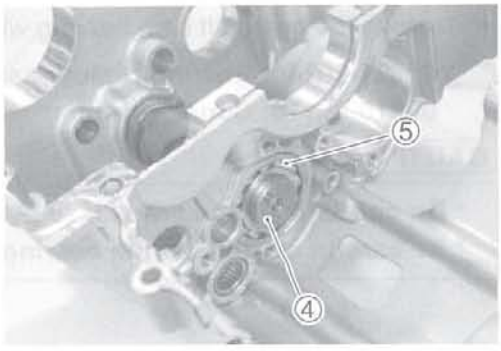

- Install the gearshift forks and their shafts as shown.
  - ⑥ For 3rd/4th drive gears
  - ⑦ For 6th driven gear (17E-1U)
  - ⑧ For 5th driven gear (17E-1T)

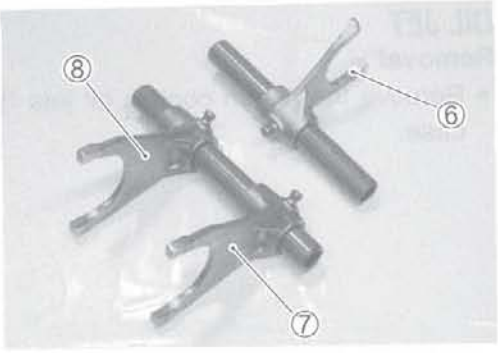

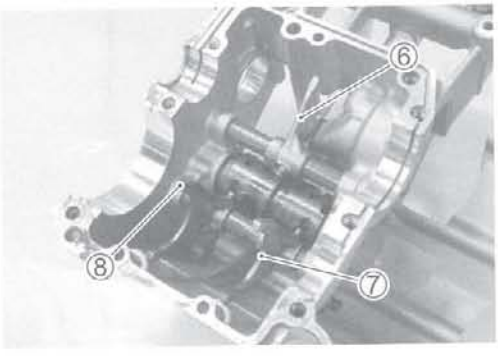

- Apply a small quantity of THREAD LOCK to the bearing retainer screws ⑨.
- Tighten the bearing retainer screws ⑨ and gearshift fork shaft retainer bolt ⑩ to the specified torque.

1342 99000-32050: THREAD LOCK "1342"

Bearing retainer screw: 10 N·m (1.0 kgf-m, 7.0 lb-ft)
Gearshift fork shaft retainer bolt: 10 N·m (1.0 kgf-m, 7.0 lb-ft)

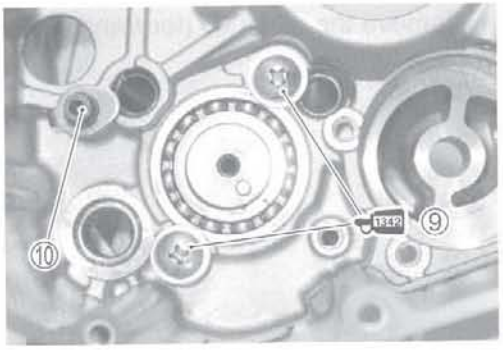

OIL JET

Removal

- Remove the piston cooling oil jets ① from the upper crankcase.

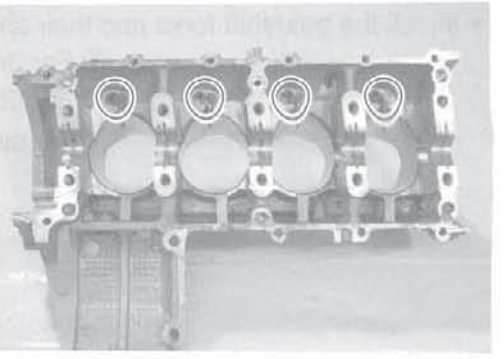

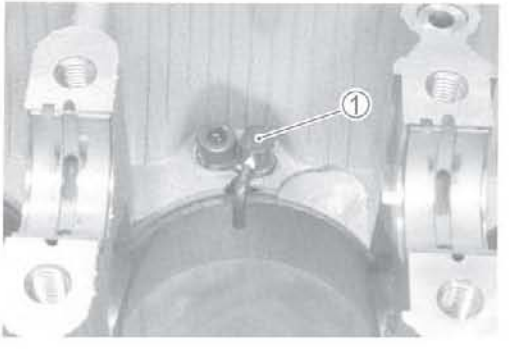

- Remove the oil jet ② (for transmission) from the lower crankcase.

- Remove the oil jet ③ (for cam chain tension adjuster) from the cylinder head.

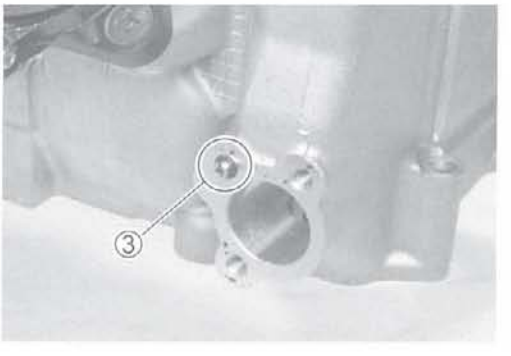

Inspection and cleaning

- Check the oil jets for clogging.
- If they are clogged, clean their oil passage with a proper wire and compressed air.

① Piston cooling oil jet
② Oil jet (#14) (For transmission)
③ Oil jet (#8) (For cam chain tension adjuster)

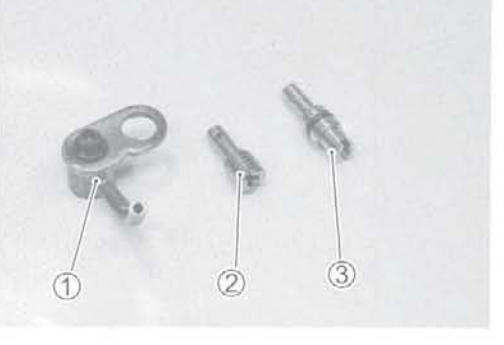

Installation

- Fit the new O-ring ① to each piston cooling oil jet as shown and apply engine oil to them.

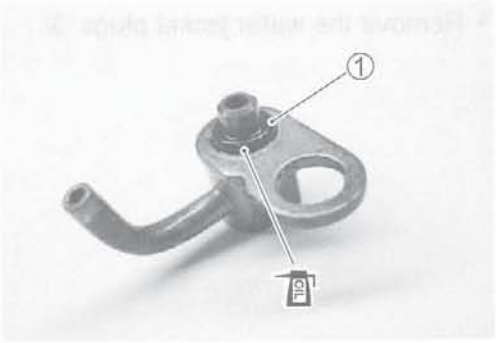

CAUTION

Use the new O-rings to prevent oil pressure leak.

- Install each piston cooling oil jet with the bolt.

NOTE:
Apply a small quantity of THREAD LOCK to the bolts and tighten them to the specified torque.

1342 99000-32050: THREAD LOCK "1342"

Piston cooling oil jet bolt: 10 N·m (1.0 kgf-m, 7.0 lb-ft)

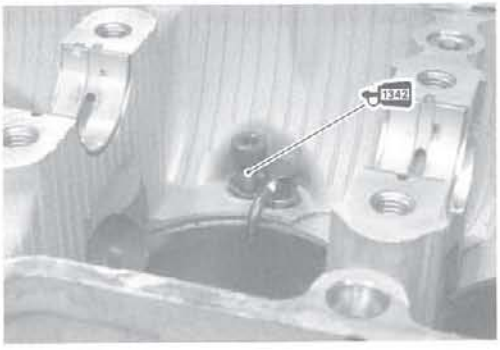

- Install the oil jet (for transmission).

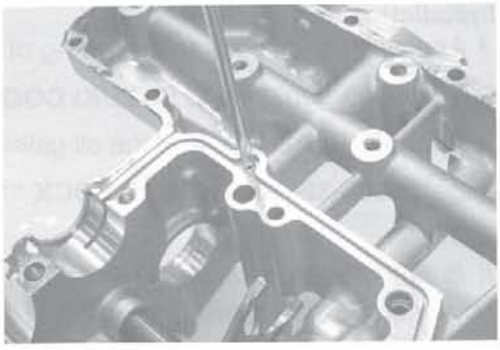

- Apply engine oil to the O-ring.
- Install the oil jet (for cam chain tension adjuster).

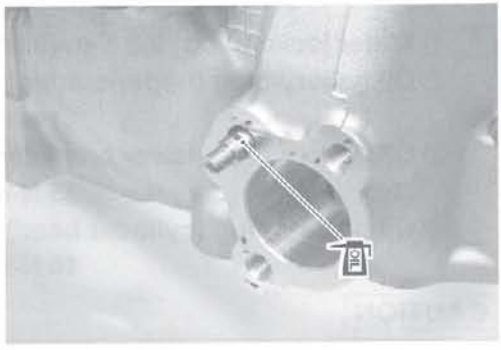

PLUG

Removal

- Remove the oil gallery plugs ① and ②.

① (for cylinder head side)
② (for upper crankcase side)

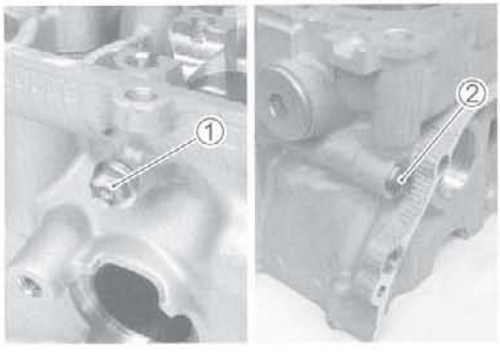

CONROD BIG END SIDE CLEARANCE

- Inspect the conrod side clearance by using a thickness gauge.
- If the clearance exceeds the limit, remove the conrod and inspect the conrod big end width and the crank pin width.
- If the width exceed the limit, replace conrod or crankshaft.

DATA Conrod big end side clearance:
Service Limit: 0.30 mm (0.012 in)

TOOL 09900-20803: Thickness gauge

DATA Conrod big end width:
Standard: 19.95 – 20.00 mm (0.7854 – 0.7874 in)

TOOL 09900-20205: Micrometer (0 – 25 mm)

DATA Crank pin width:
Standard: 20.10 – 20.15 mm (0.7913 – 0.7933 in)

TOOL 09900-20605: Dial calipers (1/100 mm, 10 – 34 mm)

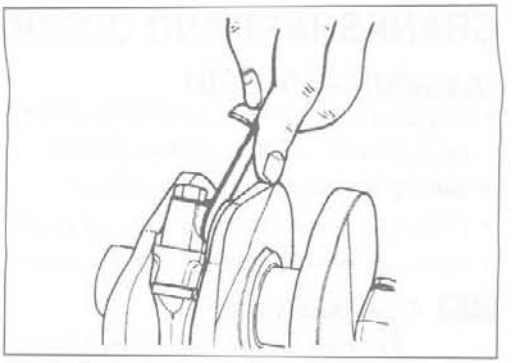

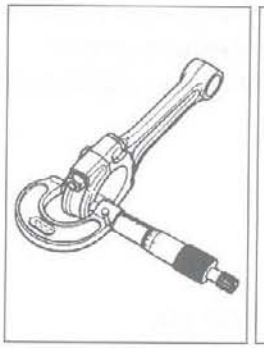

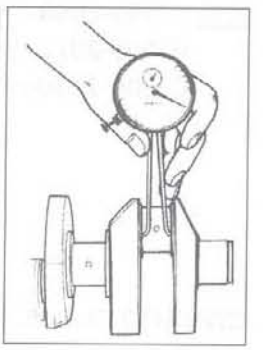

CONROD-BIG END BEARING INSPECTION

- Inspect the bearing surfaces for any sign of fusion, pitting, burn, or flaws. If any, replace them with a specified set of bearings.

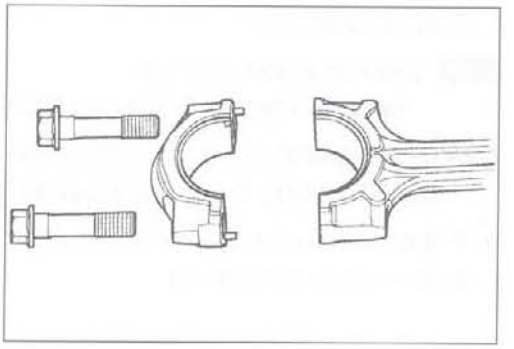

CONROD-BIG END BEARING SELECTION

- Place the plastigauge axially along the crank pin, avoiding the oil hole, as shown.

TOOL 09900-22301: Plastigauge

- Tighten the conrod cap bolts to the specified torque, in two stages. (☞3-75)

CAUTION

> *** Apply engine oil to the bearing cap bolt.**
> *** Never rotate the crankshaft or conrod when a piece of plastigauge is installed.**

*1: The number faces the intake side.

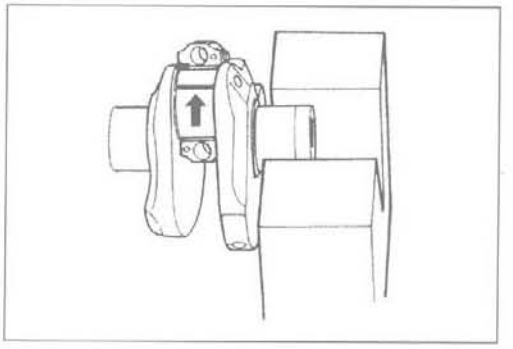

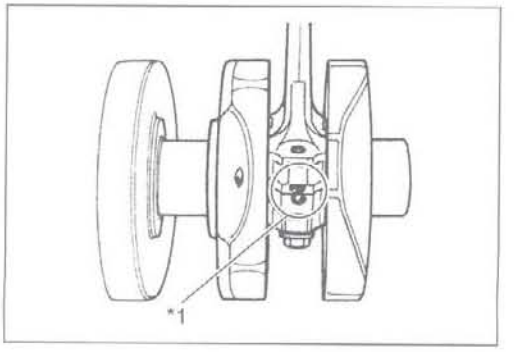

CRANKSHAFT AND CONROD

CRANKSHAFT RUNOUT

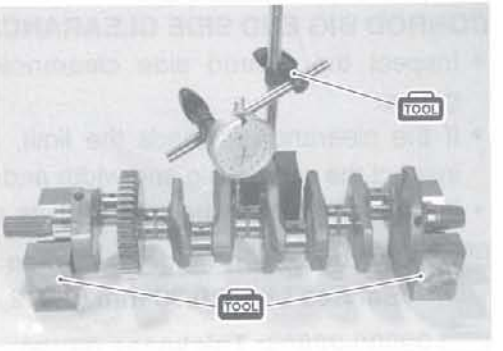

- Support the crankshaft with V-blocks as shown, with the two end journals resting on the blocks.
- Set up the dial gauge, as shown.
- Rotate the crankshaft slowly to read the runout.
- Replace the crankshaft if the runout is greater than the limit.

DATA Crankshaft runout:
Service Limit: 0.05 mm (0.002 in)

TOOL 09900-20607: Dial gauge (1/100 mm, 10 mm)
09900-20701: Magnetic stand
09900-21304: V-block set (100 mm)

CONROD SMALL END I.D.

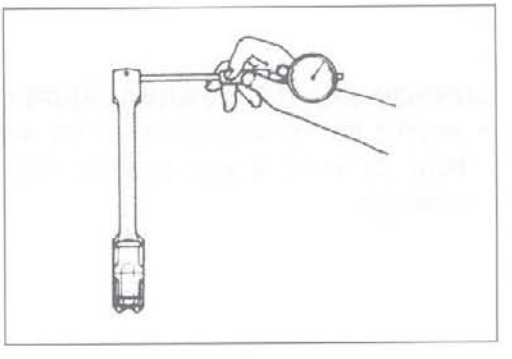

- Using a small bore gauge, measure the inside diameter of the conrod small end.

DATA Conrod small end I.D.:
Service Limit: 14.040 mm (0.5528 in)

TOOL 09900-20602: Dial gauge (1/1000 mm, 1 mm)
09900-22401: Small bore gauge (10 – 18 mm)

- If the inside diameter of the conrod small end exceeds the limit, replace the conrod.

DATA Crank pin O.D.

Code	O.D. specification
1	30.992 – 31.000 mm (1.2202 – 1.2205 in)
2	30.984 – 30.992 mm (1.2198 – 1.2202 in)
3	30.976 – 30.984 mm (1.2195 – 1.2198 in)

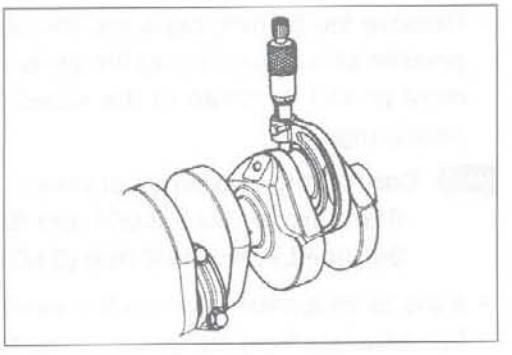

TOOL 09900-20202: Micrometer (25 – 50 mm)

DATA Bearing thickness

Color (Part No.)	Thickness
Yellow (12164-29G00-0D0)	1.492 – 1.496 mm (0.0587 – 0.0589 in)
Brown (12164-29G00-0C0)	1.488 – 1.492 mm (0.0586 – 0.0587 in)
Black (12164-29G00-0B0)	1.484 – 1.488 mm (0.0584 – 0.0586 in)
Green (12164-29G00-0A0)	1.480 – 1.484 mm (0.0583 – 0.0584 in)

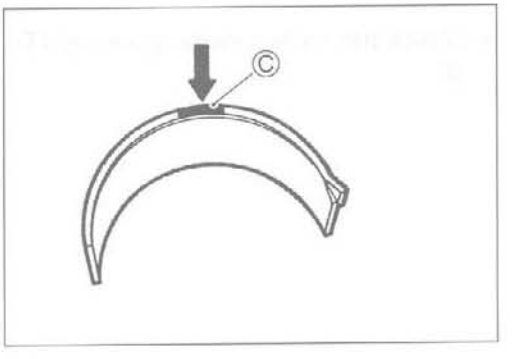

CAUTION

The bearings must be replaced as a set.

- Remove the bearing caps and measure the width of the compressed plastigauge using the envelope scale. This measurement should be taken at the widest part of the compressed plastigauge.

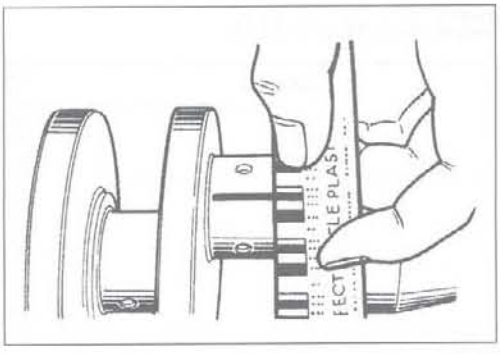

DATA Conrod big end oil clearance:
Standard: 0.032 – 0.056 mm (0.0013 – 0.0022 in)
Service Limit: 0.080 mm (0.0031 in)

- If the oil clearance exceeds the service limit, select the specified bearings from the bearing selection table.

- Check the corresponding conrod I.D. code number ("1" or "2") Ⓐ.

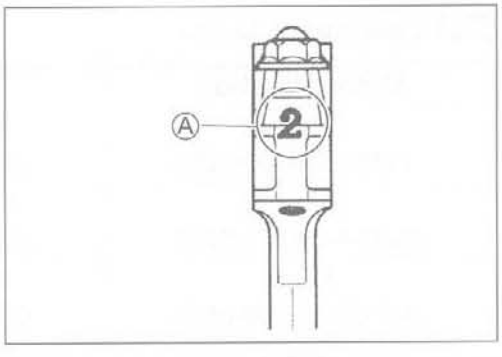

- Check the corresponding crank pin O.D. code number ("1", "2" or "3") Ⓑ.

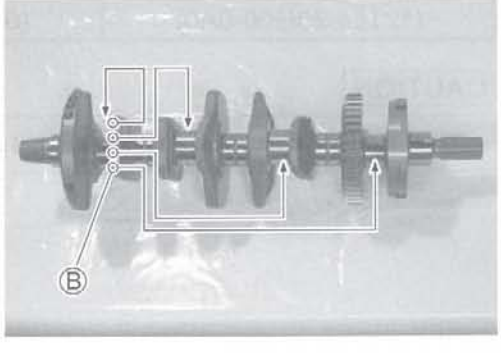

DATA Bearing selection table

		Crank pin O.D. Ⓑ		
	Code	1	2	3
Conrod I.D Ⓐ	1	Green	Black	Brown
	2	Black	Brown	Yellow

DATA Conrod I.D.

Code	I.D. specification
1	34.000 – 34.008 mm (1.3386 – 1.3389 in)
2	34.008 – 34.016 mm (1.3389 – 1.3392 in)

- Remove the water jacket plugs ③.

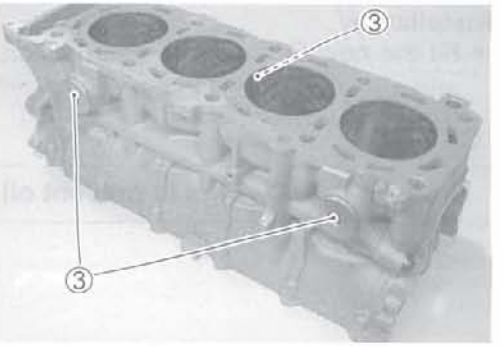

- Remove the oil gallery plugs ④ (for lower crankcase side).

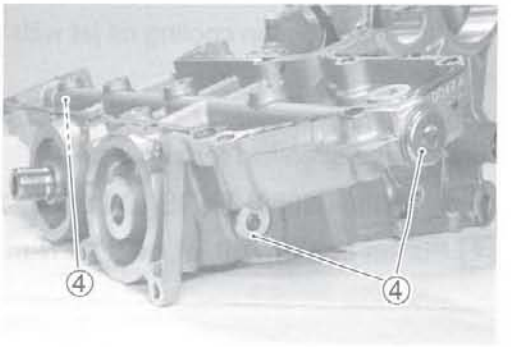

Installation

- Apply engine coolant to the O-ring of the water jacket plug ①.

LLC 99000-99032-11X: SUZUKI COOLANT (Except USA)

- Apply THREAD LOCK to the oil gallery plug ②.

1342 99000-32050: THREAD LOCK "1342"

NOTE:
It is not require to apply THREAD LOCK when installing the other removed oil gallery plugs.

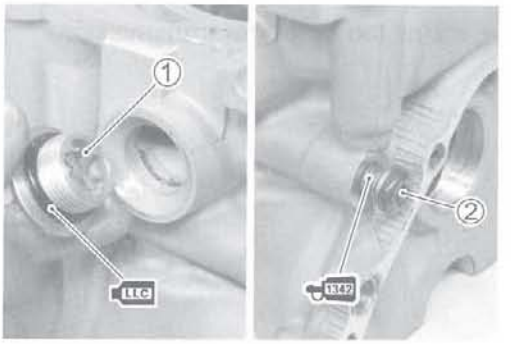

- Tighten each plug to the specified torque.

① Water jacket plug: 9.5 N·m (0.95 kgf-m, 6.9 lb-ft)
② Oil gallery plug (upper crankcase): 11 N·m (1.1 kgf-m, 8.0 lb-ft)
③ Oil gallery plug (lower crankcase): 35 N·m (3.5 kgf-m, 25.5 lb-ft)
④ Oil gallery plug (cylinder head): 10 N·m (1.0 kgf-m, 7.0 lb-ft)

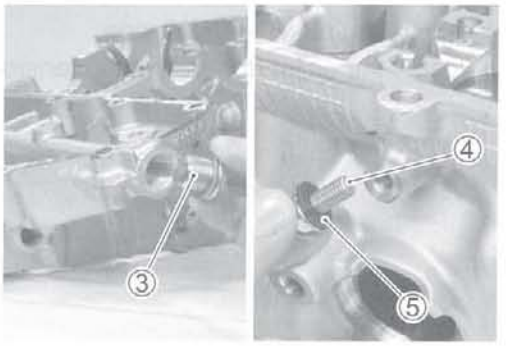

CAUTION

Use the new gasket ⑤ to prevent oil leakage.

CRANKSHAFT JOURNAL BEARING

INSPECTION

- Inspect each bearing of upper and middle crankcases for any damage.

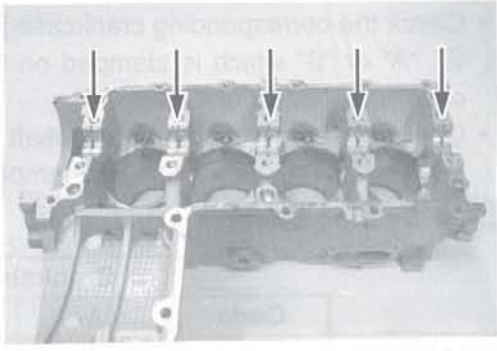

SELECTION

- Place the plastigauge axially along the crankshaft journal, avoiding the oil hole, as shown.

TOOL 09900-22301: Plastigauge

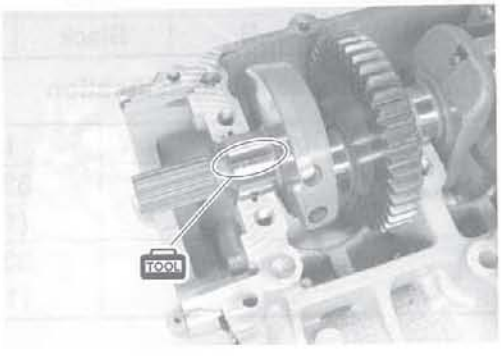

CAUTION

> **Never rotate the crankshaft when a piece of plastigauge is installed.**

- Mate the middle crankcase with the upper crankcase, and tighten the crankshaft journal bolts (M9) in the following two steps in the indicated order.

Crankshaft journal bolt (9 mm)
Initial: 18 N·m (1.8 kgf-m, 13.0 lb-ft)
Final : 50 °

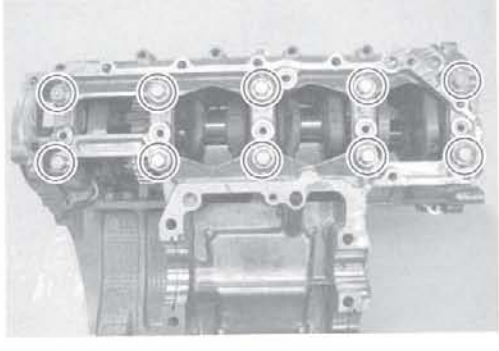

- Remove the middle crankcase and measure the width of the compressed plastigauge using the envelope scale. This measurement should be taken at the widest part of the compressed plastigauge.

DATA Crankshaft journal oil clearance:
Standard: 0.016 – 0.040 mm (0.0006 – 0.0016 in)
Service Limit: 0.080 mm (0.0031 in)

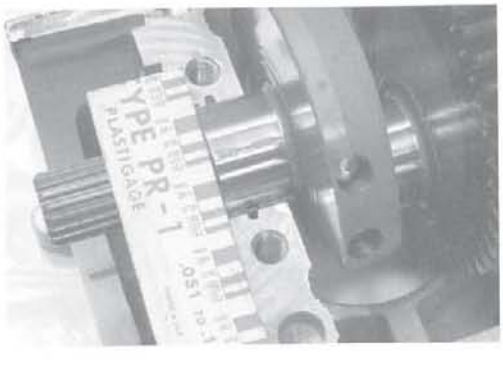

- If the oil clearance exceeds the service limit, select the specified bearings from the bearing selection table.

- Check the corresponding crankcase journal I.D. code number Ⓐ, "A" or "B" which is stamped on the rear of upper crankcase.
- Check the corresponding crankshaft journal O.D. code number Ⓑ, "A", "B" or "C" which is stamped on the crankshaft.

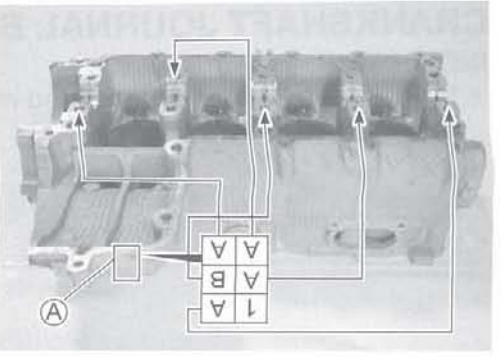

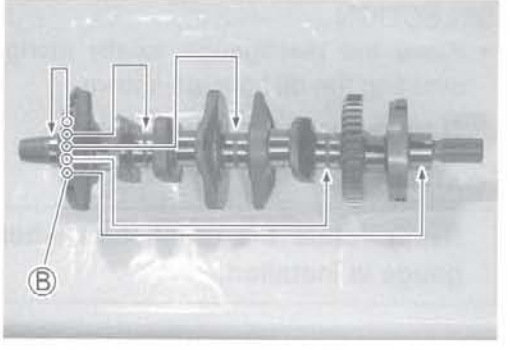

DATA Bearing selection table

		Crankshaft journal O.D. Ⓑ		
	Code	A	B	C
Crankcase I.D. Ⓐ	A	Green	Black	Brown
	B	Black	Brown	Yellow

DATA Crankcase I.D. specification

Code	I.D. specification
A	33.000 – 33.008 mm (1.2992 – 1.2995 in)
B	33.008 – 33.016 mm (1.2995 – 1.2998 in)

DATA Crankshaft journal O.D. specification

Code	O.D. specification
A	29.992 – 30.000 mm (1.1808 – 1.1811 in)
B	29.984 – 29.992 mm (1.1805 – 1.1808 in)
C	29.976 – 29.984 mm (1.1802 – 1.1805 in)

TOOL 09900-20202: Micrometer (25 – 50 mm)

DATA Bearing thickness specification

Color (Part No.)	Thickness
Yellow (12229-29G00-0D0)	1.500 – 1.504 mm (0.0591 – 0.0592 in)
Brown (12229-29G00-0C0)	1.496 – 1.500 mm (0.0589 – 0.0591 in)
Black (12229-29G00-0B0)	1.492 – 1.496 mm (0.0587 – 0.0589 in)
Green (12229-29G00-0A0)	1.488 – 1.492 mm (0.0586 – 0.0587 in)

NOTE:
Upper and middle crankshaft journal bearings are the same.

INSTALLATION

- When fitting the crankshaft journal bearings to the upper and lower crankcases, be sure to fix the stopper part Ⓐ first and press the other end.

CAUTION

Do not touch the bearing surfaces with your hands. Grasp by the edge of the bearing shell.

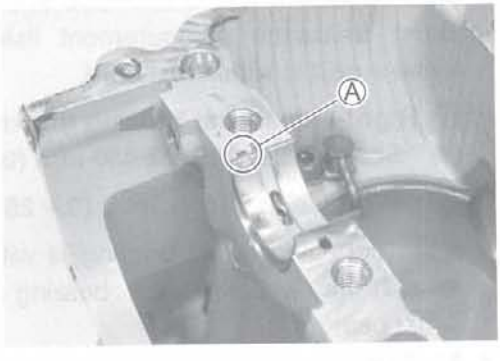

CRANKSHAFT THRUST BEARING

- With the crankshaft, right-side thrust bearing and left-side thrust bearing inserted in the upper crankcase, measure the thrust clearance on the left side by using the thickness gauge.

Ⓛ: Left-side thrust bearing
Ⓡ: Right-side thrust bearing

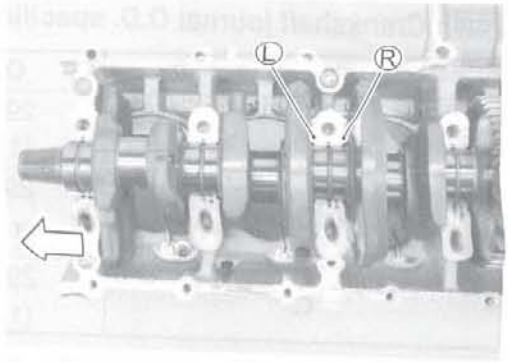

NOTE:

Pull the crankshaft to the generator side, so that there is no clearance on the right-side thrust bearing.

DATA Thrust clearance:
Standard: 0.055 – 0.110 mm (0.0022 – 0.0043 in)

TOOL 09900-20803: Thickness gauge

- If the thrust clearance exceeds the standard range, adjust the thrust clearance by the following procedures.

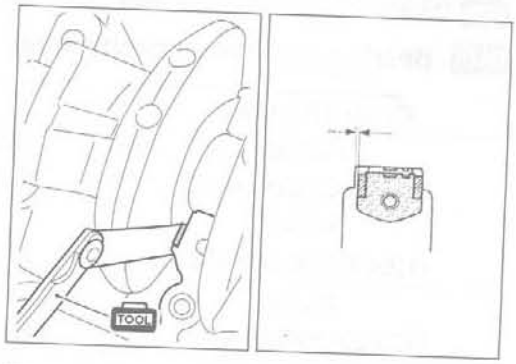

CRANKSHAFT THRUST CLEARANCE ADJUSTMENT

- Remove the right-side thrust bearing and measure its thickness with a micrometer.
- If the thickness of the right-side thrust bearing is below standard, replace it with a new one and once again perform the thrust clearance measurement listed above, checking to make sure it is within standard.

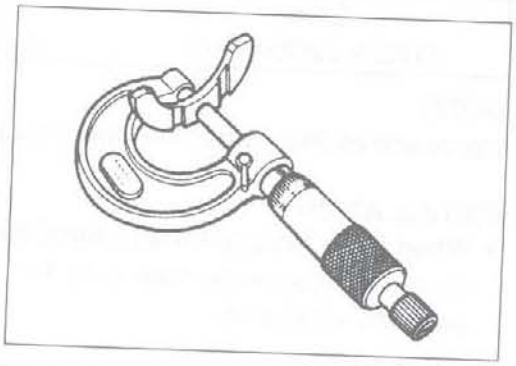

DATA Right-side thrust bearing thickness:
Standard: 2.425 – 2.450 mm (0.0955 – 0.0965 in)

TOOL 09900-20205: Micrometer (0 – 25 mm)

- If the right-side thrust bearing is within the standard range, reinsert the right-side thrust bearing and remove the left-side thrust bearing.
- As shown in the illustration, measure the clearance by using a thickness gauge before inserting of the left-side thrust bearing.
- Select a left-side thrust bearing from the selection table. (☞3-71)

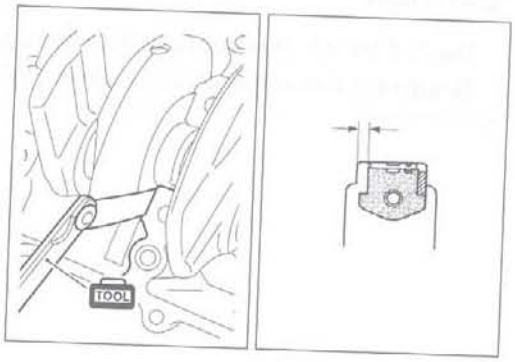

DATA Thrust bearing selection table

Clearance before inserting left-side thrust bearing	Color (Part No.)	Thrust bearing thickness	Thrust clearance
2.560 – 2.585 mm (0.1008 – 0.1018 in)	White (12228-17E00-0F0)	2.475 – 2.500 mm (0.0974 – 0.0984 in)	0.060 – 0.110 mm (0.0024 – 0.0043 in)
2.535 – 2.560 mm (0.0998 – 0.1008 in)	Yellow (12228-17E00-0E0)	2.450 – 2.475 mm (0.0965 – 0.0974 in)	0.060 – 0.110 mm (0.0024 – 0.0043 in)
2.510 – 2.535 mm (0.0988 – 0.0998 in)	Green (12228-17E00-0D0)	2.425 – 2.450 mm (0.0955 – 0.0965 in)	0.060 – 0.110 mm (0.0024 – 0.0043 in)
2.485 – 2.510 mm (0.0978 – 0.0988 in)	Blue (12228-17E00-0C0)	2.400 – 2.425 mm (0.0945 – 0.0955 in)	0.060 – 0.110 mm (0.0024 – 0.0043 in)
2.460 – 2.485 mm (0.0969 – 0.0978 in)	Black (12228-17E00-0B0)	2.375 – 2.400 mm (0.0935 – 0.0945 in)	0.060 – 0.110 mm (0.0024 – 0.0043 in)
2.430 – 2.460 mm (0.0957 – 0.0969 in)	Red (12228-17E00-0A0)	2.350 – 2.375 mm (0.0925 – 0.0935 in)	0.055 – 0.110 mm (0.0022 – 0.0043 in)

- After selecting a left-side thrust bearing, insert it and again perform the thrust clearance measurement to make sure it falls within the standard range.

Ⓐ Color code

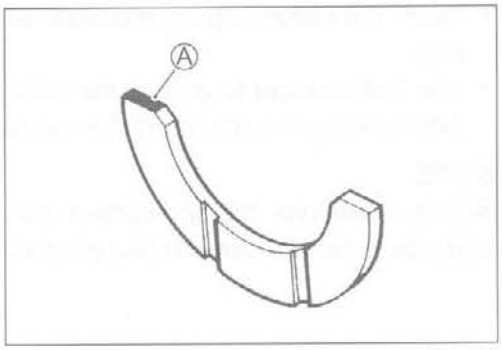

NOTE:
Right-side thrust bearing has the same specification as the GREEN (12228-17E00-0D0) of left-side thrust bearing.

ENGINE REASSEMBLY

- Reassemble the engine in the reverse order of disassembly.
- The following steps require special attention or precautionary measures should be taken.

NOTE:
Apply engine oil to each running and sliding part before reassembling.

- Be sure to install the following items to the crankcase.
* Crankshaft journal bearing (☞3-67)
* Gearshift fork (☞3-56)
* Gearshift fork shaft (☞3-56)
* Gearshift shaft bearing (☞3-57)
* Gearshift cam bearing (☞3-57)
* Gearshift cam (☞3-58)
* Bearing retainer (☞3-59)
* Oil jets (☞3-60)

PISTON RING

- Install the piston rings in the order of oil ring, 2nd ring and 1st ring.
- The first member to go into the oil ring groove is a spacer ①. After placing the spacer, fit the two side rails ②.

NOTE:
Side designations, top and bottom, are not applied to the spacer and side rails: you can position each either way.

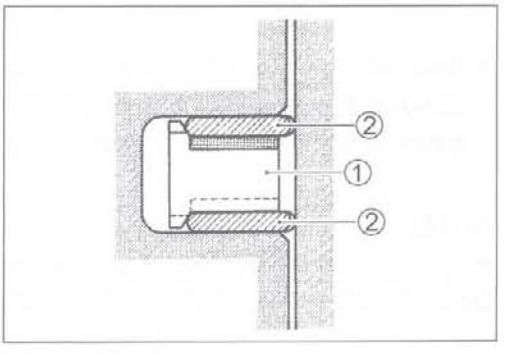

CAUTION

When installing the spacer, be careful not to allow its two ends to overlap in the groove.

Ⓐ INCORRECT
Ⓑ CORRECT

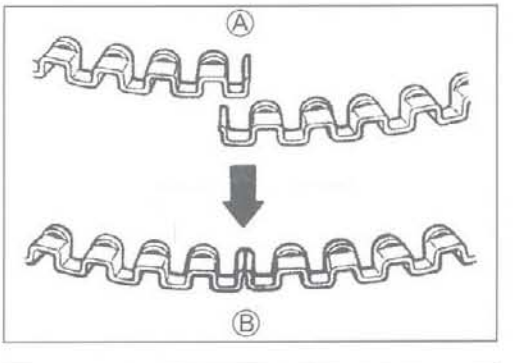

- Install the 2nd ring ③ and the 1st ring ④ to the piston.

NOTE:
1st ring and 2nd ring differ in shape.

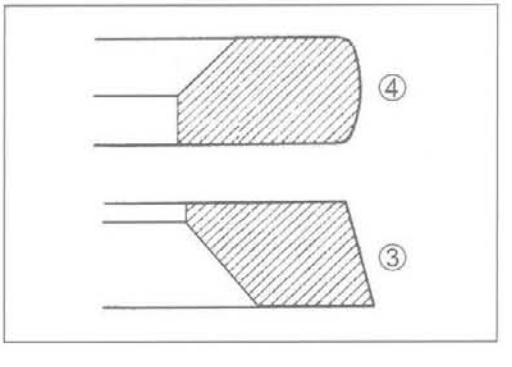

- 1st ring ⑤ and 2nd ring ⑥ have letters "IT" and "T" marked on the side. Be sure to bring the marked side to the top when fitting them to the piston.

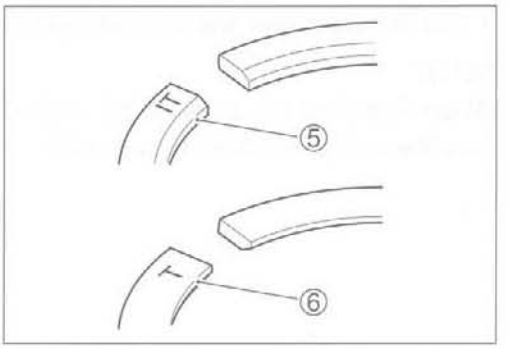

- Position the gaps of the three ring as shown. Before inserting each piston into the cylinder, check that the gaps are so located.

Ⓒ 2nd ring and lower side rail
Ⓓ Upper side rail
Ⓔ 1st ring and spacer

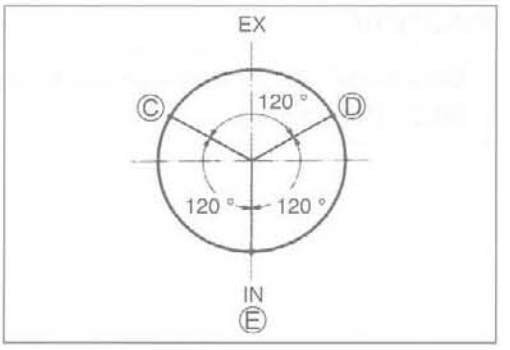

PISTON AND CONROD

- Rub a small quantity of MOLYBDENUM OIL SOLUTION onto each piston pin.

MOLYBDENUM OIL SOLUTION

- Assemble the piston and conrod.

NOTE:
When installing the pistons, the indent Ⓐ on the piston head must be brought to the other side of ID code Ⓑ on the conrod big end.

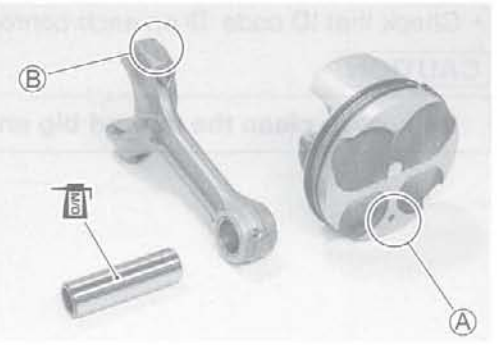

- Install the piston pin circlips ①.

CAUTION

Use new piston pin circlips to prevent circlip failure which will occur with a bend one.

NOTE:
End gap of the circlip should not be aligned with the cutaway in the piston pin bore.

- Apply engine oil to the sliding surface of the pistons and cylinder walls.

NOTE:
Be sure to install the pistons in the cylinders from which they were removed in disassembly, refering to the cylinder numbers, "1" through "4", scribed on the piston.

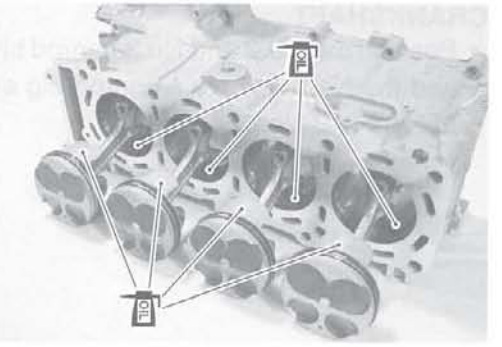

- Install the pistons and conrods into the cylinders from upside.

NOTE:
When installing the pistons, the indent Ⓒ of each piston head must be brought to the exhaust side.

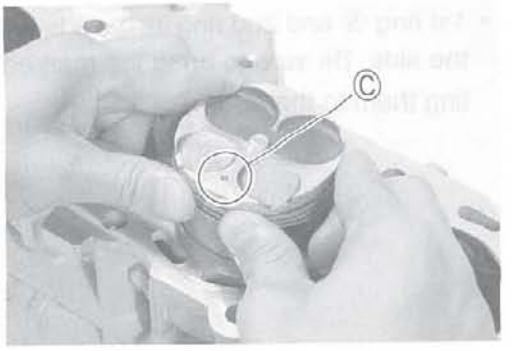

CAUTION

Be careful not to damage the cylinder wall and piston jet by the conrod.

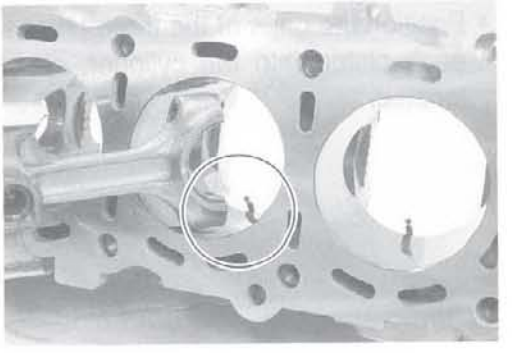

- Check that ID code Ⓓ on each conrod faces intake side.

CAUTION

Be sure to clean the conrod big end.

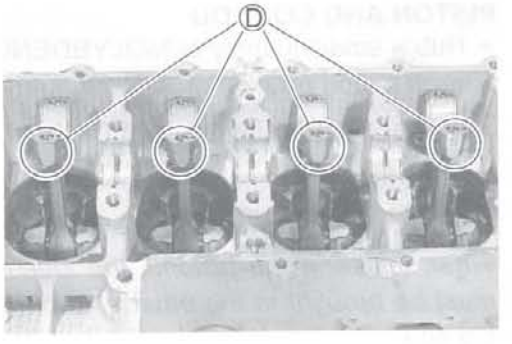

- Apply MOLYBDENUM OIL SOLUTION to the crank pin bearings surface.

MOLYBDENUM OIL SOLUTION

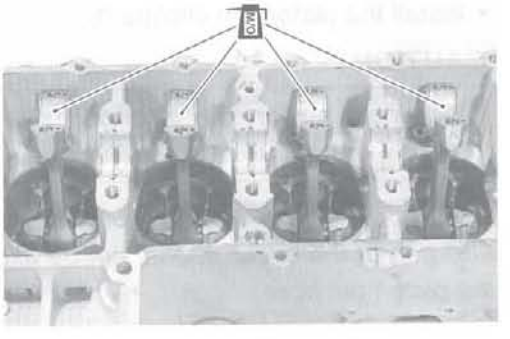

CRANKSHAFT

- Position the No.2 and No.3 conrod big ends on the same side, and the No.1 and No.4 conrod big ends on the opposite side of No.2 and No.3.

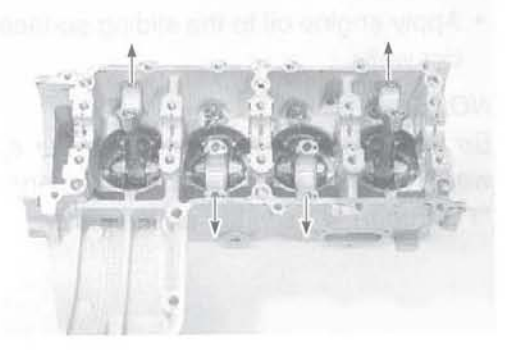

- Set the crankshaft to the conrods and upper crankcase.

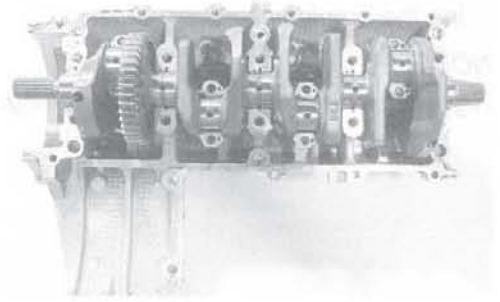

- Apply MOLYBDENUM OIL SOLUTION to the crank pin and bearing surface.

MOLYBDENUM OIL SOLUTION

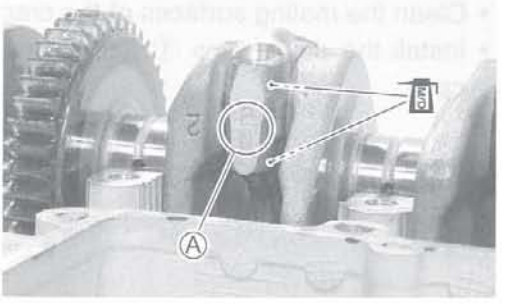

CAUTION

Be sure to clean the conrod big end.

- When fitting the conrod cap, make sure that I.D. code Ⓐ on each conrod faces intake side.

- Apply engine oil to the bearing cap bolts.
- Tighten the bearing cap bolt by using a 10 mm, 12 point socket wrench in the following two steps.

Conrod bearing cap bolt:
Initial: 15 N·m (1.5 kgf-m, 11.0 lb-ft)
Final : 90 ° (1/4 turn)

- Apply engine oil to the conrod big end side surfaces.
- Check the conrod movement for smooth turning.

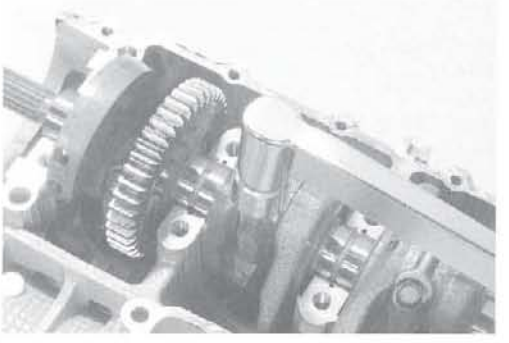

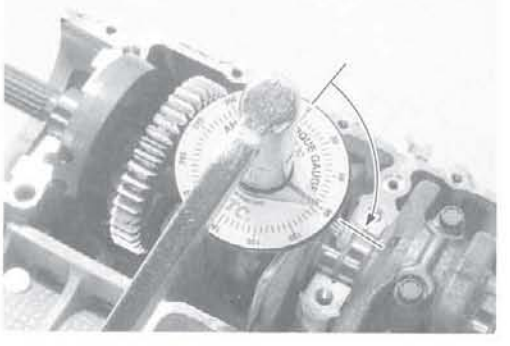

- Apply MOLYBDENUM OIL SOLUTION to each crankshaft journal bearing lightly.

MOLYBDENUM OIL SOLUTION

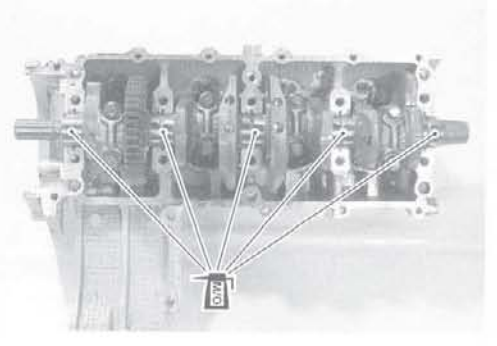

- Insert the right and left-thrust bearings with oil groove Ⓑ facing the crank web.

NOTE:
Right-thrust bearing has green painting.

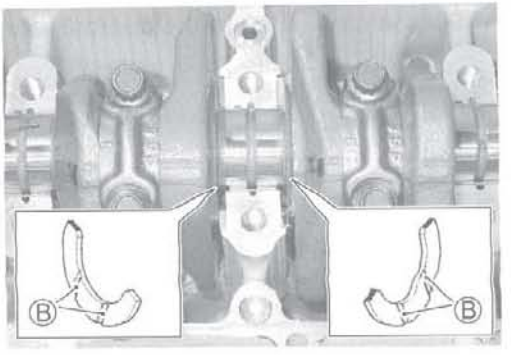

CRANKCASE

- Clean the mating surfaces of the crankcases.
- Install the dowel pins ① and O-ring ② to the upper crankcase.

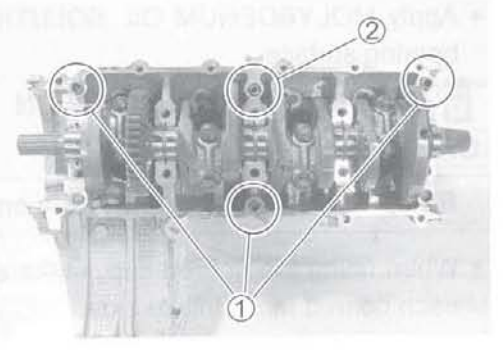

- Apply SUZUKI BOND to the mating surface of the middle crankcase.

1207B 99104-31140: SUZUKI BOND "1207B" (USA)

1215 99000-31110: SUZUKI BOND "1215" (Others)

NOTE:

Use of SUZUKI BOND is as follows:

* *Make surfaces free from moisture, oil, dust and other foreign materials.*
* *Spread on surfaces thinly to form an even layer, and assemble the crankcases within few minutes.*
* *Take extreme care not to apply any BOND to the oil hole, oil groove and bearing.*
* *Apply to distorted surfaces as it forms a comparatively thick film.*

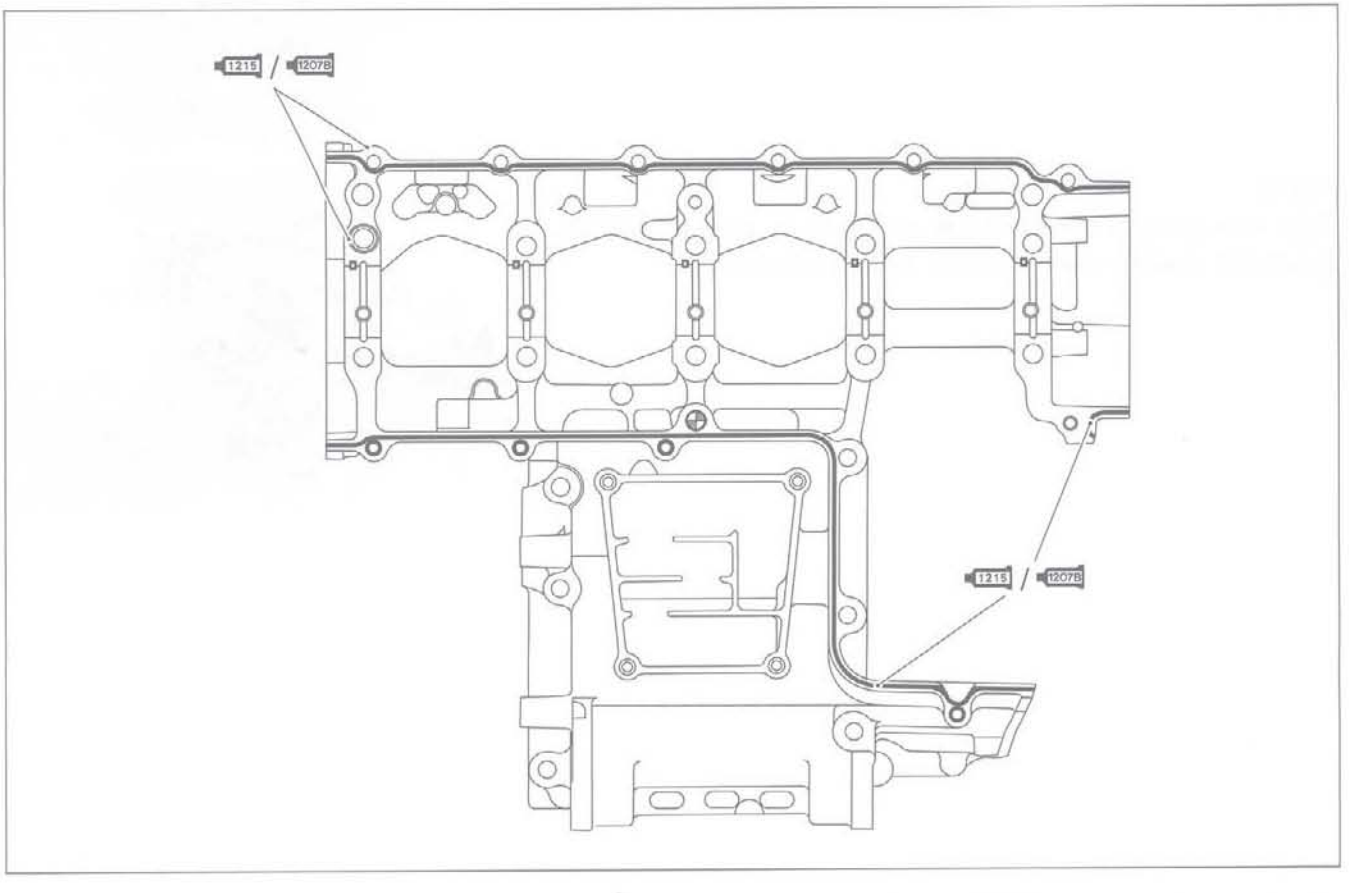

- Tighten the crankshaft journal bolts (9 mm) in ascending order of numbers assigned to these bolts. Tighten each bolt a little at a time to equalize the pressure in the following two steps.

Crankshaft journal bolt: (M9)

Initial: 18 N·m (1.8 kgf-m, 13.0 lb-ft)

Final : 50 °

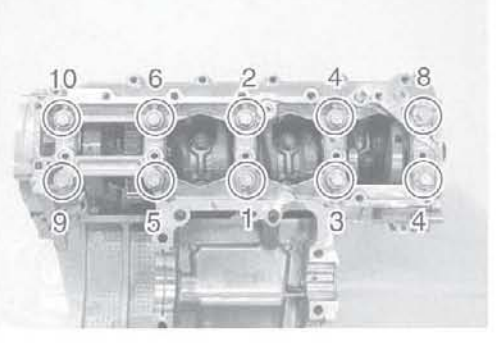

- Tighten the other crankcase bolts a little at a time to equalize the pressure.

Crankcase bolt: (M6) Initial: 6 N·m (0.6 kgf-m, 4.5 lb-ft)
Final : 11 N·m (1.1 kgf-m, 8.0 lb-ft)

NOTE:
Fit the clamp to the crankcase bolt Ⓐ.

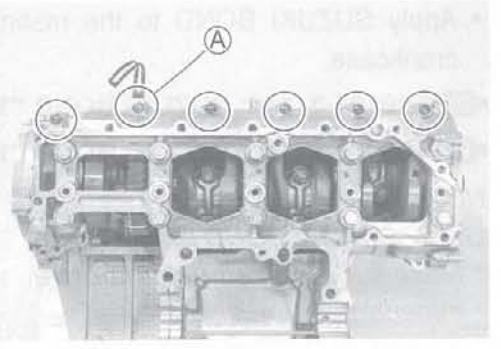

NOTE:
Fit the new gasket to the crankcase bolt Ⓑ.

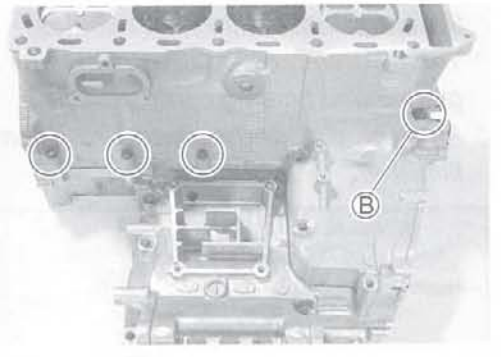

NOTE:
After the crankshaft journal bolts and crankcase bolts have been tightened, check if the crankshaft rotates smoothly.

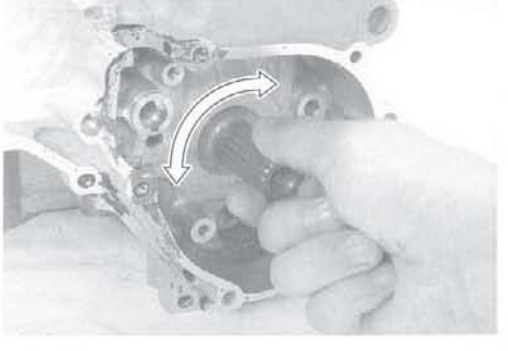

TRANSMISSION

- Install the bearing pins ① and the C-rings ② on the middle crankcase.

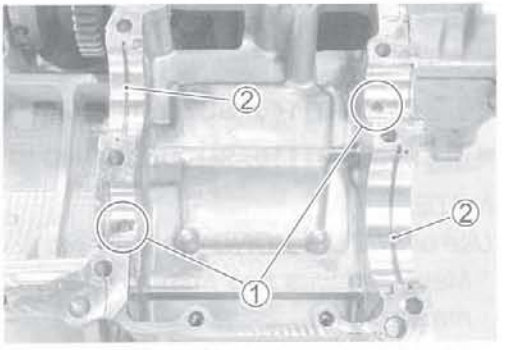

- Install the countershaft assembly on the middle crankcase.

NOTE:
Align the C-ring with the groove of bearing and the bearing pin with the indent on the bearing.

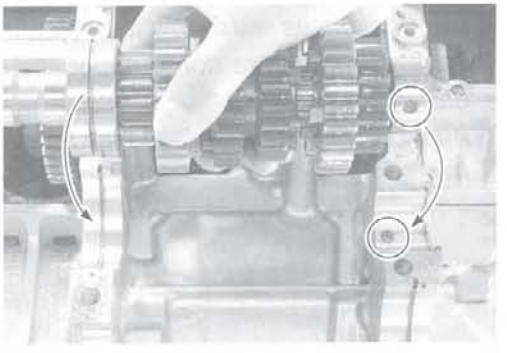

- Install the driveshaft assembly on the middle crankcase.

NOTE:
Align the C-ring with the groove of bearing and the bearing pin with the indent on the bearing.

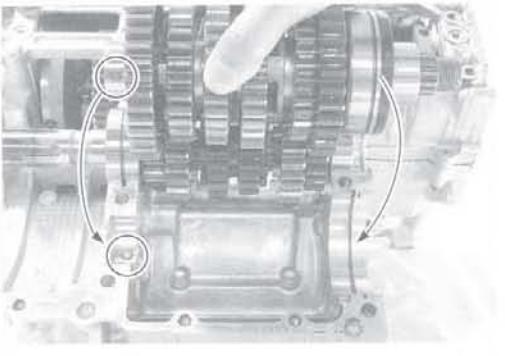

- Install the oil seal ③.
- Turn the bearings to install the bearing dowel pins Ⓐ in the respective positions.

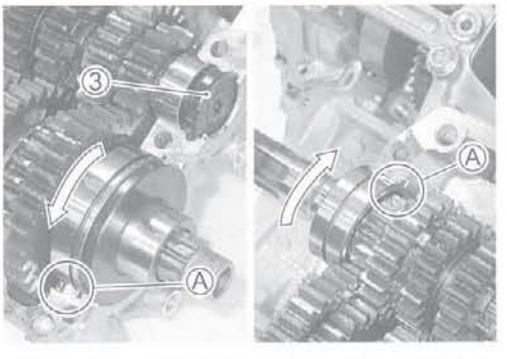

- Install the O-rings.
- Install the dowel pins ④.

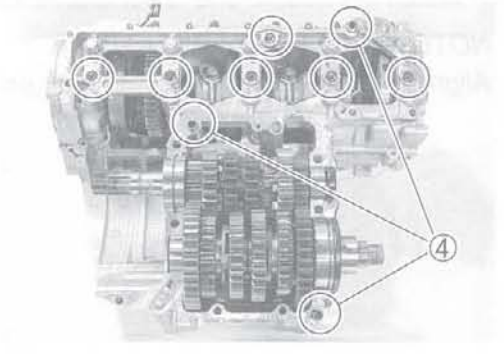

- Apply SUZUKI BOND to the mating surface of the lower crankcase.

1207B 99104-31140: SUZUKI BOND "1207B" (USA)

1215 99000-31110: SUZUKI BOND "1215" (Others)

NOTE:
Use of SUZUKI BOND is as follows:
* *Make surfaces free from moisture, oil, dust and other foreign materials.*
* *Spread on surfaces thinly to form an even layer, and assemble the crankcases within few minutes.*
* *Take extreme care not to apply any BOND to the oil hole, oil groove and bearing.*
* *Apply to distorted surfaces as it forms a comparatively thick film.*

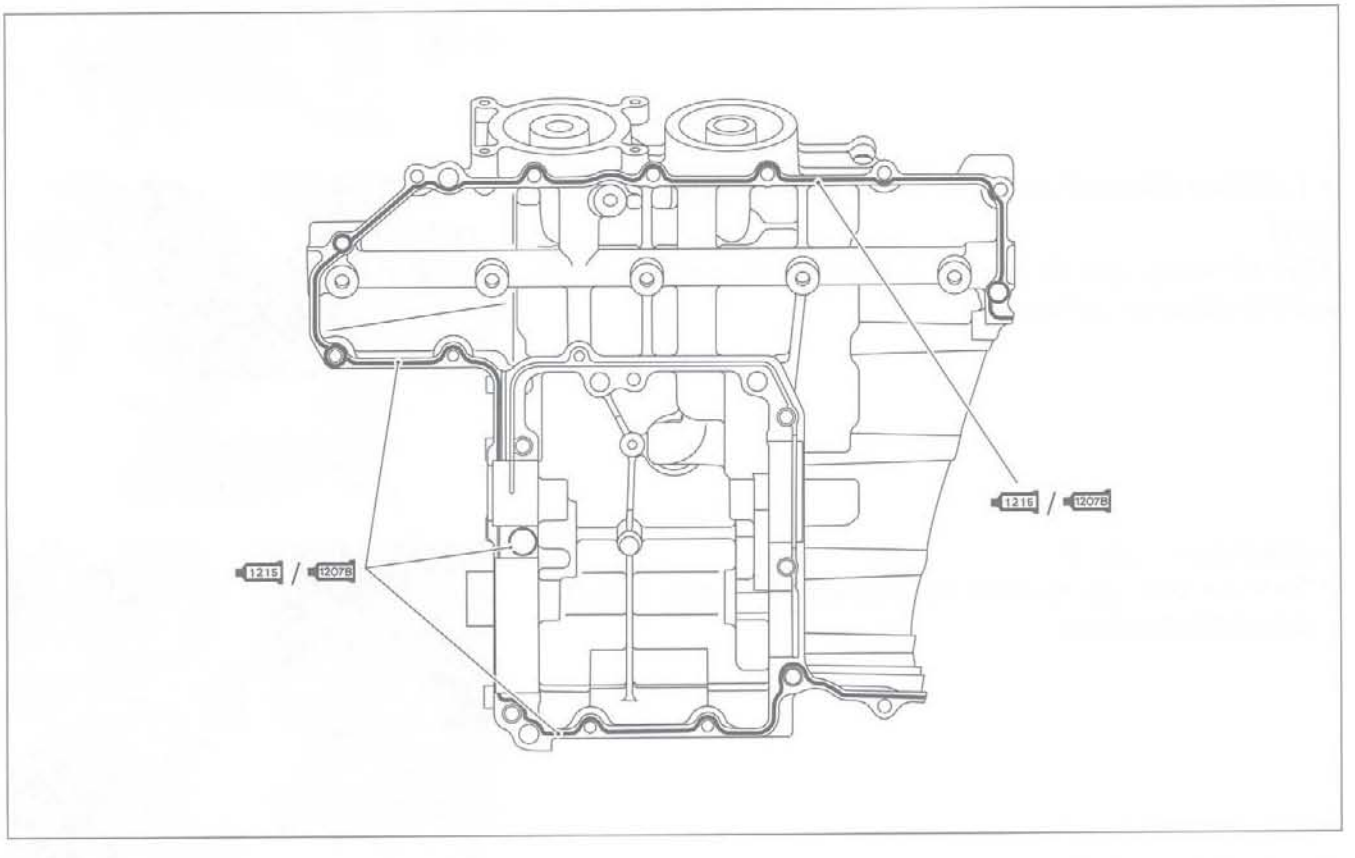

- Match the middle and lower crankcases.

NOTE:
Align the gearshift forks ⑤ with their grooves ⑥.

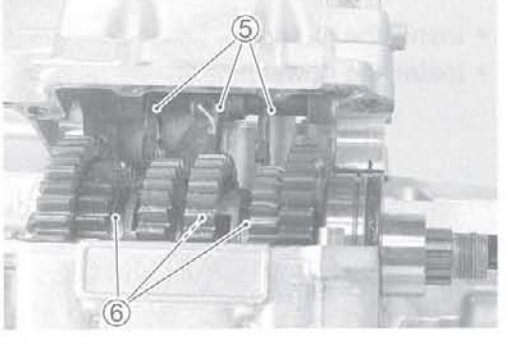

- Tighten the crankcase bolts a little at a time to equalize the pressure.

Crankcase bolt: (M6) Initial: 6 N·m (0.6 kgf-m, 4.3 lb-ft)
Final : 11 N·m (1.1 kgf-m, 8.0 lb-ft)
(M8) Initial: 15 N·m (1.5 kgf-m, 11.0 lb-ft)
Final : 26 N.m (2.6 kgf-m, 19.0 lb-ft)

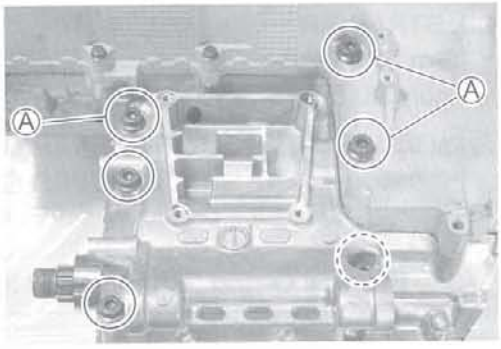

NOTE:
** Fit the new copper washer to the crankcase bolts Ⓐ.*
** Fit the new gasket washer to the crankcase bolts Ⓑ.*

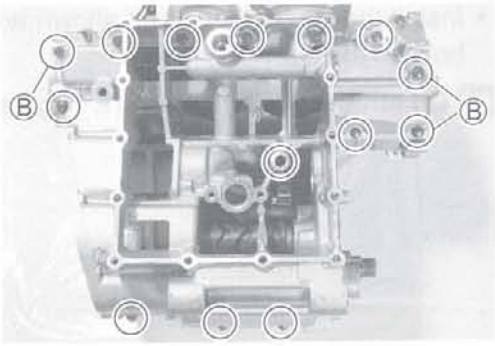

- Check that the driveshaft and countershaft rotate smoothly.

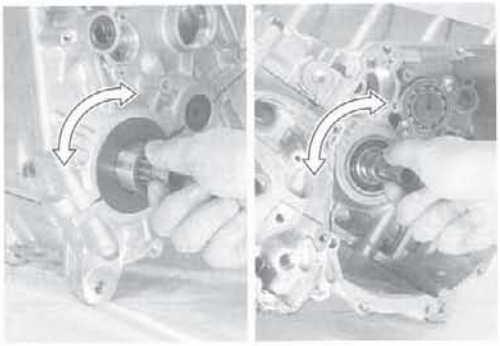

OIL STRAINER

- Install the O-ring.
- Apply SUZUKI SUPER GREASE "A" to the O-ring.

99000-25030: SUZUKI SUPER GREASE "A" (USA)
99000-25010: SUZUKI SUPER GREASE "A" (Others)

CAUTION

Use the new O-ring to prevent oil leakage.

- Install the oil strainer ① as shown and tighten the oil strainer bolts to the specified torque.

Oil strainer bolt: 10 N·m (1.0 kgf-m, 7.0 lb-ft)

OIL PRESSURE REGULATOR

- Apply SUZUKI SUPER GREASE "A" to the O-ring and press in the oil pressure regulator to the crankcase.

99000-25030: SUZUKI SUPER GREASE "A" (USA)
99000-25010: SUZUKI SUPER GREASE "A" (Others)

CAUTION

Use the new O-ring to prevent oil leakage.

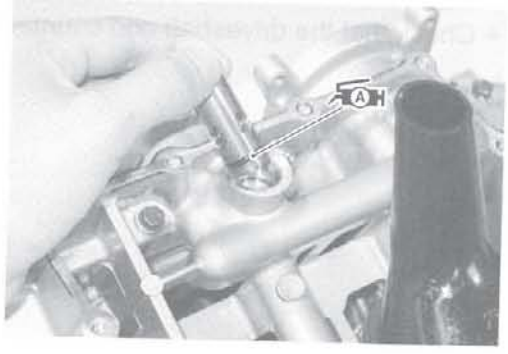

OIL PAN

- Apply SUZUKI BOND to the mating surface of the lower crankcase.

1207B 99104-31140: SUZUKI BOND "1207B" (USA)

1215 99000-31110: SUZUKI BOND "1215" (Others)

NOTE:

Use of SUZUKI BOND is as follows:

** Make surfaces free from moisture, oil, dust and other foreign materials.*

** Apply to distorted surfaces as it forms a comparatively thick film.*

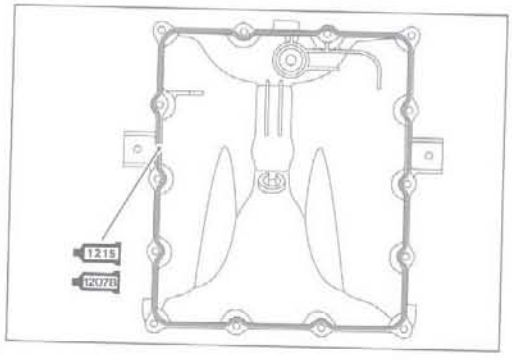

- Install the oil pan.

NOTE:
Fit the gasket washer to the oil pan bolt Ⓐ.

- Tighten the oil pan bolts diagonally to the specified torque.

Oil pan bolt: 10 N·m (1.0 kgf-m, 7.0 lb-ft)

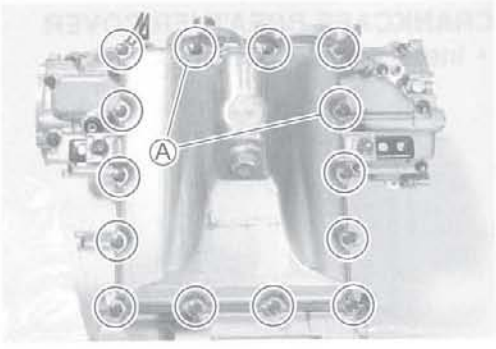

OIL PRESSURE SWITCH

- Apply SUZUKI BOND to the thread part of oil pressure switch and tighten oil pressure switch to the specified torque.

99104-31140: SUZUKI BOND "1207B" (USA)
99000-31140: SUZUKI BOND "1207B" (Others)

Oil pressure switch: 14 N·m (1.4 kgf-m, 10.0 lb-ft)

NOTE:
Be careful not to apply SUZUKI BOND to the hole of thread end.

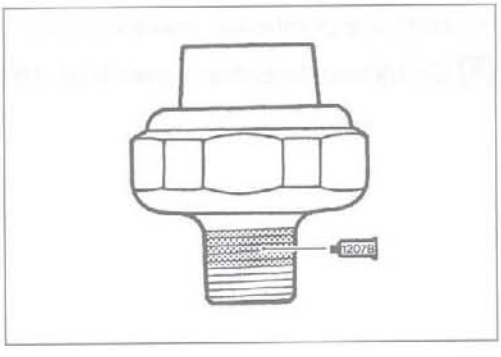

OIL COOLER

- Apply SUZUKI SUPER GREASE "A" to the O-ring.

99000-25030: SUZUKI SUPER GREASE "A" (USA)
99000-25010: SUZUKI SUPER GREASE "A" (Others)

CAUTION

Use the new O-ring to prevent oil leakage.

- Apply THREAD LOCK to the oil cooler mounting bolts and install the oil cooler ① as shown.

99000-32050: THREAD LOCK "1342"

- Tighten the oil cooler mounting bolts to the specified torque.

Oil cooler mounting bolt: 10 N·m (1.0 kgf-m, 7.0 lb-ft)

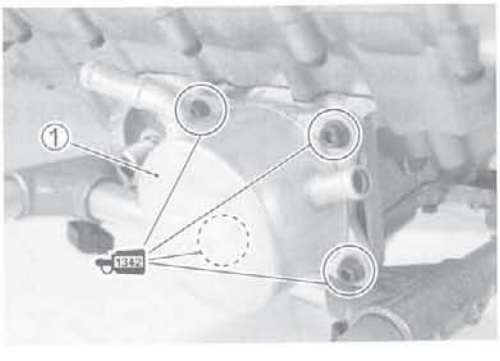

OIL FILTER

- Install the oil filter with the special tool. (☞2-13)

09915-40610: Oil filter wrench

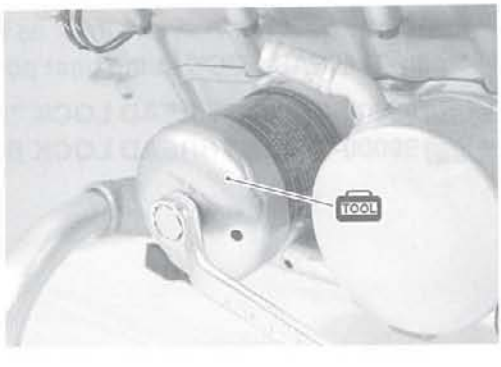

CRANKCASE BREATHER COVER

- Install the new gasket ①.

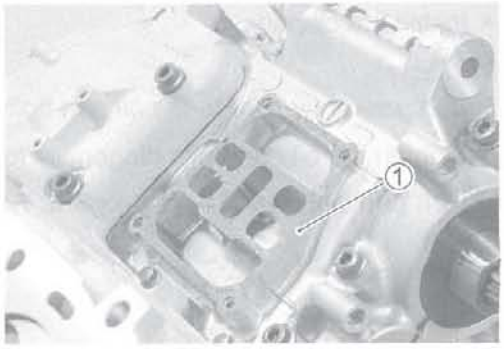

- Install the crankcase breather cover ②.

Crankcase breather cover bolt: 10 N·m (1.0 kgf-m, 7.0 lb-ft)

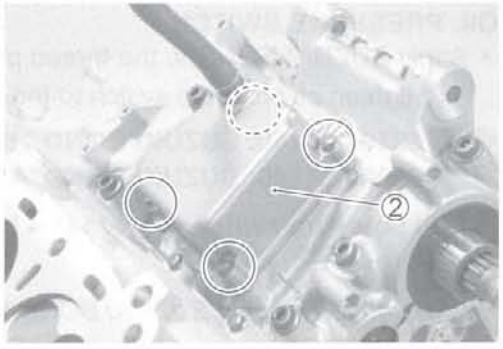

GEAR POSITION SWITCH

- Install the gear position switch contacts ① and springs ②.

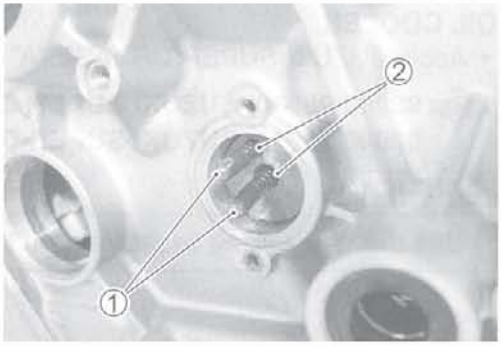

- Apply SUZUKI SUPER GREASE "A" to the O-ring.

99000-25030: SUZUKI SUPER GREASE "A" (USA)
99000-25010: SUZUKI SUPER GREASE "A" (Others)

- Install the gear position switch ③ as shown.
- Apply THREAD LOCK to the gear position switch bolts.

1342 99000-32050: THREAD LOCK "1342" (USA)
1322 99000-32110: THREAD LOCK SUPER "1322" (Others)

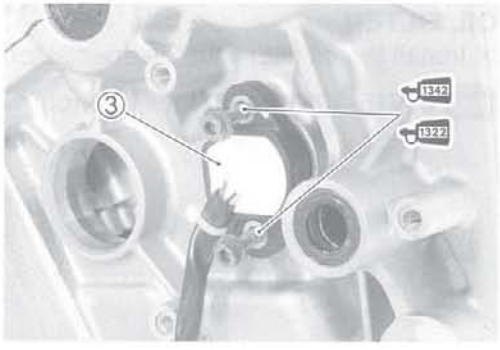

WATER PUMP

- Apply SUZUKI SUPER GREASE "A" to the O-ring.

CAUTION

Use the new O-ring to prevent oil leakage.

Ⓐ 99000-25030: SUZUKI SUPER GREASE "A" (USA)
99000-25010: SUZUKI SUPER GREASE "A" (Others)

- Tighten the water pump mounting bolts ① to the specified torque.

Water pump mounting bolt: 10 N·m (1.0 kgf-m, 7.0 lb-ft)

NOTE:
Pass the gear position switch lead wire ② under the water pump lib.

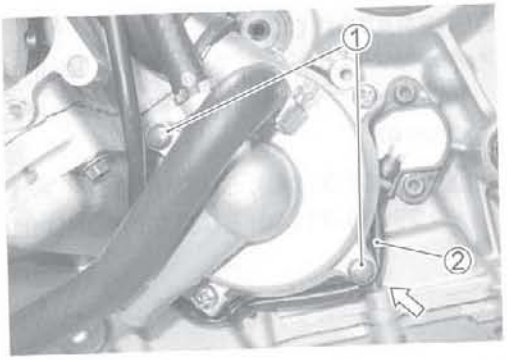

- Apply engine coolant to the O-ring.

- Install the water inlet cover ③.

Water inlet cover bolt: 10 N·m (1.0 kgf-m, 7.0 lb-ft)

GENERATOR ROTOR

- Degrease the tapered portion Ⓐ of generator rotor and also the crankshaft Ⓑ. Use nonflammable cleaning solvent to wipe off oily or greasy matter and make these surfaces completely dry.

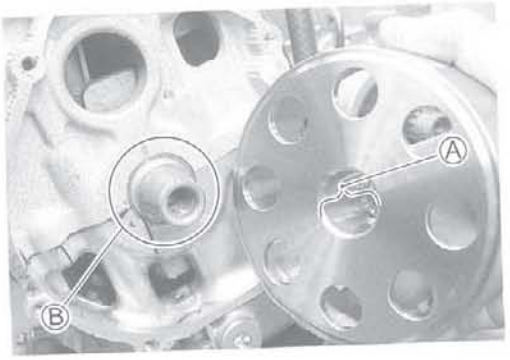

- Install the generator rotor onto the crankshaft.
- Install the rotor bolt with the washer.
- Hold the generator rotor with the special tool and tighten its bolt to the specified torque.

TOOL 09930-44520: Rotor holder

Generator rotor bolt: 120 N·m (12.0 kgf-m, 88.5 lb-ft)

GENERATOR COVER

- Apply SUZUKI BOND lightly to the mating surfaces at the parting line between the upper and middle crankcases as shown.

1207B 99104-31140: SUZUKI BOND "1207B" (USA)
99000-31140: SUZUKI BOND "1207B" (Others)

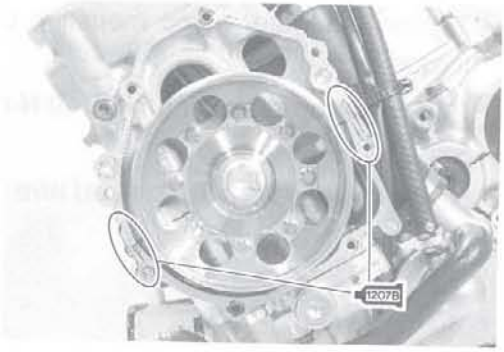

- Install the dowel pins ① and new gasket ②.

CAUTION

Use the new gasket to prevent oil leakage.

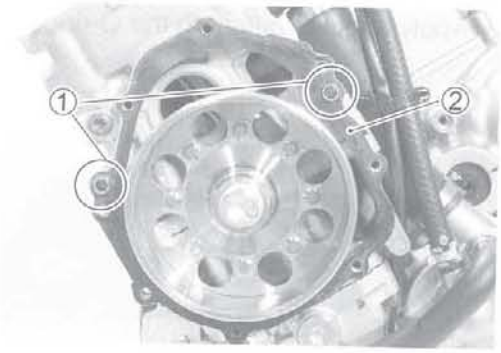

- Install the generator cover and tighten the generator cover bolts to the specified torque.

Generator cover bolt: 10 N·m (1.0 kgf-m, 7.0 lb-ft)

⚠ WARNING

Be careful not to pinch the finger between the generator cover and the crankcase.

NOTE:
Fit the gasket washer to the bolts Ⓐ.

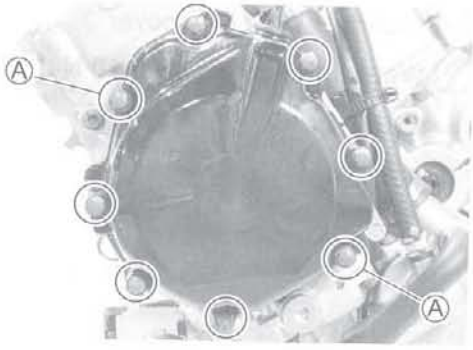

- Install the CKP sensor ③.

- Apply SUZUKI BOND lightly to the groove of signal generator lead wire gromet.

1207B 99104-31140: SUZUKI BOND "1207B" (USA)
99000-31140: SUZUKI BOND "1207B" (Others)

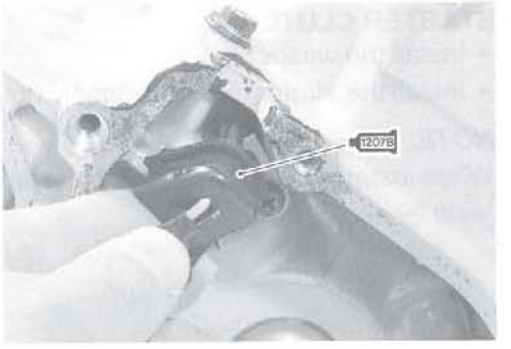

CAM CHAIN DRIVE SPROCKET

- Install the cam chain drive sprocket onto the crankshaft.

NOTE:
When installing the cam chain drive sprocket, align the wide spline teeth Ⓐ and Ⓑ.

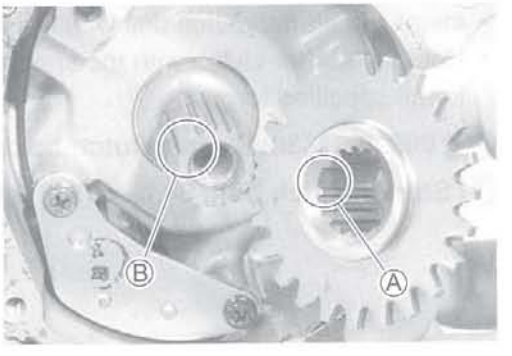

CAM CHAIN TENSIONER AND CAM CHAIN GUIDE

- Install the cam chain.
- Apply a small quantity of THREAD LOCK to the cam chain tensioner bolt and cam chain guide bolt.
- Install the cam chain tensioner ① along with the washer ②.
- Install the cam chain guide ③.

1342 99000-32050: THREAD LOCK "1342"

Cam chain tensioner bolt: 10 N·m (1.0 kgf-m, 7.0 lb-ft)
Cam chain guide bolt: 10 N·m (1.0 kgf-m, 7.0 lb-ft)

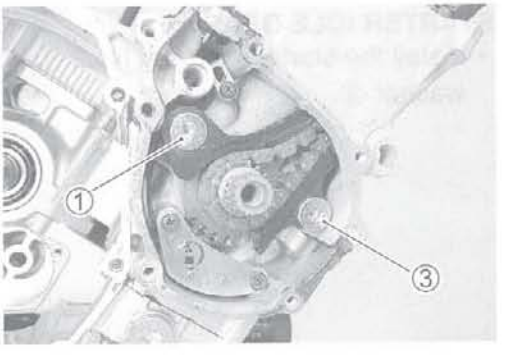

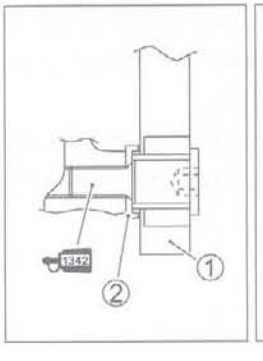

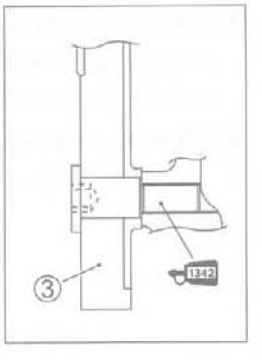

STARTER CLUTCH

- Install the washer ①.
- Install the starter clutch assembly onto the crankshaft.

NOTE:
When installing the starter clutch assembly, align the wide spline teeth Ⓐ and Ⓑ.

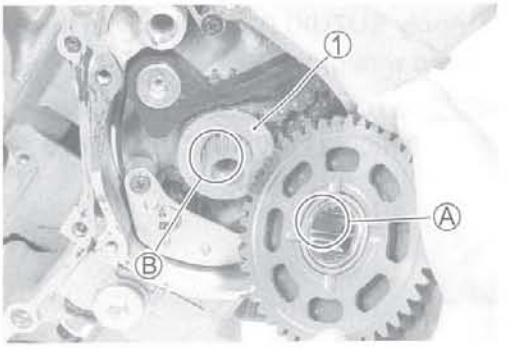

- Install the starter clutch bolt with the washer.
- Hold the starter clutch with the special tool and tighten its bolt to the specified torque.

TOOL 09920-34830: Starter clutch holder

Starter clutch bolt: 54 N·m (5.4 kgf-m, 39.0 lb-ft)

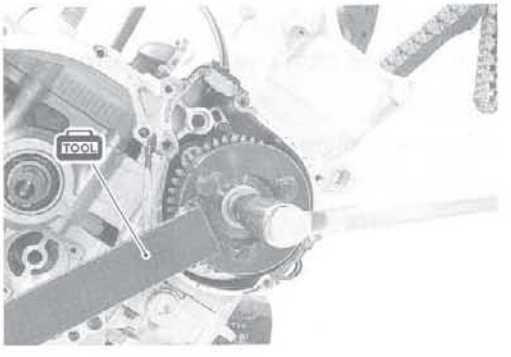

STARTER IDLE GEAR

- Install the starter idle gear No.2 ①, its shaft ② and concaved washer ③.

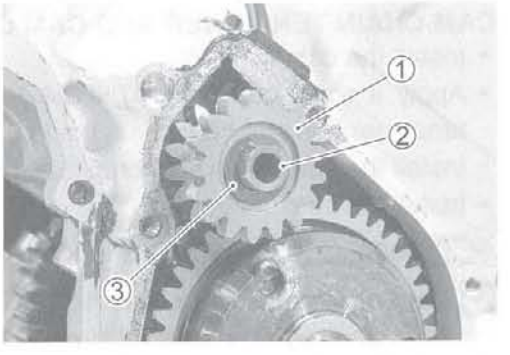

- Apply SUZUKI BOND lightly to the mating surfaces Ⓐ at the parting line between the upper and middle crankcases and surface Ⓑ as shown.

1207B 99104-31140: SUZUKI BOND "1207B" (USA)
99000-31140: SUZUKI BOND "1207B" (Others)

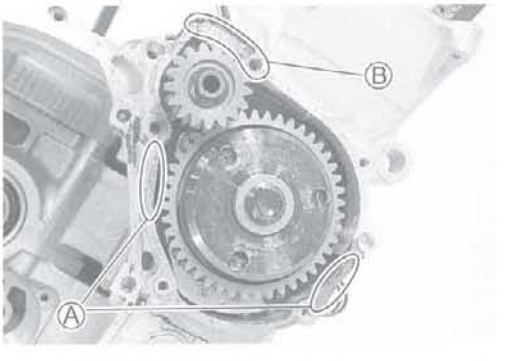

- Install the new gasket ④ and dowel pins ⑤.

CAUTION

Use a new gasket to prevent oil leakage.

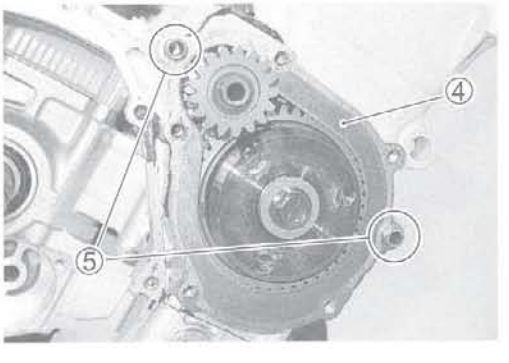

- Install the starter clutch cover and tighten its bolt as shown.

NOTE:

** Fit the clamp to the starter clutch cover bolt Ⓒ as shown.*

** Fit the new gasket washer to the starter clutch cover bolt Ⓓ as shown.*

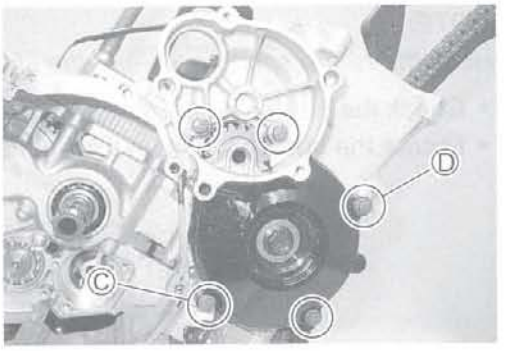

CAUTION

Use the new gasket washer to prevent oil leakage.

Starter clutch cover bolt: 10 N·m (1.0 kgf-m, 7.0 lb-ft)

- Install the starter idle gear No.1 shaft ⑥, thrust washer ⑦, bearing ⑧, starter idle gear No.1 ⑨, washer ⑩, and concaved washer ⑪.

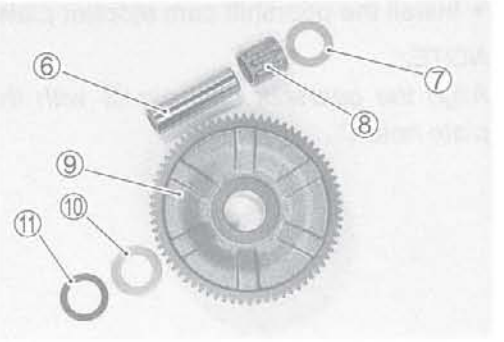

- Install the dowel pins ⑫ and new gasket ⑬.

CAUTION

Use a new gasket to prevent oil leakage.

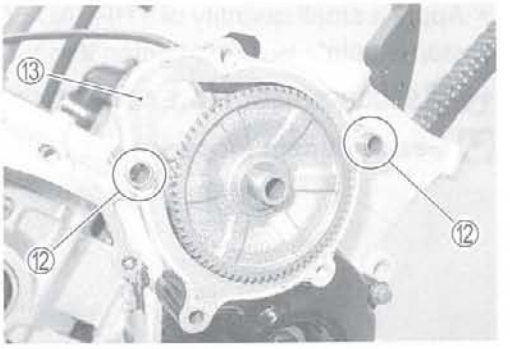

- Install the starter idle gear cover and tighten its bolts to the specified torque.

Starter idle gear cover bolt: 10 N·m (1.0 kgf-m, 7.0 lb-ft)

NOTE:

Fit the gasket washer to the bolt Ⓔ.

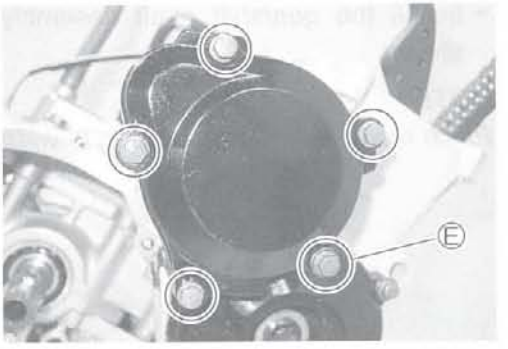

GEARSHIFT SYSTEM

- Install the gearshift cam stopper ①, its bolt ②, washer ③ and return spring ④.

NOTE:

Apply a small quantity of THREAD LOCK to the gearshift cam stopper bolt ② and tighten it to the specified torque.

1342 99000-32050: THREAD LOCK "1342"

Gearshift cam stopper bolt: 10 N·m (1.0 kgf-m, 7.0 lb-ft)

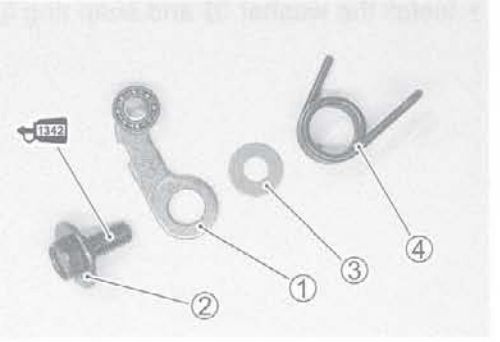

NOTE:
Hook the return spring end Ⓐ to the stopper ⑤.

- Check the gearshift cam stopper moves smoothly.
- Locate the gearshift cam in the neutral position.

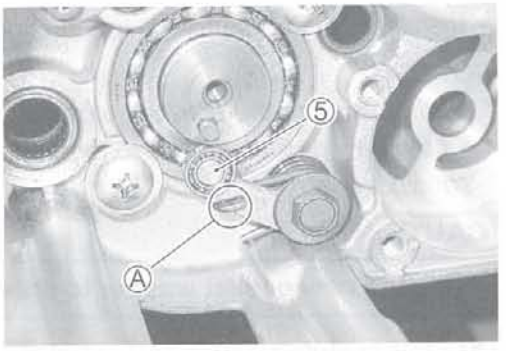

- Install the gearshift cam stopper plate ⑥.

NOTE:
Align the gearshift cam pin Ⓑ with the gearshift cam stopper plate hole Ⓒ.

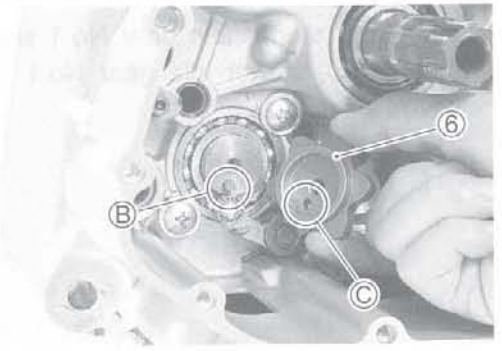

- Apply a small quantity of THREAD LOCK to the gearshift cam stopper plate bolt and tighten it to the specified torque.

1342 99000-32050: THREAD LOCK "1342"

Gearshift cam stopper plate bolt: 13 N·m (1.3 kgf-m, 9.5 lb-ft)

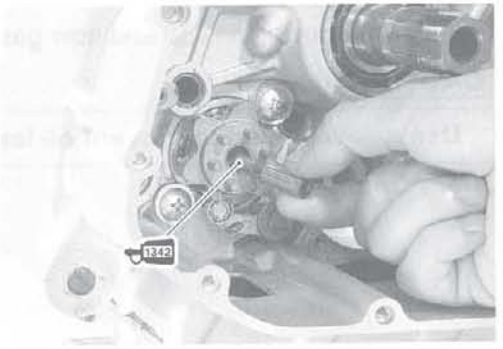

- Install the gearshift shaft assembly ⑦ and washer ⑧ as shown.

NOTE:
Pinch the gearshift arm stopper ⑨ with return spring ends Ⓓ.

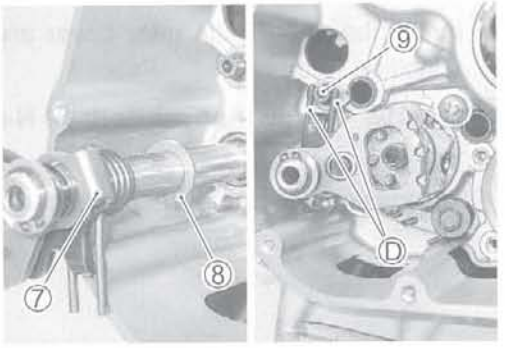

- Install the washer ⑩ and snap ring ⑪.

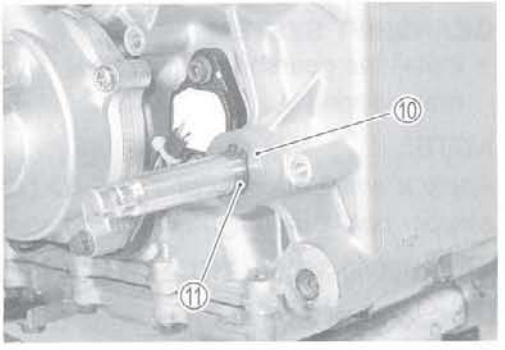

OIL PUMP

- Install the O-ring to the oil pump and apply SUZUKI SUPER GREASE "A" to it.

CAUTION

Use the new O-ring to prevent oil leakage.

NOTE:
Set the oil pump shaft end Ⓐ to the water pump shaft.

99000-25030: SUZUKI SUPER GREASE "A" (USA)
99000-25010: SUZUKI SUPER GREASE "A" (Others)

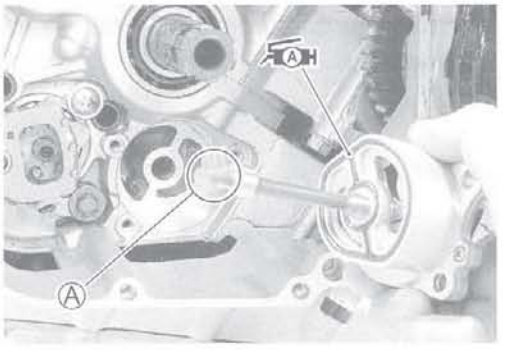

- Install the oil pump with the oil pump mounting bolts and then tighten them to the specified torque.

Oil pump mounting bolt: 10 N·m (1.0 kgf-m, 7.0 lb-ft)

- Install the washer ① and pin ②.

NOTE:
Be careful not to drop the washer ① and pin ② into the crankcase.

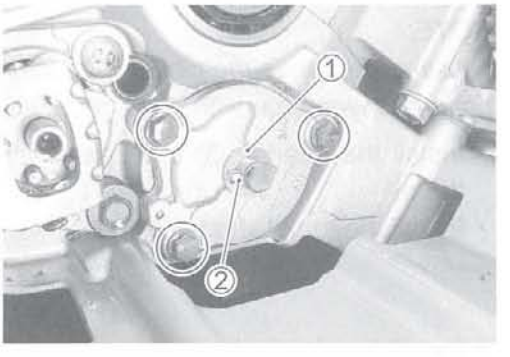

- Install the oil pump driven gear ③.
- Install the snap ring ④.

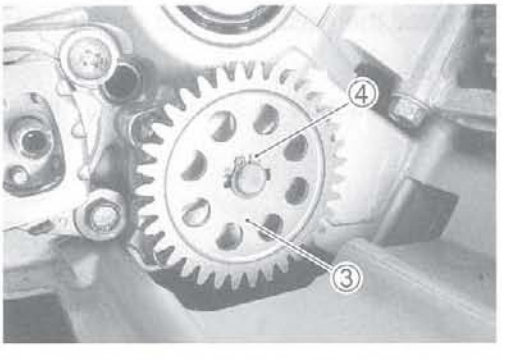

CLUTCH

- Install the thrust washer onto the countershaft.

NOTE:
The chamfer side Ⓐ of thrust washer faces inner side.

- Install the oil pump drive gear ① to the primary driven gear assembly.

- Install the primary driven gear assembly.

NOTE:
Be sure to engage the oil pump driven gear with drive gear and primary driven gear with drive gear.

- Install the bearing ③ and spacer ④ and apply engine oil to them.
- Install the thrust washer ⑤.

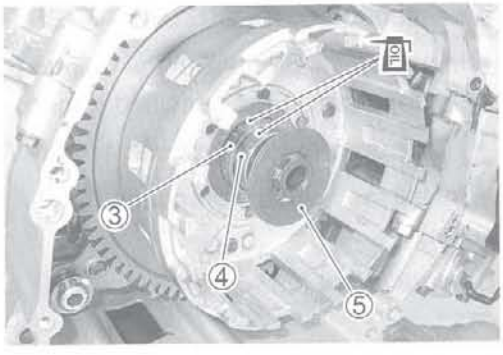

- Install the clutch sleeve hub ⑥ onto the countershaft.
- Install the washer ⑦ and spring washer ⑧.

NOTE:
The convex side of spring washer ⑧ faces outside.

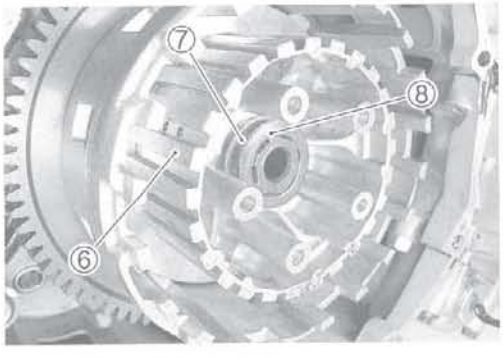

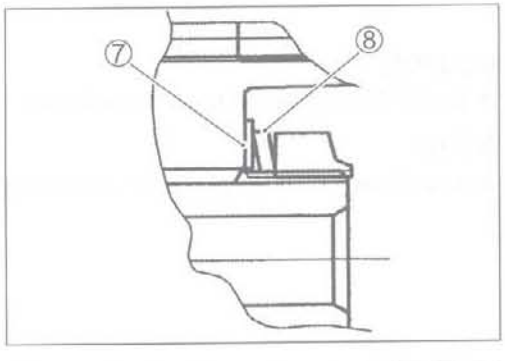

- Hold the clutch sleeve hub with the special tool.

TOOL 09920-53740: Clutch sleeve hub holder

- Tighten the clutch sleeve hub nut to the specified torque.

Clutch sleeve hub nut: 150 N·m (15.0 kgf-m, 108 lb-ft)

- Lock the clutch sleeve hub nut with a center punch.

- Install the spring washer seat ⑨ and spring washer ⑩ onto the clutch sleeve hub correctly.

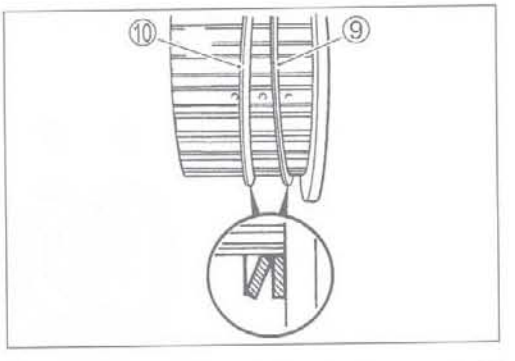

- Install the clutch push rod ⑪ into the countershaft.

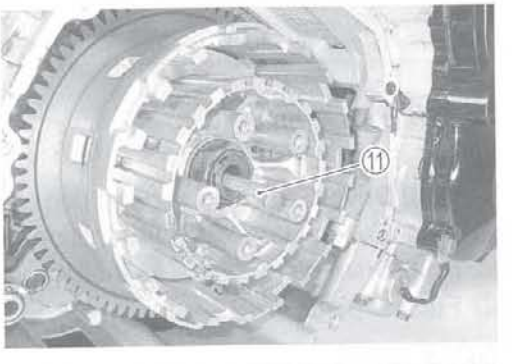

- Install the clutch push piece ⑫, bearing ⑬ and thrust washer ⑭ to the countershaft.

NOTE:
Thrust washer ⑭ is located between the pressure plate and bearing ⑬.

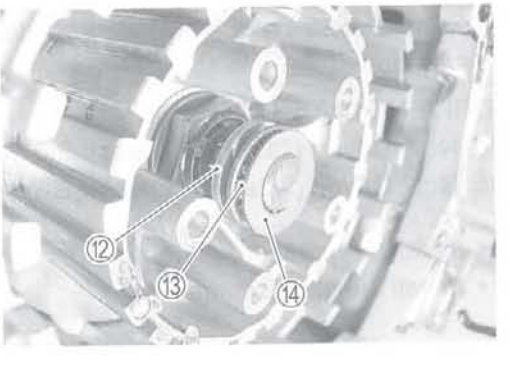

- Insert the clutch drive plates and driven plates one by one into the clutch sleeve hub in the prescribed order.

NOTE:
Insert the outermost drive plate claws Ⓑ to the other slits Ⓒ of clutch housing as shown.

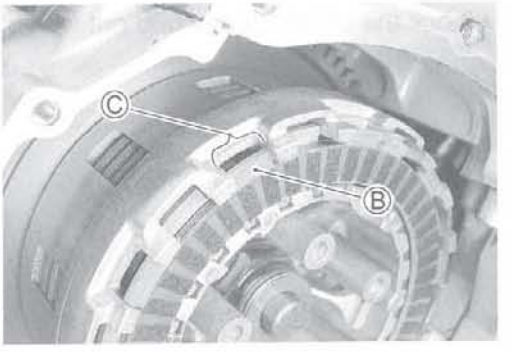

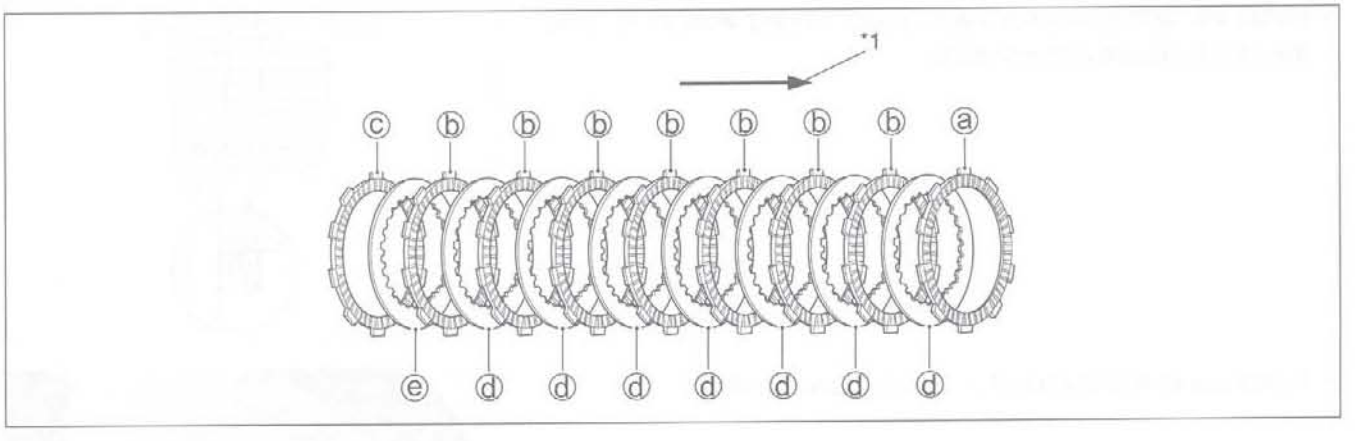

*1: Direction of outside
DRIVE PLATE:
ⓐ No.2 Drive plate...1 pc [48 friction pieces/I.D. 101 mm (4.0 in)]
ⓑ No.1 Drive plate...7 pcs [40 friction pieces/I.D. 101 mm (4.0 in)]
ⓒ No.3 Drive plate...1 pc [48 friction pieces/I.D. 108 mm (4.3 in)]
Ⓓ Friction piece

NOTE:
No.2 and No.3 drive plates can be distinguished by the inside diameter.

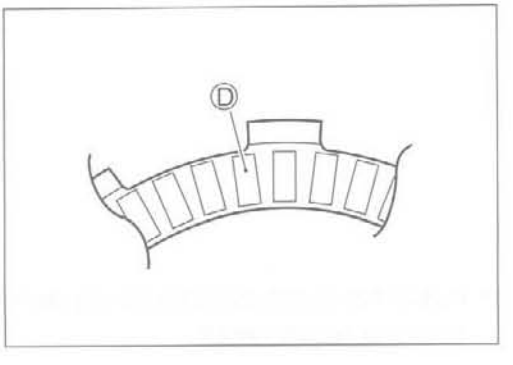

DRIVEN PLATE:
ⓓ No.1 Driven plate (Thickness): 2.6 mm (0.102 in)...6-8 pcs
ⓔ No.2 Driven plate (Thickness): 2.3 mm (0.091 in)...0-2 pcs (ⓓ + ⓔ = Total 8 pcs)

- Install the pressure plate ⑮.
- Install the clutch springs.

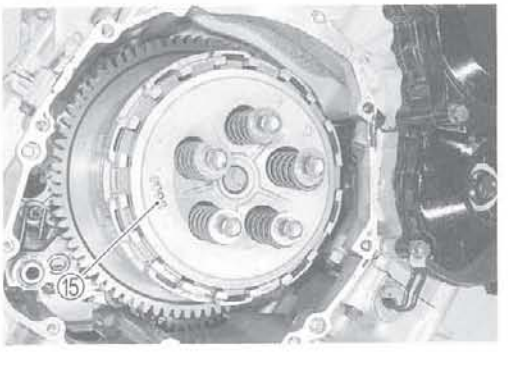

- Hold the clutch housing with the special tool.

CAUTION

Be careful not to damage the clutch housing or clutch plates.

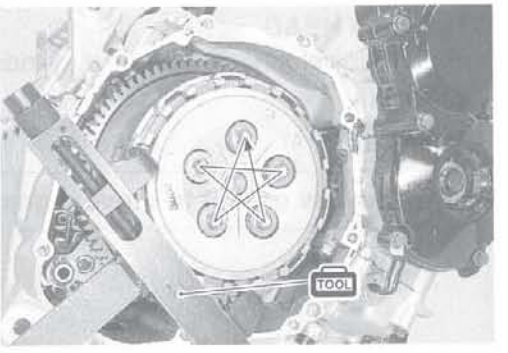

TOOL 09920-53740: Clutch sleeve hub holder

- Tighten the clutch spring set bolts to the specified torque.

Clutch spring set bolt: 10 N·m (1.0 kgf-m, 7.0 lb-ft)

NOTE:
Tighten the clutch spring set bolts diagonally.

CLUTCH COVER

- Apply SUZUKI BOND lightly to the mating surfaces at the parting line between the upper, middle and lower crankcases as shown.

1207B 99104-31140: SUZUKI BOND "1207B" (USA)
99000-31140: SUZUKI BOND "1207B" (Others)

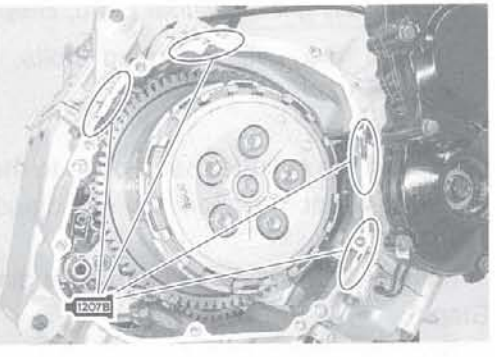

- Install the gasket ① and dowel pins ②.

CAUTION

Use the new gasket to prevent oil leakage.

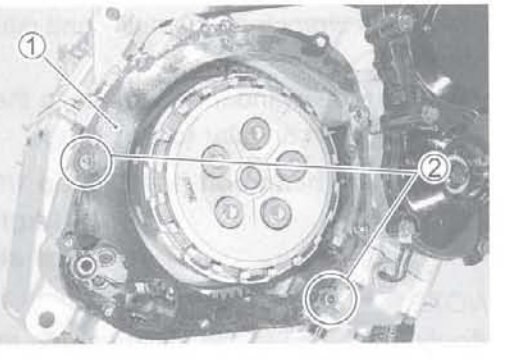

- Install the clutch cover and tighten its bolts to the specified torque.

Clutch cover bolt: 10 N·m (1.0 kgf-m, 7.0 lb-ft)

NOTE:
** Fit the clamp to the bolt Ⓐ as shown.*
** Fit the gaskets to the bolts Ⓑ as shown.*

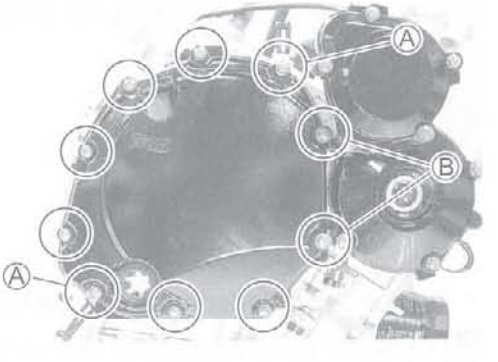

CYLINDER HEAD

- Fit the dowel pins ① and new cylinder head gasket ② to the cylinder.

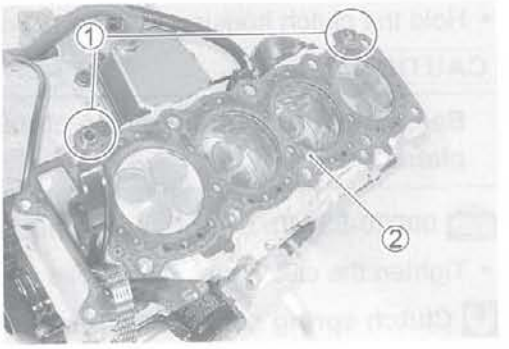

CAUTION

Use the new gasket to prevent gas leakage.

- Place the cylinder head on the cylinder.

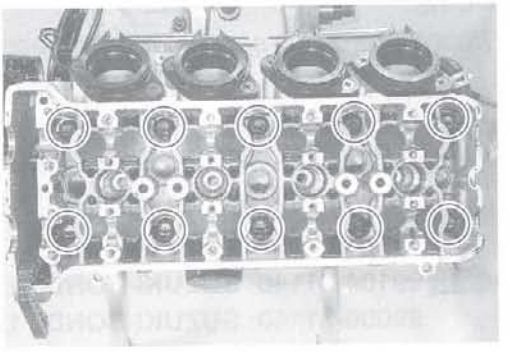

NOTE:
When installing the cylinder head, keep the cam chain taut.

- Tighten the cylinder head bolts (M10) in the following four-step.

Step 1:
- Tighten the cylinder head bolts to the specified torque with a torque wrench sequentially and diagonally.

Step 2:
- Loosen all the cylinder head bolts diagonally.

Step 3:
- Retighten the cylinder head bolts to the specified torque with a torque wrench sequentially and diagonally.

Step 4:
- Tighten the cylinder head bolts to the specified angles diagonally with an angular torque gauge.

Cylinder head bolt (M10): Step 1/Step 3: 31 N·m (3.1 kgf-m, 22.5 lb-ft)
Final step: 60 °

NOTE:
Apply engine oil to the washers and thread portion of the bolts before installing the cylinder head bolts.

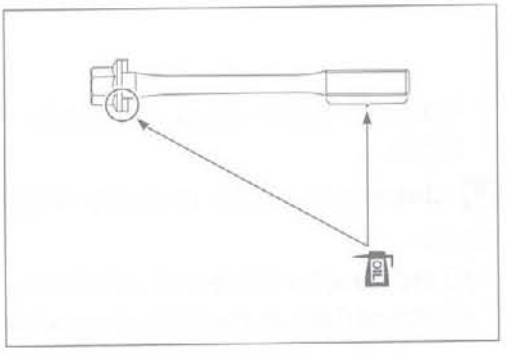

- Tighten the cylinder head bolts to the specified torque.

Cylinder head bolt (M6): 10 N·m (1.0 kgf-m, 7.0 lb-ft)

- Apply SUZUKI SUPER GREASE "A" to the O-rings and install them into the cylinder head.

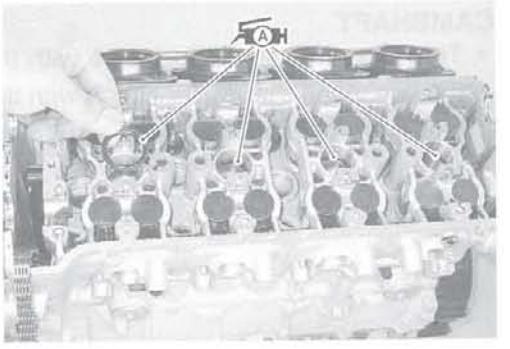

CAUTION

Replace the O-rings with the new ones.

99000-25030: SUZUKI SUPER GREASE "A" (USA)
99000-25010: SUZUKI SUPER GREASE "A" (Others)

- Fit the gasket ③ and tighten the ECT sensor.

ECT sensor: 18 N·m (1.8 kgf-m, 13.0 lb-ft)

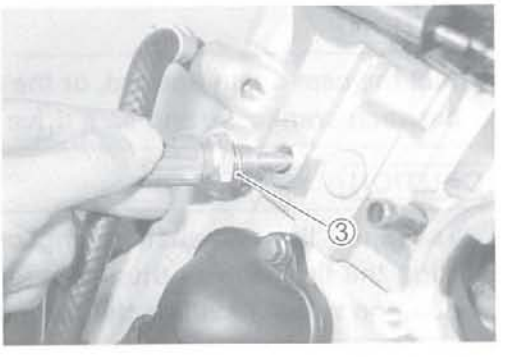

- Install the thermostat ④.

NOTE:
The jiggle valve Ⓐ of thermostat faces upside.

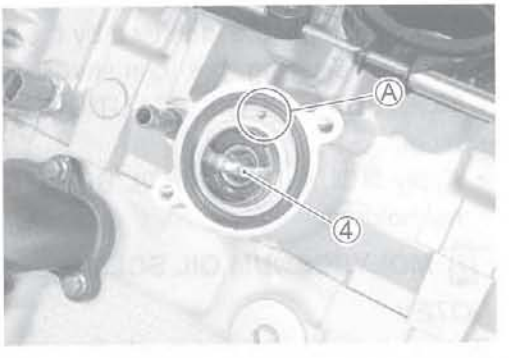

- Install the thermostat cover ⑤.

Thermostat cover bolt: 10 N·m (1.0 kgf-m, 7.0 lb-ft)

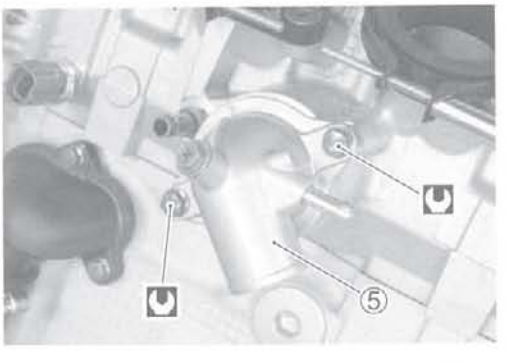

- Install the water hose ⑥. (☞10-22)

CAMSHAFT

- Turn the crankshaft clockwise with the box wrench and align the line Ⓐ on the starter clutch with the index mark Ⓑ of valve timing inspection hole while keeping the cam chain pulled upward.

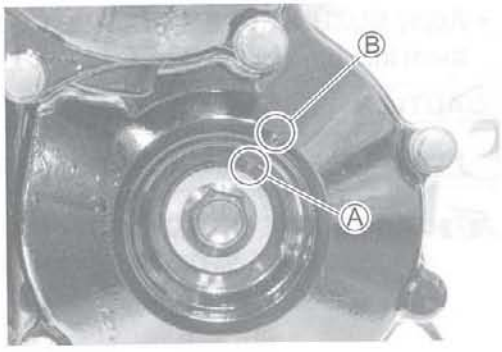

CAUTION

Pull the cam chain upward, or the chain will be caught between crankcase and cam drive sprocket.

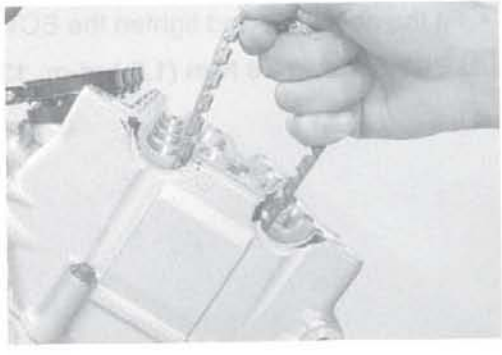

CAUTION

To adjust the camshaft timing correctly, be sure to align the line Ⓐ with the index mark Ⓑ and hold this position when installing the camshafts.

- The camshafts are identified by the embossed letters.
- Before replacing the camshafts on cylinder head, apply MOLYBDENUM OIL SOLUTION to their journals and cam faces.
- Apply MOLYBDENUM OIL SOLUTION to the camshaft journal holders.

MOLYBDENUM OIL SOLUTION

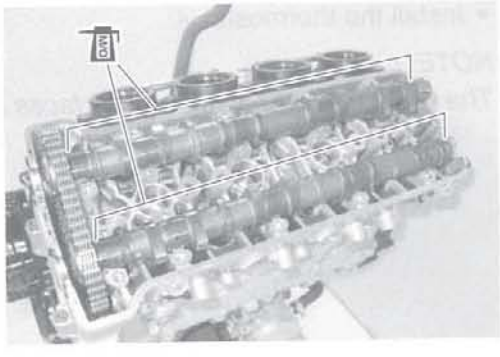

NOTE:
Before installing the camshaft, check that the tappets are installed correctly.

- Pull the cam chain lightly.
- The exhaust camshaft sprocket has an arrow marked "1" Ⓒ. Turn the exhaust camshaft so that the arrow is aligned with the gasket surface of the cylinder head.
- Engage the cam chain with the exhaust camshaft sprocket.
- Bind the cam chain and sprocket with a proper wire clamp ① to prevent the cam chain disengagement while installing the camshaft journal holders.
- The other arrow marked "2" Ⓓ should now be pointing straight up. Starting from the roller pin that is directly above the arrow marked "2" Ⓓ, count out 12 roller pins (from the exhaust camshaft side going towards the intake camshaft side).
- Engage the 12 roller pin Ⓔ on the cam chain with the arrow marked "3" on the intake sprocket.
- Bind the cam chain and sprocket with a proper wire clamp ② to prevent the cam chain disengagement while installing the camshaft journal holders.

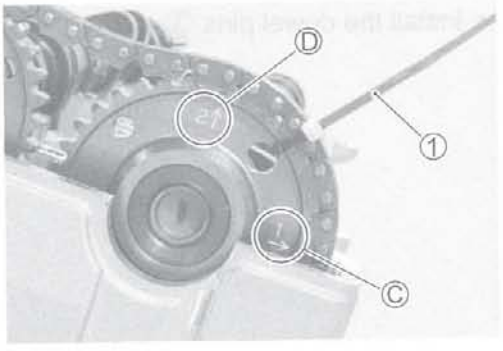

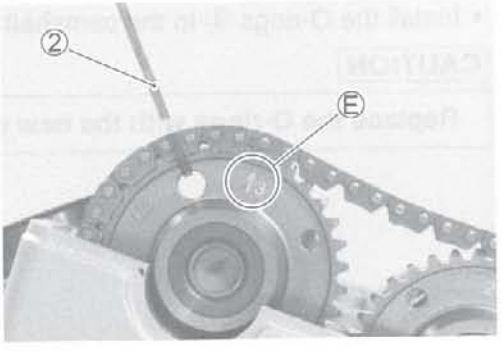

NOTE:
The cam chain should now be on all three sprockets. Be careful not to move the crankshaft until the camshaft journal holders and cam chain tension adjuster are secured.

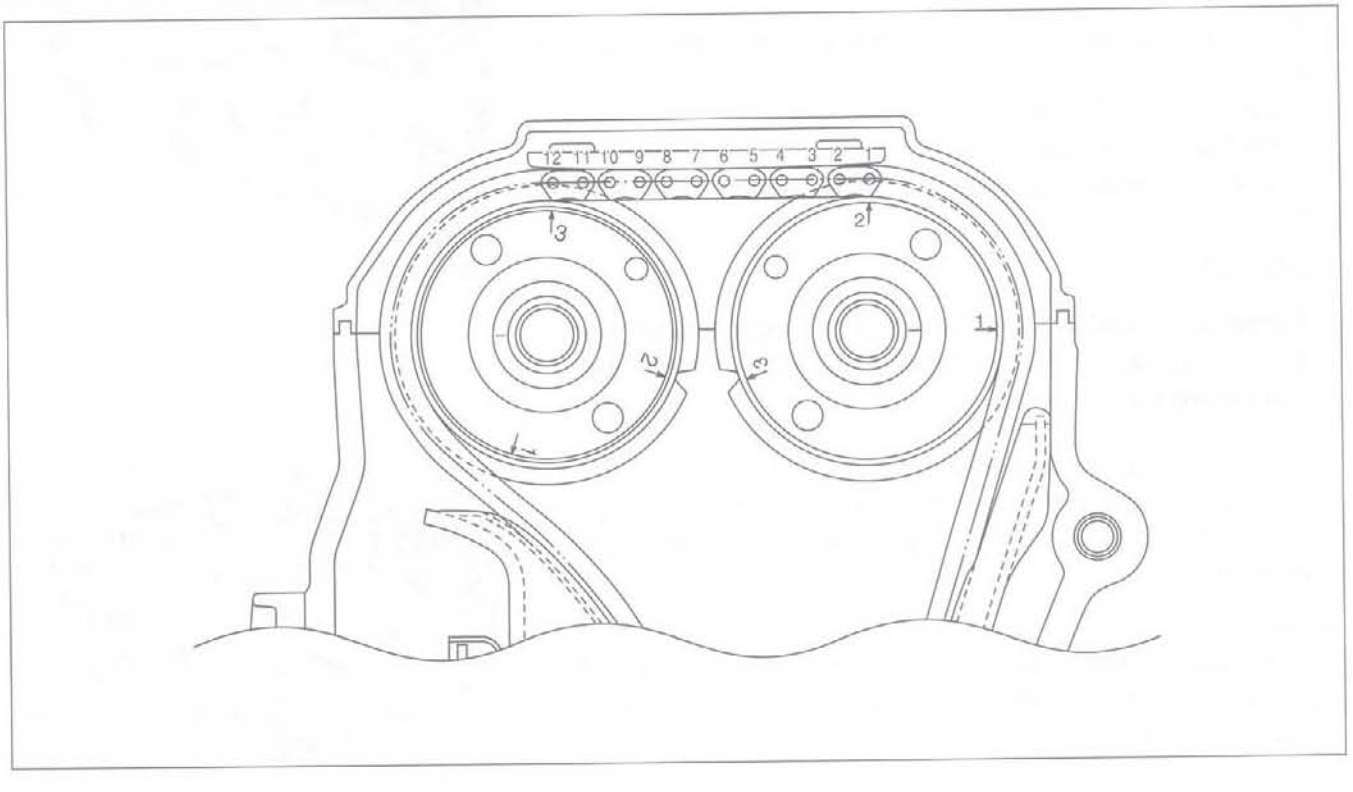

- Install the dowel pins ③.

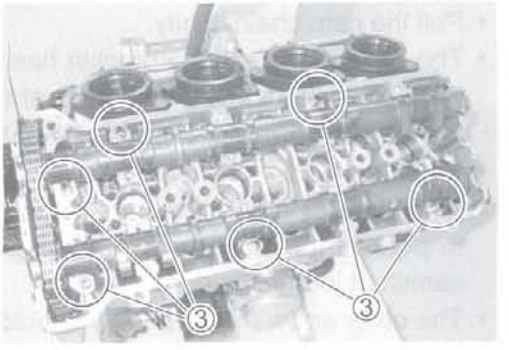

- Install the O-rings ④ to the camshaft journal holders.

CAUTION

Replace the O-rings with the new ones.

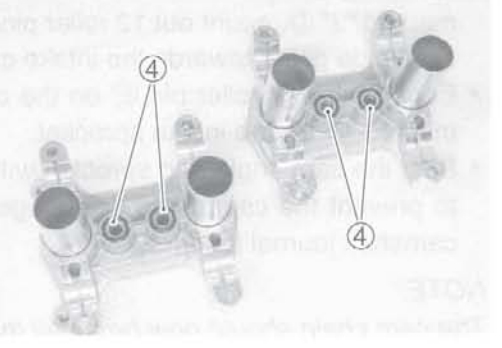

- Install the camshaft journal holders.

NOTE:

** Each camshaft journal holder is identified with an embossed letter.*

"A": No.1 and No.2 cylinders

"B": No.3 and No.4 cylinders

** Check that embossed letter on each holder faces exhaust side.*

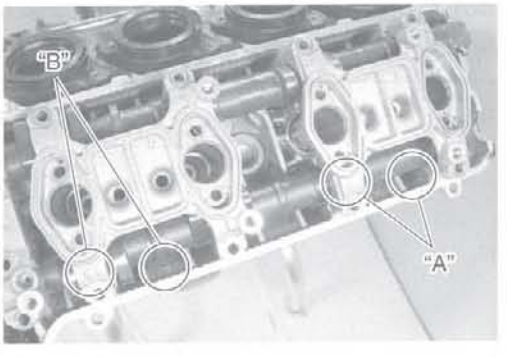

CAUTION

Damage to head or camshaft journal holder thrust surfaces may result if the camshaft journal holders are not drawn down evenly.

- Install the cam chain guide ⑤.
- Fasten the camshaft journal holders evenly by tightening the camshaft journal holder bolts lightly, in the ascending order of numbers.

NOTE:

** Fit the copper washer to the camshaft journal holder bolts Ⓕ.*

** The ascending order of numbers are indicated on the camshaft journal holders.*

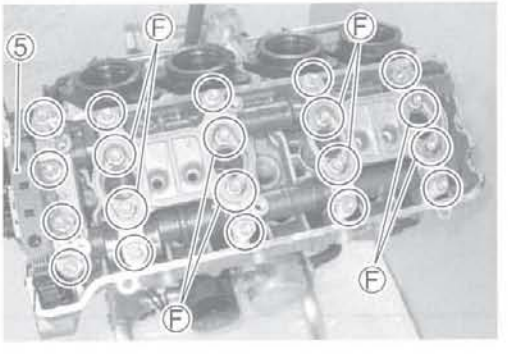

- Tighten the camshaft journal holder bolts in the ascending order of numbers to the specified torque.

Camshaft journal holder bolt: 10 N·m (1.0 kgf-m, 7.0 lb-ft)

CAUTION

The camshaft journal holder bolts are made of a special material and much superior in strength, compared with other types of high strength bolts.
Take special care not to use other types of bolts.

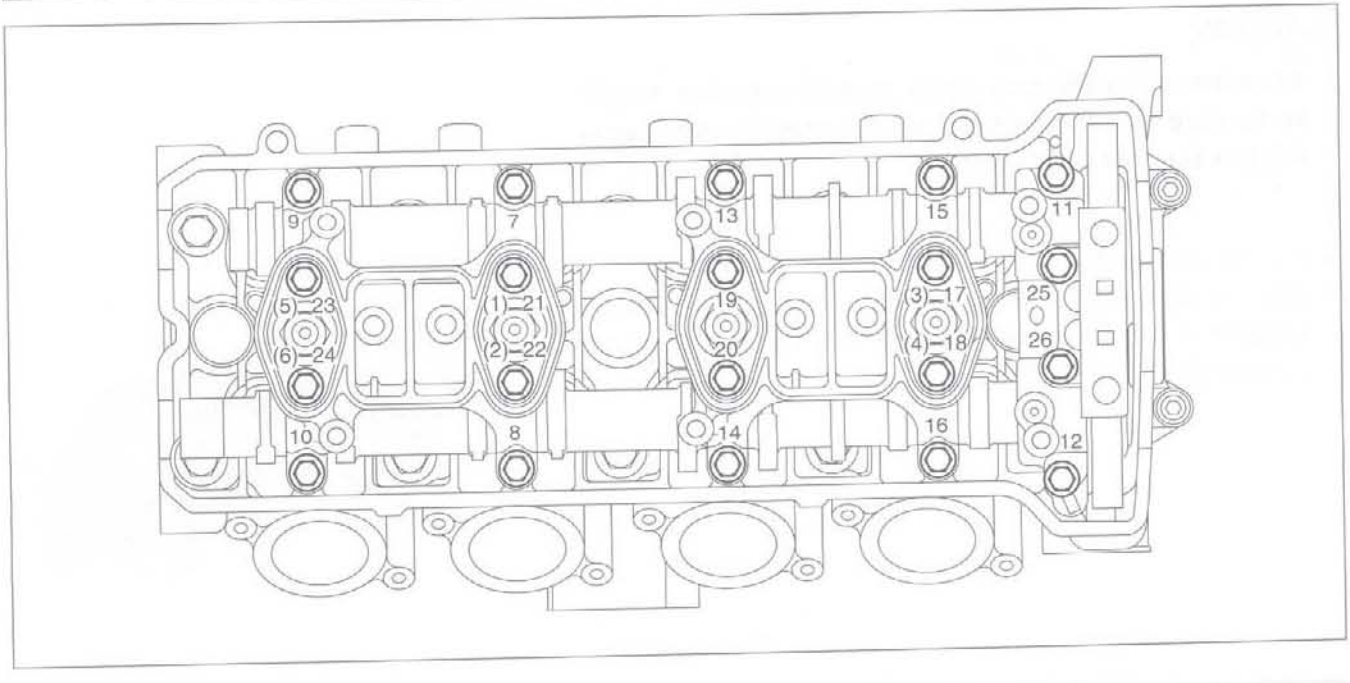

Cam chain tension adjuster

- Retract the push rod by pushing the stopper ①.
- Install the ball ② into the cam chain tension adjuster.

- Install the new gasket.

CAUTION

Use the new gasket to prevent oil leakage.

- Install the cam chain tension adjuster ③ and tighten its mounting bolts.

Cam chain tension adjuster mounting bolt: 10 N·m (1.0 kgf-m, 7.0 lb-ft)

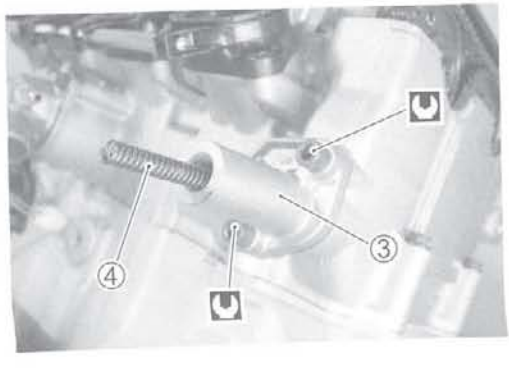

- Install the spring ④.

- Install the gasket ⑤ and cam chain tension adjuster cap bolt ⑥.

NOTE:
Click sound is heard when the cam chain tension adjuster cap bolt is installed.

- Tighten the cam chain tension adjuster cap bolt to the specified torque.

Cam chain tension adjuster cap bolt:
23 N·m (2.3 kgf-m, 16.5 lb-ft)

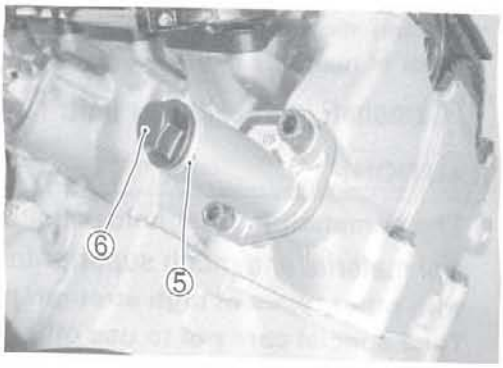

CAUTION

After installing the cam chain tension adjuster, check to be sure that the adjuster works properly by checking the slack of cam chain.

- Cut the wire clamps ⑦.
- After installing the cam chain tension adjuster, rotate the crankshaft (some turns), and recheck the positions of the camshafts. (☞3-103)

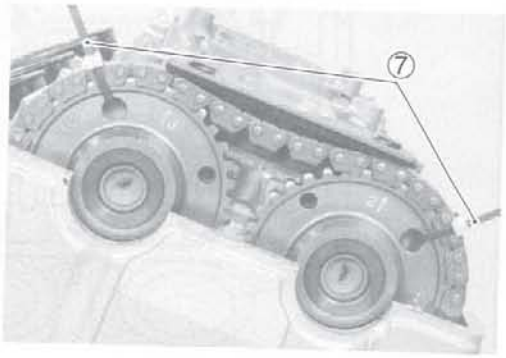

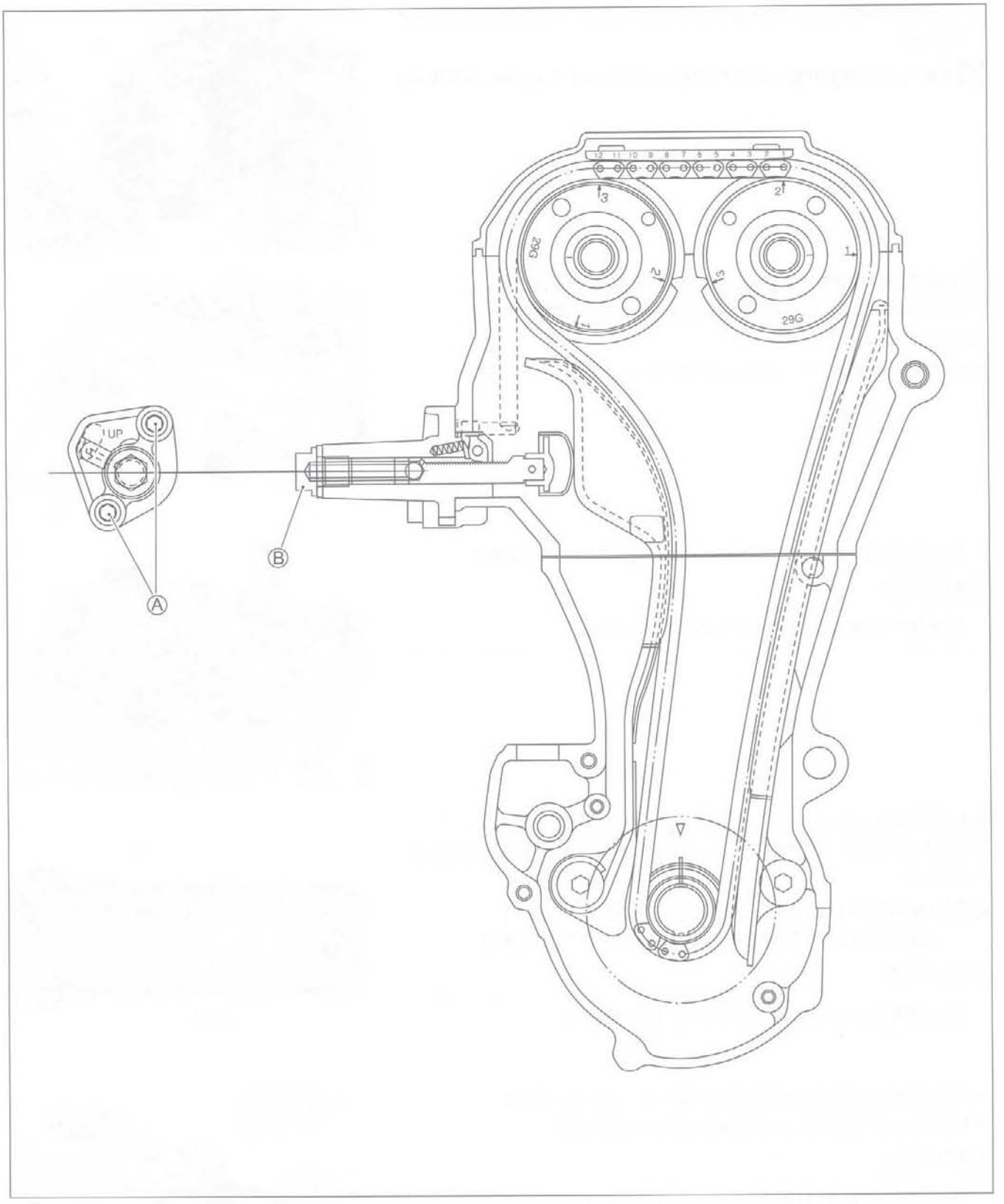

Ⓐ	Cam chain tension adjuster mounting bolt
Ⓑ	Cam chain tension adjuster cap bolt

ITEM	N·m	kgf-m	lb-ft
Ⓐ	10	1.0	7.0
Ⓑ	23	2.3	16.5

- Tighten the valve timing inspection plug ⑦ to the specified torque.

Valve timing inspection plug: 11 N·m (1.1 kgf-m, 8.0 lb-ft)

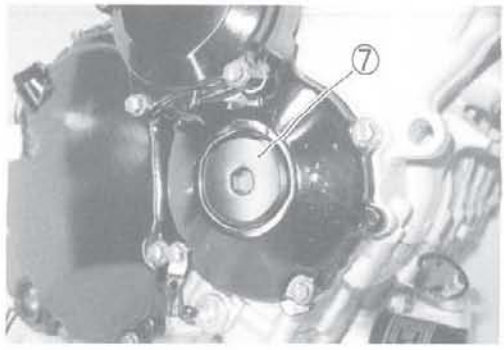

CYLINDER HEAD COVER AND PAIR REED VALVE

- Pour engine oil in each oil pocket in the cylinder head.

NOTE:
Be sure to check the valve clearance. (☞2-7)

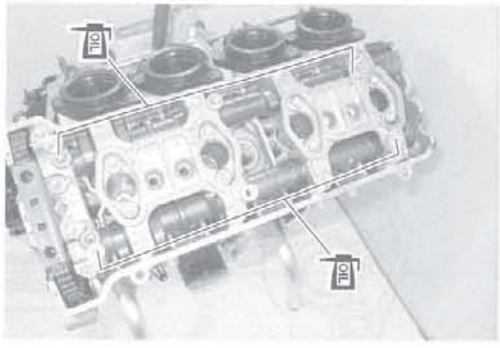

- Install the PAIR reed valves ① along with the gaskets.

CAUTION

Replace the gaskets with the new ones.

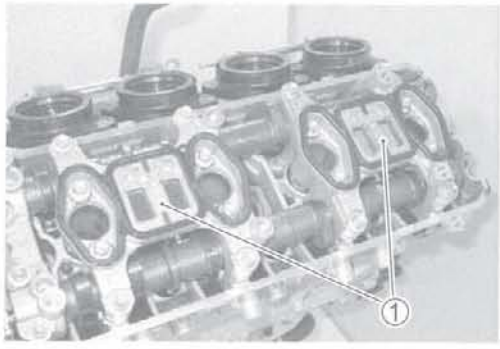

- Install the new gasket ② to the cylinder head cover.
- Apply SUZUKI BOND to the cam end caps of the gasket as shown.

1207B 99104-31140: SUZUKI BOND "1207B" (USA)
99000-31140: SUZUKI BOND "1207B" (Others)

CAUTION

Use the new gasket to prevent oil leakage.

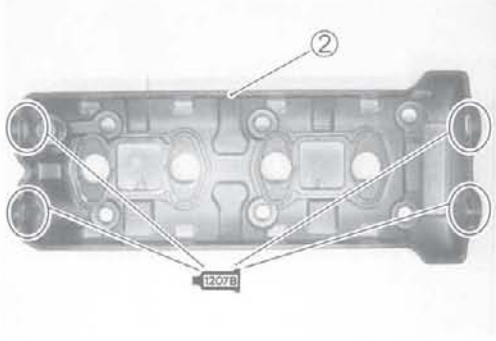

- Place the cylinder head cover on the cylinder head.
- Fit the new gasket ③ to each head cover bolt.

CAUTION

Use the new gasket to prevent oil leakage.

- Tighten the head cover bolts to the specified torque.

Head cover bolt: Initial: 10 N·m (1.0 kgf-m, 7.0 lb-ft)
Final : 14 N·m (1.4 kgf-m, 10.0 lb-ft)

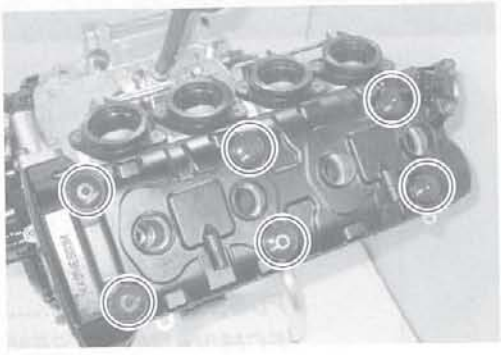

STARTER MOTOR

- Install the new O-ring ① to the starter motor.

CAUTION

Use the new O-ring to prevent oil leakage.

- Apply SUZUKI SUPER GREASE "A" to the O-ring.

99000-25030: SUZUKI SUPER GREASE "A" (USA)
99000-25010: SUZUKI SUPER GREASE "A" (Others)

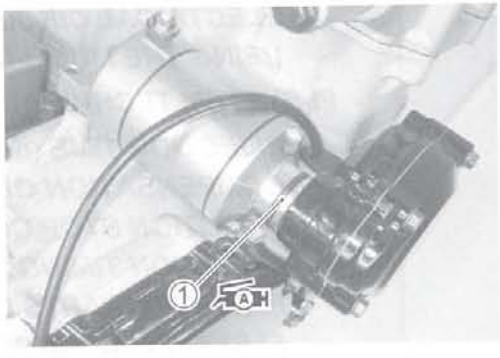

- Install the starter motor ②.

Starter motor mounting bolt: 10 N·m (1.0 kgf-m, 7.0 lb-ft)

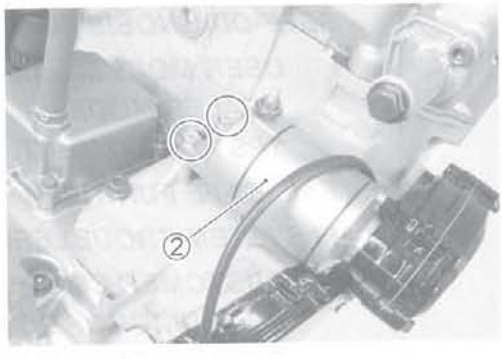

- Install the spark plugs. (☞2-5)

FI SYSTEM DIAGNOSIS

CONTENTS

PRECAUTIONS IN SERVICING 4- 2
- ELECTRICAL PARTS 4- 2
- FUSE 4- 3
- ECM/VARIOUS SENSORS 4- 3
- ELECTRICAL CIRCUIT INSPECTION PROCEDURE 4- 5
- USING THE MULTI-CIRCUIT TESTER 4- 8

FI SYSTEM TECHNICAL FEATURES 4- 9
- INJECTION TIME (INJECTION VOLUME) 4- 9
- COMPENSATION OF INJECTION TIME (VOLUME) 4-10
- INJECTION STOP CONTROL 4-10
- INJECTION TIMING 4-11
- FI SYSTEM PARTS LOCATION 4-12
- FI SYSTEM WIRING DIAGRAM 4-14

SELF-DIAGNOSIS FUNCTION 4-15
- USER MODE 4-15
- DEALER MODE 4-16
- TPS ADJUSTMENT 4-18

FAIL-SAFE FUNCTION 4-19

FI SYSTEM TROUBLESHOOTING 4-21
- CUSTOMER COMPLAINT ANALYSIS 4-21
- SELF-DIAGNOSTIC PROCEDURES 4-23
- SELF-DIAGNOSIS RESET PROCEDURE 4-23
- MALFUNCTION CODE AND DEFECTIVE CONDITION 4-24
- "C11" CMP SENSOR CIRCUIT MALFUNCTION 4-26
- "C12" CKP SENSOR CIRCUIT MALFUNCTION 4-28
- "C13" IAP SENSOR CIRCUIT MALFUNCTION 4-30
- "C14" TP SENSOR CIRCUIT MALFUNCTION 4-33
- "C15" ECT SENSOR CIRCUIT MALFUNCTION 4-36
- "C21" IAT SENSOR CIRCUIT MALFUNCTION 4-38
- "C22" AP SENSOR CIRCUIT MALFUNCTION 4-40
- "C23" TO SENSOR CIRCUIT MALFUNCTION 4-43
- "C24", "C25", "C26" or "C27" IGNITION SYSTEM MALFUNCTION 4-44
- "C28" STV ACTUATOR CIRCUIT MALFUNCTION 4-45
- "C29" STP SENSOR CIRCUIT MALFUNCTION 4-47
- "C31" GP SWITCH CIRCUIT MALFUNCTION 4-50
- "C32", "C33", "C34" or "C35" FUEL INJECTOR CIRCUIT MALFUNCTION 4-51
- "C41" FP RELAY CIRCUIT MALFUNCTION 4-53
- "C42" IG SWITCH CIRCUIT MALFUNCTION 4-53

"C49" PAIR CONTROL SOLENOID VALVE CIRCUIT MALFUNCTION....4-54
SENSORS....4-56
CMP SENSOR INSPECTION....4-56
CMP SENSOR REMOVAL AND INSTALLATION....4-56
CKP SENSOR INSPECTION....4-56
CKP SENSOR REMOVAL AND INSTALLATION....4-56
IAP SENSOR INSPECTION....4-56
IAP SENSOR REMOVAL AND INSTALLATION....4-56
TP SENSOR INSPECTION....4-56
TP SENSOR REMOVAL AND INSTALLATION....4-56
TPS ADJUSTMENT....4-56
ECT SENSOR INSPECTION....4-57
ECT SENSOR REMOVAL AND INSTALLATION....4-57
IAT SENSOR INSPECTION....4-57
IAT SENSOR REMOVAL AND INSTALLATION....4-57
AP SENSOR INSPECTION....4-57
AP SENSOR REMOVAL AND INSTALLATION....4-57
TO SENSOR INSPECTION....4-57
TO SENSOR REMOVAL AND INSTALLATION....4-57
STP SENSOR INSPECTION....4-58
STP SENSOR REMOVAL AND INSTALLATION....4-58
STP SENSOR ADJUSTMENT....4-58

PRECAUTIONS IN SERVICING

When handling the component parts or servicing the FI system, observe the following points for the safety of the system.

ELECTRICAL PARTS

CONNECTOR/COUPLER

- When connecting a connector, be sure to push it in until a click is felt.

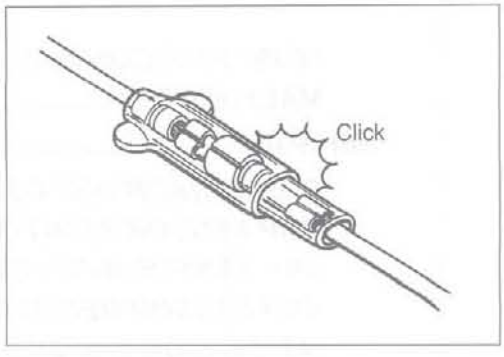

- With a lock type coupler, be sure to release the lock when disconnecting, and push it in fully till the works when connecting it.
- When disconnecting the coupler, be sure to hold the coupler body and do not pull the lead wires.
- Inspect each terminal on the connector/coupler for looseness or bending.
- Inspect each terminal for corrosion and contamination.
  The terminals must be clean and free of any foreign material which could impede proper terminal contact.

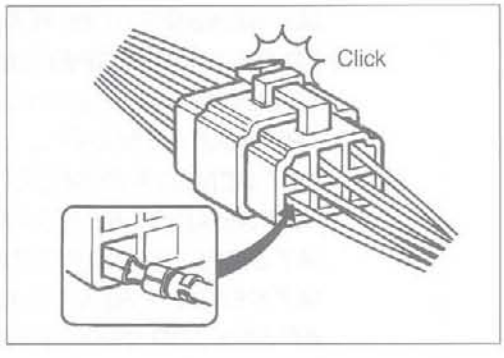

- Inspect each lead wire circuit for poor connection by shaking it by hand lightly. If any abnormal condition is found, repair or replace.

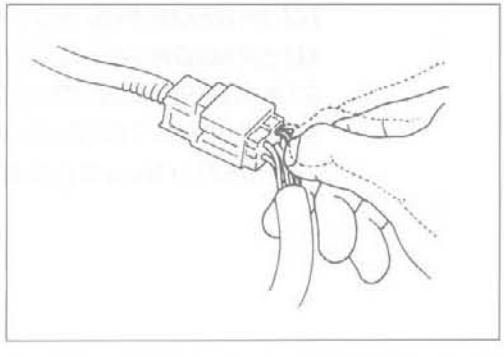

- When taking measurements at electrical connectors using a tester probe, be sure to insert the probe from the wire harness side (backside) of the connector/coupler.

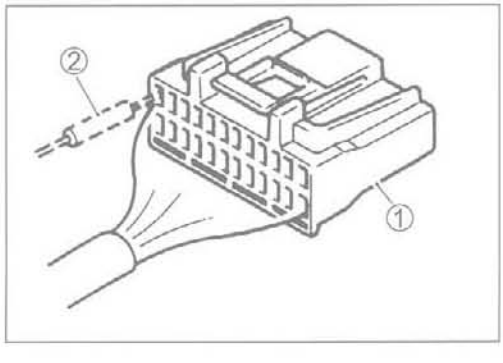

① Coupler
② Probe

- When connecting meter probe from the terminal side of the coupler (connection from harness side not being possible), use extra care not to force and cause the male terminal to bend or the female terminal to open.
  Connect the probe as shown to avoid opening of female terminal.
  Never push in the probe where male terminal is supposed to fit.
- Check the male connector for bend and female connector for excessive opening. Also check the coupler for locking (looseness), corrosion, dust, etc.

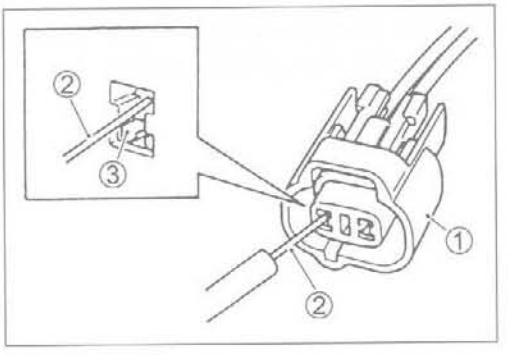

① Coupler
② Probe
③ Where male terminal fits

FUSE

- When a fuse blows, always investigate the cause correct it and then replace the fuse.
- Do not use a fuse of a different capacity.
- Do not use wire or any other substitute for the fuse.

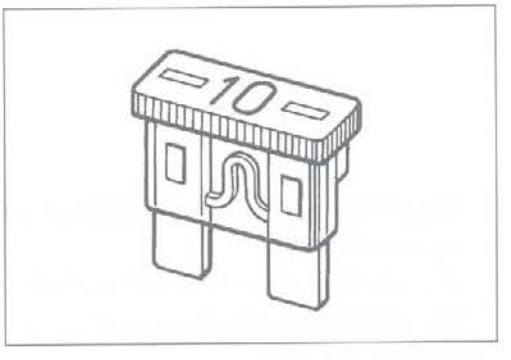

ECM/VARIOUS SENSORS

- Since each component is a high-precision part, great care should be taken not to apply any sharp impacts during removal and installation.

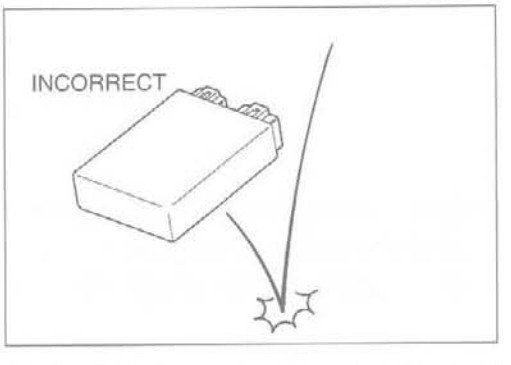

- Be careful not to touch the electrical terminals of the ECM. The static electricity from your body may damage this part.

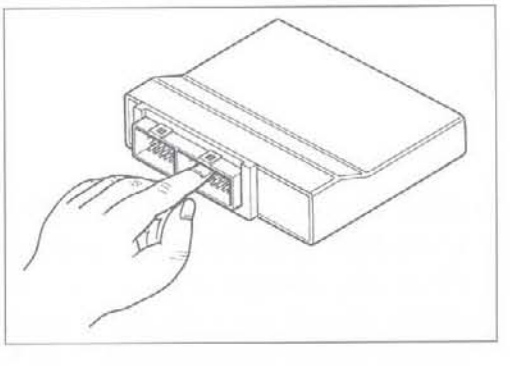

- When disconnecting and connecting the ECM, make sure to turn OFF the ignition switch ①, or electronic parts may get damaged.

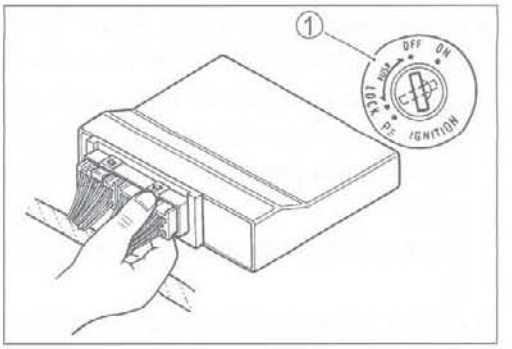

- Battery connection in reverse polarity is strictly prohibited. Such a wrong connection will damage the components of the FI system instantly when reverse power is applied.

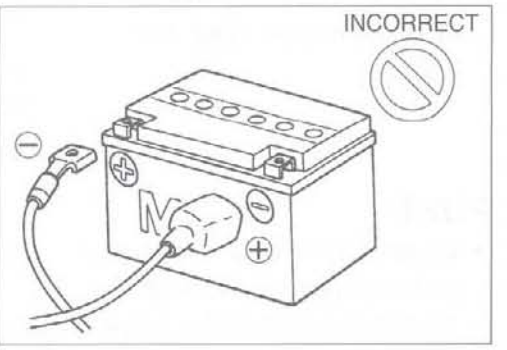

- Removing any battery terminal of a running engine is strictly prohibited.
  The moment such removal is made, damaging counter electromotive force will be applied to the ECM which may result in serious damage.

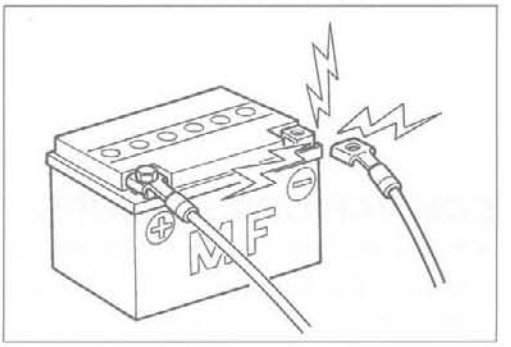

- Before measuring voltage at each terminal, check to make sure that battery voltage is 11 V or higher. Terminal voltage check at low battery voltage will lead to erroneous diagnosis.

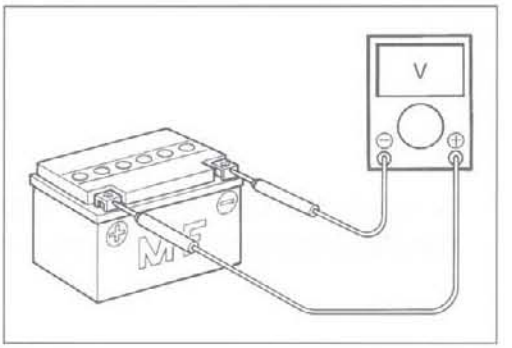

- Never connect any tester (voltmeter, ohmmeter, or whatever) to the ECM when its coupler is disconnected.
  Otherwise, damage to ECM may result.
- Never connect an ohmmeter to the ECM with its coupler connected. If attempted, damage to ECM or sensors may result.
- Be sure to use a specified voltmeter/ohmmeter. Otherwise, accurate measurements may not be obtained and personal injury may result.

ELECTRICAL CIRCUIT INSPECTION PROCEDURE

While there are various methods for electrical circuit inspection, described here is a general method to check for open and short circuit using an ohmmeter and a voltmeter.

OPEN CIRCUIT CHECK

Possible causes for the open circuits are as follows. As the cause can exist in the connector/coupler or terminal, they need to be checked carefully.

- Loose connection of connector/coupler.
- Poor contact of terminal (due to dirt, corrosion or rust, poor contact tension, entry of foreign object etc.)
- Wire harness being open.
- Poor terminal-to-wire connection.

- Disconnect the negative cable from the battery.
- Check each connector/coupler at both ends of the circuit being checked for loose connection. Also check for condition of the coupler lock if equipped.

① Sensor
② ECM
*1 Check for loose connection.

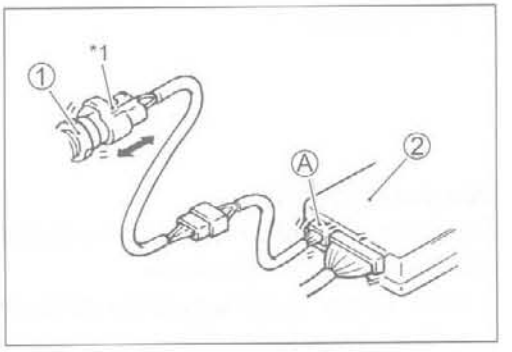

- Using a test male terminal, check the female terminals of the circuit being checked for contact tension.
  Check each terminal visually for poor contact (possibly caused by dirt, corrosion, rust, entry of foreign object, etc.). At the same time, check to make sure that each terminal is fully inserted in the coupler and locked.
  If contact tension is not enough, rectify the contact to increase tension or replace.
  The terminals must be clean and free of any foreign material which could impede proper terminal contact.

*1 Check contact tension by inserting and removing.
*2 Check each terminal for bend and proper alignment.

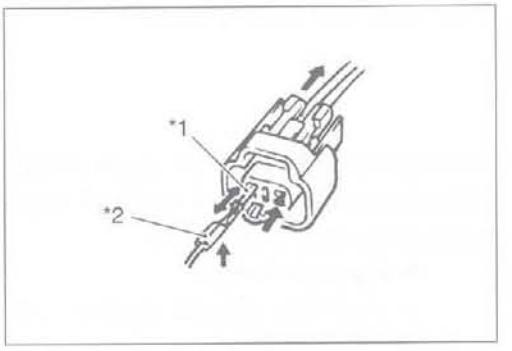

- Using continuity inspect or voltage check procedure as described below, inspect the wire harness terminals for open circuit and poor connection. Locate abnormality, if any.

Ⓐ Looseness of crimping
Ⓑ Open
Ⓒ Thin wire (a few strands left)

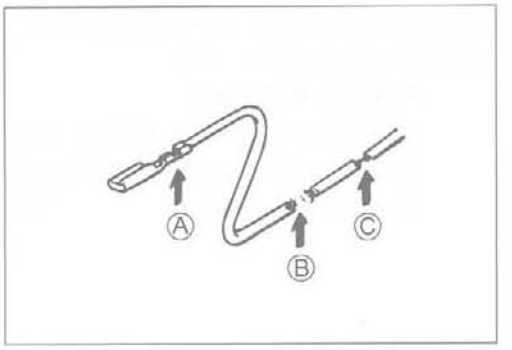

Continuity check

- Measure resistance across coupler Ⓑ (between Ⓐ and Ⓒ in the figure).
  If no continuity is indicated (infinity or over limit), the circuit is open between terminals Ⓐ and Ⓒ.

① ECM

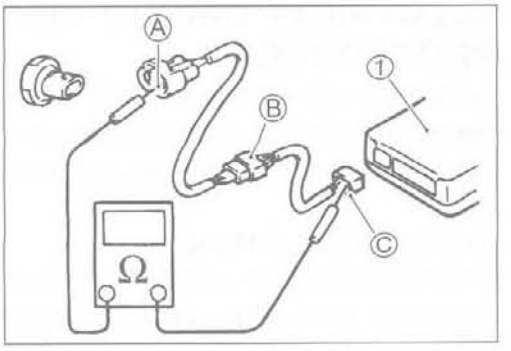

- Disconnect the coupler Ⓑ and measure resistance between couplers Ⓐ and Ⓑ.
  If no continuity is indicated, the circuit is open between couplers Ⓐ and Ⓑ. If continuity is indicated, there is an open circuit between couplers Ⓑ' and Ⓒ or an abnormality in coupler Ⓑ' or coupler Ⓒ.

① ECM

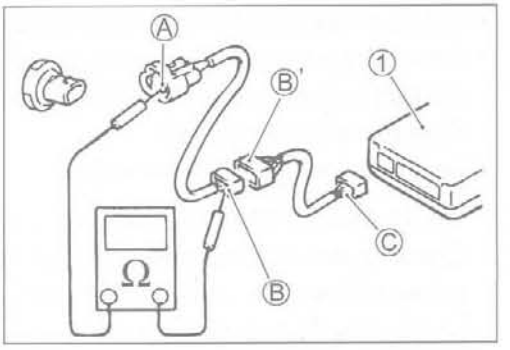

VOLTAGE CHECK

If voltage is supplied to the circuit being checked, voltage check can be used as circuit check.

- With all connectors/couplers connected and voltage applied to the circuit being checked, measure voltage between each terminal and body ground.

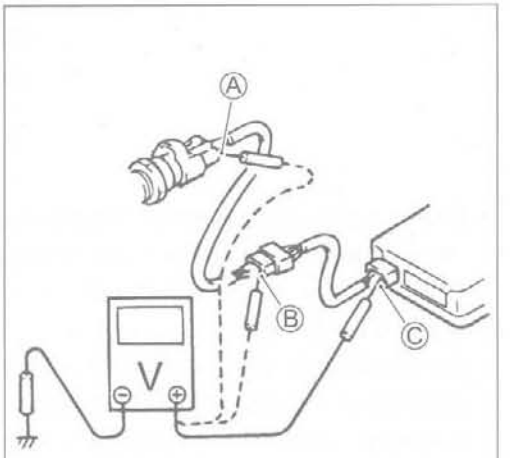

If measurements were taken as shown in the figure at the right and results are as listed below, it means that the circuit is open between terminals Ⓐ and Ⓑ.

Voltage Between:

Ⓒ and body ground: Approx. 5 V
Ⓑ and body ground: Approx. 5 V
Ⓐ and body ground: 0 V

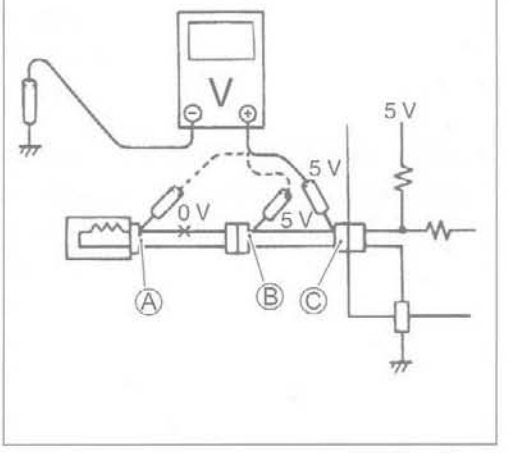

Also, if measured values are as listed below, a resistance (abnormality) exists which causes the voltage drop in the circuit between terminals Ⓐ and Ⓑ.

Voltage Between:

Ⓒ and body ground: Approx. 5 V
Ⓑ and body ground: Approx. 5 V ——— 2 V voltage drop
Ⓐ and body ground: 3 V

SHORT CIRCUIT CHECK (WIRE HARNESS TO GROUND)

- Disconnect the negative cable from the battery.
- Disconnect the connectors/couplers at both ends of the circuit to be checked.

NOTE:

If the circuit to be checked branches to other parts as shown, disconnect all connectors/couplers of those parts. Otherwise, diagnosis will be misled.

- Measure resistance between terminal at one end of circuit (Ⓐ terminal in figure) and body ground. If continuity is indicated, there is a short circuit to ground between terminals Ⓐ and Ⓒ.

① Other parts
*1 To other parts.

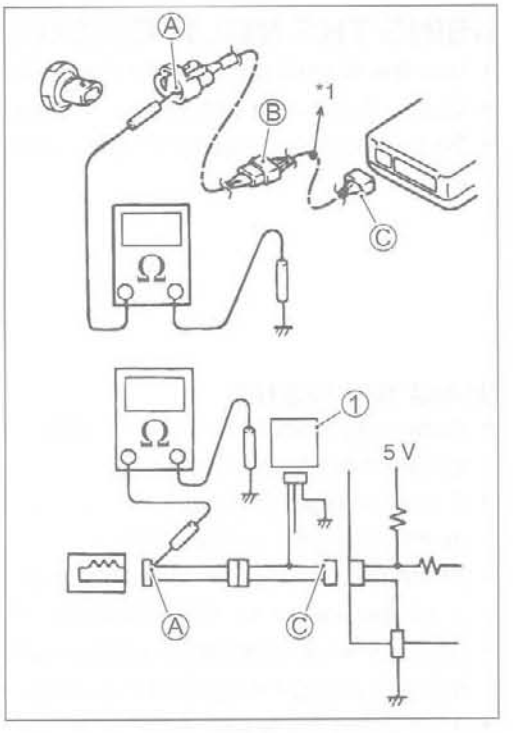

- Disconnect the connector/coupler included in circuit (coupler Ⓑ) and measure resistance between terminal Ⓐ and body ground.
  If continuity is indicated, the circuit is shorted to the ground between terminals Ⓐ and Ⓑ.

① ECM
*1 To other parts.

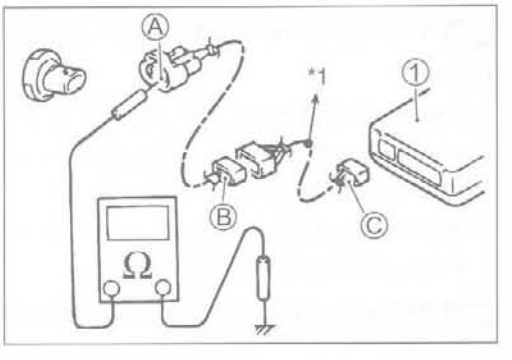

USING THE MULTI-CIRCUIT TESTER

- Use the Suzuki multi-circuit tester set (09900-25008).
- Use well-charged batteries in the tester.
- Be sure to set the tester to the correct testing range.

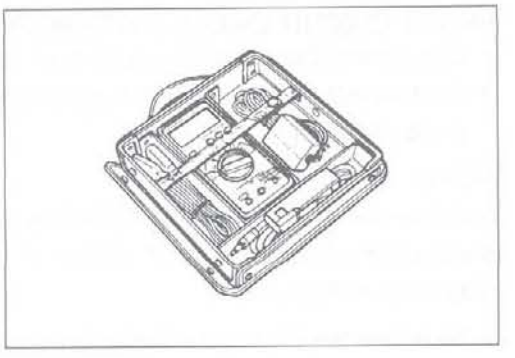

USING THE TESTER

- Incorrectly connecting the ⊕ and ⊖ probes may cause the inside of the tester to burnout.
- If the voltage and current are not known, make measurements using the highest range.
- When measuring the resistance with the multi-circuit tester ①, ∞ will be shown as 10.00 MΩ and "1" flashes in the display.
- Check that no voltage is applied before making the measurement. If voltage is applied the tester may be damaged.
- After using the tester, turn the power off.

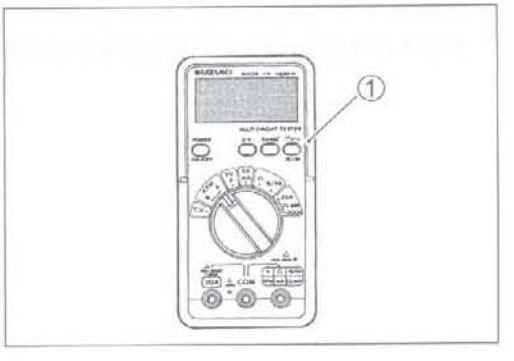

TOOL 09900-25008: Multi-circuit tester set

NOTE:

* *When connecting the multi-circuit tester, use the needle pointed probe to the back side of the lead wire coupler and connect the probes of tester to them.*
* *Use the needle pointed probe to prevent the rubber of the water proof coupler from damage.*

TOOL 09900-25009: Needle pointed probe set

FI SYSTEM TECHNICAL FEATURES

INJECTION TIME (INJECTION VOLUME)

The factors to determine the injection time include the basic fuel injection time, which is calculated on the basis of intake air pressure, engine speed and throttle opening angle, and various compensations.
These compensations are determined according to the signals from various sensors that detect the engine and driving conditions.

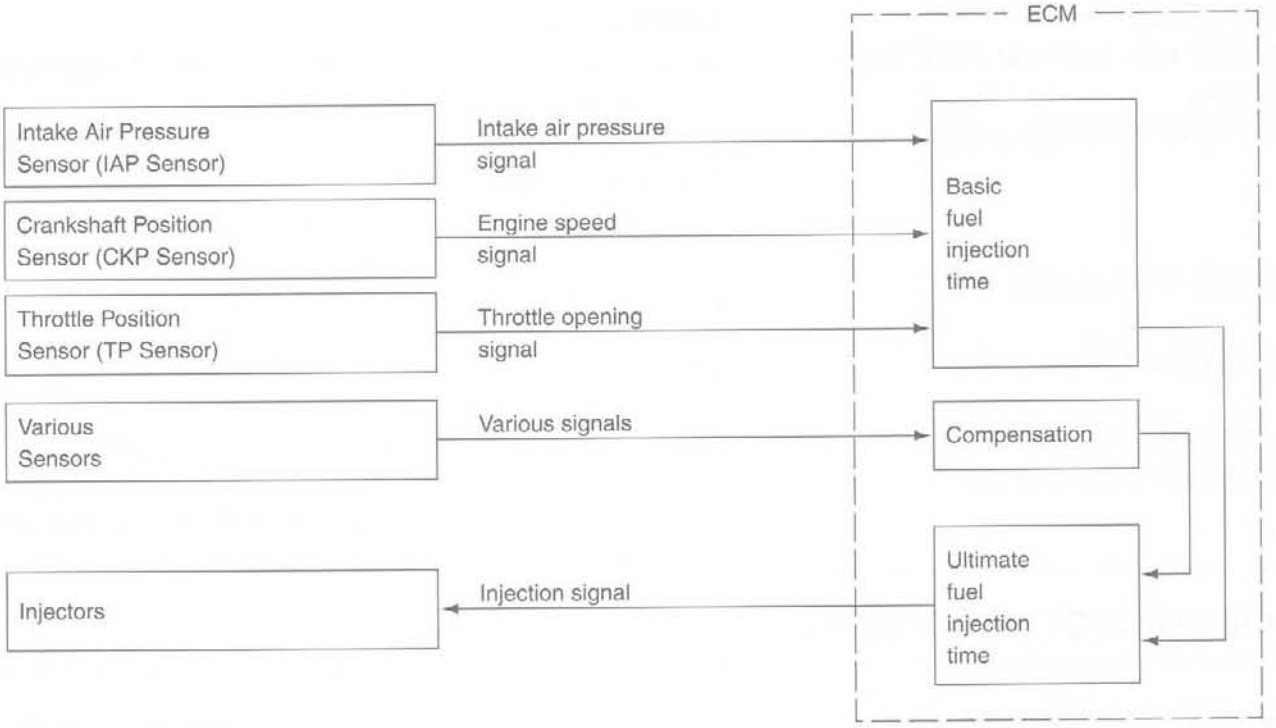

COMPENSATION OF INJECTION TIME (VOLUME)

The following different signals are output from the respective sensors for compensation of the fuel injection time (volume).

SIGNAL	DESCRIPTION
ATMOSPHERIC PRESSURE SENSOR SIGNAL	When atmospheric pressure is low, the sensor sends the signal to the ECM and reduce the injection time (volume).
ENGINE COOLANT TEMPERATURE SENSOR SIGNAL	When engine coolant temperature is low, injection time (volume) is increased.
INTAKE AIR TEMPERATURE SENSOR SIGNAL	When intake air temperature is low, injection time (volume) is increased.
BATTERY VOLTAGE SIGNAL	ECM operates on the battery voltage and at the same time, it monitors the voltage signal for compensation of the fuel injection time (volume). A longer injection time is needed to adjust injection volume in the case of low voltage.
ENGINE RPM SIGNAL	At high speed, the injection time (volume) is increased. This is the compensation of the SRAD.
STARTING SIGNAL	When starting engine, additional fuel is injected during cranking engine.
ACCELERATION SIGNAL/ DECELERATION SIGNAL	During acceleration, the fuel injection time (volume) is increased in accordance with the throttle opening speed and engine rpm. During deceleration, the fuel injection time (volume) is decreased.

INJECTION STOP CONTROL

SIGNAL	DESCRIPTION
TIP-OVER SENSOR SIGNAL (FUEL SHUT-OFF)	When the motorcycle tips over, the tip-over sensor sends a signal to the ECM. Then, this signal cuts OFF current supplied to the fuel pump, fuel injectors and ignition coils.
OVER-REV. LIMITER SIGNAL	The fuel injectors stop operation when engine rpm reaches rev. limit rpm.

INJECTION TIMING

The system employs a sequential, four-cylinder independent injection type, using the CKP sensor (signal generator) to determine the piston position (injection timing and ignition timing) and the CMP sensor to identify the cylinder during operation, and these information are sent to the ECM. This makes it possible to inject the optimum volume of fuel in the best timing for the engine operating conditions.

When the crankshaft begins to turn at the time of starting, the ECM sends the signals to the four injectors, #1, #2, #3 and #4 to have them inject fuel simultaneously. From the second turn onward, the sequential four-cylinder independent injection occurs as explained above.

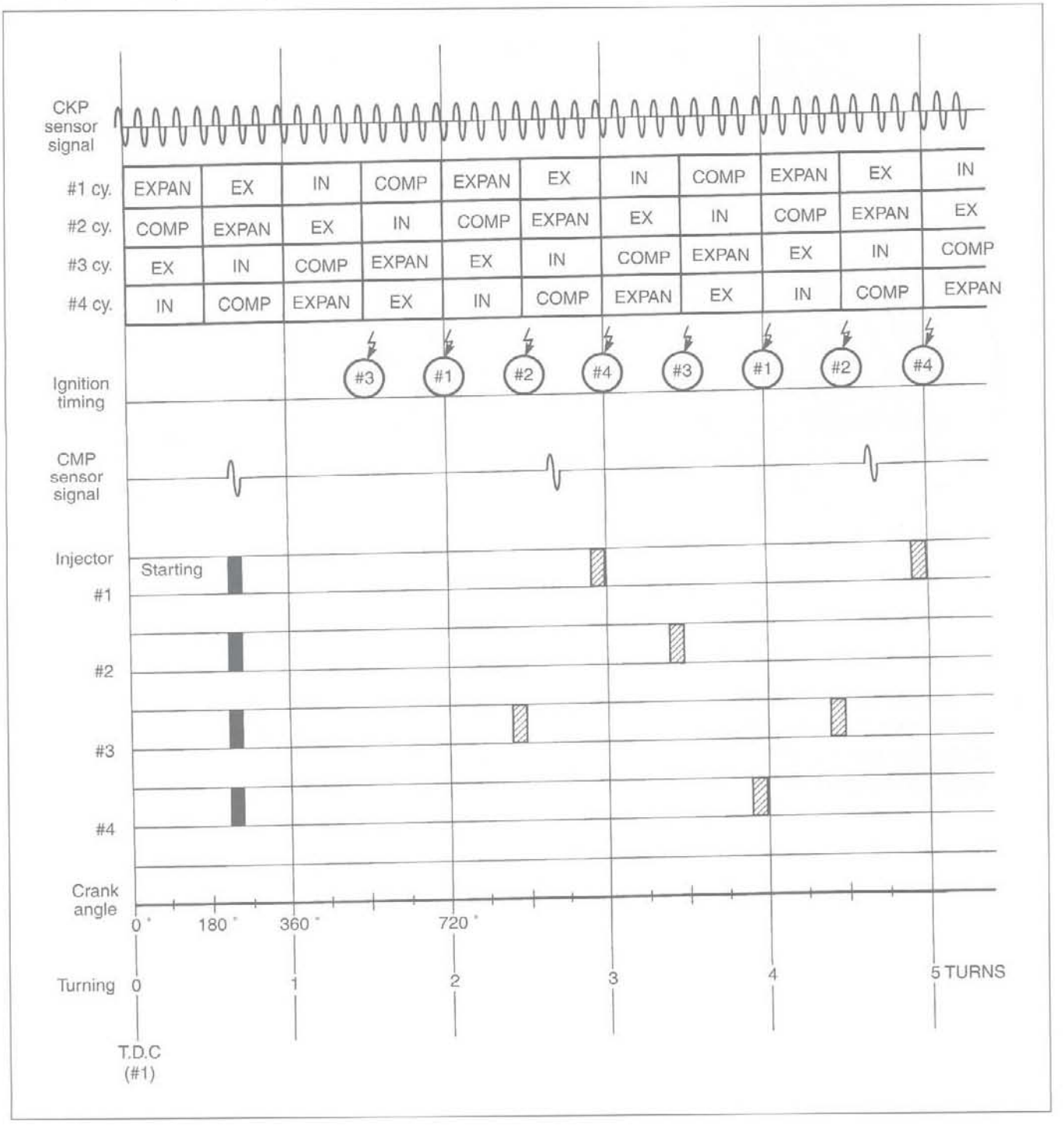

FI SYSTEM PARTS LOCATION

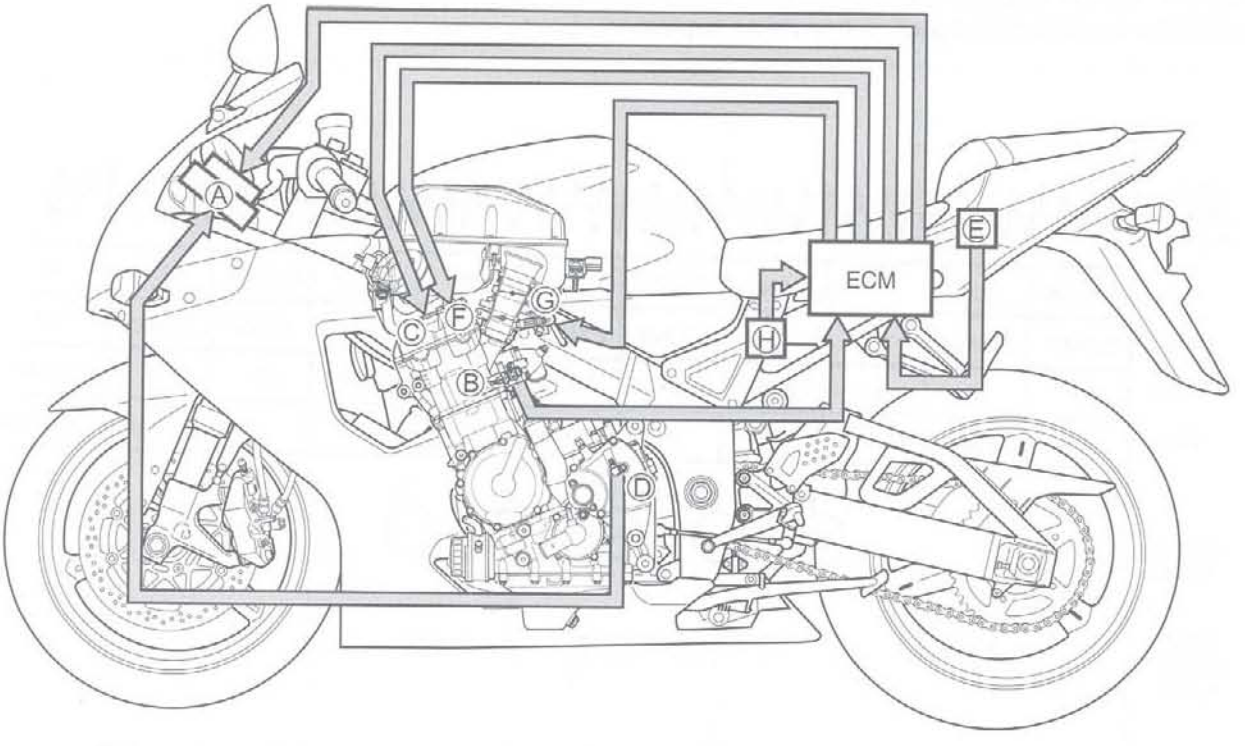

Ⓐ Speedometer
Ⓑ Engine coolant temperature sensor (ECTS)
Ⓒ Ignition coil (IG COIL)
Ⓓ Speed sensor
Ⓔ Atmospheric pressure sensor (APS)
Ⓕ Camshaft position sensor (CMPS)
Ⓖ Fuel injector (FI)
Ⓗ Tip-over sensor (TOS)

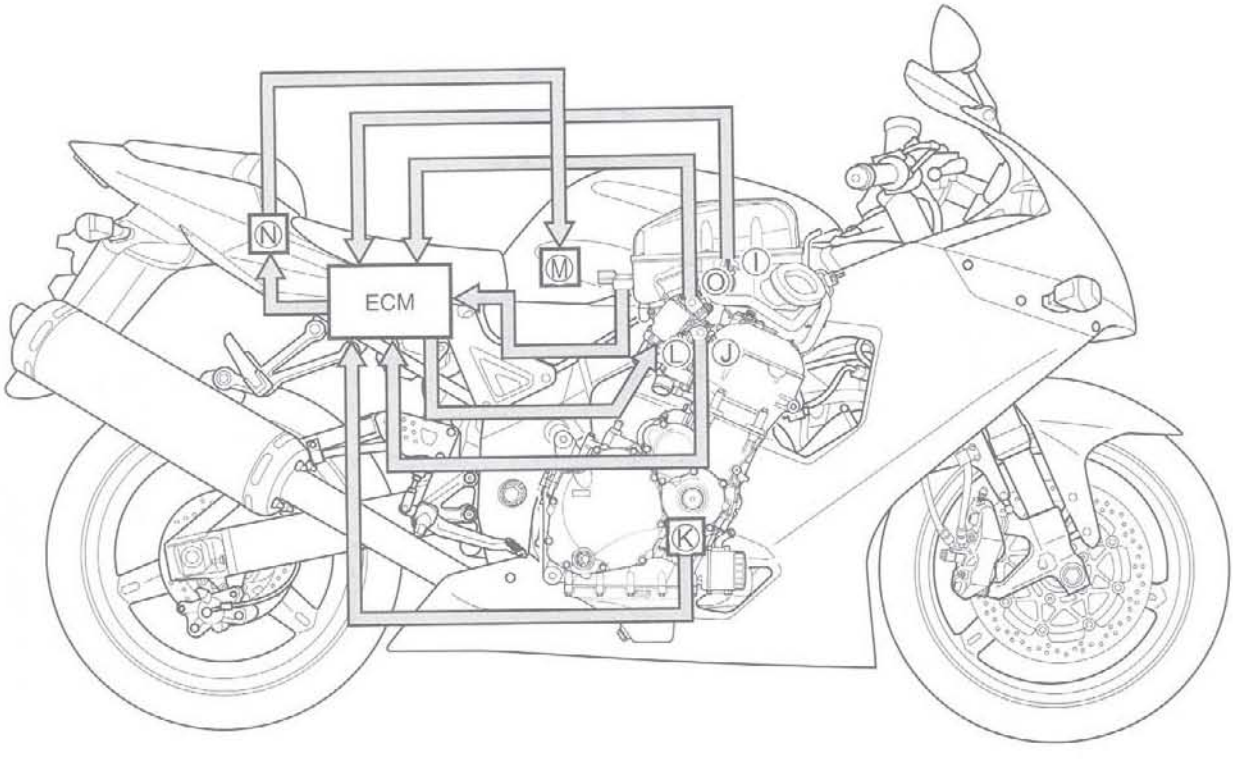

Ⓘ Intake air temperature sensor (IATS)
Ⓙ Throttle position sensor (TPS)
Ⓚ Crankshaft position sensor (CKPS)
Ⓛ Secondary throttle valve actuator (STVA)
Ⓜ Fuel pump (FP)
Ⓝ Fuel pump relay (FP RELAY)
Ⓞ Secondary throttle position sensor (STPS)

FI SYSTEM WIRING DIAGRAM

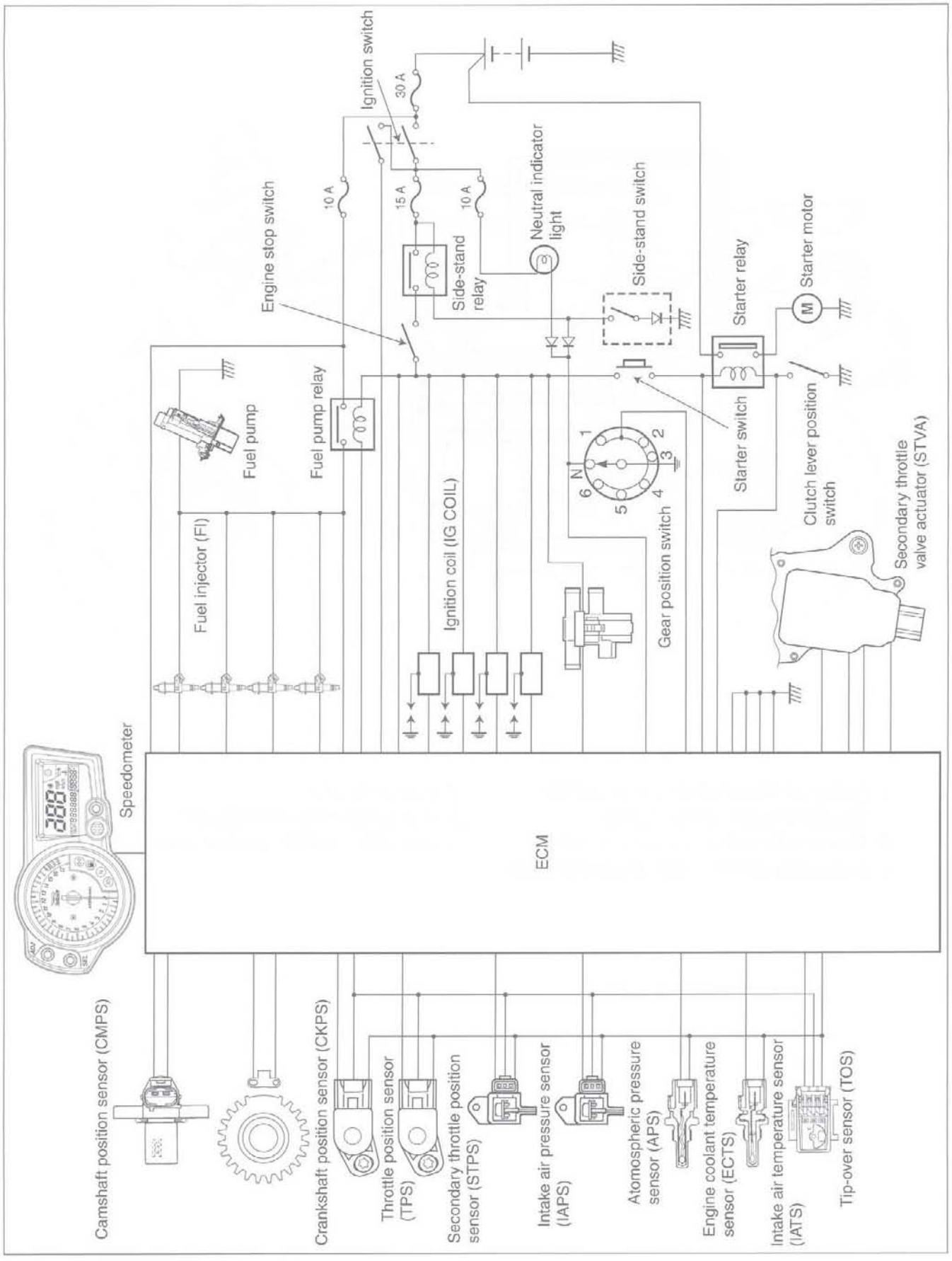

SELF-DIAGNOSIS FUNCTION

The self-diagnosis function is incorporated in the ECM. The function has two modes, "User mode" and "Dealer mode". The user can only be notified by the LCD (DISPLAY) panel and LED (FI light). To check the function of the individual FI system devices, the dealer mode is prepared. In this check, the special tool is necessary to read the code of the malfunction items.

USER MODE

MALFUNCTION		LCD (DISPLAY) INDICATION	FI LIGHT INDICATION	INDICATION MODE
"NO"		Coolant temperature	—	—
"YES"	Engine can start	Coolant temperature and "FI" letters *1	FI light turns ON.	Each 2 sec. Coolant temperature or "FI" is indicated.
	Engine can not start	"FI" letter *2	FI light turns ON and blinks.	"FI" is indicated continuously.

*1
When one of the signals is not received by ECM, the fail-safe circuit works and injection is not stopped. In this case, "FI" and coolant temperature are indicated in the LCD panel and motorcycle can run.

*2
The injection signal is stopped, when the camshaft position sensor signal, crankshaft position sensor signal, tip-over sensor signal, #1, #2, #3 and #4 ignition signals, #1, #2, #3 and #4 injector signals, fuel pump relay signal or ignition switch signal is not sent to ECM. In this case, "FI" is indicated in the LCD panel. Motorcycle does not run.

"CHEC": The LCD panel indicates "CHEC" when no communication signal from the ECM is received for 5 seconds.

For Example

: The ignition switch is turned ON, and the engine stop switch is turned OFF. In this case, the speedometer does not receive any signal from ECM, and the panel indicates "CHEC".
If CHEC is indicated, the LCD does not indicate the trouble code. It is necessary to check the wiring harness between ECM and speedometer couplers.
The possible cause of this indication is as follows;
Engine stop switch is in OFF position. Side-stand/ignition inter-lock system is not working. Ignition fuse is burnt.

NOTE:
Until starting the engine, the FI light turns ON.
The FI light is also turned ON when engine temperature is high or oil pressure is low.

DEALER MODE

The defective function is memorized in the computer. Use the special tool's coupler to connect to the dealer mode coupler. The memorized malfunction code is displayed on LCD (DISPLAY) panel. Malfunction means that the ECM does not receive signal from the devices. These affected devices are indicated in the code form.

TOOL 09930-82720: Mode select switch

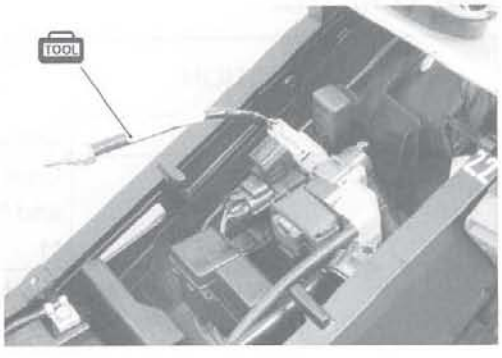

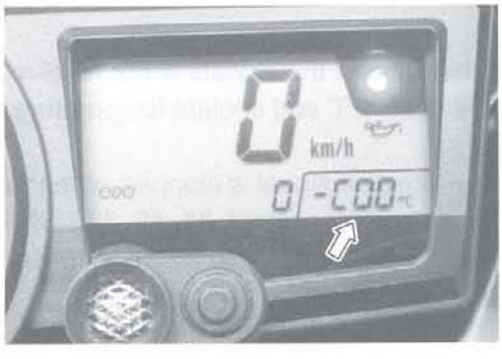

CAUTION

Before checking the malfunction code, do not disconnect the ECM lead wire couplers.
If the couplers from the ECM are disconnected, the malfunction code memory is erased and the malfunction code can not be checked.

MALFUNCTION	LCD (DISPLAY) INDICATION	FI LIGHT INDICATION	INDICATION MODE
"NO"	C00	FI light turns OFF.	—
"YES"	C**code is indicated from small numeral to large one.		For each 2 sec., code is indicated.

CODE	MALFUNCTION PART	REMARKS
C00	None	No defective part
C11	Camshaft position sensor (CMPS)	
C12	Crankshaft position sensor (CKPS)	Pick-up coil signal, signal generator
C13	Intake air pressure sensor (IAPS)	
C14	Throttle position sensor (TPS)	*1
C15	Engine coolant temperature sensor (ECTS)	
C21	Intake air temperature sensor (IATS)	
C22	Atmospheric pressure sensor (APS)	
C23	Tip-over sensor (TOS)	
C24	Ignition signal #1 (IG coil #1)	For #1 cylinder
C25	Ignition signal #2 (IG coil #2)	For #2 cylinder
C26	Ignition signal #3 (IG coil #3)	For #3 cylinder
C27	Ignition signal #4 (IG coil #4)	For #4 cylinder
C28	Secondary throttle valve actuator (STVA)	*2
C29	Secondary throttle position sensor (STPS)	
C31	Gear position signal (GP switch)	
C32	Injector signal #1 (FI #1)	For #1 cylinder
C33	Injector signal #2 (FI #2)	For #2 cylinder
C34	Injector signal #3 (FI #3)	For #3 cylinder
C35	Injector signal #4 (FI #4)	For #4 cylinder
C41	Fuel pump control system (FP control system)	Fuel pump, Fuel pump relay
C42	Ignition switch signal (IG switch signal)	Anti-theft
C49	PAIR control solenoid valve	

In the LCD (DISPLAY) panel, the malfunction code is indicated from small code to large code.

*1

To get the proper signal from the throttle position sensor, the sensor basic position is indicated in the LCD (DISPLAY) panel. The malfunction code is indicated in three digits. In front of the three digits, a line appears in any of the position, upper, middle or lower line. If the indication is upper or lower line when engine rpm is 1 300 rpm, slightly turn the throttle position sensor and bring the line to middle.

In the normal condition, the throttle valve stop screw pushes throttle valves slightly, and indication point is middle line.

*2

When the secondary throttle valve actuator and secondary throttle position sensor signals are not sent to ECM. In this case, C28 and C29 are indicated alternately.

TPS ADJUSTMENT

1. Adjust the engine rpm to 1 300 rpm. (☞2-14)
2. Connect the special tool (Mode select switch) to the dealer mode coupler at the wiring harness.

3. If the throttle position sensor adjustment is necessary, loosen the screw and turn the throttle position sensor ① and bring the line to middle.
4. Then, tighten the screw to fix the throttle position sensor.

TOOL 09930-11950: Torx wrench
09930-82720: Mode select switch

The LCD indicates 0.4 sec./time, and two times show the correct position, where it is fixed.

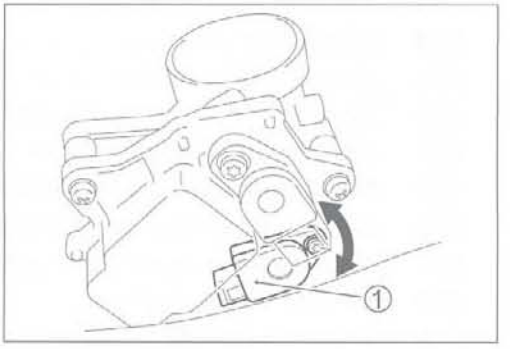

Ⓐ Incorrect
Ⓑ Correct position

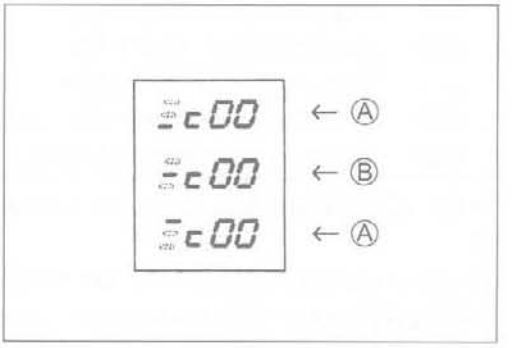

FAIL-SAFE FUNCTION

FI system is provided with fail-safe function to allow the engine to start and the motorcycle to run in a minimum performance necessary even under malfunction condition.

ITEM	FAIL-SAFE MODE	STARTING ABILITY	RUNNING ABILITY
CMP sensor	When camshaft position signal has failed during running, the ECM determines cylinder as # before occurrence of such a failure.	"NO"	"YES"
		Motorcycle can run, but once engine stops, engine can not start.	
CKP sensor	The motorcycle stops.	"NO"	"NO"
IAP sensor	Intake air pressure is fixed to 760 mmHg.	"YES"	"YES"
TP sensor	The throttle opening is fixed to full open position. Ignition timing is also fixed.	"YES"	"YES"
ECT sensor	Engine coolant temperature value is fixed to 80 °C (176 °F).	"YES"	"YES"
IAT sensor	Intake air temperature value is fixed to 40 °C (104 °F).	"YES"	"YES"
AP sensor	Atmospheric pressure is fixed to 760 mmHg.	"YES"	"YES"
Ignition signal	#1 Ignition-off	"YES"	"YES"
		#2, #3 & #4 cylinders can run.	
	#2 Ignition-off	"YES"	"YES"
		#1, #3 & #4 cylinders can run.	
	#3 Ignition-off	"YES"	"YES"
		#1, #2 & #4 cylinders can run.	
	#4 Ignition-off	"YES"	"YES"
		#1, #2 & #3 cylinders can run.	
Injection signal	#1 Fuel-cut	"YES"	"YES"
		#2, #3 & #4 cylinders can run.	
	#2 Fuel-cut	"YES"	"YES"
		#1, #3 & #4 cylinders can run.	
	#3 Fuel-cut	"YES"	"YES"
		#1, #2 & #4 cylinders can run.	
	#4 Fuel-cut	"YES"	"YES"
		#1, #2 & #3 cylinders can run.	

ITEM	FAIL-SAFE MODE	STARTING ABILITY	RUNNING ABILITY
Secondary throttle valve actuator	Secondary throttle valve is fixed to full close position. When motor disconnection or lock occurs, power from ECM is shut off.	"YES"	"YES"
STP sensor	Secondary throttle valve is fixed to full close position.	"YES"	"YES"
Gear position signal	Gear position signal is fixed to 6th gear.	"YES"	"YES"
PAIR control solenoid valve	ECM stops controlling PAIR control solenoid valve.	"YES"	"YES"

The engine can start and can run even if the above signal is not received from each sensor. But, the engine running condition is not complete, providing only emergency help (by fail-safe circuit). In this case, it is necessary to bring the motorcycle to the workshop for complete repair.
When two ignition signals or two injector signals are not received by ECM, the fail-safe circuit can not work and ignition or injection is stopped.

FI SYSTEM TROUBLESHOOTING

CUSTOMER COMPLAINT ANALYSIS

Record details of the problem (failure, complaint) and how it occurred as described by the customer. For this purpose, use of such an inspection form will facilitate collecting information to the point required for proper analysis and diagnosis.

EXAMPLE: CUSTOMER PROBLEM INSPECTION FORM

User name:	Model:	VIN:	
Date of issue:	Date Reg.	Date of problem:	Mileage:

Malfunction indicator lamp condition (LED)	☐ Always ON ☐ Sometimes ON ☐ Always OFF ☐ Good condition
Malfunction display/code (LCD)	User mode: ☐ No display ☐ Malfunction display ( )
	Dealer mode: ☐ No code ☐ Malfunction code ( )

PROBLEM SYMPTOMS	
☐ **Difficult Starting** ☐ No cranking ☐ No initial combustion ☐ No combustion ☐ Poor starting at (☐ cold ☐ warm ☐ always) ☐ Other _____	☐ **Poor Driveability** ☐ Hesitation on acceleration ☐ Back fire/☐ After fire ☐ Lack of power ☐ Surging ☐ Abnormal knocking ☐ Engine rpm jumps briefly ☐ Other _____
☐ **Poor Idling** ☐ Poor fast Idle ☐ Abnormal idling speed (☐ High ☐ Low) (r/min) ☐ Unstable ☐ Hunting (r/min. to r/min) ☐ Other _____	☐ **Engine Stall when** ☐ Immediately after start ☐ Throttle valve is opened ☐ Throttle valve is closed ☐ Load is applied ☐ Other _____
☐ OTHERS:	

MOTORCYCLE/ENVIRONMENTAL CONDITION WHEN PROBLEM OCCURS	
Environmental condition	
Weather	☐ Fair ☐ Cloudy ☐ Rain ☐ Snow ☐ Always ☐ Other
Temperature	☐ Hot ☐ Warm ☐ Cool ☐ Cold (°F/ °C) ☐ Always
Frequency	☐ Always ☐ Sometimes (times/ day, month) ☐ Only once ☐ Under certain condition
Road	☐ Urban ☐ Suburb ☐ Highway ☐ Mountainous (☐ Uphill ☐ Downhill) ☐ Tarmacadam ☐ Gravel ☐ Other
Motorcycle condition	
Engine condition	☐ Cold ☐ Warming up phase ☐ Warmed up ☐ Always ☐ Other at starting ☐ Immediately after start ☐ Racing without load ☐ Engine speed (r/min)
Motorcycle condition	During driving: ☐ Constant speed ☐ Accelerating ☐ Decelerating ☐ Right hand corner ☐ Left hand corner ☐ At stop ☐ Motorcycle speed when problem occurs (km/h, Mile/h) ☐ Other _____

NOTE:
The above form is a standard sample. It should be modified according to conditions characteristic of each market.

SELF-DIAGNOSTIC PROCEDURES

- Don't disconnect couplers from ECM, battery cable from battery, ECM ground wire harness from engine or main fuse before confirming malfunction code (self-diagnostic trouble code) stored in memory. Such disconnection will erase memorized information in ECM memory.
- Malfunction code stored in ECM memory can be checked by the special tool.
- Before checking malfunction code, read SELF-DIAGNOSIS FUNCTION "USER MODE and DEALER MODE" (☞4-15, 16) carefully to have good understanding as to what functions are available and how to use it.

- Be sure to read "PRECAUTIONS for Electrical Circuit Service" (☞4-2) before inspection and observe what is written there.
- Remove the frame cover. (☞8-7)
- Connect the special tool to the dealer mode coupler Ⓐ at the wiring harness, and start the engine or crank the engine for more than 4 seconds.
- Turn the special tool's switch ON and check the malfunction code to determine the malfunction part.

TOOL 09930-82720: Mode select switch

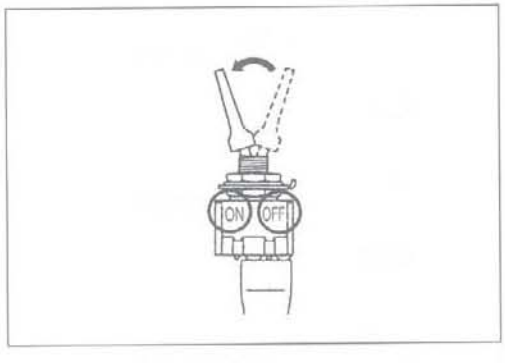

SELF-DIAGNOSIS RESET PROCEDURE

- After repairing the trouble, turn OFF the ignition switch and turn ON again.
- If the malfunction code indicates (C00), the malfunction is cleared.
- Disconnect the special tool from the dealer mode coupler.

NOTE:

* *Even though the malfunction code (C00) is indicated, the previous malfunction history code still remains stored in the ECM. Therefore, erase the history code memorized in the ECM using SDS.*
* *The malfunction code is memorized in the ECM also when the wire coupler of any sensor is disconnected. Therefore, when a wire coupler has been disconnected at the time of diagnosis, erase the stored malfunction history code using SDS.*

MALFUNCTION CODE AND DEFECTIVE CONDITION

MALFUNCTION CODE	DETECTED ITEM	DETECTED FAILURE CONDITION CHECK FOR
C00	NO FAULT	————
C11	CMP sensor	The signal does not reach ECM for 3 sec. and more, after receiving the starter signal.
		The camshaft position sensor wiring and mechanical parts. (CMP sensor, intake cam pin, wiring/coupler connection)
C12	CKP sensor	The signal does not reach ECM for 3 sec. and more, after receiving the starter signal.
		The CKP sensor wiring and mechanical parts. (CKP sensor, lead wire/coupler connection)
C13	IAP sensor	The sensor should produce following voltage. 0.5 V ≦ sensor voltage < 4.85 V Without the above range, C13 is indicated.
		Intake air pressure sensor, lead wire/coupler connection.
C14	TP sensor	The sensor should produce following voltage. 0.2 V ≦ sensor voltage < 4.80 V Without the above range, C14 is indicated.
		TP sensor, lead wire/coupler connection.
C15	ECT sensor	The sensor voltage should be the following. 0.15 V ≦ sensor voltage < 4.85 V Without the above range, C15 is indicated.
		ECT sensor, lead wire/coupler connection.
C21	IAT sensor	The sensor voltage should be the following. 0.15 V ≦ sensor voltage < 4.85 V Without the above range, C21 is indicated.
		IAT sensor, lead wire/coupler connection.
C22	AP sensor	The sensor voltage should be the following. 0.5 V ≦ sensor voltage < 4.85 V Without the above range, C22 is indicated.
		AP sensor, wiring/coupler connection.
C23	TO sensor	The sensor voltage should be the following for 2 sec. and more, after ignition switch turns ON. 0.2 V ≦ sensor voltage ≦ 4.8 V Without the above value, C23 is indicated.
		TO sensor, lead wire/coupler connection.
C24/C25 C26/C27	Ignition signal	CKP sensor (pick-up coil) signal is produced, but signal from ignition coil is interrupted continuous by 8 times or more. In this case, the code C24, C25, C26 or C27 is indicated.
		Ignition coil, wiring/coupler connection, power supply from the battery.

MALFUNCTION CODE	DETECTED ITEM	DETECTED FAILURE CONDITION CHECK FOR
C28	Secondary throttle valve actuator	When no actuator control signal is supplied from the ECM or communication signal does not reach ECM or operation voltage does not reach STVA motor, C28 is indicated. STVA can not operate.
		STVA lead wire/coupler.
C29	STP sensor	The sensor should produce following voltage. 0.15 V ≤ sensor voltage < 4.85 V Without the above value, C29 is indicated.
		STP sensor, lead wire/coupler connection.
C31	Gear position signal	Gear position signal voltage should be higher than the following for 3 seconds and more. (Gear position sensor voltage > 0.6 V) Without the above value, C31 is indicated.
		GP switch, wiring/coupler connection. Gearshift cam etc.
C32/C33 C34/C35	Fuel injector	CKP sensor (pickup coil) signal is produced, but fuel injector signal is interrupted continuous by 4 times or more. In this case, the code C32, C33, C34 or C35 is indicated.
		Injector, wiring/coupler connection, power supply to the injector.
C41	Fuel pump relay	No voltage is applied to the fuel pump, although fuel pump relay is turned ON, or voltage is applied to fuel pump although fuel pump relay is turned OFF.
		Fuel pump relay, connecting lead wire, power source to fuel pump relay, fuel injectors.
C42	Ignition switch	Ignition switch signal is not input in ECM.
		Ignition switch, lead wire/coupler.
C49	PAIR control solenoid valve	PAIR control solenoid valve voltage is not input in ECM.
		PAIR control solenoid valve, lead wire/coupler.

"C11" CMP SENSOR CIRCUIT MALFUNCTION

DETECTED CONDITION	POSSIBLE CAUSE
The signal does not reach ECM for 3 sec. and more, after receiving the starter signal.	• Metal particles or foreign material being attached on the CMP sensor and rotor tip. • CMP sensor circuit open or short. • CMP sensor malfunction. • ECM malfunction.

INSPECTION

Step 1

1) Lift and support the fuel tank. (☞5-3)
2) Remove the air cleaner box. (☞5-14)
3) Turn the ignition switch OFF.
4) Check the CMP sensor coupler for loose or poor contacts. If OK, then measure the CMP sensor resistance.

5) Disconnect the CMP sensor coupler and measure the resistance.

DATA **CMP sensor resistance: 0.9 – 1.7 kΩ (Terminal – Terminal)**

If OK, then check the continuity between each terminal and ground.

DATA **CMP sensor continuity: ∞ Ω (Infinity) (Terminal – Ground)**

TOOL **09900-25008: Multi-circuit tester set**

Tester knob indication: Resistance (Ω)

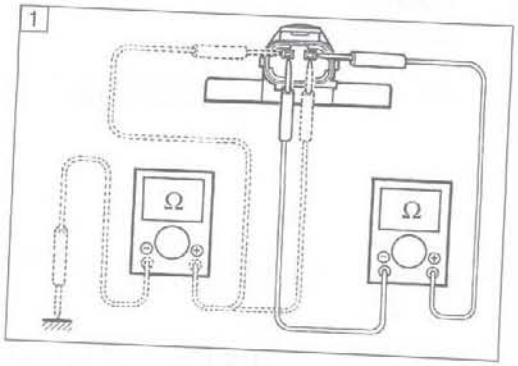

Is the resistance OK?

YES	Go to step 2.
NO	Replace the CMP sensor with a new one.

Step 2

1) Disconnect the CMP sensor coupler.
2) Crank the engine a few seconds with the starter motor, and measure the CMP sensor peak voltage at the sensor.

DATA CMP sensor peak voltage: 0.7 V and more
(⊕ B/Y – ⊖ Br)

① Peak volt adaptor

3) Repeat the above test procedure a few times and measure the highest peak voltage.

TOOL 09900-25008: Multi-circuit tester set

Tester knob indication: Voltage (⎓)

Is the voltage OK?

YES	• B/Y or Br wire open or shorted to ground, or poor ⑬ or ㉚ connection. • If wire and connection are OK, intermittent trouble or faulty ECM. • Recheck each terminal and wire harness for open circuit and poor connection. • Replace the ECM with a new one, and inspect it again.
NO	• Loose or poor contacts on the CMP sensor coupler or ECM coupler. • Replace the CMP sensor with a new one.

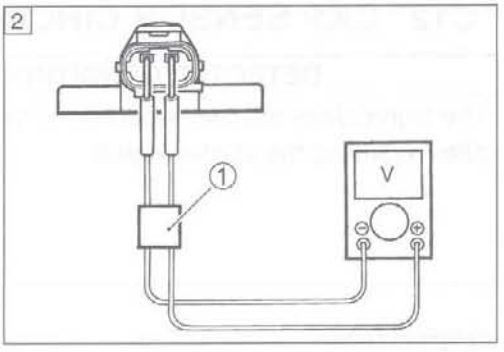

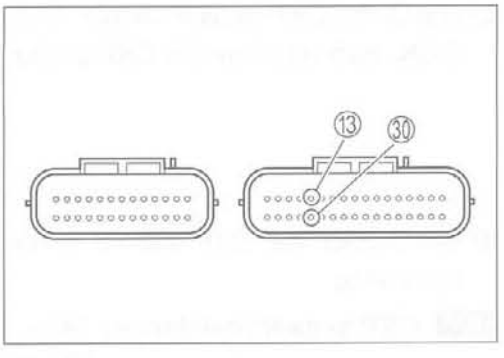

"C12" CKP SENSOR CIRCUIT MALFUNCTION

DETECTED CONDITION	POSSIBLE CAUSE
The signal does not reach ECM for 3 sec. and more, after receiving the starter signal.	• Metal particles or foreign materiel being attached on the CKP sensor and rotor tip. • CKP sensor circuit open or short. • CKP sensor malfunction. • ECM malfunction.

INSPECTION

Step 1

1) Lift and support the fuel tank. (☞5-3)
2) Turn the ignition switch OFF.
3) Check the CKP sensor coupler ① for loose or poor contacts. If OK, then measure the CKP sensor resistance.

4) Disconnect the CKP sensor coupler ① and measure the resistance.

DATA **CKP sensor resistance: 142 – 194 Ω (Black – Green)**

5) If OK, then check the continuity between each terminal and ground.

DATA **CKP sensor continuity: ∞ Ω (Infinity) (Black – Ground) (Green – Ground)**

TOOL **09900-25008: Multi-circuit tester set**

Tester knob indication: Resistance (Ω)

Are the resistance and continuity OK?

YES	Go to step 2.
NO	Replace the CKP sensor with a new one.

Step 2

1) Disconnect the CKP sensor coupler.
2) Crank the engine a few seconds with the starter motor, and measure the CKP sensor peak voltage at the coupler.

DATA CKP sensor peak voltage: 0.5 V and more
(⊕ Black – ⊖ Green)

① Peak volt adaptor

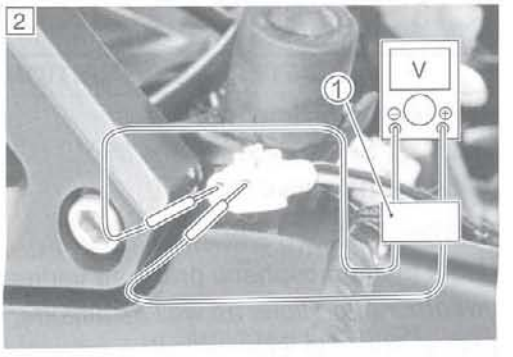

3) Repeat the above test procedure a few times and measure the highest peak voltage.

TOOL 09900-25008: Multi-circuit tester set

Tester knob indication: Voltage (⎓)

Is the voltage OK?

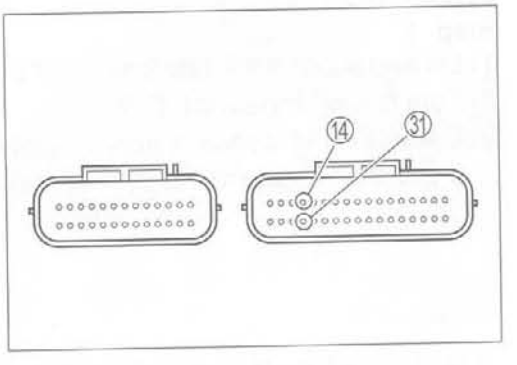

YES	• G/W or G/Bl wire open or shorted to ground, or poor ⑭ or ㉛ connection. • If wire and connection are OK, intermittent trouble or faulty ECM. • Recheck each terminal and wire harness for open circuit and poor connection.
NO	• Loose or poor contacts on the CKP sensor coupler or ECM coupler. • Replace the CKP sensor with a new one.

"C13" IAP SENSOR CIRCUIT MALFUNCTION

DETECTED CONDITION	POSSIBLE CAUSE
IAP sensor voltage low or high. 0.5 V ≦ Sensor voltage < 4.85 V (without the above range.) *NOTE:* *Note that atmospheric pressure varies depending on weather conditions as well as altitude.* *Take that into consideration when inspecting voltage.*	• Clogged vacuum passage between throttle body and IAP sensor. • Air being drawn from vacuum passage between throttle body and IAP sensor. • IAP sensor circuit open or shorted to ground. • IAP sensor malfunction. • ECM malfunction.

INSPECTION

Step 1

1) Lift and support the fuel tank. (☞5-3)
2) Turn the ignition switch OFF.
3) Check the IAP sensor coupler for loose or poor contacts.
   If OK, then measure the IAP sensor input voltage.

4) Disconnect the IAP sensor coupler.
5) Turn the ignition switch ON.
6) Insert the needle pointed probes to the lead wire coupler.
7) Measure the voltage at the Red wire and ground.
   If OK, then measure the voltage at the Red wire and B/Br wire.

DATA IAP sensor input voltage: 4.5 – 5.5 V
(⊕ Red – ⊖ Ground)
(⊕ Red – ⊖ B/Br)

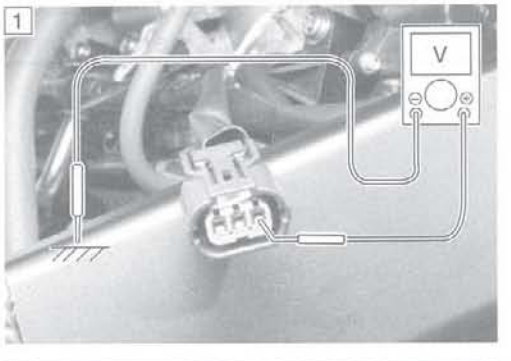

TOOL 09900-25008: Multi-circuit tester set
09900-25009: Needle pointed probe set

Tester knob indication: Voltage (⎓)

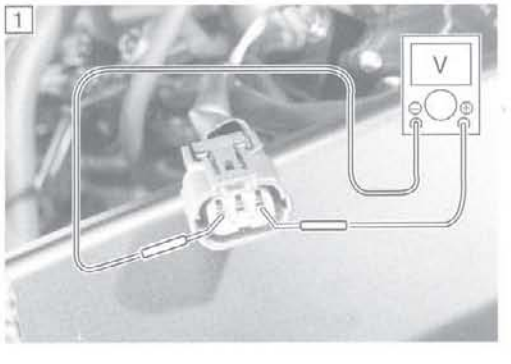

Is the voltage OK?

YES	Go to Step 2.
NO	• Loose or poor contacts on the ECM coupler. • Open or short circuit in the Red wire or B/Br wire.

Step 2

1) Connect the IAP sensor coupler.
2) Insert the needle pointed probes to the lead wire coupler. Start the engine at idle speed.
3) Measure the IAP sensor output voltage at the wire side coupler (between G/B and B/Br wires).

DATA IAP sensor output voltage: Approx. 2.7 V at idle speed (⊕ G/B – ⊖ B/Br)

TOOL 09900-25008: Multi-circuit tester set
09900-25009: Needle pointed probe set

Tester knob indication: Voltage (⎓)

YES	Go to Step 3.
NO	• Check the vacuum hose for crack or damage. • Open or short circuit in the G/B wire. • Replace the IAP sensor with a new one.

Step 3

1) Remove the IAP sensor.
2) Connect the vacuum pump gauge to the vacuum port of the IAP sensor.
   Arrange 3 new 1.5 V batteries in series ① (check that total voltage is 4.5 – 5.0 V) and connect ⊖ terminal to the ground terminal ② and ⊕ terminal to the Vcc terminal ③.
   Check the voltage between Vout ④ and ground. Also, check if voltage reduces when vacuum is applied up to 400 mmHg by using vacuum pump gauge. (☞4-32)

TOOL 09917-47011: Vacuum pump gauge
09900-25008: Multi-circuit tester set

Tester knob indication: Voltage (⎓)

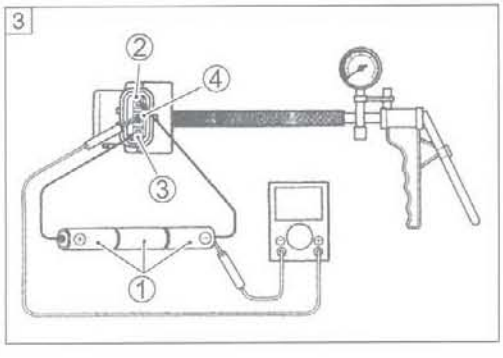

Is the voltage OK?

YES	• G/B, R or B/Br wire open or shorted to ground, or poor ⑨, ⑪ or ㉙ connection. • If wire and connection are OK, intermittent trouble or faulty ECM. • Recheck each terminal and wire harness for open circuit and poor connection.
NO	If check result is not satisfactory, replace IAP sensor with a new one.

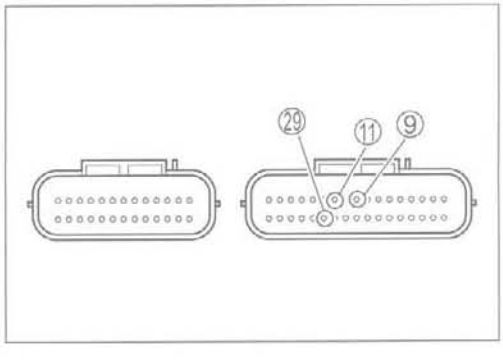

Step 2

1) Turn the ignition switch OFF.
2) Disconnect the TP sensor coupler.
3) Install the test harness to the TP sensor.
4) Check the continuity between terminal Ⓐ and ground.

DATA TP sensor continuity: ∞ Ω (Infinity)
(Terminal Ⓐ – Ground)

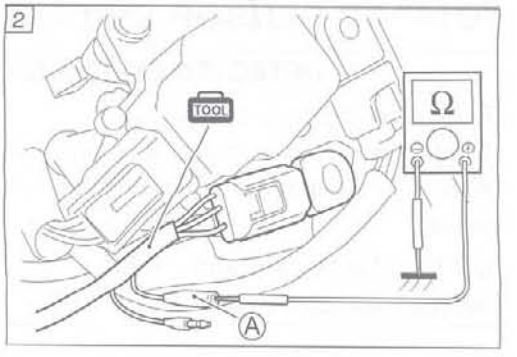

5) If OK, then measure the TP sensor resistance at the terminals (between terminal Ⓐ and terminal Ⓑ).
6) Turn the throttle grip and measure the resistance.

DATA TP sensor resistance
Throttle valve is closed : Approx. 1.1 kΩ
Throttle valve is opened: Approx. 4.4 kΩ

TOOL 09900-28630: TPS test wire harness
09900-25008: Multi-circuit tester set

Tester knob indication: Resistance (Ω)

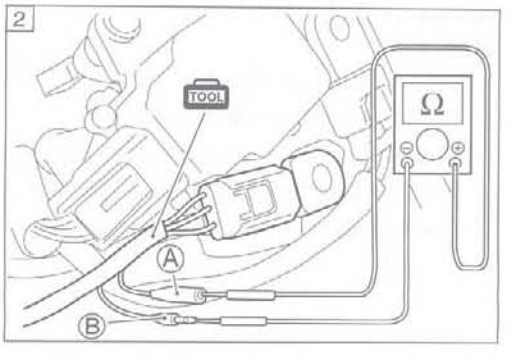

Are the resistance and continuity OK?

YES	Go to Step 3.
NO	• Reset the TP sensor position correctly. • Replace the TP sensor with a new one.

"C14" TP SENSOR CIRCUIT MALFUNCTION

DETECTED CONDITION	POSSIBLE CAUSE
Output voltage low or high Difference between actual throttle opening and opening calculated by ECM in larger than specified value. 0.2 V ≦ Sensor voltage < 4.80 V (without the above range.)	• TP sensor maladjusted. • TP sensor circuit open or short. • TP sensor malfunction. • ECM malfunction.

INSPECTION

Step 1

1) Lift and support the fuel tank. (☞5-3)
2) Turn the ignition switch OFF.
3) Check the TP sensor coupler for loose or poor contacts.
   If OK, then measure the TP sensor input voltage.
4) Disconnect the TP sensor coupler.

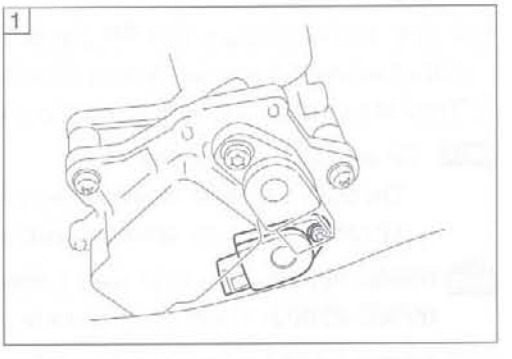

5) Turn the ignition switch ON.
6) Measure the voltage at the Red wire and ground.
7) If OK, then measure the voltage at the Red wire and B/Br wire.

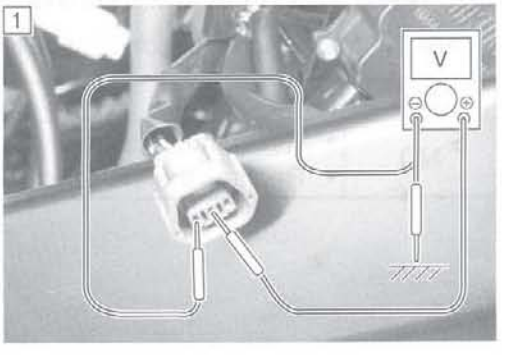

DATA TP sensor input voltage: 4.5 – 5.5 V
(⊕ Red – ⊖ Ground)
(⊕ Red – ⊖ B/Br)

TOOL 09900-25008: Multi-circuit tester set

Tester knob indication: Voltage (⎓)

Is the voltage OK?

YES	Go to Step 2.
NO	• Loose or poor contacts on the ECM coupler. • Open or short circuit in the Red wire or B/Br wire.

"C15" ECT SENSOR CIRCUIT MALFUNCTION

DETECTED CONDITION	POSSIBLE CAUSE
Output voltage low or high 0.15 ≦ Sensor voltage < 4.85 V (without the above range.)	• ECT sensor circuit open or short. • ECT sensor malfunction. • ECM malfunction.

INSPECTION

Step 1

1) Lift and support the fuel tank. (☞5-3)
2) Turn the ignition switch OFF.
3) Check the ECT sensor coupler for loose or poor contacts.
   If OK, then measure the ECT sensor voltage at the wire side coupler.
4) Disconnect the coupler and turn the ignition switch ON.
5) Measure the voltage between B/Bl wire terminal and ground.
6) If OK, then measure the voltage between B/Bl wire terminal and B/Br wire terminal.

DATA ECT sensor voltage: 4.5 – 5.5 V
(⊕ B/Bl – ⊖ Ground)
(⊕ B/Bl – ⊖ B/Br)

TOOL 09900-25008: Multi-circuit tester set

Tester knob indication: Voltage (⎓)

Is the voltage OK?

YES	Go to Step 2.
NO	• Loose or poor contacts on the ECM coupler. • Open or short circuit in the B/Bl wire or B/Br wire.

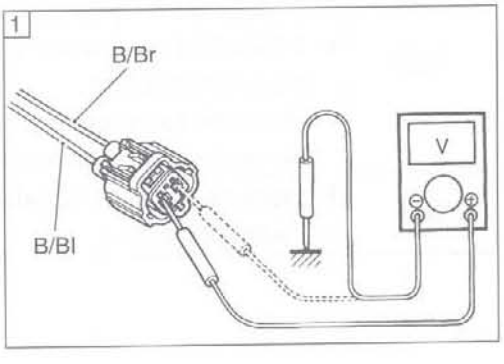

Step 3

1) Connect the TP sensor coupler ① to the test harness.
2) Turn the ignition switch ON.
   Measure the TP sensor output voltage at the terminals (between ⊕ terminal Ⓐ and ⊖ terminal Ⓑ) by turning the throttle grip.

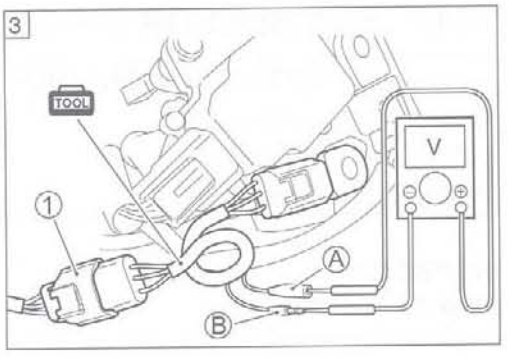

DATA TP sensor output voltage
Throttle valve is closed : Approx. 1.1 V
Throttle valve is opened: Approx. 4.4 V

TOOL 09900-28630: TPS test wire harness
09900-25008: Multi-circuit tester set

Tester knob indication: Voltage (⎓)

Is the voltage OK?

YES	• P/B, R or B/Br wire open or shorted to ground, or poor ⑧, ⑪ or ㉙ connection. • If wire and connection are OK, intermittent trouble or faulty ECM. • Recheck each terminal and wire harness for open circuit and poor connection.
NO	If check result is not satisfactory, replace TP sensor with a new one.

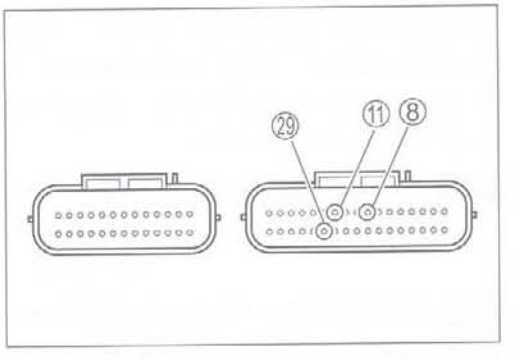

Output voltage (Vcc voltage 4.5 – 5.0 V, ambient temp. 20 – 30 °C, 68 – 86 °F)

ALTITUDE (Reference)		ATMOSPHERIC PRESSURE		OUTPUT VOLTAGE
(ft)	(m)	(mmHg)	kPa	(V)
0 – 2 000	0 – 610	760 – 707	100 – 94	3.1 – 3.6
2 001 – 5 000	611 – 1 524	707 – 634	94 – 85	2.8 – 3.4
5 001 – 8 000	1 524 – 2 438	634 – 567	85 – 76	2.6 – 3.1
8 001 – 10 000	2 439 – 3 048	567 – 526	76 – 70	2.4 – 2.9

Step 2

1) Turn the ignition switch OFF.
2) Measure the ECT sensor resistance.

DATA ECT sensor resistance:
Approx. 2.3 – 2.6 kΩ at 20 °C (68 °F)
(Terminal – Terminal)

TOOL 09900-25008: Multi-circuit tester set

Tester knob indication: Resistance (Ω)

Refer to page 7-8 for details.

Is the resistance OK?

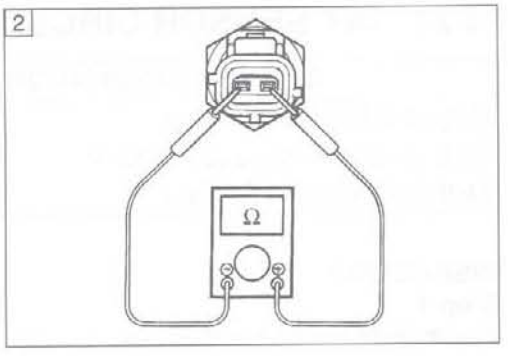

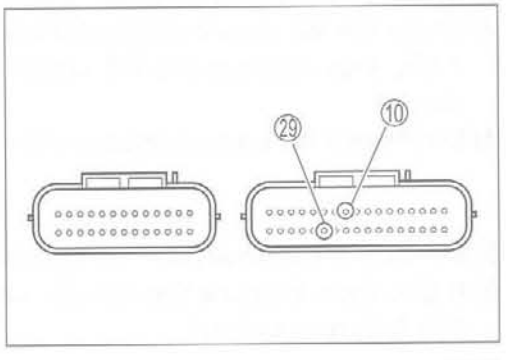

YES	• B/Bl or B/Br wire open or shorted to ground, or poor ⑩ or ㉙ connection. • If wire and connection are OK, intermittent trouble or faulty ECM. • Recheck each terminal and wire harness for open circuit and poor connection.
NO	Replace the ECT sensor with a new one.

Engine Coolant Temp	Resistance
20 °C (68 °F)	Approx. 2.45 kΩ
50 °C (122 °F)	Approx. 0.811 kΩ
80 °C (176 °F)	Approx. 0.318 kΩ
110 °C (230 °F)	Approx. 0.142 kΩ

"C21" IAT SENSOR CIRCUIT MALFUNCTION

DETECTED CONDITION	POSSIBLE CAUSE
Output voltage low or high 0.15 ≤ Sensor voltage < 4.85 V (without the above range.)	• IAT sensor circuit open or short. • IAT sensor malfunction. • ECM malfunction.

INSPECTION

Step 1

1) Lift and support the fuel tank. (☞5-3)
2) Turn the ignition switch OFF.
3) Check the IAT sensor coupler for loose or poor contacts.
   If OK, then measure the IAT sensor voltage at the wire side coupler.
4) Disconnect the coupler and turn the ignition switch ON.

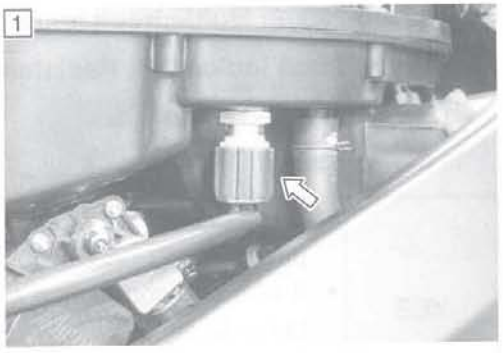

5) Measure the voltage between Dg wire terminal and ground.
6) If OK, then measure the voltage between Dg wire terminal and B/Br wire terminal.

DATA IAT sensor voltage: 4.5 – 5.5 V
(⊕ Dg – ⊖ Ground)
(⊕ Dg – ⊖ B/Br)

TOOL 09900-25008: Multi-circuit tester set

Tester knob indication: Voltage (⎓)

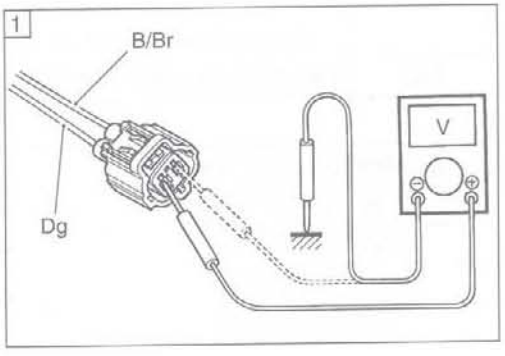

Is the voltage OK?

YES	Go to Step 2.
NO	• Loose or poor contacts on the ECM coupler. • Open or short circuit in the B/Bl wire or B/Br wire.

Step 2

1) Turn the ignition switch OFF.
2) Measure the IAT sensor resistance.

DATA IAT sensor resistance:
Approx. 2.2 – 2.7 kΩ at 20 °C (68 °F)
(Terminal – Terminal)

TOOL 09900-25008: Multi-circuit tester set

Tester knob indication: Resistance (Ω)

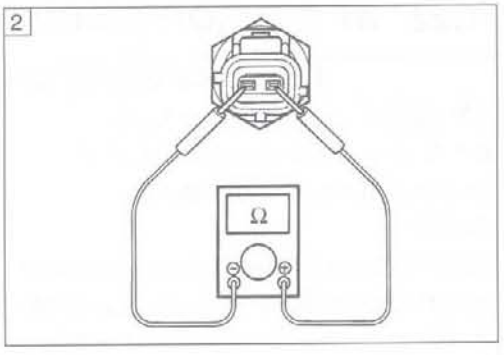

Is the resistance OK?

YES	• Dg or B/Br wire open or shorted to ground, or poor ㉗ or ㉙ connection. • If wire and connection are OK, intermittent trouble or faulty ECM. • Recheck each terminal and wire harness for open circuit and poor connection.
NO	Replace the IAT sensor with a new one.

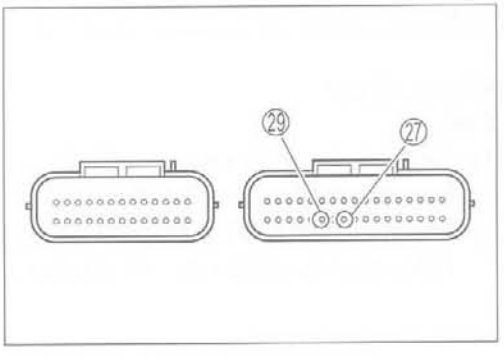

Intake Air Temp	Resistance
20 °C (68 °F)	Approx. 2.45 kΩ
50 °C (122 °F)	Approx. 0.808 kΩ
80 °C (176 °F)	Approx. 0.322 kΩ
110 °C (230 °F)	Approx. 0.148 kΩ

NOTE:
IAT sensor resistance measurement method is the same way as that of the ECT sensor. Refer to page 7-8 for details.

"C22" AP SENSOR CIRCUIT MALFUNCTION

DETECTED CONDITION	POSSIBLE CAUSE
AP sensor voltage low or high. 0.5 V ≦ Sensor voltage < 4.85 V (without the above range.) *NOTE:* *Note that atmospheric pressure varies depending on weather conditions as well as altitude.* *Take that into consideration when inspecting voltage.*	• Clogged air passage with dust. • Red wire circuit open or shorted to ground. • B/Br or G/Y wire circuit shorted to ground. • AP sensor malfunction. • ECM malfunction.

INSPECTION

Step 1

1) Remove the front seat. (☞8-6)
2) Turn the ignition switch OFF.
3) Check the AP sensor coupler for loose or poor contacts.
   If OK, then measure the AP sensor input voltage.

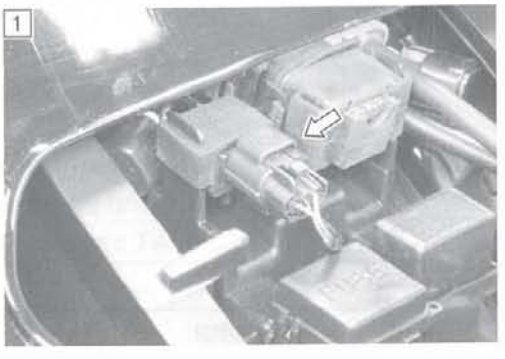

4) Disconnect the AP sensor coupler.
5) Turn the ignition switch ON.
6) Measure the voltage at the Red wire and ground.
   If OK, then measure the voltage at the Red wire and B/Br wire.

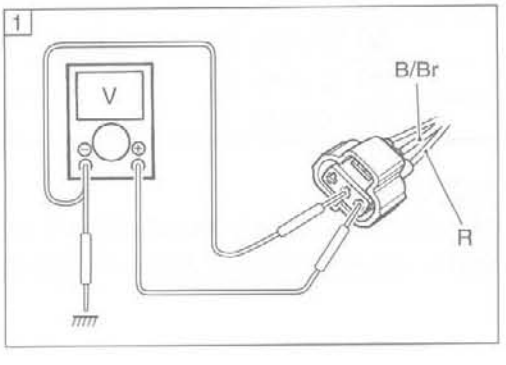

DATA AP sensor input voltage: 4.5 – 5.5 V
(⊕ Red – ⊖ Ground)
(⊕ Red – ⊖ B/Br)

TOOL 09900-25008: Multi-circuit tester set

Tester knob indication: Voltage (⎓)

Is the voltage OK?

YES	Go to Step 2.
NO	• Loose or poor contacts on the ECM coupler. • Open or short circuit in the Red wire or B/Br wire.

Step 2

1) Connect the AP sensor coupler.
2) Insert the needle pointed probes to the lead wire coupler. Turn the ignition switch ON.
3) Measure the AP sensor output voltage at the wire side coupler (between G/Y and B/Br wires).

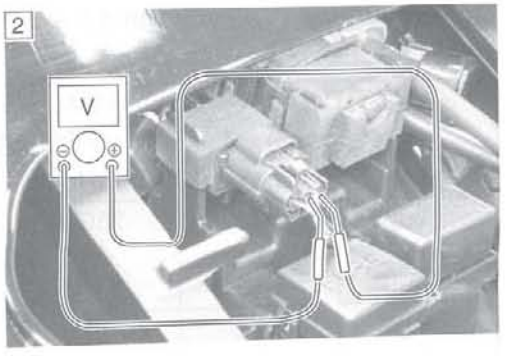

DATA AP sensor output voltage: Approx. 3.6 V at 760 mmHg (100 kPa) (⊕ G/Y – ⊖ B/Br)

TOOL 09900-25008: Multi-circuit tester set
09900-25009: Needle pointed probe set

Tester knob indication: Voltage (⎓)

YES	Go to Step 3.
NO	• Check the vacuum hose for crack or damage. • Open or short circuit in the G/Y wire. • Replace the AP sensor with a new one.

Step 3

1) Remove the AP sensor.
2) Connect the vacuum pump gauge to the vacuum port of the AP sensor.
   Arrange 3 new 1.5 V batteries in series ① (check that total voltage is 4.5 – 5.0 V) and connect ⊖ terminal to the ground terminal ② and ⊕ terminal to the Vcc terminal ③.
   Check the voltage between Vout ④ and ground. Also, check if voltage reduces when vacuum is applied up to 400 mmHg by using vacuum pump gauge. (☞4-42)

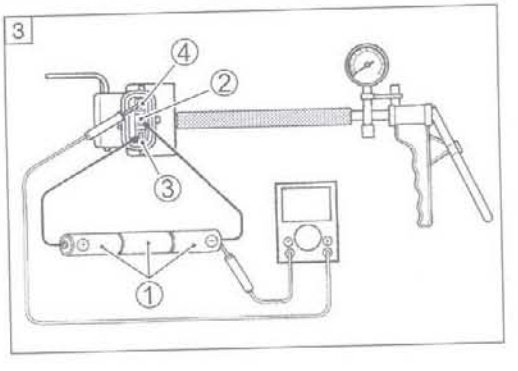

TOOL 09917-47011: Vacuum pump gauge
09900-25008: Multi-circuit tester set

Tester knob indication: Voltage (⎓)

Is the voltage OK?

YES	• Red, G/Y or B/Br wire open or shorted to ground, or poor ⑪, ㉖ or ㉙ connection. • If wire and connection are OK, intermittent trouble or faulty ECM. • Recheck each terminal and wire harness for open circuit and poor connection.
NO	If check result is not satisfactory, replace AP sensor with a new one.

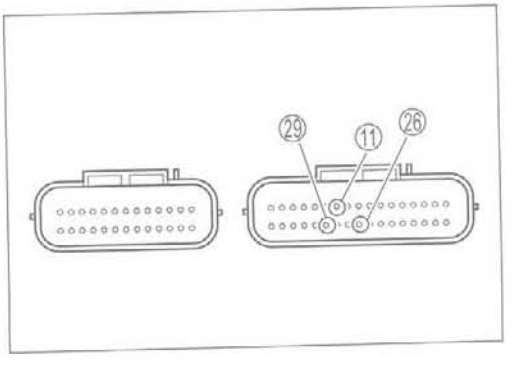

Output voltage (Vcc voltage 4.5 – 5.0 V, ambient temp. 20 – 30 °C, 68 – 86 °F)

ALTITUDE (Reference)		ATMOSPHERIC PRESSURE		OUTPUT VOLTAGE
(ft)	(m)	(mmHg)	kPa	(V)
0 – 2 000	0 – 610	760 – 707	100 – 94	3.1 – 3.6
2 001 – 5 000	611 – 1 524	707 – 634	94 – 85	2.8 – 3.4
5 001 – 8 000	1 524 – 2 438	634 – 567	85 – 76	2.6 – 3.1
8 001 – 10 000	2 439 – 3 048	567 – 526	76 – 70	2.4 – 2.9

"C23" TO SENSOR CIRCUIT MALFUNCTION

DETECTED CONDITION	POSSIBLE CAUSE
The sensor voltage should be the following for 2 sec. and more, after ignition switch turns ON. 0.2 ≦ Sensor voltage < 4.8 V	• TO sensor circuit open or short. • TO sensor malfunction. • ECM malfunction.

INSPECTION

Step 1

1) Lift and support the fuel tank. (☞5-3)
2) Turn the ignition switch OFF.
3) Check the TO sensor coupler for loose or poor contacts.
   If OK, then measure the TO sensor resistance.
4) Disconnect the TO sensor coupler.

5) Measure the resistance between terminal Ⓐ and terminal Ⓑ.

DATA TO sensor resistance: 16.5 – 22.3 kΩ
(Terminal Ⓐ – Terminal Ⓑ)

TOOL 09900-25008: Multi-circuit tester set

Tester knob indication: Resistance (Ω)

Is the resistance OK?

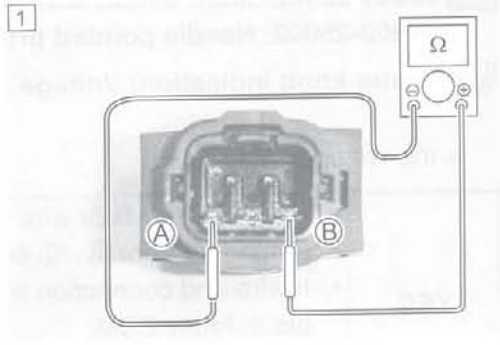

YES	Go to Step 2.
NO	Replace the TO sensor with a new one.

Step 2

1) Connect the TO sensor coupler.
2) Insert the needle pointed probes to the lead wire coupler.
3) Turn the ignition switch ON.
4) Measure the voltage at the wire side coupler between Black and B/Br wires.

DATA TO sensor voltage: 0.4 – 1.4 V
(⊕ Black – ⊖ B/Br)

Also, measure the voltage when leaning of the motorcycle.

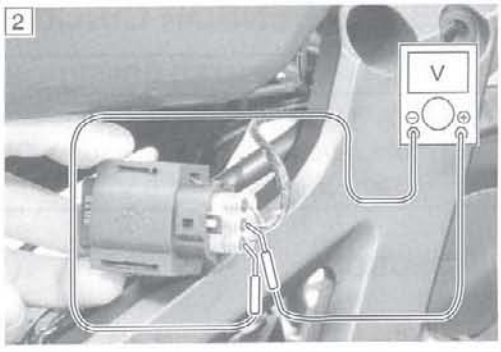

5) Dismount the TO sensor from its bracket and measure the voltage when it is leaned 65 ° and more, left and right, from the horizontal level.

DATA TO sensor voltage: 3.7 – 4.4 V
(⊕ Black – ⊖ B/Br)

TOOL 09900-25008: Multi-circuit tester set
09900-25009: Needle pointed probe set

Tester knob indication: Voltage (⎓)

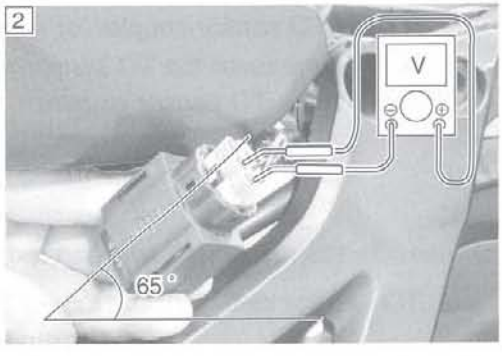

Is the voltage OK?

YES	• Red, Black or B/Br wire open or shorted to ground, or poor ⑪, ⑫ or ㉙ connection. • If wire and connection are OK, intermittent trouble or faulty ECM. • Recheck each terminal and wire harness for open circuit and poor connection.
NO	• Loose or poor contacts on the ECM coupler. • Open or short circuit. • Replace the TO sensor with a new one.

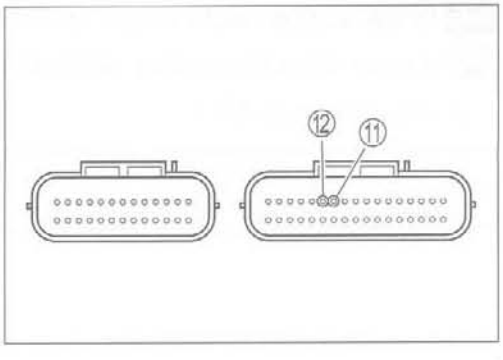

"C24", "C25", "C26" or "C27" IGNITION SYSTEM MALFUNCTION

***Refer to the IGNITION SYSTEM for details. (☞9-19)**

"C28" STV ACTUATOR CIRCUIT MALFUNCTION

DETECTED CONDITION	POSSIBLE CAUSE
The operation voltage does not reach the STVA. ECM does not receive communication signal from the STVA.	• STVA malfunction. • STVA circuit open or short. • STVA motor malfunction.

INSPECTION

Step 1

1) Lift and support the fuel tank. (☞5-3)
2) Remove the air cleaner cover.
3) Turn the ignition switch OFF.
4) Check the STVA lead wire coupler for loose or poor contacts.

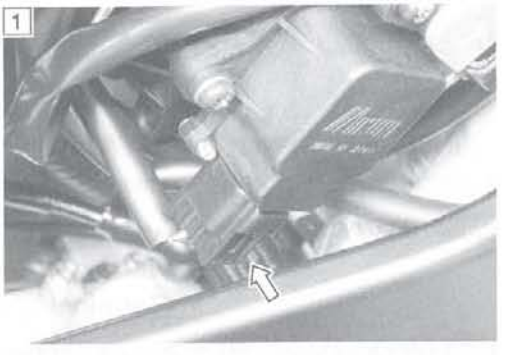

5) Turn the ignition switch ON to check the STVA operation.
   (STV operating order: Full open → 3/4 open)

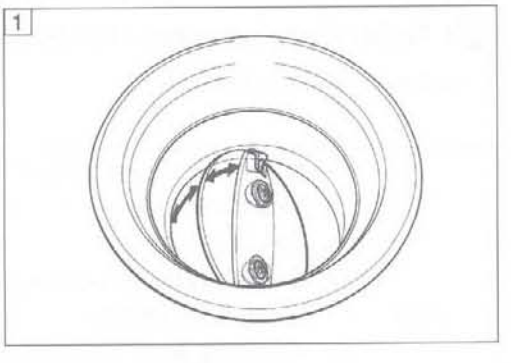

Is the operation OK?

YES	Go to Step 2.
NO	• Loose or poor contacts on the STVA coupler. • Open or short circuit in the (P/W or Green) and (B/Lg or W/B) wires.

Step 2

1) Turn the ignition switch OFF.
2) Disconnect the STVA lead wire coupler.
3) Check the continuity between each terminal and ground.

DATA STVA continuity: ∞ Ω (Infinity)

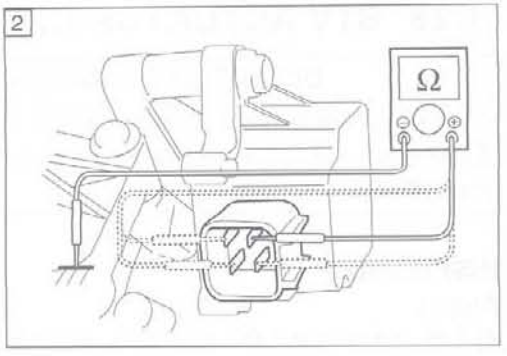

If OK, then measure the STVA resistance. (between terminal Ⓐ and terminal Ⓑ) and (between terminal Ⓒ and terminal Ⓓ)

DATA STVA resistance: Approx. 7 Ω
(Terminal Ⓐ – Terminal Ⓑ)
(Terminal Ⓒ – Terminal Ⓓ)

TOOL 09900-25008: Multi-circuit tester set

Tester knob indication: Resistance (Ω)

Is the resistance OK?

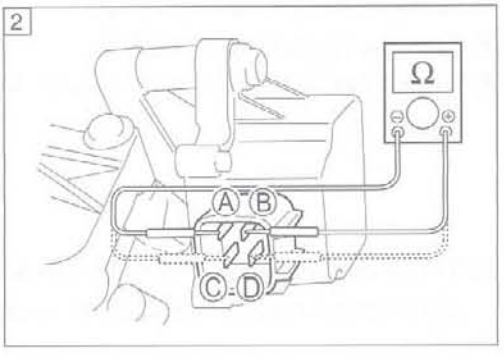

YES	• W/B, P/W, Green and B/Lg wire open or shorted to ground, or poor ①, ②, ⑱ and ⑲ connection. • If wire and connection are OK, intermittent trouble or faulty ECM. • Recheck each terminal and wire harness for open circuit and poor connection. • Replace the ECM with new one, and inspect it again.
NO	• Loose or poor contacts on the ECM coupler. • Replace the STVA with a new one.

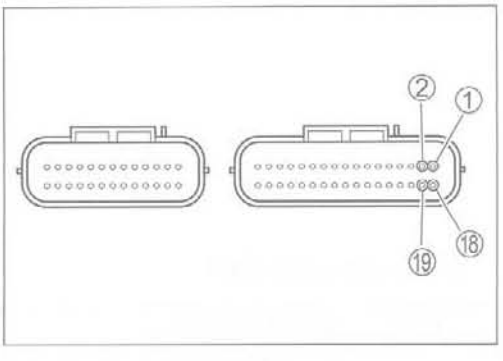

"C29" STP SENSOR CIRCUIT MALFUNCTION

DETECTED CONDITION	POSSIBLE CAUSE
Signal voltage low or high. Difference between actual throttle opening and opening calculated by ECM in larger than specified value. 0.15 V ≤ Sensor voltage < 4.85 V (without the above range.)	• STP sensor maladjusted. • STP sensor circuit open or short. • STP sensor malfunction. • ECM malfunction.

INSPECTION

Step 1

1) Lift and support the fuel tank. (☞5-3)
2) Turn the ignition switch OFF.
3) Check the STP sensor coupler for loose or poor contacts.
   If OK, then measure the STP sensor input voltage.

4) Disconnect the STP sensor coupler.
5) Turn the ignition switch ON.
6) Measure the voltage at the Red wire and ground.
   If OK, then measure the voltage at the Red wire and B/Br wire.

DATA STP sensor input voltage: 4.5 – 5.5 V
(⊕ Red – ⊖ Ground)
(⊕ Red – ⊖ B/Br)

TOOL 09900-25008: Multi-circuit tester set

Tester knob indication: Voltage (⎓)

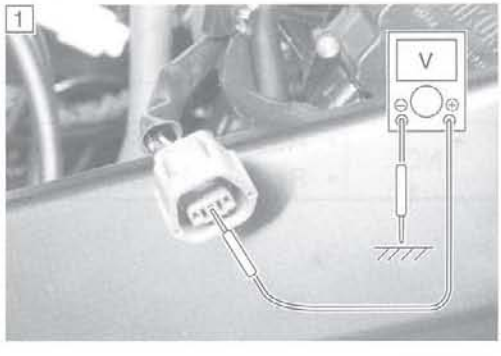

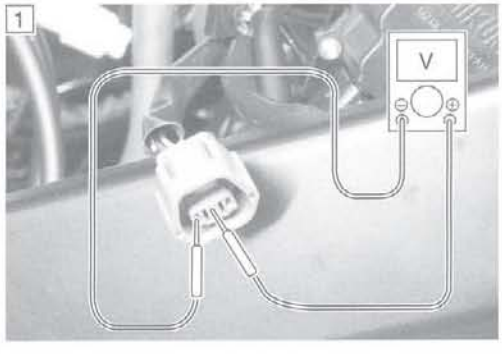

Is the voltage OK?

YES	Go to Step 2.
NO	• Loose or poor contacts on the ECM coupler. • Open or short circuit in the Red wire or B/Br wire.

Step 2

1) Turn the ignition switch OFF.
2) Remove the air cleaner cover.
3) Disconnect the STP sensor coupler.
4) Install the test harness to the STP sensor.
5) Check the continuity between terminal Ⓐ and ground.

DATA STP sensor continuity: ∞ Ω (Infinity)
(Terminal Ⓐ – Ground)

6) If OK, then measure the STP sensor resistance at the wire terminals (between terminal Ⓐ and terminal Ⓑ).
7) Close and open the secondary throttle valve by finger, and measure the valve closing and opening resistance.

DATA STP sensor resistance
Secondary throttle valve is closed : Approx. 0.6 kΩ
Secondary throttle valve is opened: Approx. 4.5 kΩ

TOOL 09900-28630: TPS test wire harness
09900-25008: Multi-circuit tester set

Tester knob indication: Resistance (Ω)

Is the resistance OK?

YES	Go to Step 3.
NO	• Reset the STP sensor position correctly. • Replace the STP sensor with a new one.

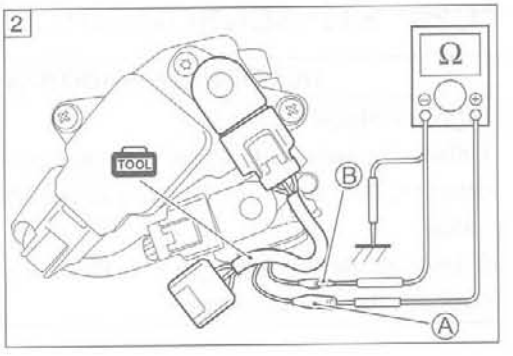

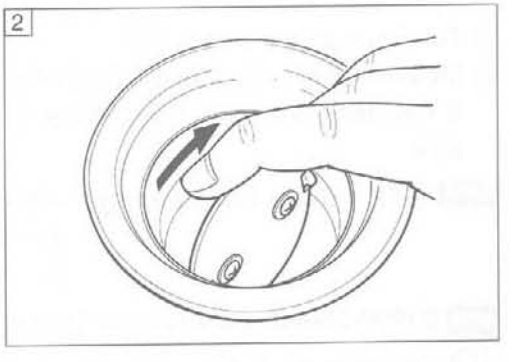

Step 3

1) Turn the ignition switch OFF.
2) Connect the STP sensor coupler ① to the test harness.
3) Disconnect the STVA lead wire coupler.
4) Turn the ignition switch ON.
5) Measure the STP sensor output voltage at the wire terminals (between ⊕ terminal Ⓐ and ⊖ terminal Ⓑ) by turning the secondary throttle valve (close and open) with a finger.

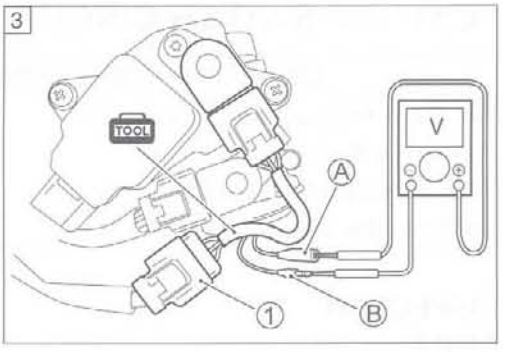

DATA STP sensor output voltage
Throttle valve is closed : Approx. 0.6 V
Throttle valve is opened: Approx. 4.5 V

TOOL 09900-28630: TPS test wire harness
09900-25008: Multi-circuit tester set

Tester knob indication: Voltage (⎓)

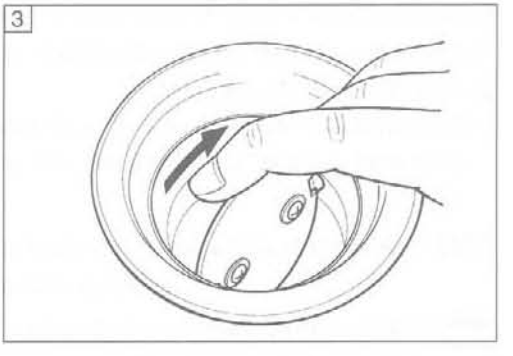

Is the voltage OK?

YES	• R, Y/W or B/Br wire open or shorted to ground, or poor ⑪, ⑳ or ㉙ connection. • If wire and connection are OK, intermittent trouble or faulty ECM. • Recheck each terminal and wire harness for open circuit and poor connection. • Replace the ECM with a new one, and inspect it again.
NO	If check result is not satisfactory, replace STP sensor with a new one.

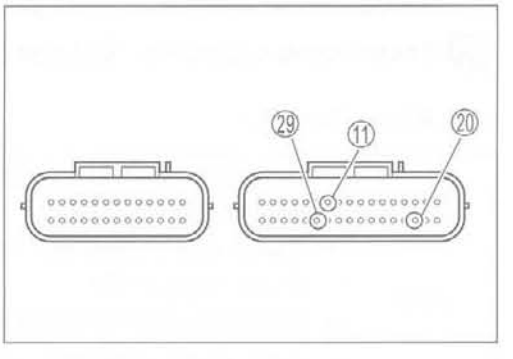

"C31" GP SWITCH CIRCUIT MALFUNCTION

DETECTED CONDITION	POSSIBLE CAUSE
No Gear Position switch voltage Switch voltage low. Sensor voltage > 0.6 V (without the above range.)	• Gear Position switch circuit open or short. • Gear Position switch malfunction. • ECM malfunction.

INSPECTION

Step 1

1) Lift and support the fuel tank. (☞5-3)
2) Turn the ignition switch OFF.
3) Check the GP switch coupler for loose or poor contacts.
   If OK, then measure the GP switch voltage.

4) Support the motorcycle with a jack.
5) Turn the side-stand to up-right position.
6) Make sure the engine stop switch is in the "RUN" position.
7) Insert the needle pointed probes to the lead wire coupler.
8) Turn the ignition switch ON.
9) Measure the voltage at the wire side coupler between Pink wire and ground, when shifting the gearshift lever from 1st to Top.

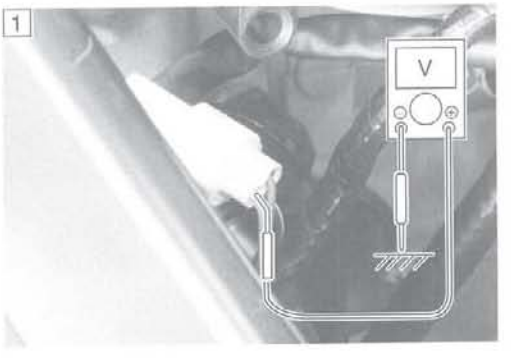

DATA GP switch voltage: 0.6 V and more (Pink – Ground)

TOOL 09900-25008: Multi-circuit tester set
09900-25009: Needle pointed probe set

Tester knob indication: Voltage (⎓)

Is the voltage OK?

YES	• Pink wire open or shorted to ground, or poor ㉓ connection. • If wire and connection are OK, intermittent trouble or faulty ECM. • Recheck each terminal and wire harness for open circuit and poor connection. • Replace the ECM with a new one, and inspect it again.
NO	• Open or short circuit in the Pink wire. • Replace the GP switch with a new one.

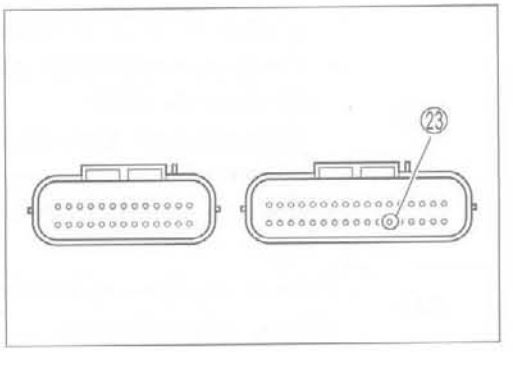

"C32", "C33", "C34" or "C35" FUEL INJECTOR CIRCUIT MALFUNCTION

DETECTED CONDITION	POSSIBLE CAUSE
CKP signals produced but fuel injector signal is interrupted continuous by 4 times or more.	• Injector circuit open or short. • Injector malfunction. • ECM malfunction.

INSPECTION

Step 1

1) Lift and support the fuel tank. (☞5-3)
2) Turn the ignition switch OFF.
3) Check the injector coupler for loose or poor contacts.
   If OK, then measure the injector resistance.

4) Disconnect the injector coupler and measure the resistance between terminals.

DATA Injector resistance: Approx. 12 Ω at 20 °C (68 °F) (Terminal – Terminal)

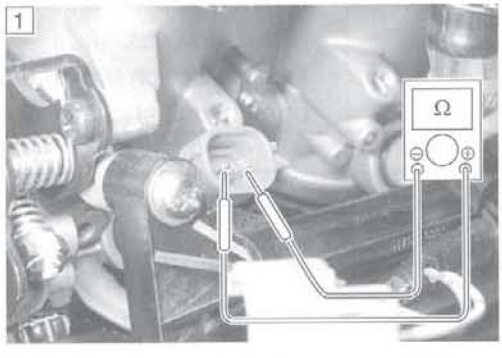

5) If OK, then check the continuity between each terminal and ground.

DATA Injector continuity: ∞ Ω (Infinity) (Terminal – Ground)

TOOL 09900-25008: Multi-circuit tester set

Tester knob indication: Resistance (Ω)

Is the resistance OK?

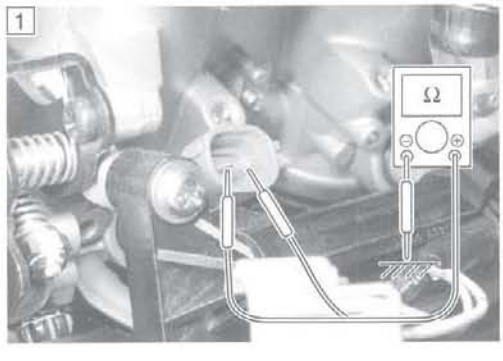

YES	Go to Step 2.
NO	Replace the Injector with a new one. (☞5-16)

Step 2

1) Turn the ignition switch ON.
2) Measure the injector voltage between Y/R wire and ground.

DATA Injector voltage: Battery voltage
(⊕ Y/R – ⊖ Ground)

NOTE:
Injector voltage can be detected only 3 seconds after ignition switch is turned ON.

TOOL 09900-25008: Multi-circuit tester set

Tester knob indication: Voltage (⎓)

Is the voltage OK?

YES	• Y/R, Gr/R, Gr/Y, Gr/B or Gr/W wire open or shorted to ground, or poor ㉝, ㊶, ㊷, ㊸ or ㊹ connection. • If wire and connection are OK, intermittent trouble or faulty ECM. • Recheck each terminal and wire harness for open circuit and poor connection.
NO	Open circuit in the Y/R wire.

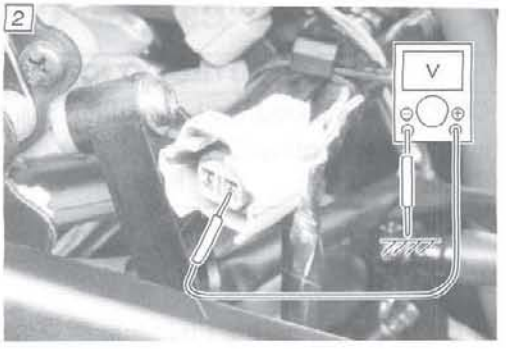

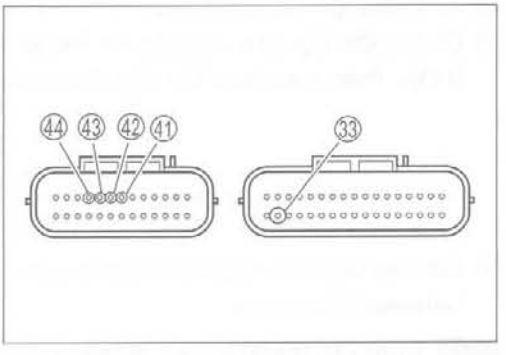

"C41" FP RELAY CIRCUIT MALFUNCTION

DETECTED CONDITION	POSSIBLE CAUSE
No voltage is applied to fuel pump, although fuel pump relay is turned ON, or voltage is applied to fuel pump although fuel pump relay is turned OFF.	• Fuel pump relay circuit open or short. • Fuel pump relay malfunction. • ECM malfunction.

INSPECTION

Step 1

1) Remove the frame cover. (☞8-7)
2) Turn the ignition switch OFF.
3) Check the FP relay coupler for loose or poor contacts.
4) If OK, then check the insulation and continuity. Refer to page 5-6 for details.
   Is the FP relay OK?

YES	• Y/B wire open or shorted to ground, or poor ㊴ connection. • If wire and connection are OK, intermittent trouble or faulty ECM. • Recheck each terminal and wire harness for open circuit and poor connection.
NO	Replace the FP relay with a new one.

1

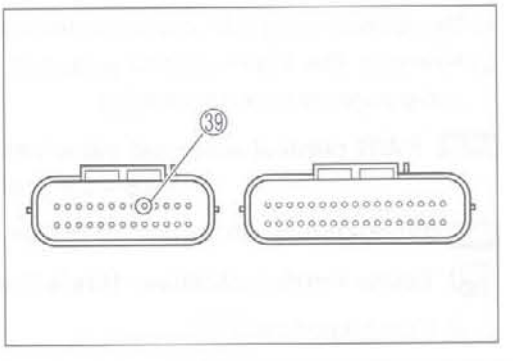

"C42" IG SWITCH CIRCUIT MALFUNCTION

DETECTED CONDITION	POSSIBLE CAUSE
Ignition switch signal is not input in the ECM.	• Ignition system circuit open or short. • ECM malfunction.

INSPECTION

***Refer to the IGNITION SWITCH INSPECTION for details. (☞9-35)**

"C49" PAIR CONTROL SOLENOID VALVE CIRCUIT MALFUNCTION

DETECTED CONDITION	POSSIBLE CAUSE
PAIR control solenoid valve voltage is not input in ECM.	• PAIR control solenoid valve circuit open or short. • PAIR control solenoid valve malfunction. • ECM malfunction.

INSPECTION

Step 1

1) Remove the air cleaner box. (☞5-14)
2) Turn the ignition switch OFF.
3) Check the PAIR control solenoid valve coupler for loose or poor contacts.
   If OK, then measure the PAIR control solenoid valve resistance.

4) Disconnect the PAIR control solenoid valve coupler.
5) Remove the PAIR control solenoid valve and measure the resistance between terminals.

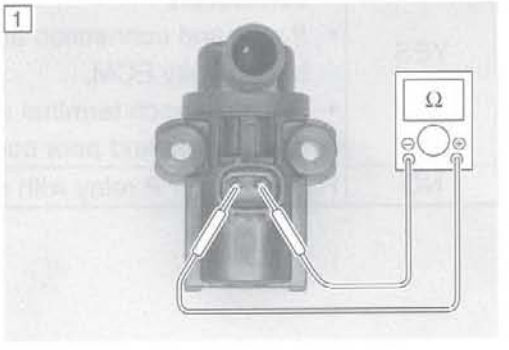

DATA PAIR control solenoid valve resistance:
18 – 22 Ω at 20 – 30 °C (68 – 86 °F)

TOOL 09900-25008: Multi-circuit tester set

Tester knob indication: Resistance (Ω)

Is the resistance OK?

YES	Go to Step 2.
NO	• Loose or poor contacts on the ECM coupler. • Replace the PAIR control solenoid valve with a new one.

Step 2

1) Turn the ignition switch ON.
2) Measure the voltage at the wire side coupler between O/W wire and ground.

DATA PAIR control solenoid valve voltage: Battery voltage (⊕ O/W – ⊖ Ground)

TOOL 09900-25008: Multi-circuit tester set

Tester knob indication: Voltage (⎓)

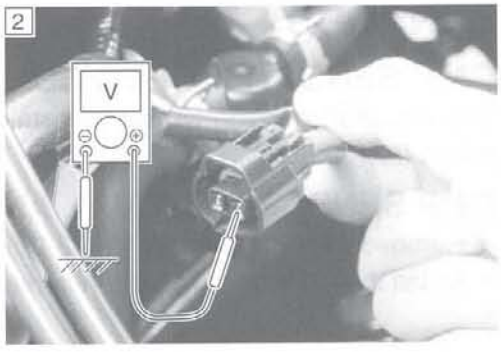

Is the voltage OK?

YES	• W/G wire open or shorted to ground, or ⑤⑥ connection. • If wire and connection are OK, intermittent trouble or faulty ECM. • Recheck each terminal and wire harness for open circuit and poor connection.
NO	Open or short circuit in the W/G wire.

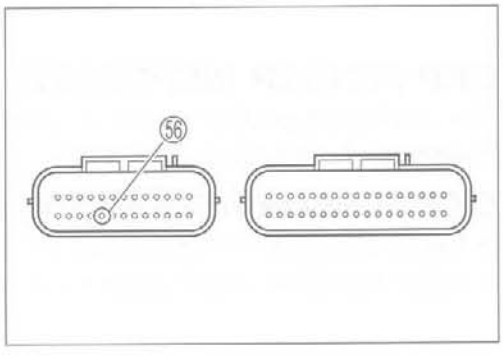

SENSORS

CMP SENSOR INSPECTION

The camshaft position sensor is installed on the cylinder head cover. (☞4-26)

CMP SENSOR REMOVAL AND INSTALLATION

- Remove the CMP sensor. (☞3-29)
- Install the CMP sensor in the reverse order of removal.

CKP SENSOR INSPECTION

The crankshaft position sensor is installed on the right side of middle crankcase cover. (☞4-28)

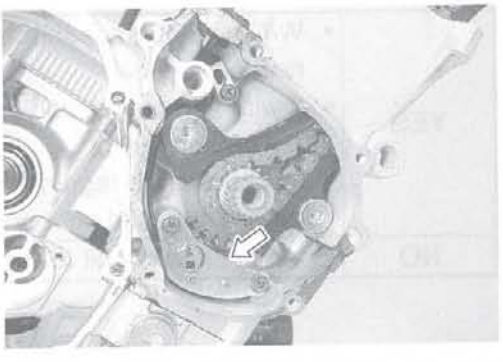

CKP SENSOR REMOVAL AND INSTALLATION

- Remove the starter clutch cover. (☞3-22)
- Install the starter clutch cover in the reverse order of removal.

IAP SENSOR INSPECTION

The intake air pressure sensor is installed at the right side of the air cleaner box. (☞4-30)

IAP SENSOR REMOVAL AND INSTALLATION

- Lift and support the fuel tank. (☞5-3)
- Remove the IAP sensor from the air cleaner box.
- Install the IAP sensor in the reverse order of removal.

TP SENSOR INSPECTION

The throttle position sensor is installed at the right side of the No.4 throttle body. (☞4-33)

TP SENSOR REMOVAL AND INSTALLATION

- Remove the TP sensor. (☞5-16)
- Install the TP sensor in the reverse order of removal.

TPS ADJUSTMENT

- Adjust the TP sensor. (☞4-18)

ECT SENSOR INSPECTION

The engine coolant temperature sensor is installed at the cylinder head. (☞4-36)

ECT SENSOR REMOVAL AND INSTALLATION

- Remove the ECT sensor. (☞7-8)
- Install the ECT sensor in the reverse order of removal.

ECT sensor: 18 N·m (1.8 kgf-m, 13.0 lb-ft)

IAT SENSOR INSPECTION

The intake air temperature sensor is installed on the right side of the air cleaner box. (☞4-38)

IAT SENSOR REMOVAL AND INSTALLATION

- Lift and support the fuel tank. (☞5-3)
- Remove the IAT sensor in the from the air cleaner box.
- Install the IAT sensor in the reverse order of removal.

IAT sensor: 18 N·m (1.8 kgf-m, 13.0 lb-ft)

AP SENSOR INSPECTION

The AP sensor is located under the front seat. (☞4-40)

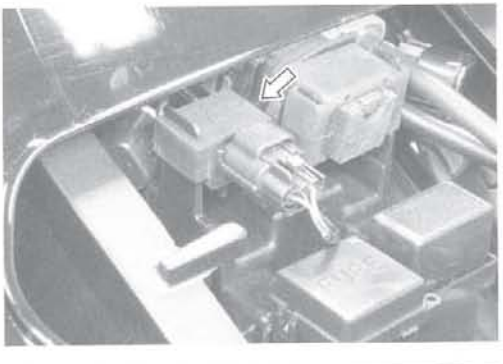

AP SENSOR REMOVAL AND INSTALLATION

- Remove the AP sensor from the frame.
- Install the AP sensor in the reverse order of removal.

TO SENSOR INSPECTION
TO SENSOR REMOVAL AND INSTALLATION

The tip-over sensor is located in front of the battery case. (☞4-43)

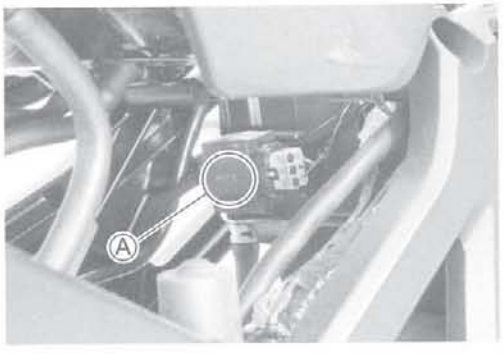

- Lift and support the fuel tank. (☞5-3)
- Remove the TO sensor from the battery case.
- Install the TO sensor in the reverse order of removal.

NOTE:
When installing the TO sensor, the arrow mark Ⓐ must be pointed upward.

STP SENSOR INSPECTION

STP SENSOR REMOVAL AND INSTALLATION

The secondary throttle position sensor is installed at the right side of the No.4 throttle body.

- Remove the STP sensor. (☞5-17)
- Install the STP sensor in the reverse order of removal.

STP SENSOR ADJUSTMENT

- Adjust the STP sensor. (☞5-22)

FUEL SYSTEM AND THROTTLE BODY

CONTENTS

FUEL DELIVERY SYSTEM 5- 2
FUEL SYSTEM 5- 3
FUEL TANK LIFT-UP 5- 3
FUEL TANK REMOVAL 5- 3
FUEL TANK INSTALLATION 5- 3
FUEL PRESSURE INSPECTION 5- 4
FUEL PUMP INSPECTION 5- 5
FUEL PUMP RELAY INSPECTION 5- 6
FUEL PUMP AND FUEL FILTER REMOVAL 5- 7
FUEL MESH FILTER INSPECTION AND CLEANING 5- 9
FUEL PUMP AND FUEL MESH FILTER INSTALLATION 5- 9
THROTTLE BODY 5-13
CONSTRUCTION 5-13
AIR CLEANER BOX REMOVAL 5-14
THROTTLE BODY REMOVAL 5-15
THROTTLE BODY DISASSEMBLY 5-16
THROTTLE BODY CLEANING 5-18
INSPECTION 5-18
THROTTLE BODY REASSEMBLY 5-19
THROTTLE BODY INSTALLATION 5-21
AIR CLEANER BOX INSTALLATION 5-22
STP SENSOR ADJUSTMENT 5-22
FUEL INJECTOR REMOVAL 5-23
FUEL INJECTOR INSPECTION 5-23
FUEL INJECTOR INSTALLATION 5-23
FAST IDLE 5-24
FAST IDLE ADJUSTMENT 5-24
THROTTLE VALVE SYNCHRONIZATION 5-26
THROTTLE POSITION SENSOR (TPS) SETTING 5-29

5

⚠ WARNING

Gasoline must be handled carefully in an area well ventilated and away from fire or sparks.

FUEL DELIVERY SYSTEM

The fuel delivery system consists of the fuel tank, fuel pump, fuel filters, fuel feed hose, fuel delivery pipe (including fuel injectors) and fuel pressure regulator. There is no fuel return hose. The fuel in the fuel tank is pumped up by the fuel pump and pressurized fuel flows into the injector installed in the fuel delivery pipe. Fuel pressure is regulated by the fuel pressure regulator. As the fuel pressure applied to the fuel injector (the fuel pressure in the fuel delivery pipe) is always kept at absolute fuel pressure of 3.0 kgf/cm² (300 kPa, 43 psi), the fuel is injected into the throttle body in conic dispersion when the injector opens according to the injection signal from the ECM.

The fuel relieved by the fuel pressure regulator flows back to the fuel tank.

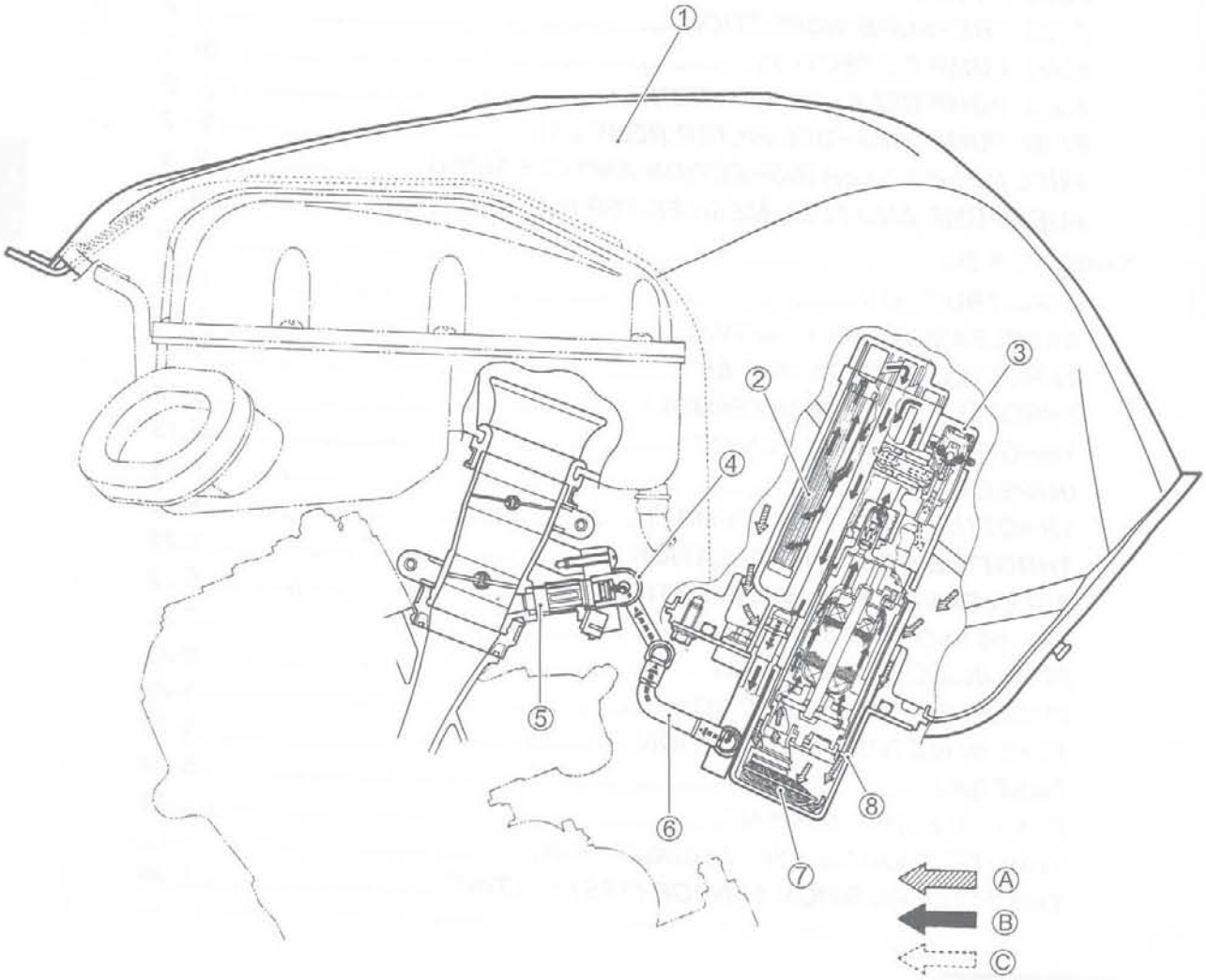

①	Fuel tank	⑦	Fuel mesh filter (For low pressure)
②	Fuel filter (For high pressure)	⑧	Fuel pump
③	Fuel pressure regulator	Ⓐ	Before-pressurized fuel
④	Fuel delivery pipe	Ⓑ	Pressurized fuel
⑤	Fuel injector	Ⓒ	Relieved fuel
⑥	Fuel feed hose		

FUEL SYSTEM

FUEL TANK LIFT-UP

- Remove the front seat. (☞8-6)
- Remove the fuel tank mounting bolts ①.

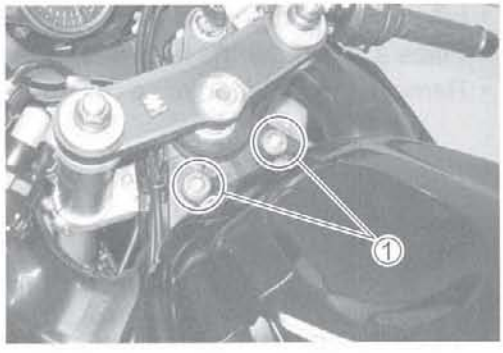

- Lift and support the fuel tank with the fuel tank prop stay ②.

FUEL TANK REMOVAL

- Lift and support the fuel tank. (☞5-3)
- Disconnect the fuel pump lead wire coupler ①.
- Place a rag under the fuel feed hose and remove the fuel feed hose ②.

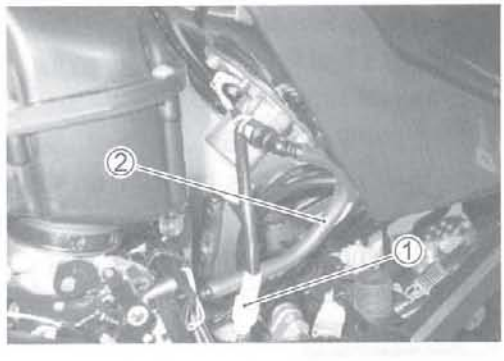

CAUTION

When removing the fuel tank, do not leave the fuel feed hose ② on the fuel tank side.

⚠ WARNING

Gasoline is highly flammable and explosive.
Keep heat, spark and flame away.

- Remove the fuel tank bracket mounting bolt ③.
- Remove the fuel tank.

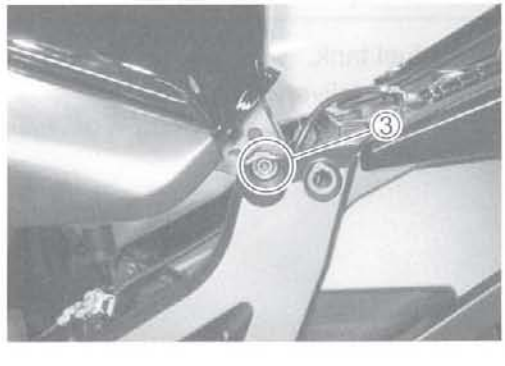

FUEL TANK INSTALLATION

- Installation is in the reverse order of removal.

FUEL PRESSURE INSPECTION

- Lift and support the fuel tank. (☞5-3)
- Place a rag under the fuel feed hose.
- Remove the fuel feed hose ①.

- Install the special tools between the fuel tank and fuel delivery pipe.

TOOL 09940-40211: Fuel pressure gauge adaptor
09940-40220: Fuel pressure gauge hose attachment
09915-77331: Oil pressure gauge
09915-74521: Oil pressure gauge hose

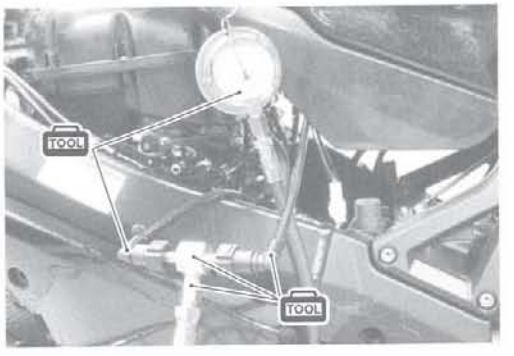

Turn the ignition switch ON and check the fuel pressure.

DATA Fuel pressure: Approx. 300 kPa (3.0 kgf/cm², 43 psi)

If the fuel pressure is lower than the specification, inspect the following items:
* Fuel hose leakage
* Clogged fuel filter
* Pressure regulator
* Fuel pump

If the fuel pressure is higher than the specification, inspect the following items:
* Fuel pump check valve
* Pressure regulator

⚠ WARNING

* **Before removing the special tools, turn the ignition switch to OFF position and release the fuel pressure slowly.**
* **Gasoline is highly flammable and explosive. Keep heat, sparks and flame away.**

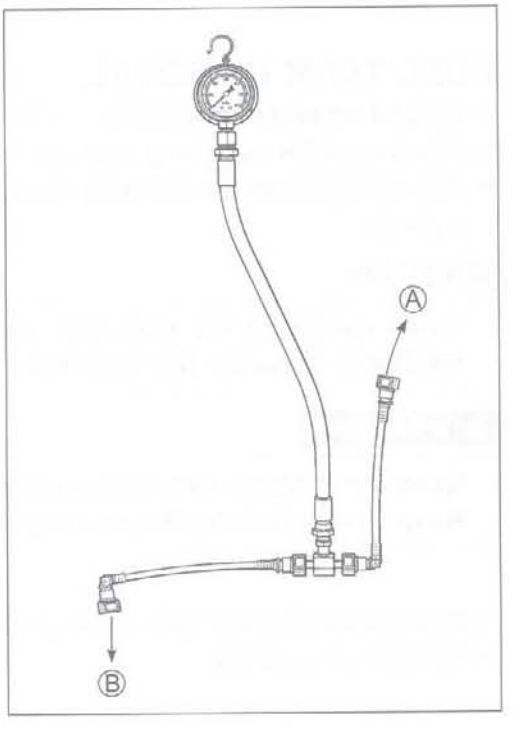

Ⓐ To fuel tank.
Ⓑ To fuel delivery pipe.

FUEL PUMP INSPECTION

Turn the ignition switch ON and check that the fuel pump operates for few seconds.
If the fuel pump motor does not make operating sound, replace the fuel pump assembly or inspect the fuel pump relay and tip-over sensor.

FUEL DISCHARGE AMOUNT INSPECTION

⚠ WARNING

Gasoline is highly flammable and explosive.
Keep heat, spark and flame away.

- Lift and support the fuel tank. (☞5-3)
- Disconnect the fuel feed hose ① from the fuel pump.

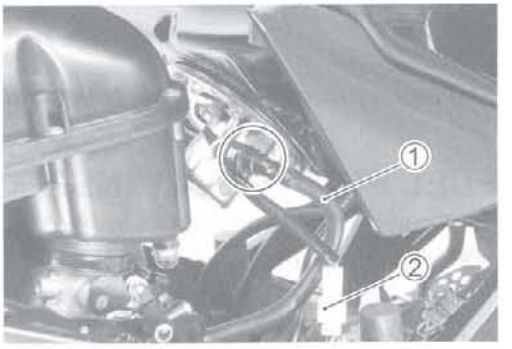

- Connect a proper fuel hose ② to the fuel pump.

- Place the measuring cylinder and insert the fuel hose end into the measuring cylinder.

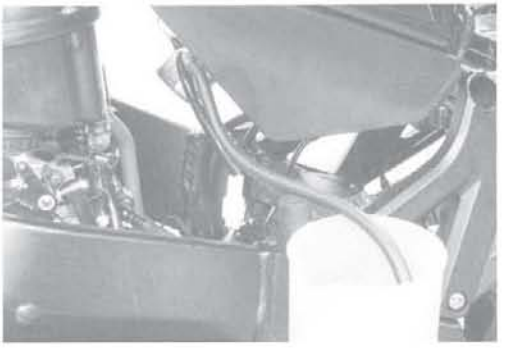

- Disconnect the fuel pump lead wire coupler ③.

- Connect a proper lead wire into the fuel pump lead wire coupler (fuel pump side) and apply 12 volts to the fuel pump (between Y/R wire and B/W wire) for 10 seconds and measure the amount of fuel discharged.
  Battery ⊕ terminal —— (Yellow with red tracer)
  Battery ⊖ terminal —— (Black with white tracer)

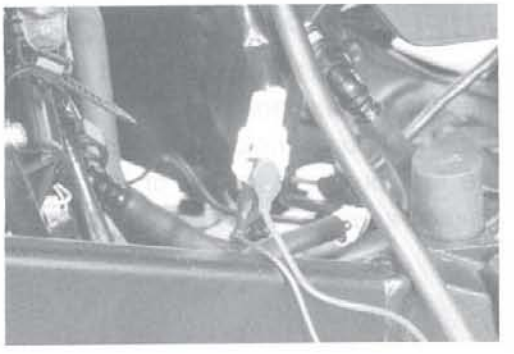

If the pump does not discharge the amount specified, it means that the fuel pump is defective or that the fuel filter is clogged.

DATA Fuel discharge amount: 168 ml and more/10 sec.
(5.7/5.9 US/Imp oz)/10 sec.

NOTE:
The battery must be in fully charged condition.

FUEL PUMP RELAY INSPECTION

Fuel pump relay is located in front of the battery.

- Remove the front and rear seats.
- Remove the frame cover. (☞8-7)
- Remove the fuel pump relay ①.

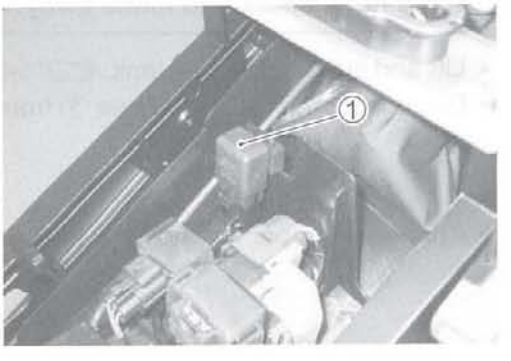

First, check the insulation between Ⓐ and Ⓑ terminals with pocket tester. Then apply 12 volts to Ⓒ and Ⓓ terminals, ⊕ to Ⓒ and ⊖ to Ⓓ, and check the continuity between Ⓐ and Ⓑ.
If there is no continuity, replace it with a new one.

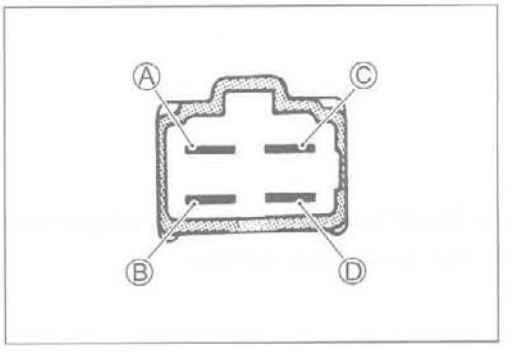

FUEL PUMP AND FUEL FILTER REMOVAL

CONSTRUCTION

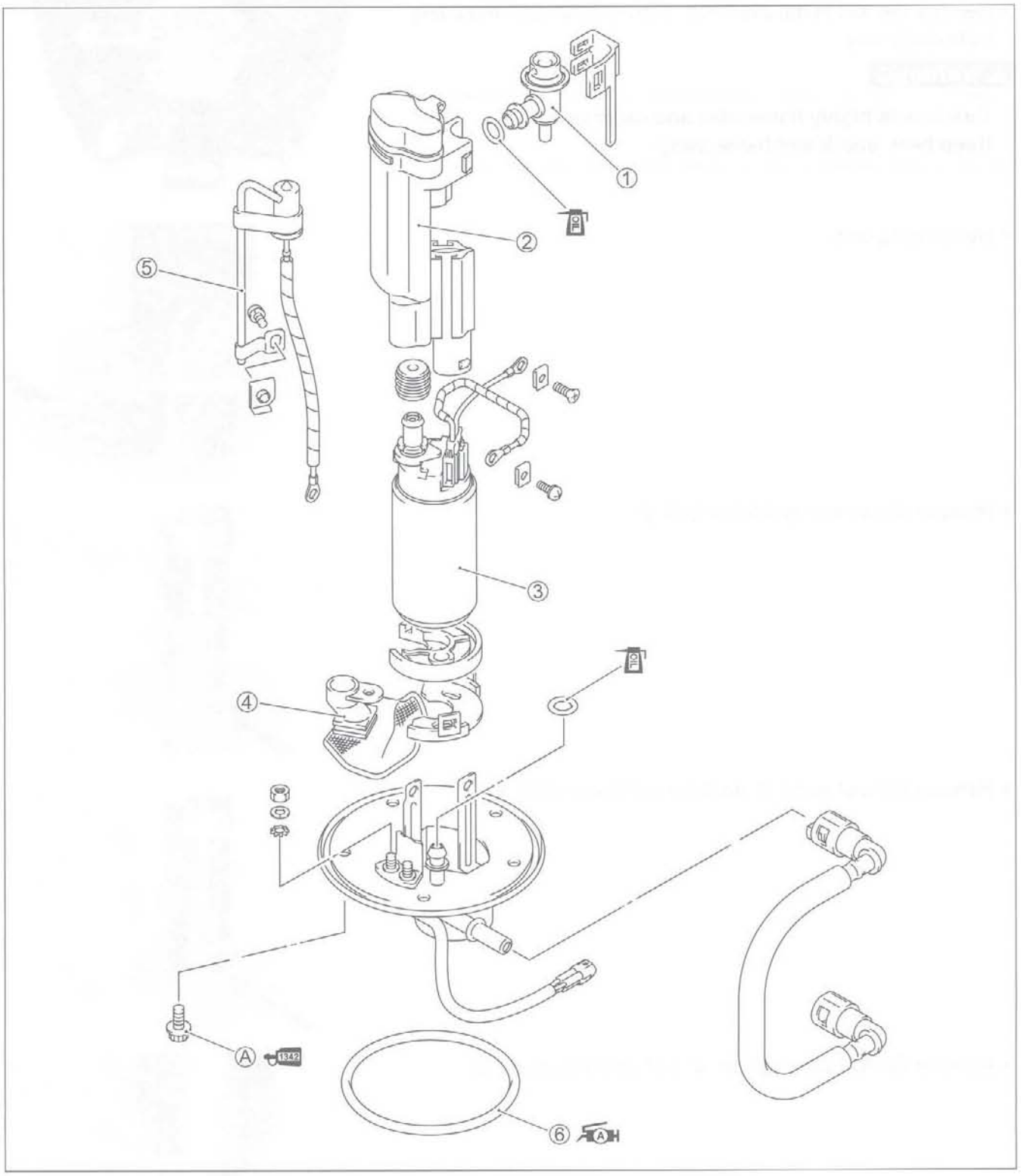

①	Fuel pressure regulator	⑤	Thermistor
②	Fuel pump case/Fuel filter cartridge	⑥	O-ring
③	Fuel pump	Ⓐ	Fuel pump mounting bolt
④	Fuel mesh filter		

ITEM	N·m	kgf-m	lb-ft
Ⓐ	10	1.0	7.0

REMOVAL

- Remove the fuel tank. (☞5-3)
- Remove the fuel pump assembly ① by removing its mounting bolts diagonally.

⚠ WARNING

Gasoline is highly flammable and explosive.
Keep heat, spark and flame away.

- Remove the nuts.

- Remove the screws and thermistor ②.

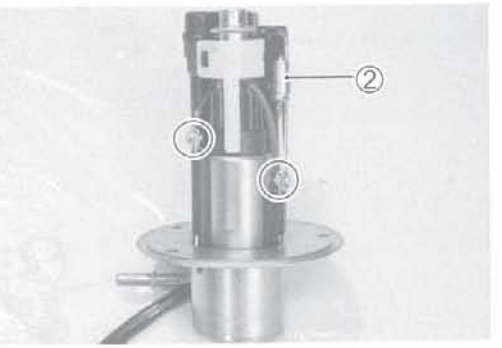

- Remove the fuel pump ③ from the fuel pump plate ④.

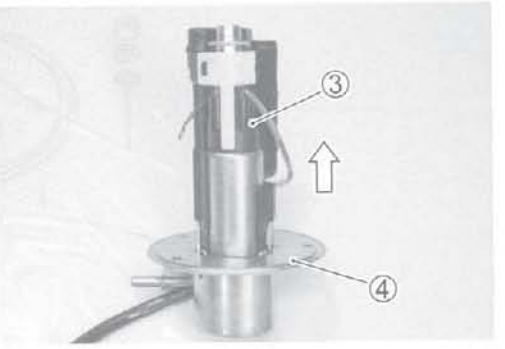

- Remove the fuel pump holder ⑤ and rubber cushion ⑥.

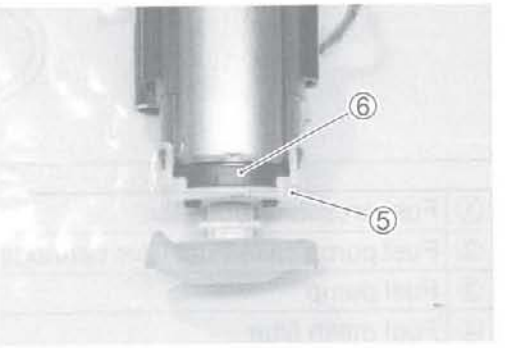

- Remove the fuel mesh filter ⑦.

- Remove the fuel pressure regulator holder ⑧ and fuel pressure regulator ⑨.

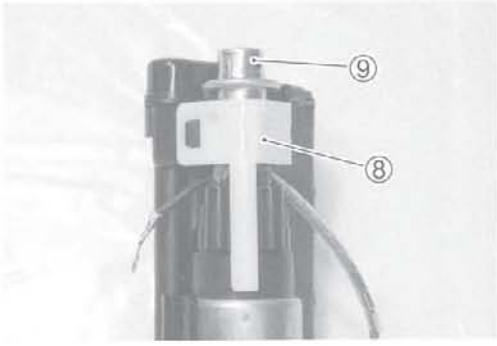

- Remove the fuel pump ⑩ from the fuel pump case/fuel filter cartridge ⑪.

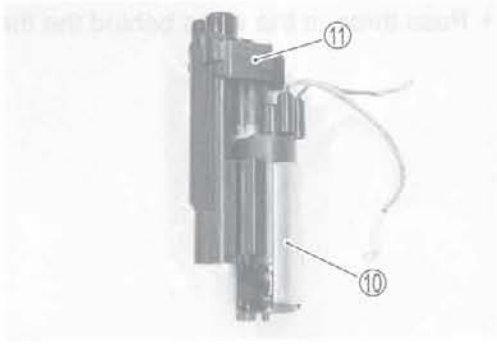

FUEL MESH FILTER INSPECTION AND CLEANING

If the fuel mesh filter is clogged with sediment or rust, fuel will not flow smoothly and loss in engine power may result.
Blow the fuel mesh filter with compressed air.

NOTE:
If the fuel mesh filter is clogged with many sediment or rust, replace the fuel filter cartridge with a new one.

FUEL PUMP AND FUEL MESH FILTER INSTALLATION

Install the fuel pump and fuel mesh filter in the reverse order of removal. Pay attention to the following points:

- Install the new bushing ① to the fuel pump.

CAUTION

Use the new bushing to prevent fuel leakage.

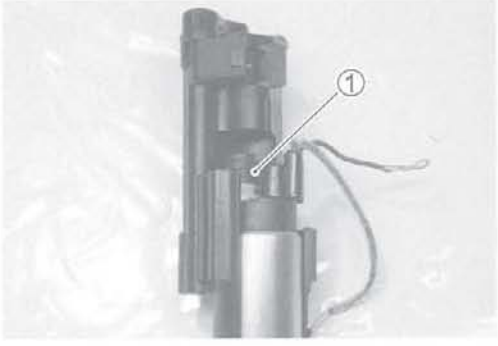

- Install the new O-rings to the fuel pressure regulator ② and fuel pipe ③.
- Apply thin coat of the engine oil to new O-rings.

CAUTION

Use the new O-rings to prevent fuel leakage.

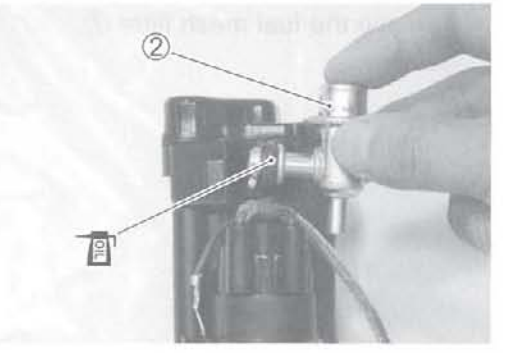

- Pass through the wires behind the thermistor ④.

- Be sure to connect the wires to the proper terminals.

Ⓐ..... Positive terminal for fuel pump
Ⓑ..... Thermistor

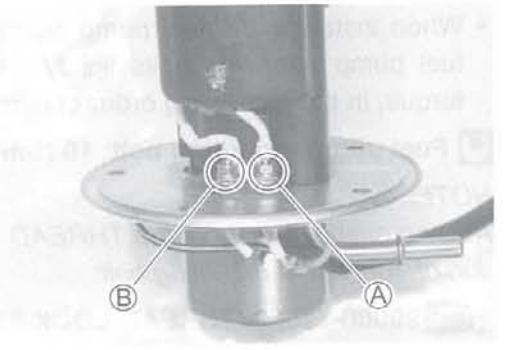

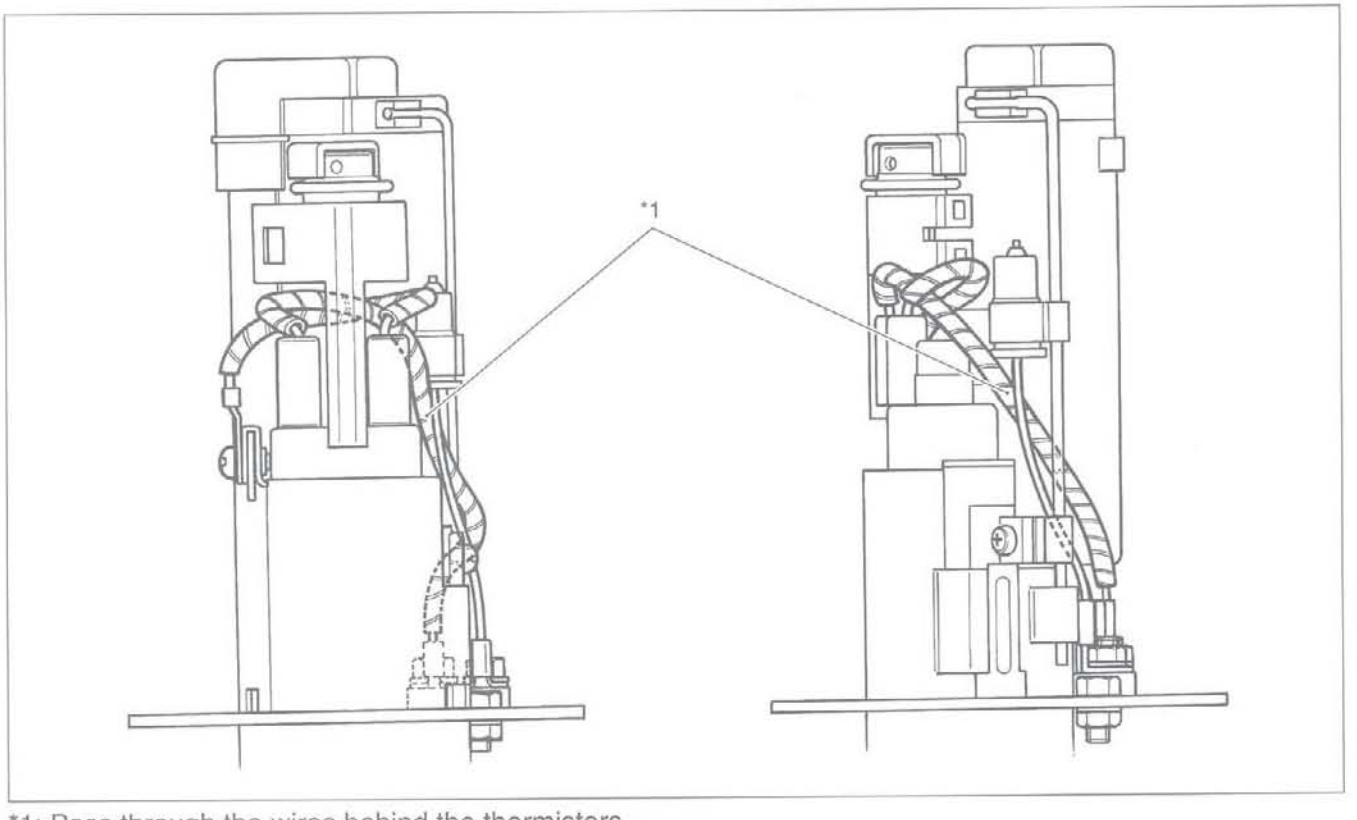

*1: Pass through the wires behind the thermistors.

- Install a new O-ring and apply SUZUKI SUPER GREASE "A" to it.

99000-25030: SUZUKI SUPER GREASE "A" (USA)
99000-25010: SUZUKI SUPER GREASE "A" (Others)

⚠ WARNING

The O-ring must be replaced with a new one to prevent fuel leakage.

- When installing the fuel pump assembly, first tighten all the fuel pump mounting bolts lightly and then to the specified torque, in the ascending order of numbers.

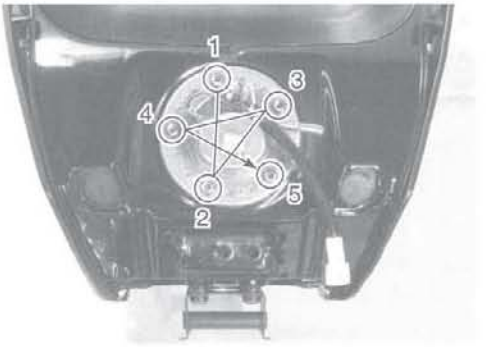

Fuel pump mounting bolt: 10 N·m (1.0 kgf-m, 7.0 lb-ft)

NOTE:

Apply a small quantity of the THREAD LOCK to the thread portion of fuel pump mounting bolt.

1342 99000-32050: THREAD LOCK "1342"

THROTTLE BODY

CONSTRUCTION

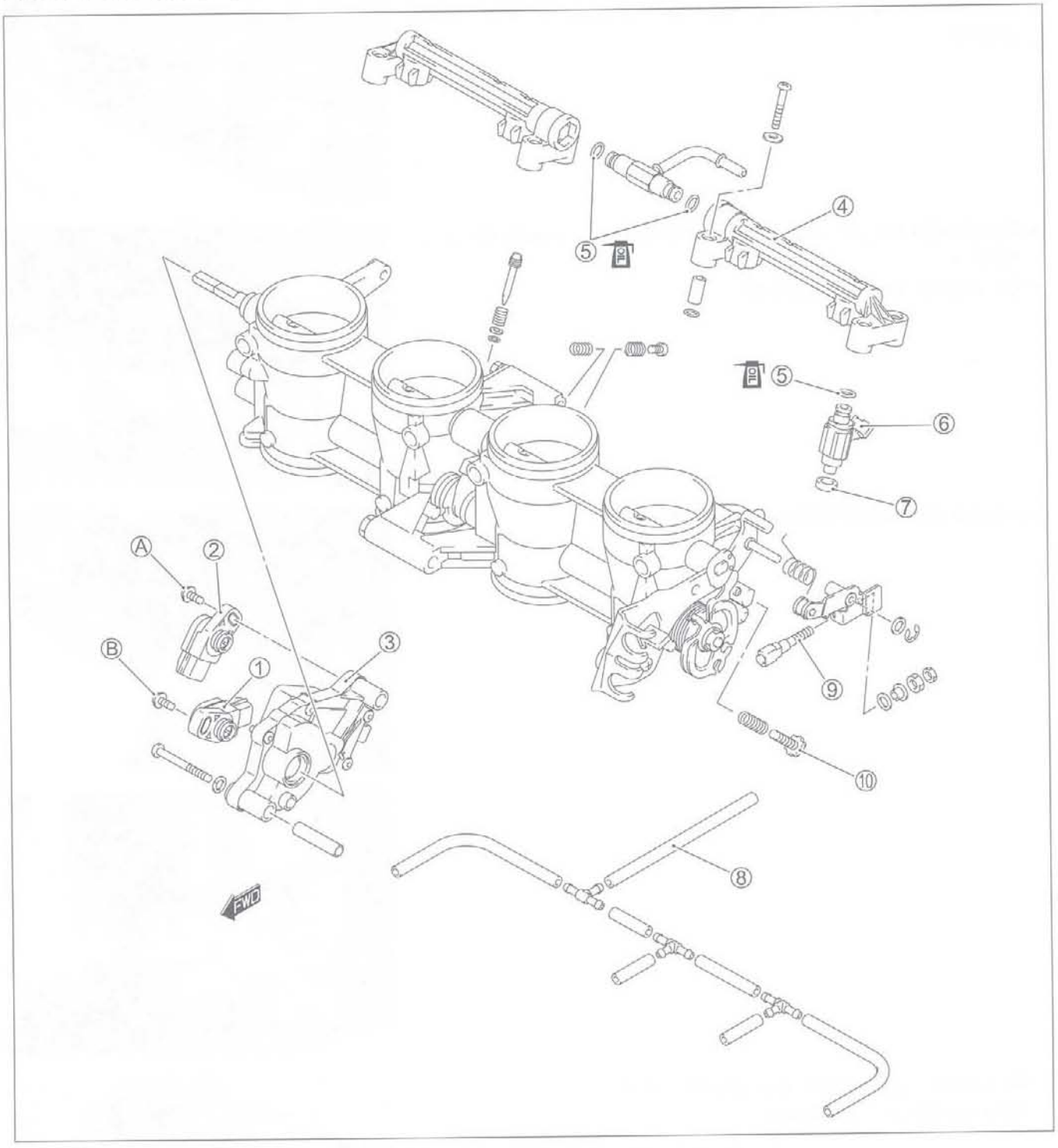

①	TP sensor	⑦	Cushion seal
②	STP sensor	⑧	Vacuum hose
③	STVA	⑨	Fast idle adjusting screw
④	Fuel delivery pipe	⑩	Throttle stop screw
⑤	O-ring	Ⓐ	STP sensor mounting screw
⑥	Fuel injector	Ⓑ	TP sensor mounting screw

ITEM	N·m	kgf-m	lb-ft
Ⓐ	3.5	0.35	2.45
Ⓑ	3.5	0.35	2.45

AIR CLEANER BOX REMOVAL

- Lift and support the fuel tank. (☞5-3)
- Disconnect the IAT sensor lead wire coupler ① and PAIR hose ②.

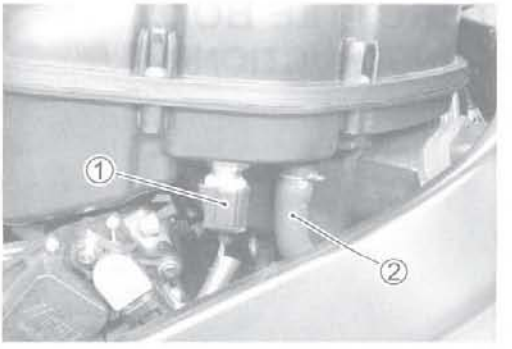

- Disconnect the IAP sensor lead wire coupler ③ and vacuum hose ④.
- Disconnect the PCV hose ⑤.

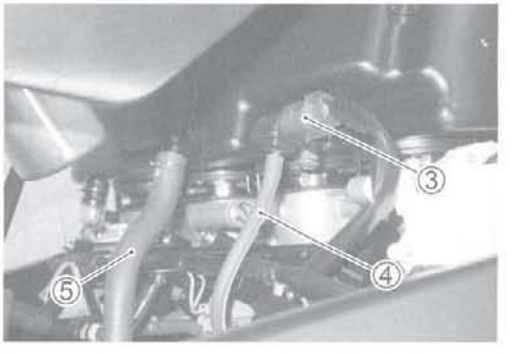

- Loosen the throttle body clamp screws ⑥.

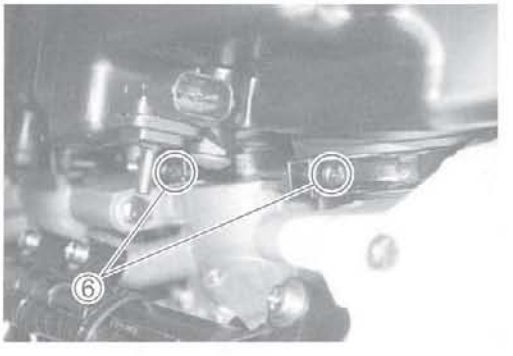

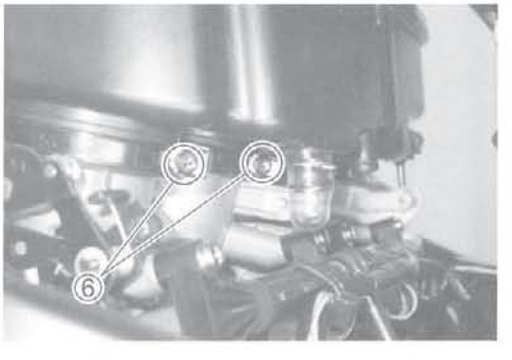

- Remove the air cleaner box mounting bolt ⑦.
- Remove the air cleaner box.

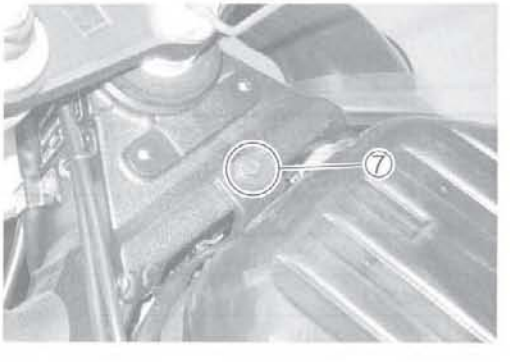

THROTTLE BODY REMOVAL

- Remove the air cleaner box. (☞5-14)
- Disconnect the throttle cables from their drum.

CAUTION

After disconnecting the throttle cables, do not snap the throttle valve from full open to full close. It may cause damage to the throttle valve and throttle body.

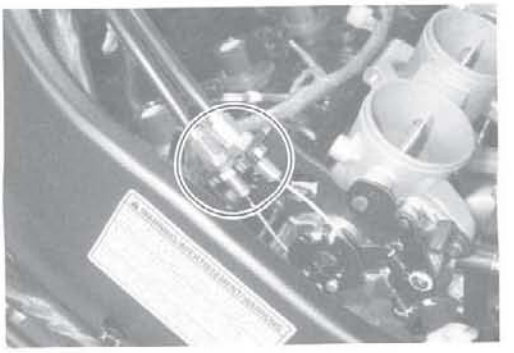

- Place a rag under the fuel feed hose and disconnect the fuel feed hose from the fuel tank.

- Disconnect the STVA lead wire coupler ① and STP sensor lead wire coupler ②.

- Remove the wire clamps ③ and disconnect the fuel injector lead wire couplers ④.

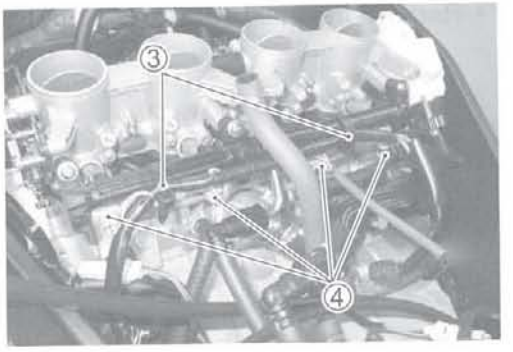

- Loosen the throttle body clamp screws at the intake pipe side.

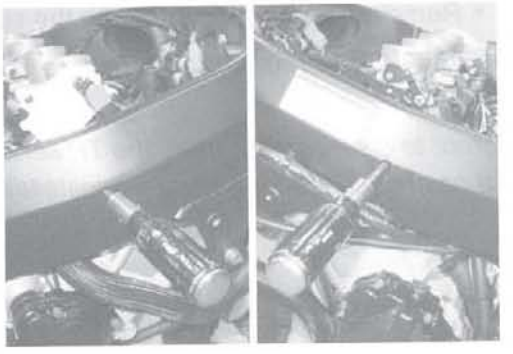

- Disconnect the TP sensor lead wire coupler ⑤.
- Remove the throttle body assembly.

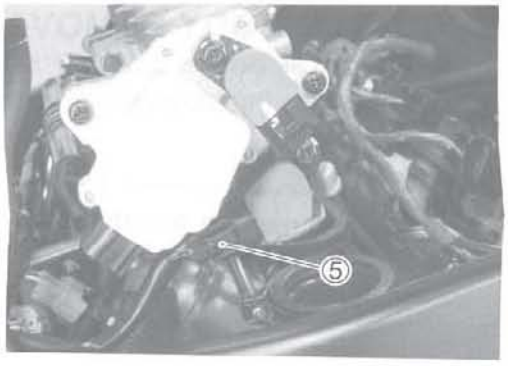

THROTTLE BODY DISASSEMBLY

- Disconnect the respective vacuum hoses ① from each throttle body.

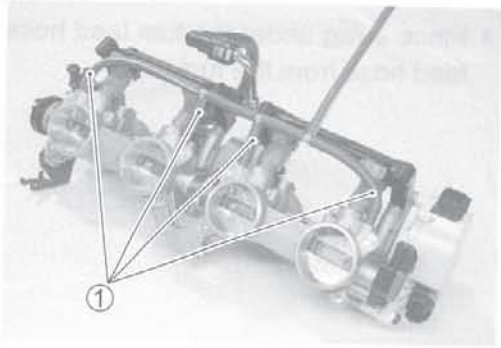

- Remove the fuel delivery pipe assembly ② by removing its mounting screws.

CAUTION

> **Be careful not to twist the fuel delivery pipe's T-joint Ⓐ, when disconnecting the fuel feed hose or removing the fuel delivery pipes, or joint part Ⓑ of the fuel delivery pipe get damage.**

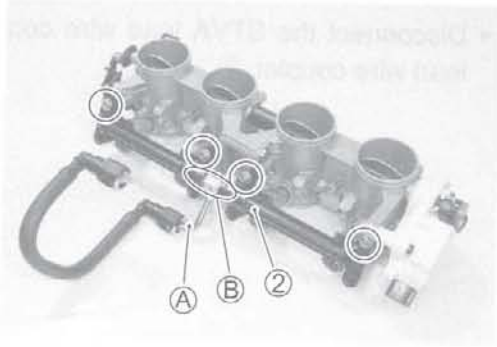

- Remove the fuel injectors ③.

- Remove the TP sensor ④ with the special tool.

TOOL 09930-11950: Torx wrench

NOTE:
Prior to disassembly, mark the TP sensor's original position with a paint or scribe for accurate reinstallation.

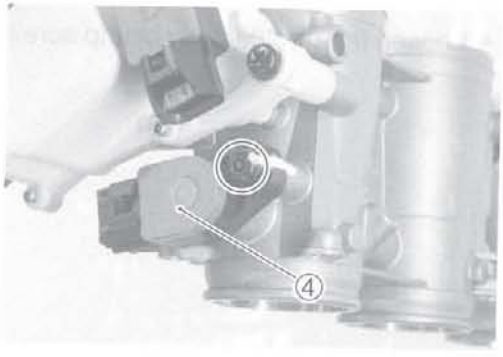

- Remove the STP sensor ⑤ with the special tool.

TOOL 09930-11950: Torx wrench

NOTE:

** Prior to disassembly, mark the STP sensor's original position with a paint or scribe for accurate reinstallation.*

** TP sensor and STP sensor look very much alike. To avoid confusion, mark identifications when removing.*

CAUTION

Never remove the STVA ⑥ from the throttle body.

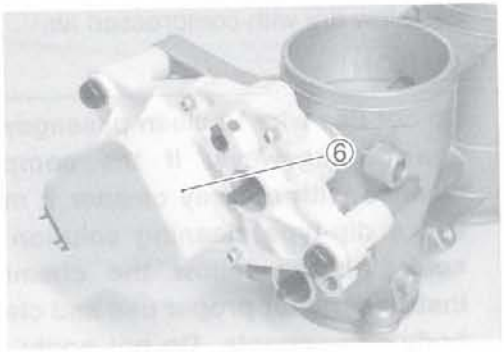

CAUTION

Never remove the secondary throttle valve ⑦ and throttle valve ⑧.

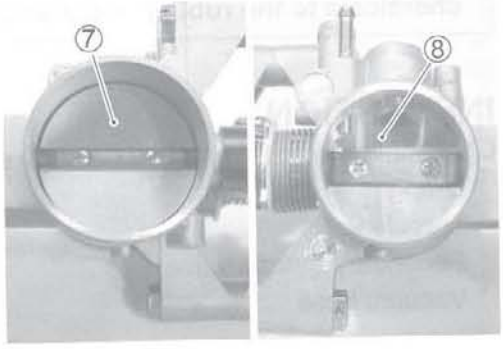

CAUTION

Never remove the cap ⑨.

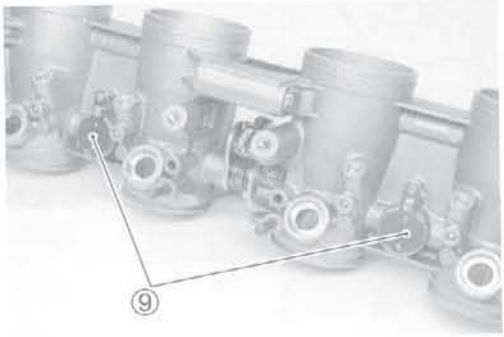

CAUTION

*** Do not loosen the nut ⑩.**

*** The fast idle screw ⑪ is factory-adjusted at the time of delivery and therefore avoid removing or turning it unless otherwise necessary.**

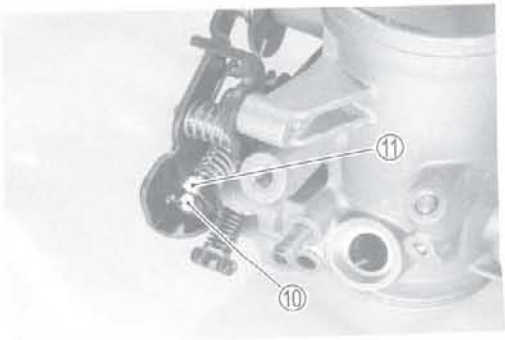

THROTTLE BODY CLEANING

⚠ WARNING

Some carburetor cleaning chemicals, especially dip-type soaking solutions, are very corrosive and must be handled carefully. Always follow the chemical manufacturer's instructions on proper use, handling and storage.

- Clean all passageways with a spray-type carburetor cleaner and blow dry with compressed air.

CAUTION

Do not use wire to clean passageways. Wire can damage passageways. If the components cannot be cleaned with a spray cleaner it may be necessary to use a dip-type cleaning solution and allow them to soak. Always follow the chemical manufacturer's instructions for proper use and cleaning of the throttle body components. Do not apply carburetor cleaning chemicals to the rubber and plastic materials.

INSPECTION

Check following items for any damage or clogging.

* O-ring
* Throttle valve
* Secondary throttle valve
* Vacuum hose

THROTTLE BODY REASSEMBLY

Reassemble the throttle body in the reverse order of disassembly. Pay attention to the following points:

- With the STV fully closed, install the STP sensor ① and tighten the STP sensor mounting screw to the specified torque.

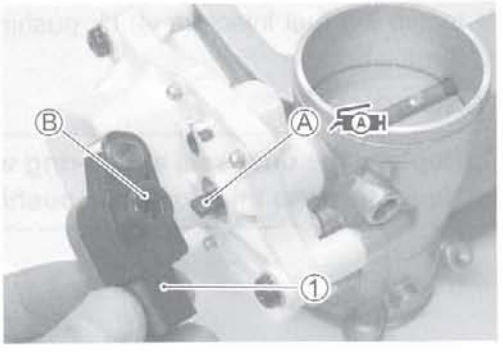

NOTE:

** Align the secondary throttle shaft end Ⓐ with the groove Ⓑ of STP sensor.*

** Apply SUZUKI SUPER GREASE "A" to the secondary throttle shaft end Ⓐ if necessary.*

99000-25030: SUZUKI SUPER GREASE "A" (USA)
99000-25010: SUZUKI SUPER GREASE "A" (Others)

09930-11950: Torx wrench

STP sensor mounting screw: 3.5 N·m (0.35 kgf-m, 2.45 lb-ft)

NOTE:

If the STP sensor adjustment is necessary, refer to page 5-22 for STP sensor setting procedure.

- With the throttle valve fully closed, install the TP sensor ② and tighten the TP sensor mounting screw to the specified torque.

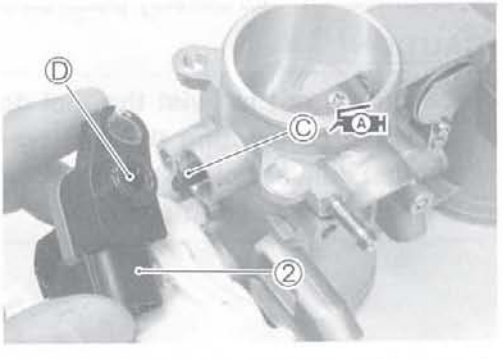

09930-11950: Torx wrench

TP sensor mounting screw: 3.5 N·m (0.35 kgf-m, 2.45 lb-ft)

NOTE:

** Align the throttle shaft end Ⓒ with the groove Ⓓ of TP sensor.*

** Apply SUZUKI SUPER GREASE "A" to the throttle shaft end Ⓒ if necessary.*

TP sensor setting procedure. (☞4-18)

99000-25030: SUZUKI SUPER GREASE "A" (USA)
99000-25010: SUZUKI SUPER GREASE "A" (Others)

- Install the O-rings ③ to each fuel injector.
- Apply thin coat of the engine oil to the new O-rings.

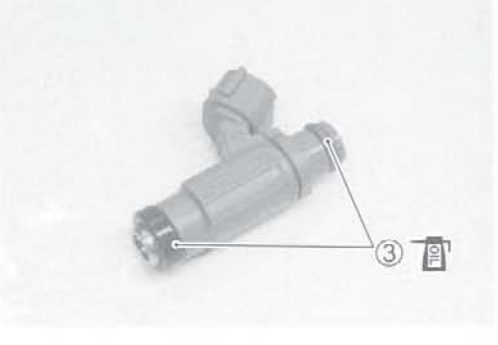

- Install the fuel injectors ④ by pushing them straight to each throttle body.

CAUTION

Replace the dust seal and O-ring with the new ones. Never turn the injector while pushing it.

- Apply thin coat of the engine oil to the new O-rings ⑤.

CAUTION

Replace the O-rings with the new ones.

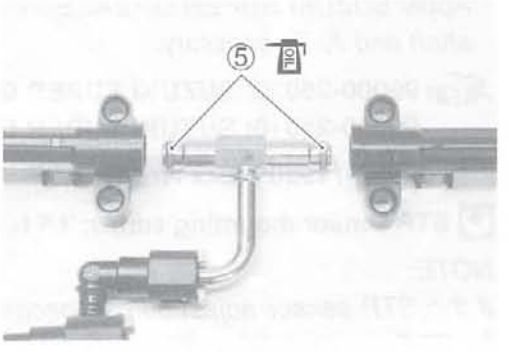

- Assemble the fuel delivery pipes as shown.

CAUTION

Be careful not to twist the fuel delivery pipe's T-joint Ⓐ, when connecting the fuel feed hose or installing the fuel delivery pipes, or joint part Ⓑ of the fuel delivery pipe may get damage.

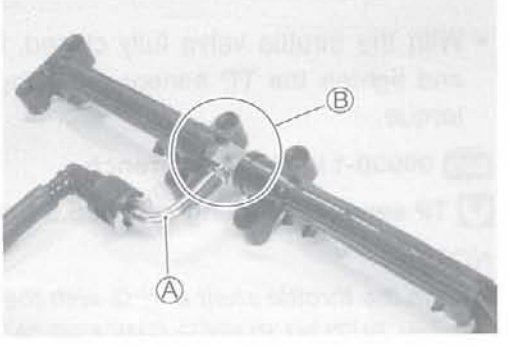

- Install the spacers ⑥ and O-rings ⑦.

CAUTION

Replace the O-rings with the new ones.

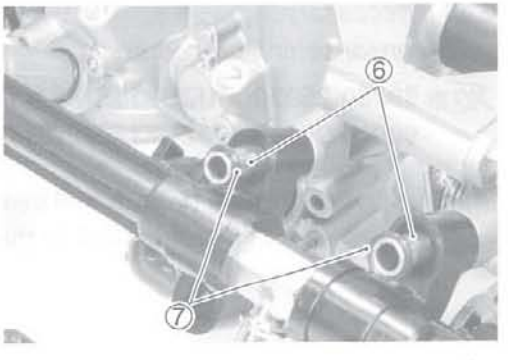

- Install the fuel delivery pipe assembly ⑥ to the throttle body assembly.

CAUTION

Never turn the fuel injectors while installing them.

- Tighten the fuel delivery pipe mounting screws to the specified torque.

Fuel delivery pipe mounting screw:
3.5 N·m (0.35 kgf-m, 2.45 lb-ft)

THROTTLE BODY INSTALLATION

Installation is in the reverse order of removal. Pay attention to the following points:

- Connect the TP sensor lead wire coupler ①.

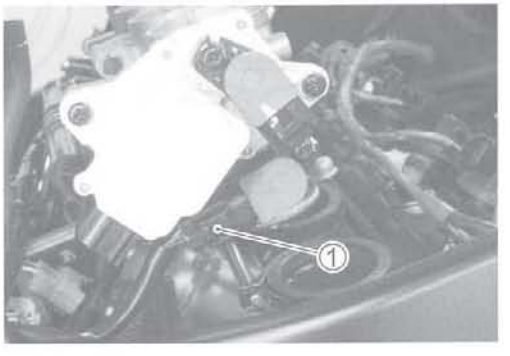

CAUTION

TP sensor lead wire coupler and STP sensor lead wire coupler resemble each other very closely in external appearance.
Make sure to check the color of coupler before installing.

TP sensor lead wire coupler: Gray
STP sensor lead wire coupler: Black

- Connect the throttle pulling cable ② and throttle returning cable ③ to the throttle cable drum.

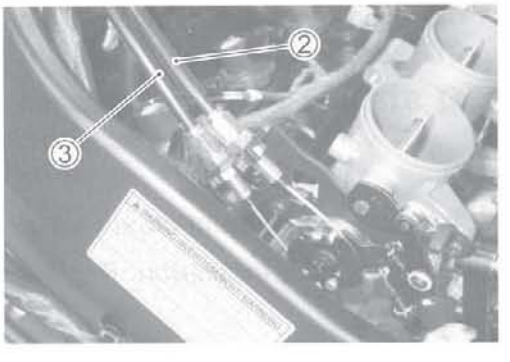

- Loosen each throttle cable lock-nut.
- Turn in each throttle cable adjuster fully and locate each outer cable so that the clearance is 0 mm (0 in).
- Tighten each lock-nut.
- Adjust the throttle cable play.
  Refer to page 2-16 for details.

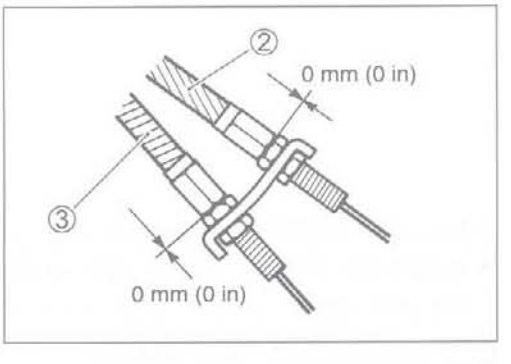

AIR CLEANER BOX INSTALLATION

Installation is in the reverse order of removal. Pay attention to the following points:

- Install the air cleaner box and tighten the throttle body clamp screws as shown in the illustration.

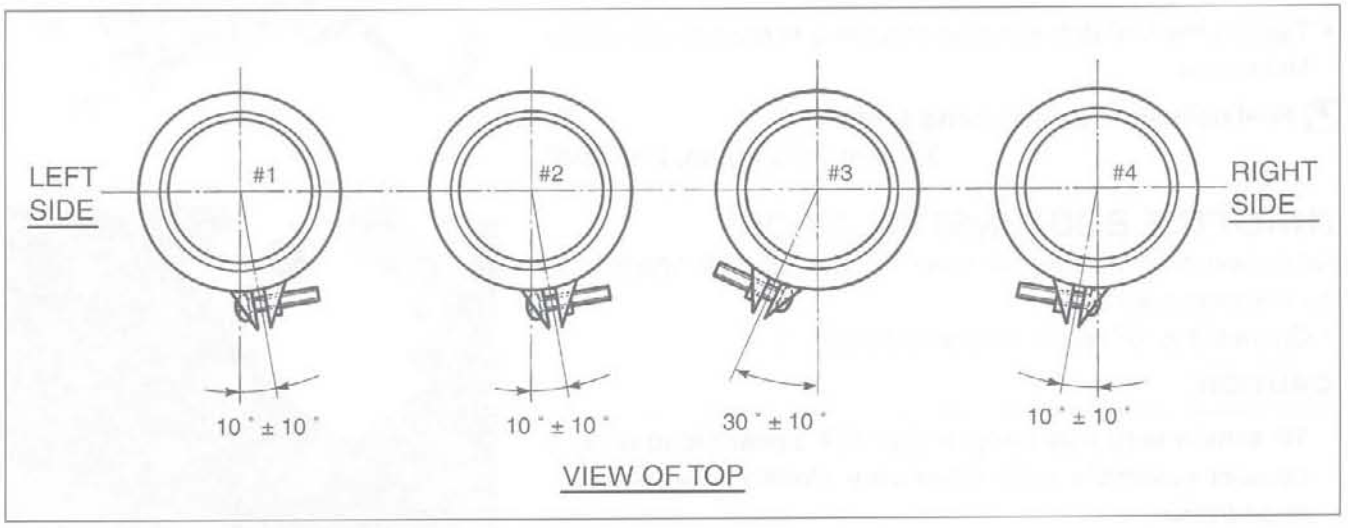

STP SENSOR ADJUSTMENT

If the STP sensor adjustment is necessary, measure the sensor resistance and adjust the STP sensor position as follows:

- Disconnect the STVA coupler and STP sensor coupler.
- Close the secondary throttle valve by finger, and measure the STP sensor resistance.

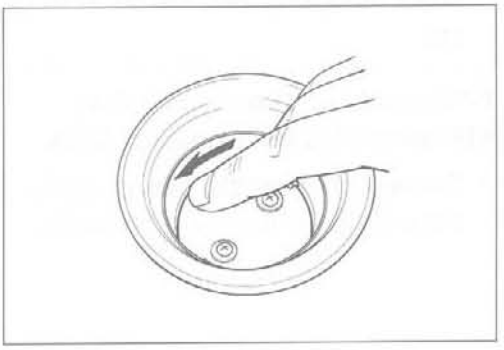

DATA STP sensor setting resistance
ST valve is fully closed: Approx. 0.6 kΩ
(Terminal Ⓐ – Terminal Ⓑ)

TOOL 09900-25008: Multi-circuit tester set

Tester knob indication: Resistance (Ω)

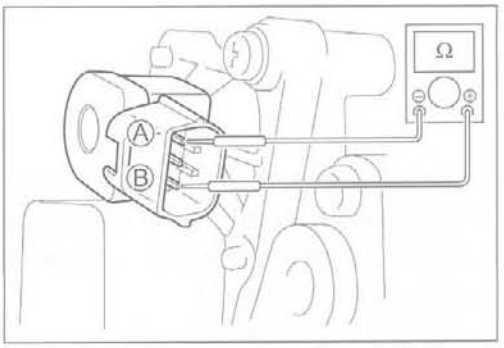

- Loosen the STP sensor mounting screw ①.
- Adjust the STP sensor ② until resistance comes to specification and tighten the STP sensor mounting screw.

TOOL 09930-11950: Torx wrench

STP sensor mounting screw: 3.5 N·m
(0.35 kgf-m, 2.45 lb-ft)

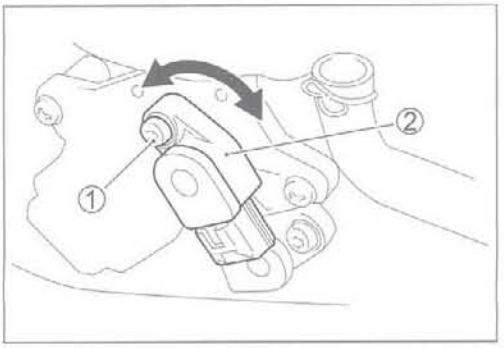

FUEL INJECTOR REMOVAL

- Lift and support the fuel tank. (☞5-3)
- Remove the air cleaner box. (☞5-14)
- With battery negative cable disconnected, disconnect the injector couplers.
- Remove the fuel delivery pipe assembly. (☞5-16)
- Remove the fuel injectors No.1, No.2, No.3 and No.4. (☞5-16)

FUEL INJECTOR INSPECTION

Check fuel injector filter for evidence of dirt and contamination. If present, clean and check for presence of dirt in the fuel lines and fuel tank.
The fuel injector can be checked without removing it from the throttle body.
Refer to page 4-51 for details.

FUEL INJECTOR INSTALLATION

- Apply thin coat of the engine oil to new injector O-rings.
- Install the injector by pushing it straight to the throttle body. Never turn the injector while pushing it. (☞5-19)

FAST IDLE

The fast idle system is automatic type.
When the fast idle cam is turned by the secondary throttle valve actuator, the cam pushes the lever on the throttle valve shaft causing the throttle valve to open and raise the engine speed. When the engine has warmed up, depending on the water temperature, ambient temperature and lapsed time, the fast idle is cancelled allowing the engine to resume idle speed.

Ambient Temp.	Fast idle rpm	Fast idle cancelling time
–5 °C (23 °F)	1 500 – 2 000 rpm	Approx. 35 sec.
15 °C (59 °F)	1 500 – 2 000 rpm	Approx. 17 sec.
25 °C (77 °F)	1 500 – 2 000 rpm	Approx. 11 sec.

FAST IDLE ADJUSTMENT

- Lift and support the fuel tank. (☞5-3)
- Start up the engine and run it in idling condition for warming up at the water temperature of 80 – 90 °C (176 – 194 °F).
- Set the idle rpm to 1 300 rpm by the throttle stop screw ①.
- Check and adjust the TP sensor. (☞4-18)

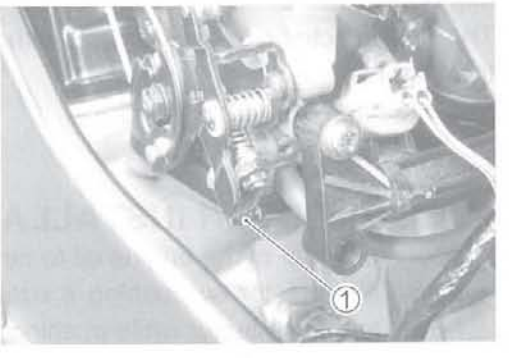

- Disconnect the TP sensor coupler ② and install the test harness.
- Start up the engine.
- Measure the TP sensor output voltage at the wire terminals (between ⊕ terminal Ⓐ and ⊖ terminal Ⓑ).

DATA TP sensor output voltage at idle position: Approx. 1.125 V

TOOL 09900-28630: TPS test wire harness
09900-25008: Multi-circuit tester set

Tester knob indication: Voltage (⎓)

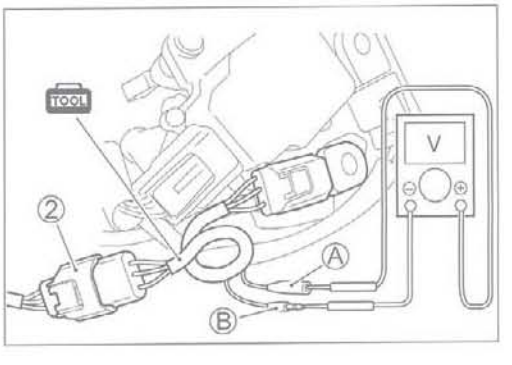

- Turn the ignition switch OFF.
- Remove the air cleaner box cover and disconnect the STVA coupler.
- Turn the ignition switch ON.
- Open the secondary throttle valve fully by turning it with your finger.
- With the secondary throttle valve held at this position, measure the output voltage of the TP sensor as shown.

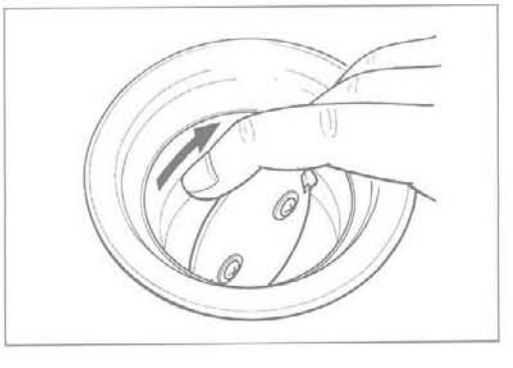

- Calculate the voltage difference between TP sensor output voltage at idle and TP sensor output voltage with the STV full opened.

Example: TP sensor output voltage with the STV fully open
Minus TP sensor output voltage at idle is 0.027 V

STV fully open	**1.152 V**
Idle	**- 1.125 V**
	0.027 V

DATA TP sensor output voltage variation: 0.021 – 0.032 V

- If the voltage variation is out of specification, loosen the lock-nut ④ and turn in or out the fast idle adjust screw ⑤ to adjust the voltage to specification.

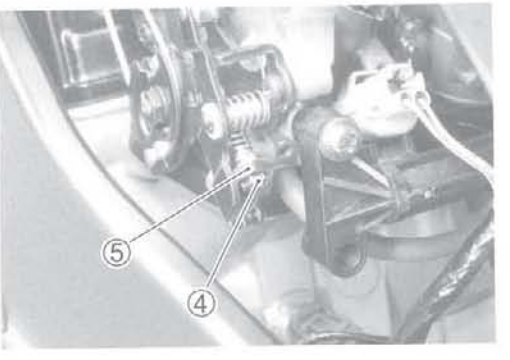

CAUTION

The fast idle screw is factory-adjusted at the time of delivery and therefore avoid removing or turning it unless otherwise necessary.

- Cool down the engine to ambient air temperature and start the engine to check the fast idle rpm comes with in the specified rpm.

DATA Standard
Fast idle rpm: 1 500 – 2 000 rpm/Cold engine
Idle rpm : 1 300 ± 100 rpm/Warmed engine

- If it is not at the specified rpm, the cause may possibly be short-circuit in water temperature sensor or wiring harness or STVA.

THROTTLE VALVE SYNCHRONIZATION

Check and adjust the throttle valve synchronization among four cylinders.

USE FOR DIGITAL VACUUM TESTER

Step 1

- Lift and support the fuel tank. (☞5-3)
- Start up the engine and run it in idling condition for warming up.
- Stop the warmed-up engine.
- Disconnect the IAP sensor coupler ①.

- Disconnect the vacuum hose ② from each throttle body.

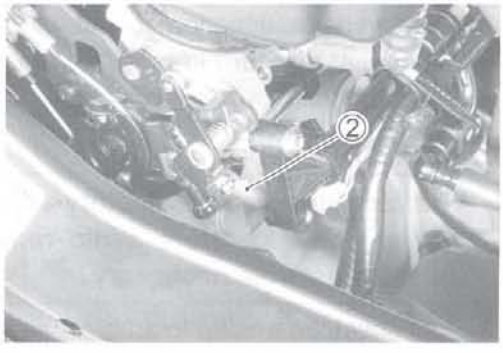

- Connect the vacuum tester hose ③ to each vacuum nipple on the throttle body.

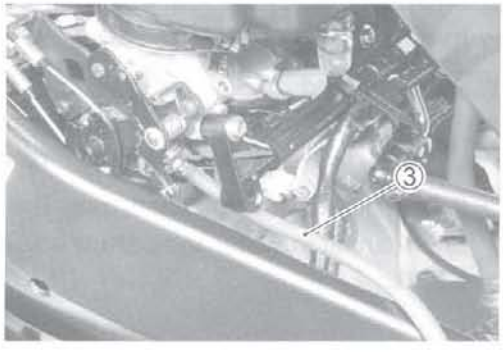

Step 2

- Connect a tachometer and start up the engine.
- Bring the engine rpm to 1 300 rpm by the throttle stop screw.
- Check the vacuum of the four cylinders and balance the four throttle valves with the balance screw ④.

CAUTION

Avoid drawing dirt into the throttle body while running the engine without air cleaner box. Dirt drawn into the engine will damage the internal engine parts.

NOTE:

- *During balancing the throttle valves, always set the engine rpm at 1 300 rpm, using throttle stop screw.*
- *After balancing the four valves, set the idle rpm to 1 300 rpm by the throttle stop screw.*
- *If the above procedures cannot still synchronize the valves, proceed to the next step.*

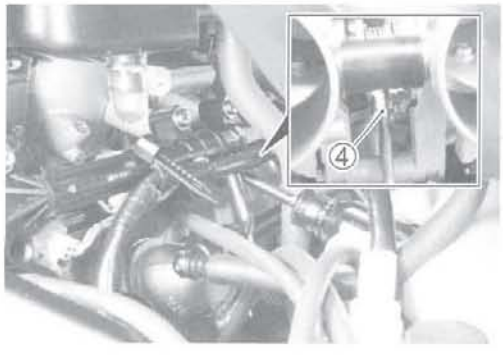

Step 3

- Turn in all the idle air screws to the complete close position.
- Check for difference of vacuum between No.1 and No.2.
- Equalize these two by gradually turning back the air screw on the higher vacuum side until the vacuum comes down to the lower. Similarly perform the same procedures between No.3 and No.4.
- Check for the synchronization adjustment. If the adjustment is not yet correct, remove each idle air screw and clean them with a spray-type carburetor cleaner and blow dry with a compressed air.
- Also, clean the idle air screw passageways.

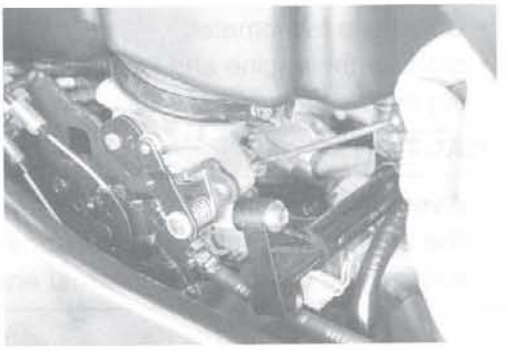

NOTE:

** Slowly turn the idle air screw in clockwise and count the number of turns until the screw is lightly seated.*

** Make a note of how many turns were made so the screw can be reset correctly after cleaning.*

Step 4

Repeat the procedures of Step 2 and Step 3.

USE FOR VACUUM BALANCER GAUGE

Calibrating each vacuum gauge

- Stop the warmed-up engine.
- Disconnect the vacuum hose ① from the No.1 throttle body.
- Install a proper plug ② into the disconnected vacuum hose.

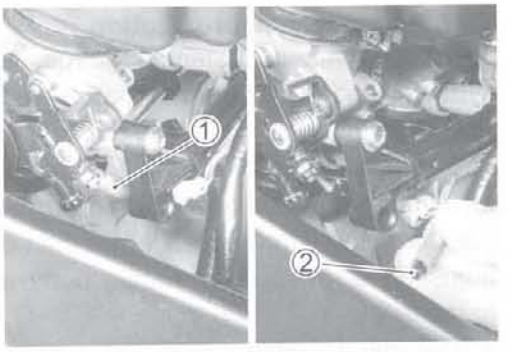

- Connect one of the vacuum balancer gauge hose ③ to the vacuum nipple on the No.1 throttle body.

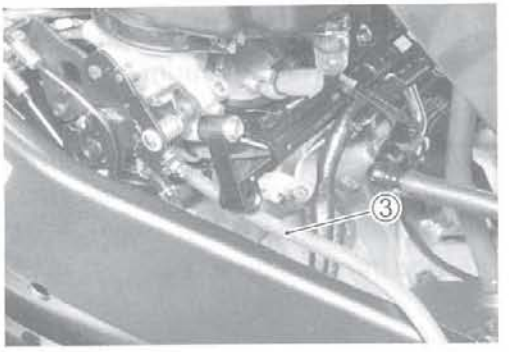

- Connect a tachometer.
- Start up the engine and keep it running at 1 300 rpm by turning throttle stop screw ④.

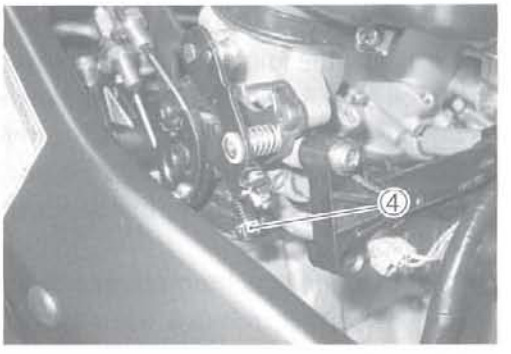

CAUTION

Avoid drawing dirt into the throttle body while running the engine without air cleaner box. Dirt drawn into the engine will damage the internal engine parts.

- Turn the air screw ⑤ of the gauge so that the vacuum acting on the tube of that hose will bring the steel ball ⑥ in the tube to the center line ⑦.

NOTE:
The vacuum gauge is positioned approx. 30 ° from the horizontal level.

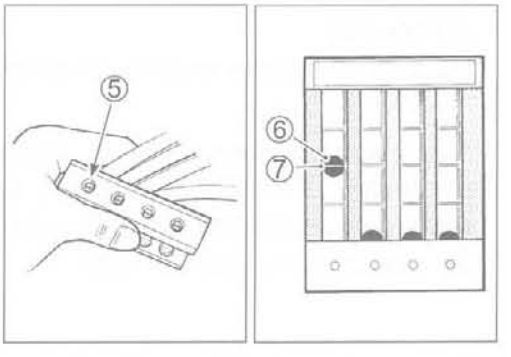

- After making sure that the steel ball stays steady at the center line, disconnect the hose from the No.1 throttle body vacuum nipple and connect the next hose to this vacuum nipple.
- Turn air screw to bring the other steel ball ⑧ to the center line.
- Repeat the above process on the third and fourth hoses.

The balancer gauge is now ready for use in balancing the throttle valves.

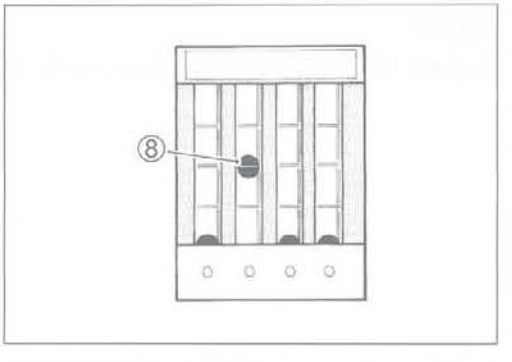

Throttle valve synchronization

Using the vacuum balancer gauge, inspect the throttle valve synchronization in the same manner of the digital vacuum tester. Pay attention to the following points:

The vacuum gauge is positioned approx. 30 ° from the horizontal level, and in this position the four balls should be within one ball dia. If the difference is larger than one ball, turn the balance adjusting screw on the throttle body and bring the ball to the same level.

A correctly adjusted throttle valve synchronization has the balls in the No. 1 through 4 at the same level.

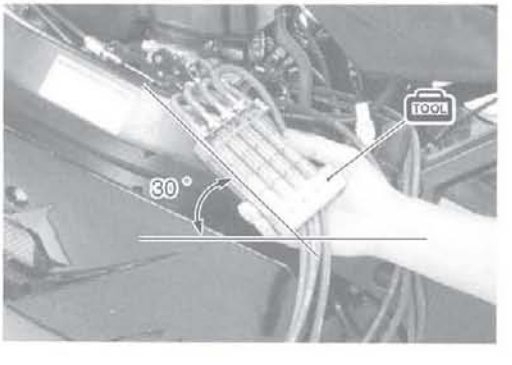

TOOL 09913-13121: Vacuum balancer gauge

NOTE:

* *During balancing the throttle valves, always set the engine rpm at 1 300 rpm, using throttle stop screw.*
* *After balancing the four valves, set the idle rpm to 1 300 rpm by the throttle stop screw.*

THROTTLE POSITION SENSOR (TPS) SETTING

After all adjustments are completed, check or adjust the TPS ① setting condition.
(Refer to page 4-18 for TPS setting procedure.)

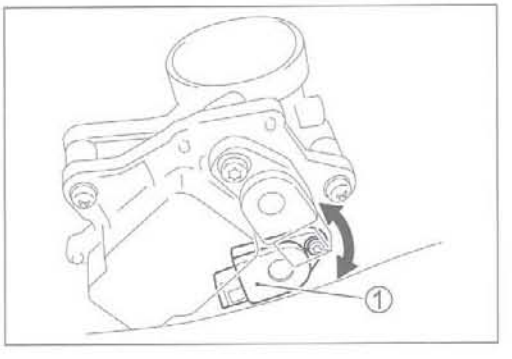

EXHAUST SYSTEM

CONTENTS

PRECAUTIONS FOR EXHAUST SYSTEM 6- 2
EXHAUST SYSTEM COMPONENTS 6- 2
EXHAUST PIPE AND MUFFLER 6- 3
REMOVAL 6- 3
INSTALLATION 6- 4
INSPECTION 6- 4

PRECAUTIONS FOR EXHAUST SYSTEM

⚠ WARNING

To avoid the danger of being burned, do not touch the exhaust system when the system is hot. Any service on the exhaust system should be performed when the system is cool.

CAUTION

Make sure that the exhaust pipe and muffler have enough clearance from the rubber parts and plastic parts to avoid melting.

EXHAUST SYSTEM COMPONENTS

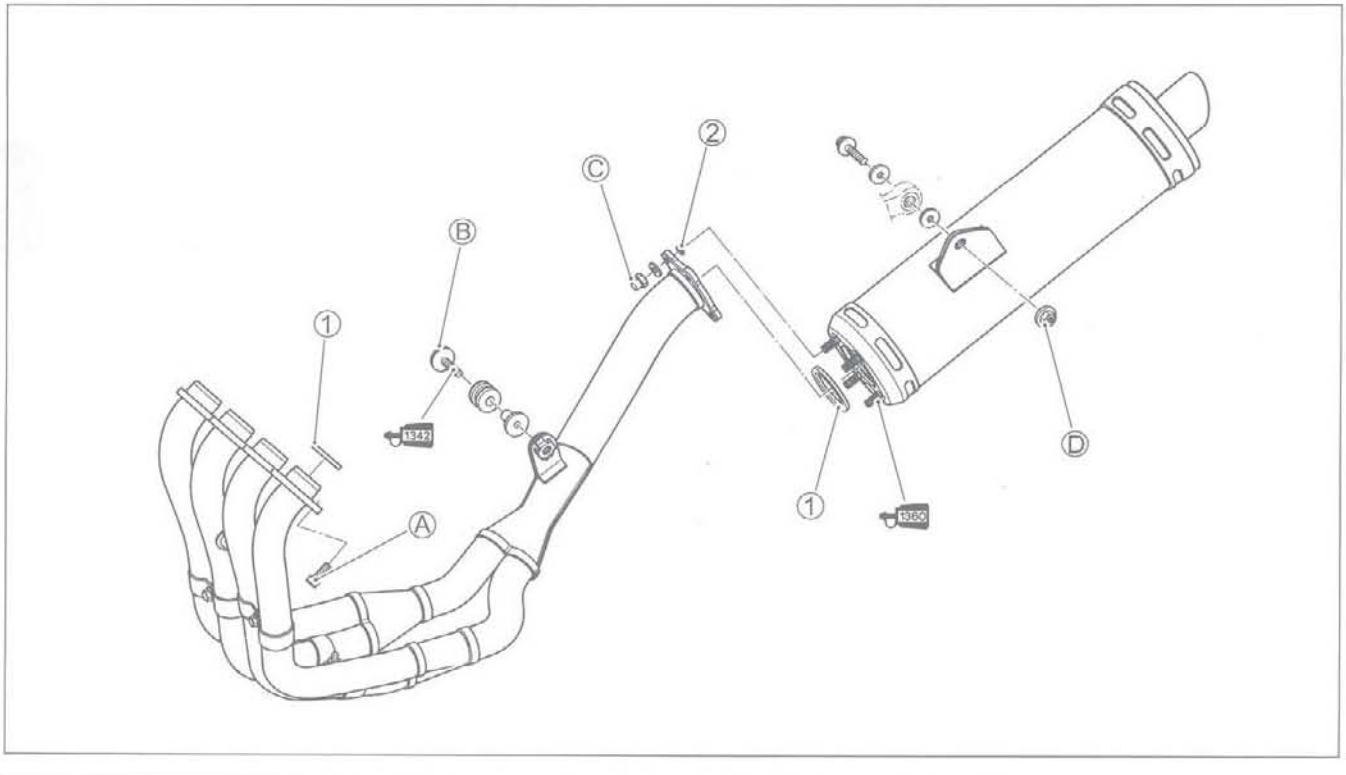

①	Gasket	Ⓑ	Exhaust pipe mounting bolt
②	O-ring	Ⓒ	Muffler connecting nut
Ⓐ	Exhaust pipe bolt	Ⓓ	Muffler mounting nut

ITEM	N·m	kgf-m	lb-ft
ⒶⒷⒹ	23	2.3	16.5
Ⓒ	25	2.5	18.0

CAUTION

Replace the gaskets and O-rings with the new ones.

EXHAUST PIPE AND MUFFLER

REMOVAL

- Remove the under cowling. (☞8-3)
- Drain the engine coolant. (☞2-17)
- Remove the radiator. (☞3-5)
- *Remove the exhaust pipe bolts.*

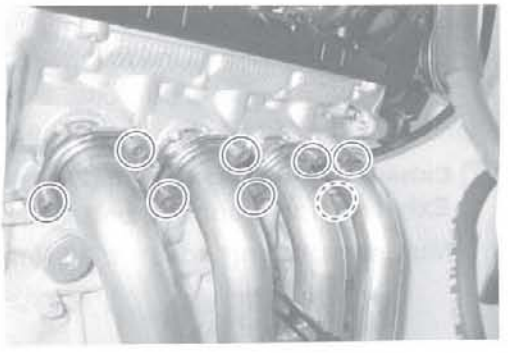

- Remove the exhaust pipe mounting bolt ① and muffler mounting bolt/nut ②.
- Remove the exhaust pipe and muffler.

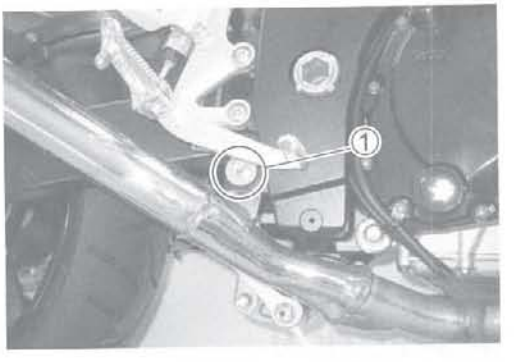

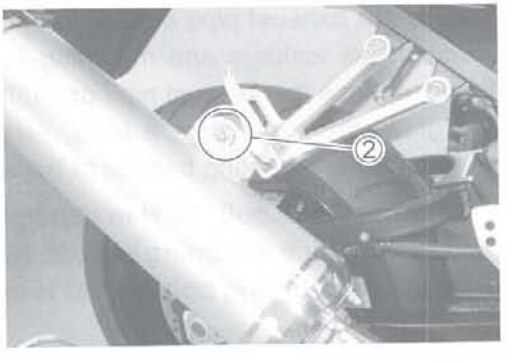

INSTALLATION

Install the exhaust pipe and muffler in the revers order of removal. Pay attention to the following points:

- Tighten the exhaust pipe bolts, exhaust pipe mounting bolt and muffler mounting bolt/nut to the specified torque.

Exhaust pipe bolt: 23 N·m (2.3 kgf-m, 16.5 lb-ft)
Exhaust pipe mounting bolt: 23 N·m (2.3 kgf-m, 16.5 lb-ft)
Muffler mounting bolt/nut: 23 N·m (2.3 kgf-m, 16.5 lb-ft)

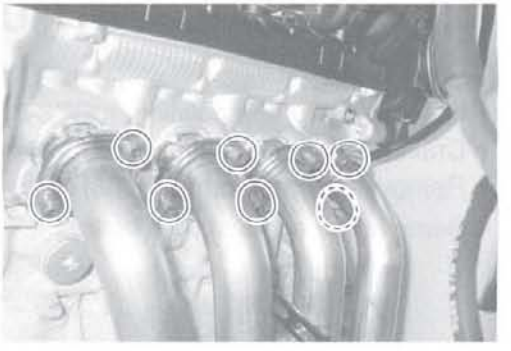

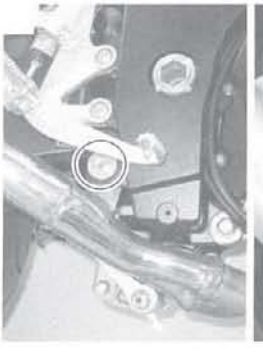

INSPECTION

Inspect the exhaust pipe connection and muffler connection for exhaust gas leakage and mounting condition. If any defect is found, replace the exhaust pipe or muffler with a new one.

- Tighten the exhaust pipe bolts, exhaust pipe mounting bolt and muffler mounting bolt/nut to the specified torque.

Exhaust pipe bolt: 23 N·m (2.3 kgf-m, 16.5 lb-ft)
Exhaust pipe mounting bolt: 23 N·m (2.3 kgf-m, 16.5 lb-ft)
Muffler mounting bolt/nut: 23 N·m (2.3 kgf-m, 16.5 lb-ft)

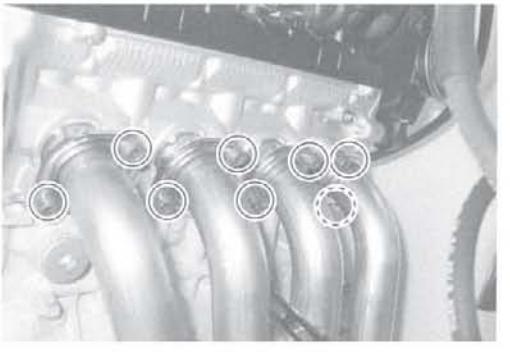

CAUTION

Replace the gaskets and O-rings with the new ones.

COOLING AND LUBRICATION SYSTEM

CONTENTS

ENGINE COOLANT 7- 2
COOLING CIRCUIT 7- 3
COOLING CIRCUIT INSPECTION 7- 3
RADIATOR AND WATER HOSES 7- 4
RADIATOR REMOVAL 7- 4
RADIATOR CAP INSPECTION 7- 4
RADIATOR INSPECTION AND CLEANING 7- 4
RADIATOR INSTALLATION 7- 5
WATER HOSE INSPECTION 7- 5
COOLING FAN 7- 6
REMOVAL 7- 6
INSPECTION 7- 6
INSTALLATION 7- 6
COOLING FAN THERMO-SWITCH 7- 7
REMOVAL 7- 7
INSPECTION 7- 7
INSTALLATION 7- 7
ECT SENSOR 7- 8
REMOVAL 7- 8
INSPECTION 7- 8
INSTALLATION 7- 9
THERMOSTAT 7- 9
REMOVAL 7- 9
INSPECTION 7-10
INSTALLATION 7-10
WATER PUMP 7-11
REMOVAL AND DISASSEMBLY 7-11
INSPECTION 7-14
REASSEMBLY AND INSTALLATION 7-14
LUBRICATION SYSTEM 7-18
OIL COOLER 7-18
OIL PRESSURE 7-19
OIL FILTER 7-19
OIL PRESSURE REGULATOR 7-19
OIL STRAINER 7-19
OIL JET 7-19
OIL PUMP 7-19
OIL PRESSURE SWITCH 7-19
ENGINE LUBRICATION SYSTEM CHART 7-20
ENGINE LUBRICATION SYSTEM 7-21

ENGINE COOLANT

At the time of manufacture, the cooling system is filled with a 50:50 mixture of distilled water and ethylene glycol anti-freeze. This 50:50 mixture will provide the optimum corrosion protection and excellent heat protection, and will protect the cooling system from freezing at temperatures above –31 °C (–24 °F).
If the motorcycle is to be exposed to temperatures below –31 °C (–24 °F), this mixing ratio should be increased up to 55 % or 60 % according to the figure.

Anti-freeze density	Freezing point
50 %	–30 °C (–24 °F)
55 %	–40 °C (–44 °F)
60 %	–55 °C (–67 °F)

CAUTION

- **Use a high quality ethylene glycol base anti-freeze, mixed with distilled water. Do not mix an alcohol base anti-freeze and different brands of anti-freeze.**
- **Do not put in 60 % and more anti-freeze or 50 % and less. (Refer to below figure.)**
- **Do not use a radiator anti-leak additive.**

50 % Engine coolant including reserve tank capacity

Anti-freeze	1475 ml (3.1/2.6 US/Imp.pt)
Water	1475 ml (3.1/2.6 US/Imp.pt)

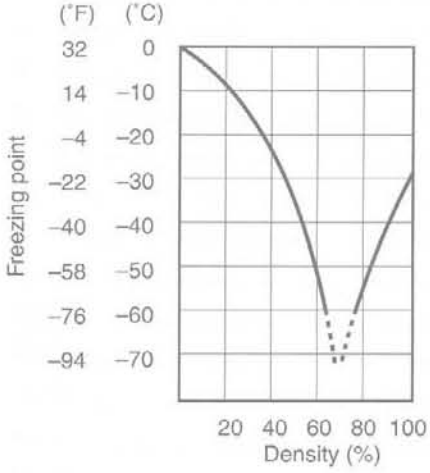

Fig.1 Engine coolant density-freezing point curve.

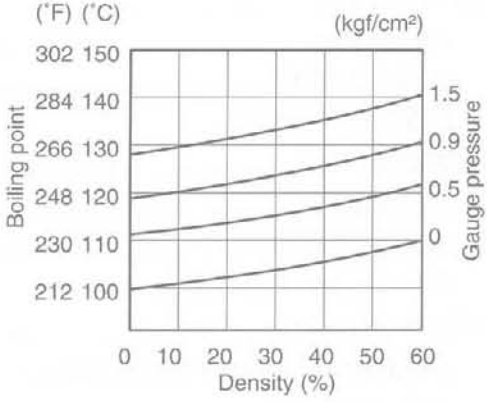

Fig.2 Engine coolant density-boiling point curve.

⚠ WARNING

- **You can be injured by scalding fluid or steam if you open the radiator cap when the engine is hot. After the engine cools, wrap a thick cloth around cap and carefully remove the cap by turning it a quarter turn to allow pressure to escape and then turn the cap all the way off.**
- **The engine must be cool before servicing the cooling system.**
- **Coolant is harmful;**
  - **If it comes in contact with skin or eyes, flush with water.**
  - **If swallowed accidentally, induce vomiting and call physician immediately.**
  - **Keep it away from children.**

COOLING CIRCUIT

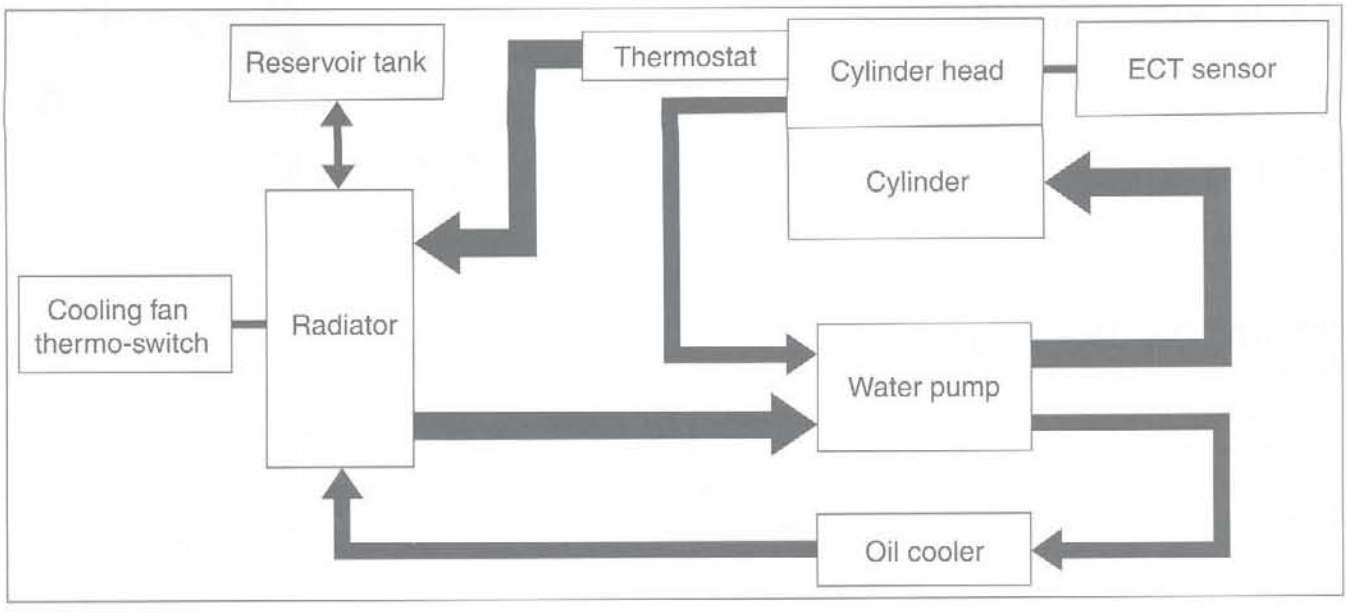

COOLING CIRCUIT INSPECTION

Before removing the radiator and draining the engine coolant, inspect the cooling circuit for tightness.

- Remove the under cowling. (☞8-3)
- Remove the radiator cap ① and connect the tester ② to the filler.

⚠ WARNING

Do not remove the radiator cap when the engine is hot.

- Give a pressure of about 120 kPa (1.2 kgf/cm², 17 psi) and see if the system holds this pressure for 10 seconds.
- If the pressure should fall during this 10-second interval, it means that there is a leaking point in the system. In such a case, inspect the entire system and replace the leaking component or part.

⚠ WARNING

When removing the radiator cap tester, put a rag on the filler to prevent spouting of engine coolant.

CAUTION

Do not allow the pressure to exceed the radiator cap release pressure, or the radiator can be damaged.

RADIATOR AND WATER HOSES

RADIATOR REMOVAL

- Remove the under cowling. (☞8-3)
- Drain the engine coolant. (☞2-17)
- Remove the radiator. (☞3-5)
- Remove the reservoir tank ① from the radiator.

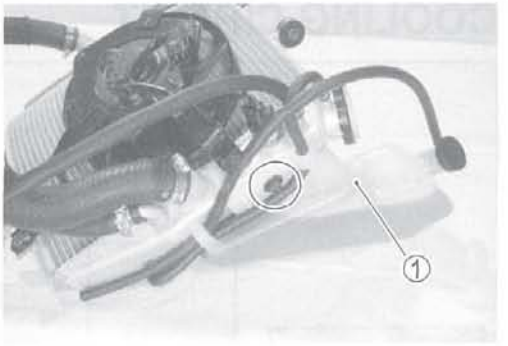

RADIATOR CAP INSPECTION

- Fit the cap ① to the radiator cap tester ②.
- Build up pressure slowly by operating the tester. Make sure that the pressure build-up stops at 93 – 123 kPa (0.93 – 1.23 kgf/cm², 13.2 – 17.5 psi) and that, with the tester held stand-still, the cap is capable of holding that pressure for at least 10 seconds.
- Replace the cap if it is found not to satisfy either of these two requirements.

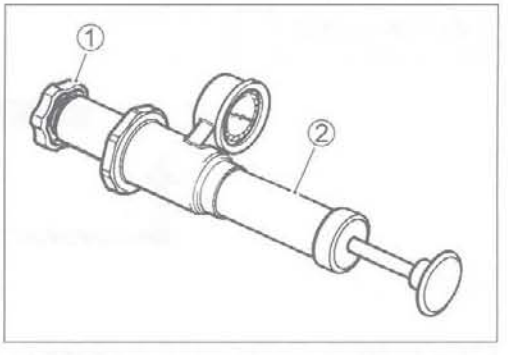

DATA Radiator cap valve opening pressure
Standard: 93 – 123 kPa
(0.93 – 1.23 kgf/cm², 13.2 – 17.5 psi)

RADIATOR INSPECTION AND CLEANING

- Road dirt or trash stuck on the fins must be removed.
- Use of compressed air is recommended for this cleaning.

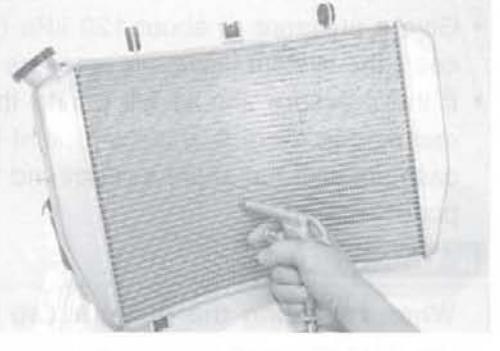

- Fins bent down or dented can be repaired by straightening them with the blade of a small screwdriver.

RADIATOR INSTALLATION

- Install the radiator.
- Route the radiator hoses. (☞10-22)
- Pour engine coolant. (☞2-17)
- Bleed air from the cooling circuit. (☞2-18)
- Install the under cowling. (☞8-4)

WATER HOSE INSPECTION

- Remove the under cowling. (☞8-3)
- Any water hose found in a cracked condition or flattened must be replaced.
- Any leakage from the connecting section should be corrected by proper tightening.

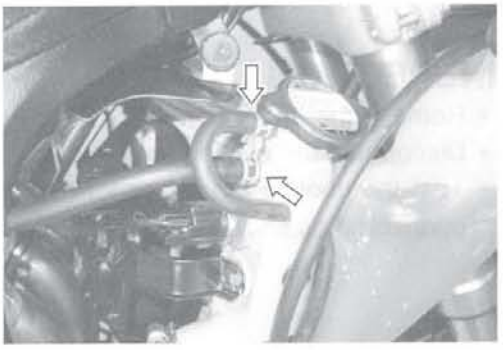

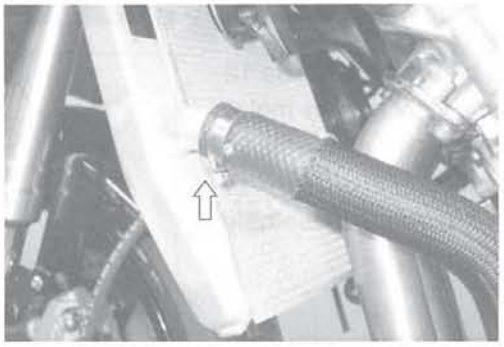

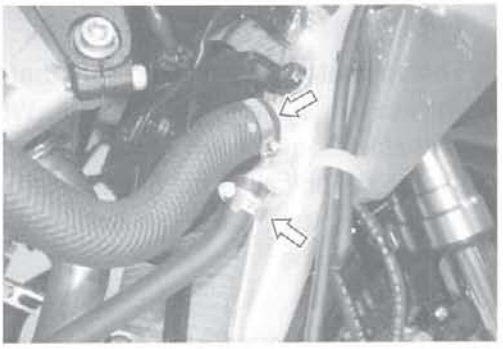

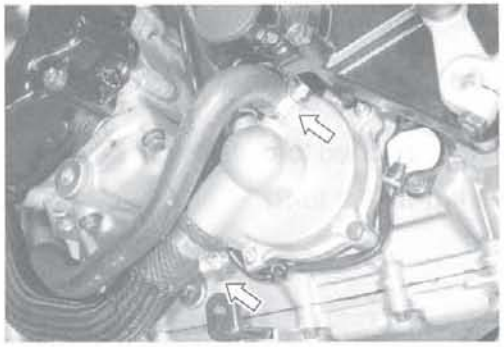

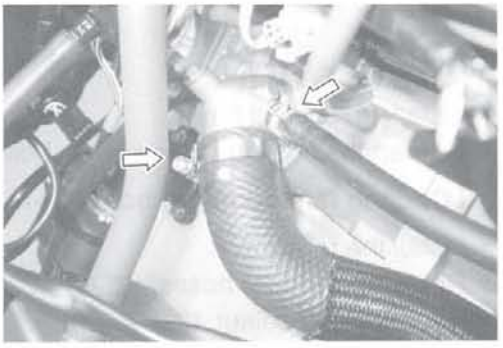

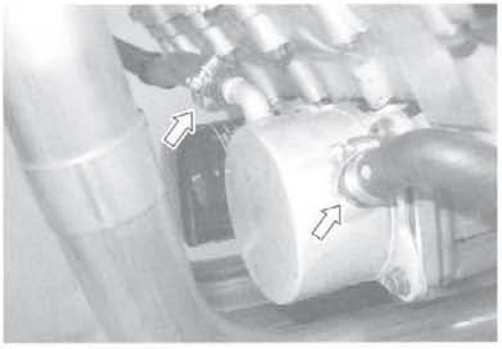

COOLING FAN

REMOVAL

- Remove the under cowling. (☞8-3)
- Drain the engine coolant. (☞2-17)
- Remove the radiator. (☞3-5)
- Disconnect the cooling fan thermo-switch lead wire coupler ①.
- Remove the cooling fan ②.

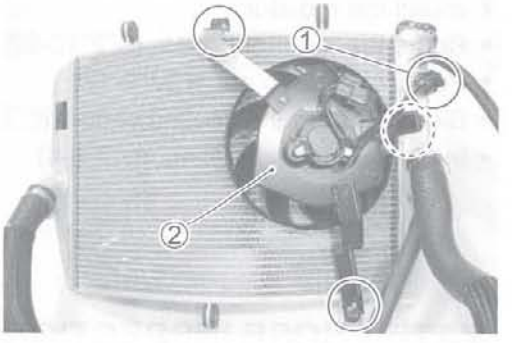

INSPECTION

- Remove the under cowling. (☞8-3)
- Disconnect the cooling fan coupler ①.
- Test the cooling fan motor for load current with an ammeter connected as shown in the illustration.

- The voltmeter is for making sure that the battery ② applies 12 volts to the cooling fan motor ③. With the cooling fan motor with electric motor fan running at full speed, the ammeter ④ should be indicating not 5 amperes and more.
- If the fan motor does not turn, replace the motor assembly with a new one.

NOTE:
When making above test, it is not necessary to remove the cooling fan.

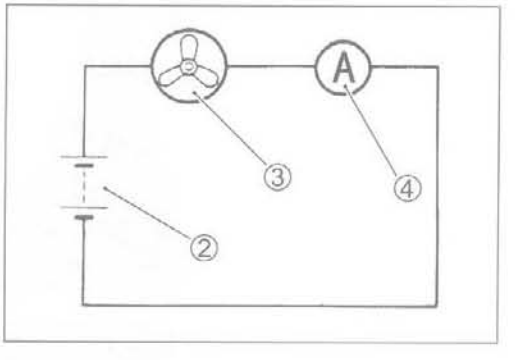

INSTALLATION

- Install the cooling fan ①.
- Tighten the cooling fan mounting bolts to the specified torque.

Cooling fan mounting bolt: 8 N·m (0.8 kgf-m, 6.0 lb-ft)

- Install the radiator.
- Route the radiator hoses. (☞10-22)
- Pour engine coolant. (☞2-17)
- Bleed the air from the cooling circuit. (☞2-18)
- Install the under cowling. (☞8-4)

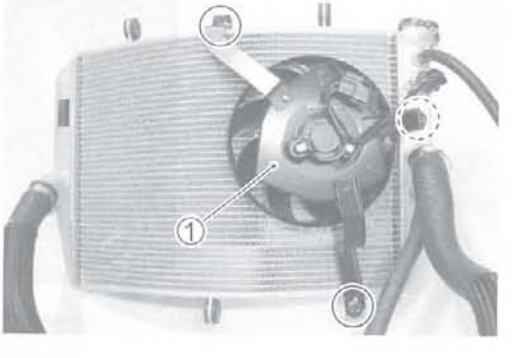

COOLING FAN THERMO-SWITCH

REMOVAL

- Remove the under cowling. (☞8-3)
- Drain the engine coolant. (☞2-17)
- Disconnect the cooling fan thermo-switch lead wire coupler ①.
- Remove the cooling fan thermo-switch ②.

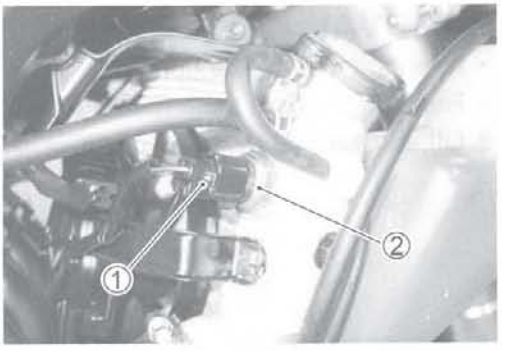

INSPECTION

- Check the thermo-switch closing or opening temperatures by testing it at the bench as shown in the figure. Connect the cooling fan thermo-switch ① to a circuit tester and place it in the oil ② contained in a pan, which is placed on a stove.
- Heat the oil to raise its temperature slowly, and read the column thermometer ③ when the switch closes or opens.

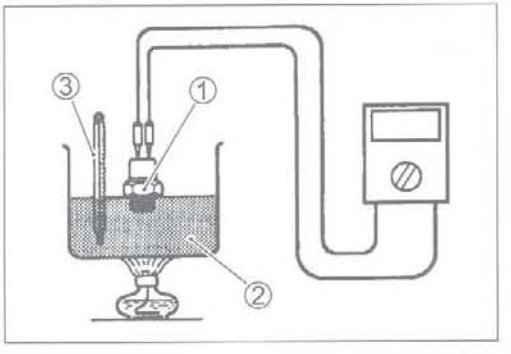

TOOL 09900-25008: Multi-circuit tester set

Tester knob indication: Continuity test (•ı))

DATA Cooling fan thermo-switch operating temperature:
Standard (OFF→ON): Approx. 105 °C (221 °F)
(ON→OFF): Approx. 100 °C (212 °F)

CAUTION

- **Take special care when handling the thermo-switch. It may cause damage if it gets a sharp impact.**
- **Do not contact the cooling fan thermo-switch and the column thermometer with a pan.**

INSTALLATION

- Install the O-ring ①.
- Tighten the cooling fan thermo-switch to the specified torque.

Cooling fan thermo-switch: 17 N·m
(1.7 kgf-m, 12.5 lb-ft)

- Pour engine coolant. (☞2-17)
- Install the under cowling. (☞8-4)

ECT SENSOR

REMOVAL

- Keep the motorcycle upright.
- Remove the front seat. (☞8-6)
- Lift and support the fuel tank. (☞5-3)

- Disconnect the ECT sensor coupler ①.
- Place a rag under the ECT sensor and remove the ECT sensor.

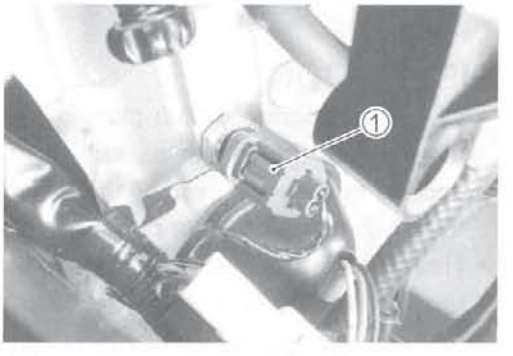

INSPECTION

- Check the ECT sensor by testing it at the bench as shown in the figure. Connect the ECT sensor ① to a circuit tester and place it in the oil ② contained in a pan, which is placed on a stove.
- Heat the oil to raise its temperature slowly and read the column thermometer ③ and the ohmmeter.

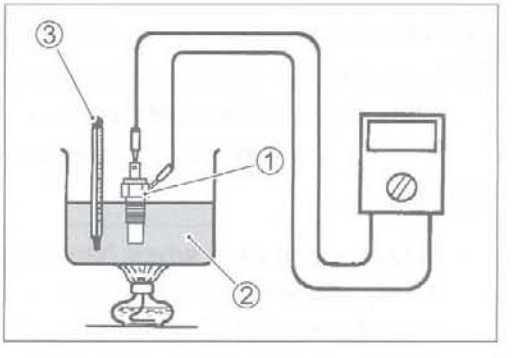

- If the ECT sensor ohmic value does not change in the proportion indicated, replace it with a new one.

DATA Temperature sensor specification

Temperature	Standard resistance
20 °C (68 °F)	Approx. 2.45 kΩ
50 °C (122 °F)	Approx. 0.811 kΩ
80 °C (176 °F)	Approx. 0.318 kΩ
110 °C (230 °F)	Approx. 0.142 kΩ

If the resistance is noted to show infinity or too much different resistance value, replace the ECT sensor with a new one.

CAUTION

*** Take special care when handling the ECT sensor. It may cause damage if it gets a sharp impact.**
*** Do not contact the ECT sensor and the column thermometer with a pan.**

INSTALLATION

- Tighten the ECT sensor to the specified torque.

ECT sensor: 18 N·m
(1.8 kgf-m, 13.0 lb-ft)

CAUTION

Take special care when handling the ECT sensor. It may cause damage if it gets a sharp impact.

- Install the fuel tank. (☞5-3)
- Install the front seat.
- Pour engine coolant. (☞2-17)

THERMOSTAT

REMOVAL

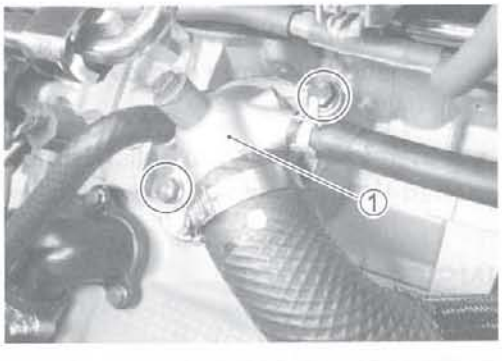

- Remove the front seat. (☞8-6)
- Lift and support the fuel tank. (☞5-3)
- Place a rag under the thermostat cover.
- Remove the thermostat cover ①.

- Remove the thermostat ②.

INSPECTION

Inspect the thermostat pellet for signs of cracking.

Test the thermostat at the bench for control action, in the following manner.

- Pass a string ① between flange ② of thermostat, as shown.
- Immerse the thermostat in the water contained in a beaker, as shown in the illustration. Note that the immersed thermostat is in suspension. Heat the water ③ by placing the beaker on a stove ④ and observe the rising temperature on a thermometer ⑤.

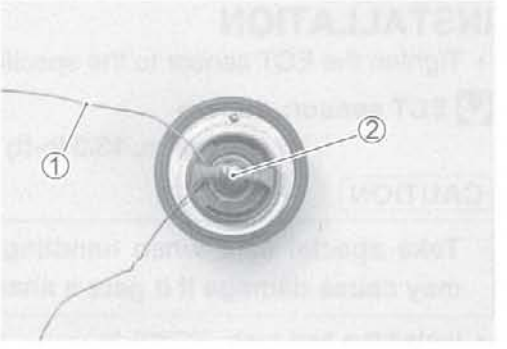

- Read the thermometer just when opening the thermostat. This reading, which is the temperature level at which the thermostat valve begins to open, should satisfy the standard value.

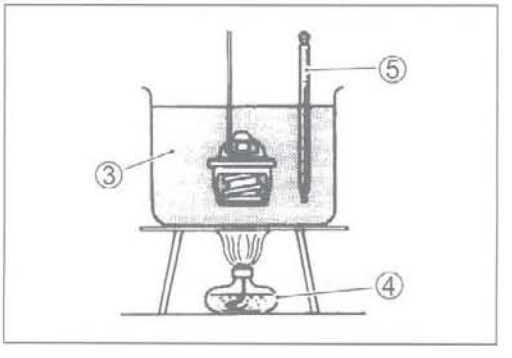

DATA Thermostat valve opening temperature
Standard: Approx. 88 °C (190 °F)

- Keep on heating the water to raise its temperature.
- Just when the water temperature reaches specified value, the thermostat valve should have lifted by at least 8 mm (0.31 in).

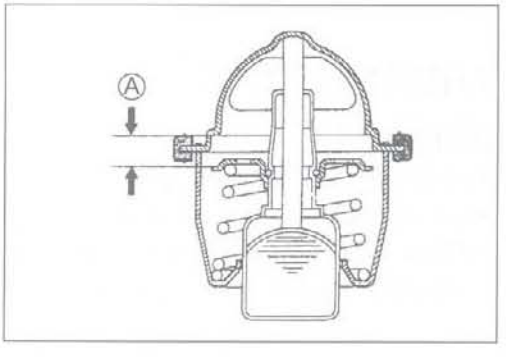

DATA Thermostat valve lift Ⓐ
Standard: 8 mm and over at 100 °C
(0.31 in and over at 212 °F)

- A thermostat failing to satisfy either of the two requirements (start-to-open temperature and valve lift) must be replaced.

INSTALLATION

- Install the thermostat.

NOTE:
The jiggle valve Ⓐ of the thermostat faces upside.

- Install the thermostat cover ①.
- Tighten the thermostat cover bolts to the specified torque.

Thermostat cover bolt: 10 N·m (1.0 kgf-m, 7.0 lb-ft)

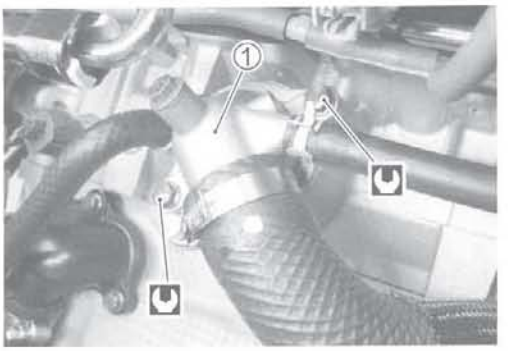

- Install the fuel tank. (☞5-3)
- Install the front seat.
- Pour engine coolant.

WATER PUMP

REMOVAL AND DISASSEMBLY

- Remove the under cowling. (☞8-3)
- Drain the engine coolant. (☞2-17)
- Drain the engine oil. (☞2-12)

NOTE:
Before draining engine oil and engine coolant, inspect engine oil and coolant leakage between the water pump and crankcase. If engine oil is leaking, visually inspect the oil seal and O-ring. If engine coolant is leaking, visually inspect the mechanical seal and seal washer. (☞7-14)

- Remove the gearshift lever ①.
- Remove the engine sprocket cover ②.

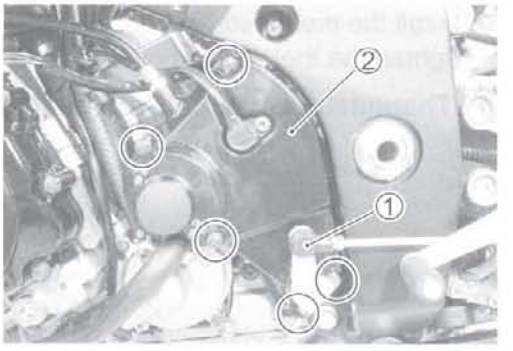

- Disconnect the water hoses.

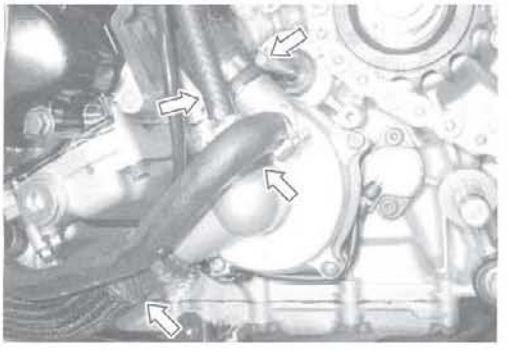

- Release the gear position switch lead wire from the clamp ③.
- Remove the water pump ④.

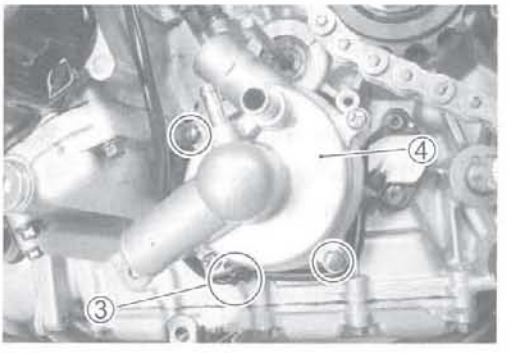

- Remove the water pump cover ⑤ and clamp ⑥.

- Remove the impeller securing bolt by holding the impeller with a water pump pliers.

- Remove the mechanical seal ring ⑦ and rubber seal ⑧ from the impeller.

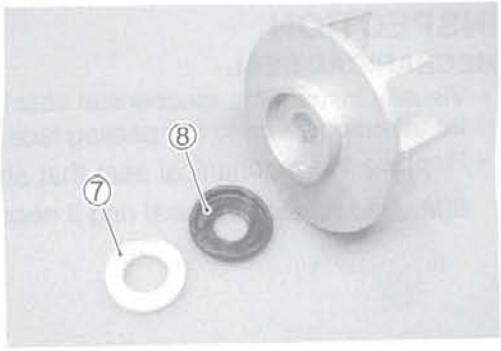

- Remove the impeller shaft ⑨ and washer ⑩.

- Remove the mechanical seal with the special tool.

TOOL 09921-20240: Bearing remover set (12 mm)

NOTE:
If there is no abnormal condition, the mechanical seal removal is not necessary.

CAUTION

The removed mechanical seal must be replaced with a new one.

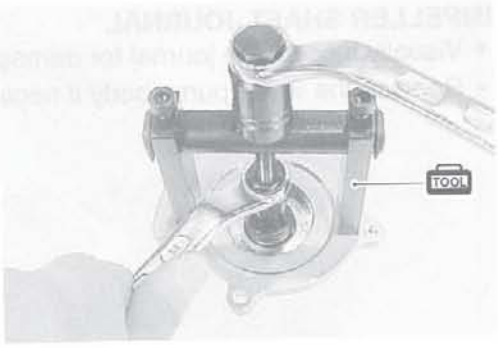

- Remove the oil seal using a suitable bar.

NOTE:
If there is no abnormal condition, the oil seal removal is not necessary.

CAUTION

The removed oil seal must be replaced with a new one.

INSPECTION

MECHANICAL SEAL

- Visually inspect the mechanical seal for damage, with particular attention given to the sealing face.
- Replace the mechanical seal that shows indications of leakage. Also replace the seal ring if necessary.

OIL SEAL

- Visually inspect the oil seal for damage, with particular attention given to the lip.
- Replace the oil seal that shows indications of leakage.

IMPELLER SHAFT JOURNAL

- Visually inspect the journal for damage or scratch.
- Replace the water pump body if necessary.

SEAL WASHER

- Visually inspect the seal washer for damage, with particular attention given to the sealing face.
- Replace the seal washer that shows indications of leakage.

REASSEMBLY AND INSTALLATION

- Install the oil seal with the special tool.

TOOL 09913-70210: Bearing installer set (ϕ 22)

NOTE:

The stamped mark on the oil seal faces mechanical seal side.

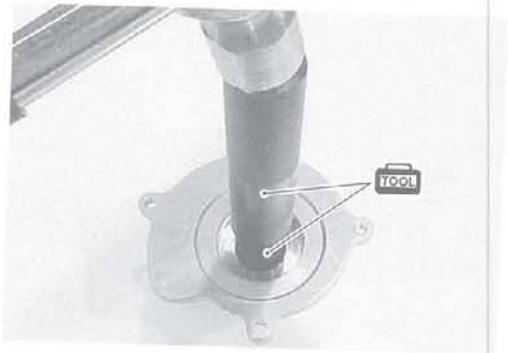

- Apply a small quantity of the SUZUKI SUPER GREASE "A" to the oil seal lip.

99000-25030: SUZUKI SUPER GREASE "A" (USA)
99000-25010: SUZUKI SUPER GREASE "A" (Others)

- Install the new mechanical seal using a suitable size socket wrench.

NOTE:
On the new mechanical seal, the sealer Ⓐ has been applied.

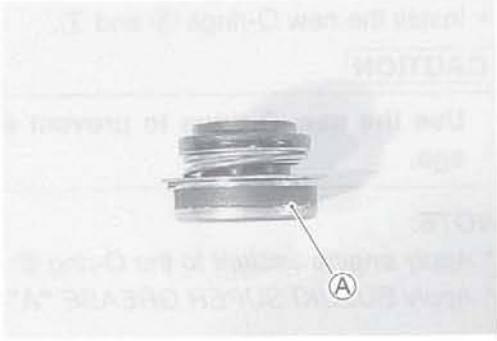

- Apply SUZUKI SUPER GREASE "A" to the impeller shaft.

99000-25030: SUZUKI SUPER GREASE "A" (USA)
99000-25010: SUZUKI SUPER GREASE "A" (Others)

- Install the impeller shaft to the water pump body.

- Install the rubber seal ① into the impeller.
- After wiping off the oily or greasy matter from the mechanical seal ring, install it into the impeller.

NOTE:
The paint marked side Ⓑ of mechanical seal ring faces the rubber seal.

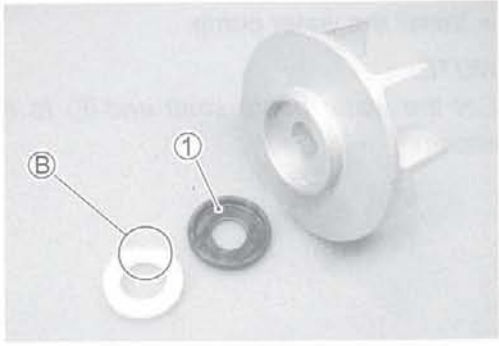

- Install the washer ② and seal washer ③ onto the impeller securing bolt ④.

NOTE:
The metal side Ⓒ of seal washer and the curved side Ⓓ of washer face the impeller securing bolt head.

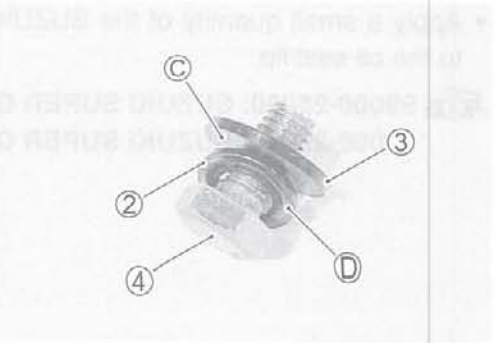

- Install the impeller ⑤ and its securing bolt onto the shaft.
- Tighten the impeller securing bolt to the specified torque.

Impeller securing bolt: 8 N·m (0.8 kgf-m, 5.7 lb-ft)

NOTE:
Before installing the impeller securing bolt, apply a small quantity of the THREAD LOCK to it.

99000-32050: THREAD LOCK "1342"

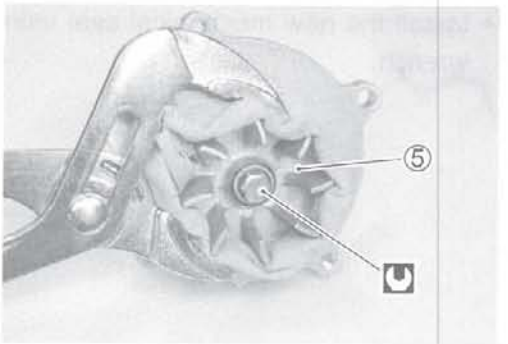

- Install the new O-rings ⑥ and ⑦.

CAUTION

Use the new O-rings to prevent engine coolant leakage.

NOTE:
** Apply engine coolant to the O-ring ⑥.*
** Apply SUZUKI SUPER GREASE "A" to the O-ring ⑦.*

99000-25030: SUZUKI SUPER GREASE "A" (USA)
99000-25010: SUZUKI SUPER GREASE "A" (Others)

- Tighten the water pump cover screws to the specified torque.

Water pump cover screw: 5 N·m (0.5 kgf-m, 3.7 lb-ft)

NOTE:
Fit the clamp Ⓔ to the water pump cover screw.

- Install the water pump.

NOTE:
Set the water pump shaft end Ⓕ to the oil pump shaft Ⓖ as shown.

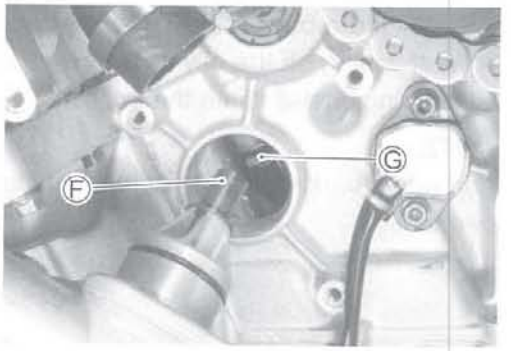

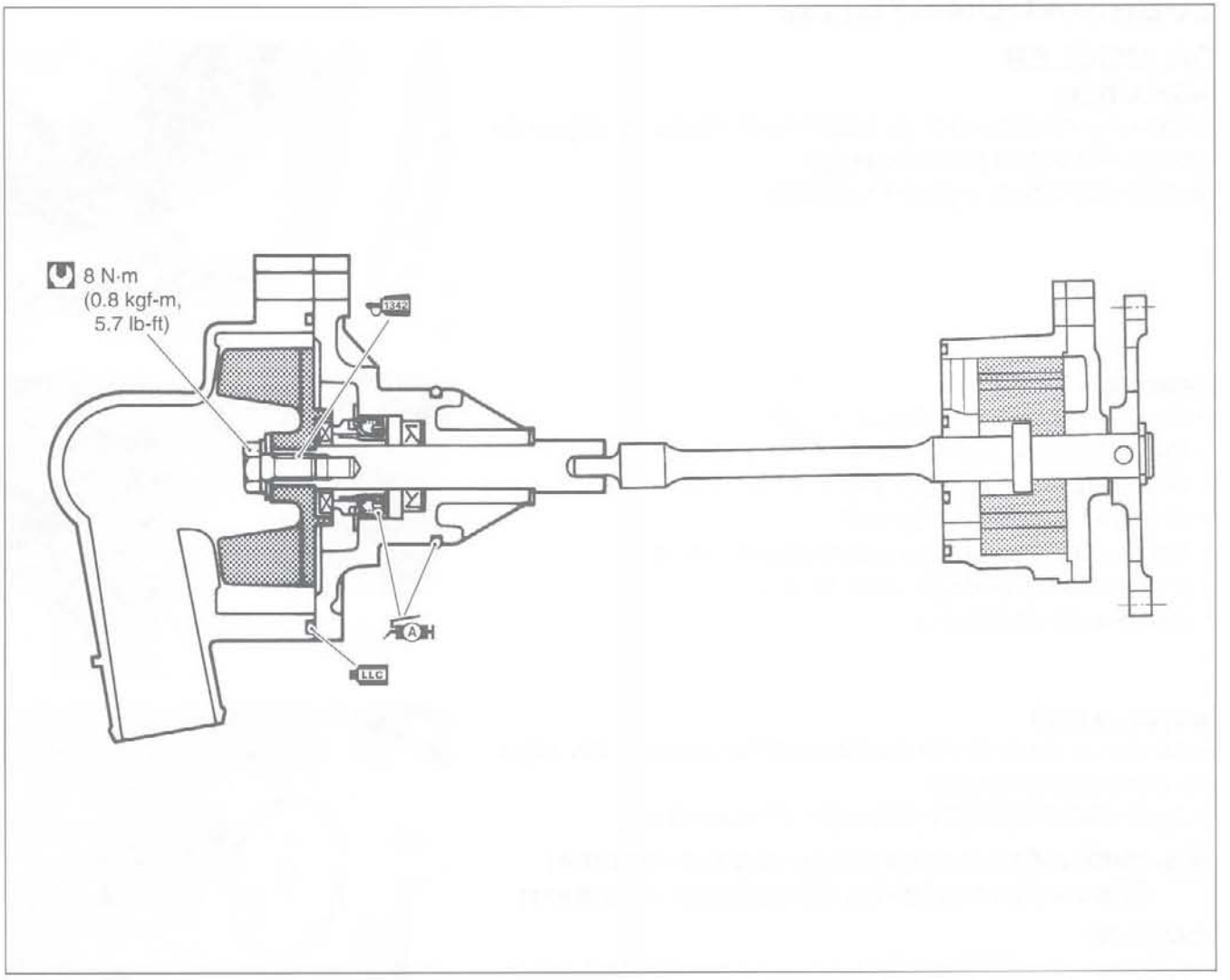

- Tighten the water pump mounting bolts to the specified torque.

Water pump mounting bolt: 10 N·m (1.0 kgf-m, 7.0 lb-ft)

NOTE:
Pass the gear position switch lead wire ⑧ under the water pump lib.

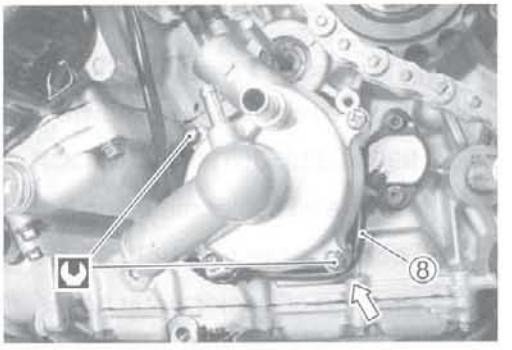

- Connect the water hoses. (☞10-22)
- Install the engine sprocket cover.
- Install the gearshift lever.
- Pour engine coolant. (☞2-17)
- Pour engine oil. (☞2-13)
- Install the under cowling. (☞8-4)

LUBRICATION SYSTEM

OIL COOLER

INSPECTION

Inspect the oil cooler and oil cooler water hoses for engine oil leakage and engine coolant leakage.
Replace any defective parts if necessary.

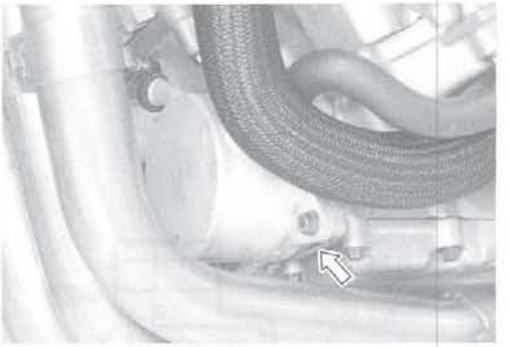

REMOVAL

- Remove the under cowling. (☞8-3)
- Drain engine oil. (☞2-12)
- Drain engine coolant. (☞2-17)
- Remove the radiator. (☞3-5)
- Remove the exhaust pipe and muffler. (☞6-3)
- Disconnect the oil cooler water hose ①.
- Remove the oil cooler ②.

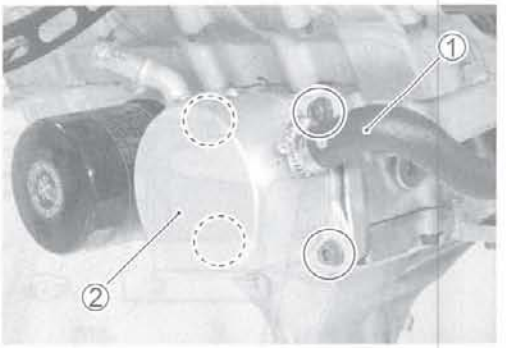

INSTALLATION

Install the oil cooler in the reverse order of removal. Pay attention to the following points:

- Apply SUZUKI SUPER GREASE "A" to the O-ring.

99000-25030: SUZUKI SUPER GREASE "A" (USA)
99000-25010: SUZUKI SUPER GREASE "A" (Others)

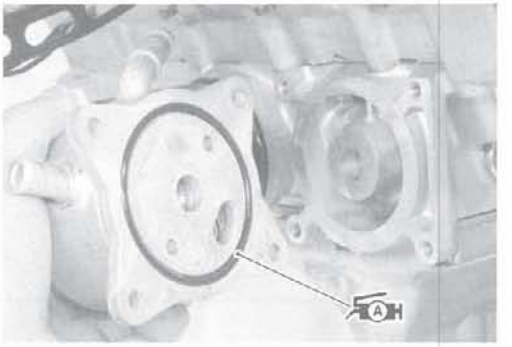

CAUTION

Replace the O-ring with a new one.

- Apply THREAD LOCK to the oil cooler mounting bolts and install the oil cooler ① as shown.

99000-32050: THREAD LOCK "1342"

- Tighten the oil cooler mounting bolts to the specified torque.

Oil cooler mounting bolt: 10 N·m (1.0 kgf-m, 7.0 lb-ft)

- Connect the oil cooler water hoses. (☞10-22)
- Install the exhaust pipe and muffler. (☞6-4)
- Install the radiator. (☞7-5)
- Pour engine coolant. (☞2-17)
- Pour engine oil. (☞2-13)
- Install the under cowling. (☞8-4)

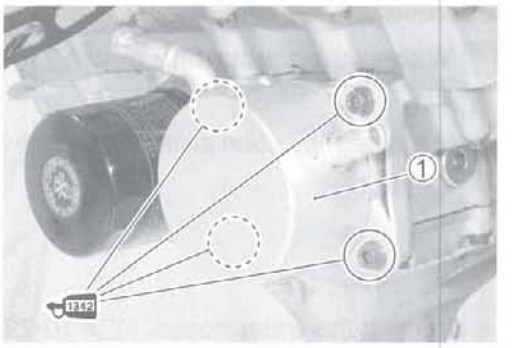

OIL PRESSURE
☞2-33

OIL FILTER
☞2-13

OIL PRESSURE REGULATOR
☞3-49

OIL STRAINER
☞3-49

OIL JET
☞3-60

OIL PUMP
☞3-46

OIL PRESSURE SWITCH
☞9-30

ENGINE LUBRICATION SYSTEM CHART

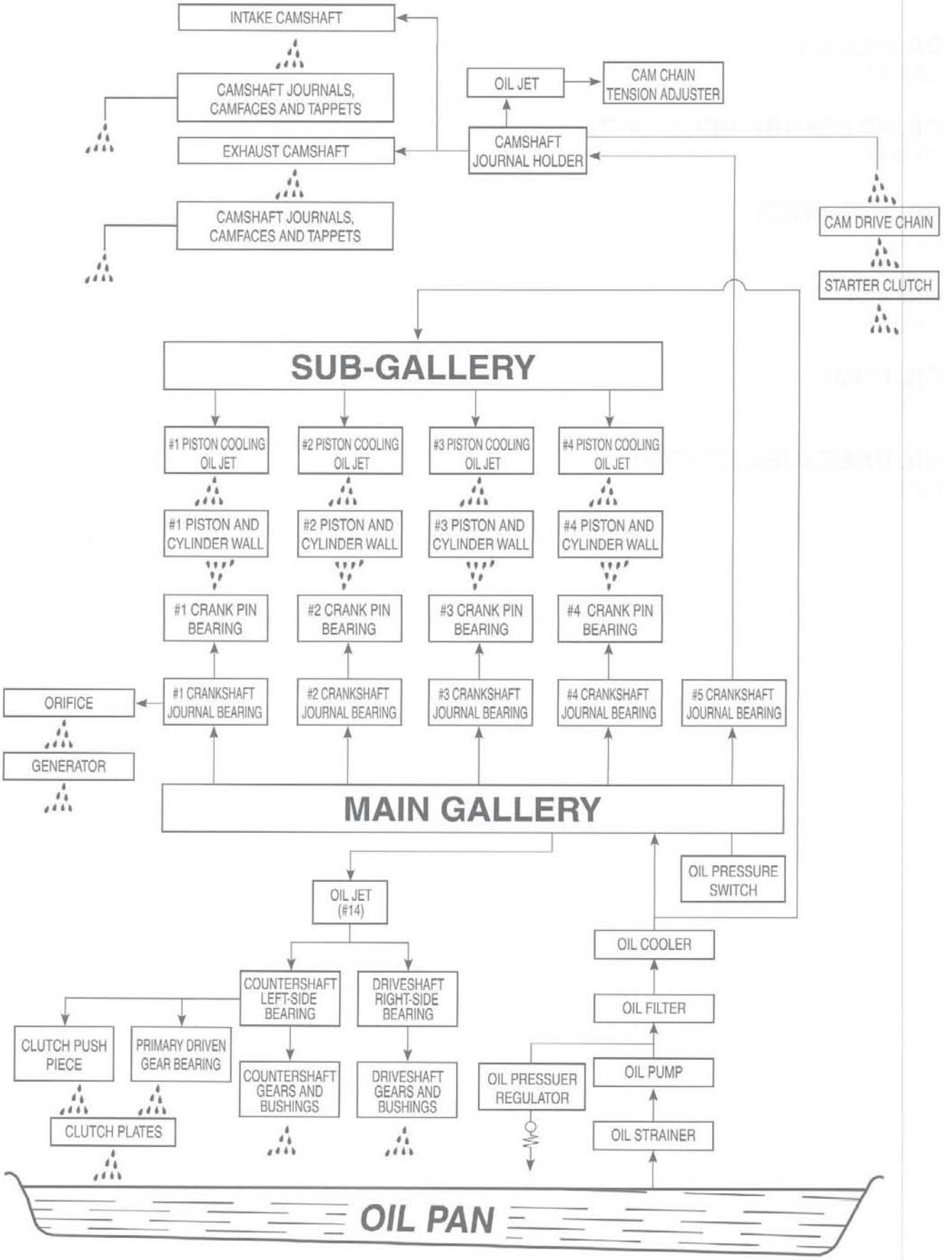

ENGINE LUBRICATION SYSTEM

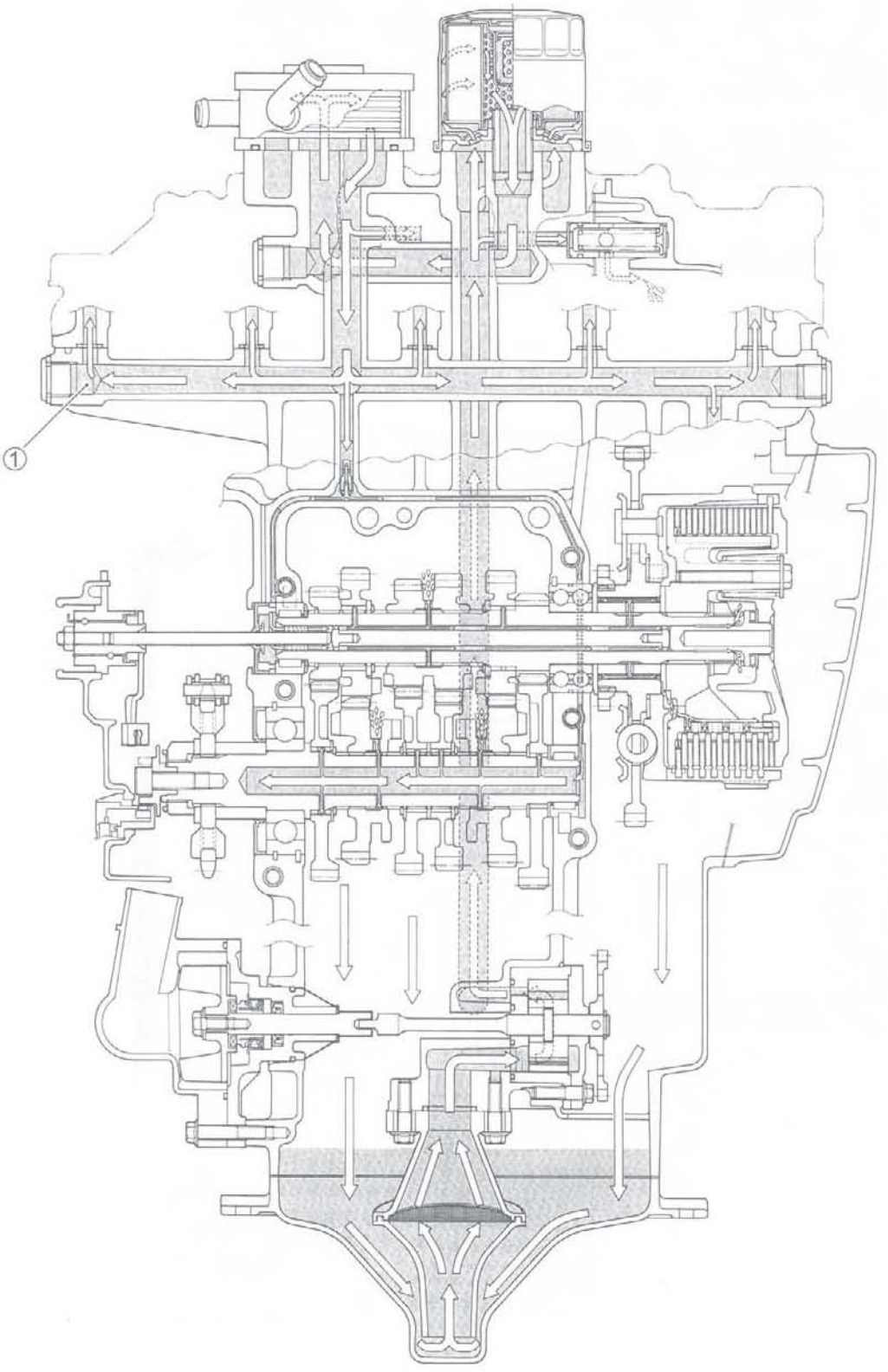

① Main gallery

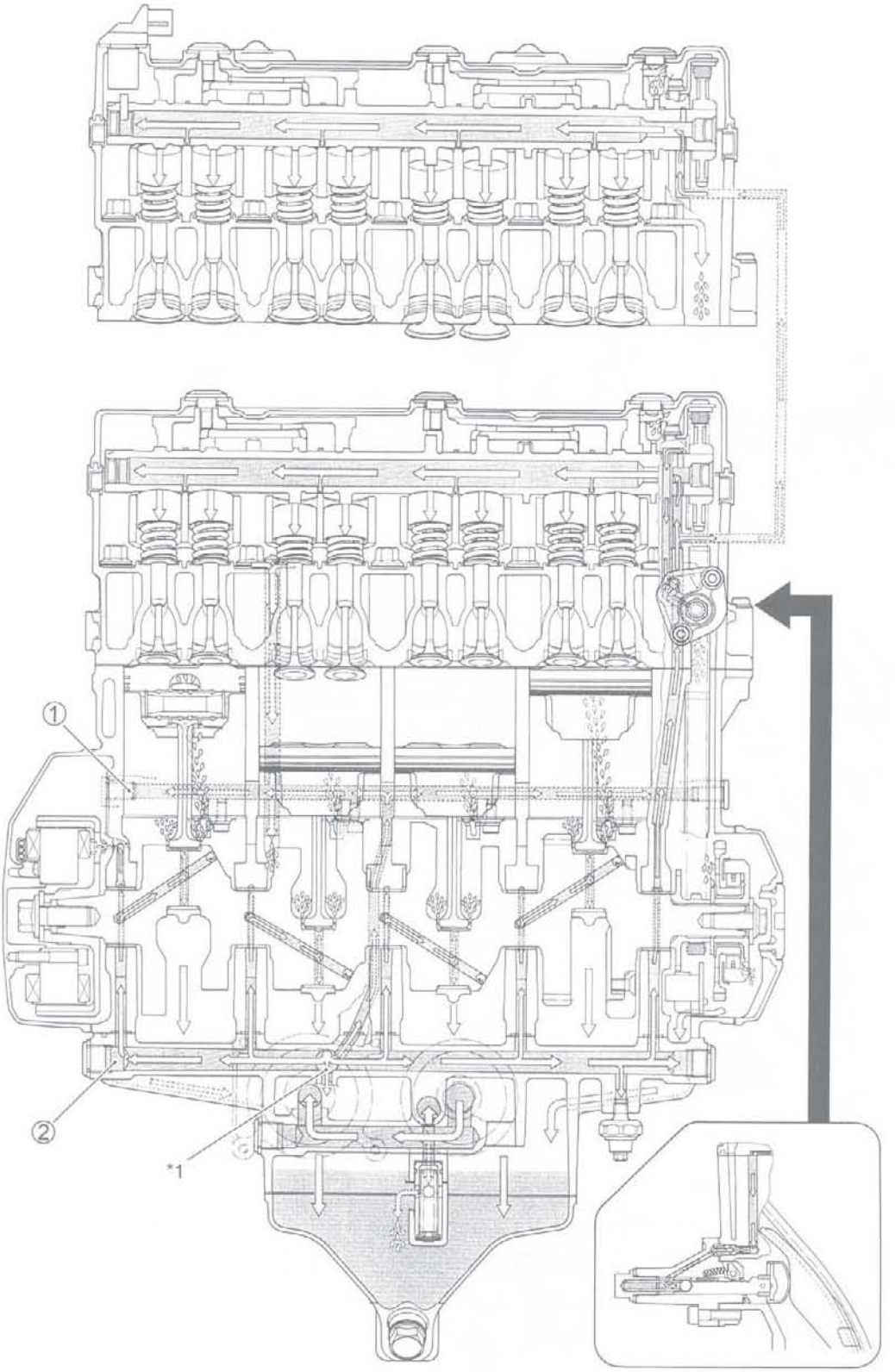

① Sub-gallery ② Main gallery *1 To transmission

CHASSIS

CONTENTS

EXTERIOR PARTS 8- 2
- FASTENER REMOVAL AND REINSTALLATION 8- 2
- SCREEN 8- 3
- BODY COWLING COVER AND LOWER BRACKET COVER 8- 3
- RIGHT AND LEFT UNDER COWLINGS 8- 3
- BODY COWLING 8- 5
- RIGHT AND LEFT AIR INTAKE PIPES 8- 6
- COWLING BRACE 8- 6
- FRONT SEAT 8- 6
- REAR SEAT AND SEAT TAIL COVER 8- 7
- FRAME COVER 8- 7

FRONT WHEEL 8- 8
- CONSTRUCTION 8- 8
- REMOVAL 8- 9
- INSPECTION AND DISASSEMBLY 8- 9
- REASSEMBLY AND INSTALLATION 8-11

FRONT FORK 8-14
- CONSTRUCTION 8-14
- REMOVAL 8-15
- DISASSEMBLY 8-16
- INSPECTION 8-18
- REASSEMBLY 8-19
- INSTALLATION 8-23
- SUSPENSION SETTING 8-25

STEERING DAMPER 8-26
- CONSTRUCTION 8-26
- REMOVAL 8-26
- INSPECTION 8-26
- INSTALLATION 8-27

STEERING 8-28
- CONSTRUCTION 8-28
- REMOVAL 8-29
- INSPECTION 8-30
- DISASSEMBLY 8-30
- REASSEMBLY 8-30
- INSTALLATION 8-31
- STEERING TENSION ADJUSTMENT 8-33

HANDLEBARS 8-34
- CONSTRUCTION 8-34
- REMOVAL 8-34
- INSTALLATION 8-35

REAR WHEEL 8-38
- CONSTRUCTION 8-38
- REMOVAL 8-39
- INSPECTION AND DISASSEMBLY 8-40
- REASSEMBLY AND INSTALLATION 8-42

REAR SHOCK ABSORBER 8-46
- CONSTRUCTION 8-46
- REMOVAL 8-47

INSPECTION 8-47
REAR SHOCK ABSORBER SCRAPPING PROCEDURE 8-48
INSTALLATION 8-48
SUSPENSION SETTING 8-49
REAR SUSPENSION 8-50
CONSTRUCTION 8-50
REMOVAL 8-51
INSPECTION AND DISASSEMBLY 8-53
REASSEMBLY 8-55
INSTALLATION 8-57
FINAL INSPECTION AND ADJUSTMENT 8-58
FRONT BRAKE 8-59
CONSTRUCTION 8-59
BRAKE PAD REPLACEMENT 8-60
BRAKE FLUID REPLACEMENT 8-61
CALIPER REMOVAL 8-62
CALIPER DISASSEMBLY 8-62
CALIPER INSPECTION 8-64
CALIPER REASSEMBLY 8-64
CALIPER INSTALLATION 8-65
BRAKE DISC INSPECTION 8-66
MASTER CYLINDER REMOVAL 8-67
MASTER CYLINDER DISASSEMBLY 8-68
MASTER CYLINDER INSPECTION 8-68
MASTER CYLINDER REASSEMBLY 8-69
MASTER CYLINDER INSTALLATION 8-69
REAR BRAKE 8-71
CONSTRUCTION 8-71
BRAKE PAD REPLACEMENT 8-72
BRAKE FLUID REPLACEMENT 8-73
CALIPER REMOVAL 8-73
CALIPER DISASSEMBLY 8-73
CALIPER INSPECTION 8-74
CALIPER REASSEMBLY 8-75
CALIPER INSTALLATION 8-76
MASTER CYLINDER REMOVAL 8-77
MASTER CYLINDER DISASSEMBLY 8-77
MASTER CYLINDER INSPECTION 8-78
MASTER CYLINDER REASSEMBLY 8-78
MASTER CYLINDER INSTALLATION 8-79
TIRE AND WHEEL 8-80
TIRE REMOVAL 8-80
INSPECTION 8-80
VALVE INSPECTION 8-81
TIRE INSTALLATION 8-82
BALANCER WEIGHT INSTALLATION 8-83
DRIVE CHAIN 8-84
DRIVE CHAIN CUTTING 8-84
DRIVE CHAIN CONNECTING 8-85

EXTERIOR PARTS

FASTENER REMOVAL AND REINSTALLATION

FASTENER

Removal

- Depress the head of fastener center piece ①.
- Pull out the fastener ⓐ.

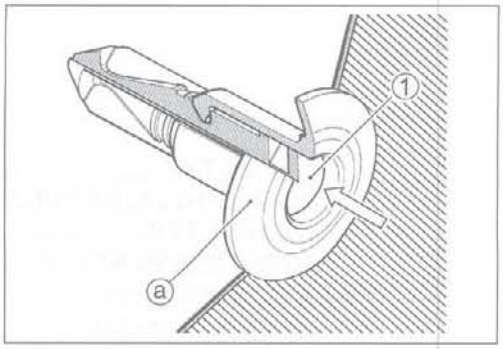

Installation

- Let the center piece stick out toward the head so that the pawls ② close.
- Insert the fastener into the installation hole.

NOTE:
To prevent the pawl ② from damage, insert the fastener all the way into the installation hole.

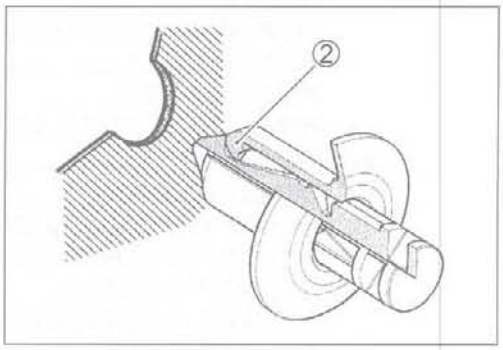

- Push in the head of center piece until it becomes flush with the fastener outside face.

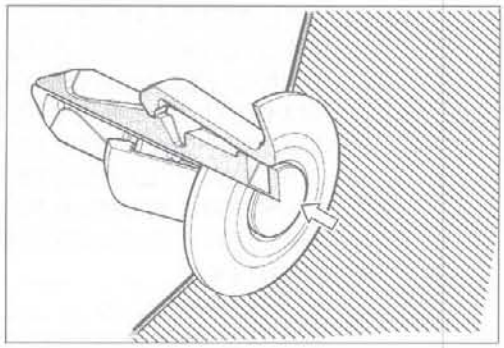

FASTENER

Removal

- Pull the head of fastener center piece
- Pull out the fastener ⓑ.

Installation

- Let the center piece stick out toward the head so that the pawls close.
- Insert the fastener into the installation hole.
- Push in the head of center piece.

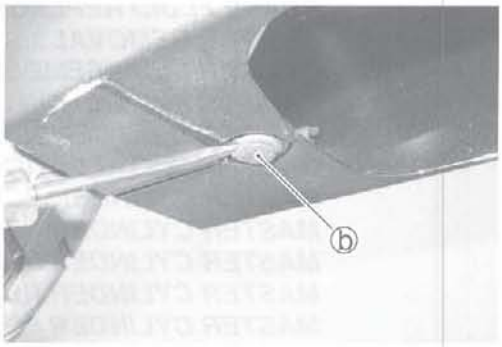

SCREEN

REMOVAL

- Remove the rear view mirrors.

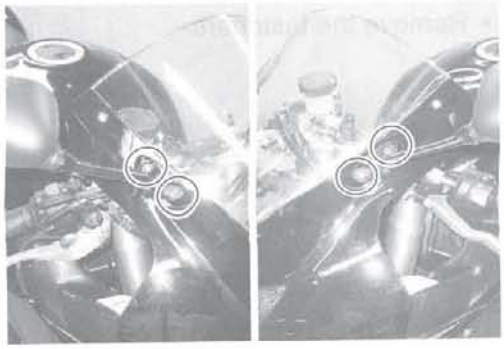

- Remove the screen ①.

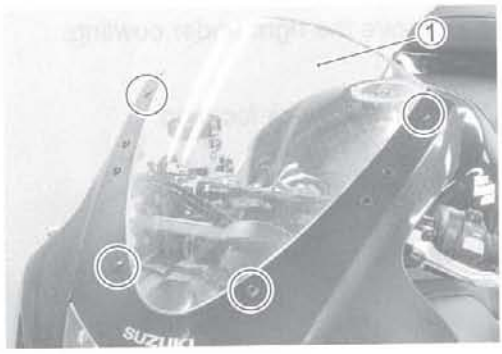

INSTALLATION

- Install the screen in the reverse order of removal.

BODY COWLING COVER AND LOWER BRACKET COVER

REMOVAL

- Remove the body cowling cover ① by removing the fasteners.
- Remove the lower bracket cover ② by removing the bolts.

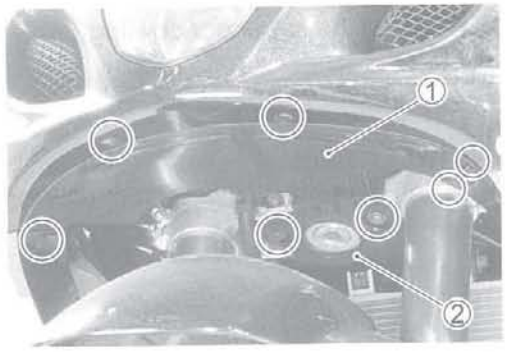

INSTALLATION

- Install the body cowling cover and lower bracket cover in the reverse order of removal.

RIGHT AND LEFT UNDER COWLINGS

REMOVAL

- Remove the fasteners.

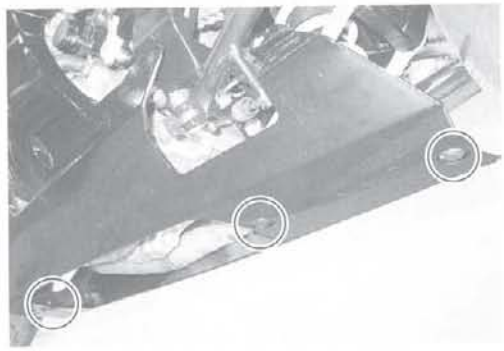

- Remove the fasteners.

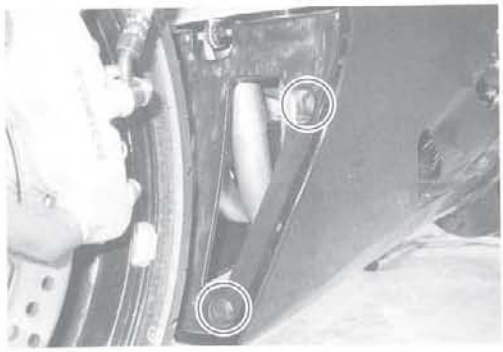

- Remove the fasteners.

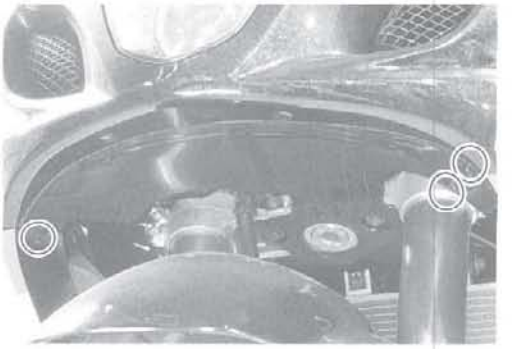

- Remove the right under cowling.

NOTE:
"☆" indicates hook location.

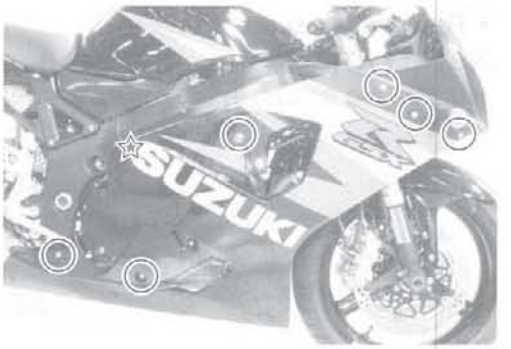

- Remove the left under cowling.

NOTE:
"☆" indicates hook location.

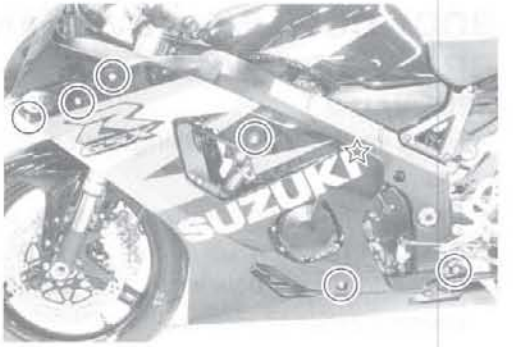

INSTALLATION

- Install the right and left under cowlings in the reverse order of removal.

BODY COWLING

REMOVAL

- Remove the screen. (☞8-3)
- Remove the body cowling cover ①.

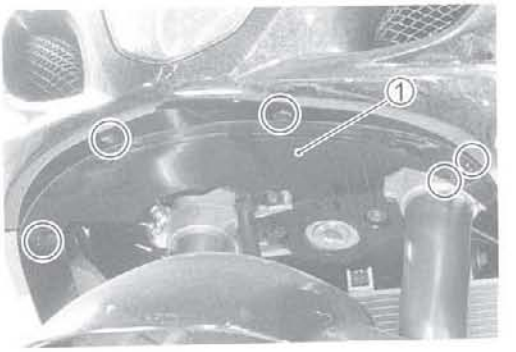

- Remove the bolts.

- Remove the screws and fasteners.

- Disconnect the lead wire coupler ② and wire clamp ③.
- Remove the body cowling.

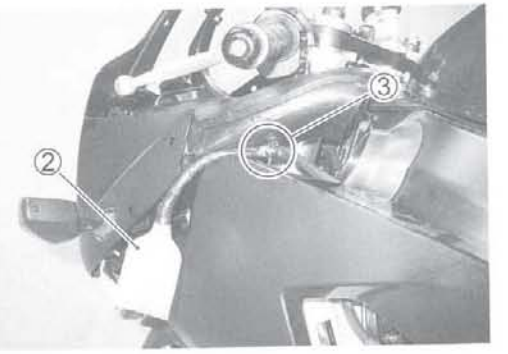

INSTALLATION

Install the body cowling in the reverse order of removal. Pay attention to the following points:

NOTE:

When remounting the body cowling, install the hooks Ⓐ to the cowling brace holes.

RIGHT AND LEFT AIR INTAKE PIPES

REMOVAL

- Remove the body cowling. (☞8-5)
- Remove the fasteners.
- Remove the air intake pipes ①.

INSTALLATION

Install the right and left air intake pipes in the reverse order of removal.

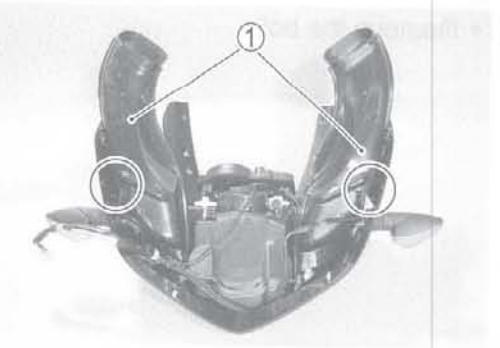

COWLING BRACE

REMOVAL

- Remove the body cowling. (☞8-5)
- Remove the cowling brace ①.

INSTALLATION

Install the cowling brace in the reverse order of removal. Pay attention to the following points:

- Tighten the cowling brace bolts.

Cowling brace bolt: 23 N·m (2.3 kgf-m, 16.5 lb-ft)

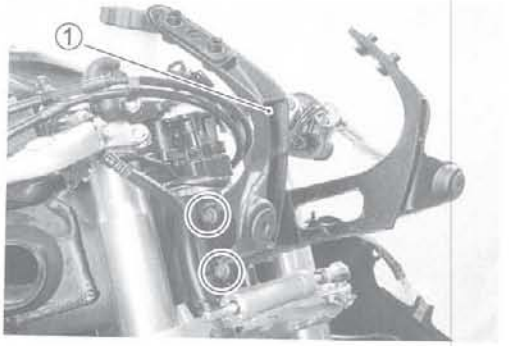

FRONT SEAT

REMOVAL

- Remove the front seat by removing the bolts.

INSTALLATION

- Install the front seat in the reverse order of removal.

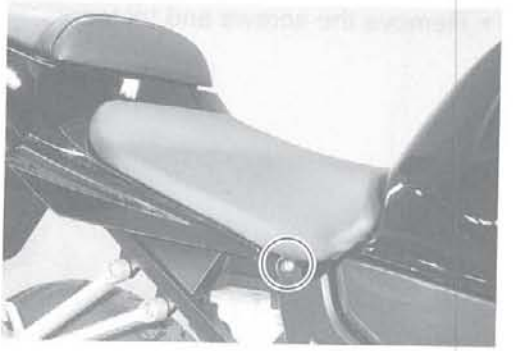

REAR SEAT AND SEAT TAIL COVER

REMOVAL

- Remove the rear seat (seat tail cover) with the ignition key.

INSTALLATION

- Hook the seat hook to the frame and push down the seat (seat tail cover) firmly until the seat (seat tail cover) snaps into the locked position.

FRAME COVER

REMOVAL

- Remove the front and rear seats. (☞8-6 and 8-7)
- Remove the bolts.
- Disconnect the seat lock cable ① and clamp ②.
- Disconnect the rear combination light lead wire coupler ③.

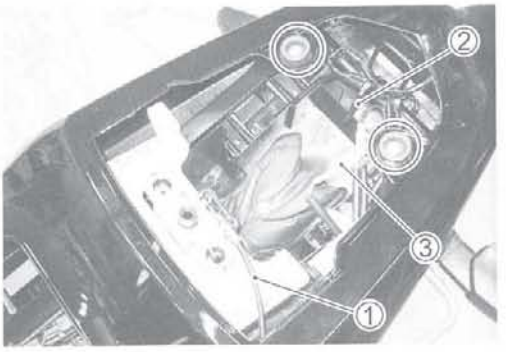

- Remove the bolts.

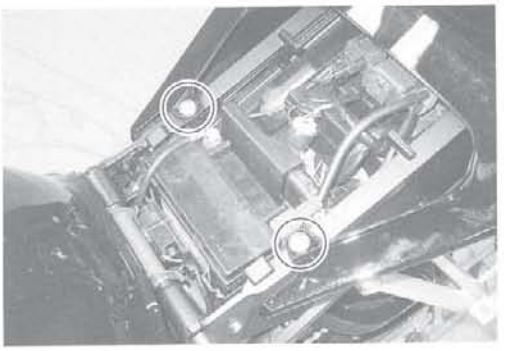

- Remove the fasteners.
- Remove the frame cover.

INSTALLATION

Install the frame cover in the reverse order of removal.

FRONT WHEEL
CONSTRUCTION

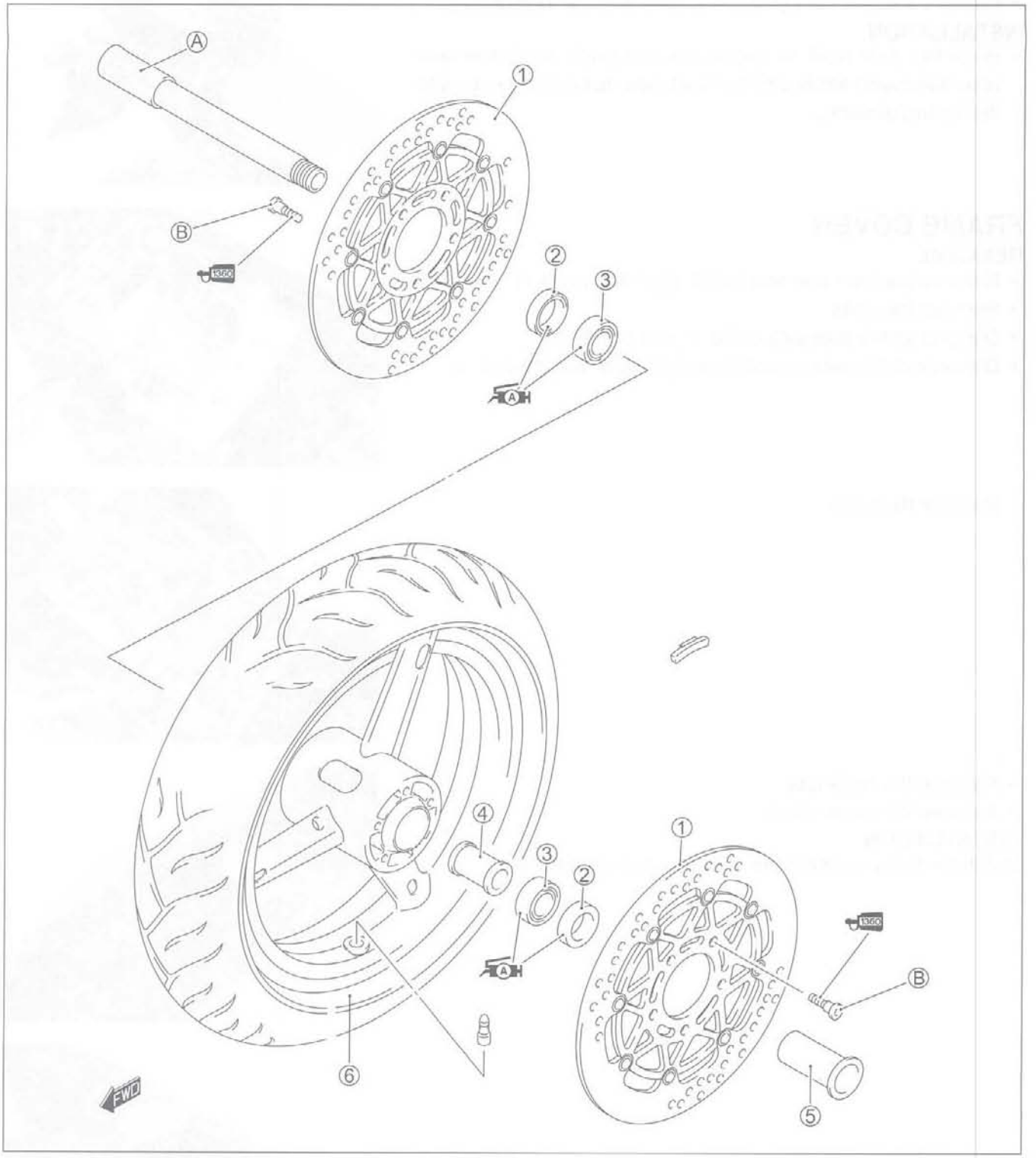

①	Brake disc	⑤	Spacer nut
②	Dust seal	⑥	Front wheel
③	Bearing	Ⓐ	Front axle
④	Spacer	Ⓑ	Brake disc bolt (Front)

ITEM	N·m	kgf-m	lb-ft
Ⓐ	100	10.0	72.5
Ⓑ	23	23.0	16.5

REMOVAL

- Remove the brake calipers.

CAUTION

Do not operate the brake lever while removing the calipers.

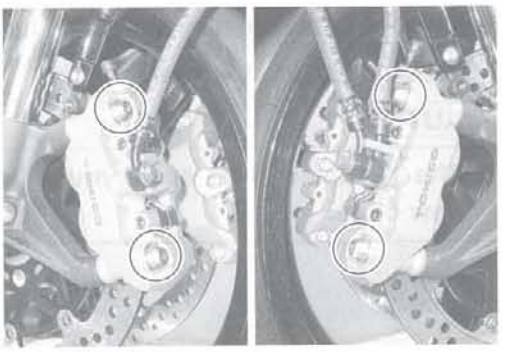

- Loosen two axle pinch bolts ① on the right front fork leg.
- Slightly loosen the front axle with the special tool.

TOOL 09900-18740: Hexagon socket (24 mm)

- Raise the front wheel off the ground and support the motorcycle with a jack or a wooden block.

CAUTION

Do not work by using side stand. Do not support the motorcycle with exhaust pipe. Make sure that the motorcycle is supported securely.

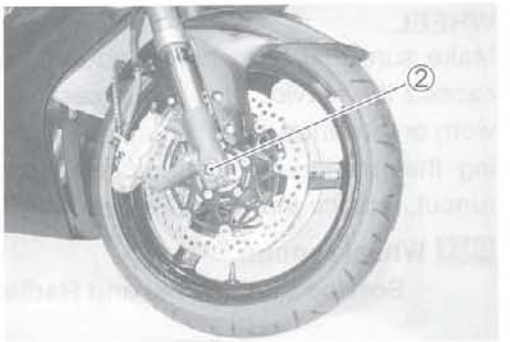

- Draw out the front axle ② and remove the front wheel.

- Loosen two axle pinch bolts ③ on the left front fork leg and remove the spacer nut ④.

NOTE:
After removing the front wheel, fit the calipers temporarily to the original positions.

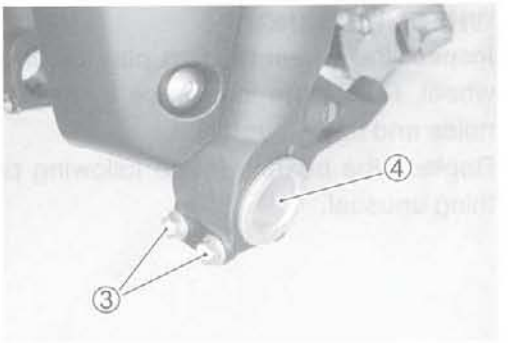

INSPECTION AND DISASSEMBLY

TIRE INSPECTION (☞8-80)

- Remove the brake disc.

BRAKE DISC INSPECTION (☞8-66)

- Remove both side dust seals with the special tool.

TOOL 09913-50121: Oil seal remover

CAUTION

The removed dust seals must be replaced with the new ones.

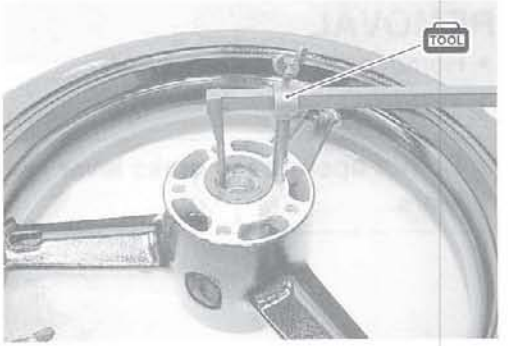

AXLE SHAFT

Using a dial gauge, check the axle shaft for runout and replace it if the runout exceeds the limit.

TOOL 09900-20607: Dial gauge (1/100)
09900-20701: Magnetic stand
09900-21304: V-block set (100 mm)

DATA Axle shaft runout:
Service Limit: 0.25 mm (0.010 in)

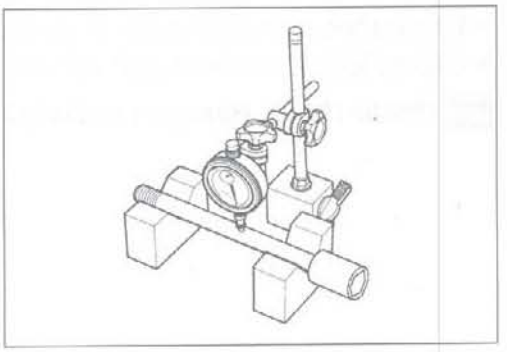

WHEEL

Make sure that the wheel runout checked as shown does not exceed the service limit. An excessive runout is usually due to worn or loosened wheel bearings and can be reduced by replacing the bearings. If bearing replacement fails to reduce the runout, replace the wheel.

DATA Wheel runout:
Service Limit (Axial and Radial): 2.0 mm (0.08 in)

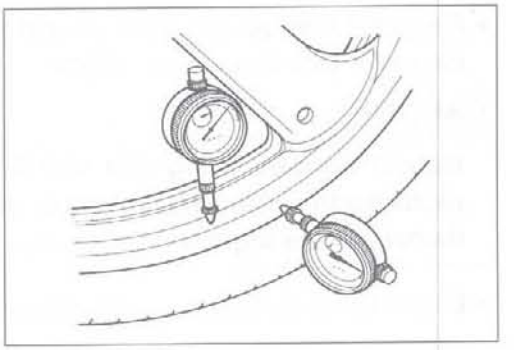

WHEEL BEARING

Inspect the wheel bearing play by finger while they are in the wheel. Rotate the inner race by finger to inspect for abnormal noise and smooth rotation.
Replace the bearing in the following procedure if there is anything unusual.

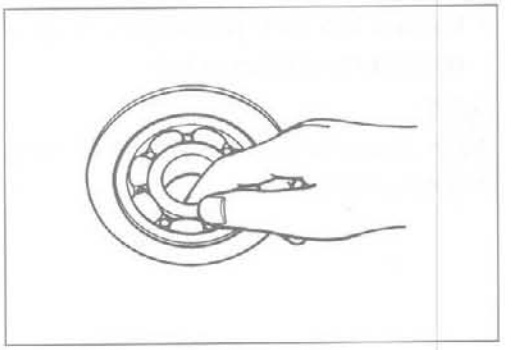

- Remove the wheel bearings with the special tool.

TOOL 09921-20240: Bearing remover set (25 mm)

CAUTION

The removed bearings should be replaced with the new ones.

REASSEMBLY AND INSTALLATION

Reassemble and install the front wheel in the reverse order of removal and disassembly. Pay attention to the following points:

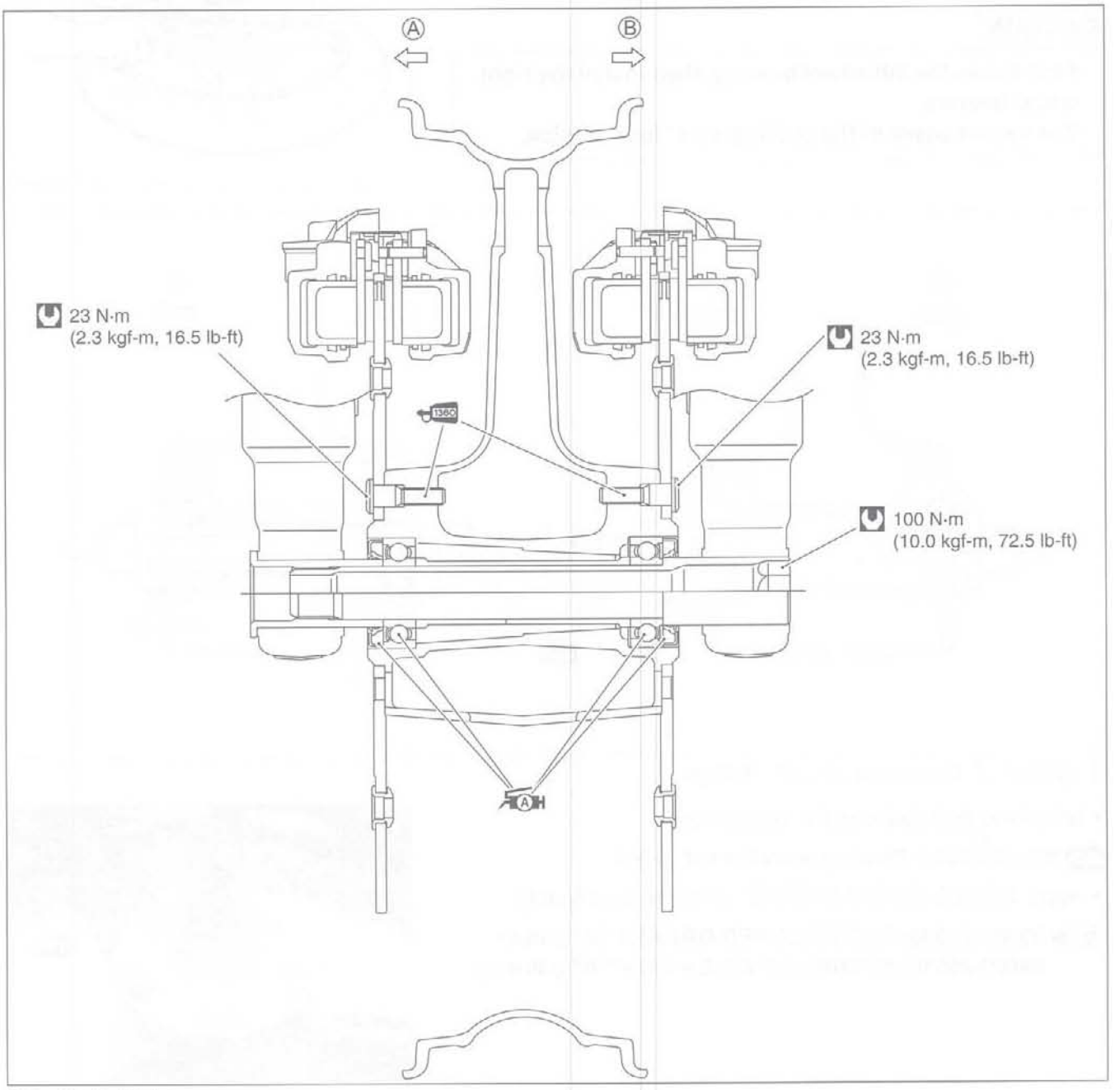

Ⓐ Left Ⓑ Right

WHEEL BEARING

- Apply SUZUKI SUPER GREASE "A" to the wheel bearings.

Ⓐ 99000-25030: SUZUKI SUPER GREASE "A" (USA)
99000-25010: SUZUKI SUPER GREASE "A" (Others)

- Install the wheel bearings as follows with the special tools.

TOOL 09941-34513: Steering race installer
09924-84510: Bearing installer set

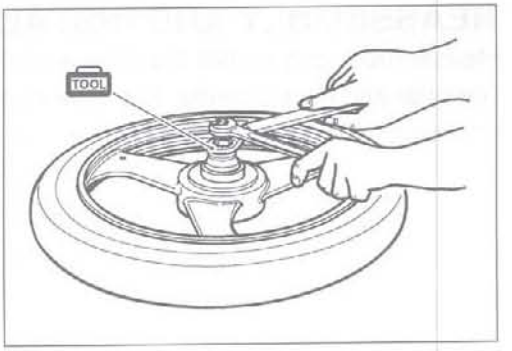

CAUTION

First install the left wheel bearing, then install the right wheel bearing.
The sealed cover of the bearing must face outside.

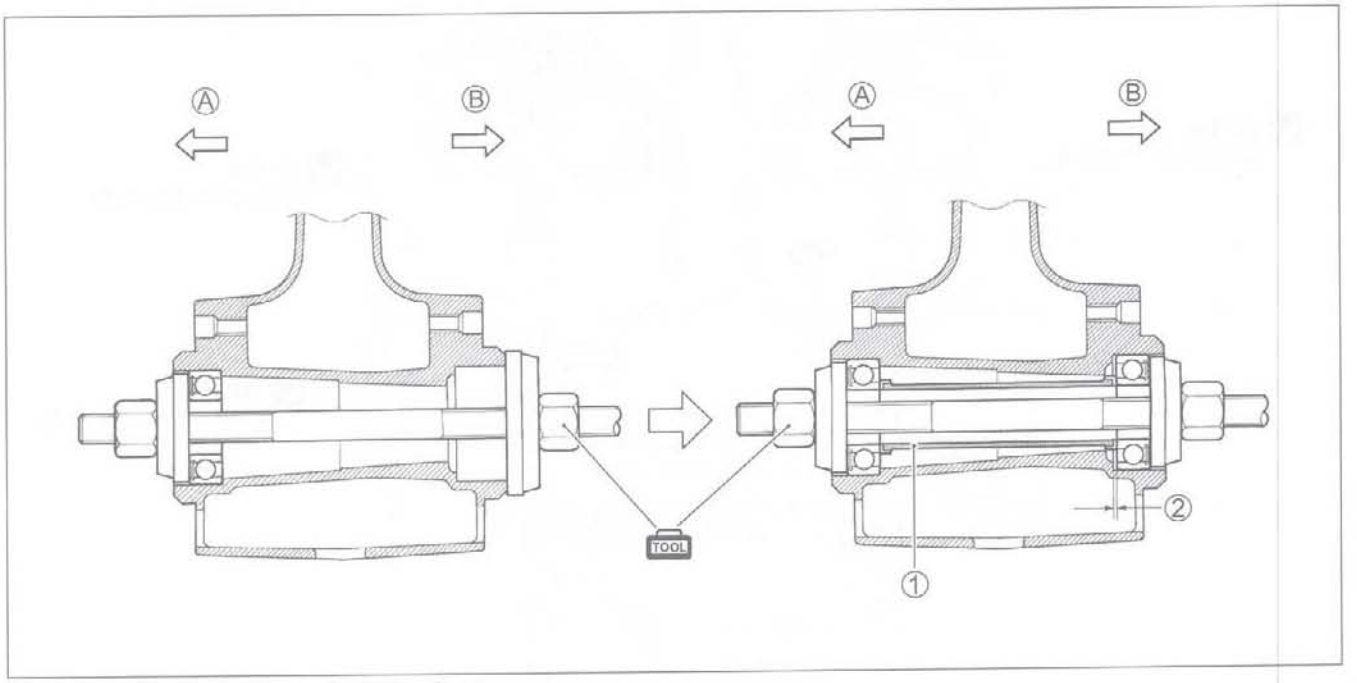

① Spacer ② Clearance Ⓐ Left Ⓑ Right

- Install the dust seal with the special tool.

TOOL 09913-70210: Bearing installer set (ϕ 52)

- Apply SUZUKI SUPER GREASE "A" to the dust seal lip.

99000-25030: SUZUKI SUPER GREASE "A" (USA)
99000-25010: SUZUKI SUPER GREASE "A" (Others)

BRAKE DISC

Make sure that the brake disc is clean and free of any greasy matter.

- Apply THREAD LOCK to the brake disc bolts and tighten them to the specified torque.

1360 99000-32130: THREAD LOCK SUPER "1360"

Brake disc bolt (Front): 23 N·m (2.3 kgf-m, 16.5 lb-ft)

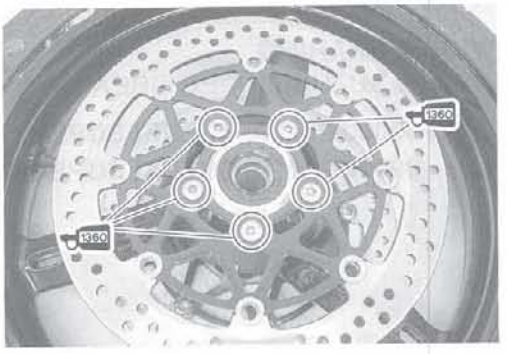

SPACER NUT

With the flange of spacer nut ① contacting the left front fork leg, tighten the two axle pinch bolts ② on the left front fork leg to the specified torque.

Front axle pinch bolt: 23 N·m (2.3 kgf-m, 16.5 lb-ft)

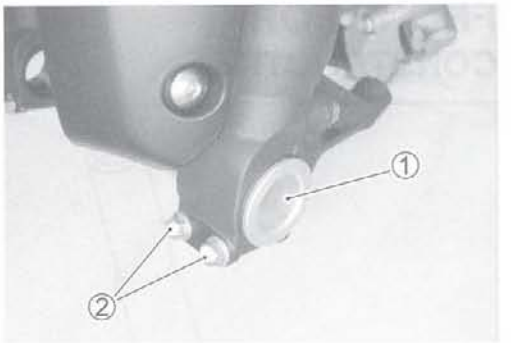

WHEEL

Install the front wheel with the front axle and hand-tighten the front axle temporarily.

⚠ WARNING

The directional arrow on the tire should point to the wheel rotation, when remounting the wheel.

BRAKE CALIPER

- Tighten the brake caliper mounting bolts to the specified torque.

Front brake caliper mounting bolt: 39 N·m (3.9 kgf-m, 28.0 lb-ft)

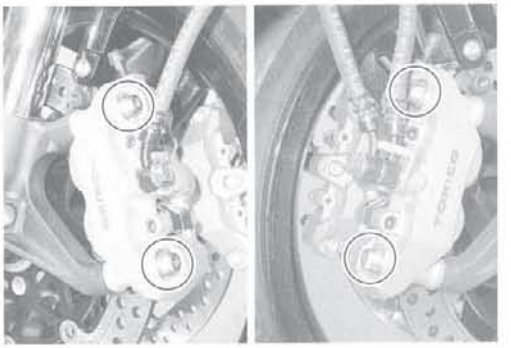

FRONT AXLE

- Tighten the front axle to the specified torque.

Front axle: 100 N·m (10.0 kgf-m, 72.5 lb-ft)

NOTE:
Before tightening the two axle pinch bolts on the right front fork leg, move the front fork up and down 4 or 5 times.

- Tighten two axle pinch bolts ① on the right front fork leg to the specified torque.

Front axle pinch bolt: 23 N·m (2.3 kgf-m, 16.5 lb-ft)

FRONT FORK
CONSTRUCTION

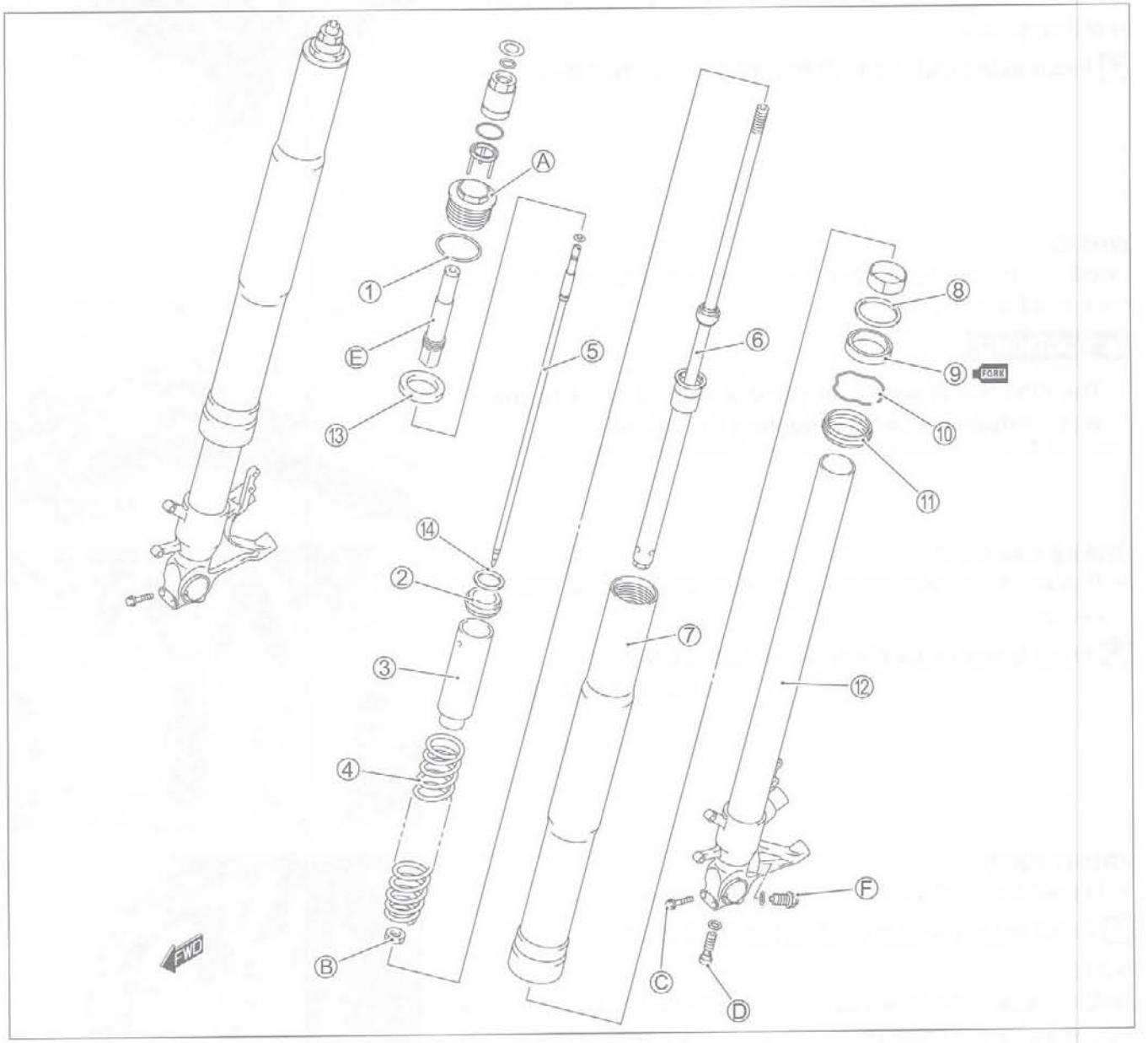

①	O-ring	⑪	Dust seal
②	Spring retainer	⑫	Inner tube
③	Spacer	⑬	Rubber seat
④	Spring	⑭	Washer
⑤	Adjuster rod	Ⓐ	Front fork cap bolt
⑥	Inner rod/damper rod (cartridge)	Ⓑ	Lock-nut
⑦	Outer tube	Ⓒ	Front axle pinch bolt
⑧	Oil seal retainer	Ⓓ	Damper rod bolt
⑨	Oil seal	Ⓔ	Rebound damping force adjuster
⑩	Oil seal stopper ring	Ⓕ	Compression damping force adjuster

ITEM	N·m	kgf-m	lb-ft
Ⓐ	35	3.5	25.5
Ⓑ	20	2.0	14.5
Ⓒ	23	2.3	16.5
Ⓓ	35	3.5	25.5
Ⓔ	35	3.5	25.5
Ⓕ	18	1.8	13.0

REMOVAL

- Remove the body cowling cover and lower bracket cover. (☞8-3)
- Remove the front wheel. (☞8-9)
- Disconnect the brake hose ① from the brake hose guides on the front fender.
- Remove the front fender ②.

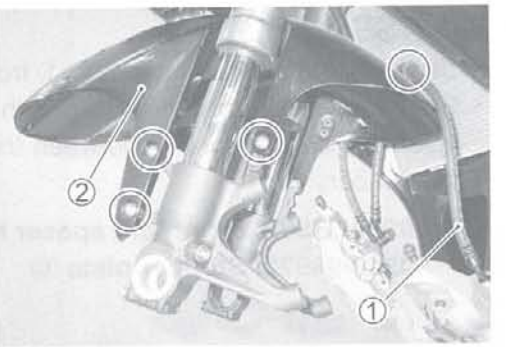

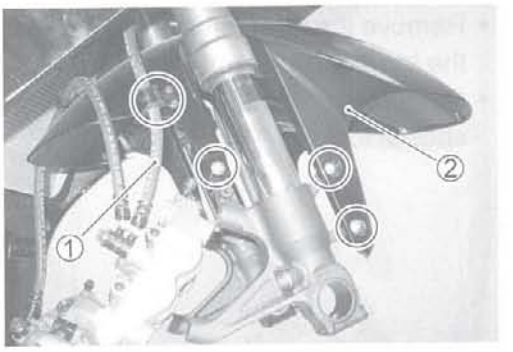

- Loosen the front fork upper clamp bolts ③, left and right.
- Loosen the handlebar clamp bolts ④, left and right.

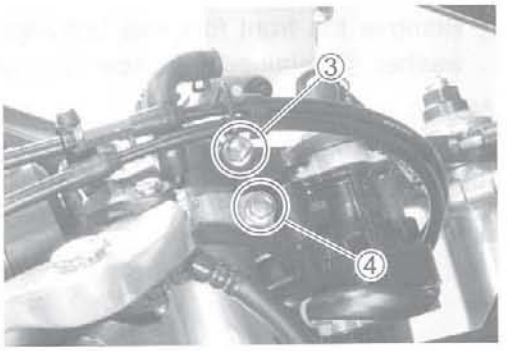

NOTE:

- *Slightly loosen the front fork cap bolts ⑤ before loosening the lower clamp bolts to facilitate later disassembly.*
- *Be sure to adjust the rebound damping force adjuster ⑥ to the softest position before removing the front fork.*

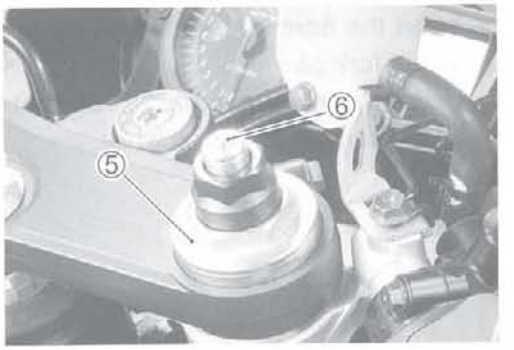

- Loosen the front fork lower clamp bolts, left and right.
- Remove the front forks, left and right.

DISASSEMBLY

- Separate the front fork cap bolt ① from the front fork.
- Compress the front fork spring with the special tool Ⓐ and insert the special tool Ⓑ between the inner rod lock-nut and the spacer.

TOOL 09940-94930: Front fork spacer holder Ⓐ
09940-94922: Stopper plate Ⓑ

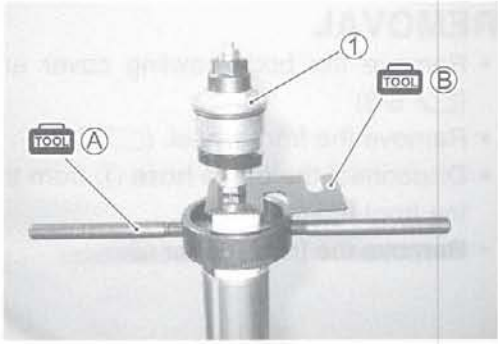

- Remove the front fork cap bolt from the inner rod by loosening the inner rod lock-nut.
- Compress the fork spring with the special tool and remove the special tool.

- Remove the front fork cap bolt/adjuster ②, rubber seat ③, washer ④, retainer ⑤, spacer ⑥ and spring ⑦.

NOTE:
After removing the front fork cap bolt/adjuster ②, do not hold the outer tube vertically by hand to prevent the inner tube from falling damage.

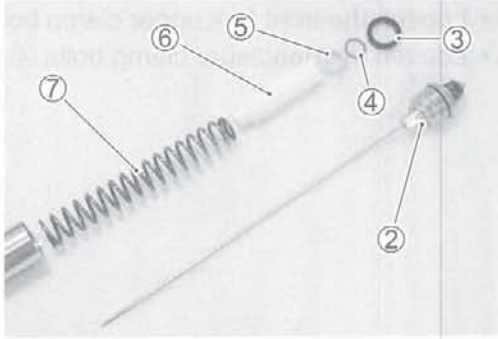

- Invert the front fork and stroke the inner rod several times to let out fork oil.
- Under the inverted condition of front fork, drain oil completely by holding the fork for a while.

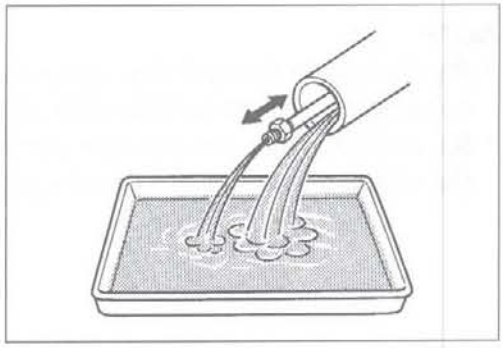

- Remove the damper rod bolt with the special tool.

TOOL 09940-30221: Front fork assembling tool

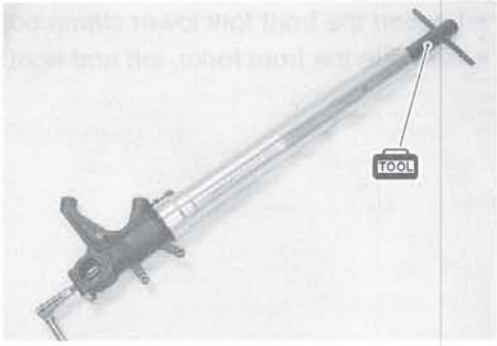

- Remove the inner rod/damper rod (cartridge) ⑧.

CAUTION

Do not disassemble the inner rod/damper rod (cartridge).

- Extract the outer tube from the inner tube.

NOTE:
Be careful not to damage the "ANTI-FRICTION" metals.

- Remove the following parts.

⑨ Dust seal
⑩ Oil seal stopper ring
⑪ Oil seal
⑫ Oil seal retainer

CAUTION

The removed oil seal must be replaced with a new one.

- Remove the compression damping force adjuster ⑬.

NOTE:
Never disassemble the compression damping force adjuster.

- Remove the adjuster ⑭ turn the counterclockwise from the front fork cap bolt ⑮.

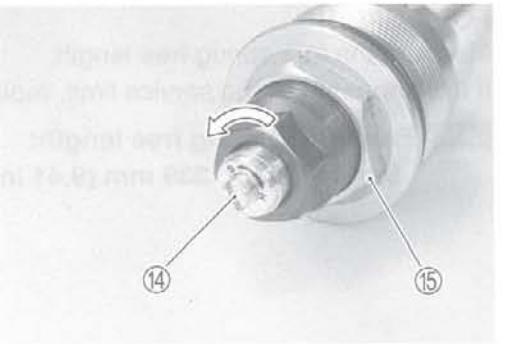

- Remove the spring adjuster stopper ring ⑯.

- Remove the spring adjuster bolt ⑰ and spring adjuster ⑱.
- Remove the rebound damping force adjuster ⑲.

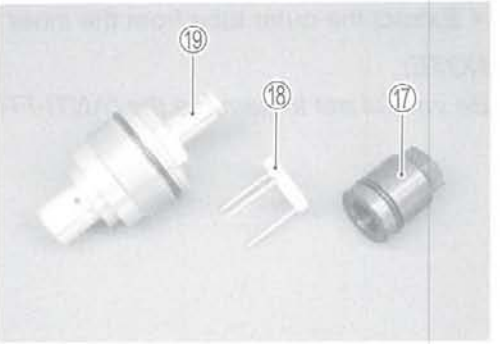

INSPECTION

INNER AND OUTER TUBES

- Inspect the inner tube outer surface and outer tube inner surface for scratches.
- Inspect the "ANTI-FRICTION" metal surfaces for scratches.
- If any defects are found, replace them with a new one.

CAUTION

Do not remove the "ANTI-FRICTION" metals, ① and ②.

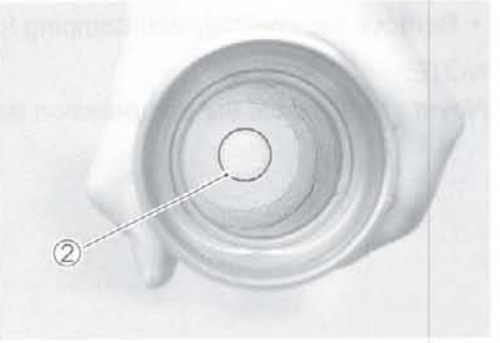

FORK SPRING

Measure the fork spring free length.
If it is shorter than the service limit, replace it with a new one.

DATA Front fork spring free length:
Service Limit: 239 mm (9.41 in)

Ⓐ Upper side
Ⓑ Lower side

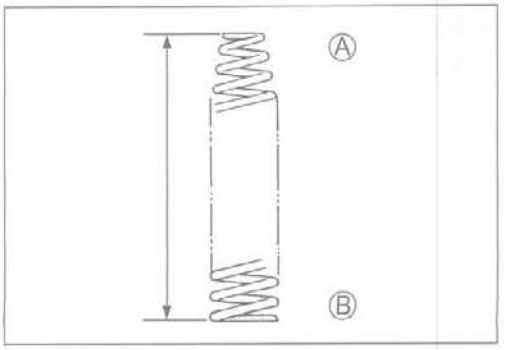

DAMPER ROD

Move the inner rod by hand to examine it for smoothness.
If any defects are found, replace inner rod/damper rod (cartridge) with a new one.

REASSEMBLY

Reassemble the front fork in the reverse order of disassembly.
Pay attention to the following points:

COMPRESSION DAMPING FORCE ADJUSTER

- Tighten the compression damping force adjuster to the specified torque.

Compression damping force adjuster:
18 N·m (1.8 kgf-m, 13.0 lb-ft)

CAUTION

The removed O-ring must be replaced with a new one.

OIL SEAL AND DUST SEAL

- Install the dust seal, oil seal stopper ring, oil seal and oil seal retainer onto the inner tube.

① Dust seal
② Oil seal stopper ring
③ Oil seal
④ Oil seal retainer

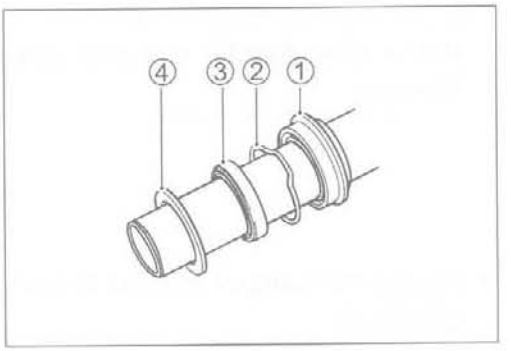

CAUTION

- **When installing the oil seal to outer tube, be careful not to damage the oil seal lip.**
- **Do not use solvents for washing to prevent oil seal damage.**
- **Apply fork oil to the Anti-friction metals and lip of the oil seal.**
- **Make sure that the oil seal stopper ring has been fitted securely.**

- Insert the inner tube into the outer tube and fit the oil seal and dust seal with the special tool.

TOOL 09940-52861: Front fork oil seal installer

NOTE:
Stamped mark on the oil seal should face outside.

⑤ Oil seal retainer
⑥ Oil seal
⑦ Oil seal stopper ring
⑧ Dust seal

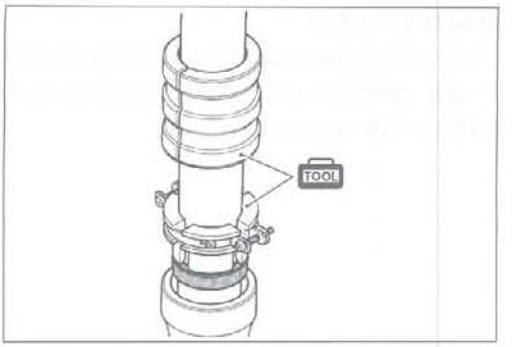

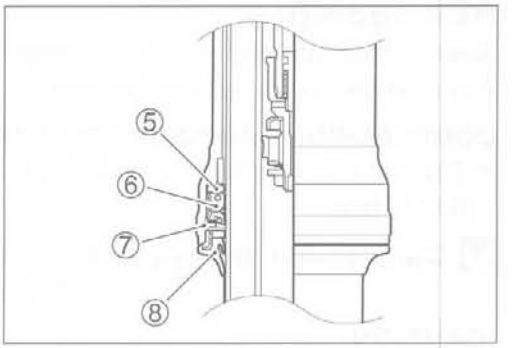

DAMPER ROD BOLT

- Insert the inner rod/damper rod (cartridge) into the inner tube.

CAUTION

Use a new damper rod bolt gasket ① to prevent oil leakage.

- Tighten the damper rod bolt to the specified torque with the special tool.

TOOL 09940-30221: Front fork assembling tool

Damper rod bolt: 35 N·m (3.5 kgf-m, 25.5 lb-ft)

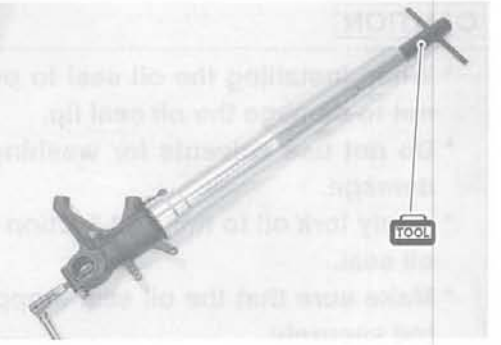

FORK OIL

- Place the front fork vertically without spring.
- Compress it fully.
- Pour specified front fork oil up to the top level of the outer tube.

DATA Capacity (each leg): 479 ml (16.2/16.9 US/Imp oz)

FORK 99000-59056-SS5: SUZUKI FORK OIL SS-05 or an equivalent fork oil

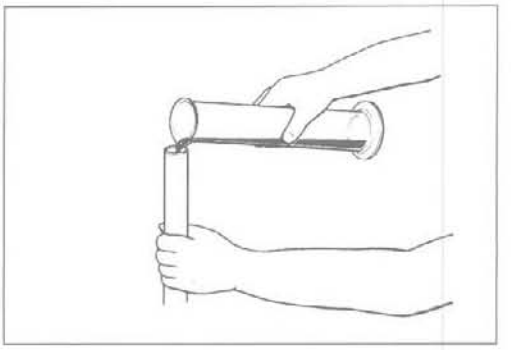

- Move the inner rod slowly with the special tool ten times and more until no more bubbles come out from the oil.

TOOL 09940-52841: Inner rod holder

NOTE:
Refill front fork oil up to the top of the outer tube so that bubbles are visible while bleeding air.

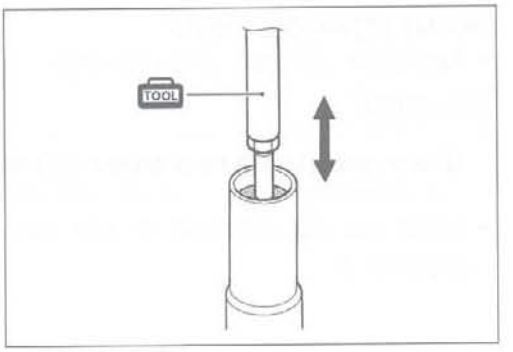

- Refill specified front fork oil up to the top level of the outer tube again. Move the outer tube up and down several strokes until no more bubbles come out from the oil.
- Keep the front fork vertically and wait 5 – 6 minutes.

NOTE:
** Always keep oil level over the cartridge top end, or air may enter the cartridge during this procedure.*
** Take extreme care so as to pump out air completely.*

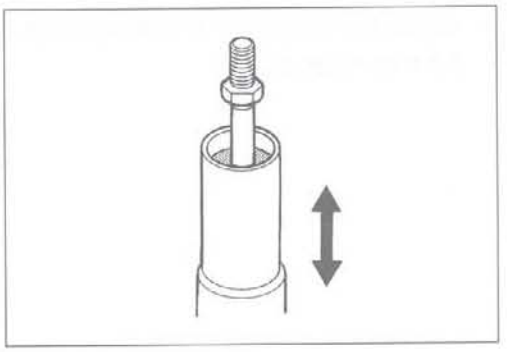

- Hold the front fork vertically and adjust fork oil level with the special tool.

NOTE:
When adjusting the fork oil level, compress the outer tube fully without the fork spring.

DATA Fork oil level: 102 mm (4.02 in)

TOOL 09943-74111: Front fork oil level gauge

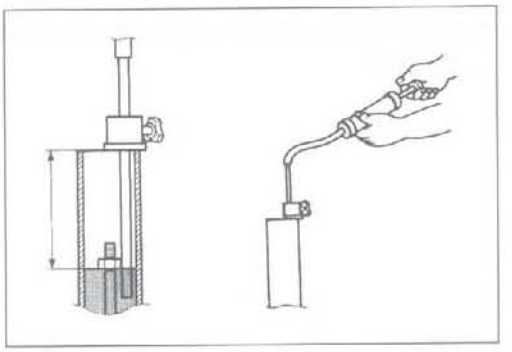

FORK SPRING

- Install the fork spring as shown in the illustration.

Ⓐ Upper side
Ⓑ Lower side

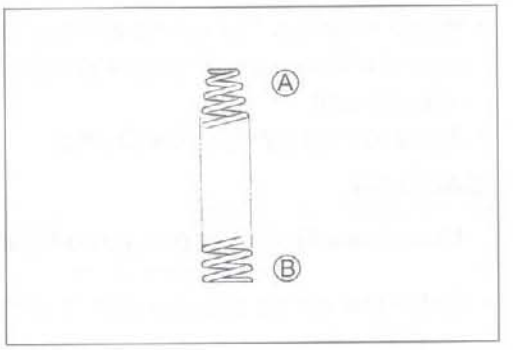

- Install the spring ①, spacer ②, retainer ③ and washer ④.

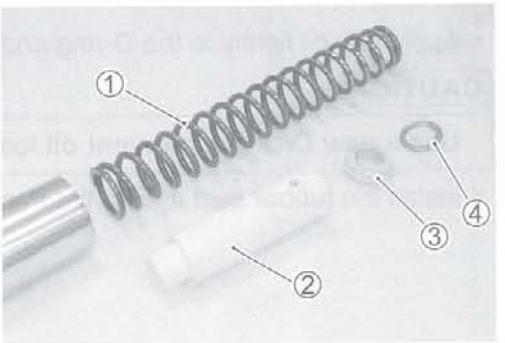

FRONT FORK CAP BOLT

- Apply fork oil lightly to the O-ring.

CAUTION

Use a new O-ring to prevent oil leakage.

- Insert the adjuster rod ① into the rebound damping force adjuster ②.

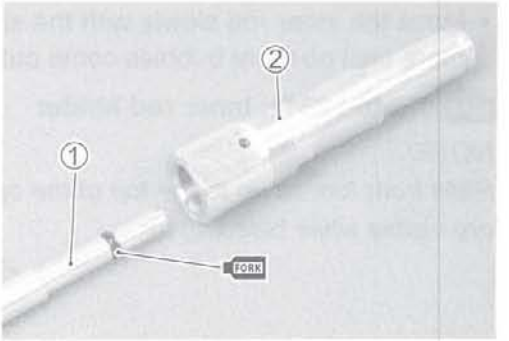

- Adjust the height Ⓐ of the rebound damping force adjuster at 1.5 mm (0.06 in).

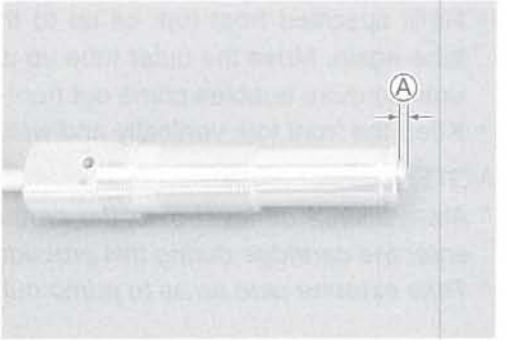

- Install the front fork cap bolt ③ to the rebound damping force adjuster.

- When installing the spring adjuster to the front fork cap bolt, align the three legs Ⓑ of spring adjuster with the holes of front fork cap bolt.
- Apply fork oil lightly to the O-ring.

CAUTION

Use a new O-ring to prevent oil leakage.

- Install the spring adjuster bolt ④ and spring adjuster stopper ring ⑤.

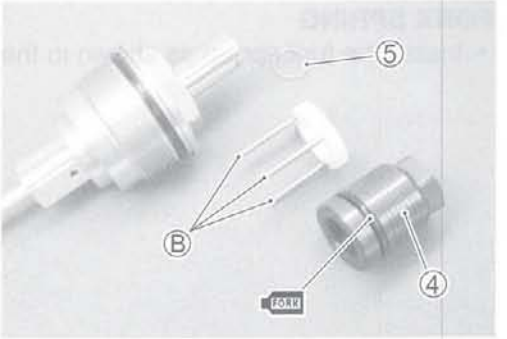

- Apply fork oil lightly to the O-ring and rubber seat.

CAUTION

Use a new O-ring to prevent oil leakage.

- Install the rubber seat ⑥ into the front fork cap bolt.

- Pull up the inner rod with the special tool Ⓒ.
- Compress the spring with the special tool Ⓓ and then insert the special tool Ⓔ between the lock-nut and the spacer.

TOOL 09940-52841: Inner rod holder Ⓒ
09940-94930: Front fork spacer holder Ⓓ
09940-94922: Stopper plate Ⓔ

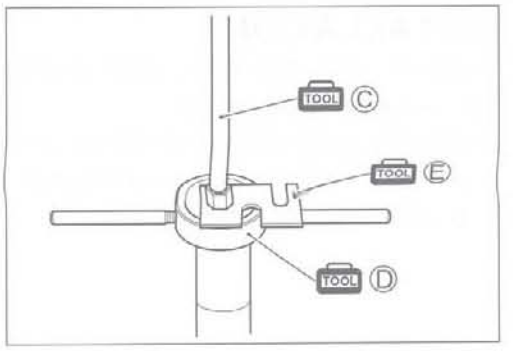

- Slowly turn the front fork cap bolt by hand until the rebound damping force adjuster seats on the inner-rod.

NOTE:
Be sure to check or adjust the height of the rebound damping force adjuster before installing the front fork cap bolt. (Refer to page 8-22.)

CAUTION

Make sure that the rebound damping force adjuster ⑦ to the softest position before installing the cap bolt.

- Hold the cap bolt ⑧ and tighten the inner rod lock-nut ⑨ to the specified torque.

Rebound damping force adjuster lock-nut:
20 N·m (2.0 kgf-m, 14.5 lb-ft)

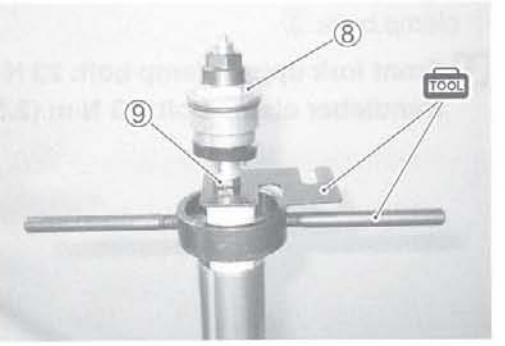

- Remove the special tools.
- Install the front fork cap bolt to the outer tube temporarily.

INSTALLATION

Install the front fork in the reverse order of removal. Pay attention to the following points:

- Set the upper surface of the outer tube height Ⓐ at 5.0 mm (0.20 in) from the upper surface of the steering stem upper bracket.

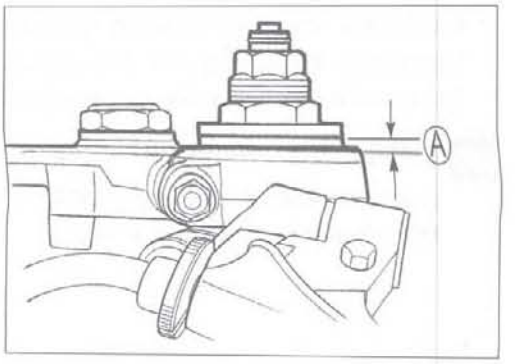

- Tighten the front fork lower clamp bolts ① to the specified torque.

Front fork lower clamp bolt: 23 N·m (2.3 kgf-m, 16.5 lb-ft)

- Tighten the front fork cap bolt to the specified torque and recheck the front fork outer tube upper surface height Ⓐ from the upper surface of the steering stem upper bracket.

Front fork cap bolt: 35 N·m (3.5 kgf-m, 25.5 lb-ft)

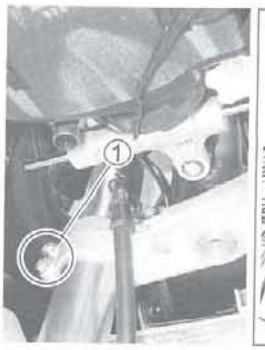

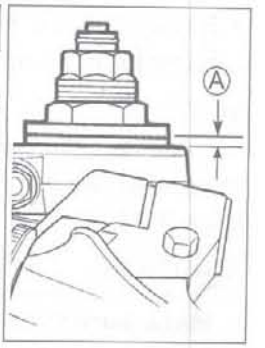

- Tighten the front fork upper clamp bolts ② and handlebar clamp bolts ③.

Front fork upper clamp bolt: 23 N·m (2.3 kgf-m, 16.5 lb-ft)
Handlebar clamp bolt: 23 N·m (2.3 kgf-m, 16.5 lb-ft)

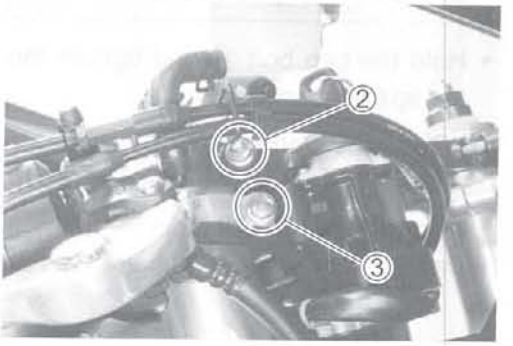

- Remount the front wheel. (☞8-13)

NOTE:
Before tightening the two axle pinch bolts on right front fork leg, move the front fork up and down 4 or 5 times.

SUSPENSION SETTING

After installing the front fork, adjust the spring pre-load and damping force as follows.

SPRING PRE-LOAD ADJUSTMENT

There are seven grooved lines on the side of the spring adjuster. Position 0 provides the maximum spring pre-load and position 7 provides the minimum spring pre-load.

STD POSITION: 4

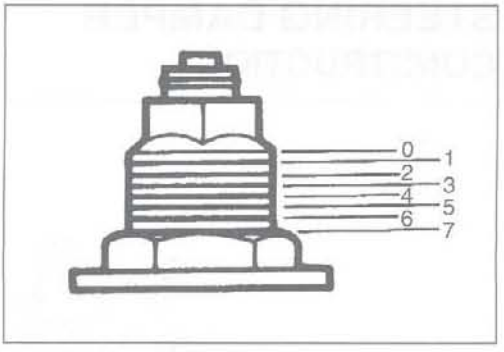

DAMPING FORCE ADJUSTMENT

Compression damping force

Fully turn the damping force adjuster ① clockwise. It is at stiffest position and turn it out to standard setting position.

STD POSITION: 1 3/4 turns out from stiffest position.

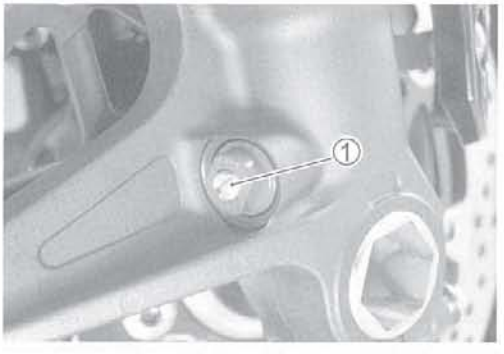

Rebound damping force

Fully turn the damping force adjuster ② clockwise. It is at stiffest position and turn it out to standard setting position.

STD POSITION: 1 3/4 turns out from stiffest position

STANDARD FRONT SUSPENSION SETTING

	FRONT		
	Spring pre-load adjuster	Damping force adjuster	
		Compression	Rebound
Solo and dual riding	4	1 3/4 turns out from stiffest position	1 3/4 turns out from stiffest position

⚠ WARNING

Be sure to adjust the spring pre-load and damping force on both front fork legs equally.

STEERING DAMPER
CONSTRUCTION

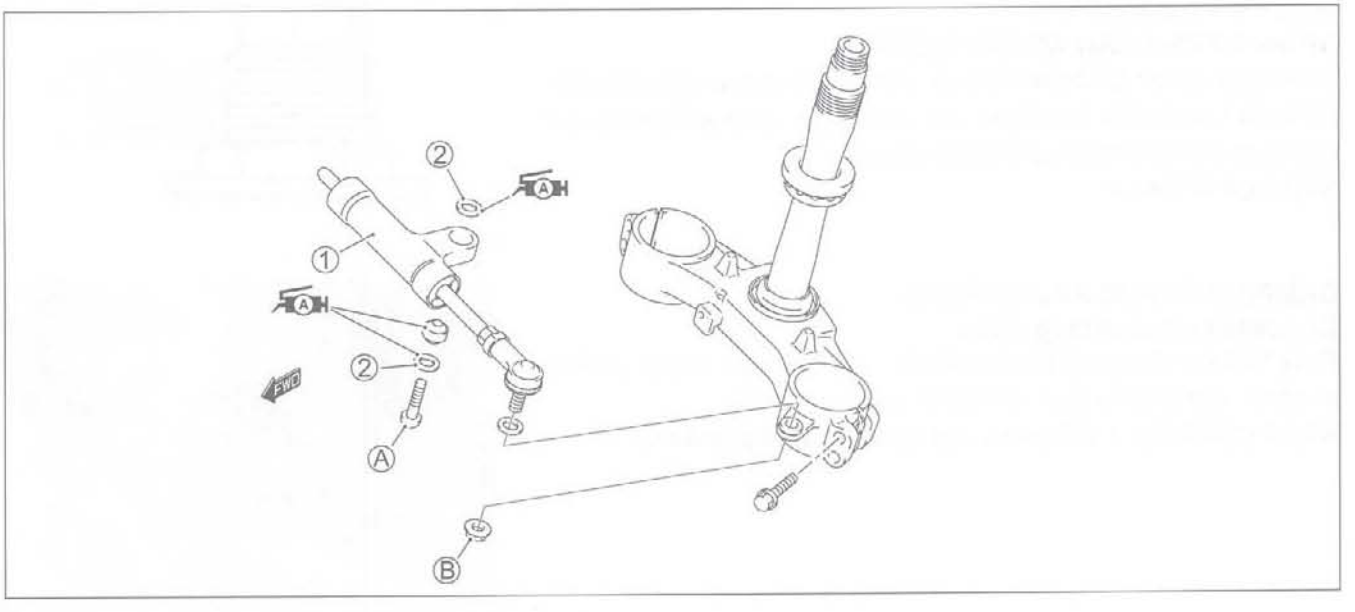

①	Steering damper
②	Dust seal
Ⓐ	Steering damper bolt
Ⓑ	Steering damper nut

ITEM	N·m	kgf-m	lb-ft
Ⓐ	23	2.3	16.5
Ⓑ	23	2.3	16.5

REMOVAL

- Remove the body cowling cover and lower bracket cover. (☞8-3)
- Remove the nut ① by holding the nut ②.
- Remove the bolt ③ and remove the steering damper.

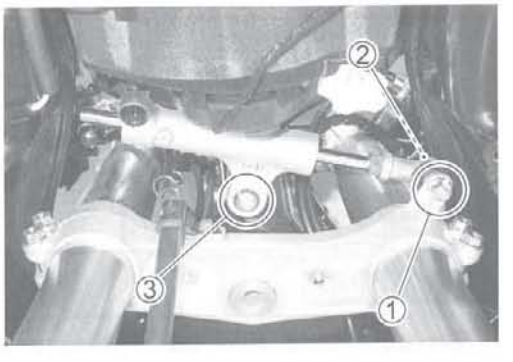

INSPECTION

Inspect the steering damper body, bearing and oil seal for damage and oil leaking.
Move the steering damper rod by hand to inspect for a smooth movement.
If any defects are found, replace the steering damper with a new one.

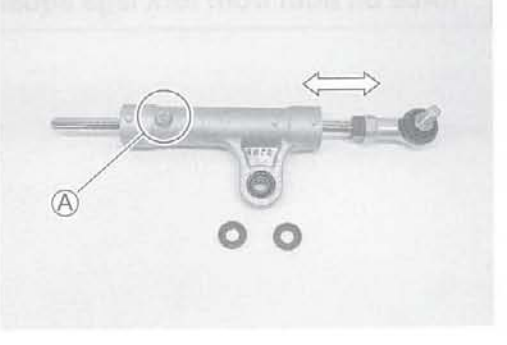

CAUTION

Do not remove the bolt Ⓐ.

INSTALLATION

Install the steering damper in the reverse order of removal. Pay attention to the following points:

- Apply SUZUKI SUPER GREASE "A" to the bearings and dust seals.

99000-25030: SUZUKI SUPER GREASE "A" (USA)
99000-25010: SUZUKI SUPER GREASE "A" (Others)

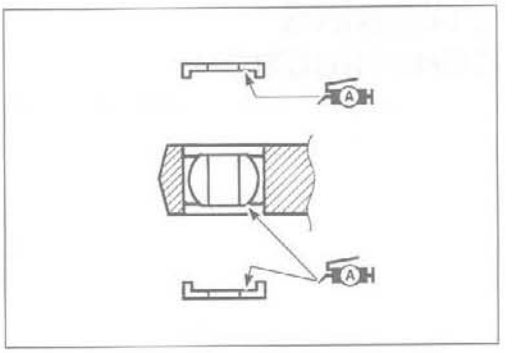

- Install the steering damper and tighten the bolt ① and nut ②.

Steering damper bolt and nut: 23 N·m (2.3 kgf-m, 16.5 lb-ft)

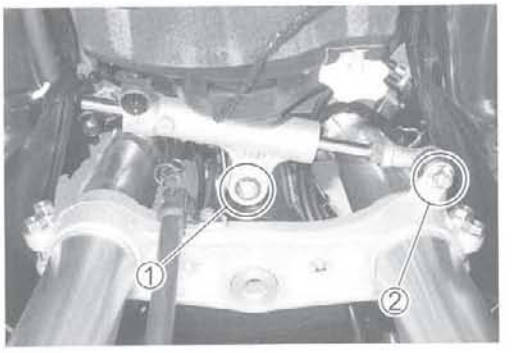

STEERING
CONSTRUCTION

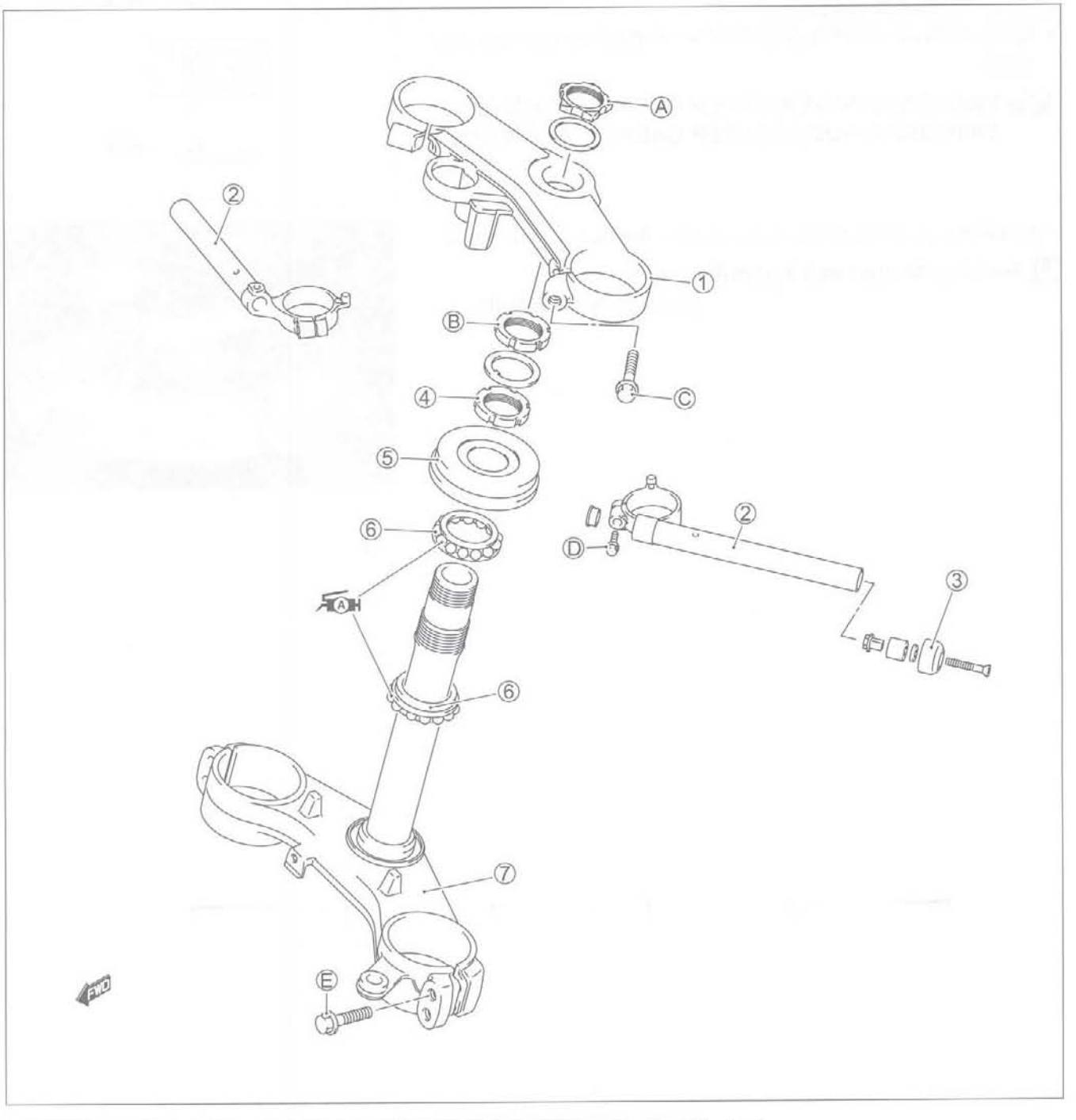

①	Steering stem upper bracket	⑦	Steering stem lower bracket
②	Handlebars	Ⓐ	Steering stem head nut
③	Handlebar balancer	Ⓑ	Steering stem lock-nut
④	Steering stem nut	Ⓒ	Front fork upper clamp bolt
⑤	Dust seal	Ⓓ	Handlebar clamp bolt
⑥	Bearing	Ⓔ	Front fork lower clamp bolt

ITEM	N·m	kgf-m	lb-ft
Ⓐ	90	9.0	65.0
Ⓑ	80	8.0	58.0
Ⓒ	23	2.3	16.5
Ⓓ	23	2.3	16.5
Ⓔ	23	2.3	16.5

REMOVAL

- Remove the front wheel. (☞8-9)
- Remove the front forks and handlebars. (☞8-15)
- Remove the steering damper. (☞8-26)
- Remove the steering stem head nut and washer.
- Disconnect the ignition switch lead wire coupler. (☞9-34)
- Remove the steering stem upper bracket.

NOTE:
It is not necessary to remove the ignition switch, only when replacing the steering stem lower bracket and bearings.
(Ignition switch removal: ☞9-34)

- Remove the brake hose clamp bolt ①.

- Remove the steering stem lock-nut, washer and steering stem nut with the special tools.

TOOL 09940-14911: Steering stem nut wrench
09940-14960: Steering stem nut wrench socket

- Draw out the steering stem lower bracket.

NOTE:
Hold the steering stem lower bracket by hand to prevent it from falling.

- Remove the dust seal ②, steering stem upper bearing inner race ③ and bearing ④.

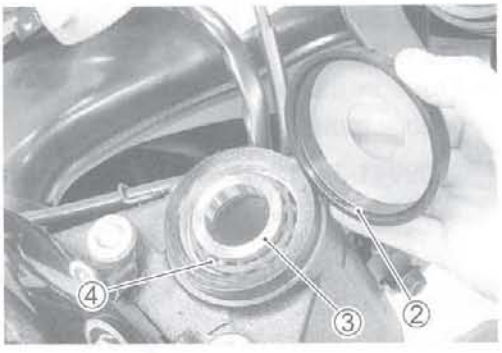

INSPECTION

Inspect the removed parts for the following abnormalities.

* Handlebars distortion
* Race wear and brinelling
* Bearing wear or damage
* Abnormal noise of bearing

If any abnormal points are found, replace defective parts with the new ones.

DISASSEMBLY

- Remove the steering stem lower bearing inner race with a chisel.

CAUTION

The removed bearing outer race must be replaced with a new one.

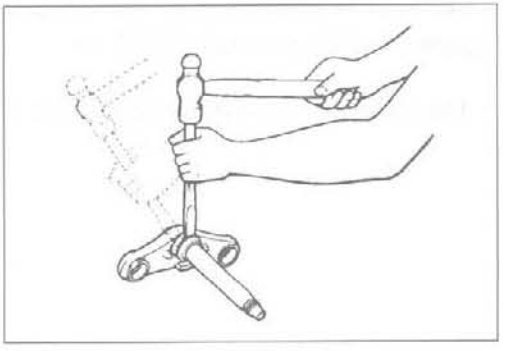

- Drive out the steering stem bearing outer races (upper and lower) using the steel rod.

CAUTION

The removed bearing outer race must be replaced with a new one.

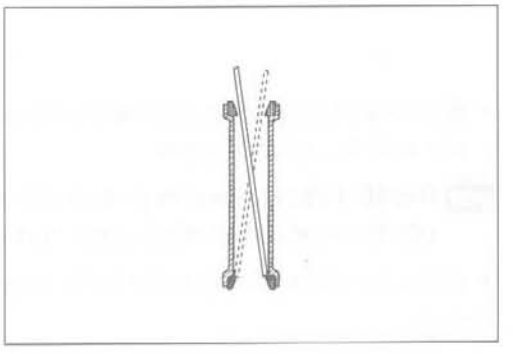

REASSEMBLY

Reassemble the steering stem in the reverse order of disassembly. Pay attention to the following points:

OUTER RACE

- Press in the upper and lower bearing outer races with the special tools.

TOOL 09941-34513: Steering race installer
09913-70210: Bearing installer set (ϕ 55)

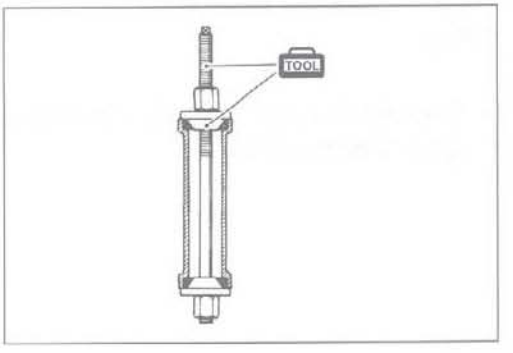

INNER RACE

- Press in the lower bearing inner race with the special tool.

TOOL 09925-18011: Steering bearing installer

INSTALLATION

Install the steering stem in the reverse order of removal. Pay attention to the following points:

BEARING

- Apply SUZUKI SUPER GREASE "A" to the bearings and bearing races.

99000-25030: SUZUKI SUPER GREASE "A" (USA)
99000-25010: SUZUKI SUPER GREASE "A" (Others)

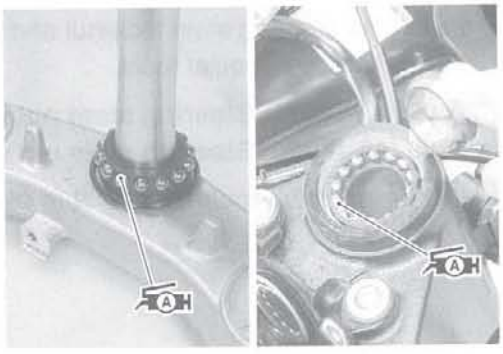

- Install the lower bearing to the steering stem lower bracket.
- Install the upper bearing and bearing inner race.

STEM NUT

- Install the dust seal.
- Tighten the steering stem nut to the specified torque with the special tools.

09940-14911: Steering stem nut wrench
09940-14960: Steering stem nut wrench socket

Steering stem nut: 45 N·m (4.5 kgf-m, 32.5 lb-ft)

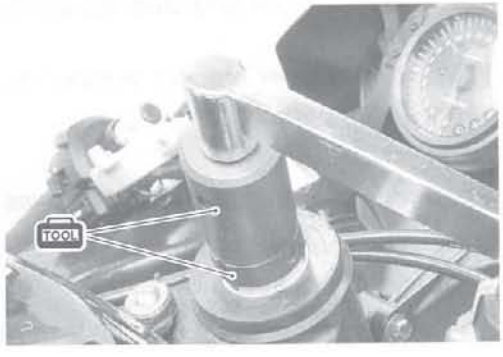

- Turn the steering stem lower bracket about five or six times to the left and right so that the angular ball bearings will be seated properly.
- Loosen the stem nut by 1/4 – 1/2 turn.

NOTE:
This adjustment will vary from motorcycle to motorcycle.

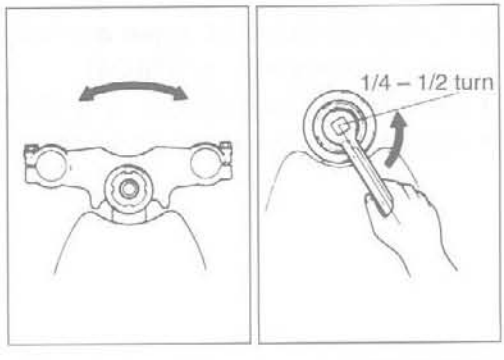

NOTE:
When installing the washer, align the stopper lug to the groove of steering stem.

- Install the steering stem lock-nut and tighten it to the specified torque with the special tools.

TOOL 09940-14911: Steering stem nut wrench
09940-14960: Steering stem nut wrench socket

Steering stem lock-nut: 80 N·m (8.0 kgf-m, 58.0 lb-ft)

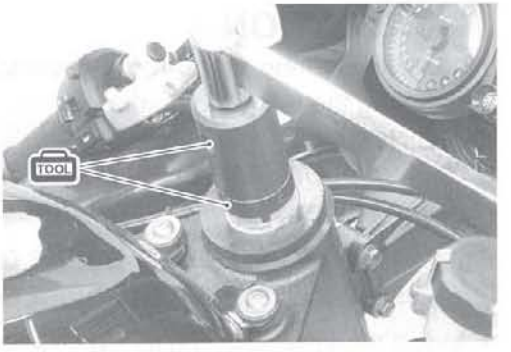

FRONT FORK AND STEERING STEM UPPER BRACKET

Install the front fork and steering stem upper bracket in the following steps:

1) Install the upper bracket, washer ① and steering stem head nut ② temporarily.

NOTE:
Pay attention to the direction of the washer.

2) Position the handlebars on the front forks and tighten the steering stem head nut ②.

Steering stem head nut: 90 N·m (9.0 kgf-m, 65.0 lb-ft)

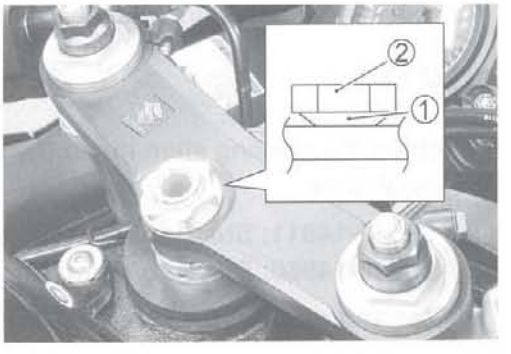

3) Tighten the front fork upper and lower clamp bolts and brake hose clamp bolt ③. (☞8-24)

- Install the steering damper. (☞8-27)
- Install the front wheel. (☞8-13)

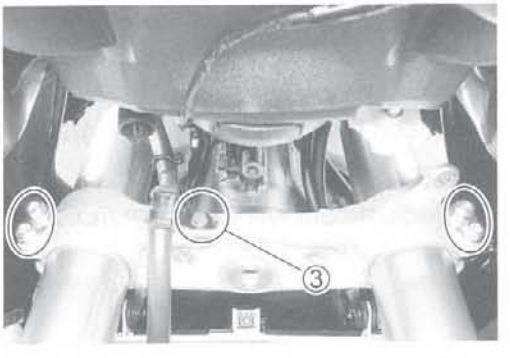

STEERING TENSION ADJUSTMENT

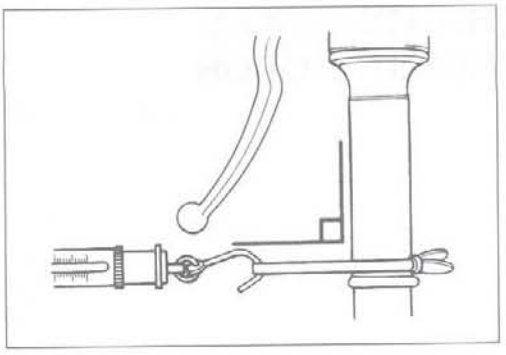

Check the steering movement in the following procedure.

- By supporting the motorcycle with a jack, lift the front wheel until it is off the floor by 20 – 30 mm (0.8 – 1.2 in).
- Remove the steering damper. (☞8-26)
- Check to make sure that the cables and wire harnesses are properly routed.
- With the front wheel in the straight ahead state, hitch the spring scale (special tool) on one handlebar grip end as shown in the figure and read the graduation when the handlebar starts moving. Do the same on the other grip end.

DATA Initial force: 200 – 500 grams

TOOL 09940-92720: Spring scale

- If the initial force read on the scale when the handlebar starts turning is either too heavy or too light, adjust it till it satisfies the specification.

1) First, loosen the front fork upper clamp bolts, handlebar clamp bolts, steering stem head nut and steering stem lock-nut, and then adjust the steering stem nut by loosening or tightening it.
2) Tighten the steering stem lock-nut, stem head nut, handlebar clamp bolts and front fork upper clamp bolts to the specified torque and re-check the initial force with the spring scale according to the previously described procedure.
3) If the initial force is found within the specified range, adjustment has been completed.

NOTE:
Hold the front fork legs, move them back and forth and make sure that the steering is not loose.

HANDLEBARS
CONSTRUCTION

①	Left handle grip	⑤	handlebars
②	Right handle grip	⑥	Handle balancer
③	Right handle switch	Ⓐ	Handlebar clamp bolt
④	Left handle switch		

ITEM	N·m	kgf-m	lb-ft
Ⓐ	23	2.3	16.5

REMOVAL

- Remove the brake master cylinder ①. (☞8-67)
- Remove the throttle cable guide ②.
- Remove the right handle switch ③.
- Remove the handle balancer ④.
- Remove the right handle grip ⑤.

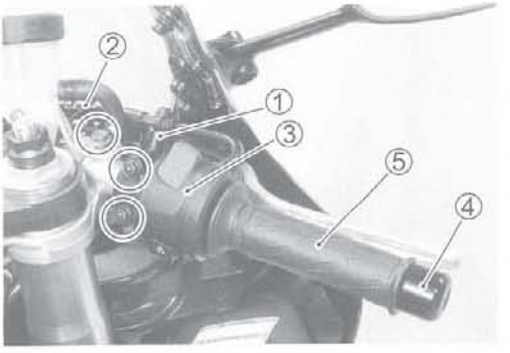

- Remove the left handle switch ⑥.
- Remove the handle balancer ⑦.
- Remove the left handle grip ⑧.
- Disconnect the clutch cable.
- Remove the clutch lever holder ⑨.

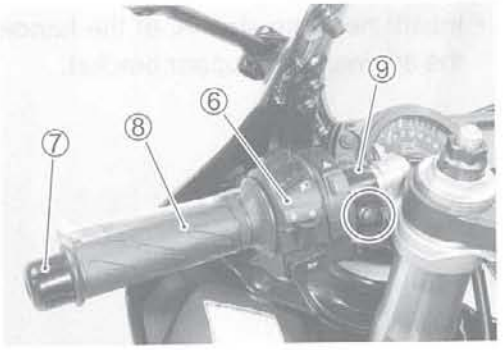

- Loosen the handlebar clamp bolts and front fork upper clamp bolts.

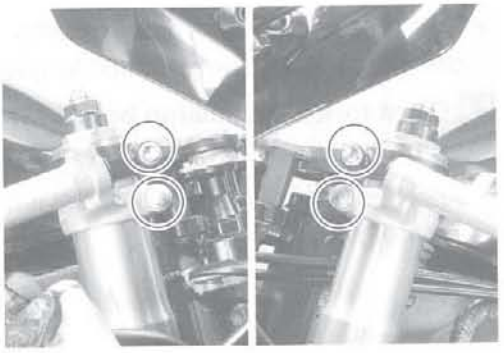

- Remove the steering stem upper bracket ⑩ by removing the steering stem head nut.

NOTE:
Place the rags under the steering stem upper bracket to prevent scratching the body cowling and the air intake pipes.

- Remove the handlebars ⑪ to upward.

INSTALLATION

Install the handlebars in the reverse order of removal. Pay attention to the following points:

- Install the handlebars temporary.
- Install the steering stem upper bracket.
- Tighten the steering stem head nut to the specified torque.

Steering stem head nut: 90 N·m (9.0 kgf-m, 65.0 lb-ft)

- Insert the protrusion Ⓐ of the handlebars into the hole Ⓑ of the steering stem upper bracket.

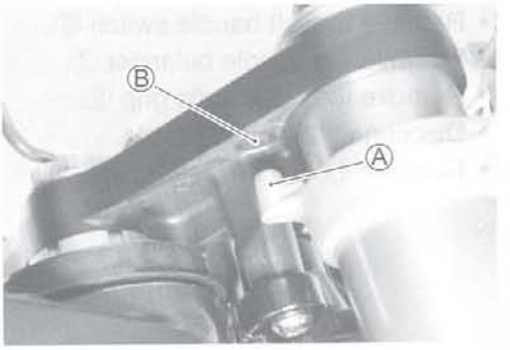

- Tighten the front fork upper clamp bolts ① and handlebar clamp bolts ② to the specified torque.

Front fork upper clamp bolt: 23 N·m (2.3 kgf-m, 16.5 lb-ft)
Handlebar clamp bolt: 23 N·m (2.3 kgf-m, 16.5 lb-ft)

- Apply an adhesive agent onto the left handlebar before installing the handlebar grip.

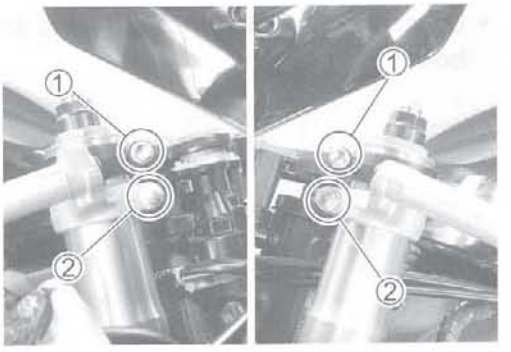

- Install the clutch lever holder, align the holder's mating surface Ⓐ with punch mark Ⓑ on the handlebars.

*1: Up side

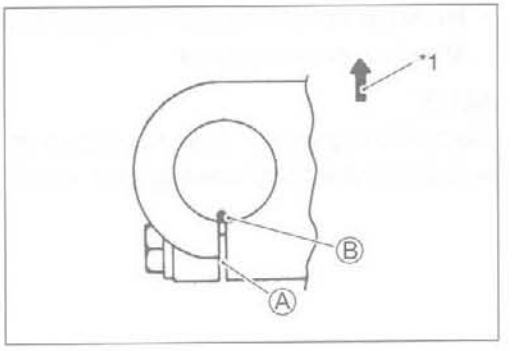

- Install the front brake master cylinder. (☞8-69)
- When installing the brake master cylinder, align the holders mating surface with punch mark Ⓒ on the handlebars.

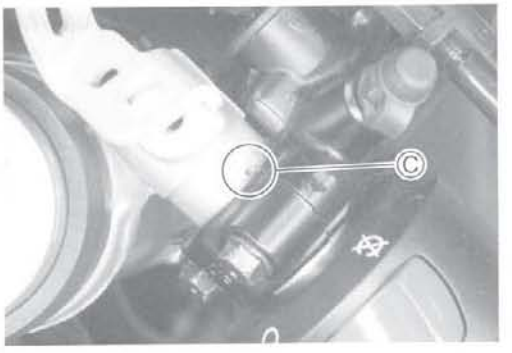

- Apply the SUZUKI SUPER GREASE "A" to the throttle cables and cable drum.

99000-25030: SUZUKI SUPER GREASE "A" (USA)
99000-25010: SUZUKI SUPER GREASE "A" (Others)

- When installing the right and left handle switches, engage the stopper with the handlebar hole.

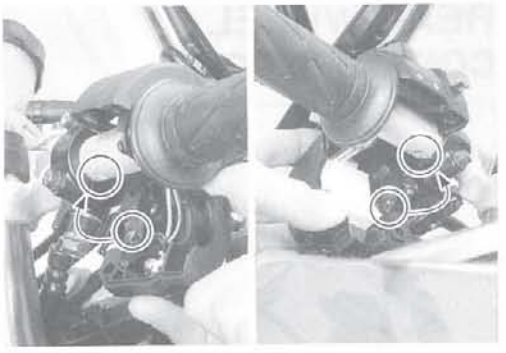

REAR WHEEL
CONSTRUCTION

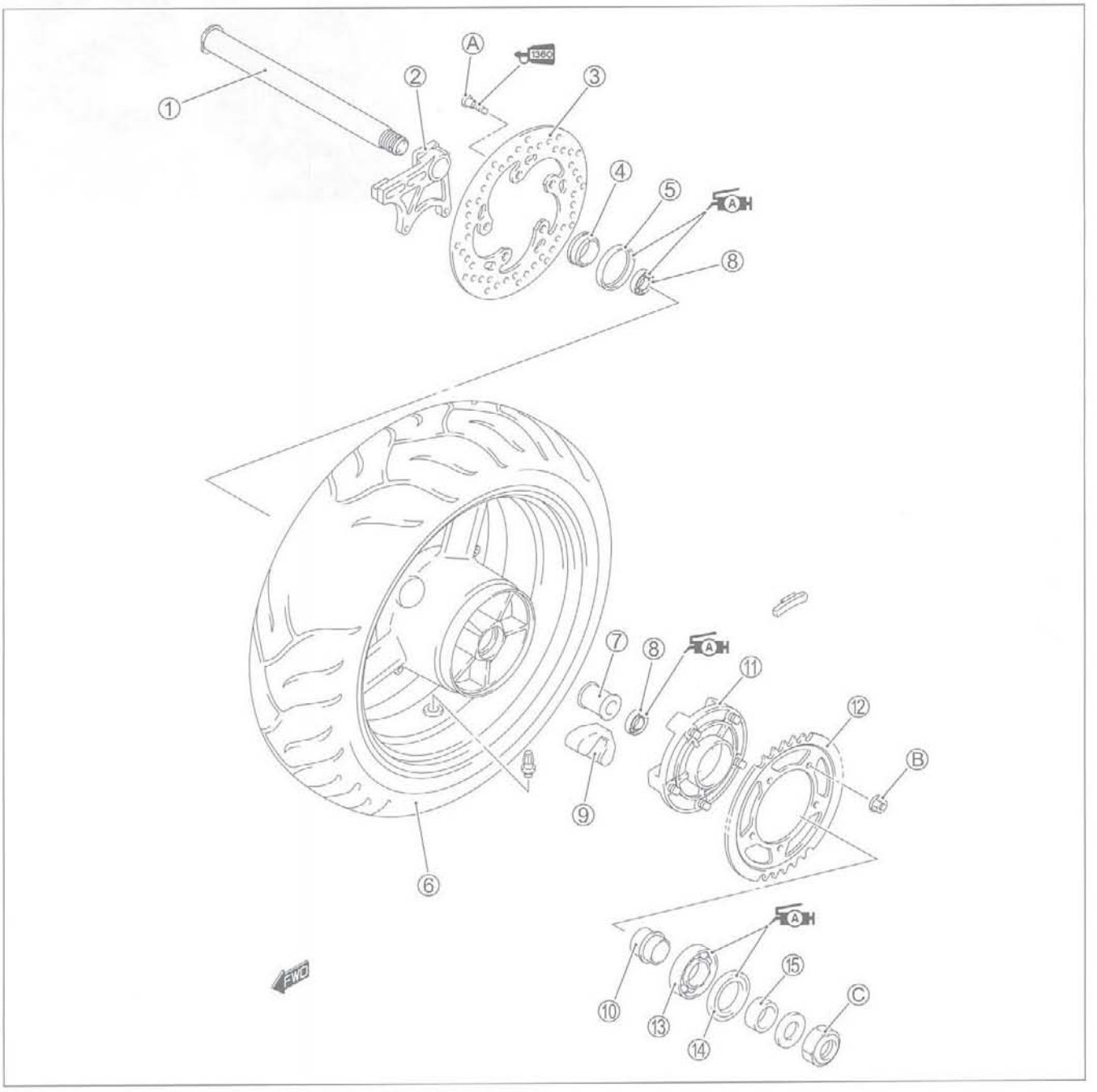

①	Rear axle	⑩	Spacer
②	Caliper bracket	⑪	Sprocket mounting drum
③	Brake disc	⑫	Sprocket
④	Collar	⑬	Bearing
⑤	Dust seal	⑭	Dust seal
⑥	Rear wheel	⑮	Collar
⑦	Spacer	Ⓐ	Brake disc bolt
⑧	Bearing	Ⓑ	Rear sprocket nut
⑨	Cushion	Ⓒ	Rear axle nut

ITEM	N·m	kgf-m	lb-ft
Ⓐ	35	3.5	25.5
Ⓑ	60	6.0	43.5
Ⓒ	100	10.0	72.5

REMOVAL

- Remove the cotter pin. (For E-03, 28, 33)
- Loosen the axle nut ①.
- Raise the rear wheel off the ground and support the motorcycle with a jack or wooden block.
- Remove the axle nut and draw out the rear axle.

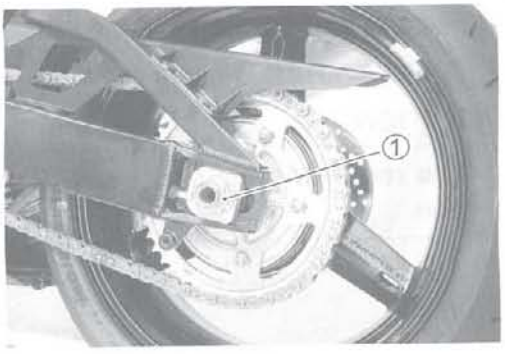

- Remove the rear wheel by disengaging the drive chain.

CAUTION

Do not operate the brake pedal while removing the rear wheel.

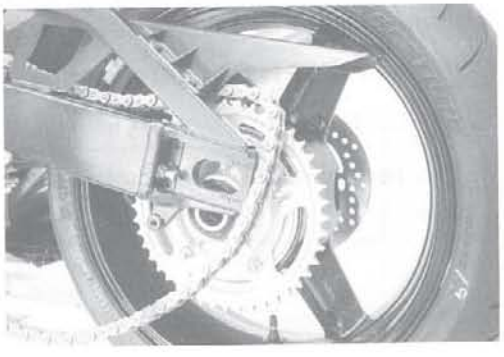

- Remove the collar ②.
- Remove the brake disc ③.

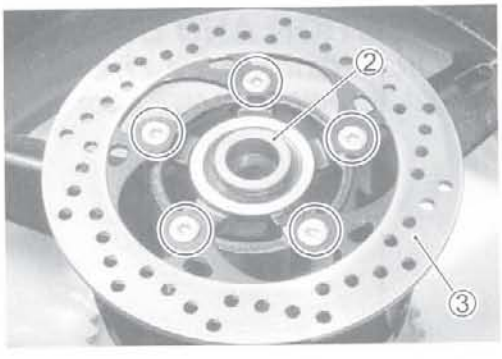

- Remove the collar ④.
- Remove the rear sprocket mounting nuts.
- Draw out the rear sprocket mounting drum ⑤ from the wheel hub and separate the rear sprocket ⑥ from its mounting drum.

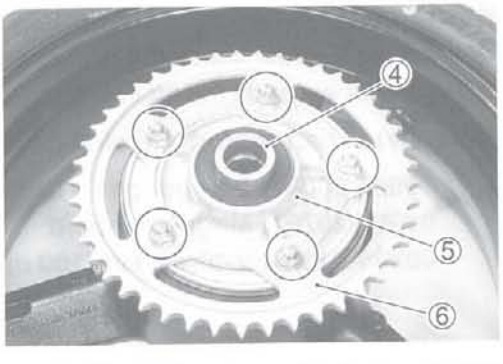

- Remove the rear sprocket mounting drum spacer ⑦.

- Remove the dust seal with the special tool.

TOOL 09913-50121: Oil seal remover

CAUTION

The removed dust seal must be replaced with a new one.

- Remove the dust seal with the special tool.

TOOL 09913-50121: Oil seal remover

CAUTION

The removed dust seal must be replaced with a new one.

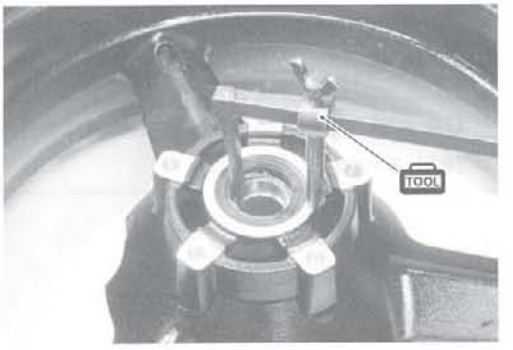

INSPECTION AND DISASSEMBLY

TIRE INSPECTION (☞2-27, 8-80)
WHEEL INSPECTION (☞8-80)

REAR AXLE

Using a dial gauge, check the rear axle for runout.
If the runout exceeds the limit, replace the rear axle.

DATA Axle shaft runout: Service Limit: 0.25 mm (0.010 in)

TOOL 09900-20607: Dial gauge (1/100 mm)
09900-20701: Magnetic stand
09900-21304: V-block set (100 mm)

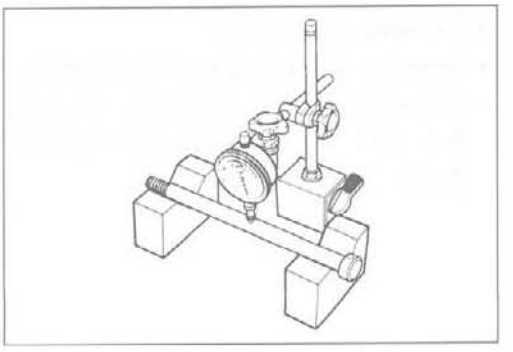

WHEEL DAMPER

Inspect the damper for wear and damage.
Replace the damper if there is anything unusual.

SPROCKET

Inspect the sprocket teeth for wear. If they are worn as shown, replace the two sprockets and drive chain as a set.

Ⓐ Normal wear
Ⓑ Excessive wear

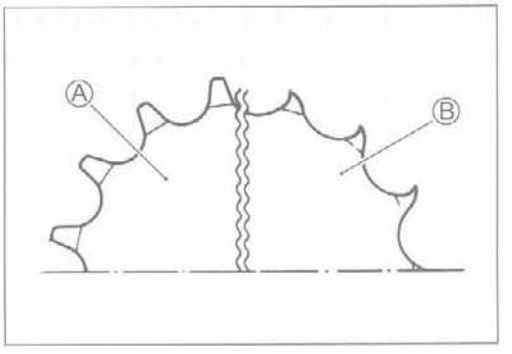

BEARINGS

Inspect the wheel bearing play and sprocket mounting drum bearing by hand while they are installed in place. Rotate the inner race by hand to inspect for abnormal noise and smooth rotation. Replace the bearing if there is anything unusual.

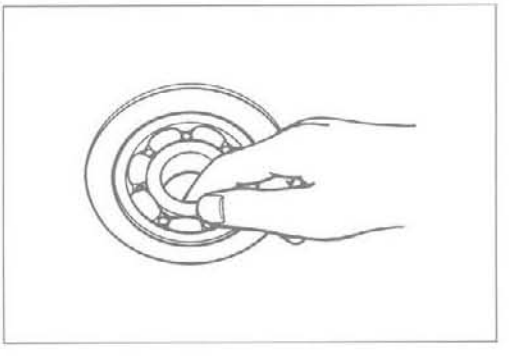

- Remove the sprocket mounting drum bearing ① and wheel bearing ② with the special tool.

TOOL 09921-20240: Bearing remover set (① 30 mm)
(② 28 mm)

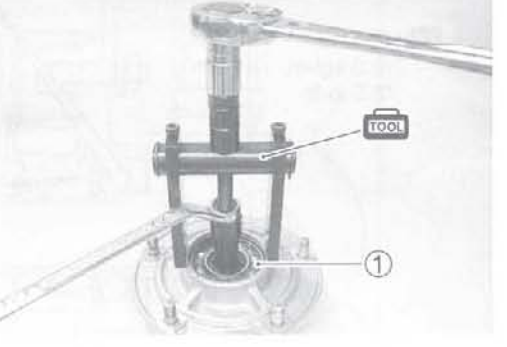

CAUTION

The removed bearings must be replaced with the new ones.

REASSEMBLY AND INSTALLATION

Reassemble and install the rear wheel in the reverse order of removal and disassembly. Pay attention to the following points:

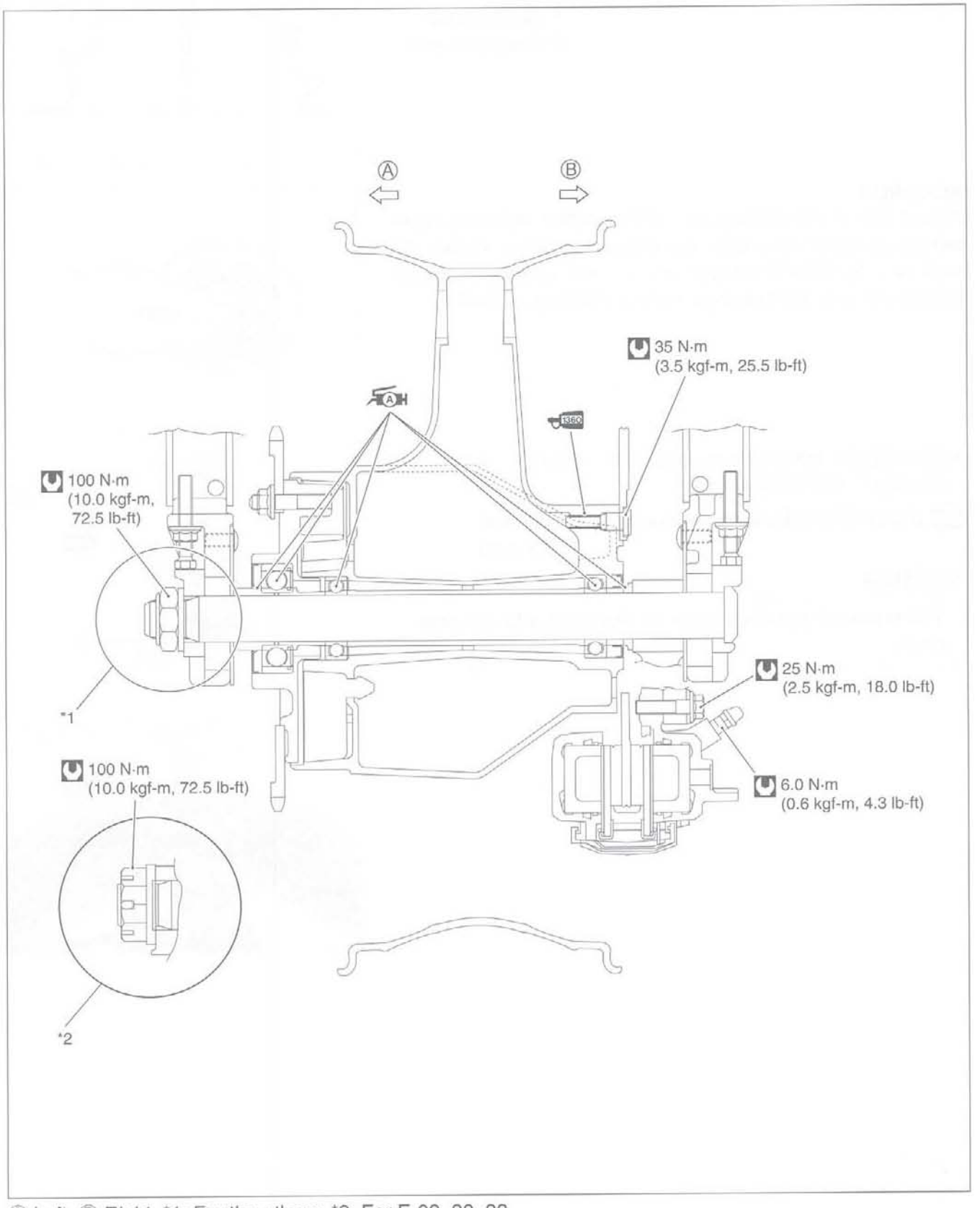

Ⓐ Left Ⓑ Right *1: For the others *2: For E-03, 28, 33

BEARINGS

- Apply SUZUKI SUPER GREASE "A" to the bearings before installing.

99000-25030: SUZUKI SUPER GREASE "A" (USA)
99000-25010: SUZUKI SUPER GREASE "A" (Others)

- Install the new bearing to the sprocket mounting drum with the special tool.

TOOL 09913-70210: Bearing installer set (ϕ 62)

- First install the right wheel bearing, then install the left wheel bearing with the special tools.

TOOL 09941-34513: Steering race installer
09924-84510: Bearing installer set

CAUTION

The sealed cover of the bearing must face outside.

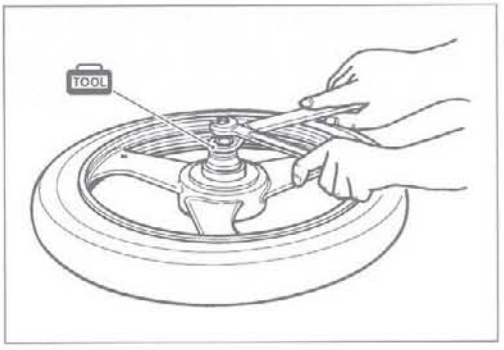

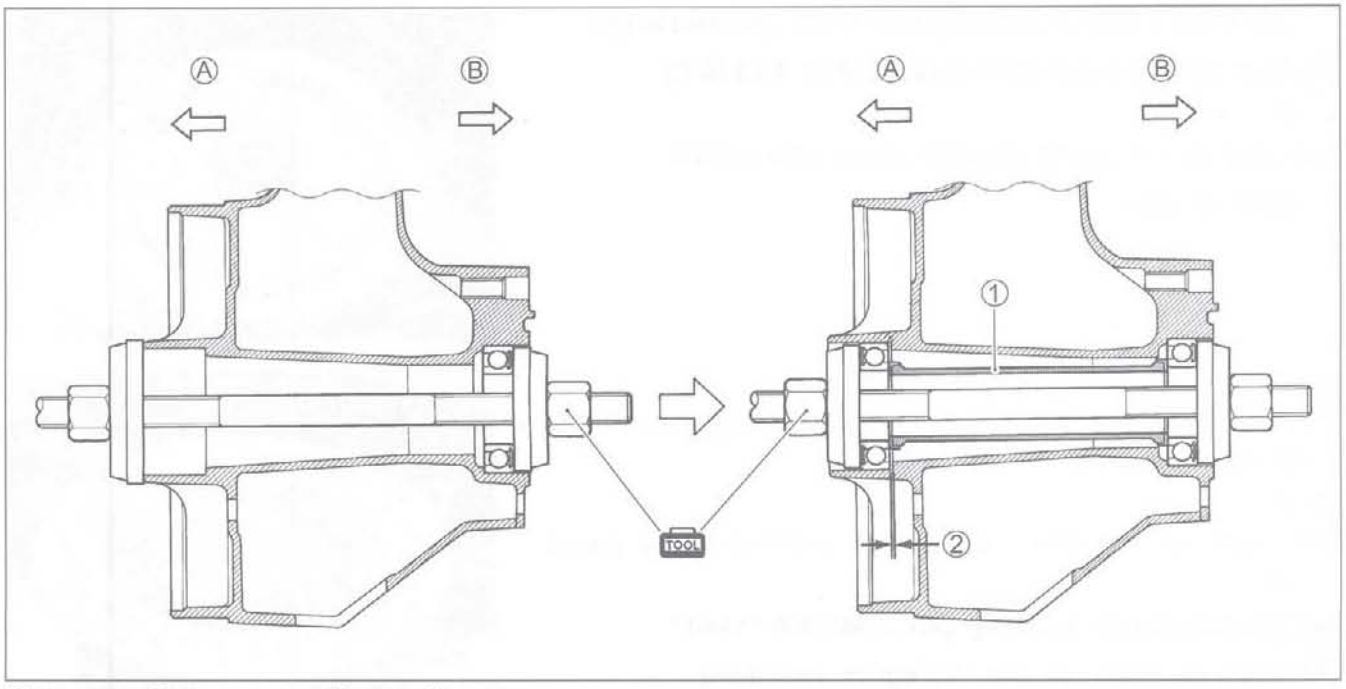

① Spacer ② Clearance Ⓐ Left Ⓑ Right

DUST SEALS

- Install the new dust seal with the special tool.

TOOL 09913-70210: Bearing installer set (① ϕ 68)
(② ϕ 52)

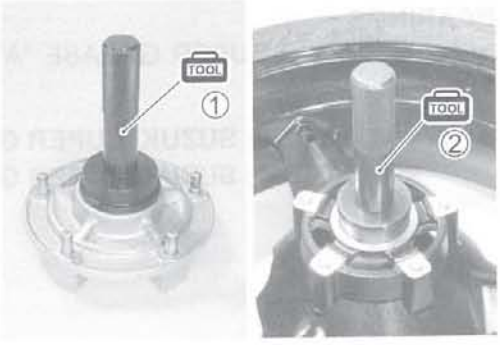

- Apply SUZUKI SUPER GREASE "A" to the dust seal lip before assembling rear wheel.

99000-25030: SUZUKI SUPER GREASE "A" (USA)
99000-25010: SUZUKI SUPER GREASE "A" (Others)

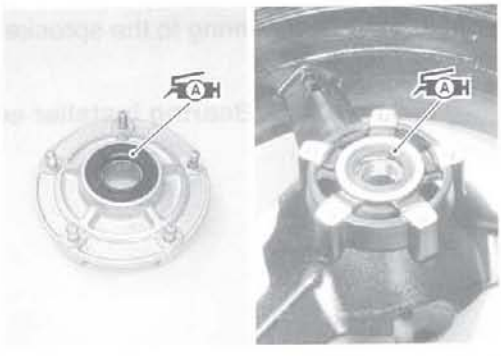

REAR SPROCKET AND SPROCKET MOUNTING DRUM

- Install the rear sprocket mounting drum spacer ①.
- Install the rear sprocket mounting drum to the rear wheel.

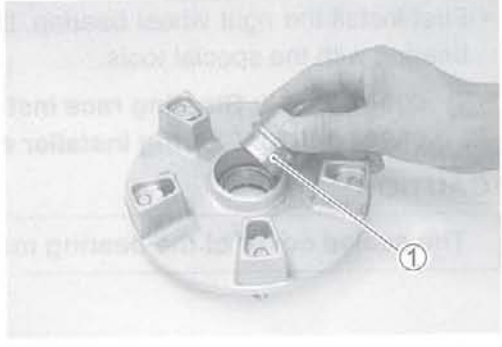

- Tighten the sprocket mounting nuts to the specified torque.

Rear sprocket nut: 60 N·m (6.0 kgf-m, 43.5 lb-ft)

NOTE:
Stamped mark Ⓐ on the sprocket should face outside.

- Install the collar ②.

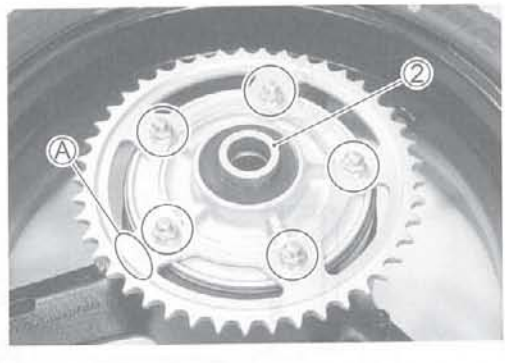

BRAKE DISC

- Apply THREAD LOCK to the disc bolts and tighten them to the specified torque.

NOTE:
Make sure that the brake disc is clean and free of any greasy matter.

1360 99000-32130: THREAD LOCK SUPER "1360"

Brake disc bolt: 35 N·m (3.5 kgf-m, 25.5 lb-ft)

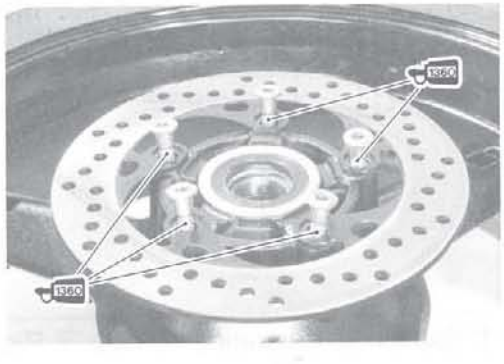

- Install the collar ①.

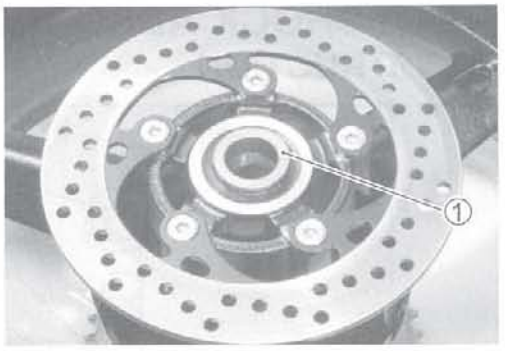

REAR AXLE

- Remount the rear wheel and rear axle shaft, and install the washer ① and rear axle nut ②.
- Adjust the chain slack after rear wheel installation. (☞2-21)
- Tighten both chain adjuster lock-nuts ③ securely.
- Tighten the rear axle nut ② to the specified torque.

Rear axle nut: 100 N·m (10.0 kgf-m, 72.5 lb-ft)

- Install the new cotter pin. (For E-03, 28, 33)

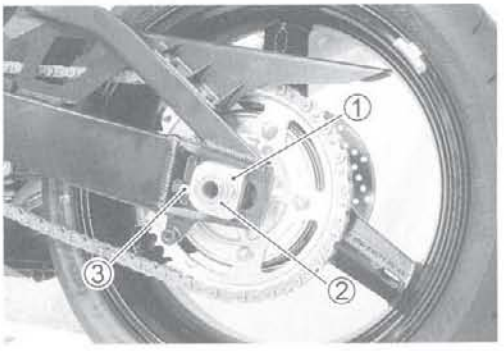

REAR SHOCK ABSORBER
CONSTRUCTION

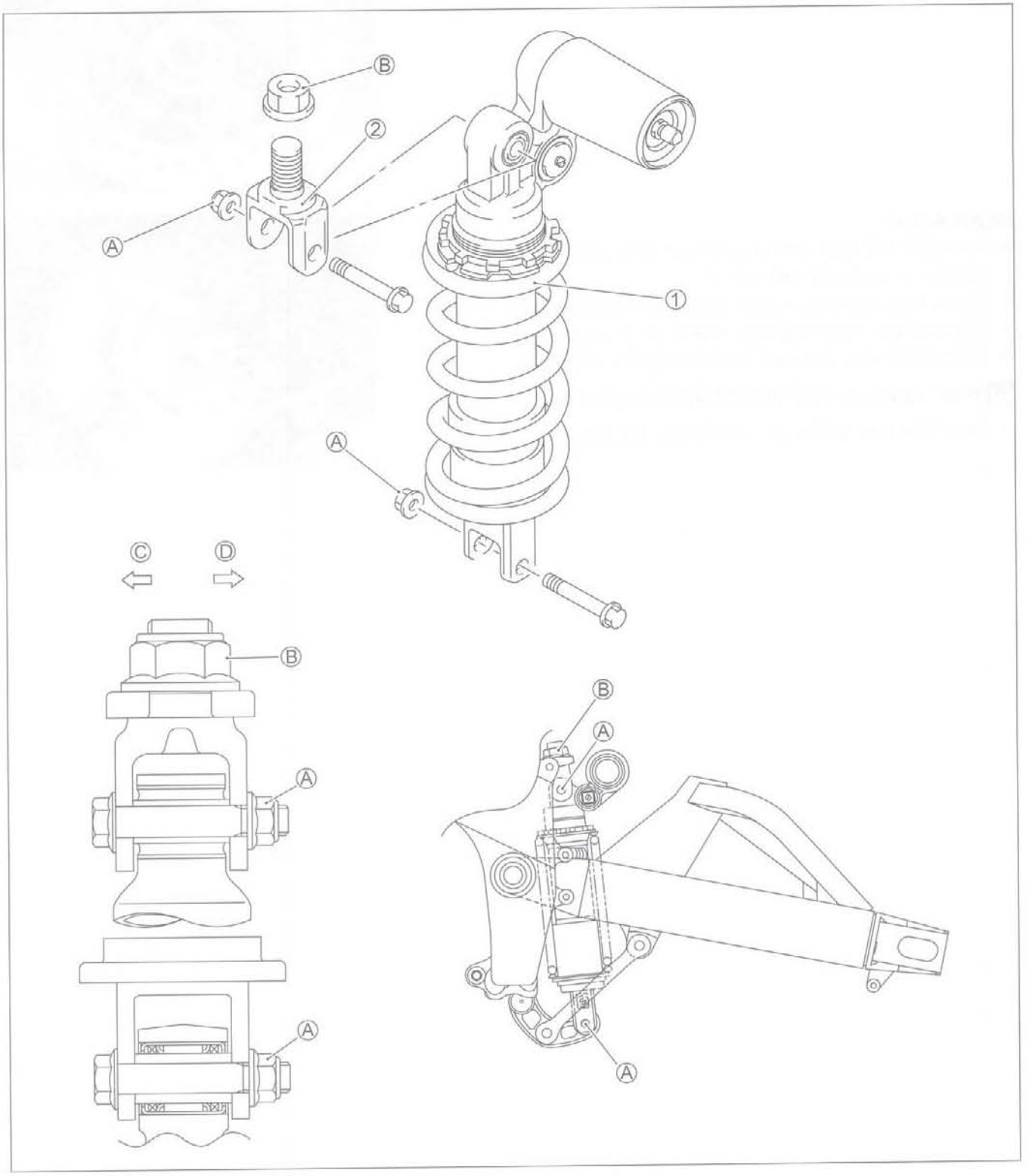

①	Rear shock absorber	Ⓑ	Rear shock absorber bracket nut
②	Rear shock absorber bracket	Ⓒ	Left
Ⓐ	Rear shock absorber mounting nut	Ⓓ	Right

ITEM	N·m	kgf-m	lb-ft
Ⓐ	50	5.0	36.0
Ⓑ	115	11.5	83.0

REMOVAL

- Support the motorcycle with a jack relieve load on the rear shock absorber.
- Remove the rear shock absorber upper and lower mounting bolts and nuts.

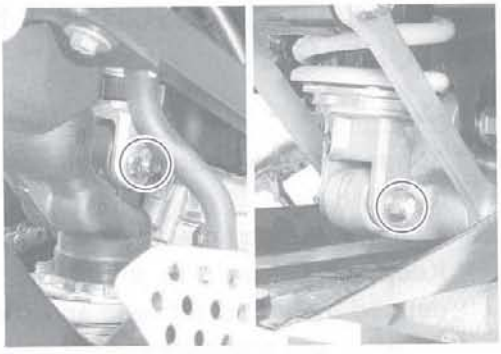

- Take out the rear shock absorber.

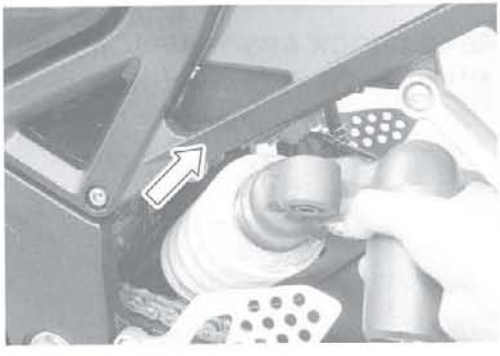

- Remove the rear shock absorber bracket ①.

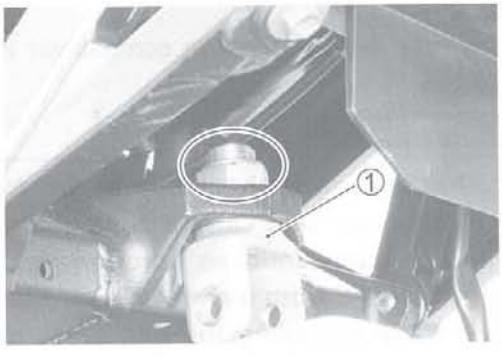

INSPECTION

Inspect the shock absorber body and bushing for damage and oil leakage.

If any defects are found, replace the shock absorber with a new one.

CAUTION

Do not attempt to disassemble the rear shock absorber unit. It is unserviceable.

REAR SHOCK ABSORBER SCRAPPING PROCEDURE

⚠ WARNING

- **The rear shock absorber unit contains high-pressure nitrogen gas.**
- **Mishandling can cause explosion.**
- **Keep away from fire and heat. High gas pressure caused by heat can cause an explosion.**
- **Release gas pressure before scrapping.**

REAR SHOCK ABSORBER GAS RELEASE

- Remove the valve cap ①.

- Press the valve with a screwdriver to bleed out the nitrogen gas.

⚠ WARNING

- **Releasing high pressure gas from the rear shock absorber unit can be hazardous. Never perform any servicing until the nitrogen gas pressure has been released from the rear shock absorber unit.**
- **When releasing the gas pressure, place a rag over the gas valve and use the tip of a screwdriver to press the valve. Do not use your finger to depress the gas valve, and be sure to direct the valve away from your face and body.**
- **Be sure to always wear eye protection when performing this procedure.**

INSTALLATION

Install the rear shock absorber in the reverse order of removal. Pay attention to the following points:

- Tighten the rear shock absorber bracket nut ① to the specified torque.

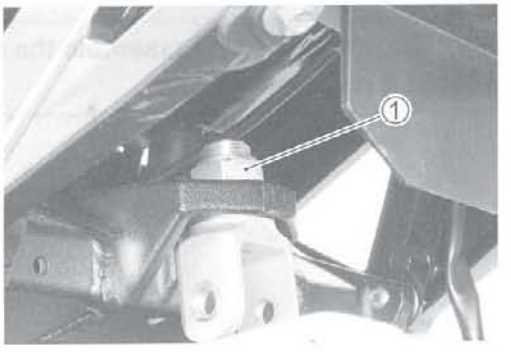

Rear shock absorber bracket nut:
115 N·m (11.5 kgf-m, 83.0 lb-ft)

- Install the rear shock absorber and tighten the rear shock absorber upper/lower mounting nuts to the specified torque.

Rear shock absorber mounting nut:
50 N·m (5.0 kgf-m, 36.0 lb-ft)

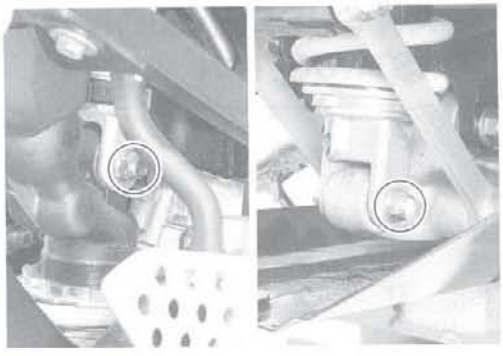

SUSPENSION SETTING

After installing the rear suspension, adjust the spring pre-load and damping force as follows.

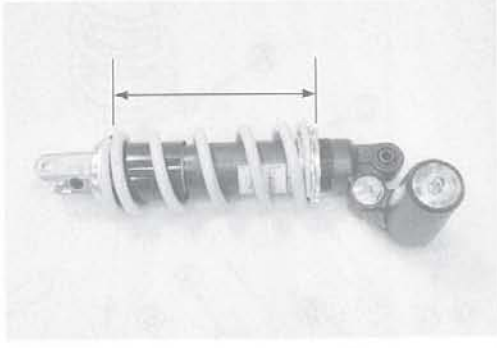

SPRING PRE-LOAD ADJUSTMENT

The set length 190.9 mm (7.52 in) provides the maximum spring pre-load.

The set length 200.9 mm (7.91 in) provides the minimum spring pre-load.

DATA STD Length: 195.9 mm (7.71 in)

DAMPING FORCE ADJUSTMENT

Rebound side

Fully turn the damping force adjuster ① clockwise. It is at stiffest position and turn it out to standard setting position.

DATA STD Position: 2 turns out from stiffest position

[Fine-tune the adjuster by turning it slightly until two punch marks align.]

Compression side

Fully turn the damping force adjuster ② clockwise. It is at stiffest position and turn it out to standard setting position.

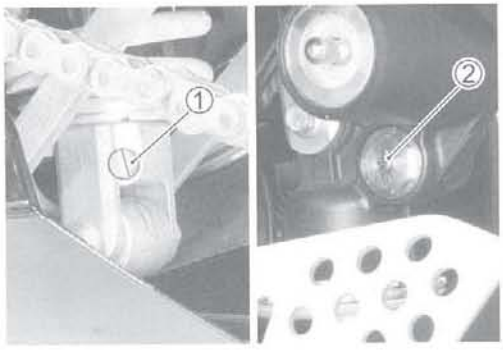

DATA STD Position: 1 3/4 turns out from stiffest position

[Fine-tune the adjuster by turning it slightly until two punch marks align.]

DATA Standard suspension setting

	REAR		
	Spring set length	Damping force adjuster	
		Rebound	Compression
Solo and dual riding	195.9 mm (7.71 in)	2 turns out from stiffest position	1 3/4 turns out from stiffest position

REAR SUSPENSION
CONSTRUCTION

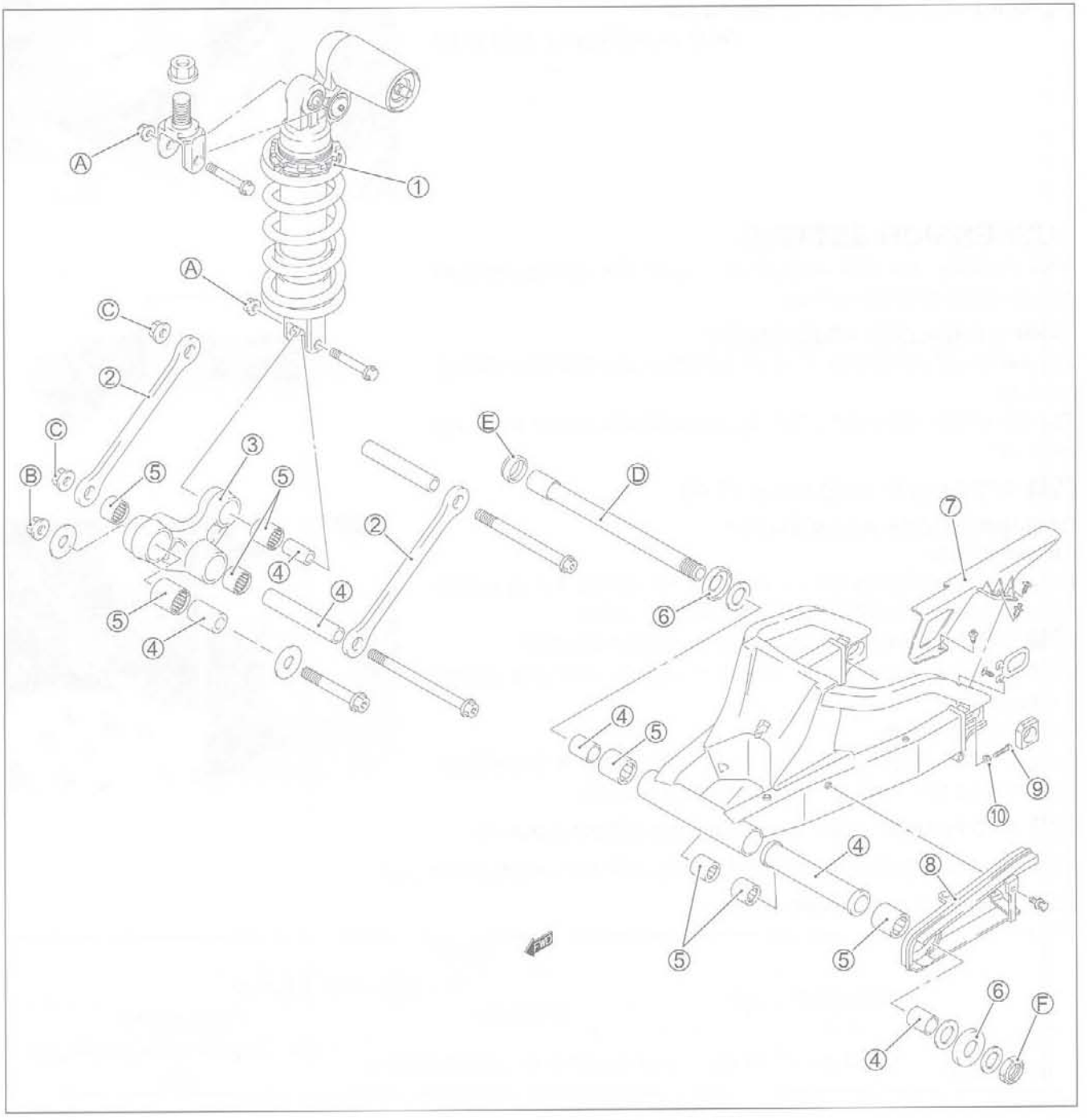

①	Rear shock absorber	⑨	Chain adjuster
②	Cushion rod	⑩	Chain adjuster lock-nut
③	Cushion lever	Ⓐ	Rear shock absorber mounting nut
④	Spacer	Ⓑ	Cushion lever mounting nut
⑤	Bearing	Ⓒ	Cushion rod nut
⑥	Dust seal	Ⓓ	Swingarm pivot shaft
⑦	Chain cover	Ⓔ	Swingarm pivot lock-nut
⑧	Chain buffer	Ⓕ	Swingarm pivot nut

ITEM	N·m	kgf-m	lb-ft
Ⓐ	50	5.0	36.0
Ⓑ	78	7.8	56.5
Ⓒ	78	7.8	56.5
Ⓓ	15	1.5	11.0
Ⓔ	90	9.0	65.0
Ⓕ	100	10.0	72.5

REMOVAL

- Cut the drive chain. (☞8-84)

NOTE:
It is necessary to cut the drive chain, only when replacing drive chain or swingarm.

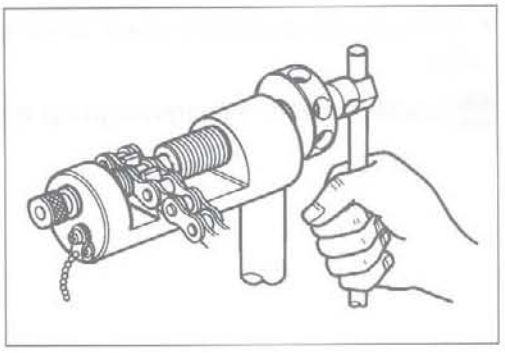

- Raise the rear wheel off the ground and support the motorcycle with a jack or a wooden block.
- Remove the rear wheel. (☞8-39)
- Remove the side-stand ①.

NOTE:
It is necessary to remove the side-stand, only when replacing the cushion lever.

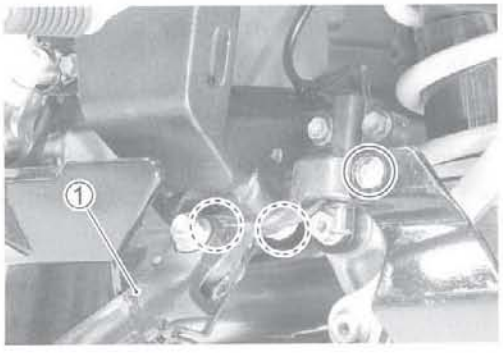

- Remove the rear brake hose union bolt.

CAUTION

> **Completely wipe off any brake fluid adhering to any part of motorcycle. The fluid reacts chemically with paint, plastics, rubber materials, etc., and will damage them severely.**

- Remove the brake hose guide ②.

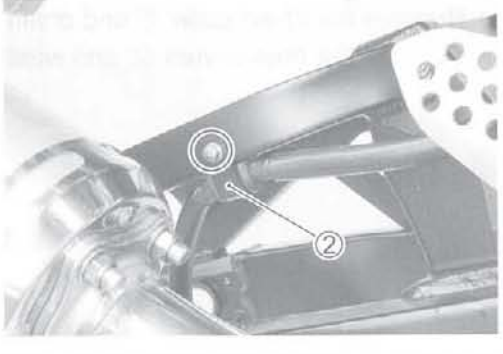

- Remove the cushion lever mounting bolt/nut ③ and rear shock absorber lower mounting bolt/nut ④.
- Remove the cushion lever ⑤.

NOTE:
Slightly loosen the cushion rod mounting bolt/nut Ⓐ to facilitate later disassembly.

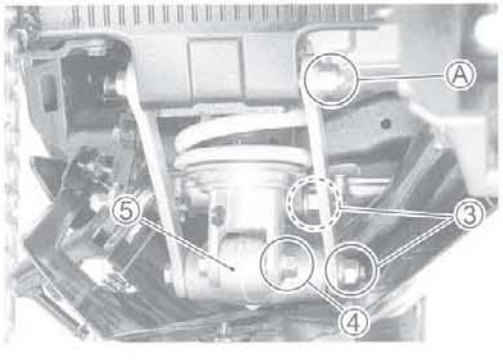

- Remove the swingarm pivot shaft lock-nut with the special tool.

TOOL 09940-14940: Swingarm pivot thrust adjuster socket wrench

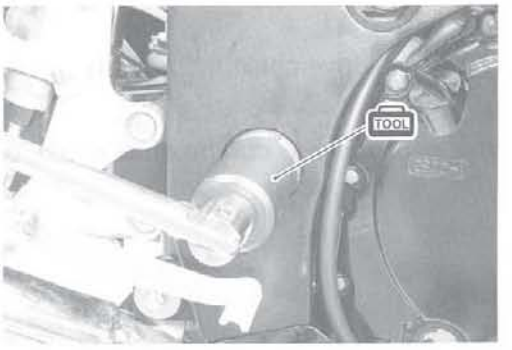

- Hold the swingarm pivot shaft ⑥ and remove the swingarm pivot nut ⑦.

TOOL 09900-18740: Hexagon socket (24 mm)

- Draw out the swingarm pivot shaft.
- Remove the rear suspension assembly.

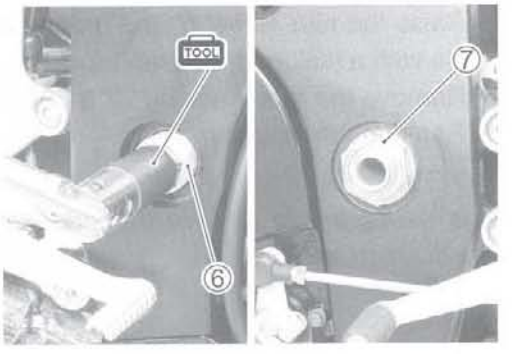

- Remove the cushion rods ⑧.

- Remove the chain case ⑨ and chain buffer ⑩.
- Remove the dust covers ⑪ and washers ⑫.

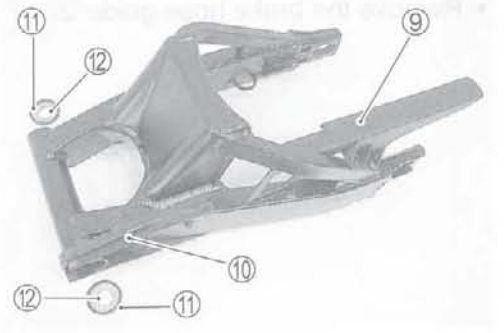

INSPECTION AND DISASSEMBLY

SPACER

- Remove the spacers from swingarm.
- Remove the spacers from the cushion lever.
- Inspect the spacers for any flaws or other damage. If any defects are found, replace the spacers with the new ones.

SWINGARM BEARING

Insert the spacer into bearing and check the play when moving the spacer up and down.
If excessive play is noted, replace the bearing with a new one.

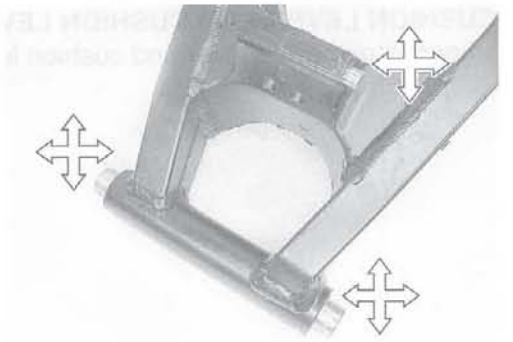

- Draw out the swingarm pivot bearings ① and the swingarm cushion rod upper bearings ② with the special tool.

TOOL 09921-20240: Bearing remover set (① 30 mm)
(② 17 mm)

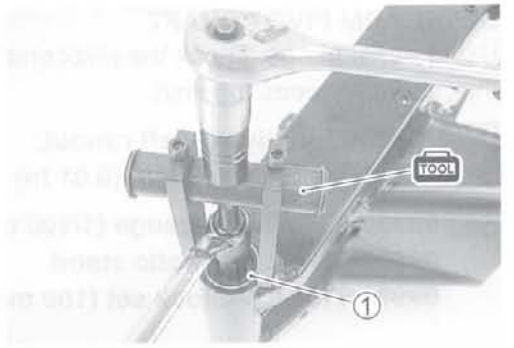

CAUTION

The removed bearings must be replaced with the new ones.

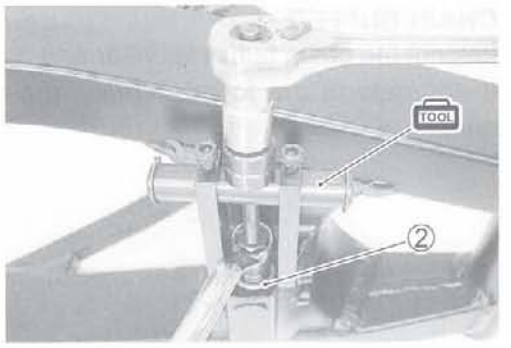

CUSHION LEVER BEARING

Insert the spacer into bearing and check the play when moving the spacer up and down.
If excessive play is noted, replace the bearing with a new one.

- Draw out the cushion lever bearings with the special tool.

TOOL 09921-20240: Bearing remover set (20 mm and 17 mm)

CAUTION

The removed bearings must be replaced with the new ones.

CUSHION LEVER AND CUSHION LEVER RODS

Inspect the cushion lever and cushion lever rods for damage.

SWINGARM PIVOT SHAFT

Using a dial gauge, check the pivot shaft runout and replace it if the runout exceeds the limit.

DATA Swingarm pivot shaft runout:
Service limit: 0.3 mm (0.01 in)

TOOL 09900-20607: Dial gauge (1/100 mm, 10 mm)
09900-20701: Magnetic stand
09900-21304: V-block set (100 mm)

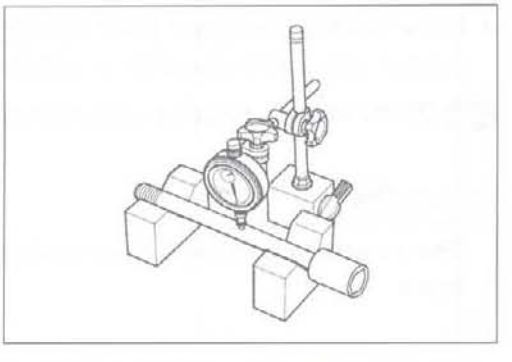

CHAIN BUFFER

Inspect the chain buffer for wear and damage.
If any defects are found, replace the chain buffer with a new one.

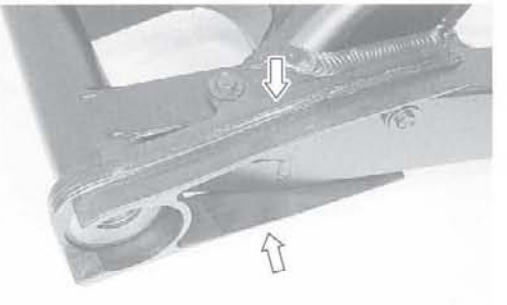

REASSEMBLY

Reassemble the swingarm in the reverse order of disassembly and removal.
Pay attention to the following points:

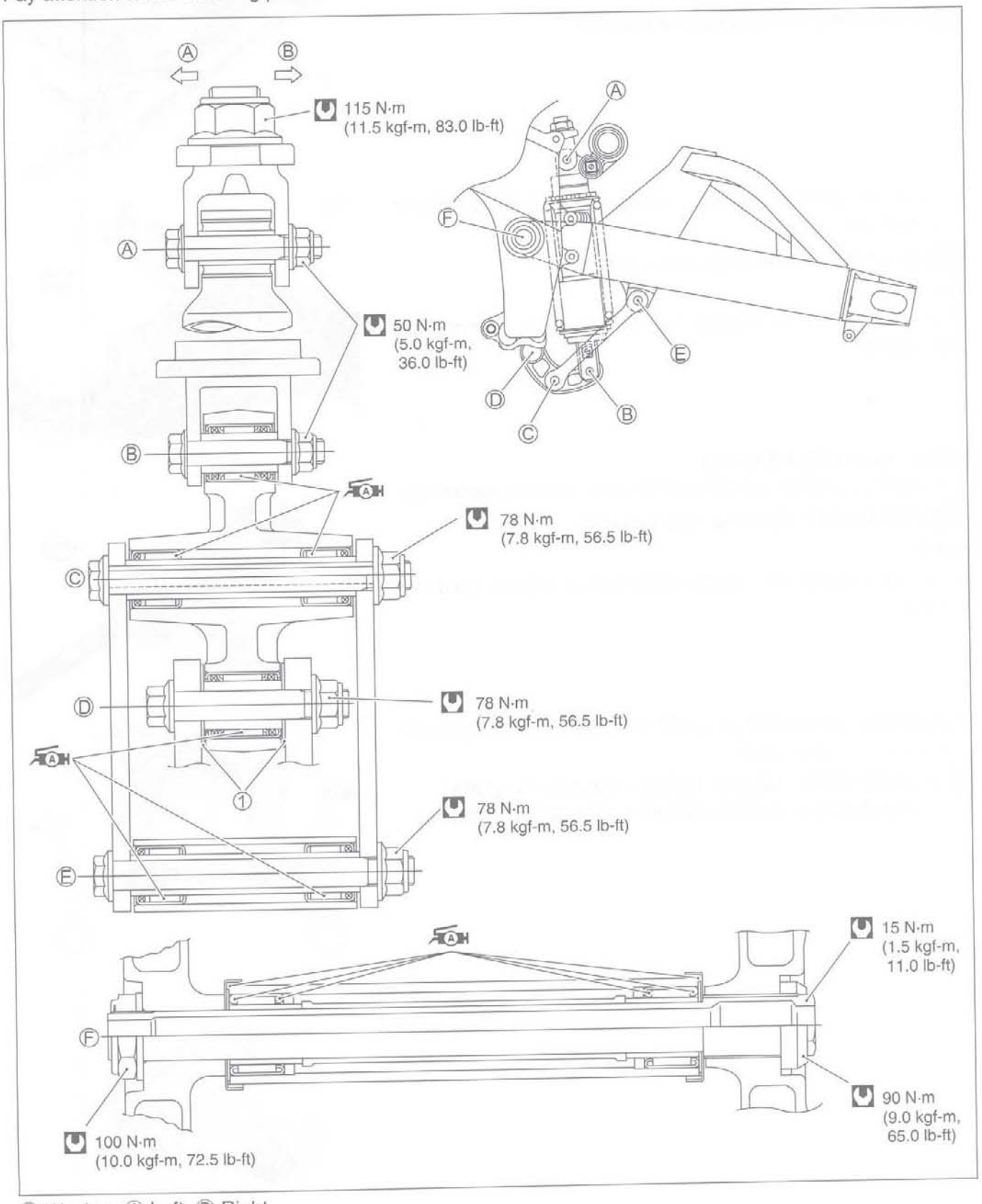

① Washer Ⓐ Left Ⓑ Right

SWINGARM BEARING

- Press the bearing into the swingarm pivot with the special tool.

TOOL 09941-34513: Steering race installer

- Press the swingarm cushion rod upper side bearing with the special tool.

TOOL 09941-34513: Steering race installer

NOTE:
When reinstalling the bearing, stamped mark on bearing must face outside.

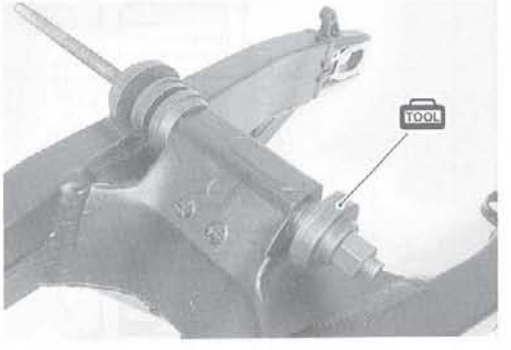

CUSHION LEVER BEARING

- Press the bearings into the cushion lever with the special tool.

TOOL 09941-34513: Steering race installer

NOTE:
When installing the bearing, stamped mark on bearing must face outside.

- Apply SUZUKI SUPER GREASE "A" to the bearings, spacers, washers and dust seals.

A 99000-25030: SUZUKI SUPER GREASE "A" (USA)
99000-25010: SUZUKI SUPER GREASE "A" (Others)

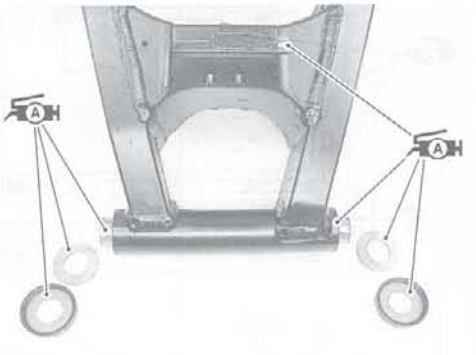

- Assemble the cushion rods ① onto the swingarm temporarily.

- Install the chain case ② and chain buffer ③.

INSTALLATION

Install the swingarm in the reverse order of removal. Pay attention to the following points:

SWINGARM PIVOT THRUST CLEARANCE ADJUSTMENT

Adjust swingarm pivot thrust clearance in the following procedure.

- Insert the swingarm pivot shaft and tighten its to the specified torque.

TOOL 09900-18740: Hexagon socket (24 mm)

Swingarm pivot shaft: 15 N·m (1.5 kgf-m, 11.0 lb-ft)

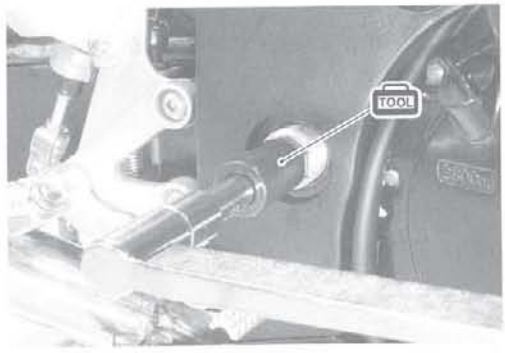

- Hold the swingarm pivot shaft and tighten the swingarm pivot nut ① to the specified torque.

Swingarm pivot nut: 100 N·m (10.0 kgf-m, 72.5 lb-ft)

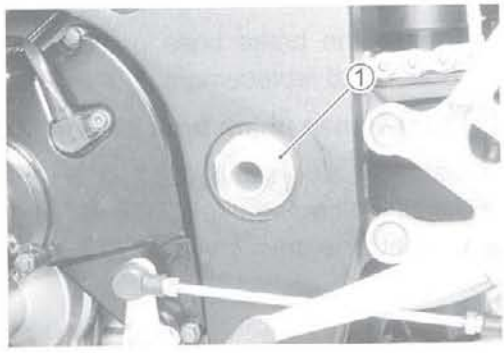

- Tighten the swingarm pivot lock-nut to the specified torque with the special tool.

TOOL 09940-14940: Swingarm pivot thrust adjuster socket wrench

Swingarm pivot lock-nut: 90 N·m (9.0 kgf-m, 65.0 lb-ft)

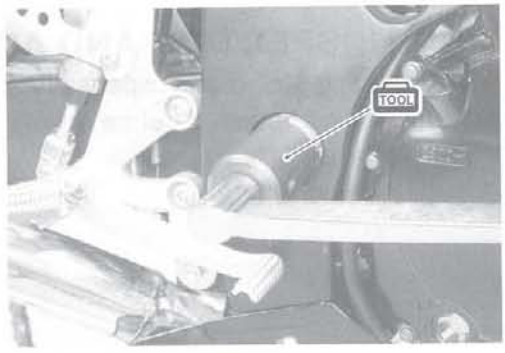

SHOCK ABSORBER AND CUSHION LEVER MOUNTING NUT

- Install the washers ① and cushion lever ②.

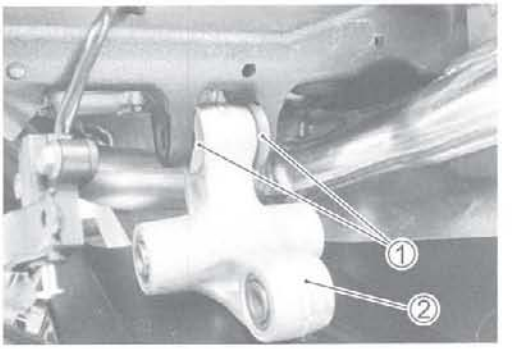

- Tighten the cushion lever mounting nut ③ to the specified torque.

Cushion lever mounting nut ③: 78 N·m (7.8 kgf-m, 56.5 lb-ft)

- Assemble the cushion lever, cushion rod and rear shock absorber and tighten them to the specified torque. (☞8-55)

Rear shock absorber mounting nut ④: 50 N·m (5.0 kgf-m, 36.0 lb-ft)

Cushion rod nut ⑤: 78 N·m (7.8 kgf-m, 56.5 lb-ft)

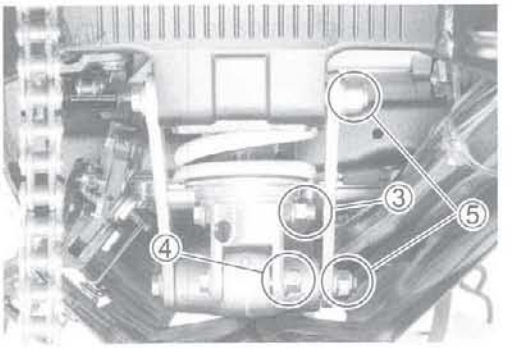

- Route the brake hose and install the brake hose guide ⑥. (☞10-24)

- Tighten the brake hose union bolt to the specified torque. (Brake fluid replacement: ☞8-73)

Brake hose union bolt: 23 N·m (2.3 kgf-m, 16.5 lb-ft)

- Install the side-stand. (☞10-31)
- Install the rear wheel. (☞8-42)
- Connect the drive chain. (☞8-84)

FINAL INSPECTION AND ADJUSTMENT

After installing the rear suspension and wheel, the following adjustments are required before driving.

* Drive chain (☞2-21)
* Tire pressure (☞2-27)

FRONT BRAKE
CONSTRUCTION

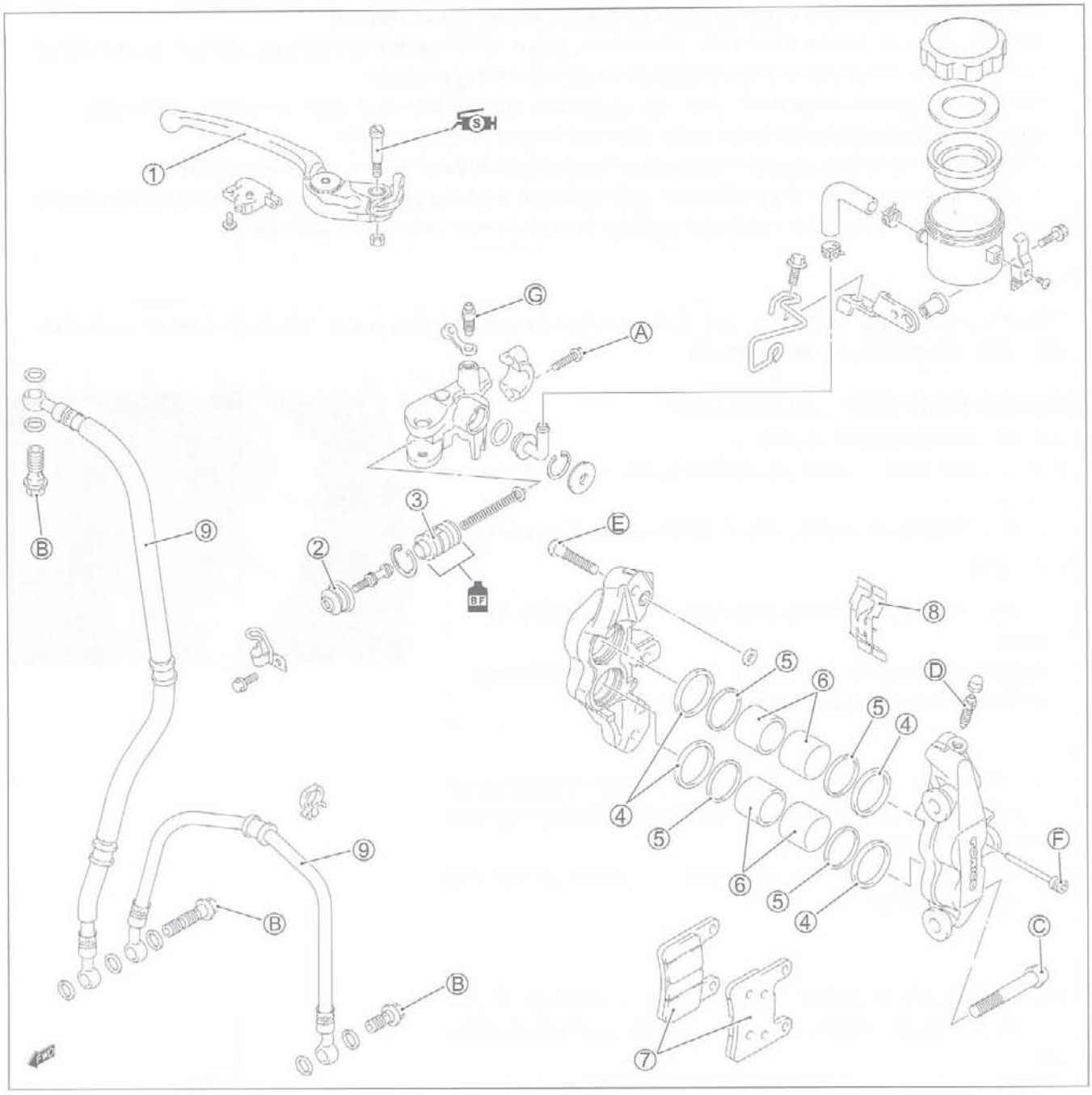

①	Brake lever	⑨	Brake hose
②	Dust boot	Ⓐ	Master cylinder mounting bolt
③	Piston set	Ⓑ	Brake hose union bolt
④	Piston seal	Ⓒ	Caliper mounting bolt
⑤	Dust seal	Ⓓ	Caliper air bleeder valve
⑥	Brake caliper piston	Ⓔ	Caliper housing bolt
⑦	Brake pad	Ⓕ	Brake pad mounting pin
⑧	Brake pad spring	Ⓖ	Master cylinder air bleeder valve

ITEM	N·m	kgf-m	lb-ft
Ⓐ	10	1.0	7.0
Ⓑ	23	2.3	16.5
Ⓒ	39	3.9	28.0
Ⓓ	7.5	0.75	5.5
Ⓔ	22	2.2	16.0
Ⓕ	15	1.5	11.0
Ⓖ	6.0	0.6	4.3

⚠ WARNING

* **This brake system is filled with an ethylene glycol-based DOT 4 brake fluid. Do not use mix different types of fluid such as silicone-based or petroleum-based.**
* **Do not use any brake fluid taken from old, used or unsealed containers. Never reuse brake fluid left over from the last servicing or stored for long periods.**
* **When storing the brake fluid, seal the container completely and keep away from children.**
* **When replenishing brake fluid, take care not to get dust into fluid.**
* **When washing brake components, use fresh brake fluid. Never use cleaning solvent.**
* **A contaminated brake disc or brake pad reduces braking performance. Discard contaminated pads and clean the disc with high quality brake cleaner or neutral detergent.**

CAUTION

Handle brake fluid with care: the fluid reacts chemically with paint, plastics, rubber materials etc. and will damage then severely.

BRAKE PAD REPLACEMENT

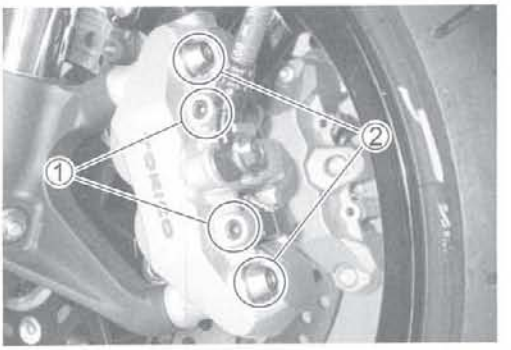

- Loosen the pad mounting pins ①.
- Remove the brake caliper by removing the caliper mounting bolts ②.
- Remove the pad mounting pins ①, brake pads and spring.

CAUTION

* **Do not operate the brake lever while dismounting the pads.**
* **Replace the brake pads as a set, otherwise braking performance will be adversely affected.**

NOTE:

* *When the brake caliper is removed, care must be used so as not to cause stress to the brake hose. (Hang the brake caliper on the frame with a string etc.)*
* *When removing the pad spring, push the piston all the way into the brake caliper.*

- Inspect the pad mounting pins for bent or damage. If any defects are found, replace the pad mounting pins with the new ones.

- Install the spring to the caliper, bring its wider side of pawl Ⓐ facing top.

NOTE:
Before installing the spring and brake pads to the caliper, push the piston all the way into the brake caliper.

- Install the new brake pads.
- Install the brake caliper.
- Tighten each bolt to the specified torque.

Pad mounting pin ①: 15 N·m (1.5 kgf-m, 11.0 lb-ft)
Front brake caliper mounting bolt ②: 39 N·m (3.9 kgf-m, 28.0 lb-ft)

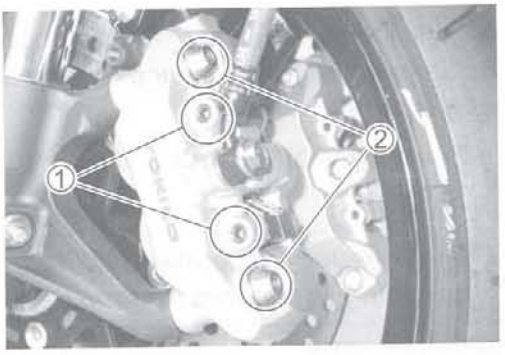

NOTE:
* *After replacing the brake pads, pump the brake lever a few times to check for proper brake operation and then check the brake fluid level.*

BRAKE FLUID REPLACEMENT

- Place the motorcycle on a level surface and keep the handlebars straight.
- Remove the brake fluid reservoir cap ① and diaphragm.
- Drain the old brake fluid as much as possible.
- Fill the reservoir with new brake fluid.

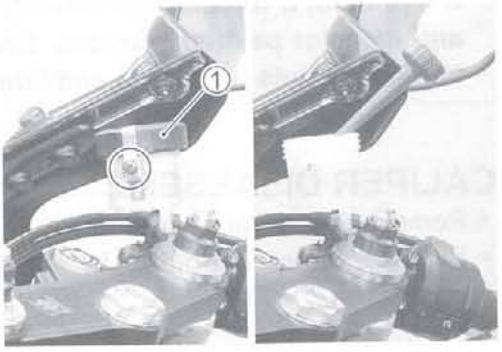

- Connect a clear hose to the caliper air bleeder valve and insert the other end of hose into a receptacle.
- Loosen the air bleeder valve and pump the brake lever until old brake fluid flows out of the bleeder system.
- Close the caliper air bleeder valve and disconnect a clear hose. Fill the reservoir with new fluid to the upper mark of the reservoir.

Specification and Classification: DOT 4

CAUTION

Bleed air from the brake system. (☞2-25)

CALIPER REMOVAL

- Remove the brake hose from the caliper by removing the union bolt ① and catch the brake fluid in a suitable receptacle.

NOTE:
Place a rag underneath the union bolt on the brake caliper to catch any split brake fluid.

- Remove the brake caliper. (☞8-60)

NOTE:
Slightly loosen the caliper housing bolts from the opposite side before removing the caliper mounting bolts to facilitate later disassembly.

- Remove the brake pads and spring. (☞8-60)

CAUTION

Never reuse the brake fluid left over from previous servicing and stored for long periods of time.

⚠ WARNING

Brake fluid, if it leaks, will interfere with safe running and discolor painted surfaces. Check the brake hose and hose joints for cracks and fluid leakage.

CALIPER DISASSEMBLY

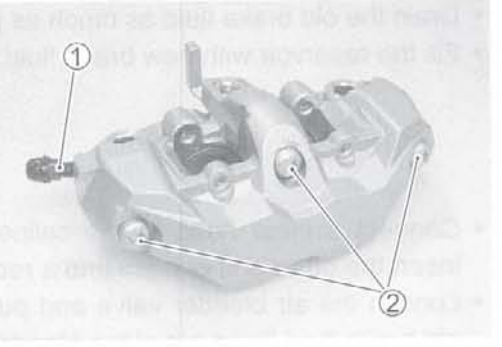

- Remove the caliper air bleeder valve ①.
- Separate the caliper halves by removing the caliper housing bolts ②.

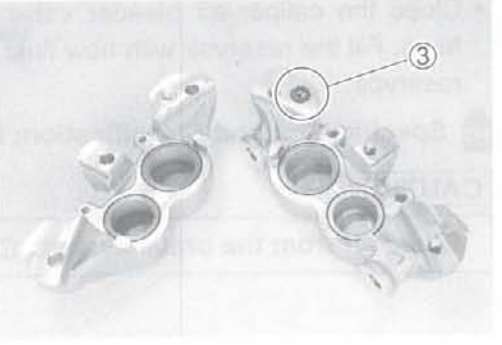

- Remove the O-ring ③.

CAUTION

Replace the O-ring with a new one.

- Place a rag over the pistons to prevent it from popping out and then force out the pistons using compressed air.

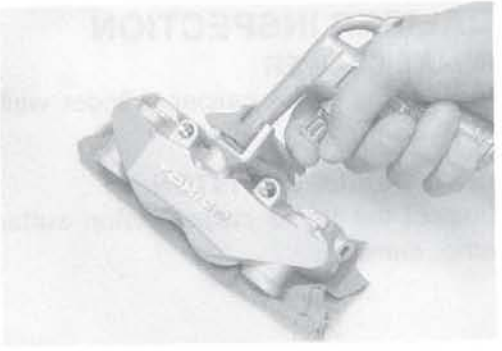

CAUTION

Do not use high pressure air to prevent piston damage.

- Remove the dust seals and piston seals.

CAUTION

Do not reuse the dust seals and piston seals to prevent fluid leakage.

CALIPER INSPECTION

BRAKE CALIPER

Inspect the brake caliper cylinder wall for nicks, scratches or other damage.

BRAKE CALIPER PISTON

Inspect the brake caliper piston surface for any scratches or other damage.

CALIPER REASSEMBLY

Reassemble the caliper in the reverse order of disassembly. Pay attention to the following points:

- Clean the caliper bores and pistons with specified brake fluid, especially the dust seal grooves and piston seal grooves.

Specification and Classification: DOT 4

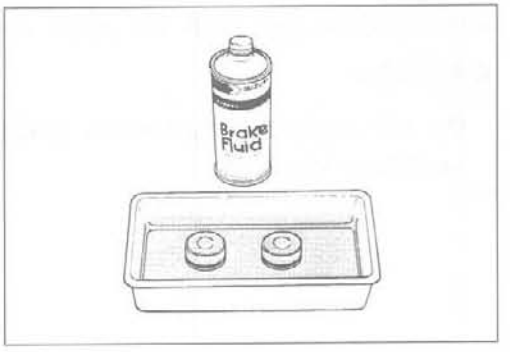

CAUTION

- **Clean the caliper components with fresh brake fluid before reassembly. Never use cleaning solvent or gasoline to clean them.**
- **Do not wipe the brake fluid off after cleaning the components.**
- **When cleaning the components, use the specified brake fluid. Never use different types of fluid or cleaning solvent such as gasoline, kerosine or others.**
- **Replace the piston seals and dust seals with the new ones when reassembly. Apply the brake fluid to both seals when installing them.**

PISTON SEAL

- Install the piston seals as shown in the illustration.

① Dust seal
② Piston seal
③ Caliper body

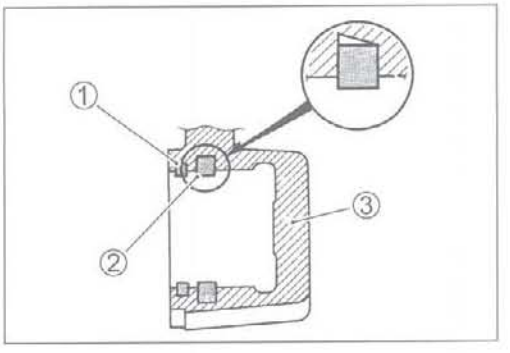

O-RING

- Install the new O-ring ① and reassemble caliper halves.

CAUTION

Replace the O-ring with a new one.

CALIPER INSTALLATION

Install the caliper in the reverse order of removal. Pay attention to the following points:

- Install the spring and brake pads. (☞8-61)
- Install the brake caliper and tighten each bolt to the specified torque.

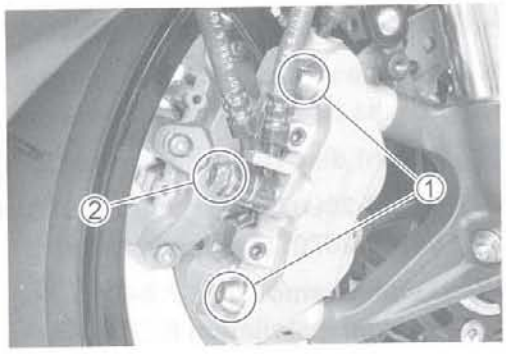

Front brake caliper housing bolt:
22 N·m (2.2 kgf-m, 16.0 lb-ft)

Front brake caliper mounting bolt ①:
39 N·m (3.9 kgf-m, 28.0 lb-ft)

Front brake hose union bolt ②:
23 N·m (2.3 kgf-m, 16.5 lb-ft)

CAUTION

Bleed air from the system after reassembling the caliper. (☞2-25)

BRAKE DISC INSPECTION

Visually check the brake disc for damage or cracks.
Measure the thickness with a micrometer.
Replace the disc if the thickness is less than the service limit or if damage is found.

DATA Front disc thickness: Service Limit: 5.0 mm (0.20 in)

TOOL 09900-20205: Micrometer (0 – 25 mm)

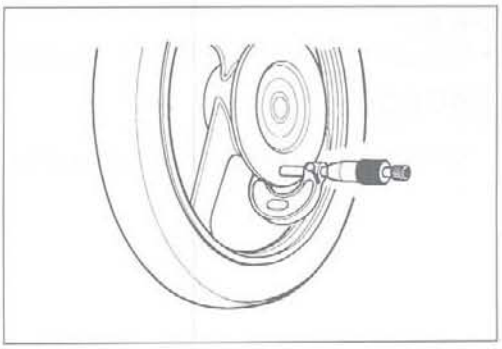

- Remove the brake calipers. (☞8-60)

Measure the runout with a dial gauge.
Replace the disc if the runout exceeds the service limit.

DATA Front disc runout: Service Limit: 0.30 mm (0.012 in)

TOOL 09900-20607: Dial gauge (1/100 mm)
09900-20701: Magnetic stand

*** Brake disc removal (☞8-9)**
*** Brake disc installation (☞8-12)**

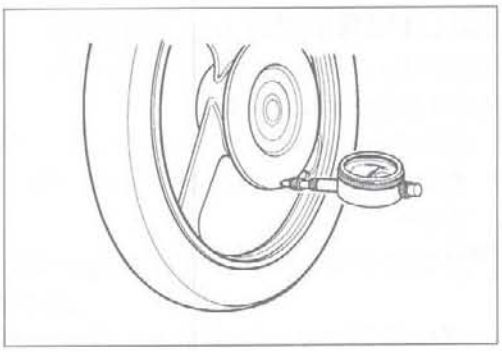

MASTER CYLINDER REMOVAL

- Place a rag underneath the union bolt on the master cylinder to catch any split brake fluid. Remove the union bolt ① and disconnect the brake hose ②.

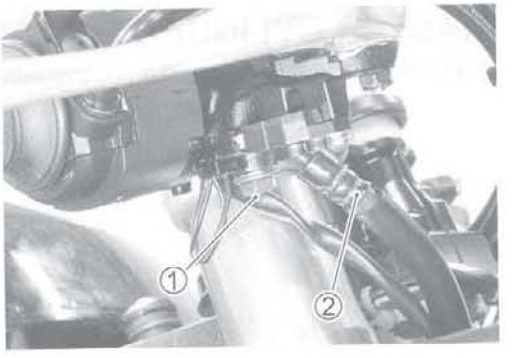

CAUTION

Immediately and completely wipe off any brake fluid contacting any part of the motorcycle. The fluid reacts chemically with paint, plastics and rubber materials, etc. and will damage them severely.

- Remove the brake fluid reservoir mounting bolt ③.
- Remove the master cylinder by removing the master cylinder bolts ④.

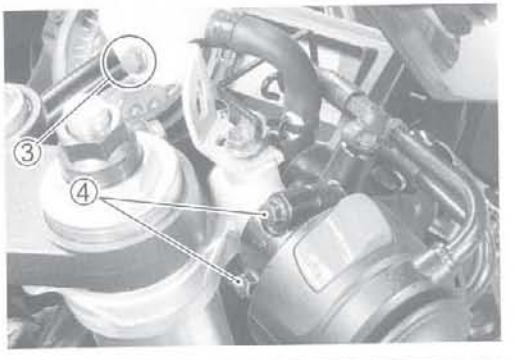

- Disconnect the front brake light switch lead wires ⑤.

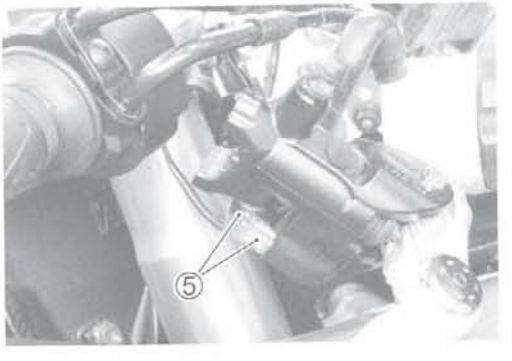

MASTER CYLINDER DISASSEMBLY

- Remove the reservoir cap ①, insulator ② and diaphragm ③.

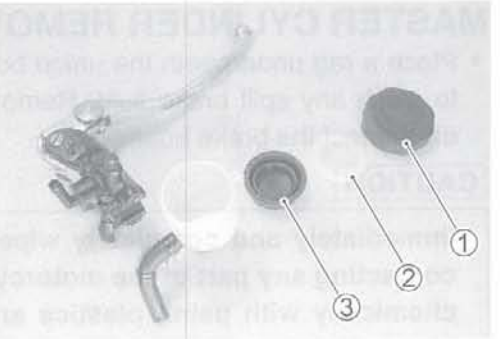

- Remove the brake lever ④ and brake switch ⑤.

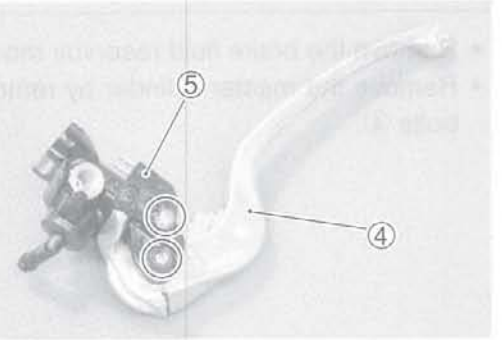

- Pull out the dust boot ⑥ and remove the snap ring ⑦.
- Remove the following parts.

⑧ Push rod
⑨ Secondary cup
⑩ Piston
⑪ Primary cup
⑫ Return spring
⑬ Return spring guide

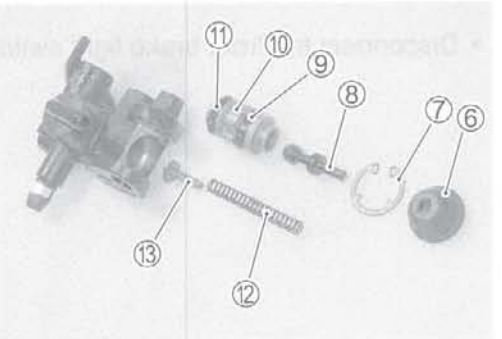

- Remove the air bleeder valve ⑭, dust seal ⑮, snap ring ⑯, connector ⑰ and O-ring ⑱.

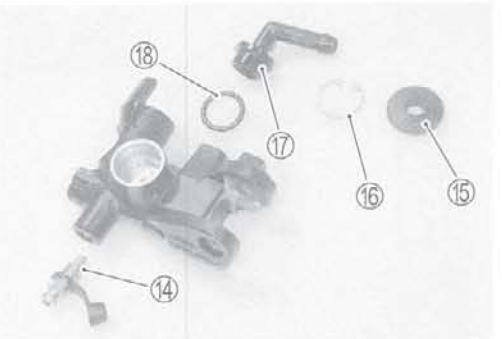

MASTER CYLINDER INSPECTION

Inspect the master cylinder bore for any scratches or other damage.
Inspect the piston surface for any scratches or other damage.
Inspect the primary cup, secondary cup and dust seal for wear or damage.

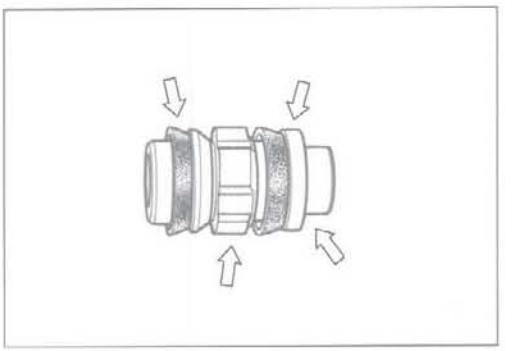

MASTER CYLINDER REASSEMBLY

Reassemble the master cylinder in the reverse order of disassembly. Pay attention to the following points:

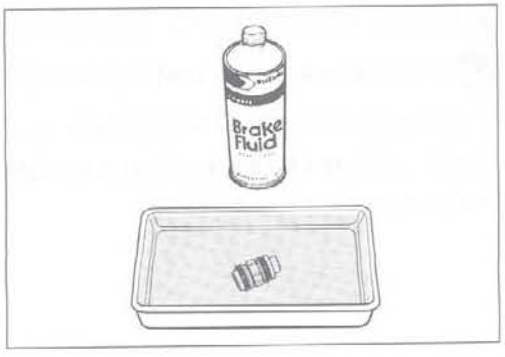

CAUTION

- **Clean the master cylinder components with fresh brake fluid before reassembly. Never use cleaning solvent or gasoline to clean them.**
- **Do not wipe the components with a rag.**
- **Apply brake fluid to the cylinder bore and all the component to be inserted into the bore.**

Specification and Classification: DOT 4

- Apply SUZUKI SILICONE GREASE to the brake lever mounting bolt.

99000-25100: SUZUKI SILICONE GREASE

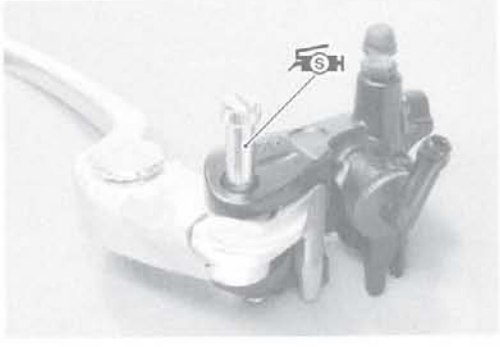

MASTER CYLINDER INSTALLATION

Install the master cylinder in the reverse order of removal. Pay attention to the following points:

- When installing the brake master cylinder ① onto the handlebars ②, align the master cylinder holders mating surface with punched mark Ⓐ on the handlebars and tighten the upper clamp bolt ③ first as shown.

Front brake master cylinder mounting bolt:
10 N·m (1.0 kgf-m, 7.0 lb-ft)

Ⓑ "UP" mark
Ⓒ Clearance

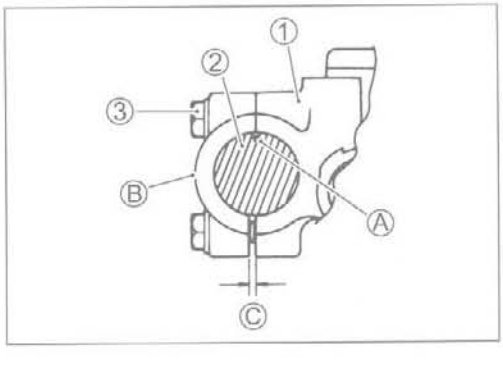

- Tighten the union bolt ④. (Brake hose routing: ☞10-23)

Brake hose union bolt: 23 N·m (2.3 kgf.m, 16.5 lb-ft)

- Bleed air from the brake system. (☞2-25)

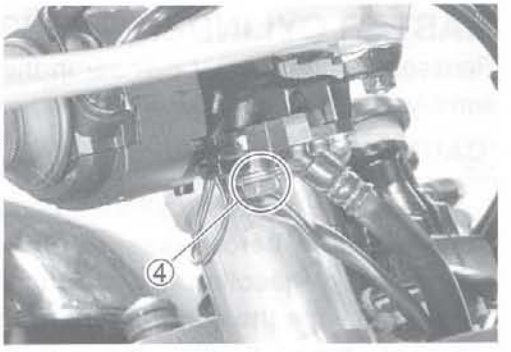

INSPECTION AFTER INSTALLATION

- Front brake (☞2-23)

REAR BRAKE
CONSTRUCTION

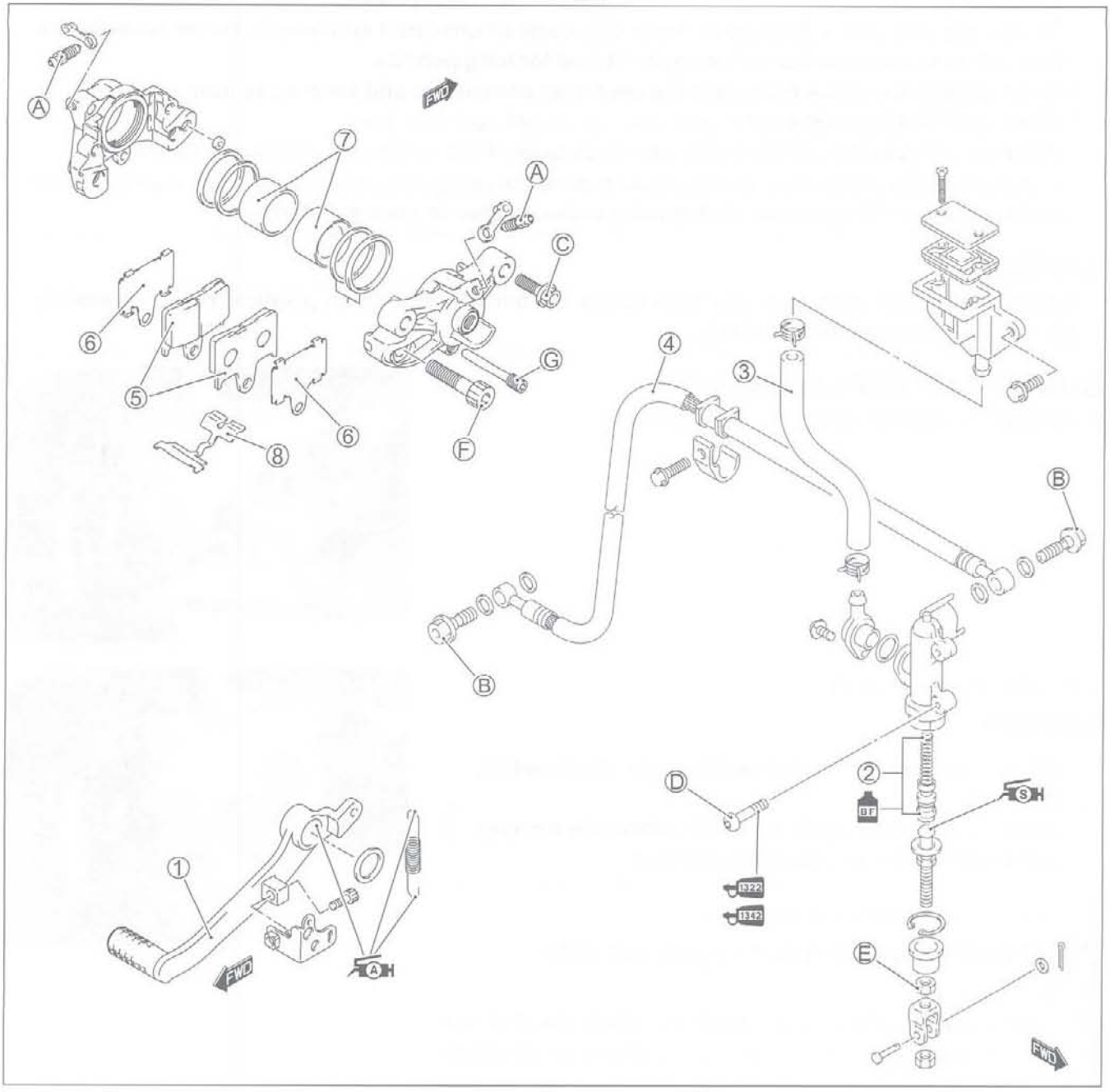

①	Brake pedal	Ⓐ	Caliper air bleeder valve
②	Piston/cup set	Ⓑ	Brake hose union bolt
③	Reservoir hose	Ⓒ	Brake caliper mounting bolt
④	Brake hose	Ⓓ	Brake master cylinder mounting bolt
⑤	Brake pad	Ⓔ	Brake master cylinder rod lock-nut
⑥	Shim	Ⓕ	Brake caliper housing bolt
⑦	Piston	Ⓖ	Brake pad mounting pin
⑧	Brake pad spring		

ITEM	N·m	kgf-m	lb-ft
Ⓐ	6.0	0.6	4.3
Ⓑ	23	2.3	16.5
Ⓒ	25	2.5	18.0
Ⓓ	10	1.0	7.0
Ⓔ	18	1.8	13.0
Ⓕ	37	3.7	27.0
Ⓖ	17	1.7	12.5

⚠ WARNING

* This brake system is filled with an ethylene glycol-based DOT 4 brake fluid. Do not use mix different types of fluid such as silicone-based or petroleum-based.
* Do not use any brake fluid taken from old, used or unsealed containers. Never reuse brake fluid left over from the last servicing or stored for long periods.
* When storing the brake fluid, seal the container completely and keep away from children.
* When replenishing brake fluid, take care not to get dust into fluid.
* When washing brake components, use fresh brake fluid. Never use cleaning solvent.
* A contaminated brake disc or brake pad reduces braking performance. Discard contaminated pads and clean the disc with high quality brake cleaner or neutral detergent.

CAUTION

Handle brake fluid with care: the fluid reacts chemically with paint, plastics, rubber materials etc. and will damage then severely.

BRAKE PAD REPLACEMENT

- Remove the pad mounting pin ① and spring ②.

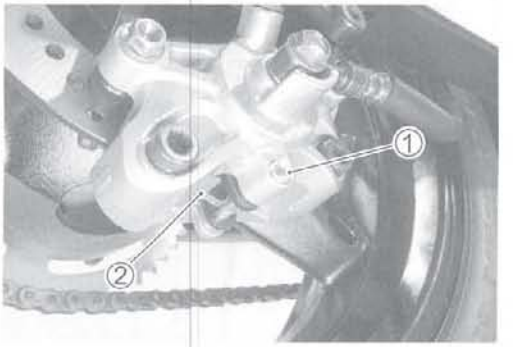

- Remove the brake pads.

CAUTION

* Do not operate the brake pedal while dismounting the pads.
* Replace the brake pads as a set, otherwise braking performance will be adversely affected.

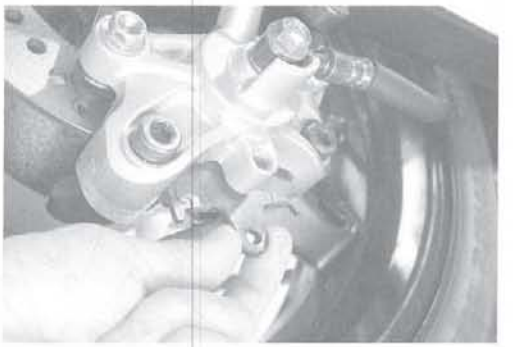

- Install the new brake pads and shims.

Pad mounting pin: 17 N·m (1.7 kgf-m, 12.5 lb-ft)

NOTE:

After replacing the brake pads, pump the brake pedal a few times to set the brake parts correctly and then check the brake fluid level.

BRAKE FLUID REPLACEMENT

- Remove the brake fluid reservoir cap ①.
- Replace the brake fluid in the same manner as the front brake. (☞8-61)

Specification and Classification: DOT 4

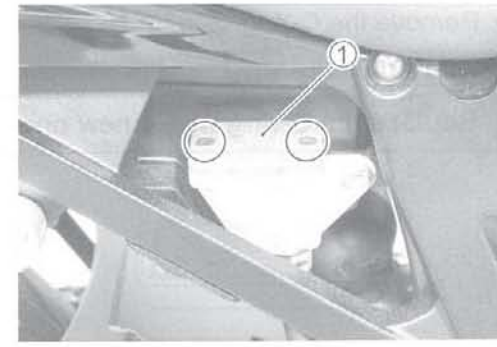

CAUTION

Bleed air from the brake system. (☞2-25)

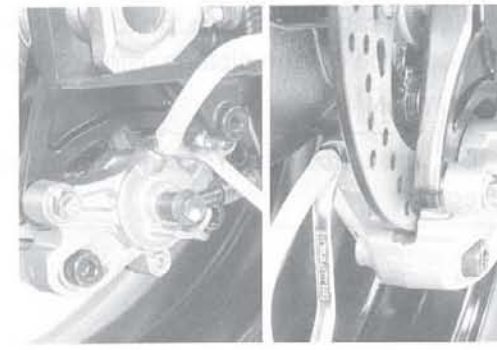

CALIPER REMOVAL

- Remove the brake pads. (☞8-72)
- Remove the union bolt ① and catch the brake fluid in a suitable receptacle.
- Remove the brake caliper by removing the brake caliper mounting bolts ②.

NOTE:
Slightly loosen the caliper housing bolts ③ to facilitate later disassembly before removing the caliper mounting bolts.

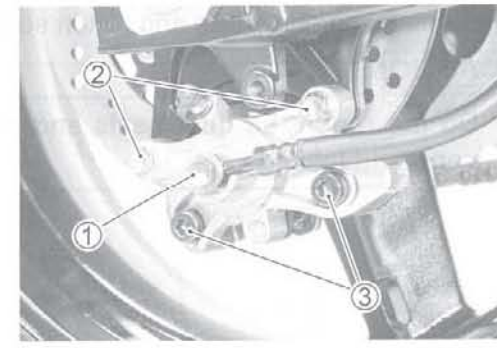

CAUTION

Never reuse the brake fluid left over from previous servicing and stored for long periods.

⚠ WARNING

Brake fluid, if it leaks, will interfere with safe running and discolor painted surfaces. Check the brake hose and hose joints for cracks and fluid leakage.

CALIPER DISASSEMBLY

- Remove the caliper air bleeder valve ①.
- Remove the caliper housing bolts ②.
- Separate the caliper halves.

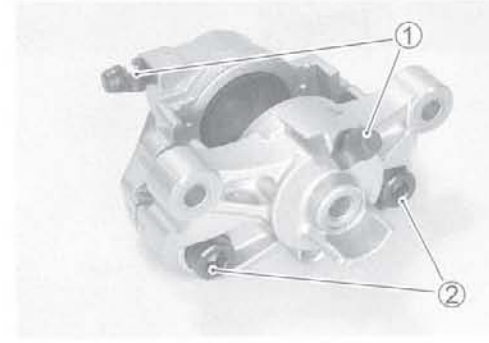

- Remove the O-ring ③.

CAUTION

Replace the O-ring with a new one.

- Place a rag over the piston to prevent it from popping out and then force out the pistons using compressed air.

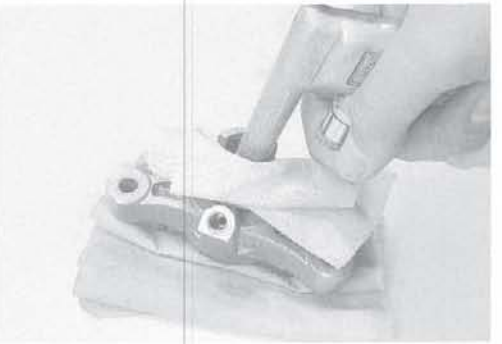

CAUTION

Do not use high pressure air to prevent piston damage.

- Remove the dust seals and piston seals.

CAUTION

Do not reuse the dust seals and piston seals to prevent fluid leakage.

CALIPER INSPECTION

CALIPER INSPECTION (☞8-64)
BRAKE DISC INSPECTION (☞8-66)

DATA Service Limit

Rear disc thickness: 4.5 mm (0.18 in)
Rear disc runout: 0.30 mm (0.012 in)

CALIPER REASSEMBLY

Reassemble the caliper in the reverse order of disassembly. Pay attention to the following points:

- Clean the caliper bores and pistons with specified brake fluid, especially the dust seal grooves and piston seal grooves.

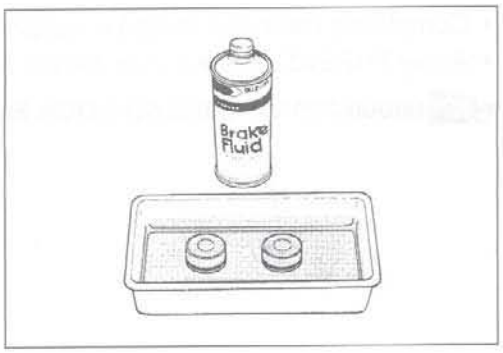

Specification and Classification: DOT 4

CAUTION

- **Clean the caliper components with fresh brake fluid before reassembly. Never use cleaning solvent or gasoline to clean them.**
- **Do not wipe the brake fluid off after cleaning the components.**
- **When cleaning the components, use the specified brake fluid. Never use different types of fluid or cleaning solvent such as gasoline, kerosine the others.**
- **Replace the piston seals and dust seals with new ones when reassembly. Apply the brake fluid to both seals when installing them.**

PISTON SEAL

- Install the piston seals as shown in the illustration.

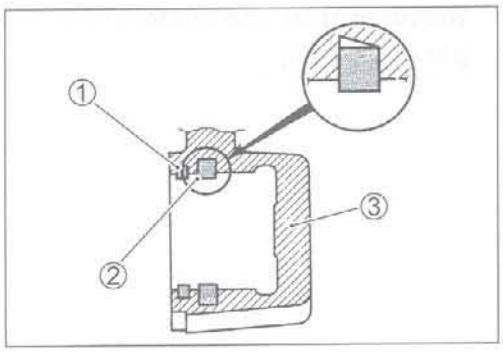

① Dust seal
② Piston seal
③ Caliper body

O-RING

- Install the new O-ring ① and reassemble caliper halves.

CAUTION

Replace the O-ring with a new one.

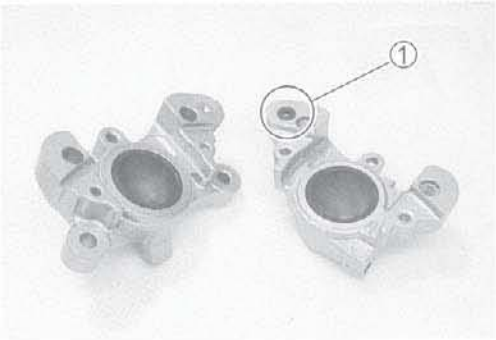

- Completely clean the thread of caliper housing and bolts.
- Apply THREAD LOCK to the caliper housing bolts.

1360 99000-32130: THREAD LOCK SUPER "1360"

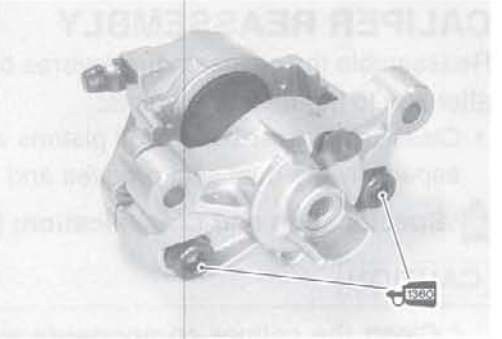

CALIPER INSTALLATION

Install the caliper in the reverse order of removal. Pay attention to the following points:

- Tighten each bolt to the specified torque.

Brake hose union bolt ①: 23 N·m (2.3 kgf-m, 16.5 lb-ft)
Brake caliper housing bolt ②: 37 N·m (3.7 kgf-m, 27.0 lb-ft)
Brake caliper mounting bolt ③: 25 N·m (2.5 kgf-m, 18.0 lb-ft)

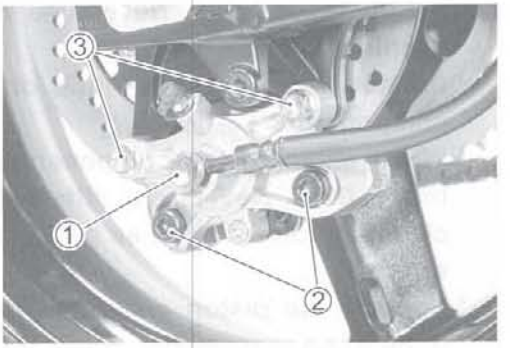

CAUTION

Bleed air from the system after reassembling the caliper. (☞2-25)

MASTER CYLINDER REMOVAL

- Remove the brake fluid reservoir mounting bolt ①.

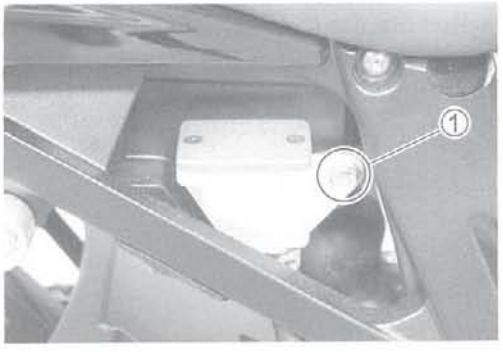

- Place a rag underneath the union bolt on the master cylinder to catch spilled drops of brake fluid. Remove the union bolt ② and disconnect the brake hose.
- Loosen the lock-nut ③.
- Remove the mounting bolts ④.

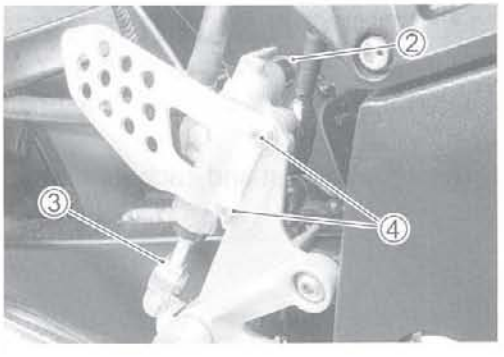

CAUTION

Immediately and completely wipe off any brake fluid contacting any parts of the motorcycle. The fluid reacts chemically with paint, plastic and rubber materials, etc. and will damage them severely.

- Disconnect the reservoir hose.
- Remove the master cylinder by turning the master cylinder rod ⑤.

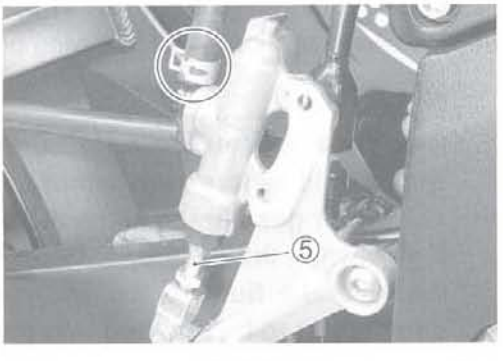

MASTER CYLINDER DISASSEMBLY

- Remove the reservoir cap ① and diaphragm ②.
- Remove the connector ③ by removing the screw.
- Remove the O-ring ④.

CAUTION

Replace the O-ring with a new one.

- Pull out the dust seal ⑤ then remove the snap ring ⑥.
- Remove the push rod ⑦, piston/primary cup ⑧ and spring ⑨.

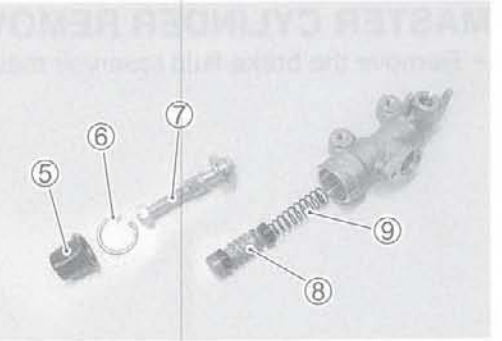

MASTER CYLINDER INSPECTION

CYLINDER, PISTON AND CUP SET

Inspect the cylinder bore wall for any scratches or other damage.

Inspect the cup set and each rubber part for damage.

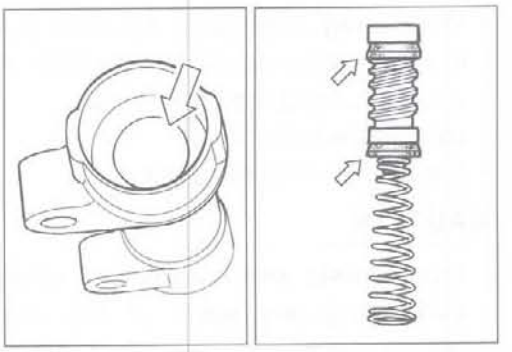

MASTER CYLINDER REASSEMBLY

Reassemble the master cylinder in the reverse order of disassembly. Pay attention to the following points:

CAUTION

- **Clean the master cylinder components with fresh brake fluid before reassembly. Never use cleaning solvent or gasoline to clean them.**
- **Do not wipe the components with a rag.**
- **Apply brake fluid to the cylinder bore and all the component to be inserted into the bore.**

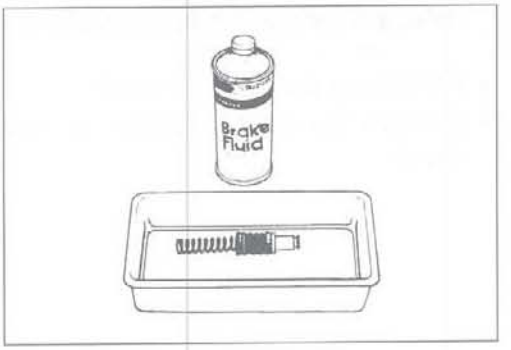

Specification and Classification: DOT 4

- Apply SUZUKI SILICONE GREASE to the push rod end.

99000-25100: SUZUKI SILICONE GREASE

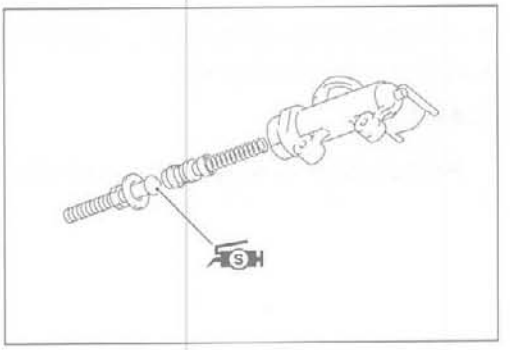

MASTER CYLINDER INSTALLATION

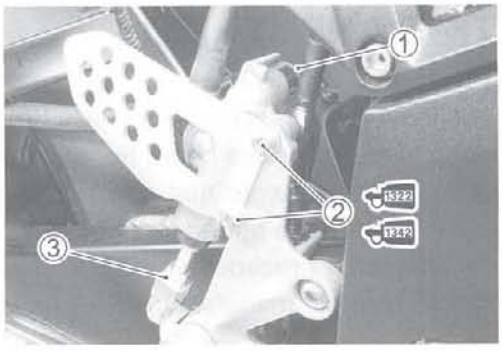

Install the master cylinder in the reverse order of removal. Pay attention to the following points:

- Apply THREAD LOCK to the master cylinder mounting bolts.

1342 99000-32050: THREAD LOCK "1342" (USA)

1322 99000-32110: THREAD LOCK SUPER "1322" (Others)

- Tighten each bolt to the specified torque.
  (Brake hose routing: ☞10-24)

Brake hose union bolt ①: 23 N·m (2.3 kgf-m, 16.5 lb-ft)
Master cylinder mounting bolt ②:
10 N·m (1.0 kgf-m, 7.0 lb-ft)
Master cylinder rod lock-nut ③:
18 N·m (1.8 kgf-m, 13.0 lb-ft)

- Bleed air from the brake system. (☞2-25)

INSPECTION AFTER INSTALLATION

Rear brake (☞2-23)

TIRE AND WHEEL

TIRE REMOVAL

The most critical factor of tubeless tire is the seal between the wheel rim and the tire bead. For this reason, it is recommended to use a tire changer that can satisfy this sealing requirement and can make the operation efficient as well as functional.
For operating procedures, refer to the instructions supplied by the tire changer manufacturer.

NOTE:
When removing the tire in the case of repair or inspection, mark the tire with a chalk to indicate the tire position relative to the valve position.
Even though the tire is refitted to the original position after repairing puncture, the tire may have to be balanced again since such a repair can cause imbalance.

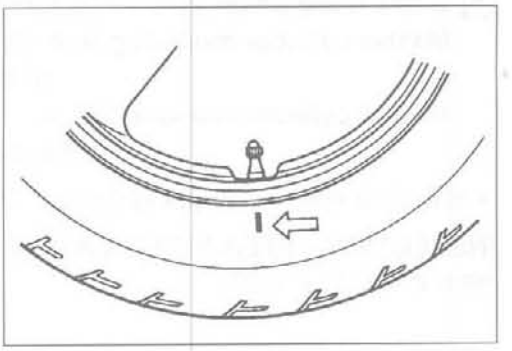

INSPECTION

WHEEL

Wipe the wheel clean and check for the following:
- Distortion and crack
- Any flaws and scratches at the bead seating area.
- Wheel rim runout (☞8-10)

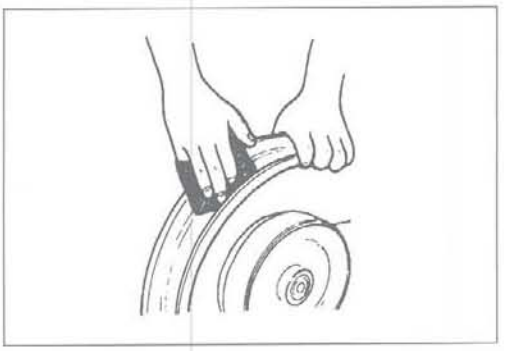

TIRE

Tire must be checked for the following points:
- Nick and rupture on side wall
- Tire tread depth (☞2-27)
- Tread separation
- Abnormal, uneven wear on tread
- Surface damage on bead
- Localized tread wear due to skidding (Flat spot)
- Abnormal condition of inner liner

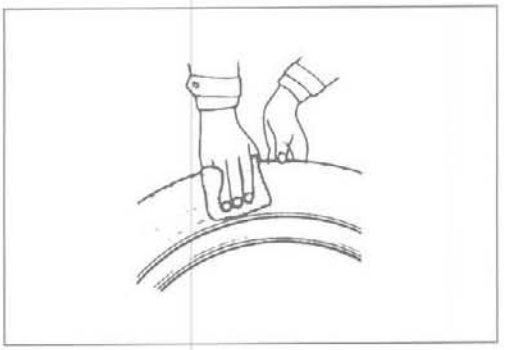

VALVE INSPECTION

Inspect the valve after the tire is removed from the rim. Replace the valve with a new one if the seal Ⓐ rubber is peeling or has damage.

NOTE:
If the external appearance of the valve shows no abnormal condition, removing of the valve is not necessary.
If the seal has abnormal deformation, replace the valve with a new one.

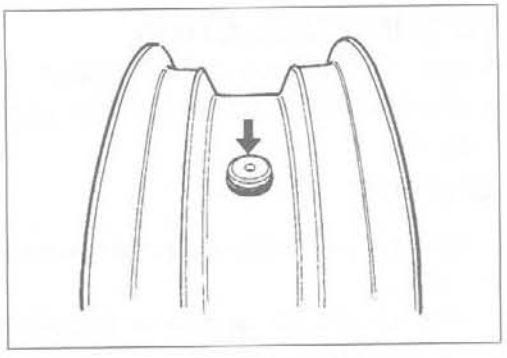

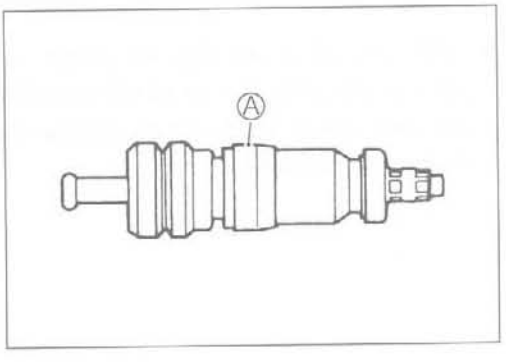

Any dust or rust around the valve hole Ⓑ must be cleaned off. Then install the valve in the rim.

NOTE:
To properly install the valve into the valve hole, apply a special tire lubricant or neutral soapy liquid to the valve.

CAUTION

Be careful not to damage the lip Ⓒ of valve.

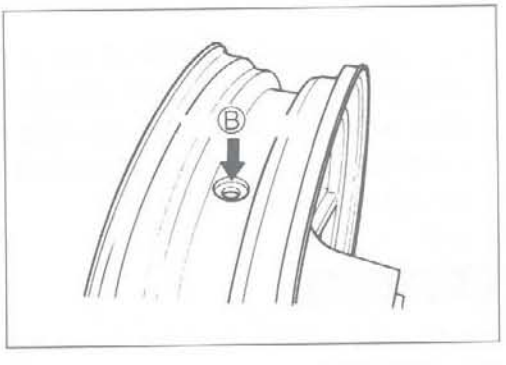

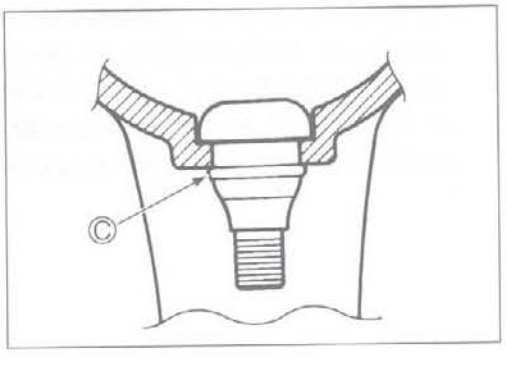

TIRE INSTALLATION

- Apply tire lubricant to the tire bead.
- When installing the tire onto the wheel, observe the following points.

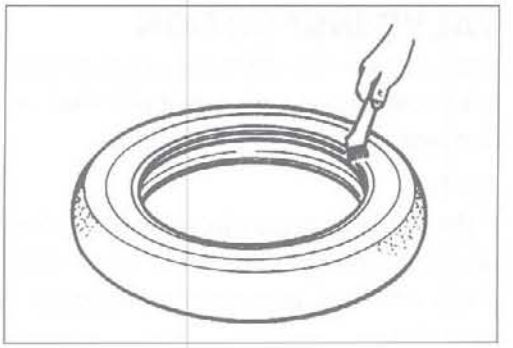

CAUTION

*** Do not reuse the valve which has been once removed.**
*** Never use oil, grease or gasoline on the tire bead in place of tire lubricant.**

- When installing the tire, the arrow Ⓐ on the side wall should point to the direction of wheel rotation.
- Align the chalk mark put on the tire at the time of removal with the valve position.

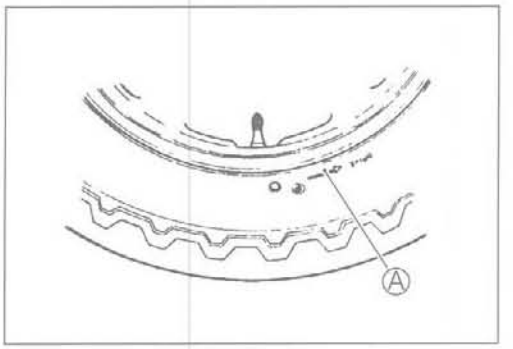

- For installation procedure of tire onto the wheel, follow the instructions given by the tire changer manufacturer.
- Bounce the tire several times while rotating. This makes the tire bead expand outward to contact the wheel, thereby facilitating air inflation.
- Inflate the tire.

⚠ WARNING

*** Do not inflate the tire to more than 400 kPa (4.0 kgf/cm², 57 psi). If inflated beyond this limit, the tire can burst and possibly cause injury. Do not stand directly over the tire while inflating.**
*** In the case of preset pressure air inflator, pay special care for the set pressure adjustment.**

- In this condition, check the "rim line" Ⓑ cast on the tire side walls. The line must be equidistant from the wheel rim all around. If the distance between the rim line and wheel rim varies, this indicates that the bead is not properly seated. If this is the case, deflate the tire completely and unseat the bead for both sides. Coat the bead with lubricant and fit the tire again.
- When the bead has been fitted properly, adjust the pressure to specification.
- As necessary, adjust the tire balance.

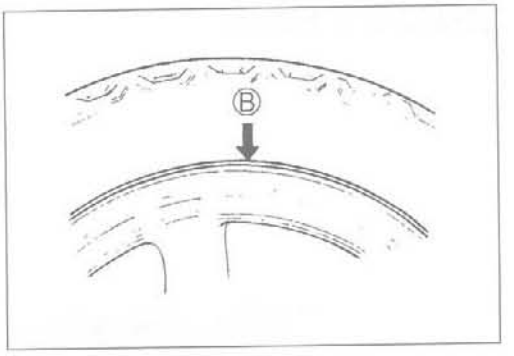

CAUTION

Do not run with a repaired tire at a high speed.

DATA Cold inflation tire pressure

	Front	Rear
Solo riding	250 kPa (2.50 kgf/cm², 36 psi)	250 kPa (2.50 kgf/cm², 36 psi)
Dual riding	250 kPa (2.50 kgf/cm², 36 psi)	250 kPa (2.50 kgf/cm², 36 psi)

BALANCER WEIGHT INSTALLATION

- When installing the balancer weights to the wheel, set the two balancer weights Ⓐ on both sides of wheel rim.

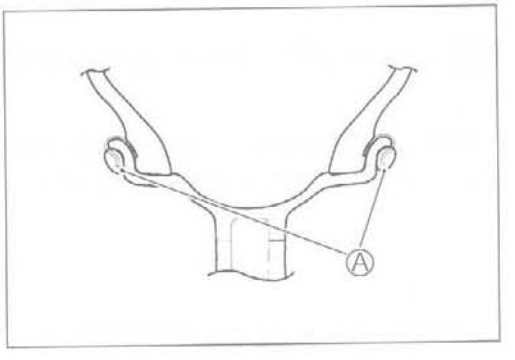

CAUTION

Weight difference between the two balancer weights must be 10 g (0.02 lb) and less.

DRIVE CHAIN

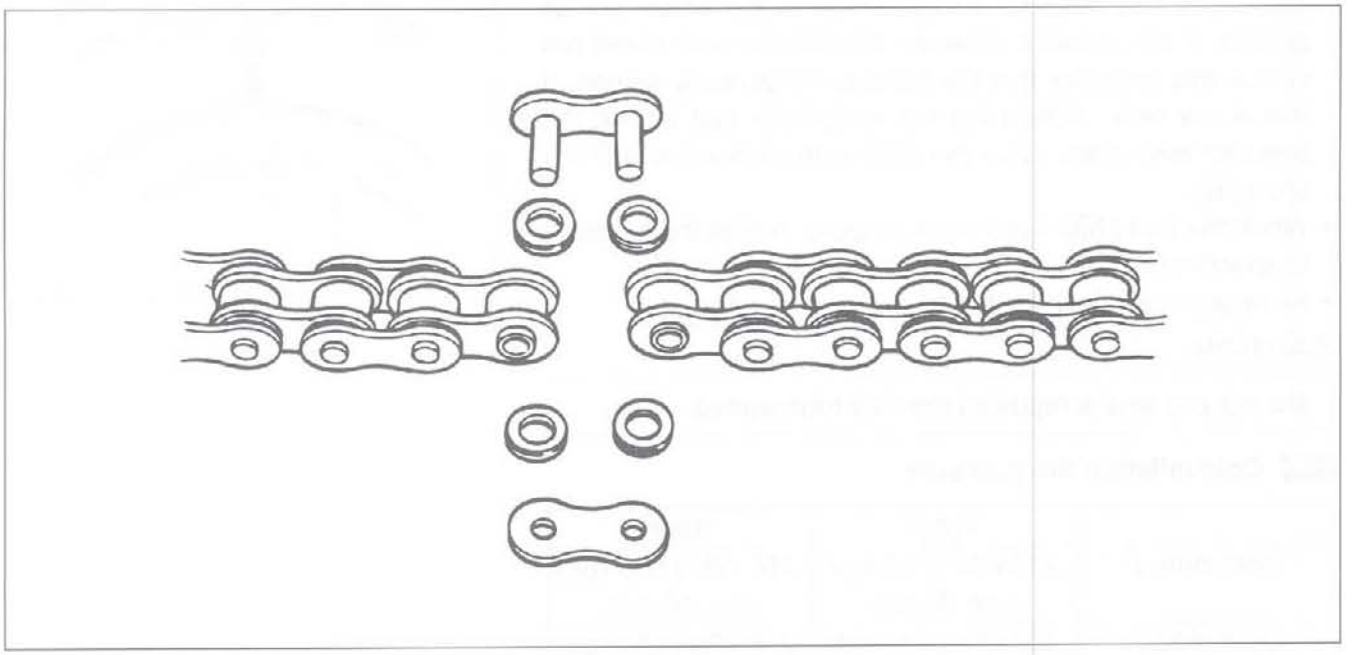

Use the special tool in the following procedures, to cut and rejoin the drive chain.

TOOL 09922-22711: Drive chain cutting and joining tool set

NOTE:
When using the special tool, apply a small quantity of grease to the threaded parts of the special tool.

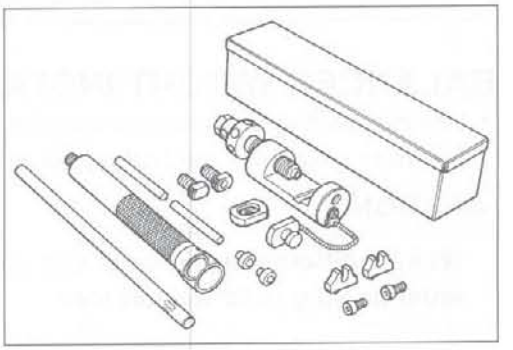

DRIVE CHAIN CUTTING

- Set up the special tool as shown in the illustration.
  ① Tool body
  ② Grip handle
  ③ Pressure bolt "A"
  ④ Pressure bolt "B"
  ⑤ Bar
  ⑥ Adjuster bolt (with through hole)
  ⑦ Pin remover
  ⑧ Chain holder (engraved mark 500) with reamer bolt M5 × 10

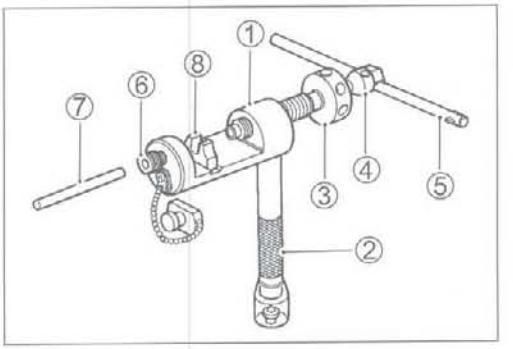

NOTE:
The tip of pin remover ⑦ should be positioned inside Ⓐ approximately 5 mm (0.2 in) from the end face of pressure bolt "A" ③ as shown in the illustration.

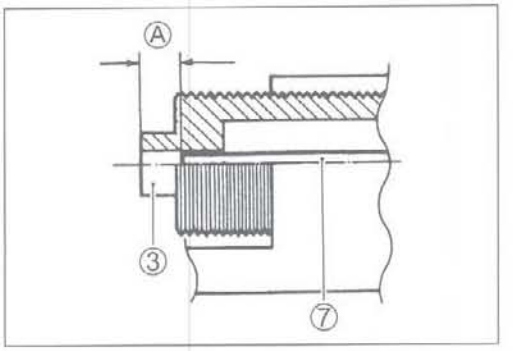

- Place the drive chain link being disjointed on the holder part ⑧ of the tool.
- Turn in both the adjuster bolt ⑥ and pressure bolt "A" ③ so that each of their end hole fits over the chain joint pin properly.
- Tighten the pressure bolt "A" ③ with the bar.

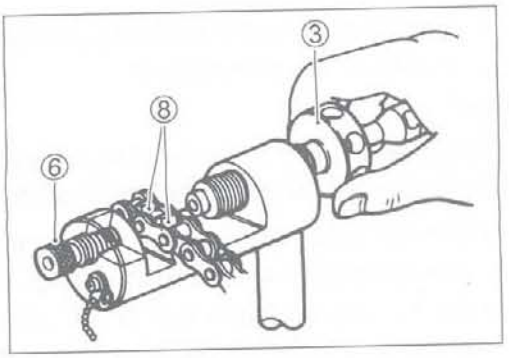

- Turn in the pressure bolt "B" ④ with the bar ⑤ and force out the drive chain joint pin ⑨.

CAUTION

Continue turning in the pressure bolt "B" ④ until the joint pin has been completely pushed out of the chain.

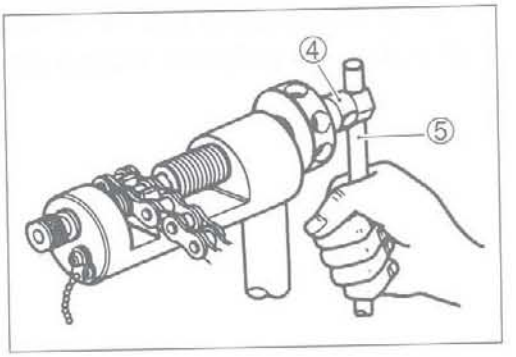

NOTE:
After the joint pin ⑨ is removed, loosen the pressure bolt "B" ④ and then pressure bolt "A" ③.

- Remove the joint pin ⑨ of the other side of joint plate.

CAUTION

Never reuse joint pins, O-rings and plates. After joint pins, O-rings and plates have been removed from the drive chain, the removed joint pins, O-rings and plates should be discarded and new joint plate, O-rings and plate must be installed.

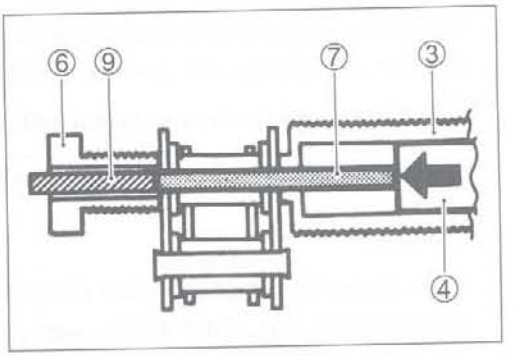

DRIVE CHAIN CONNECTING

JOINT PLATE INSTALLATION

- Set up the special tool as shown in the illustration.
  - ① Tool body
  - ② Grip handle
  - ③ Joint plate holder (engraved mark "F520")
  - ④ Wedge holder & wedge pin
  - ⑤ Adjuster bolt (without hole)
  - ⑥ Pressure bolt "A"
  - ⑦ Bar

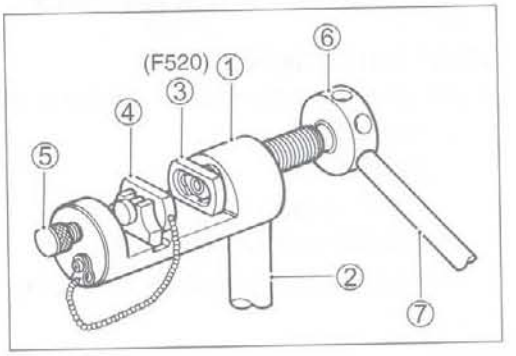

- Connect both ends of the drive chain with the joint pin ⑧ inserted from the wheel side Ⓐ as installed on the motorcycle.
  - ⑨ O-ring … 4 pcs
  - ⑩ Joint plate
  - Joint set part number
  - RK: 27600-06G10

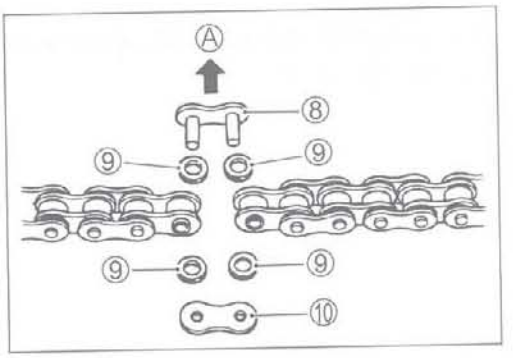

⚠ WARNING

Do not use joint clip type of drive chain. The joint clip may have a chance to drop which may cause severe damage to motorcycle and severe injury.

- Apply grease on the recessed portion of the joint plate holder ③ and set the joint plate ⑩.

NOTE:
When positioning the joint plate ⑩ on the tool, its stamp mark must face the joint plate holder ③ side.

- Set the drive chain on the tool as illustrated and turn in the adjuster bolt ⑤ to secure the wedge holder & wedge pin ④.
- Turn in the pressure bolt "A" ⑥ and align two joint pins ⑪ properly with the respective holes of the joint plate ⑩.
- Turn in the pressure bolt "A" ⑥ further using the bar ⑦ to press the joint plate over the joint pins.

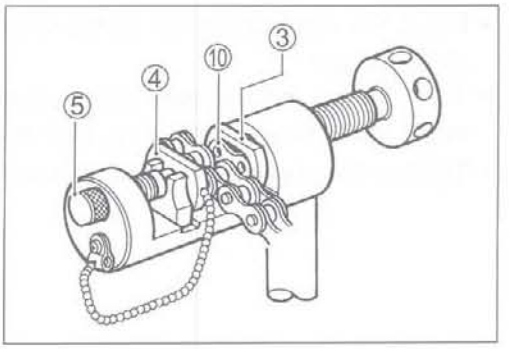

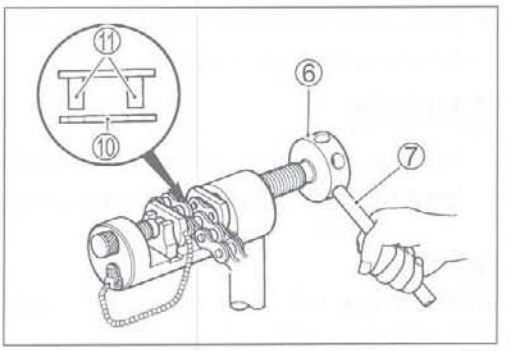

- Continue pressing the joint plate until the distance between the two joint plates come to the specification.

DATA Joint plate distance specification Ⓦ

RK	18.6 – 18.9 mm (0.73 – 0.74 in)

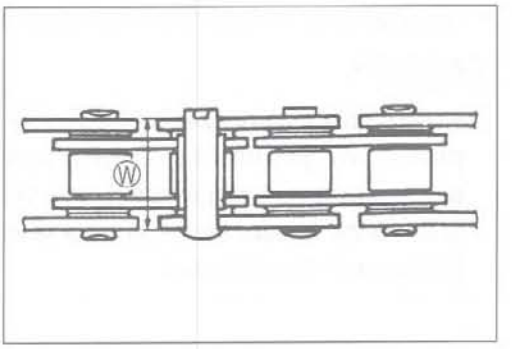

CAUTION

Should pressing of the joint plate be made excessively beyond the specified dimension, the work should be redone using the new joint parts.

JOINT PIN STAKING

- Set up the special tool as shown in the illustration.
  ① Tool body
  ② Grip handle
  ③ Pressure bolt "A"
  ④ Adjuster bolt (without hole)
  ⑤ Staking pin (stowed inside grip handle behind rubber cap)
  ⑥ Bar

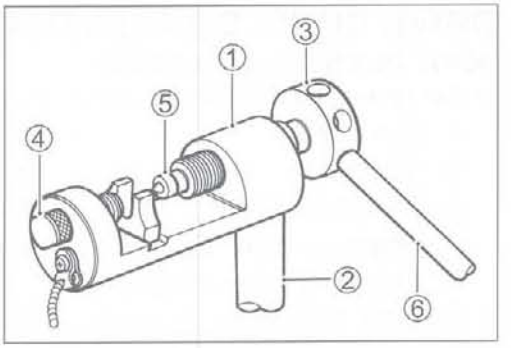

NOTE:
Before staking the joint pin, apply a small quantity of grease to the staking pin ⑤.

- Stake the joint pin by turning (approximately 7/8 turn) the pressure bolt "A" ③ with the bar until the pin end diameter becomes the specified dimension.

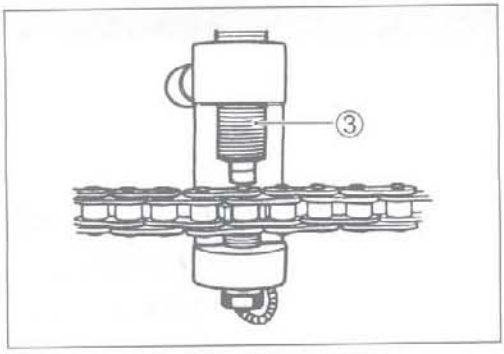

DATA Pin end diameter specification Ⓓ

RK	5.45 – 5.85 mm (0.21 – 0.23 in)

CAUTION

*** After joining of the chain has been completed, check to make sure that the link is smooth and no abnormal condition is found.**
*** Should any abnormal condition be found, reassemble the chain link using the new joint parts.**

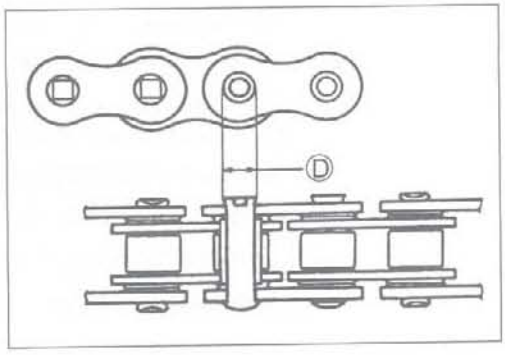

- Adjust the drive chain, after connecting it. (☞2-21)

ELECTRICAL SYSTEM

CONTENTS

CAUTIONS IN SERVICING 9- 2
- CONNECTOR 9- 2
- COUPLER 9- 2
- CLAMP 9- 2
- FUSE 9- 2
- SEMI-CONDUCTOR EQUIPPED PART 9- 3
- BATTERY 9- 3
- CONNECTING THE BATTERY 9- 3
- WIRING PROCEDURE 9- 3
- USING THE MULTI-CIRCUIT TESTER 9- 4

LOCATION OF ELECTRICAL COMPONENTS 9- 5

CHARGING SYSTEM 9- 7
- TROUBLESHOOTING 9- 7
- INSPECTION 9- 8

STARTER SYSTEM AND SIDE-STAND/IGNITION INTERLOCK SYSTEM 9-11
- TROUBLESHOOTING 9-11
- STARTER MOTOR REMOVAL 9-12
- STARTER MOTOR DISASSEMBLY 9-13
- STARTER MOTOR INSPECTION 9-14
- STARTER MOTOR REASSEMBLY 9-14
- STARTER MOTOR INSTALLATION 9-15
- STARTER RELAY INSPECTION 9-15
- SIDE STAND/IGNITION INTERLOCK SYSTEM PARTS INSPECTION 9-16

IGNITION SYSTEM 9-19
- TROUBLESHOOTING 9-19
- INSPECTION 9-21

COMBINATION METER 9-25
- DESCRIPTION 9-25
- REMOVAL AND DISASSEMBLY 9-26
- INSPECTION 9-27

LAMPS 9-31
- HEADLIGHT, BRAKE LIGHT/TAILLIGHT, LICENSE PLATE LIGHT AND TURN SIGNAL LIGHT 9-31

RELAYS 9-33

TURN SIGNAL/SIDE-STAND RELAY 9-33
STARTER RELAY 9-33
FUEL PUMP RELAY 9-33
IGNITION SWITCH REMOVAL 9-34
IGNITION SWITCH INSTALLATION 9-34
SWITCHES INSPECTION 9-35
BATTERY 9-36
SPECIFICATIONS 9-36
INITIAL CHARGING 9-36
SERVICING 9-38
RECHARGING OPERATION 9-38

CAUTIONS IN SERVICING

CONNECTOR

- When connecting a connector, be sure to push it in until a click is felt.
- Inspect the connector for corrosion, contamination and breakage in its cover.

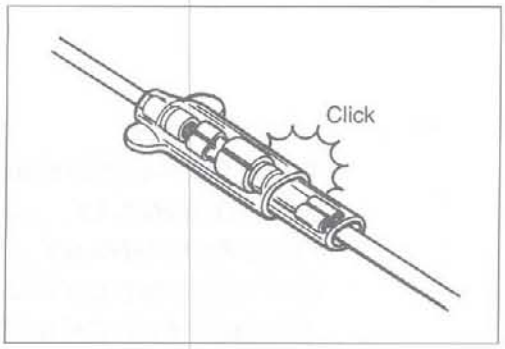

COUPLER

- With a lock type coupler, be sure to release the lock before disconnecting and push it in fully till the lock works when connecting.
- When disconnecting the coupler, be sure to hold the coupler itself and do not pull the lead wires.
- Inspect each terminal on the coupler for being loose or bent.
- Inspect each terminal for corrosion and contamination.

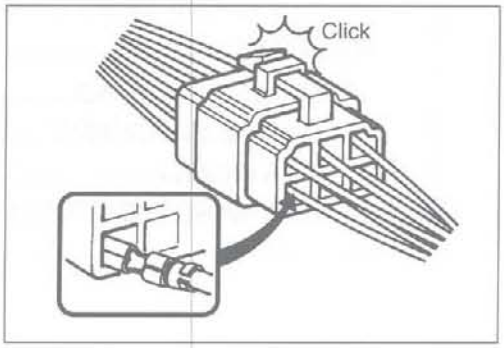

CLAMP

- Clamp the wire harness at such positions as indicated in "WIRE HARNESS ROUTING". (☞10-16 to 10-18)
- Bend the clamp properly so that the wire harness is clamped securely.
- In clamping the wire harness, use care not to allow it to hang down.
- Do not use wire or any other substitute for the band type clamp.

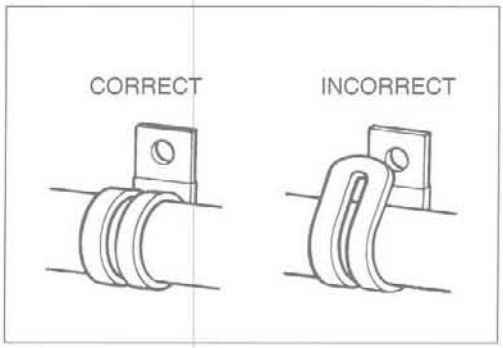

FUSE

- When a fuse blows, always investigate the cause, correct it and then replace the fuse.
- Do not use a fuse of a different capacity.
- Do not use wire or any other substitute for the fuse.

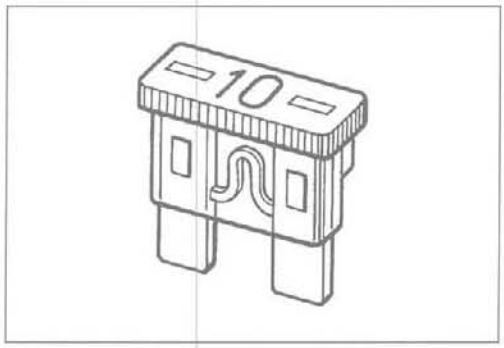

SEMI-CONDUCTOR EQUIPPED PART

- Be careful not to drop the part with a semi-conductor built in such as a ECM.
- When inspecting this part, follow inspection instruction strictly. Neglecting proper procedure may cause damage to this part.

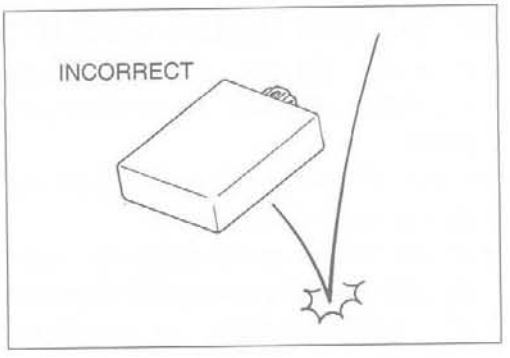

BATTERY

- The MF battery used in this motorcycle does not require maintenance (e.g., electrolyte level inspection, distilled water replenishment).
- During normal charging, no hydrogen gas is produced. However, if the battery is overcharged, hydrogen gas may be produced. Therefore, be sure there are no fire or spark sources (e.g., short circuit) nearby when charging the battery.
- Be sure to recharge the battery in a well-ventilated and open area.
- Note that the charging system for the MF battery is different from that of a conventional battery. Do not replace the MF battery with a conventional battery.

CONNECTING THE BATTERY

- When disconnecting terminals from the battery for disassembly or servicing, be sure to disconnect the ⊖ battery lead wire, first.
- When connecting the battery lead wires, be sure to connect the ⊕ battery lead wire, first.
- If the terminal is corroded, remove the battery, pour warm water over it and clean it with a wire brush.
- After connecting the battery, apply a light coat of grease to the battery terminals.
- Install the cover over the ⊕ battery terminal.

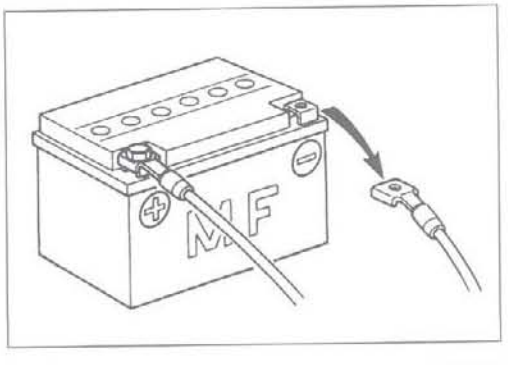

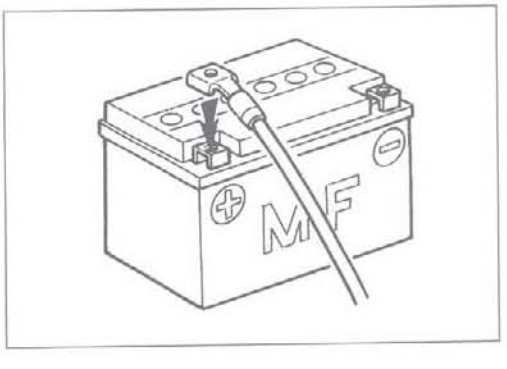

WIRING PROCEDURE

- Properly route the wire harness according to the "WIRE ROUTING" section. (☞10-16 to 10-18)

USING THE MULTI-CIRCUIT TESTER

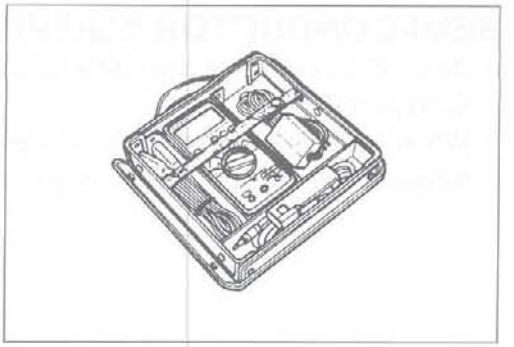

- Properly use the multi-circuit tester ⊕ and ⊖ probes. Improper use can cause damage to the motorcycle and tester.
- If the voltage and current values are not known, begin measuring in the highest range.
- When measuring the resistance, make sure that no voltage is applied. If voltage is applied, the tester will be damaged.
- After using the tester, be sure to turn the switch to the OFF position.

TOOL 09900-25008: Multi-circuit tester set

CAUTION

Before using the multi-circuit tester, read its instruction manual.

NOTE:

** When connecting the multi-circuit tester, use the needle pointed probe to the back side of the lead wire coupler and connect the probes of tester to them.*

** Use the needle pointed probe to prevent the rubber of the water proof coupler from damage.*

TOOL 09900-25009: Needle pointed probe set

LOCATION OF ELECTRICAL COMPONENTS

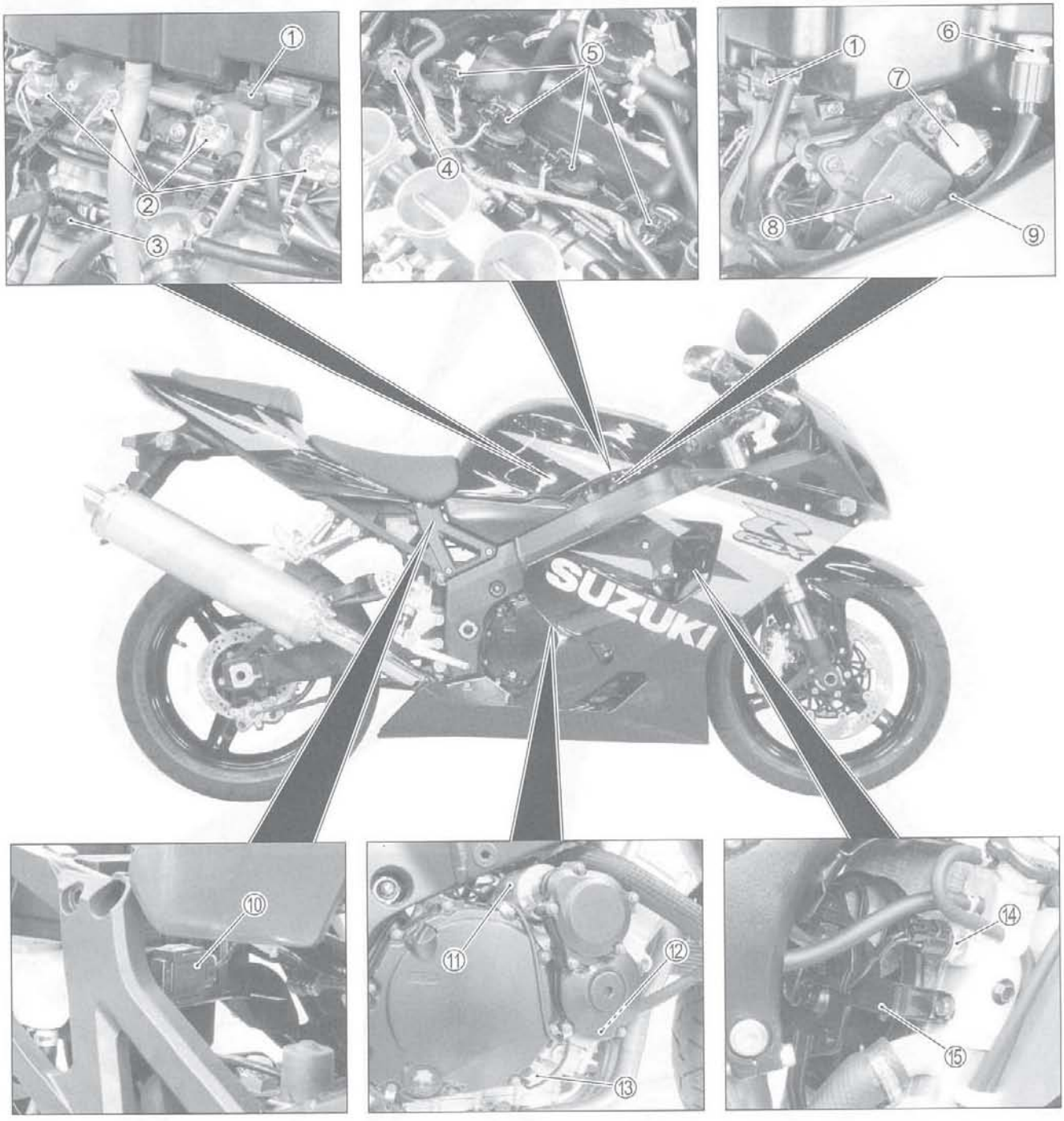

① IAP sensor (☞4-30)
② Fuel injector (☞4-51)
③ ECT sensor (☞4-36)
④ CMP sensor (☞4-26)
⑤ Ignition coil (No.1, 2, 3, 4)
⑥ IAT sensor (☞4-38)
⑦ STP sensor (☞4-47)
⑧ STV actuator (☞4-45)
⑨ TP sensor (☞4-33)
⑩ TO sensor (☞4-43)
⑪ Starter motor
⑫ CKP sensor (☞4-28)
⑬ Oil pressure switch
⑭ Cooling fan thermo-switch (☞7-7)
⑮ Cooling fan (☞7-6)

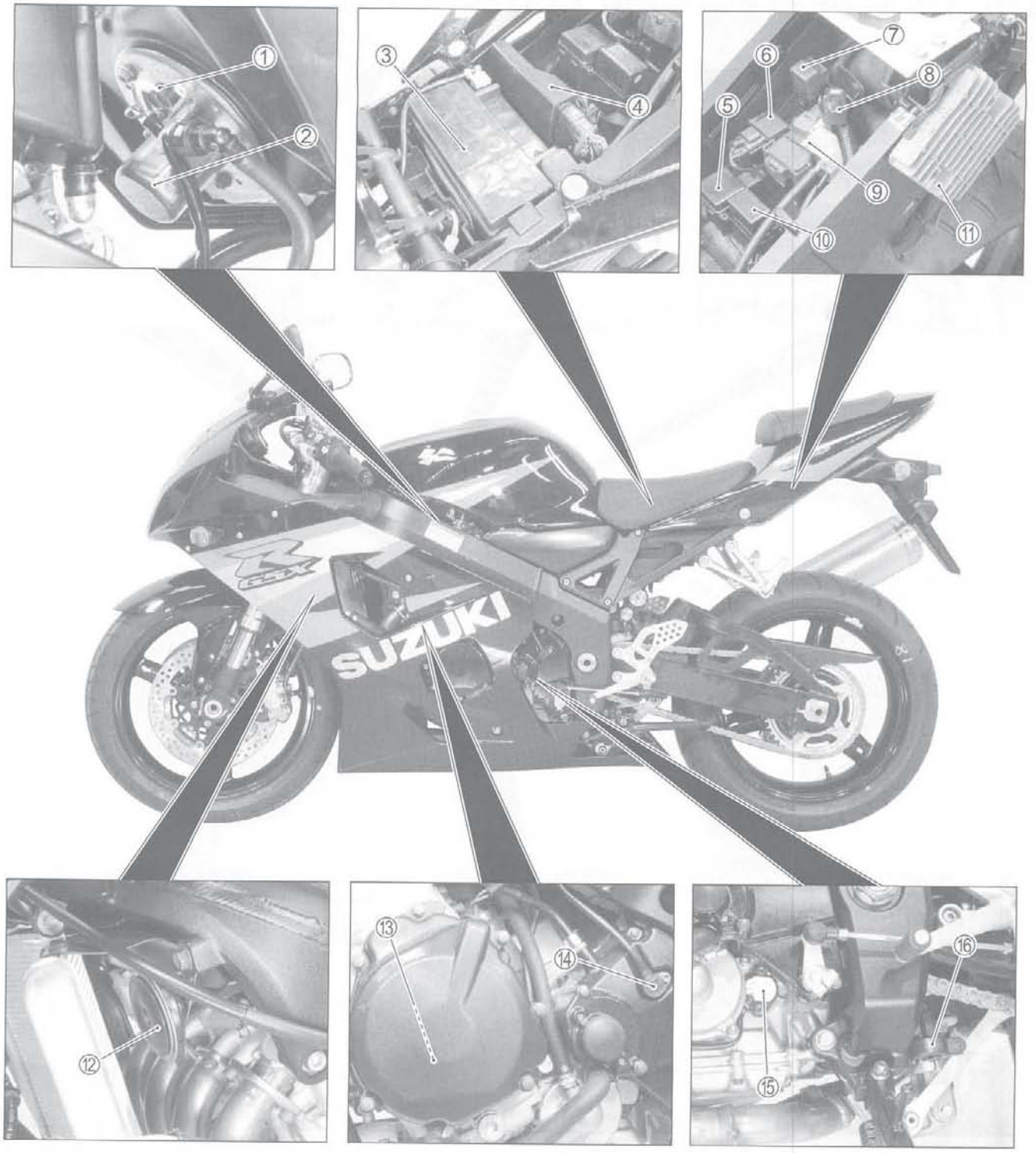

① Fuel level switch
② Fuel pump (☞5-7)
③ Battery
④ ECM (Engine Control Module)
⑤ Fuse box
⑥ AP sensor (☞4-40)
⑦ Fuel pump relay (☞5-6)
⑧ Mode selection switch coupler (☞4-23)
⑨ Starter relay/Main fuse
⑩ Turn signal/Side-stand relay
⑪ Regulator/Rectifier
⑫ Horn
⑬ Generator
⑭ Speed sensor
⑮ GP switch
⑯ Side-stand switch

CHARGING SYSTEM

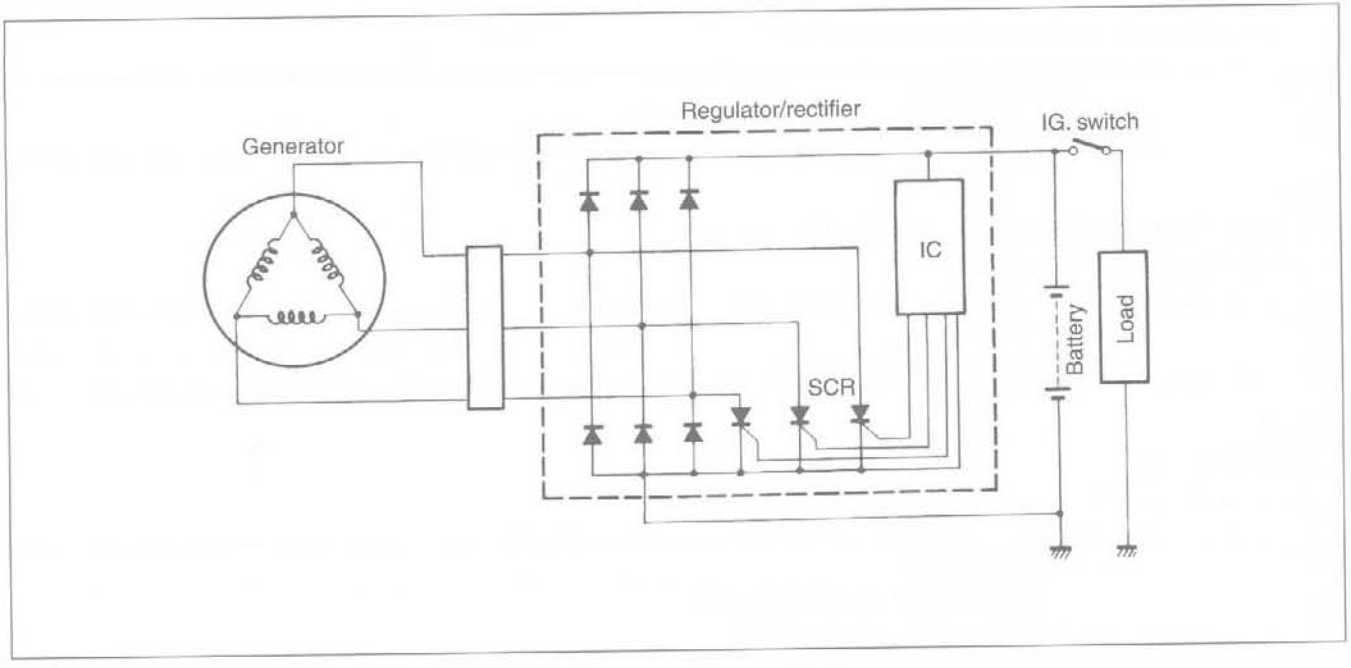

TROUBLESHOOTING

Battery runs down quickly

Step 1

1) Check accessories which use excessive amounts of electricity.
   Are accessories being installed?

YES	Remove accessories.
NO	Go to Step 2.

Step 2

1) Check the battery for current leaks. (☞9-8)
   Is the battery for current leaks OK?

YES	Go to Step 3.
NO	• Short circuit of wire harness. • Faulty electrical equipment.

Step 3

1) Measure the regulated voltage between the battery terminals. (☞9-9)
   Is the regulated voltage OK?

YES	• Faulty battery. • Abnormal driving condition.
NO	Go to Step 4.

Step 4

1) Measure the resistance of the generator coil. (☞9-9)
   Is the resistance of generator coil OK?

YES	Go to Step 5.
NO	• Faulty generator coil. • Disconnected lead wires.

Step 5

1) Measure the generator no-load performance. (☞9-10)
   Is the generator no-load performance OK?

YES	Go to Step 6.
NO	Faulty generator.

Step 6

1) Inspect the regulator/rectifier. (☞9-10)
   Is the regulator/rectifier OK?

YES	Go to Step 7.
NO	Faulty regulator/rectifier.

Step 7

1) Inspect wirings.
   Is the wirings OK?

YES	Faulty battery.
NO	• Short circuit of wire harness. • Poor contact of couplers.

Battery overcharges

- Faulty regulator/rectifier.
- Faulty battery.
- Poor contact of generator lead wire coupler.

INSPECTION

BATTERY CURRENT LEAKAGE

- Remove the front seat. (☞8-6)
- Turn the ignition switch to the OFF position.
- Disconnect the battery ⊖ lead wire ①.
- Measure the current between ⊖ battery terminal and the ⊖ battery lead wire using the multi-circuit tester. If the reading exceeds the specified value, leakage is evident.

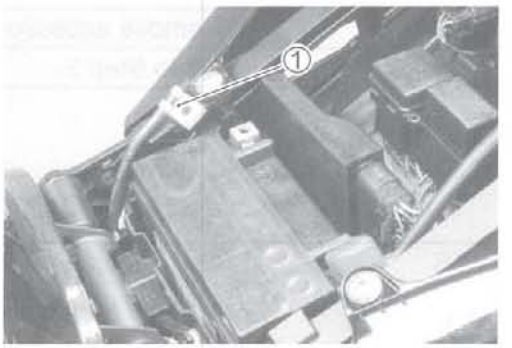

TOOL 09900-25008: Multi-circuit tester set

DATA Battery current (leak): Under 3 mA

Tester knob indication: Current (⎓, 20 mA)

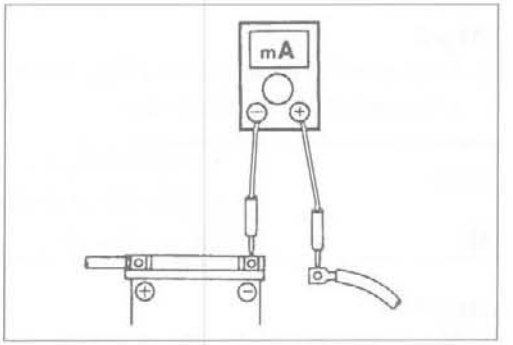

CAUTION

> *** Because the current leak might be large, turn the tester to high range first to avoid tester damage.**
> *** Do not turn the ignition switch to the "ON" position when measuring current.**

When checking for excessive current leakage, remove the couplers and connectors, one by one, so as to locate the position of trouble.

REGULATED VOLTAGE

- Remove the front seat. (☞8-6)
- Start the engine and keep it running at 5 000 r/min. with the dimmer switch turned HI position.
- Measure the DC voltage between the ⊕ and ⊖ battery terminals using the multi-circuit tester. If the voltage is not within the specified value, inspect the generator and regulator/rectifier. (☞9-9 and 9-10)

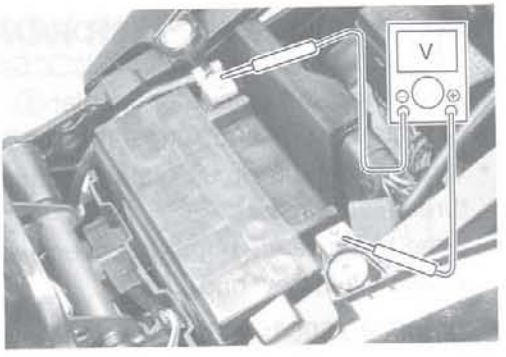

NOTE:
When making this test, be sure that the battery is in fully-charged condition.

TOOL 09900-25008: Multi-circuit tester set

Tester knob indication: Voltage (⎓)

DATA Regulated voltage (Charging output):
14.0 – 15.5 V at 5 000 r/min.

GENERATOR COIL RESISTANCE

- Lift and support the fuel tank. (☞5-3)
- Disconnect the generator coupler ①.
- Measure the resistance between the three lead wires.
  If the resistance is out of specified value, replace the stator with a new one. Also, check that the generator core is insulated properly.

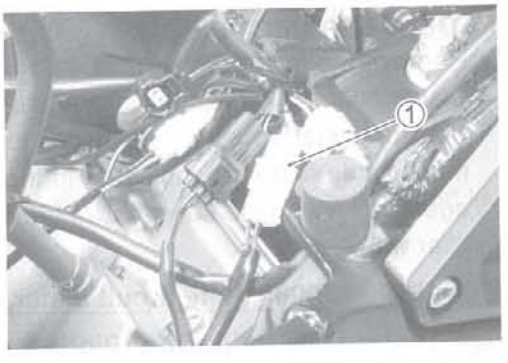

TOOL 09900-25008: Multi-circuit tester set

Tester knob indication: Resistance (Ω)

DATA Generator coil resistance: 0.2 – 0.9 Ω (Black – Black)
∞ Ω (Black – Ground)

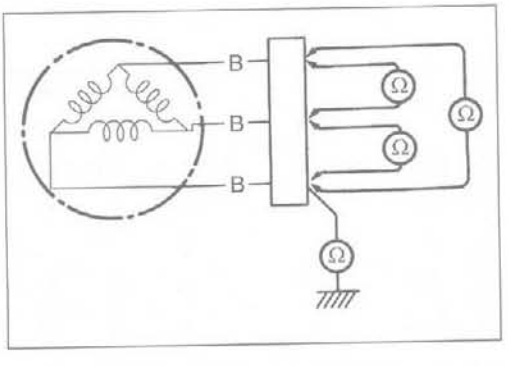

NOTE:
When making above test, it is not necessary to remove the generator.

GENERATOR NO-LOAD PERFORMANCE

- Lift and support the fuel tank. (☞5-3)
- Disconnect the generator coupler ①.
- Start the engine and keep it running at 5 000 r/min.
- Using the multi-circuit tester, measure the voltage between three lead wires.
  If the tester reads under the specified value, replace the generator with a new one.

TOOL 09900-25008: Multi-circuit tester set

Tester knob indication: Voltage (~)

DATA Generator no-load performance:
65 V and more at 5 000 r/min (When engine is cold)

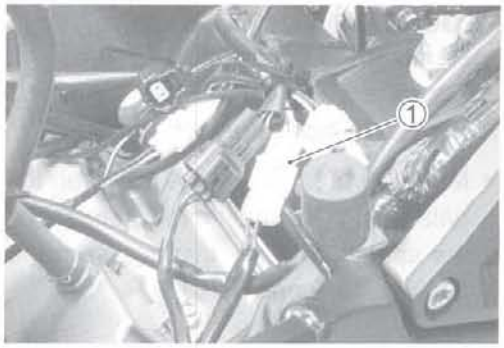

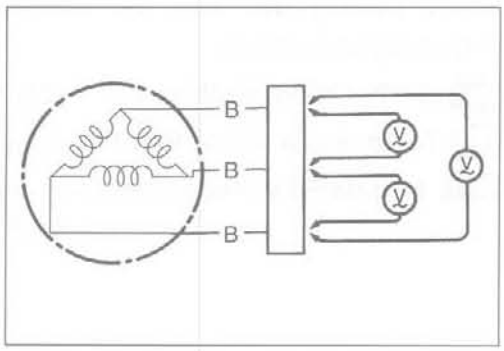

REGULATOR/RECTIFIER

- Remove the frame cover. (☞8-7)
- Disconnect the regulator/rectifier coupler ①.
- Measure the voltage between the lead wires using the multi-circuit tester as indicated in the table below. If the voltage is not within the specified value, replace the regulator/rectifier with a new one.

TOOL 09900-25008: Multi-circuit tester set

Tester knob indication: Diode test (⊣◀)

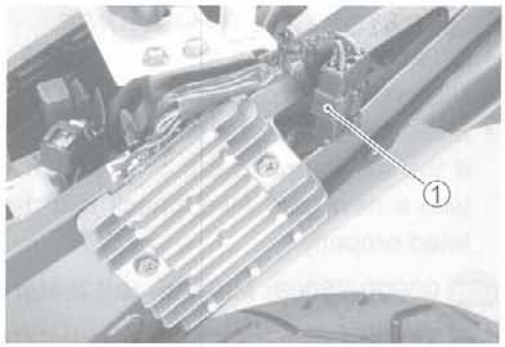

Unit: V

Probe of tester to: ⊖	⊕ Probe of tester to: B/R	B1	B2	B3	B/W
B/R		0.4 – 0.7	0.4 – 0.7	0.4 – 0.7	0.5 – 1.2
B1	*		*	*	0.4 – 0.7
B2	*	*		*	0.4 – 0.7
B3	*	*	*		0.4 – 0.7
① B/W	*	*	*	*	

*1.4 V and more (tester's battery voltage)

NOTE:
If the tester reads 1.4 V and below when the tester probes are not connected, replace its battery.

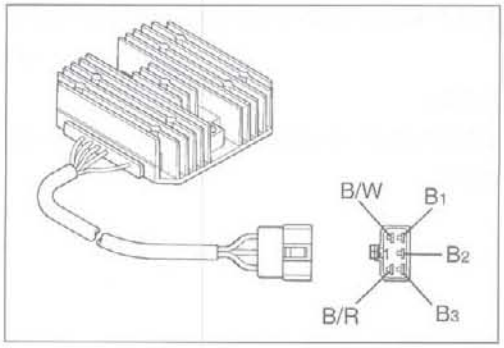

WIRE COLOR
B: Black, B/R: Black with Red tracer,
B/W: Black with White tracer

STARTER SYSTEM AND SIDE-STAND/IGNITION INTERLOCK SYSTEM

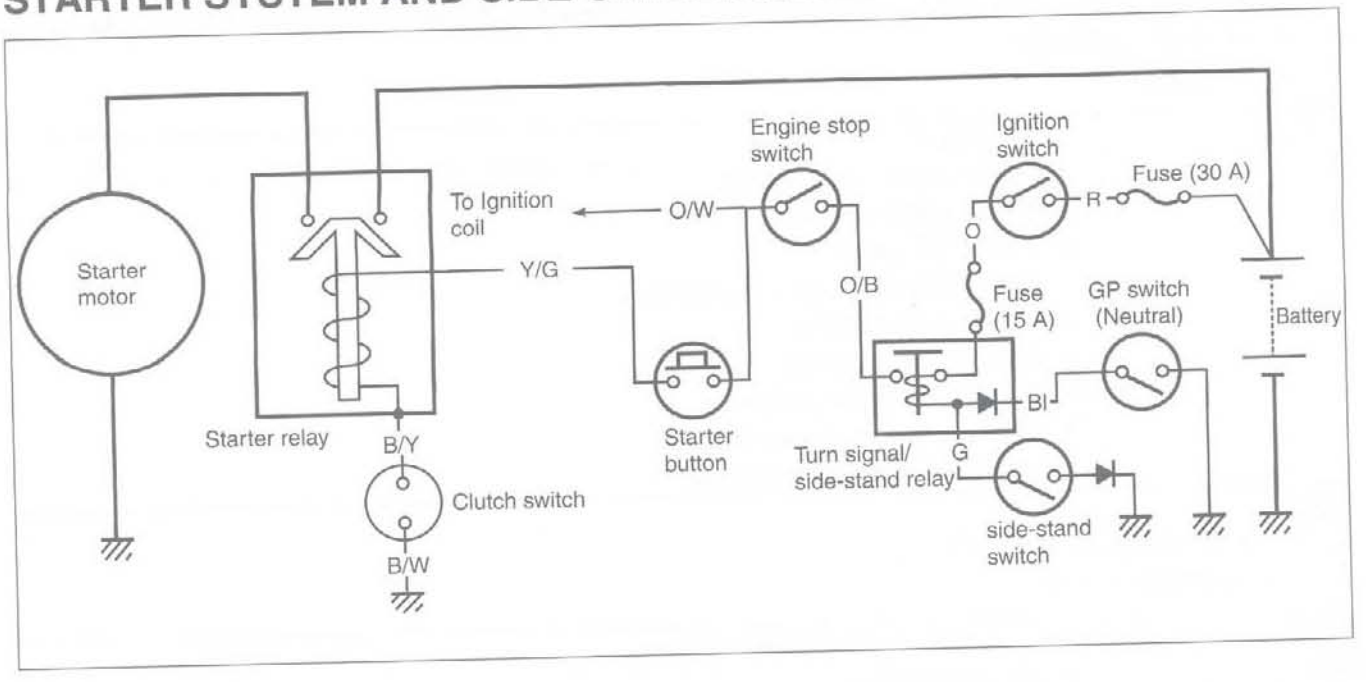

TROUBLESHOOTING

Make sure that the fuses are not blown and the battery is fully-charged before diagnosing.

Starter motor will not run

Step 1

1) Shift the transmission to neutral.
2) Pull the clutch lever, turn on the ignition switch with the engine stop switch in the "RUN" position and listen for a click from the starter relay when the starter button is pushed.
   Is a click sound heard?

YES	Go to Step 2.
NO	Go to Step 3.

Step 2

1) Check if the starter motor runs when its terminal is connected to the battery ⊕ terminal. (Do not use thin "wire" because a large amount of current flows.)
   Does the starter motor run?

YES	• Faulty starter relay. • Loose or disconnected starter motor lead wire. • Loose or disconnected between starter relay and battery ⊕ terminal.
NO	Faulty starter motor.

Step 3

1) Measure the starter relay voltage at the starter relay connectors (between Y/G ⊕ and B/Y ⊖) when the starter button is pushed.
   Is a voltage OK?

YES	Go to Step 4.
NO	• Faulty engine stop switch. • Faulty clutch switch. • Faulty GP switch. • Faulty turn signal/side-stand relay. • Faulty starter button. • Faulty ignition switch. • Faulty side-stand switch. • Poor contact of connector. • Open circuit in wire harness.

Step 4

1) Check the starter relay. (☞9-15)
   Is the starter relay OK?

YES	Poor contact of the starter relay.
NO	Faulty starter relay.

Starter motor runs but does not crank the engine

Step 1

1) The starter motor runs when the transmission is in neutral, but does not run when the transmission is in any position other than neutral, with the side-stand up.
2) Check the side-stand switch. (☞9-16)
   Is the side-stand switch OK?

YES	Go to Step 2.
NO	Faulty side-stand switch.

Step 2

1) Check the starter clutch.
   Is the starter clutch OK?

YES	Faulty starter clutch.
NO	• Open circuit in wire harness. • Poor contact of connector.

STARTER MOTOR REMOVAL

- Disconnect the battery ⊖ lead wire.
- Lift and support the fuel tank.
- Remove the starter motor ①.

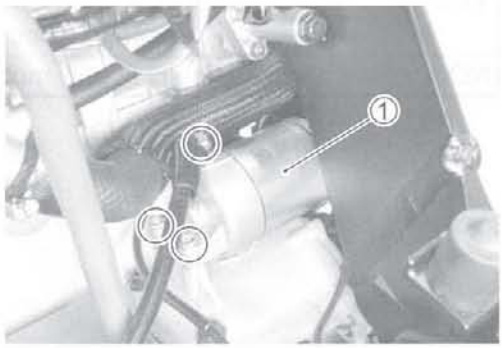

STARTER MOTOR DISASSEMBLY

- Disassemble the starter motor as shown in the illustration.

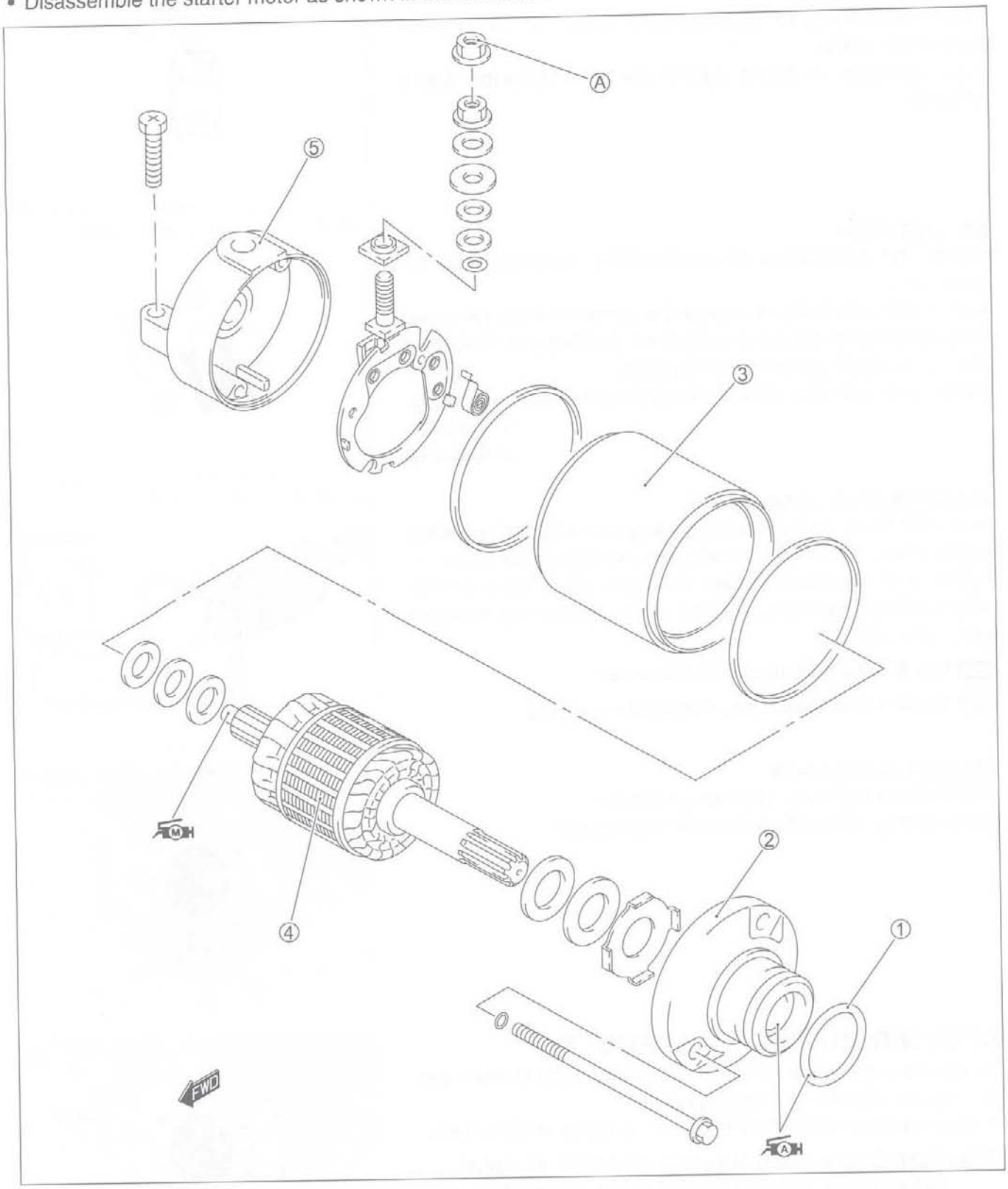

①	O-ring	④	Armature
②	Housing end (inside)	⑤	Housing end (outside)
③	Starter motor case	Ⓐ	Lead wire mounting nut

ITEM	N·m	kgf-m	lb-ft
Ⓐ	6	0.6	4.5

STARTER MOTOR INSPECTION

CARBON BRUSH

Inspect the brushes for abnormal wear, cracks, or smoothness in the brush holder.
If any damages are found, replace the brush assembly with a new one.

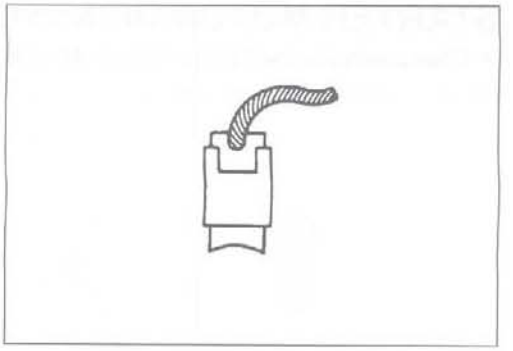

COMMUTATOR

Inspect the commutator for discoloration, abnormal wear or undercut Ⓐ.
If abnormal wear is found, replace the armature with a new one.
If the commutator surface is discolored, polish it with #400 sand paper and wipe it using a clean dry cloth.
If there is no undercut, scrape out the insulator with a saw blade.

① Insulator
② Segment

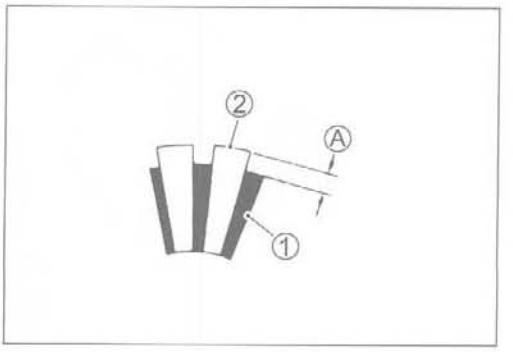

ARMATURE COIL INSPECTION

Check for continuity between each segment and between each segment and the armature shaft using the multi-circuit tester.
If there is no continuity between the segments or there is continuity between the segments and shaft, replace the armature with a new one.

09900-25008: Multi-circuit tester set

Tester knob indication: Continuity test (•)))

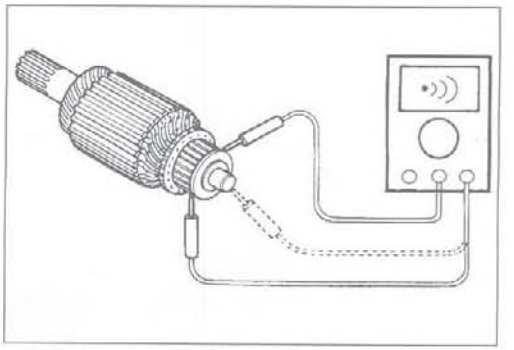

OIL SEAL INSPECTION

Check the oil seal lip for damage or leakage.
If any damage is found, replace the housing end.

STARTER MOTOR REASSEMBLY

Reassemble the starter motor in the reverse order of disassembly. Pay attention to the following points:

- Apply SUZUKI SUPER GREASE "A" to the lip of the oil seal.

99000-25030: SUZUKI SUPER GREASE "A" (USA)
99000-25010: SUZUKI SUPER GREASE "A" (Others)

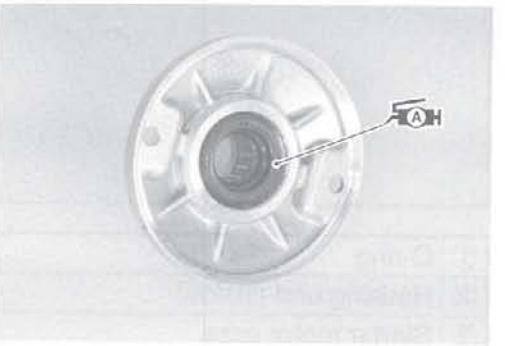

- Apply a small quantity of SUZUKI MOLY PASTE to the armature shaft.

99000-25140: SUZUKI MOLY PASTE

- Fit the projection of the starter motor case to the depression of the housing end.

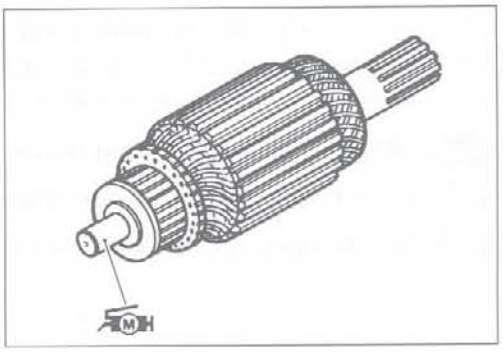

- Align the marks on the housing ends with the marks on the starter motor case.
- Apply SUZUKI SUPER GREASE "A" to the O-ring.

99000-25030: SUZUKI SUPER GREASE "A" (USA)
99000-25010: SUZUKI SUPER GREASE "A" (Others)

STARTER MOTOR INSTALLATION

- Tighten the starter motor lead wire connecting nut ① to the specified torque.

Lead wire connecting nut: 6 N·m (0.6 kgf-m, 4.3 lb-ft)

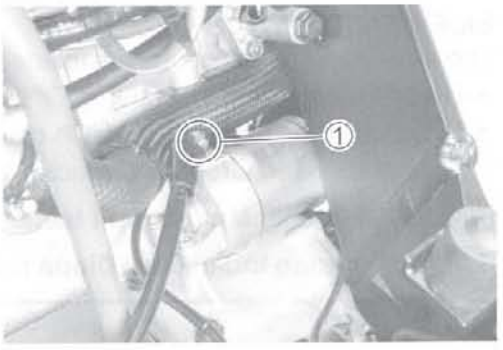

STARTER RELAY INSPECTION

- Remove the frame cover. (☞8-7)
- Disconnect the battery ⊖ lead wire from the battery.
- Remove the starter relay cover ①.
- Disconnect the starter motor lead wire, battery lead wire and starter relay coupler ②.
- Remove the starter relay.
- Apply 12 V to Ⓐ and Ⓑ terminals and check for continuity between the positive and negative terminals using the multi-circuit tester. If the starter relay clicks and continuity is found, the relay is ok.

09900-25008: Multi-circuit tester set

Tester knob indication: Continuity test (•)))

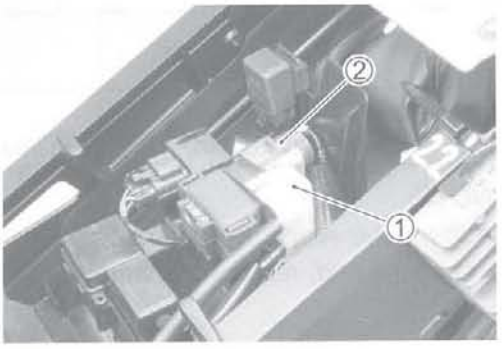

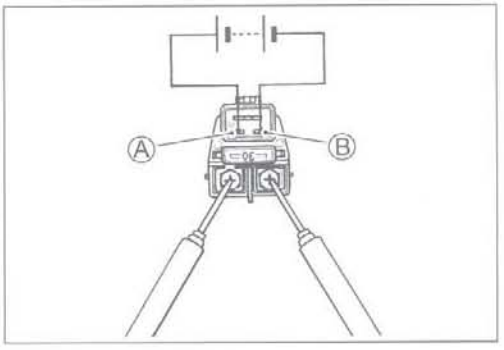

CAUTION

Do not apply battery voltage to the starter relay for five seconds and more, since the relay coil may overheat and get damaged.

Measure the relay coil resistance between the terminals using the multi-circuit tester. If the resistance is not within the specified value, replace the starter relay with a new one.

09900-25008: Multi-circuit tester set

Tester knob indication: Resistance (Ω)

Starter relay resistance: 3 – 5 Ω

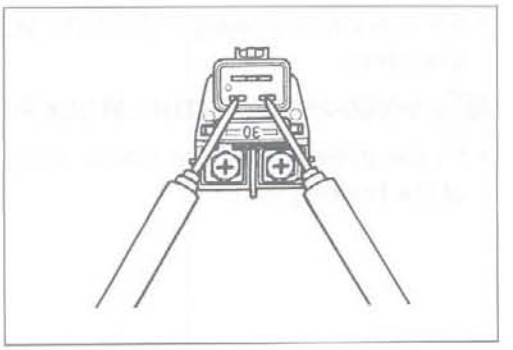

SIDE STAND/IGNITION INTERLOCK SYSTEM PARTS INSPECTION

Check the interlock system for proper operation. If the interlock system does not operate properly, check each component for damage or abnormalities. If any abnormality is found, replace the component with a new one.

SIDE-STAND SWITCH

The side-stand switch coupler is located above the crankcase.

- Lift and support the fuel tank. (☞5-3)
- Disconnect the side-stand switch coupler ① and measure the voltage between Green and Black/White lead wires.

09900-25008: Multi-circuit tester set

Tester knob indication: Diode test (⊣◀)

	Green (⊕ Probe)	Black/White (⊖ Probe)
ON Ⓐ (Side-stand up)	0.4 – 0.6 V	
OFF Ⓑ (Side-stand down)	1.4 V and more (Tester's battery voltage)	

NOTE:
If the tester reads 1.4 V and below when the tester probes are not connected, replace its battery.

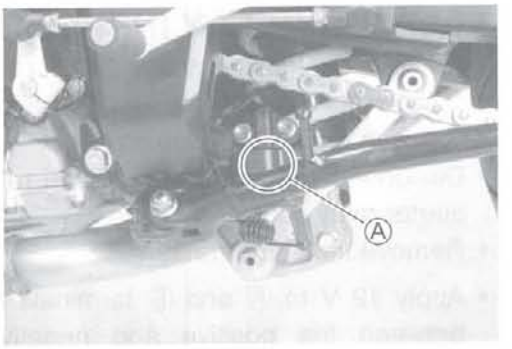

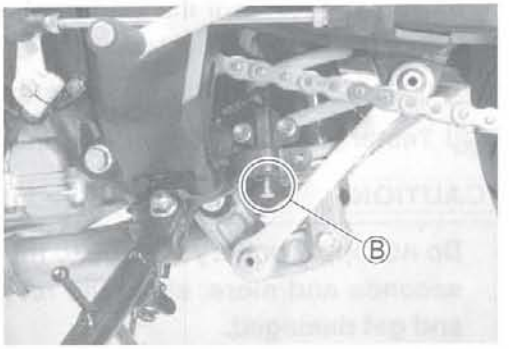

GP SWITCH

- Lift and support the fuel tank. (☞5-3)
- Disconnect the GP switch coupler ① and check the continuity between Blue and Black/White with the transmission in "NEUTRAL".

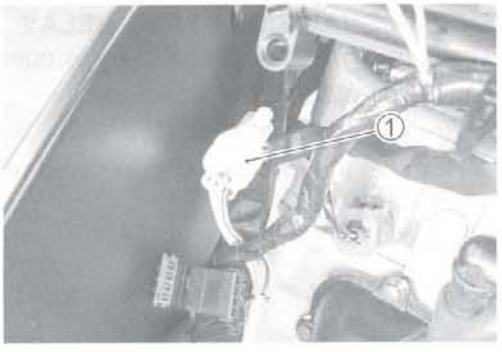

TOOL 09900-25008: Multi-circuit tester set

Tester knob indication: Continuity test (•)))

	Blue	Black/White
ON (Neutral)	○	○
OFF (Except neutral)		

CAUTION

When disconnecting and connecting the gear position switch coupler, make sure to turn OFF the ignition switch, or electronic parts may get damaged.

- Connect the GP switch coupler to the wiring harness.
- Turn the ignition switch to "ON" position and side-stand to upright position.
- Insert the needle pointed probes to the GP switch coupler.
- Measure the voltage between Pink and Black/White lead wires using the multi-circuit tester when shifting the gearshift lever from low to top.

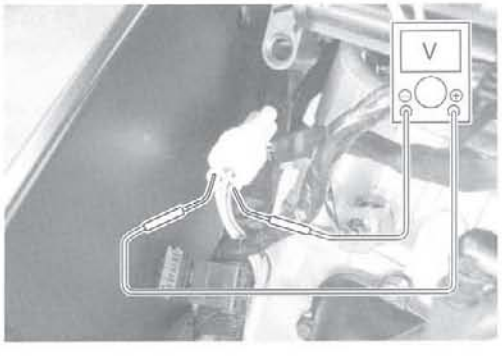

TOOL 09900-25008: Multi-circuit tester set
09900-25009: Needle pointed probe set

Tester knob indication: Voltage (⎓)

DATA GP switch voltage: 0.6 V and more

(* Low to top gear position / * Except neutral position) (Pink ⊕ – B/W ⊖)

CAUTION

Use the special tool to prevent the rubber of the water proof coupler from damage.

TURN SIGNAL/SIDE-STAND RELAY

The turn signal/side-stand relay is composed of the turn signal relay, side-stand relay and diode.

- Remove the front seat. (☞8-6)
- Remove the turn signal/side-stand relay ①.

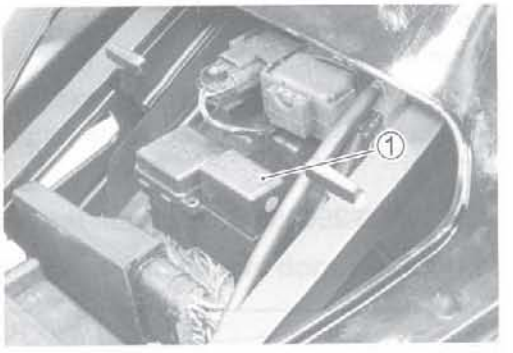

SIDE-STAND RELAY INSPECTION

First check the insulation between Ⓓ and Ⓔ terminals with the tester. Then apply 12 V to terminals Ⓓ and Ⓒ (⊕ to Ⓓ and ⊖ to Ⓒ) and check the continuity between Ⓓ and Ⓔ. If there is no continuity, replace the turn signal/side-stand relay with a new one.

TOOL 09900-25008: Multi-circuit tester set

Tester knob indication: Continuity test (•)))

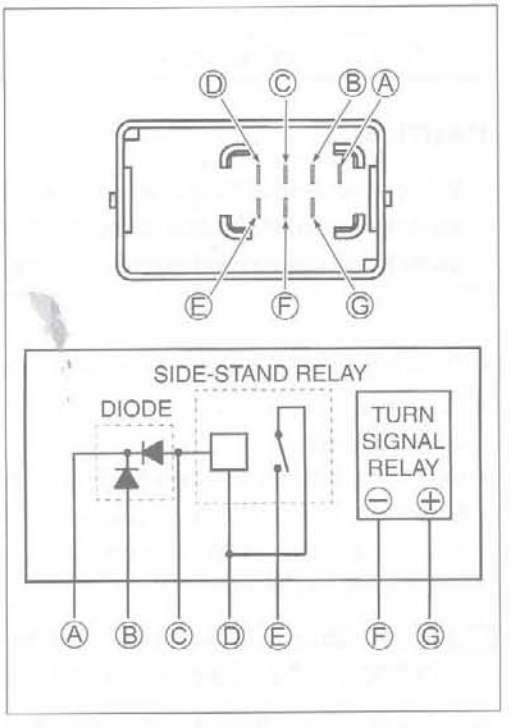

DIODE INSPECTION

Measure the voltage between the terminals using the multi-circuit tester. Refer to the following table.

⊖ Probe of tester to:	⊕ Probe of tester to: Ⓒ, Ⓑ	⊕ Probe of tester to: Ⓐ
Ⓒ, Ⓑ		1.4 V and more (Tester's battery voltage)
Ⓐ	0.4 – 0.6 V	

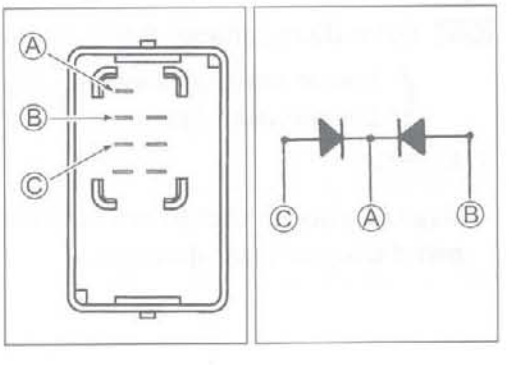

TOOL 09900-25008: Multi-circuit tester set

Tester knob indication: Diode test (⊣◀)

NOTE:

If the multi circuit tester reads 1.4 V and below when the tester probes are not connected, replace its battery.

IGNITION SYSTEM

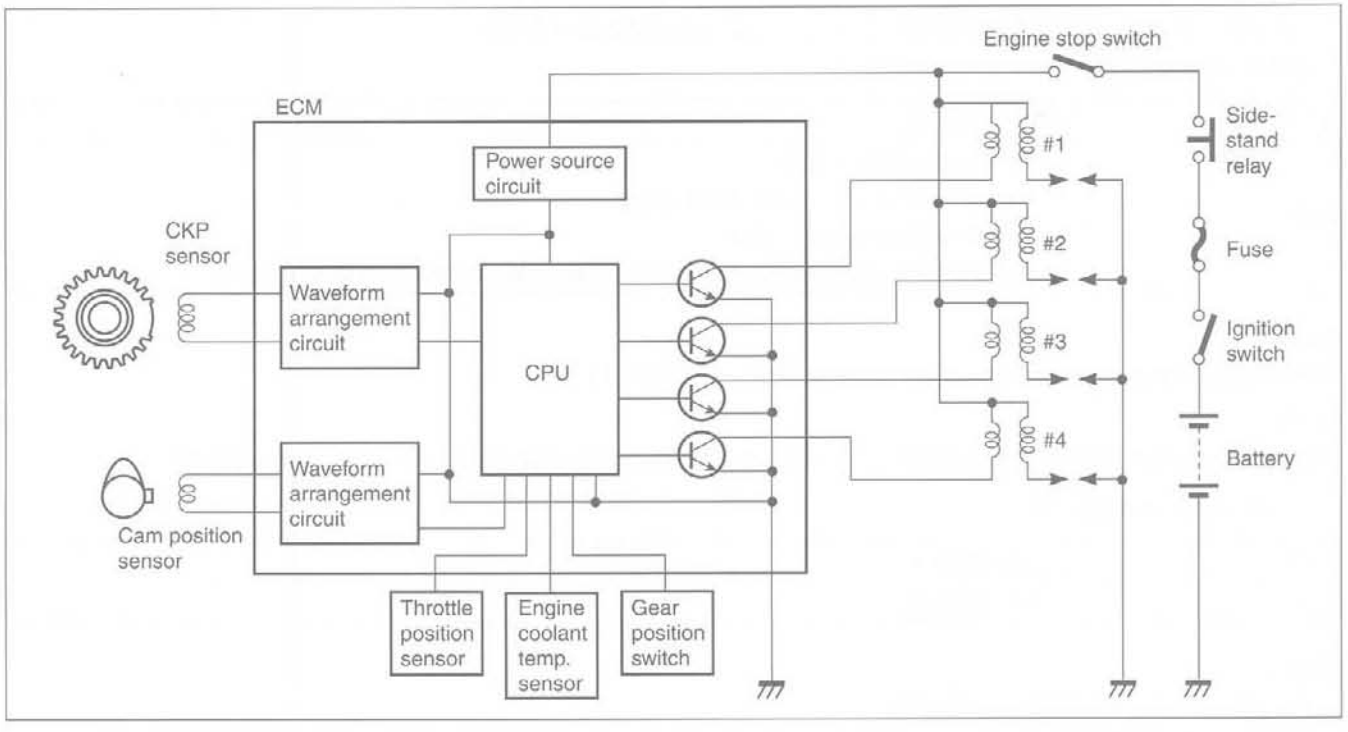

NOTE:

The fuel cut-off circuit is incorporated in this ECM in order to prevent over-running of engine. When engine speed reaches 15 000 r/min, this circuit cuts off fuel at the fuel injector. But under no load, the clutch lever is pulled or the gear position is neutral, this circuit cuts off fuel when engine speed reaches 14 600 r/min.

TROUBLESHOOTING

No spark or poor spark

NOTE:

Check that the transmission is in neutral and the engine stop switch is in the "RUN" position. Grasp the clutch lever. Check that the fuse is not blown and the battery is fully-charged before diagnosing.

Step 1

1) Check the ignition system couplers for poor connections.
   Is there connection in the ignition system couplers?

YES	Go to Step 2.
NO	Poor connection of couplers.

Step 2

1) Measure the battery voltage between input lead wires at the ECM with the ignition switch in the "ON" position. (E-02, 19: O/G and B/W, E-03, 24, 28, 33: O/W and B/W)
   Is the voltage OK?

YES	Go to Step 3.
NO	• Faulty ignition switch. • Faulty turn signal/side-stand relay. • Faulty engine stop switch. • Broken wire harness or poor connection of related circuit couplers.

Step 3

1) Measure the ignition coil primary peak voltage. (☞9-21)

NOTE:
This inspection method is applicable only with the multi-circuit tester and the peak volt adaptor.

   Is the peak voltage OK?

YES	Go to Step 4.
NO	Go to Step 5.

Step 4

1) Inspect the spark plugs. (☞2-5)
   Is the spark plug OK?

YES	Go to Step 5.
NO	Faulty spark plug (-s).

Step 5

1) Inspect the ignition coil/plug caps. (☞9-22)
   Is the ignition coil/plug cap OK?

YES	Go to Step 6.
NO	• Poor connection of the ignition coil/plug cap (-s). • Faulty ignition coil/plug cap (-s).

Step 6

1) Measure the CKP sensor peak voltage and its resistance. (☞9-23 and 9-24)

NOTE:
The CKP sensor peak voltage inspection is applicable only with the multi-circuit tester and peak volt adaptor.

   Is the peak voltage and resistance OK?

YES	• Faulty ECM. • Poor connection of ignition couplers.
NO	Faulty CKP sensor.

INSPECTION

IGNITION COIL PRIMARY PEAK VOLTAGE

- Remove the air cleaner box. (☞5-14)
- Disconnect all the ignition coil/plug cap lead wire couplers before removing the ignition coil/plug caps.
- Remove all of the ignition coil/plug caps.

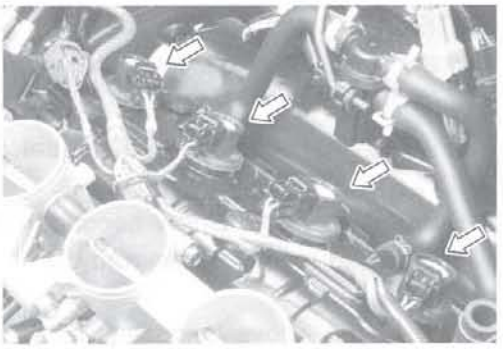

CAUTION

> *** Do not remove the ignition coil/plug cap before disconnecting the lead wire coupler, or the lead wire will be damaged.**
> *** Do not pry up the ignition coil/plug cap with a screwdriver or a bar to avoid damage.**
> *** Be careful not to drop the ignition coil/plug cap as it may open or short in a circuit.**

- Connect the new four spark plugs to each ignition coil/plug cap.
- Connect all the ignition coil/plug cap lead wire couplers to the ignition coil/plug caps respectively and ground them on the cylinder head.

CAUTION

> **Avoid grounding the spark plugs and suppling the electrical shock to the cylinder head cover (magnesium parts) to prevent the magnesium material from damage.**

NOTE:
Be sure that all couplers and spark plugs are connected properly and the battery used is in fully-charged condition.

Inspect each ignition coil primary peak voltage at the ignition coil/plug cap coupler.

- Connect the multi-circuit tester with peak voltage adaptor as follows.

  No.1 ignition coil/plug cap:
  W/Bl terminal (⊕ Probe) – Ground (⊖ Probe) terminal
  No.2 ignition coil/plug cap:
  B terminal (⊕ Probe) – Ground (⊖ Probe) terminal
  No.3 ignition coil/plug cap:
  Y terminal (⊕ Probe) – Ground (⊖ Probe) terminal
  No.4 ignition coil/plug cap:
  G terminal (⊕ Probe) – Ground (⊖ Probe) terminal

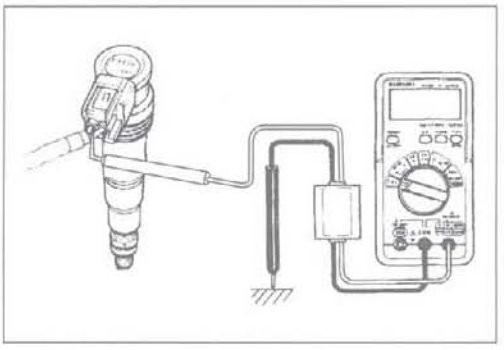

TOOL **09900-25008: Multi-circuit tester set**
09900-25009: Needle pointed probe set

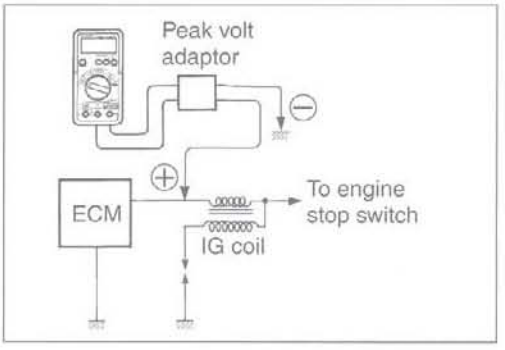

CAUTION

> **Before using the multi-circuit tester and peak volt adaptor, be sure to refer to the appropriate instruction manual.**

NOTE:
Use the special tool to prevent the rubber of the water proof coupler from damage.

- Shift the transmission into neutral and turn ignition switch "ON".
- Crank the engine a few seconds with the starter motor by depressing starter button and check the ignition coil primary peak voltage.
- Repeat the above inspection a few times and measure the highest peak voltage.

Tester knob indication: voltage (⎓)

DATA Ignition coil primary peak voltage: 85 V and more

⚠ WARNING

Do not touch the tester probes and spark plugs to prevent an electric shock while testing.

If the peak voltage is lower than the standard range, check the ignition coil/plug cap as follow.

IGNITION COIL/PLUG CAP RESISTANCE

- Check the ignition coil/plug cap for resistance in both primary and secondary coils. If the resistance is not within the standard range, replace the ignition coil/plug cap with a new one.

TOOL 09900-25008: Multi-circuit tester set

Tester knob indication: Resistance (Ω)

DATA Ignition coil/plug cap resistance
Primary : 1.3 – 1.9 Ω (⊕ tap – ⊖ tap)
Secondary: 10.8 – 16.2 kΩ (Plug cap – ⊖ tap)

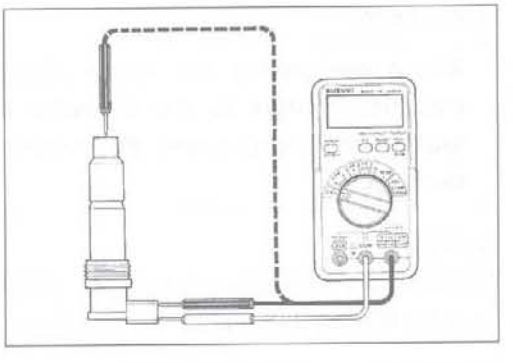

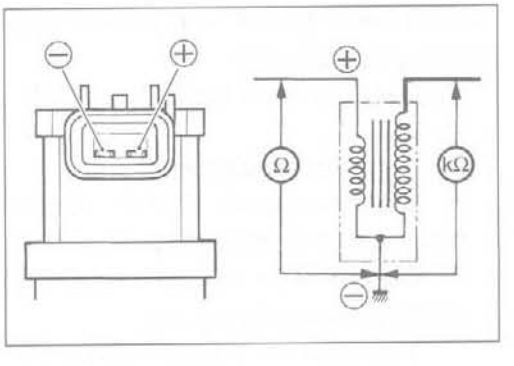

CKP SENSOR PEAK VOLTAGE

- Remove the front seat. (☞8-6)

NOTE:
Be sure that all couplers are connected properly and the battery used is in fully-charged condition.

- Disconnect the both couplers ①.
- Connect the multi-circuit tester with peak volt adaptor as follows.
- Measure the CKP sensor peak voltage between Green/Blue and Green/White lead wires at the ECM coupler ②.

Green/Blue (⊕ Probe) – Green/White (⊖ Probe)

TOOL 09900-25008: Multi-circuit tester set
09900-25009: Needle pointed probe set

CAUTION

Before using the multi-circuit tester and peak volt adaptor, be sure to refer to the appropriate instruction manual.

- Shift the transmission into the neutral and turn ignition switch "ON".
- Crank the engine a few seconds with the starter motor by depressing starter button and check the CKP sensor peak voltage.
- Repeat the above test procedure a few times and measure the highest peak voltage.

Tester knob indication: Voltage (⎓)

DATA CKP sensor peak voltage: 0.5 V and more (Green/Blue – Green/White)

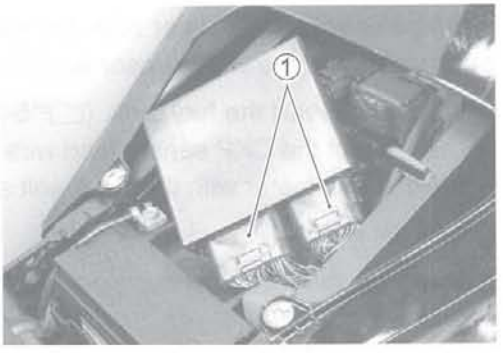

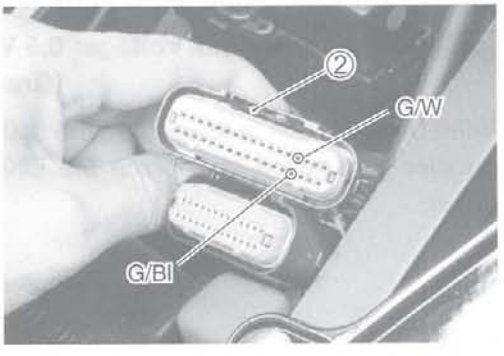

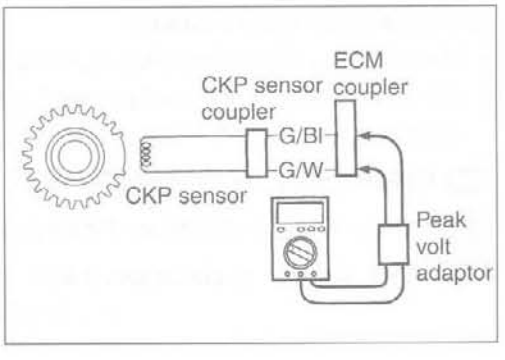

If the peak voltage is lower than the standard range, check the peak voltage at the CKP sensor lead wire coupler.

- Lift and support the fuel tank. (☞5-3)
- Disconnect the CKP sensor lead wire coupler and connect the multi-circuit tester with the peak volt adaptor.

Green (⊕ Probe) – Black (⊖ Probe)

- Measure the CKP sensor peak voltage at the CKP sensor lead wire coupler.

Tester knob indication: Voltage (⎓)

DATA CKP sensor peak voltage: 0.5 V and more (Green – Black)

If the peak voltage is lower than the standard range, check each coupler connection or replace the CKP sensor and inspect it again.

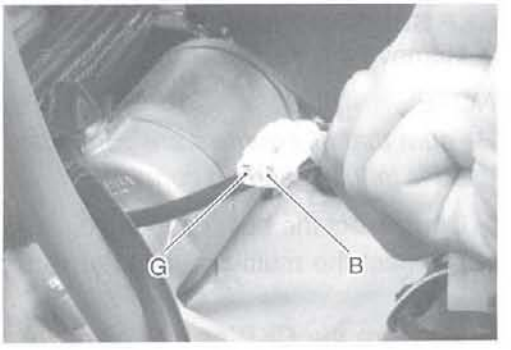

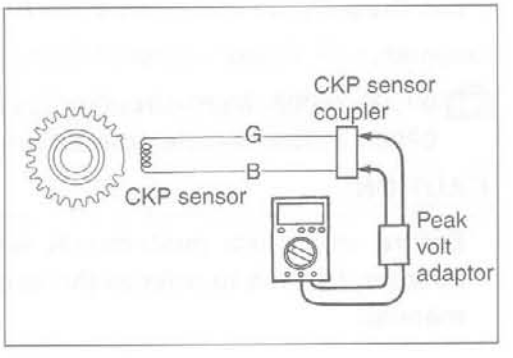

CKP SENSOR RESISTANCE

- Measure the resistance between the lead wires and ground. If the resistance is not as specified, the CKP sensor must be replaced.

TOOL 09900-25008: Multi-circuit tester set

Tester knob indication: Resistance (Ω)

DATA CKP sensor resistance: 142 – 194 Ω (Green – Black)
: ∞ Ω (Green – Ground)

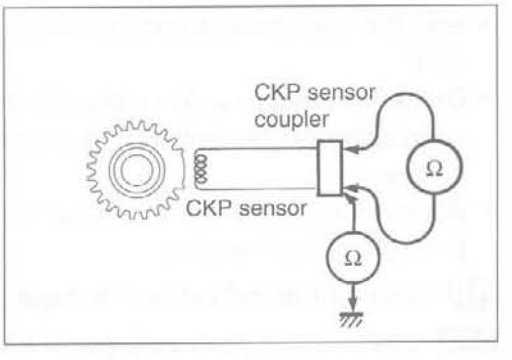

COMBINATION METER

DESCRIPTION

This combination meter mainly consists of the stepping motor, LCD (Liquid Crystal Display) and LED (Light Emitting Diode). This combination meter is light, thin and of high response compared to those currently in use because of this composition.

The rpm pointer is driven by the stepping motor.

The LCDs indicate speed, Odo/Trip1/Trip2/Clock and engine coolant temp./FI respectively.

LED (Light Emitting Diode)

LED is used for the illumination light and each indicator light.

LED is maintenance free. LED is less electric-power consuming and stronger to vibration resistance compared to the bulb.

Engine revolution indicator lamp

This speedometer is equipped the engine revolution indicator lamp. The engine revolution indicator lamp is adjustable from 7 000 – 15 500rpm. (every 500rpm, initial setting: 13 000rpm)

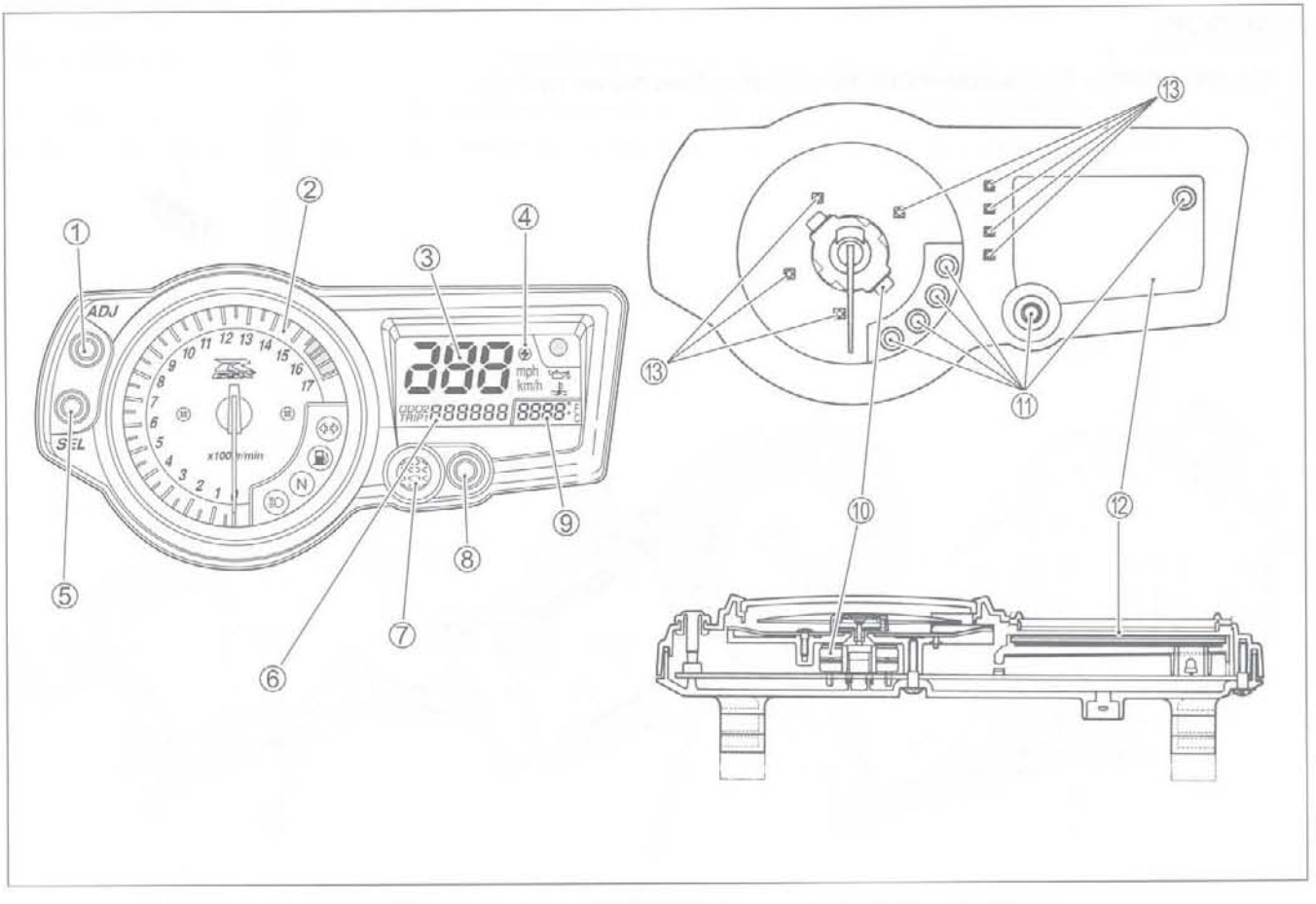

①	Adjust switch (Trip/clock)	⑧	Adjust switch (Engine revolution)
②	Tachometer	⑨	Engine coolant temperature/FI
③	Speedometer	⑩	Stepping motor
④	Engine revolution indicator	⑪	LED
⑤	Select switch	⑫	LCD
⑥	Odo/Trip 1/Trip 2/Clock	⑬	LED (Combination meter light)
⑦	Engine revolution indicator lamp		

REMOVAL AND DISASSEMBLY

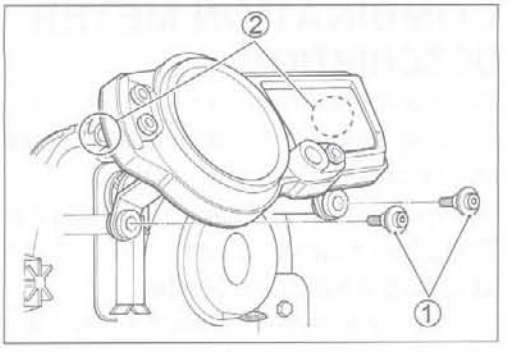

- Remove the screws ①.
- With the hooked parts ② of the combination meter pulled from the headlight housing, disconnect the combination meter lead wire coupler.
- Remove the combination meter.

CAUTION

When disconnecting and reconnecting the combination meter coupler, make sure to turn OFF the ignition switch, or electronic parts may get damaged.

- Disassemble the combination meter as follows.

CAUTION

Do not attempt to disassemble the combination meter unit ②.

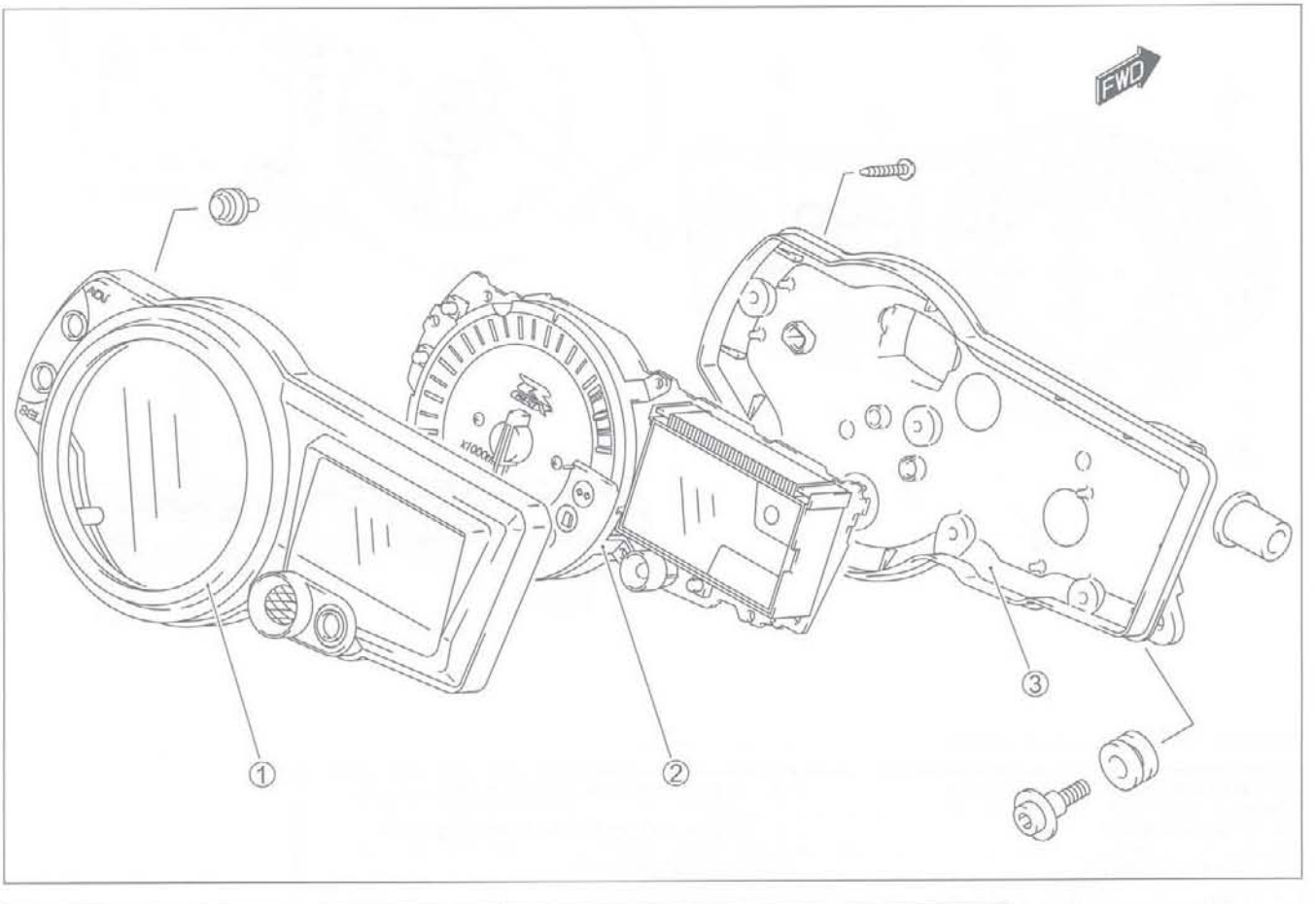

①	Combination meter cover	③	Combination meter case
②	Combination meter unit		

INSPECTION

LED (LIGHT EMITTING DIODE)

Check that the LED lights (FI light, Fuel level indicator light and Engine revolution indicator lamp) immediately after turning the ignition switch on. Also, other LED lights (Neutral indicator light, High-beam indicator light and Turn signal indicator light) can be checked by depending on each switch position.

If the LED fails in operation, replace the combination meter unit with a new one after checking its wire harness/coupler.

STEPPING MOTOR

Check that the pointer calibrates itself immediately after turning the ignition switch on and stops at zero point.

If abnormal condition is found, replace the combination meter unit with a new one after checking its wire harness/coupler.

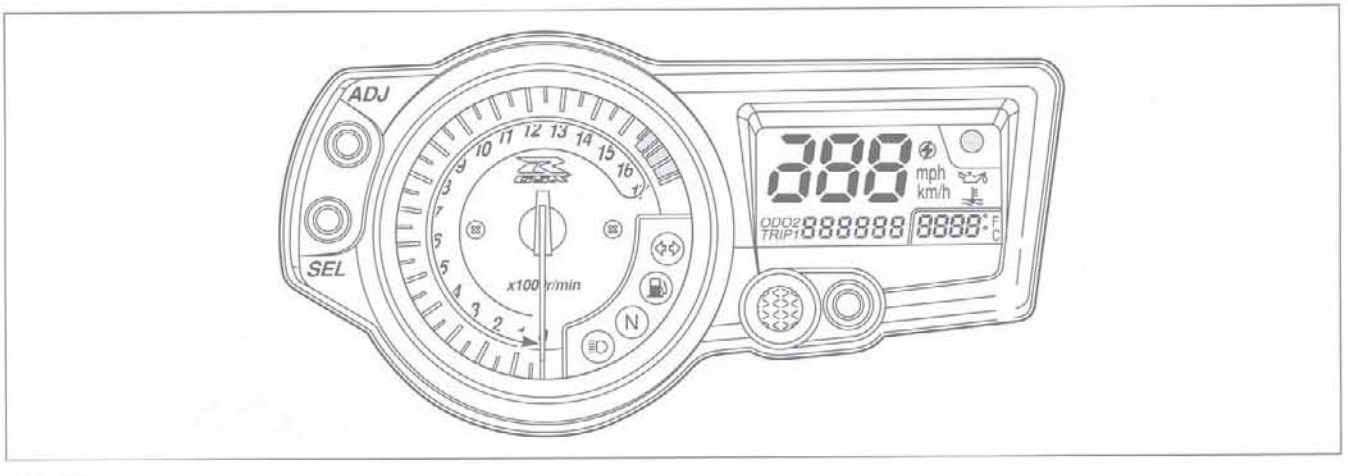

NOTE:

The pointer may not return to the proper position even turning the ignition switch on under low temperature condition. In that case, you can reset the pointer to the proper position by following the instruction below:

1) With the function switch Ⓐ pressed, turn the ignition switch on.
2) Release the function switch Ⓐ, 3 to 5 seconds after turning the ignition switch on.
3) Press the function switch Ⓐ twice (within 1 second). →Reset

* Complete the operation within 10 seconds after the ignition switch has been turned on.

Time	Ignition switch	Adjuster switch Ⓐ
	OFF	PUSH
0	ON	↓
•	↓	↓
•	↓	↓
3 sec	↓	↓
•	↓	↓
5 sec	↓	Release
•	↓	Push
•	↓	Push
•	↓	Push→Reset
•	↓	
10 sec		

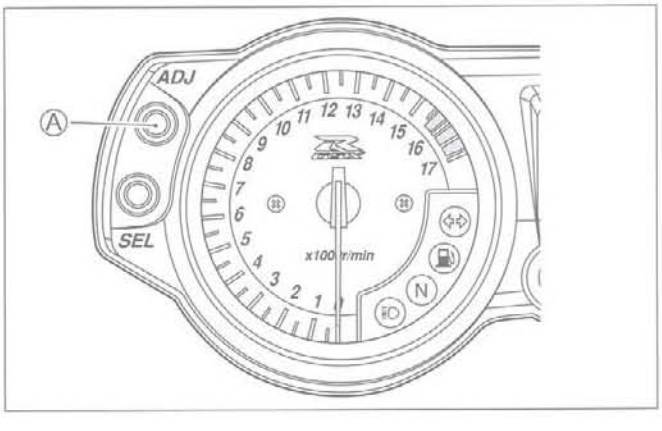

Pointer will return to the starting point right after the completion of the operation. In the case of the pointer not returning to the proper position after doing above, replace the combination meter unit.

ENGINE COOLANT TEMPERATURE METER AND INDICATOR

ECT sensor inspection. (☞7-8)

- Lift and support the fuel tank. (☞5-3)
- Disconnect the ECT sensor coupler ①.

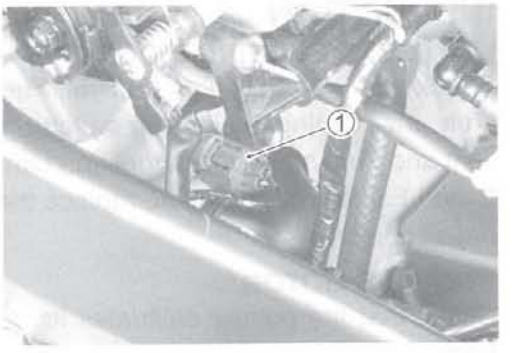

CAUTION

When connecting and disconnecting the engine coolant temperature sensor lead wire coupler, make sure to turn OFF the ignition switch, or electronic parts may get damaged.

- Connect the variable resistor Ⓐ between the terminals.
- Turn the ignition switch ON.
- Check the LCD and LED operations when the resistance is adjusted to the specified values.

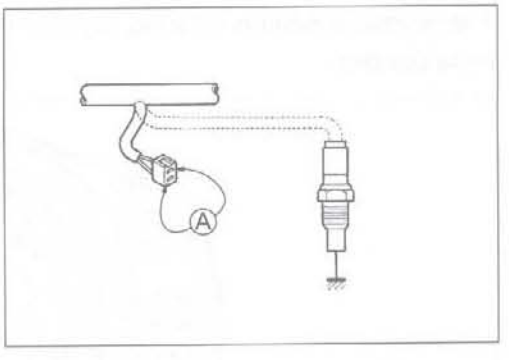

Resistance Ⓐ	LED Ⓑ	LCD Ⓒ	LCD Ⓓ	Water temperature
2.45 kΩ and over	OFF	"---"	—	19 °C and below
Approx. 0.811 kΩ	OFF	"50"	—	Approx. 50 °C
Approx. 0.1 kΩ ON	ON	"120" – "139"	Flicker	120 – 139 °C
0 Ω (Jumper wire)	ON	"HI"	Flicker	140 °C and over

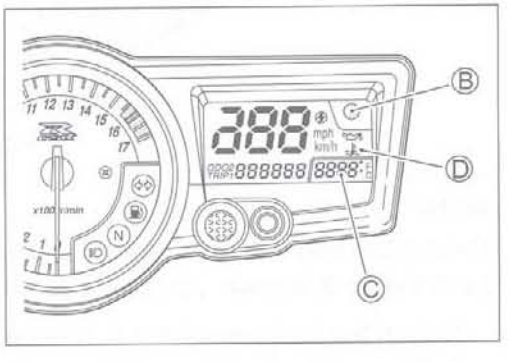

If either one or all indications are abnormal, replace the combination meter with a new one.

NOTE:

If the engine stop switch is turned OFF while the ignition switch is ON, the LCD displays "CHEC". But it is not a malfunction.

This condition implies that combination meter receives no signal from the ECM.

In that case, they are restored to normal indication by turning the engine stop switch to RUN position.

FUEL LEVEL INDICATOR SWITCH INSPECTION

- Remove and disassemble the fuel pump assembly. (☞5-8)

- Connect 12 V battery and test bulb (12 V, 3.4 W) to the fuel level indicator switch as shown in the right illustration. The bulb should come on after one minutes if the switch is in good condition.

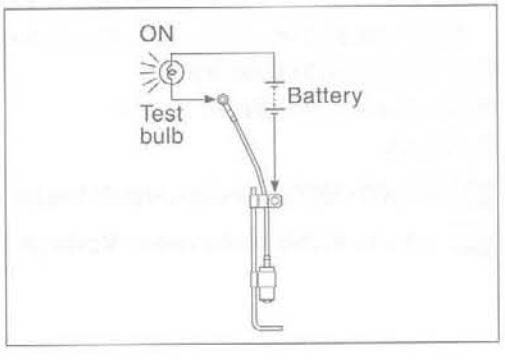

- When the switch is immersed in water under the above condition, the bulb should go out. If the bulb remains lit, replace the unit with a new one.

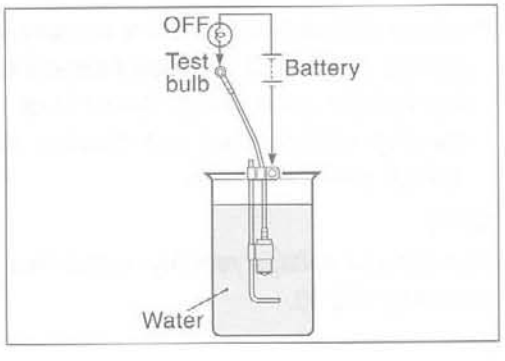

FUEL LEVEL INDICATOR LIGHT INSPECTION

If the fuel level indicator light does not function properly, check the fuel level indicator switch and its lead wire/coupler.

If the fuel level indicator switch and its lead wire/coupler are functioning properly, replace the combination meter with a new one.

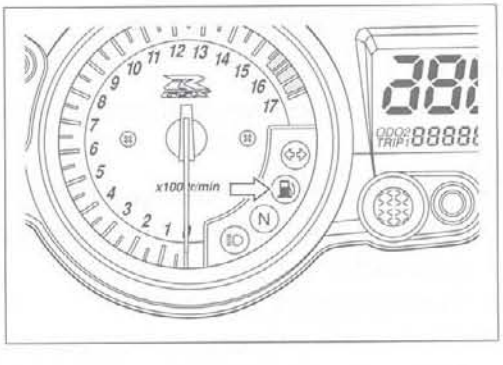

SPEEDOMETER

If the speedometer, odometer or trip meter does not function properly, inspect the speedometer sensor and connection of couplers. If the speed sensor and connection are functioning properly, replace the meter with a new one.

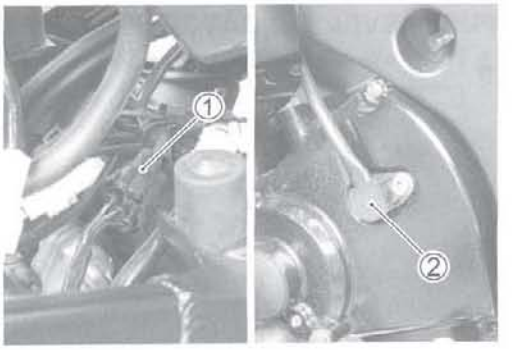

SPEED SENSOR

- Lift and support the fuel tank. (☞5-3)
- Disconnect speed sensor coupler ①.
- Remove the speed sensor ② by removing its mounting bolt.
- Connect 12 V battery, 10 kΩ resistor and the multi-circuit tester as shown in the right illustration.

B/R: Black with Red tracer
B/W: Black with White tracer
B: Black

TOOL 09900-25008: Multi-circuit tester set

Tester knob indication: Voltage (⎓)

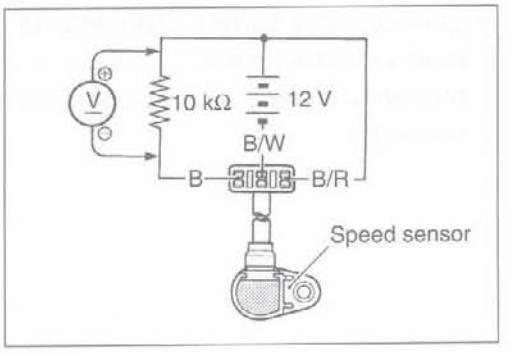

- Under above condition, if a suitable screwdriver touching the pick-up surface of the speed sensor is moved, the tester reading voltage changes (0 V→12 V or 12 V→0 V). If the tester reading voltage does not change, replace the speedometer sensor with a new one.

NOTE:
The highest voltage reading in this test will be the same as that of battery (12 V).

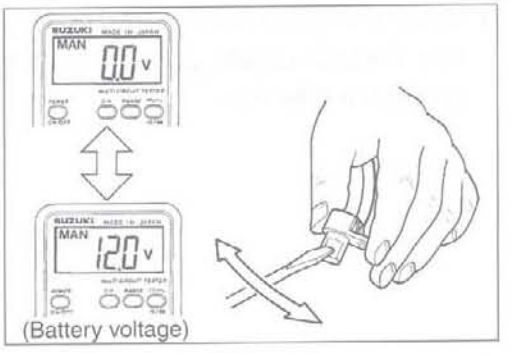

OIL PRESSURE INDICATOR

NOTE:
Before inspecting the oil pressure switch, check if the engine oil level is correct. (☞2-12)

- Remove the under cowling. (☞8-3)
- Disconnect the oil pressure switch lead wire from the oil pressure switch.
- Turn the ignition switch ON.
- Check if the oil pressure indicator Ⓐ will light and LCD Ⓑ will flicker, when grounding the lead wire.

If any indications are abnormal, replace the combination meter with a new one after checking connection of couplers.

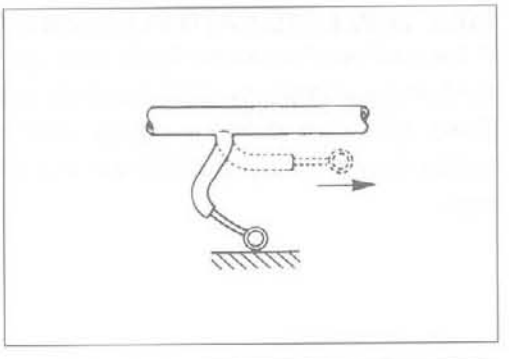

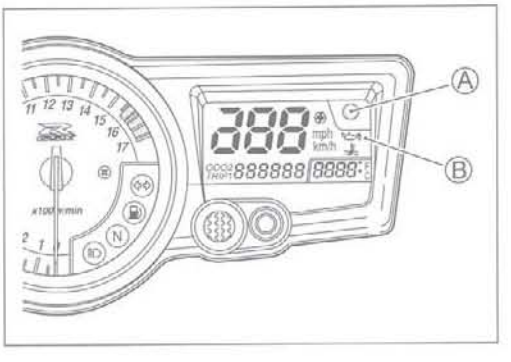

LAMPS

HEADLIGHT, BRAKE LIGHT/TAILLIGHT, LICENSE PLATE LIGHT AND TURN SIGNAL LIGHT

HEADLIGHT

12 V 55 W H7 ① (E-02, 19)
12 V 55/55 W H7 ① (E-03, 24, 28, 33)
12 V 60/55 W H4 ②

POSITION LIGHT

12 V 5 W ③ (Except for E-03, 24, 28, 33)

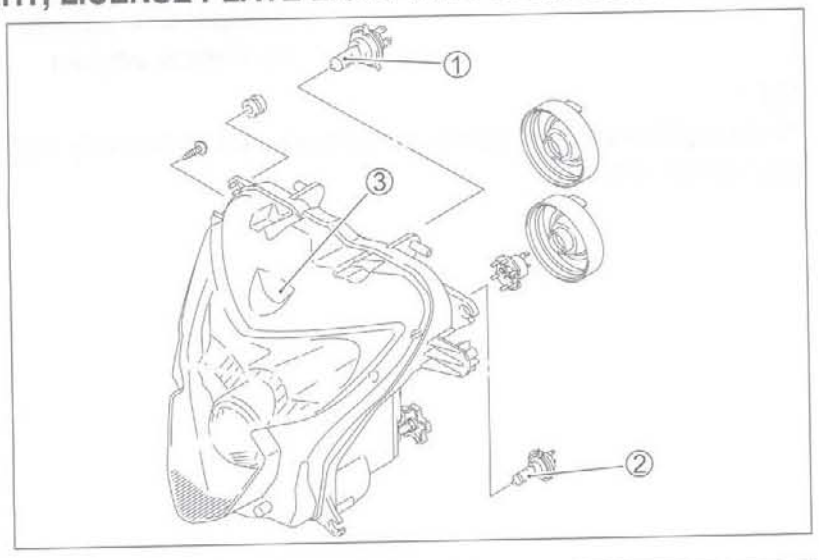

BRAKE LIGHT/TAILLIGHT: LED

LICENCE PLATE LIGHT ④

12 V 5 W

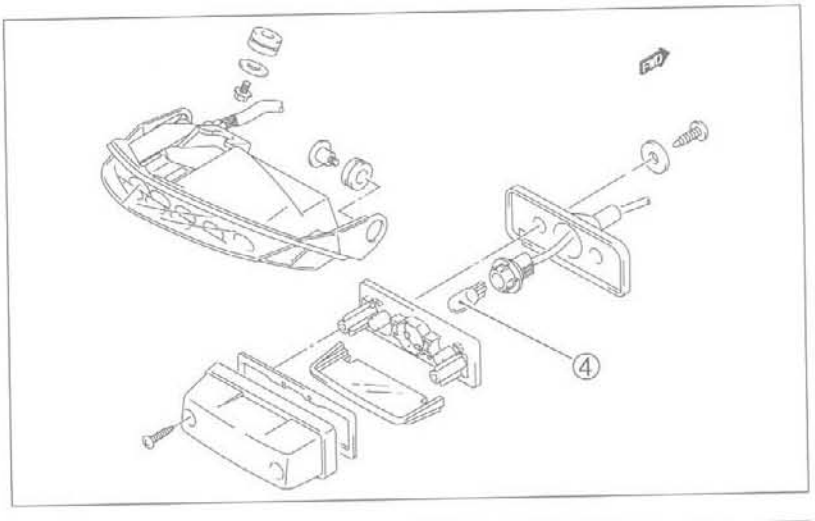

TURN SIGNAL LIGHT ⑤

12 V 18 W x 4

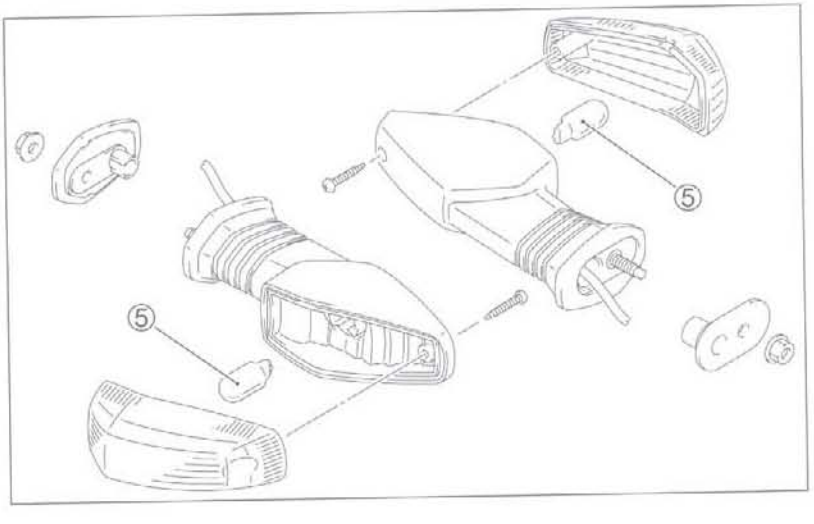

CAUTION

If you have touched and the bulb with your bare hands, clean it with a cloth moistened with alcohol or soapy water to maintain lens clarity.

HEADLIGHT BEAM ADJUSTMENT

- Adjust the headlight beam.

Ⓐ: Horizontal adjuster
Ⓑ: Vertical adjuster

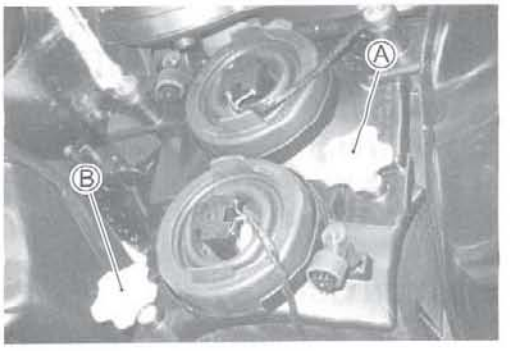

NOTE:
To adjust the headlight beam, adjust the beam horizontally first, then adjust vertically.

RELAYS

TURN SIGNAL/SIDE-STAND RELAY

The turn signal/side-stand relay is composed of the turn signal relay, side-stand relay and diode.

INSPECTION

Before removing the turn signal/side-stand relay, check the operation of the turn signal light.

If the turn signal light does not illuminate, inspect the bulb, turn signal switch and circuit connection.

If the bulb, turn signal switch and circuit connection are OK, the turn signal relay may be faulty. In this case, replace the turn signal/side-stand relay with a new one.

NOTE:

* *Make sure that the battery is fully charged.*
* *Refer to the page 9-16 for the side-stand relay and diode inspection.*

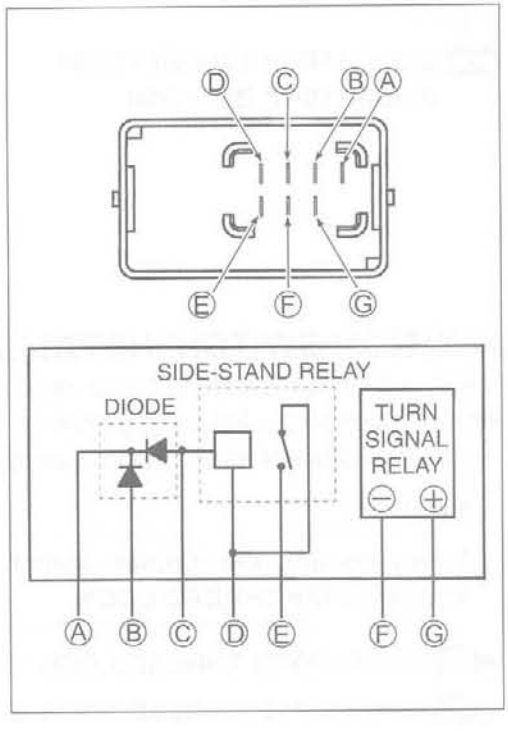

STARTER RELAY

☞9-15

FUEL PUMP RELAY

☞5-6

IGNITION SWITCH REMOVAL

- Remove the air cleaner box. (☞5-14)
- Disconnect the ignition switch lead wire coupler ①.

- Remove the ignition switch mounting bolts with the special tools.

TOOL 09930-11920: Torx bit JT40H
09930-11940: Bit holder

IGNITION SWITCH INSTALLATION

Install the ignition switch in the reverse order of removal.
Pay attention to the following points:

- Apply thread lock to the ignition switch bolts.

CAUTION

> **When reusing the ignition switch bolt, clean thread and apply the THREAD LOCK.**

1342 99000-32050: THREAD LOCK "1342" (USA)

1322 99000-32110: THREAD LOCK SUPER "1322" (Others)

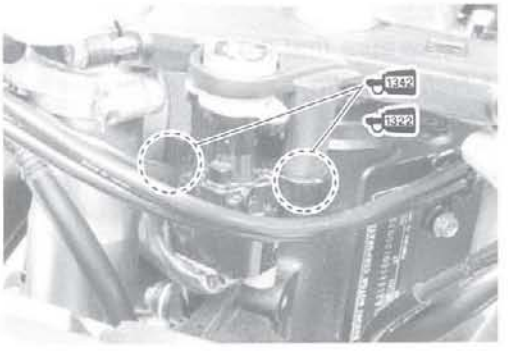

SWITCHES INSPECTION

Inspect each switch for continuity with a tester. If any abnormality is found, replace the respective switch assemblies with new ones.

HAZARD SWITCH

Position \ Color	B	Lbl	Lg
• (OFF)		○	○
⚠ (ON)	○	○	○

IGNITION SWITCH

Position \ Color	O/R	R	O	O/Y	O/G	Br
ON	○	○	○	○	○	○
OFF						
LOCK						
P		○				○

DIMMER SWITCH

Position \ Color	W	Y	O
HI (≡D)		○	○
LO (≡D)	○		○

TURN SIGNAL SWITCH

Position \ Color	Lg	Lbl	B
L		○	○
PUSH			
R	○	○	

PASSING LIGHT SWITCH

Position \ Color	O	Y
•		
PUSH	○	○

ENGINE STOP SWITCH

Position \ Color	O/B	O/W
OFF (⊗)		
RUN (○)	○	○

STARTER BUTTON

Position \ Color	O/W	Y/G
•		
PUSH	○	○

HORN BUTTON

Position \ Color	B/Bl	B/W
•		
PUSH	○	○

FRONT BRAKE SWITCH

Position \ Color	B/R	B/Bl
OFF		
ON	○	○

REAR BRAKE SWITCH

Position \ Color	O/G	W/B
OFF		
ON	○	○

CLUTCH SWITCH

Position \ Color	B/W	B/Y
OFF		
ON	○	○

OIL PRESSURE SWITCH

Position \ Color	G/Y	Ground
ON (engine is at stop)	○	○
OFF (engine is running)		

NOTE:
Before inspecting the oil pressure switch, check if the engine oil level is correct. (☞ 2-12)

WIRE COLOR

B	: Black	Lbl	: Light blue	R	: Red
Br	: Brown	Lg	: Light green	Y	: Yellow
Gr	: Gray	O	:Orange	W	: White

B/Bl : Black with Blue tracer
B/W : Black with White tracer
B/R : Black with Red tracer
O/B : Orange with Black tracer
O/G : Orange with Green tracer
O/R : Orange with Red tracer
O/W : Orange with White tracer
O/Y : Orange with Yellow tracer
W/B : White with Black tracer
Y/G : Yellow with Green tracer

BATTERY

SPECIFICATIONS

Type designation	FTX9-BS
Capacity	12 V, 28.8 kC (8 Ah)/10 HR

① Upper cover breather
② Cathode plates
③ Stopper
④ Filter
⑤ Terminal
⑥ Safety valve
⑦ Anode plates
⑧ Separator (Fiberglass plate)

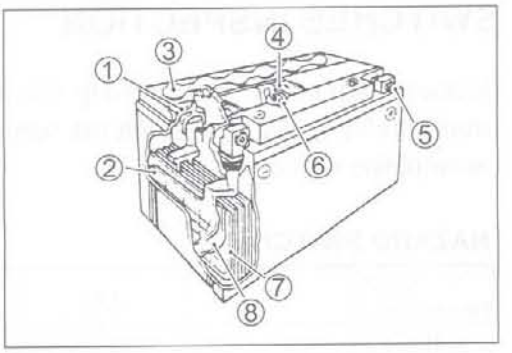

INITIAL CHARGING

Filling electrolyte

- Remove the aluminum tape ① sealing the battery electrolyte filler holes Ⓐ.

NOTE:
When filling electrolyte, the battery must be removed from the vehicle and must be put on the level ground.

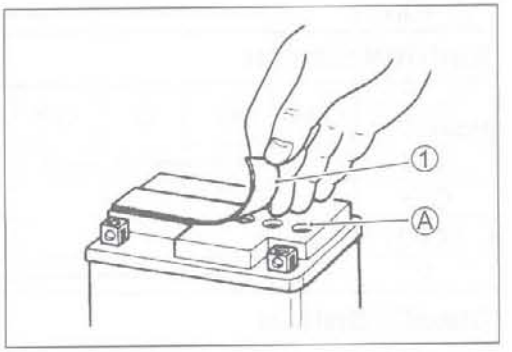

- Remove the caps ②.

NOTE:
** After filling the electrolyte completely, use the removed cap ② as sealing caps of battery-filler holes.*
** Do not remove or pierce the sealed areas ③ of the electrolyte container.*

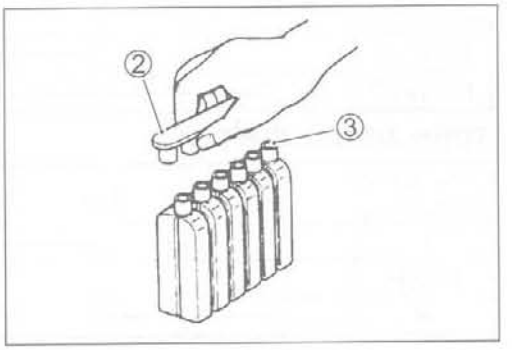

- Insert the nozzles of the electrolyte container ④ into the battery's electrolyte filler holes, holding the container firmly so that it does not fall. Take precaution not to allow any of the fluid to spill.

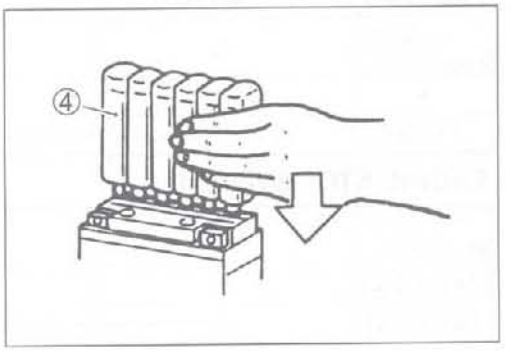

- Make sure air bubbles ⑤ are coming up each electrolyte container, and leave in this position for about more than 20 minutes.

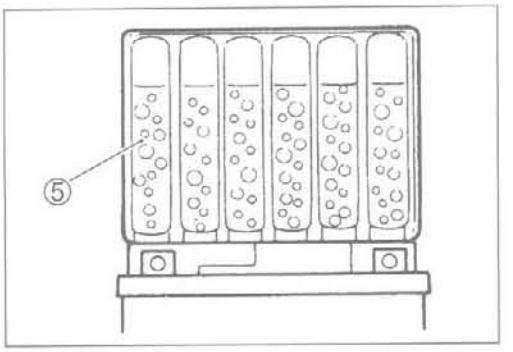

NOTE:
If no air bubbles are coming up from a filler port, tap the bottom of the electrolyte container two or three times.
Never remove the container from the battery.

- After confirming that the electrolyte has entered the battery completely, remove the electrolyte containers from the battery. Wait for about 20 minutes.

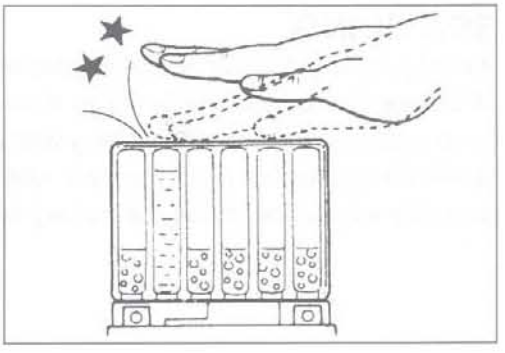

- Insert the caps ⑥ into the filler holes, pressing in firmly so that the top of the caps do not protrude above the upper surface of the battery's top cover.

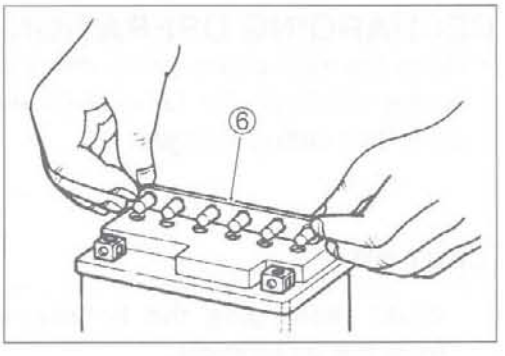

CAUTION

- **Never use anything except the specified battery.**
- **Once the caps have been installed to the battery, do not remove the caps.**
- **Do not tap the caps with a tool such as hammer when installing them.**

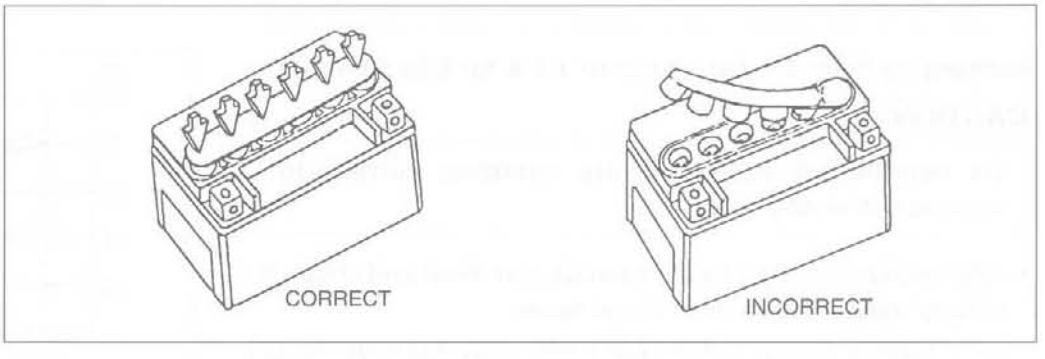

For initial charging, use the charger specially designed for MF battery.

CAUTION

- **For charging the battery, make sure to use the charger specially designed for MF battery. Otherwise, the battery may be overcharged resulting in shortened service life.**
- **Do not remove the cap during charging.**
- **Position the battery with the cap facing upward during charging.**

SERVICING

Visually inspect the surface of the battery container. If any signs of cracking or electrolyte leakage from the sides of the battery have occurred, replace the battery with a new one. If the battery terminals are found to be coated with rust or an acidic white powdery substance, clean the battery terminals with sandpaper.

RECHARGING OPERATION

- Using the multi circuit tester, check the battery voltage. If the voltage reading is the 12.0 V (DC) and less, recharge the battery with a battery charger.

Ⓐ Charging period
Ⓑ Stop charging

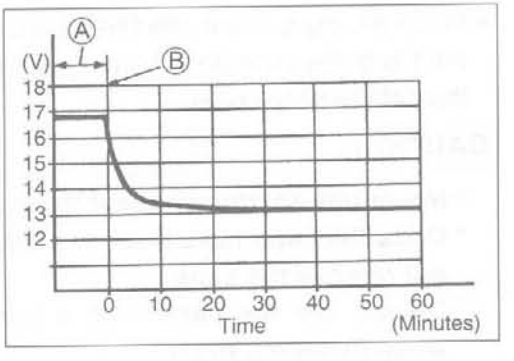

CAUTION

*** When recharging the battery, remove the battery from the motorcycle.**
*** Do not remove the caps on the battery top while recharging.**

Recharging time: 5 A for 1 hour or 1.2 A for 5 to 10 hours

CAUTION

Be careful not to permit the charging current to exceed 5 A at any time.

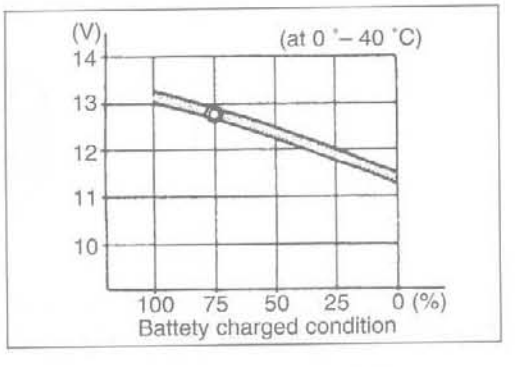

- After recharging, wait for 30 minutes and more and check the battery voltage with a multi circuit tester.
- If the battery voltage is the 12.5 V and less, recharge the battery again.
- If battery voltage is still 12.5 V and less, after recharging, replace the battery with a new one.
- When the motorcycle is not used for a long period, check the battery every 1 month to prevent the battery discharge.

SERVICING INFORMATION

CONTENTS

TROUBLESHOOTING 10- 2
FI SYSTEM MALFUNCTION CODE AND DEFECTIVE CONDITION 10- 2
ENGINE 10- 4
RADIATOR (COOLING SYSTEM) 10-10
CHASSIS 10-11
BRAKES 10-12
ELECTRICAL 10-13
BATTERY 10-15
WIRING HARNESS, CABLE AND HOSE ROUTING 10-16
WIRING HARNESS ROUTING 10-16
CABLE ROUTING 10-19
THROTTLE BODY HOSE ROUTING 10-20
FUEL TANK DRAIN HOSE ROUTING 10-21
COOLING SYSTEM HOSE ROUTING 10-22
FRONT BRAKE HOSE ROUTING 10-23
REAR BRAKE HOSE ROUTING 10-24
PAIR (AIR SUPPLY) SYSTEM HOSE ROUTING 10-25
FUEL TANK INSTALLATION 10-26
FUEL TANK LOWER SIDE COVER 10-27
COWLING INSTALLATION 10-28
FRAME COVER INSTALLATION 10-29
UNDER COWLING HEAT SHIELD INSTALLATION 10-30
SIDE-STAND INSTALLATION 10-31
GEARSHIFT PEDAL INSTALLATION 10-31
SEAT LOCK CABLE ROUTING 10-32
HANDLEBAR BALANCER 10-33
COMBINATION METER INSTALLATION 10-33
REAR COMBINATION LIGHT INSTALLATION 10-34
SPECIAL TOOLS 10-35
TIGHTENING TORQUE 10-39
ENGINE 10-39
FI SYSTEM AND INTAKE AIR SYSTEM 10-40
COOLING SYSTEM 10-40
CHASSIS 10-41
TIGHTENING TORQUE CHART 10-42
SERVICE DATA 10-43

TROUBLESHOOTING

FI SYSTEM MALFUNCTION CODE AND DEFECTIVE CONDITION

MALFUNCTION CODE	DETECTED ITEM	DETECTED FAILURE CONDITION CHECK FOR
C00	NO FAULT	————
C11	CMP sensor	The signal does not reach ECM for 3 sec. and more, after receiving the starter signal.
		The camshaft position sensor wiring and mechanical parts. (CMP sensor, intake cam pin, wiring/coupler connection)
C12	CKP sensor	The signal does not reach ECM for 3 sec. and more, after receiving the starter signal.
		The CKP sensor wiring and mechanical parts. (CKP sensor, lead wire/coupler connection)
C13	IAP sensor	The sensor should produce following voltage. 0.5 V ≦ sensor voltage < 4.85 V Without the above range, C13 is indicated.
		Intake air pressure sensor, lead wire/coupler connection.
C14	TP sensor	The sensor should produce following voltage. 0.2 V ≦ sensor voltage < 4.80 V Without the above range, C14 is indicated.
		TP sensor, lead wire/coupler connection.
C15	ECT sensor	The sensor voltage should be the following. 0.15 V ≦ sensor voltage < 4.85 V Without the above range, C15 is indicated.
		ECT sensor, lead wire/coupler connection.
C21	IAT sensor	The sensor voltage should be the following. 0.15 V ≦ sensor voltage < 4.85 V Without the above range, C21 is indicated.
		IAT sensor, lead wire/coupler connection.
C22	AP sensor	The sensor voltage should be the following. 0.5 V ≦ sensor voltage < 4.85 V Without the above range, C22 is indicated.
		AP sensor, wiring/coupler connection.
C23	TO sensor	The sensor voltage should be the following for 2 sec. and more, after ignition switch turns ON. 0.2 V ≦ sensor voltage ≦ 4.8 V Without the above value, C23 is indicated.
		TO sensor, lead wire/coupler connection.
C24/C25 C26/C27	Ignition signal	CKP sensor (pick-up coil) signal is produced, but signal from ignition coil is interrupted continuous by 8 times or more. In this case, the code C24, C25, C26 or C27 is indicated.
		Ignition coil, wiring/coupler connection, power supply from the battery.

MALFUNCTION CODE	DETECTED ITEM	DETECTED FAILURE CONDITION CHECK FOR
C28	Secondary throttle valve actuator	When no actuator control signal is supplied from the ECM or communication signal does not reach ECM or operation voltage does not reach STVA motor, C28 is indicated. STVA can not operate.
		STVA lead wire/coupler.
C29	STP sensor	The sensor should produce following voltage. 0.15 V ≦ sensor voltage < 4.85 V Without the above value, C29 is indicated.
		STP sensor, lead wire/coupler connection.
C31	Gear position signal	Gear position signal voltage should be higher than the following for 3 seconds and more. (Gear position sensor voltage > 0.6 V) Without the above value, C31 is indicated.
		GP switch, wiring/coupler connection. Gearshift cam etc.
C32/C33 C34/C35	Fuel injector	CKP sensor (pickup coil) signal is produced, but fuel injector signal is interrupted continuous by 4 times or more. In this case, the code C32, C33, C34 or C35 is indicated.
		Injector, wiring/coupler connection, power supply to the injector.
C41	Fuel pump relay	No voltage is applied to the fuel pump, although fuel pump relay is turned ON, or voltage is applied to fuel pump although fuel pump relay is turned OFF.
		Fuel pump relay, connecting lead wire, power source to fuel pump relay, fuel injectors.
C42	Ignition switch	Ignition switch signal is not input in ECM.
		Ignition switch, lead wire/coupler.
C49	PAIR control solenoid valve	PAIR control solenoid valve voltage is not input in ECM.
		PAIR control solenoid valve, lead wire/coupler.

ENGINE

ENGINE WILL NOT START OR IS HARD TO START

Symptom, possible causes and remedy

1) Compression too low	
• Valve clearance out of adjustment.	Adjust.
• Worn valve guides or poor seating of valves.	Repair or replace.
• Mistimed valves.	Adjust.
• Excessively worn piston rings.	Replace.
• Worn-down cylinder bores.	Replace.
• Starter motor cranks too slowly.	See electrical section.
• Poor seating of spark plugs.	Retighten.
2) Plug not sparking	
• Fouled spark plugs.	Clean or replace.
• Wet spark plugs.	Clean and dry.
• Defective ignition coils.	Replace.
• Defective CKP sensor.	Replace.
• Defective ECM.	Replace.
• Open-circuited wiring connections.	Repair or replace.
3) No fuel reaching the intake manifold	
• Clogged fuel filter or fuel hose.	Clean or replace.
• Defective fuel pump.	Replace.
• Defective fuel pressure regulator.	Replace.
• Defective fuel injector.	Replace.
• Defective fuel pump relay.	Replace.
• Defective ECM.	Replace.
• Open-circuited wiring connections.	Check and repair.
4) Incorrect fuel/air mixture	
• TP sensor out of adjustment.	Adjust.
• Defective fuel pump.	Replace.
• Defective fuel pressure regulator.	Replace.
• Defective TP sensor.	Replace.
• Defective CKP sensor.	Replace.
• Defective IAP sensor.	Replace.
• Defective ECM.	Replace.
• Defective ECT sensor.	Replace.
• Defective IAT sensor.	Replace.
• Defective AP sensor.	Replace.

ENGINE IDLES POORLY

Symptom, possible causes and remedy

• Valve clearance out of adjustment.	Adjust.
• Poor seating of valves.	Replace or repair.
• Defective valve guides.	Replace.
• Worn down camshafts.	Replace.
• Too wide spark plug gaps.	Adjust or replace.
• Defective ignition coil/plug caps.	Replace.
• Defective CKP sensor.	Replace.
• Defective ECM.	Replace.
• Defective TP sensor.	Replace.
• Defective fuel pump.	Replace.
• Imbalanced throttle valve.	Adjust.
• Damaged or cracked vacuum hose.	Replace.

ENGINE STALLS OFTEN

Symptom, possible causes and remedy

1) Incorrect fuel/air mixture

• Defective IAP sensor or circuit.	Repair or replace.
• Clogged fuel filter.	Clean or replace.
• Defective fuel pump.	Replace.
• Defective fuel pressure regulator.	Replace.
• Defective ECT sensor.	Replace.
• Defective thermostat.	Replace.
• Defective IAT sensor.	Replace.
• Damaged or cracked vacuum hose.	Replace.

2) Fuel injector improperly operating

• Defective fuel injectors.	Replace.
• No injection signal from ECM.	Repair or replace.
• Open or short circuited wiring connection.	Repair or replace.
• Defective battery or low battery voltage.	Replace or recharge.

3) Control circuit or sensor improperly operating

• Defective ECM.	Replace.
• Defective fuel pressure regulator.	Replace.
• Defective TP sensor.	Replace.
• Defective IAT sensor.	Replace.
• Defective CMP sensor.	Replace.
• Defective CKP sensor.	Replace.
• Defective ECT sensor.	Replace.
• Defective fuel pump relay.	Replace.

4) Engine internal parts improperly operating

• Fouled spark plugs.	Clean.
• Defective CKP sensor or ECM.	Replace.
• Clogged fuel hose.	Clean.
• Valve clearance out of adjustment.	Adjust.

NOISY ENGINE

Symptom, possible causes and remedy

1) Excessive valve chatter	
• Too large valve clearance.	Adjust.
• Weakened or broken valve springs.	Replace.
• Worn tappet or cam surface.	Replace.
• Worn and burnt camshaft journal.	Replace.
2) Noise seems to come from piston	
• Worn down pistons or cylinders.	Replace.
• Combustion chambers fouled with carbon.	Clean.
• Worn piston pins or piston pin bore.	Replace.
• Worn piston rings or ring grooves.	Replace.
3) Noise seems to come from cam chain	
• Stretched chain.	Replace.
• Worn sprockets.	Replace.
• Tension adjuster not working.	Repair or replace.
4) Noise seems to come from clutch	
• Worn splines of countershaft or hub.	Replace.
• Worn teeth of clutch plates.	Replace.
• Distorted clutch plates, driven and drive.	Replace.
• Worn clutch release bearing.	Replace.
• Weakened clutch dampers.	Replace the primary driven gear.
5) Noise seems to come from crankshaft	
• Rattling bearings due to wear.	Replace.
• Worn and burnt big-end bearings.	Replace.
• Worn and burnt journal bearings.	Replace.
• Too large thrust clearance.	Replace thrust bearing.
6) Noise seems to come from transmission	
• Worn or rubbing gears.	Replace.
• Worn splines.	Replace.
• Worn or rubbing primary gears.	Replace.
• Worn bearings.	Replace.
7) Noise seems to come from water pump	
• Too much play on pump shaft bearing.	Replace.
• Worn or damaged impeller shaft.	Replace.
• Worn or damaged mechanical seal.	Replace.
• Contact between pump case and impeller.	Replace.

ENGINE RUNS POORLY IN HIGH SPEED RANGE

Symptom, possible causes and remedy

1) Defective engine internal/electrical parts	
• Weakened valve springs.	Replace.
• Worn camshafts.	Replace.
• Valve timing out of adjustment.	Adjust.
• Too narrow spark plug gaps.	Adjust.
• Ignition not advanced sufficiently due to poorly working timing advance circuit.	Replace ECM.
• Defective ignition coils.	Replace.
• Defective CKP sensor.	Replace.
• Defective ECM.	Replace.
• Clogged fuel hose, resulting in inadequate fuel supply to injector.	Clean and prime.
• Defective fuel pump.	Replace.
• Defective TP sensor.	Replace.
• Defective STP sensor or STVA.	Replace.
• Clogged air cleaner element.	Replace
2) Defective air flow system	
• Clogged air cleaner element.	Clean or replace.
• Defective throttle valve.	Adjust or replace.
• Defective secondary throttle valve.	Adjust or replace.
• Sucking air from throttle body joint.	Repair or replace.
• Defective ECM.	Replace.
• Imbalanced throttle valve synchronization.	Adjust.
3) Defective control circuit or sensor	
• Low fuel pressure.	Repair or replace.
• Defective TP sensor.	Replace.
• Defective IAT sensor.	Replace.
• Defective CMP sensor.	Replace.
• Defective CKP sensor.	Replace.
• Defective GP switch.	Replace.
• Defective IAP sensor.	Replace.
• Defective ECM.	Replace.
• TP sensor out of adjustment.	Adjust.
• Defective STP sensor and/or STVA.	Replace.

ENGINE LACKS POWER

Symptom, possible causes and remedy

1) Defective engine internal/electrical parts

• Loss of valve clearance.	Adjust.
• Weakened valve springs.	Replace.
• Valve timing out of adjustment.	Adjust.
• Worn piston rings or cylinders.	Replace.
• Poor seating of valves.	Repair.
• Fouled spark plugs.	Clean or replace.
• Incorrect spark plugs.	Adjust or replace.
• Clogged injectors.	Clean or replace.
• TP sensor out of adjustment.	Adjust.
• Clogged air cleaner element.	Replace.
• Imbalanced throttle valve synchronization.	Adjust.
• Sucking air from throttle valve or vacuum hose.	Retighten or replace.
• Too much engine oil.	Drain out excess oil.
• Defective fuel pump or ECM.	Replace.
• Defective CKP sensor and ignition coils.	Replace.

2) Defective control circuit or sensor

• Low fuel pressure.	Repair or replace.
• Defective TP sensor.	Replace.
• Defective IAT sensor.	Replace.
• Defective CMP sensor.	Replace.
• Defective CKP sensor.	Replace.
• Defective GP switch.	Replace.
• Defective IAP sensor.	Replace.
• Defective ECM.	Replace.
• Defective AP sensor.	Replace.
• Imbalanced throttle valve synchronization.	Adjust.
• TP sensor out of adjustment.	Adjust.
• Defective STP sensor and/or STVA.	Replace.

ENGINE OVERHEATS

Symptom, possible causes and remedy

1) Defective engine internal parts	
• Heavy carbon deposit on piston crowns.	Clean.
• Not enough oil in the engine.	Add oil.
• Defective oil pump or clogged oil circuit.	Replace or clean.
• Sucking air from intake pipes.	Retighten or replace.
• Use of incorrect engine oil.	Change.
• Defective cooling system.	See radiator section.
2) Lean fuel/air mixture	
• Short-circuited IAP sensor/lead wire.	Repair or replace.
• Short-circuited IAT sensor/lead wire.	Repair or replace.
• Sucking air from intake pipe joint.	Repair or replace.
• Defective fuel injectors.	Replace.
• Defective ECT sensor.	Replace.
3) Other factors	
• Ignition timing too advanced due to defective timing advance system (ECT sensor, GP switch, CKP sensor and ECM.)	Replace.
• Drive chain too tight.	Adjust.

DIRTY OR HEAVY EXHAUST SMOKE

Symptom, possible causes and remedy

• Too much engine oil in the engine.	Check with inspection window. Drain excess oil.
• Worn piston rings or cylinders.	Replace.
• Worn valve guides.	Replace.
• Scored or scuffed cylinder walls.	Replace.
• Worn valves stems.	Replace.
• Defective stem seal.	Replace.
• Worn oil ring side rails.	Replace.

SLIPPING CLUTCH

Symptom, possible causes and remedy

• Weakened clutch springs.	Replace.
• Worn or distorted pressure plates.	Replace.
• Distorted clutch plates or pressure plates.	Replace.

DRAGGING CLUTCH

Symptom, possible causes and remedy

• Some clutch springs weakened while others are not.	Replace.
• Distorted pressure plates or clutch plates.	Replace.

TRANSMISSION WILL NOT SHIFT

Symptom, possible causes and remedy

• Broken gearshift cam.	Replace.
• Distorted gearshift forks.	Replace.
• Worn gearshift pawl.	Replace.

TRANSMISSION WILL NOT SHIFT BACK

Symptom, possible causes and remedy

• Broken return spring on shift shaft.	Replace.
• Rubbing or sticky shift shaft.	Repair or replace.
• Distorted or worn gearshift forks.	Replace.

TRANSMISSION JUMPS OUT OF GEAR

Symptom, possible causes and remedy

• Worn shifting gears on driveshaft or countershaft.	Replace.
• Distorted or worn gearshift forks.	Replace.
• Weakened stopper spring on gearshift stopper.	Replace.
• Worn gearshift cam plate.	Replace.

RADIATOR (COOLING SYSTEM)

ENGINE OVERHEATS

Symptom, possible causes and remedy

• Not enough engine coolant.	Add coolant.
• Radiator core clogged with dirt or scale.	Clean.
• Faulty cooling fan.	Repair or replace.
• Defective cooling fan thermo-switch.	Replace.
• Clogged water passage.	Clean.
• Air trapped in the cooling circuit.	Bleed air.
• Defective water pump.	Replace.
• Use of incorrect engine coolant.	Replace.
• Defective thermostat.	Replace.

ENGINE OVERCOOLS

Symptom, possible causes and remedy

• Defective cooling fan thermo-switch.	Replace.
• Extremely cold weather.	Put on radiator cover.
• Defective thermostat.	Replace.

CHASSIS

HEAVY STEERING

Symptom, possible causes and remedy

• Overtightened steering stem nut.	Adjust.
• Broken bearing in steering stem.	Replace.
• Distorted steering stem.	Replace.
• Not enough pressure in tires.	Adjust.

WOBBLY HANDLEBARS

Symptom, possible causes and remedy

• Loss of balance between right and left front forks.	Adjust.
• Distorted front fork.	Repair or replace.
• Distorted front axle or crooked tire.	Replace.
• Loose steering stem nut.	Adjust.
• Worn or incorrect tire or wrong tire pressure.	Adjust or replace.
• Worn bearing/race in steering stem.	Replace.

WOBBLY FRONT WHEEL

Symptom, possible causes and remedy

• Distorted wheel rim.	Replace.
• Worn front wheel bearings.	Replace.
• Defective or incorrect tire.	Replace.
• Loose axle or axle pinch bolt.	Retighten.
• Incorrect front fork oil level.	Adjust.
• Incorrect front wheel weight balance.	Adjust.

FRONT SUSPENSION TOO SOFT

Symptom, possible causes and remedy

• Weakened springs.	Replace.
• Not enough fork oil.	Replenish.
• Wrong viscous fork oil.	Replace.
• Improperly set front fork spring adjuster.	Adjust.
• Improperly set front fork damping force adjuster.	Adjust.

FRONT SUSPENSION TOO STIFF

Symptom, possible causes and remedy

• Too viscous fork oil.	Replace.
• Too much fork oil.	Drain excess oil.
• Improperly set front fork spring adjuster.	Adjust.
• Improperly set front fork damping force adjuster.	Adjust.
• Bent front axle.	Replace.

NOISY FRONT SUSPENSION

Symptom, possible causes and remedy

• Not enough fork oil.	Replenish.
• Loose bolts on suspension.	Retighten.

WOBBLY REAR WHEEL

Symptom, possible causes and remedy

• Distorted wheel rim.	Replace.
• Worn rear wheel bearing or swingarm bearings.	Replace.
• Defective or incorrect tire.	Replace.
• Worn swingarm and rear suspension bearings.	Replace.
• Loose nuts or bolts on rear suspensions.	Retighten.

REAR SUSPENSION TOO SOFT

Symptom, possible causes and remedy

• Weakened spring of shock absorber.	Replace.
• Leakage of oil or gas from shock absorber.	Replace.
• Improperly set rear spring pre-load adjuster.	Adjust.
• Improperly set damping force adjuster.	Adjust.

REAR SUSPENSION TOO STIFF

Symptom, possible causes and remedy

• Bent shock absorber shaft.	Replace.
• Bent swingarm pivot shaft.	Replace.
• Worn swingarm and rear suspension bearings.	Replace.
• Improperly set rear spring pre-load adjuster.	Adjust.
• Improperly set damping force adjuster.	Adjust.

NOISY REAR SUSPENSION

Symptom, possible causes and remedy

• Loose nuts or bolts on rear suspension.	Retighten.
• Worn swingarm and suspension bearings.	Replace.

BRAKES

INSUFFICIENT BRAKE POWER

Symptom, possible causes and remedy

• Leakage of brake fluid from hydraulic system.	Repair or replace.
• Worn pads.	Replace.
• Oil adhesion on friction surface of pads.	Clean disc and pads.
• Worn disc.	Replace.
• Air in hydraulic system.	Bleed air.
• Not enough brake fluid in the reservoir.	Replenish.

BRAKE SQUEAKING

Symptom, possible causes and remedy

• Carbon adhesion on pad surface.	Repair surface with sandpaper.
• Tilted pad.	Correct pad fitting or replace.
• Damaged wheel bearing.	Replace.
• Loose front wheel axle or rear wheel axle.	Tighten to specified torque.
• Worn pads or disc.	Replace.
• Foreign material in brake fluid.	Replace brake fluid.
• Clogged return port of master cylinder.	Disassemble and clean master cylinder.

EXCESSIVE BRAKE LEVER STROKE

Symptom, possible causes and remedy

• Air in hydraulic system.	Bleed air.
• Insufficient brake fluid.	Replenish fluid to specified level; bleed air.
• Improper quality of brake fluid.	Replace with correct fluid.

LEAKAGE OF BRAKE FLUID

Symptom, possible causes and remedy

• Insufficient tightening of connection joints.	Tighten to specified torque.
• Cracked hose.	Replace.
• Worn piston and/or cup.	Replace piston and/or cup.

BRAKE DRAGS

Symptom, possible causes and remedy

• Rusty part.	Clean and lubricate.
• Insufficient brake lever or brake pedal pivot lubrication.	Lubricate.

ELECTRICAL

NO SPARKING OR POOR SPARKING

Symptom, possible causes and remedy

• Defective ignition coils.	Replace.
• Defective spark plugs.	Replace.
• Defective CKP sensor.	Replace.
• Defective ECM.	Replace.
• Defective TO sensor.	Replace.
• Open-circuited wiring connections.	Check and repair.

SPARK PLUG SOON BECOME FOULED WITH CARBON

Symptom, possible causes and remedy

• Mixture too rich.	Inspect FI system.
• Idling speed set too high.	Adjust fast idle or throttle stop screw.
• Incorrect gasoline.	Change.
• Dirty air cleaner element.	Replace.
• Too cold spark plugs.	Replace with hot type plugs.

SPARK PLUG BECOME FOULED TOO SOON

Symptom, possible causes and remedy

• Worn piston rings.	Replace.
• Worn piston or cylinders.	Replace.
• Excessive clearance of valve stems in valve guides.	Replace.
• Worn stem oil seal.	Replace.

SPARK PLUG ELECTRODES OVERHEAT OR BURN

Symptom, possible causes and remedy

• Too hot spark plugs.	Replace with cold type plugs.
• Overheated the engine.	Tune up.
• Loose spark plugs.	Retighten.
• Too lean mixture.	Inspect FI system.

GENERATOR DOES NOT CHARGE

Symptom, possible causes and remedy

• Open- or short-circuited lead wires, or loose lead connections.	Repair or replace or retighten.
• Short-circuited, grounded or open generator coil.	Replace.
• Short-circuited or punctured regulator/rectifier.	Replace.

GENERATOR DOES CHARGE, BUT CHARGING RATE IS BELOW THE SPECIFICATION

Symptom, possible causes and remedy

• Lead wires tend to get short- or open-circuited or loosely connected at terminals.	Repair or retighten.
• Grounded or open-circuited generator coil.	Replace.
• Defective regulator/rectifier.	Replace.
• Defective cell plates in the battery.	Replace the battery.

GENERATOR OVERCHARGES

Symptom, possible causes and remedy

• Internal short-circuit in the battery.	Replace the battery.
• Damaged or defective regulator/rectifier.	Replace.
• Poorly grounded regulator/rectifier.	Clean and tighten ground connection.

UNSTABLE CHARGING

Symptom, possible causes and remedy

• Lead wire insulation frayed due to vibration, resulting in intermittent short-circuiting.	Repair or replace.
• Internally short-circuited generator.	Replace.
• Defective regulator/rectifier.	Replace.

STARTER BUTTON IS NOT EFFECTIVE

Symptom, possible causes and remedy

• Run down battery.	Repair or replace.
• Defective switch contacts.	Replace.
• Brushes not seating properly on starter motor commutator.	Repair or replace.
• Defective starter relay/starter interlock switch.	Replace.
• Defective main fuse.	Replace.

BATTERY

"SULFATION", ACIDIC WHITE POWDERY SUBSTANCE OR SPOTS ON SURFACE OF CELL PLATES

Symptom, possible causes and remedy

• Cracked battery case.	Replace the battery.
• Battery has been left in a run-down condition for a long time.	Replace the battery.

BATTERY RUNS DOWN QUICKLY

Symptom, possible causes and remedy

• Trouble in charging system.	Check the generator, regulator/rectifier and circuit connections and make necessary adjustments to obtain specified charging operation.
• Cell plates have lost much of their active material as a result of overcharging.	Replace the battery and correct the charging system.
• Internal short-circuit in the battery.	Replace the battery.
• Too low battery voltage.	Recharge the battery fully.
• Too old battery.	Replace the battery.

BATTERY "SULFATION"

Symptom, possible causes and remedy

• Incorrect charging rate. (When not in use battery should be checked at least once a month to avoid sulfation.)	Replace the battery.
• The battery was left unused in a cold climate for too long.	Replace the battery if badly sulfated.

WIRING HARNESS, CABLE AND HOSE ROUTING

WIRING HARNESS ROUTING

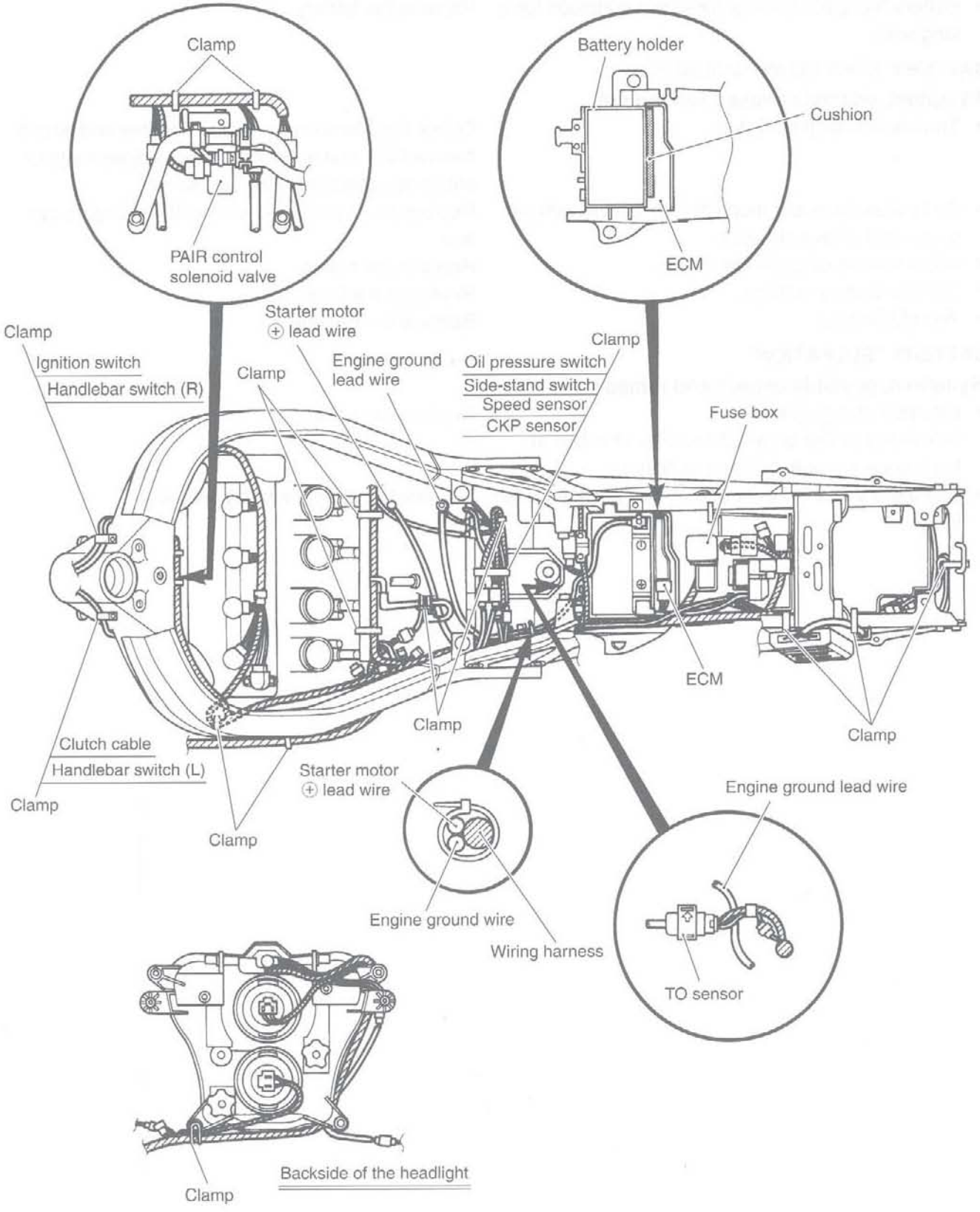

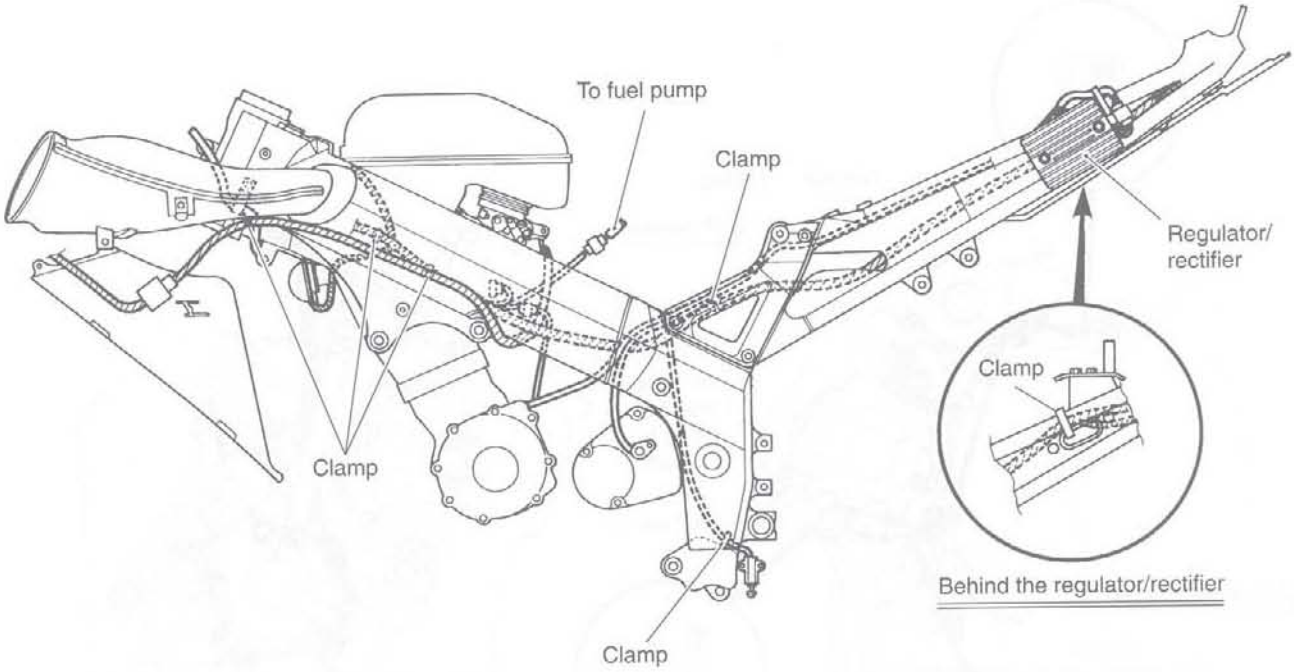
To fuel pump
Clamp
Regulator/
rectifier
Clamp
Clamp
Behind the regulator/rectifier
Clamp

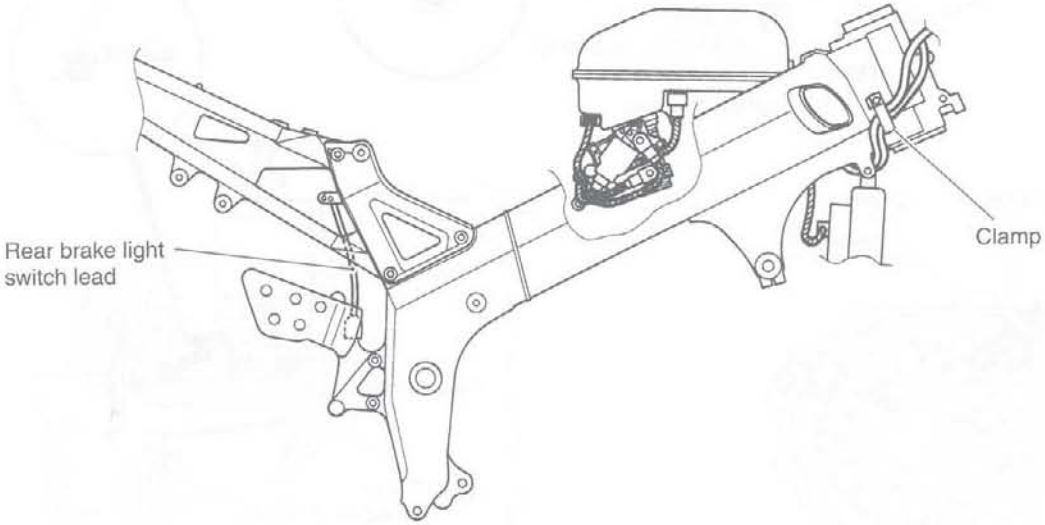
Rear brake light
switch lead
Clamp

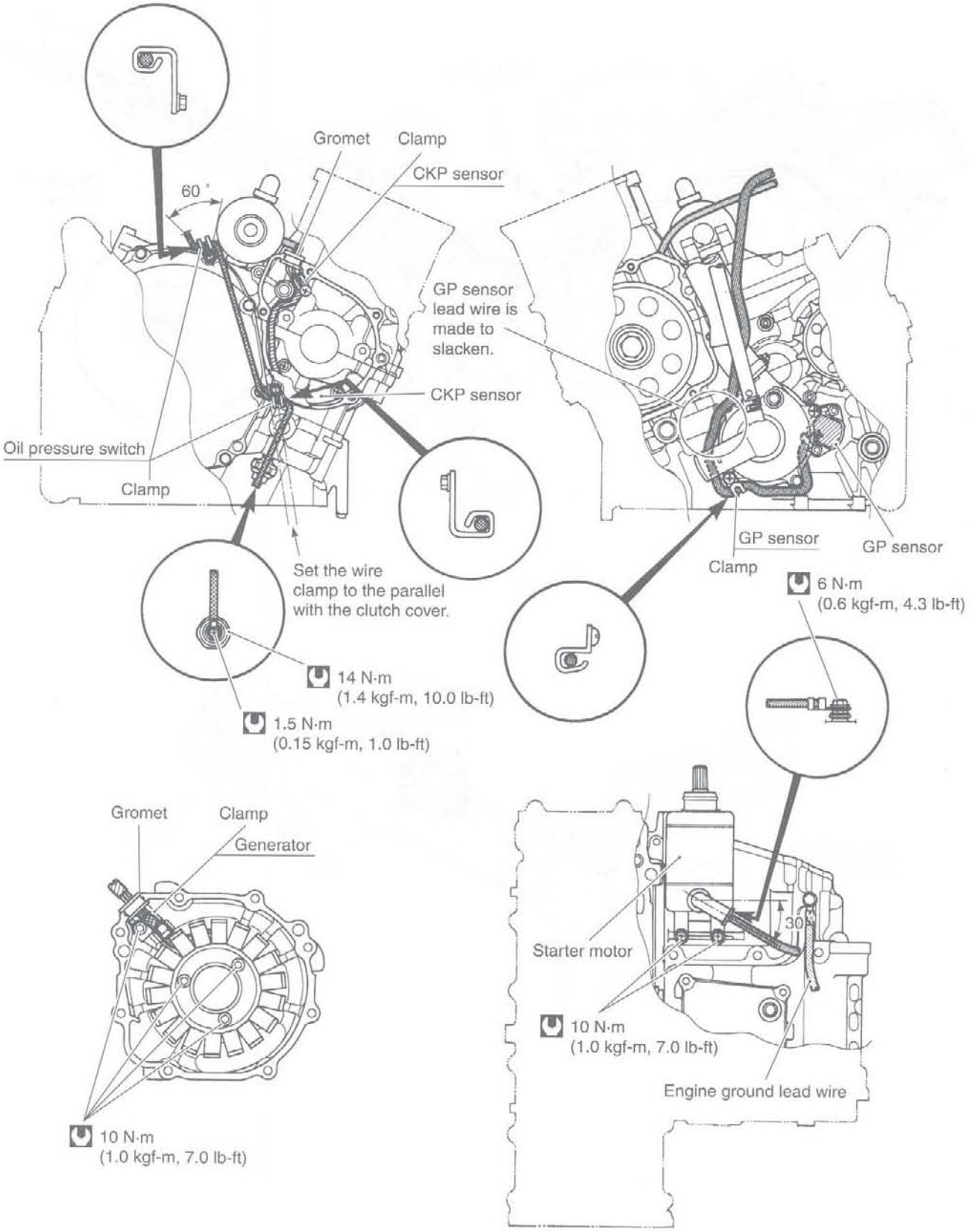
Gromet
Clamp
CKP sensor
60°
GP sensor lead wire is made to slacken.
CKP sensor
Oil pressure switch
Clamp
Set the wire clamp to the parallel with the clutch cover.
14 N·m (1.4 kgf-m, 10.0 lb-ft)
1.5 N·m (0.15 kgf-m, 1.0 lb-ft)
GP sensor
Clamp
GP sensor
6 N·m (0.6 kgf-m, 4.3 lb-ft)
Gromet
Clamp
Generator
10 N·m (1.0 kgf-m, 7.0 lb-ft)
30°
Starter motor
10 N·m (1.0 kgf-m, 7.0 lb-ft)
Engine ground lead wire

CABLE ROUTING

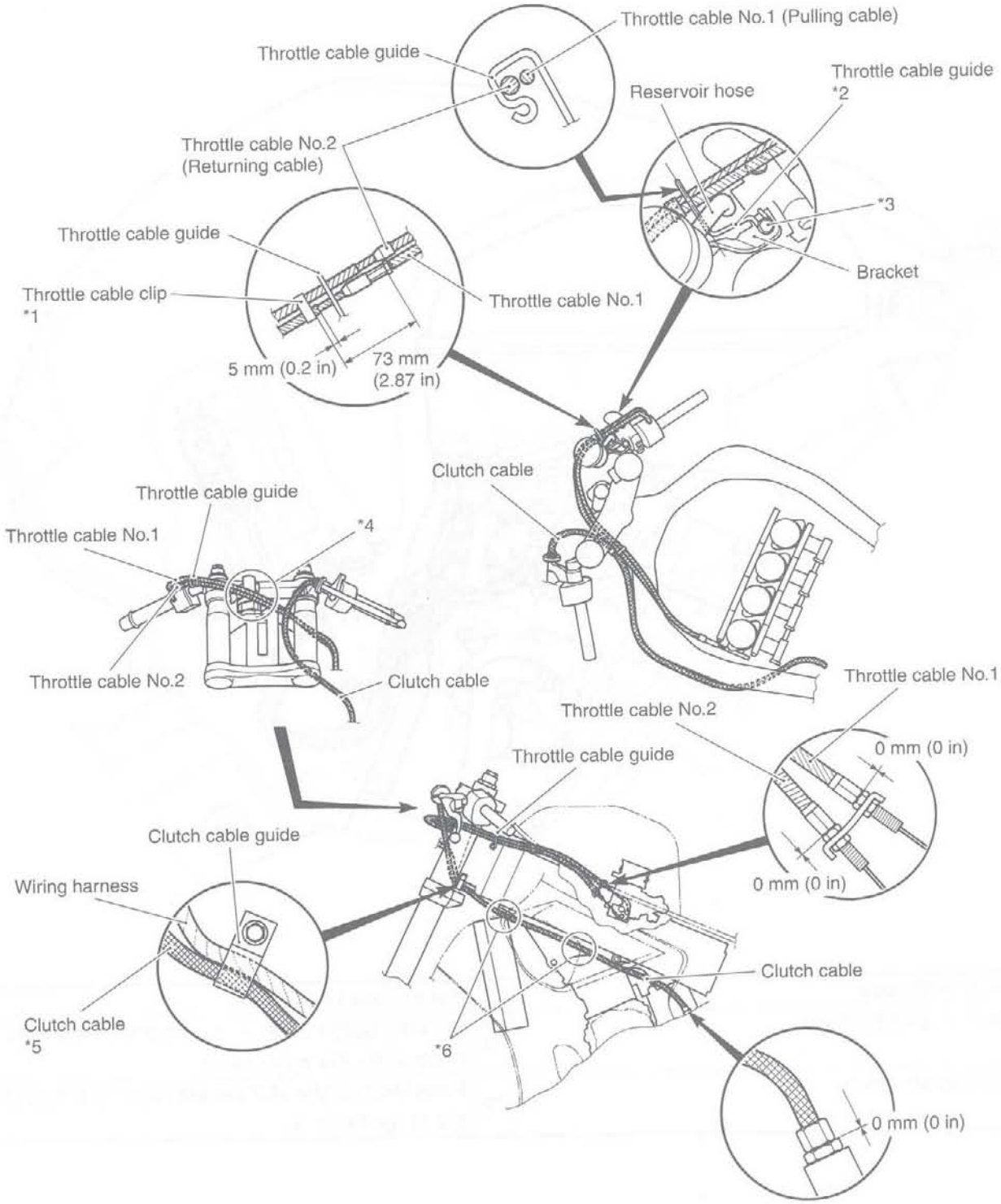

*1	After throttle cable adjustment, install the throttle cable clip as shown.	*4	Pass through the throttle cable No.1 over the throttle cable No.2
*2	Locate the throttle cable guide under the reservoir hose.	*5	Pass through the clutch cable under the wiring harness.
*3	Tighten the bolt together with the bracket and cable guide.	*6	Pass through the clutch cable between the frame and left under cowling.

THROTTLE BODY HOSE ROUTING

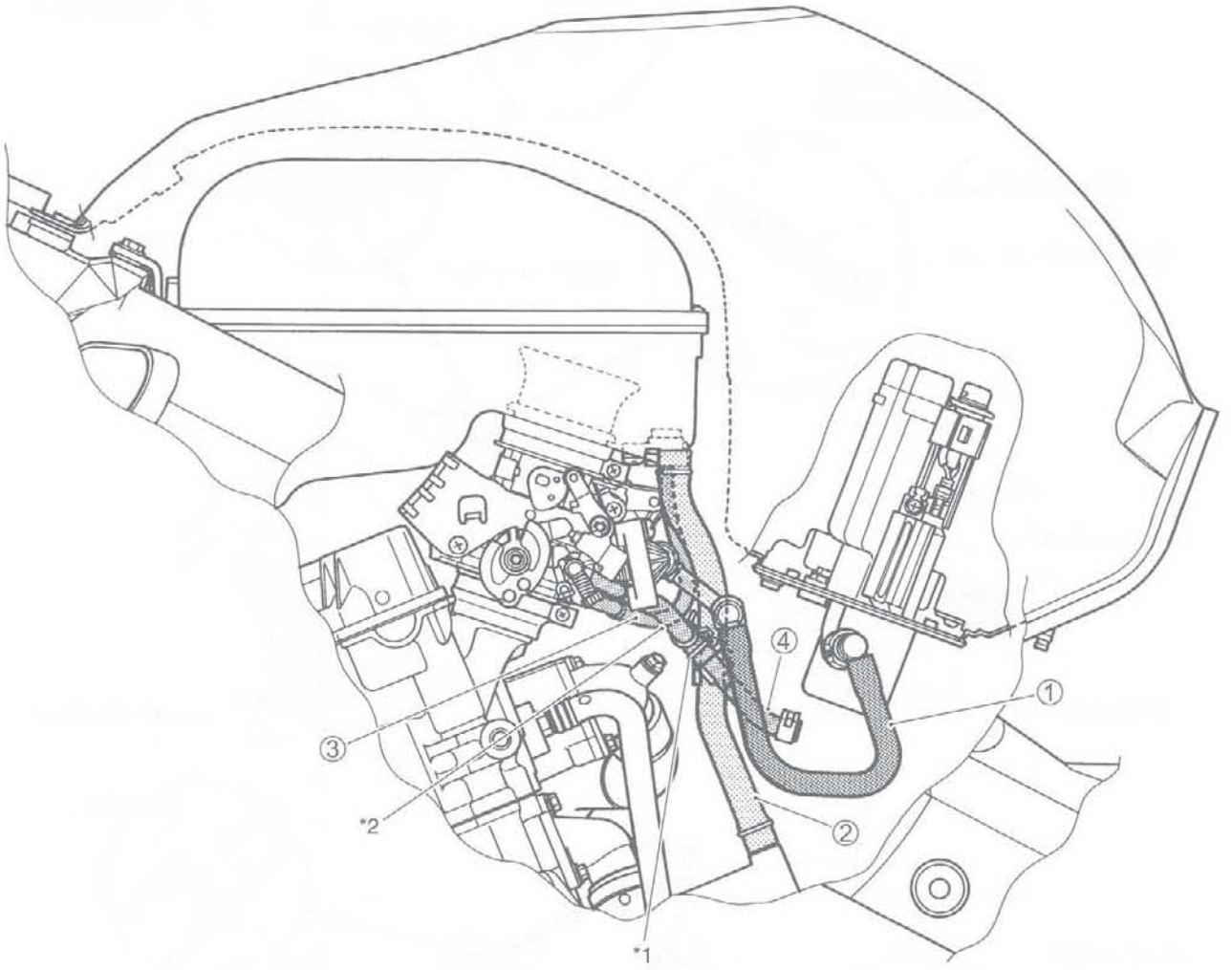

①	Fuel feed hose	④	Purge hose (E-33 only)
②	PCV (breather) hose	*1	Bind the purge hose ④ together with the PCV hose ② by the wire clamp.
③	IAP sensor hose	*2	Pass through the IAP sensor hose ③ inside of the purge hose ④.

FUEL TANK DRAIN HOSE ROUTING

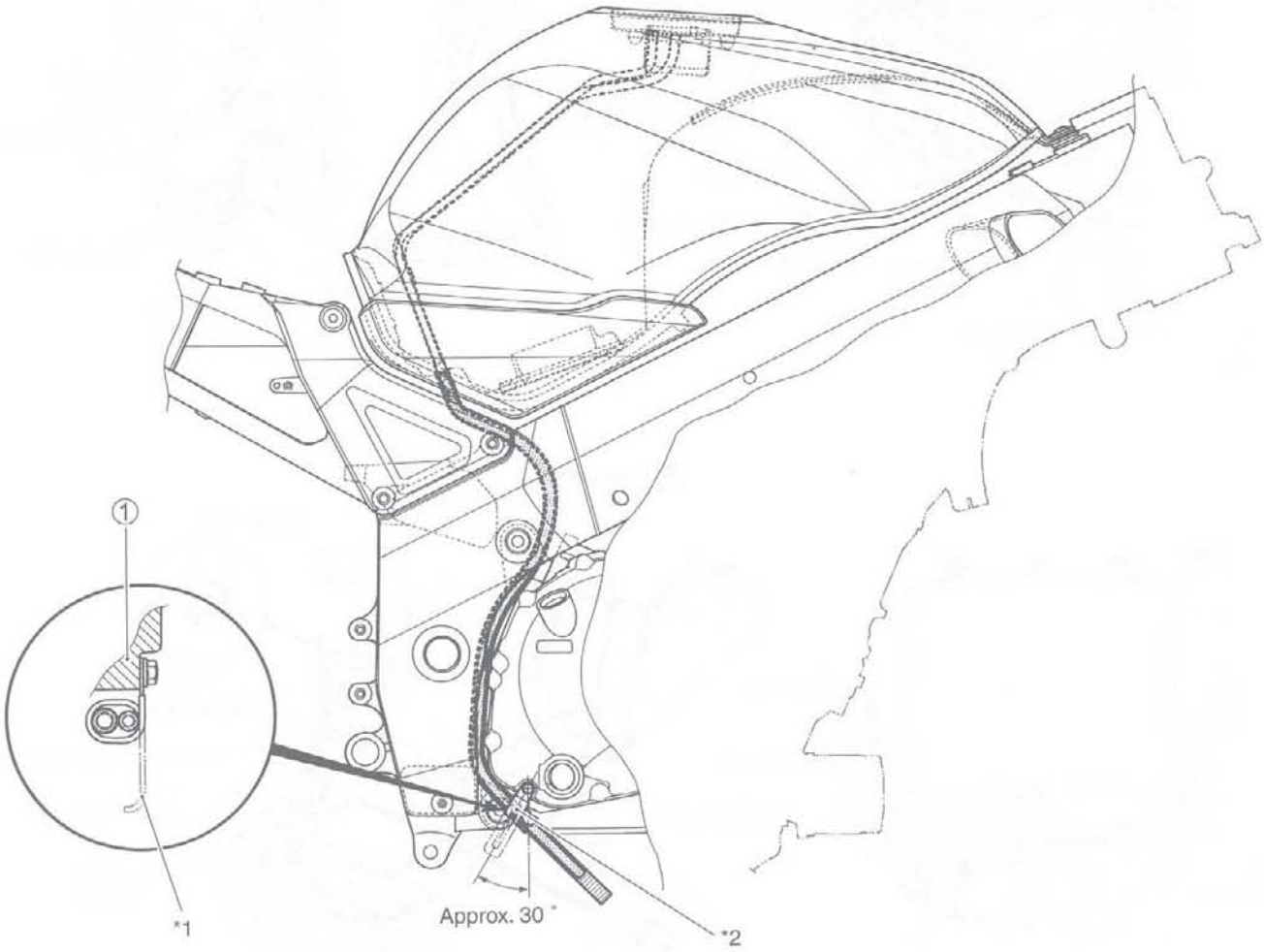

①	Clutch cover	*2	White painted marking.
*1	Pay attention to the bend direction of the clamp.		

COOLING SYSTEM HOSE ROUTING

Ⓐ : The ends of the clamp should face.....

Ⓑ : The clamp bolt head should face.....

Hose clamp bolt tightening torque: 2 N·m (0.2 kgf-m, 1.5 lb-ft)

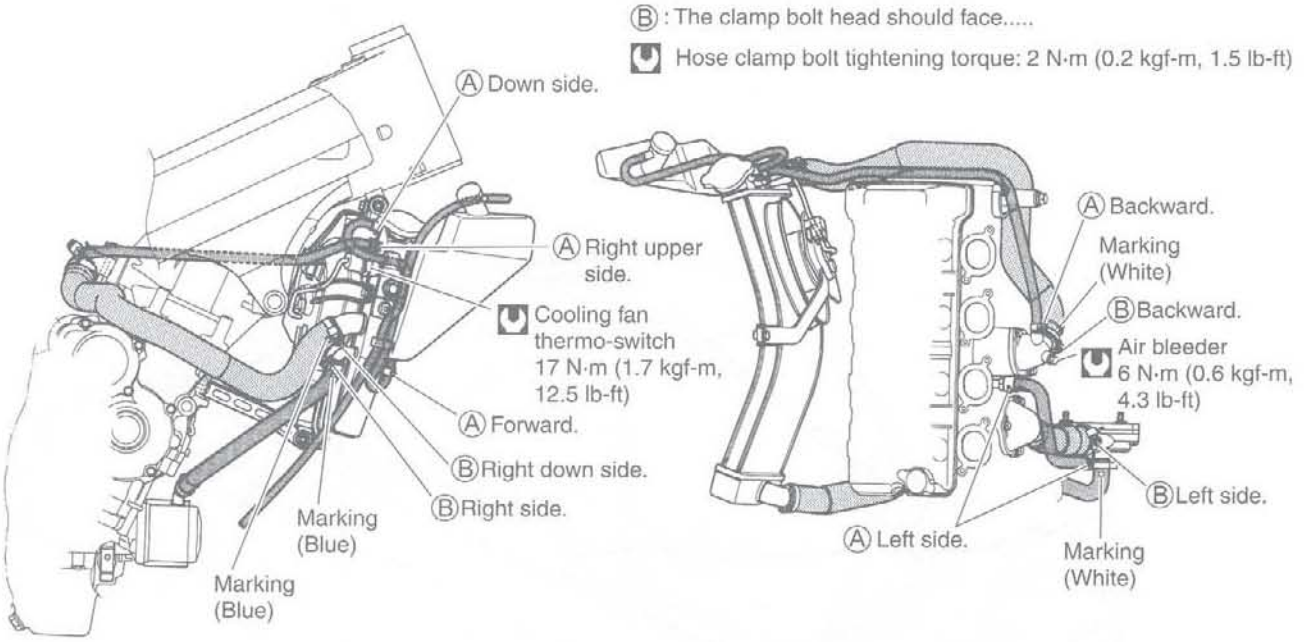

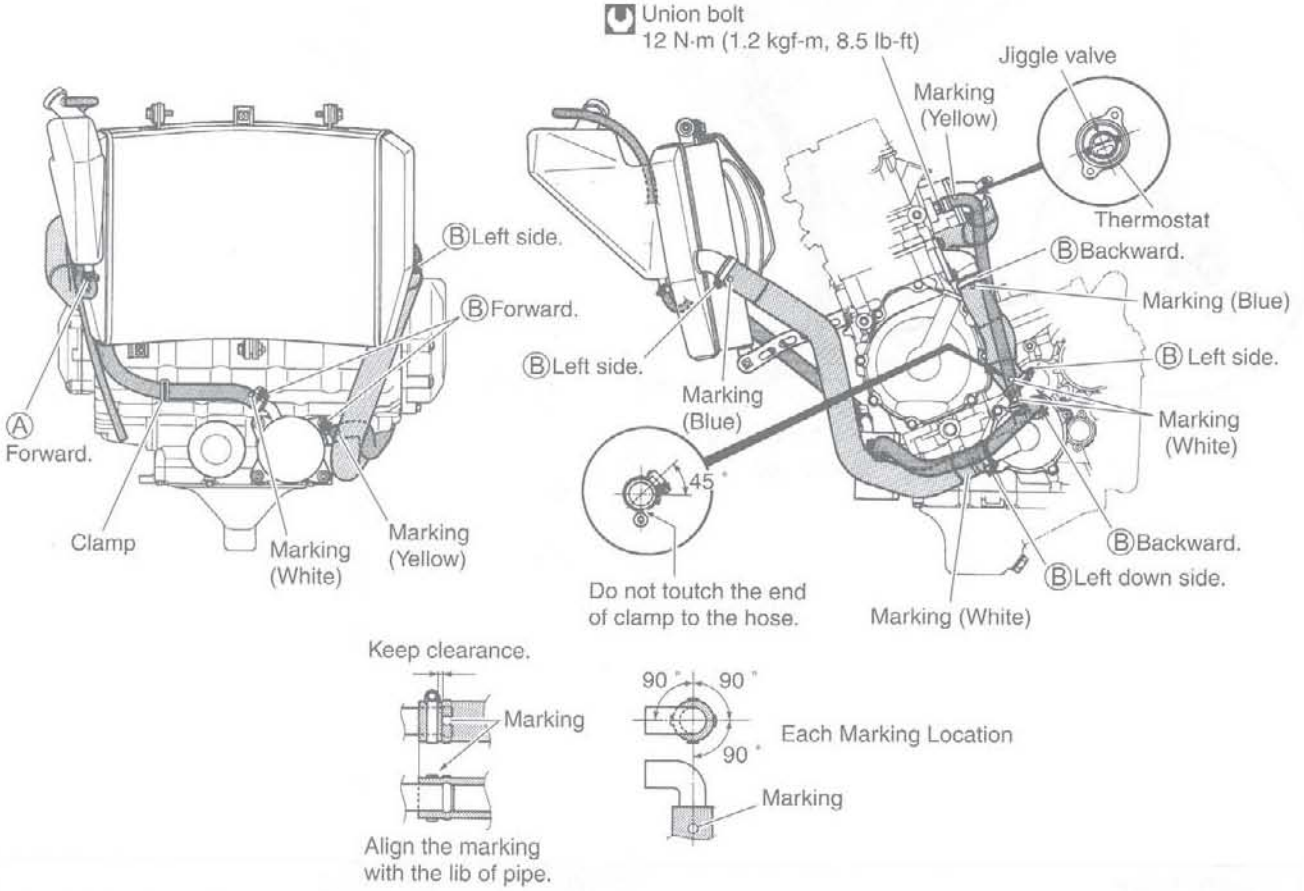

FRONT BRAKE HOSE ROUTING

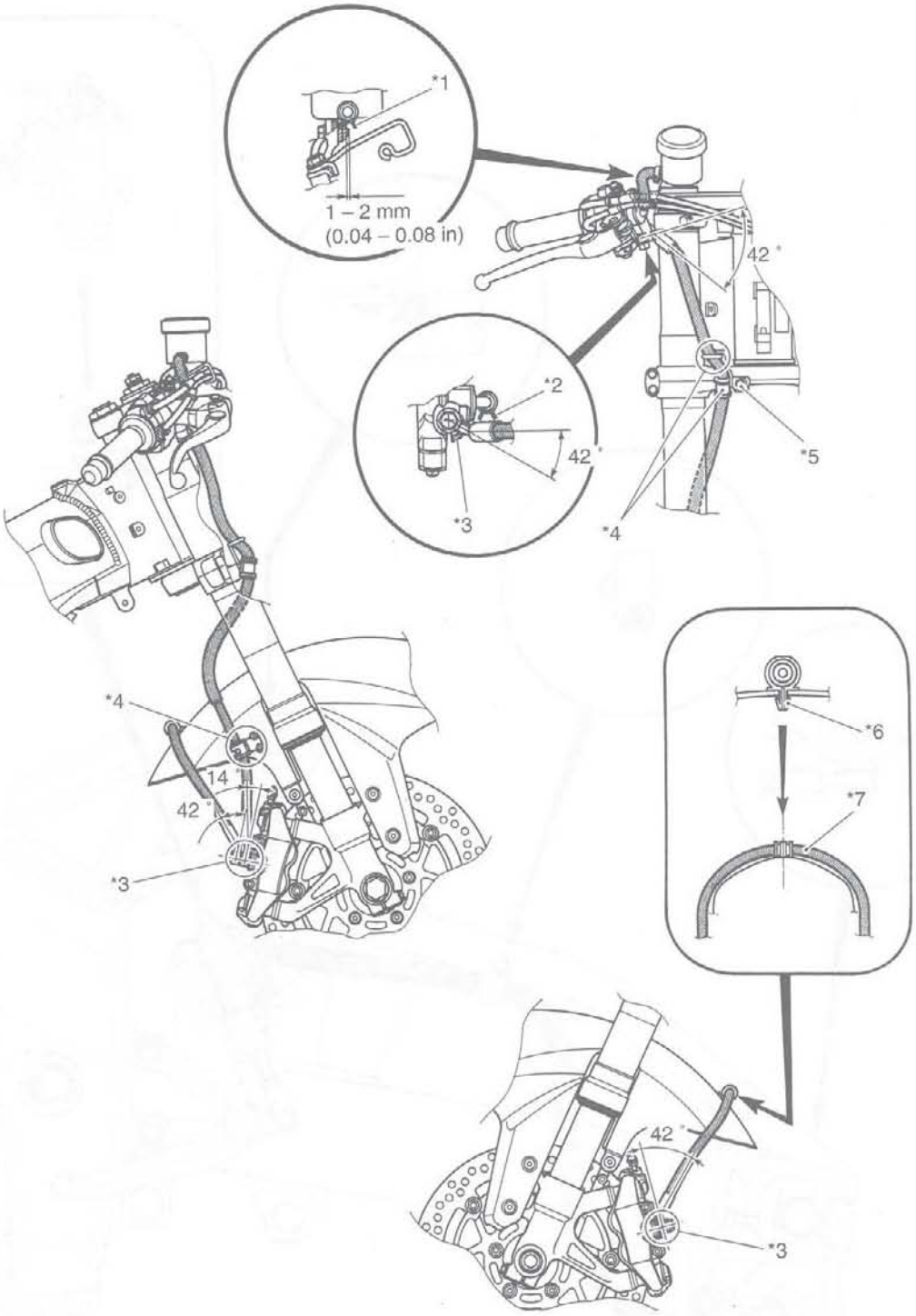

*1	Clamp ends should face downside.	*5	After positioning the clamp with the stopper, tighten the clamp bolt.
*2	Clamp ends should face backward.	*6	Insert the clamp to the hole of the front fender fully.
*3	After the brake hose union has contacted the stopper, tighten the union bolt.	*7	The green paint is right side and face upside.
*4	Clamp the brake hose firmly.		

REAR BRAKE HOSE ROUTING

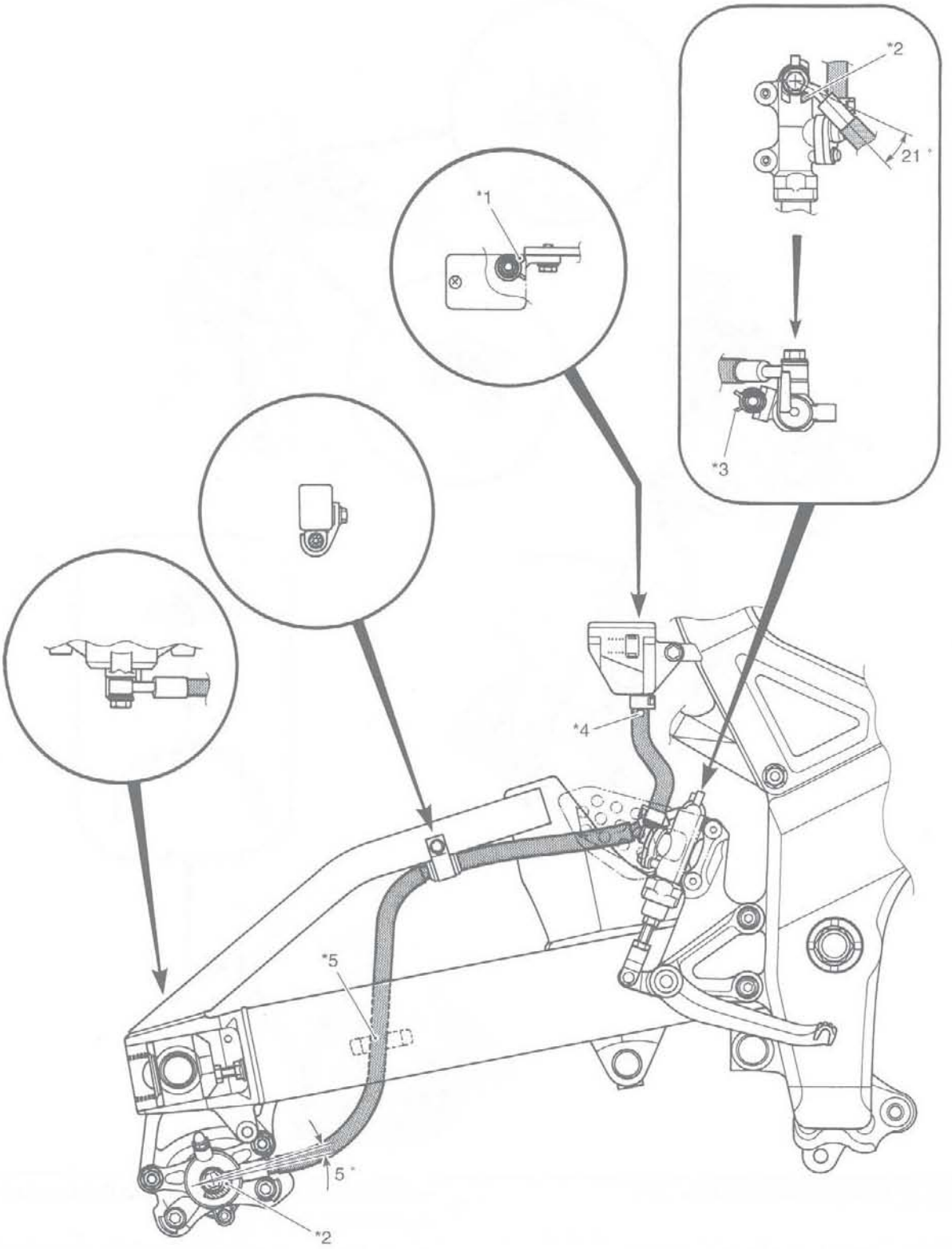

*1	Clamp ends should face forward.	*4	White paint faces outside.
*2	After the brake hose union has contacted the stopper, tighten the union bolt.	*5	Pass through the brake hose inside of the hose guide.
*3	Clamp ends should face backward.		

PAIR (AIR SUPPLY) SYSTEM HOSE ROUTING

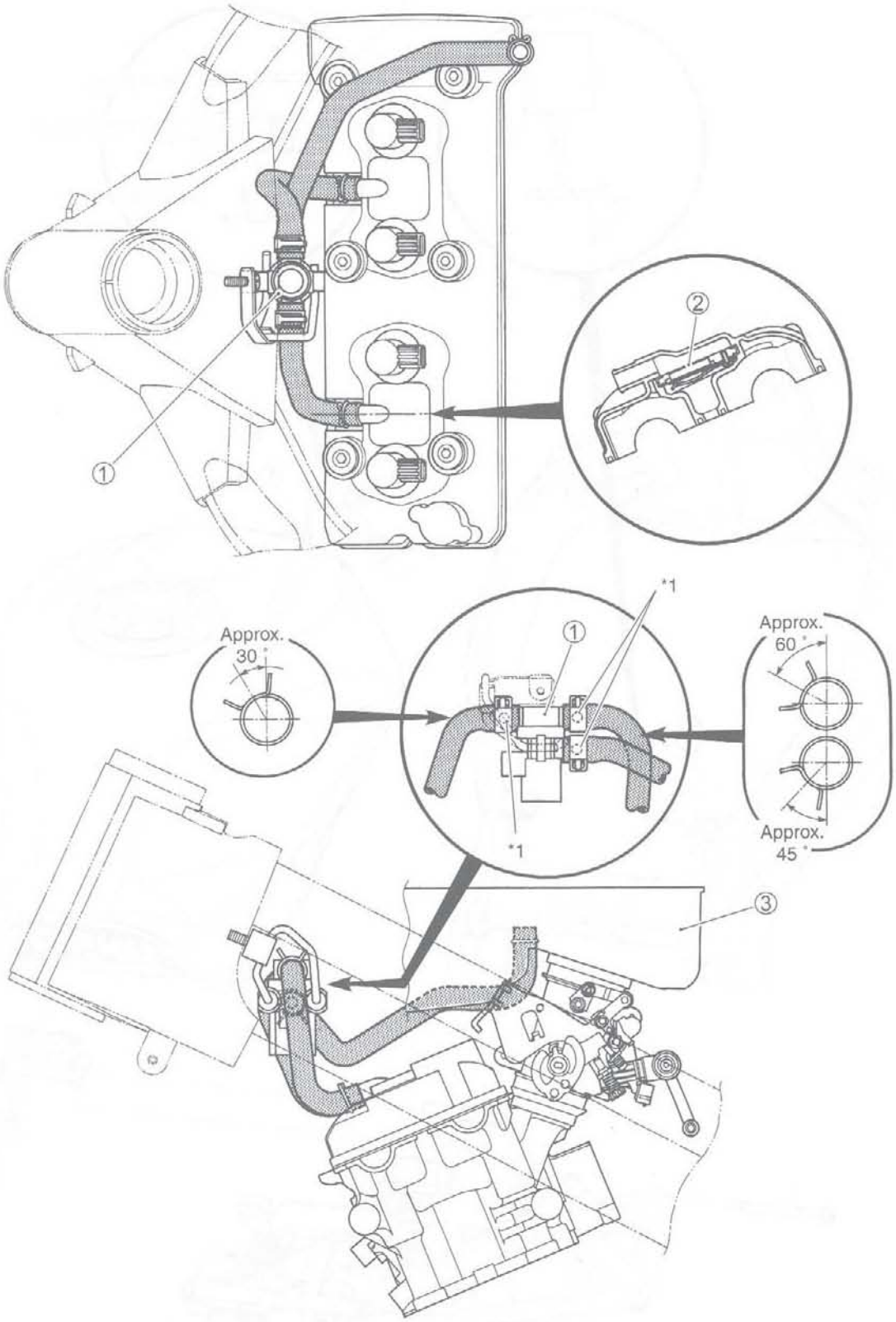

①	PAIR control solenoid valve	③	Air cleaner box
②	PAIR reed valve	*1	Matching mark (Yellow)

FUEL TANK INSTALLATION

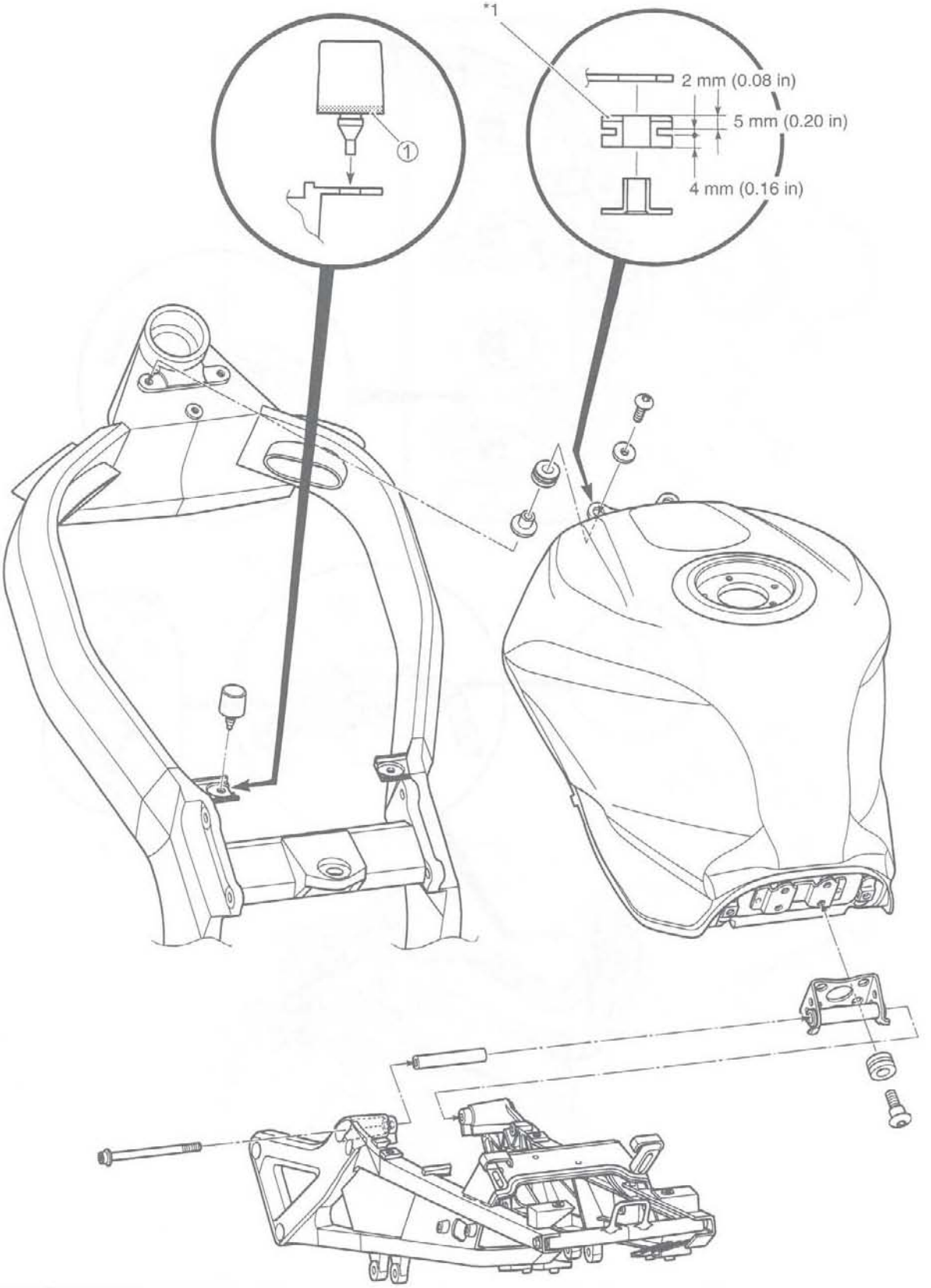

①	Adhesive	*1	Pay attention to the direction of the cushion.

FUEL TANK LOWER SIDE COVER

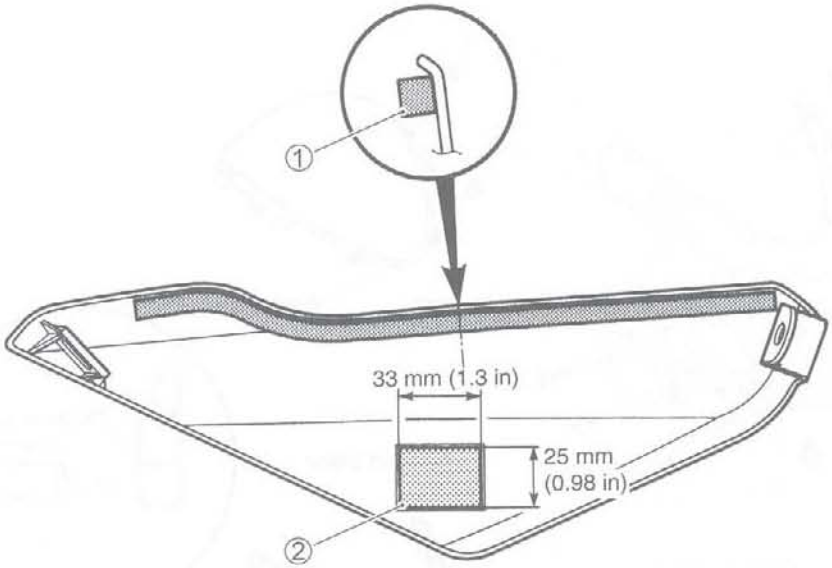

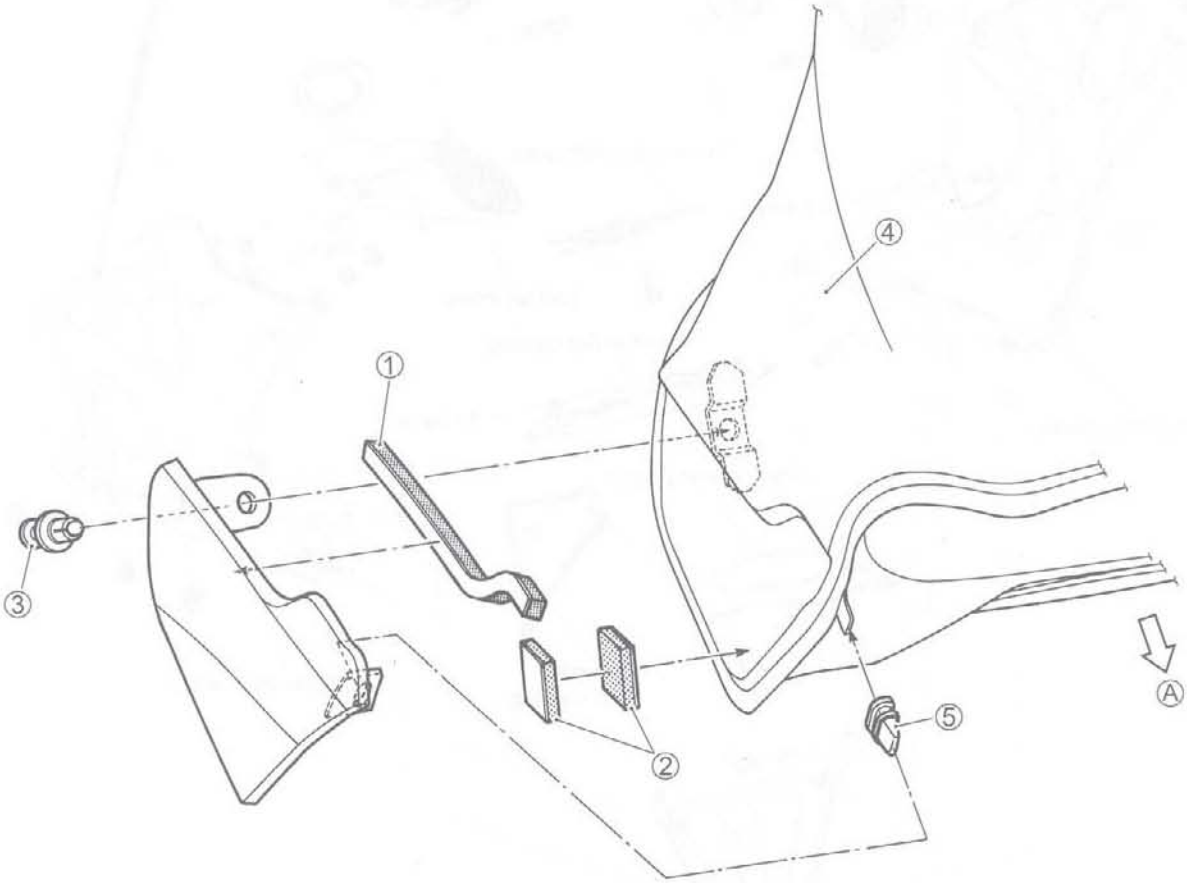

①	Cushion seat	④	Fuel tank
②	Velcro fastening	⑤	Rubber cushion
③	Clip	Ⓐ	Forward

COWLING INSTALLATION

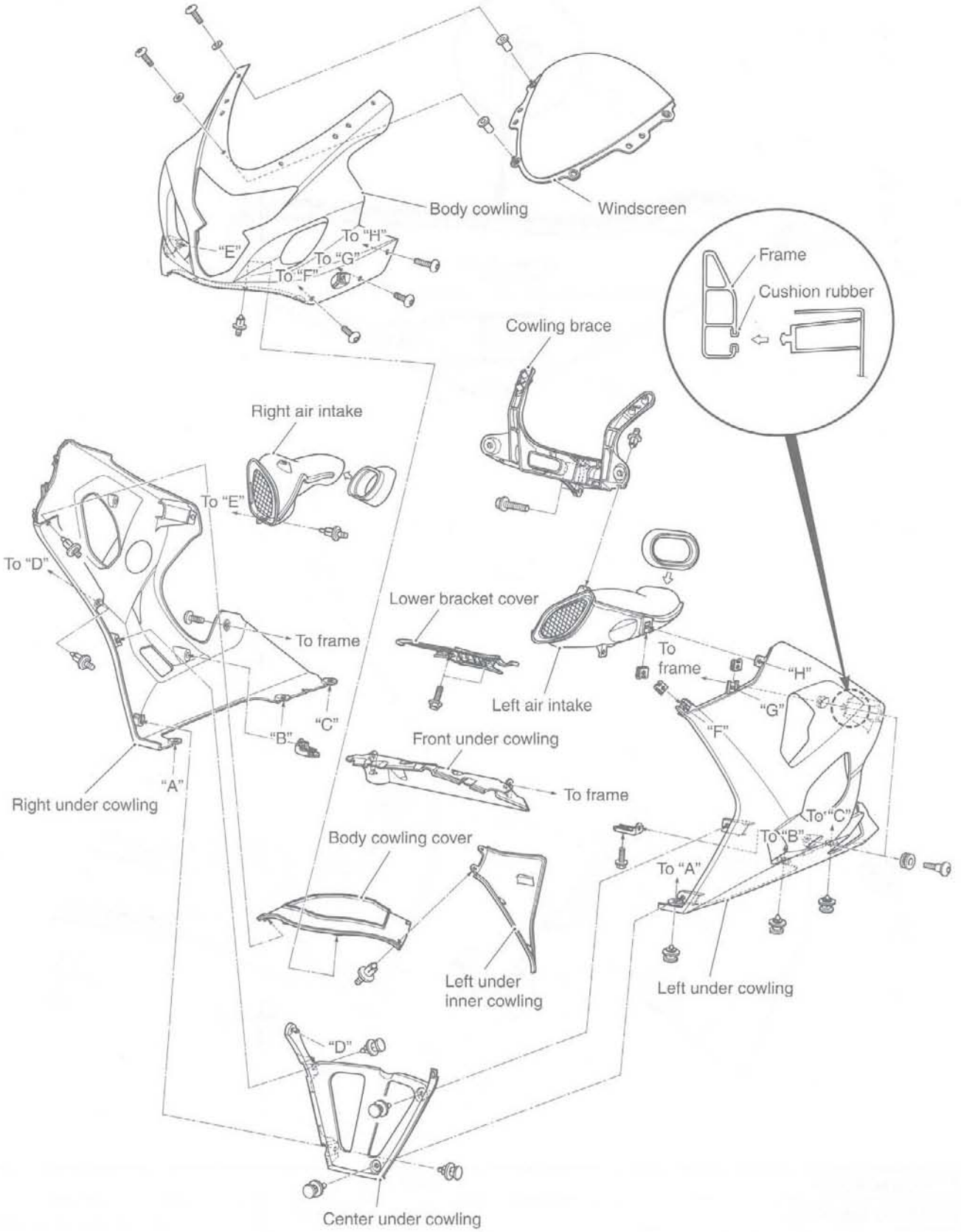

FRAME COVER INSTALLATION

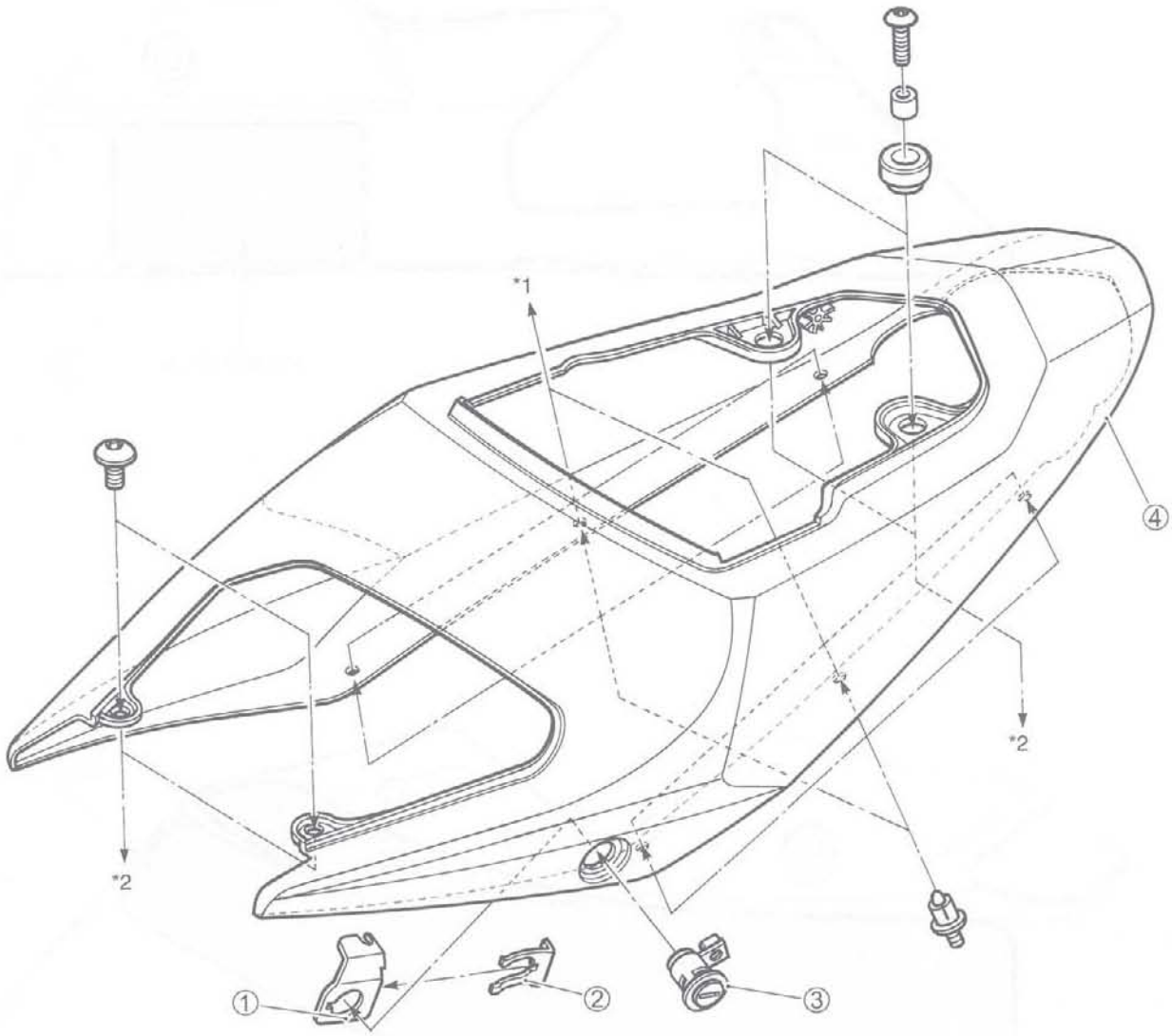

①	Seat lock cable guide	④	Frame cover
②	Stopper	*1	To rear fender
③	Seat lock	*2	To seat rail

UNDER COWLING HEAT SHIELD INSTALLATION

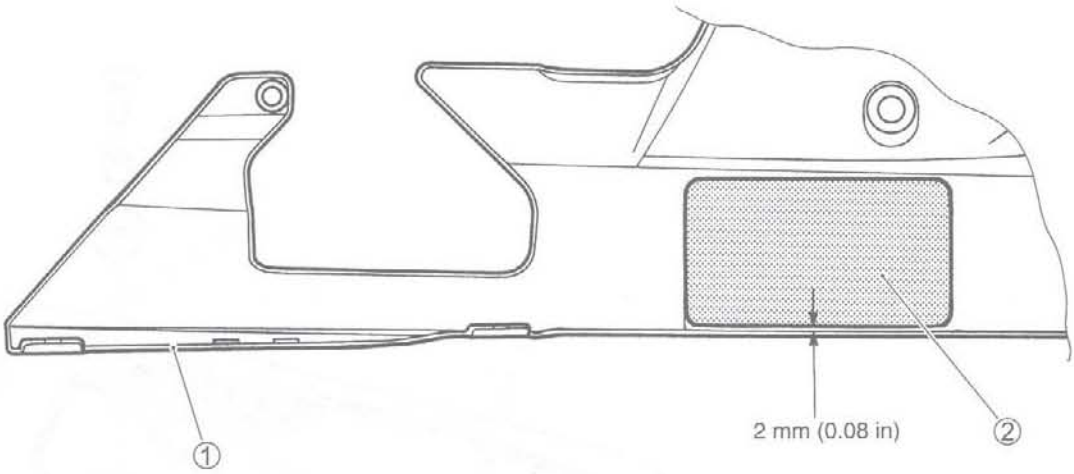

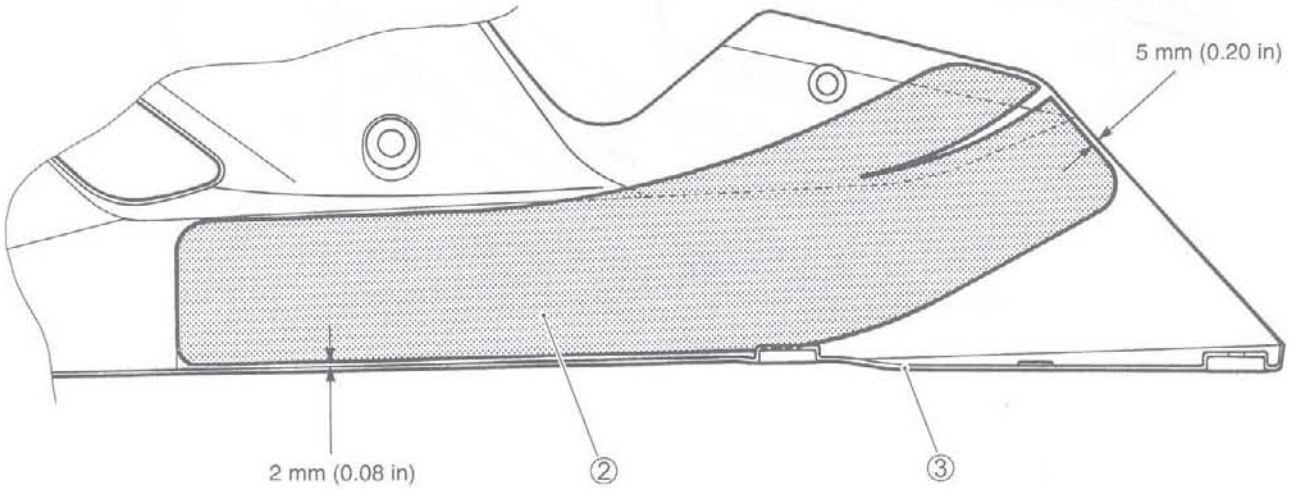

①	Left under cowling	③	Right under cowling
②	Heat shield		

NOTE:

Clean the adhesive surface before adhering the heat shield.

SIDE-STAND INSTALLATION

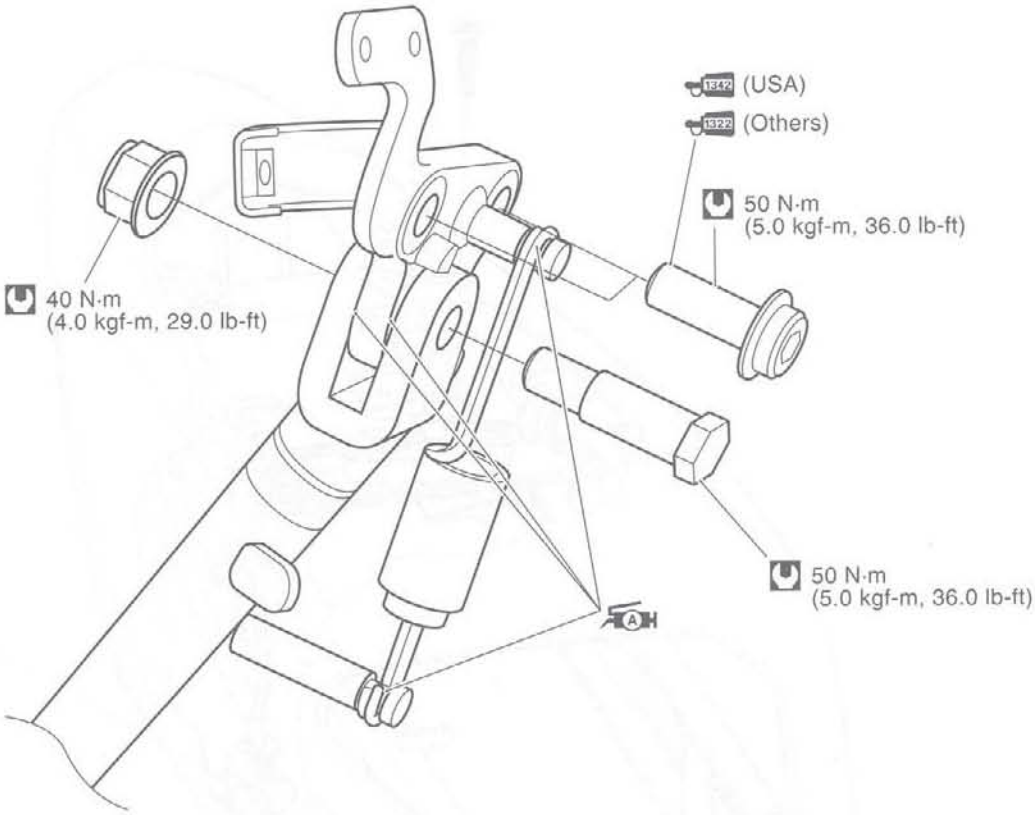

GEARSHIFT PEDAL INSTALLATION

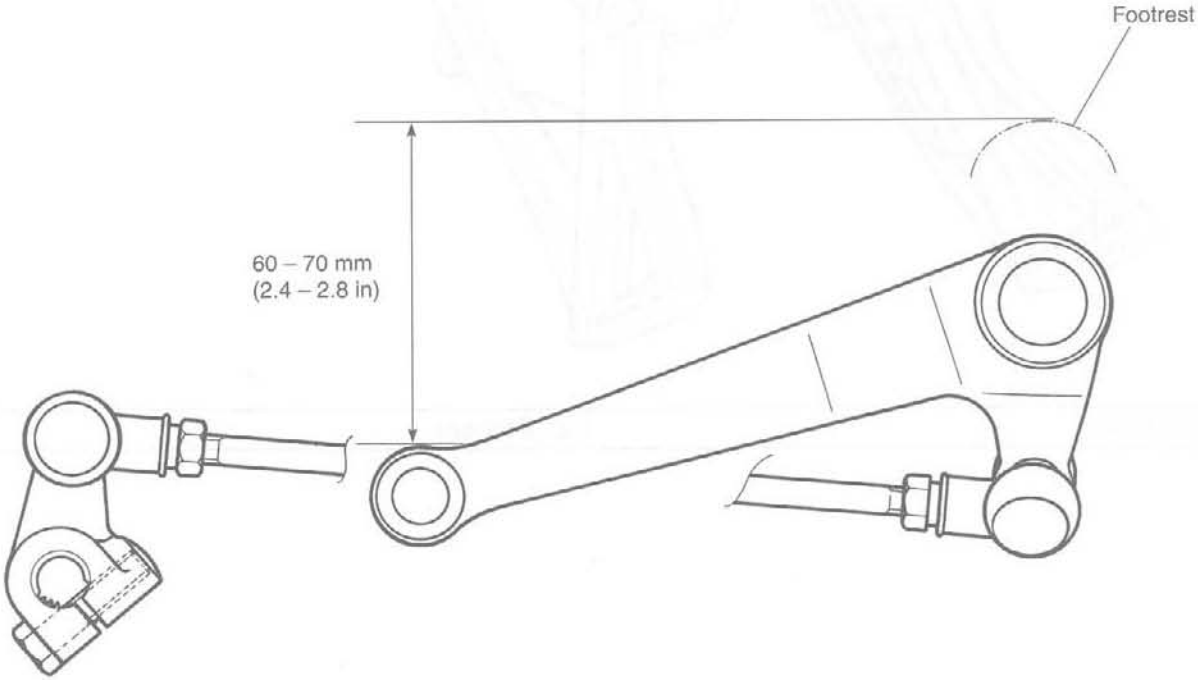

SEAT LOCK CABLE ROUTING

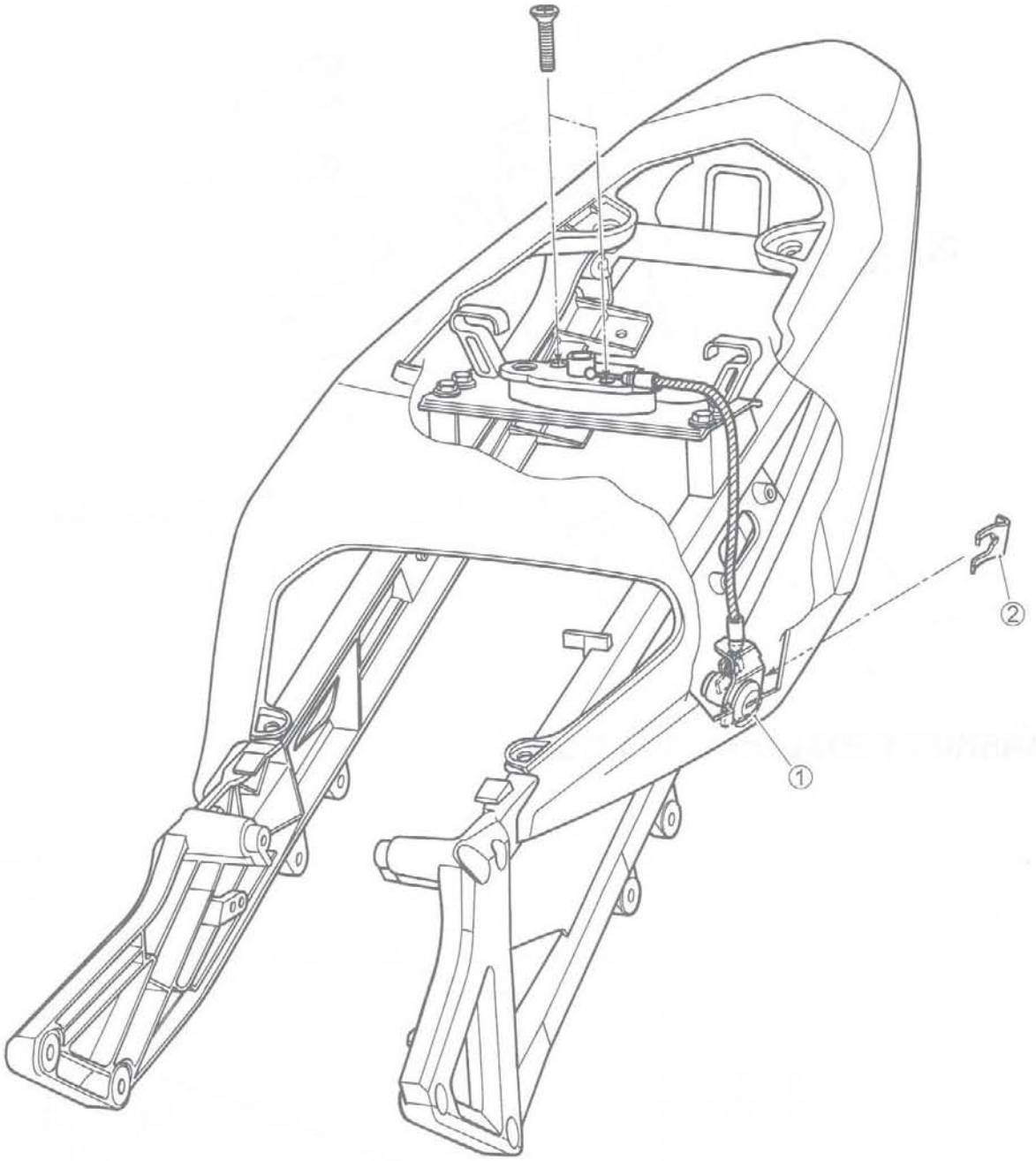

①	Seat lock	②	Stopper

HANDLEBAR BALANCER

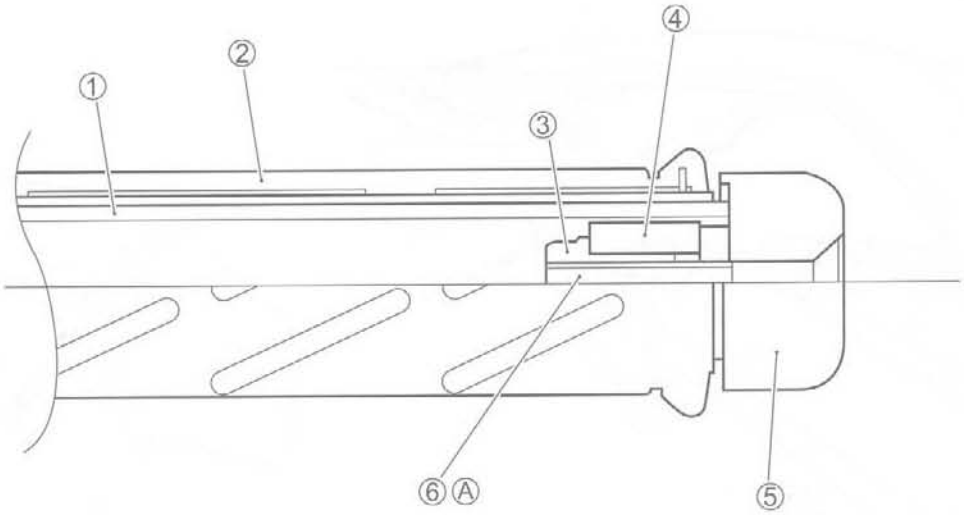

①	Handlebar	④	Handle balancer expander
②	Throttle grip	⑤	Handlebar balancer
③	Nut	⑥	Screw

ITEM	N·m	kgf-m	lb-ft
Ⓐ	5.5	0.5	4.0

COMBINATION METER INSTALLATION

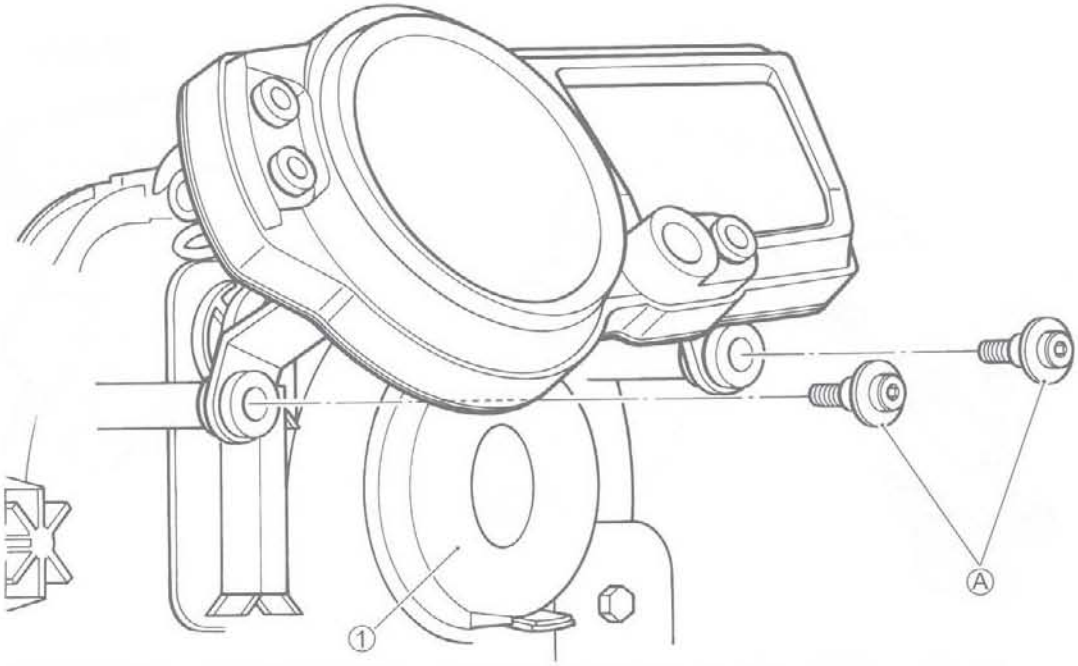

①	Headlight

ITEM	N·m	kgf-m	lb-ft
Ⓐ	6	0.6	4.3

REAR COMBINATION LIGHT INSTALLATION

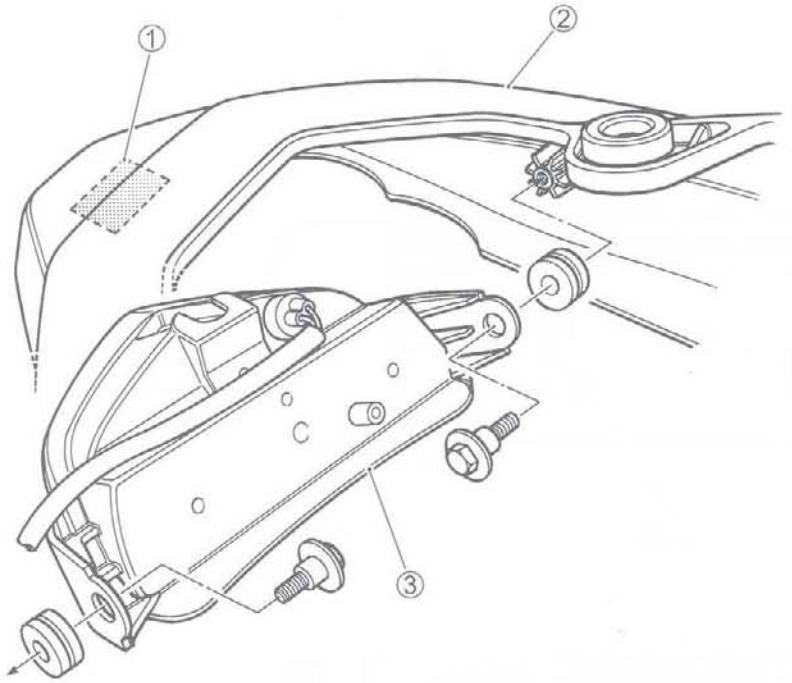

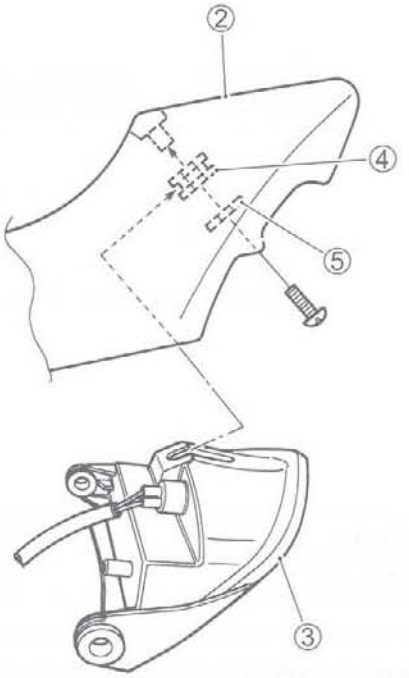

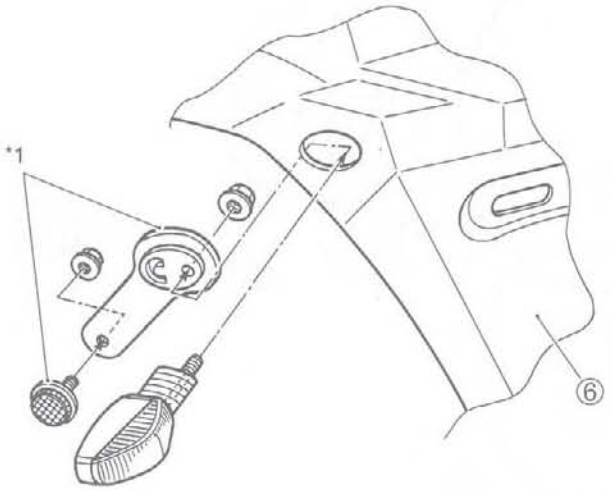

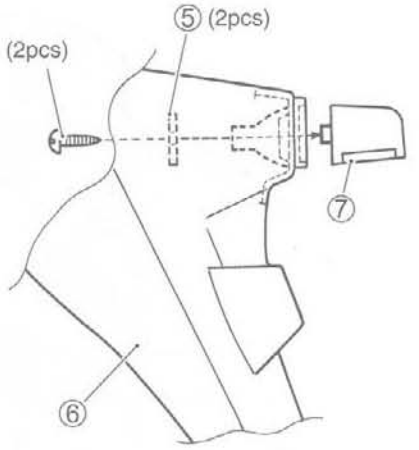

①	Brake light/Taillight cushion seat	⑤	Washer
②	Frame cover	⑥	Rear fender
③	Brake light/Taillight	⑦	License plate light
④	Grommet	*1	For E-03, 28, 33

SPECIAL TOOLS

09900-18740 Hexagon socket (24 mm)	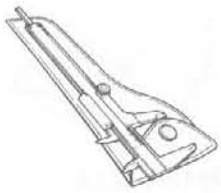 09900-20101 09900-20102 Vernier calipers	09900-20202 Micrometer (25 – 50 mm)	09900-20203 Micrometer (50 – 75 mm)	09900-20205 Micrometer (0 – 25 mm)
09900-20508 Cylinder gauge set	09900-20602 Dial gauge (1/1000 mm, 1 mm)	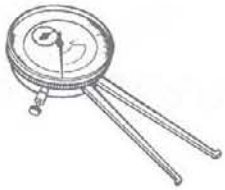 09900-20605 Dial calipers (1/100 mm, 10 – 34 mm)	09900-20607 Dial gauge (1/100 mm, 10 mm)	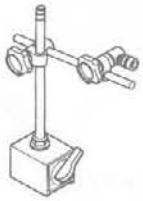 09900-20701 Magnetic stand
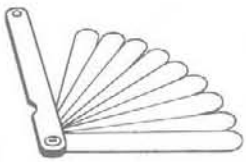 09900-20803 09900-20806 Thickness gauge	09900-20805 Tire depth gauge	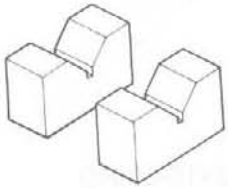 09900-21304 V-block set (100 mm)	09900-22301 09900-22302 Plastigauge	09900-22401 (10 – 18 mm) 09900-22403 (18 – 35 mm) Small bore gauge
09900-25008 Multi-circuit tester set	09900-25009 Needle pointed probe set	09910-20115 Conrod stopper	09913-10750 Adaptor	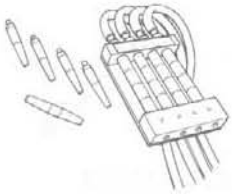 09913-13121 Vacuum balancer gauge

09913-50121 Oil seal remover	09913-70210 Bearing installer set	09915-40610 Oil filter wrench	09915-64512 Compression gauge set	09915-74521 Oil pressure gauge hose
09915-74540 Oil pressure gauge attachment	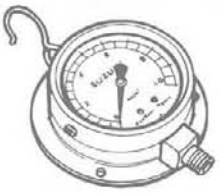 09915-77331 Meter (for high pressure)	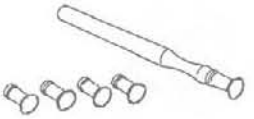 09916-10911 Valve lapper set	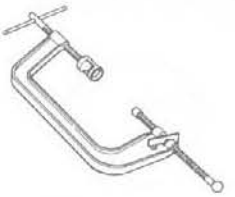 09916-14510 Valve lifter	09916-14521 09916-14530 Valve lifter attachment
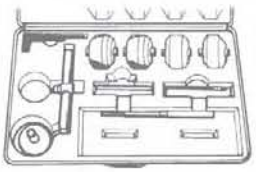 09916-21111 Valve seat cutter set	09916-20630 Valve seat cutter (N–126)	09916-20640 Solid pilot (N–100 – 4.5)	09916-33210 Valve guide reamer (4.5 mm)	09916-34542 Reamer handle
09916-33320 Valve guide reamer (9.8 mm)	09916-43211 Valve guide remover/installer	09916-53330 Attachment	09916-84511 Tweezers	09917-47011 Vacuum pump gauge

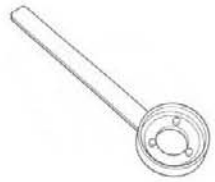 09920-34830 Starter clutch holder	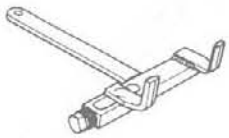 09920-53740 Clutch sleeve hub holder	09921-20210 Bearing remover	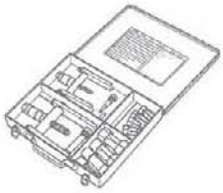 09921-20240 Bearing remover set	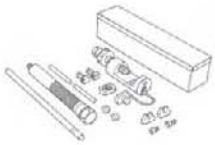 09922-22711 Drive chain cutting and joining tool set
09924-84510 Bearing installer set	09925-18011 Steering bearing installer	09930-11920 Torx bit JT40H	09930-11940 Bit holder	09930-11950 Torx wrench
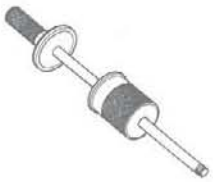 09930-30104 Sliding shaft	09930-34980 Rotor remover	09930-44520 Rotor holder	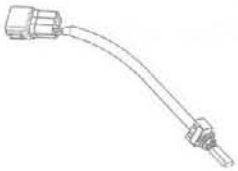 09930-82720 Mode select switch	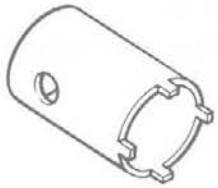 09940-14911 Steering stem nut wrench
09940-14960 Steering stem nut wrench socket	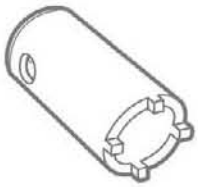 09940-14940 Swingarm pivot thrust adjuster socket wrench	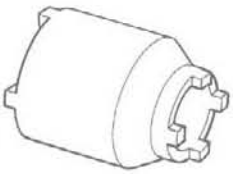 09940-14990 Engine mounting thrust adjuster socket wrench	09940-30221 Front fork assembling tool	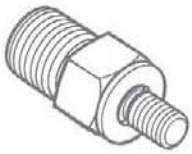 09940-40211 Fuel pressure gauge adaptor

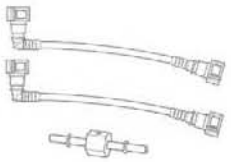 09940-40220 Fuel pressure gauge hose attachment	09940-52841 Inner rod holder	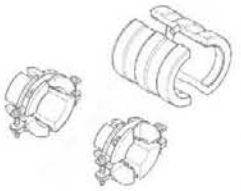 09940-52861 Front fork oil seal installer	09940-92720 Spring scale	09940-94922 Stopper plate
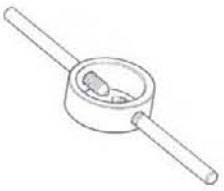 09940-94930 Front fork spacer holder	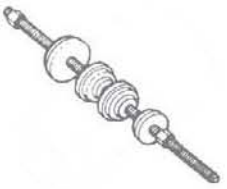 09941-34513 Steering race installer	09943-74111 Front fork oil level gauge	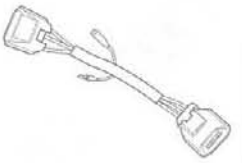 09900-28630 TPS test wire harness	

NOTE:
When order the special tool, please confirm whether it is available or not.

TIGHTENING TORQUE

ENGINE

ITEM			N·m	kgf-m	lb-ft
Exhaust pipe bolt			23	2.3	16.5
Exhaust pipe mounting bolt			23	2.3	16.5
Muffler connecting nut			25	2.5	18.0
Muffler mounting nut			23	2.3	16.5
Speed sensor rotor bolt			23	2.3	16.5
Engine sprocket nut			115	11.5	83.2
Engine mounting bolt and nut	(M: 12)		75	7.5	54.0
	(M: 10)		55	5.5	39.8
Engine mounting thrust adjuster			23	2.3	16.5
Engine mounting thrust adjuster lock-nut			45	4.5	32.5
Engine mounting pinch bolt			23	2.3	16.5
Cylinder head cover bolt		Initial	10	1.0	7.0
		Final	14	1.4	10.0
Spark plug			11	1.1	8.0
Cam chain guide bolt			10	1.0	7.0
Camshaft journal holder bolt			10	1.0	7.0
Cam chain tension adjuster cap bolt			23	2.3	16.6
Cam chain tension adjuster mounting bolt			10	1.0	7.0
Cam chain tensioner bolt			10	1.0	7.0
Cylinder head bolt	(M: 10)	Step 1/step 3	31	3.1	22.5
		Final step	60 °		
	(M: 6)		10	1.0	7.0
Water jacket plug			9.5	0.95	6.9
Water inlet cover bolt			10	1.0	7.0
Clutch cover bolt			10	1.0	7.0
Clutch sleeve hub nut			150	15.0	108
Clutch spring set bolt			10	1.0	7.0
Starter clutch cover bolt			10	1.0	7.0
Starter idle gear cover bolt			10	1.0	7.0
Valve timing inspection plug			11	1.1	8.0
Starter clutch bolt			54	5.4	39.0
Generator cover bolt			10	1.0	7.0
Generator rotor bolt			120	12.0	88.5
Generator stator set bolt			10	1.0	7.0
Gearshift cam stopper bolt			10	1.0	7.0
Gearshift cam stopper plate bolt			13	1.3	9.5
Oil pressure switch			14	1.4	10.0
Crankcase bolt	(M: 6)	(Initial)	6	0.6	4.3
		(Final)	11	1.1	8.0
	(M: 8)	(Initial)	15	1.5	11.0
		(Final)	26	2.6	19.0
Crankshaft journal bolt	(M: 9)	(Initial)	18	1.8	13.0
		(Final)	50 °		

ITEM		N·m	kgf-m	lb-ft
Oil gallery plug	(M: 6)	10	1.0	7.0
	(M: 10)	11	1.1	8.0
	(M: 16)	35	3.5	26.5
Oil drain plug		23	2.3	16.5
Piston cooling oil jet bolt		10	1.0	7.0
Oil pump mounting bolt		10	1.0	7.0
Conrod bearing cap bolt	(Initial)	15	1.5	11.0
	(Final)	90 ° (1/4 turn)		
Bearing retainer screw		10	1.0	7.0
Crankcase breather cover bolt		10	1.0	7.0
Oil strainer bolt		10	1.0	7.0
Oil pan bolt		10	1.0	7.0
Oil cooler mounting bolt		10	1.0	7.0
Water bypass union		12	1.2	8.5
Gearshift fork shaft retainer bolt		10	1.0	7.0
Starter motor mounting bolt		10	1.0	7.0

FI SYSTEM AND INTAKE AIR SYSTEM

ITEM	N·m	kgf-m	lb-ft
CMP sensor bolt	8	0.8	6.0
IAT sensor	18	1.8	13.0
Fuel delivery pipe mounting screw	3.5	0.35	2.45
Fuel pump mounting bolt	10	1.0	7.0
TPS and STPS mounting screw	3.5	0.35	2.45

COOLING SYSTEM

ITEM	N·m	kgf-m	lb-ft
Impeller securing bolt	8	0.8	5.7
Water pump cover screw	5	0.5	3.7
Water pump mounting bolt	10	1.0	7.0
Cooling fan thermo-switch	17	1.7	12.5
ECT sensor	18	1.8	13.0
Thermostat cover bolt	10	1.0	7.0
Cooling fan mounting bolt	8	0.8	6.0
Air bleeding bolt	5.5	0.55	4.0

CHASSIS

ITEM	N·m	kgf-m	lb-ft
Steering stem head nut	90	9.0	65.0
Steering stem lock-nut	80	8.0	58.0
Steering damper bolt and nut	23	2.3	16.5
Front fork upper clamp bolt	23	2.3	16.5
Front fork lower clamp bolt	23	2.3	16.5
Front fork cap bolt	35	3.5	25.5
Rebound damping force adjuster lock-nut	20	2.0	14.5
Rebound damping force adjuster	35	3.5	25.5
Compression damping force adjuster	18	1.8	13.0
Front fork damper rod bolt	35	3.5	25.5
Front axle	100	10.0	72.5
Front axle pinch bolt	23	2.3	16.5
Handlebar clamp bolt	23	2.3	16.5
Front brake master cylinder mounting bolt	10	1.0	7.0
Front brake caliper mounting bolt	39	3.9	28.0
Front brake caliper housing bolt	22	2.2	16.0
Front brake pad mounting pin	15	1.5	11.0
Brake hose union bolt	23	2.3	16.5
Air bleeder valve (Front brake caliper)	7.5	0.75	5.5
Air breeder valve (Master cylinder and Rear brake caliper)	6.0	0.6	4.3
Brake disc bolt (Front)	23	2.3	16.5
Brake disc bolt (Rear)	35	3.5	25.5
Rear brake caliper mounting bolt	25	2.5	18.0
Rear brake caliper housing bolt	37	3.7	27.0
Rear brake pad mounting pin	17	1.7	12.5
Rear brake master cylinder mounting bolt	10	1.0	7.0
Rear brake master cylinder rod lock-nut	18	1.8	13.0
Front footrest bracket mounting bolt	23	2.3	16.5
Swingarm pivot shaft	15	1.5	11.0
Swingarm pivot nut	100	10.0	72.5
Swingarm pivot lock-nut	90	9.0	65.0
Cushion lever mounting nut	78	7.8	56.5
Cushion rod nut	78	7.8	56.5
Rear shock absorber mounting nut (Upper and Lower)	50	5.0	36.0
Rear axle nut	100	10.0	72.5
Rear sprocket nut	60	6.0	43.5
Side-stand mounting bracket bolt	50	5.0	36.0
Cowling brace bolt	23	2.3	16.5
Rear shock absorber bracket nut	115	11.5	83.0
Seat rail bolt	50	5.0	36.0

TIGHTENING TORQUE CHART

For other nuts and bolts not listed in the preceding page, refer to this chart:

Bolt Diameter Ⓐ (mm)	Conventional or "4" marked bolt			"7" marked bolt		
	N·m	kgf-m	lb-ft	N·m	kgf-m	lb-ft
4	1.5	0.15	1.0	2.3	0.23	1.5
5	3	0.3	2.0	4.5	0.45	3.0
6	5.5	0.55	4.0	10	1.0	7.0
8	13	1.3	9.5	23	2.3	16.5
10	29	2.9	21.0	50	5.0	36.0
12	45	4.5	32.5	85	8.5	61.5
14	65	6.5	47.0	135	13.5	97.5
16	105	10.5	76.0	210	21.0	152.0
18	160	16.0	115.5	240	24.0	173.5

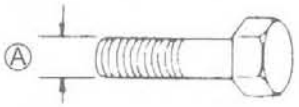

Conventional bolt

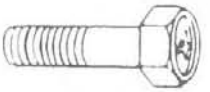

"4" marked bolt

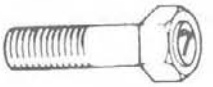

"7" marked bolt

SERVICE DATA

VALVE + VALVE GUIDE

Unit: mm (in)

ITEM	STANDARD		LIMIT
Valve diam.	IN.	27.2 (1.07)	—
	EX.	22.0 (0.87)	—
Tappet clearance (when cold)	IN.	0.10 – 0.20 (0.004 – 0.008)	—
	EX.	0.20 – 0.30 (0.008 – 0.012)	—
Valve guide to valve stem clearance	IN.	0.010 – 0.037 (0.0004 – 0.0015)	—
	EX.	0.030 – 0.057 (0.0012 – 0.0022)	—
Valve guide I.D.	IN. & EX.	4.500 – 4.512 (0.1772 – 0.1776)	—
Valve stem O.D.	IN.	4.475 – 4.490 (0.1762 – 0.1768)	—
	EX.	4.455 – 4.470 (0.1754 – 0.1760)	—
Valve stem deflection	IN. & EX.	—	0.25 (0.001)
Valve stem runout	IN. & EX.	—	0.05 (0.002)
Valve head thickness	IN. & EX.	—	0.5 (0.02)
Valve seat width	IN. & EX.	0.9 – 1.1 (0.035 – 0.043)	—
Valve head radial runout	IN. & EX.	—	0.03 (0.001)
Valve spring free length	IN.	—	36.2 (1.43)
	EX.	—	36.0 (1.42)
Valve spring tension	IN.	155 – 179 N (15.8 – 18.3 kgf) (34.8 – 40.3 lbs) at length 32.55 mm (1.28 in)	—
	EX.	146 – 168 N (14.9 – 17.1 kgf) (32.8 – 37.7 lbs) at length 32.55 mm (1.28 in)	—

CAMSHAFT + CYLINDER HEAD

Unit: mm (in)

ITEM	STANDARD		LIMIT
Cam height	IN.	36.58 – 36.63 (1.440 – 1.442)	36.28 (1.428)
	EX.	35.28 – 35.33 (1.389 – 1.391)	34.98 (1.377)
Camshaft journal oil clearance	IN. & EX.	0.032 – 0.066 (0.0013 – 0.0026)	0.150 (0.0059)
Camshaft journal holder I.D.	IN. & EX.	24.012 – 24.025 (0.9454 – 0.9459)	—
Camshaft journal O.D.	IN. & EX.	23.959 – 23.980 (0.9433 – 0.9441)	—
Camshaft runout	—		0.10 (0.004)
Cam chain pin (at arrow "3")	12th pin		—
Cylinder head distortion	—		0.20 (0.008)

CYLINDER + PISTON + PISTON RING

Unit: mm (in)

ITEM	STANDARD			LIMIT
Compression pressure	1 100 – 1 500 kPa (11 – 15 kgf/cm², 156 – 213 psi)			900 kPa (9 kgf/cm², 128 psi)
Compression pressure difference	—			200 kPa (2 kgf/cm², 28 psi)
Piston to cylinder clearance	0.025 – 0.035 (0.0010 – 0.0014)			0.120 (0.0047)
Cylinder bore	67.000 – 67.015 (2.6378 – 2.6384)			Nicks or Scratches
Piston diam.	66.985 – 66.970 (2.6372 – 2.6366) Measure at 15 mm (0.6 in) from the skirt end.			66.880 (2.6331)
Cylinder distortion	—			0.02 (0.008)
Piston ring free end gap	1st	T	Approx 5.5 (0.22)	4.4 (0.17)
	2nd	T	Approx 10.0 (0.39)	8.0 (0.31)
Piston ring end gap	1st	T	0.06 – 0.21 (0.002 – 0.008)	0.50 (0.020)
	2nd	T	0.06 – 0.18 (0.002 – 0.007)	0.50 (0.020)
Piston ring to groove clearance	1st		—	0.180 (0.0071)
	2nd		—	0.150 (0.0059)

ITEM	STANDARD		LIMIT
Piston ring groove width	1st	1.01 – 1.03 (0.0398 – 0.0406)	—
	2nd	0.81 – 0.83 (0.0319 – 0.0327)	—
	Oil	1.51 – 1.53 (0.0594 – 0.0602)	—
Piston ring thickness	1st	0.97 – 0.99 (0.0382 – 0.0390)	—
	2nd	0.77 – 0.79 (0.0303 – 0.0311)	—
Piston pin bore I.D.	14.002 – 14.008 (0.5513 – 0.5515)		14.030 (0.5524)
Piston pin O.D.	13.995 – 14.000 (0.5510 – 0.5512)		13.980 (0.5504)

CONROD + CRANKSHAFT

Unit: mm (in)

ITEM	STANDARD		LIMIT
Conrod small end I.D.	14.010 – 14.018 (0.5516 – 0.5519)		14.040 (0.5528)
Conrod big end side clearance	0.10 – 0.15 (0.004 – 0.006)		0.30 (0.012)
Conrod big end width	19.95 – 20.00 (0.7854 – 0.7874)		—
Crank pin width	20.10 – 20.15 (0.7913 – 0.7933)		—
Conrod big end oil clearance	0.032 – 0.056 (0.0013 – 0.0022)		0.080 (0.0031)
Crank pin O.D.	30.976 – 31.000 (1.2195 – 1.2205)		—
Crankshaft journal oil clearance	0.016 – 0.040 (0.0006 – 0.0016)		0.080 (0.0031)
Crankshaft journal O.D.	29.976 – 30.000 (1.1802 – 1.1811)		—
Crankshaft thrust bearing thickness	Right side	2.425 – 2.450 (0.0955 – 0.0965)	—
	Left side	2.350 – 2.500 (0.0925 – 0.0984)	—
Crankshaft thrust clearance	0.055 – 0.110 (0.0022 – 0.0043)		—
Crankshaft runout	—		0.05 (0.002)

OIL PUMP

ITEM	STANDARD	LIMIT
Oil pressure (at 60 °C, 140 °F)	200 – 500 kPa (2.0 – 5.0 kgf/cm², 28 – 71 psi) at 3 000 r/min.	—

CLUTCH

Unit: mm (in)

ITEM	STANDARD		LIMIT
Clutch lever play	10 – 15 (0.4 – 0.6)		—
Clutch release screw	1/4 turn out		—
Drive plate thickness	No. 1, 2 and 3	2.92 – 3.08 (0.115 – 0.121)	2.62 (0.103)
Drive plate claw width	No. 1, 2 and 3	13.70 – 13.80 (0.5394 – 0.5433)	12.90 (0.5079)
Driven plate distortion	—		0.10 (0.004)
Clutch spring free length	54.15 (2.132)		51.5 (2.028)

TRANSMISSION + DRIVE CHAIN

Unit: mm (in) Except ratio

ITEM		STANDARD		LIMIT
Primary reduction ratio		1.926 (79/41)		—
Final reduction ratio		2.812 (45/16)		—
Gear ratios	Low	2.785 (39/14)		—
	2nd	2.052 (39/19)		—
	3rd	1.681 (37/22)		—
	4th	1.450 (29/20)		—
	5th	1.304 (30/23)		—
	Top	1.181 (26/22)		—
Shift fork-to-groove clearance		0.10 – 0.30 (0.004 – 0.012)		0.50 (0.020)
Shift fork groove width		5.0 – 5.1 (0.197 – 0.201)		—
Shift fork thickness		4.8 – 4.9 (0.189 – 0.193)		—
Drive chain	Type	RK525SMOZ7		—
	Links	110 links		—
	20-pitch length	—		336.5 (13.25)
Drive chain slack (on side-stand)		20 – 30 (0.8 – 1.2)		—
Gearshift lever height		60 – 70 (2.4 – 2.8)		—

THERMOSTAT + RADIATOR + FAN + COOLANT

ITEM	STANDARD/SPECIFICATION		NOTE
Thermostat valve opening temperature	Approx. 88 °C (190 °F)		—
Thermostat valve lift	8 mm (0.31 in) and over at 100 °C (212 °F)		—
ECT sensor resistance	20 °C (68 °F)	Approx. 2.45 kΩ	—
	50 °C (122 °F)	Approx. 0.811 kΩ	—
	80 °C (176 °F)	Approx. 0.318 kΩ	—
	110 °C (230 °F)	Approx. 0.142 kΩ	—
Radiator cap valve opening pressure	93 – 123 kPa (0.93 – 1.23 kgf/cm², 13.2 – 17.5 psi)		—
Cooling fan thermo-switch operating temperature	OFF→ON	Approx. 105 °C (221 °F)	—
	ON→OFF	Approx. 100 °C (212 °F)	—
Engine coolant type	Use an antifreeze/coolant compatible with aluminum radiator, mixed with distilled water only, at the ratio of 50:50.		—
Engine coolant	Reservoir tank side	Approx. 250 ml (0.3/0.2 US/Imp qt)	—
	Engine side	Approx. 2 700 ml (2.9/2.4 US/Imp qt)	—

INJECTOR + FUEL PUMP + FUEL PRESSURE REGULATOR

ITEM	SPECIFICATION	NOTE
Injector resistance	Approx. 12 Ω at 20 °C (68 °F)	
Fuel discharge amount	168 ml (5.7/5.9 US/Imp oz) and more/10 sec.	
Fuel pressure regulator operating set pressure	Approx. 300 kPa (3.0 kgf/cm², 43 psi)	

FI SENSORS+ SECONDARY THROTTLE VALVE ACTUATOR

ITEM	SPECIFICATION		NOTE
CMP sensor resistance	0.9 – 1.7 k Ω		
CMP sensor peak voltage	0.7 V and more		When cranking
CKP sensor resistance	142 – 194 Ω		
CKP sensor peak voltage	0.5 V and more		When cranking
IAP sensor input voltage	4.5 – 5.5 V		
IAP sensor output voltage	Approx. 2.7 V at idle speed		
TP sensor input voltage	4.5 – 5.5 V		
TP sensor resistance	Closed	Approx. 1.1 kΩ	
	Opened	Approx. 4.4 kΩ	
TP sensor output voltage	Closed	Approx. 1.1 V	
	Opened	Approx. 4.4 V	
ECT sensor input voltage	4.5 – 5.5 V		
ECT sensor resistance	Approx. 2.45 kΩ at 20 °C (68 °F)		
IAT sensor input voltage	4.5 – 5.5 V		
IAT sensor resistance	Approx. 2.45 kΩ at 20 °C (68 °F)		
AP sensor input voltage	4.5 – 5.5 V		
AP sensor output voltage	Approx. 3.6 V at 760 mmHg (100 kPa)		
TO sensor resistance	16.5 – 22.3 kΩ		
TO sensor voltage	Normal	0.4 – 1.4 V	
	Leaning	3.7 – 4.4 V	When leaning 65 °
GP switch voltage	0.6 V and more		From 1st to Top
Injector voltage	Battery voltage		
Ignition coil primary peak voltage	85 V and more		When cranking
STP sensor input voltage	4.5 – 5.5 V		
STP sensor resistance	Closed	Approx. 0.6 kΩ	
	Opened	Approx. 4.5 kΩ	
STP sensor output voltage	Closed	Approx. 0.6 V	
	Opened	Approx. 4.5 V	
STV actuator resistance	Approx. 7 Ω		
PAIR control solenoid valve resistance	18 – 22 Ω at 20 – 30 °C (68 – 86 °F)		

THROTTLE BODY

ITEM	SPECIFICATION
Bore size	38 mm
I.D. No.	29G10 (For E-33), 29G00 (For the others)
Idle r/min.	1 300 ± 100 r/min.
Fast idle r/min.	1 500 – 2 000 r/min. When cold engine
Throttle cable play	2.0 – 4.0 mm (0.08 – 0.16 in)

ELECTRICAL

Unit: mm (in)

ITEM			SPECIFICATION		NOTE
Firing order			1.2.4.3		
Spark plug			Type	NGK: CR9E DENSO: U27ESR-N	
			Gap	0.7 – 0.8 (0.028 – 0.031)	
Spark performance			Over 8 (0.3) at 1 atm.		
CKP sensor resistance			142 – 194 Ω		
CKP sensor peak voltage			0.5 V and more		
Ignition coil resistance			Primary	1.3 – 1.9 Ω	Terminal – Terminal
			Secondary	10.8 – 16.2 kΩ	Plug cap – Terminal
Ignition coil primary peak voltage			85 V and more		
Generator coil resistance			0.2 – 0.9 Ω		
Generator no-load performance (when engine is cold)			65 V and more at 5 000 r/min.		
Regulated voltage (charging output)			14.0 – 15.5 V at 5 000 r/min.		
Starter relay resistance			3 – 5 Ω		
GP switch voltage			0.6 V and more (From 1st to top without neutral)		
Battery	Type designation		FTX9-BS		
	Capacity		12 V 28.8 kC (8 Ah)/10 HR		
Fuse size	Headlight	HI	15 A		E-03, 24, 28, 33
			10 A		E-02, 19
		LO	10 A		
	Signal		10 A		
	Ignition		15 A		
	Fuel		10 A		
	Fan		10 A		
	Main		30 A		

WATTAGE

Unit: W

ITEM		STANDARD/SPECIFICATION	
		E-03, -24, -28, -33	Others
Headlight	HI	60/55 W	←
	LO	55/55 W	55 W
Position light			5 W
Brake light/Taillight		LED	←
Turn signal light		18 W × 4	←
License plate light		5 W	←
Combination meter light		LED	←
Turn signal indicator light		LED	←
High beam indicator light		LED	←
Neutral indicator light		LED	←
FI indicator light/Oil pressure indicator light/Engine coolant temp. indicator light		LED	←
Fuel level indicator light		LED	←
Engine RPM indicator light		LED	←

BRAKE + WHEEL

Unit: mm (in)

ITEM	STANDARD			LIMIT
Rear brake pedal height	60 – 70 (2.4 – 2.8)			—
Brake disc thickness	Front	5.3 – 5.7 (0.209 – 0.224)		5.0 (0.20)
	Rear	4.8 – 5.2 (0.189 – 0.205)		4.5 (0.18)
Brake disc runout	—			0.30 (0.012)
Master cylinder bore	Front	19.050 – 19.093 (0.7500 – 0.7517)		—
	Rear	14.000 – 14.043 (0.5512 – 0.5529)		—
Master cylinder piston diam	Front	19.018 – 19.034 (0.7487 – 0.7494)		—
	Rear	13.957 – 13.984 (0.5495 – 0.5506)		—
Brake caliper cylinder bore	Front	Leading	30.230 – 30.306 (1.1902 – 1.1931)	—
		Trailing	33.960 – 34.036 (1.3370 – 1.3400)	—
	Rear	38.180 – 38.230 (1.5031 – 1.5051)		—

ITEM	STANDARD			LIMIT
Brake caliper piston diam	Front	Leading	30.150 – 30.200 (1.1870 – 1.1890)	—
		Trailing	33.884 – 33.934 (1.3340 – 1.3360)	—
	Rear	38.060 – 38.093 (1.4984 – 1.4997)		—
Brake fluid type	DOT 4			—
Wheel rim runout	Axial	—		2.0 (0.08)
	Radial	—		2.0 (0.08)
Wheel rim size	Front	17 M/C × MT 3.50		—
	Rear	17 M/C × MT 5.50		—
Wheel axle runout	Front	—		0.25 (0.010)
	Rear	—		0.25 (0.010)

TIRE

ITEM	STANDARD		LIMIT
Cold inflation tire pressure (Solo riding)	Front	250 kPa (2.50 kgf/cm², 36 psi)	—
	Rear	250 kPa (2.50 kgf/cm², 36 psi)	—
Cold inflation tire pressure (Dual riding)	Front	250 kPa (2.50 kgf/cm², 36 psi)	—
	Rear	250 kPa (2.50 kgf/cm², 36 psi)	—
Tire size	Front	120/70 ZR17 M/C (58 W)	—
	Rear	180/55 ZR17 M/C (73 W)	—
Tire type	Front	DUNLOP: D218F	E-03, 28, 33
		BRIDGESTONE: BT014F SF	Others
	Rear	DUNLOP:D218	E-03, 28, 33
		BRIDGESTONE: BT014R F	Others
Tire tread depth (Recommended depth)	Front	—	1.6 (0.06)
	Rear	—	2.0 (0.08)

SUSPENSION

Unit: mm (in)

ITEM	STANDARD		LIMIT
Front fork stroke	120 (4.72)		—
Front fork spring free length	244.6 (9.63)		239 (9.41)
Front fork oil level (without spring, outer tube fully compressed)	102 (4.02)		—
Front fork oil type	SUZUKI FORK OIL SS-05 or an equivalent fork oil		—
Front fork oil capacity (each leg)	479 ml (16.2/16.9 US/Imp oz)		—
Front fork inner tube outside diam.	43 (1.69)		—
Front fork spring adjuster	4 th groove from top		—
Front fork damping force adjuster	Rebound	1 3/4 turns out from stiffest position	—
	Compression	1 3/4 turns out from stiffest position	—
Rear shock absorber spring pre-set length	195.9 (7.71)		—
Rear shock absorber damping force adjuster	Rebound	2 turns out from stiffest position	—
	Compression	1 3/4 turns out from stiffest position	—
Rear wheel travel	130 (5.1)		—
Swingarm pivot shaft runout	—		0.3 (0.01)

FUEL + OIL

ITEM	SPECIFICATION		NOTE
Fuel type	Use only unleaded gasoline of at least 87 pump octane (R/2 + M/2) or 91 octane or higher rated by the research method. Gasoline containing MTBE (Methyl Tertiary Butyl Ether), less than 10 % ethanol, or less than 5 % methanol with appropriate cosolvents and corrosion inhibitor is permissible.		E-03, 28, 33
	Gasoline used should be graded 91 octane or higher. An unleaded gasoline is recommended.		Others
Fuel tank capacity	Including reserve	16.5 L (4.4/3.6 US/Imp gal)	E-33
		17 L (4.5/3.7 US/Imp gal)	Others
	Fuel level indicator light lighting	Approx. 1.7 L (1.8/1.5 US/Imp qt)	
Engine oil type	SAE 10 W-40, API, SF or SG		
Engine oil capacity	Change	2.8 L (3.0/2.5 US/Imp qt)	
	Filter change	3.1 L (3.3/2.7 US/Imp qt)	
	Overhaul	3.6 L (3.8/3.2 US/Imp qt)	

EMISSION CONTROL INFORMATION

CONTENTS

EMISSION CONTROL SYSTEMS 11- 2
FUEL INJECTION SYSTEM 11- 2
CRANKCASE EMISSION CONTROL SYSTEM 11- 3
EXHAUST EMISSION CONTROL SYSTEM (PAIR SYSTEM) 11- 4
NOISE EMISSION CONTROL SYSTEM 11- 5
PAIR (AIR SUPPLY) SYSTEM AND EMISSION CONTROL SYSTEM INSPECTION 11- 6
PAIR HOSES 11- 6
PAIR REED VALVE 11- 6
PCV HOSE 11- 6
PAIR CONTROL SOLENOID VALVE 11- 7
PAIR (AIR SUPPLY) SYSTEM DIAGRAM 11- 8
PAIR (AIR SUPPLY) SYSTEM HOSE ROUTING 11- 9

EMISSION CONTROL SYSTEMS

FUEL INJECTION SYSTEM

GSX-R600 motorcycles are equipped with a fuel injection system for emission level control.
This fuel injection system is precision designed, manufactured and adjusted to comply with the applicable emission limits.

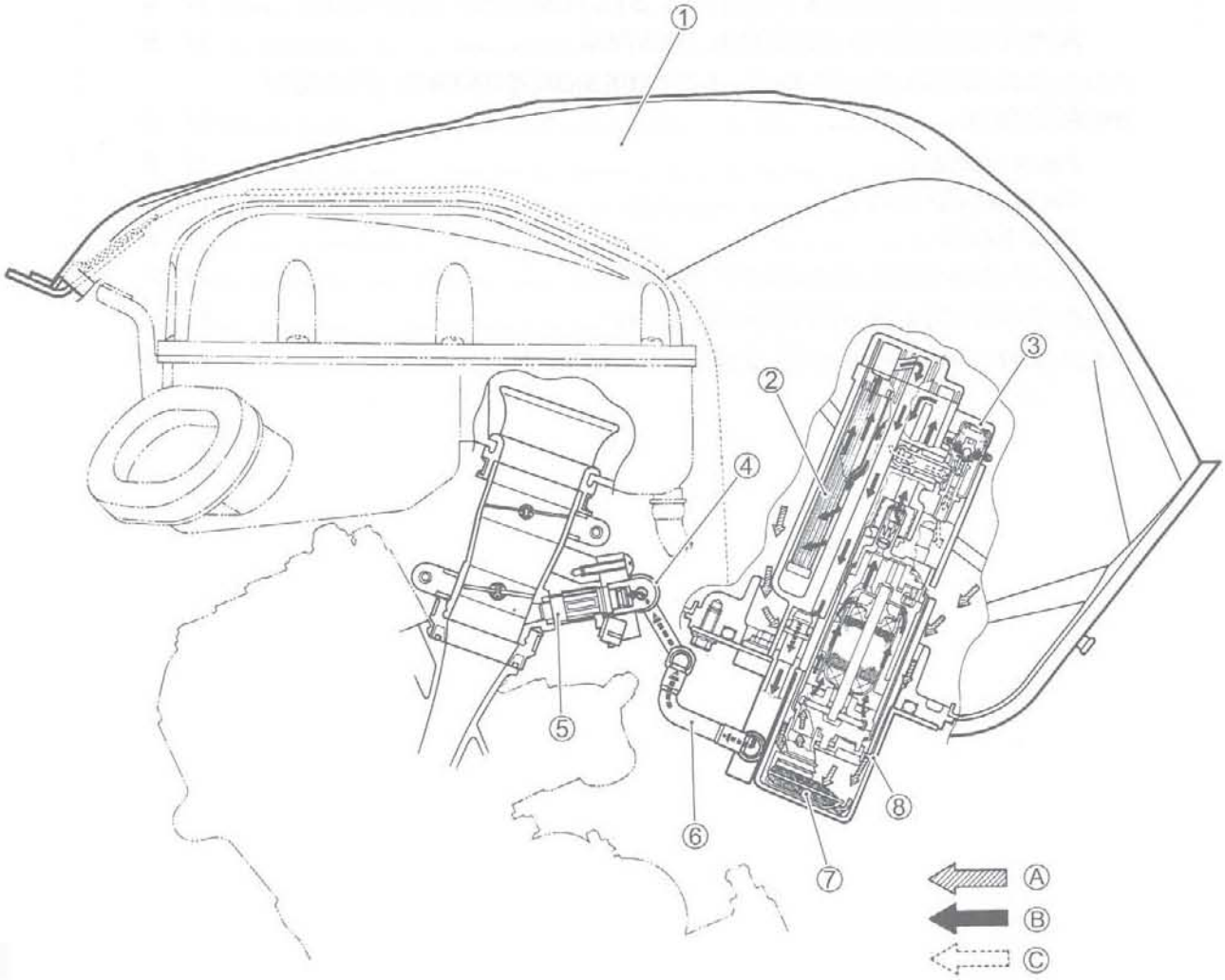

①	Fuel tank	⑦	Fuel mesh filter (For low pressure)
②	Fuel filter (For high pressure)	⑧	Fuel pump
③	Fuel pressure regulator	Ⓐ	Before-pressurized fuel
④	Fuel delivery pipe	Ⓑ	Pressurized fuel
⑤	Fuel injector	Ⓒ	Relieved fuel
⑥	Fuel feed hose		

CRANKCASE EMISSION CONTROL SYSTEM

The engine is equipped with a PCV system. Blow-by gas in the engine is constantly drawn into the crankcase, which is returned to the combustion chamber through the PCV (breather) hose, air cleaner and throttle body.

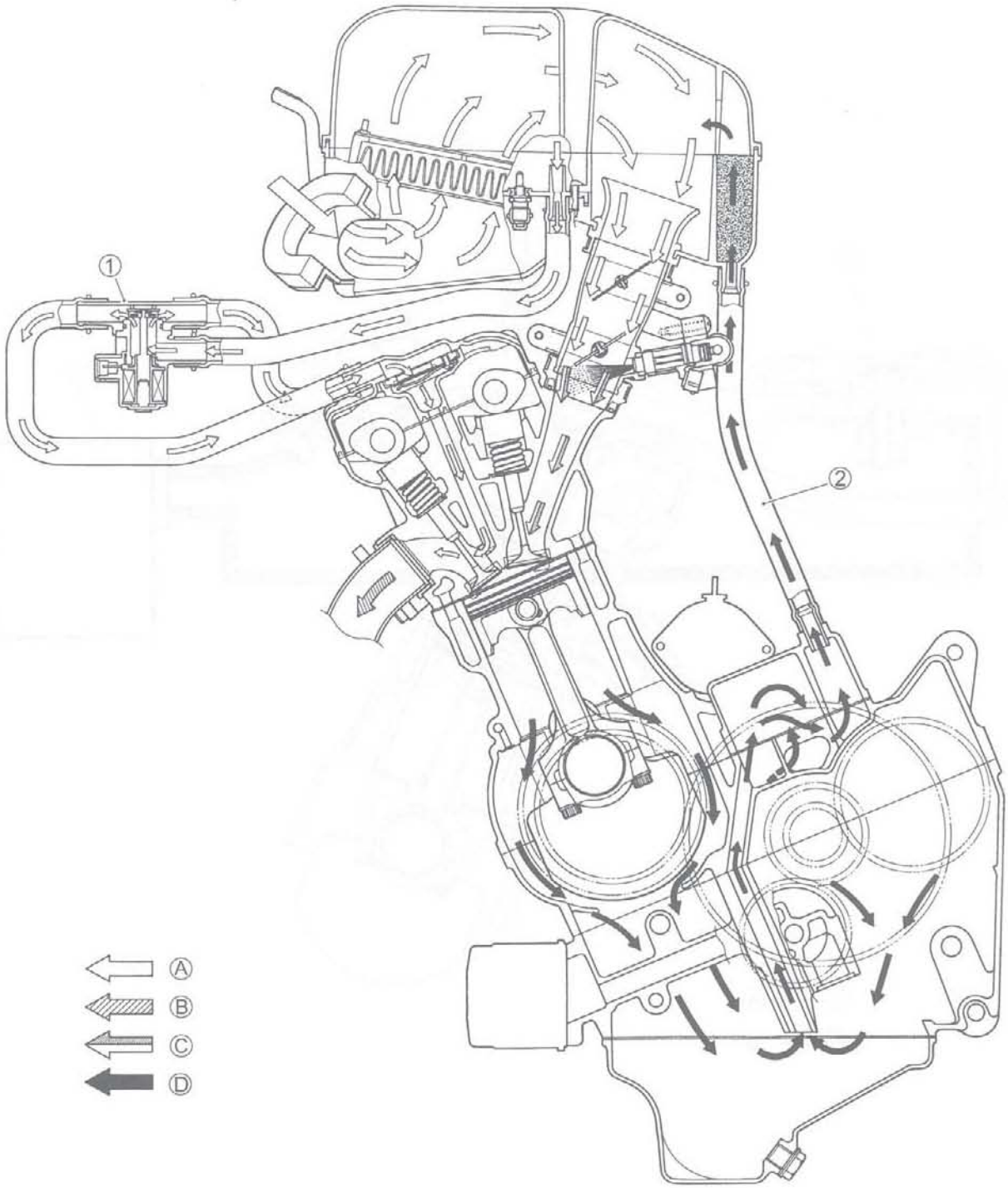

①	PAIR control solenoid valve	Ⓑ	EXHAUST GAS
②	PCV hose	Ⓒ	FUEL/AIR MIXTURE
Ⓐ	FRESH AIR	Ⓓ	BLOW-BY GAS

EXHAUST EMISSION CONTROL SYSTEM (PAIR SYSTEM)

The exhaust emission control system is composed of the PAIR system and THREE-WAY CATALYST system (For E-02 and -19). The fresh air is drawn into the exhaust port with the PAIR control solenoid valve and PAIR reed valve. The PAIR control solenoid valve is operated by the ECM, and the fresh air flow is controlled according to the TPS, ECTS, IATS, IAPS and CKPS.

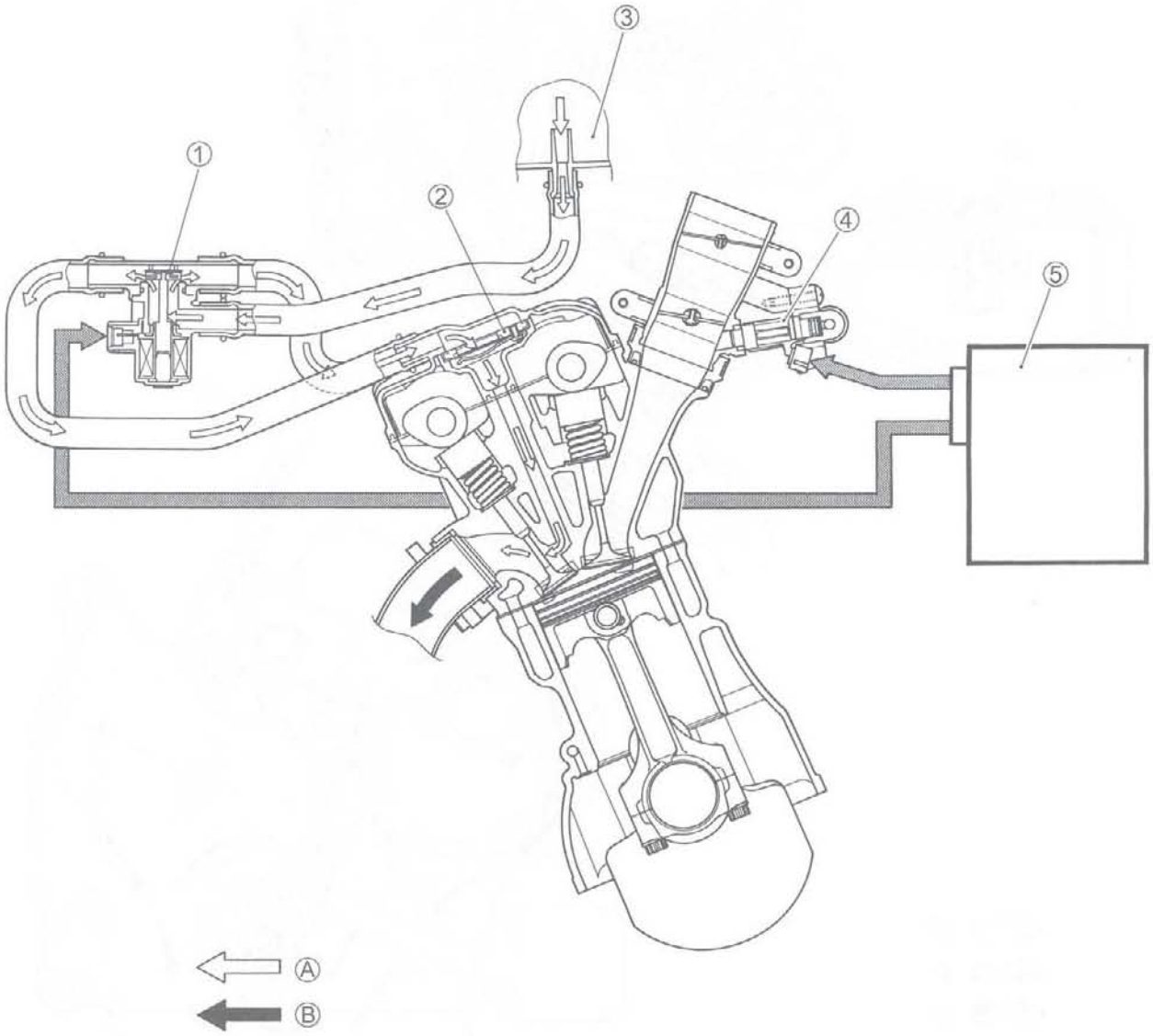

①	PAIR control solenoid valve	⑤	ECM
②	PAIR reed valve	Ⓐ	FRESH AIR
③	Air cleaner box	Ⓑ	EXHAUST GAS
④	Fuel injector		

NOISE EMISSION CONTROL SYSTEM

TAMPERING WITH THE NOISE CONTROL SYSTEM PROHIBITED: Local law prohibits the following acts or the causing thereof:

1. The removal or rendering inoperative by any person, other than for purposes of maintenance, repair or replacement, of any device or element of design incorporated into any new vehicle for the purpose of noise control prior to its sale or delivery to the ultimate purchaser or while it is in use, or
2. The use of the vehicle after such device or element of design has been removed or rendered inoperative by any person.

AMONG THOSE ACTS PRESUMED TO CONSTITUTE TAMPERING ARE THE ACTS LISTED BELOW:

- Removing or puncturing the muffler, baffles, header pipes, screen type spark arrester (if equipped) or any other component which conducts exhaust gases.
- Removing or puncturing the air cleaner case, air cleaner cover, baffles or any other component which conducts intake air.
- Replacing the exhaust system or muffler with a system or muffler not marked with the same model specific code as the code listed on the Motorcycle Noise Emission Control Information label.

PAIR (AIR SUPPLY) SYSTEM AND EMISSION CONTROL SYSTEM INSPECTION

PAIR HOSES

- Inspect the PAIR hoses for wear or damage.
- Inspect the PAIR hoses is securely connected.

PAIR REED VALVE

- Remove the cylinder head cover.
- Remove the PAIR reed valve ① from the gasket.

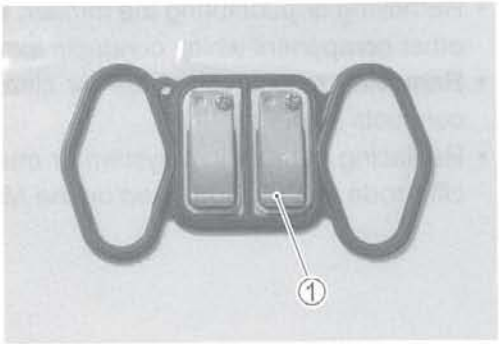

- Inspect the reed valve for the carbon deposit.
- If the carbon deposit is found in the reed valve, replace the PAIR reed valve with a new one.

- Set the new gasket to the PAIR reed valve as shown.

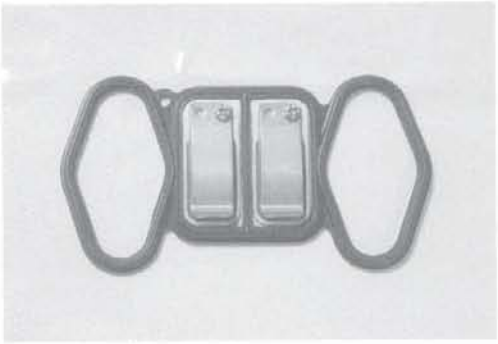

PCV HOSE

- Remove the PCV hose from the crankcase breather cover.
- Inspect the PCV hose for wear or damage.
- If it is worn or damaged, replace the PCV hose with a new one.

PAIR CONTROL SOLENOID VALVE

- Remove the air cleaner box. (☞5-14)
- Disconnect the PAIR control solenoid valve lead wire coupler ① and PAIR hoses.
- Remove the PAIR control solenoid valve ②.

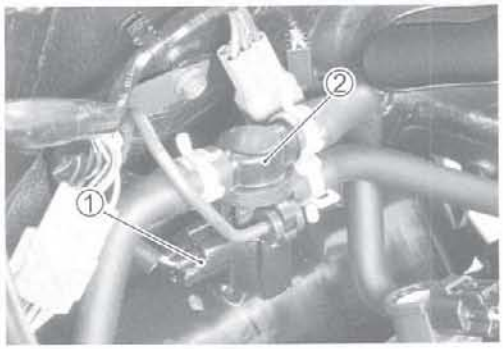

- Check that air flows through the air inlet port to the air outlet port.
- If air does not flow out, replace the PAIR control solenoid valve with a new one.

Ⓐ Air flow

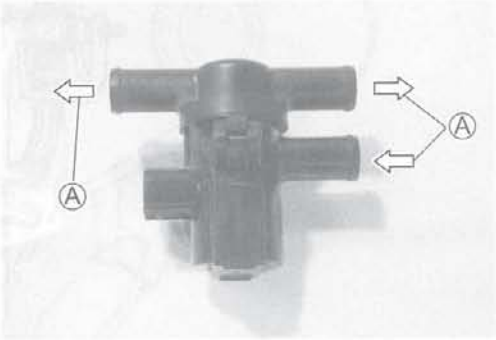

- Connect the 12 V battery to the PAIR control solenoid valve terminals and check the air flow.
- If air does not flow out, the solenoid valve is in normal condition.

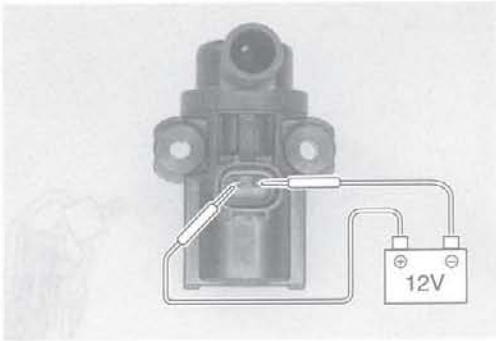

- Check the resistance between the terminals of the PAIR control solenoid valve.

DATA Resistance: 18 – 22 Ω at 20 – 30 °C (68 – 86 °F)

TOOL 09900-25008: Multi-circuit tester set

Tester knob indication: Resistance (Ω)

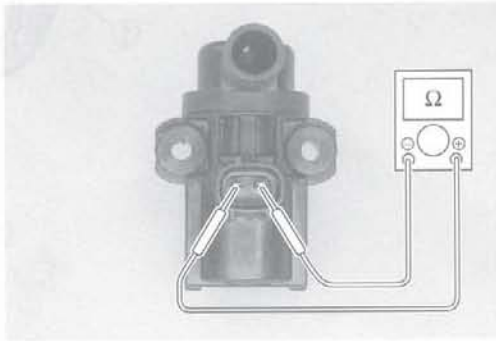

If the resistance is not within the standard range, replace the PAIR control solenoid valve with a new one.

Installation is in the reverse order of removal.

- Connect the PAIR control solenoid valve lead wire coupler and PAIR hoses securely.

PAIR (AIR SUPPLY) SYSTEM DIAGRAM

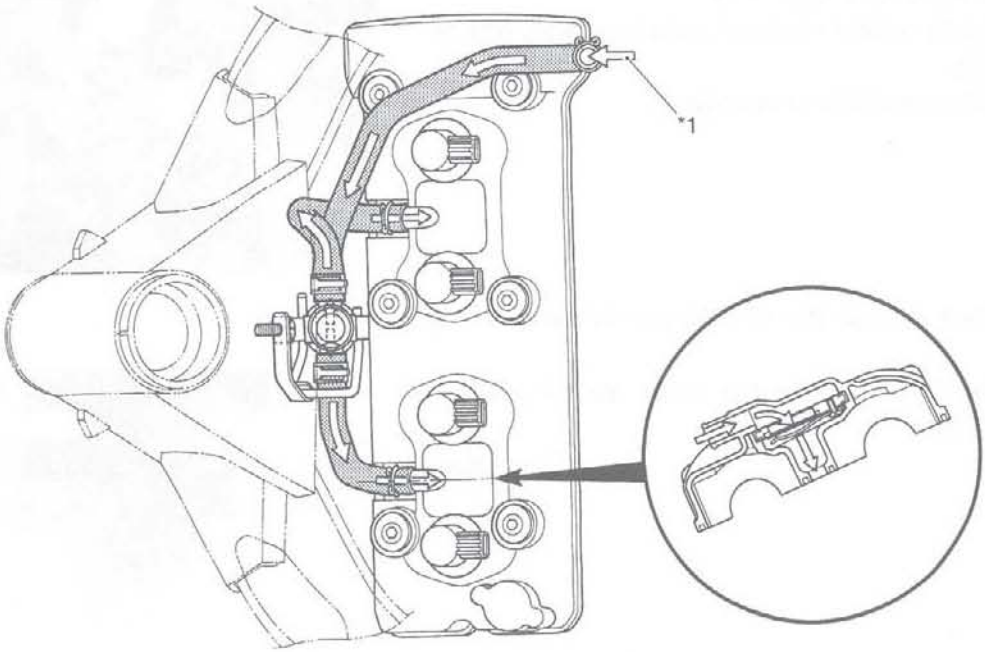

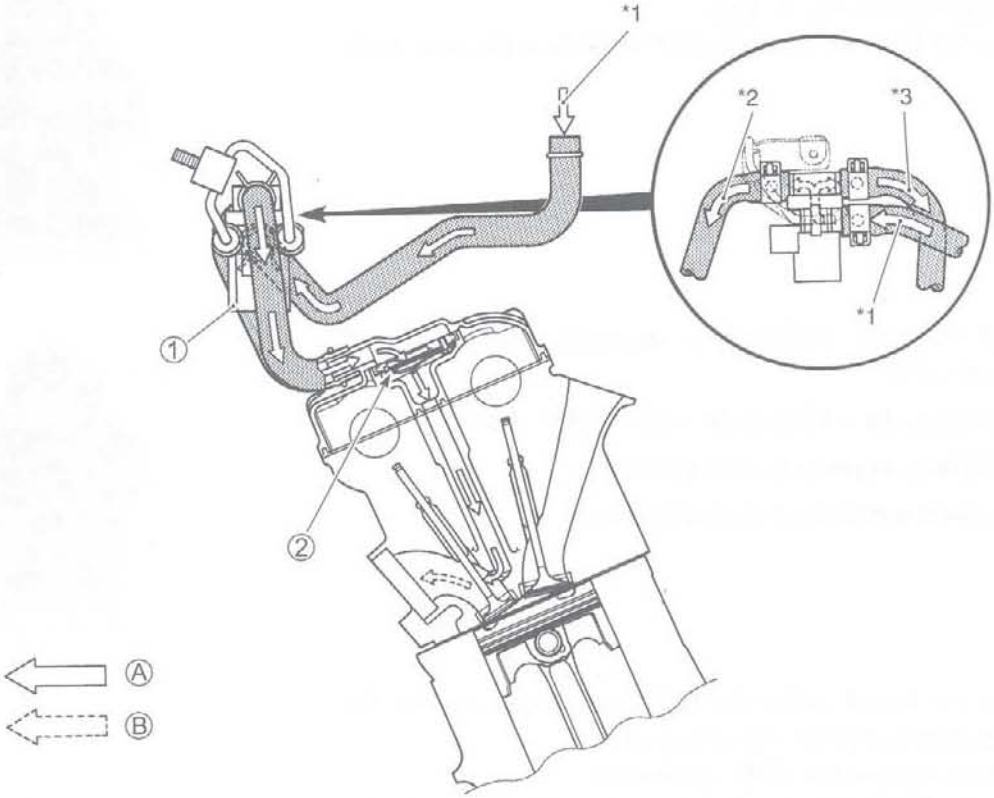

①	PAIR control solenoid valve	*1	From air cleaner.
②	PAIR reed valve	*2	To #1 and #2 cylinders.
Ⓐ	FRESH AIR	*3	To #3 and #4 cylinders.
Ⓑ	EXHAUST GAS		

PAIR (AIR SUPPLY) SYSTEM HOSE ROUTING

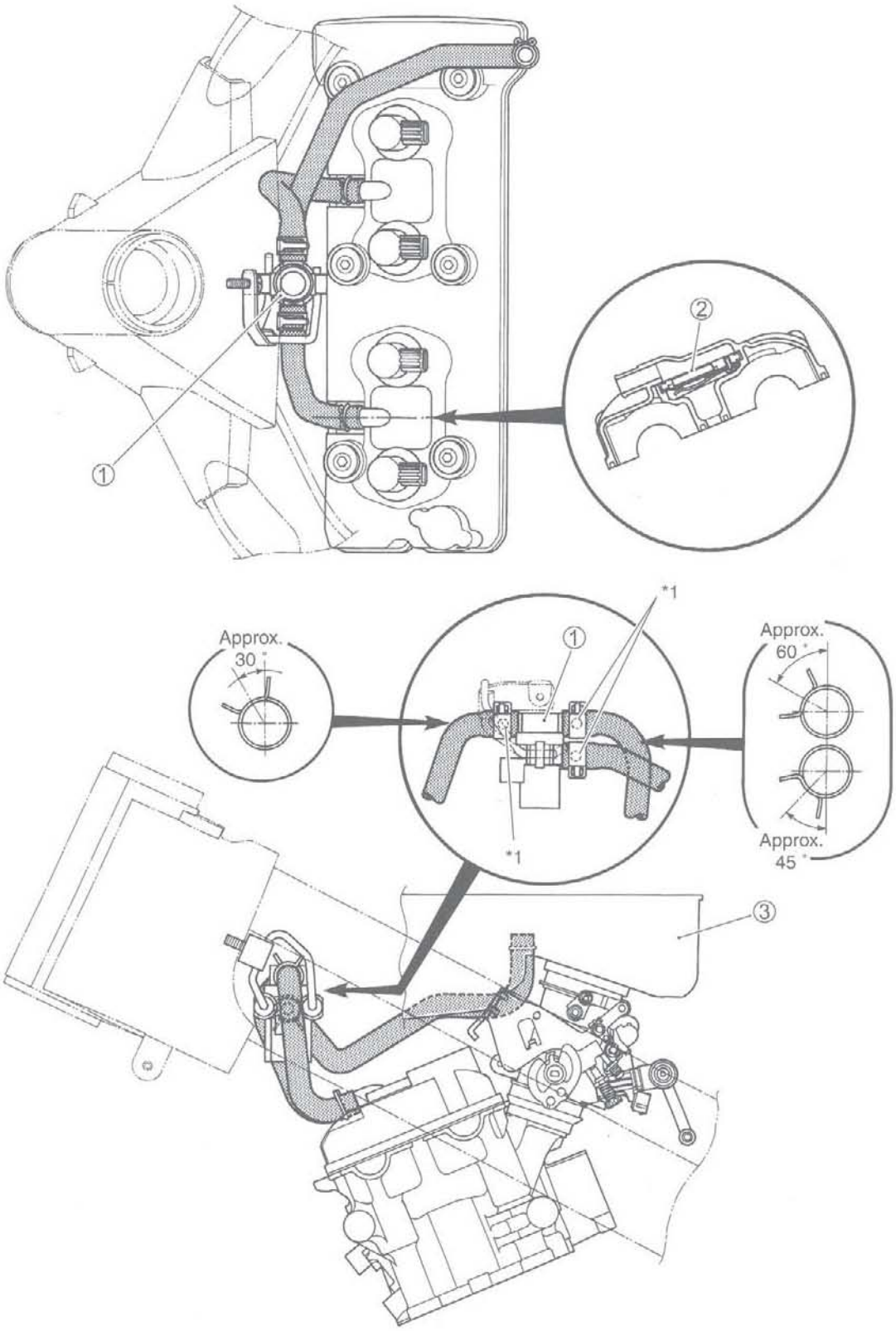

①	PAIR control solenoid valve	③	Air cleaner box
②	PAIR reed valve	*1	Matching mark (Yellow)

WIRING DIAGRAM

E-02, 19

Wiring diagrams wire color, refer to section "WIRE COLOR".

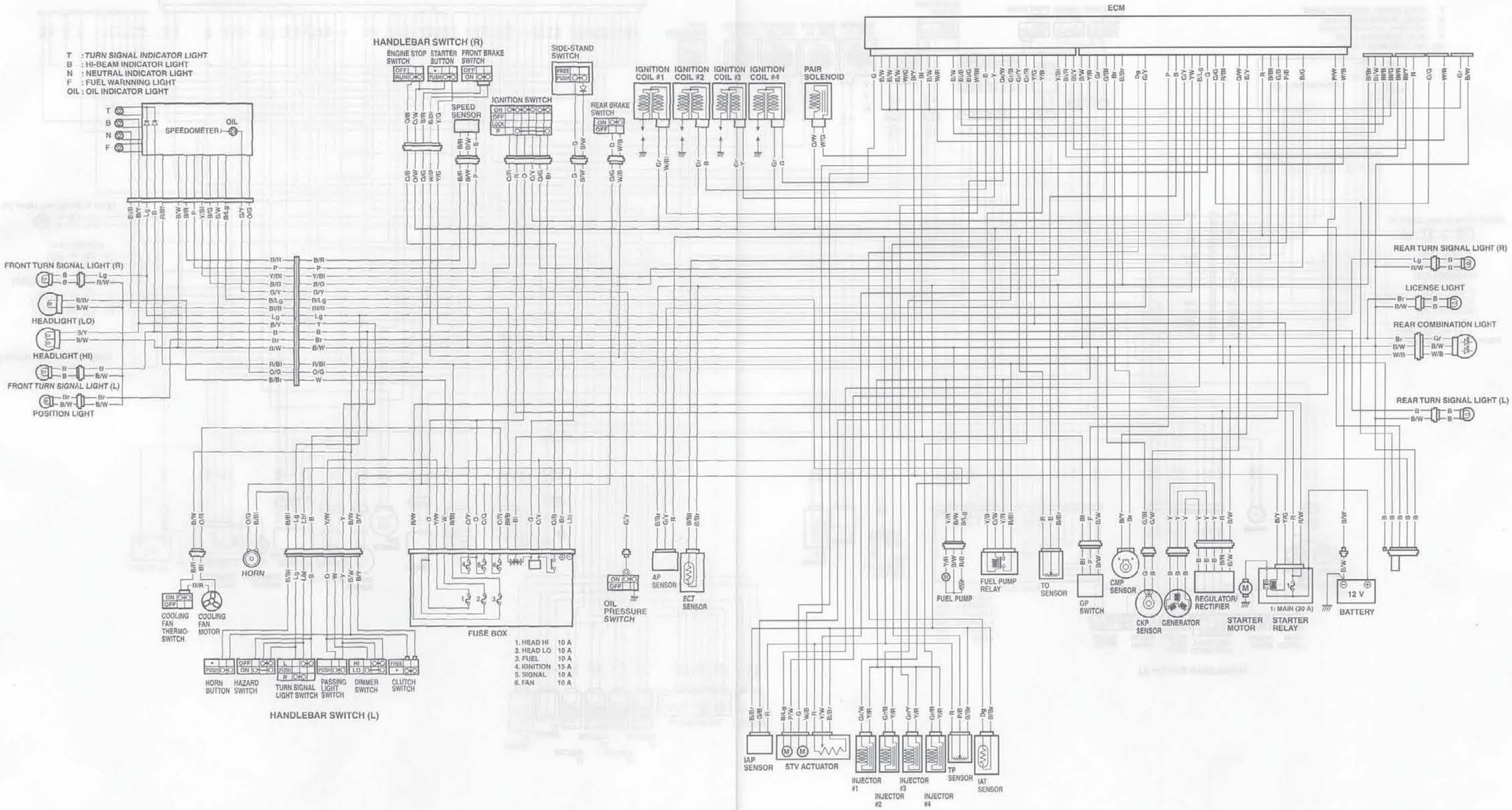

E-03, 24, 28, 33

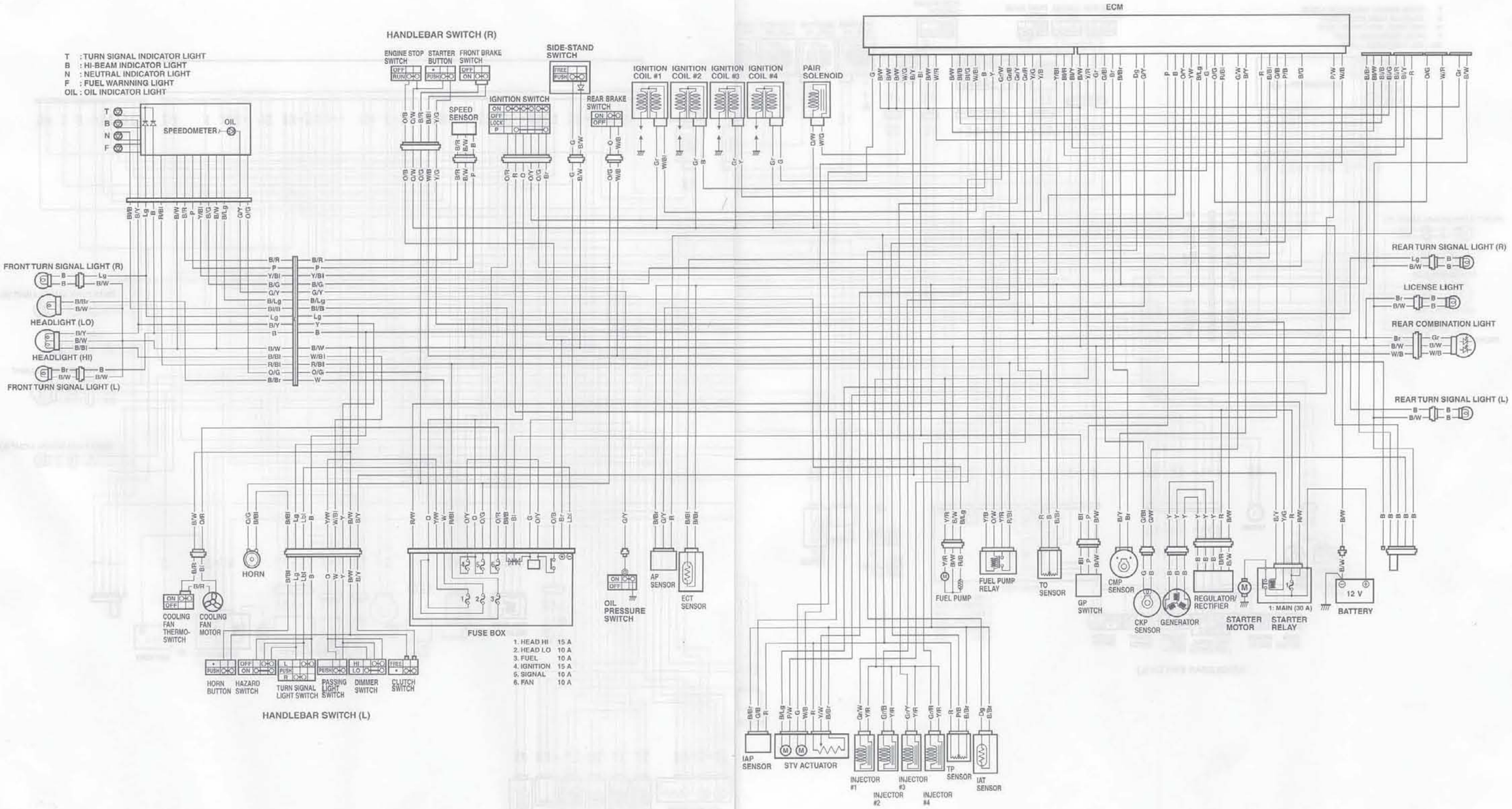
T : TURN SIGNAL INDICATOR LIGHT
B : HI-BEAM INDICATOR LIGHT
N : NEUTRAL INDICATOR LIGHT
F : FUEL WARNNING LIGHT
OIL : OIL INDICATOR LIGHT
SPEEDOMETER
HANDLEBAR SWITCH (R)
ENGINE STOP SWITCH
STARTER BUTTON
FRONT BRAKE SWITCH
SIDE-STAND SWITCH
SPEED SENSOR
IGNITION SWITCH
REAR BRAKE SWITCH
IGNITION COIL #1
IGNITION COIL #2
IGNITION COIL #3
IGNITION COIL #4
PAIR SOLENOID
ECM
FRONT TURN SIGNAL LIGHT (R)
HEADLIGHT (LO)
HEADLIGHT (HI)
FRONT TURN SIGNAL LIGHT (L)
REAR TURN SIGNAL LIGHT (R)
LICENSE LIGHT
REAR COMBINATION LIGHT
REAR TURN SIGNAL LIGHT (L)
HORN
COOLING FAN THERMO-SWITCH
COOLING FAN MOTOR
FUSE BOX
1. HEAD HI 15 A
2. HEAD LO 10 A
3. FUEL 10 A
4. IGNITION 15 A
5. SIGNAL 10 A
6. FAN 10 A
OIL PRESSURE SWITCH
AP SENSOR
ECT SENSOR
FUEL PUMP
FUEL PUMP RELAY
TO SENSOR
GP SWITCH
CMP SENSOR
CKP SENSOR
GENERATOR
REGULATOR/ RECTIFIER
STARTER MOTOR
1: MAIN (30 A)
STARTER RELAY
12 V
BATTERY
HORN BUTTON
HAZARD SWITCH
TURN SIGNAL LIGHT SWITCH
PASSING LIGHT SWITCH
DIMMER SWITCH
CLUTCH SWITCH
HANDLEBAR SWITCH (L)
IAP SENSOR
STV ACTUATOR
INJECTOR #1
INJECTOR #2
INJECTOR #3
INJECTOR #4
TP SENSOR
IAT SENSOR