Introduction

This service manual describes the service procedures for the CBR1000F.

This Model Specific Manual includes every service procedure that is of a specific nature to this particular model. Basic service procedures that are common to other Honda Motorcycle/Motor Scooter/ATVs are covered in the Common Service Manual. This Model Specific Service Manual should be used together with the Common Service Manual in order to provide complete service information on all aspects of this motorcycle.

Performing the first scheduled maintenance is very important. It compensates for the initial wear that occurs during the break-in period.

Sections 1 and 3 apply to the whole motorcycle. Section 2 illustrates procedures for removal/installation of components that may be required to perform service described in the following sections.
Sections 4 through 17 describe parts of the motorcycle, grouped according to location.

Find the section you want on this page, then turn to the table of contents on the first page of the section.

Most sections describe the service procedure through system illustration. Refer to the next page for detail on how to use this manual.

If you are not familiar with this motorcycle, read Technical Feature in section 19.
If you don't know the source of the trouble, go to section 20 Troubleshooting.

All information, illustrations, directions and specifications included in this publication are based on the latest product information available at the time of approval for printing. Honda Motor Co.,LTD. reserves the right to make changes at any time without notice and without incurring any obligation whatever. No part of this publication may be reproduced without written permission. This manual is written for persons who have acquired basic knowledge of maintenance on Honda motorcycles, motor scooters or ATVs.

HONDA MOTOR CO., LTD.
Service Publications Office

Contents

Date of Issue: December, 1992

Important Safety Notice

⚠ WARNING **Indicates a strong possibility of severe personal injury or death if instructions are not followed.**

CAUTION: **Indicates a possibility of personal injury or equipment damage if instructions are not followed.**

NOTE: Gives helpful information.

Detailed descriptions of standard workshop procedures, safety principles and service operations are not included. It is important to note that this manual contains some warnings and cautions against some specific service methods which could cause PERSONAL INJURY to service personnel or could damage a vehicle or render it unsafe. Please understand that those warnings could not cover all conceivable ways in which service, whether or not recommended by Honda, might be done or of the possibly hazardous consequences of each conceivable way, nor could Honda investigate all such ways. Anyone using service procedures or tools, whether or not recommended by Honda,must satisfy himself thoroughly that neither personal safety nor vehicle safety will be jeopardized by the service method or tools selected.

Type Codes

• Throughout this manual, the following abbreviations are used to identify individual model.

Code	Area Type
ED	European direct sales
E	U.K.
F	France
G (GI/GII)	Germany (Full power/Limited power)
U	Australia
ND	North Europe
SW	Switzerland
IT	Italy
H	Netherland
AR	Austria
SP	Spain

How To Use This Manual

Finding The Information You Need

- This manual is devided into sections which cover each of the major components of the motorcycle.
  To quickly find the section you are interested in, the first page of each sections is marked with a black tab that lines up with one of the thumb index tabs before this page.
  The first page of each section lists the table of contents within the section.
  Read the service information and troubleshooting related to the section before you begin working.
- An index of the entire book is provided in the last chapter to directly locate the information you need.

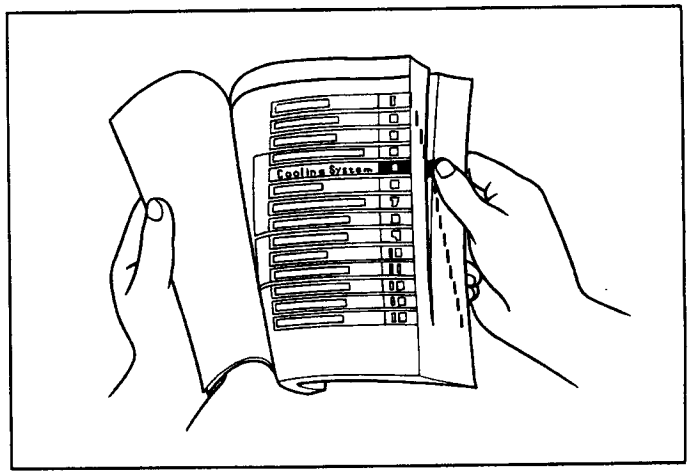

Note On The Explanation Method Of This Manual

- The removal and installation of parts are for the most part illustrated by large and clear illustrations that should provide the reader with visual aid in understanding the major point for servicing.
- The system illustrations are augmented by call outs whose numbers or letters indicate the order in which the parts should be removed or installed.
- The sequence of steps represented numerically are differentiated from the ones represented alphabetically to notify the reader that they must perform these steps seperately.
  For example, if the steps prior and up to camshaft removal are performed with the engine installed, but the subsequent steps like cylinder head removal require engine removal, the callouts are grouped in numerical and alphabetical orders.
- The illustrations may contain symbols to indicate necessary service procedures and precautions that need to be taken.
  Refer to the next page for the meaning of each symbol.
- Also in the illustration is a chart that lists information such as the order in which the parts is removed/installed, the name of the part, and some extra notes that may needed.
- Step by step instructions are provided to supplement the illustrations when datailed explanation of the procedure is necessary or illustrations alone would not suffice.
- Service procedures required before or after the procedure described on that particular page, or inspection/adjustment procedures required following the installation of parts, are described under the title Requisite Service.
- Standard workshop procedures and knowledge covered in the Common Service Manual are abbreviated in this manual.

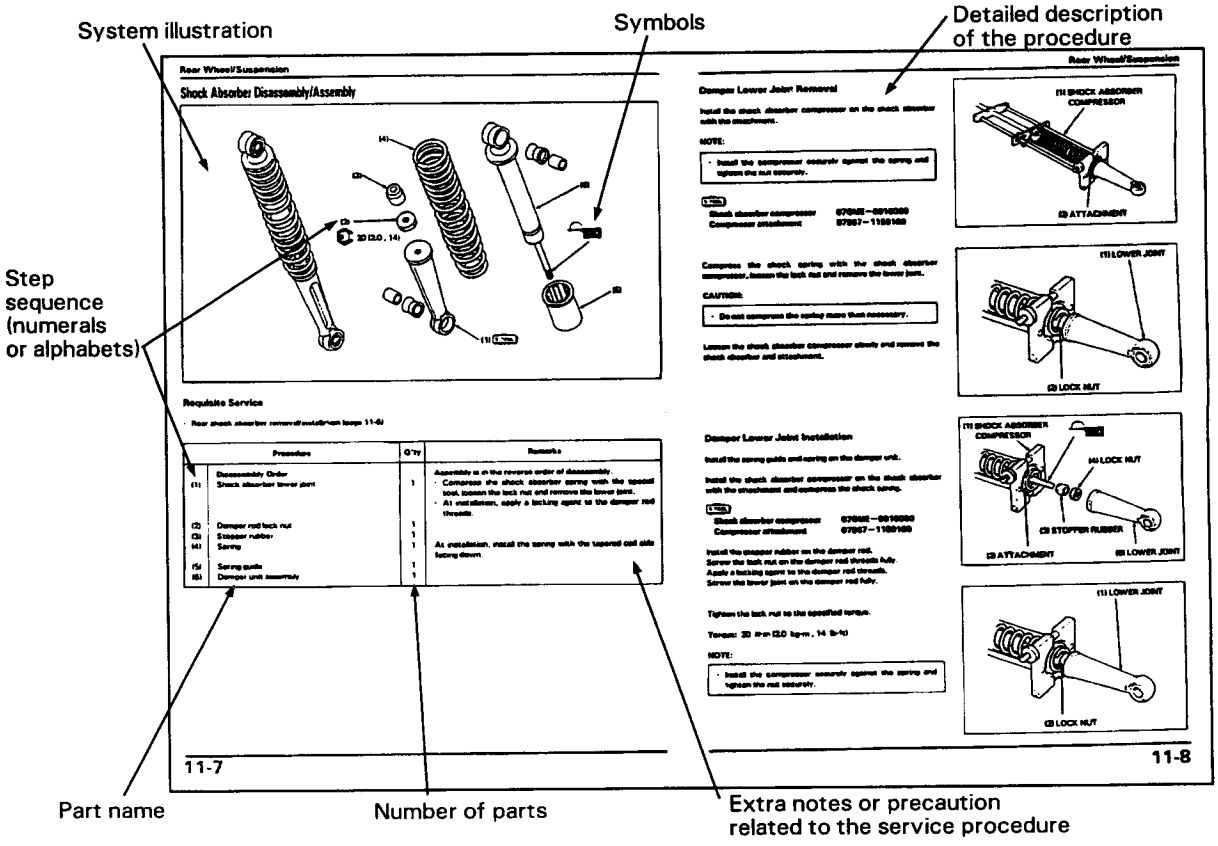

Symbols

The symbols used throughout this manual show specific service procedures. If supplementary information is required pertaining to these symbols, it would be explained specifically in the text without the use of the symbols.

NEW	Replace the part (s) with new one (s) before assembly.
S. TOOL	Use special tool.
O.P. TOOL	Use optional tool. These tools are obtained as you order parts.
10 (1.0, 7)	Torque specification. 10 N•m (1.0 kg-m, 7 ft-lb)
OIL	Use recommended engine oil, unless otherwise specified.
Mo. OIL	Use molybdenum oil solution (mixture of the engine oil and molybdenum grease with the ratio 1 : 1).
GREASE	Use multi-purpose grease (Lithium Based multi-purpose grease NLGI #2 or equivalent).
M	Use molybdenum disulfide grease (containing more than 3% molybdenum disulfide, NLGI #2 or equivalent). Example: Molykote®BR-2 plus manufactured by Dow Corning, U.S.A. Multi-purpose M-2 manufactured by Mitsubishi Oil Japan
MP	Use molybdenum disulfide paste (containing more than 40% molybdenum disulfide, NLGI #2 or equivalent). Example: Molykote®G-n Paste manufactured by Dow Corning, U.S.A. Honda Moly 60 (U.S.A. only) Rocol ASP manufactured by Rocol Limited, U.K. Rocol Paste manufactured by Sumico Lubricant, Japan
S	Use silicone grease.
LOCK	Apply a locking agent. Use the agent of the middle strength, unless otherwise specified.
SEAL	Apply sealant.
BRAKE FLUID	Use brake fluid DOT 4. Use the recommended brake fluid, unless otherwise specified.
FORK	Use Fork or Suspension Fluid.

1. General Information

General Safety

Carbon Monoxide
If the engine must be running to do some work, make sure the area is well ventilated. Never run the engine in an enclosed area.

⚠WARNING

- **The exhaust contains poisonous carbon monoxide gas that can cause loss of consciousness and may lead to death.**

Run the engine in an open area or with an exhaust evacuation system in an enclosed area.

Gasoline
Work in a well ventilated area. Keep cigarettes, flames or sparks away from the work area or where gasoline is stored.

⚠WARNING

- **Gasoline is extremely flammable and is explosive under certain conditions. KEEP OUT OF REACH OF CHILDREN.**

Hot Components

⚠WARNING

- **Engine and exhaust system parts become very hot and remain hot for some time after the engine is run. Wear insulated gloves or wait until the engine and exhaust system have cooled before handling these parts.**

Used Engine/Transmission Oil

⚠WARNING

- **Used engine oil may cause skin cancer if repeatedly left in contact with the skin for prolonged periods. Although this is unlikely unless you handle used oil on a daily basis, it is still advisable to thoroughly wash your hands with soap and water as soon as possible after handling used oil. KEEP OUT OF REACH OF CHILDREN.**

Brake Dust
Never use an air hose or dry brush to clean brake assemblies.

⚠WARNING

- **Inhaled asbestos fibers have been found to cause respiratory disease and cancer.**

Brake Fluid

CAUTION

- **Spilling fluid on pained, plastic or rubber parts will damage them. Place a clean shop towel over these parts whenever the system is serviced. KEEP OUT OF REACH OF CHILDREN.**

Coolant

Under some conditions, the ethylene glycol in engine coolant is combustible and its flame is not visible. If the ethylene glycol does ignite, you will not see any flame, but you can be burned.

⚠ WARNING

- **Avoid spilling engine coolant on the exhaust system or engine parts. They may be hot enough to cause the coolant to ignite and burn without a visible flame.**
- **Coolant (ethylene glycol) can cause some skin irritation and is poisonous if swallowed, KEEP OUT OF REACH OF CHILDREN.**
- **Keep out of reach of pets. Some pets are attracted to the smell and taste of coolant and can die if they drink it.**
- **Do not remove the radiator cap when the engine is hot. The coolant is under pressure and could scald you.**

If it contacts your skin, wash the affected areas immediately with soap and water. If it contacts your eyes, flush them thoroughly with fresh water and get immediate medical attention. If it is swallowed, the victim must be forced to vomit then rinse mouth and throat with fresh water before obtaining medical attention. Because of these dangers, always store coolant in a safe place, away from the reach of children. Recycle used coolant in an ecologically correct manner.

Nitrogen Pressure

For shock absorber with a gas-filled reservoir.

⚠ WARNING

- **Use only nitrogen to pressurize the shock absorber. The use of an unstable gas can cause a fire or explosion resulting in serious injury.**
- **The shock absorber contains nitrogen under high pressure. Allowing fire or heat near the shock absorber could lead to and explosion that could result in serious injury.**
- **Failure to release the pressure from a shock absorber before disposing of it may lead to a possible explosion and serious injury if it is heated or pierced.**

To prevent the possibility of an explosion, release the nitrogen by pressing the valve core. Then remove the valve stem from the shock absorber reservoir.

Before disposal of the shock absorber, release the nitrogen by pressing the valve core. Then remove the valve stem from the shock absorber.

Battery Hydrogen Gas & Electrolyte

⚠ WARNING

- **The battery gives off explosive gases; keep sparks, flames and cigarettes away. Provide adequate ventilation when charging.**
- **The battery contains sulfuric acid (electrolyte). Contact with skin or eyes may cause severe burns. Wear protective clothing and a face shield.**
  - **If electrolyte gets on your skin, flush with water.**
  - **If electrolyte gets in your eyes, flush with water for at least 15 minutes and call a physician.**
- **Electrolyte is poisonous.**
  - **If swallowed, drink large quantities of water or milk and follow with milk of magnesia or vegetable oil and call a physician. KEEP OUT OF REACH OF CHILDREN.**

Model Identification

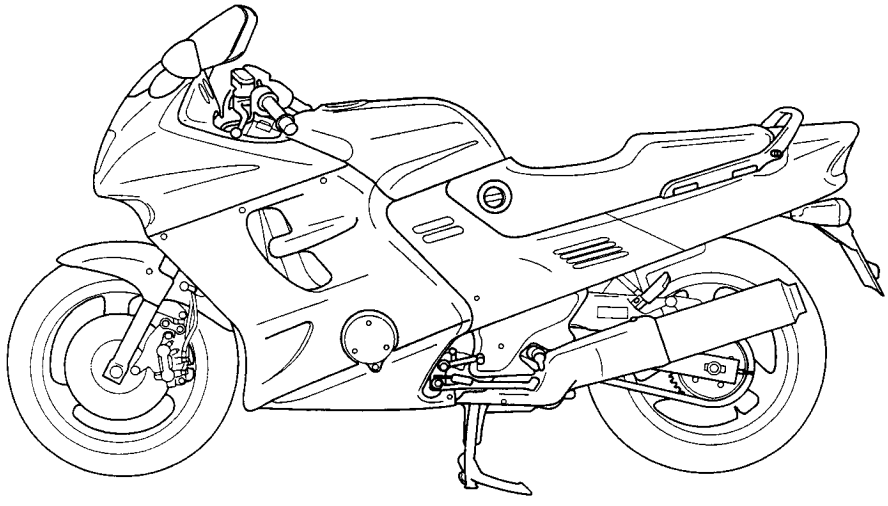

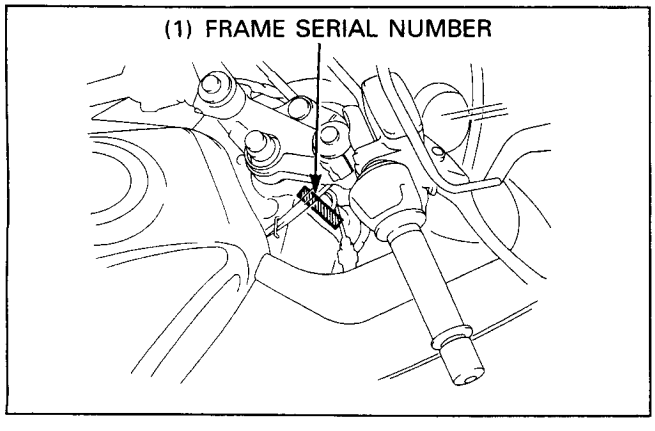

(1) The frame serial number is stamped on the right side of the steering head.

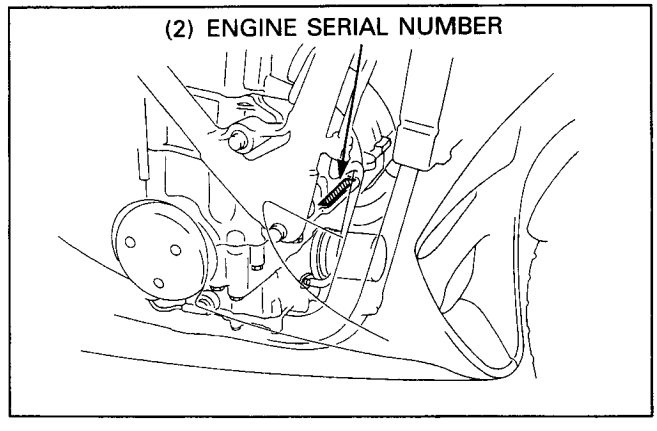

(2) The engine serial number is stamped on the front of the crankcase.

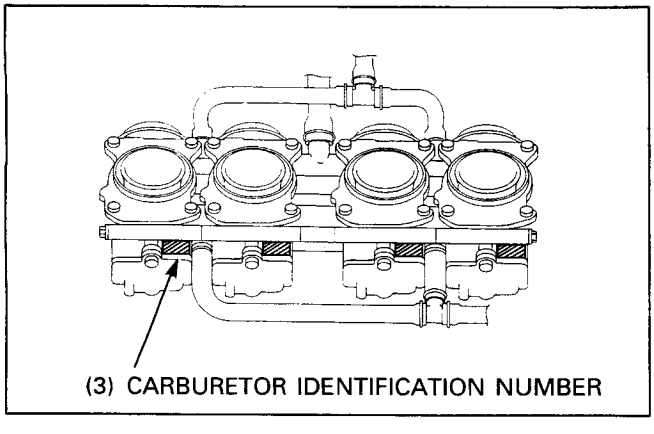

(3) The carburetor identification number is stamped on the rear side of each carburetor.

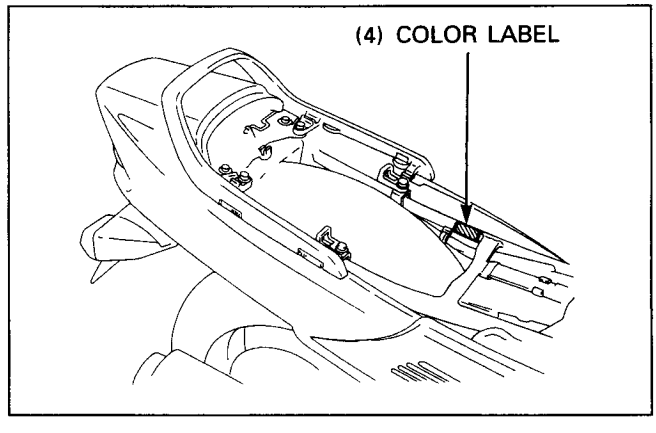

(4) The color label is attached as shown. When ordering color-coded parts, always specify the designated color code.

Specifications

General

	Item	Specifications
Dimensions	Overall length (G, SW, IT, ND type)	2,235 mm (88.0 in)
	(ED, E, F, AR, SP, U type)	2,270 mm (89.4 in)
	Overall width	740 mm (29.1 in)
	Overall height	1,215 mm (47.8 in)
	Wheel base	1,500 mm (59.1 in)
	Seat height	780 mm (30.7 in)
	Footpeg height	355 mm (14.0 in)
	Ground clearance	140 mm (5.5 in)
	Dry weight	235 kg (518 lbs)
	Curb weight	271 kg (597 lbs)
	Maximum weight capacity	185 kg (408 lbs)
Frame	Frame type	Diamond
	Front suspension	Telescopic fork
	Front wheel travel	130 mm (5.1 in)
	Rear suspension	Swingarm
	Rear wheel travel	115 mm (4.5 in)
	Rear damper	Nitrogen gas filled damper
	Front tire size	120/70 VR17–V270
	Rear tire size	170/60 VR17–V270
	Tire brand (Bridgestone) FR/RR	CYROX19E/CYROX16E (Except AR type)
	Tire brand (Dunlop) FR/RR	K510A/K510B
	Front brake	Hydraulic double disc brake
	Rear brake	Hydraulic single disc brake
	Caster angle	27°
	Trail length	110 mm (4.3 in)
	Fuel tank capacity	22 liter (5.81 US gal, 4.84 Imp gal)
	Fuel tank reserve capacity	3.5 liter (0.91 US gal, 0.77 Imp gal)
Engine	Bore and stroke	77.0 x 53.6 mm (3.03 x 2.11 in)
	Displacement	998 cm³ (60.9 cu-in)
	Compression ratio	10.5 : 1
	Valve train	Chain drive and DOHC
	Intake valve opens at 1 mm lift	15° BTDC (E, G type); 0° BTDC (SW, AR type); 5° BTDC (F type)
	Intake valve closes at 1 mm lift	38° ABDC (E, G type); 40° ABDC (SW, AR type); 30° ABDC (F type)
	Exhaust valve opens at 1 mm lift	40° BBDC (E, G type); 40° BBDC (SW, AR type); 40° BBDC (F type)
	Exhaust valve closes at 1mm lift	10° ATDC (E, G type); 0° ATDC (SW, AR type); 10° ATDC (F type)
	Lubrication system	Forced pressure and wet sump
	Oil pump type	Trochoid
	Cooling system	Liquid cooled
	Air filtration	Paper filter
	Crankshaft type	Unit type, 6 main journals
	Engine weight	94.7 kg (209 lbs)
	Firing order	1 – 2 – 4 – 3
	Cylinder arrangement	4 cylinder, inline
	Cylinder number	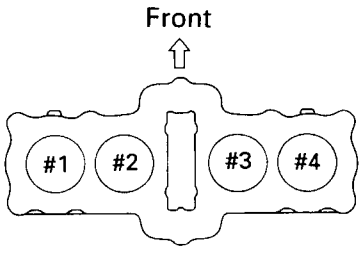

General (Cont'd)

Item		Specifications
Carburetor	Carburetor type Throttle bore	CV (Constant Velocity) type, with flat valve 38 mm (1.5 in)
Drive Train	Clutch system Clutch operation system Transmission Primary reduction Final reduction Gear ratio 1st Gear ratio 2nd Gear ratio 3rd Gear ratio 4th Gear ratio 5th Gear ratio 6th Gearshift pattern	Multi-plate, wet Hydraulic operating 6-speeds constant mesh 1.785 (75/42) 2.470 (42/17) 2.750 (33/12) 2.066 (31/15) 1.647 (28/17) •1.368 (26/19) 1.173 (27/23) 1.045 (23/22) Left foot operated, return system 1 – N – 2 – 3 – 4 – 5 – 6
Electrical	Ignition system Starting system Charging system Regulator/rectifier type Lighting system	Full transistor digital ignition Electric starter motor Triple phase output alternator Transistor opened/triple phase, full-wave rectification Battery

Unit: mm (in)

Lubrication System

Item	Standard	Service Limit
Engine oil capacity at draining	3.6 liter (3.78 US qt, 3.17 Imp qt)	——
at disassembly	4.5 liter (4.76 US qt, 3.96 Imp qt)	——
at oil filter change	3.8 liter (4.02 US qt, 4.43 Imp qt)	——
Recommended engine oil	Use Honda 4-stroke oil or equivalent API Service Classification: SE, SF or SG viscosity: SAE 10W–40 Other viscosities shown in the chart may be used when the average temperature in your riding area is within the indicated range.	——
Oil pressure at oil pressure switch	588–686 kPa (6.0–7.0kg/cm², 85–100 psi) at 5,000 min^{-1} (rpm) (80°C/176°F)	——
Oil pump rotor tip clearance ①	0.15 (0.006)	0.20 (0.008)
body clearance ②	0.15–0.22 (0.006–0.009)	0.35 (0.014)
end clearance ③	0.02–0.07 (0.001–0.003)	0.10 (0.004)

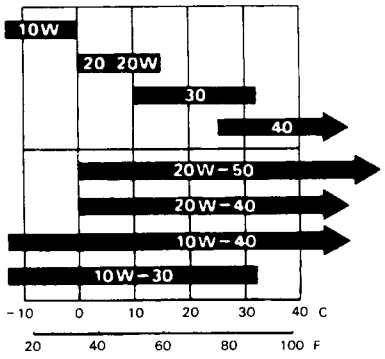

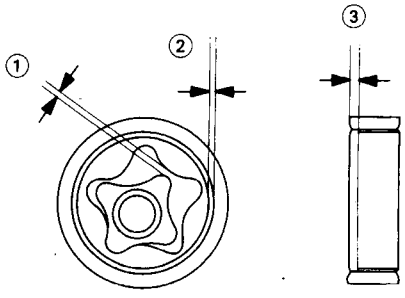

Fuel System

Carburetor identification number		——
(G type)	VP83A	——
(ED, E, ND, SP, IT, U type)	VP83B	——
(F type)	VP83C	——
(SW type)	VP85A	——
(AR type)	VP85B	——
Main jet	#122	——
Slow jet (ED, E, F, ND, SP, IT, U type)	#42	——
(G, SW, AR type)	#40	——
Pilot screw initial opening (Except SW, AR type)	3 turns out	——
(SW type)	1–3/4 turns out	——
(AR type)	2–5/8 turns out	——
Float level	13.7 (0.54)	——
Carburetor vacuum difference	20 mm Hg (0.8 in Hg)	——
Base carburetor (For carburetor synchronization)	No.3	——
Idle speed (Except SW, AR type)	1,000 ± 100 min^{-1} (rpm)	——
(SW type)	1,050 ± 50 min^{-1} (rpm)	——
(AR type)	1,050 ± 100 min^{-1} (rpm)	——
Throttle grip free play	2–6 (0.08–0.24)	——
Secondary air supply system (SW, AR type)	Reed valves are built into the ASV	——
Air injection control valve vacuum pressure (SW, AR type)	420 mm Hg (16.5 in Hg)	——

Unit: mm (in)

Cooling System

Item	Standard	Service Limit
Coolant capacity (Radiator and engine)	2.6 liter (2.75 US qt, 2.29 Imp qt)	——
(Reserve tank)	0.4 liter (0.42 US qt, 0.35 Imp qt)	——
Radiator cap relief pressure	108–137 kPa (1.1–1.4 kg/cm², 16–20 psi)	——
Thermostat begins to open	80°–84°C (176–183°F)	——
Thermostat fully open	95°C (203°F)	——
Thermostat valve lift	8.0 (0.32) minimun	——

Cylinder Head

Cylinder compression	1,050–1,450 kpa (10.5–14.4 kg/cm², 149–206 psi)/400 min⁻¹ (rpm)	——
Cylinder compression synchronization difference	40 mm Hg	——
Valve clearance IN	0.10 ± 0.02 (0.004 ± 0.001)	——
EX	0.18 ± 0.02 (0.007 ± 0.001)	——
Cylinder head warpage	——	0.07 (0.003)
Cam lobe height ① IN (ED, E, G, ND, SP, IT, U type)	35.668–35.748 (1.4042–1.4074)	35.62 (1.402)
IN (F type)	33.352–33.432 (1.3131–1.3162)	33.30 (1.311)
IN (SW, AR type)	34.907–34.987 (1.3743–1.3774)	34.85 (1.372)
EX (ED, E, G, ND, SP, IT, U type)	35.540–35.620 (1.3992–1.4024)	35.49 (1.397)
EX (F type)	35.540–35.620 (1.3992–1.4024)	35.49 (1.397)
EX (SW, AR type)	34.835–34.915 (1.3715–1.3746)	34.79 (1.370)
Camshaft runout	——	0.03 (0.001)
Camshaft oil clearane A	0.020–0.062 (0.0008–0.0024)	0.12 (0.005)
B	0.050–0.092 (0.0020–0.0036)	0.14 (0.006)

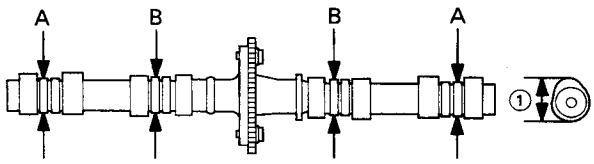

Camshshaft journal O.D A (Except F type)	27.959–27.980 (1.1007–1.1016)	——
A (F type)	27.459–27.480 (1.0811–1.0819)	——
B (Except F type)	27.929–27.950 (1.0996–1.1004)	——
B (F type)	27.421–27.450 (1.0796–1.0807)	——
Valve stem O.D. IN	5.475–5.490 (0.2156–0.2161)	5.47 (0.215)
EX	5.455–5.470 (0.2148–0.2154)	5.45 (0.215)
Valve guide I.D. IN	5.500–5.512 (0.2165–0.2170)	5.55 (0.219)
EX	5.500–5.512 (0.2165–0.2170)	5.55 (0.219)
Stem-to-guide clearance IN	0.010–0.037 (0.0004–0.0015)	——
EX	0.030–0.057 (0.0012–0.0022)	——
Valve guide projection above cylinder head IN	17.8–18.0 (0.70–0.71)	——
EX	17.8–18.0 (0.70–0.71)	——

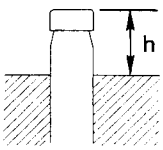

Before guide installation:
1. Chill the valve guides in the freezer section of the refrigerator for about an hour.
2. Heat the cylinder head to 100–150°C (212–300°F)

Valve seat width	0.9–1.1 (0.035–0.043)	1.5 (0.6)
Valve spring free length inner IN	43.15 (1.699)	41.8 (1.65)
inner EX	43.15 (1.699)	41.8 (1.65)
outer IN	47.08 (1.854)	45.7 (1.80)
outer EX	47.08 (1.854)	45.7 (1.80)

Unit: mm (in)

Cylinder/Piston

Item	Standard	Service Limit
Cylinder I.D.	77.000–77.010 (3.0315–3.0319)	77.10 (3.305)
Cylinder out of round	———	0.05 (0.002)
Cylinder taper	———	0.05 (0.002)
Cylinder warpage	———	0.05 (0.002)
Piston mark direction	"IN" mark facing toward the intake side	———
Piston O.D. (D)	76.970–76.990 (3.0303–3.0311)	76.87 (3.026)
Piston O.D. measurement point (H)	15 mm (0.6 in) from the bottom	———
Piston pin hole I.D. (d)	20.002–20.008 (0.7875–0.7877)	20.06 (0.790)
Cylinder-to-piston clearance	0.010–0.040 (0.0004–0.0016)	0.10 (0.004)
Piston pin O.D.	19.994–20.000 (0.7872–0.7874)	19.98 (0.787)
Piston-to-piston pin clearance	0.002–0.014 (0.0001–0.0006)	0.04 (0.002)
Connecting rod-to piston pin clearance	0.016–0.040 (0.0006–0.0016)	0.06 (0.002)
Top ring-to-ring groove clearance	0.025–0.055 (0.0010–0.0022)	0.09 (0.004)
Second ring-to-ring groove clearance	0.015–0.045 (0.0006–0.0018)	0.10 (0.004)
Top Ring end gap	0.250–0.400 (0.0100–0.0157)	0.58 (0.023)
Second Ring end gap	0.320–0.470 (0.0126–0.0185)	0.65 (0.026)
Oil ring (side rail) end gap	0.300–0.900 (0.0118–0.0354)	1.10 (0.043)
Top ring mark	Marking side facing up	———
Second ring mark	Marking side facing up	———

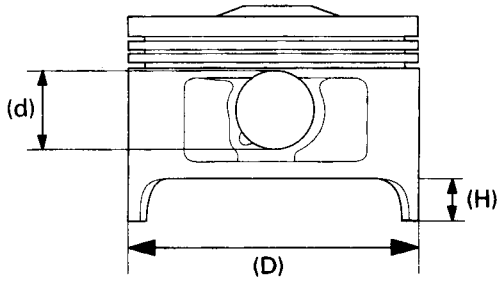

Clutch System

Recommended clutch fluid	DOT 4 brake fluid	———
Clutch master cylinder I.D.	14.000–14.043 (0.5512–0.5529)	14.06 (0.554)
Clutch master piston O.D.	13.957–13.984 (0.5495–0.5506)	13.94 (0.549)
Clutch outer I.D.	47.005–47.030 (1.8506–1.8516)	47.10 (1.854)
Clutch outer guide I.D.	27.995–28.012 (1.1022–1.1028)	28.08 (1.106)
Mainshaft O. D. at clutch outer guide	27.980–27.993 (1.1016–1.1021)	27.97 (1.101)
Clutch spring free length	46.7 (1.839)	44.7 (1.76)
Clutch disc thickness A	3.42–3.58 (0.135–0.141)	3.1 (0.12)
B	3.72–3.33 (0.146–0.153)	3.1 (0.12)
Clutch plate warpage	———	0.30 (0.012)

Transmission

Unit: mm (in)

Item	Standard	Service Limit
Transmission gear I.D. M5, M6	31.000–31.016 (1.2205–1.2211)	31.04 (1.222)
C2, C3, C4	33.000–33.016 (1.2992–1.2998)	33.04 (1.301)
Transmission gear bushing O.D. M5, M6	30.955–30.980 (1.2187–1.2197)	30.93 (1.218)
C2, C3, C4	32.955–32.980 (1.2976–1.2984)	32.93 (1.296)
Transmission gear bushing I.D. M5	27.985–28.006 (1.1018–1.1026)	28.02 (1.103)
C2	29.985–30.006 (1.1805–1.1813)	30.02 (1.182)
Gear-to-bushing clearance at M5, M6 gear	0.020–0.061 (0.0008–0.0024)	0.10 (0.004)
at C2, C3, C4 gear	0.020–0.061 (0.0008–0.0024)	0.10 (0.004)
Mainshaft O.D. at M5 gear	27.967–27.980 (0.1011–1.1016)	27.94 (1.100)
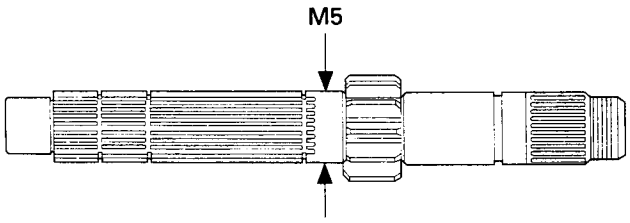		
Countershaft O.D. at C2 gear	29.950–29.975 (1.1791–1.1801)	29.92 (1.178)
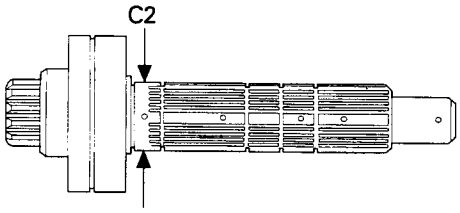		
Gear bushing-to shaft clearance at M5 gear	0.005–0.039 (0.0002–0.0015)	0.06 (0.002)
at C2 gear	0.010–0.056 (0.0004–0.0022)	0.06 (0.002)
Shift fork claw thickness L	5.43–5.50 (0.214–0.217)	5.1 (0.20)
C	6.43–6.50 (0.253–0.256)	6.1 (0.24)
R	5.43–5.50 (0.214–0.217)	5.1 (0.20)
Shift fork I.D. L	14.000–14.018 (0.5112–0.5519)	14.04 (0.553)
C	14.000–14.018 (0.5112–0.5519)	14.04 (0.553)
R	14.000–14.018 (0.5112–0.5519)	14.04 (0.553)
Shift fork shaft O.D. L	13.957–13.968 (0.5495–0.5499)	13.90 (0.547)
C	13.957–13.968 (0.5495–0.5499)	13.90 (0.547)
R	13.957–13.968 (0.5495–0.5499)	13.90 (0.547)

Unit: mm (in)

Crankshaft

Item	Standard	Service Limit
Connecting rod small end I.D.	20.016–20.034 (0.7880–0.7887)	20.08 (0.791)
Connecting rod big end side clearance	0.05–0.20 (0.002–0.008)	0.3 (0.01)
Crankshaft runout ①	——	0.03 (0.001)
Crankpin oil clearance	0.028–0.052 (0.0011–0.0020)	0.08 (0.003)
Crankpin bearing selection	See page 10-21	——
Main journal oil clearance	0.021–0.045 (0.008–0.0018)	0.08 (0.003)
Main journal bearing selection	See page 10-20	——

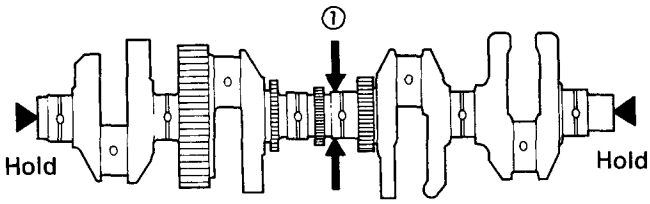

Alternator

Alternator shaft collar spring free height	2.1 (0.08)	1.8 (0.07)

Unit: mm (in)

Wheels/Tires

Item	Standard	Service Limit
Minimum tire tread depth (FR)	———	1.5 (0.06)
(RR)	———	2.0 (0.08)
Cold tire pressure Driver only (FR)	250 kPa (2.5 kg/cm², 36 psi)	———
Driver only (RR)	290 kPa (2.9 kg/cm², 42 psi)	———
Driver and passenger (FR)	250 kPa (2.5 kg/cm², 36 psi)	———
Driver and passenger (RR)	290 kPa (2.9 kg/cm², 42 psi)	———
Front and rear axle runout	———	0.2 (0.01)
Front and rear wheel rim runout (Radial)	———	2.0 (0.08)
(Axial)	———	2.0 (0.08)
Wheel balance weight (Front)	———	60 g (2.1 oz)
(Rear)	———	60 g (2.1 oz)
Drive chain slack	15–25 (0.6–1.0)	———
Drive chain size/link (DID)	DID50ZV/114	———
(RK)	RK50LFO/114	———

Front Suspension

Fork spring free length	446.3 (17.57)	437.4 (17.22)
Fork spring direction	Tapered wound coil facing down	———
Fork tube runout	———	0.2 (0.01)
Recommended fork oil	Fork fluid	———
Fork oil level	173 (6.8)	———
Fork oil capacity	418 cm³ (14.1 US oz, 11.8 Imp oz)	———
Steering bearing preload	1.1–1.6 kg (2.43–3.53 lb)	———

Rear Suspension

Damper compressed gas	Nitrogen	———
Damper drilling point	13 (0.5)	———

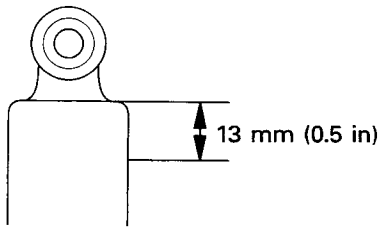

Unit: mm (in)

Brakes

	Item	Standard	Service Limit
Front	brake fluid	DOT 4	——
	brake pad wear indicator ①	——	To the groove
	brake disc thickness	5.0 (0.20)	4.0 (0.16)
	brake disc runout	——	0.30 (0.012)
	master cylinder I.D.	12.700–12.743 (0.5000–0.5017)	12.76 (0.502)
	caliper piston O.D.	12.657–12.684 (0.4983–0.4994)	12.65 (0.498)
	caliper cylinder I.D. (22.6 mm bore)	22.650–22.700 (0.8917–0.8937)	22.710 (0.8941)
	(25.4 mm bore)	25.400–25.450 (1.0000–1.0020)	25.460 (1.0024)
	(27.0 mm bore)	27.000–27.050 (1.0630–1.0650)	27.060 (1.0654)
	caliper piston O.D. (22.6 mm bore)	22.585–22.618 (0.8892–0.8905)	22.560 (0.8882)
	(25.4 mm bore)	25.318–25.368 (0.9968–0.9987)	25.310 (0.9965)
	(27.0 mm bore)	26.916–26.968 (1.0597–1.0617)	26.910 (1.0594)
	Secondary master cylinder I.D.	12.700–12.743 (0.5000–0.5017)	12.76 (0.502)
	Secondary master piston O.D.	12.657– 12.684 (0.4983–0.4994)	12.65 (0.498)
Rear	brake fluid	DOT 4	——
	brake pedal height	75 (3.0)	——
	brake pad wear indicator ②	——	To the groove
	brake disc thickness	5.0 (0.20)	4.0 (0.16)
	brake disc runout	——	0.30 (0.012)
	master cylinder I.D.	17.460–17.503 (0.6874–0.6891)	17.515 (0.6896)
	master piston O.D.	17.417–17.444 (0.6857–0.6868)	17.405 (0.6852)
	caliper cylinder I.D. (22.6 mm bore)	22.650–22.700 (0.8917–0.8937)	22.710 (0.8941)
	(25.4 mm bore)	25.400–25.450 (1.0000–1.0020)	25.460 (1.0024)
	(27.0 mm bore)	27.000–27.050 (1.0630–1.0650)	27.060 (1.0654)
	caliper piston O.D. (22.6 mm bore)	22.585–22.618 (0.8892–0.8905)	22.560 (0.8882)
	(25.4 mm bore)	25.318–25.368 (0.9968–0.9987)	25.310 (0.9965)
	(27.0 mm bore)	26.916–26.968 (1.0597–1.0617)	26.910 (1.0594)

Battery/Charging System

Alternator/charging coil resistance (At 20°C/68°F)	0~1.0Ω	——
Alternator field coil resistance (At 20°C/68°F)	0~4.0Ω	——
Regulator/rectifier regulated voltage	12.6–15.0V/5,000 min^{-1} (rpm)	——
Battery capacity	12V–14Ah	——
Specified current leakage	0.1 mA max.	——
Battery specific gravity (Fully charging)	1.270–1.290	——
(Needs charging)	Below 1.260	——

Ignition System

Item	Standard	Service Limit
Spark plug (Standard : NGK)	DPR9EA-9	——
(Standard : NIPPONDENSO)	X27EPR-U9	——
Spark plug gap	0.8–0.9 mm (0.03–0.04 in)	——
Ignition timing "F"mark (Except SW, type)	10° BTDC/1,000 min^{-1} (rpm)	——
(SW, type)	5° BTDC/1,000 min^{-1} (rpm)	——
Full advance (Except G, F, SW, AR type)	40° BTDC/5,000 min^{-1} (rpm)	——
(G. F, SW, AR type)	37° BTDC/9,500 min^{-1} (rpm)	——
Ignition coil resistance (Primary: at 20°C/68°F)	2.5–3.2Ω	——
(Secondary with plug cap)	21–27kΩ	——
(Secondary without plug cap)	11–17kΩ	——
Pulse generator resistance (At 20°C/68°F)	460–580Ω	——

Starting System

Starter motor brush length	12.0–13.0 mm (0.47–0.51 in)	6.5mm (0.26 in)

Lights/Meters/Switches

Main fuse	30A	——
Fuse (Except G type)	10A x 5, 20A x 1	——
(G type)	10A x 6, 20A x 1	——
Headlight (High/low beam; E type)	12V–60/55W x 2	——
(High/low beam; Except E, IT, U, type)	12V–60/55W x 1, 12V60W x 1	——
(High/low beam; IT type)	12V–60/55W x 1	——
(High/low beam; U type)	12V–45/45W x 2	——
Tail/brake light	12V–5/21W x 2	——
Position light (Except U type)	12V–5W	——
Front turn signal light	12V–21W x 2	——
Rear turn signal light	12V–21W x 2	——
Instrument light	12V–1.7W x 4	——
Oil pressure warning indicator	12V–3.4W	——
Side stand warning indicator	12V–3.4W	——
High beam indicator	12V–3.4W	——
Turn signal indicator	12V–3.4W x 2	——
Neutral indicator	12V–3.4W	——
Fuel unit resistance (At full level)	10Ω	——
(At low level)	90Ω	——
Coolant temperature sensor resistance (50°C/122°F)	130–180Ω	——
(80°C/176°F)	45–60Ω	——
(120°C/248°F)	10–20Ω	——
Fan motor switch start to close (ON)	98–102°C (208–216°F)	——
stop opening	93–97°C (199–207°F)	——

Torque Values

Standard

Fasteners Type	Torque N • m (kg-m, ft-lb)	Fasteners Type	Torque N • m (kg-m, ft-lb)
5 mm hex bolt and nut	5 (0.5, 3.6)	5 mm screw	4 (0.4, 2.9)
6 mm hex bolt and nut	10 (1.0, 7)	6 mm screw	9 (0.9, 6.5)
8 mm hex bolt and nut	22 (2.2, 16)	6 mm flange bolt (8 mm head)	9 (0.9, 6.5)
10 mm hex bolt and nut	35 (3.5, 25)	6 mm flange bolt (10 mm head) and nut	12 (1.2, 9)
12 mm hex bolt and nut	55 (5.5, 40)	8 mm flange bolt and nut	27 (2.7, 20)
		10 mm flange bolt and nut	40 (4.0, 29)

Torque specifications listed below are for important fasteners. Others should be tightened to standard torque values listed above.

Notes: 1. Apply sealant to the threads.
2. Apply a locking agent to the threads.
3. Apply molybdenum disulfide oil to the threads and flange surface.
4. Stake.
5. Apply oil to the threads and flange surface.
6. Apply clean engine oil to the O-ring.
7. Apply grease to the threads and flange surface.
8. UBS bolt.
9. U-nut.
10. ALOC bolt.

Engine

Item	Q'ty	Thread dia. (mm)	Torque N • m (kg-m, ft-lb)	Remarks
Maintenance:				
Timing hole cap	1	45	18 (1.8, 13)	Note 7
Spark plug	4	12	15 (1.5, 11)	
Lubrication System:				
Oil filter boss	1	20	18 (1.8, 13)	Note 2
Oil filter cartridge	1	20	10 (1.0, 7)	Note 5
Oil drain plug	1	14	30 (3.0, 22)	
Oil pass plate	3	6	12 (1.2, 9)	Note 2
Oil pipe C special bolt	2	6	12 (1.2, 9)	Note 2
Oil pump driven sprocket bolt	1	6	15 (1.5, 11)	Note 2
Oil pump assembly flange bolt	3	6	13 (1.3, 9)	
Oil pressure switch	1	PT 1/8	12 (1.2, 9)	Note 1
Oil pressure switch connector bolt	1	4	2.2 (0.22, 1.6)	
Fuel System:				
Carburetor connecting nut, 6 mm	2	6	10 (1.0, 7)	
5 mm	2	5	5.2 (0.52, 3.8)	
Cooling System:				
Water pump flange bolt	2	6	13 (1.3, 9)	
Water pipe D flange bolt	2	6	13 (1.3, 9)	

Engine (Cont'd)

Item	Q'ty	Thread dia. (mm)	Torque N • m (kg-m, ft-lb)	Remarks
Cylinder Head/Valves:				
Cylinder head flange cap nut	4	10	45 (4.5, 33)	Note 5
Cylinder head flange nut	8	10	45 (4.5, 33)	Note 5
Cylinder head socket bolt	4	8	26 (2.6, 19)	
Cylinder head sealing bolt	1	18	32 (3.2, 23)	Note 2
Vacuum port socket bolt	1	5	3 (0.30, 2.2)	
Camshaft holder flange bolt	16	6	14 (1.4, 10)	
Cylinder head cover bolt	8	6	10 (1.0, 7)	
Boost joint	3	5	2.5 (0.25, 1.8)	
Cam sprocket bolt	4	7	20 (2.0, 14)	Note 2, 8
Valve adjuster screw lock nut	16	7	23 (2.3, 17)	Note 5
Cam chain tensioner bracket bolt	4	6	14 (1.4, 10)	
Rocker arm guide bolt	16	6	12 (1.2, 9)	Note 8
Clutch /Gearshift Linkage:				
Clutch center lock nut	1	25	128 (12.8, 93)	Note 5
Clutch spring bolt	5	6	12 (1.2, 9)	
Clutch slave cylinder bleeder screw	1	8	8 (0.8, 5.8)	
Shift fork shaft stopper plate bolt	2	6	12 (1.2, 9)	Note 2
Shift drum center bolt	1	8	23 (2.3, 17)	Note 2
Gearshift spindle return spring pin	1	8	22 (2.2, 16)	
Drive sprocket special bolt	1	10	54 (5.4, 39)	
Clutch slave cylinder oil bolt	1	10	35 (3.5, 25)	
Crankshaft/Transmission:				
Crankcase main journal bolt	12	9	37 (37, 27)	Note 8
Crankcase flange bolt	10	1	39 (3.9, 28)	
	8	17	24 (2.4, 17)	
Crankcase sealing bolt	20	1	30 (3.0, 22)	
	10	1	12 (1.2, 9)	
Connecting rod nut	8	8	35 (3.5, 25)	Note 5
Balancer shaft holder flange bolt	1	6	12 (1.2, 9)	
Charging System/Alternator:				
Alternator base flange bolt	3	8	25 (2.5, 18)	Note 1
Alternator assembly flange socket bolt	3	6	8 (0.8, 5.8)	Note 2
Alternator shaft flange nut	1	12	49 (4.9, 35)	Note 5
Ignition System:				
Pulse generator rotor flange bolt	1	10	49 (4.9, 35)	Note 2
Lights/Meters/Switches:				
Neutral switch	1	10	12 (1.2, 9)	
Neutral switch terminal nut	1	4	2.2 (0.22, 1.6)	
Other:				
General torque: SH flange bolt	–	6	10 (1.0, 7)	
SHF flange bolt	–	6	12 (1.2, 9)	

Frame

Item	Q'ty	Thread dia. (mm)	Torque N • m (kg-m, ft-lb)	Remarks
Frame/Body Panels/Exhaust System:				
Exhaust pipe joint nut	8	7	17 (1.7, 12)	
Muffler band bolt	4	8	22 (2.2, 16)	
Muffler stay flange nut	3	8	22 (2.2, 16)	
Step holder bolt	4	8	33 (3.3, 24)	
Center stand bolt	1	10	50 (5.0, 36)	
Side stand pivot bolt	1	10	8 (0.8, 5.8)	
Side stand pivot lock nut	1	10	40 (4.0, 29)	Note 9
Side stand bracket bolt	3	10	65 (6.5, 47)	
Grub rail mounting bolt	4	8	35 (3.5, 2.5)	
Lubrication System:				
Oil cooler pipe joint	4	6	9 (0.9, 6.5)	
Fuel System:				
Fuel valve	1	6	10 (1.0, 7)	
Fuel tank cap	7	4	3 (0.30, 2.2)	
Fuel unit	4	6	10 (1.0, 7)	Note 9
Fuel tank mounting bolt	2	6	10 (1.0, 7)	
Fuel tank pivot nut	1	6	10 (1.0, 7)	Note 9
Cooling System:				
Fan motor switch	1	16	18 (1.8, 13)	Note 1
Water hose joint	1	6	9 (0.9, 6.5)	
Water hose band			1.0-1.5 (0.10-0.15, 0.7-1.1)	
Engine Mounting:				
Front engine hanger bolt/nut (Upper)	2	10	45 (4.5, 33)	
Front engine hanger bolt/nut (Lower)	2	10	45 (4.5, 33)	
Rear engine hanger bolt/nut (Upper)	1	12	55 (5.5, 40)	
Rear engine hanger bolt/nut (Lower)	1	12	55 (5.5, 40)	
Engine hanger adjusting bolt	1	20	8 (0.8, 5.8)	
Engine hanger adjusting bolt lock nut	1	20	25 (2.5, 18)	
Clutch/Gearshift Linkage:				
Clutch master cylinder holder bolt	2	6	12 (1.2, 9)	
Clutch master cylinder cap screw	2	4	1.5 (0.15, 1.1)	
Clutch lever pivot bolt	1	6	0.8 (0.08, 0.6)	
Clutch lever pivot nut	1	6	5.9 (0.59, 4.3)	
Clutch switch screw	1	4	1.2 (0.12, 0.8)	
Gearshift pedal arm pinch bolt	1	6	16 (1.6, 12)	
Gearshift pedal arm pivot bolt	1	8	27 (2.7, 20)	
Wheels:				
Front axle bolt	1	14	59 (5.9, 43)	
Front axle holder bolt	4	8	22 (2.2, 16)	
Front brake disc bolt	12	8	42 (4.2, 30)	Note 10
Rear axle nut	1	18	93 (9.3, 67)	
Rear brake disc bolt	6	8	42 (4.2, 30)	Note 10
Driven sprocket nut	5	12	110 (11.0, 78)	Note 9
Front Suspension:				
Steering stem nut	1	24	103 (10.3, 96)	
Top thread A	1	26	25 (2.5, 18)	See page 11-18
Top thread B	1	26		
Top bridge pinch bolt	2	8	23 (2.3, 17)	
Bottom bridge pinch bolt	2	10	49 (4.9, 35)	
Handlebar pivot pinch bolt	2	8	27 (2.7, 20)	
Handlebar weight mounting screw	2	6	10 (1.0, 7)	

Frame (Cont'd)

Item	Q'ty	Thread dia. (mm)	Torque N • m (kg-m, ft-lb)	Remarks
Fork:				
Fork oil drain bolt	2	6	8 (0.8, 5.8)	
Fork socket bolt	2	8	20 (2.0, 14)	
Fork cap bolt	2	37	23 (2.3, 17)	
Fork damper rod lock nut	2	10	20 (2.0, 14)	
Secondary master cylinder link rod bracket bolt	2	8	27 (2.7, 20)	Note 10
Rear Suspension:				
Swingarm pivot nut	1	14	108 (10.8, 78)	Note 9
Drive chain adjuster lock nut	2	8	22 (2.2, 16)	
Rear shock absorber mounting bolt/nut	2	10	42 (4.2, 30)	Note 9
Shock link bolt (Frame side)	1	10	59 (5.9, 43)	Note 9
Shock link bolt (Shock arm side)	1	10	42 (4.2, 30)	Note 9
Shock arm bolt (Swingarm side)	1	10	42 (4.2, 30)	
Brake System:				
Front brake master cylinder holder bolt	2	6	12 (1.2, 9)	
Front brake master cylinder cap screw	2	4	1.5 (0.15, 1.1)	
Front brake lever pivot bolt	1	6	0.8 (0.08, 0.6)	
Front brake lever pivot nut	1	6	5.9 (0.59, 4.3)	
Front brake lever adjuster socket bolt	1	5	3.9 (0.39, 2.9)	
Front brake switch screw	1	4	1.2 (0.12, 0.8)	
Right front brake caliper mounting bolt	2	8	27 (2.7, 20)	Note 10
Left front brake caliper lower mounting bolt	1	8	27 (2.7, 20)	Note 10
Caliper body B mounting bolt	9	8	32 (3.2, 23)	Note 10
Brake caliper main slide pin	3	12	27 (2.7, 20)	
Brake caliper slide pin	3	8	23 (2.3, 17)	
Pad pin	3	10	23 (2.3, 17)	
Caliper bleeder screw	6	8	5.4 (0.54, 4.0)	
Secondary master cylinder mounting bolt	2	6	12 (1.2, 9)	
Secondary master cylinder push rod joint nut	1	8	18 (1.8, 13)	
Secondary master cylinder orifice bolt	1	8	5.4 (0.54, 4.0)	
Brake link arm bolt/nut	2	8	27 (2.7, 20)	Note 10
Rear master cylinder mounting bolt	2	6	12 (1.2, 9)	
Rear master cylinder reservoir	1	6	12 (1.2, 9)	
Rear master cylinder push rod lock nut	1	8	18 (1.8, 13)	
Rear master cylinder reservoir joint screw	1	4	1.5 (0.15, 1.1)	
Brake hose oil bolt	12	10	35 (3.5, 25)	
Brake pipe bolt	8	10	17 (1.7, 12)	Note 5
Brake hose joint mounting bolt	5	6	12 (1.2, 9)	
Brake hose clamp mounting bolt	6	6	12 (1.2, 9)	
Other Fasteners:				
Ignition switch torx bolt	2	8	25 (2.5, 18)	Note 10

Tools

Special

The marked "*" is newly designed tool.

Description	Tool Number	Applicability
Maintenance:		
Oil filter wrench	07HAA–PJ70100	
Lock wrench	07GMA–ML70120	
Drive chain cutter	07HMH–MR10102	
*– Link plate holder	07PMH–MZ20110	
Fuel System:		
Pilot screw wrench	07908–4220201	Except SW type
Pilot crew wrench	07KMA–MS60101	SW type
Cylinder Head/Valves:		
Valve guide reamer, 5.510 mm	07984–2000001	
Cylinder/Piston:		
*Piston ring compressor	07PME–MZ20100	Two required
Piston base	07958–250001	Two required
Front Wheel/Suspension/Steering:		
Oil seal driver	07947–KA50100	
Oil seal driver attachment	07947–KF00100	
Steering stem socket	07916–3710101	
Bearing race remover	07946–3710500	
Steering stem driver	07946–MB00000	
Ball race remover	07953–MJ10000	
– Remover attachment	07953–MJ10100	
– Remover handle	07953–MJ10200	
Rear Wheel/Suspension:		
Bearing remover set	07936–3710300	
– Remover handle	07936–3710100	
– Sliding weight	07741–0010201	
Driver shaft	07946–MJ00100	
Bearing remover attachment	07GMD–KT70200	
Driver attachment, 28 x 30 mm	07946–1870100	
Driver pin	07GMD–KT80100	
Brake System:		
Snap ring pliers	07914–3230001	
Electrical Equipment:		
Peak voltage adaptor	07HGJ–0020100	

Common

Description	Tool Number	Applicability
Lubrication System:		
Oil pressure gauge	07506–3000000	
Oil pressure gauge attachment	07510–4220100	
Fuel System:		
Float level Gauge	07401–0010000	
Cylinder Head/Valves:		
Valve spring compressor	07757–0010000	
Valve guide remover, 5.5 mm	07742–0010100	
Valve guide driver	07743–0020000	
Valve seat cutter		
Seat cutter, 33 mm (45° IN)	07780–0010800	
Seat cutter, 27.5 mm (45° IN)	07780–0010200	
Flat cutter, 33 mm (32° IN)	07780–0012900	
28 mm (32° EX)	07780–0012100	
Interior cutter, 30 mm (60° IN/EX)	07780–0014000	
Cutter holder, 5.5 mm	07781–0010101	
Clutch/Gearshift Linkage:		
Clutch center holder	07724–0050001	
Extension bar	07716–0020500	
Crankshaft/Transmission:		
Universal bearing puller	07631–0010000	
Attachment, 37 x 40 mm	07746–0010200	
Inner driver C	07746–0030100	
Attachment, 25 mm	07746–0030200	
Pilot, 17 mm	07746–0040400	
Front Wheel/Suspension/Steering:		
Bearing remover head, 20 mm	07746–0050600	
Bearing remover shaft	07746–0050000	
Driver	07749–0010000	
Attachment 42 x 47 mm	07746–0010300	
Attachment, 52 x 55 mm	07746–0010400	
Pilot, 20 mm	07746–0040500	
Extension bar	07716–0020500	
Rear Wheel/Suspension:		
Bearing remover head, 20 mm	07746–0050600	
Bearing remover shaft	07746–0050000	
Driver	07749–0010000	
Attachment, 32 x 35 mm	07746–0010100	
Attachment, 37 x 40 mm	07746–0010200	
Attachment, 52 x 55 mm	07746–0010400	
Attachment, 62 x 68 mm	07746–0010500	
Pilot, 15 mm	07746–0040300	
Pilot, 17 mm	07746–0040400	
pilot, 20 mm	07746–0040500	
Pilot, 22 mm	07746–0041000	
Pilot, 25 mm	07746–0040600	
Driver attachment outer, 24 x 26 mm	07746–0010700	
Electrical Equipment:		
Torx driver bit (T40)	07703–0010100	or equivalent commercially available
Digital multimeter (KOWA)	07411–0020000	
Analogue tester	07308–00200001 (SANWA) or TH-5H (KOWA)	

Lubrication & Seal Points

Engine

Location	Material	Remarks
Crankcase mating surface 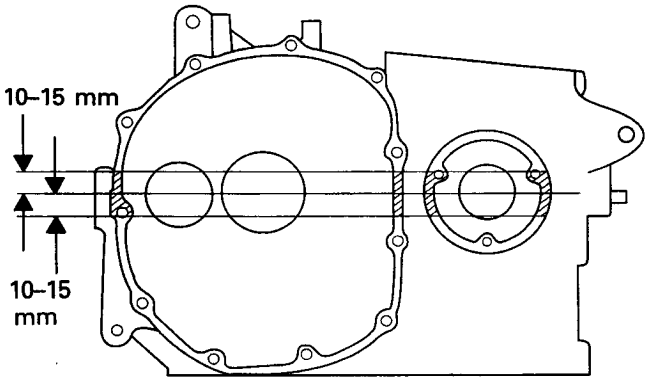 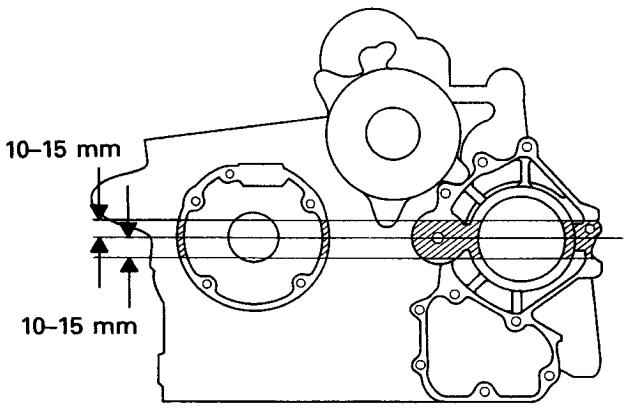 Oil pressure switch threads 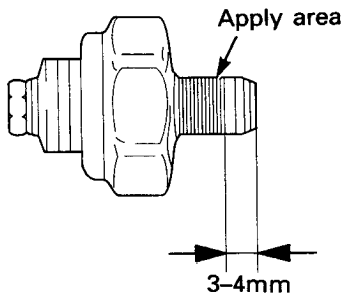 Alternator base tightening bolt threads Drive chain guide plate bolt threads	Liquid sealant (Three-Bond 1207B or equivalent)	• Wipe off the excess sealant • Do not apply sealant to near the bearing Apply only to the area shown
Main bearing surface Connecting rod bearing surface Crankshaft thrust surface Camshaft bearing surface and thrust surface Rocker arm slipper surface, guide area Rocker arm spherical bearing surface M3/4 gear, C5, C6 gear shift fork groove Valve stem (valve guide sliding surface) Primary driven gear surface Starter reduction shaft sliding surface	Molybdenum disulfide oil (A mixture of 1/2 engine oil and 1/2 molybdenum disulfide grease)	

Engine (Cont'd)

Location	Material	Remarks
Ignition pulse generator grommet Cylinder head semi-circular cut-out 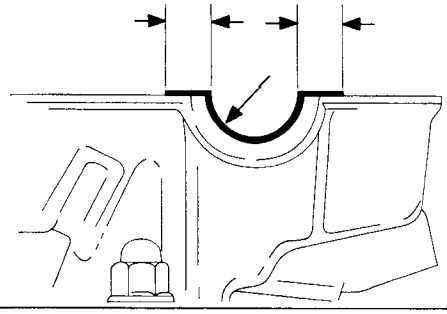	Sealant	
Cylinder head cover breather plate bolt threads Cylinder head sealing bolt threads Cam sprocket bolt threads Shift drum bearing set plate bolt threads Lower crankcase sealing bolt threads (10 mm/20 mm) Ignition pulse generator rotor bolt threads Alternator chain guide bolt threads Alternator chain tensioner mounting bolt threads Oil pump chain guide bolt threads Oil pass plate bolt threads Oil pump driven sprocket bolt threads Oil pipe C mounting bolt threads Shift fork shaft stopper plate bolt threads Oil filter boss Shift fork shaft stopper plate bolt threads Drive chain guide plate bolt threads	Locking agent	Clean and apply to the threads 6.5 ± 1 mm
Clutch disc surface Piston sliding surface and piston pin bore Piston rings and ring grooves Oil pass plate seal Cylinder head nut threads and seating surface Connecting rod nut threads and seating surface Main journal UBS bolt threads and seating surface Oil filter cartridge O-ring Clutch center lock nut threads and seating surface Valve adjusting screw threads Starter one-way clutch sliding lock surface Alternator damper spline area Alternator shaft nut threads and seating surface Clutch joint piece Each gear teeth and rotating surface Oil strainer packing O-rings Each bearings	Engine oil	
Oil seal lips Balancer damper rubber fitting area Timing hole cap threads	Multi-purpose grease	
Clutch slave cylinder piston seal	DOT 4 brake fluid	

Frame

Location	Material	Remarks
Steering stem bearing and dust seal lips Left second master cylinder link needle bearings and oil seal Wheel bearing dust seal lips Fork bottom case needle bearings Secondary master cylinder arm bearings Secondary master cylinder arm oil seals Swingarm pivot nut seating surface Shock arm/shock link bearing and oil seal Rear wheel and driven flange sliding area Swingarm pivot bearing/dust seal Wheel axle and swingarm outer surface Throttle cable end Center stand pivot surface Side stand pivot surface Brake pedal pivot Gearshift pedal pivot Seat lock striker Dust seal lips	Multi-purpose grease	Apply thin coat of grease
Handlebar (throttle grip sliding surface) Swingarm pivot dust seal lips Swingarm pivot needle bearings Shock arm pivot needle bearings/dust seal lips Shock link pivot needle bearings/dust seal lips Shock absorber lower mount dust seal lips Shock absorber lower mount needle bearing Side stand pivot sliding surface	Molybdenum disulfide grease	
Rear shock absorber upper metal bushing	Molybdenum paste	
Steering stem top threads Brake flare pipe threads	Engine oil	
Handle grip inside surface	Honda Bond A	
Brake lever pivot and piston contact area Brake caliper slide pin and boot inside Caliper dust seal Rear master cylinder push rod tips/boot inside Secondary master cylinder push rod tips/boot inside	Silicone grease	
Brake caliper slide pin threads Fork socket bolt threads	Locking agent	
Fork cap O-ring Fork oil seal lips	Fork fluid	
Brake master cylinder piston and cup Clutch master cylinder piston and cup Brake caliper piston and seal	DOT 4 breake fluid	
Fan motor switch threads	Sealant	

Cable & Harness Routing

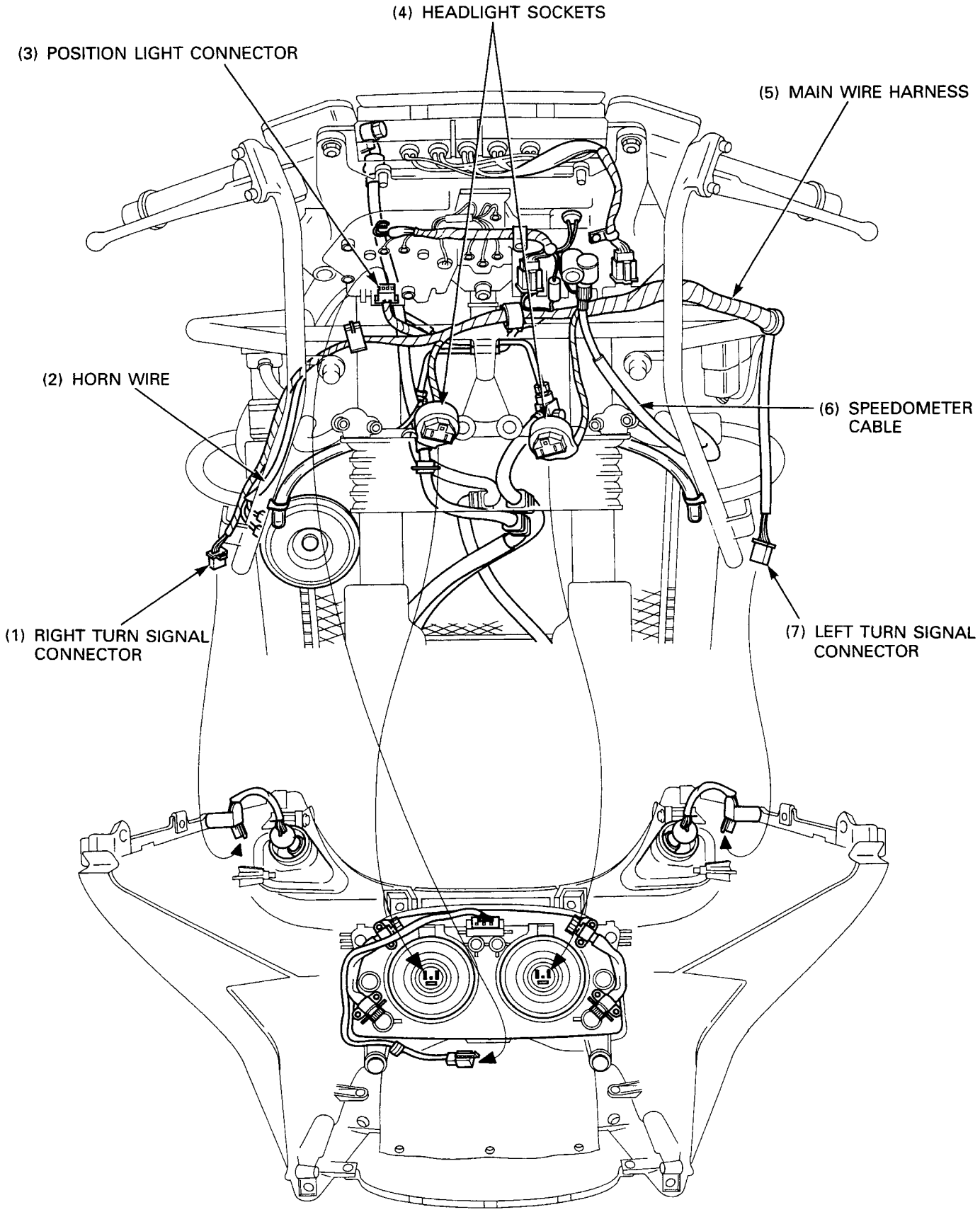

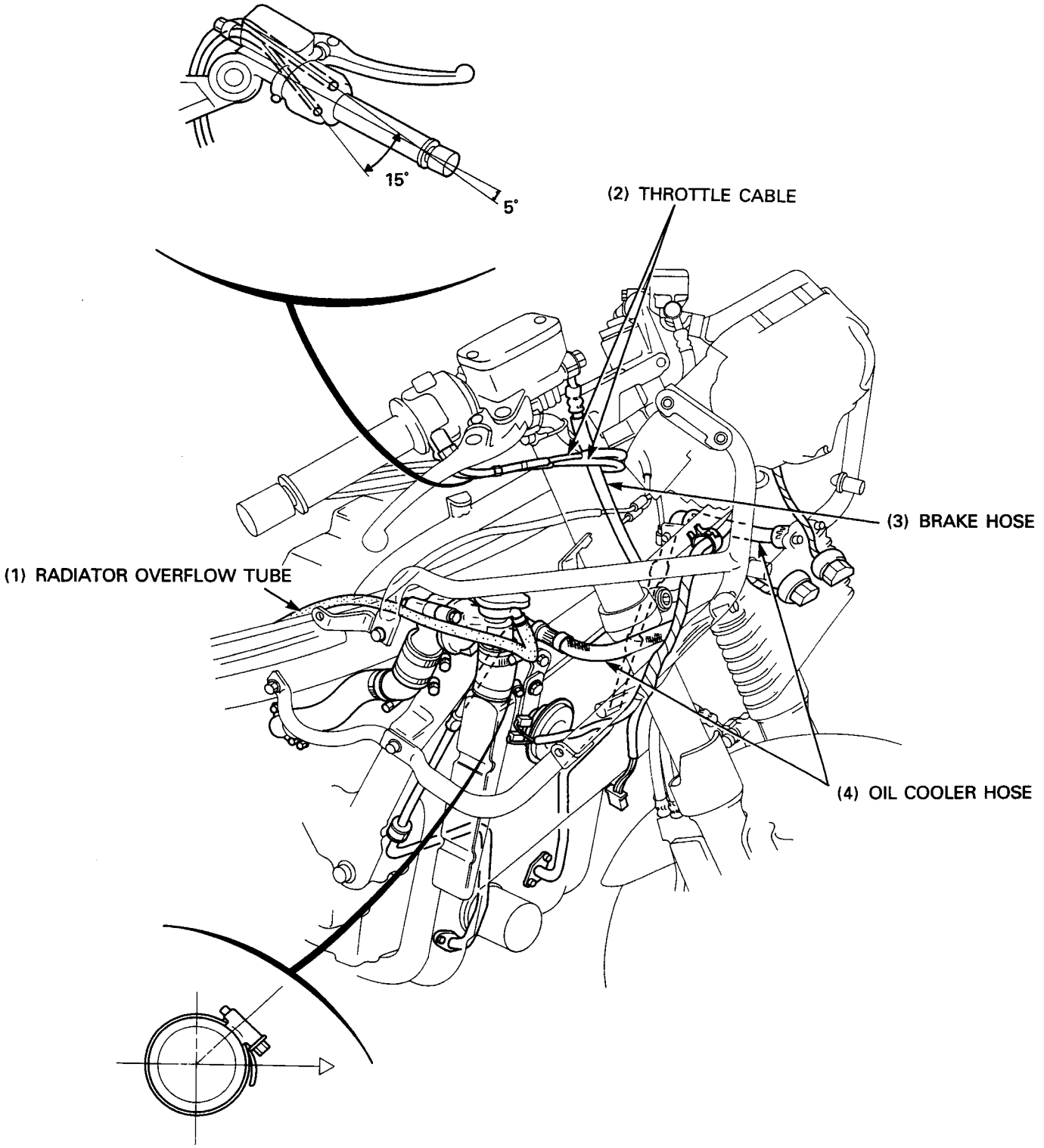
15°
5°
(2) THROTTLE CABLE
(3) BRAKE HOSE
(1) RADIATOR OVERFLOW TUBE
(4) OIL COOLER HOSE

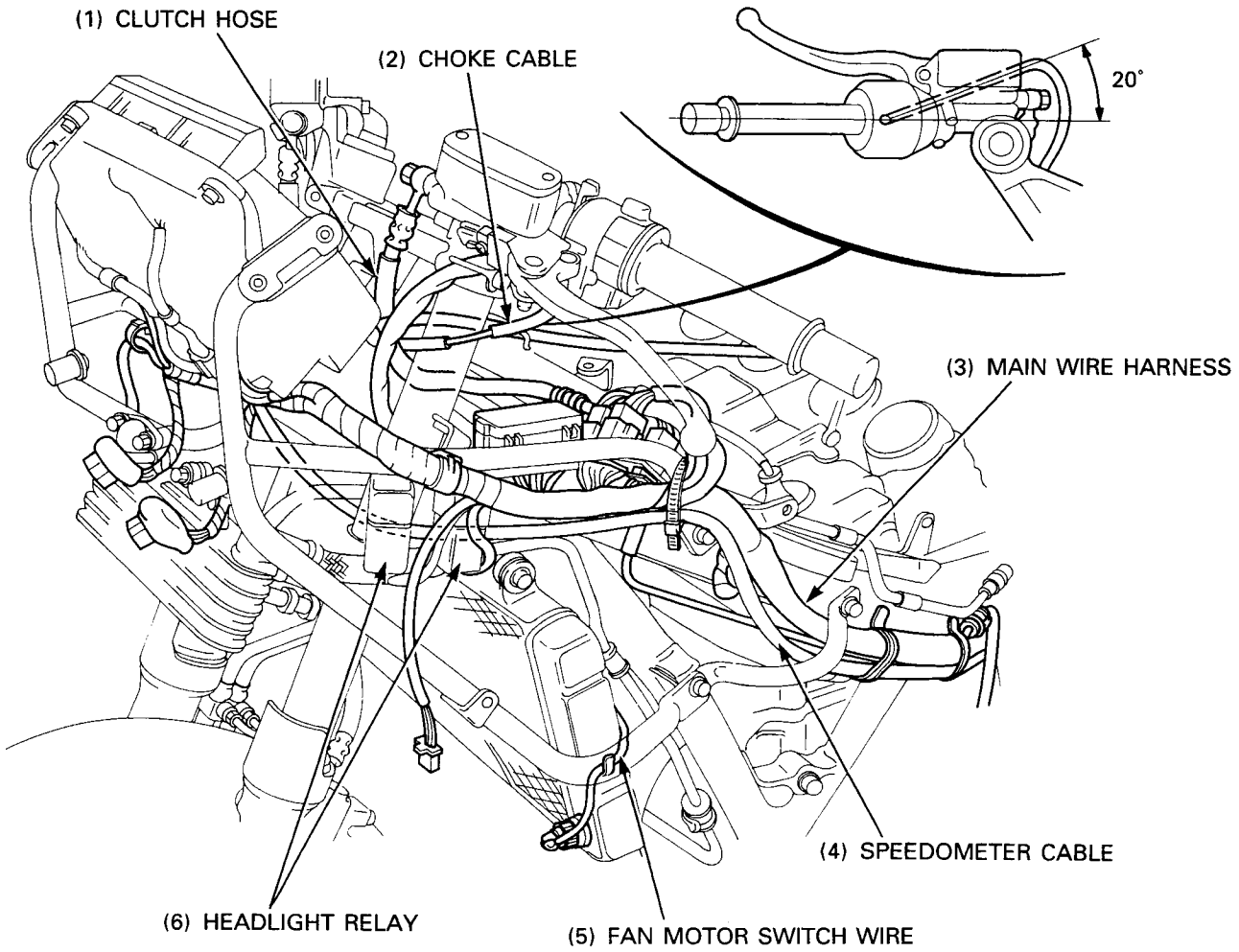
(1) CLUTCH HOSE
(2) CHOKE CABLE
20°
(3) MAIN WIRE HARNESS
(4) SPEEDOMETER CABLE
(5) FAN MOTOR SWITCH WIRE
(6) HEADLIGHT RELAY

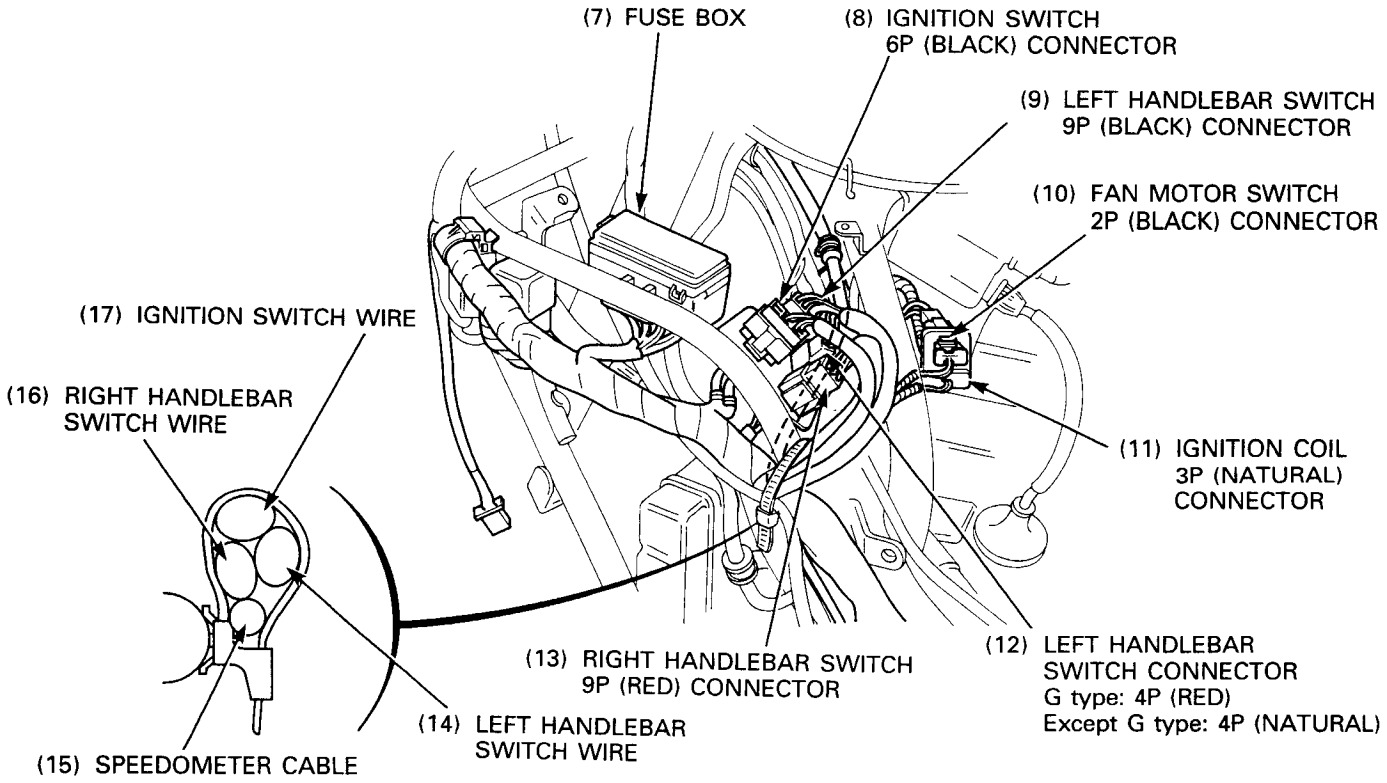
(7) FUSE BOX
(8) IGNITION SWITCH 6P (BLACK) CONNECTOR
(9) LEFT HANDLEBAR SWITCH 9P (BLACK) CONNECTOR
(10) FAN MOTOR SWITCH 2P (BLACK) CONNECTOR
(11) IGNITION COIL 3P (NATURAL) CONNECTOR
(12) LEFT HANDLEBAR SWITCH CONNECTOR G type: 4P (RED) Except G type: 4P (NATURAL)
(13) RIGHT HANDLEBAR SWITCH 9P (RED) CONNECTOR
(14) LEFT HANDLEBAR SWITCH WIRE
(15) SPEEDOMETER CABLE
(16) RIGHT HANDLEBAR SWITCH WIRE
(17) IGNITION SWITCH WIRE

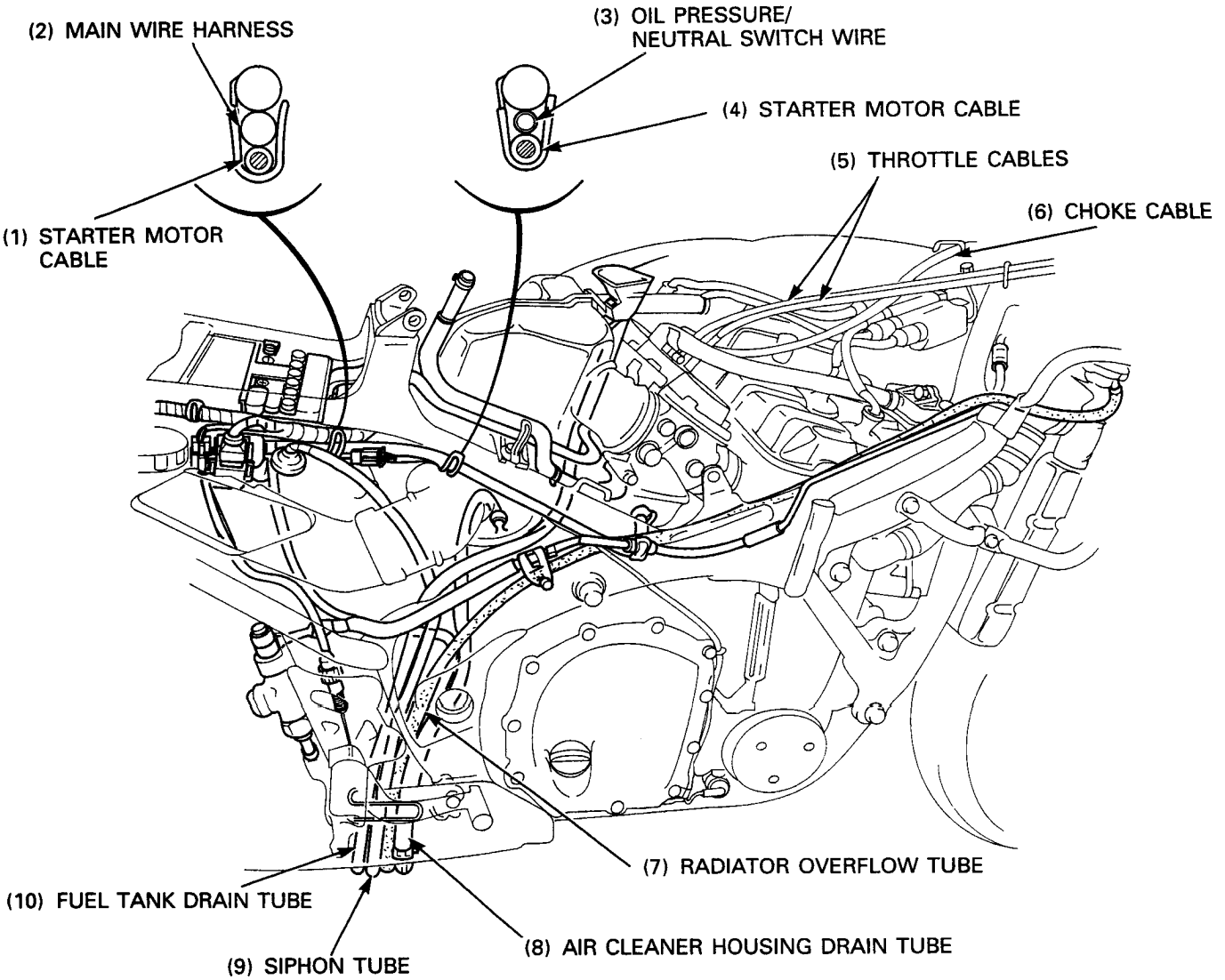
(2) MAIN WIRE HARNESS
(3) OIL PRESSURE/
NEUTRAL SWITCH WIRE
(4) STARTER MOTOR CABLE
(5) THROTTLE CABLES
(6) CHOKE CABLE
(1) STARTER MOTOR
CABLE
(7) RADIATOR OVERFLOW TUBE
(10) FUEL TANK DRAIN TUBE
(8) AIR CLEANER HOUSING DRAIN TUBE
(9) SIPHON TUBE

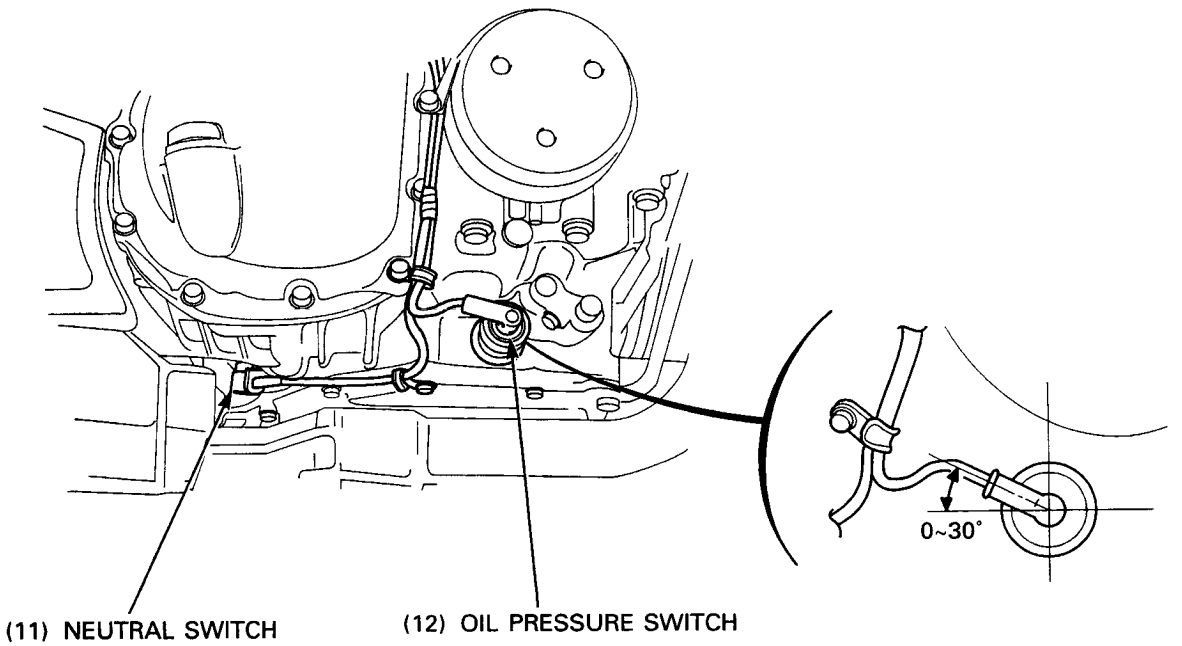
0~30°
(11) NEUTRAL SWITCH
(12) OIL PRESSURE SWITCH

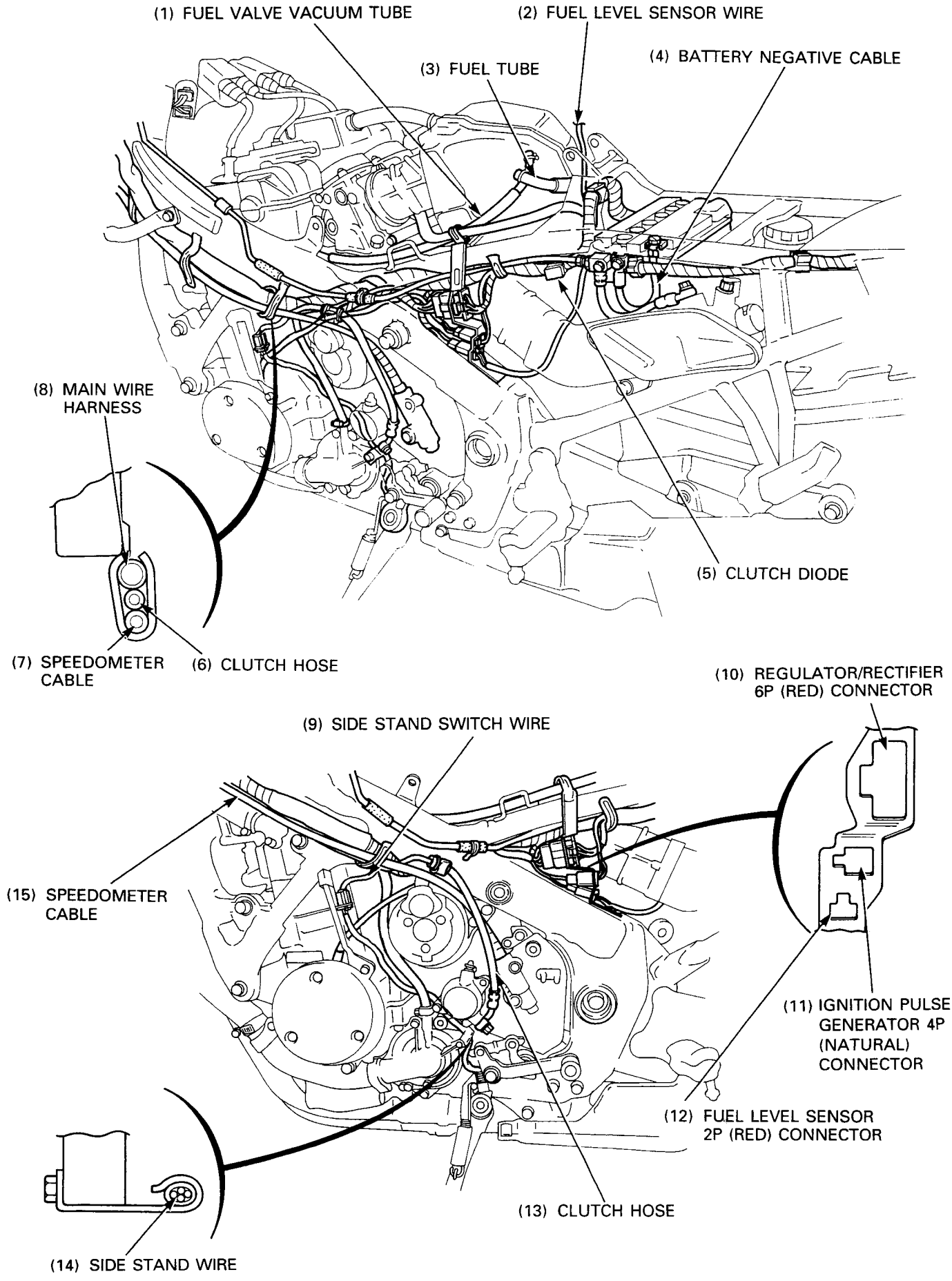
(1) FUEL VALVE VACUUM TUBE
(2) FUEL LEVEL SENSOR WIRE
(3) FUEL TUBE
(4) BATTERY NEGATIVE CABLE
(5) CLUTCH DIODE
(6) CLUTCH HOSE
(7) SPEEDOMETER CABLE
(8) MAIN WIRE HARNESS
(9) SIDE STAND SWITCH WIRE
(10) REGULATOR/RECTIFIER 6P (RED) CONNECTOR
(11) IGNITION PULSE GENERATOR 4P (NATURAL) CONNECTOR
(12) FUEL LEVEL SENSOR 2P (RED) CONNECTOR
(13) CLUTCH HOSE
(14) SIDE STAND WIRE
(15) SPEEDOMETER CABLE

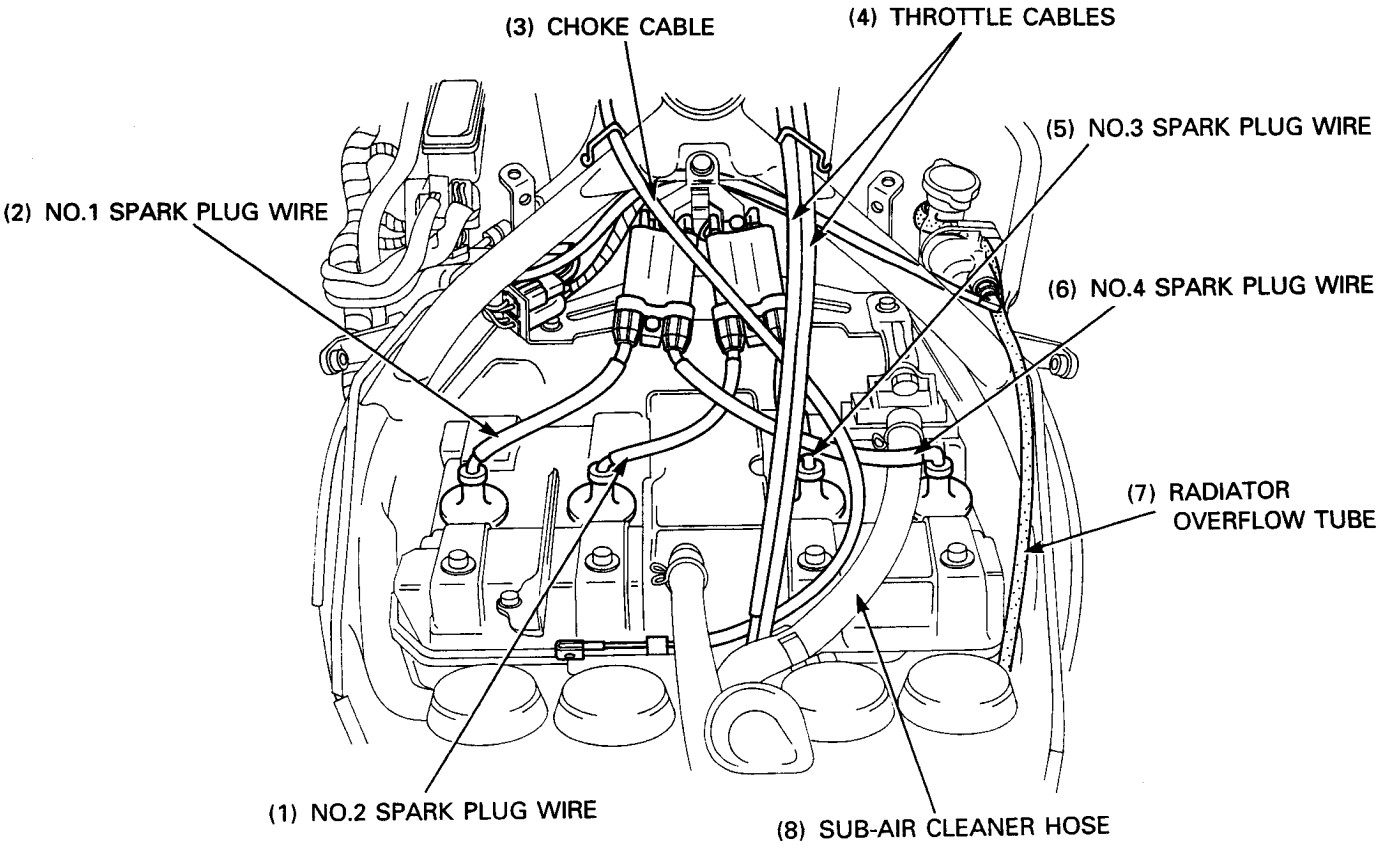
(3) CHOKE CABLE
(4) THROTTLE CABLES
(5) NO.3 SPARK PLUG WIRE
(2) NO.1 SPARK PLUG WIRE
(6) NO.4 SPARK PLUG WIRE
(7) RADIATOR OVERFLOW TUBE
(1) NO.2 SPARK PLUG WIRE
(8) SUB-AIR CLEANER HOSE

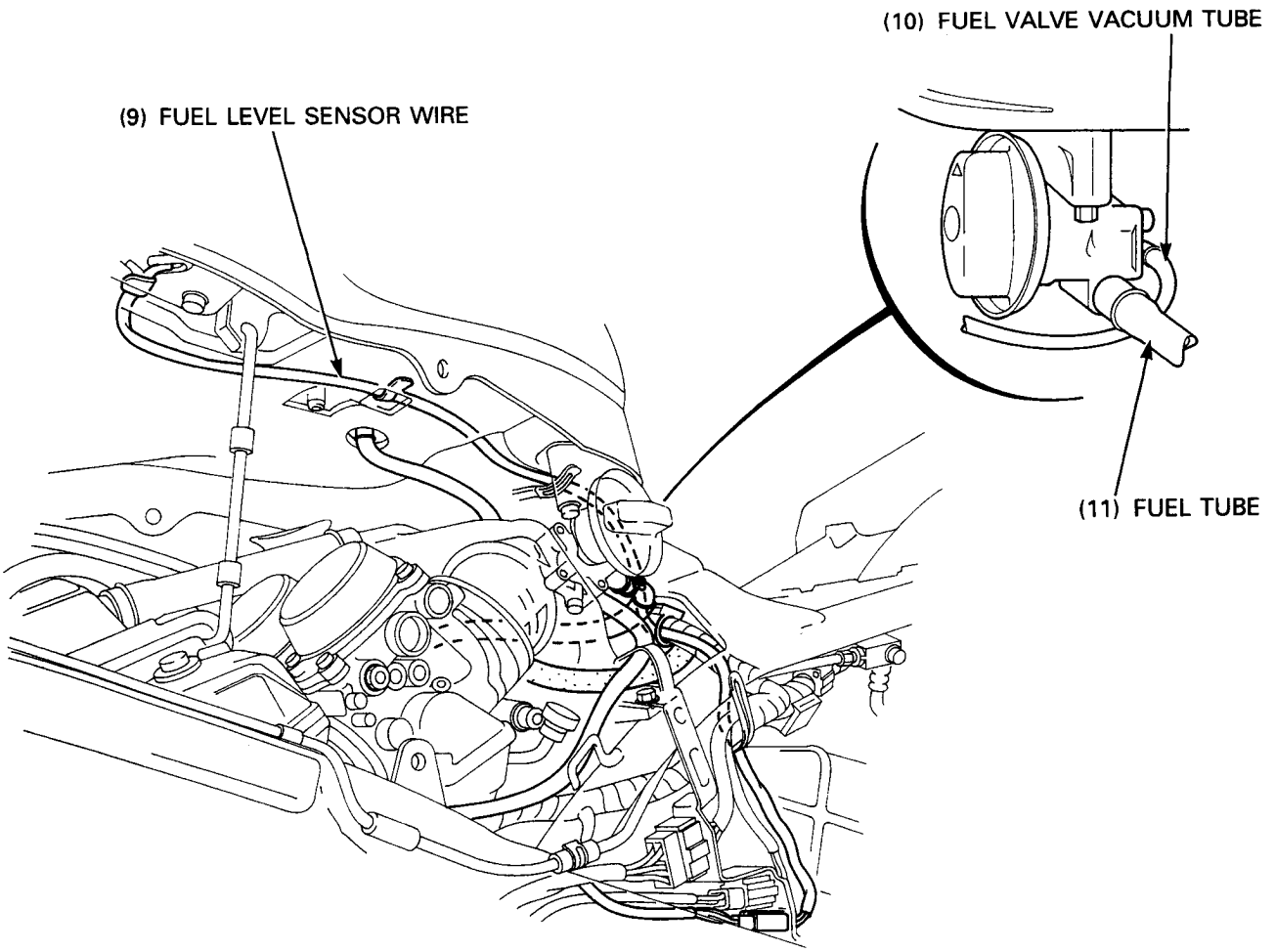
(10) FUEL VALVE VACUUM TUBE
(9) FUEL LEVEL SENSOR WIRE
(11) FUEL TUBE

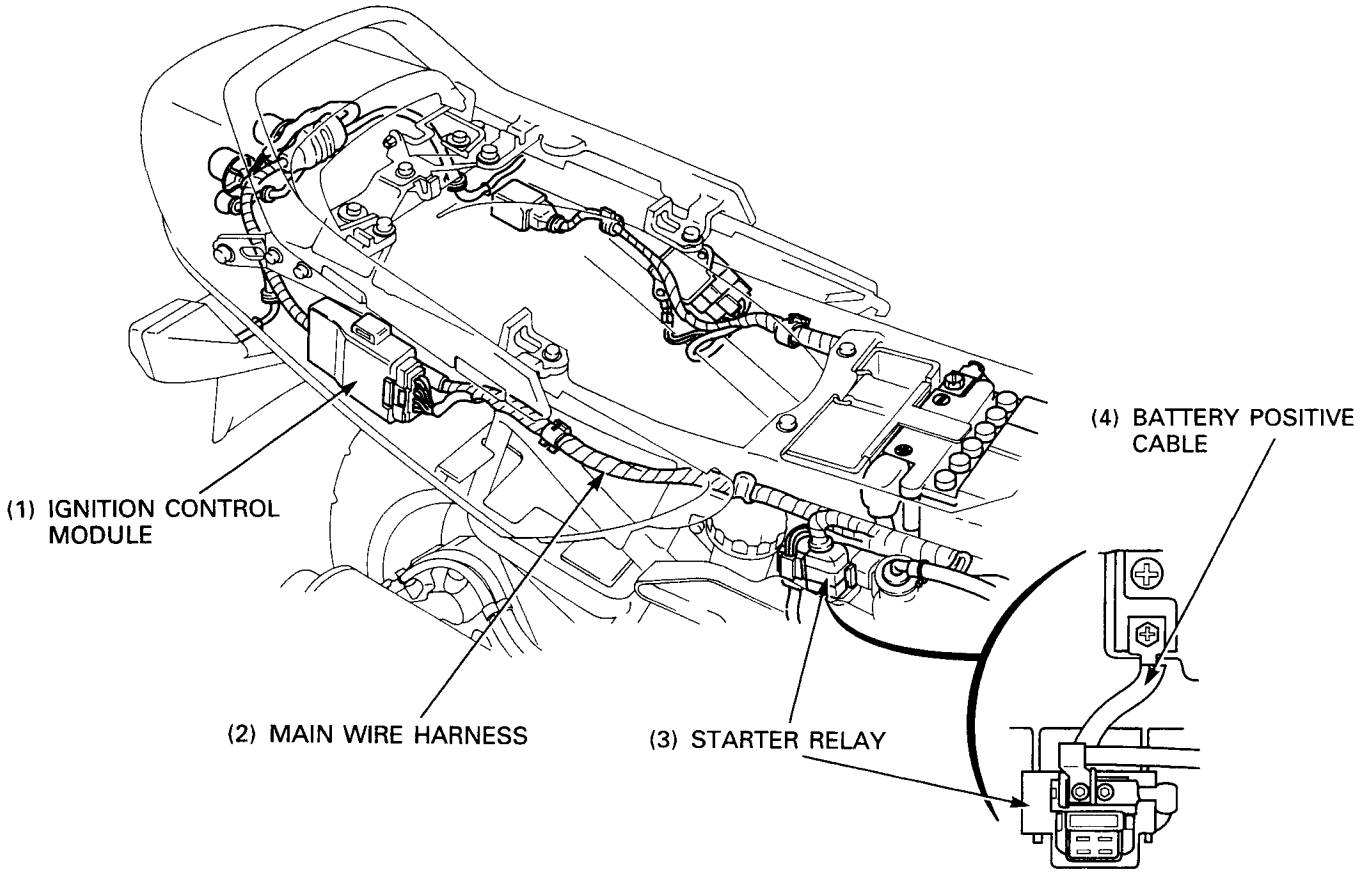
(1) IGNITION CONTROL MODULE
(2) MAIN WIRE HARNESS
(3) STARTER RELAY
(4) BATTERY POSITIVE CABLE

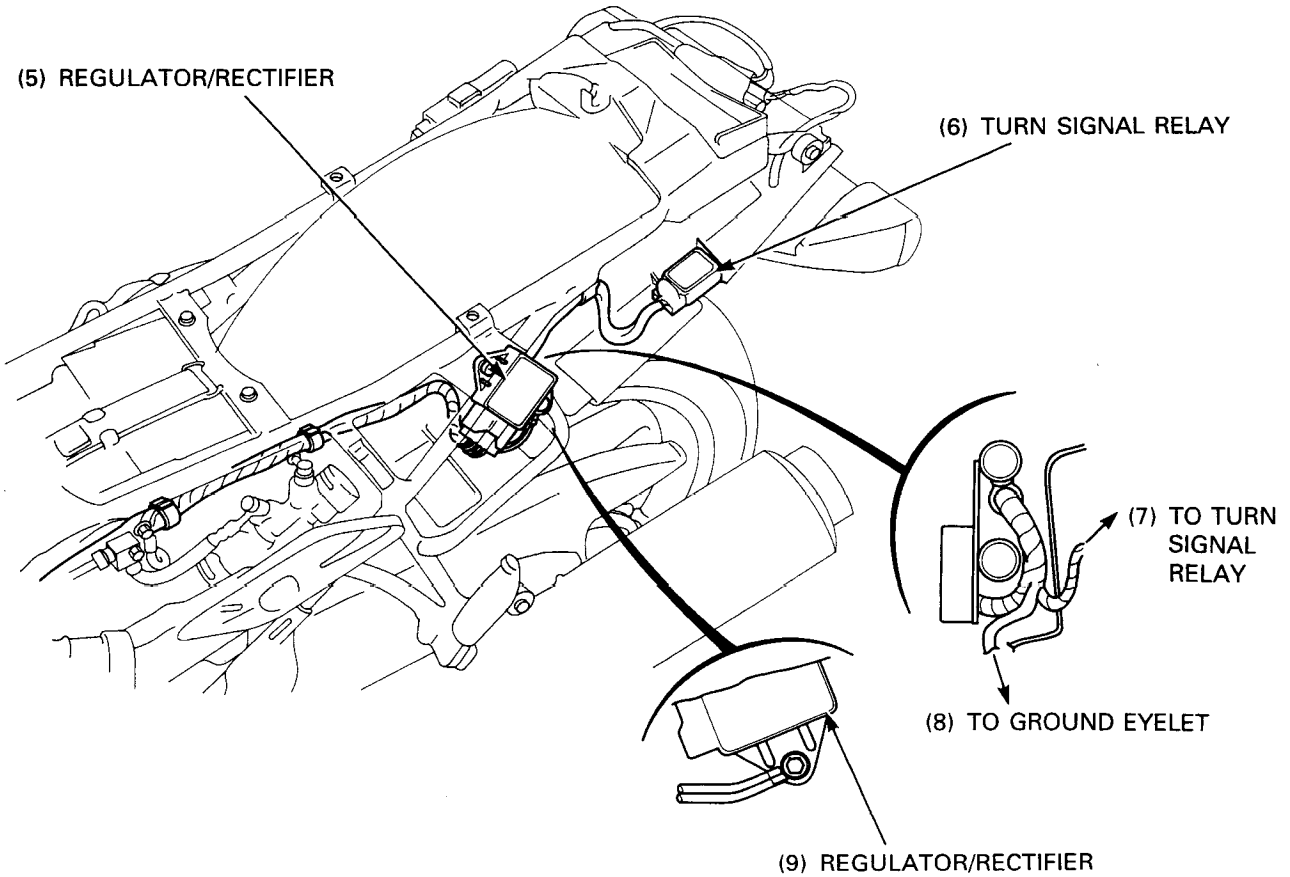
(5) REGULATOR/RECTIFIER
(6) TURN SIGNAL RELAY
(7) TO TURN SIGNAL RELAY
(8) TO GROUND EYELET
(9) REGULATOR/RECTIFIER

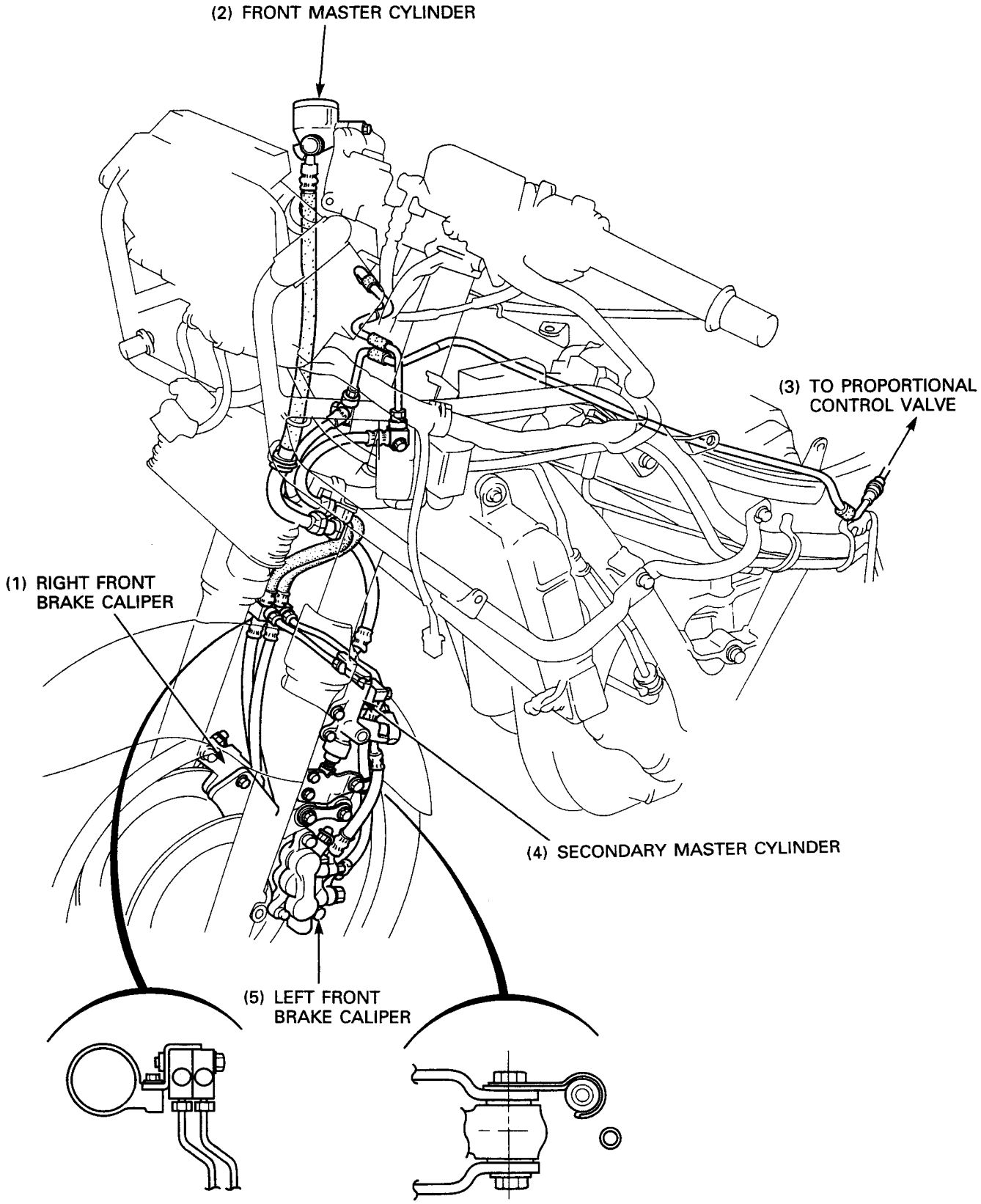
(2) FRONT MASTER CYLINDER
(3) TO PROPORTIONAL CONTROL VALVE
(1) RIGHT FRONT BRAKE CALIPER
(4) SECONDARY MASTER CYLINDER
(5) LEFT FRONT BRAKE CALIPER

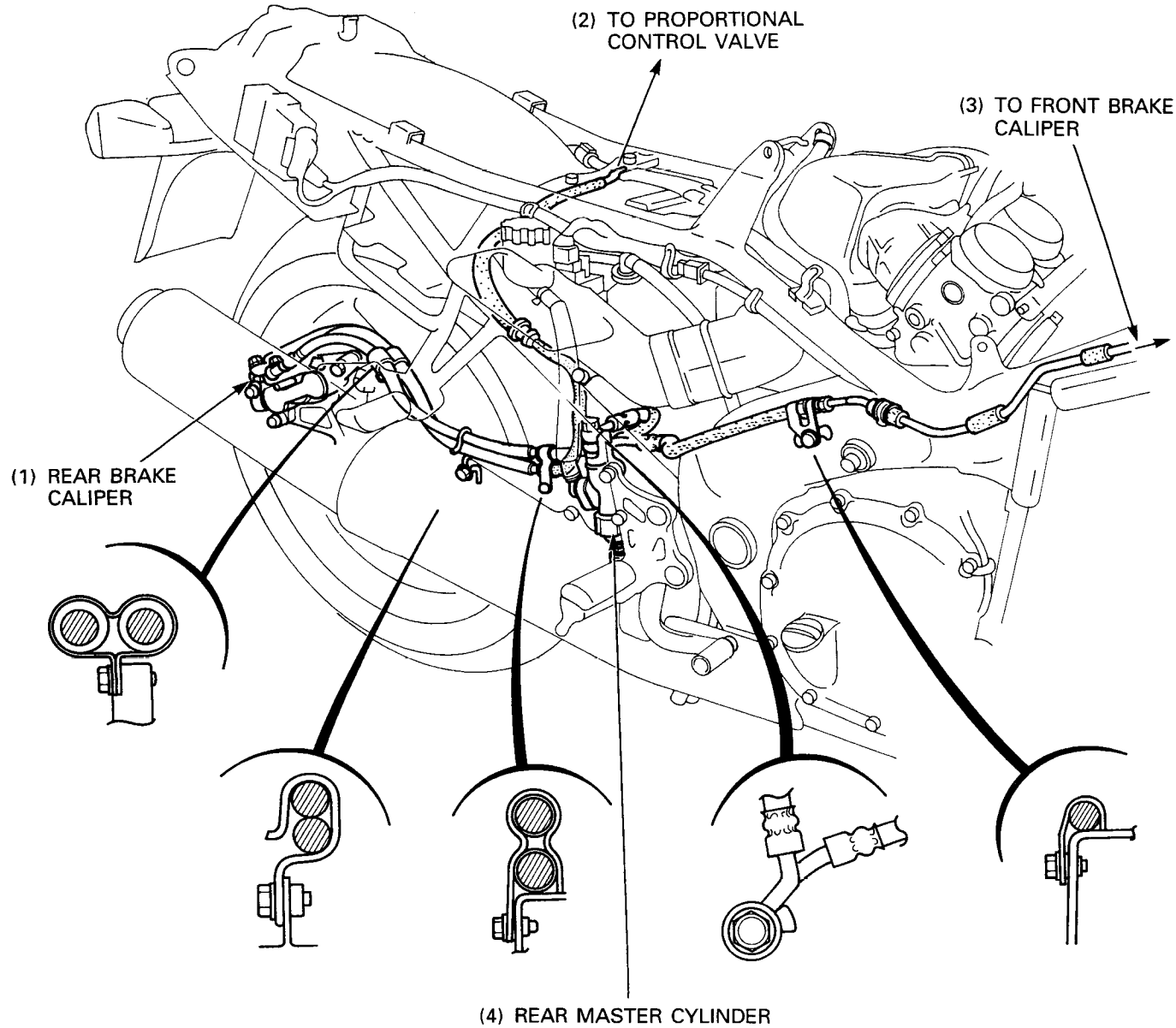
(2) TO PROPORTIONAL CONTROL VALVE
(3) TO FRONT BRAKE CALIPER
(1) REAR BRAKE CALIPER
(4) REAR MASTER CYLINDER

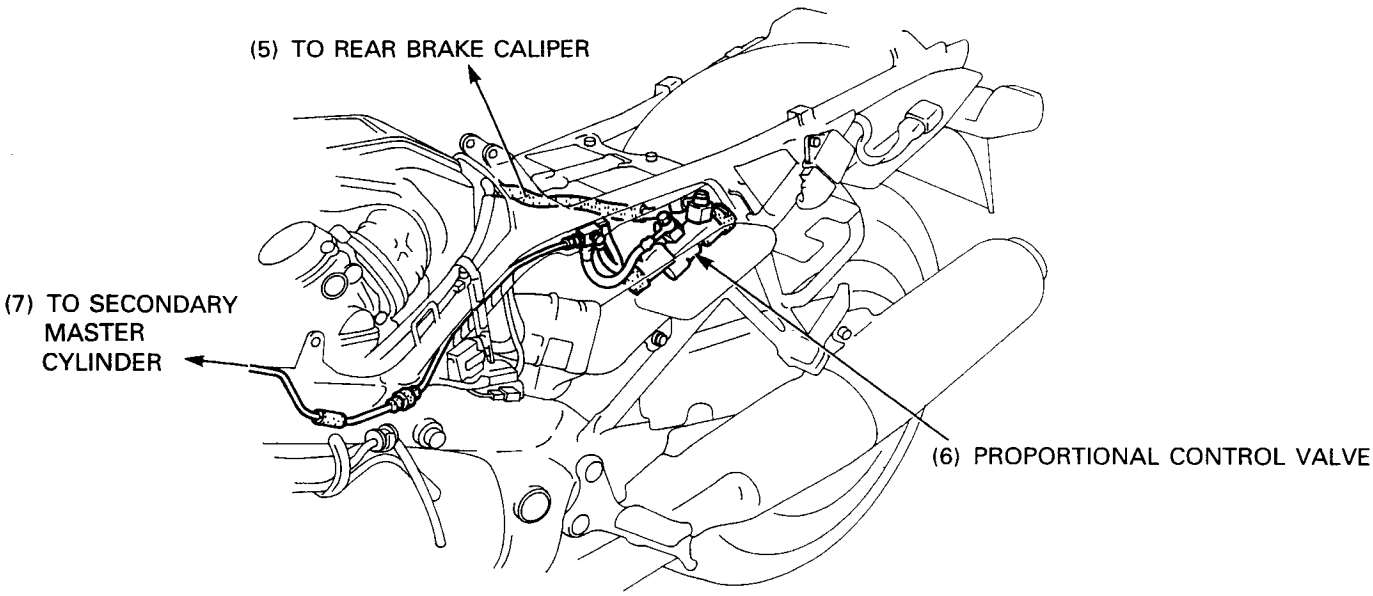
(5) TO REAR BRAKE CALIPER
(7) TO SECONDARY MASTER CYLINDER
(6) PROPORTIONAL CONTROL VALVE

Secondary Air Supply System Routing (SW, AR type)

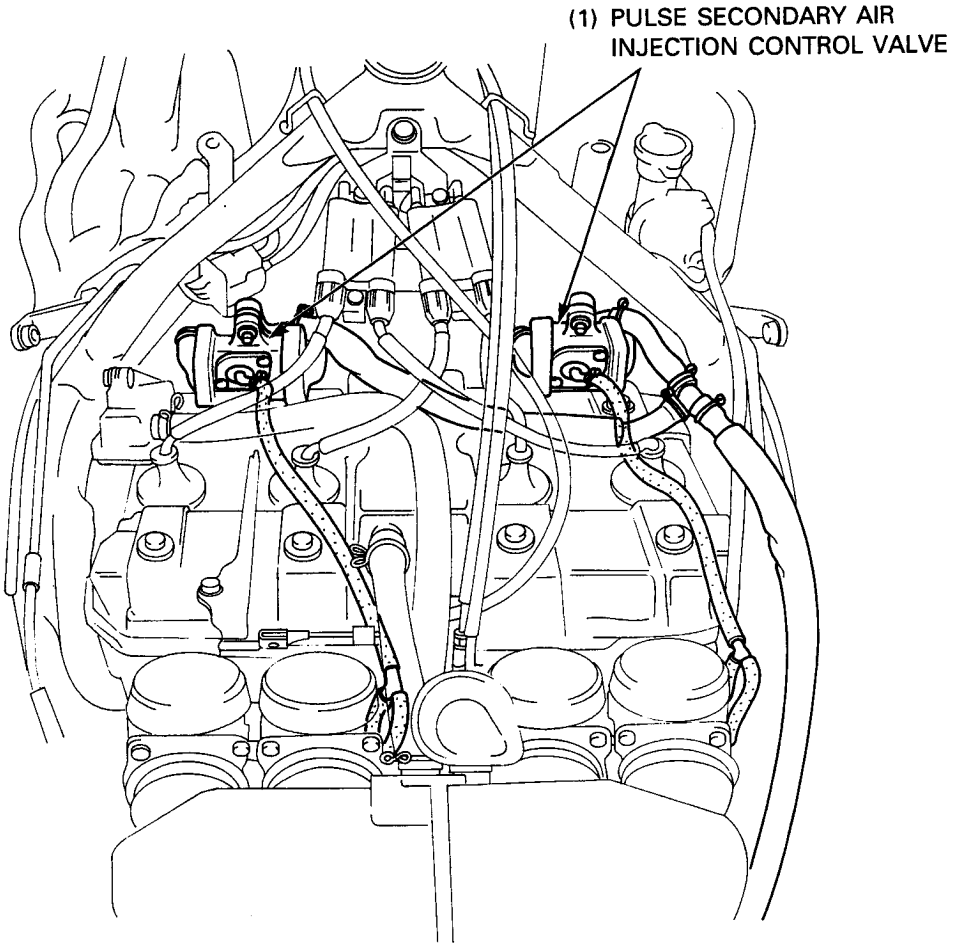

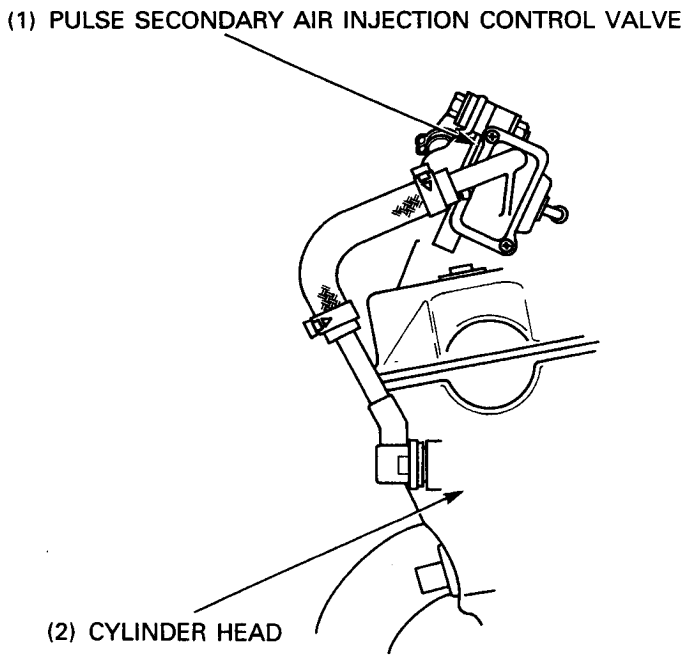

2. Frame/Body Panels/Exhaust System

Service Information

⚠ WARNING

- **Gasoline is extremely flammable and is explosive under certain conditions.**
- **Serious burns may result if the exhaust system is not allowed to cool before components are removed or serviced.**

- Work in a well ventilated area. Smoking or allowing flames or sparks in the working area or where gasoline is stored can cause a fire or explosion.
- This section covers removal and installation of the frame body panels, fuel tank and exhaust system.
- Always replace the exhaust pipe gaskets when removing the exhaust pipe from the engine.
- When installing the exhaust pipe, install the all fasteners loosely. Always tighten the exhaust clamps first, then tighten the mounting fasteners. If you tighten the mounting fasteners first, the exhaust pipe may not seat properly.
- Always inspect the exhaust system for leaks after installation.

Troubleshooting

Excessive Exhaust Noise
- Broken exhaust system
- Exhaust gas leak

Poor Performance
- Deformed exhaust system
- Exhaust gas leak
- Clogged muffler

Body Panel Locations

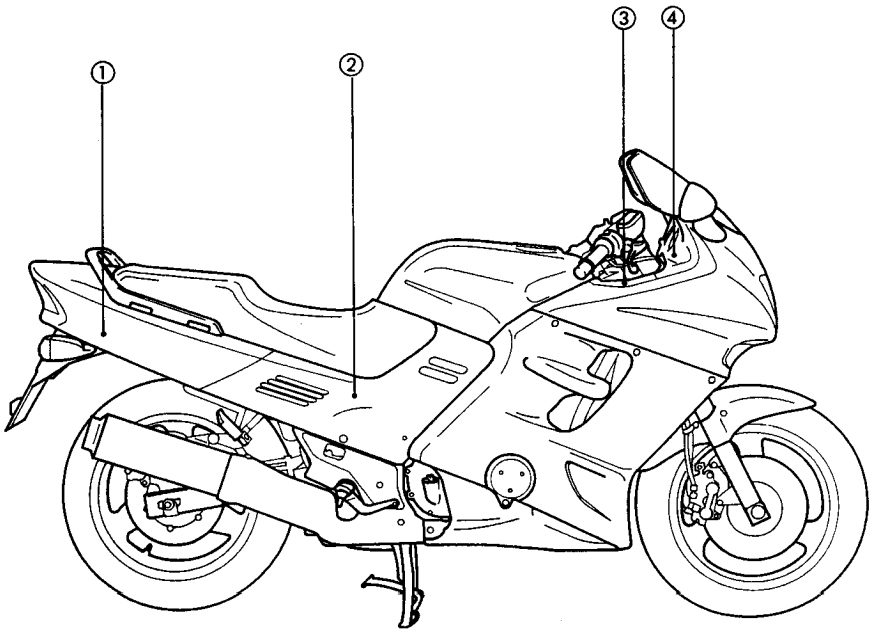

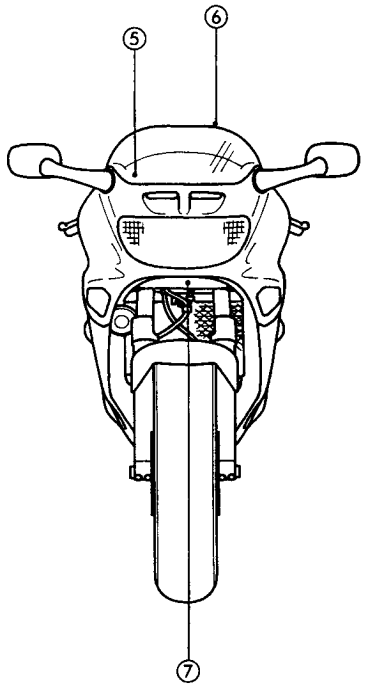

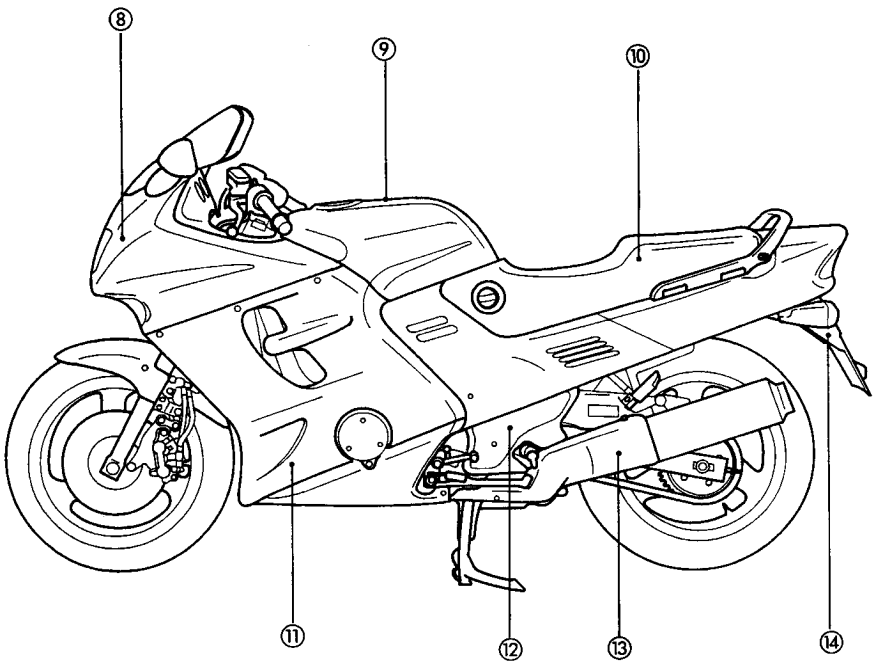

① SEAT COWL
② SIDE COVER
③ INNER COVER
④ INSTRUMENT PANEL
⑤ UPPER COWL INNER
⑥ WINDSCREEN
⑦ MAINTENANCE LID
⑧ UPPER FAIRING
⑨ FUEL TANK
⑩ SEAT
⑪ LOWER FAIRING
⑫ PIVOT COVER
⑬ PIVOT UNDER COVER
⑭ REAR FENDER A

Side Cover

Removal/Installation

Release the clip screw by turning it counterclockwise.
Pull the front of the side cover out, then release the boss from the lower fairing rubber grommet.
Release the tabs from the seat cowl, then remove the side cover.

Installation is in the reverse order of removal.

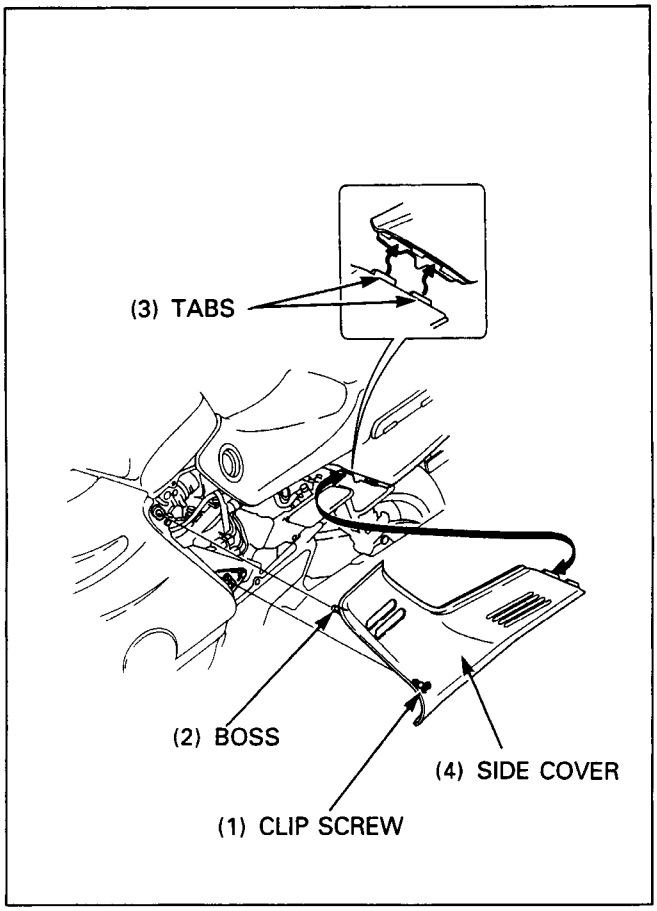

Seat

Removal

Unlock the seat using the ignition key.
Release the two hooks from the fuel tank.

Pull the seat rearward and remove it.

Installation

Installation is in the reverse order of removal

NOTE

- At installation, first install the front hooks into the fuel tank, then install the middle and rear hooks into the catches of the grab rail.

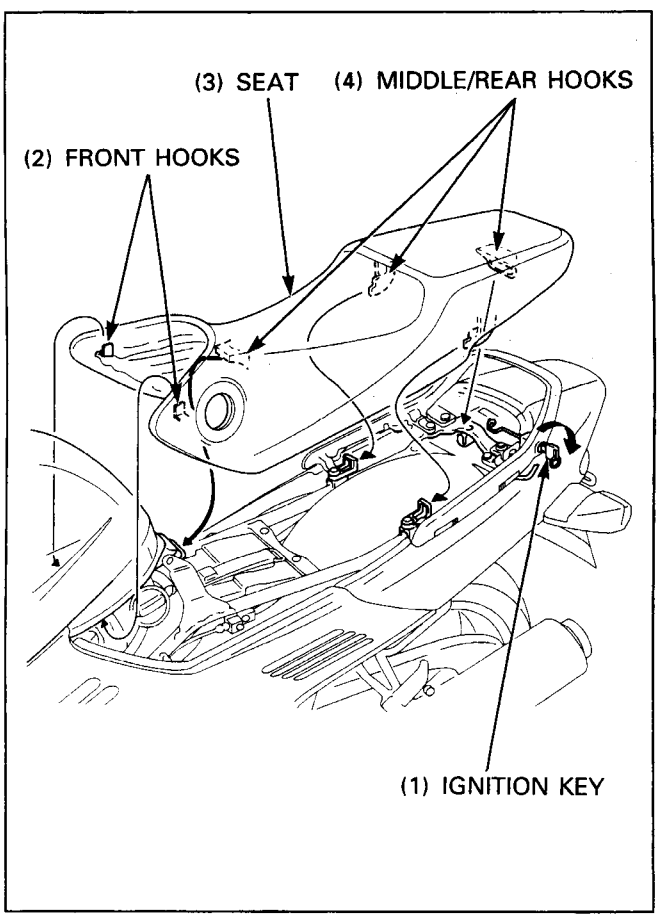

Seat Cowl

Removal

Remove the seat (page 2-3).

Remove the four grab rail mounting bolts.
Remove the grab rail while releasing the seat lock link from the seat lock.

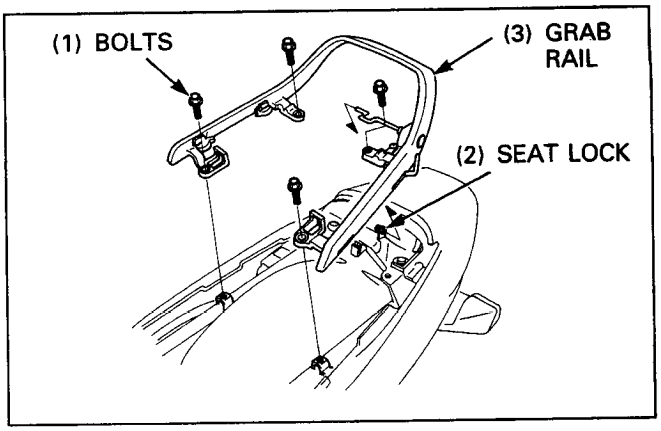

Disconnect the tail/brake light connector.
Remove the seat cowl mounting bolts and collars.

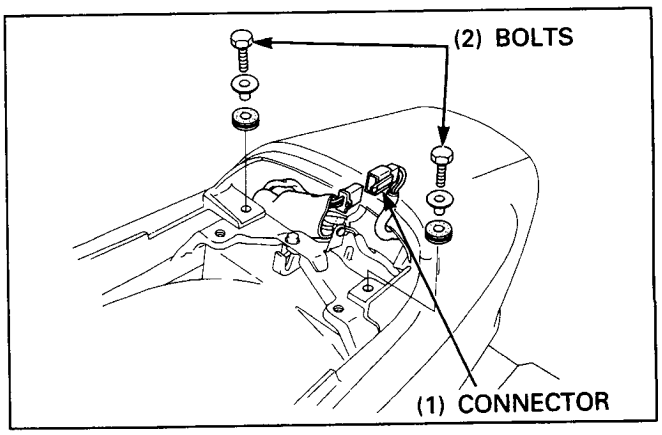

Release the tabs from the frame hooks while pulling the seat cowl backward, then remove the seat cowl.
Remove the hook rubbers.

Remove the three screws and tail/brake light unit.

Installation

Installation is in the reverse order of removal.

NOTE

- At installation, install the hook rubbers securely onto the tabs of the seat cowl.

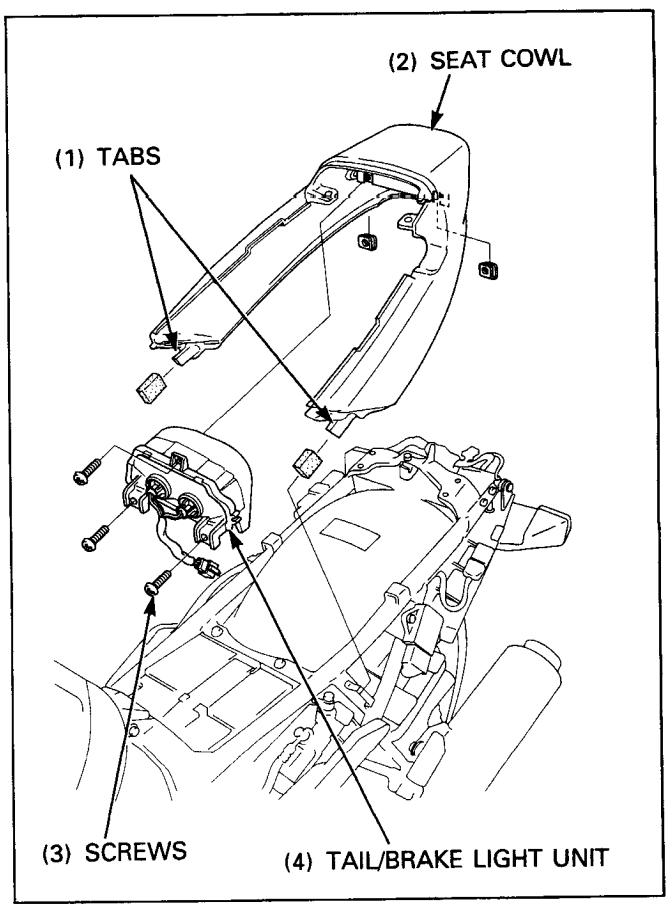

Rear Fender

Removal

Remove the seat cowl (page 2-4).
Disconnect the turn signal connectors.

Remove the trim clips.
Remove the rear fender mounting bolts and nuts, then remove the rear fender A assembly.

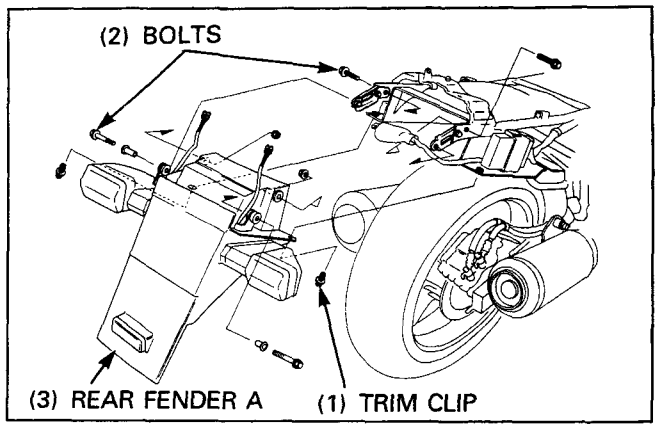

Remove the following:
- Bolts
- Turn signal unit
- Setting collars

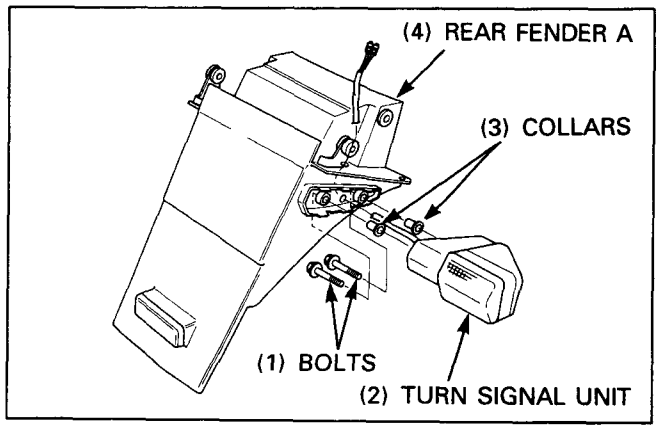

Remove the ignition control module and turn signal relay from the bracket on the rear fender B.

Pull the rear fender B out of the frame.

Installation

Installation is in the reverse order of removal.

NOTE

- At installation of the rear fender B, align the boss on the rear fender B with the grommet holes in the battery case.

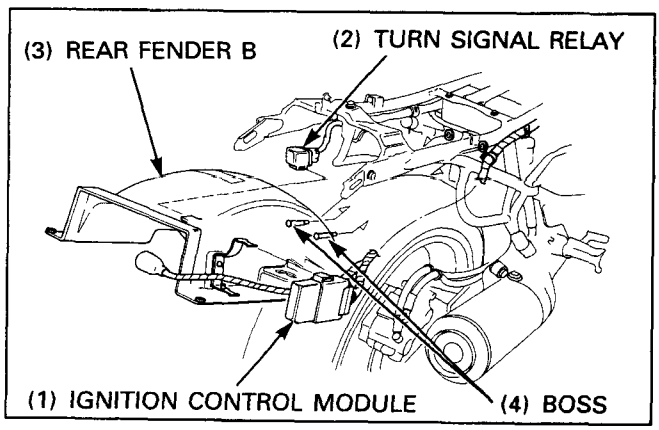

Pivot Cover

Removal/Installation

Remove the side cover (page 2-3).

Remove the two socket bolts.
Release the hook from the frame, then remove the pivot cover.

Installation is in the reverse order of removal.

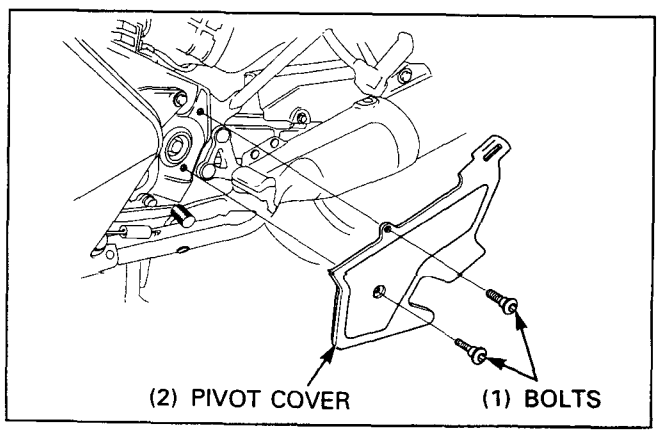

Pivot Under Cover

Removal/Installation

⚠ WARNING

- **Do not remove the pivot under cover while the exhaust system is hot.**

Remove the pivot covers (page 2-5).

Remove the socket bolts, and pivot under cover.

Installation is in the reverse order of removal.

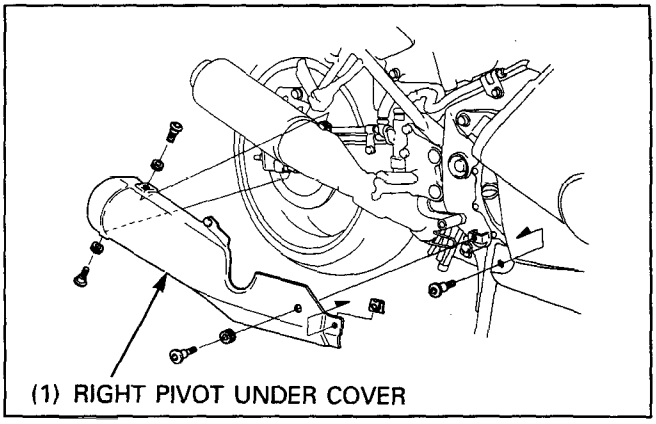

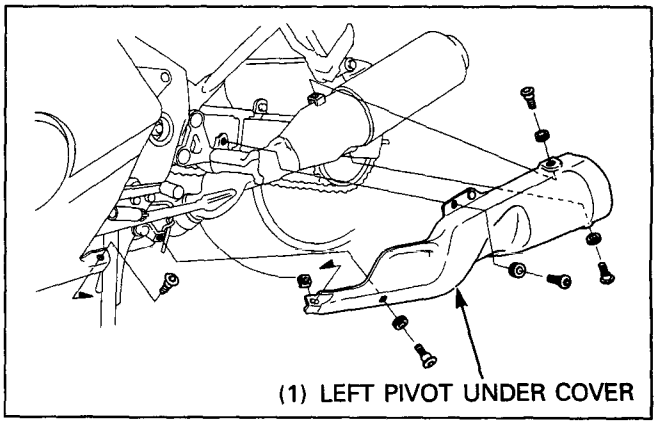

Lower Fairing

Removal

Remove the trim clips and maintenance lid.

Remove the trim clips securing the lower fairing and upper

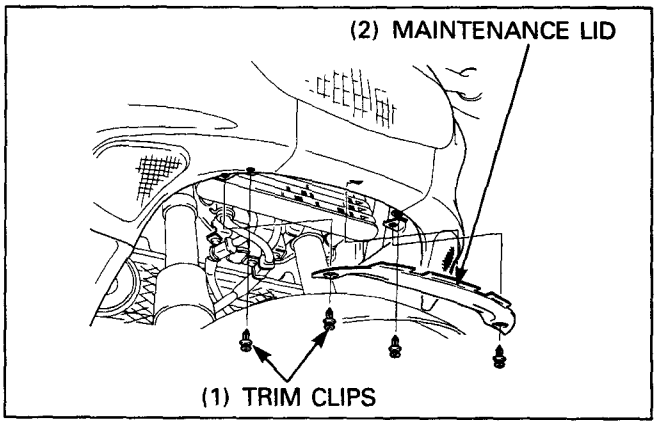

Remove the trim clips connecting the both lower fairings.

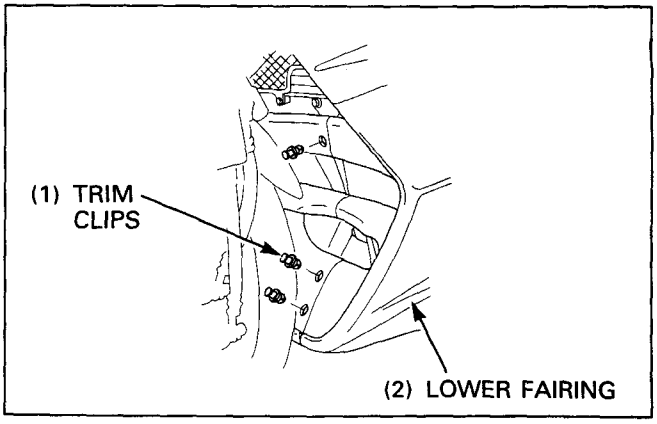

Remove the side bumper protector.
Remove the protector cover (page 3-5).
Remove the lower fairing mounting socket bolts and flange bolts.

Remove the retaining clip.
Disconnect the lower hooks then separate and remove the lower fairings.

Installation

Installation is in the reverse order of removal.

NOTE

- Be careful not to damage the hooks.

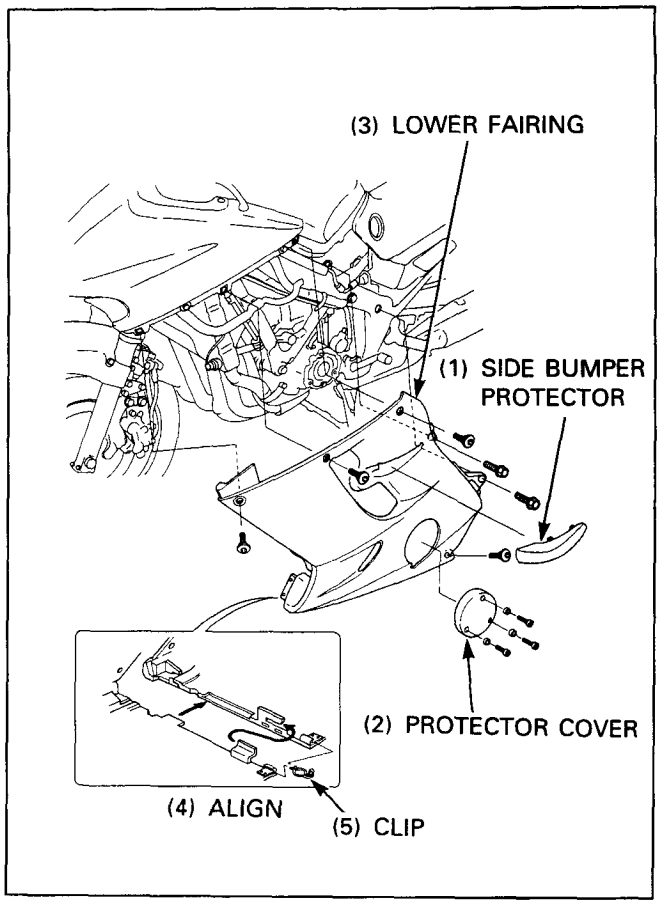

Upper Fairing

Removal

Remove the lower fairing.

Remove the screws, plastic washers, rubber washer and windscreen.
Remove the windscreen setting nut.

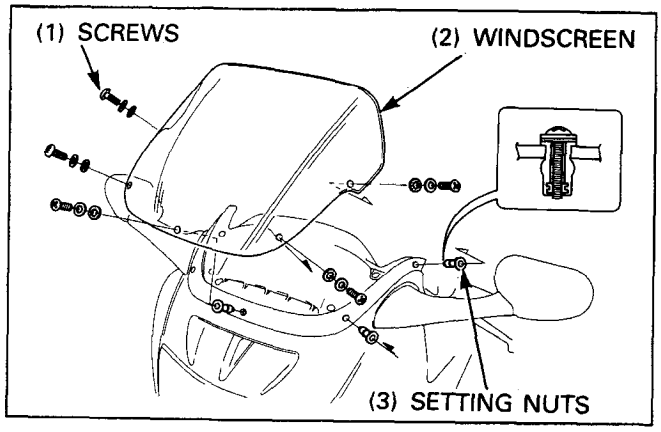

Remove the rearview mirror boot.

Remove the following:
- Bolts
- Rearview mirror
- Setting plate
- Setting rubber

NOTE

- At installation, install the setting rubber with its mark facing outward.
- At installation, install the setting plate with its arrow facing out and forward as shown.

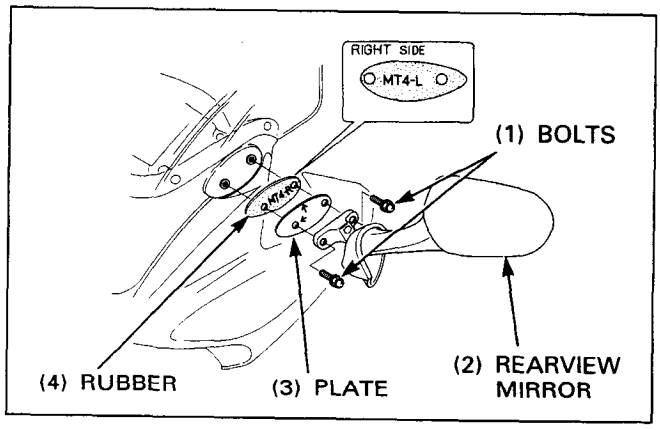

Remove the socket bolt on each side.
Release the tabs and remove the inner covers.

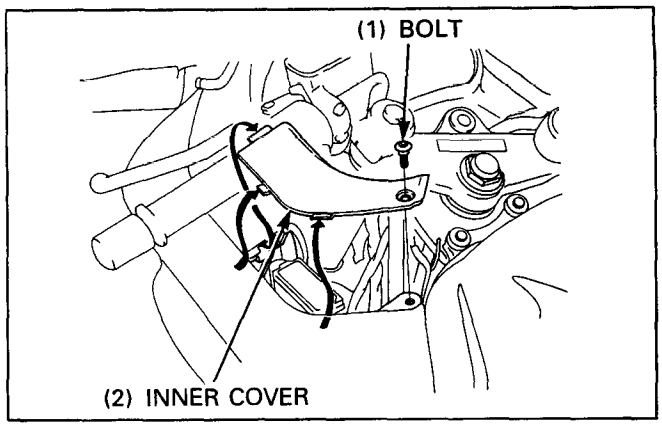

Remove the screws and instrument panel.

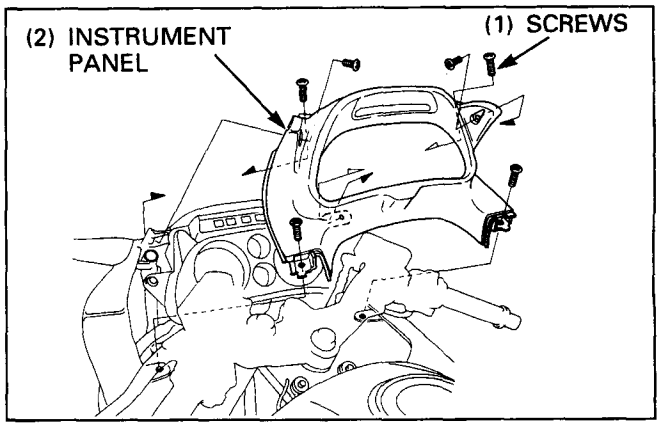

Remove the screws and upper cowl inner.

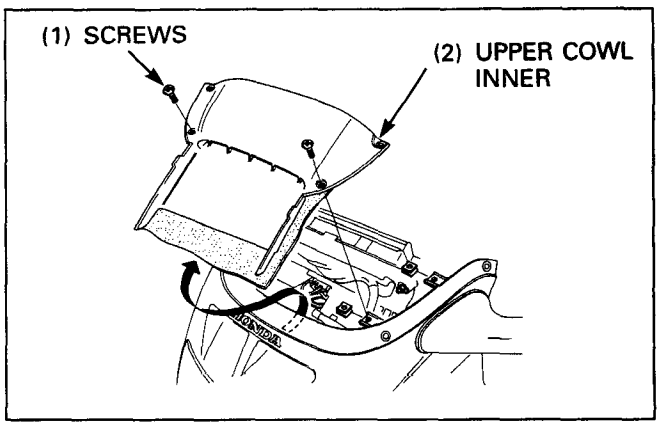

Remove the upper fairing mounting bolts.

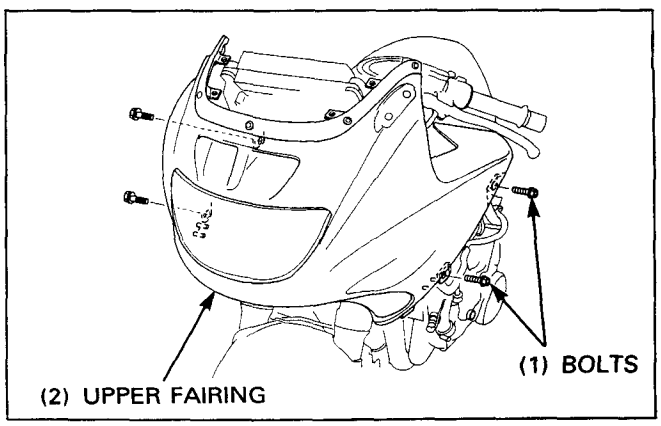

Disconnect the headlight sockets and turn signal connectors.
Remove the upper faining from the frame.

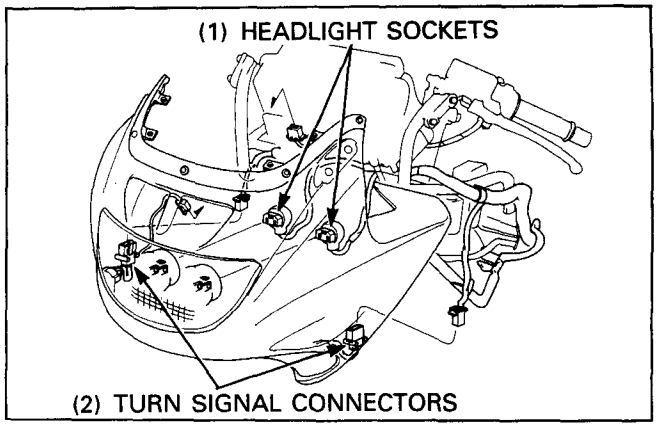

Remove the screws and turn signal unit.
Remove the bolts and headlight unit.

Installation

Installation is in the reverse order of removal.

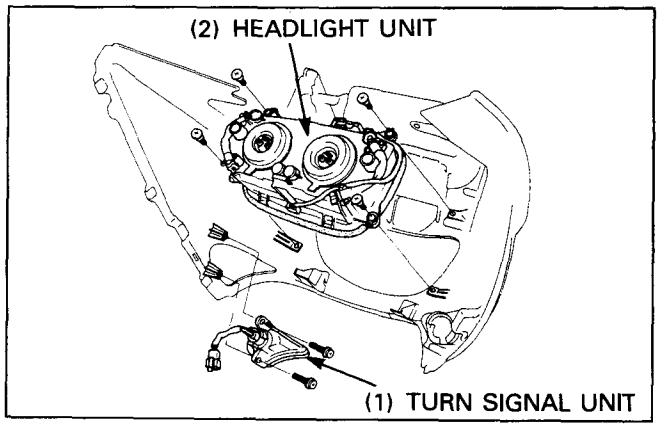

Fuel Tank

⚠ WARNING

- **Gasoline is extremely flammable and is explosive under certain conditions. Work in a well ventilated area. Smoking or allowing flames or sparks in the work area or where gasoline is stored can cause a fire or explosion.**

Remove the seat and both side covers (page 2-3)

Remove the fuel tank front mounting bolts and washers.
Open the fuel tank and support the tank using the support rod.

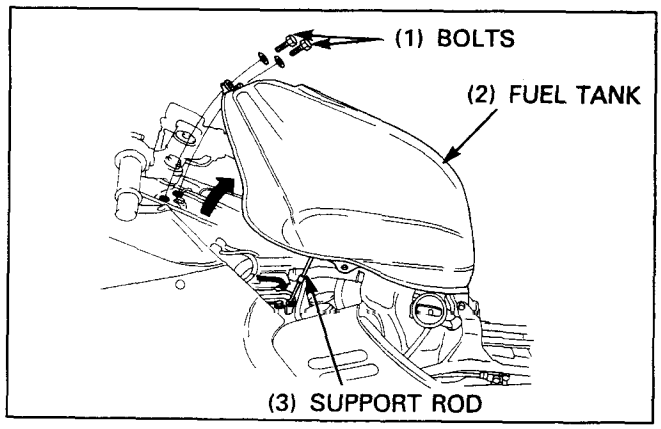

Disconnect the fuel level sensor wire connector.
Disconnect the fuel valve vacuum tube and fuel tube.
Disconnect the fuel tank air vent tube.

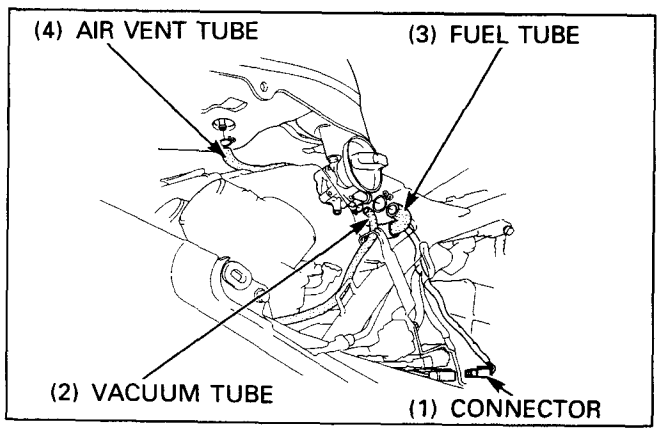

Remove the B-clip and washer from the support rod.

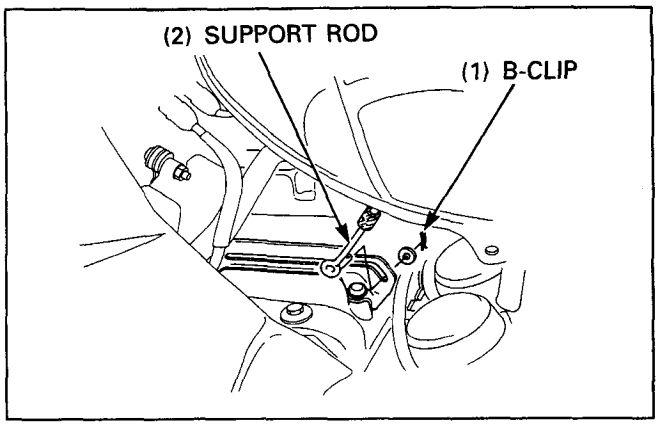

Remove the pivot bolt/nut and the fuel tank.

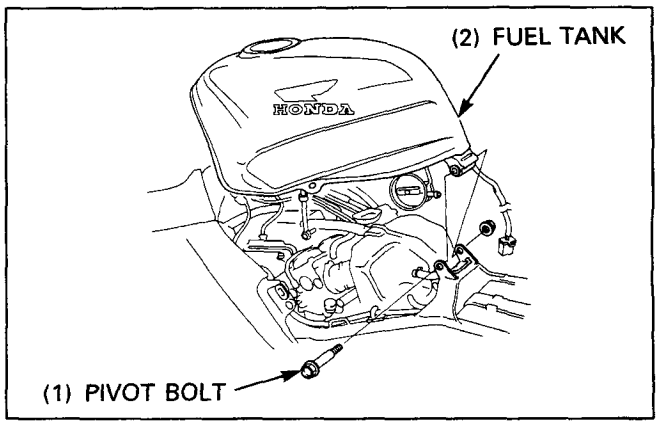

Installation

Installation is in the reverse order of removal.

Torque:
Fuel tank pivot nut: 10 N•m (1.0 Kg-m, 7 ft-lb)
Fuel tank mounting bolt: 10 N•m (1.0 Kg-m, 7 ft-lb)

NOTE

- After installation, make sure there are not fuel leaks.

Exhaust System

WARNING

- **Do not service the exhaust system while it is hot.**

Muffler Removal

Remove the pivot covers and pivot under covers (page 2-5, 6).

Loosen the muffler clamp bolts.
Remove the muffler mounting bolts/nuts, then remove the muffler.
Remove the gasket.

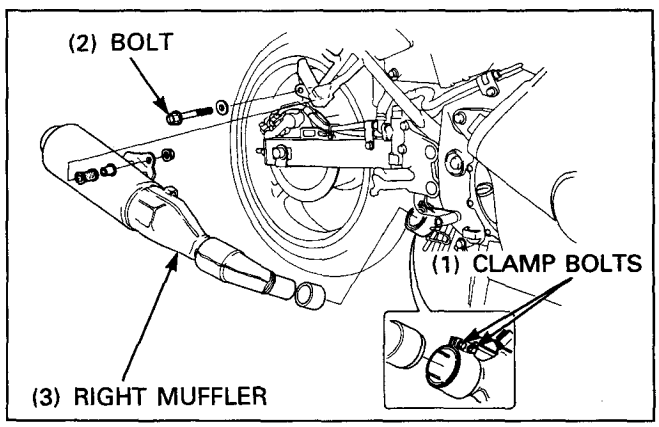

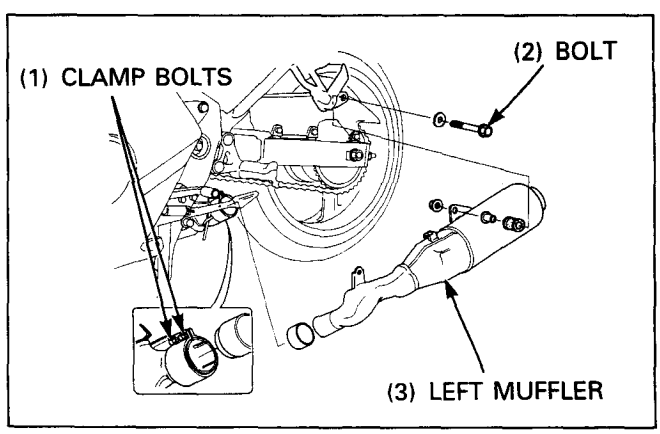

Exhaust Pipe Removal

Remove the following:
- Lower fairing (page 2-6)
- Radiator (page 6-4)
- Mufflers

Remove the exhaust pipe joint nuts.
Remove the exhaust pipe mounting bolt and exhaust pipe.
Remove the gaskets.

Install the exhaust pipe and mufflers in the reverse order of removal.

NOTE

- Always replace the exhaust pipe gaskets and muffler gaskets with new ones.
- At installation, loosely install all fasteners, and tighten the exhaust pipe joint nuts first, then tighten the muffler clamp bolts and the mounting bolts.

Torque:
Exhaust pipe joint nut: 17 N•m (1.7 kg-m, 12 ft-lb)
Muffler clamp bolt: 22 N•m (2.2 kg-m, 16 ft-lb)
Muffler/exhaust pipe mounting bolt: 22 N•m (2.2 kg-m, 16 ft-lb)

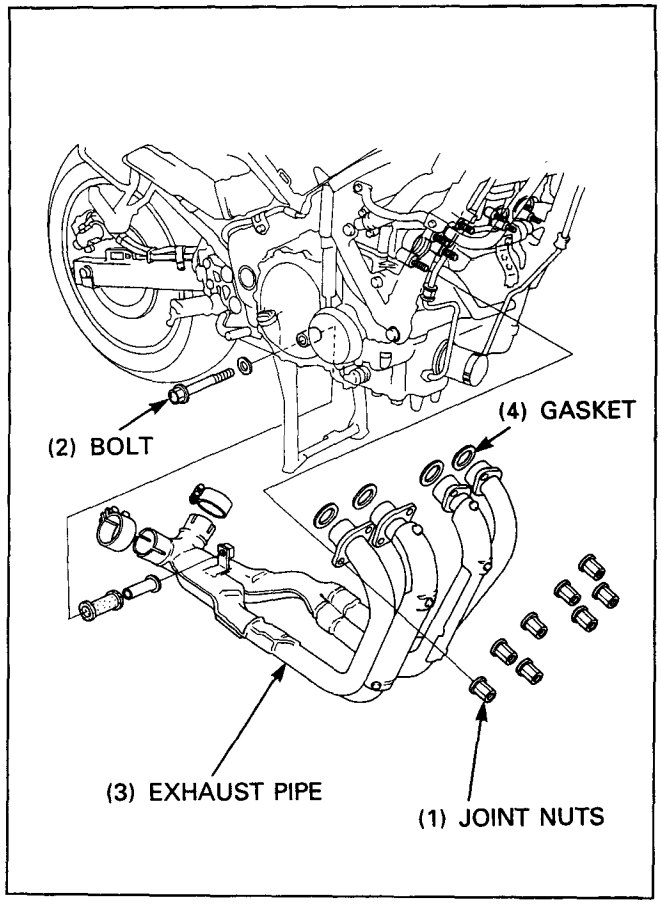

3. Maintenance

Service Information

- Refer to Common Service Manual for items not included in this manual.
- Refer to specifications (Section 1) for maintenance data.

Service Access Guide

- The follwing shows the locations of the parts that must be removed for the maintenance items listed below. Refer to the Common Service Manual for items not included in this manual.
- Refer to section 2 (Frame/Body Panels /Exhaust System), for the parts that must be removed for service.
  For example: Air Cleaner (Contamination, clogging, replacement): Parts
  - Fuel tank ———— The part required must be removed for service.

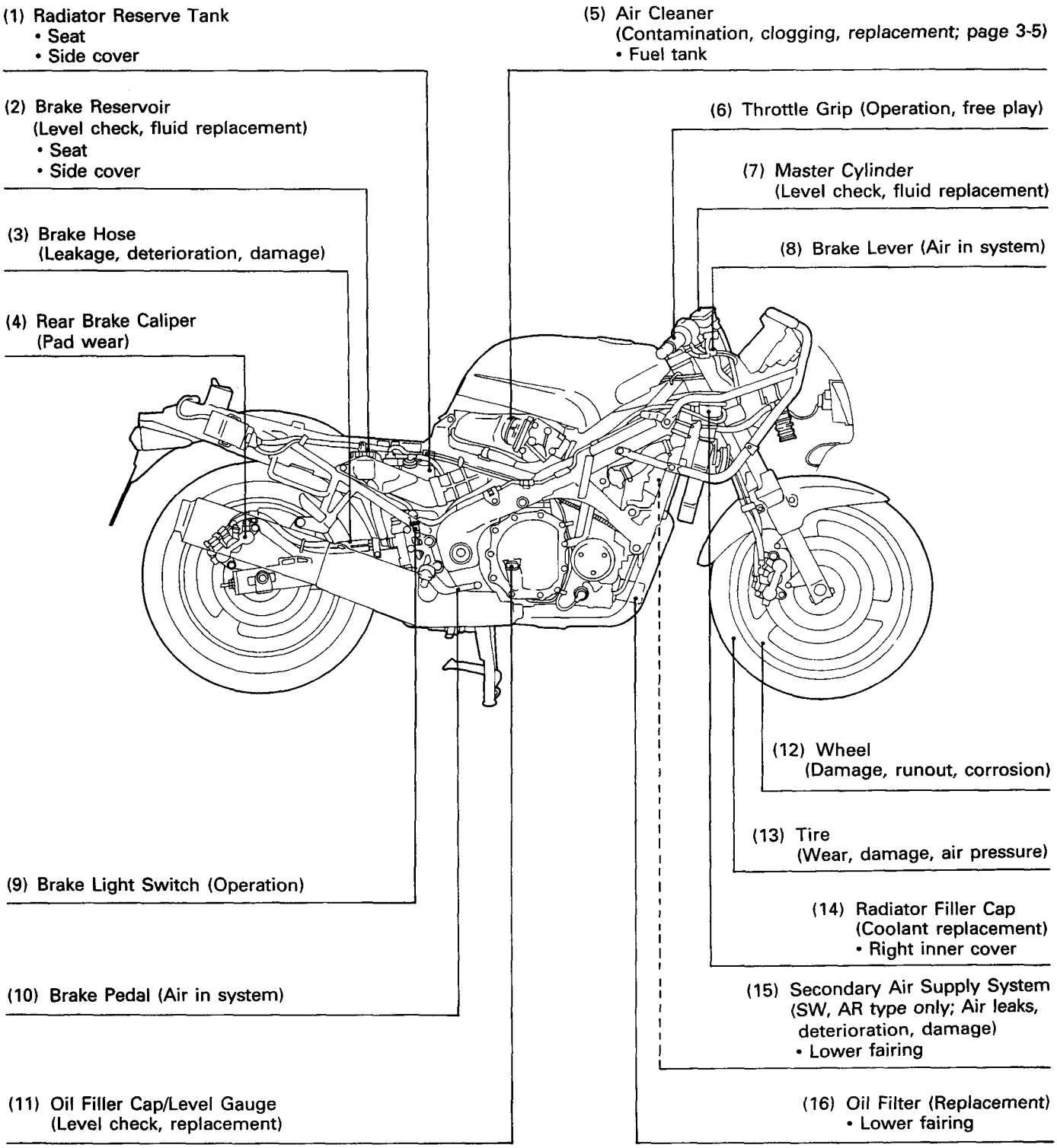

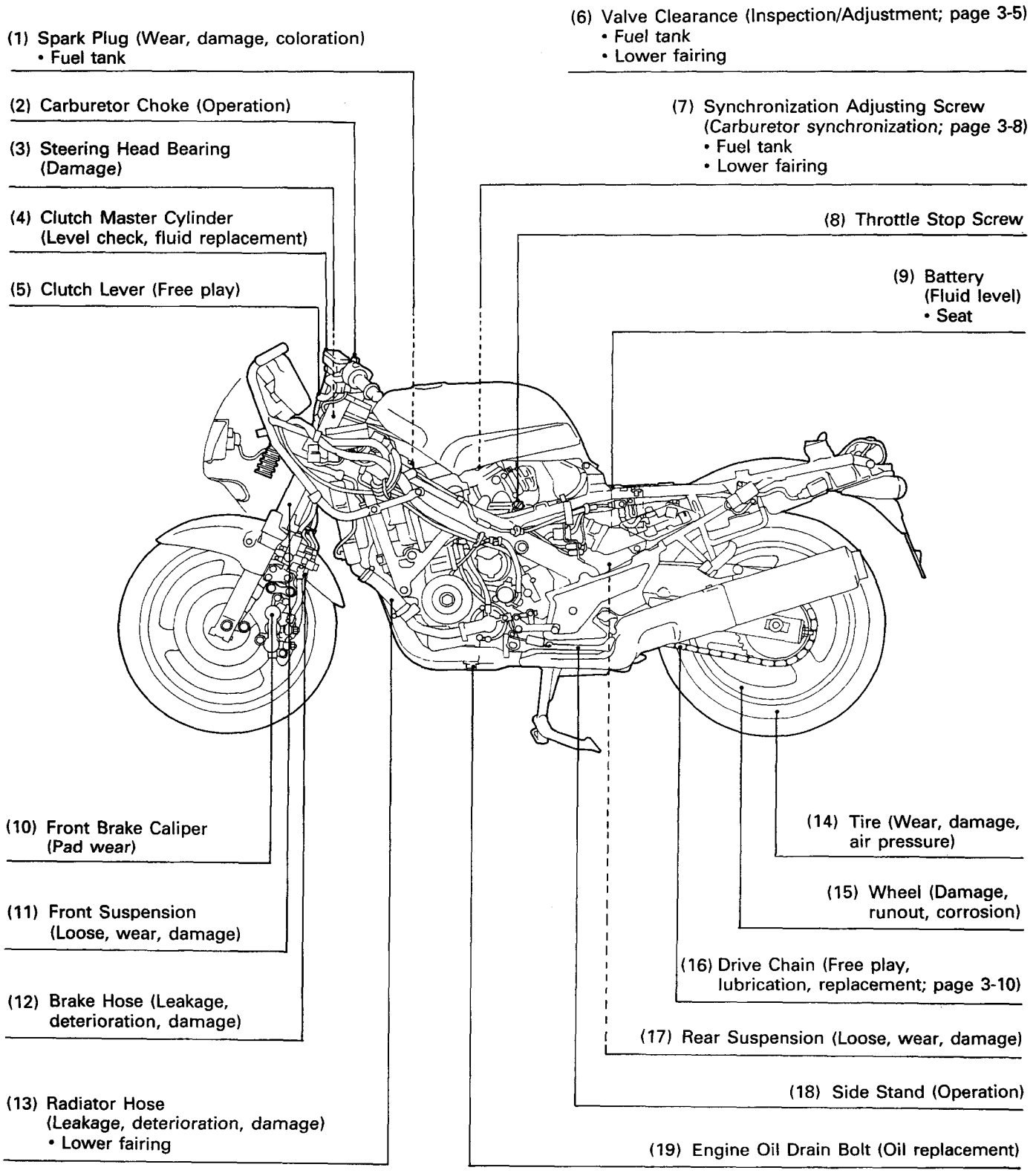
(1) Spark Plug (Wear, damage, coloration)
• Fuel tank
(2) Carburetor Choke (Operation)
(3) Steering Head Bearing (Damage)
(4) Clutch Master Cylinder (Level check, fluid replacement)
(5) Clutch Lever (Free play)
(6) Valve Clearance (Inspection/Adjustment; page 3-5)
• Fuel tank
• Lower fairing
(7) Synchronization Adjusting Screw (Carburetor synchronization; page 3-8)
• Fuel tank
• Lower fairing
(8) Throttle Stop Screw
(9) Battery (Fluid level)
• Seat
(10) Front Brake Caliper (Pad wear)
(11) Front Suspension (Loose, wear, damage)
(12) Brake Hose (Leakage, deterioration, damage)
(13) Radiator Hose (Leakage, deterioration, damage)
• Lower fairing
(14) Tire (Wear, damage, air pressure)
(15) Wheel (Damage, runout, corrosion)
(16) Drive Chain (Free play, lubrication, replacement; page 3-10)
(17) Rear Suspension (Loose, wear, damage)
(18) Side Stand (Operation)
(19) Engine Oil Drain Bolt (Oil replacement)

Maintenance Schedule

Perform the Pre-Ride Inspection in the Owner's Manual at each scheduled maintenance period.
I: Inspect and clean, Adjust, Lubricate, or Replace if necessary.
C: Clean, R: Replace, A: Adjust, L: Lubricate
The following items require some mechanical knowledge. Certain items (particularly those marked *and **) may require more technical information and tools. Consult their authorized Honda dealer.

Item	Frequency	Whichever Comes First ⇩	⇨ Odometer Reading (Note 1)								Refer to page
			X1,000km	1	6	12	18	24	30	36	
			X1,000mi	0.6	4	8	12	16	20	24	
			Months		6	12	18	24	30	36	
*	Fuel Line					I		I		I	Note 6
*	Throttle Operation					I		I		I	Note 6
*	Carburetor Choke					I		I		I	Note 6
	Air Cleaner	Note 2					R			R	3–5
	Crankcase Breather	Note 3			C	C	C	C	C	C	Note 6
	Spark Plug				I	R	I	R	I	R	Note 6
*	Valve Clearance			I		I		I		I	3–5
	Engine Oil			R		R		R		R	Note 6
	Engine Oil Filter			R		R		R		R	Note 6
*	Carburetor Synchronization					I		I		I	3–8
*.	Carburetor Idle speed			I	I	I	I	I	I	I	Note 6
	Radiator Coolant	Note 4				I		I		R	Note 6
*	Cooling System					I		I		I	Note 6
*	Secondary Air Supply System	Note 5				I		I		I	Note 6
	Drive Chain			Every 1,000km (600mi) I, L							3–10
	Drive Chain Slider					I		I		I	Note 6
	Battery				I	I	I	I	I	I	Note 6
	Brake Fluid	Note 4			I	I	R	I	I	R	3–13
	Brake Pad Wear				I	I	I	I	I	I	3–12
	Brake System			I		I		I		I	3–13
*	Brake Light Switch					I		I		I	Note 6
*	Headlight Aim					I		I		I	3–14
	Clutch System					I		I		I	Note 6
	Clutch Fluid	Note 4			I	I	R	I	I	R	Note 6
	Side Stand					I		I		I	Note 6
*	Suspension					I		I		I	Note 6
*	Nuts, Bolts, Fasteners			I		I		I		I	1–14
**	Wheels/Tires					I		I		I	Note 6
**	Steering Head Bearing			I		I		I		I	Note 6

* Should be serviced by your authorized Honda dealer, unless the owner has the proper tools and service data and is mechanically qualified.
** In the interest of safety, we recommended these items be serviced only by your authorized Honda dealer.

Notes:
1. At higher odometer readings, repeat at the frequency interval established here.
2. Service more frequently when riding in unusually wet or dusty areas.
3. Service more frequently when riding in rain or at full throttle.
4. Replace every 2 years, or at indicated odometer interval, whichever cames first. Replacement requires mechanical skill.
5. Switzerland and Austria type only.
6. Refer to Common Service Manual.

Air Cleaner

Remove the right side cover (page 2-3).

Remove the bolt and intake air duct.

Remove the three screws and air cleaner housing cover.

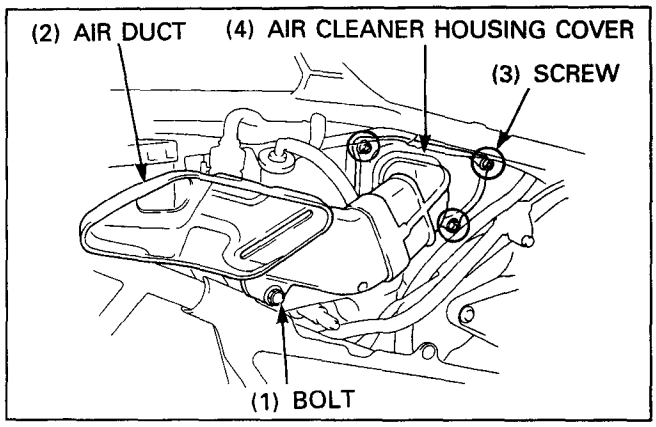

Remove the retainer and air cleaner element.

Replace the element in accordance with the maintenance schedule (page 3-4).
Also, replace the element any time it is excessively dirty or damaged.

Install a new air cleaner element and secure it with the retainer.
Install the removed parts in the reverse order of removal.

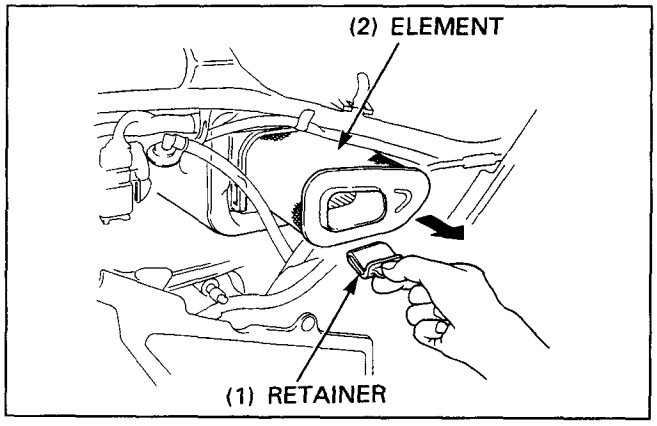

Valve Clearance

Inspection

NOTE

- Inspect and adjust the valve clearance while the engine is cold (below 35°C/95°F).
- The special 3 mm hexagon socket wrench is required for valve clearance adjustment. Modify a commercially available hexagon socket wrench as shown in the illustration.

Remove the following:
- Fuel tank (page 2-10)
- Cylinder head cover (page 8-2)

Remove the left crankcase protector cover.
Remove the crankshaft hole cap.

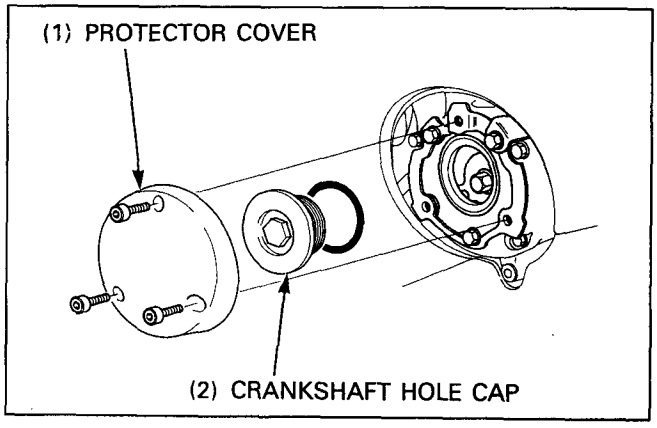

Rotate the crankshaft counterclockwise and align the index mark on the ignition pulse generator rotor with the "T" mark on the crankcase.

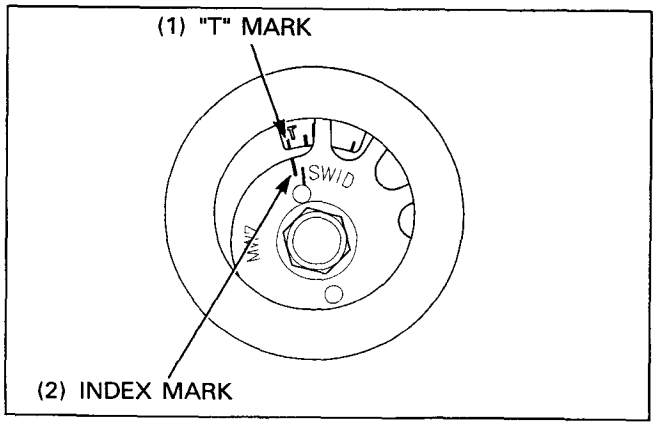

The timing marks ("IN" and "EX") on the cam sprockets must be flush with the cylinder head surface and facing outward as shown.

If the timing marks on the cam sprockets are facing inward, turn the crankshaft clockwise one full turn and realign the timing marks with the cylinder head surface so they are facing outward.

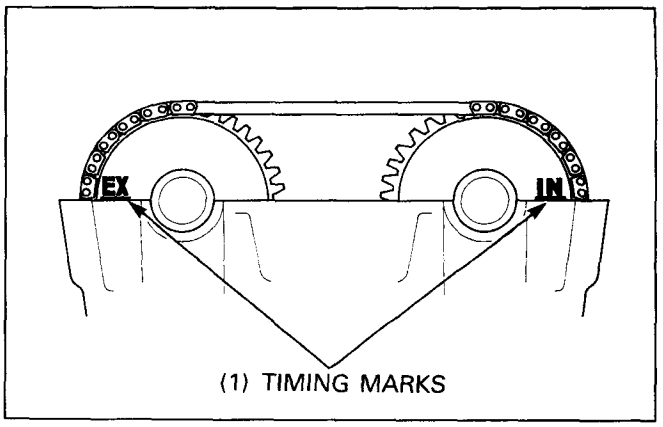

Insert the feeler gauge between the rocker arm slipper surface and the cam lobe.

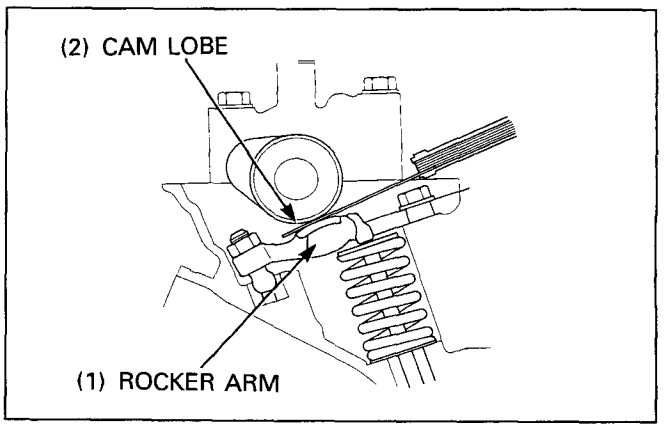

Check the valve clearance for the No.1 and No.3 cylinder intake valves using the feeler gauge.

Valve clearance : IN: 0.10 ± 0.02 mm (0.004 ± 0.001 in)

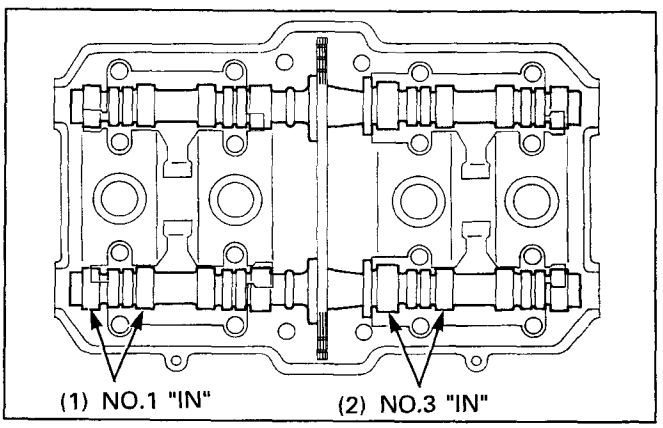

Potate the crankshaft counterclockwise 1/2 turn, align the index mark on the ignition pulse generator with the "T" mark on the crankcase.

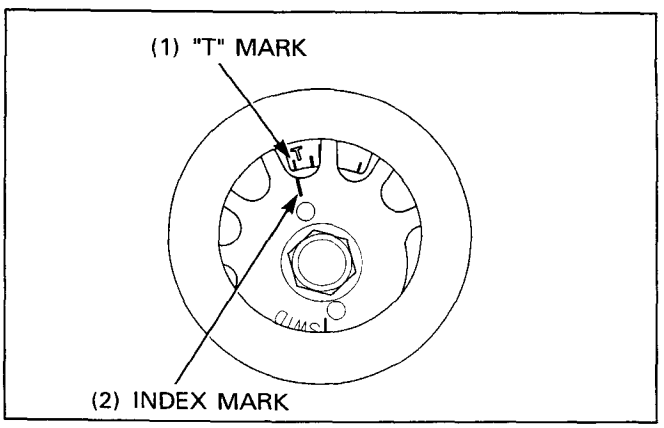

Check the valve clearance for the No.2 and No.4 cylinder exhaust valves using a feeler gauge.

Valve clearance : EX: 0.18 ± 0.02 mm (0.007 ± 0.001 in)

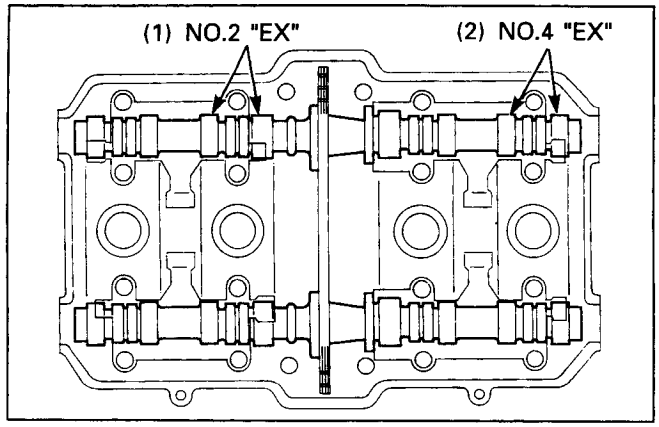

Turn the crankshaft counterclockwise 1/2 turn, align the timing marks on the cam sprockets are facing inward and flush with the cylinder head surface.

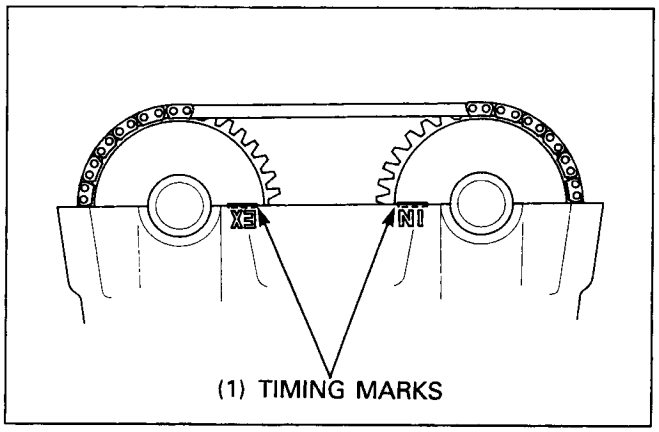

Check the valve clearance for the No.2 and No.4 cylinder intake valves using a feeler gauge.

Valve clearance: IN: 0.10 ± 0.02 mm (0.004 ± 0.001 in)

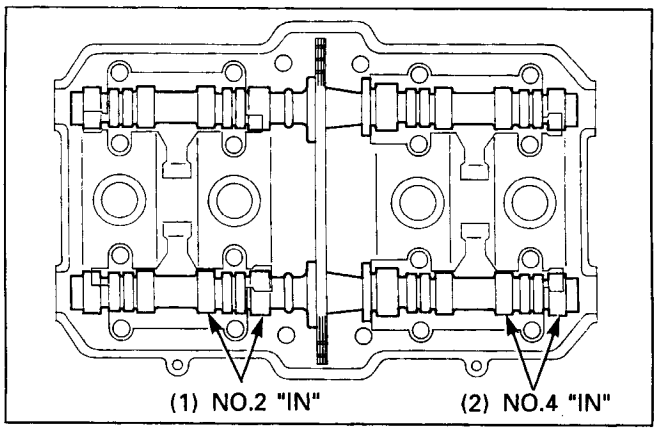

Turn the crankshaft counterclockwise 1/2 turn, align the Index mark on the igniton pulse generator with the "T" mark on the crankcase.

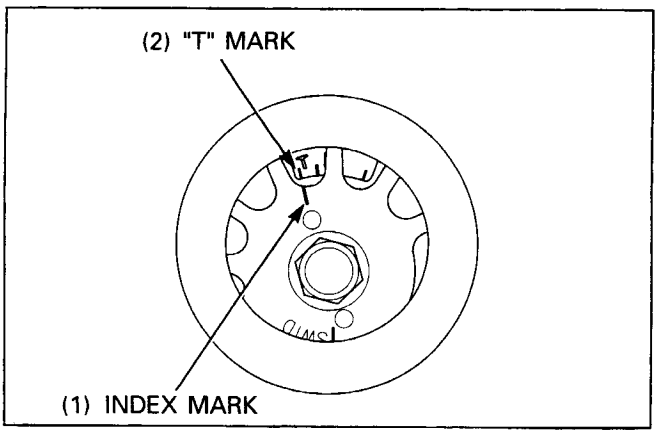

Check the valve clearance for the No.1 and No.3 cylinder exhaust valves using a feeler gauge.

Valve clearance: EX: 0.18 ± 0.02 mm (0.007 ± 0.001 in)

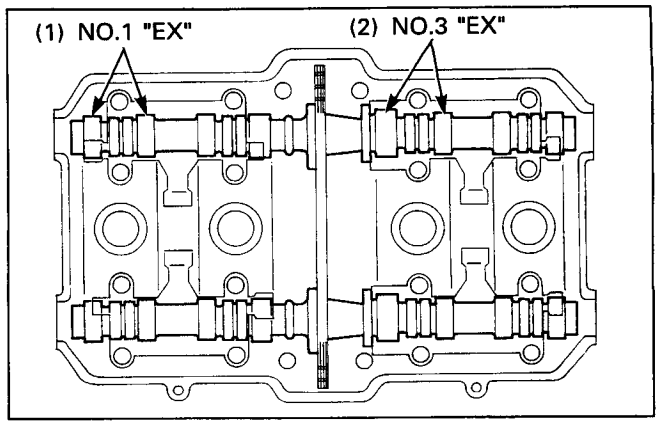

Adjustment

Loosen the valve adjusting screw lock nut and turn the adjusting screw with the modified 3 mm hexagon socket wrench until there is a slight drag on the feeler gauge.

S. TOOL

Lock nut wrench	**07GMA-ML70120 or**
Lock nut wrench	**07GMA-KT80120**

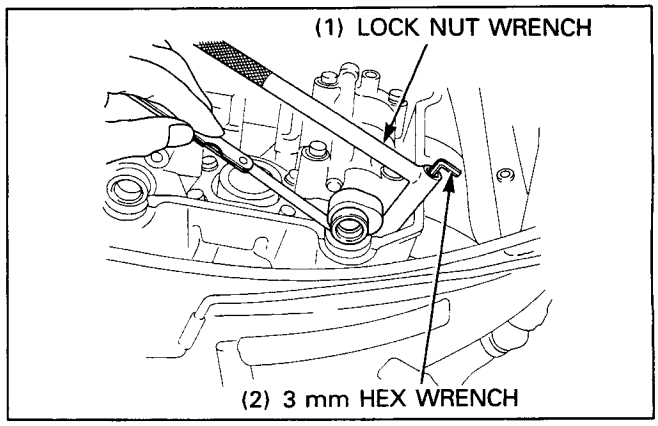

Hold the adjusting screw with the hexagon wrench and tighten the lock nut.

Torque: 23 N•m (2.3 kg-m, 17 ft-lb)

CAUTION

- **The lock nuts will come loose if the proper torque is not applied.**

Install the following:
- Cylinder head cover (page 8-2)
- Fuel tank (page 2-10)

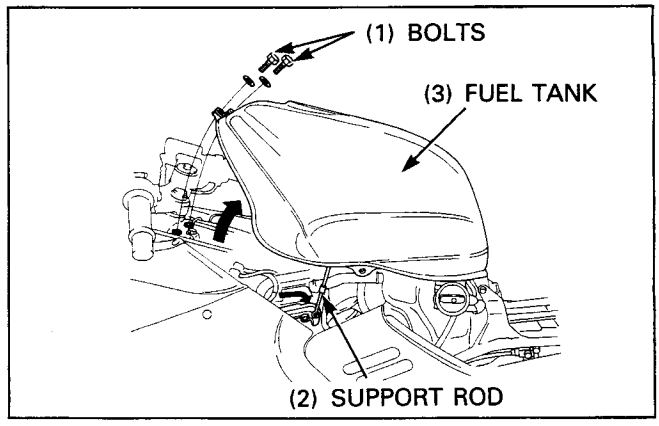

Carburetor Synchronization

NOTE

- Refer to section 2 of the Common Service Manual for caburetor synchronization procedure.
- Synchronize the carburetors with the engine at normal operating temperature,transmission in neutral and the motorcycle supported securely on a level surface.

Remove the fuel tank mounting bolts, raise the fuel tank and support it with the support rod (page 2-10).

Disconnect the fuel valve vacuum tube from the No.1 intake port.
Remove the No.2, 3 cylinder intake port rubber cap.

NOTE

- Remove the No.2, 3 intake port rubber cap by pinching the end of the cap. Do not pinch the cap body or it will be damaged.

Remove the No.4 vacuum plug from the cylinder head intake port.

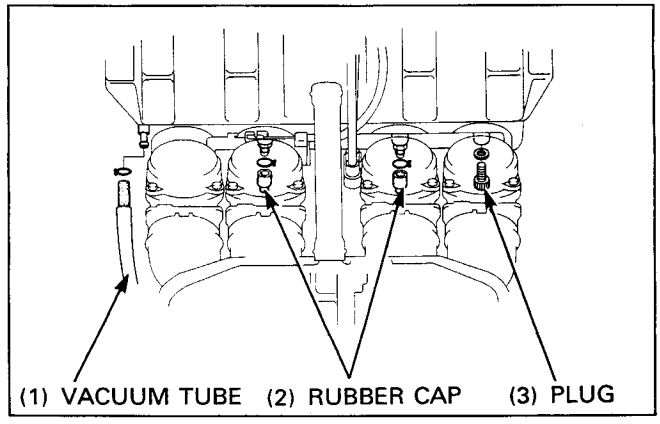

Screw the adaptors in the No.4 intake port vacuum holes.
Connect the vacuum gauge tubes to the No.2, 3 intake ports.
Connect the vacuum gauge tube to the No.1 intake port
Connect the vacuum pump to the fuel tank vacuum tube.
Operate the pump and open the fuel valve.

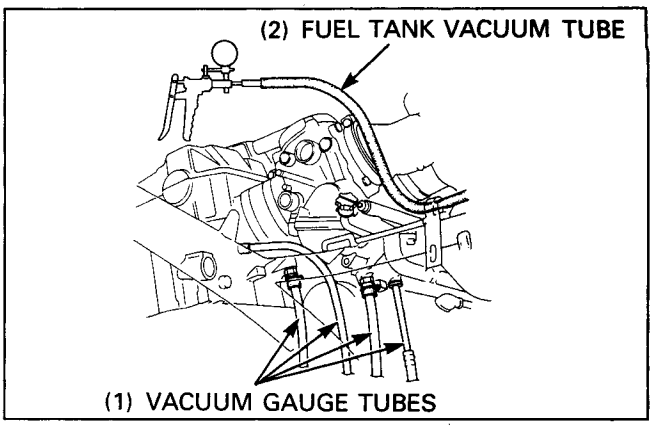

Start the engine and adjust the idle speed using the throttle stop screw.

Idle speed: 1,000 ± 100 min^{-1} (rpm) (Except SW, AR type)
1,050 ± 50 min^{-1} (rpm) (SW type)
1,050 ± 100 min^{-1} (rpm) (AR type)

Check the each carburetor intake vacuum pressure is within 20 mm (0.8 in) Hg of the base carburetor.

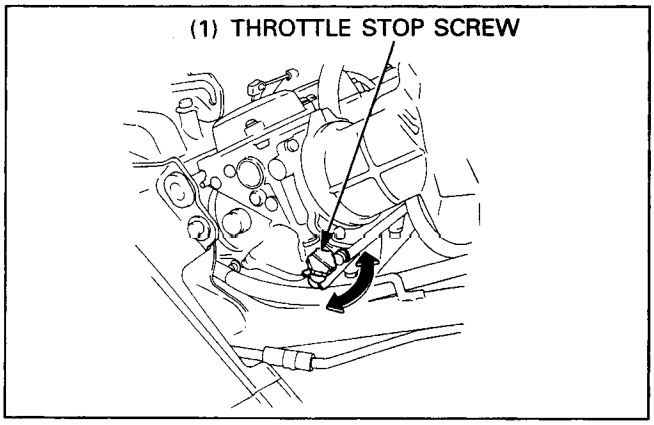

Synchronize the carburetors by turning the adjusting screws.

NOTE

- The No.3 carburetor cannot be adjusted; it is the base carburetor.
- The No.3 cylinder intake vacuum pressure is the base vacuum pressure.

Synchronize to specification by turning the adjusting screw with the phillips screwdriver as shown.

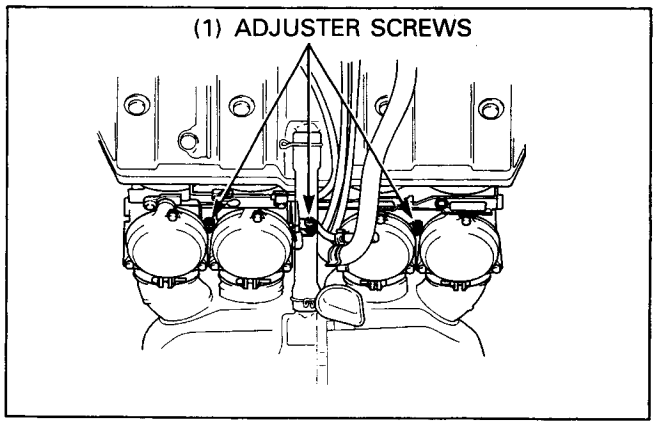

Recheck the idle speed and each cylinder intake vacuum pressure so it is within 20 mm (0.8 in) Hg of the base carburetor reading after snapping the throttle grip 3-4 times.

Remove the vacuum gauge tubes.

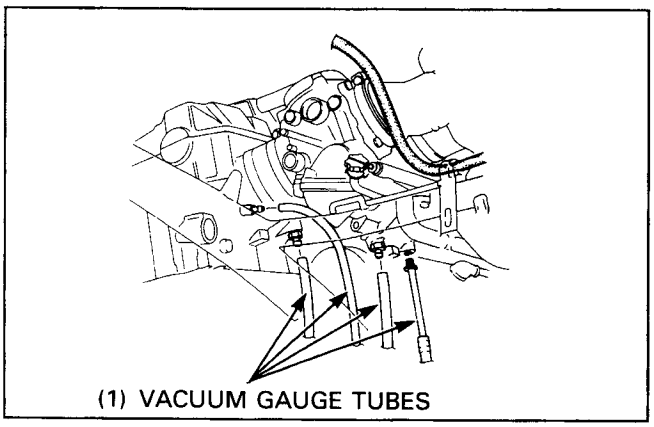

Install the vacuum plug and rubber caps.
Connect a fuel valve vacuum tube to the No.1 cylinder intake port.

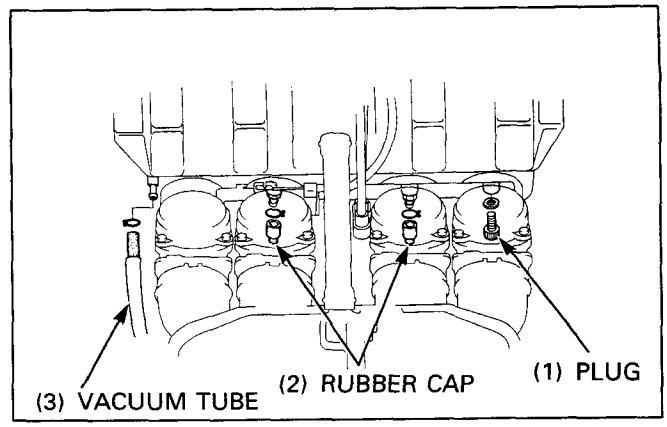

Drive Chain

Replacement

NOTE

- The CBR1000F uses a drive chain with a staked master link.

Loosen the drive chain.

Assemble the special tool.

S.TOOL

Drive chain cutter	**07HMH-MR10102**
– Link plate holder	**07PMH-MZ20110**

NOTE

- When using the special tool, follow the manufacturer's operating instructions.

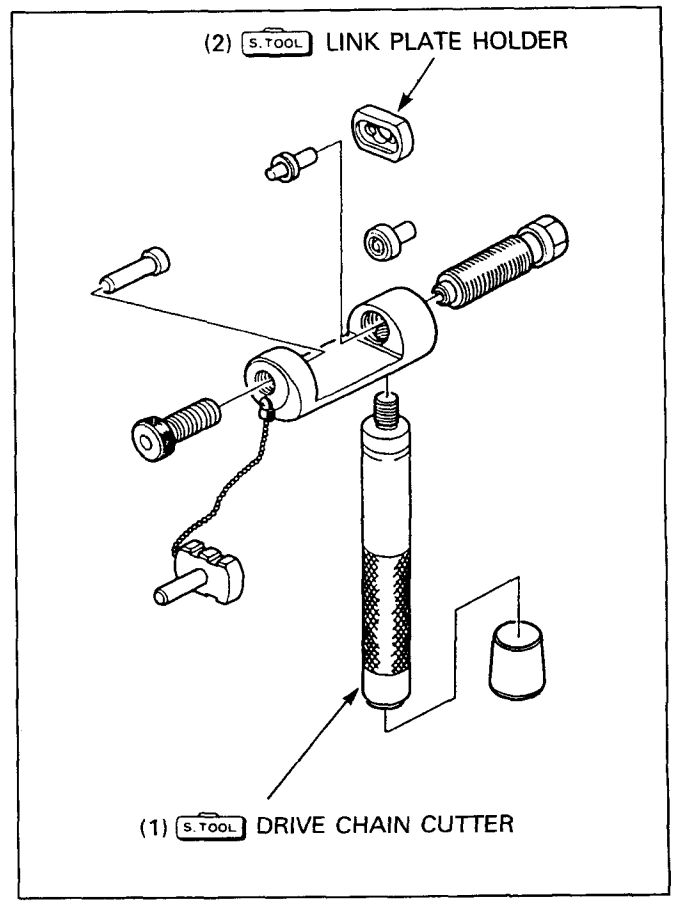

Locate the crimped pin ends of the master link from the outside of the chain and remove the link with the chain cutter.

S.TOOL

Drive chain cutter	**07HMH-MR10102**

Remove the drive chain.

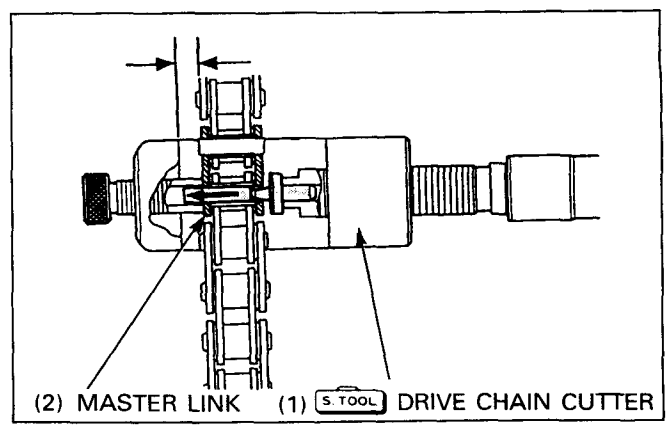

Remove exceeded drive chain link from the new drive chain using the drive chain cutter.

NOTE

- Include the master link when you count the drive chain links.

Replacement chain: DID.: 50ZV-120ZB
RK: 50LRO-120LJ-FZ

Specified links: 114 links

S.TOOL
Drive chain Cutter **07HMH–MR10102**

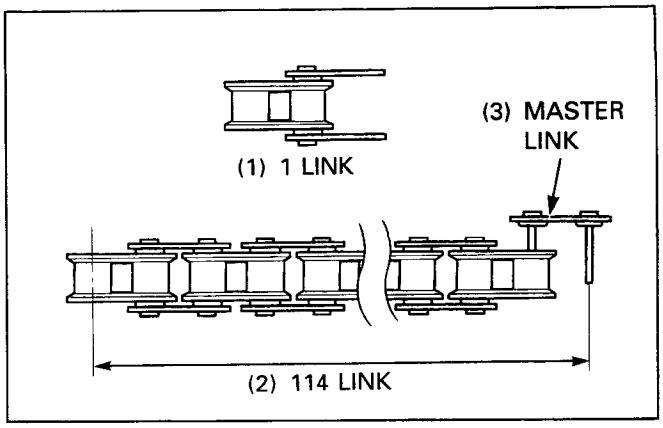

CAUTION

- **Never reuse the old drive chain, master link, master link plate and O-rings.**

Install the new drive chain as shown.

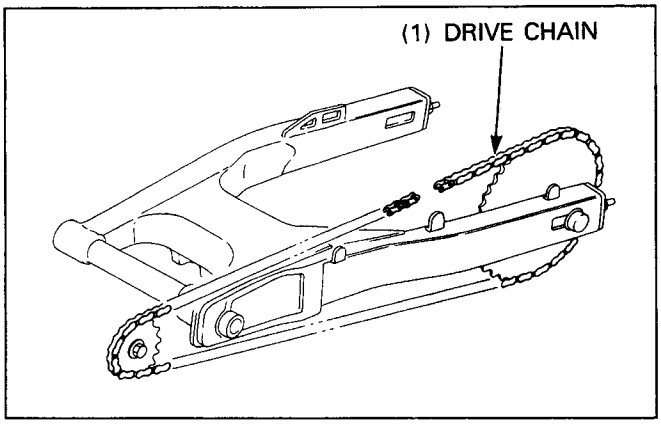

Assemble the new master link, O-rings and plate.

CAUTION

- **Insert the master link from the inside of the drive chain and install the plate with the identification mark facing the outside.**

Assemble and set the drive chain cutter.
Check that the master link pins are installed propely by measuring the master link pin length projected from the plate.

Projection: DID: 1.15–1.55 mm (0.045–0.061 in)
RK: 1.2–1.4 mm (0.05–0.06 in)

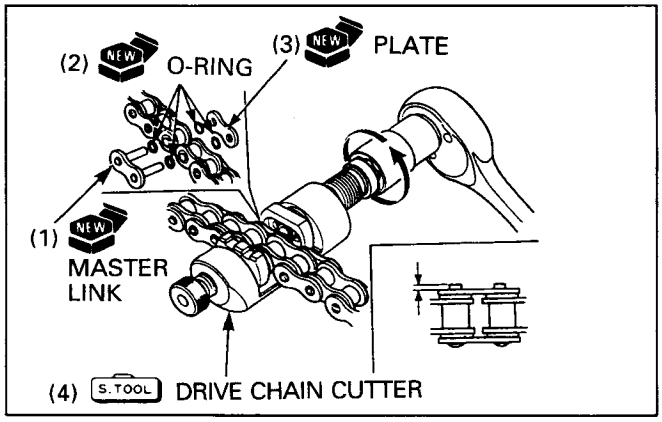

Stake the master link pins.

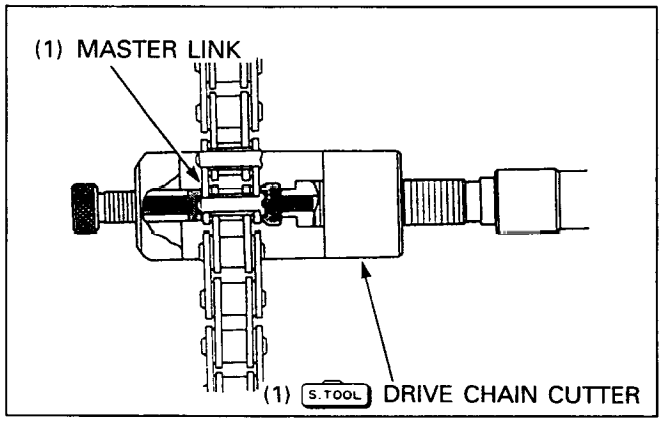

Make sure that the pins are staked properly by measuring the diameter of the staked area using a slide calipers.

Diameter of the staked area:
DID: 5.5–5.8 mm (0.22–0.23 in)
RK: 5.55–5.85 mm (0.219–0.230 in)

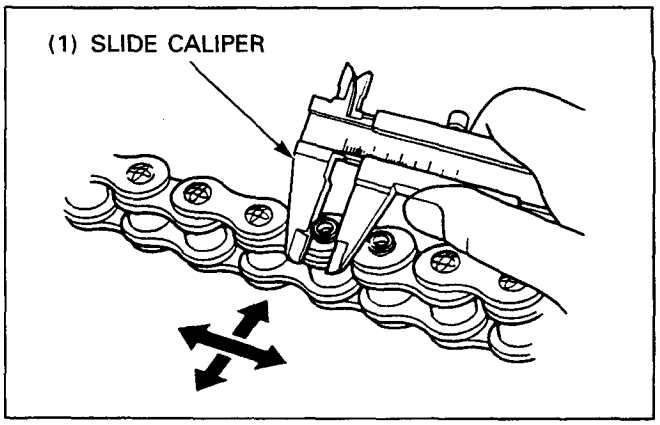

After staking, check the staked area of the master link for cracks.
In there is any cracking, replace the master link, O-rings and plate.

CAUTION

- **Drive chain with clip-type master link must not be used.**

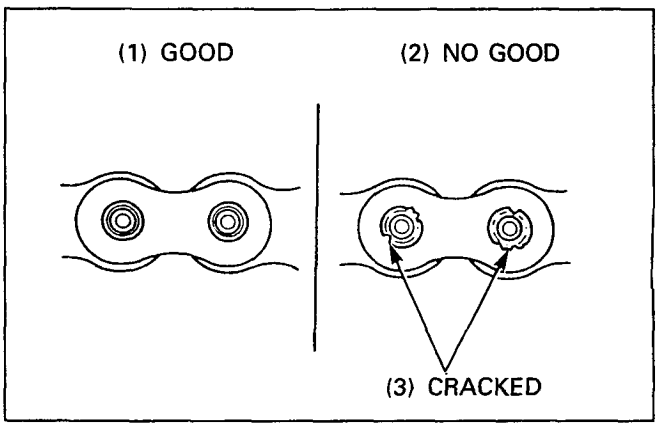

Brake Pad Wear

Visually inspect the brake pad wear.

Replace the brake pads if either pad is worm to the bottom of the wear grooves.

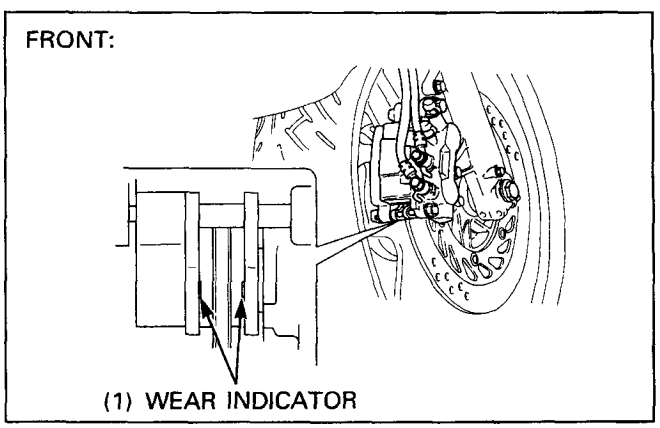

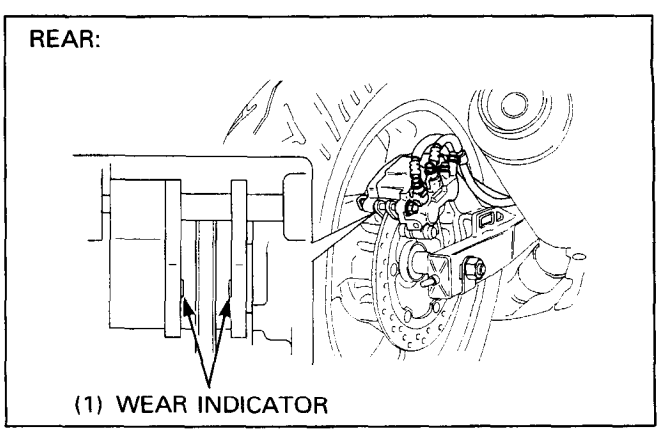

Brake System

NOTE

- The CBR1000F is equipped with the Dual Conbined Brake System.
- Check the front and rear brake operation as follows.

Place the motorcycle on its center stand and shift the transmission into neutral.

Turn the front brake link 8 mm bolt clockwise using a wrench.
Make sure the rear wheel does not turn while the front brake link is turned clockwise.

CAUTION

- **Do not turn the brake link 8 mm bolt counterclockwise or the bolt may be loosened.**

Also check the smooth operation of the brake link.

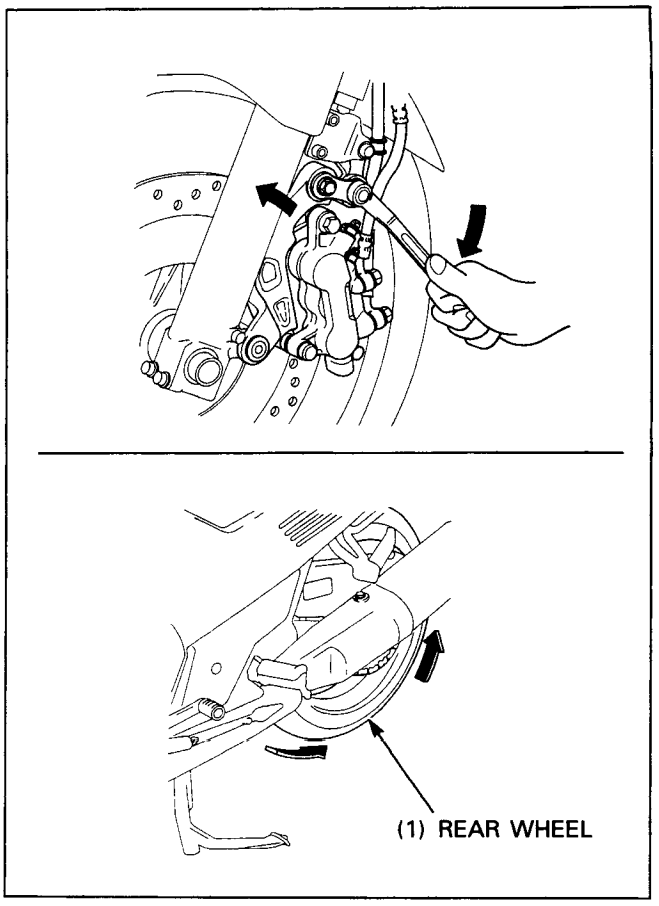

Jack-up the motorcycle and the front wheel off the ground.

Apply rear brake pedal.
Make sure the front wheel does not turn while the rear brake pedal is applied.

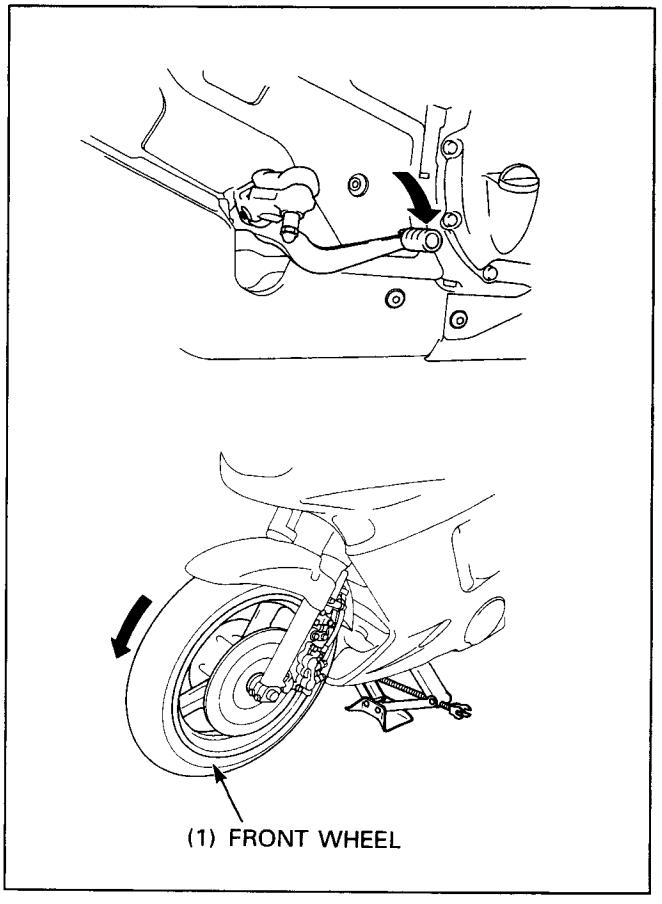

Headlight Aim

⚠ WARNING

- **An improperly adjusted headlight may blind oncoming drivers, or it may fail to light the load for a safe distance.**

NOTE

- Adjust the headlight beam as specified by local laws and regulations.

Remove the trim clips and maintenance lid.

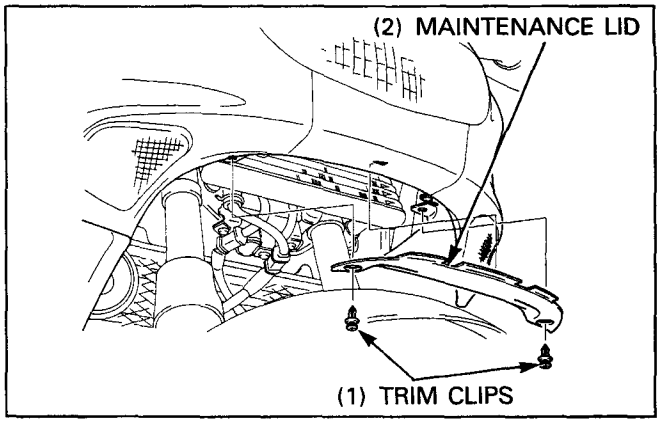

Vertical Beam Adjustment

Adjust the vertical beam with the adjusting knobs.

Turn the adjuster knob clockwise, beam moves down.
Turn the adjuster knob counterclockwise, beam moves up.

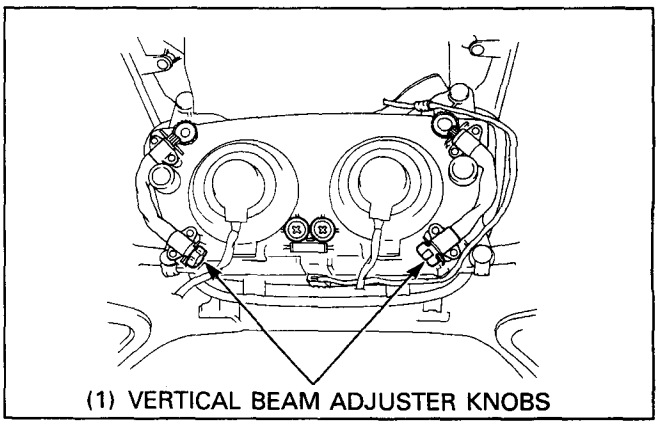

Horizontal Beam Adjustment

Adjust the horizontal beam, turning the adjuster using a pillips screwdriver as shown.

Left headlight:
Turn the adjuster screw clockwise, headlight beam moves to the left side.
Turn the adjuster screw counterclockwise, beam moves to the right side.

Right headlight:
Turn the adjusting screw clockwise, beam moves to the right side.
Turn the adjusting screw counterclockwise, beam moves to the left side.

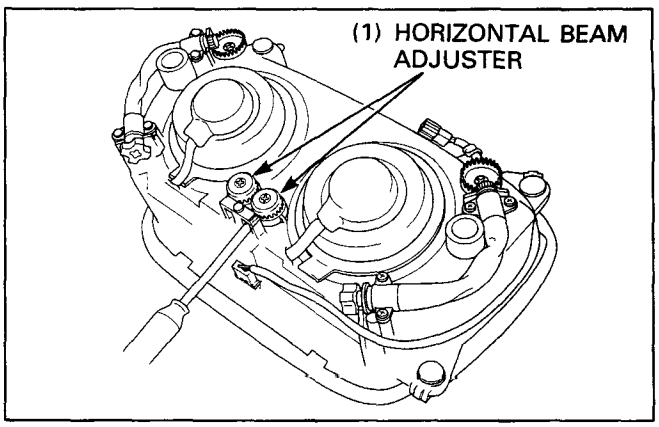

4. Lubrication System

Service Information

⚠ WARNING

- **If the engine must be running to do some work, make sure the area is well ventilated. Never run the engine in an enclosed area. The exhaust contains poisonous carbon monoxide gas that can cause loss of consciousness and may lead to death. Run the engine in an open area or with an exhaust evacuation system in an enclosed area.**
- **Used engine oil may cause skin cancer if repeatedly left in contact with the skin for prolonged periods. Although this is unlikely unless you handle used oil on a daily basis, it is still advisable to thoroughly wash your hands with soap and water as soon as possible after handling used oil.**

- The service procedures in this section must be performed with the engine oil drained.
- When removing and installing the oil pump use care not to allow dust or dirt to enter the engine.
- If any portion of the oil pump is worn beyond the specified service limits, replace the oil pump as an assembly.
- After the oil pump has been installed check that there are no oil leaks and that oil pressure is correct.

Troubleshooting

Oil Level Low
- Oil consumption
- External oil leak
- Worn piston ring or incorrect piston ring installation
- Worn valve guide or seal

Low Or No Oil Pressure
- Clogged oil orifice
- Incorrect oil being used

No Oil Pressure
- Oil level too low
- Oil pump drive sprocket broken
- Oil pump damaged (pump shaft)
- Internal oil leaks

Low Oil Pressure
- Clogged oil strainer screen
- Oil pump worn or damaged
- Internal oil leak
- Incorrect oil being used
- Low oil level

High Oil Pressure
- Plugged oil filter, gallery, or metering orifice
- Incorrect oil being used

Lubrication System Diagram

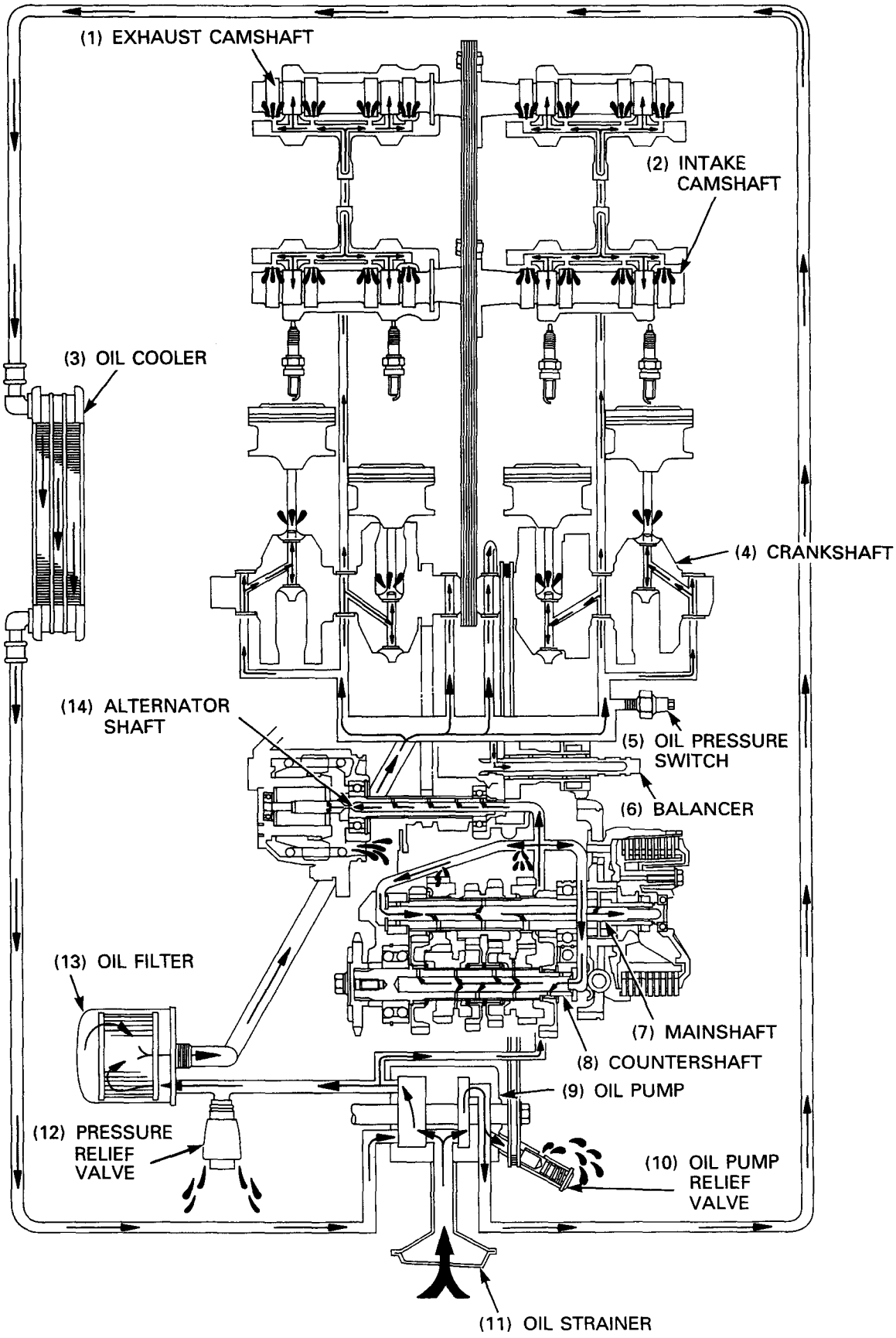

Oil Cooler Removal/Installation

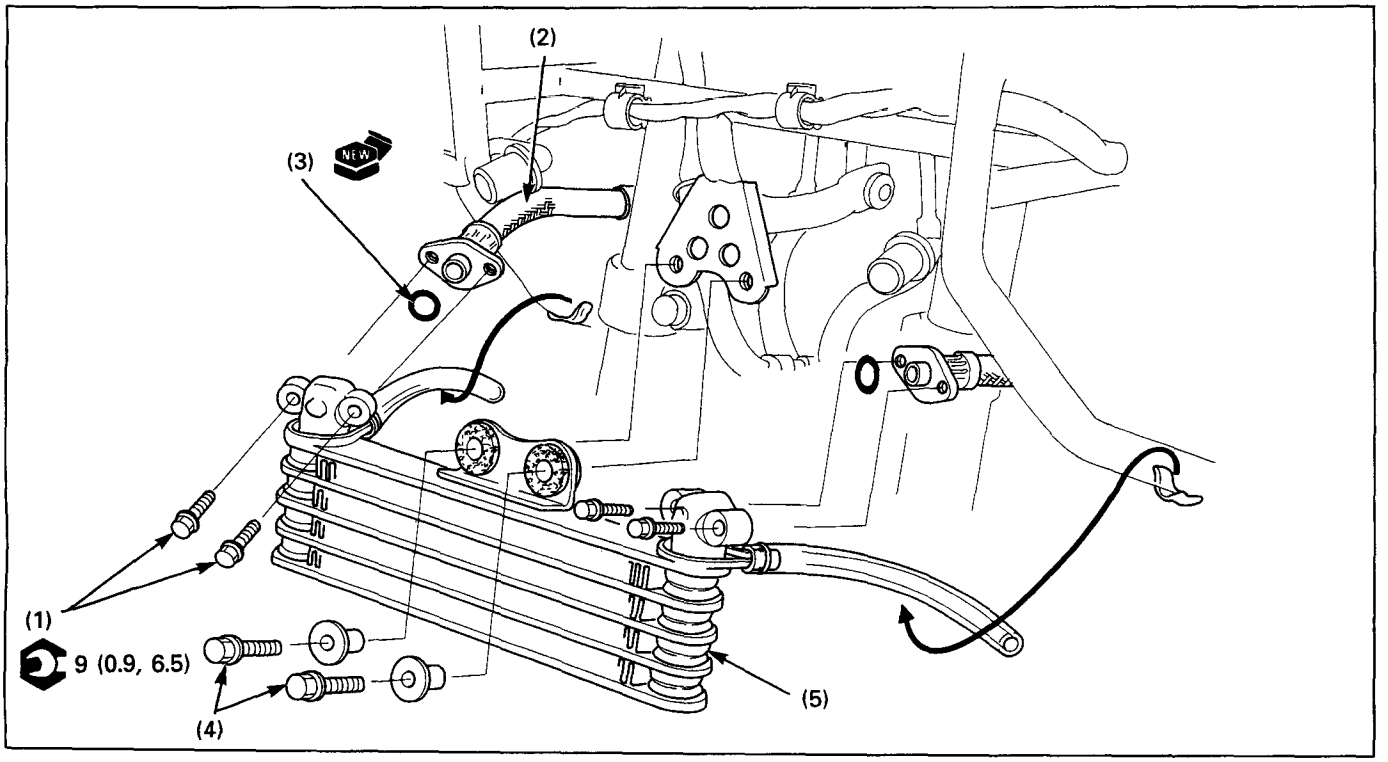

NOTE

- Use care not allow dust and dirt to enter the engine.
- After installation, check that there are no oil leaks.

Requisite Service

- Engine oil draining/refilling
- Lower fairing removal/installation (page 2-6)

	Procedure	Q'ty	Remarks
	Removal Order		Installation is in the reverse order of removal.
(1)	Oil pipe bolt	4	
(2)	Oil pipe	2	
(3)	O-ring	2	
(4)	Oil cooler bolt/collar	2/2	
(5)	Oil cooler	1	

Oil Pump Removal/Installation

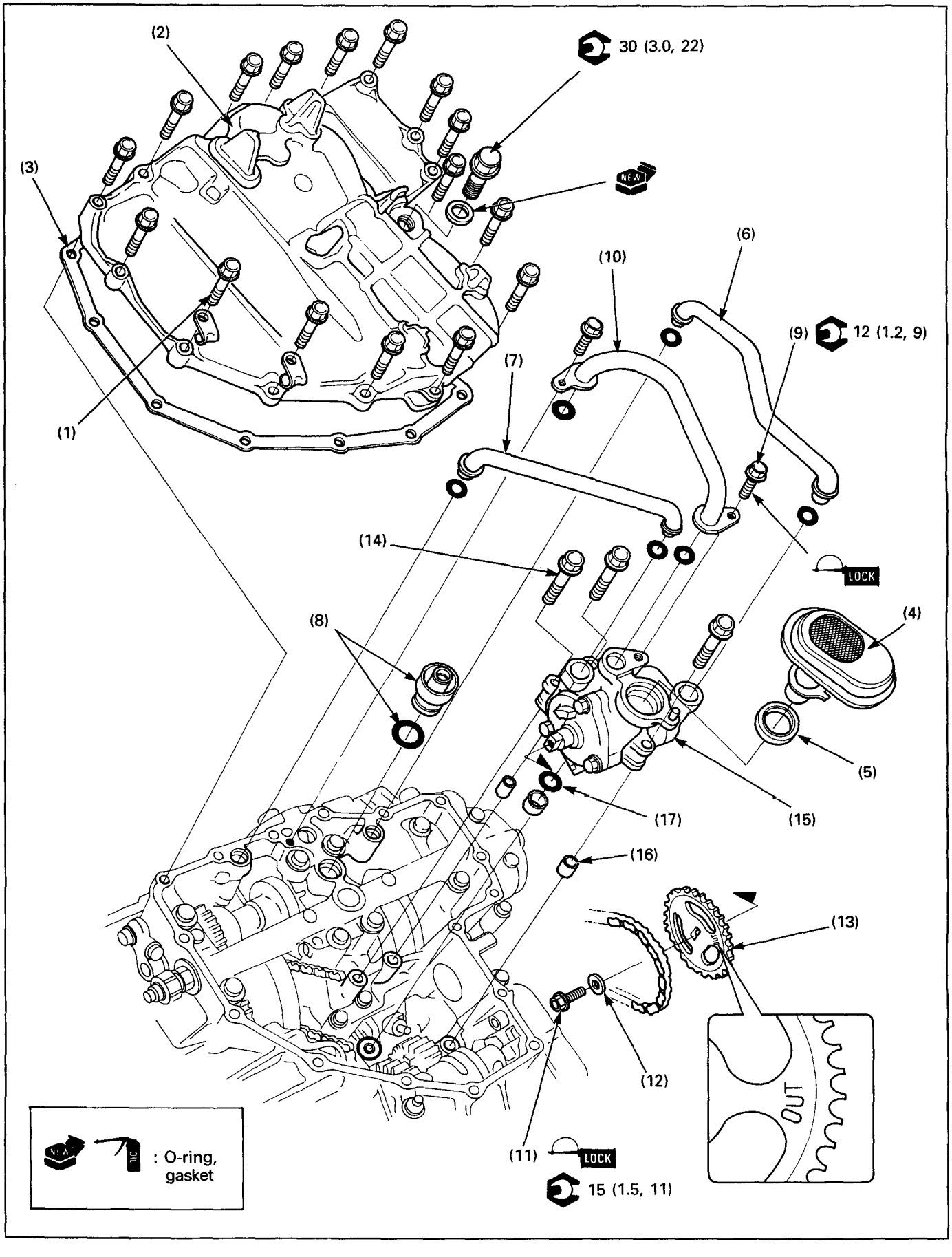

NOTE

- Use care not allow dust and dirt to enter the engine.
- After installation, check that there are no oil leaks.

Requisite Service

- Engine oil draining/refilling
- Lower fairing removal/installation (page 2-6)
- Exhaust pipe removal/installation (page 2-10)

	Procedure	Q'ty	Remarks
	Removal Order		Installation is in the reverse order of removal.
(1)	Oil pan bolt/clamp	16/2	NOTE • At installation, tighten the bolts in a gradual, crisscross pattern.
(2)	Oil pan	1	
(3)	Gasket	1	
(4)	Oil strainer screen	1	NOTE • Clean with the non-flammable solvent.
(5)	Oil strainer packing	1	
(6)	Oil pipe A/O-ring	1/2	
(7)	Oil pipe B/O-ring	1/2	
(8)	Oil pressure relief valve/O-ring	1/1	
(9)	Oil pipe bolt	2	
(10)	Oil pipe C/O-ring	1/2	
(11)	Oil pump driven sprocket bolt	1	NOTE • Apply a locking agent to the tip of the threads.
(12)	Washer	1	
(13)	Oil pump driven sprocket	1	NOTE • At installation, install the driven sprocket with the "OUT" mark facing the clutch.
(14)	Oil pump bolt	3	
(15)	Oil pump	1	
(16)	Dowel pin	3	
(17)	O-ring	1	

Oil Pump Disassembly/Assembly

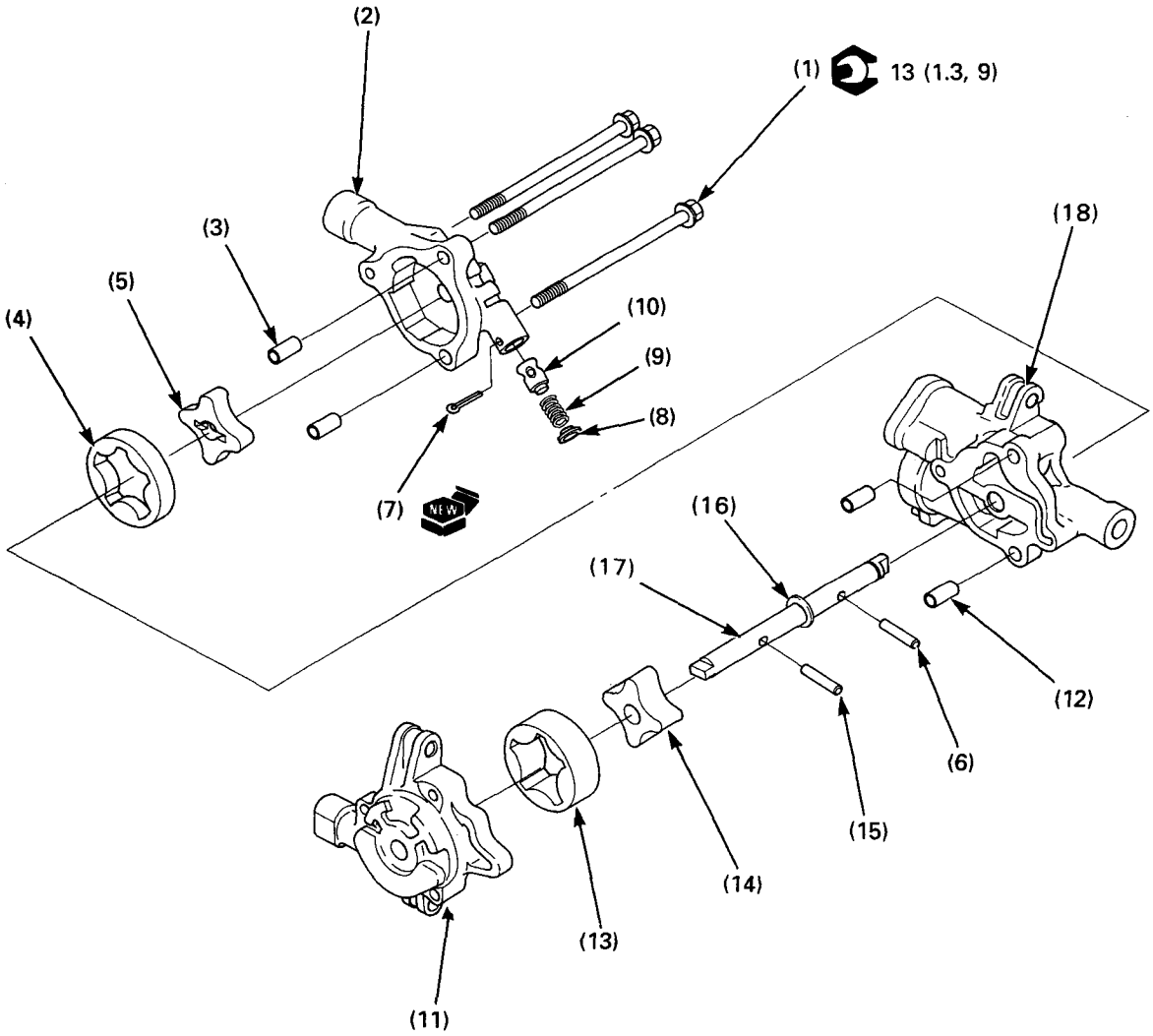

NOTE

- If any portion of the oil pump is worn beyond the specified service limit, replace the oil pump as an assembly.
- Before assembling them, clean all disassembled parts thoroughly with clean engine oil.
- Refer to section 4 of the Common Service Manual for inspection information.
- Refer to page 1-6 for specification.

Requisite Service

- Oil pump removal/installation (page 4-4)

	Procedure	Q'ty	Remarks
	Disassembly Order		Assembly is in the reverse order of disassembly.
(1)	Oil pump cover bolt	3	
(2)	Cooler pump cover	1	
(3)	Dowel pin	2	
(4)	Cooler pump outer rotor	1	
(5)	Cooler pump inner rotor	1	
(6)	Drive pin	1	
(7)	Cotter pin	1	
(8)	Retainer	1	
(9)	Spring	1	
(10)	Valve	1	
(11)	Feed pump cover	1	
(12)	Dowel pin	2	
(13)	Feed pump outer rotor	1	
(14)	Feed pump inner rotor	1	
(15)	Drive pin	1	
(16)	Washer	1	
(17)	Oil pump shaft	1	
(18)	Oil pump body	1	

5. Fuel System

Service Information

⚠ WARNING

- **Gasoline is extremely flammable and is explosive under certain conditions.**
- **Bending or twisting the control cables will impair smooth operation and could cause the cables to stick or bind, resulting in loss of vehicle control.**

- Work in a well ventilated area. Smoking or allowing flames or sparks in the work area or where gasoline is stored can cause a fire or explosion.

CAUTION

- **Be sure to remove the diaphragms before cleaning air and fuel passages with compressed air. The diaphragms might be damaged.**

- Refer to section 2 for fuel tank removal and installation.
- When disassembling fuel system parts, note the locations of the O-rings. Replace them with new ones on reassembly.
- Before disassembling the carburetor, place the suitable container under the carburetor drain tube loosen the bolt and drain the carburetor.
- After removing the carburetor, wrap the intake ports of the engine with a shop towel or cover it with piece of tape to prevent any foreign material from dropping into the engine.

NOTE

- If the vehicle is to be stored for more than one month, drain the float bowls. Fuel left in the float bowls may cause clogged jets resulting in hard starting or poor driveability.

Troubleshooting

Engine Won't Start
- Too much fuel getting to the engine
  - Air cleaner clogged
  - Flooded carburetors
- Intake air leak
- Fuel contaminated/deteriorated
- No fuel to carburetor
  - Fuel strainer clogged
  - Fuel tube clogged
  - Fuel valve stuck
  - Fuel pump malfunction
  - Float level misadjusted
  - Fuel tank breather tube clogged

Lean Mixture
- Fuel jets clogged
- Float valve faulty
- Float level too low
- Fuel line restricted
- Carburetor air bent tube clogged
- Intake air leak
- Fuel pump malfunction
- Throttle valve faulty
- Vacuum piston faulty

Rich Mixture
- Starting enrichment valve in ON position
- Float valve faulty
- Float level too high
- Air jets clogged
- Air cleaner element contaminated
- Flooded carburetor

Engine Stall, Hard To Start, Rough Idling
- Fuel line restricted
- Ignition malfunction
- Fuel mixture too lean/rich
- Fuel contaminated/deteriorated
- Intake air leak
- Idle speed misadjusted
- Float level misadjusted
- Fuel tank breather tube clogged
- Fuel pump malfunction
- Pilot screw misadjusted
- Slow circuit or bystarter circuit clogged
- Emission control system is malfunction (SW, AR type only)

Afterburn When Engine Braking Is Used
- Lean mixture in slow circuit
- Air cut-off valve malfunction (SW,AR type only)
- Emission control system is malfunction (SW, AR type only)
  - Secondary air supply system faulty
  - Loose, disconnected or deteriorated hoses of the emission control system

Backfiring Or Misfiring During Acceleration
- Ignition system malfunction
- Fuel mixture too lean

Poor Performance (Driveability) And Poor Fuel Economy
- Fuel system clogged
- Ignition system malfunction
- Emission control system is malfunction (SW, AR type only)
  - Secondary air supply system faulty
  - Loose, disconnected or deteriorated hoses of the emission control system

Air Cleaner Housing Removal/Installation

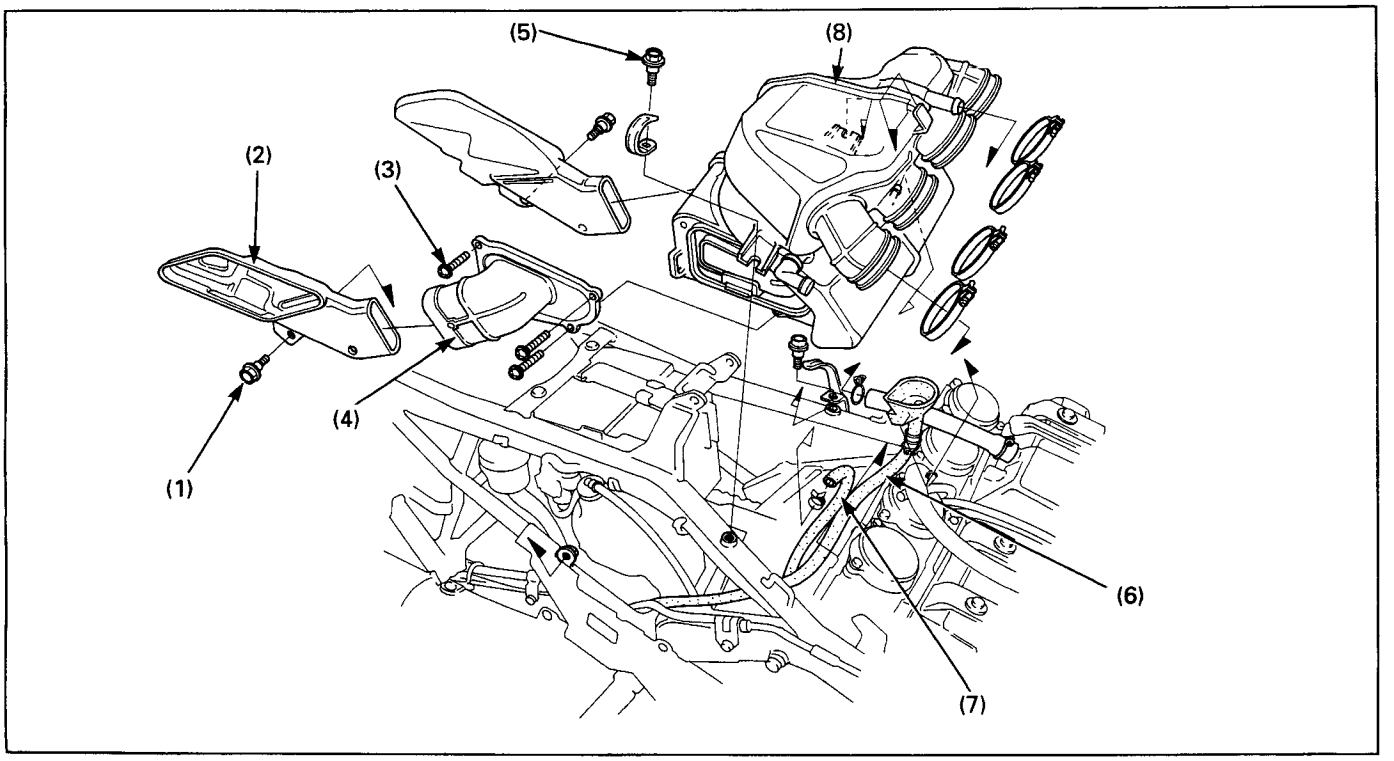

Requisite Service

- Carburetor removal/installation (page 5-4)

	Procedure	Q'ty	Remarks
	Removal Order		Installation is in the reverse order of removal.
(1)	Intake duct bolt	2	
(2)	Intake duct	2	
(3)	Element cover screw	3	
(4)	Element cover	1	
(5)	Air cleaner housing bolt/clamp	2/1	
(6)	Air hose	1	
(7)	Breather tube	1	
(8)	Air cleaner housing	1	

Carburetor Removal/Installation

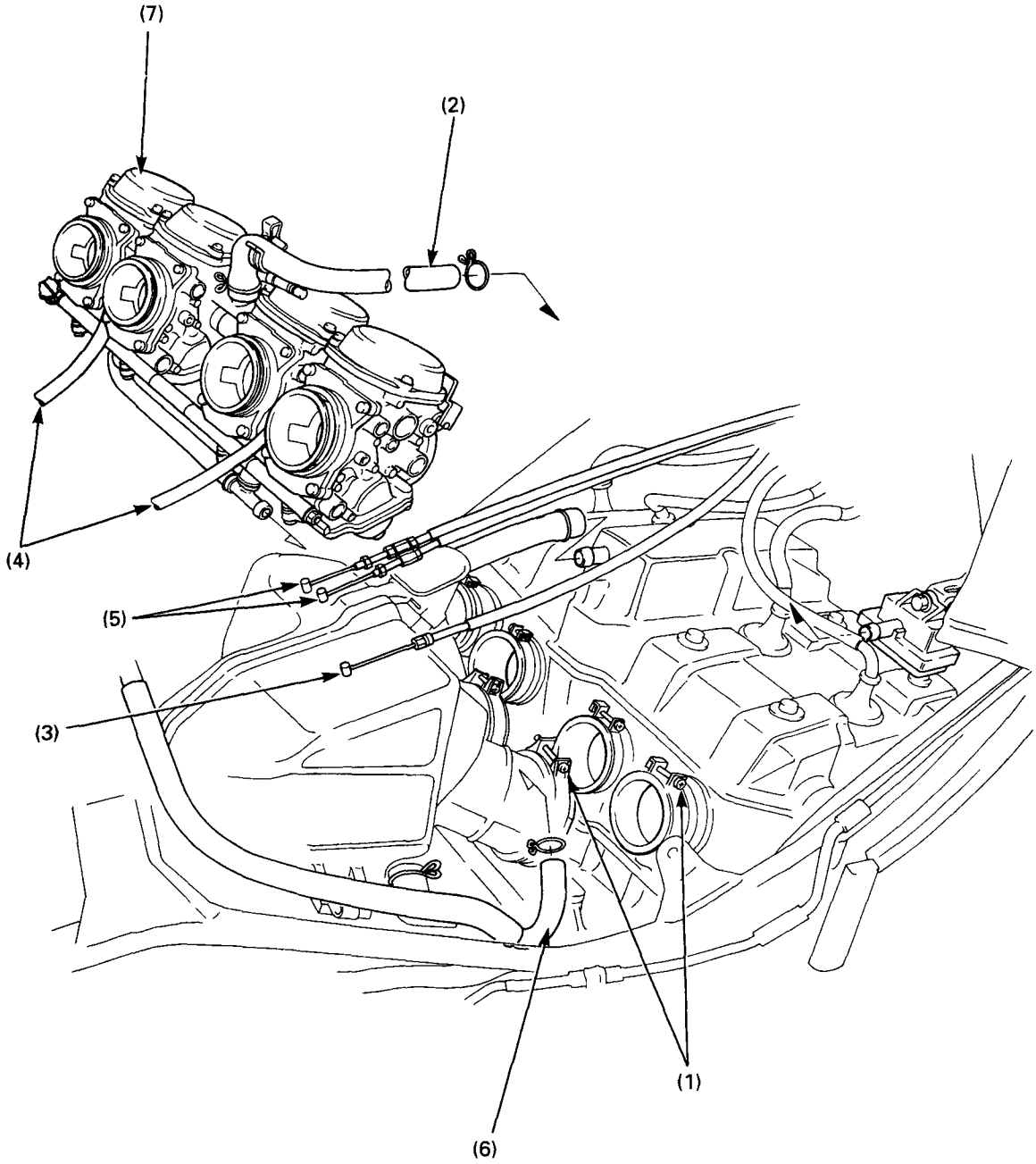

⚠ WARNING

- **Gasoline is extremely flammable and is explosive under certain conditions.**

- Work in a well ventilated area. Smoking or allowing flames or sparks in the work area where gasoline is stored can cause a fire or explosion.

NOTE

- Route the drain and fuel tubes correctly (page 1-23)

Requisite Service

- Fuel tank removal/installation (page 2-9)

	Procedure	Q'ty	Remarks
	Removal Order		Installation is in the reverse order of removal.
(1)	Insulator band screw	8	Only loosen.
(2)	Air hose	1	
(3)	Choke cable	1	
(4)	Air bent tube	2	
(5)	Throttle cable	2	
(6)	Fuel tube	1	
(7)	Carburetor assembly	1	NOTE • Remove the carburetor assembly from the insulator. • After removing the carburetor assembly, do not place it up side down or the air intake might be deformed.

Carburetor Separation

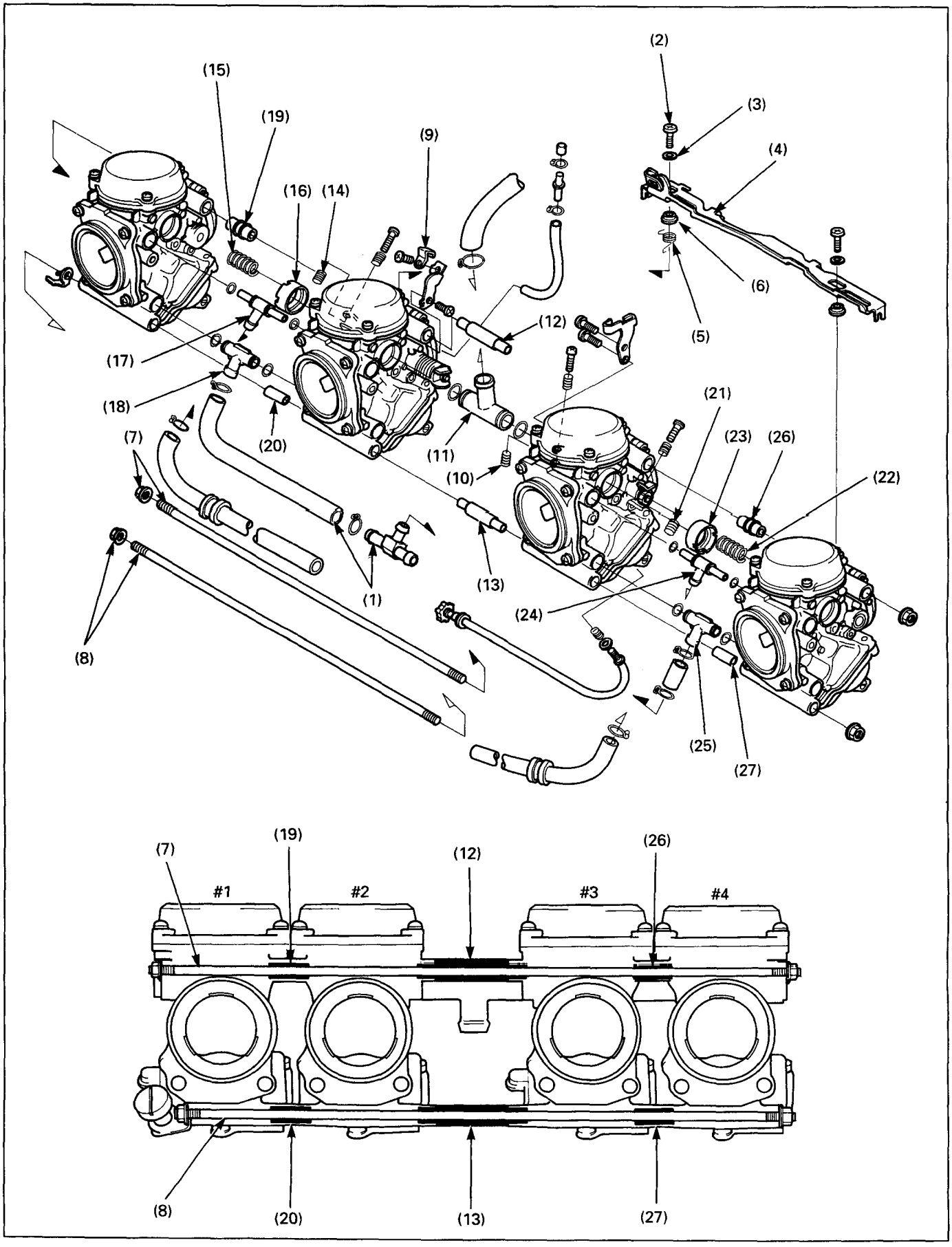

Requisite Service

- Carburetor removal/installation (page 5-4)

	Procedure	Q'ty	Remarks
	Separate No.3/4 carb. from No.1/2 carb.		
(1)	Fuel tube/joint	1	
(2)	Starting enrichment valve arm screw	2	
(3)	Plastic washer	2	
(4)	Starting enrichment valve arm	1	
(5)	Thrust spring	1	
(6)	Plastic collar	2	
(7)	Carburetor connecting nut/bolt, 6mm	2/1	
(8)	Carburetor connecting nut/bolt, 5mm	2/1	
(9)	Starting enrichment valve cable holder	1	
(10)	No.2 carburetor synchronization spring	1	
(11)	Air joint pipe (3-way joint)/O-ring	1/2	
(12)	Dowel pin (6mm bolt side)	1	
(13)	Distance collared dowel pin (5mm bolt side)	1	
	Separate No.1 carb. from No.2 carb.		
(14)	No.1 carburetor synchronization spring	1	
(15)	Thrust spring	1	
(16)	Air joint rubber pipe	1	
(17)	Air vent joint pipe/O-ring	1/2	
(18)	Fuel joint pipe (3-way joint)/O-ring	1/2	
(19)	Dowel pin (6mm bolt side)	1	
(20)	Dowel pin (5mm bolt side)	1	
	Separate No.3 carb. from No.4 carb.		
(21)	No.4 carburetor synchronization spring	1	
(22)	Thrust spring	1	
(23)	Air joint rubber pipe	1	
(24)	Air vent joint pipe/O-ring	1/2	
(25)	Fuel joint pipe (3-way joint)/O-ring	1/2	
(26)	Dowel pin (6mm bolt side)	1	
(27)	Dowel pin (5mm bolt side)	1	

Carburetor Disassembly/Assembly

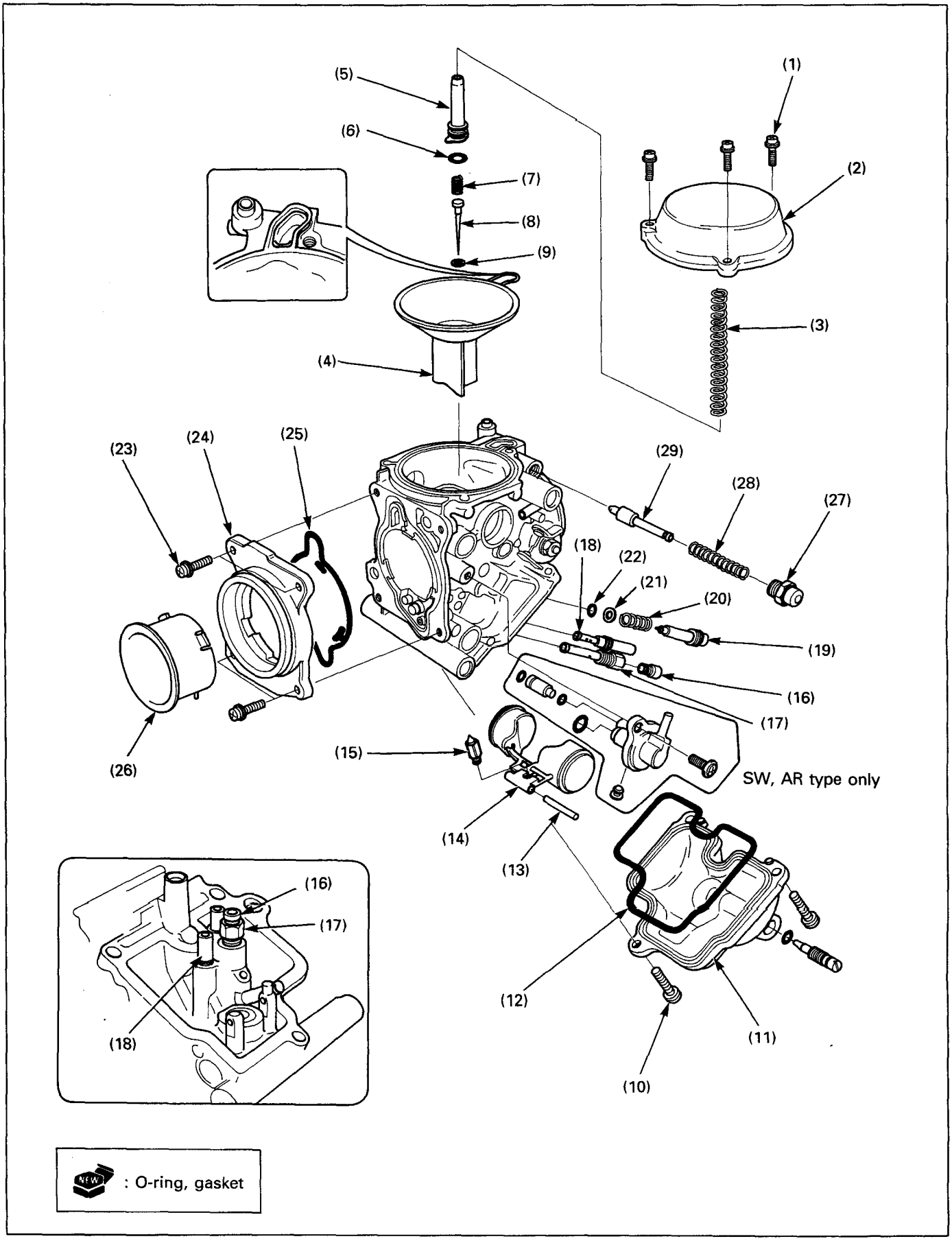

NOTE

- Vacuum chamber, float chamber and jets can be serviced without separating the carburetors.
- Note the location of the each carburetor parts so they can be back in their original locations.

Requisite Service

- Carburetor separation (page 5-6)
- Carburetor combination (page 5-12)

	Procedure	Q'ty	Remarks
	Disassembly Order		Assembly is in the reverse order of disassembly.
	Vacuum Chamber Disassembly Order		
(1)	Vacuum chamber cover screw	3	
(2)	Vacuum chamber cover	1	
(3)	Diaphragm spring	1	NOTE • At installation, be careful not to damage the spring.
(4)	Diaphragm/vacuum piston	1	NOTE • At installation, align the tab of the diaphragm with the carburetor body groove.
(5)	Jet needle holder	1	Removal/installation (page 5-10)
(6)	O-ring	1	
(7)	Jet needle holder spring	1	
(8)	Jet needle	1	
(9)	Washer	1	
	Float Chamber Disassembly		
(10)	Float chamber cover screw	3	
(11)	Float chamber cover	1	
(12)	O-ring	1	
(13)	Float pin	1	
(14)	Float	1	
(15)	Float valve	1	
(16)	Main jet	1	
(17)	Needle jet holder	1	
(18)	Slow jet	1	
(19)	Pilot scerw	1	Adjustment (page 5-14)
(20)	Spring	1	
(21)	Washer	1	
(22)	O-ring	1	
	Air Funnel Disassembly Order		
(23)	Air funnel holder screw	4	
(24)	Air funnel holder	1	
(25)	O-ring	1	NOTE • At installation, install the O-ring into the carburetor groove securey . • Replace the O-ring if necessary.
(26)	Air funnel	1	
	Starting Enrichment Valve Disassembly Order		
(27)	Valve nut	1	
(28)	Spring	1	
(29)	Starting enrichment valve	1	

Jet Needle Removal/Installation

Removal

Remove the vacuum piston (page 5-8)

Temporarily install the 4mm screw or equivalent (Example; vacuum chamber screw).
Pull the screw and remove the jet needle holder.

CAUTION

- **Be careful not to damage the diaphragm.**
- **Do not remove the jet needle holder by pushing the jet needle.**

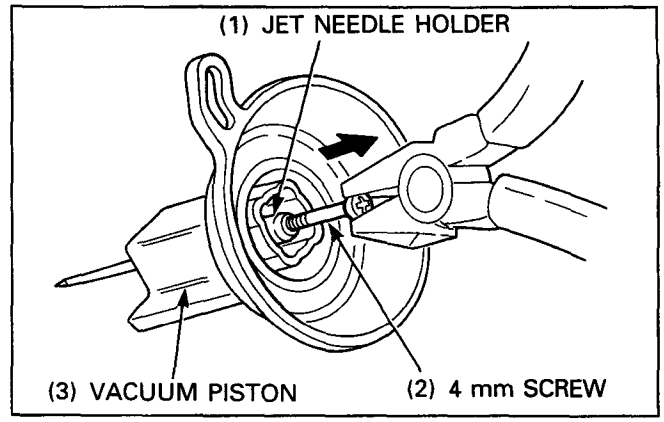

Installation

Check the O-ring on the jet needle holder is in good condition and replace if necessary.

Apply oil to the O-ring.
Install the jet needle holder into the vacuum piston until you felt the click so that the O-ring is installed into the groove in the vacuum piston.

Install the vacuum piston (page 5-8).

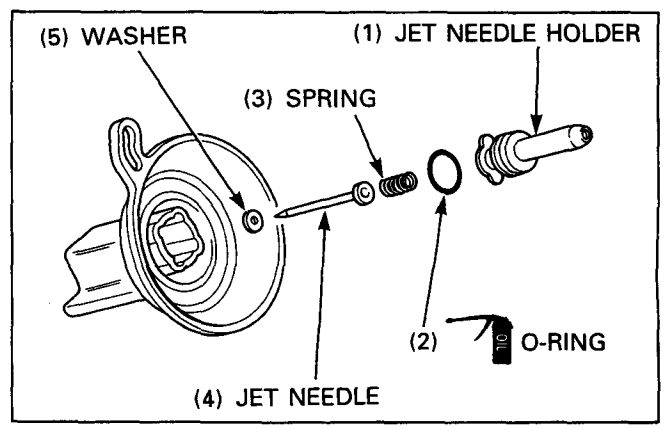

Air Funnel Installation

Check the O-ring is in good condition and replace if necessary.

Install the O-ring into the carburetor body groove.

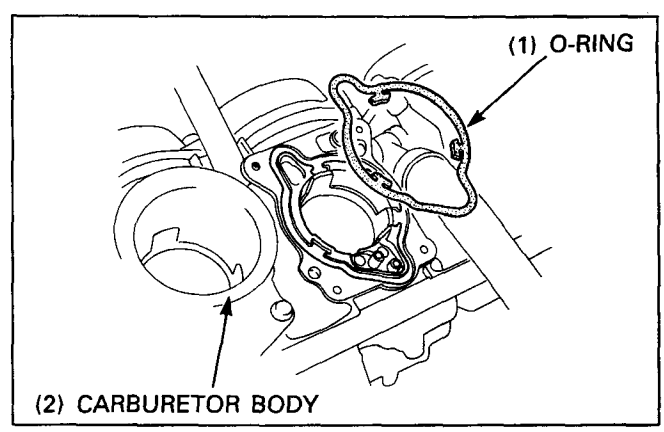

Install the air funnel into the holder.

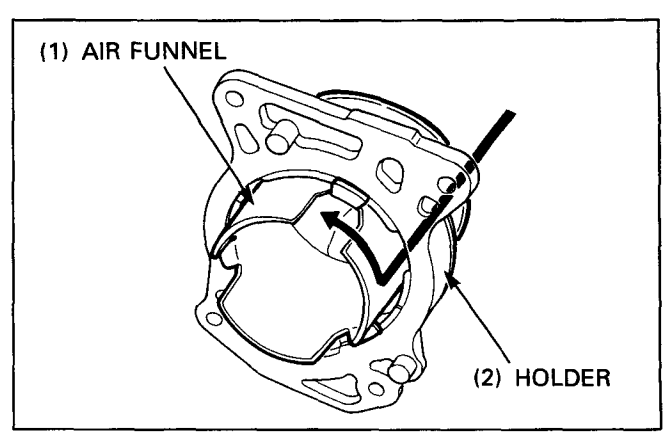

Align the cut out on the air funnel with the groove in the carburetor body, then install the air funnel/holder.

Install and tighten the air funnel holder screws.

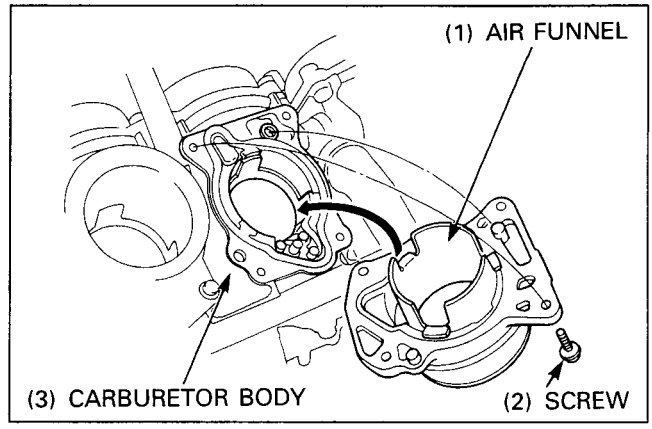

Carburetor Body Cleaning

Clean the fuel strainer in the float valve using the compressed air from the float valve seat side.

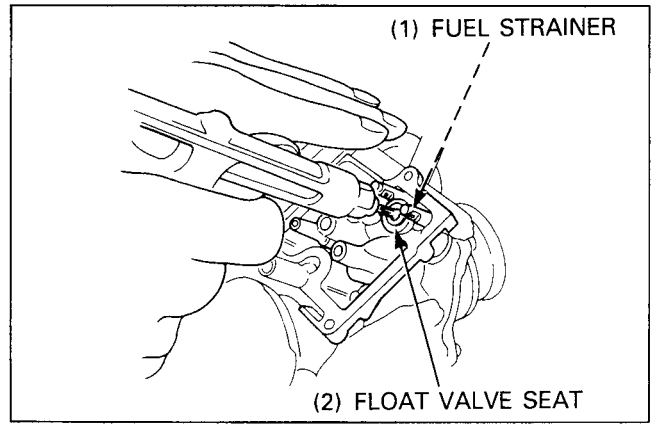

Carburetor Combination

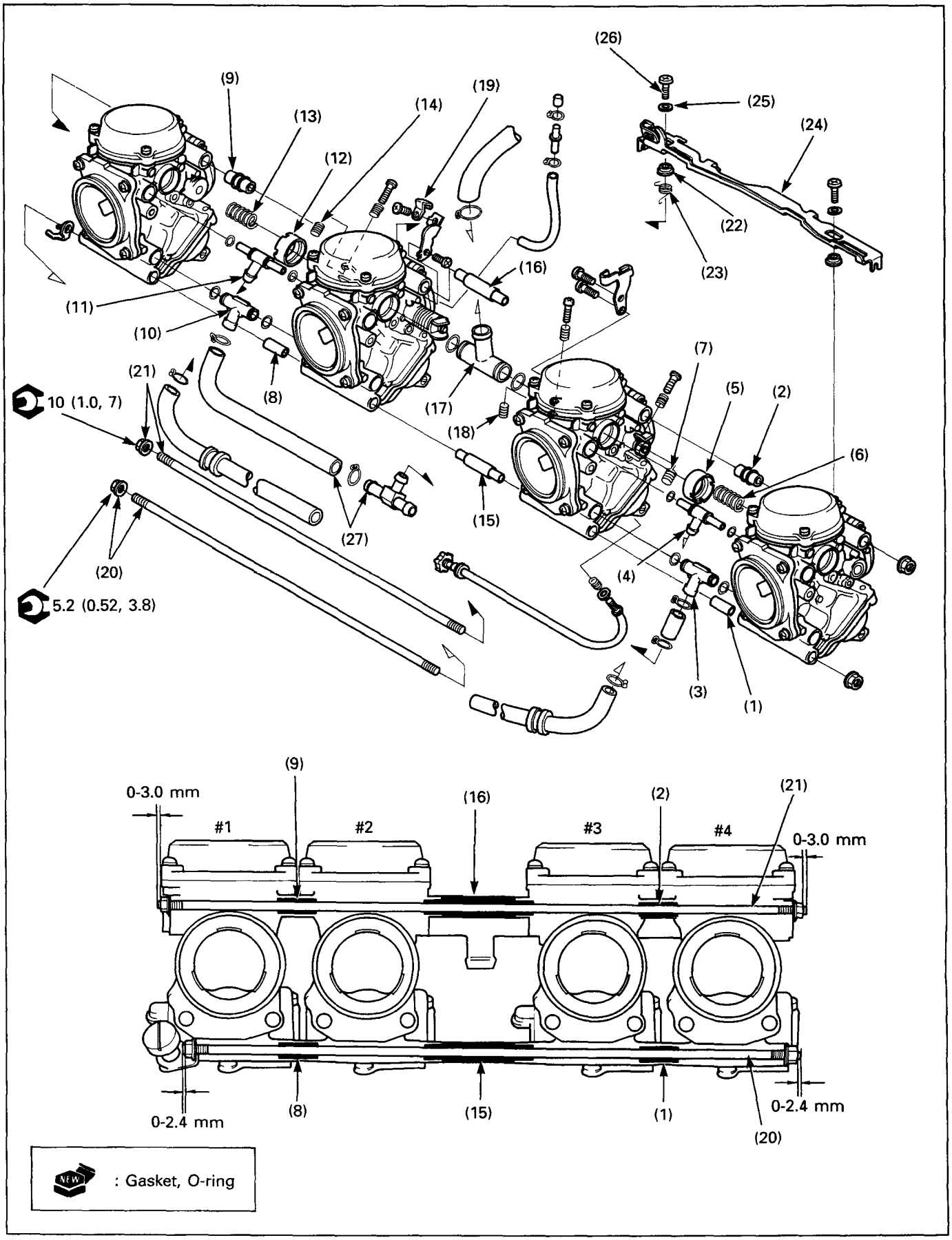

NOTE

- No.3 carburetor is the base carburetor.
- Before tightening the carburetor connecting bolt/nut, check that not clearance between the each carburetor joints.
- Tighten the each connecting bolts/nuts gradually and alternately, be sure the bolt thread projections are equal height. Hold the nut and tighten the other side nut.

Requisite Service

- Carburetor disassembly (page 5-8)
- Carburetor installation (page 5-4)
- Carburetor synchronization (page 3-8)

	Procedure	Q'ty	Remarks
	Assemble No.3 carb. with No.4 carb.		
(1)	Dowel pin (5mm bolt side)	1	
(2)	Dowel pin (6mm bolt side)	1	
(3)	Fuel joint pipe (3-way joint)/O-ring	1/2	Always replace the O-rings with new ones.
(4)	Air vent joint pipe/O-ring	1/2	
(5)	Air joint rubber pipe	1	
(6)	Thrust spring	1	
(7)	No.4 carburetor synchronization spring	1	
	Assemble No.1 carb. with No.2 carb.		
(8)	Dowel pin (5mm bolt side)	1	
(9)	Dowel pin (6mm bolt side)	1	
(10)	Fuel joint pipe (3-way joint)/O-ring	1/2	Always replace the O-rings with new ones.
(11)	Air vent joint pipe/O-ring	1/2	
(12)	Air joint rubber pipe	1	
(13)	Thrust spring	1	
(14)	No.1 carburetor synchronization spring	1	
	Assemble No.3/4 carb. with No.1/2 carb.		
(15)	Distance collared dowel pin(5mm bolt side)	1	
(16)	Dowel pin (6mm bolt side)	1	
(17)	Air joint pipe (3-way joint)/O-ring	1/2	Always replace the O-rings with new ones.
(18)	No.2 carburetor synchronization spring	1	
(19)	Starting enrichment valve cable holder	1	
(20)	Carburetor connecting nut/bolt, 5mm	2/1	**CAUTION**
(21)	Carburetor connecting nut/bolt, 6mm	2/1	• **Tighten each nuts gradually and alternately with the above procedure. Do not over tighten the nuts.**
(22)	Plastic collar	2	
(23)	Thrust spring	1	
(24)	Starting enrichment valve arm	1	
(25)	Plastic washer	2	
(26)	Starting enrichment valve arm screw	2	
(27)	Fuel tube/joint	1	

Pilot Screw Adjustment

Idle Drop Procedure

⚠ WARNING

- **If the engine must be running to do some work, make sure the area is well ventilated. Never run the engine in an enclosed area. The exhaust contains poisonous carbon monoxide gas that may cause loss of consciousness and lead to death.**

NOTE

- Make sure the carburetor synchronization is within specification before pilot screw adjustment (page 1 -6).
- The pilot screw is factory pre-set and no adjustment can be done unless it is replaced.
- The engine must be warm for accurate adjustment. Ten minutes of stop-and-go riding is sufficient.
- Use a tachometer with graduation of 50 min^{-1}(rpm) or smaller that will accurately indicate a 50 min^{-1}(rp m) change.

1. Turn each pilot screw clockwise until it seats lightly and then back it out to the specification.

Initial Opening: Except SW,AR type: 3turns out
SW type: 1•3/4 turns out
AR type: 2•5/8 tunrs out

CAUTION

- **Damage the pilot screw seat will occur if the pilot screw is tightened against the seat.**

2. Warm up the engine to operating temperature.
3. Stop the engine and attach the tachometer according to the manufacturer's instruction .
4. Start the engine and adjust the idle speed with the throttle stop screw.

Idle Speed: Except SW,AR type: 1,100 ± 100 min^{-1} (rpm)
SW type: 1,050 ± 50 min^{-1}(rpm)
AR type : 1,050 ± 100 min^{-1} (rpm)

5. Turn all pilot screws 1/2 turns counterclockwise from the initial setting.

S TOOL

Pilot screw wrench **07908-4220201 (Except SW type)**
07KMA-MS60101 (SW type)

6. If the engine speed increase by 50 min^{-1}(rpm) or more, turn all pilot screws out by successive 1/2 turn increments until engine speed does not increase.
7. Adjust the idle speed with the throttle stop screw.
8. Turn the No.3 carburetor pilot screw in until the engine speed drops 50 min^{-1}(rpm).
9. Then turn the No.3 pilot screw counterclockwise 1 (G, SW, AR type : 3/4) turn from the position obtained in step 8.
10. Adjust the idle speed with the throttle stop screw.
11. Perform steps 8, 9 and 10 for the No.1, 2 and 4 carburetor pilot screw.

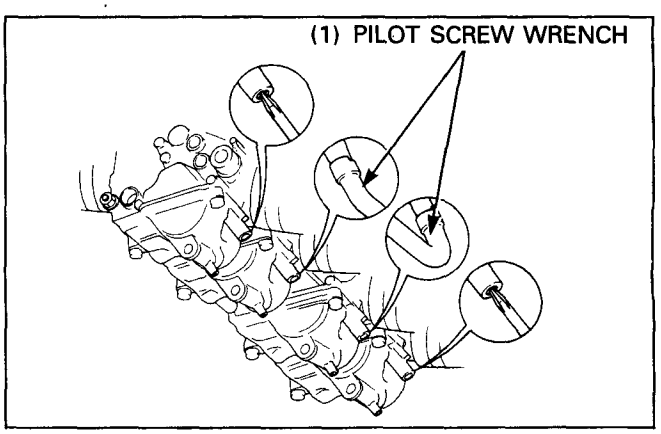

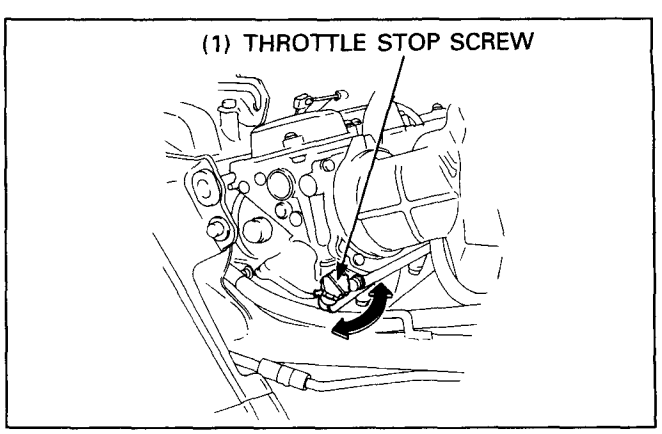

6. Cooling System

Service Information

⚠WARNING

- **Wait until the engine is cool before slowly removing the radiator cap. Removing the cap while the engine is hot and the coolant is under pressure may cause serious scalding.**
- **Radiator coolant is toxic. Keep it away from eyes, mouth, skin and clothes.**
  - **If any coolant gets in your eyes, rinse them water and consult a doctor immediately.**
  - **If any coolant is swallowed, induce vomiting, gargle and consult a physician immediately.**
  - **If any coolant gets on your skin or clothes, rinse thoroughly with plenty of water.**
- **KEEP OUT OF REACH OF CHILDREN.**

- Add coolant at the reserve tank. Do not remove the radiator cap except to refill or drain the system.
- All cooling system services can be done with the engine in the frame.
- Avoid spilling coolant on painted surfaces.
- After servicing the system, check for leaks with a cooling system tester.
- Refer to section 25 of the Common Service Manual for fan motor switch and thermo sensor inspection.

Troubleshooting

Engine Temperature Too High
- Faulty radiator cap
- Insufficient coolant
- Passages blocked in radiator, hoses or water jacket
- Air in system
- Faulty water pump
- Thermostat stuck closed
- Faulty temperature gauge or thermo sensor
- Faulty cooling fan motor
- Faulty fan motor switch

Engine Temperature Too Low
- Faulty temperature gauge or gauge sensor
- Thermostat stuck open
- Faulty cooling fan motor switch

Coolant Leaks
- Faulty water pump mechanical seal
- Deteriorated O-rings
- Damaged or deteriorated gasket
- Loose hose connection or clamp
- Damaged or deteriorated hose

System Flow Pattern

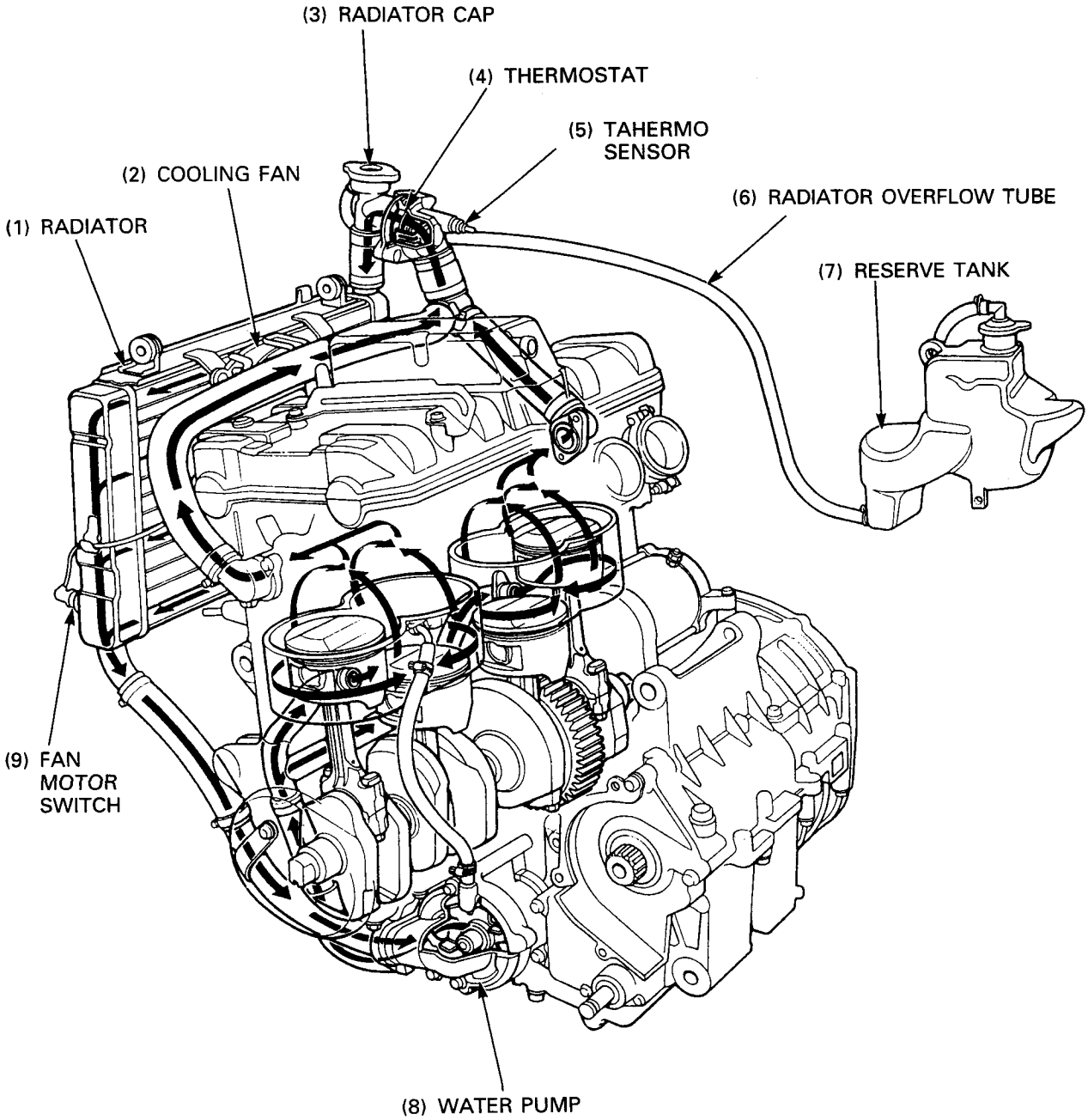

Water Pump Removal/Installation

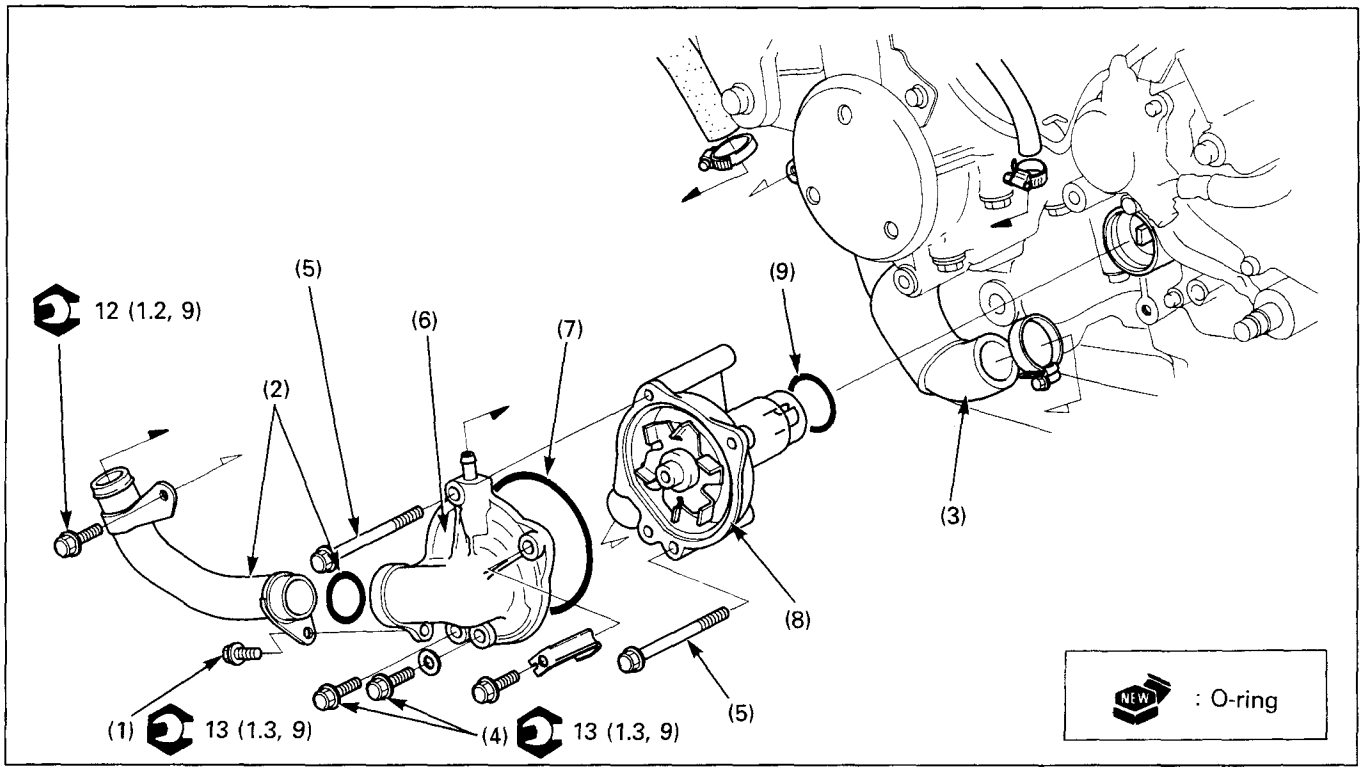

Requisite Service

- Coolant draining/refilling
- Engine oil draining
- Gearshift spindle joint removal/installation (7-2)

	Procedure	Q'ty	Remarks
	Removal Order		Installation is in the reverse order of removal.
(1)	Water pump-to-radiator pipe bolt	2	
(2)	Water pump-to-radiator pipe/O-ring	1/1	
(3)	Water pump-to-cylinder head hose	1	
(4)	Water pump cover bolt/clamp	2/1	
(5)	Water pump mounting bolt	2	
(6)	Water pump cover	1	
(7)	O-ring	1	
(8)	Water pump body	1	At installation, align the cut-out of the water pump shaft with the oil pump shaft.
(9)	O-ring	1	

Radiator Removal/Installation

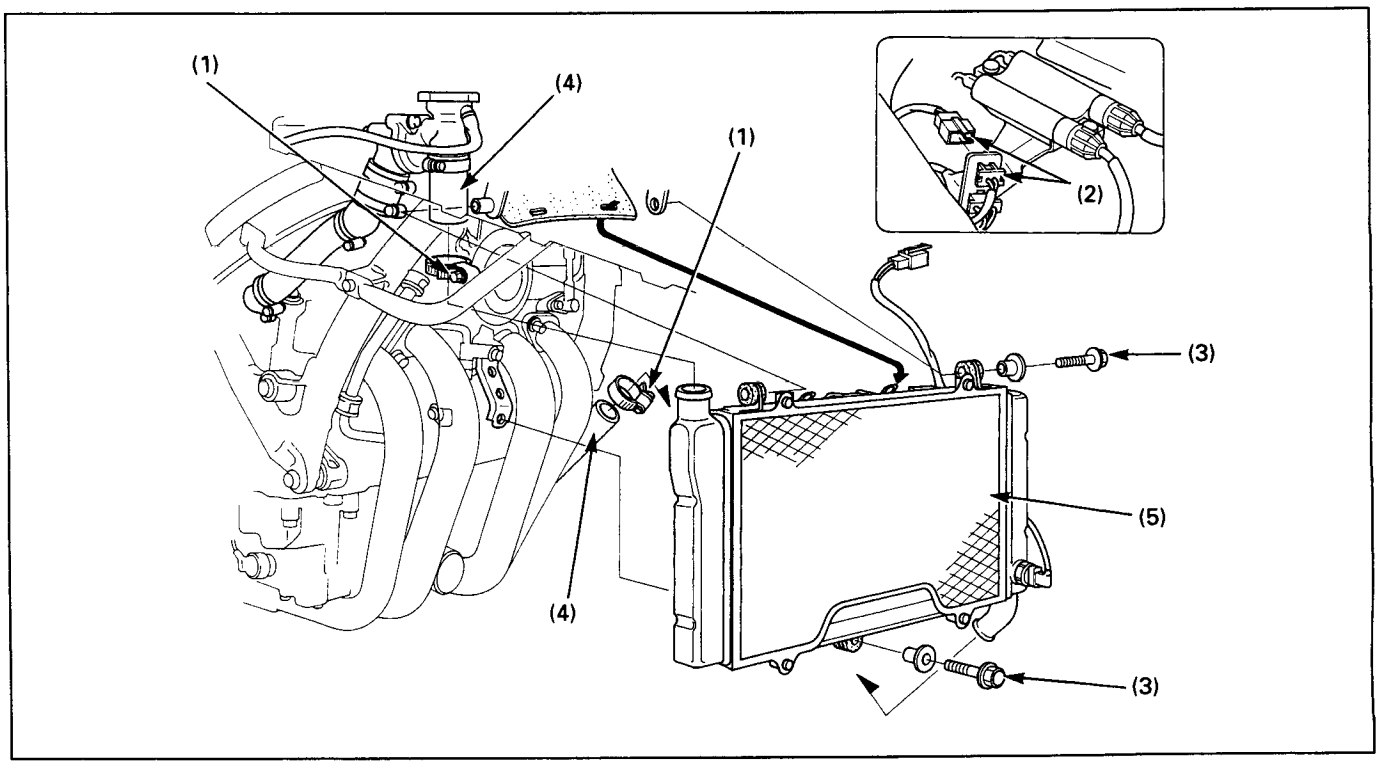

Requisite Service

- Coolant draining/refilling
- Lower fairing removal/installation (page 2-6)

	Procedure	Q'ty	Remarks
	Removal Order		Installation is in the reverse order of removal.
(1)	Radiator hose band	2	Only loosen.
(2)	Cooling fan wire connector	1	
(3)	Radiator mounting bolt	2	
(4)	Radiator hose	2	
(5)	Radiator assembly	1	**CAUTION** • **During removal and installation, be careful not to damage the radiator core.** NOTE • At installation, align the grommet hole with the boss on the frame.

Radiator Disassembly/Assembly

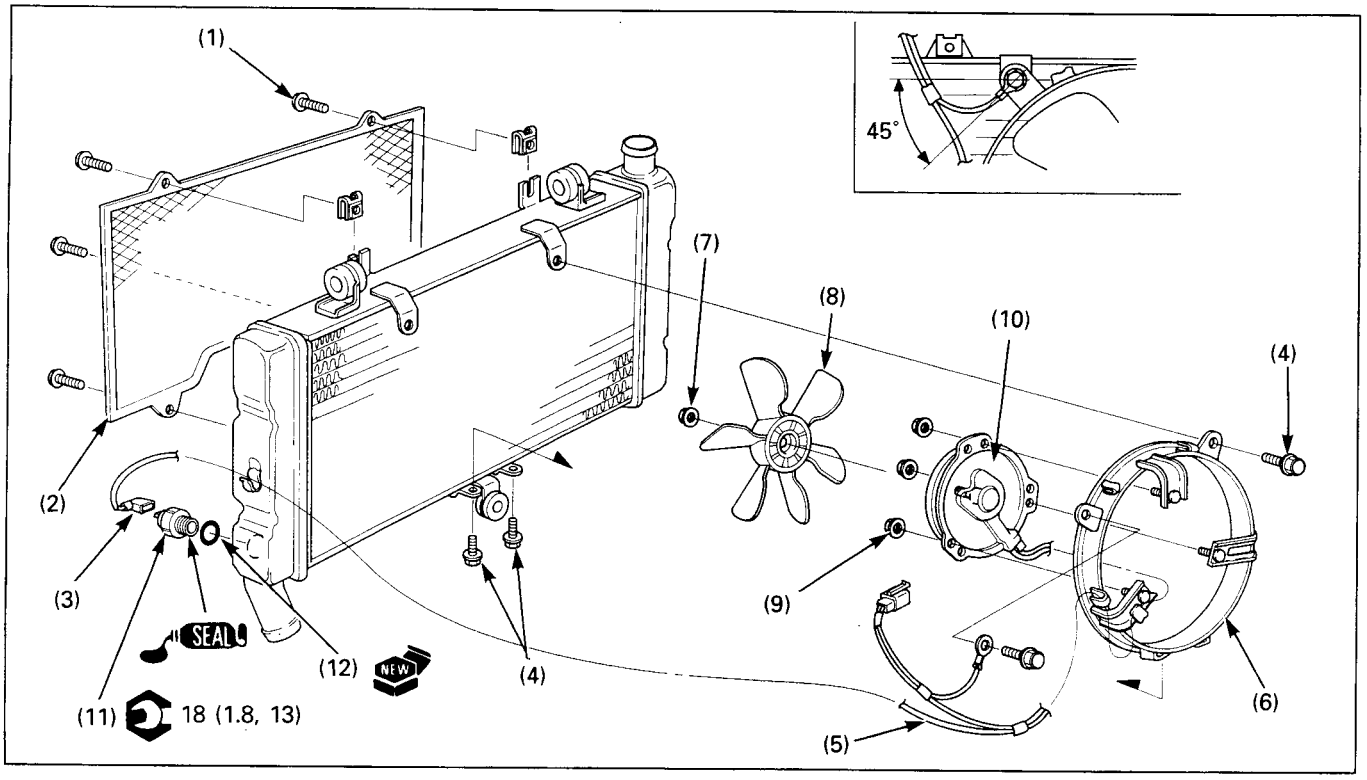

Requisite Service

- Radiator removal/installation (page 6-4)

	Procedure	Q'ty	Remarks
	Disassembly Order		Assembly is in the reverse order of disassembly.
(1)	Radiator grill screw	4	
(2)	Radiator grill	1	
(3)	Fan motor switch connector	1	
(4)	SH bolt	4	At installation, attach the ground wire as shown.
(5)	Fan motor wire harness	1	
(6)	Shroud	1	
(7)	Cooling fan nut	1	
(8)	Cooling fan	1	At installation, align the fan motor groove with the fan motor shaft.
(9)	Fan motor nut	3	
(10)	Fan motor	1	
(11)	Fan motor switch	1	
(12)	O-ring	1	

Reserve Tank Removal/Installation

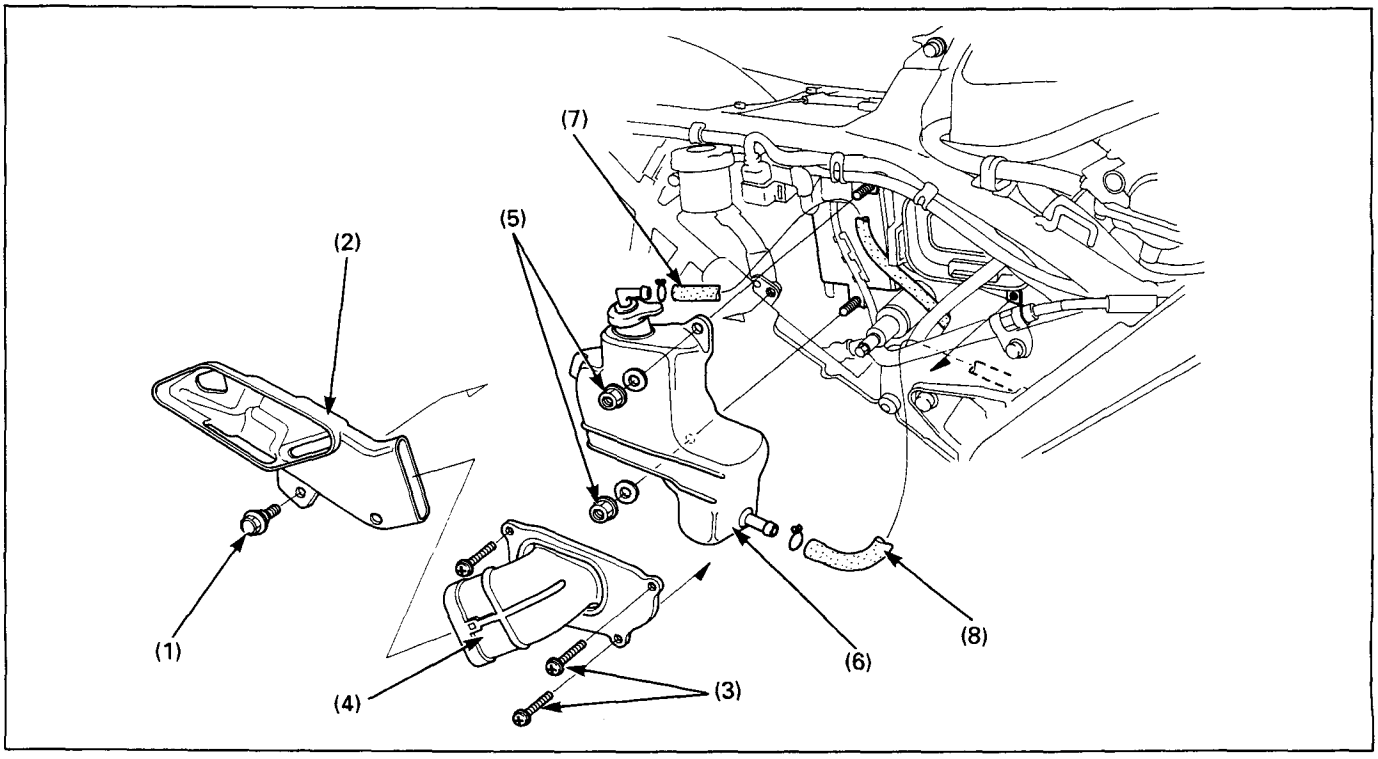

Requisite Service

- Coolant draining/refilling
- Side cover removal/installation (page 2-3)

	Procedure	Q'ty	Remarks
	Removal Order		Installation is in the reverse order of removal.
(1)	Intake duct bolt	1	
(2)	Intake duct	1	
(3)	Element cover screw	3	
(4)	Element cover	1	
(5)	Reserve tank nut	2	
(6)	Reserve tank	1	
(7)	Reserve tank breather tube	1	
(8)	Siphon tube	1	

Thermostat Removal/Installation

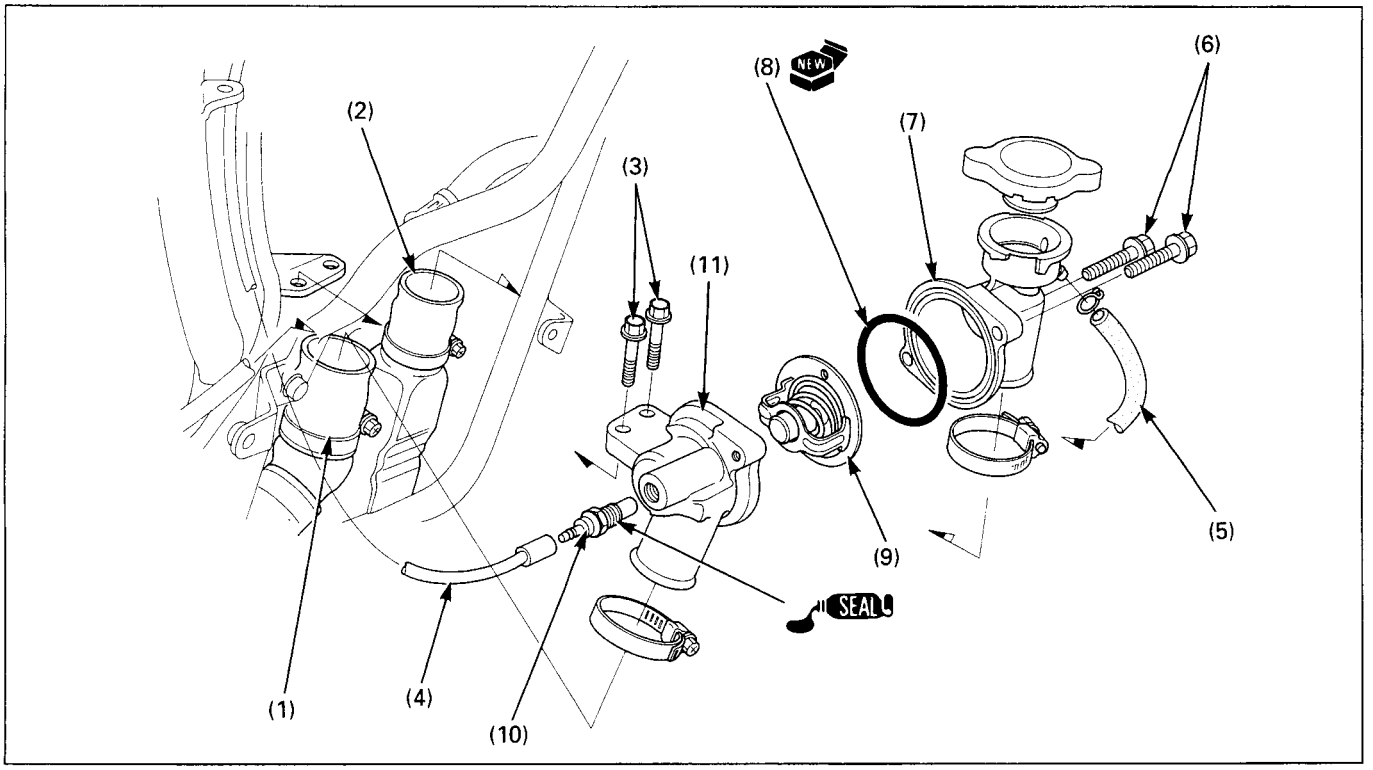

Requisite Service

- Coolant draining/refilling
- Upper fairing removal/installation (page 2-7)
- Lower fairing removal/installation (page 2-6)

	Procedure	Q'ty	Remarks
	Removal Order		Installation is in the reverse order of removal.
(1)	Cylinder head-to-thermostat hose	1	Loosen the hose band, then disconnect it.
(2)	Radiator-to-thermostat hose	1	
(3)	Thermostat housing bolt	2	
(4)	Water temperature sensor connector	1	
(5)	Siphon tube	1	
(6)	Thermostat housing cover bolt	2	
(7)	Thermostat housing cover	1	
(8)	O-ring	1	
(9)	Thermostat	1	NOTE • Install the thermostat with its hole facing up and fit it properly in the housing.
(10)	Water temperature sensor	1	
(11)	Thermostat housing	1	

7. Engine Removal/Installation

Service Information

• During removal and installation, support the motorcycle using a safety stand or hoist.

⚠WARNING

• **Do not support the engine using the oil filter.**

• The following components can be serviced with the engine installed in the frame.
  - Alternator (Section 14)
  - Clutch/gearshift linkage (Section 9)
  - Cylinder haed/valves (Section 8)
  - Oil cooler (Section 4)
  - Oil pump (Section 4)
  - Water pump (Section 6)
• The following components require engine removal for service.
  - Crankshaft/transmission (Section 10)
  - Shift forks/shift drum (Section 10)

Drive Sprocket Removal/Installation

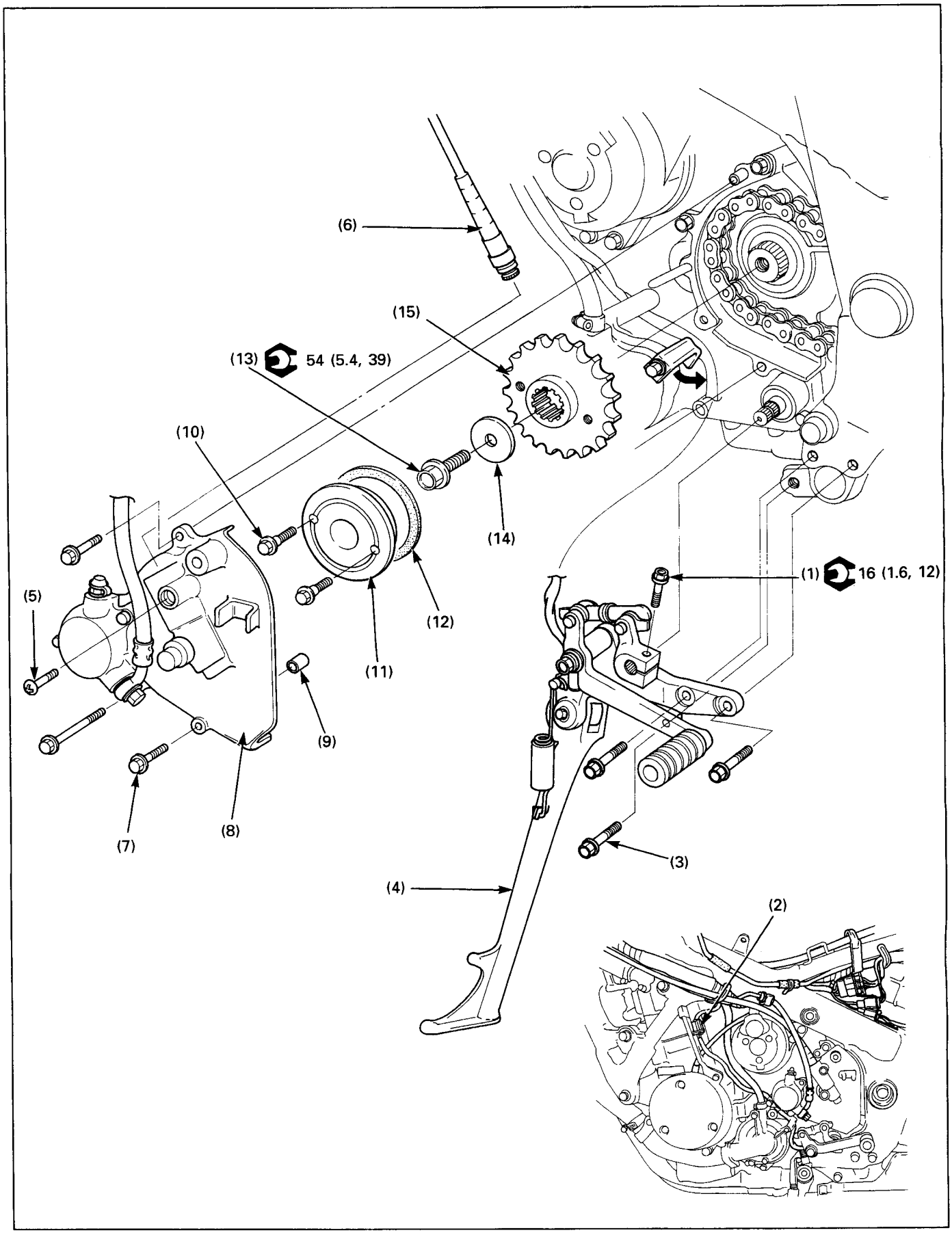

NOTE

- Support the motorcycle using the center stand.

Requisite Service

- Lower fairing removal/installation (page 2-6)
- Carburetor removal/installation (page 5-4)

	Procedure	Q'ty	Remarks
	Removal Order		Installation is in the reverse order of removal.
(1)	Gearshift linkage bolt	1	
(2)	Side stand switch 3P connector	1	Remove the side stand switch wire from the clamp, then disconnect the 3P connector.
(3)	Side stand bracket bolt	3	
(4)	Side stand bracket assembly	1	
(5)	Screw	1	
(6)	Speedometer cable	1	
(7)	Drive sprocket cover bolt	3	
(8)	Drive sprocket cover	1	
(9)	Dowel pin	1	
(10)	Guide ring bolt	2	
(11)	Guide ring	1	
(12)	Damper ring	1	
(13)	Drive sprocket bolt	1	
(14)	Washer	1	
(15)	Drive sprocket	1	

Engine Removal

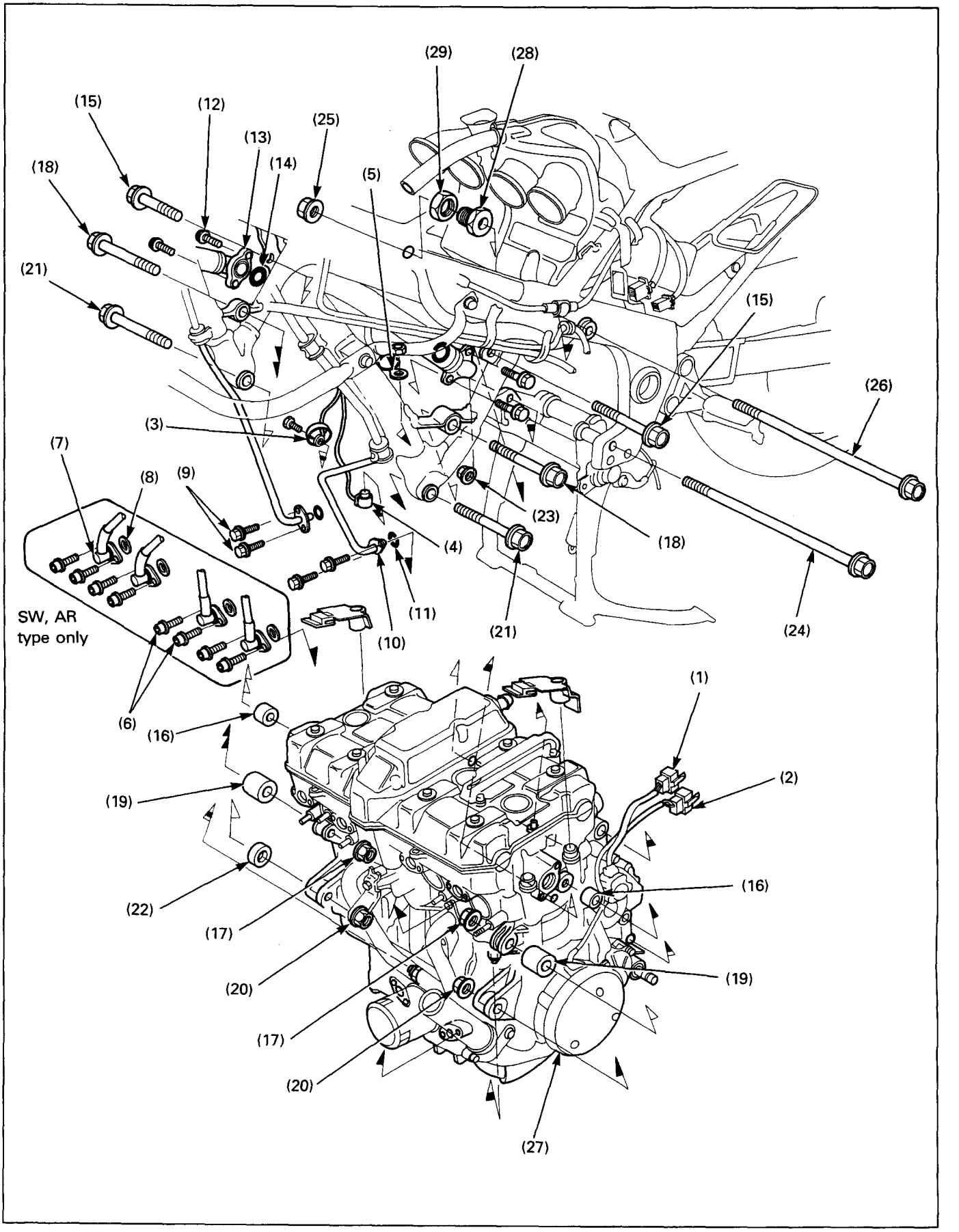

⚠WARNING

- **Do not support the engine using the oil filter.**

NOTE

- Support the motorcycle using safety stand or a hoist.
- A floor jack or other adjustable support is required to support and maneuver the engine. The jack height must be continually adjusted to relieve stress for ease of bolt removal.
- Turn the ignition switch OFF and disconnect the battery ground (–) terminal.

Requisite Service

- Fuel tank removal (page 2-9)
- Lower fairing removal (page 2-6)
- Carburetor removal (page 5-4)
- Muffler removal (page 2-10)
- Radiator removal (page 6-4)
- Clutch hose removal (page 9-2)
- Dnive sprocket removal (page 7-2)
- Engine oil draining

	Procedure	Q'ty	Remarks
	Removal Order		
(1)	Alternator connector	1	
(2)	Ignition pulse generator 2P connector	1	
(3)	Oil pressure switch connector	1	
(4)	Neutral switch connector	1	
(5)	Starter motor cable	1	
(6)	Pulse secndary air injection control valve socket bolt	8	SW, AR type only
(7)	Pulse secndary air injection control valve	4	
(8)	Sealing washer	4	
(9)	Oil pipe bolt	4	
(10)	Oil pipe	2	
(11)	O-ring	2	
(12)	Water hose bolt	4	
(13)	Water hose	2	
(14)	O-ring	2	
(15)	Engine mounting bolt (front/upper)	2	
(16)	Collar (ø22×24.3mm)	2	
(17)	Front engine hanger nut (upper)	2	
(18)	Front engine hanger bolt (upper)	2	
(19)	Collar (ø25/ø18×16mm)	2	
(20)	Front engine hanger nut (lower)	2	
(21)	Front engine hanger bolt (lower)	2	
(22)	Collar (ø24×10mm)	1	
(23)	Rear engine hanger nut (lower)	1	
(24)	Rear engine hanger bolt (lower)	1	
(25)	Rear engine hanger nut (upper)	1	
(26)	Rear engine hanger bolt (upper)	1	
(27)	Engine assembly	1	
(28)	Engine hanger adjusting bolt	1	
(29)	Engine hanger adjusting bolt lock nut	1	

Engine Installation

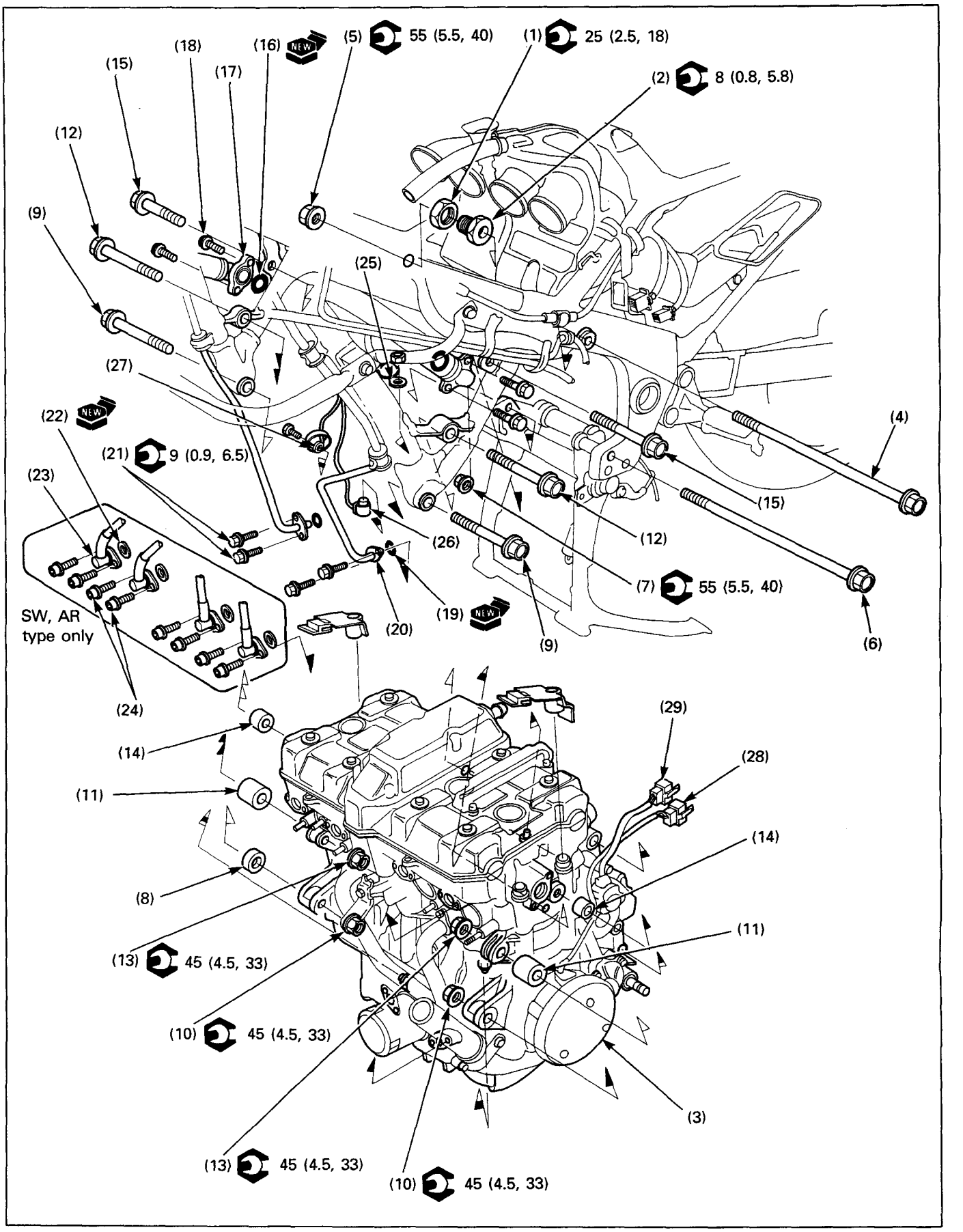

NOTE

- Note the direction of the engine mounting bolts.
- All engine mounting bolts and nuts loosely install, then tighten the nuts specified torque.
- Route the wire harnesses and tubes properly (page 1-23).

Requisite Service

- Fuel tank installation (page 2-9)
- Lower fairing installation (page 2-6)
- Carburetor installation (page 5-4)
- Muffler installation (page 2-10)
- Clutch hose installation (page 9-2)
- Drive sprocket installation (page 7-2)
- Engine oil refilling
- Radiator installation (page 6-4)

	Procedure	Q'ty	Remarks
	Installation Order		
(1)	Engine hanger adjusting bolt lock nut	1	
(2)	Engine hanger adjusting bolt	1	
(3)	Engine assembly	1	
(4)	Rear engine hanger bolt (upper)	1	
(5)	Rear engine hanger nut (upper)	1	
(6)	Rear engine hanger bolt (lower)	1	
(7)	Rear engine hanger nut (lower)	1	
(8)	Collar (ø24×10mm)	1	
(9)	Front engine hanger bolt (lower)	2	
(10)	Front engine hanger nut (lower)	2	
(11)	Collar (ø25/ø18×16mm)	2	
(12)	Front engine hanger bolt (upper)	2	
(13)	Front engine hanger nut (upper)	2	
(14)	Collar (ø22×24.3mm)	2	
(15)	Engine mounting bolt (front/upper)	2	
(16)	O-ring	2	
(17)	Water hose	2	
(18)	Water hose bolt	4	
(19)	O-ring	2	
(20)	Oil pipe	2	
(21)	Oil pipe bolt	4	
(22)	Sealing washer	4	SW, AR type only
(23)	Pulse secondary air injection control valve	4	
(24)	Pulse secondary air injection control valve socket bolt	8	
(25)	Starter motor cable	1	
(26)	Neutral switch connector	1	
(27)	Oil pressure switch connector	1	
(28)	Ignition pulse generator 2P connector	1	
(29)	Alternator connector	1	

8. Cylinder Head/Cylinder/Piston

Service Information

- Camshaft lubricating oil is fed through oil passages in the cylinder head. Clean the oil passages before assembling the cylinder head.
- Clean all disassembled parts with clean solvent and dry them by blowing them off with compressed air before inspection.
- When disassembling, mark and store the disassembled parts to ensure that they are reinstalled in their proper locations.

Troubleshooting

- Engine top-end problem usually affect engine performance. These can be diagnosed by a compression or leak down test, or by tracing noises to the top-end with a sounding rod or stethoscope.
- If performance is poor at low speeds, check for white smoke in the crankcase breather tube. If the tube is smoky, check for a seized piston ring.

Compression Too Low, Hard Starting Or Poor Performance At Low Speed
- Valves
  - Incorrect valve adjustment
  - Burned or bent valves
  - Incorrect valve timing
  - Broken valve spring
  - Uneven valve seating
- Cylinder head
  - Leaking or damaged head gasket
  - Warped or cracked cylinder head
- Cylinder, piston
  - Leaking cylinder head gasket
  - Loose spark plug
  - Worn, stuck or broken piston ring
  - Worn or damaged cylinder and piston

Compression Too High, Overheating Or Knocking
- Excessive carbon build-up in cylinder head or on top of piston

Excessive Smoke
- Cylinder head
  - Worn valve stem or valve guide
  - Damaged stem seal
- Cylinder, piston
  - Worn cylinder, piston, or piston rings
  - Improper installation of piston rings
  - Scored or scratched piston or cylinder wall

Excessive Noise
- Cylinder head
  - Incorrect valve adjustment
  - Sticking valve or broken valve spring
  - Damaged or worn camshaft
  - Loose or worn cam chain
  - Worn or damaged cam chain
  - Worn or damaged cam chain tensioner
  - Worn cam sprocket teeth
- Cylinder, piston
  - Worn cylinder and piston
  - Worn piston pin and piston pin hole

Rough Idle
- Low cylinder compression

Cylinder Head Cover Removal/Installation

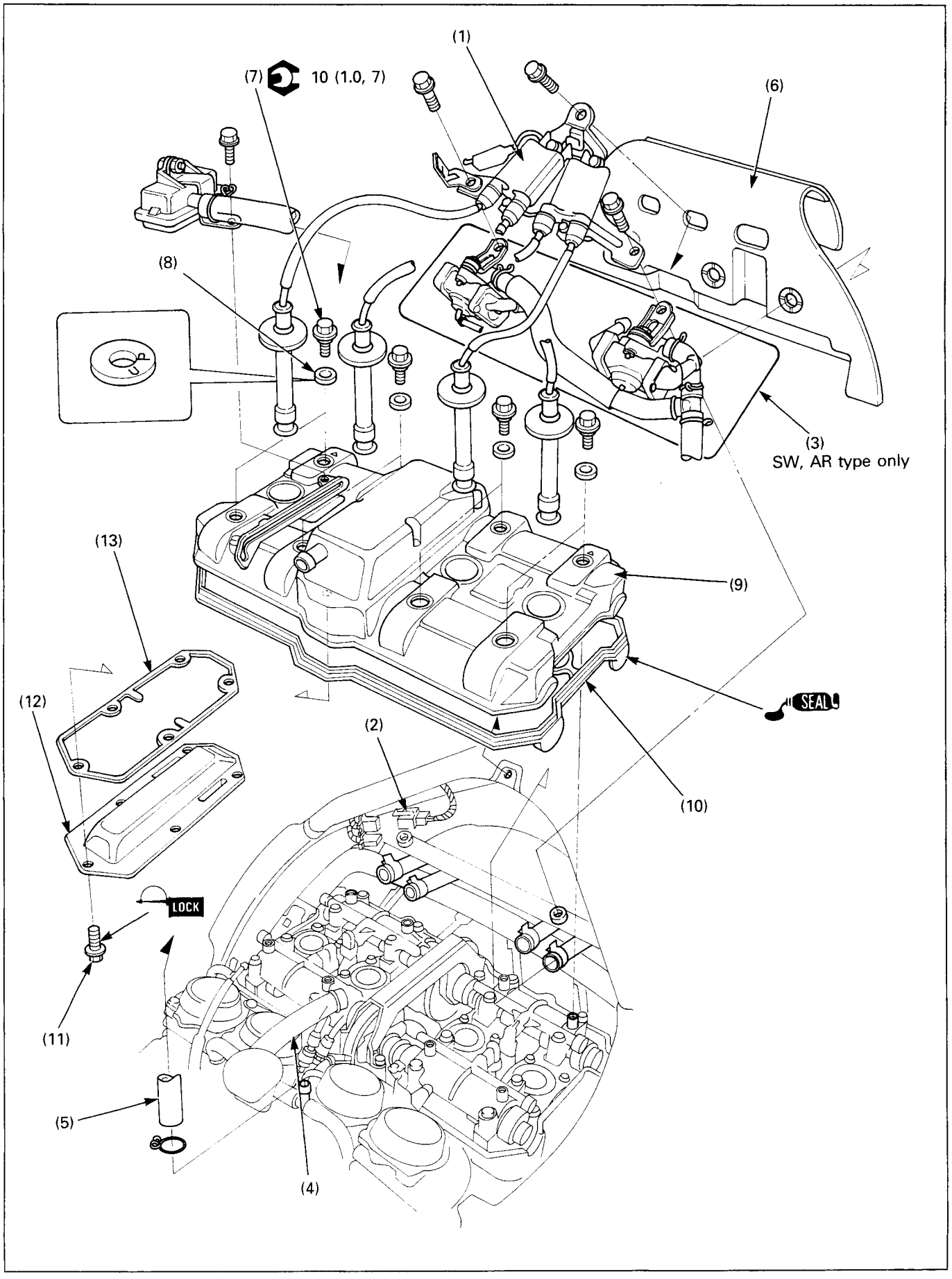

Requisite Service

- Fuel tank removal/installation (page 2-9)

	Procedure	Q'ty	Remarks
	Removal Order		Installation is in the reverse order of removal.
(1)	Ignition coil assembly	1	Removal/installation (page 15-9)
(2)	Radiator fan motor connector	1	
(3)	Pulse secondary air injection control valve assembly	1	SW, AR type only.
(4)	Breather tube	1	Disconnect the breather tube from the cylinder head side.
(5)	Air vent tube	1	
(6)	Insulator	1	
(7)	Cylinder head cover bolt	8	At installation, tighten the "▲" mark side bolts first, then other side bolts.
(8)	Washer	8	At installation, install them with the "UP" marks facing up.
(9)	Cylinder head cover	1	At installation, install the cover with the "F ↑ " mark facing forward.
(10)	Gasket	1	
(11)	Breather case cover bolt	5	
(12)	Breather case cover	1	
(13)	Gasket	1	

Camshaft Removal/Installation

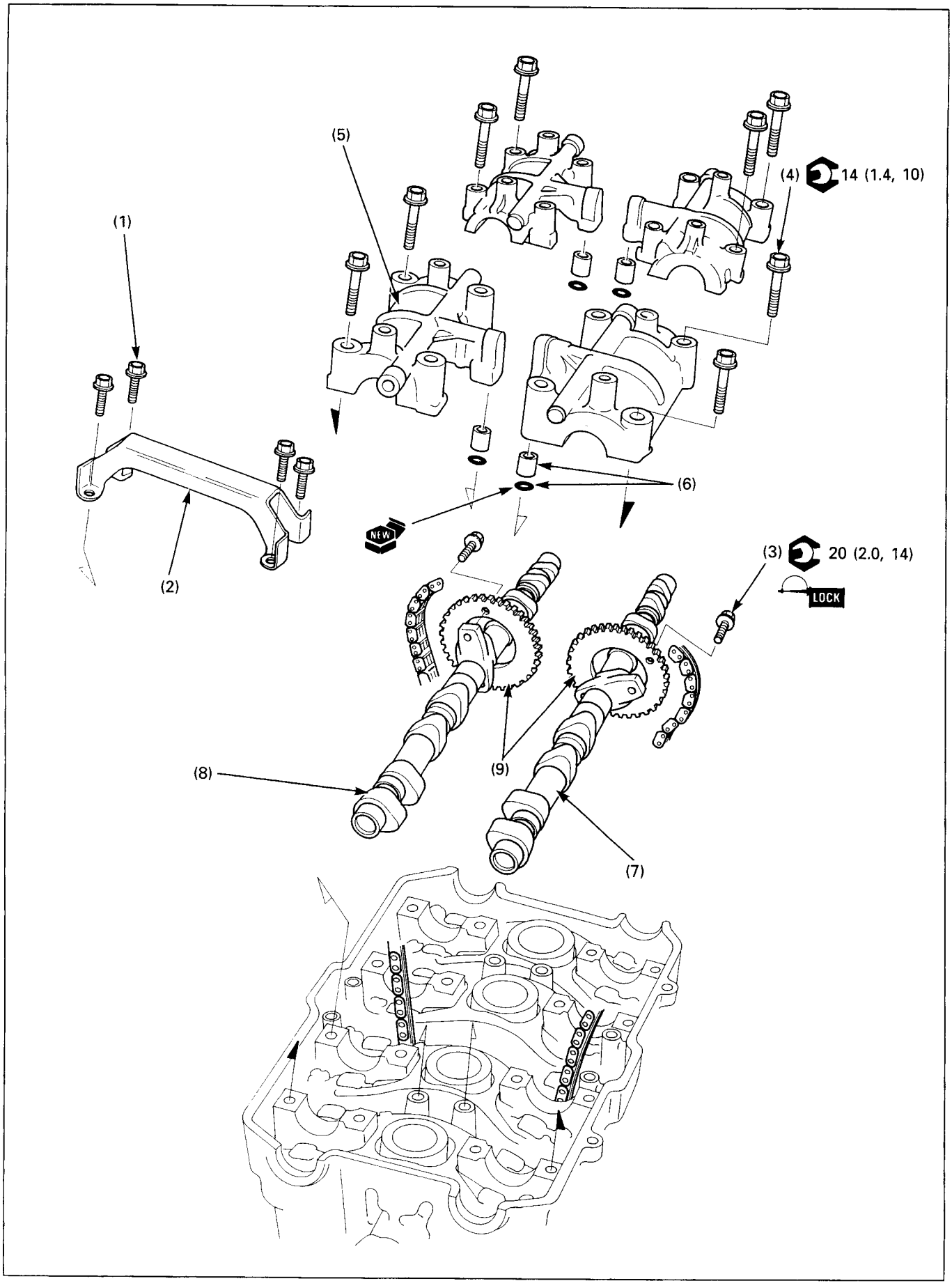

NOTE

- It is not necessary to remove the cam sprocket from the camshaft except replacing the camshaft or sprocket.

Requisite Service

- Cylinder head cover removal/installation (page 8-2)

	Procedure	Q'ty	Remarks
	Removal Order		Installation is in the reverse order of removal.
(1)	Cam chain guide bolt	4	
(2)	Cam chain guide	1	
(3)	Cam sprocket bolt	4	NOTE • It is not necessary to remove the cam sprocket from the camshaft except replacing the camshaft or sprocket. • Be careful not to drop the bolts into the engine.
(4)	Camshaft holder bolt	16	**CAUTION** • **From outside to inside, loosen the bolts in a crisscross pattern in several steps or camshaft holder might break.**
(5)	Camshaft holder	4	
(6)	Dowel pin (8×8mm)/O-ring	4/4	
(7)	Exhaust camshaft	1	
(8)	Intake camshaft	1	
(9)	Cam sprocket	2	

Camshaft Installation

Remove the timing hole cap (page 3-5).
Turn the crankshaft counterclockwise and align the index mark on the ignition pulse generator rotor with the "T" mark on the crankcase cover.

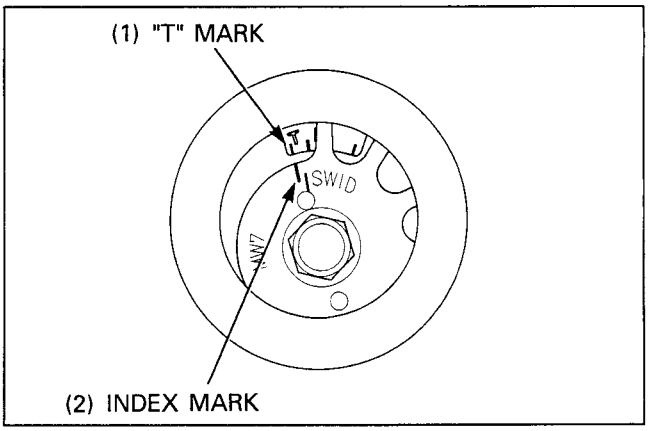

NOTE

- The camshaft has an "IN" mark for intake, or an " EX" mark for exhaust.

Apply molybdenum disulfide oil to the camshaft journals of the cylinder head and camshaft holder.
Position the cam sprockets onto the camshaft with the timing marks facing left of the engine.
Place the intake and exhaust camshaft onto the cylinder head with the No.1 cylinder cam lobe as shown.

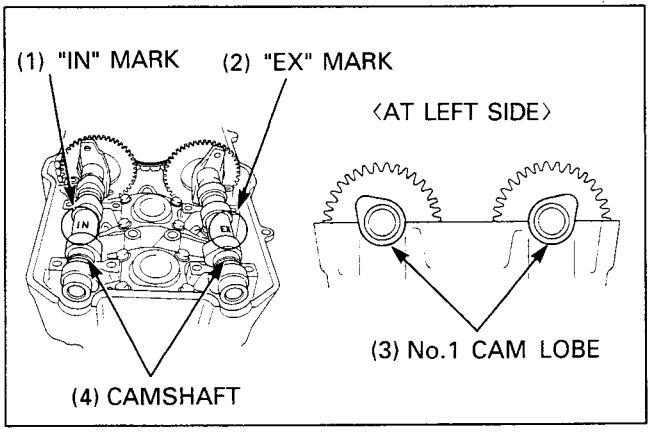

Apply molybdenum disulfide grease to the journal of the holders.

Install each camshaft holder on its original position.

NOTE

- The camshaft holders have their location marks.
  "IN R": Intake right
  "IN L": Intake left
  "R": Exhaust right
  "EX L": Exhaust left

Tighten the camshaft holder bolts to the specified torque in a crisscross pattern in 2-3 steps.

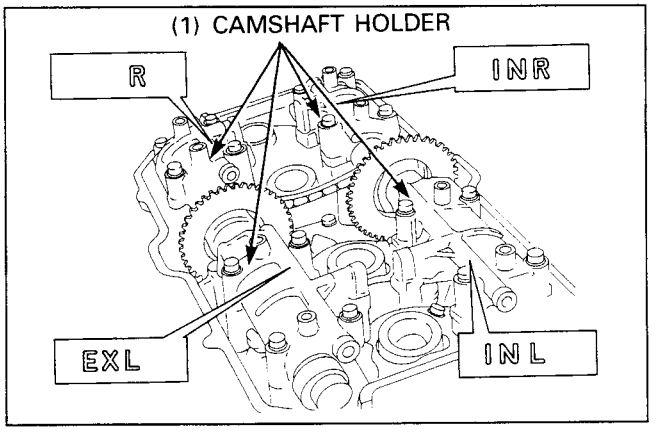

Torque: 14 N • m (1.4 kg-m, 10 ft-lb)

Align the "IN" marks on the intake cam sprocket and "EX" mark on the exhaust cam sprocket with the cylinder head upper surface.

CAUTION

- **Tighten the camshaft holder bolts on only one-side might cause a camshaft holder to break.**

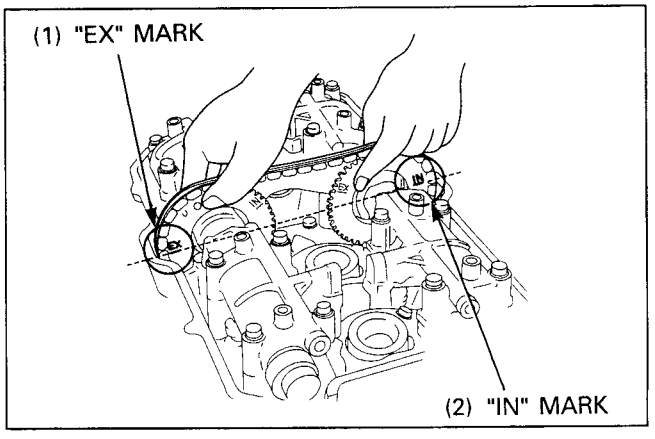

Install the cam chain over the cam sprocket.
Install the cam sprockets onto the camshaft flange shoulders while depressing the cam chain tensioner arm with a screwdriver.

NOTE

- Make sure that the cam chain is engaged on the sprocket of the crankshaft.

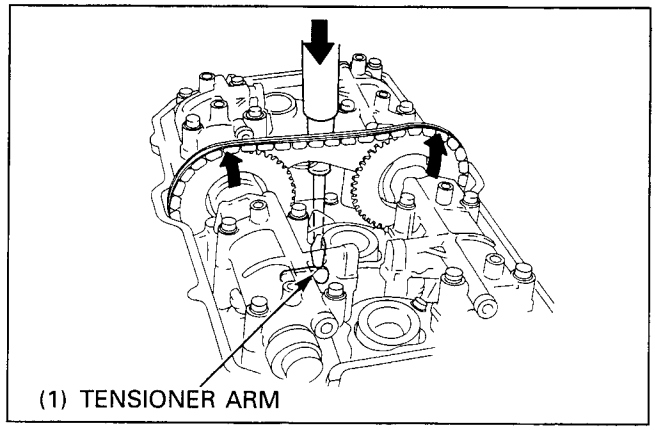

Apply a locking agent to the threads of the sprocket bolts.
Align the cam sprocket bolt holes by turning the camshaft slightly and install the cam sprocket bolts.
Tighten the sprocket bolts, rotate the crankshaft one revolution and tighten the other bolts.

Torque: 17 N • m (1.7 kg-m, 12 lb-ft)

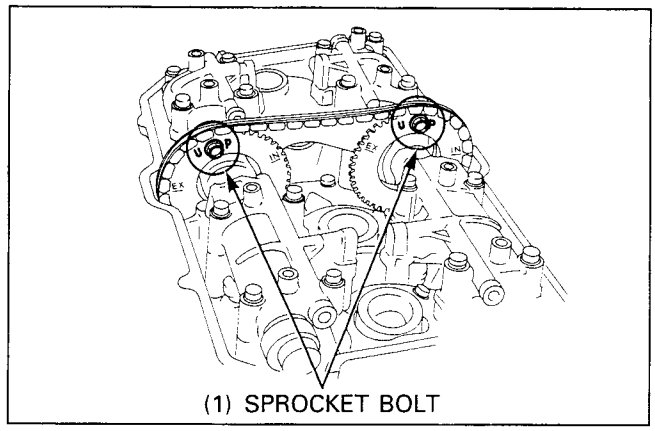

Realign the index mark on the ignition pulse generator rotor with the "T" mark on the crankcase.
Make sure that the "IN" and "EX" marks on the sprockets align with the cylinder head upper surface.

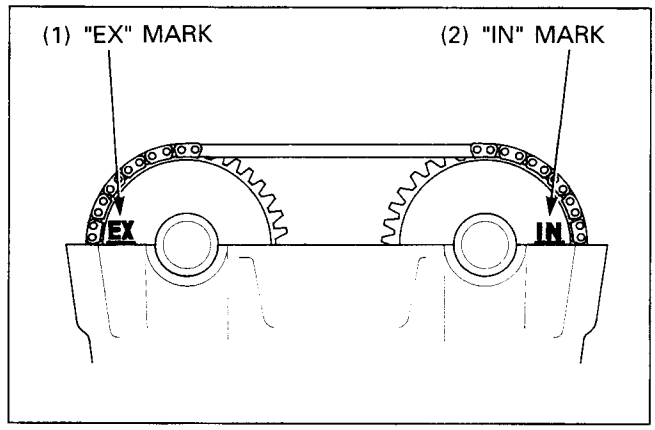

Fill the cam chain tensioner oil chamber with clean engine oil .

Recheck valve timing.

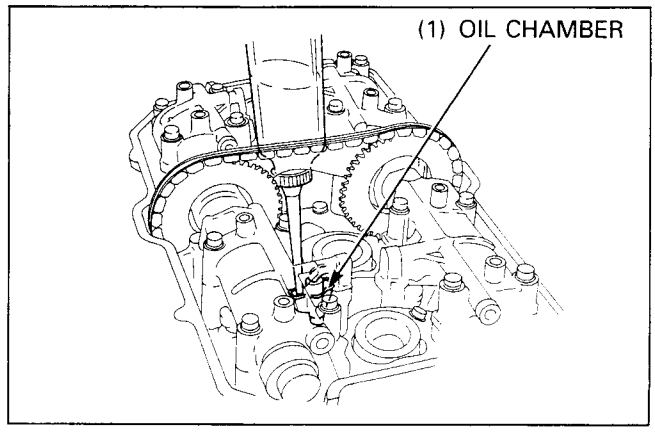

Rocker Arm/Cam Chain Tensioner Removal/Installation

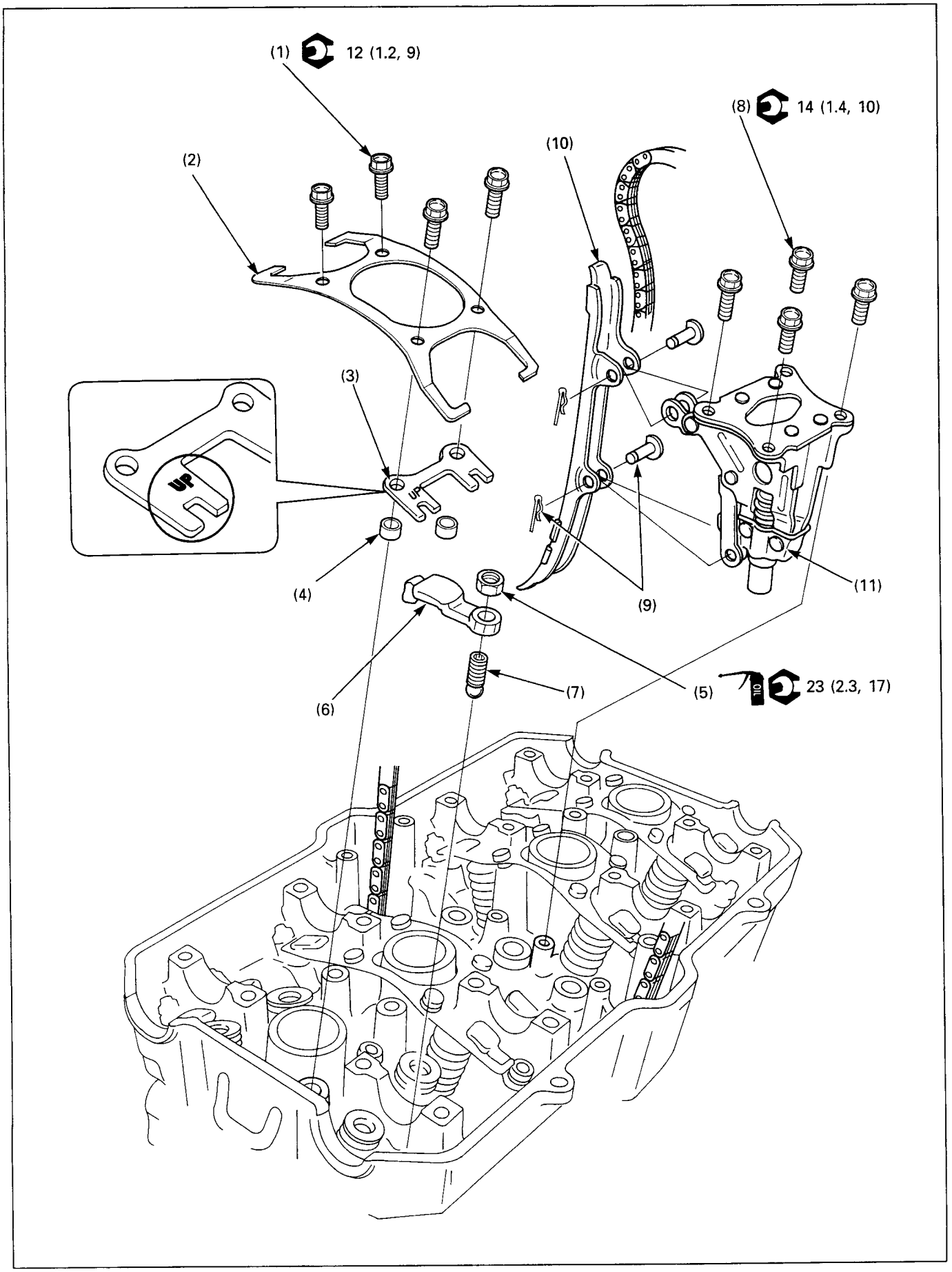

Requisite Service

- Camshaft removal/installation (page 8-4)

	Procedure	Q'ty	Remarks
	Rocker Arm Removal Order		Installation is in the reverse order of removal.
(1)	Rocker arm spring bolt	16	
(2)	Rocker arm spring	4	
(3)	Rocker arm holder	8	
(4)	Dowel pin	16	
(5)	Adjuster lock nut	16	
(6)	Rocker arm	16	
(7)	Adjuster screw	16	
	Cam Chain Removal Order		
(8)	Cam chain tensioner bolt	4	NOTE
(9)	Joint pin/clip	2/2	• Be careful not to drop them into the crankcase.
(10)	Chain slider	1	
(11)	Cam chain tensioner	1	

Cylinder Head Removal/Installation

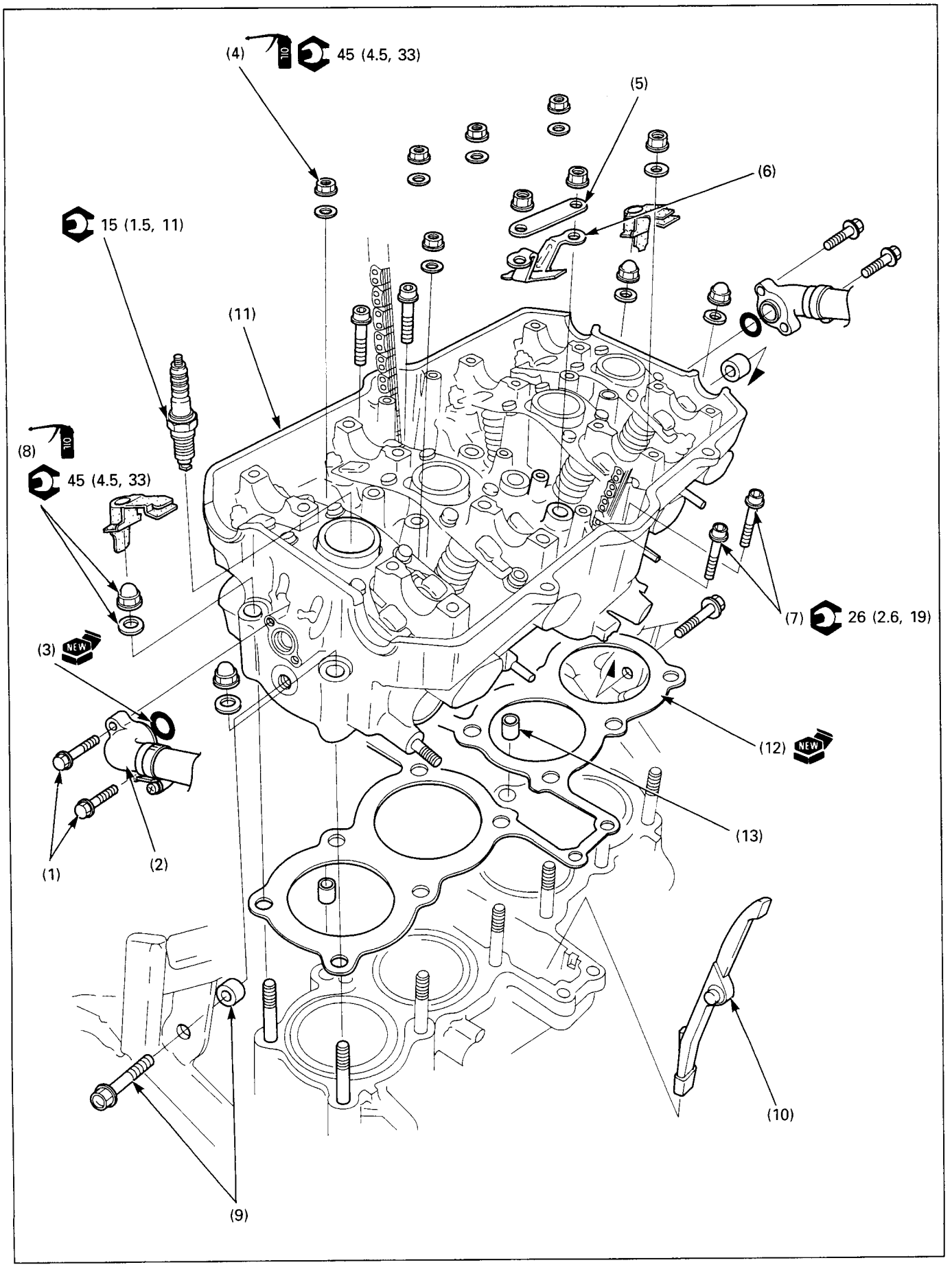

Requisite Service

- Exhaust system removal/installation (page 2-10)
- Carburetor removal/installation (page 5-4)
- Camshaft removal/installation (page 8-4)
- Cam chain tensioner removal/installation (page 8-8)

	Procedure	O'ty	Remarks
	Removal Order		Installation is in the reverse order of removal.
(1)	Water hose bolt	4	
(2)	Water hose	2	
(3)	O-ring	2	
(4)	Cylinder head nut/washer	8/6	
(5)	Oil guide setting plate	1	
(6)	Oil guide plate	1	NOTE • Attach the piece of wire to the cam chain to prevent it from being dropped into the crankcase, then remove it.
(7)	Cylinder head socket bolt	4	
(8)	Cylinder head cap nut/washer	4/4	
(9)	Engine mounting bolt (front/upper)/collar	2/2	
(10)	Cam chain slider	1	Raise the cylinder head a little and pry off the cam chain slider from the cylinder groove.
(11)	Cylinder head assembly	1	Disassembly/assembly (page 8-12)
(12)	Gasket	1	
(13)	Dowel pin	2	

Cylinder Head Disassembly/Assembly

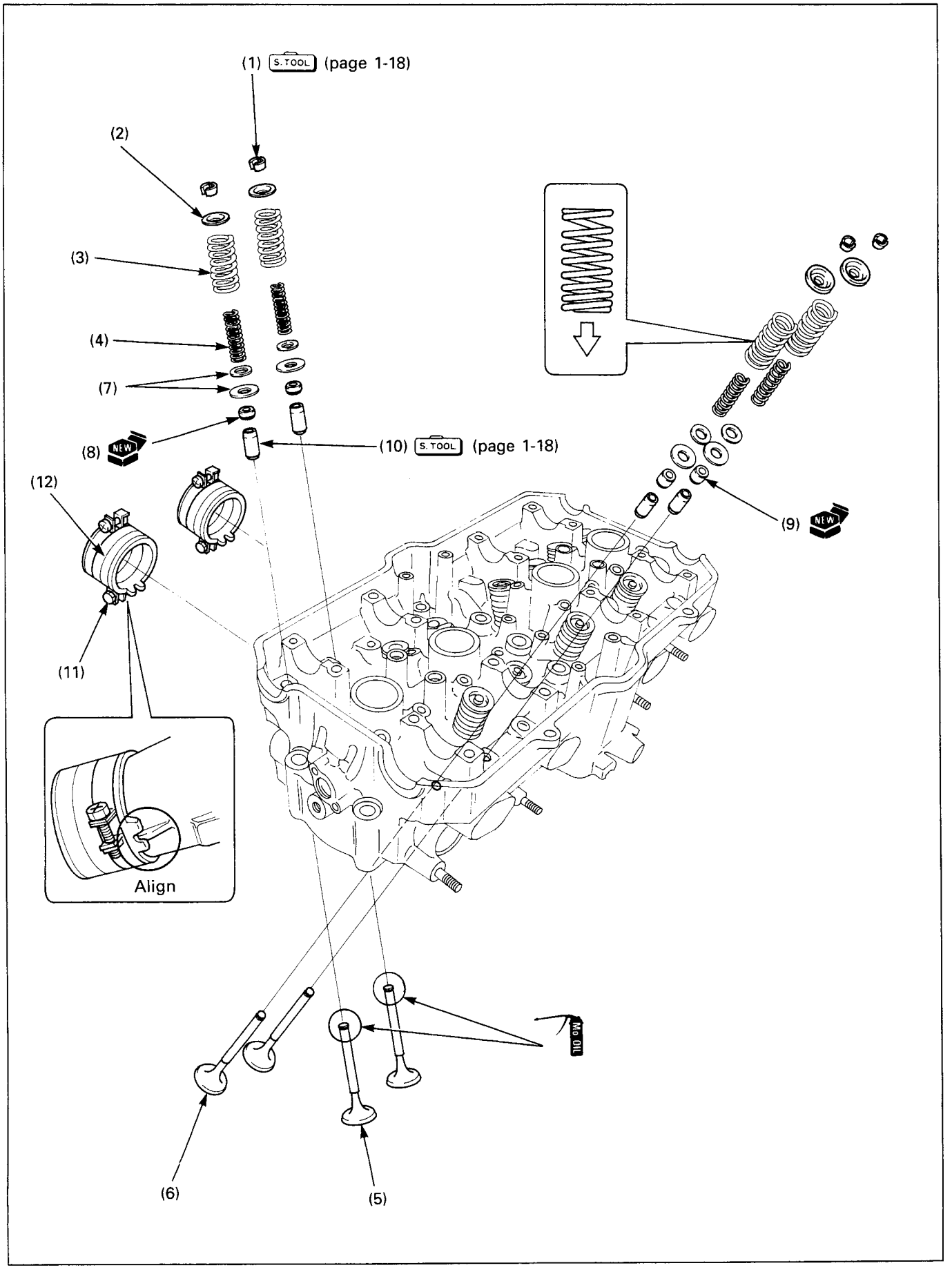

NOTE

- Mark all parts during disassembly so they can be placed back their original position.
- Remove carbon deposits from the combustion chamber and clean off the head gasket surface, before assembly.
  - Avoid damaging the gasket surface.
  - Gaskets will come off easier soaked in solvent.
- Valve guide replacement see section 9 of the Common Service Manual.

Requisite Service

- Cylinder head removal/installation (page 8-10)

	Procedure	O'ty	Remarks
	Disassembly Order		Assembly is in the reverse order of disassembly.
(1)	Valve cotter	32	
(2)	Valve retainer	16	
(3)	Outer valve spring	16	At installation, install the spring with the narrow pitch end facing down.
(4)	Inner valve spring	16	
(5)	Intake valve	8	NOTE • Before installation, lubricate each valve stem with molybdenum disulfide oil and insert the valve into the valve guide. • To avoid damage to stem seal, turn the valve slowly when installing.
(6)	Exhaust valve	8	
(7)	Spring seat	16	
(8)	Stem seal (IN)	8	
(9)	Stem seal (EX)	8	
(10)	Valve guide	16	
(11)	Screw	4	Only loosen.
(12)	Carburetor insulator	4	At installation, align the insulator groove with cylinder head lug.

Cylinder/Piston Removal/Installation

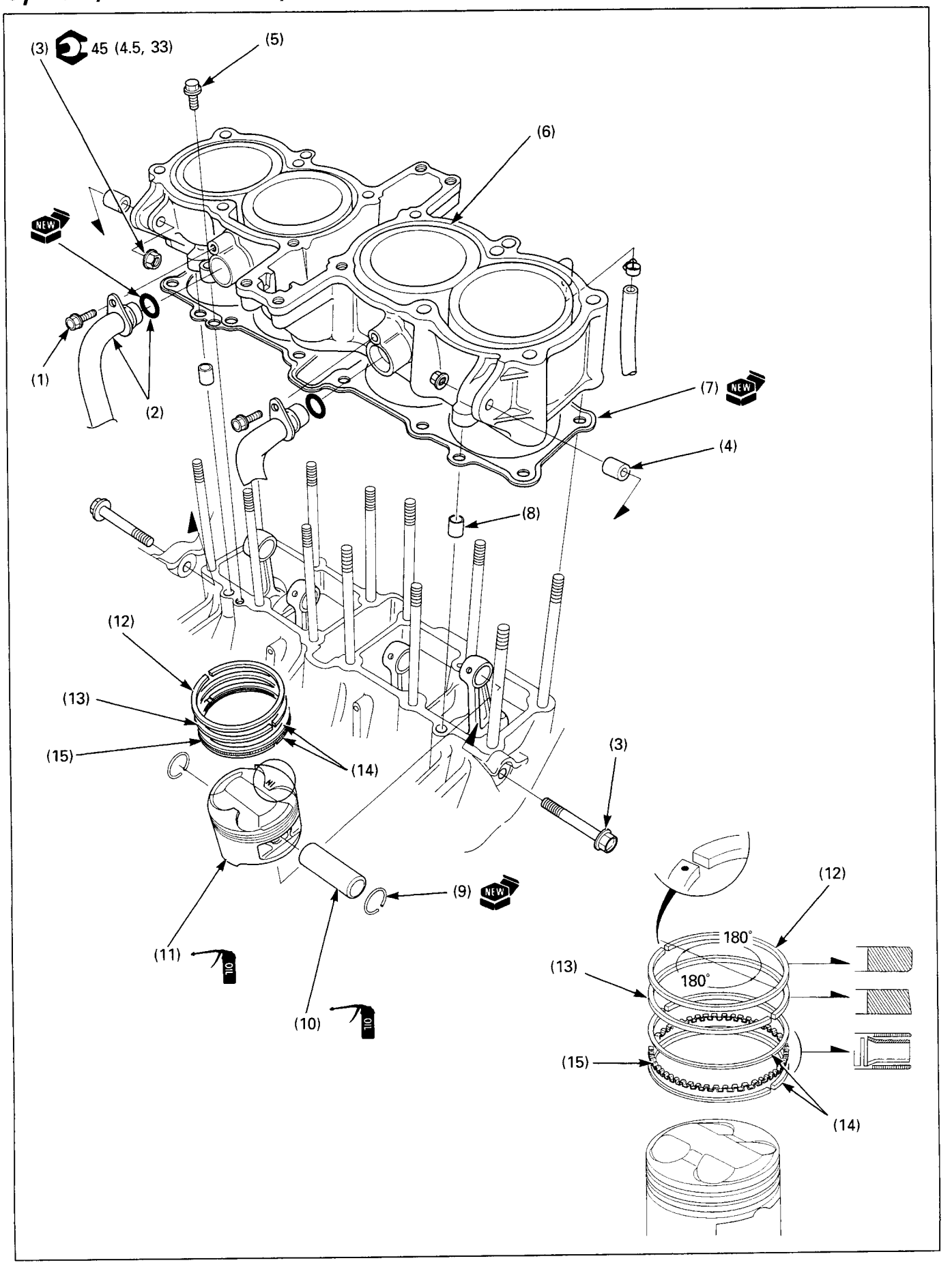

Requisite Service

- Cylinder head removal/installation (page 8-10)

	Procedure	O'ty	Remarks
	Cylinder Removal Order		Installation is in the reverse order of removal.
(1)	Water pipe bolt	2	
(2)	Water pipe/O-ring	2	
(3)	Front engine hanger bolt/nut	2/2	
(4)	Collar (ϕ25/ϕ18 x 16 mm)	2	
(5)	Cylinder bolt	1	
(6)	Cylinder assembly	1	
(7)	Gasket	1	
(8)	Dowel pin	2	
	Piston Disassembly Order		
(9)	Piston pin clip	8	
(10)	Piston pin	4	
(11)	Piston assembly	4	At installation, install the piston with the "IN" mark facing to the intake side.
(12)	Top ring	4	At installation, install the top and second rings with the markings facing up.
(13)	Second ring	4	
(14)	Side rail	8	
(15)	Spacer	4	

9. Clutch/Gearshift Linkage

Service Information

- Clutch and gearshift linkage maintenance can be done with the engine in the frame.
- Transmission oil viscosity and level have an effect on clutch disengagement. When the clutch does not disengage or the vehicle creeps with clutch disengaged, inspect the transmission oil level before servicing the clutch system.

Troubleshooting

Hard To Shift
- Incorrect clutch adjustment
- Loose stopper plate bolt
- Damaged stopper plate and pin
- Damaged gearshift spindle

Transmission Jumps Out Of Gear
- Worn shift drum stopper arm
- Weak or broken shift arm return spring
- Loose stopper plate bolt

Gearshift Pedal Will Not Return
- Weak or broken gearshift spindle return spring
- Bent gearshift spindle

Clutch Slips When Accelerating
- Worn clutch discs
- Weak clutch springs
- Transmission oil mixed with molybdenum or graphite additive

Motorcycle Creeps With The Engine Idling
- Clutch plates warped
- Faulty clutch lifter
- Incorrect engine oil weight

Clutch Slave Cylinder Removal/Installation

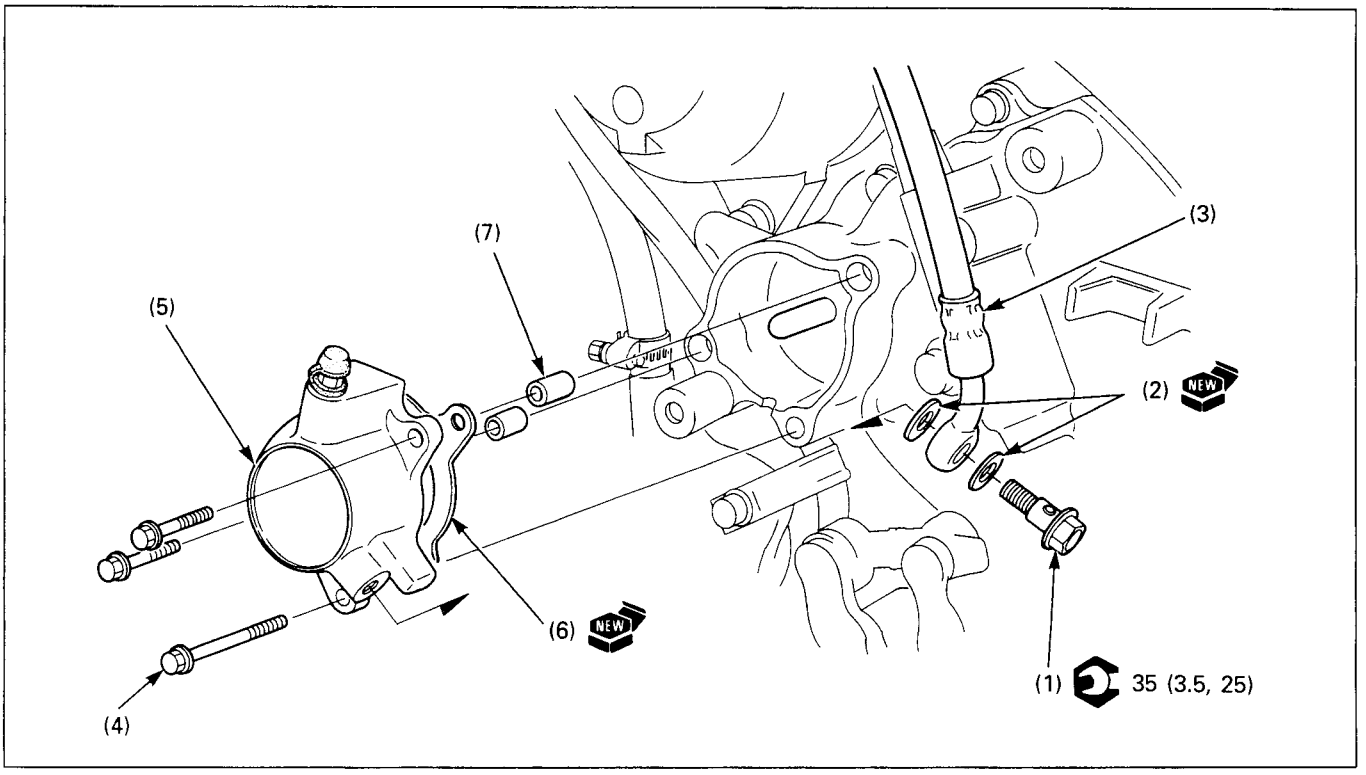

Requisite Service

- Clutch fluid draining/refilling
- Clutch system air bleeding
- Lower fairing removal/installation (page 2-6)

	Procedure	O'ty	Remarks
	Removal Order		Installation is in the reverse order of removal.
(1)	Oil bolt	1	
(2)	Sealing washer	2	
(3)	Oil hose	1	
(4)	Bolt	3	
(5)	Slave cylinder assembly	1	
(6)	Gasket	1	
(7)	Dowel pin	2	

Clutch Slave Cylinder Disassembly/Assembly

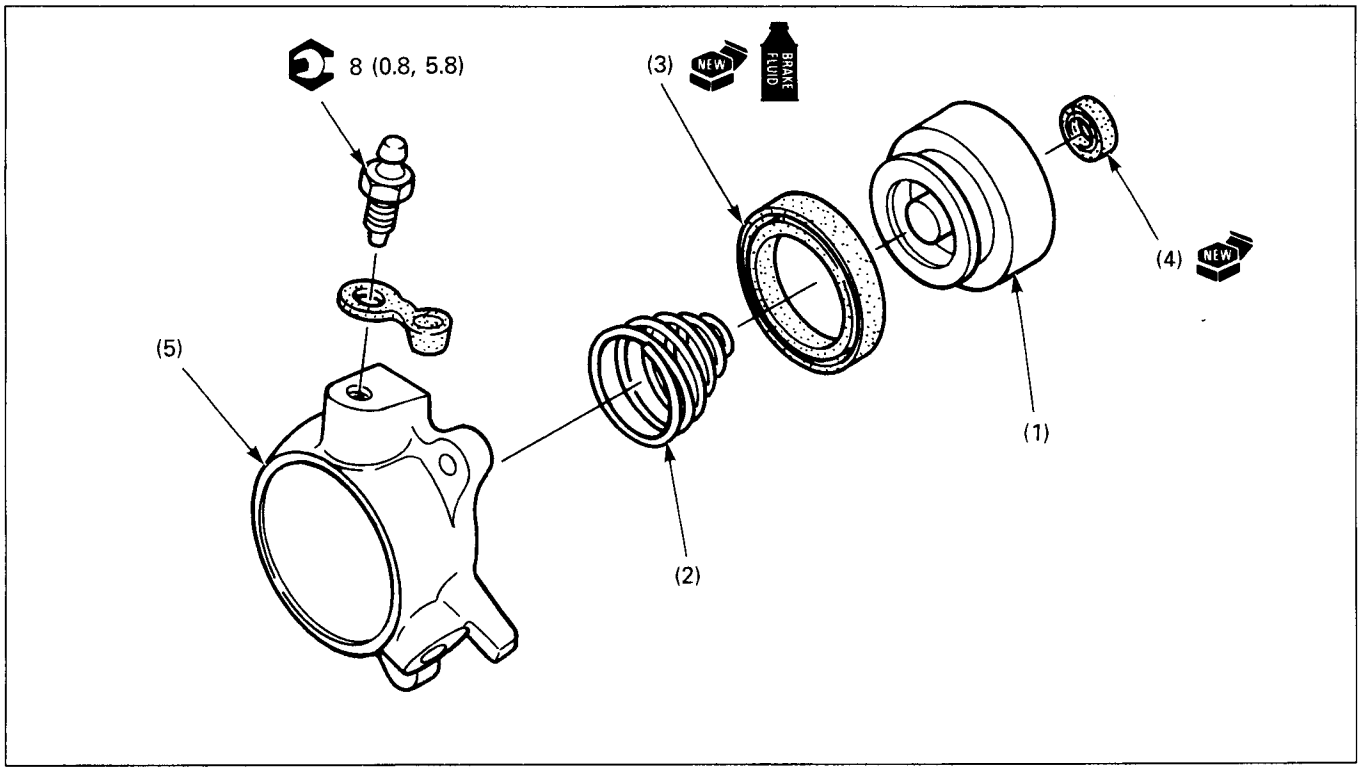

Requisite Service

- Clutch slave cylinder removal/installation (page 9-2)

	Procedure	Q'ty	Remarks
	Disassembly Order		Assembly is in the reverse order of disassembly.
(1)	Slave cylinder piston assembly	1	
(2)	Spring	1	
(3)	Piston seal	1	At installation, install the piston seal with groove side facing to the slave cylinder body.
(4)	Oil seal	1	At installation, install the oil seal with groove side facing to the slave cylinder piston.
(5)	Slave cylinder body	1	

Clutch Master Cylinder Removal/Installation

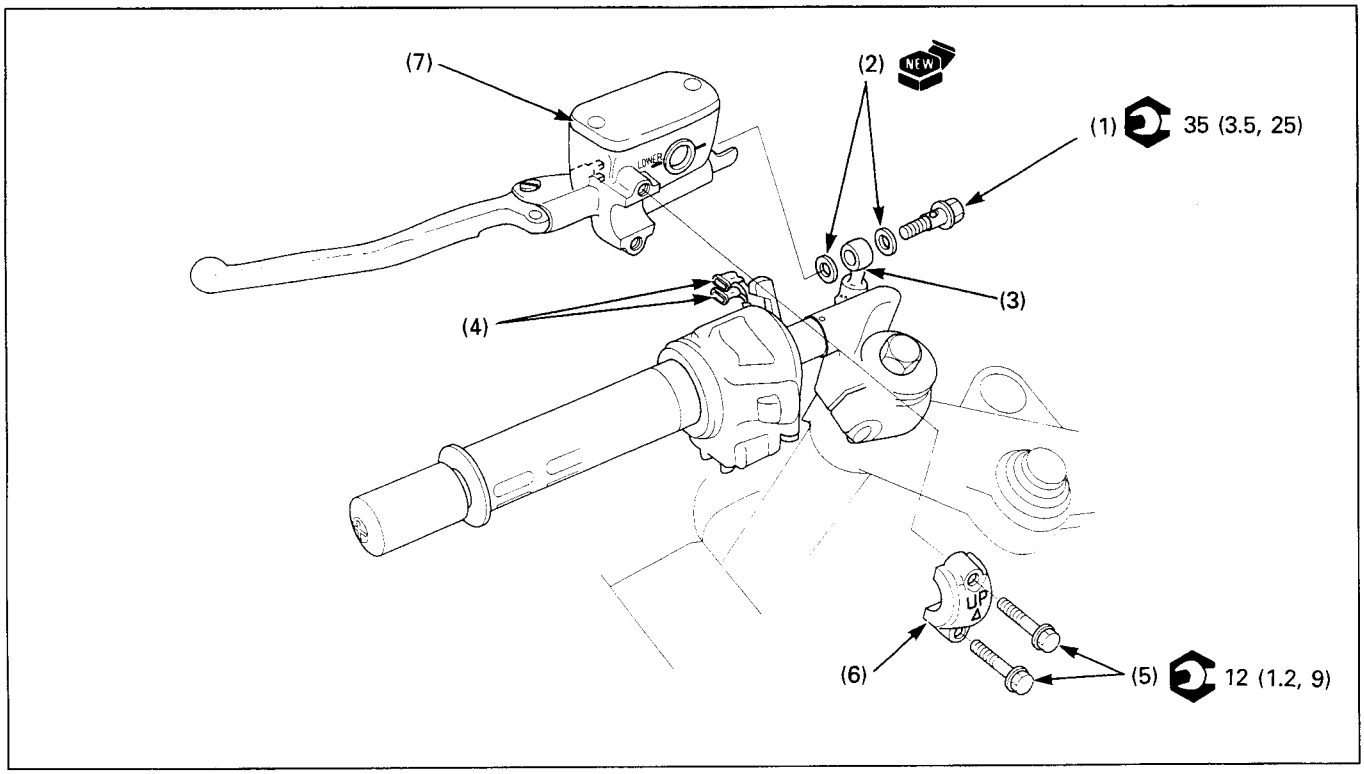

CAUTION

- **Avoid spilling fluid on painted, plastic,or rubber parts. Place a rag over these parts whenever the system is serviced.**
- **When removing the oil bolt, cover the end of the clutch hose to prevent contamination.**
- **Do not allow the foreign material to enter the system.**

NOTE

- Use DOT 4 brake fluid from a sealed container.

Requisite Service

- Clutch fluid draining/refilling
- Clutch system air bleading

	Procedure	O'ty	Remarks
	Removal Order		Installation is in the reverse order of removal.
(1)	Clutch oil bolt	1	
(2)	Sealing washer	2	
(3)	Clutch hose eyelet joint	1	At installation, press the eyelet joint against the stopper while tightening the oil bolt.
(4)	Clutch switch connector	2	
(5)	Clutch master cylinder holder bolt	2	At installation, tighten the upper bolt first, then the lower bolt.
(6)	Clutch master cylinder holder	1	At installation, install the holder with its "UP" mark facing up.
(7)	Clutch master cylinder	1	At installation, align the mating surface with the punch mark on the handlebar.

Clutch Master Cylinder Disassembly/Assembly

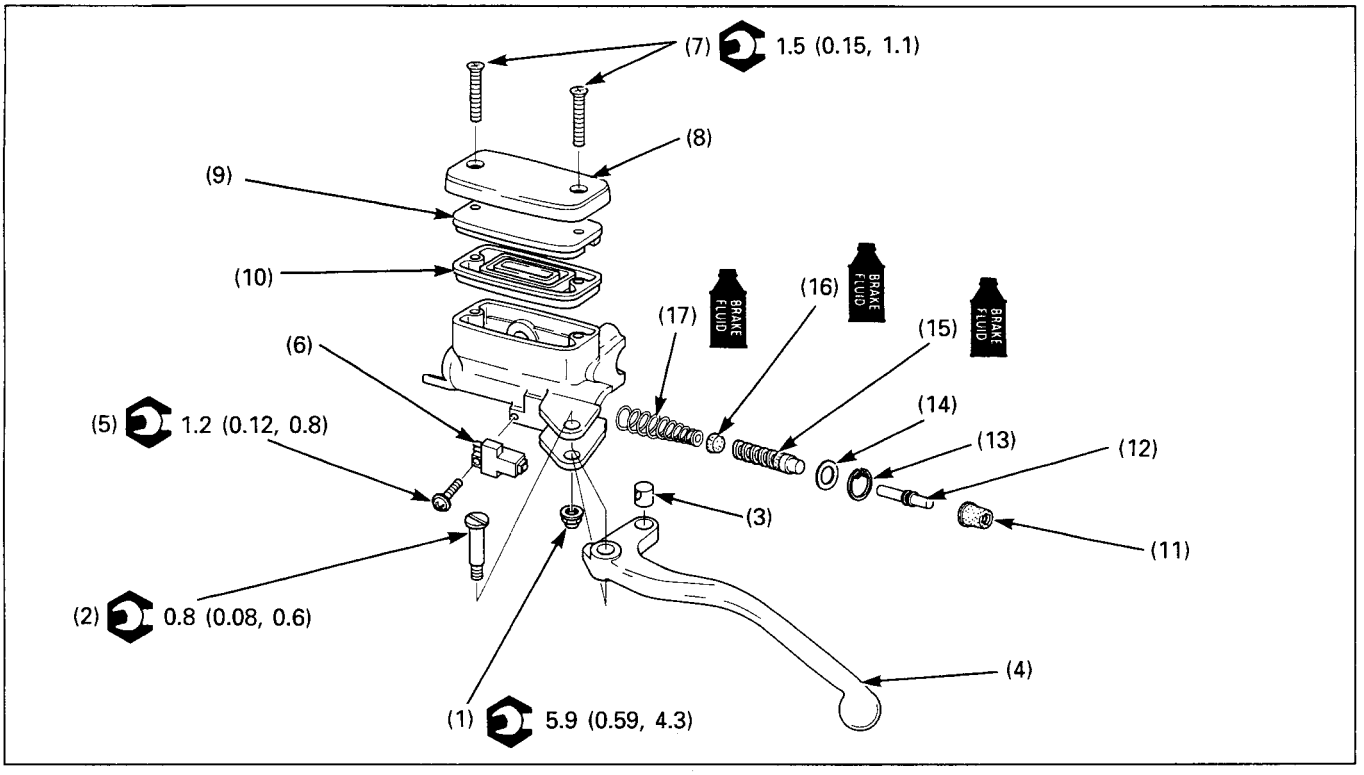

NOTE

- Replace the master piston, spring, cups, snap ring and boot as a set.
- The master piston, cups and spring must be installed as a set.

Requisite Service

- Clutch master cylinder removal/installation (page 9-4)

	Procedure	Q'ty	Remarks
	Disassembly Order		Assembly is in the reverse order of disassembly.
(1)	Clutch lever pivot nut	1	
(2)	Clutch lever pivot bolt	1	
(3)	Joint piece	1	
(4)	Clutch lever	1	
(5)	Clutch switch screw	1	
(6)	Clutch switch	1	
(7)	Master cylinder cover screw	2	
(8)	Master cylinder cover	1	
(9)	Diaphragm plate	1	
(10)	Diaphragm	1	
(11)	Boot	1	
(12)	Push rod	1	
(13)	Snap ring	1	
(14)	Washer	1	
(15)	Master piston assembly	1	
(16)	Primary cup	1	
(17)	Spring	1	Install the spring with the small coil end facing the piston.

Clutch Removal

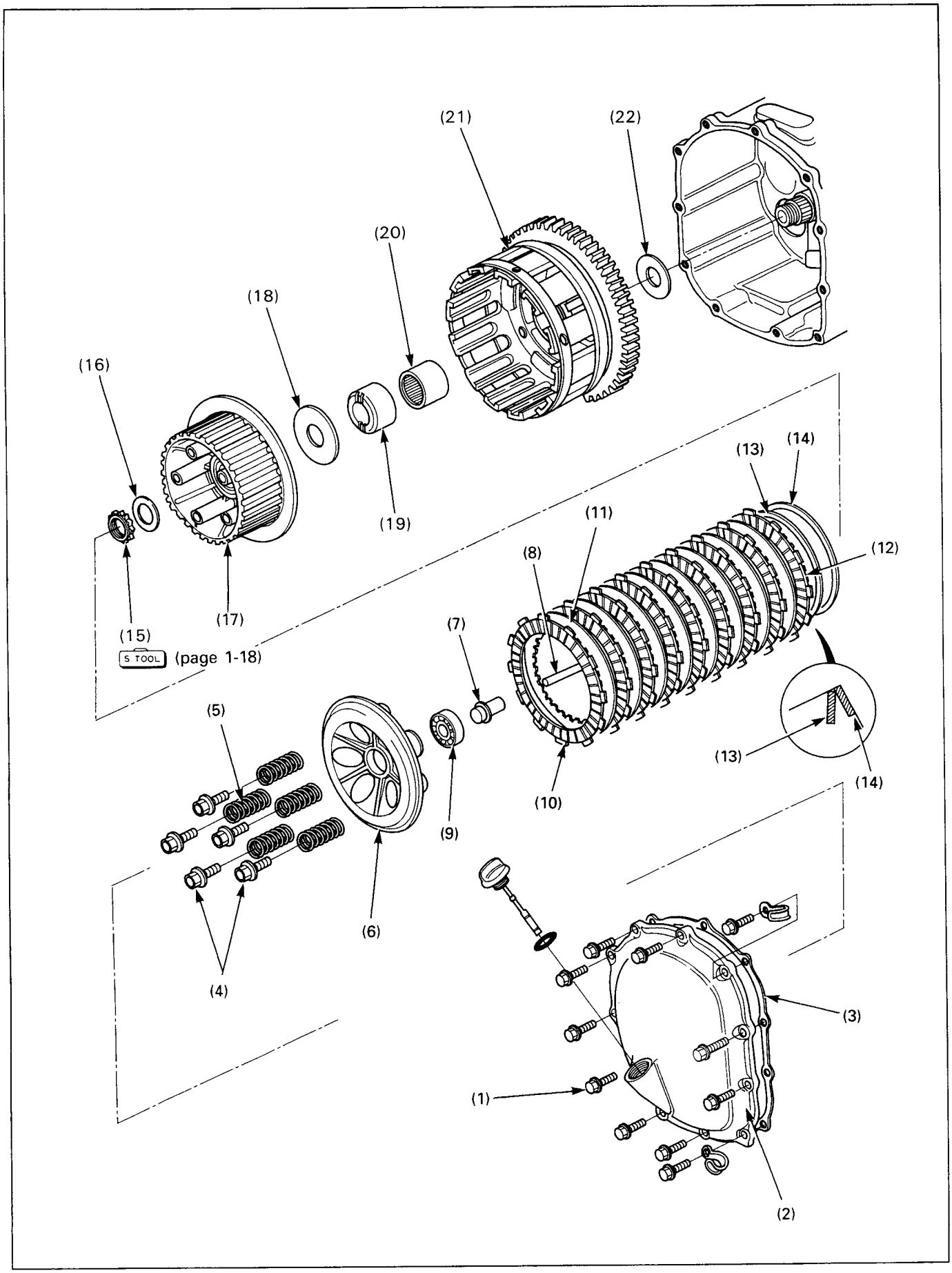

NOTE

- At clutch outer removal, remove the clutch outer turning the crankshaft until the primary drive gear clears the crank weight.

Requisite Service

- Engine oil draining
- Lower fairing removal (page 2-6)

	Procedure	O'ty	Remarks
	Removal Order		
(1)	Clutch cover bolt	11	
(2)	Clutch cover	1	
(3)	Gasket	1	
(4)	Clutch lifter plate bolt	5	
(5)	Clutch spring	5	
(6)	Clutch lifter plate	1	
(7)	Lifter guide	1	
(8)	Lifter rod	1	
(9)	Lifter bearing	1	
(10)	Clutch disc A	8	
(11)	Clutch plate	8	
(12)	Clutch disc B	1	
(13)	Judder spring	1	
(14)	Spring seat	1	
(15)	Clutch center lock nut	1	Removal (page 9-10)
(16)	Lock washer	1	
(17)	Clutch center	1	
(18)	Washer	1	
(19)	Clutch outer guide	1	
(20)	Needle bearing	1	
(21)	Clutch outer	1	
(22)	Washer	1	

Clutch Installation

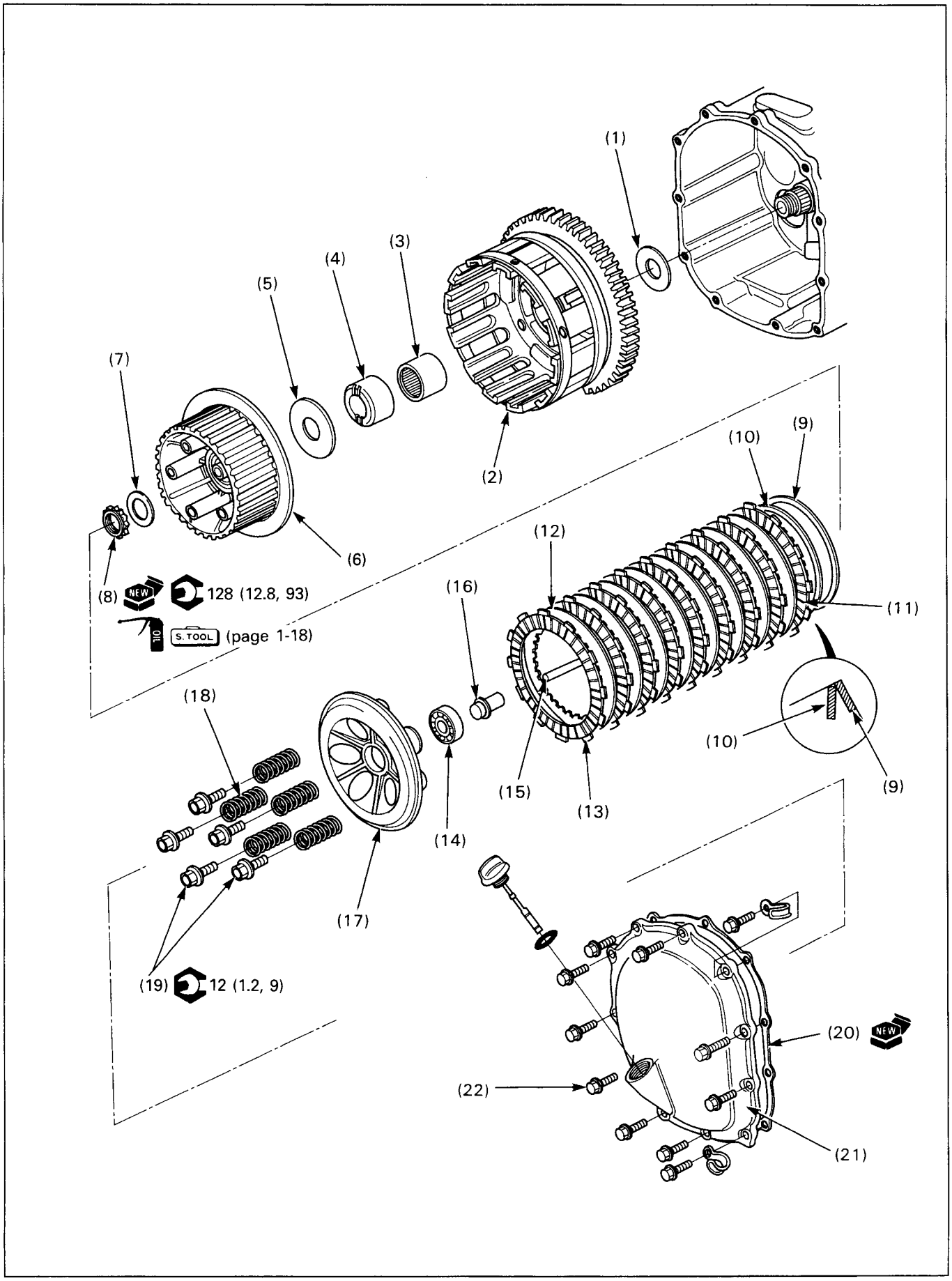

NOTE

- At clutch outer installation, install the clutch outer turning the crankshaft until the primary drive gear clears the crank weight.

Requisite Service

- Engine oil refilling
- Lower fairing installation (page 2-6)

	Procedure	Q'ty	Remarks
	Installation Order		
(1)	Washer	1	
(2)	Clutch outer	1	Install the clutch outer while aligning the primary drive gear and crankshaft gear using the screwdriver.
(3)	Needle bearing	1	
(4)	Clutch outer guide	1	
(5)	Washer	1	
(6)	Clutch center	1	
(7)	Lock washer	1	At installation, install the lock washer with the "OUT SIDE" mark facing out side.
(8)	Clutch center lock nut	1	NOTE • Never re-use the removed nut. • Installation (page 9-10)
(9)	Spring seat	1	
(10)	Judder spring	1	
(11)	Clutch disc B	1	
(12)	Clutch plate	8	
(13)	Clutch disc A	8	
(14)	Lifter bearing	1	
(15)	Lifter rod	1	
(16)	Lifter guide	1	
(17)	Clutch lifter plate	1	
(18)	Clutch spring	5	
(19)	Clutch lifter plate bolt	5	
(20)	Gasket	1	
(21)	Clutch cover	1	
(22)	Clutch cover bolt	11	

Clutch Center Lock Nut Removal/Installation

Lock Nut Removal

Unstake the clutch center lock nut.

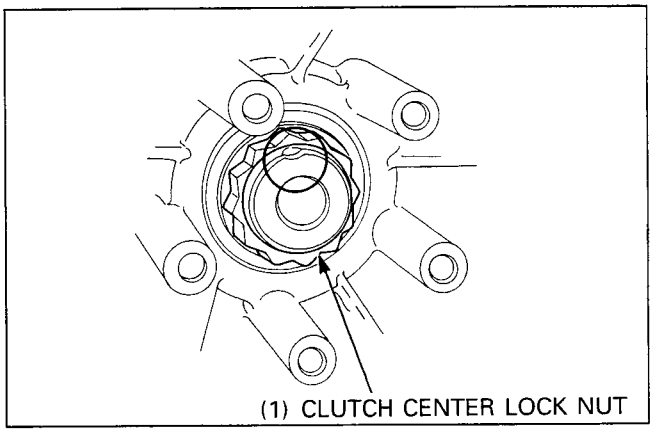

Attach the clutch center holder to the clutch center.
Remove the lock nut using the special tools.

S. TOOL

Clutch center holder	**07724-0050001**
Lock nut wrench, 30 x 32 mm	**07716-0020400**
Extension bar	**07716-0020500**

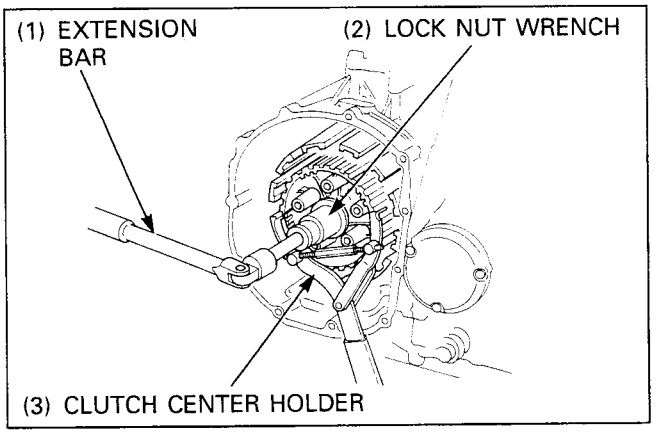

Clutch Outer Removal

Remove the lock washer and clutch center.

Pull the clutch outer guide with needle nose pliers.

Remove the needle bearing.

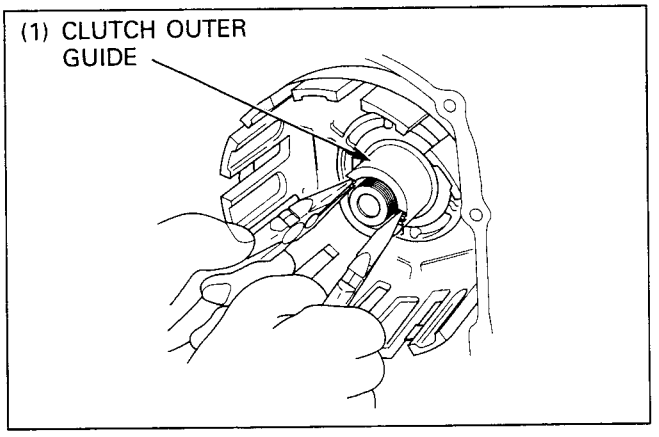

Remove the clutch outer from the mainshaft.

Remove the washer.

NOTE

- At clutch outer removal, remove the clutch outer turning the crankshaft until the primary drive gear clears the crank weight.

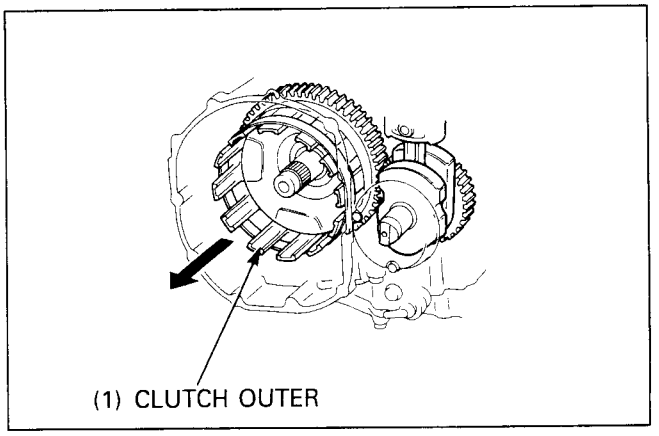

Clutch Outer Installation

Install the washer.

Install the clutch outer to the mainshaft.

Install the needle bearing.

Align the primary drive gear and crankshaft teeth with the screw driver, and install the clutch outer guide.

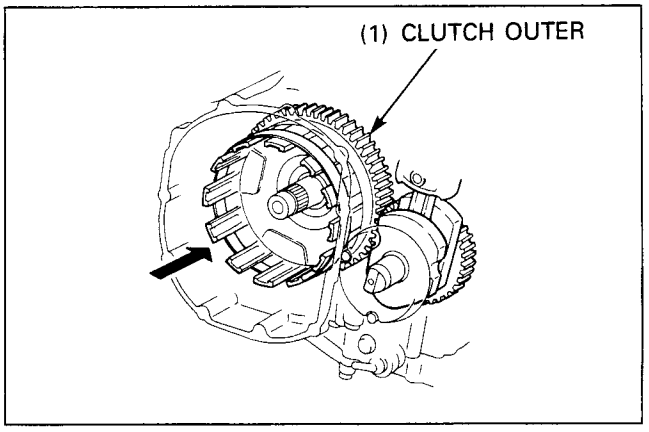

Lock Nut Installation

Install the washer, clutch center and lock washer.

Hold the clutch center with the clutch center holder.

S. TOOL

Clutch center holder **07724-0050001**

Install a new lock nut and tighten it.

NOTE

- Never re-use the removed nut.

S. TOOL

Lock nut wrench, 30 x 32 mm **07716-0020400**
Extension bar **07716-0020500**

Torque: 128 N • m (12.8 kg-m, 93 ft-lb)

Stake the lock nut into the mainshaft end groove, as shown.

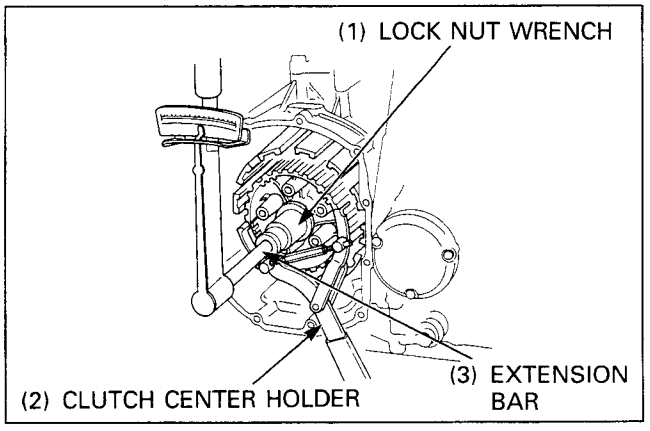

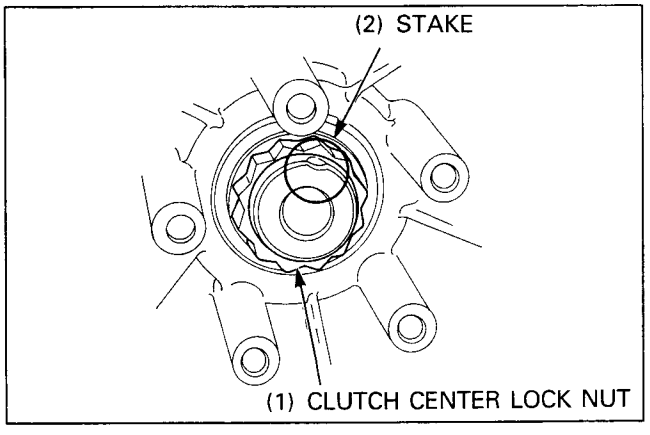

Gearshift Linkage Removal/Installation

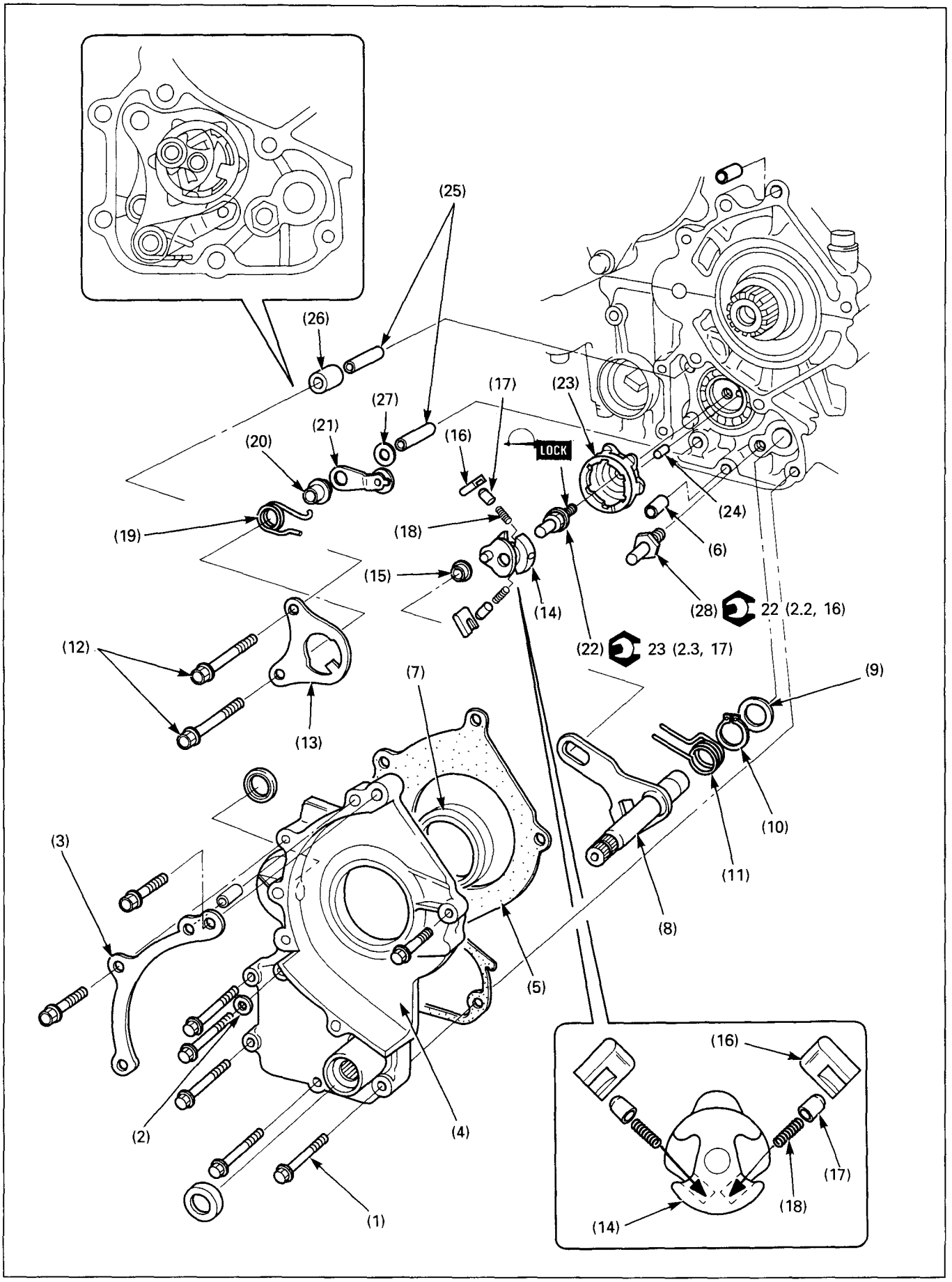

NOTE

- After installation, check the gearshift linkage can be operated properly.

Requisite Service

- Engine oil draining/refilling
- Drive sprocket removal/installation (page 7-2)
- Water pump removal/installation (page 6-3)

	Procedure	O'ty	Remarks
	Removal Order		Installation is in the reverse order of removal.
(1)	Gearshift linkage cover bolt	8	
(2)	Washer	1	
(3)	Chain guide	1	
(4)	Gearshift linkage cover	1	
(5)	Gasket	1	
(6)	Dowel pin	2	
(7)	Oil seal	2	
(8)	Gearshift spindle	1	
(9)	Washer	1	
(10)	Snap ring	1	
(11)	Return spring	1	
(12)	Guide plate bolt	2	At installation, install the dowel pins securely, then tighten the guide plate bolt.
(13)	Guide plate	1	
(14)	Shifter drum	1	
(15)	Collar	1	
(16)	Ratchet pawl	2	At installation, install the ratchet pawl to original position.
(17)	Plunger	2	
(18)	Spring	2	
(19)	Drum stopper spring	1	
(20)	Drum stopper collar	1	
(21)	Drum stopper arm	1	
(22)	Shift drum center bolt	1	
(23)	Shift drum center	1	At installation, align the drum center groove with the shift drum pin on the shift drum.
(24)	Shift drum pin	1	
(25)	Guide plate dowel pin	2	
(26)	Collar	1	
(27)	Washer	1	
(28)	Gearshift spindle return spring pin	1	

10. Crankshaft/Transmission

Service Information

- The crankcase must be separated to service the crankshaft and transmission.
- The following parts must be removed before disassembling the crankcase.
  - Oil pump (page 4-4)
  - Cylinder head/Cylinder/Piston (Section 8)
  - Clutch slave cylinder (page 9-2)
  - AC generator cover (page 14-9)
  - Starter motor (page 16-7)
  - Water pump (page 6-3)
  - Clutch (page 9-6)
  - Gearshift linkage (page 9-12)
  - Pulse generator/rotor (Section 15)
- Be careful not to damage the crankshaft main journal bearing while removing or installing the crankshaft.
- All bearing inserts are select fitted and are identified by color code. Select replacement bearings from the selection table (page 10-20).
- After installing new bearings, recheck them with plastigauge to verify clearance.
- Apply molybdenum disulfide oil to the main journals and crankpins during assembly.

Troubleshooting

Excessive Noise
- Worn connecting rod big-end bearing
- Bent connecting rod
- Worn crankshaft main bearing
- Worn transmission bearing

Hard To Shift
- Improper clutch operation
- Incorrect transmission oil weight
- Incorrect clutch adjustment
- Bent shift fork
- Bent fork shaft
- Bent fork claw
- Damaged shift drum cam grooves
- Bent shift spindle

Transmission Jumps Out Of Gear
- Worn gear dogs or slots
- Bent fork shaft
- Broken shift drum stopper
- Worn or bent shift forks
- Broken shift linkage return spring

Engine Vibration
- Excessive crankshaft runout

Balancer Removal/Installation

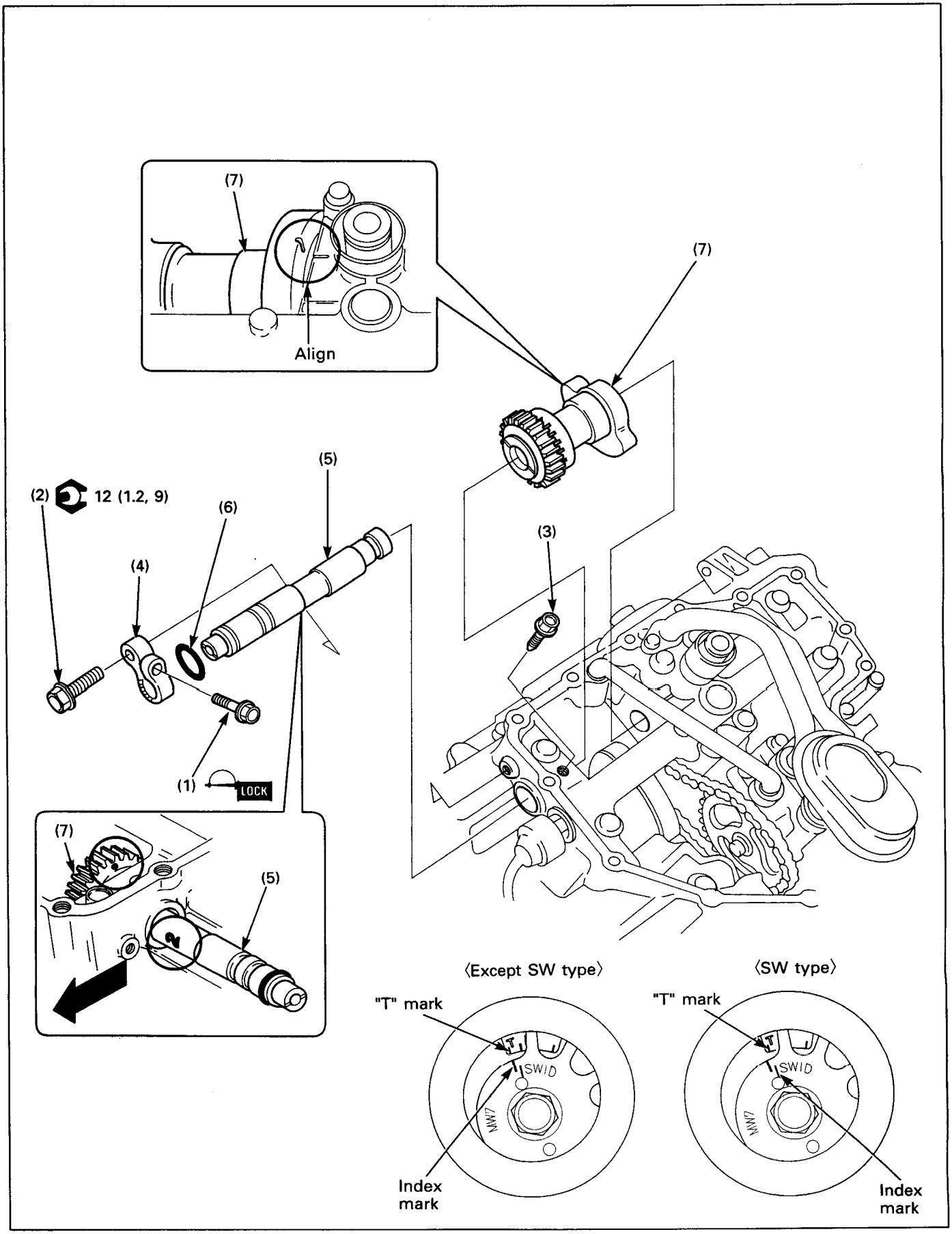

NOTE

- Replace the weight, shaft and needle bearings as a set.
- After installation, adjust the balancer backlash (page 10-4).

Requisite Service

- Oil pan removal/installation (page 4-4)

	Procedure	Q'ty	Remarks
	Removal Order		Installation is in the reverse order of removal.
(1)	Balancer shaft holder pinch bolt	1	
(2)	Balancer shaft holder bolt	1	
(3)	Balancer shaft lock bolt	1	
(4)	Balancer shaft holder	1	
(5)	Balancer shaft	1	NOTE • At installation, check for align the index mark on the weight with the punch mark on the gear (page 10-5) and install the the balancer shaft with the I.D. code number facing forward with the punch mark on the balancer gear facing to oil pan.
(6)	O-ring	1	
(7)	Balancer weight assembly	1	NOTE • The balancer assembly will only come out from one particular position. Rotate it until it comes out easily; do not force it out. • At installation,rotate the crankshaft counterclockwise and align the index mark on the pulse generator rotor with "T" mark on the crankcase. • At installation, align the index mark on the weight with index mark on the crankcase.

Backlash Adjustment

NOTE

- Adjust the backlash while the engine is cold (below 35°C/95°F) and stopped.

Loosen the pinch bolt and turn the shaft counterclockwise up to dead end and back off by one graduation.

Apply locking agent to the threads of the pinch bolt and tighten it securely.

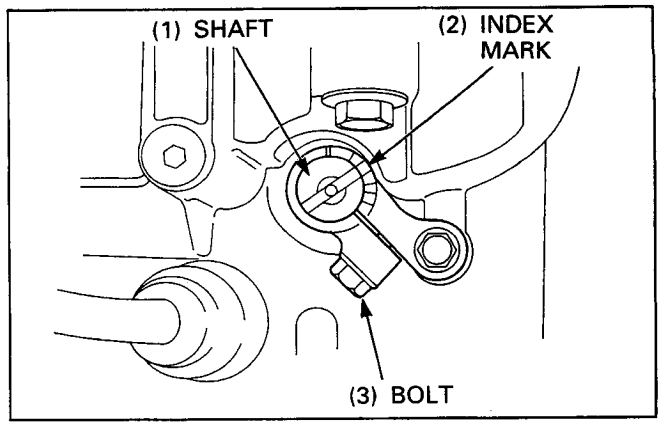

Balancer Disassembly/Assembly

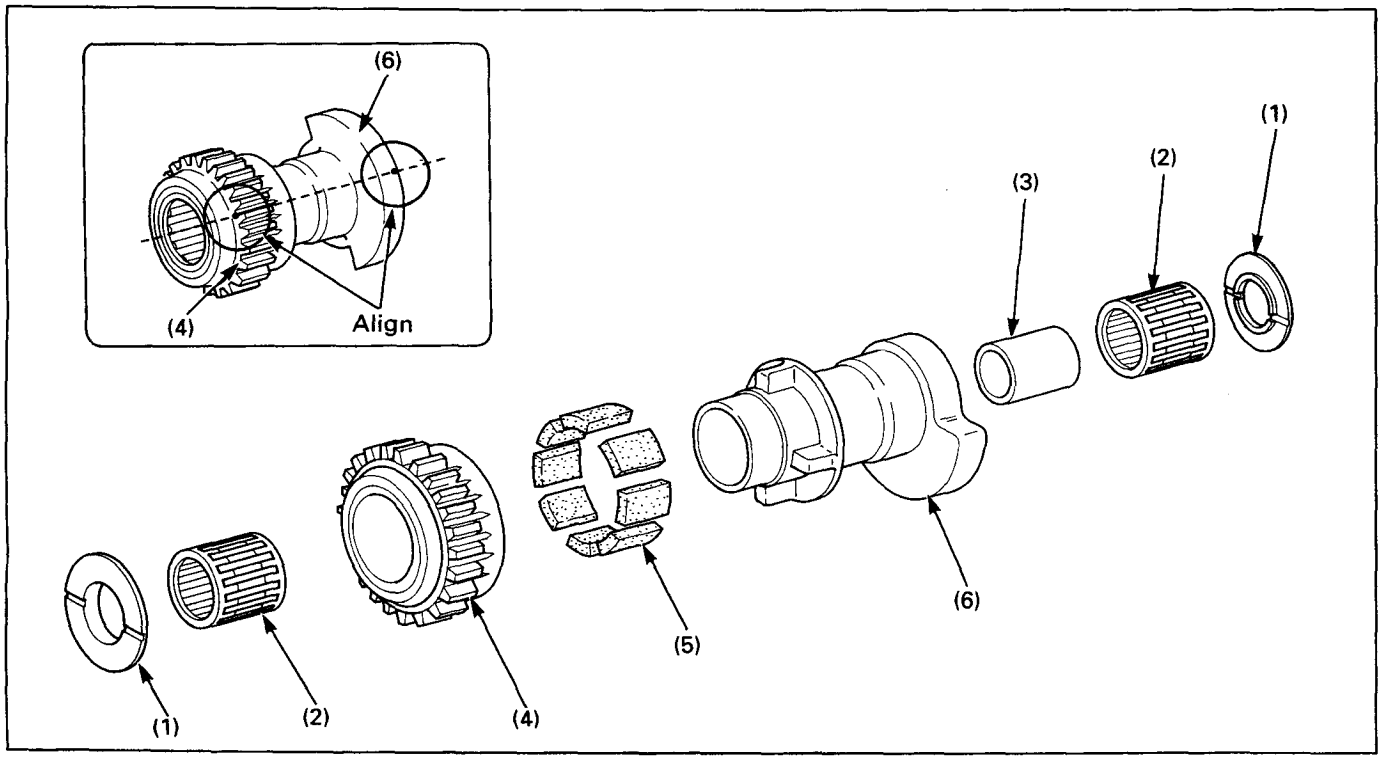

NOTE

- Replace the weight, shaft and needle bearings as a set.

Requisite Service

- Balancer removal/installation (page 10-2)

	Procedure	Q'ty	Remarks
	Disassembly Order		Assembly is in the reverse order of disassembly.
(1)	Washer	2	
(2)	Needle bearing	2	
(3)	Collar	1	
(4)	Balancer gear	1	NOTE • Assemble the balancer weight aligning the index mark on the weight with the punch mark on the gear.
(5)	Damper	8	
(6)	Weight	1	

Crankcase Separation

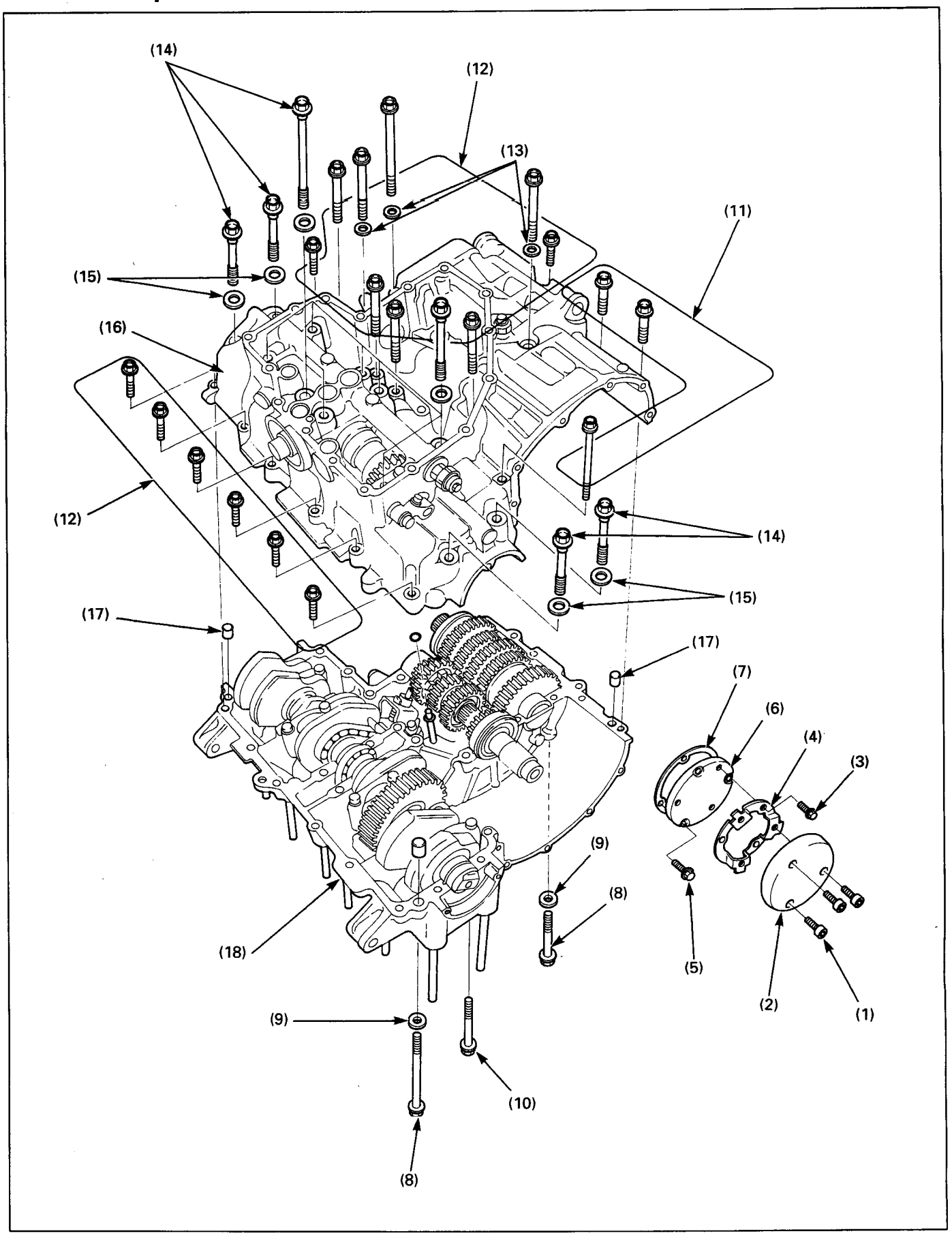

NOTE

- Refer to Service Information (page 10-1) for removal of necessary parts separating the crankcase.
- From the outside to inside, loosen the bolts in a crisscross pattern in several steps.

	Procedure	Q'ty	Remarks
	Separation Order		
(1)	Socket bolt	3	
(2)	Right crank cover	1	
(3)	Bolt	3	
(4)	Bracket	1	
(5)	Right crankcase cover bolt	3	
(6)	Right crankcase cover	1	
(7)	Gasket	1	
(8)	Upper crankcase bolt (8 mm)	2	
(9)	Sealing washer	2	
(10)	Upper crankcase bolt (10 mm)	1	
(11)	Lower crankcase bolt (6 mm)	3	
(12)	Lower crankcase bolt (8mm)	15	
(13)	Sealing washer	3	
(14)	Main journal bolt (9 mm)	12	
(15)	Sealing washer	12	
(16)	Lower crankcase	1	
(17)	Dowel pin	3	
(18)	Upper crankcase	1	

Transmission Removal/Installation

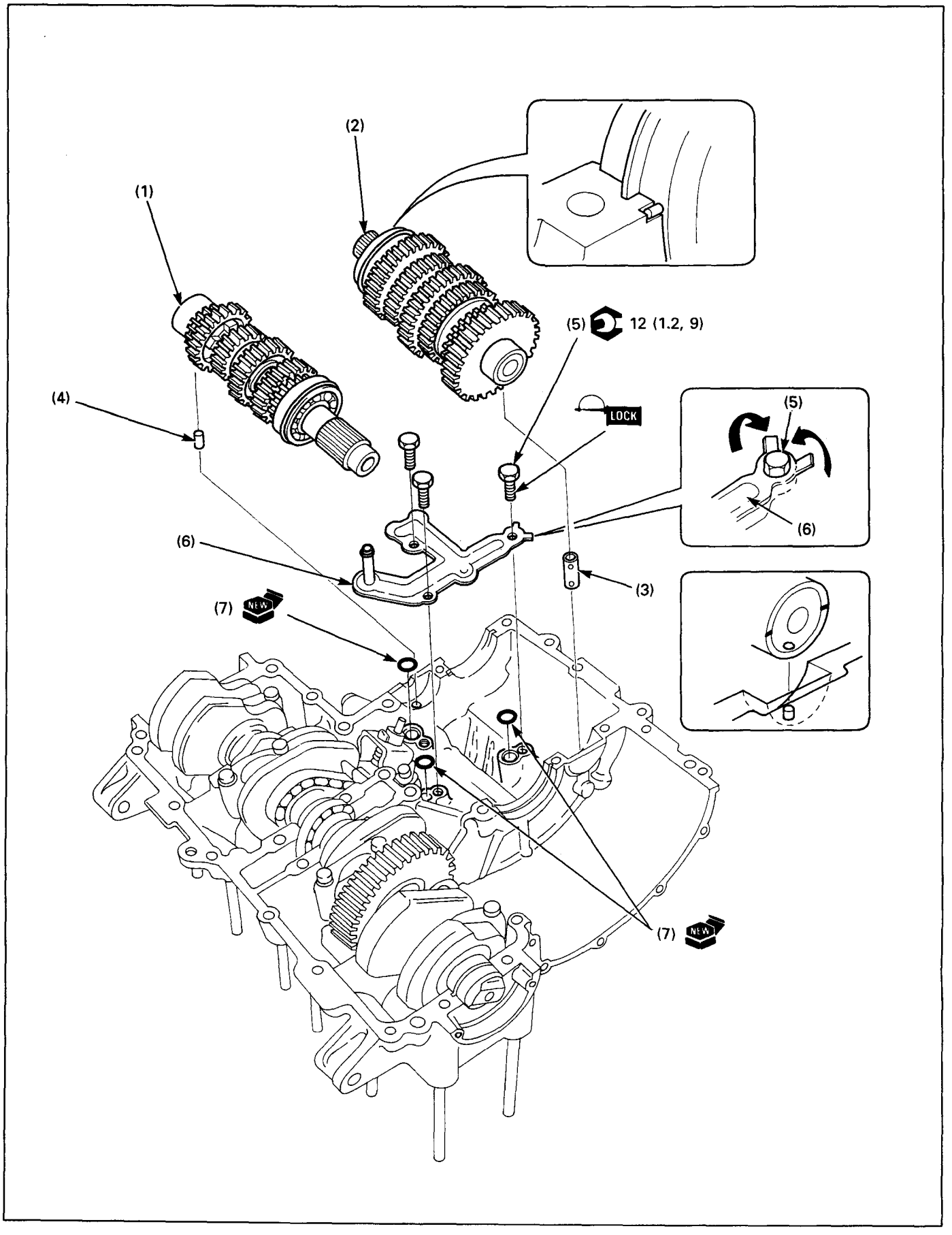

Requisite Service

- Crankcase separation (page 10-6)
- Crankcase combination (page 10-22)

	Procedure	Q'ty	Remarks
	Removal Order		Installation is in the reverse order of removal.
(1)	Mainshaft assembly	1	• At installation, align the holes in the needle bearing case with the pins on the crankcase. • At installation, align the goove on the needle bearing case with the crankcase mating surface.
(2)	Countersharft assembly	1	At installation, align the holes in the needle bearing case with the orifice and groove on the crankcase.
(3)	Oil orifice	1	
(4)	Pin	1	
(5)	Oil pass pipe plate bolt	3	NOTE • Unstake the tab for enough to enable bolt removal. The tabs can break easily. Install a new oil pass pipe plate on assembly.
(6)	Oil pass pipe plate	1	
(7)	O-ring	4	

Mainshaft Disassembly/Assembly

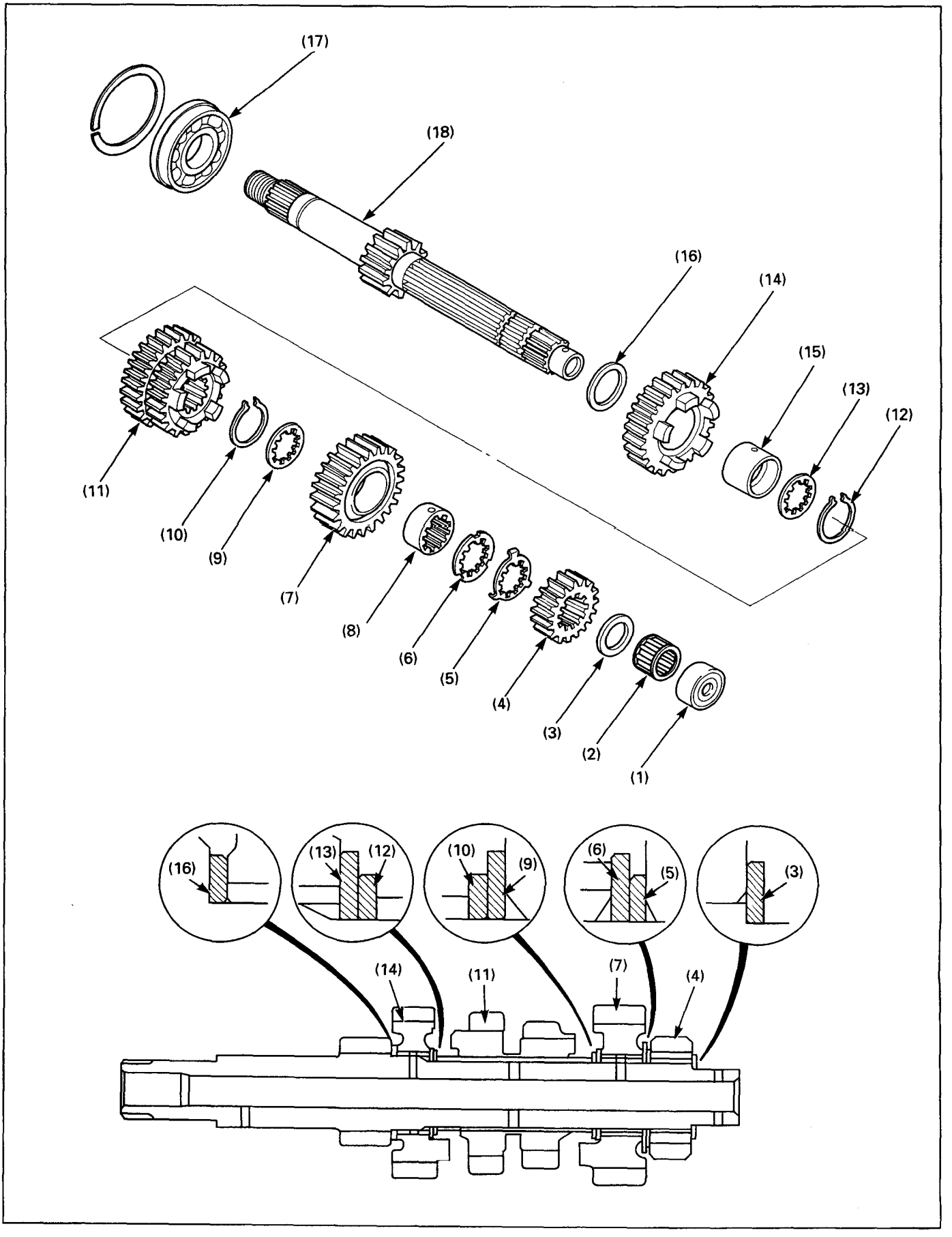

NOTE

- Apply molybdenum oil to the shifter gear grooves.
- Always install the thrust washers and snap rings with the chamfered (rolled) edge facing away from the thrust load.
- After installing a snap ring, slightly open the ring and rotate it in its groove to be sure it is fully seated.
- Do not use worn snap rings which could easily spin in the groove. They may be too loose to properly seat in the groove.
- Align the gap in the snap ring with the groove of spline.

Requisite Service

- Transmission removal/installation (page 10-8)

	Procedure	Q'ty	Remarks
	Mainshaft Disassembly Order		Assembly is in the reverse order of disassembly.
(1)	Needle bearing outer case	1	
(2)	Needle bearing	1	
(3)	Washer	1	
(4)	M2 gear (15T)	1	
(5)	Lock plate	1	
(6)	Lock washer	1	At installation, align the tabs on the plate with cut out of the washer.
(7)	M6 gear (22T)	1	
(8)	M6 gear spline bushing	1	
(9)	Spline washer	1	
(10)	Snap ring	1	
(11)	M3/M4 gear (17/19T)	1	
(12)	Snap ring	1	
(13)	Spline washer	1	
(14)	M5 gear (23T)	1	
(15)	M5 gear bushing	1	
(16)	Washer	1	
(17)	Mainshaft bearing	1	At installation, install it with bearing stopper on the outside.
(18)	Mainshaft/M1 gear	1	

Countershaft Disassembly/Assembly

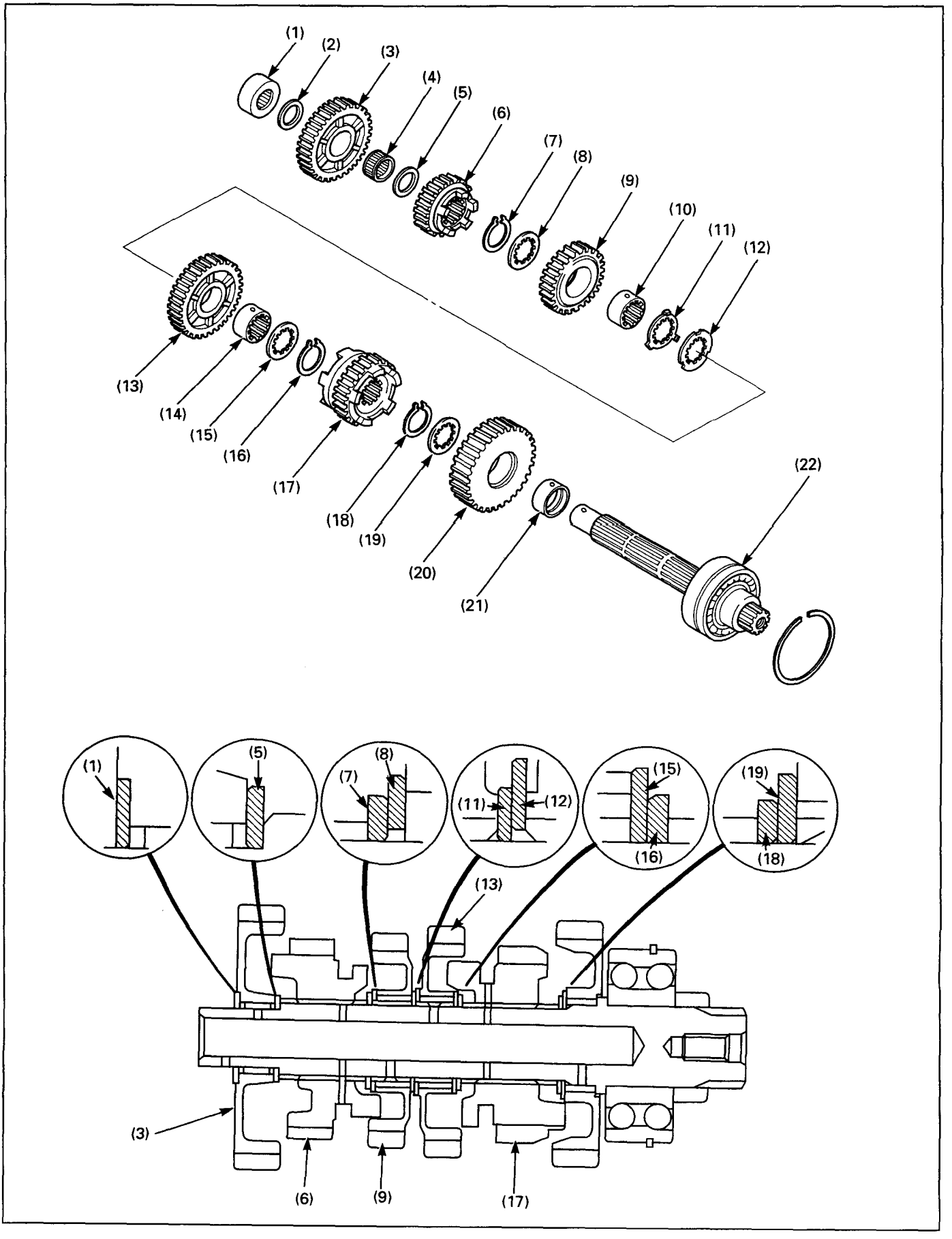

NOTE

- Apply molybdenum oil to the shifter gear grooves.
- Always install the thrust washers and snap rings with the chamfered(rolled) edge facing away from the thrust load.
- After installing a snap ring, slightly open the ring and rotate it in its groove to be sure it is fully seated.
- Do not use worn snap rings which could easily spin in the groove. They may be too loose to properly seat in the groove.
- Align the gap in the snap ring with the groove of spline.

Requisite Service

- Transmission removal/installation (page 10-8)

	Procedure	Q'ty	Remarks
	Countershaft Disassembly Order		Assembly is in the reverse order of disassembly.
(1)	Needle bearing	1	
(2)	Washer	1	
(3)	C1 gear (33T)	1	
(4)	Needle bearing	1	
(5)	Washer	1	
(6)	C6 gear (23T)	1	
(7)	Snap ring	1	
(8)	Spline washer	1	
(9)	C4 gear (26T)	1	
(10)	C4 gear spline bushing	1	
(11)	Lock plate	1	At installation, align the tabs on the plate with the cut outs of the washer.
(12)	Lock washer	1	
(13)	C3 gear (28T)	1	
(14)	C3 gear spline bushing	1	
(15)	Spline washer	1	
(16)	Snap ring	1	
(17)	C5 gear (27T)	1	
(18)	Snap ring	1	
(19)	Spline washer	1	
(20)	C2 gear (31T)	1	
(21)	C2 gear bushing	1	
(22)	Countershaft	1	

Shift Drum Removal/Installation

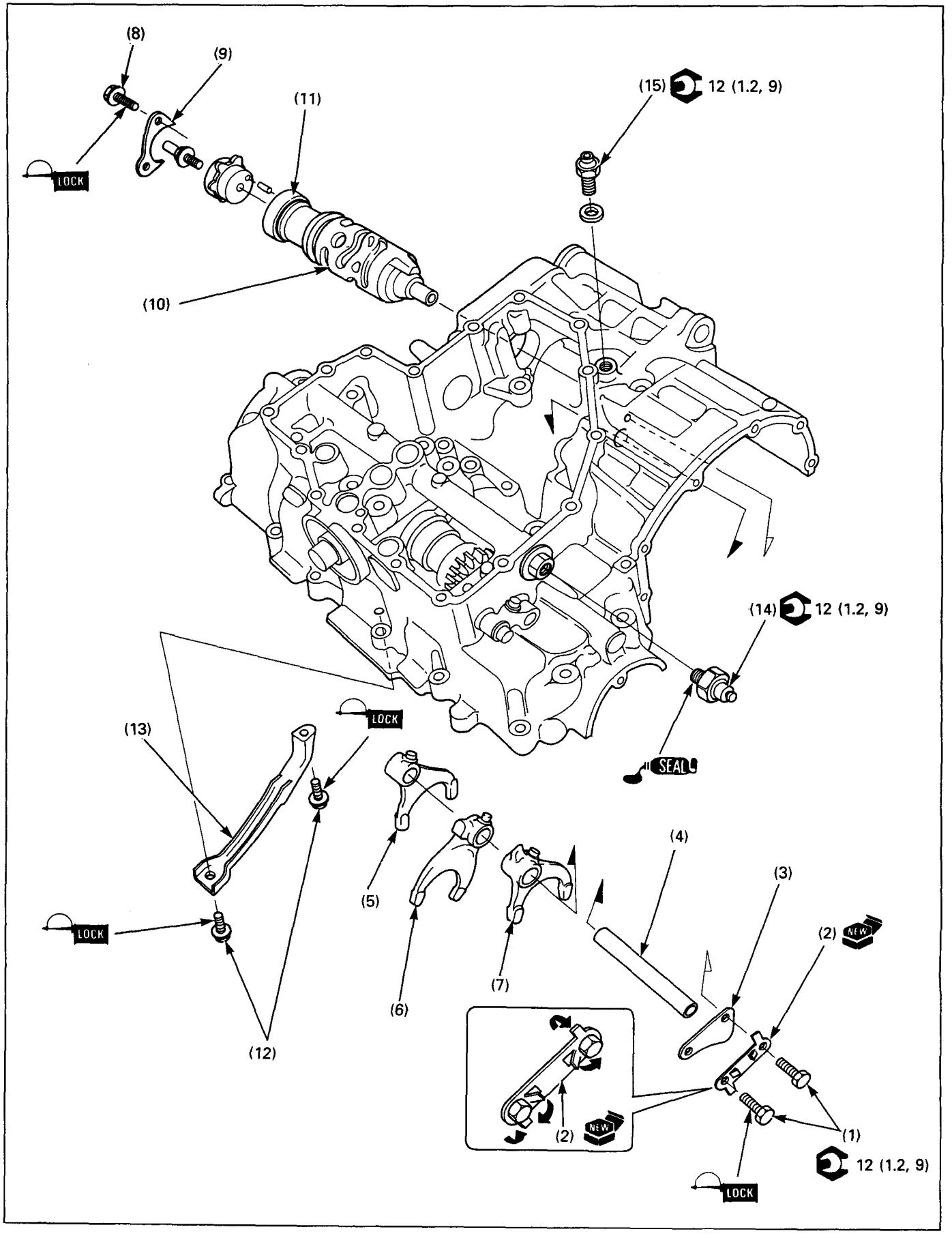

Requisite Service

- Crankcase separation (page 10-6)
- Crankcase combination (page 10-22)

	Procedure	Q'ty	Remarks
	Removal Order		Installation is in the reverse order of removal.
(1)	Bolt	2	NOTE • At installation, clean and apply a locking agent to the threads. • Remove after bending down the lock plate tab. When installing bend the new lock plate tabs against the bolt heads.
(2)	Lock plate	1	
(3)	Stopper plate	1	
(4)	Shift fork shaft	1	
(5)	Left shift fork	1	
(6)	Center shift fork	1	
(7)	Right shift fork	1	
(8)	Bolt	2	NOTE • At installation, clean and apply a locking agent to the threads.
(9)	Bearing stopper plate	1	
(10)	Shift drum	1	
(11)	Shift drum bearing	1	
(12)	Alternator drive chain slider bolt	2	
(13)	Alternator drive chain slider	1	
(14)	Oil pressure switch	1	
(15)	Neutral switch	1	

Alternator Shaft Removal/Installation

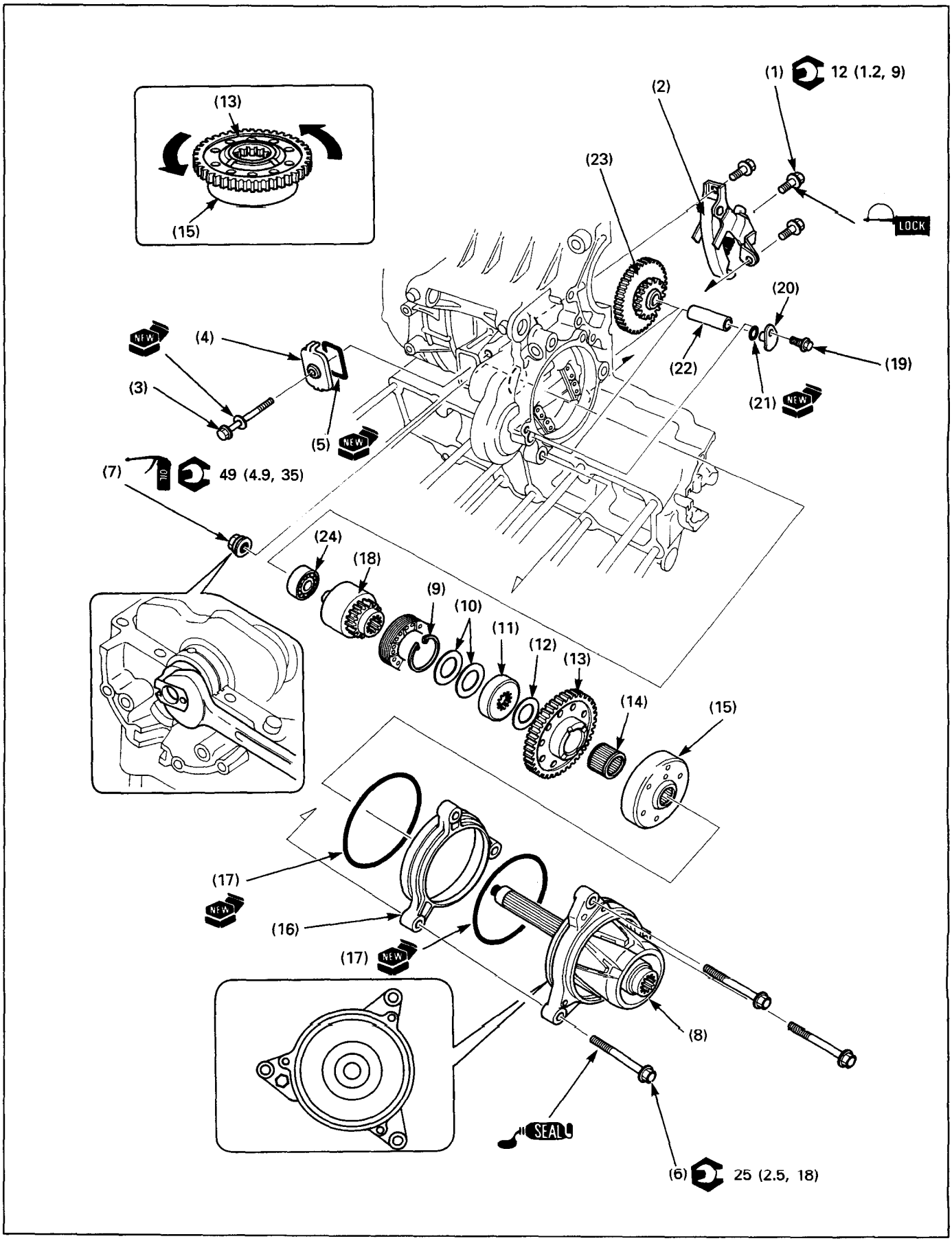

Requisite Service

- Crankcase separation (page 10-6)
- Transmission removal (page 10-8)

	Procedure	Q'ty	Remarks
	Removal Order		Installation is in the reverse order of removal.
(1)	Tensioner bolt	3	
(2)	Chain tensioner	1	Installation (See below)
(3)	Alternator shaft cover bolt	1	
(4)	Alternator shaft cover	1	
(5)	O-ring	1	
(6)	Alternator base bolt	3	
(7)	Alternator shaft nut	1	Hold the crankshaft as shown.
(8)	Alternator shaft assembly	1	
(9)	Snap ring	1	
(10)	Collar spring	2	
(11)	Shaft collar	1	
(12)	Washer	1	
(13)	Starter driven gear	1	Assemble the starter driven gear in the starter clutch by turning the starter driven gear counterclockwise.
(14)	Needle bearing	1	
(15)	Starter clutch outer	1	
(16)	Alternator base	1	
(17)	O-ring	2	
(18)	Damper	1	
(19)	Setting plate bolt	1	
(20)	Shaft setting plate	1	
(21)	O-ring	1	
(22)	Reduction gear shaft	1	
(23)	Starter reduction gear	1	
(24)	Bearing	1	At installation, install the sealed side facing to nut side.

Chain Tensioner Installation

Push the notch on the chain tensioner with a screwdriver and push the tensioner rod until hole on the rod appears.
Insert a pin or equivalent into the hole to lock the tensioner.
Install the tensioner to the crankcase.
Apply a locking agent to the threads of the bolts.
Tighten the bolts to the specified torque.

Torque: 12 N • m (1.2 kg-m, 9ft-lb)

Remove the pin from the hole of the tensioner rod.

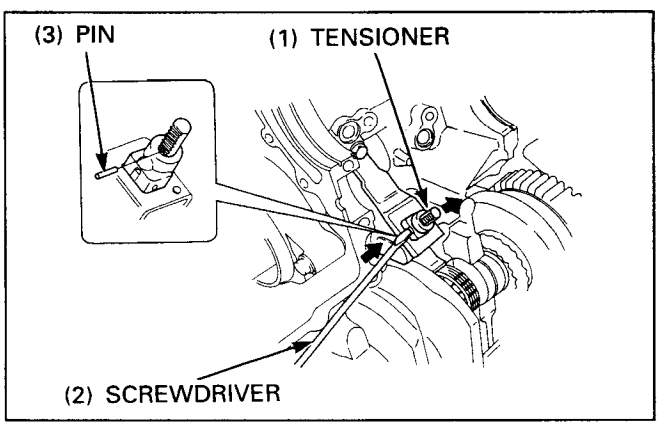

Crankshaft Removal/Installation

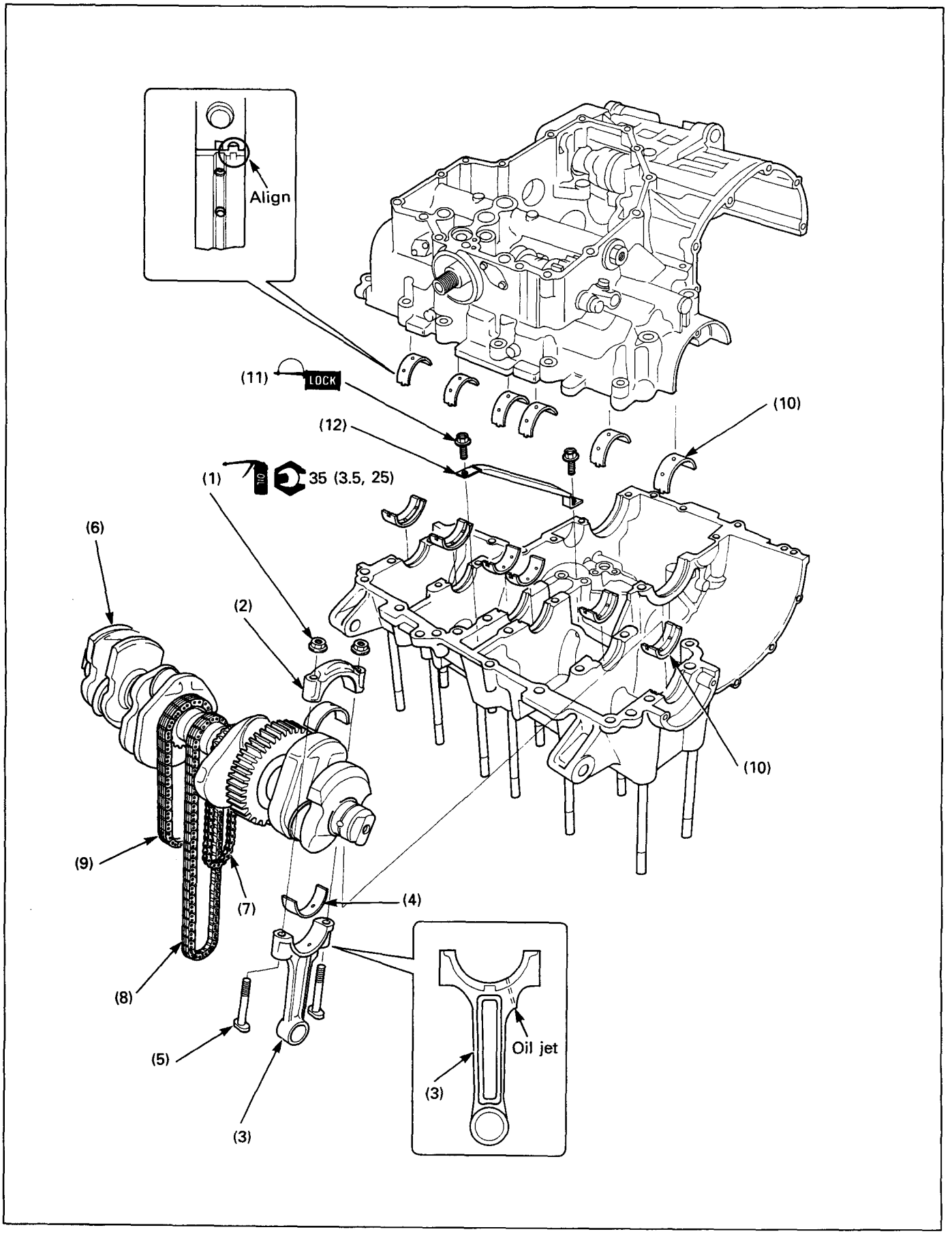

NOTE

- Mark all parts during disassembly so they can be replaced in their original locations.
- All bearing inserts are select fitted and are identified by color code. Select replacement bearings from the code table (page 10-20). After installing new bearings, recheck them with plastigauge to verify the clearance.
- Apply molybdenum disulfide oil to the connecting rod/main journal bearings, main journal and crankpin.

Requisite Service

- Transmission removal/installation (page 10-8)
- Alternator shaft removal/installation (page 10-16)

	Procedure	Q'ty	Remarks
	Removal Order		
(1)	Connecting rod bearing cap nut	8	
(2)	Connecting rod bearing cap	4	
(3)	Connecting rod	4	
(4)	Connecting rod bearing	8	Replacement (page 10-21)
(5)	Connecting rod bolt	8	Do not remove them unless necessary.
(6)	Crankshaft	1	
(7)	Oil pump drive chain	1	
(8)	Cam chain	1	
(9)	Alternator drive chain	1	
(10)	Main journal bearing	12	Replacement (page 10-20)
(11)	Slider bolt	2	
(12)	Chain slider	1	
	Installation Order		
(12)	Chain slider	1	
(11)	Slider bolt	2	
(10)	Main journal bearing	12	NOTE • Wipe all oil from the bearing seating area. • Align the tab on the bearing with the groove on the crankcase.
(9)	Alternator drive chain	1	
(8)	Can chain	1	
(7)	Oil pump drive chain	1	
(6)	Crankshaft	1	
(5)	Connecting rod bolt	8	
(4)	Connecting rod bearing	8	NOTE • Wipe all oil from the bearing seating area. • Align the tab on the bearing with the goove on the crankcase. • Align the hole on the bearing with the hole on the connecting rod.
(3)	Connecting rod	4	NOTE • Install the connecting rod with it oil hole side facing the intake side.
(2)	Connecting rod bearing cap	4	
(1)	Connecting rod bearing cap nut	8	

Crankshaft Bearing Replacement

Main Journal Bearing Selection

Record the crankcase I.D. letters from the pad on the left side of the crankcase.

NOTE

- Letters (A, B or C) on the upper crankcase are the codes for the main journal I.D.s from the left.

Record the corresponding main journal O.D. code numbers from the crank weight.

NOTE

- Numbers (1 or 2) on the crank weight are the codes for the main journal O.D.s from the left.

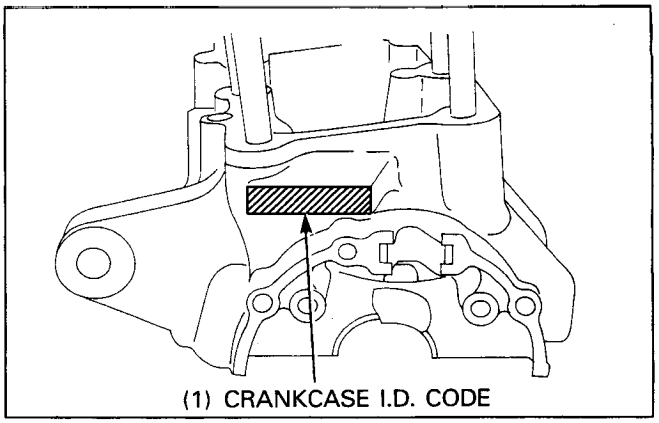

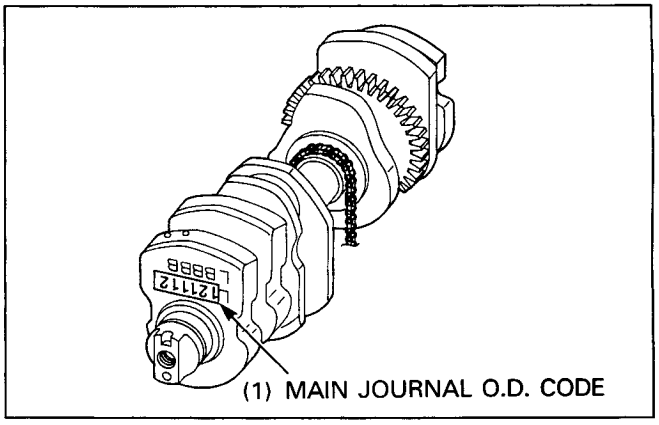

Cross reference the case and journal codes to determine the replacement bearing color code.

Main Journal Bearing Selection Table

Crankshaft O.D. Code \ Crankcase I.D Code		A	B	C
		39.000-39.007 (1.5354-1.5357)	39.008-39.015 (1.5357-1.5360)	39.016-39.024 (1.5360-1.5363)
1	35.992-36.000 (1.4170-1.4173)	Pink	Yellow	Green
2	35.984-35.991 (1.4166-1.4169)	Yellow	Green	Brown

Bearing thickness:
Blown: 1.508-1.512mm
(0.0593-0.0595in)
Green: 1.504-1.507mm
(0.0592-0.0593in)
Yellow: 1.500-1.503mm
(0.0590-0.0591in)
Pink: 1.496-1.499mm
(0.0589-0.0590in)

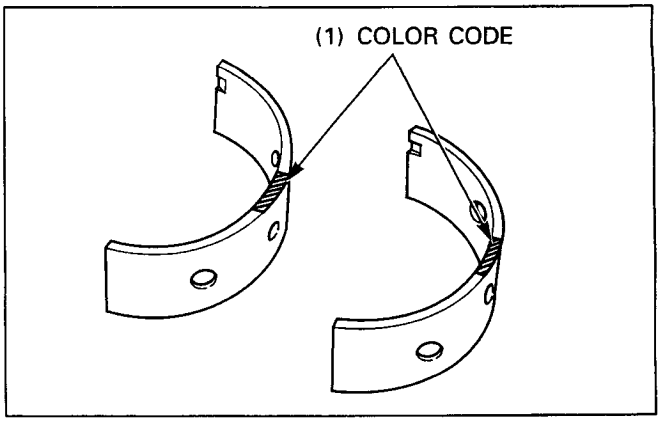

Connecting Rod Bearing Selection

Inspect the connecting rod bearing and crankpin oil clearance (See section 14 of the Common Service Manual).

Record the connecting rod I.D. code number (1 or 2) or measure the I.D. with the bearing cap installed without bearing insert.

If you replace the crankshaft, record corresponding crankpin O.D. code number (A or B).

Reuse crankshaft, measure the crankpin O.D. with the micrometer.

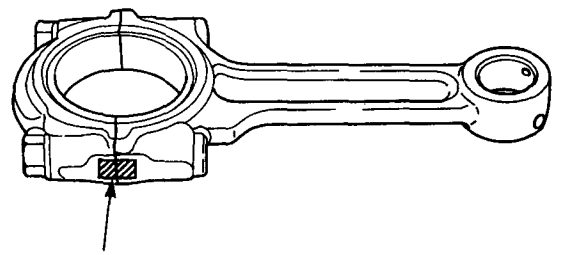

NOTE

- Numbers (A or B) on the crank weight are the codes for the crank pin O.D.s. from the left.

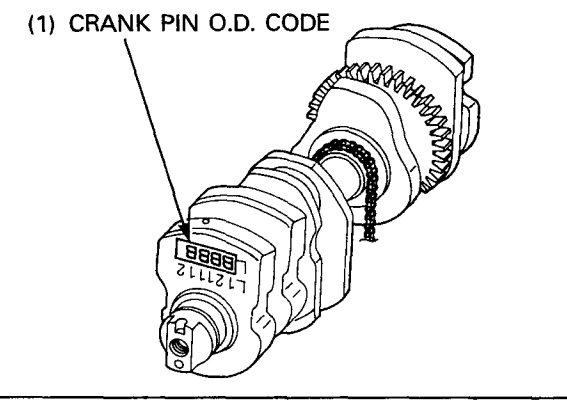

Cross-reference the crankpin and rod codes to determine the replacement bearing color.

Connecting Rod Bearing Selection Table:

Connecting rod I.D. code \ Crankpin O.D. code		A	B
		39.955-40.003 (1.5730-1.5749)	39.987-39.994 (1.5742-1.5745)
1	43.000-43.007 (1.6929-1.6931)	Yellow	Green
2	43.008-43.016 (1.6932-1.6935)	Green	Brown

Bearing thickness:
Brown: 1.492-1.496mm (0.0587-0.0588in)
Green: 1.488-1.491mm (0.0585-0.0587in)
Yellow: 1.484-1.487mm (0.0584-0.0585in)

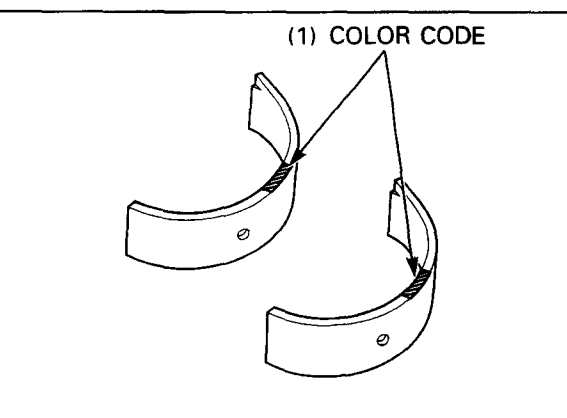

Crankcase Combination

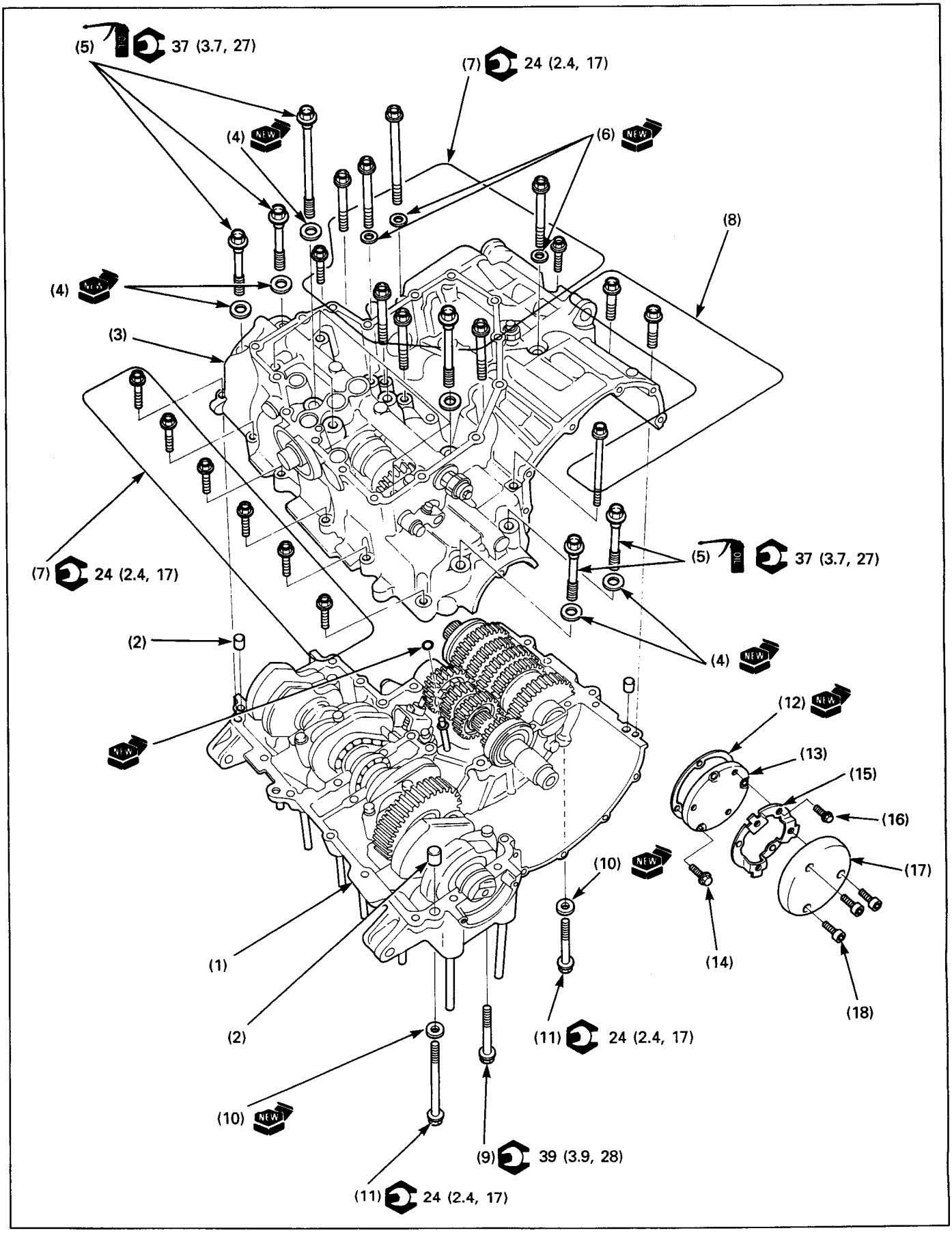

NOTE

- Refer to page 10-24 for crankcase sealant area and detail of the bolt location.
- Install the sealing washers to the bolts indicated "▼" marks on the crankcase.
- From the inside to outside, tighten the bolts in a crisscross pattern in several steps.

Requisite Service

- Crankcase separation (page 10-6)

	Procedure	Q'ty	Remarks
	Combination Order		
(1)	Upper crankcase	1	**CAUTION** • **Do not apply sealant around oil passage area and main bearing journal area.** Refer to page 10-24 for detail for apply area.
(2)	Dowel pin	3	
(3)	Lower crankcase	1	
(4)	Sealing washer	12	Tightening order (page 10-24)
(5)	Main journal bolt (9mm)	12	
(6)	Sealing washer	3	
(7)	Lower crankcase bolt (8mm)	15	
(8)	Lower crankcase bolt (6mm)	3	
(9)	Upper crankcase bolt (10mm)	1	
(10)	Sealing washer	2	
(11)	Upper crankcase bolt (8mm)	2	
(12)	Gasket	1	
(13)	Right crankcase cover	1	
(14)	Right crankcase cover bolt	3	
(15)	Bracket	1	
(16)	Bolt	3	
(17)	Right crank cover	1	
(18)	Socket bolt	3	

Liquid Sealant Apply Area

Apply a light but through coating of sealant to the upper crankcase mating surface except to the main bearing journal bolt areas and the oil passage area as shown.

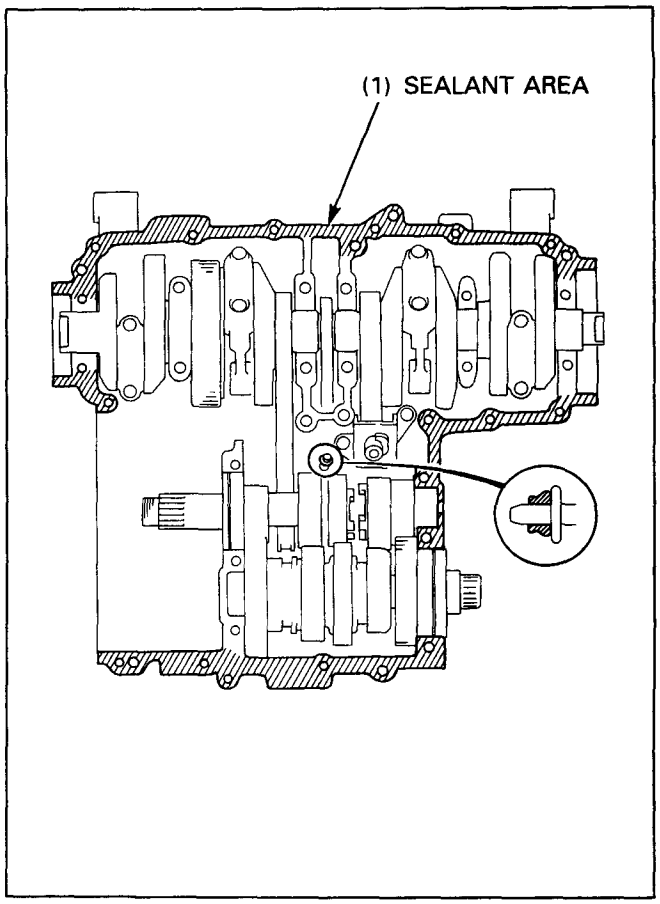

Crankcase Bolt Location

Clean the crankcase bolts thoroughly with solvent and blow dry.

Apply clean engine oil to the crankcase bolt threads and seating surface and install them.

NOTE

- The sealing washer locations are indicated on the upper crankcase using the "▼" mark.

Loosely install the all lower crankcase bolt.
Make sure the upper and lower crankcase are seated securely.

From inside to outside, tighten the main journal bolts in a crisscross pattern in 2 or 3 steps.

Torque: 37 N • m (3.7 kg-m, 27 ft-lb)

Tighten the 8mm bolt, and then tighten the 6mm bolt securely.

Torque: 8mm bolt: 24 N • m (2.4 kg-m, 17 ft-lb)

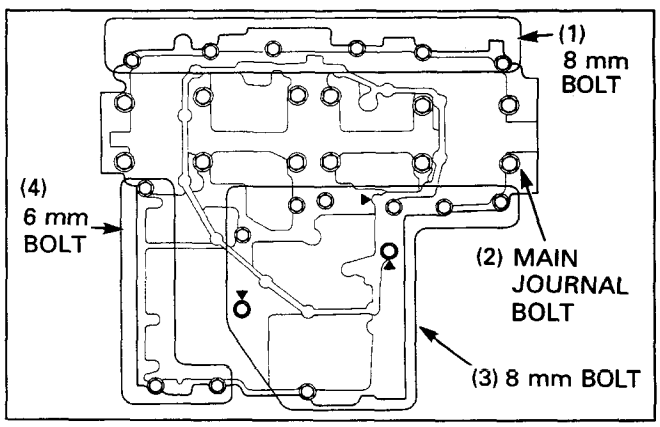

Install the upper crankcase bolts and the sealing washers.

NOTE

- The sealing washer locations are indicated on the upper crankcase using the "▼" mark.

Torque: 10mm bolt: 39 N • m (3.9 kg-m, 28 ft-lb)
8mm bolt: 24 N • m (2.4 kg-m, 17 ft-lb)

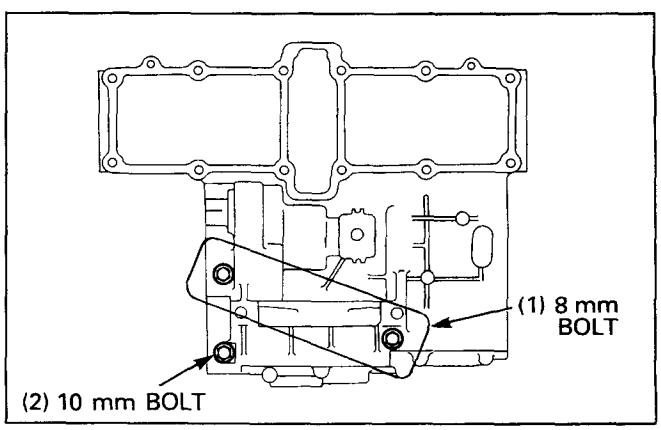

11. Front Wheel/Suspension/Steering

Service Information

⚠ WARNING

- **A contaminated brake disc or pad reduces stopping power. Discard contaminated pads and clean a contaminated disc with a high quality brake degreasing agent.**

- When servicing the front wheel, support the motorcycle securely with a jack or other support under the engine.
- Refer to the section 13 for brake system information.
- Use only tires marked "TUBELESS" and tubeless valves on rims marked "TUBELESS TIRE APPLICABLE".

Troubleshooting

Hard Steering
- Faulty steering head bearings
- Damaged steering head bearings
- Insufficient tire pressure
- Steering head bearing adjustment nut too tight

Steers To One Side Or Does Not Track Straight
- Unevenly adjusted right and left forks
- Bent fork
- Bent axle
- Wheel installed incorrectly
- Faulty steering head bearings
- Bent frame
- Worn wheel bearing
- Worn swingarm pivot components

Front Wheel Wobbling
- Bent rim
- Worn front wheel bearings
- Faulty tire
- Unbalanced tire and wheel

Wheel Turns Hard
- Faulty wheel bearing
- Bent front axle
- Brake drag

Soft Suspension
- Insufficient fluid in fork
- Weak fork springs
- Low tire pressure

Hard Suspension
- Incorrect fluid weight
- Bent fork tubes
- Clogged fork fluid passage
- High tire pressure

Front Suspension Noisy
- Insufficient fluid in fork
- Loose fork fasteners

Right Handlebar Removal/Installation

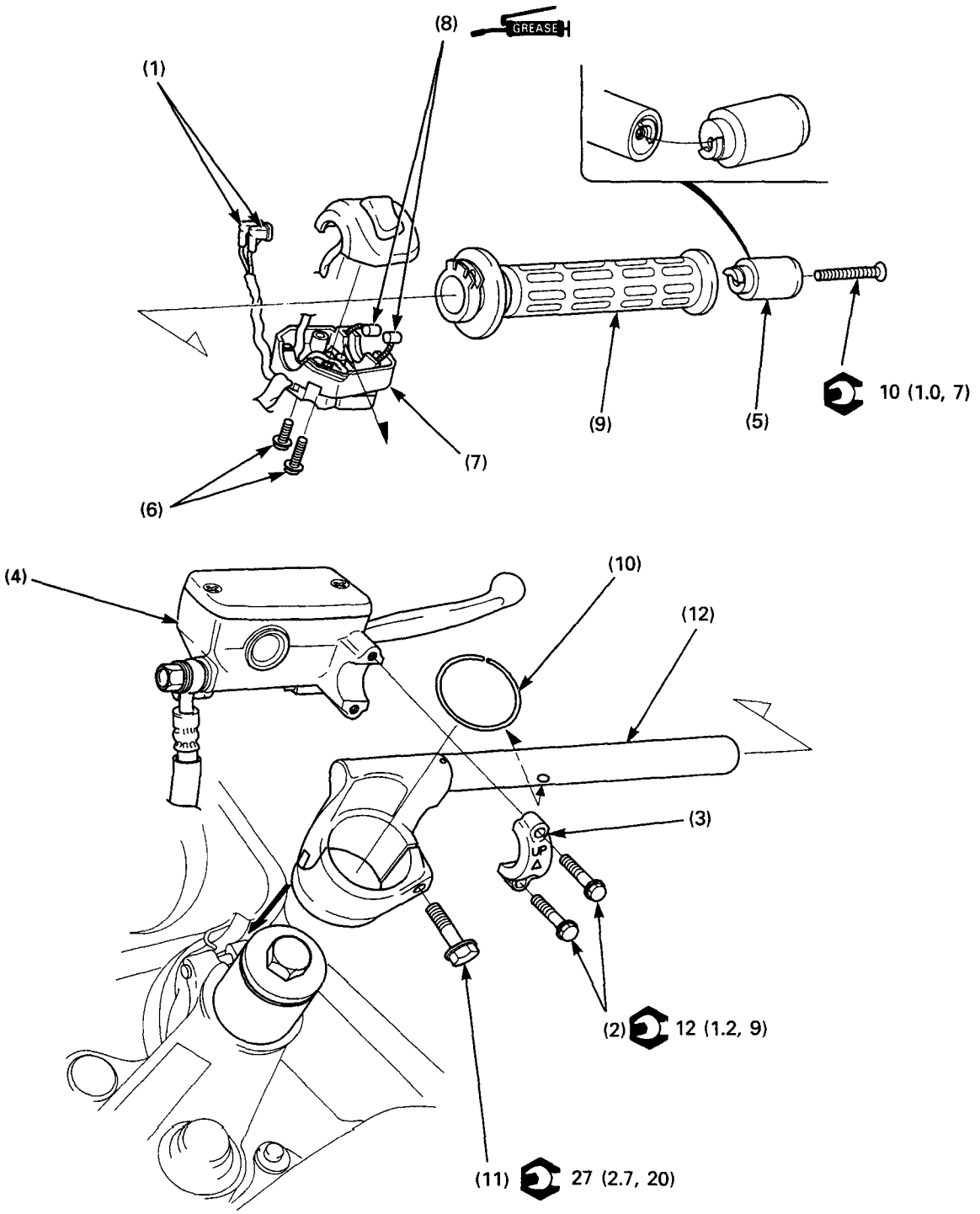

⚠ WARNING

- **Contaminants in the system may cause a reduction or loss of braking ability.**

CAUTION

- **Spilling brake fluid will damage painted, plastic, or rubber parts.**

NOTE

- Using wires, hang the front brake master cylinder at least as high as the position it was originally installed at to prevent air from getting into the master cylinder. Do not twist the brake hose.
- Route the cables and wire harnesses properly.

Requisite Service

- Throttle grip free play adjustment (Section 2 of the Common Service Manual)

	Procedure	Q'ty	Remarks
	Removal Order		Installation is in the reverse order of removal.
(1)	Brake switch connector	2	
(2)	Master cylinder holder bolt	2	At installation, tighten the upper bolt first.
(3)	Master cylinder holder	1	• At installation, align the mating surface of the master cylinder and holder with the punch mark on the handlebar. • Install the holder with its "UP" mark facing up.
(4)	Master cylinder assembly	1	
(5)	Handlebar weight	1	
(6)	Right handle switch screw	2	
(7)	Right handle switch housing	1	At installation, align the locating pin the engine stop switch with the hole on the handlebar.
(8)	Throttle cable	2	
(9)	Throttle pipe	1	
(10)	Stop ring	1	
(11)	Right handlebar pinch flange bolt	1	
(12)	Right handlebar	1	At installation, align the stopper on the handlebar with the groove in the top bridge.

Left Handlebar Removal/Installation

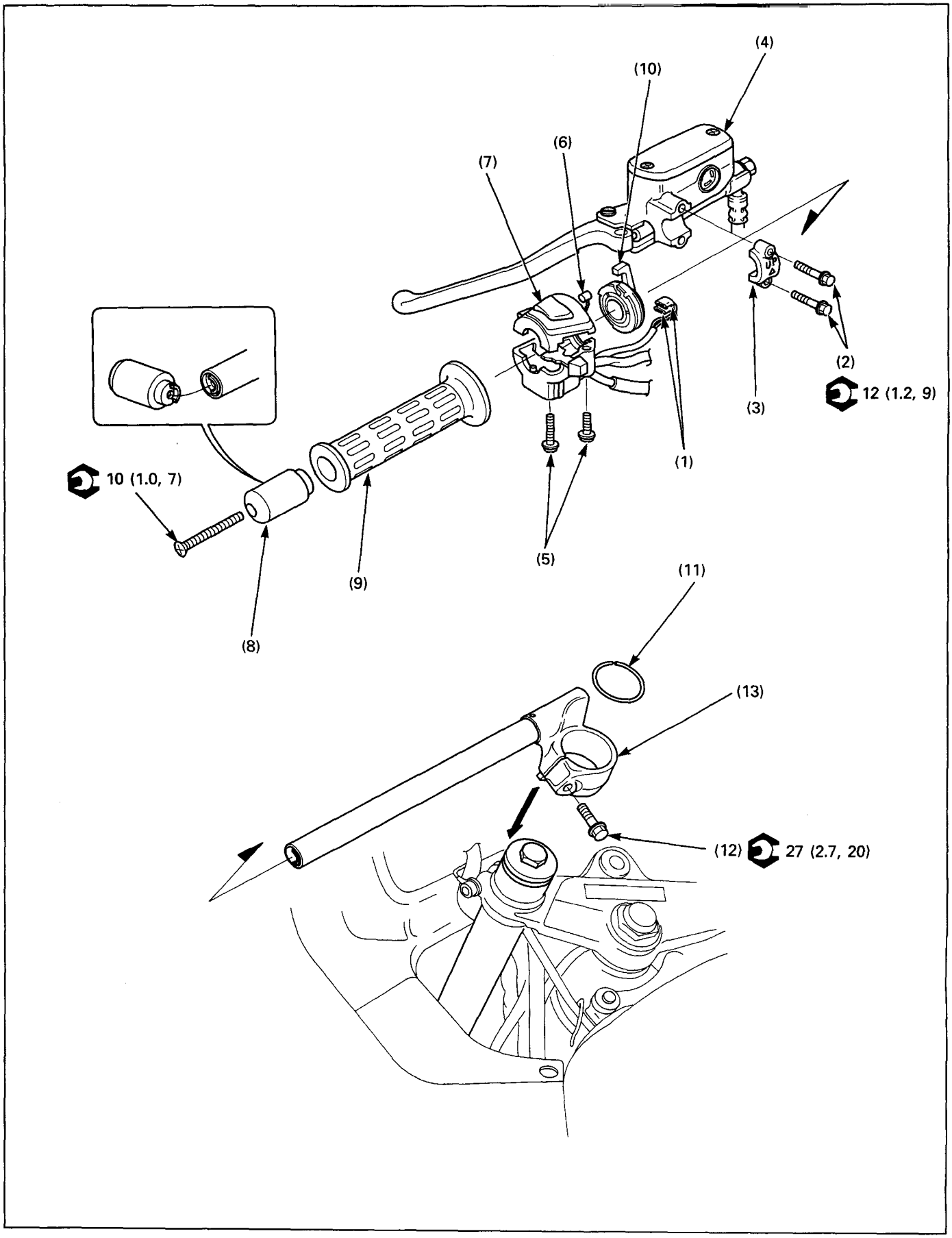

CAUTION

- **Spilling drake fluid will damage painted, plastic, or rubber parts.**

NOTE

- Using wires, hang the clutch master cylinder at lest as high as the position it was originally installed at to prevent air from getting into the master cylinder. Do not twist the clutch hose.
- Route the cables and wire harnesses properly.

	Procedure	Q'ty	Remarks
	Removal Order		Installation is in the reverse order of removal.
(1)	Clutch switch connector	2	
(2)	Clutch master cylinder holder bolt	2	At installation, tighten the upper bolt first.
(3)	Clutch master cylinder holder	1	• At installation, align the mating surface of the master cylinder and holder with the punch mark on the handlebar. • Install the holder with its "UP" mark facing up.
(4)	Clutch master cylinder assembly	1	
(5)	Left handlebar switch screw	2	At installation, tighten the front screw first, then the rear screw.
(6)	Choke cable	1	
(7)	Left handlebar switch housing	1	At installation, align the locating pin in the throttle hous ing with the hole on the handlebar.
(8)	Handlebar weight	1	
(9)	Handle grip	1	
(10)	Choke lever	1	
(11)	Stop ring	1	
(12)	Left handlebar pinch flange bolt	1	
(13)	Left handlebar	1	At installation, align the stopper on the handlebar with the groove in the top bridge.

Front Wheel Removal/Installation

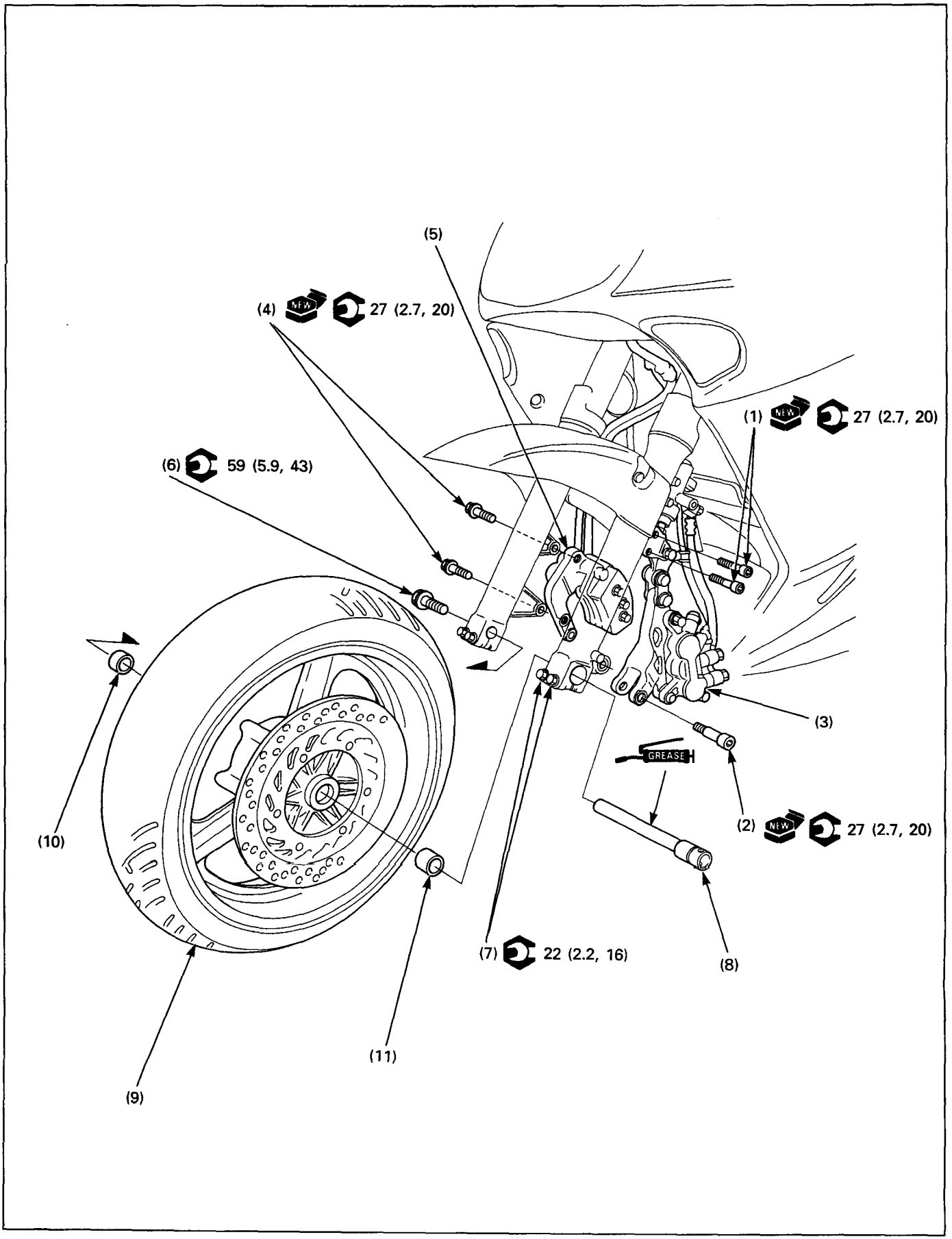

⚠ WARNING

- **A contaminated brake disc or pad reduces stopping power. Discard contaminated pads and clean a contaminated disc with a high quality degreasing agent.**

CAUTION

- **Do not jack up the motorcycle using the oil filter.**
- **Do not suspend the brake caliper using the brake hose. Do not twist the brake hose more than necessary.**
- **Do not twist the secondary master cylinder push rod more than necessary.**

NOTE

- When servicing the front wheel, place a jack or other adjustable support under engine .
- Do not operate the brake lever or pedal after the wheel is removed.
- Apply thin layer of grease to the front axle surface.
- Check the clearance between the brake disc and caliper bracket on each side after installation. The clearance should be at least 0.7mm (0.03in).
- After installation, operate the brake lever and pedal, and check the brake operation.

	Procedure	Q'ty	Remarks
	Removal Order		Installation is in the reverse order of removal.
(1)	Secondary master cylinder link plate bolt	2	
(2)	Left brake caliper lower socket bolt	1	
(3)	Left brake caliper assembly	1	Remove the left brake caliper from the brake disc.
(4)	Right brake caliper mounting bolt	2	
(5)	Right brake caliper	1	
(6)	Axle bolt	1	
(7)	Axle pinch bolt	4	Only loosening the bolts.
(8)	Front axle	1	
(9)	Front wheel assembly	1	Disassembly (11-8)
(10)	Right side collar	1	
(11)	Left side collar	1	

Front Wheel Disassembly/Assembly

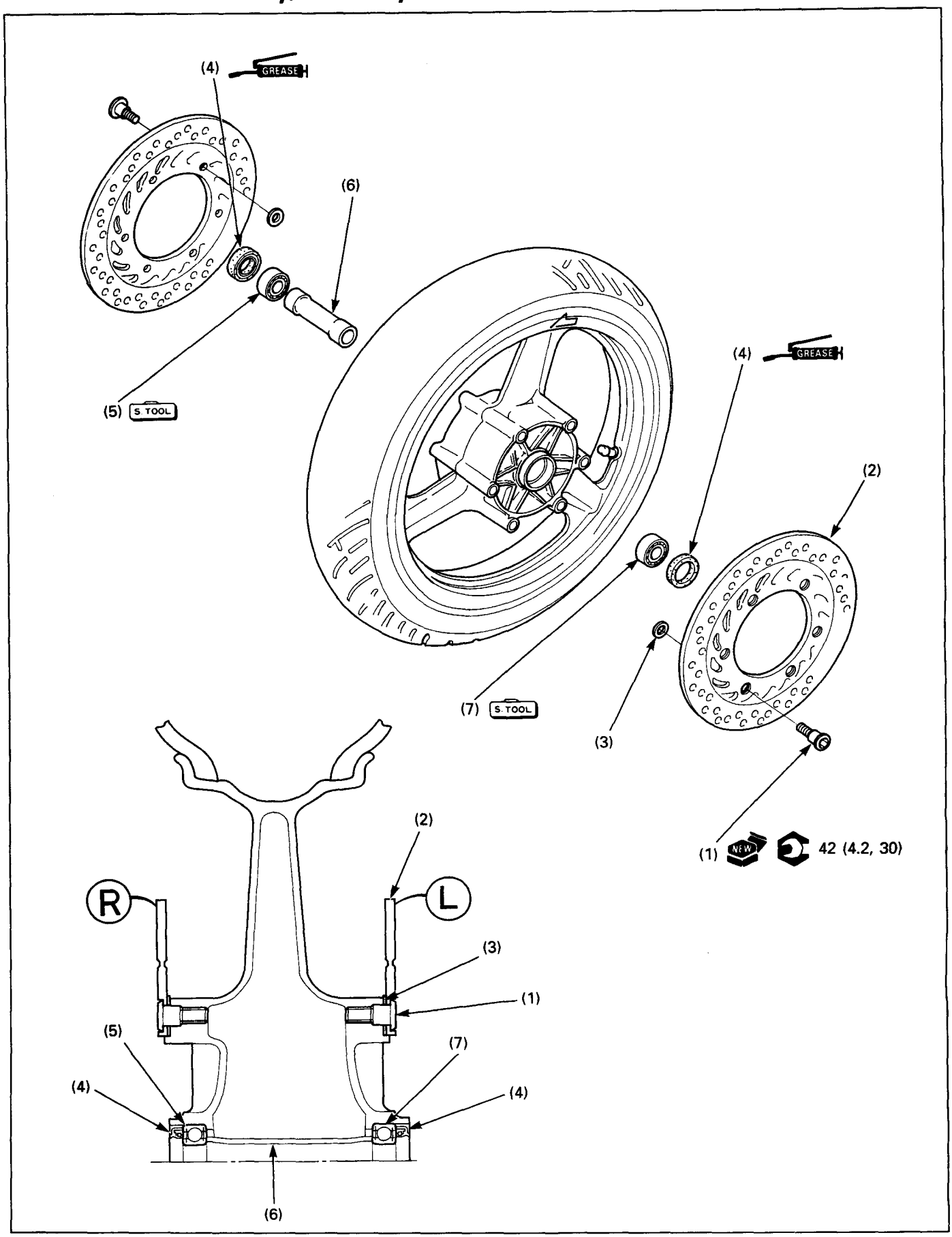

⚠ WARNING

- ***A contaminated brake disc or pad reduces stopping power. Discard contaminated pads and clean a contaminated disc with a high quality brake degreasing agent.***

NOTE

- Replace the bearings in pairs.
- Do not add more than 60 grams of the balance weight to the wheel.

Requisite Service

- Front wheel removal/installation (page 11-6)

	Procedure	Q'ty	Remarks
	Disassembly Order		Assembly is in the reverse order of removal.
(1)	Brake disc mounting bolt	12	
(2)	Brake disc	2	NOTE • At installation, install each disc with their stamped side facing out.
(3)	Shim	12	
(4)	Dust seal	2	
(5)	Right wheel bearing (6004)	1	
(6)	Distance collar	1	
(7)	Left wheel bearing (6004)	1	NOTE • At assembly, drive in the left side bearing first, then the right side bearing.

Fork Removal/Installation

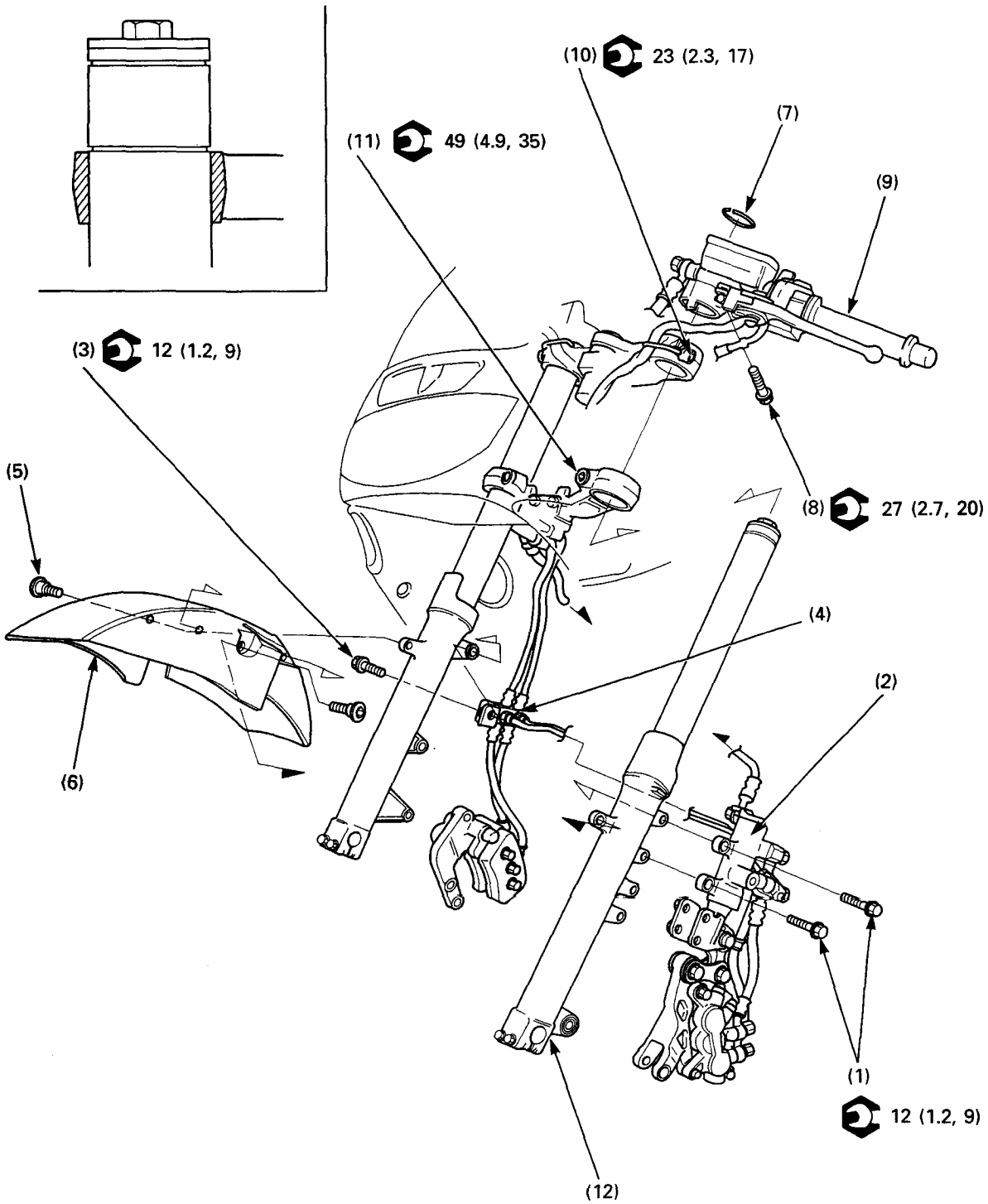

CAUTION

- **Do not suspend the brake caliper using the brake hose. Do not twist the brake hose more than necessary.**
- **Do not suspend the secondary master cylinder using the brake caliper. Do not twist the brake brake hose more than necessary.**
- **Do not twist the secondary master cylinder push rod more than necessary.**

NOTE

- If the fork legs will be disassembled, loosen the fork cap before removing the fork legs.

Requisite Service

- Front wheel removal/installation (page 11-6)

	Procedure	Q'ty	Remarks
	Removal Order		Installation is in the reverse order of removal.
(1)	Secondary master cylinder mounting bolt	2	
(2)	Secondary master cylinder	1	
(3)	Brake hose joint mounting bolt	1	
(4)	Brake hose joint	1	
(5)	Front fender mounting socket bolt	2	
(6)	Front fender	1	
(7)	Stop ring	2	
(8)	Handlebar pinch flange bolt	2	
(9)	Handlebar assembly	2	
(10)	Fork top pinch socket bolt	2	• Only loosen. • If the fork leg will be disassembled, loosen the fork cap before removing the fork legs.
(11)	Fork bottom pinch socket bolt	2	
(12)	Fork leg	2	At installation, align the fork groove with the top bridge upper surface.

Fork Disassembly

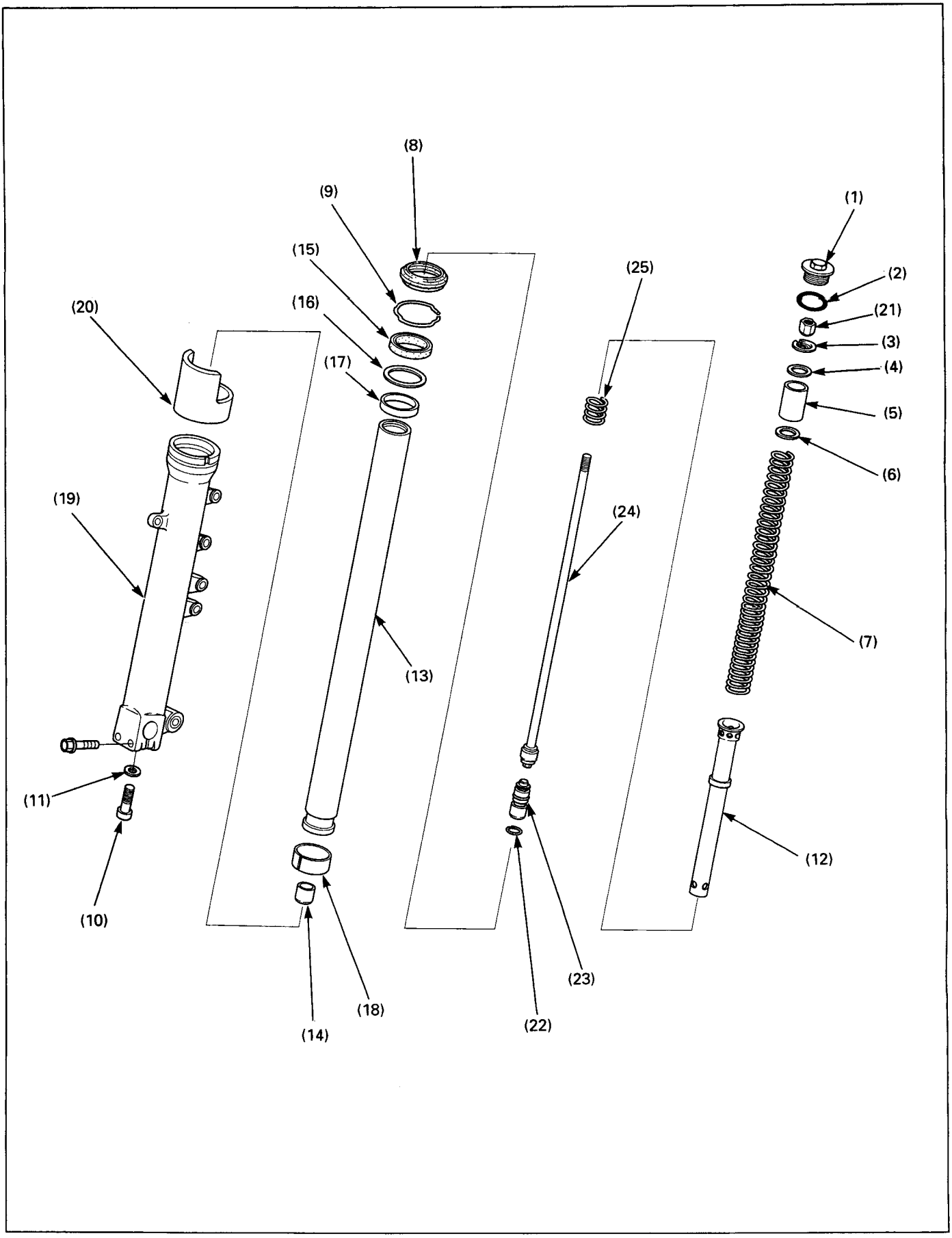

⚠WARNING

- **The fork cap is under spring pressure. Use care when removing it and wear eye and face protection.**

NOTE

- Temporarily install the fork spring and fork cap, if the socket bolt turns together with the fork piston.
- Always replace oil seal with a new one.

Requisite Service

- Fork removal/installation (page 11-10)

	Procedure	Q'ty	Remarks
	Disassembly Order		
(1)	Fork tube cap	1	Hold the fork damper rod look nut, then remove the fork cap.
(2)	O-ring	1	
(3)	Seat stopper	1	
(4)	Spring seat	1	
(5)	Spring collar	1	
(6)	Spring seat	1	
(7)	Fork spring	1	Pour out the fork oil after removing the fork spring.
(8)	Dust seal	1	
(9)	Stopper ring	1	**CAUTION:** • **Do not scratch the inner fork tube sliding surface.**
(10)	Fork socket bolt	1	
(11)	Sealing washer	1	
(12)	Fork damper assembly	1	
(13)	Fork tube	1	
(14)	Oil lock piece	1	
(15)	Oil seal	1	Remove them from the fork tube.
(16)	Back-up ring	1	
(17)	Slider guide bushing	1	
(18)	Fork tube bushing	1	Do not remove it, unless it is necessary to replace with a new one.
(19)	Fork slider	1	
(20)	Protector	1	
	Fork Damper Disassembly Order		
(21)	Damper rod look nut	1	
(22)	Stopper ring	1	
(23)	Bottom piece	1	
(24)	Damper rod	1	
(25)	Rebound spring	1	

Fork Assembly

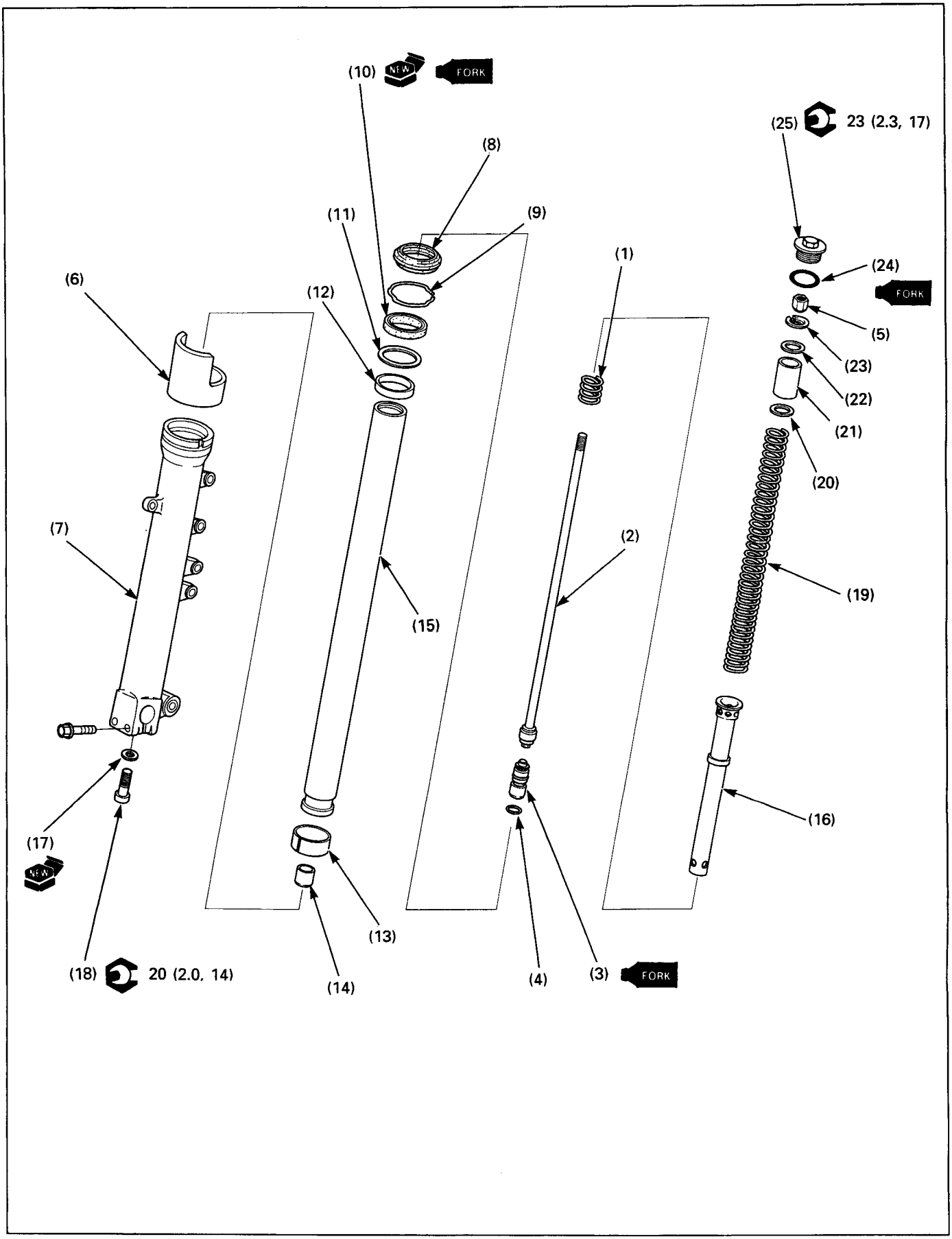

NOTE

- Always replace the oil seal with a new one.
- Coat a new oil seal with the recommended fork oil and install with its seal mark facing up.
- After installing the fork legs, torque the fork cap.

Requisite Service

- Fork disassembly (page 11-12)
- Fork installation (page 11-10)

	Procedure	Q'ty	Remarks
	Fork Damper Assembly Order		
(1)	Rebound spring	1	
(2)	Damper rod	1	
(3)	Bottom piece	1	
(4)	Stopper ring	1	NOTE • Seat the bottom piece against the stop ring by pushing the piston rod gradually. **CAUTION** • **Do not tap the piston rod end, or the piston rod and bottom piece may damaged.**
(5)	Damper rod lock nut	1	NOTE • Screw the lock nut with its chamfered side facing down. • Screw the lock nut, but do not tighten it.
	Fork Assembly Order		
(6)	Protector	1	
(7)	Fork slider	1	
(8)	Dust seal	1	• Install them onto the fork tube. • Install the back-up ring with its chamfered side facing down. • Use fork seal driver (07947-KA50100) and attachment (07947-KF00100) for fork seal installation.
(9)	Stopper ring	1	
(10)	Oil seal	1	
(11)	Back-up ring	1	
(12)	Fork tube bushing	1	
(13)	Slider guide bushing	1	
(14)	Oil lock piece	1	
(15)	Fork tube	1	
(16)	Fork damper	1	
(17)	Sealing washer	1	
(18)	Fork socket bolt	1	If the fork socket bolt turns together with the fork piston, temporarily install the fork spring and fork cap.
(19)	Fork spring	1	Install the fork spring with the tapered end facing down.
(20)	Spring seat	1	
(21)	Spacer	1	
(22)	Spring seat	1	
(23)	Seat stopper	1	
(24)	O-ring	1	Apply oil to the new O-ring.
(25)	Fork tube cap	1	NOTE • Make sure the distance between the lock nut and the top of the damper rod 1.5mm (0.14in). • Screw the fork cap until it seats on the damper rod lock nut, then hold the lock nut and tighten the fork cap to the specified torque. **CAUTION** • **Be careful not to cross-thread the fork tube cap.** • **Screw in the fork cap, but do not tighten yet.**

Steering Stem Removal/Installation

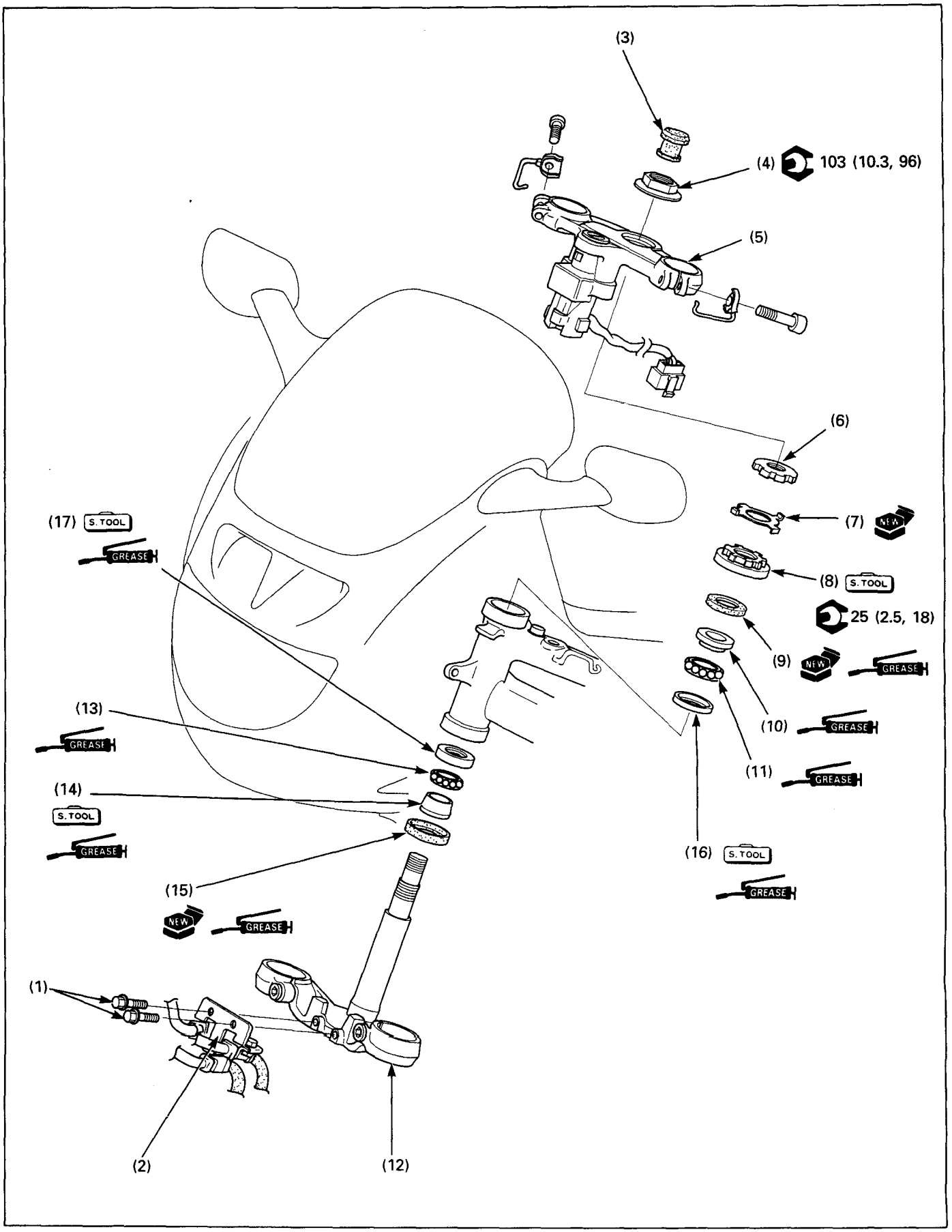

NOTE

- Replace the bearings and races as a set.
- At installation, apply grease to all bearing area.

Requisite Service

- Fork removal/installation (page 11-10)
- Handlebar removal/installation (page 11-2,4)

	Procedure	Q'ty	Remarks
	Removal Order		
(1)	Brake hose bracket mounting bolt	2	
(2)	Brake hose bracket assembly	1	
(3)	Stem nut cap	1	
(4)	Stem nut	1	
(5)	Top bridge	1	
(6)	Lock nut	1	Bend straight the tabs of the look washer, then remove.
(7)	Lock washer	1	
(8)	Bearing adjustment nut	1	Removal/installation (page 11-18)
(9)	Dust seal	1	
(10)	Upper bearing inner race	1	
(11)	Upper bearing	1	
(12)	Steering stem	1	
(13)	Lower bearing	1	
(14)	Lower bearing inner race	1	
(15)	Dust seal	1	
(16)	Upper bearing outer race	1	Use ball race remover (07953-MJ10000).
(17)	Lower bearing outer race	1	Use bearing race remover (07946-3710500).
	Installation Order		
(17)	Lower bearing outer race	1	Use driver (07749-0010000) and attachment 52×55mm (07746-0010400).
(16)	Upper bearing outer race	1	Use driver (07749-0010000) and attachment 42×47mm (07746-0010300).
(15)	Dust seal	1	
(14)	Lower bearing inner race	1	Use steering stem driver (07946-MB00000) for installation.
(13)	Lower bearing	1	
(12)	Steering stem	1	
(11)	Upper bearing	1	
(10)	Upper bearing inner race	1	
(9)	Dust seal	1	
(8)	Bearing adjustment nut	1	See page 11-18 for tightening procedure.
(7)	Lock washer	1	
(6)	Lock nut	1	
(5)	Top bridge	1	
(4)	Stem nut	1	Temporarily install the fork legs and torque the nut.
(3)	Stem nut cap	1	
(2)	Brake hose bracket assembly	1	
(1)	Brake hose bracket mounting bolt	2	

Bearing Adjustment Nut Removal

Bend the tabs of the lock washer straight and then remove the lock nut and lock washer.

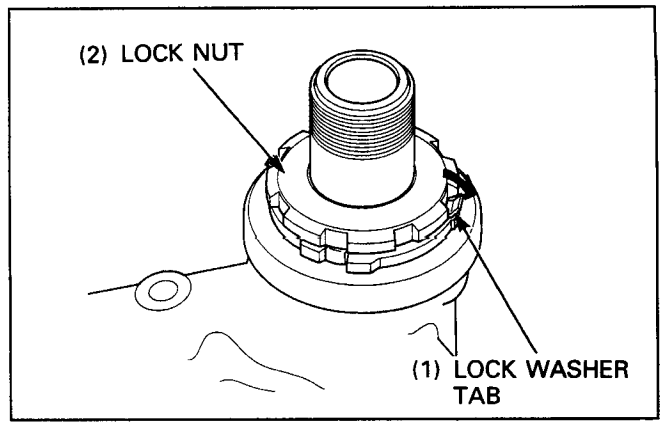

Remove the steering stem adjustment nut.

S. TOOL

Steering stem socket	**07916-3710101**
Extension bar	**07716-0020500**

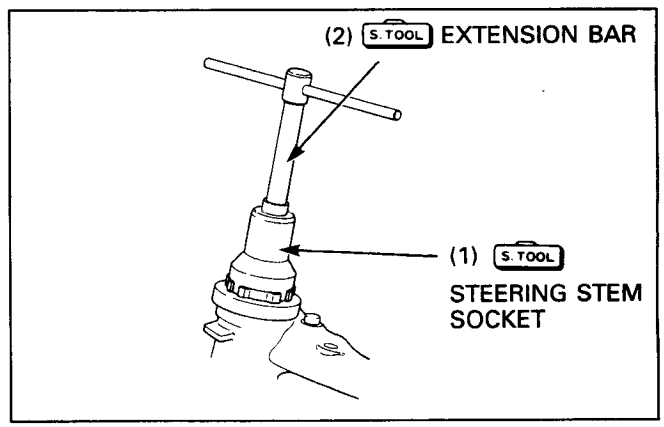

Bearing Adjustment Nut Installation

Apply clean engine oil to the bearing adjustment nut threads.
Install and tighten the adjustment nut to the specified torque.

S. TOOL

Steering stem socket	**07916-3710101**

Torque: 25 N• m (2.5 kg-m, 18 ft-lb)

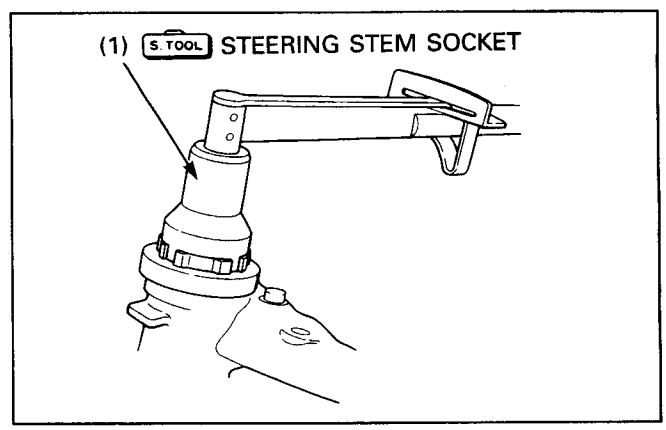

Turn the steering stem lock to lock at lease five times, then retighten the steering adjustment nut to the specified torque.

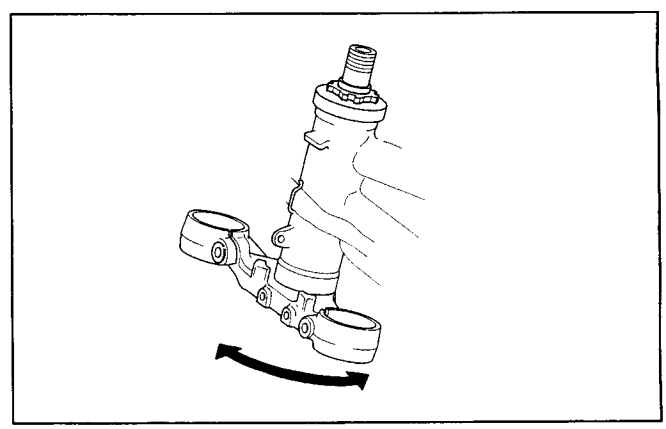

Install the new lock washer onto the steering stem.
Align the tabs of the lock washer with the grooves in the adjustment nut and bend two opposite tabs (shorter) down into the adjustment nut groove.

Install and finger tighten the lock nut.
Hold the lock nut and further tighten the lock nut within 1/4 turn (90°) enough to align its grooves with the lock washer tabs.
Bend the lock washer tabs up into the lock nut grooves.

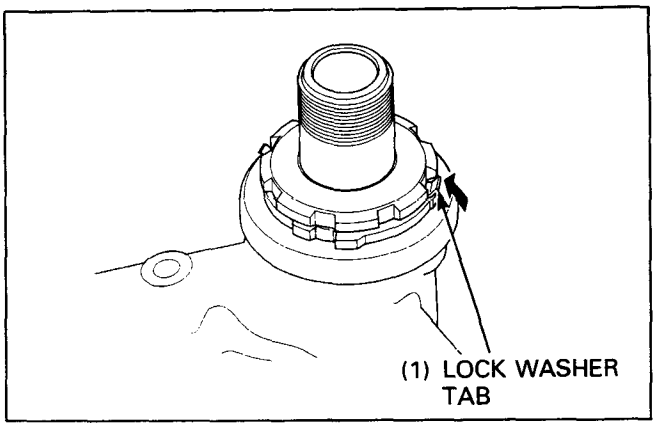

12. Rear Wheel/Suspension

Service Information

⚠ WARNING

- **A contaminated brake disc or pad reduces stopping power. Discard contaminated pads and clean a contaminated disc with a high quality brake degreasing agent.**

- When servicing the rear wheel, place the motorcycle on its center stand.
- Refer to the section 13 for brake system information.
- Use only tires marked "TUBELESS" and tubeless valves on rims marked "TUBELESS TIRE APPLICABLE".

Troubleshooting

Soft Suspension
- Weak shock absorber spring
- Oil leakage from damper unit
- Low tire pressure

Hard Suspension
- Damaged shock absorber mount bushing
- Bent damper rod
- Damaged swingarm pivot bearings
- Bent swingarm pivot
- High tire pressure

Steers To One Side Or Dose Not Track Straight
- Bent rear axle.
- Axle alignment/chain adjustment not equal on both sides

Rear Wheel Wobbling
- Bent rim
- Worn rear wheel bearings
- Faulty tire
- Unbalanced tire and wheel
- Low tire pressure
- Faulty swingarm pivot bearing(s)

Rear Wheel Removal/Installation

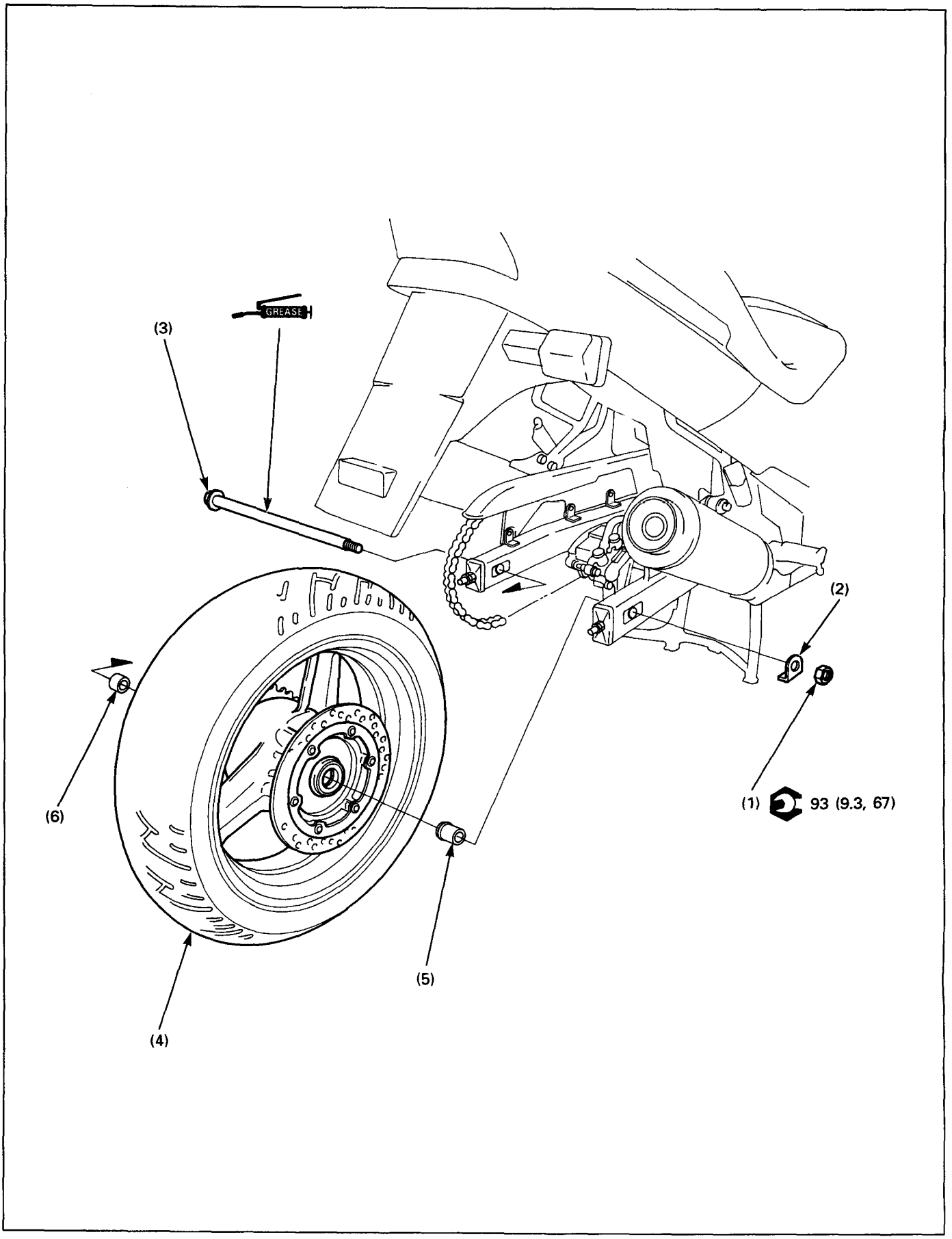

⚠WARNING

- **A contaminated brake disc or pad reduces stopping power. Discard contaminated pads and clean a contaminated disc with a high quality brake degreasing agent.**

NOTE

- When servicing the rear wheel, place the motorcycle on its center stand.
- Do not operate the brake pedal or lever after the rear wheel is removed.
- Adjust the drive chain free play after installing the wheel.

	Procedure	O'ty	Remarks
	Removal Order		Installation is in the reverse order of removal.
(1)	Rear axle nut	1	• Loosen the drive chain adjuster fully, then remove the axle nut. • Move the rear wheel forward, and derail the drive chain from the driven sprocket.
(2)	Rear axle washer	1	
(3)	Rear axle	1	
(4)	Rear wheel	1	
(5)	Right side collar	1	
(6)	Left side collar	1	

Rear Wheel Disassembly/Assembly

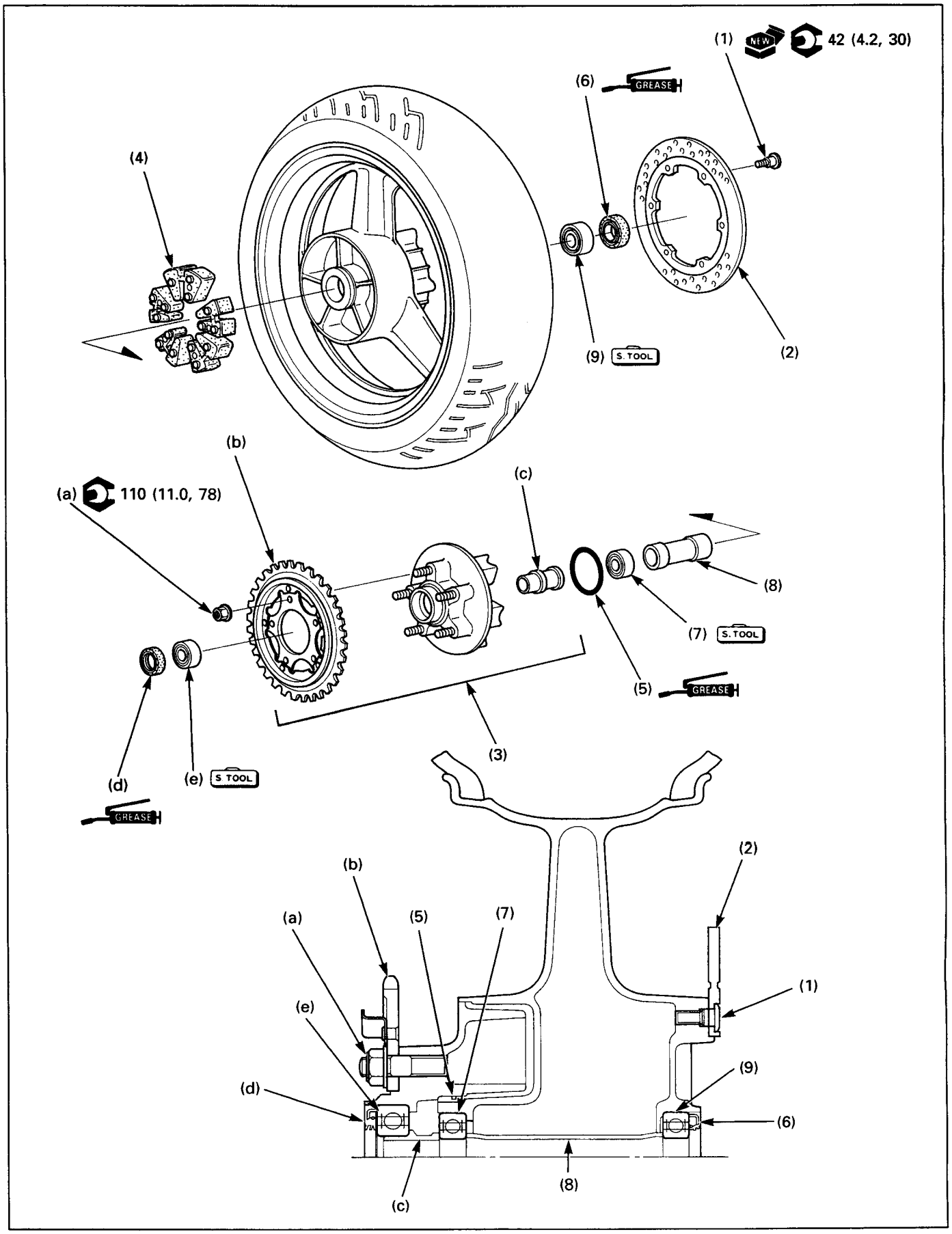

⚠ WARNING

- **A contaminated brake disc or pad reduces stopping power. Discard contaminated pads and clean a contaminated disc with a high quality brake degreasing agent.**

NOTE

- Replace the wheel bearings in pairs.
- Do not add more than 60 grams of balance weight to the wheel.

Requisite Service

- Rear wheel removal/installation (page 12-2)

	Procedure	Q'ty	Remarks
	Disassembly Order		Assembly is in the reverse order of disassembly.
(1)	Brake disc mounting bolt	6	
(2)	Brake disc	1	At installation, install the disc with its "⇨DRIVE" mark facing out.
(3)	Driven flange assembly	1	
	Driven Flange Disassembly Order		
(a)	Driven sprocket nut	5	Temporarily install the driven flange into the wheel hub, then remove the nuts.
(b)	Driven sprocket	1	
(c)	Rear axle sleeve	1	
(d)	Dust seal	1	
(e)	Driven flange bearing (62/22)	1	
(4)	Damper rubber	5	
(5)	O-ring, 69 x 2 mm	1	
(6)	Right dust seal	1	
(7)	Left wheel bearing (6304 UU)	1	
(8)	Distance collar	1	
(9)	Right wheel bearing (6304 UU)	1	NOTE • Drive in the right side bearing first, then the left side bearing.

Suspension Linkage/Shock Absorber Removal/Installation

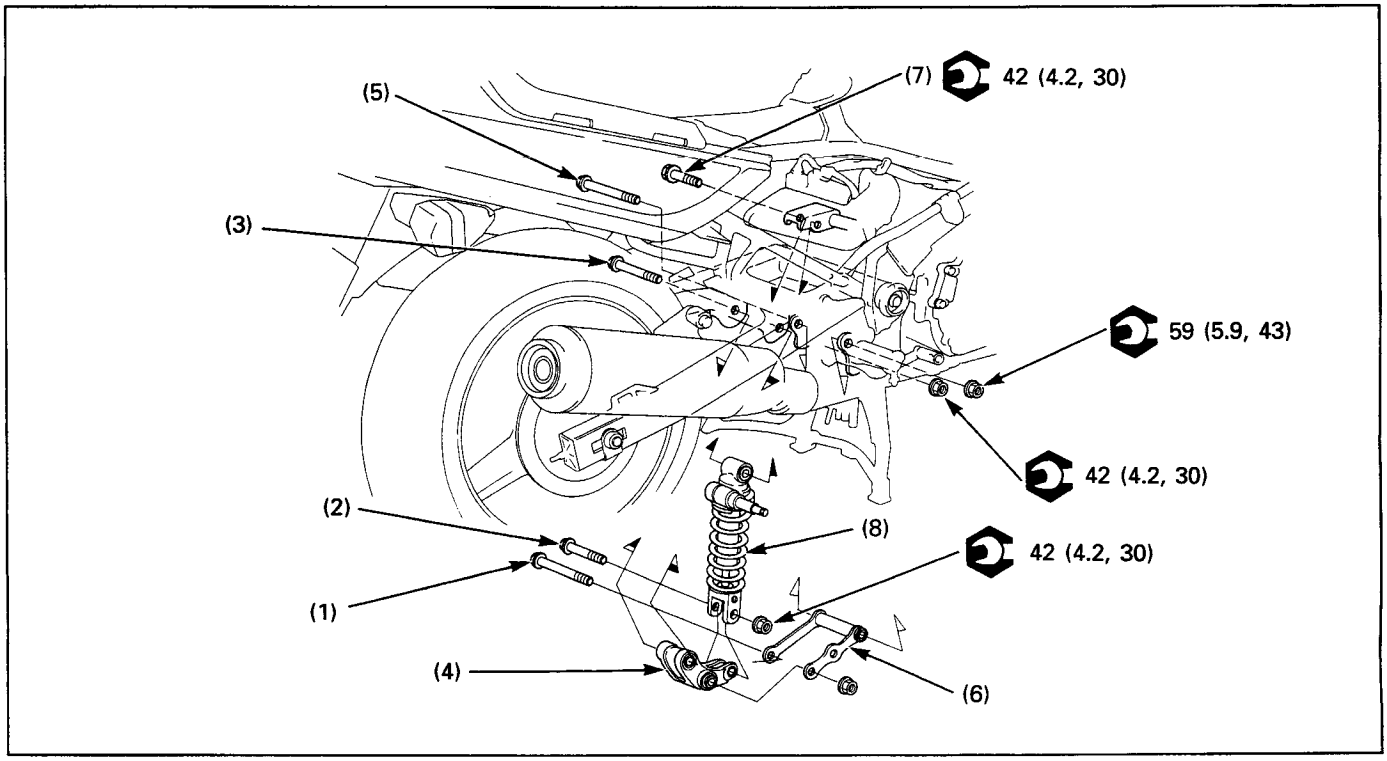

NOTE

- When removing the shock linkage and shock absorber, place the motorcycle on its center stand.

Requisite Service

- Side cover removal/installation (page 2-3)
- Pivot under cover removal/installation (page 2-6)

	Procedure	Q'ty	Remarks
	Removal Order		Installation is in the reverse order of removal.
(1)	Shock link-to-shock arm bolt/nut	1/1	
(2)	Shock absorber lower mounting bolt/nut	1/1	
(3)	Shock arm-to-swingarm bolt/nut	1/1	
(4)	Shock arm	1	
(5)	Shock link-to-frame bolt/nut	1/1	
(6)	Shock link	1	
(7)	Shock absorber upper mounting bolt	1	
(8)	Shock absorber	1	**CAUTION** • **Do not disassemble the shock absorber.**

Suspension Linkage Disassembly/Assembly

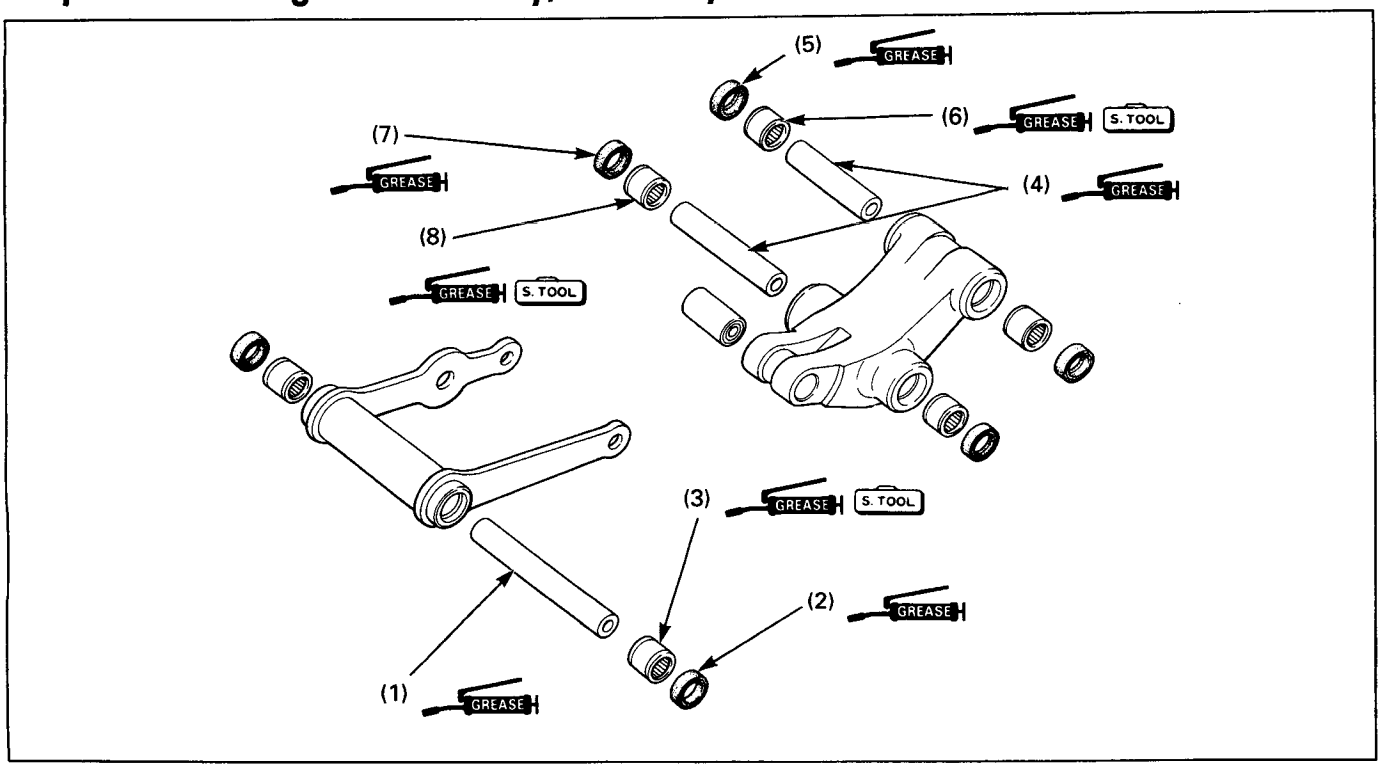

Requisite Service

- Suspension linkage removal/installation (page 12-6)

	Procedure	Q'ty	Remarks
	Removal Order		Installation is in the reverse order of removal.
(1)	Shock link pivot collar	1	
(2)	Oil seal, 17 x 27 x 5 mm	2	
(3)	Needle bearing, 17 x 24 x 25 mm	2	
(4)	Shock arm pivot collar	2	
(5)	Oil seal, 17 x 27 x 5 mm	2	
(6)	Needle bearing, 17 x 24 x 20 mm	2	
(7)	Dust seal	2	
(8)	Needle bearing	2	

Shock Arm Needle Bearing Replacement

Removal

Press the needle bearing out of the shock arm using the special tools.

S. TOOL

Swingarm side:	
Driver pin	**07GMD–KT80100**
Shock link side:	
Driver shaft	**07946–MJ00100**

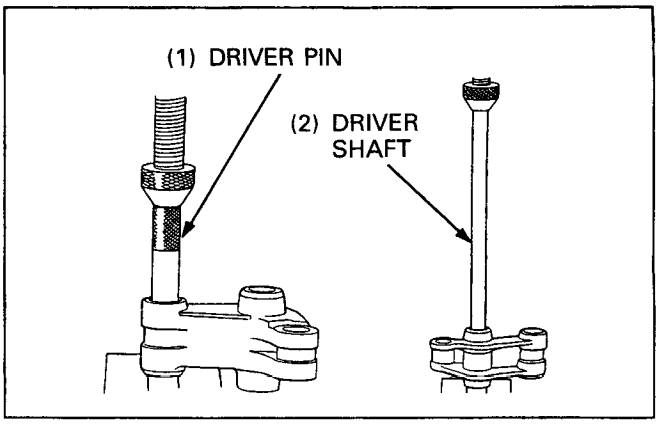

Installation

Apply grease to the new needle bearings.
Press the needle bearings into the shock arm using the special tools.

S. TOOL

Driver	**07749–0010000**
Attachment, 24 x 26 mm	**07746–0010700**
Pilot, 17 mm	**07746–0040400**

NOTE

- Press the needle bearing into the shock arm with the marked side facing out.

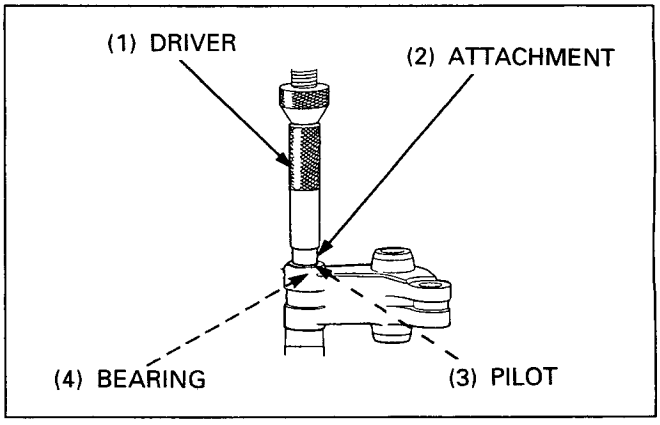

Shock Link Needle Bearing Replacement

Removal

Remove the pivot collars and dust seals.

Remove the needle bearing using the special tools.

S. TOOL

Bearing remover	**07936–3710300**
– Remover handle	**07936–3710100**
– Remover weight	**07741–0010201**

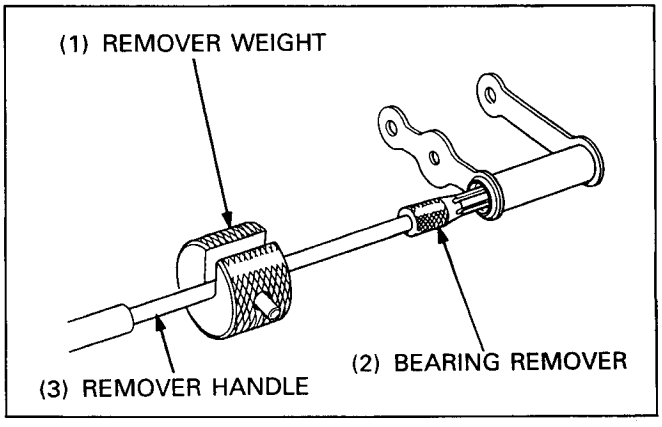

Installation

Apply grease to the new needle bearings.
Press new needle bearings into the shock link.

S. TOOL

Driver	**07749–0010000**
Attachment, 24 x 26 mm	**07746–0010700**
Pilot, 17 mm	**07746–0040400**

NOTE

- Press the needle bearing into the shock link with the marked side facing out.

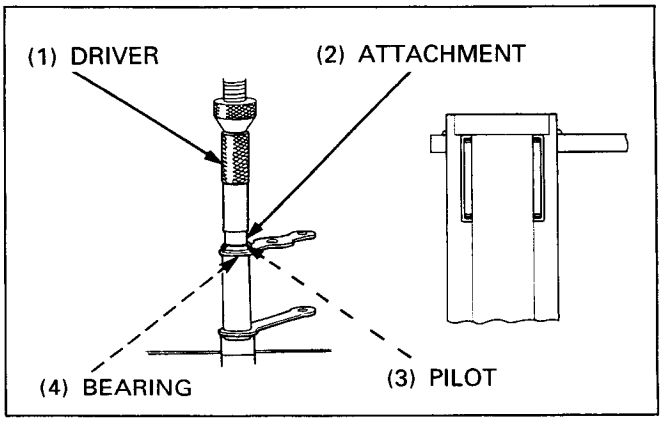

Swingarm Removal/Installation

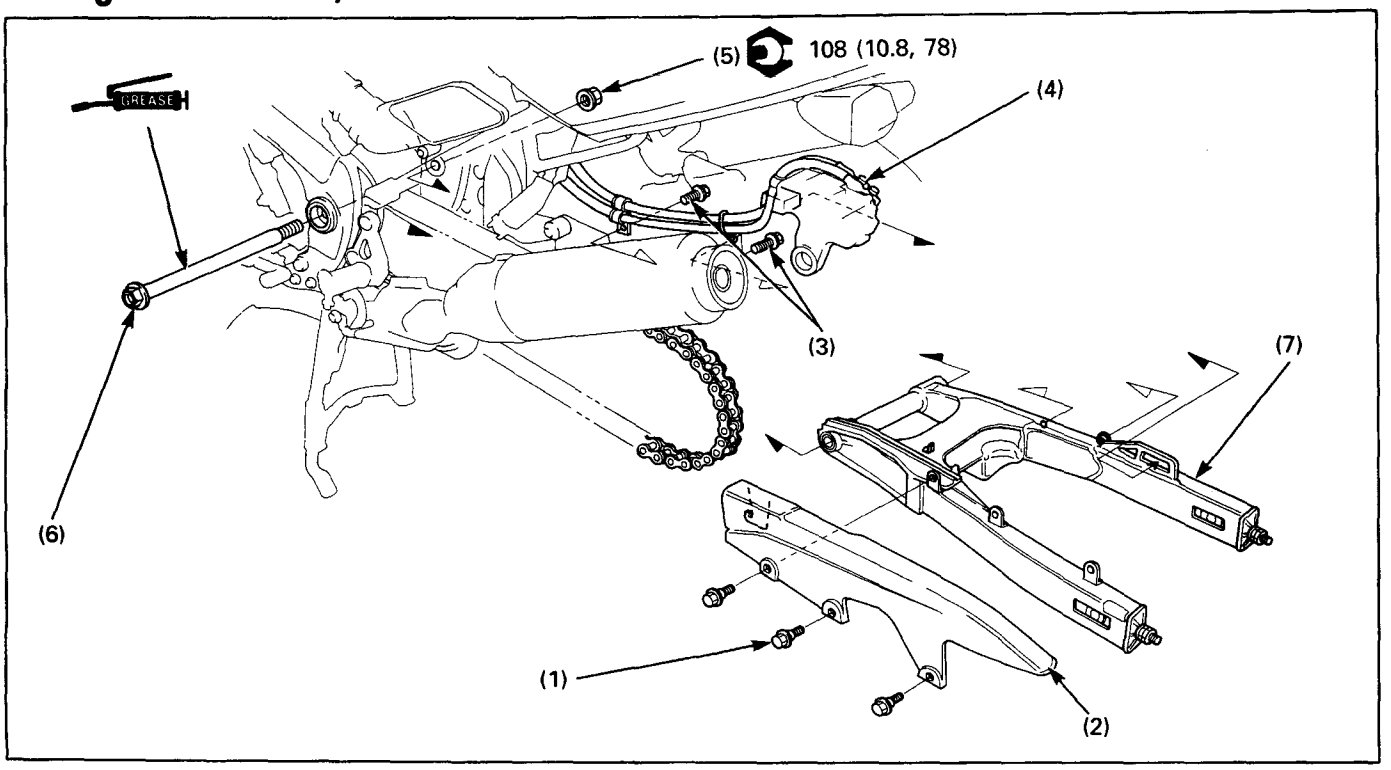

NOTE

- Apply thin layer of grease to the swingarm pivot surface.

Requisite Service

- Rear wheel removal/installation (page 12-2)
- Shock absorber removal/installation (page 12-6)

	Procedure	Q'ty	Remarks
	Removal Order		Installation is in the reverse order of removal.
(1)	Drive chain case bolt	3	
(2)	Drive chain case	1	
(3)	Brake hose clamp bolt	2	
(4)	Brake hose/brake caliper	1	
(5)	Swingarm pivot nut	1	
(6)	Swingarm pivot bolt	1	
(7)	Swingarm	1	

Swingarm Disassembly/Assembly

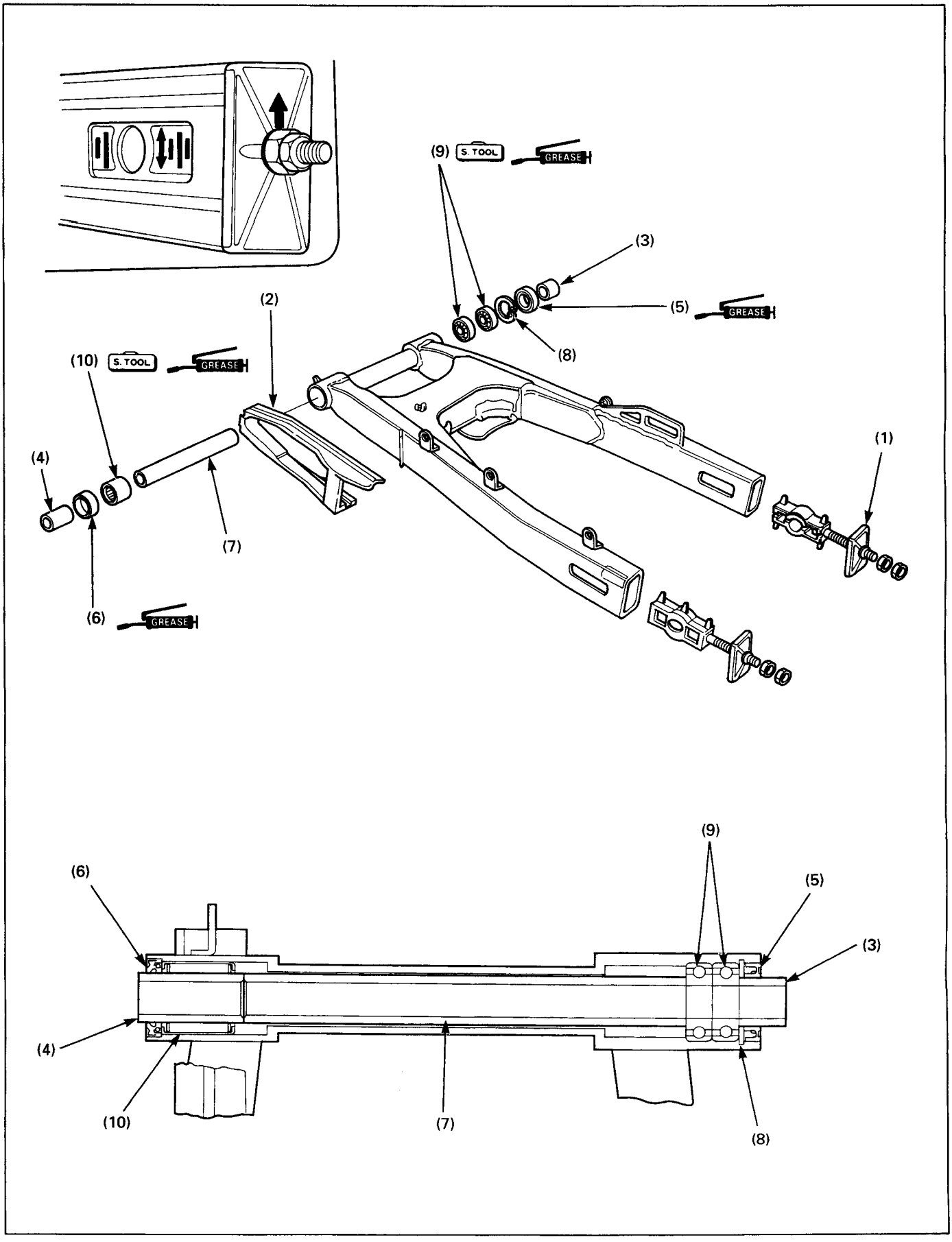

Requisite Service

- Swingarm removal/installation (page 12-9)

	Procedure	Q'ty	Remarks
	Removal Order		Installation is in the reverse order of removal.
(1)	Drive chain adjuster	1	NOTE • Install the adjuster with its "UP" mark facing up and the index mark facing out.
(2)	Drive chain slider	1	
(3)	Right pivot collar	1	
(4)	Left pivot collar	1	
(5)	Right dust seal, 22 x 35 x 7 mm	1	
(6)	Left dust seal, 22 x 31 x 5 mm	1	
(7)	Distance collar	1	
(8)	Snap ring	1	
(9)	Radial bearing (6202)	2	Refer to page 12-12 for replacement.
(10)	Needle bearing	1	

Swingarm Pivot Bearing Replacement

Press the right pivot bearings (radial ball bearing) out of the swingarm.

S. TOOL

Driver shaft	**07946–MJ00100**

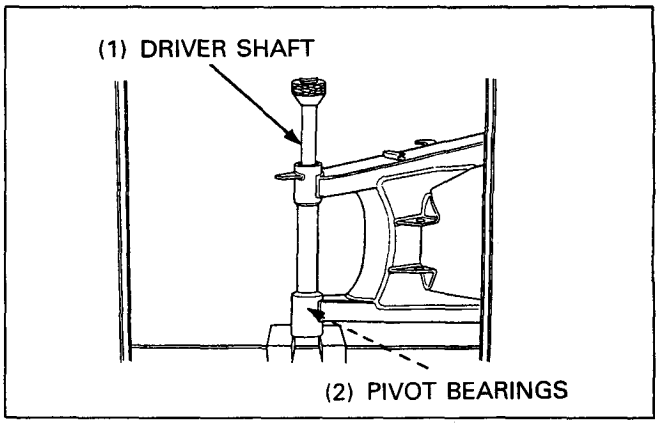

Press the left pivot bearings (needle bearing) out of the swingarm.

S. TOOL

Needle bearing remover	**07GMD–KT70200**
Driver shaft	**07946–MJ00100**

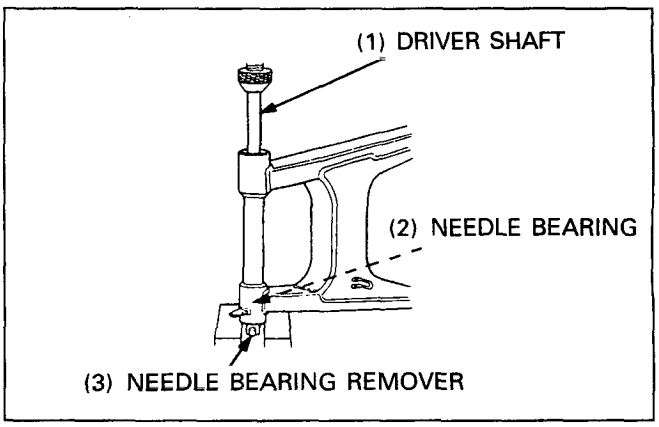

Apply grease to the new needle bearing.
Press a new needle bearing into the left swingarm pivot.

S. TOOL

Driver	**07749–0010000**
Attachment, 28 x 30 mm	**07946–1870100**
Pilot, 22 mm	**07746–0041000**

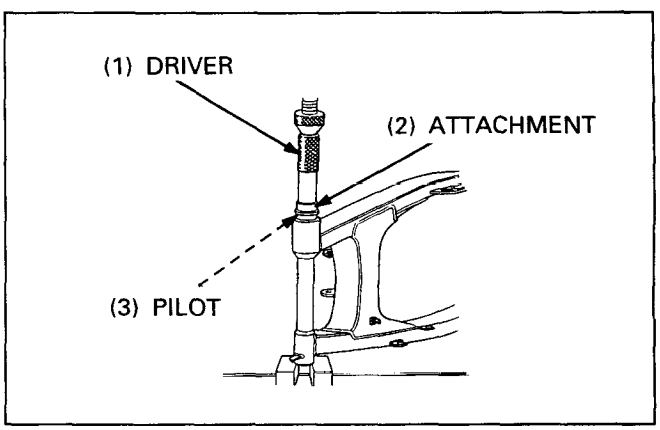

Pack all bearing cavity with grease.
Press new right pivot bearings into right swingarm pivot.

S. TOOL

Driver	**07749–0010000**
Attachment, 32 x 35 mm	**07746–0010100**
Pilot,15 mm	**07746–0040300**

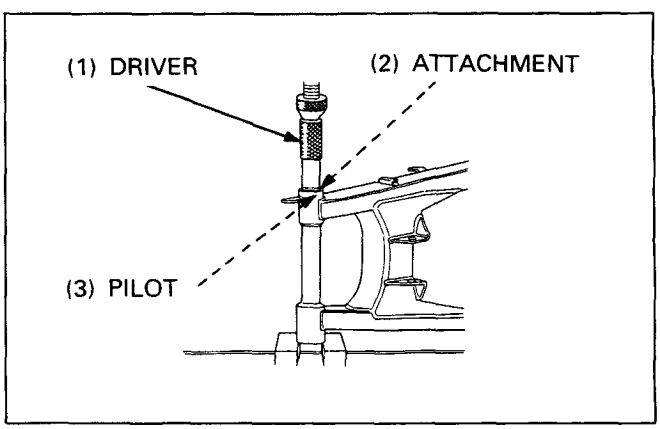

13. Brake System

Service Information

⚠ WARNING

- **A contaminated brake disc or pad reduces stopping power. Discard contaminated pads and clean a contaminated disc with a high quality brake degreasing agent.**

CAUTION

- **The CBR1000F equipped Dual Combined Brake System. Must be follow the system air bleeding procedure (page 13-25) if you disconnect or service the any brake hydraulic system.**
- **Do not disassemble the secondary master cylinder push rod or the correct brake performance is not obtained.**

- Spilled brake fluid will severely damage instrument lenses and painted surfaces. It is also harmful to some rubber parts. Be careful whenever you remove the reservoir cap: make sure the front reservoir is horizontal first.
- Never allow contaminations (dirt, water, etc.) to get into and open reservoir.
- Once the hydraulic system has been opened, or if the brake feel spongy, the system must be bled.
- Always use fresh DOT 4 brake fluid from a sealed container when servicing the system. Do not mix different types of fluid as they may not be compatible.
- Always check brake operation before riding the motorcycle.

System Location

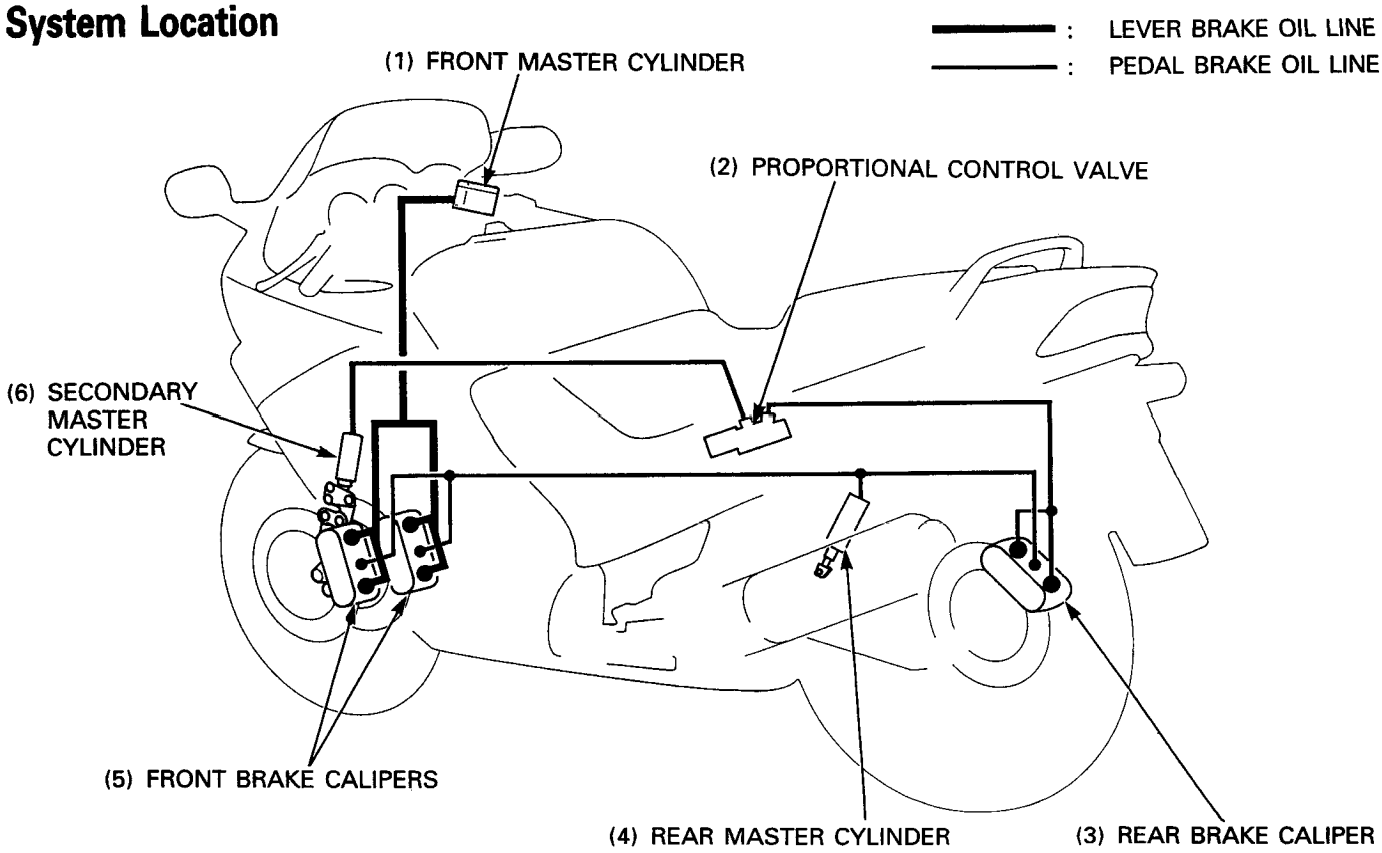

Troubleshooting

CAUTION

- **The Dual Combined Brake System simultaneously engage both front and rear brakes when either the front brake lever or rear brake pedal is applied. Always follow the troubleshooting procedures when you starting troubleshooting.**

Check the following items before you start troubleshooting.
1. No problem in suspension components.
2. System air bleeding is completely done.
3. After air bleeding, secondary master cylinder orifice bolt is tightened securely.

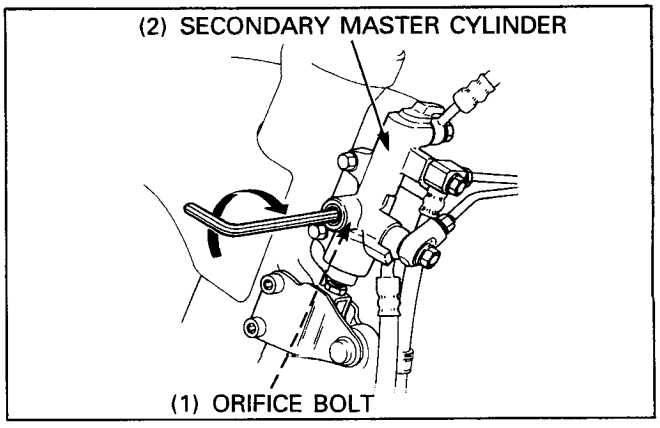

CAUTION

- **If the orifice bolt is loosened, feel vibration when you start applying the brake pedal.**

4. Check that the secondary master cylinder link operation.

Push the left front brake caliper by hand, check the smooth operation.

If the link is not smooth or excessive play, inspect the following:
- Worn or damaged link bearing
- Loose linkage mounting bolt
- Sticking or damaged secondary master cylinder piston

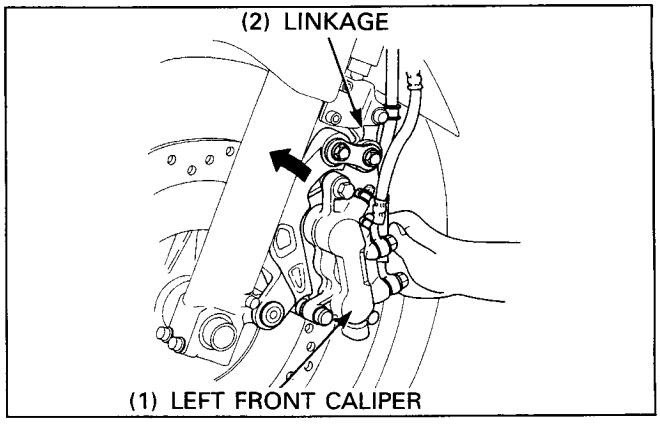

Poor Lever/Pedal Brake Performance
- Air in hydraulic system
- Low fluid level
- Leaking hydraulic system
- Improper break-in front and rear brake discs or pads
- Clogged fluid passage
- Contaminated brake pad/disc
- Contaminated caliper
- Contaminated master cylinder
- Worn or damaged brake pad/disc
- Worn caliper piston seal
- Worn master cylinder cups
- Sticking/worn caliper piston
- Sticking/worn master cylinder piston
- Warped/deformed brake disc
- Damaged wheel
- Caliper not sliding properly
- Bent brake lever/pedal

Above items are normal but still poor performance, check for nose dive during braking. If the nose dive eccessive, check for secondary master cylinder hydraulic system.

Brake Lever/Pedal Hard
- Clogged/restricted brake system
- Sticking/worn caliper piston
- Caliper not sliding properly
- Worn caliper piston seal
- Sticking/worn master cylinder piston
- Bent brake lever/pedal
- Sticking/worn brake lever or brake pedal pivot

Brake Drags
- Contaminated brake pad/disc
- Misaligned wheel
- Worn brake pad/disc
- Warped/deformed brake disc
- Caliper not sliding properly
- Improper secondary master cylinder push rod installed length
- Clogged/restricted brake hydraulic system
- Clogged secondary master cylinder oil orifice (rear wheel drags)
- Sticking/worn caliper piston
- Clogged master cylinder port

First locking the rear wheel when only the brake lever is applied/ First locking the front wheel when only the brake pedal is applied (In the case that all items are normal in "Poor Lever/Pedal Brake Performance")
- Improper secondary master cylinder push rod installed length
- Faulty PCV (Proportional Control Valve)

Front Brake Pad Replacement

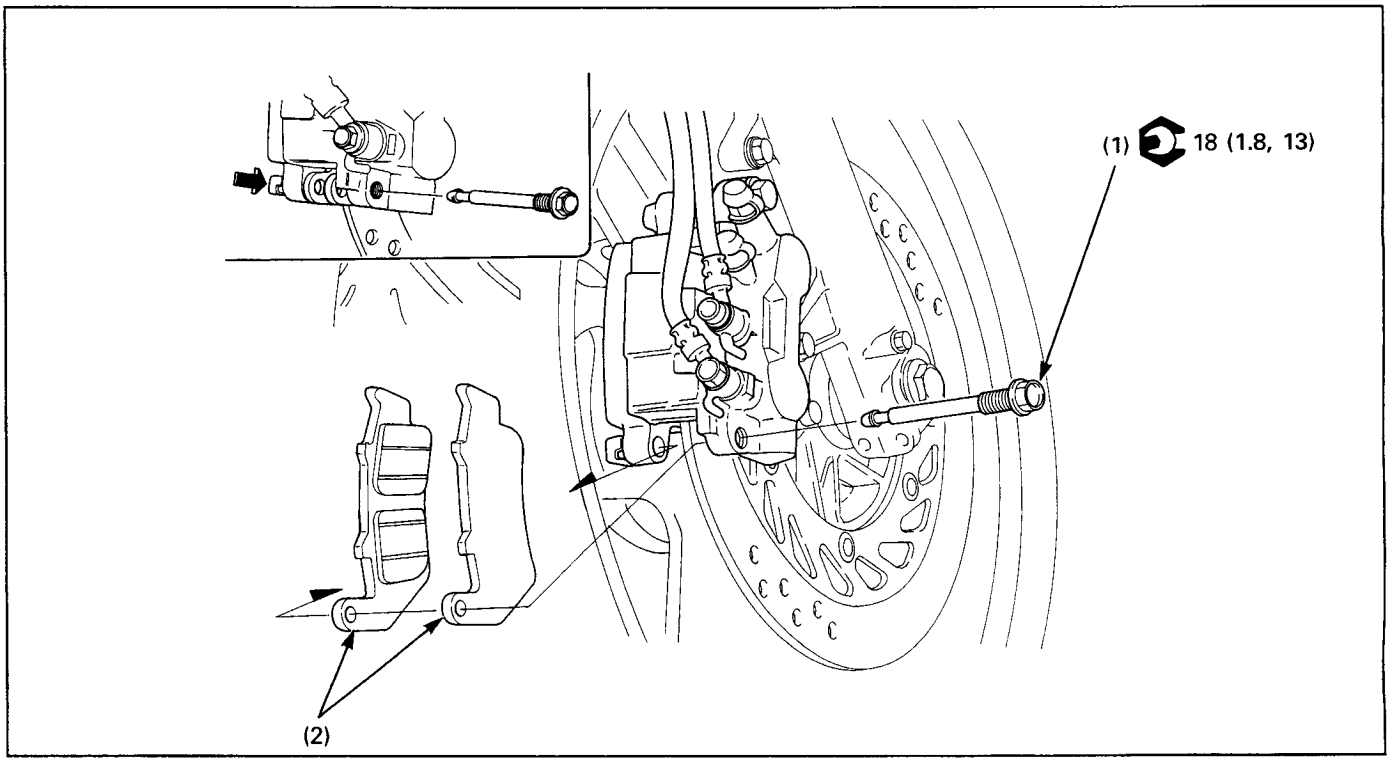

WARNING

- **A contaminated brake disc or pad reduces stopping power. Discard contaminated pads and clean a contaminated disc with a high quality brake degreasing agent.**
- **Check the brake system by applying the brake lever and pedal after pad replacement.**

NOTE

- The brake pad replacement can be serviced without disconnecting the hydraulic system.
- Clean the caliper inside especially around the caliper pistons before installing the brake pads.
- Always replace the brake pads in pairs to assure even disc pressure.
- Operate the brake lever and pedal to seat the caliper pistons against the pads after the pad replacement.

	Procedure	Q'ty	Remarks
	Removal Order		Installation is in the reverse order of removal.
(1)	Pad pin bolt	1	At removal, remove the pad pin while pushing the retainer.
(2)	Brake pad	2	

Rear Brake Pad Replacement

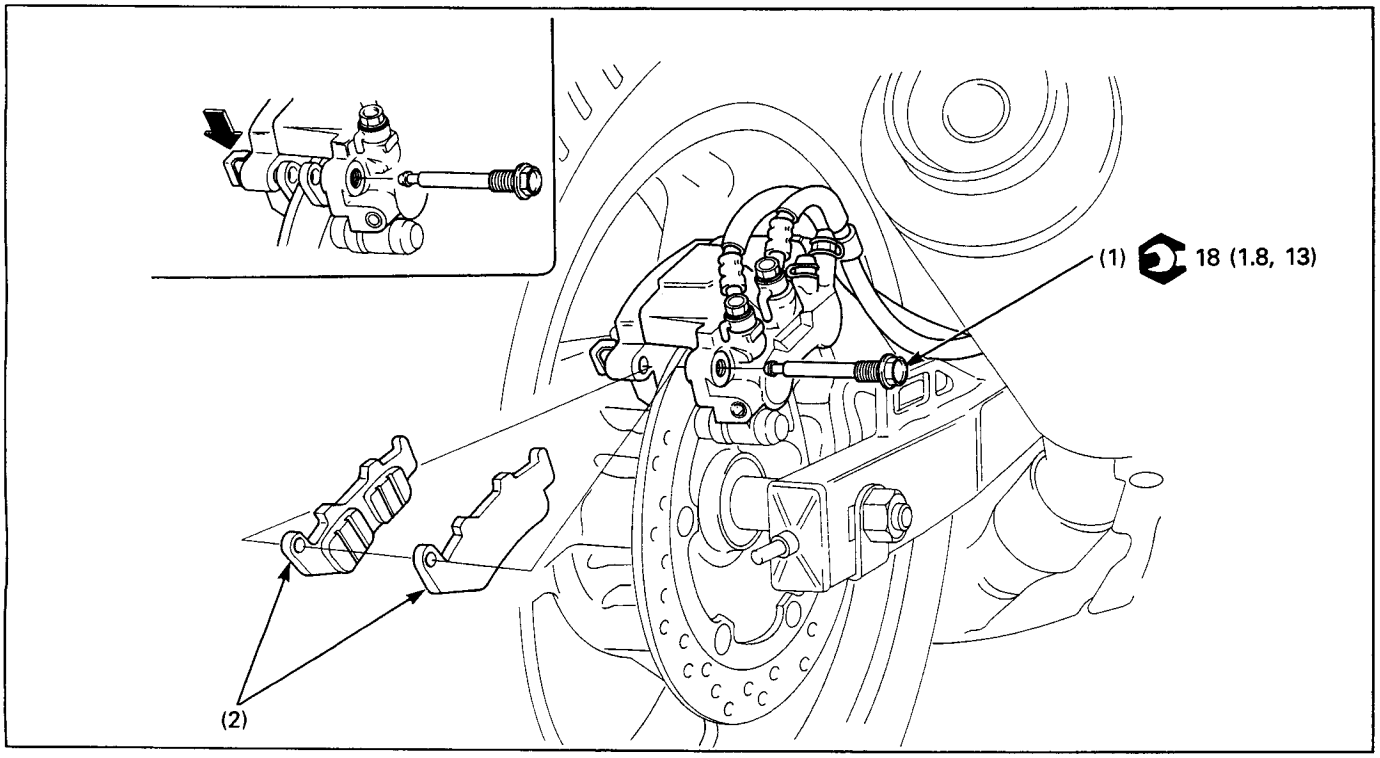

WARNING

- **A contaminated brake disc or pad reduces stopping power. Discard contaminated pads and clean a contaminated disc with a high quality brake degreasing agent.**
- **Check the brake system by applying the brake pedal after pad replacement.**

NOTE

- The brake pad replacement can be serviced without disconnecting the hydraulic system.
- Clean the caliper inside especially around the caliper pistons before installing the brake pads.
- Always replace the brake pads in pairs to assure even disc pressure.
- Operate the brake pedal to seat the caliper piston against the pads after the pad replacement.

	Procedure	Q'ty	Remarks
	Removal Order		Installation is in the reverse order of removal.
(1)	Pad pin bolt	1	At removal, remove the pad pin while pushing the retainer.
(2)	Brake pad	2	

Left Front Brake Caliper Removal/Installation

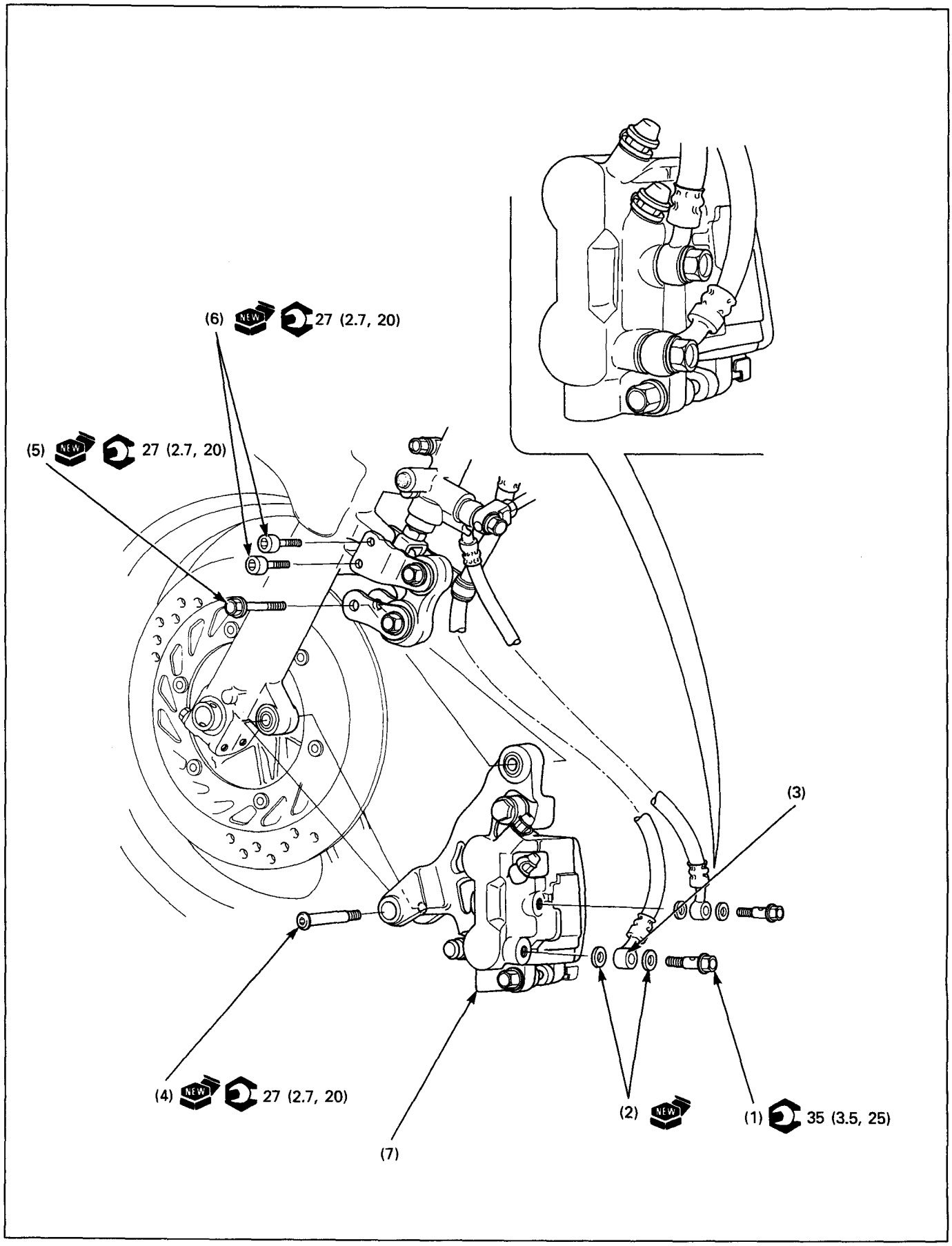

⚠ WARNING

- **A contaminated brake disc or pad reduces stopping power. Discard contaminated pads and clean a contaminated disc with a high quality brake degreasing agent.**

CAUTION

- **Avoid spilling brake fluid on painted, plastic, or rubber parts. Place a rag over these parts whenever the system is serviced.**

Requisite Service

- Front brake pad replacement (page 13-4)
- Brake system air bleeding (page 13-25)

	Procedure	Q'ty	Remarks
	Removal Order		Installation is in the reverse order of removal.
(1)	Oil bolt	2	
(2)	Sealing washer	4	
(3)	Brake hose eyelet joint	2	At installation, press the eyelet joint against the stopper while tightening the oil bolt.
(4)	Caliper lower mounting socket bolt	1	
(5)	Caliper upper mounting flange bolt	1	
(6)	Secondary master cylinder bracket bolt	2	
(7)	Left front brake caliper assembly	1	

Right Front Brake Caliper Removal/Installation

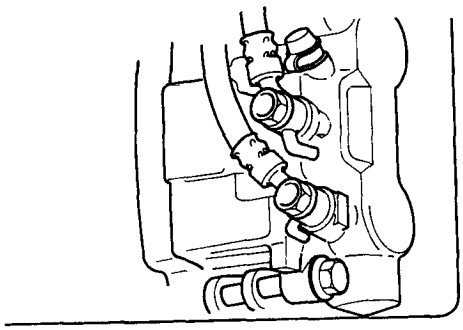

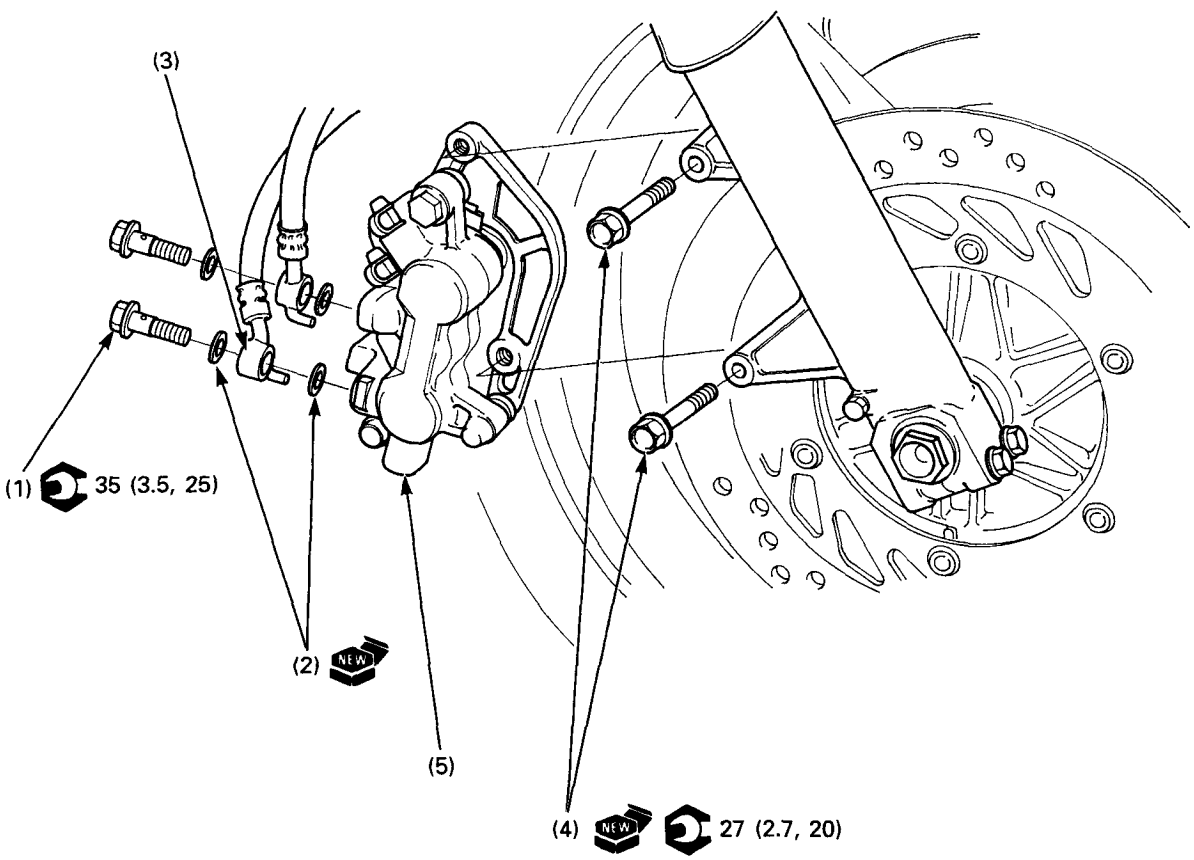

⚠WARNING

- **A contaminated brake disc or pad reduces stopping power. Discard contaminated pads and clean a contaminated disc with a high quality brake degreasing agent.**

CAUTION

- **Avoid spilling brake fluid on painted, plastic, or rubber parts. Place a rag over these parts whenever the system is serviced.**

Requisite Service

- Front brake pad replacement (page 13-4)
- Brake system air bleeding (page 13-25)

	Procedure	Q'ty	Remarks
	Removal Order		Installation is in the reverse order of removal.
(1)	Oil bolt	2	
(2)	Sealing washer	4	
(3)	Brake hose eyelet joint	2	At installation, press the eyelet joint stopper pin against the caliper body while tightening the oil bolt.
(4)	Caliper mounting flange bolt	2	
(5)	Right front brake caliper assembly	1	

Front Brake Caliper Disassembly/Assembly

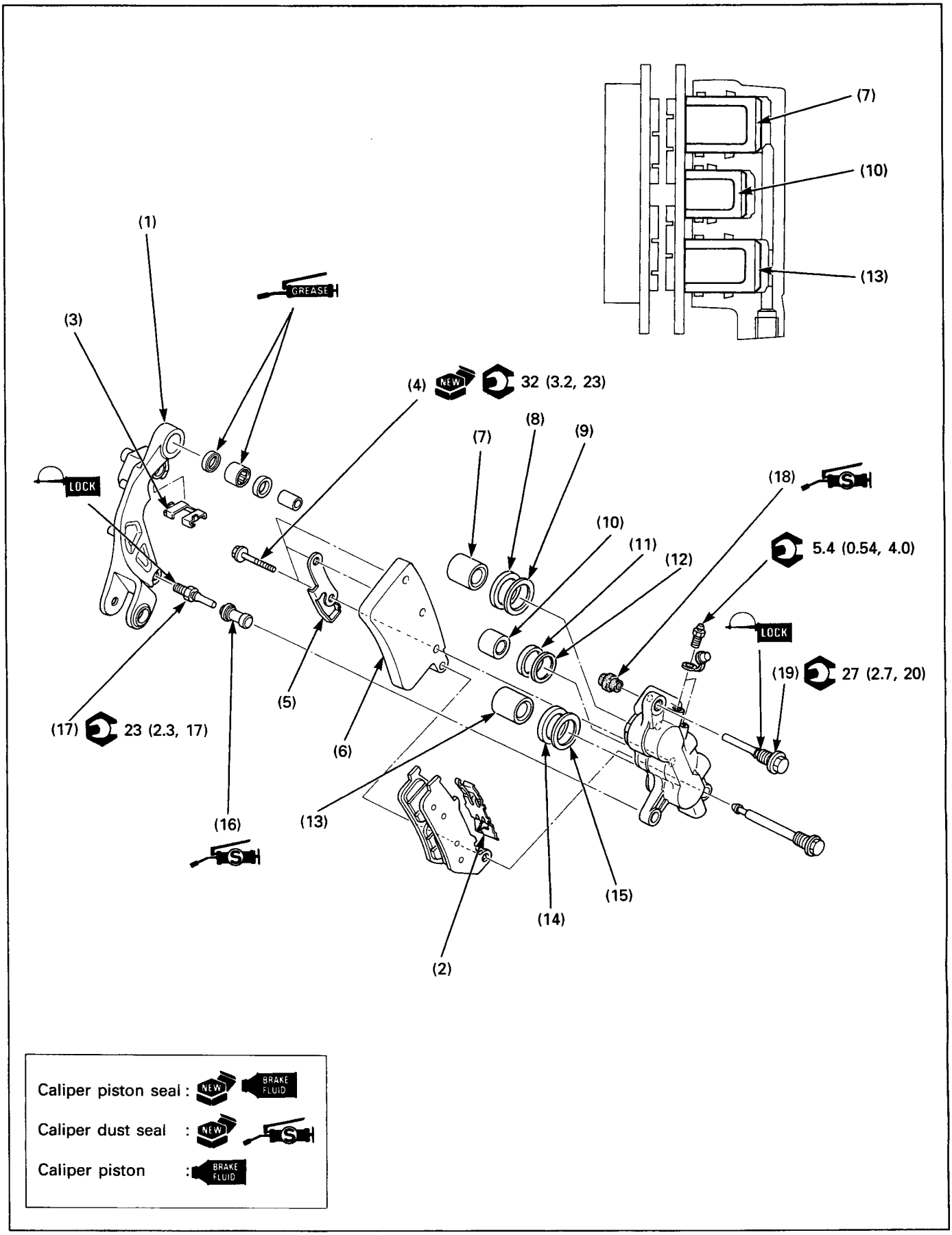

NOTE

- Note the location and direction of the caliper pistons, dust seals and piston seals.
- Replace the caliper piston seals and dust seals as a set.

Requisite Service

- Left front brake caliper removal/installation (page 13-6)
- Right front brake caliper removal/installtion (page13-8)

	Procedure	O'ty	Remarks
	Disassembly Order		Assembly is in the reverse order of disassembly.
(1)	Caliper bracket	1	
(2)	Brake pad spring	1	
(3)	Brake pad retainer	1	
(4)	Caliper body B mounting bolt	3	
(5)	Retainer	1	
(6)	Caliper body B	1	
(7)	Caliper piston (O.D. 27.0 mm)	1	
(8)	Dust seal	1	Apply silicone grease to the new dust seals.
(9)	Piston seal	1	
(10)	Caliper piston (O.D. 22.6 mm)	1	
(11)	Dust seal	1	
(12)	Piston seal	1	
(13)	Caliper piston (O.D. 25.4 mm)	1	
(14)	Dust seal	1	
(15)	Piston seal	1	
(16)	Bracket pin boot	1	
(17)	Bracket pin bolt	1	
(18)	Caliper pin boot	1	
(19)	Caliper pin bolt	1	

Rear Brake Caliper Removal/ Installation

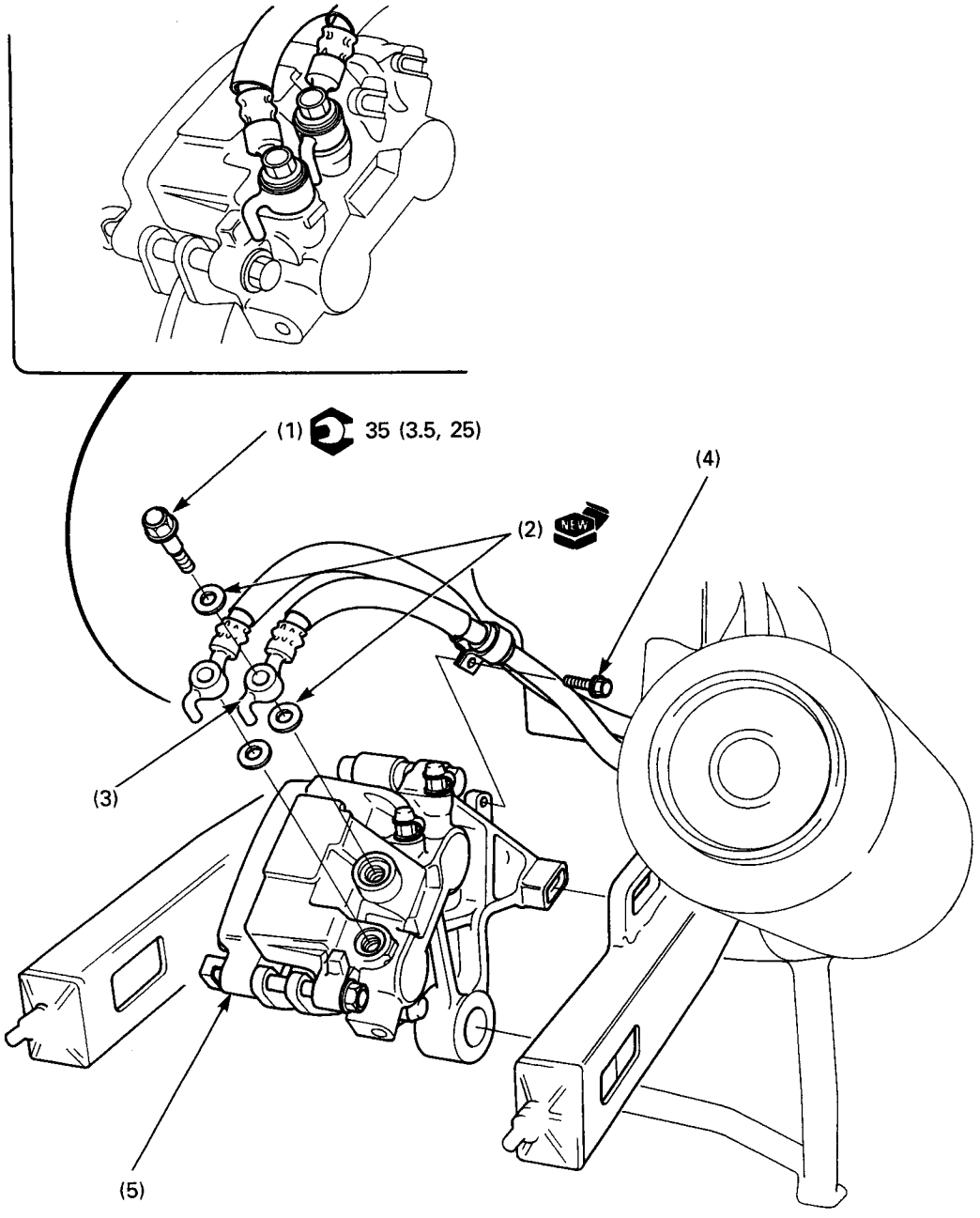

⚠ WARNING

- **A contaminated brake disc or pad reduces stopping power. Discard contaminated pads and clean a contaminated disc with a high quality brake degreasing agent.**

CAUTION

- **Avoid spilling brake fluid on painted, plastic, or rubber parts. Place a rag over these parts whenever the system is serviced.**

Requisite Service

- Rear brake pad replacement (page 13-5)
- Brake system air bleeding (page 13-25)
- Rear wheel removal/installation (page 12-2)

	Procedure	O'ty	Remarks
	Removal Order		Installation is in the reverse order of removal.
(1)	Oil bolt	2	
(2)	Sealing washer	4	
(3)	Brake hose eyelet joint	2	At installation, press the eyelet joint stopper pin against the caliper body while tightening the oil bolt.
(4)	Brake hose clamp bolt	1	
(5)	Rear brake caliper/bracket assembly	1	

Rear Brake Caliper Disassembly/Assembly

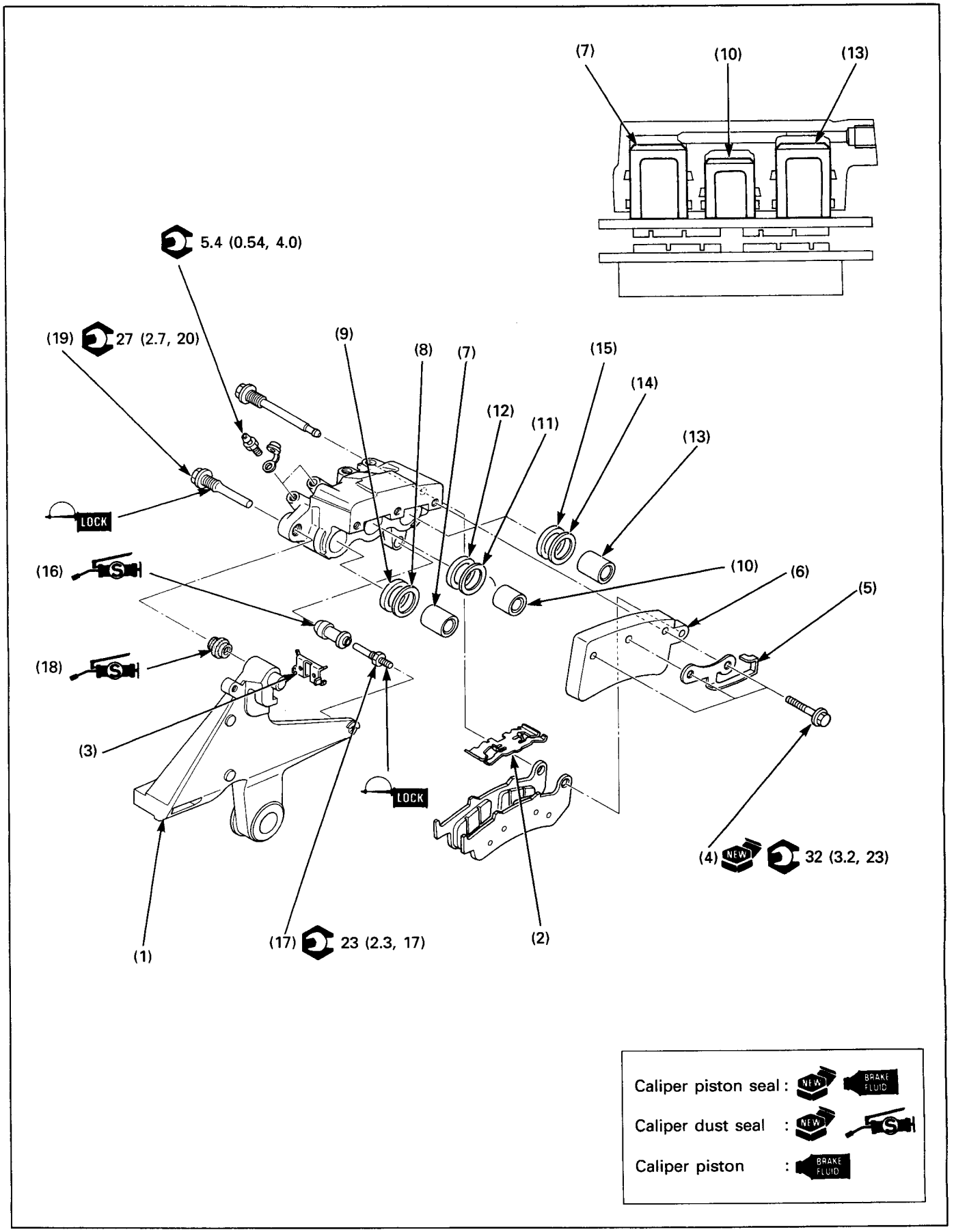

NOTE

- Note the location and direction of the caliper pistons, dust seals and piston seals.
- Replace the caliper piston seals and dust seals as a set.

Requisite Service

- Rear brake caliper removal/installation (page 13-12)

	Procedure	Q'ty	Remarks
	Disassembly Order		Assembly is in the reverse order of disassembly.
(1)	Caliper bracket	1	
(2)	Brake pad spring	1	
(3)	Brake pad retainer	1	
(4)	Caliper body B mounting bolt	3	
(5)	Retainer	1	
(6)	Caliper body B	1	
(7)	Caliper piston (O.D. 27.0 mm)	1	
(8)	Dust seal	1	Apply silicone grease to the new dust seals.
(9)	Piston seal	1	
(10)	Caliper piston (O.D. 22.6 mm)	1	
(11)	Dust seal	1	
(12)	Piston seal	1	
(13)	Caliper piston (O.D. 25.4 mm)	1	
(14)	Dust seal	1	
(15)	Piston seal	1	
(16)	Bracket pin boot	1	
(17)	Bracket pin bolt	1	
(18)	Caliper pin boot	1	
(19)	Caliper pin bolt	1	

Front Master Cylinder Removal/Installation

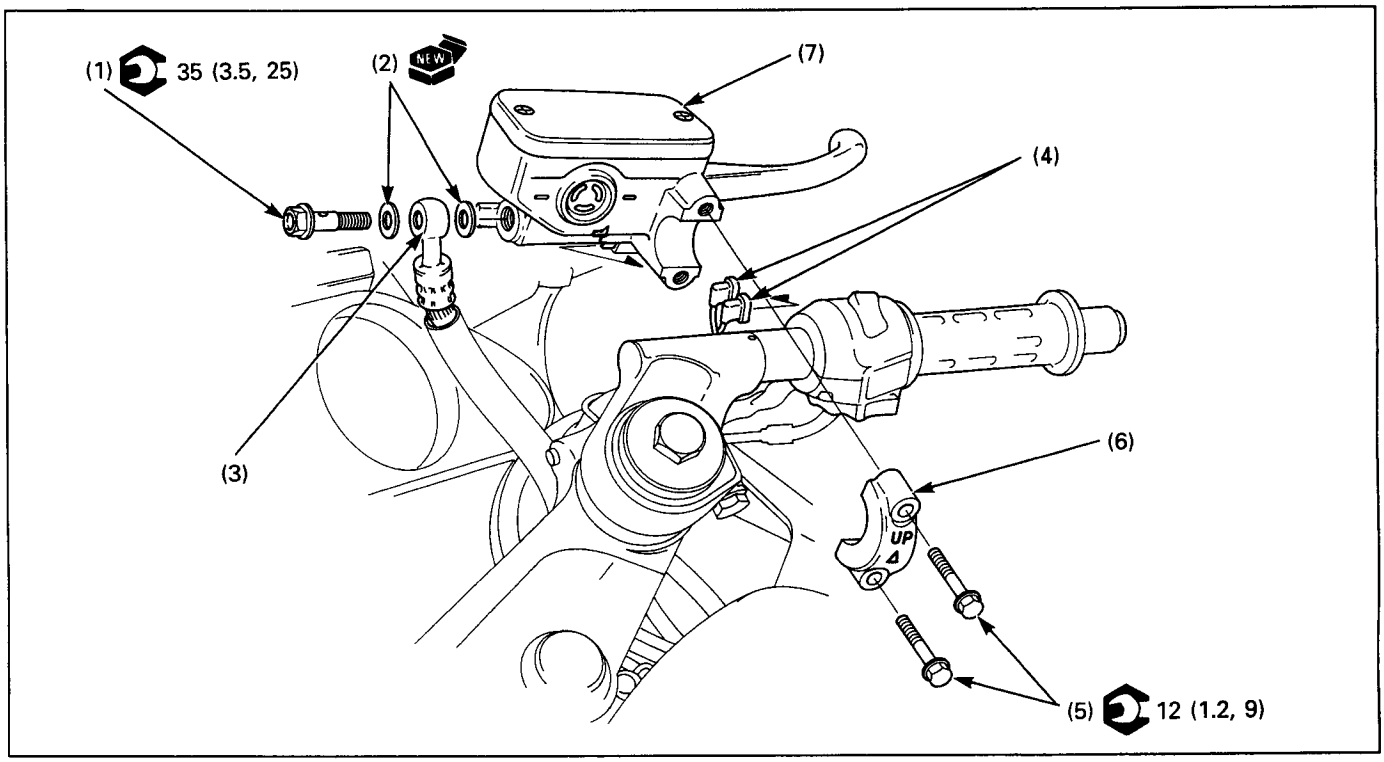

CAUTION

- **Avoid spilling brake fluid on painted, plastic, or rubber parts. Place a rag over these parts whenever the system is serviced.**
- **When removing the oil bolt, cover the end of the brake hose to prevent contamination.**
- **Do not allow foreign material to enter the system.**

NOTE

- Use DOT 4 brake fluid from a sealed container.

Requisite Service

- Brake system air bleeding (page 13-25)

	Procedure	Q'ty	Remarks
	Removal Order		Installation is in the reverse order of removal.
(1)	Oil bolt	1	
(2)	Sealing washer	2	
(3)	Brake hose eyelet joint	1	At installation, press the eyelet joint against the stopper while tightening the oil bolt.
(4)	Brake light switch connector	2	
(5)	Master cylinder holder bolt	2	At installation, tighten the upper bolt first, then the lower bolt.
(6)	Master cylinder holder	1	At installation, install the holder with its "UP" mark facing up.
(7)	Master cylinder	1	At installation, align the mating surface with the punch mark on the handlebar.

Front Master Cylinder Disassembly/Assembly

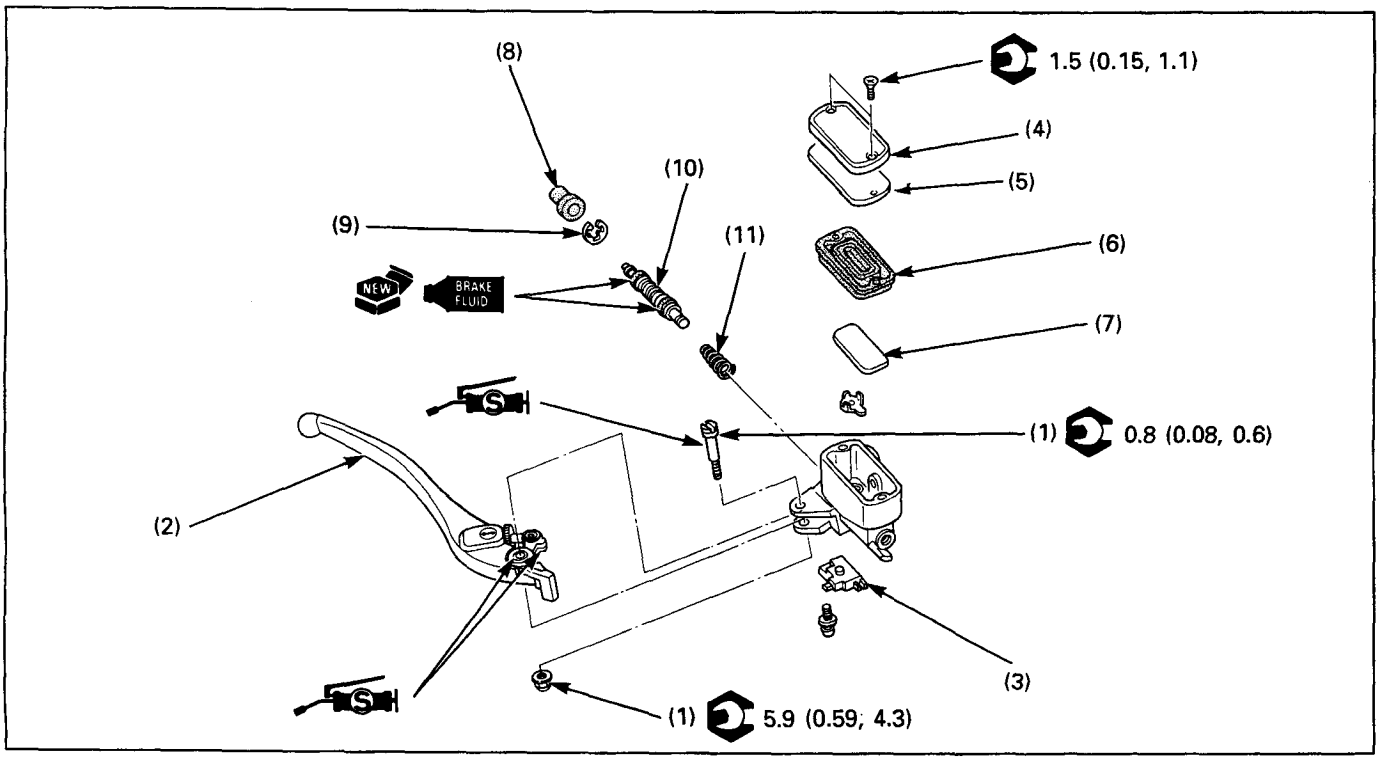

NOTE

- Replace the master piston, spring, cups, stopper plate, snap ring and boot as a set.
- The master piston, cups and spring must be installed as a set.

Requisite Service

- Front brake master cylinder removal/installation (page 13-16)

	Procedure	Q'ty	Remarks
	Disassembly Order		Assembly is in the reverse order of disassembly.
(1)	Brake lever pivot bolt/nut	1/1	
(2)	Brake lever assembly	1	
(3)	Brake light switch	1	
(4)	Reservoir cover	1	
(5)	Diaphragm plate	1	
(6)	Diaphragm	1	
(7)	Float	1	
(8)	Boot	1	
(9)	Snap ring	1	**CAUTION** • **Be certain the snap ring is fully seated in the groove.**
(10)	Master piston assembly	1	
(11)	Spring	1	Install the spring with the small coil end facing to the piston.

Rear Master Cylinder Removal/Installation

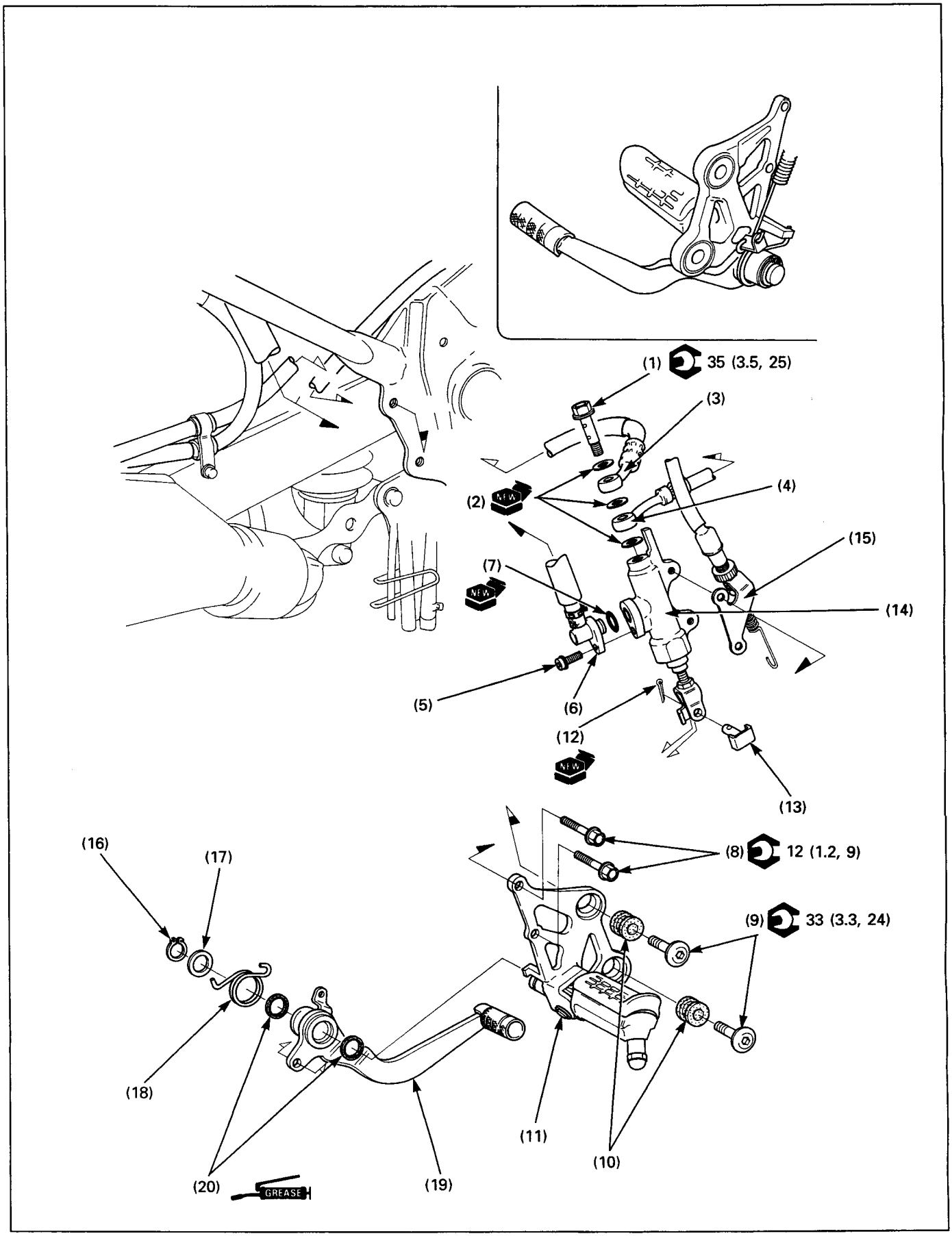

CAUTION

- **Avoid spilling brake fluid on painted, plastic, or rubber parts. Place a rag over these parts whenever the system is serviced.**

NOTE

- Use DOT 4 brake fluid from a sealed container.

Requisite Service

- Brake system air bleeding (page 13-25)

	Procedure	Q'ty	Remarks
	Removal Order		Installation is in the reverse order of removal.
(1)	Oil bolt	1	
(2)	Sealing washer	3	
(3)	Brake hose eyelet joint (To rear caliper)	1	
(4)	Brake hose eyelet joint (To front caliper)	1	
(5)	Screw	1	
(6)	Reserve tank hose joint	1	
(7)	O-ring	1	
(8)	Master cylinder mounting bolt	2	
(9)	Step holder bolt	2	
(10)	Step holder rubber	2	
(11)	Step holder assembly	1	
(12)	Cotter pin	1	
(13)	Joint pin	1	
(14)	Master cylinder	1	
(15)	Brake light switch bracket	1	
(16)	Snap ring	1	
(17)	Washer	1	
(18)	Return spring	1	
(19)	Brake pedal	1	
(20)	Dust seal	2	

Rear Master Cylinder Disassembly/Assembly

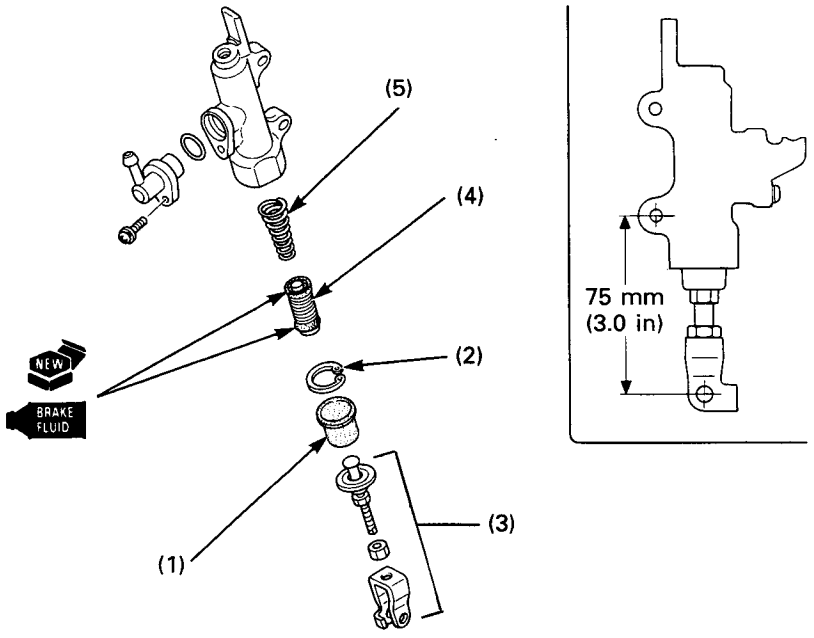

NOTE

- Replace the master piston, spring, cups, snap ring and boot as a set.
- The master piston, cups and spring must be installed as a set.

Requisite Service

- Rear master cylinder removal/installation (page 13-18)

	Procedure	Q'ty	Remarks
	Disassembly Order		Assembly is in the reverse order of disassembly.
(1)	Boot	1	
(2)	Snap ring	1	**CAUTION** • **Be certain the snap ring is fully seated in the groove.**
(3)	Push rod assembly	1	Adjust the push rod joint install length as shown.
(4)	Master piston	1	
(5)	Spring	1	Install the spring with the small coil end facing the piston.

Secondary Master Cylinder Removal/Installation

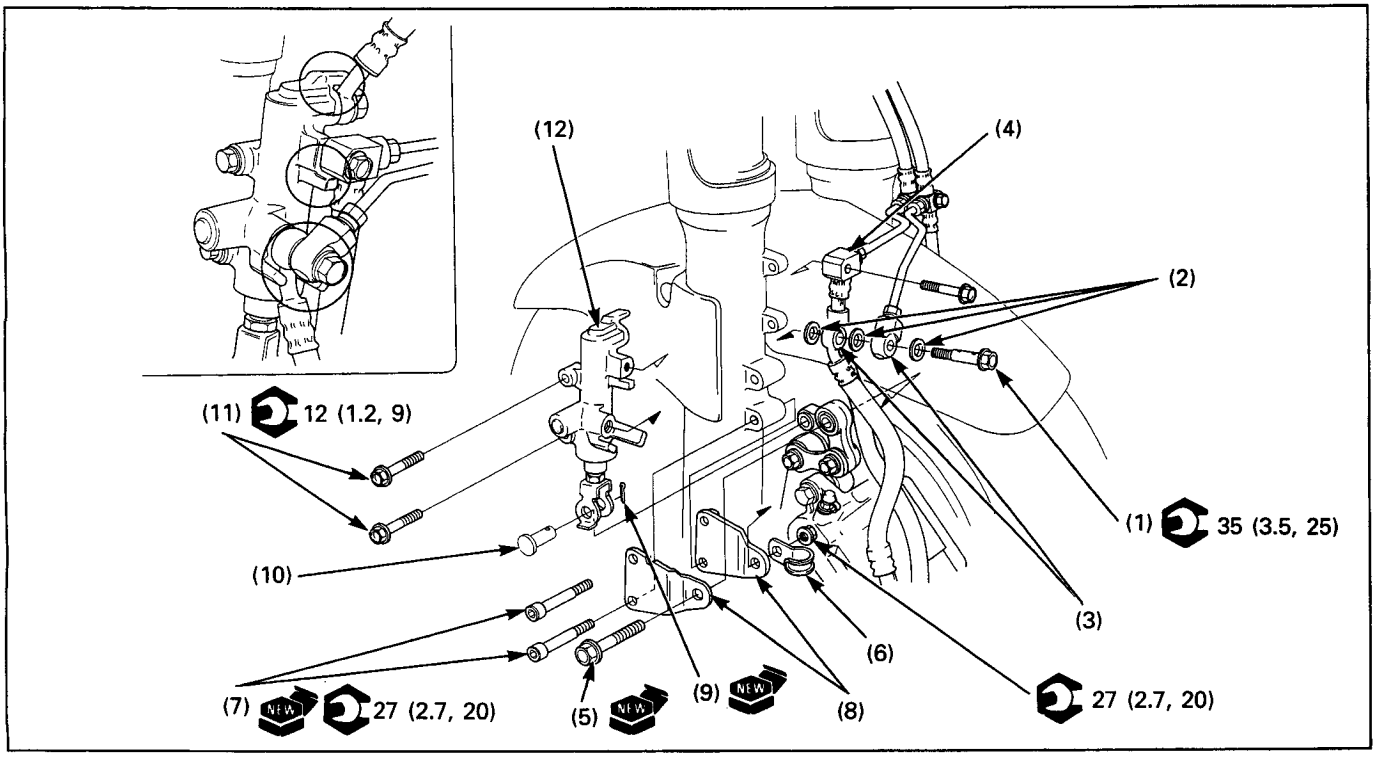

CAUTION

- **Avoid spilling brake fluid on painted, plastic, or rubber parts. Place a rag over these parts whenever the system is serviced.**
- **When removing the oil bolt, cover the end of the brake hose to prevent contamination.**
- **Do not allow foreign material to enter the system.**

Requisite Service

- Brake system air bleeding (page 13-25)

	Procedure	Q'ty	Remarks
	Removal Order		Installation is in the reverse order of removal.
(1)	Oil bolt	1	
(2)	Sealing washer	3	
(3)	Brake hose eyelet joint/brake pipe joint	1/1	
(4)	Brake pipe joint	1	
(5)	Brake link bolt/nut	1/1	
(6)	Brake hose clamp	1	
(7)	Brake link bracket bolt	2	
(8)	Brake link bracket	2	
(9)	Cotter pin	1	
(10)	Joint pin	1	
(11)	Secondary master cylinder mounting bolt	2	
(12)	Secondary master cylinder	1	

Secondary Master Cylinder Disassembly/Assembly

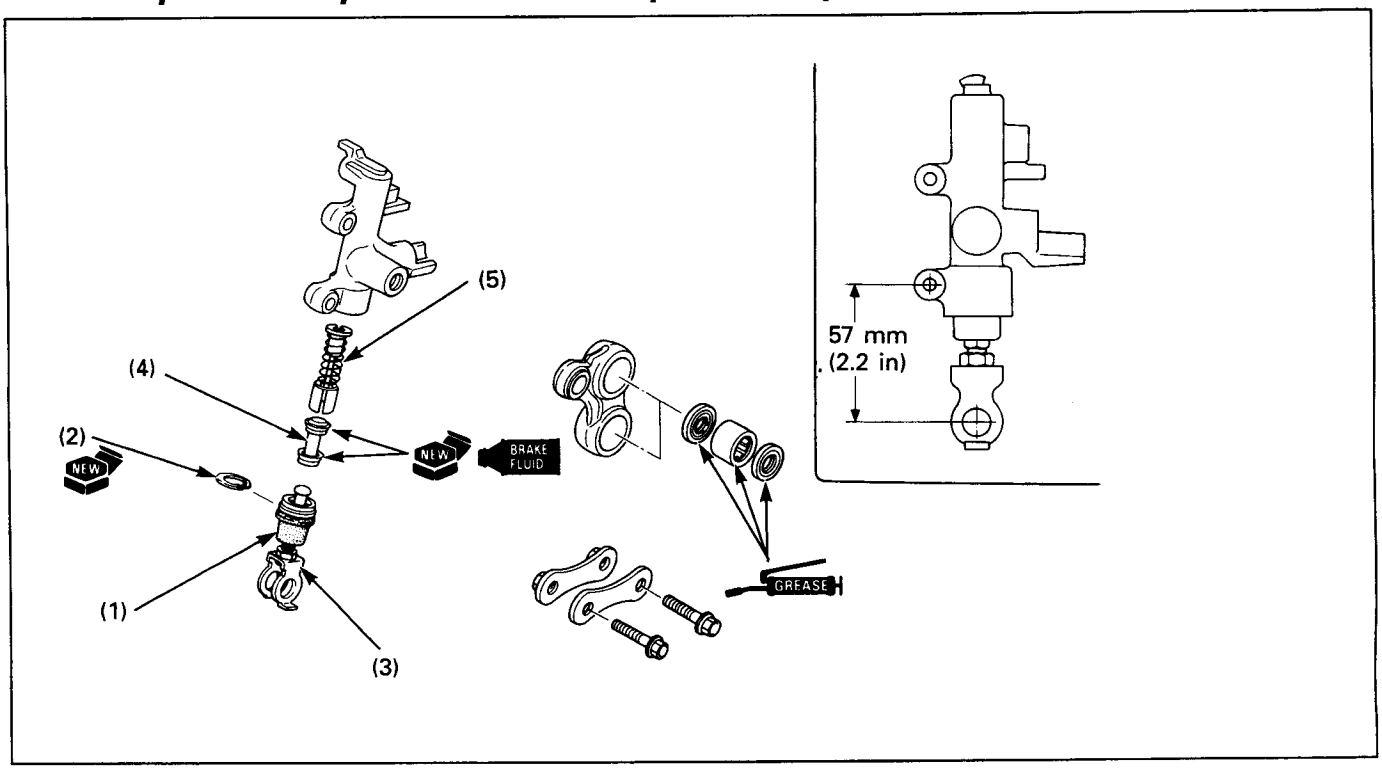

NOTE

- Replace the master piston, spring, cups, snap ring and boot as a set.
- The master piston, cups and spring must be installed as a set.

Requisite Service

- Secondary master cylinder removal/installation (page 13-21)

	Procedure	Q'ty	Remarks
	Disassembly Order		Assembly is in the reverse order of disassembly.
(1)	Boot	1	
(2)	Snap ring	1	**CAUTION** • **Be certain the snap ring is fully seated in the groove.**
(3)	Push rod assembly	1	Removal/installation (page 13-23) **CAUTION** • **Do not disassemble the secondary master cylinder push rod or the correct brake performance is not obtained.**
(4)	Master piston	1	
(5)	Spring assembly	1	

Push Rod Removal/Installation

Remove the boot from the secondary master cylinder.

Set the snap ring pliers to the snap ring.
Hold the snap ring pliers and tilt the push rod, then remove the push rod assembly from the master cylinder.

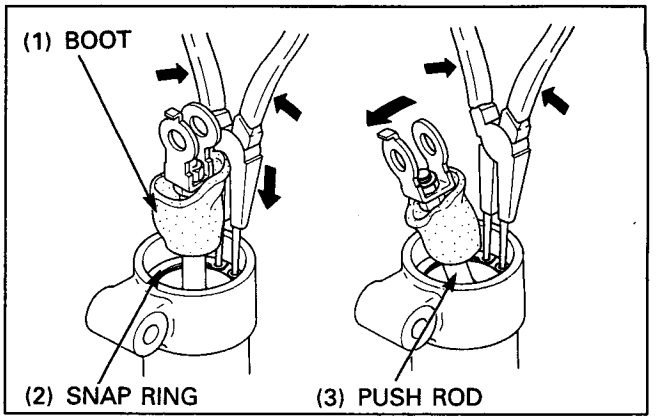

Install the new snap ring onto the push rod.

Install the push rod assembly into the master cylinder.
Install the snap ring into the master cylinder groove securely.

Make sure the snap ring is seated into the master cylinder groove and stopper plate as shown.

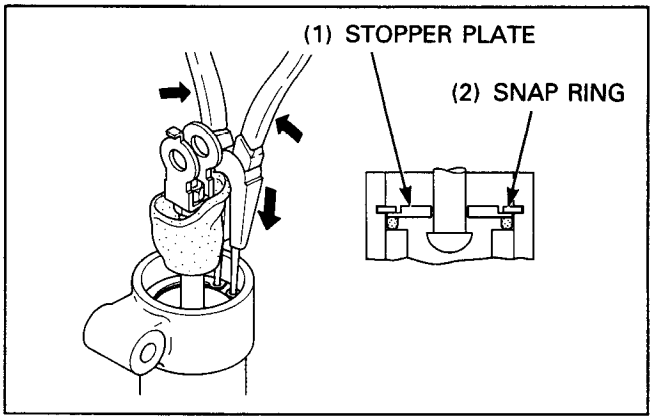

Check that the snap ring is rotated freely into the groove.

Measure the snap ring end gap is 5.2 mm or more.

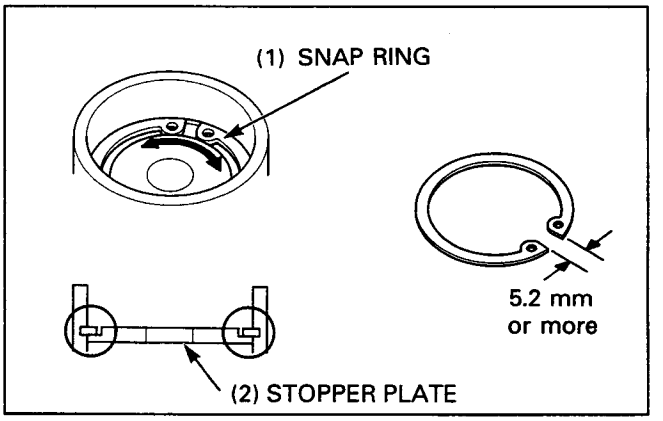

Proportional Control Valve Removal/Installation

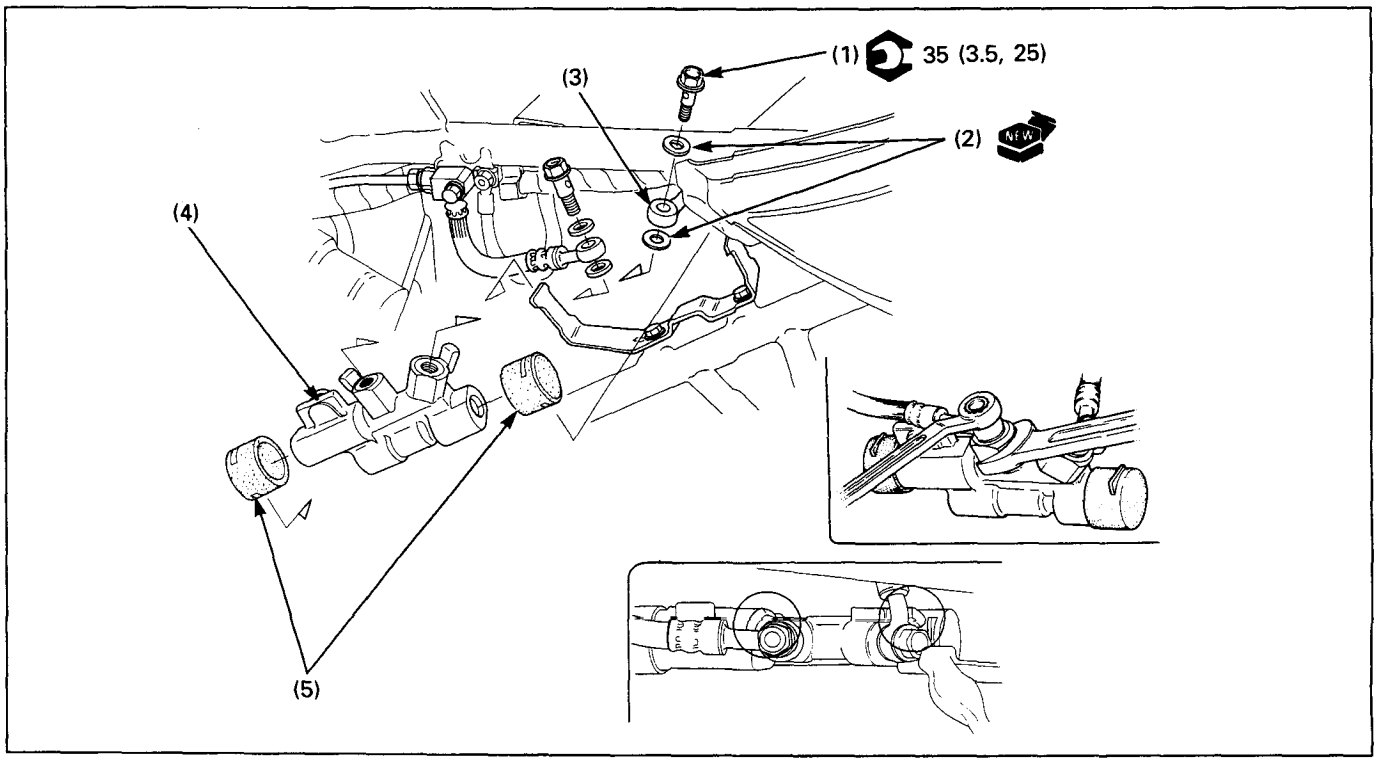

CAUTION

- **Avoid spilling brake fluid on painted, plastic, or rubber parts. Place a rag over these parts whenever the system is serviced.**
- **When removing the oil bolt, cover the end of the brake hose to prevent contamination.**
- **Do not disassemble the proportional control valve.**

Requisite Service

- Seal cowl removal/installation (page 2-4)
- Brake system air bleeding (page 13-25)

	Procedure	Q'ty	Remarks
	Removal Order		Installation is in the reverse order of removal.
(1)	Oil bolt	2	Hold the proportional control valve using a open end wrench, then loosen or tightening the bolts.
(2)	Sealing washer	4	
(3)	Brake hose eyelet joint	2	
(4)	Proportional control valve assembly	1	
(5)	Rubber suspension	2	

System Air Bleeding

⚠ WARNING

- **A contaminated brake disc or pad reduces stopping power.**

NOTE

- Once the hydraulic system has been opened, or if the brake feels spongy, the system must be bled.
- When using a commercially available brake bleeder, follow the manufacturer's operating instructions.

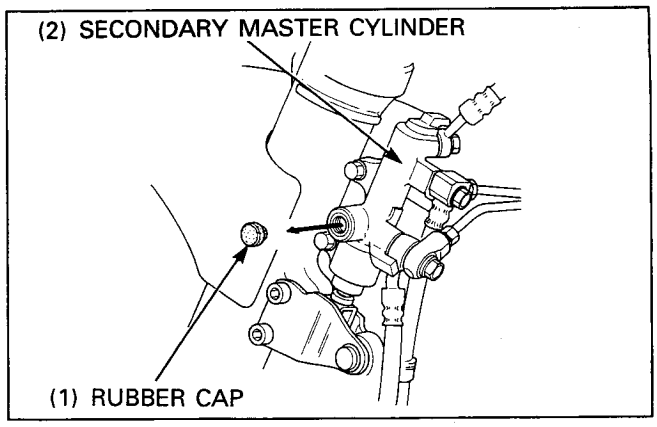

Support the motorcycle on its center stand.

Remove the secondary master cylinder orifice bolt rubber cap.

Loosen the orifice bolt fully until its seats on the snap ring.

NOTE

- Make sure that the secondary master cylinder orifice bolt is loosened before you starting the air bleeding procedure, or it may be difficult to bleed the air completely.
- After air bleeding, tighten the orifice bolt securely. If the orifice bolt is not tightened, correct brake performance is not obtained.
- It it not necessary to loosen the orifice bolt when you bleed the air from the lever brake line only.

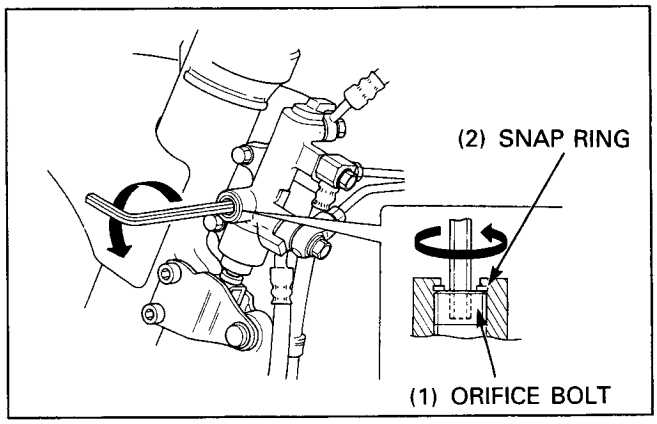

Lever Brake Line Air Bleeding

Remove the following:
- Screws
- Reservoir cover
- Set plate
- Diaphragm

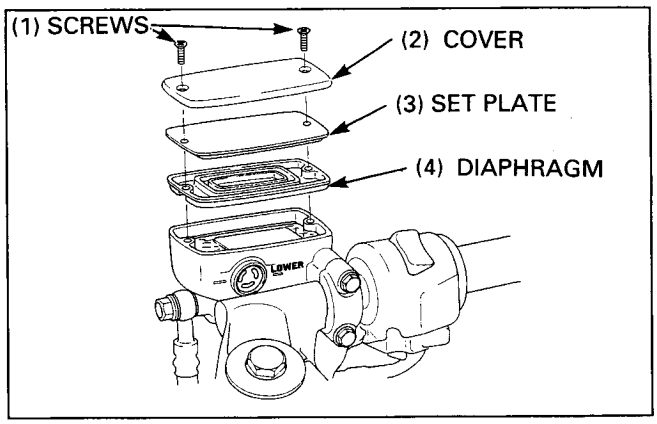

Turn the brake lever adjuster so that the lever is further away from the handlebar.

Operate the brake lever several times (about 8-10 times), bleed the air from the master cylinder.

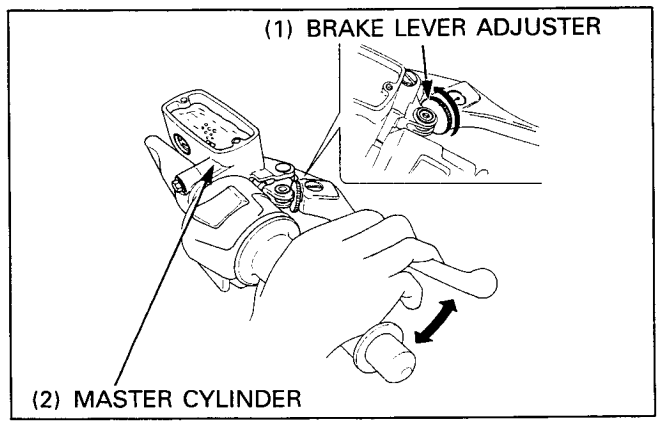

Connect a commercially available Brake Bleeder to the *front* brake caliper outer bleed valve.

NOTE

- When using a brake bleeder, follow the manufacturer's operating instructions.

Pump the brake bleeder and loosen the bleed valve.

Add DOT 4 brake fluid when the fluid level in the master cylinder is low.
Repeat the above procedures until not air bubbles appear in the tube.

NOTE

- Check the fluid level often while bleeding the brakes to prevent air from being pumped into the system.
- Use only DOT 4 brake fluid from a sealed container.
- If air is entering the bleeder from around the bleed valve threads, seal the threads with teflon tape.

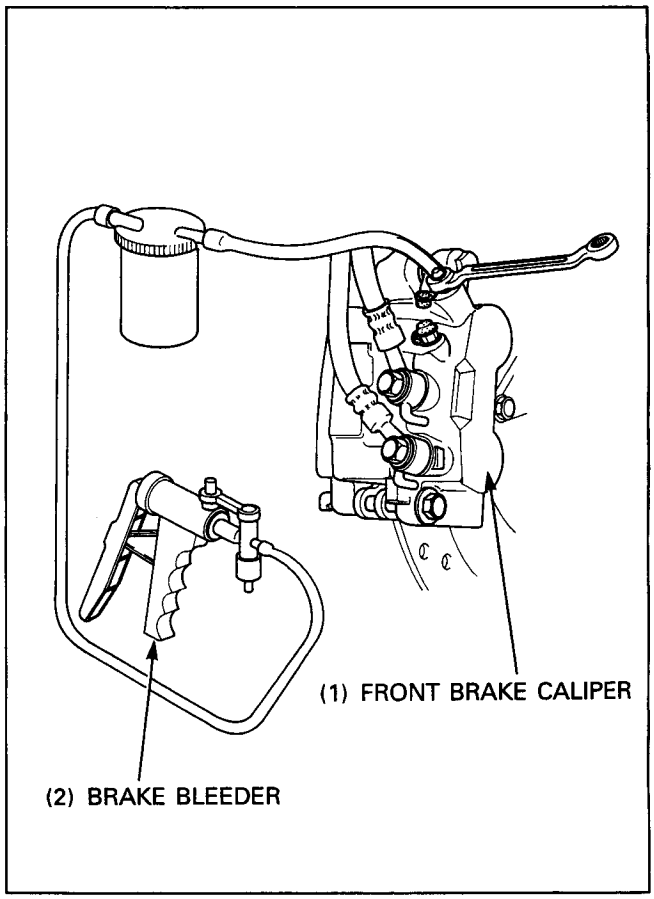

If the brake bleeder is not available, perform the following procedures.

Connect the transparent bleeder tube to the bleed valve and place the outer end of the hose in a container.

1. Loosen the bleed valve 1/4 turn and pump the brake lever until the brake fluid flow out. Pump the brake lever 5-10 times, then pull in the brake lever all the way and loosen the bleed valve.

NOTE

- Do not release the brake lever while opening the bleed valve.

Close the bleed valve.

2. Release the brake lever slowly and wait several seconds after it reaches the end of its travel.
3. Repeat above step 1 and 2 until bubbles cease to appear in the fluid at the end of the bleed tube and lever resistance is felt.

Tighten each bleed valve to the specified torque.

Torque: 5.4 N•m (0.54 kg-m, 3.9 ft-lb)

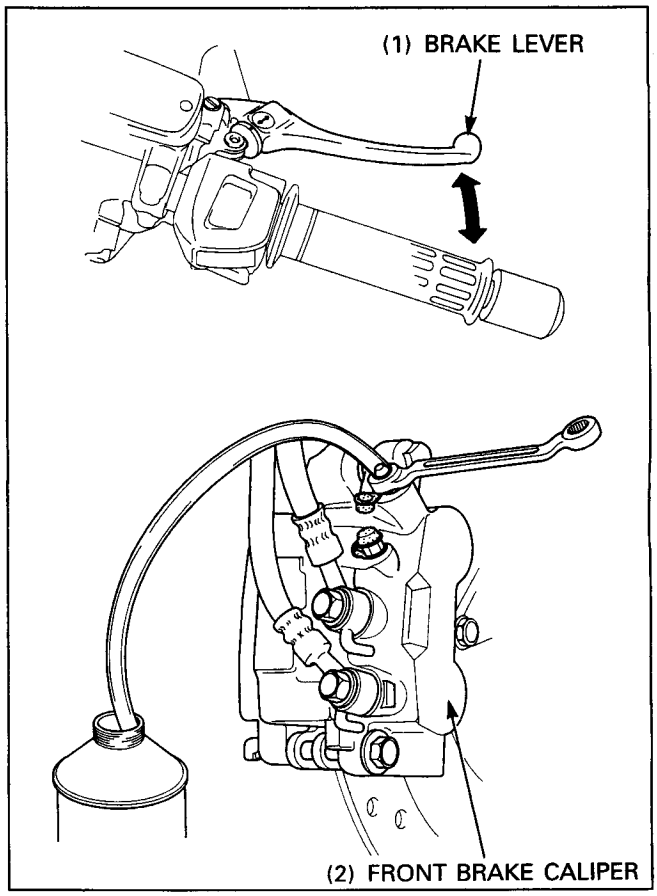

Fill the reservoir up to the "UPPER" level.

Specified brake fluid: DOT 4 brake fluid

Install the following:
- Diaphragm
- Set plate
- Reservoir cover
- Screws

Turn the adjuster, adjust the brake lever position.

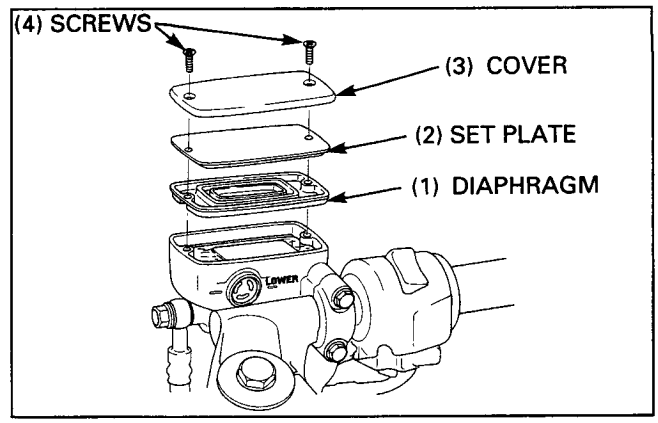

Pedal Brake Line Air Bleeding

NOTE

- For correct air bleeding, comprehend the pedal brake line referring to the Technical Feature in section 19.
- Make sure the secondary master cylinder orifice bolt is loosened fully until it seats on the snap ring.
- Bleed the air from the pedal brake line in the sequence as follow:
  1. Right front brake caliper center bleeder
  2. Left front brake caliper center bleeder
  3. Rear brake caliper center bleeder
  4. Rear brake caliper outer bleeder

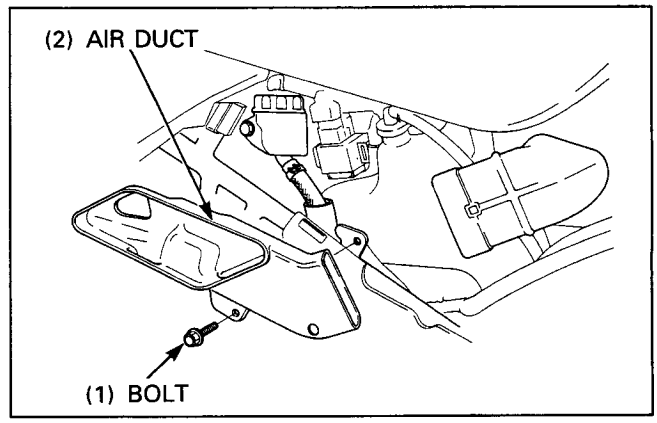

Remove the right side cover (page 2-3).
Remove the bolt and intake air duct.

Remove the rear master cylinder reservoir tank mounting bolt.

Remove the following:
- Reservoir cap
- Set plate
- Diaphragm

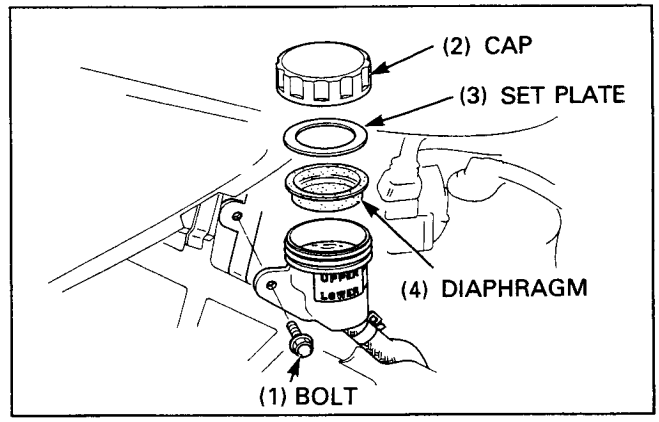

Fill the reservoir DOT 4 brake fluid.
Pump the brake pedal while filling the brake fluid and feed fluid into the master cylinder.

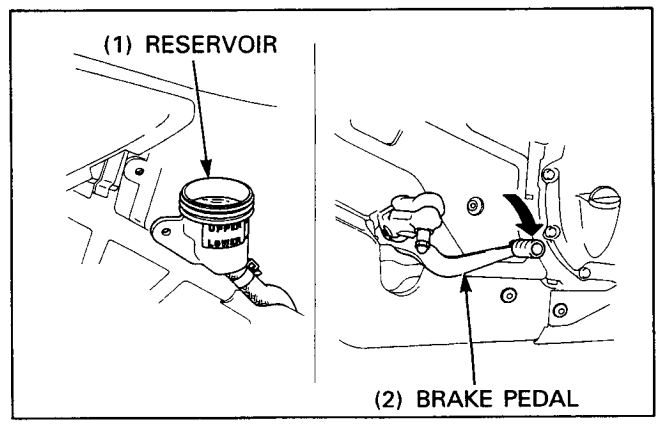

1. Connect a commercially available Brake Bleeder to the right front brake caliper center bleed valve.

NOTE

- When using a brake bleeder, follow the manufacturer's operating instructions.

Pump the brake bleeder and loosen the bleed valve.
Operate the brake bleeder and feed the brake fluid until fluid flow out from the bleeder valve.
Close the bleeder valve.

2. Feed the brake fluid at the left front brake caliper center bleeder valve as same procedures in step 1.
3. Feed the brake fluid at the rear brake caliper center bleeder valve as same procedures in step 1.
4. Feed the brake fluid at the rear brake caliper outer bleeder valve as same procedures in step 1.
5. Repeat step 1-4 until the pedal resistance is felt.

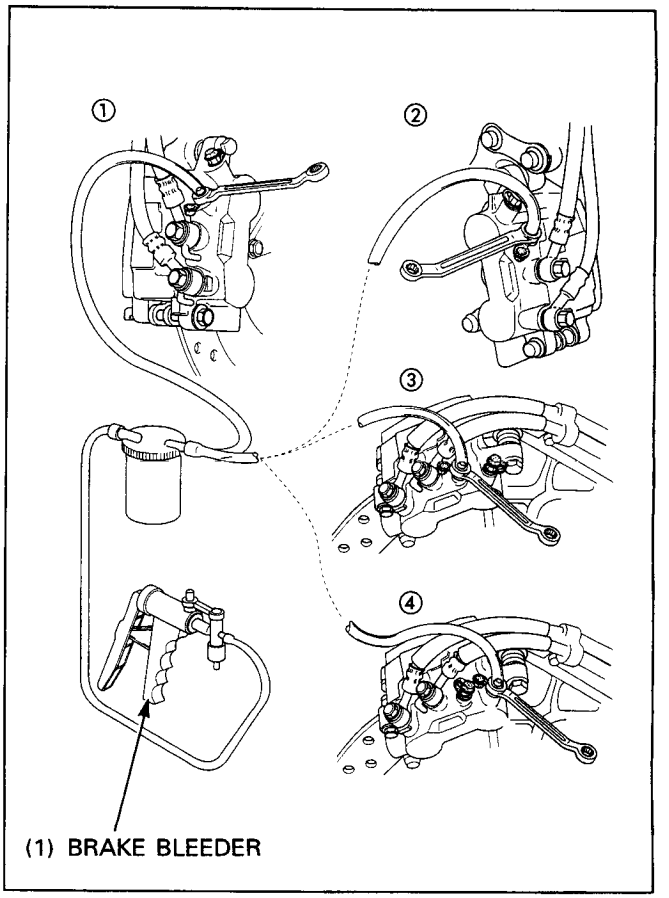

Next bleed the air from the system without using a brake bleeder tool.

Connect the transparent bleeder tube to the bleed valve and place the outer end of the hose in a container.

1. Pump the brake pedal 5-10 times, then release the pedal. Loosen the bleed valve, then pushing down the brake pedal all the way.

NOTE

- Do not release the brake pedal while opening the bleed valve.

Close the bleed valve.

2. Release the brake pedal slowly and wait several seconds after it reaches the end of its travel.
3. Repeat above step 1 and 2 until bubbles cease to appear in the fluid at the end of the bleed tube and pedal resistance is felt.

NOTE

- After the bubbles cease to appear in the fluid, repeat air bleeding procedure about 2-3 times.
- Elaborately bleed the air from the rear brake caliper outer bleeder valve (From secondary master cylinder -to- Proportional control valve -to- rear caliper line).

Tighten the each bleed valve to the specified torque.

Torque: 5.4 N•m (0.54 kg-m, 3.9 ft-lb)

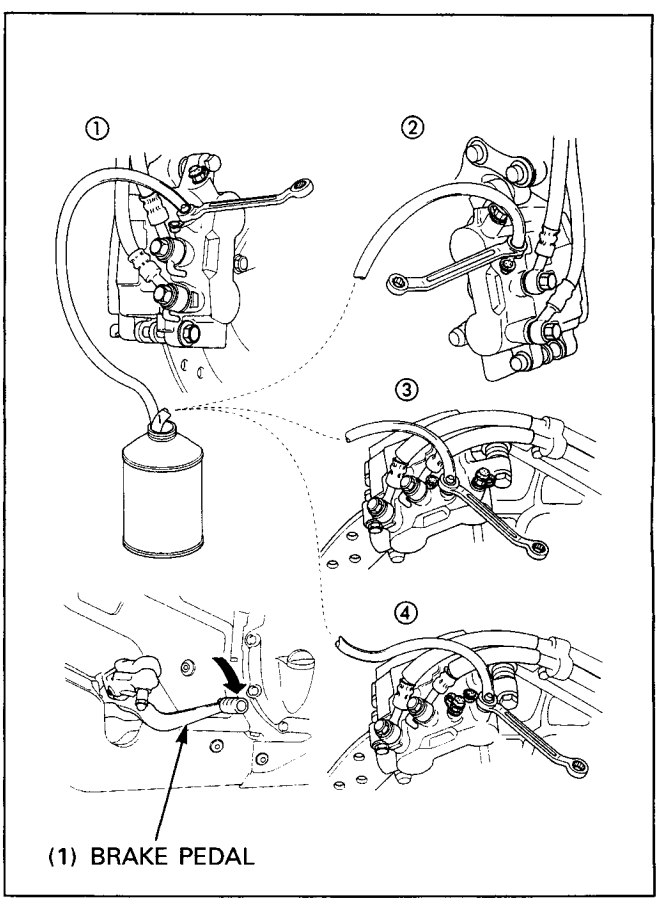

Fill the reservoir up to the "UPPER" level.

Specified brake fluid: DOT 4 brake fluid

Install the following:
- Diaphragm
- Set plate
- Reservoir cover

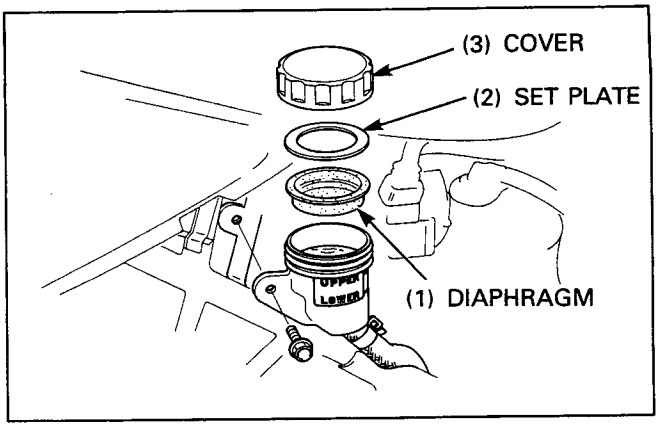

Tighten the secondary master cylinder orifice bolt to the specified torque.

Torque: 5.4 N•m (0.54 kg-m, 4.0 ft-lb)

NOTE

- After air bleeding, tighten the orifice bolt securely. If the orifice bolt is not tightened, correct brake performance is not obtained.

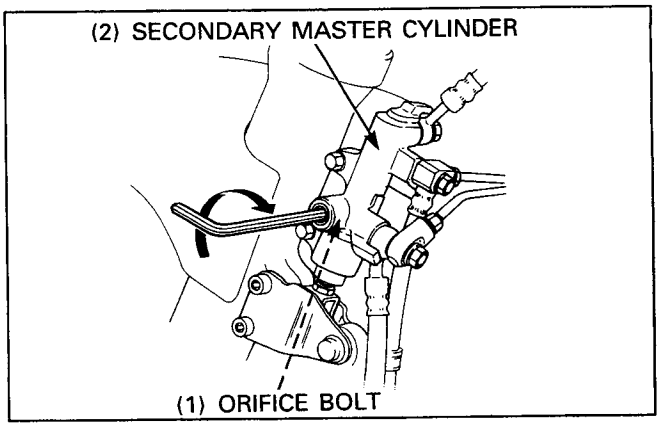

Install the secondary master cylinder orifice bolt rubber cap.

Check the brake system operation (page 3-13).

Install the removed parts the reverse order of removal.

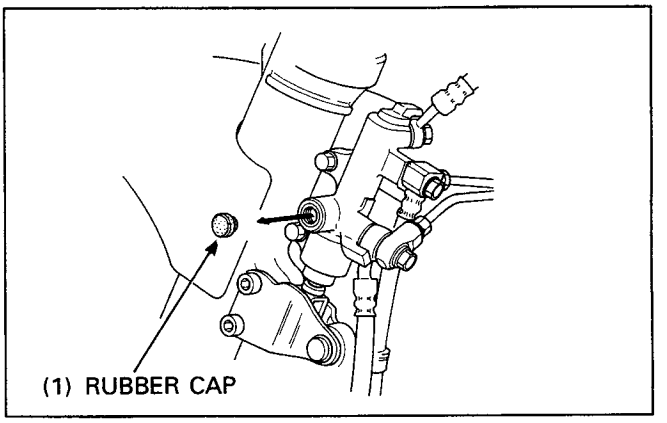

14. Charging System/Alternator

Service Information

⚠ WARNING

- **The battery gives off explosive gases; keep sparks, frames, and cigarettes away. Provide adequate ventilation when charging or using the battery in an enclosed space.**
- **The battery contains sulfuric acid (electrolyte). Contact with skin or eyes may cause severe burns. Wear protective clothing and a face shield.**
  - **If electrolyte gets on your skin, flush with water.**
  - **If electrolyte gets in your eyes, flush with water for at least 15 minutes and call a physician immediately.**
- **Electrolyte is poisonous. If swallowed, drink large quantities of water or milk and follow with milk of magnesia or vegetable oil and call a physician. KEEP OUT OF REACH OF CHILDREN.**

- Always turn off the ignition switch before disconnecting any electrical component.

CAUTION

- **Some electrical components may be damaged if terminals or connectors are connected or disconnected while the ignition switch is ON and current is present.**

- For extended storage, remove the battery, give it a full charge, and store it in a cool, dry space. For maximum service life, charge the stored battery every two weeks.
- For battery remaining in a stored motorcycle, disconnect the negative battery cable from the battery terminal.
- Use only distilled water in the battery.

CAUTION

- **Avoid filling the battery above the UPPER LEVEL line to prevent an electrolyte overflow which could corrode the engine or nearby parts.**

- Battery can be damaged if over charged or undercharged, or if left to discharge for long periods. These same conditions contribute to shortening the "life span" of the battery. Even under normal use, the performance of battery deteriorates after 2-3 years.
- Battery voltage may recover after battery charging, but under heavy load, battery voltage will drop quickly and eventually die out. For this reason, the charging system is often suspected to be the problem. Battery overcharge often result eventually problems in the battery itself, which may appear to be an overcharge symptom. If one of the battery cells is shorted and battery voltage does not increase, the regulator/rectifier supplies excess voltage to the battery. Under these conditions, the electrolyte level goes down quickly.
- Before troubleshooting the charging system, check the proper use and maintenance of the battery. Check if the battey is frequently under heavy load, such as having the headlight and taillight ON for long periods of time without riding the motorcycle.
- The battery will self-discharge when the motorcycle is not is use. For this reason, charge the battery every two weeks to prevent sulfation from forming.
- Filling a new battery with electrolyte will produce some voltage, but in order to achieve its maximum performance, always charge the battery. Also, the battery life is lengthened when it is initial-charged.
- When checking the charging system, always follow the steps in the troubleshooting flow chart (page 15-3).
- For battery testing/charging, refer to section 22 of the Common Service Manual.
- For charging system location, see page 15-2.

System Location

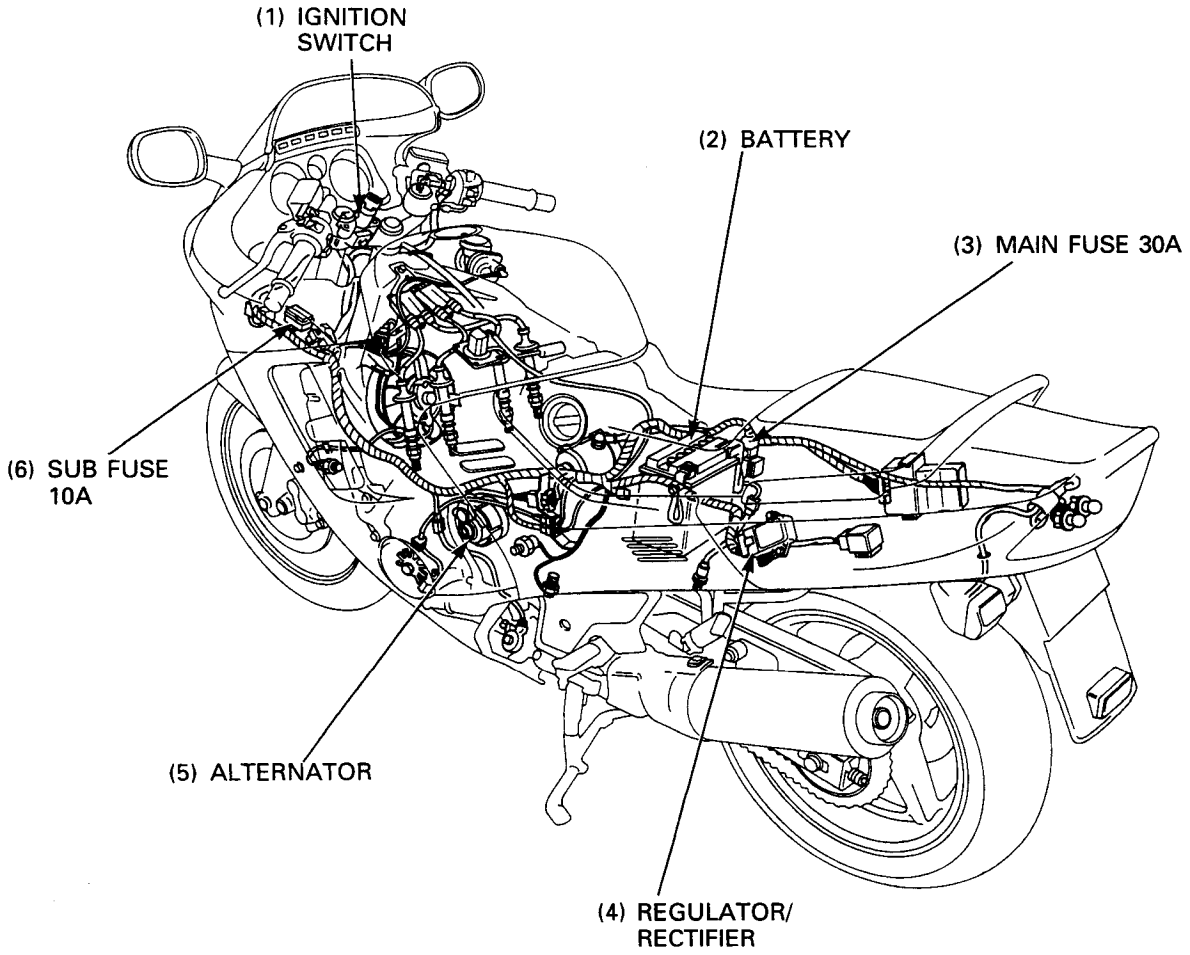

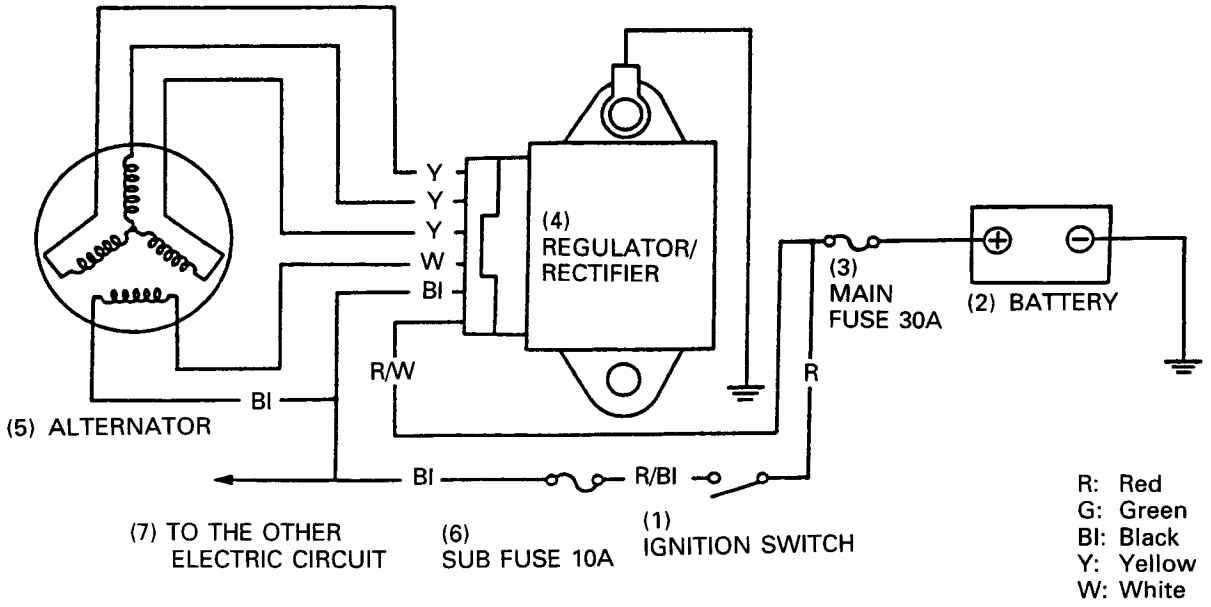

Troubleshooting

Battery Overcharging
- Faulty regulator/rectifier

Battery Undercharging

NOTE

- In order to obtain accurate test reading when charging system, the battery specific gravity must be greater than 1.27 (20°C/68°F) and in good condition. Common Service Manual section 22 for check the battery condition.

Measure the battery current leakage ampere (leak test: page 14-6).

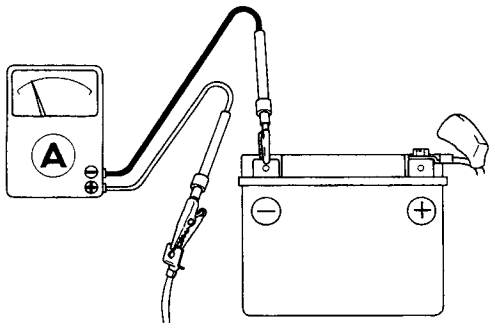

Standard : 0.1 mA max.

Incorrect →

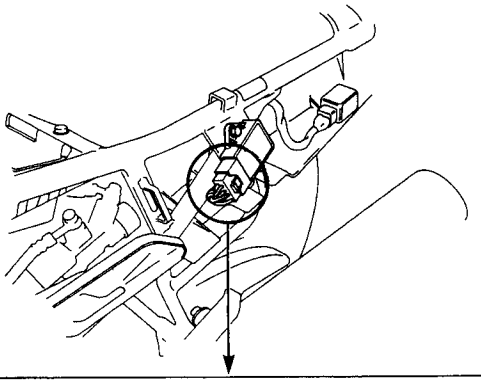

Check the regulator/rectifier (page 14-7).

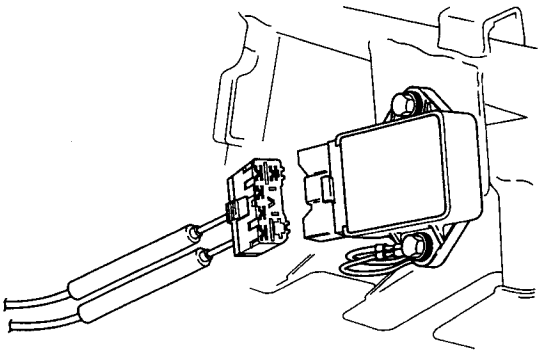

Correct →

Incorrect →
- Shorted wire harness
- Faulty ignition switch

- Faulty regulator/rectifier

Correct ↓

Inspect the regulated voltage (page 14-6).

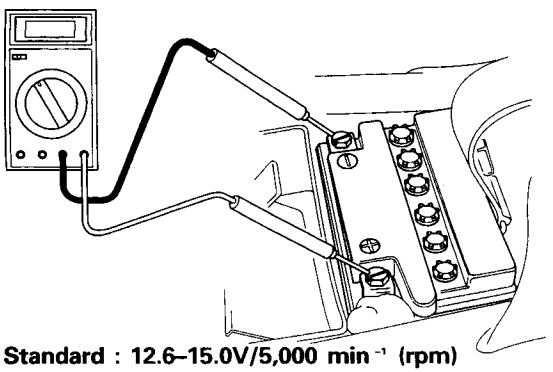

Standard : 12.6–15.0V/5,000 min⁻¹ (rpm)

Charging →

Check the battery using the battery tester.

Incorrect →
- Electric system over loading
- Faulty battery

Correct →
- Open circuit in wire harness
- Poorly connected connectors

Not charging ↓

Check the voltage between the regulator/recitifier battery charging line and ground line (page 14-7).

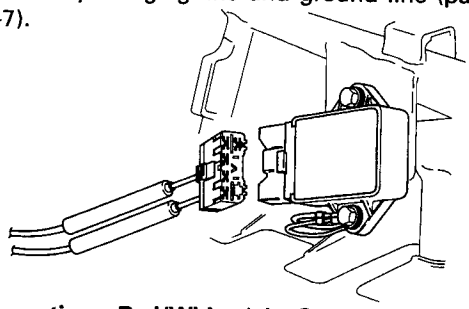

Connection : Red/White (+) – Green (–)
Standard : Battery voltage

Abnormal →
- Open circuit in wire harness
- Poorly connected connectors

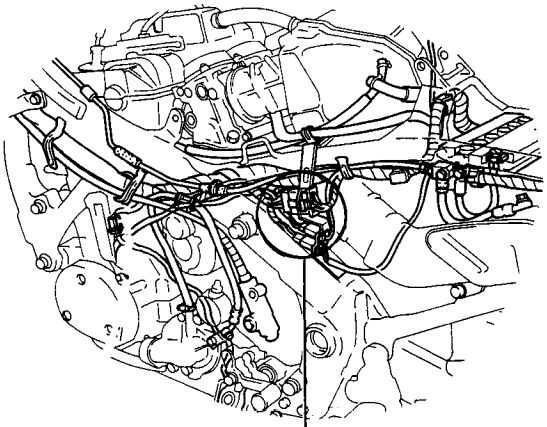

Normal ↓

Check the alternator (charging coil) resistance at the regulator/rectifier connector (page 14-7).

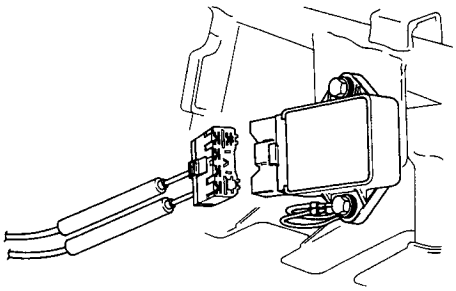

Connection : Yellow–Yellow
Standard : 0–1.0Ω

Abnormal →

Check the charging coil resistance at the alternator connector (page 14-8).

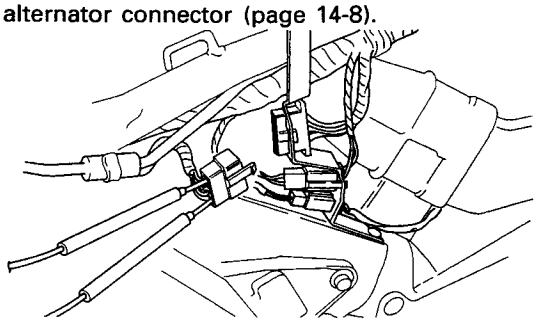

Connection : Yellow–Yellow
Standard : 0–1.0Ω

Abnormal →
- Faulty alternator

Normal →
- Poorly connected alternator connector
- Open or short circuit in Yellow wire

Normal ↓

Check the regulator/rectifier unit (page 14-8).

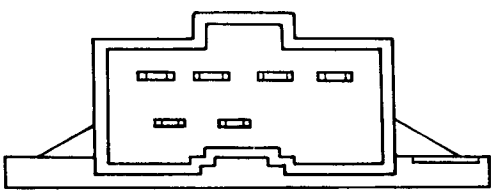

Abnormal →
- Faulty regulator/rectifier

Normal →
- Faulty battery

Battery Removal/Installation

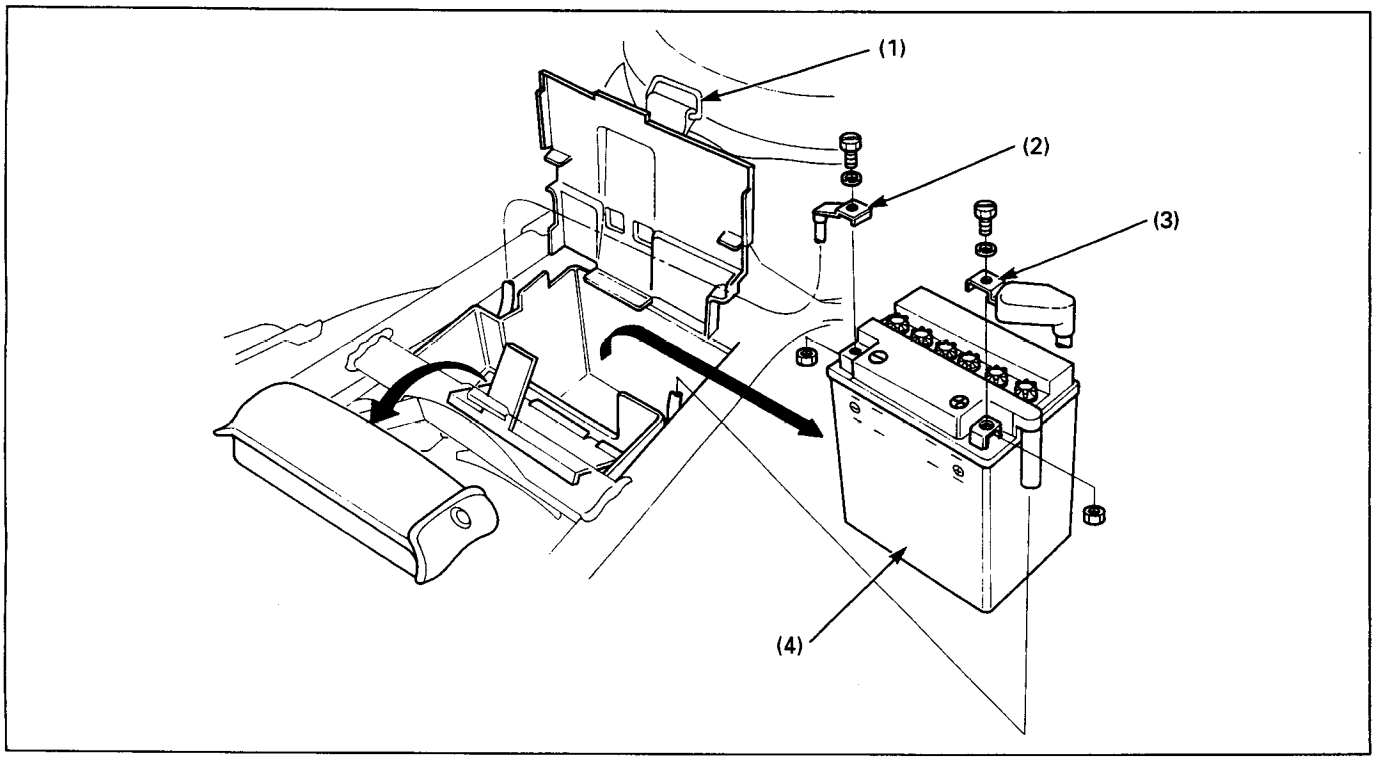

NOTE

- Always turn the ignition switch OFF before removing or installing the battery.

Requisite Service

- Seat removal/installation (page 2-3)

	Procedure	O'ty	Remarks
	Removal Order		Installation is in the reverse order of removal.
(1)	Battery holder band	1	Remove the hook from the battery cover, then open the battery cover.
(2)	Negative terminal	1	After installation, apply clean grease to the terminal.
(3)	Positive terminal	1	
(4)	Battery	1	

Charging System Inspection

Leakage Test

Turn the ignition switch off, and disconnect the ground (–) cable from the battery.

Connect the ammeter (+) probe to the ground cable and the ammeter (–) probe to the battery (–) terminal.
With the ignition switch off, check for current leakage.

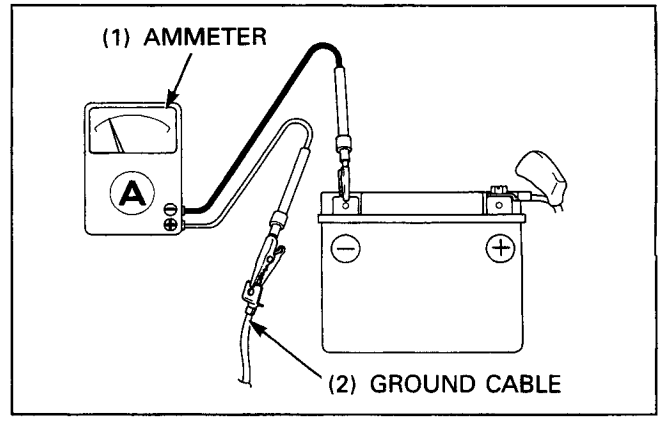

NOTE

- When measuring the current using a tester, set it to a high range, and then bring the range down to an appropriate level. Current flow larger than the range selected may blow out the fuse in the tester.
- While measuring current, do not turn the ignition switch ON. A sudden surge of current may blow out the fuse in the tester.

Specified Current Leakage: 0.1 mA max.

If current leakage exceeds the specified value, a shorted circuit is likely.

Regulated Voltage Inspection

NOTE

- Before performing this test, be sure the battery is fully charged and that its specific gravity is greater than 1.27 (20°C/68°F).

Start the engine and warm it to operating temperature, then turn the ignition switch OFF.

Connect the multimeter between the battery terminals.

S.TOOL

Digital multimeter	**07411–0020000**
Analogue tester	**07308–0020001**

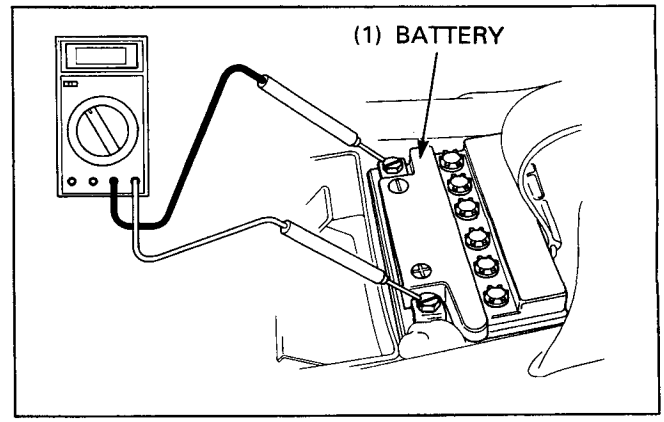

⚠ WARNING

- **If the engine must be running to do some work, make sure the area is well-ventilated. Never run the engine in an enclosed area.**
- **The exhaust contains poisonous carbon monoxide gas that may cause loss of consciousness and lead to death.**

Start the engine and increase the engine speed gradually and check that the voltage is regulated.

CAUTION

- **Be careful not to short any tester probes.**

Regulated Voltage: 12.6–15.0V/5,000 min^{-1} (rpm)

Regulator/Rectifier

System Inspection

Remove the seat cowl (page 2-4).

Disconnect the regulator/rectifier 6P connector.
Check the connectors for loose or corroded terminal.

Measure the following between connector terminal of the wire harness side.

Item	Terminals	Specification
Battery charging line	Red/White (+) and Green (–)	Battery voltage should register.
Ground line	Green and ground	Continuity exist.
Charging coil line	Yellow and Yellow	0–1.0Ω (20°C/68°F)

If the charging coil line reading is out of specification, check the alternator (page 14-8).

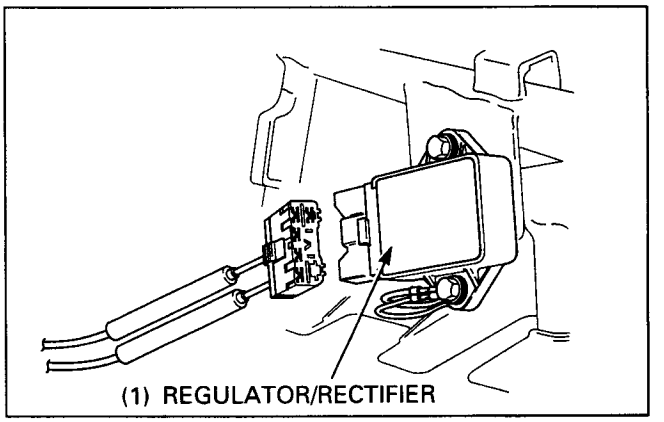

Unit Inspection

Provided the circuit on the wire harness side is normal and there are no loose connections at the connector, inspect the regulator/rectifier unit by measuring the resistance between the terminals.

NOTE

- You'll get false readings if the probes touch you fingers.
- Use the specified multimeters. Using other equipment may no allow you to obtain the correct results. This is due to the characteristic of semiconductors, which have different values depending on the applied voltage.
  Specific Multimeter:
  – 07411–0020000 (KOWA Digital type)
  – 07308–0020001 (SANWA Analogue type)
- Select the following range:
  SANWA: x kΩ
  KOWA: x 100
- An old battery stored in the multimeter could cause inaccurate readings. Check the battery if the multimeter resistance incorrectly.
- When using the KOWA multimeter, remember value that all readings should be multiplied by 100.

Replace the regulator/rectifier unit if the resistance value between the terminals is abnormal.

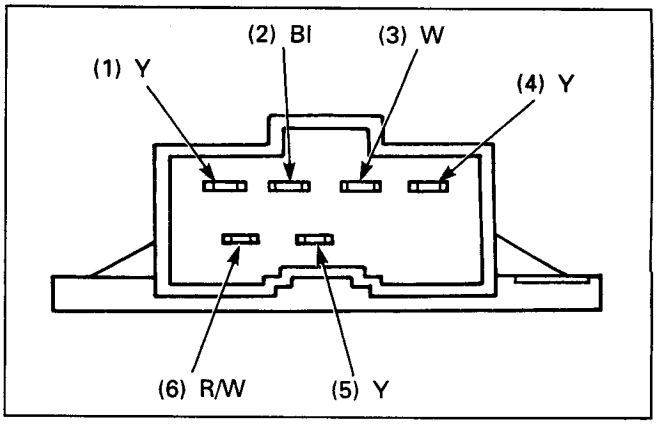

Unit : kΩ

⊖ \ ⊕	R/W	Y	Y	Y	Bl	W
R/W		∞	∞	∞	∞	∞
Y	0.5-50		∞	∞	∞	∞
Y	0.5-50	∞		∞	∞	∞
Y	0.5-50	∞	∞		∞	∞
Bl	1-70	1-70	1-70	1-70		1-30
W	1.5-100	1.5-100	1.5-100	1.5-100	0.5-30	

Removal

Disconnect the regulator/rectifier 6P connector.
Remove the mounting bolt and regulator/rectifier unit.

Installation is in the reverse order of removal.

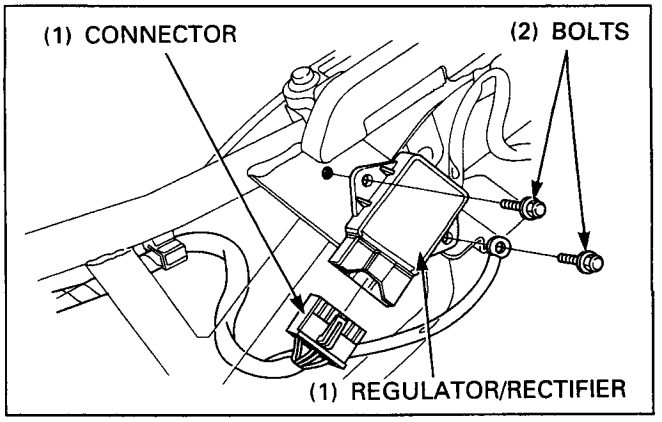

Alternator

NOTE

- It is not necessary to remove the stator to make this test.

Remove the lower fairing (page 2-6).
Disconnect the alternator 6P connector.

Measure the resistance between the Yellow wire terminals and check for no continuity between each terminal and body ground.

Standard:
Yellow–Yellow: 0–0.1Ω (20°C/68°F)
Yellow–body groud: No continuity

Replace the alternator if the resistance is out of specification or if there is continuity between Yellow wire terminal and ground.

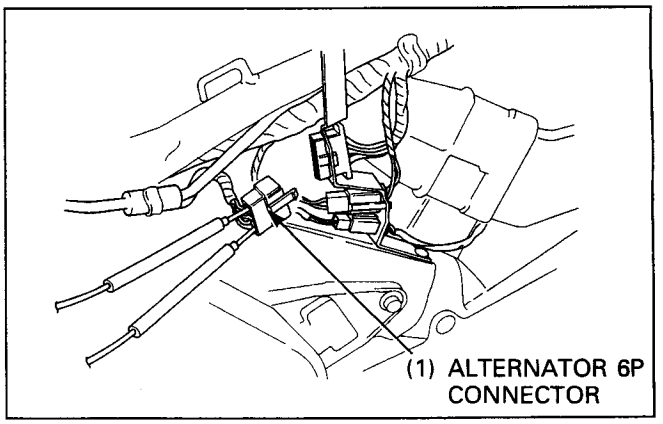

AC Generator Cover Removal/Installation

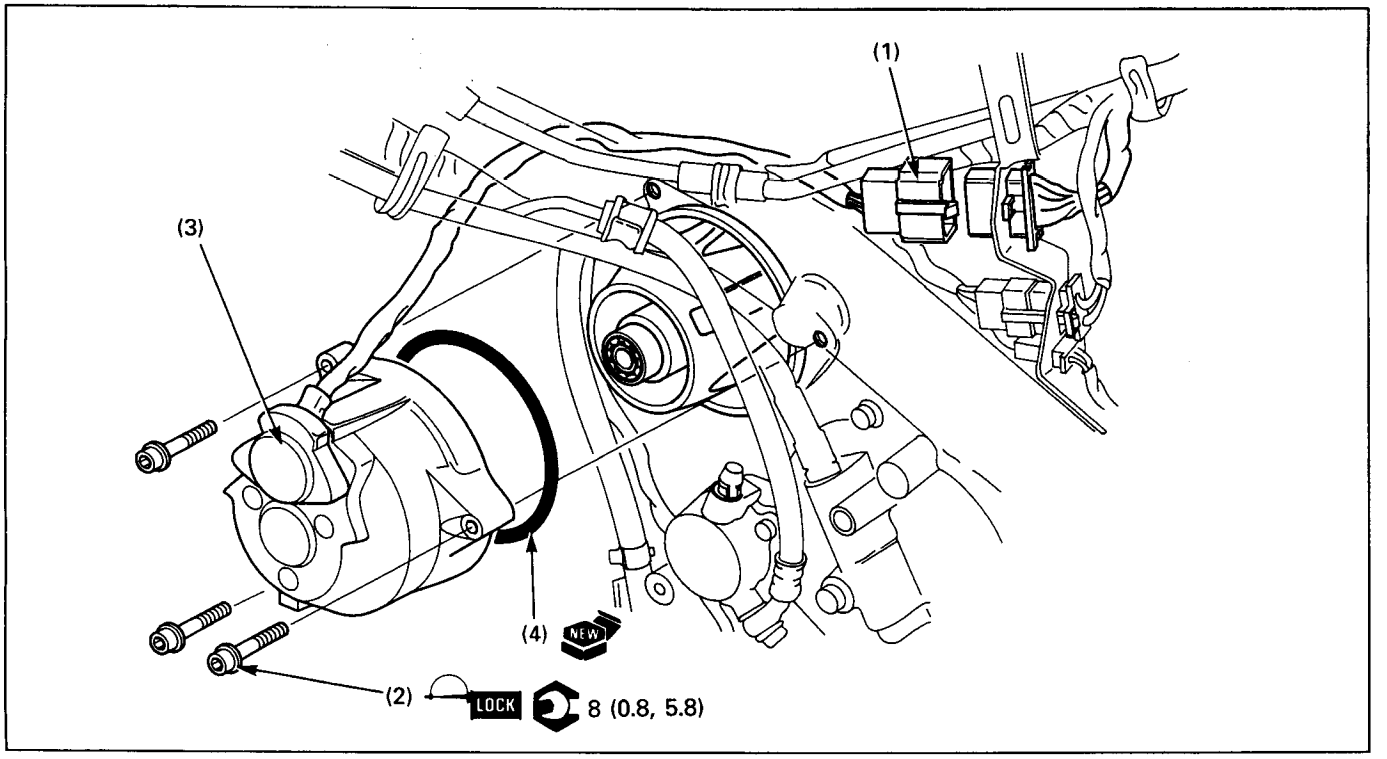

Requisite Service

- Left lower fairing removal/installation (page 2-6)

	Procedure	Q'ty	Remarks
	Removal Order		Installation is in the reverse order of removal.
(1)	AC generator 6P connector	1	
(2)	AC generator cover bolt	3	
(3)	AC generator cover	1	
(4)	O-ring	1	

15. Ignition System

Service Information

⚠ WARNING

- **If the engine must be running to do some work, make sure the area is well-ventilated. Never run the engine in an enclosed area. The exhaust contains poisonous carbon monoxide gas that may cause loss of consciousness and lead to death.**

CAUTION

- **Some electrical components may be damaged if terminals or connectors are connected or disconnected while the ignition switch is ON and current is present.**

- When checking the ignition system, always follow the steps in the troubleshooting flow chart (page 15-3).
- The ignition control module may be damaged if dropped. Also, if the connector is disconnected when current is present, the excessive voltage may damage the unit. Always turn off the ignition switch before servicing.
- Ignition timing cannot be adjusted since the ignition control module is non-adjustable. If ignition timing is incorrect, check the system components and replace any faulty parts.
- A faulty ignition system is often related to poorly connected or corroded connectors. Check those connections before proceeding.
- Use spark plugs of the correct heat range. Using spark plugs with an incorrect heat range can damage the engine. Refer to section 2 of the Common Service Manual.
- For neutral switch inspection, refer to section 25 of the Common Service Manual. For switch location, see page 15-2 of this manual (System Location).
- For alternator removal and installation, see section 14.
- For side stand switch, engine stop switch and ignition switch inspection, check for continuity chart of the Wiring Diagram, page 18-1. Disconnect the ignition and engine stop switch connectors in the upper fairing (page 1-23), side stand switch connector under the lower fairing and check it.

System Location

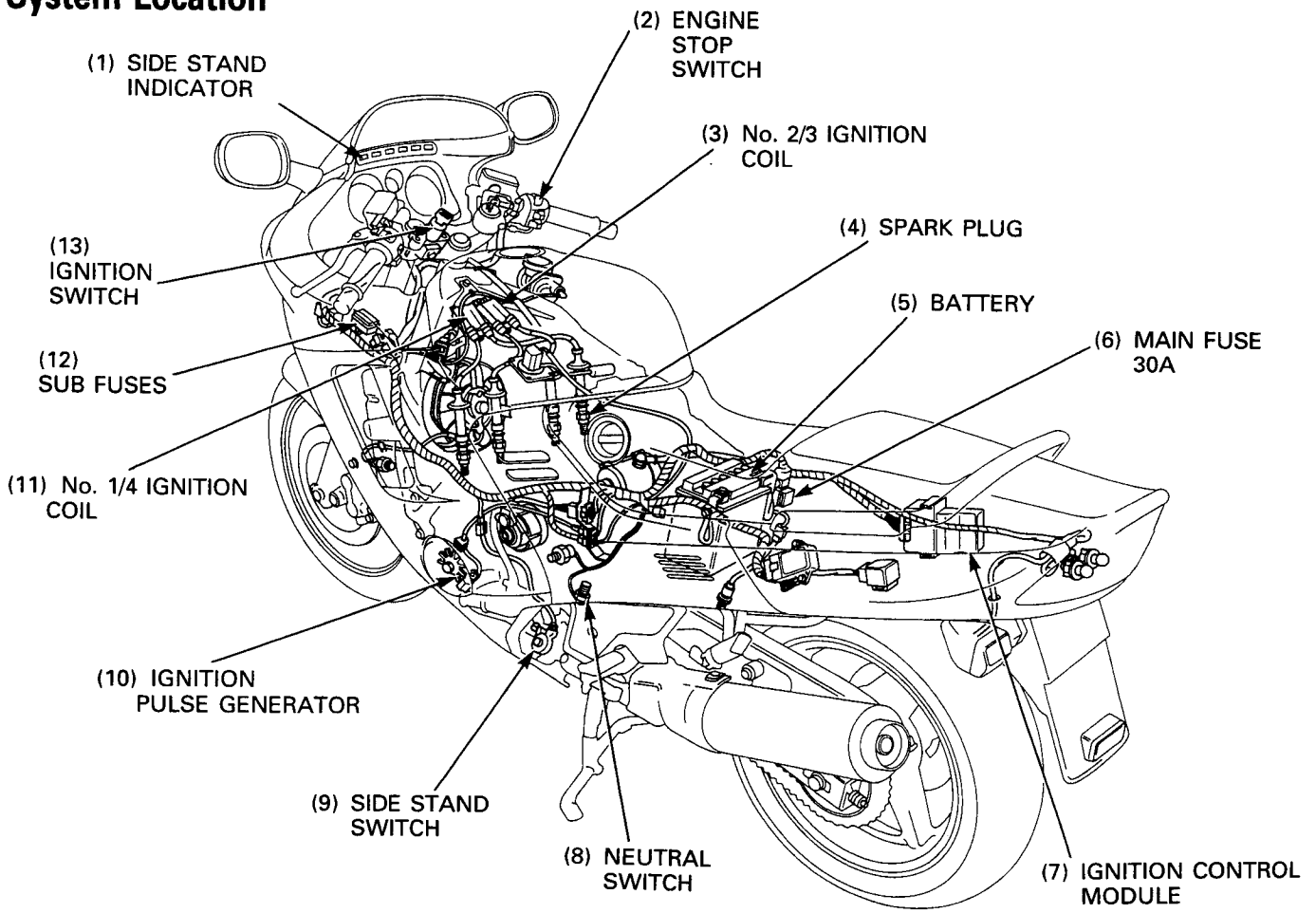

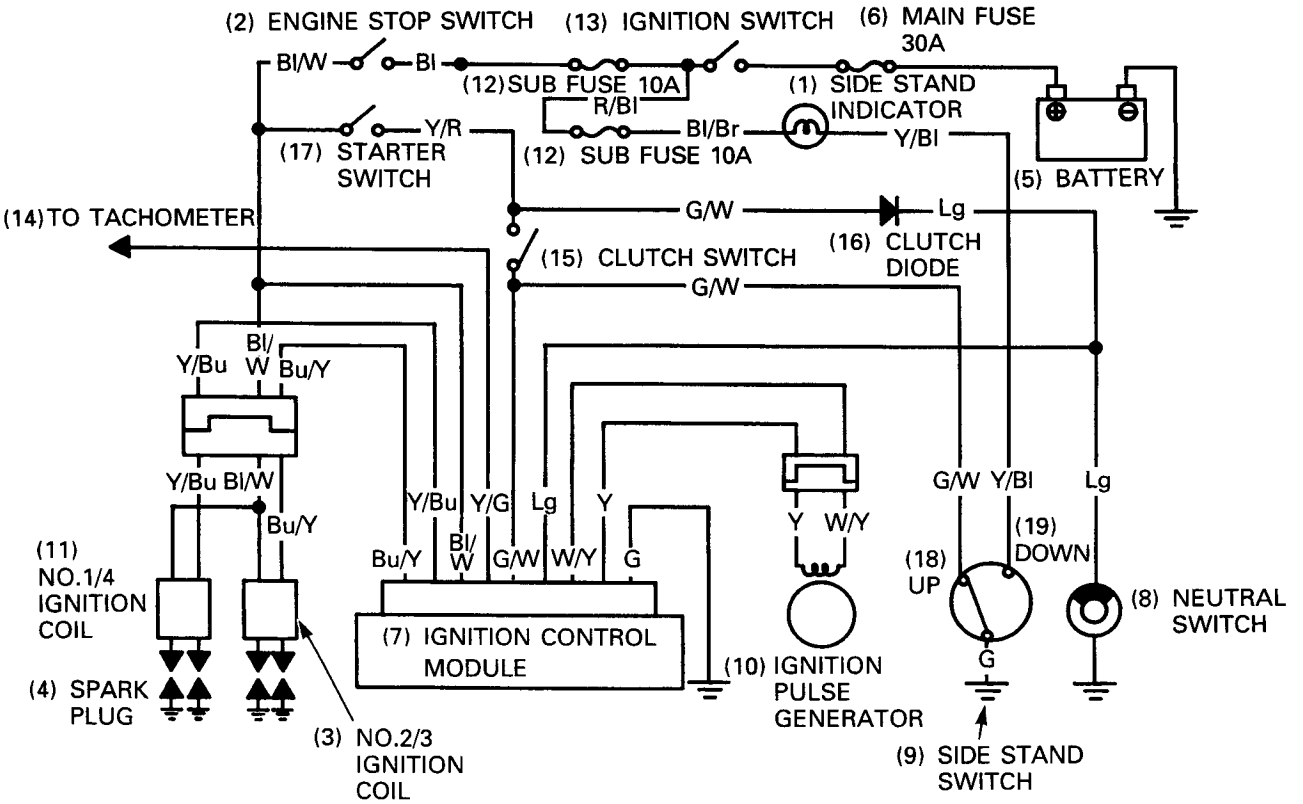

Troubleshooting

- Inspect the followings before diagnosing the system.
  - Loose spark plug caps or spark plug wire connections.
  - Water got into the spark plug cap. (Leaking the ignition secondry voltage)
  - Loose or poor contact of ignition system connectors.

Check the starter motor operation (page 16-3).

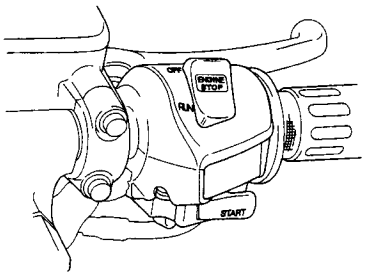

Abnormal →
- Faulty battery
- Inspect the starter system

Normal ↓

Inspect the ignition coil initial voltage (page 15-6).

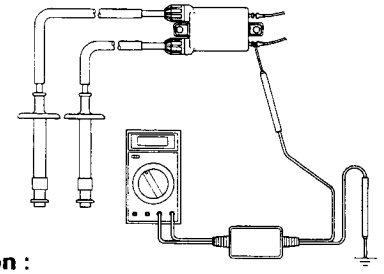

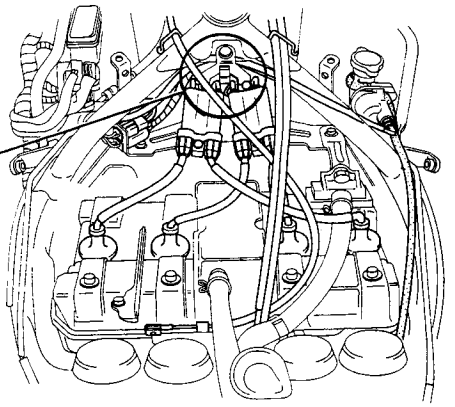

Connection :
No, 1/4 coil : Black/White (+) – Ground (–)
No, 2/3 coil : Black/White (+) – Ground (–)
Standard : Battery voltage

Abnormal →
- Faulty ignition switch
- Faulty engine stop switch
- Faulty ignition control module
- Short or open circuit in black/white wire

Normal ↓

Inspect the ignition coil primary peak voltage (page 15-6).

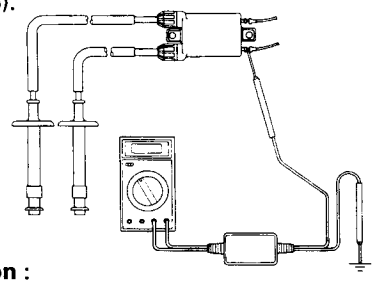

Connection :
No, 1/4 coil : Black/White (+) – Ground (–)
No, 2/3 coil : Black/White (+) – Ground (–)
Standard : 100V minimum

100V minimum →
- Faulty spark plug leaking ignition coil secon dary current ampere
- Faulty ignition coil

0V or battery voltage (below 100V) ↓

Inspect the ignition pulse generator peak voltage at the ignition control module multi-connector (page 15-8).

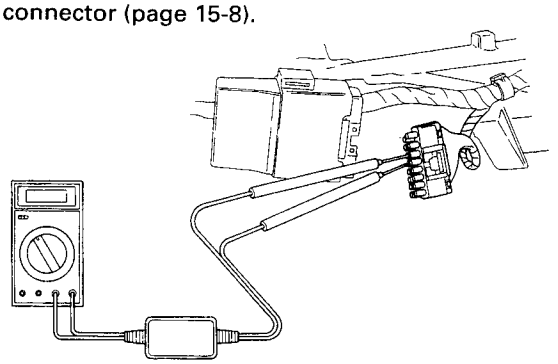

Connection : Yellow (+) – White/Yellow (–)
Standard : 0.7V minimum

Normal → • Faulty ignition control module

Abnormal

Inspect the ignition pulse generator peak voltage at the ignition pulse generator 4P connector (page 15-8).

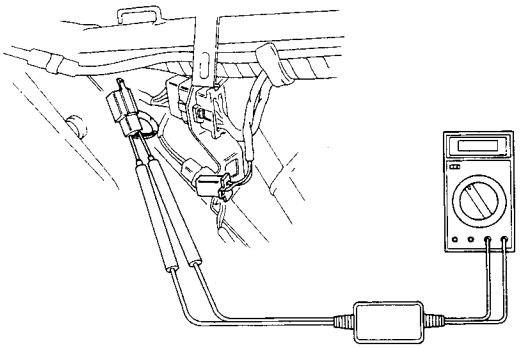

Connection : Yellow (+) – White/Yellow (–)
Standard : 0.7V minimum

Abnormal → • Faulty ignitoin pulse generator

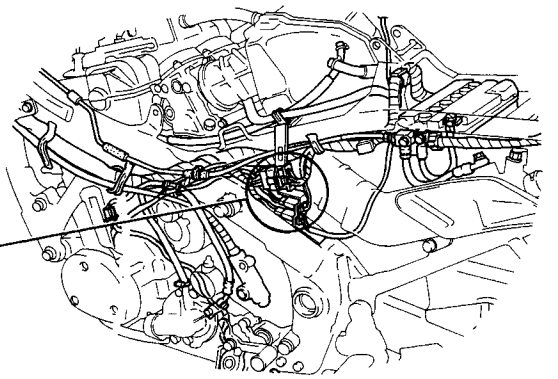

Normal →
- Short or open circuit in white/yellow wire
- Short or open circuit in yellow wire

Engine Starts, But Side Stand Switch Does Not Function At All

NOTE

The side stand switch should function follows:
- When the transmission is shifted into a gear from neutral with the side stand down, the ignition shouts off and the engine stops.
- When in neutral, the neutral switch line (a) of the ignition control module is connected to ground via the side stand switch. When the side stand is up, the side stand switch line (b) of the ignition control module passes to ground via the side stand switch. The ignition control module monitors lines (a) and (b), and provides spark only when one or both of those lines is connected to ground via the neutral switch or the side stand switch.

Check the side stand indicator function.

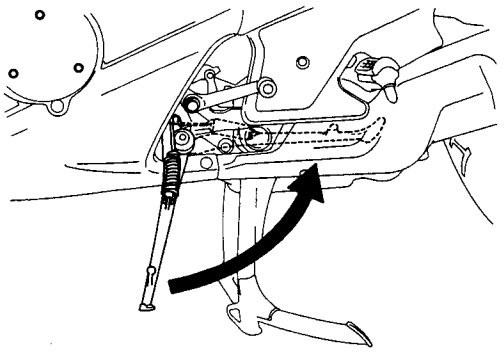

Normal → • Open circuit in Green/White wire

Abnormal ↓

Check for continuity between each terminals of side stand switch as follow.

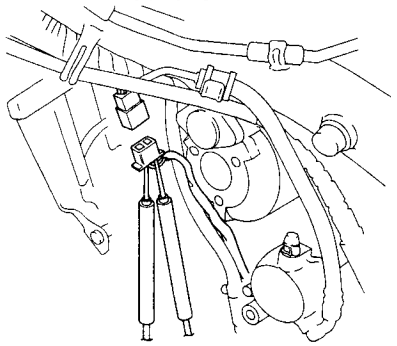

Side stand up : Green/White – Green
Side stand down : Yellow/Black – Green

Normal →
- Loose or poor contact of related connectors
- Open circuit in Green/White wire
- Burnt indicator bulb

Abnormal → • Faulty side stand switch

System Inspection

NOTE

- If no spark at all plugs, check all connections for loose or poor contact before measuring each peak voltage.
- Use genuine digital tester or commercially available digital multitester impedance: 10 MΩ/DCV minimum.
- The display value differs depending upon the initial impedance of the multitester.
- If using Imrie diagnostic tester (model 625), follow the manufacture's instruction.

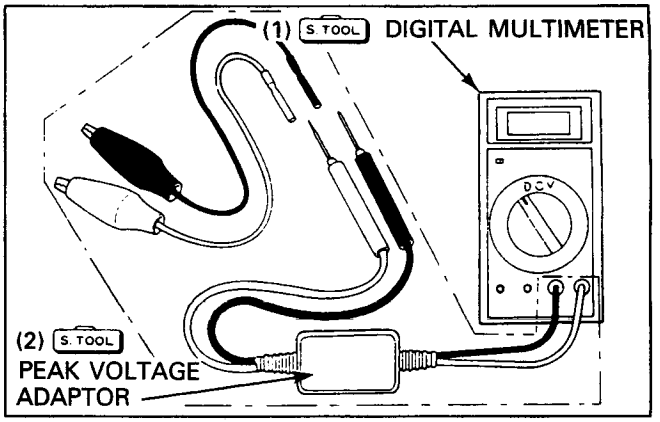

Connect the peak voltage adaptor to the digital multitester.

S. TOOL

Imrie diagnostic tester (model 625) made in Austria or
Peak voltage adaptor 07HGJ-0020100 with
Digital multitester 07411-0020000

Ignition Coil Primary Voltage Inspection

NOTE

- Check all system connections before this inspection. If the system is disconnected, incorrect peak voltage might be measured.
- Check all cylinder compression at each cylinder and spark plugs and caps are installed correctly in all cylinders. If the peak voltage is measured with the cylinder compression being low, the measurement will be higher than the standard voltage.

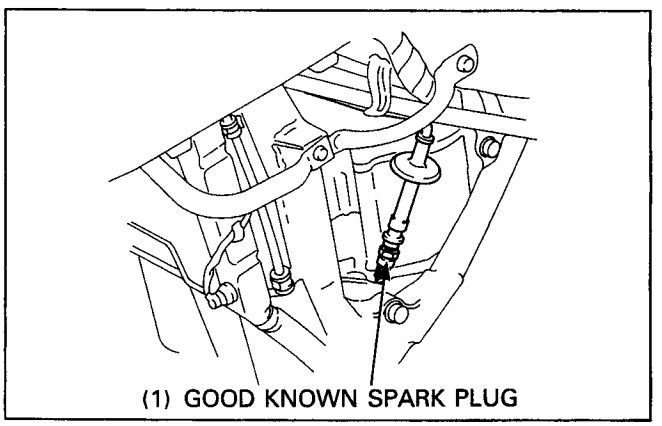

Support the motorcycle using the center stand.

Disconnect all spark plug caps from the spark plug.

Connect good known spark plugs on each spark plug cap, then ground the spark plugs to the cylinder as done in a spark test.

Connect the peak voltage adaptor probes between the primary ignition terminals with the connectors remained connected.

Connection:

No.1/4 coil : Black/White (+) and Body ground (–)
No.2/3 coil : Black/White (+) and Body ground (–)

Turn the ignition switch is ON and engine stop switch to RUN.
Check for initial voltage at this time.
The battery voltage should be measured.

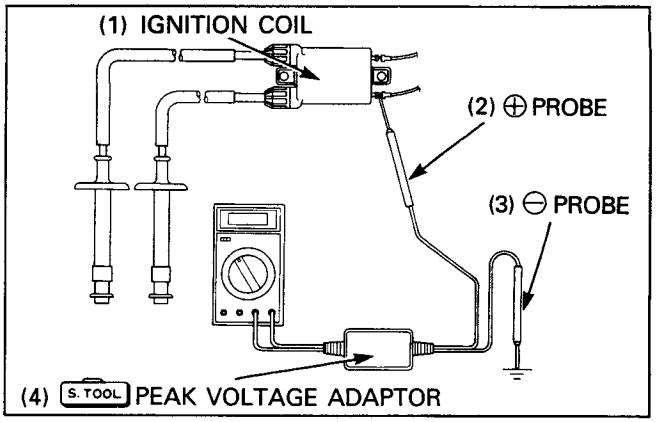

If the initial voltage is not measured, check power supply circuit referring the troubleshooting (page 15-3).

Crank the engine with the starter motor and read each ignition coil primary peak voltage.

Connection:

No.1/4 coil : Black/White (+) and Body ground (–)
No.2/3 coil : Black/White (+) and Body ground (–)

Peak voltage : 100 V minimum

⚠ WARNING

- **Avoid touching the spark plugs and tester probes to prevent electric shock.**

NOTE

- Although measured values are different for each igni tion coil, they are normal as long as each voltage is higher than the specified voltage.

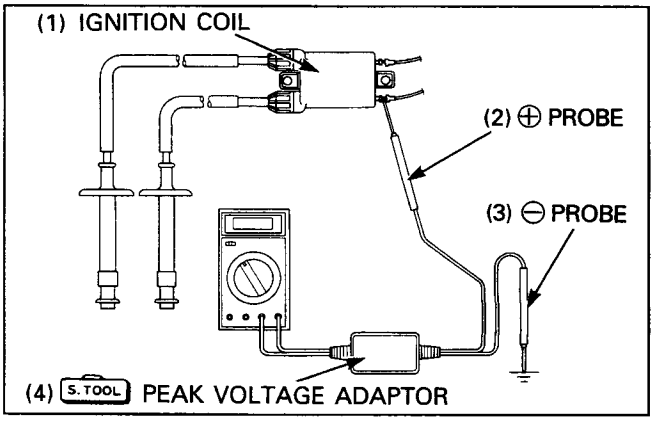

Ignition Pulse Generator Peak Voltage Inspection

NOTE

- Measure the peak voltage with the cylinder compression is applied. Leave all spark plugs in the cylinder head.

Remove the seat cowl (page 2-4).

Remove the ignition control module multi-connector. Connect the peak voltage adaptor probes to the ignition pulse generator terminals of ignition control module multi-connector.

Connection: Yellow (+) and White/Yellow (–)

Crank the engine with the starter motor and read the ignition pulse generator peak voltage.

Peak voltage: 0.7 V minimum

WARNING

- **Avoid touching the tester probes to prevent electric shock.**

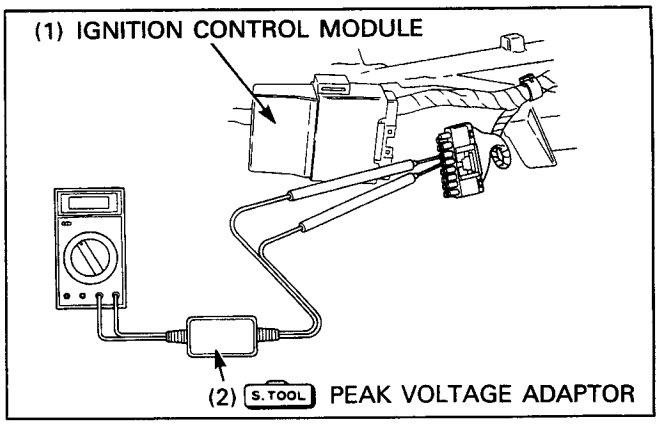

If the measured value is out of specification, measure the peak voltage at the ignition pulse generator 4P connector using the same procedure as for the previous measurement.

WARNING

- **Avoid touching the tester probes to prevent electric shock.**

If the peak voltage is within the specification, check for and open or short circuit in White/Yellow and Yellow wires.

If the peak voltage is out of the specification, replace the ignition pulse generator (page 15-11).

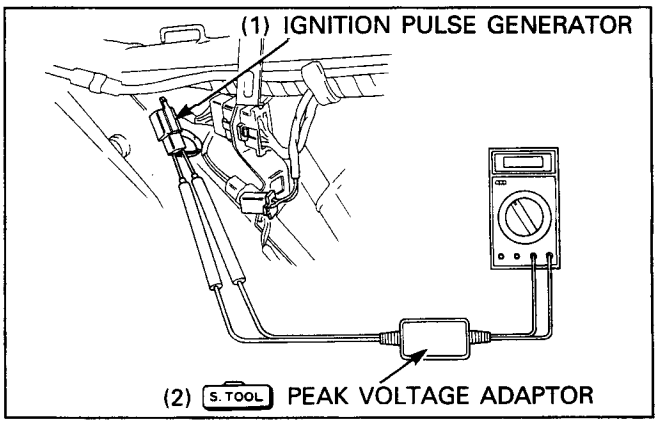

Ignition Coil

Inspection

Measure the primary coil resistance between the terminals.

Standard: 2.5 – 3.2 Ω (20°C/68°F)

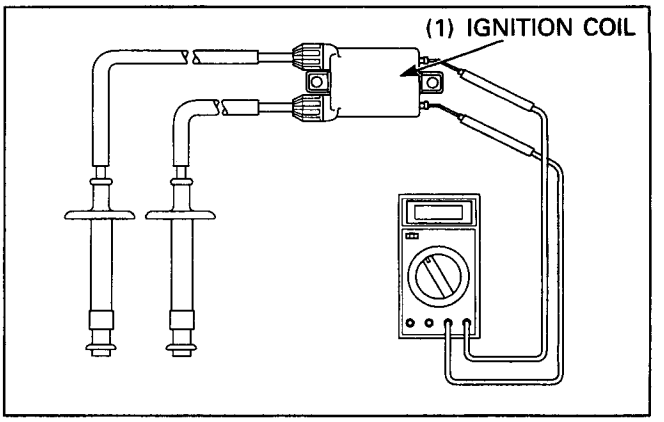

Measure the resistance between the spark plug caps.

Standard: 21 – 27kΩ (20°C/68°F)

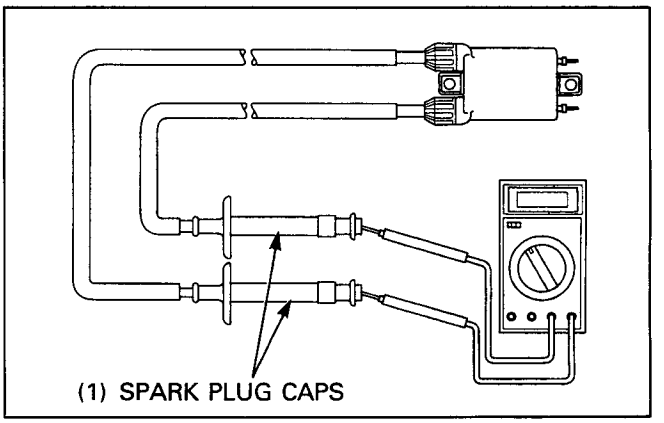

If the measured value out of the specification, remove the spark plug caps from the spark plug wires and measure the resistance between the spark plug wires.

Standard: 11 – 17 kΩ (20°C/68°F)

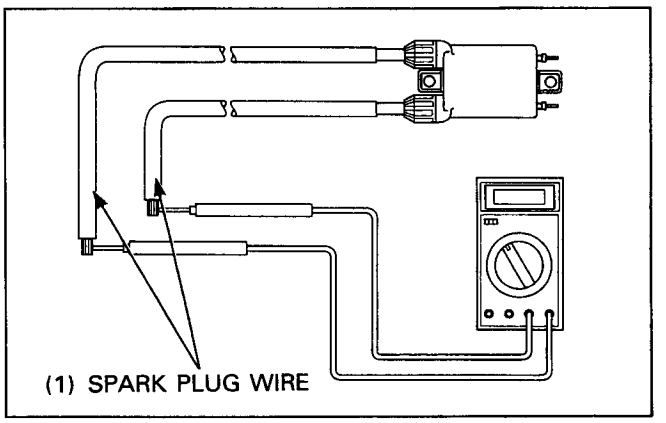

Removal/Installation

Disconnect the spark plug cap from the cylinder head.
Remove the ignition coil mounting bolts.
Disconnect the primary wires and remove the ignition coil.

Installation is in the reverse order of removal.

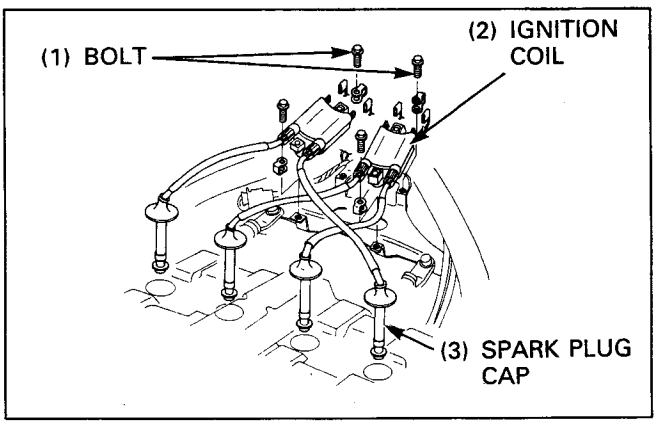

Ignition Pulse Generator Inspection

NOTE

- It is not necessary to remove the ignition pulse generator from the engine.

Remove the seat cowl (page 2-4).
Disconnect the ignition control module multi-connector.
Measure the resistance between the White/Yellow and Yellow terminals.

Standard: 460 – 580 Ω (20°C/68°F)

If the measured value is out of specification, measure the resistance at the ignition pulse generator 4P connector using the same procedure as for the previous measurement.

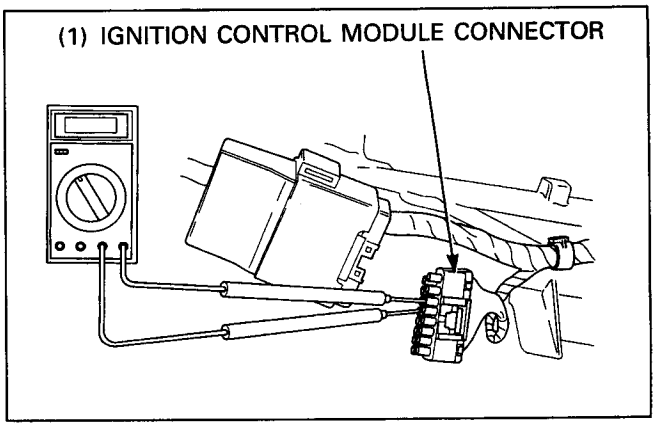

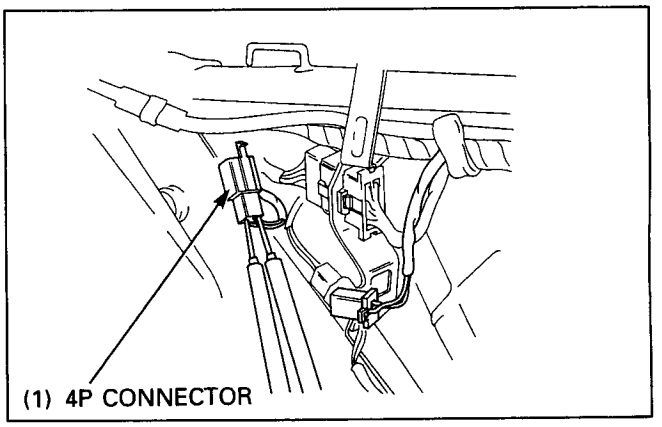

Ignition Timing

NOTE

- The ignition control module system is factory pre-set and cannot be adjusted. Ignition timing inspection procedures are given to inspect the function of the ignition control module components.
- Connect the timing light to the other spark plug wire if you see that the ignition timing is incorrect, and you might be able to see the timing is correct.

Warm up the engine to operating temperature.

⚠ WARNING

- **If the engine must be running to do some work, make sure the area is well-ventilated. Never run the engine in an enclosed area.**
- **The exhaust contains poisonous carbon monoxide gas that may cause loss of consciousness and may lead to death.**

Stop the engine and remove the crankshaft hole cap.
Connect a timing light to the spark plug wire.
Start the engine and let it idle.

The timing is correct if the "F" mark on the ignition pulse generator rotor aligns with the index mark on the crankcase.

Increase the engine speed by rotating the throttle stop screw and make sure the "F" mark begins to move counterclockwise at approximately 1,600 min^{-1} (rpm).

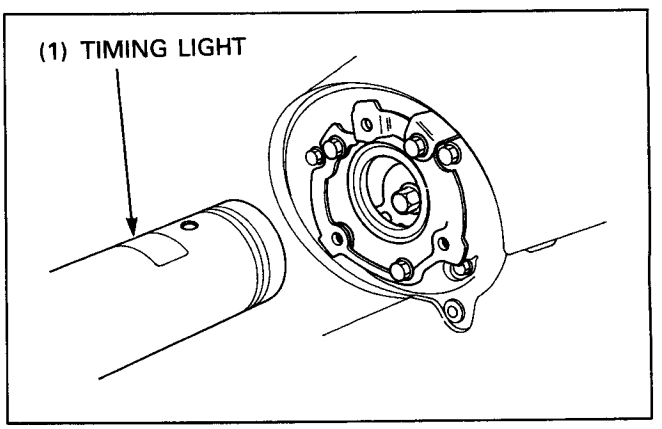

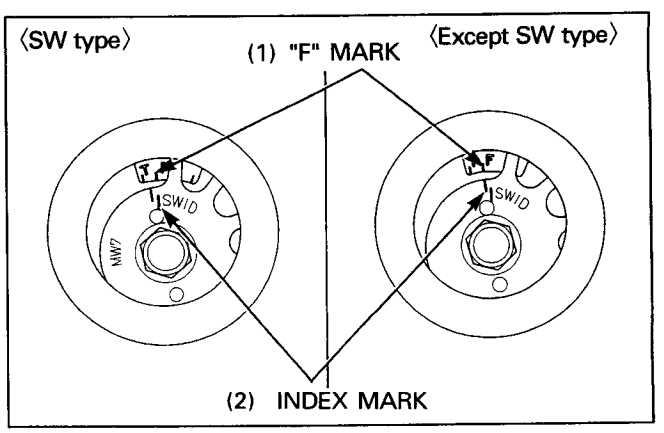

Ignition Pulse Generator Rotor Removal/Installation

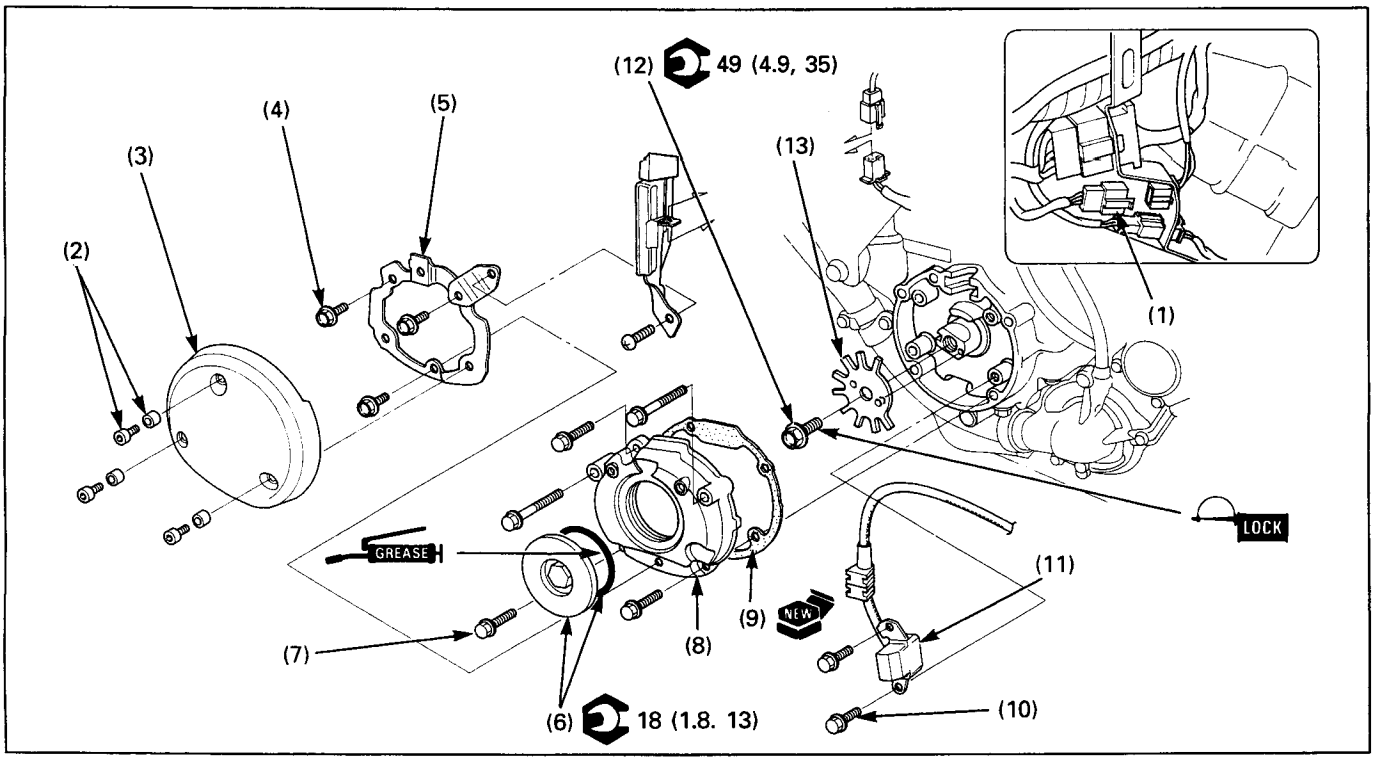

NOTE

- If you plan to remove the ignition pulse generator, remove the right crankcase cover and hold the crankshaft.

Requisite Service

- Lower fairing removal/installation (page 2-6)

	Procedure	Q'ty	Remarks
	Removal Order		Installation is in the reverse order of removal.
(1)	Ignition pulse generator 2P connector	1	After removal, remove the ignition pulse generator wire from the clamps.
(2)	Socket bolt/collar	3/3	
(3)	Left crank cover	1	
(4)	Bolt	3	
(5)	Bracket	1	
(6)	Timing hole cap/O-ring	1/1	
(7)	Ignition pulse generator cover bolt	5	
(8)	Ignition pulse generator cover	1	
(9)	Gasket	1	
(10)	Ignition pulse generator bolt	2	
(11)	Ignition pulse generator	1	At removal, remove the grommet from the crankcase.
(12)	Ignition pulse generator rotor bolt	1	
(13)	Ignition pulse generator rotor	1	At installation, align the projections on the rotor with cut out and on the crankshaft.

16. Electric Starter

Service Information

⚠WARNING

- **Always turn the ignition switch OFF before servicing the starter motor. The motor could suddenly start, causing serious injury.**

- A weak battery may be unable to turn the starter motor quickly enough, or supply adequate ignition current.
- If the current is kept flowing through the starter motor to turn it while the engine is not cranking over, the starter motor may be damaged.
- For the following components inspections, refer to the following pages; for the parts locations, see page 16-3 of this manual (System Location).

Component	Inspection method	Remarks
Clutch switch diode	Section 24 of the Common Service Manual	
Starter motor	Section 24 of the Common Service Manual	
Clutch switch	Section 25 of the Common Service Manual	
Neutral switch	Section 25 of the Common Service Manual	Torque : 18 N • m (1.8 kg-m, 13, ft-lb)
Ignition switch	Check for continuity on the continuity chart of the Wiring Diagram, page 18-1.	
Side stand switch	Section 25 of the Common Service Manual	

System Location

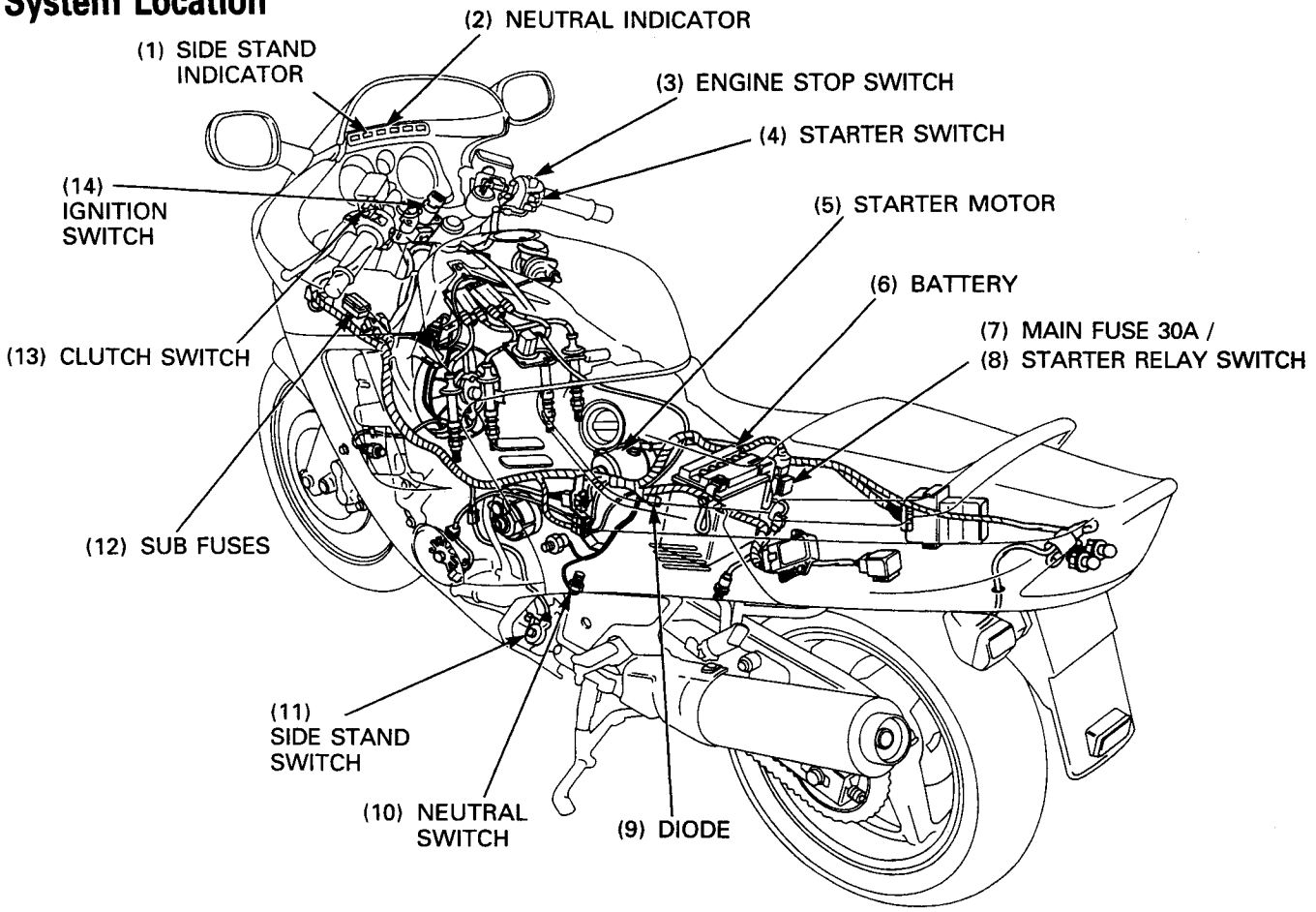

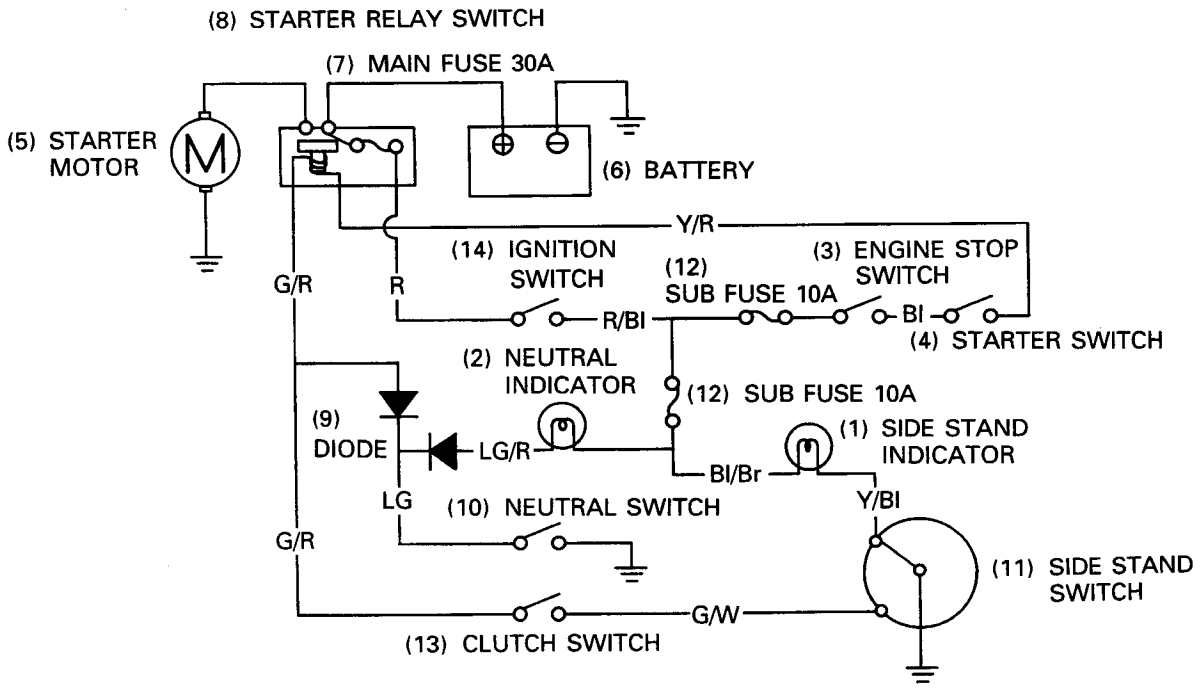

Troubleshooting

NOTE

- Check for the following before troubeshooting the system.
  - Blown main fuse (30A) or sub fuse (10A).
  - Loose battery and starter motor cable.
  - Discharged battery.

- The starter motor does not turn when the engine stop switch is OFF.
- The starter motor should turn when the transmission is in neutral.
- The starter motor should turn when the transmission is in any gear with relative circuit satisfied, indicated below chart.

Gear Position	Side Stand	Clutch Lever	Starter Motor
In Any Gear	Up (Retracted)	Pulled in	Turn
		Free	Does Not Turn
	Down	Pulled in	Does Not Turn
		Free	Does Not Turn

Starter motor will not turn

Check for loose or poorly contacted battery terminals and opened or shorted battery cable.

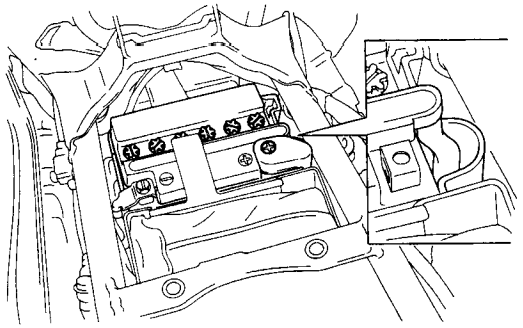

Abnormal →
- Poorly connected battery terminals
- Open or short circuit in battery cable

Normal ↓

Check for loose or poorly connected starter relay switch terminals of 4P connector.

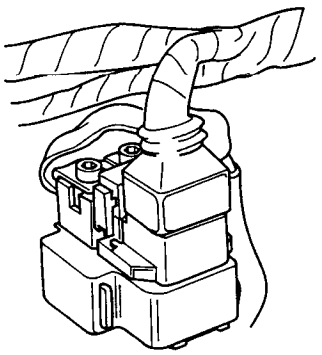

Abnormal →
- Poorly connected terminals of 4P connector

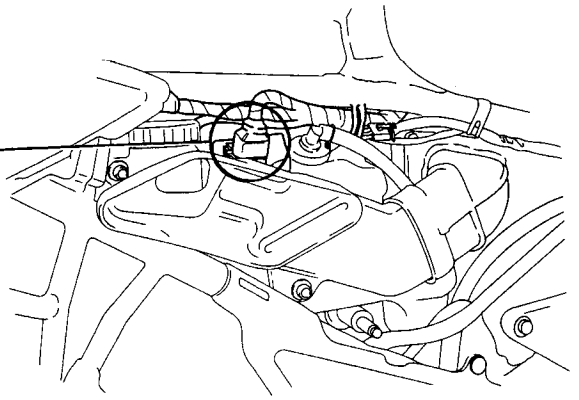

Normal ↓

Check for loose or poorly connected starter motor cable, and opened cable.

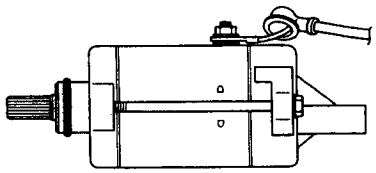

Abnormal →
- Poorly connected battery terminals
- Open circuit in motor cable

Normal ↓

With the ignition switch "ON" push the starter switch and check for a "Click" sound from the starter relay switch.

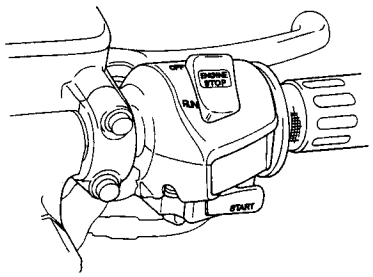

Clicks →

Connect the starter motor terminal to the bettery positive terminal directly.
(Because a large amount of current flows, do not use thin wires)

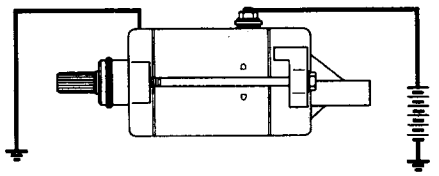

Starter motor turns ↓
- Loose or disconnected starter motor cable
- Faulty starter relay switch

Starter motor does not turn ↓
- Faulty starter motor

No click ↓

Disconnect starter relay switch connector, and check the relay coil ground line as below for continuity:
1. Green/Red terminal-to-clutch switch diode-to-neutral switch line (with transmission into neutral and clutch lever released).
2. Green/Red terminal-to-clutch switch-to-side stand switch line (in any gear except neutral, and with the clutch lever pulled in and the side stand up).

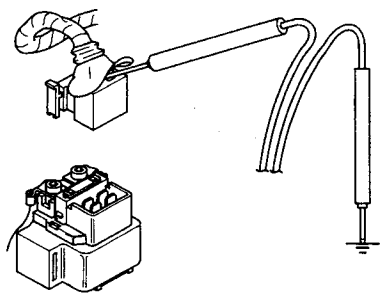

No continuity →
- Faulty neutral switch
- Faulty clutch switch
- Faulty side stand switch
- Loose or poor contact of connector
- Open circuit in wire harness

Continuity ↓

Connect the stater relay switch connector. With the ignition switch ON and the starter switch pushed, measure the starter relay voltage at the starter switch connector.

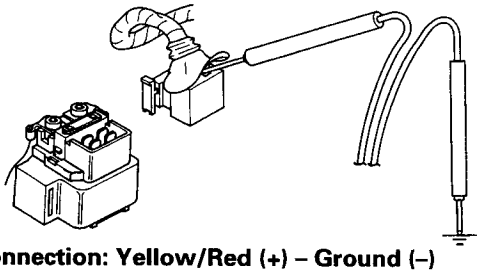

Connection: Yellow/Red (+) – Ground (–)
Standard: Battery Voltage

No voltage →
- Faulty ignition switch
- Faulty starter switch
- Blown out main or sub fuses
- Loose or poor contact of connector
- Open circuit in wire harness

Voltage appeared ↓

Remove the starter relay switch.
Connect a fully charged 12V battery to the starter relay switch.
Check the continuity between the switch large terminal.

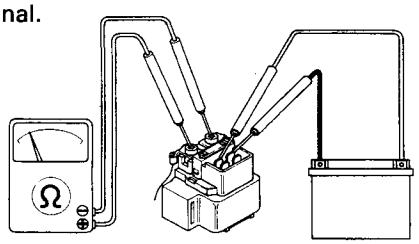

Connection: Yellow/Red (+) – Green/Red (–)
Standard: Continuity

Normal →
- Loose or poor contact of the starter relay switch connector

Abnormal →
- Faulty starter relay switch

Starter motor turns when the transmission is in neutral, but does not turn with transmission in any position except neutral, with the side stand up and the clutch lever pulled in.

Check the side stand switch is properly operated with the ignition ON.

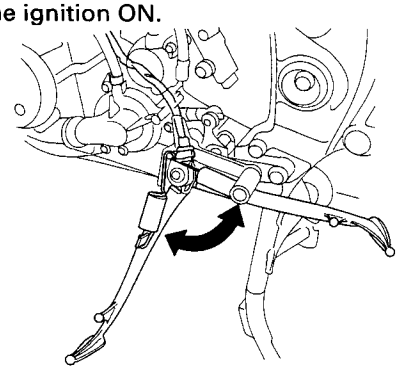

Abnormal →
- Faulty side stand switch
- Burnt bulb
- Open circuit in wire harness

Normal ↓

Check the clutch switch operation (Section 19).

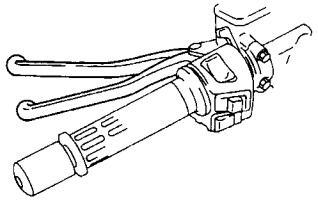

Abnormal → • Faulty clutch switch

Normal

Check the side stand switch.

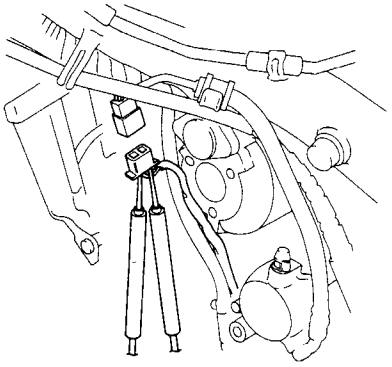

Abnormal → • Faulty side stand switch

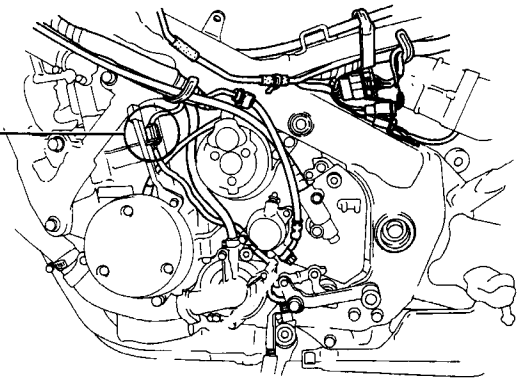

Normal →
- Open circuit wire harness
- Loose or poor contact of connector

Starter motor turns slowly
- Low specific gravity in battery (or dead battery)
- Poorly connected battery terminal cable
- Poorly connected starter motor cable
- Faulty starter motor

Starter motor turns, but engine does not turn
- Starter motor is running backward
  - Case assembled improperly
  - terminals connected improperly
- Faulty starter clutch
- Damaged reduction gear
- Damaged starter idle gear

Starter relay switch "click", but engine does not turn over
- Crankshaft does not turn due to engine problem
- Excessive reduction gear friction

Starter Motor Removal/Installation

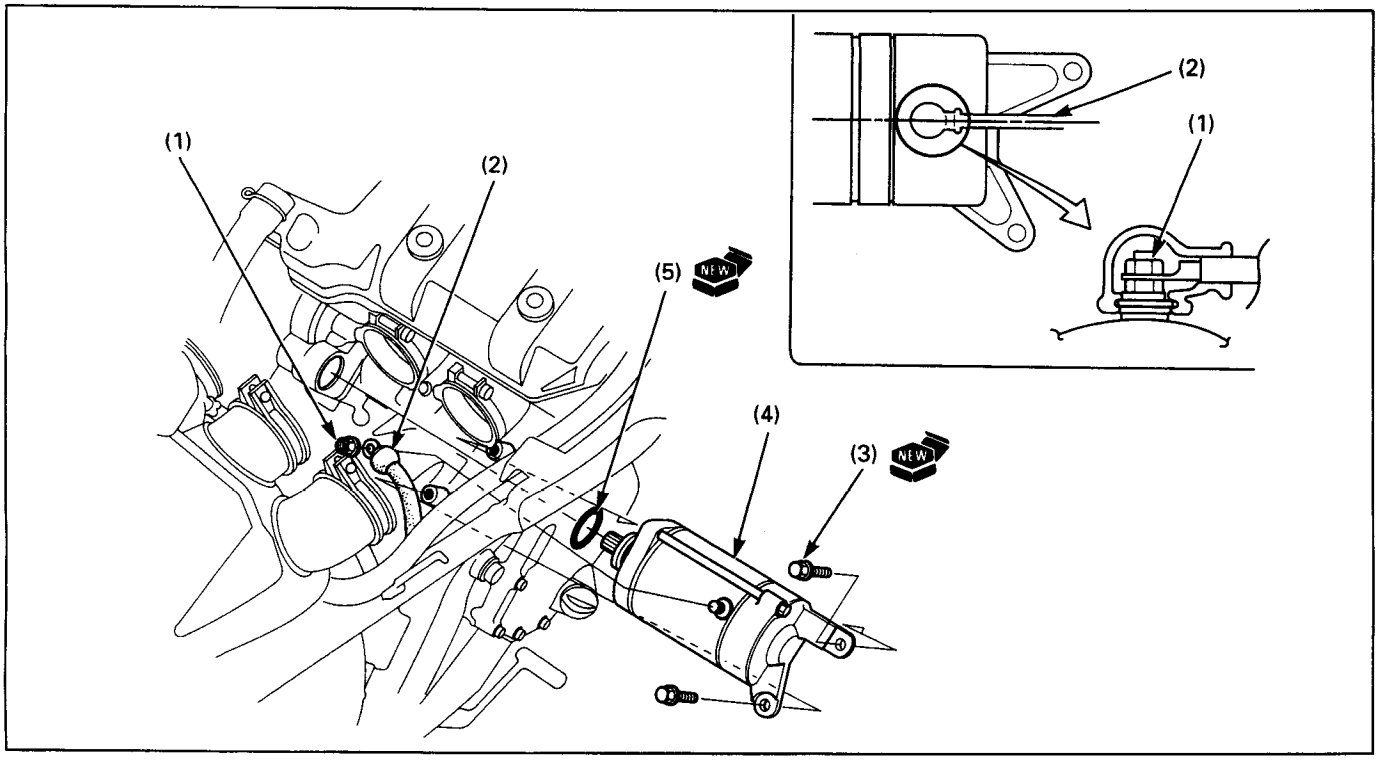

⚠WARNING

- **With the ignition switch OFF, remove the negative cable at the battery before servicing the starter motor.**

NOTE

- Route the wire and cables properly (page 1-23)
- The starter motor can be removed easily after removing the carburetor.

Requisite Service

- Lower fairing removal/installation (page 2-6)
- Carburetor removal/installation (page 5-4)

	Procedure	Q'ty	Remarks
	Removal Order		Installation is in the reverse order of removal.
(1)	Terminal nut	1	
(2)	Starter motor cable eyelet	1	
(3)	Starter motor mounting bolt	2	
(4)	Starter motor assembly	1	Disassembly/assembly (page 16-8)
(5)	O-ring	1	

Starter Motor Disassembly/Assembly

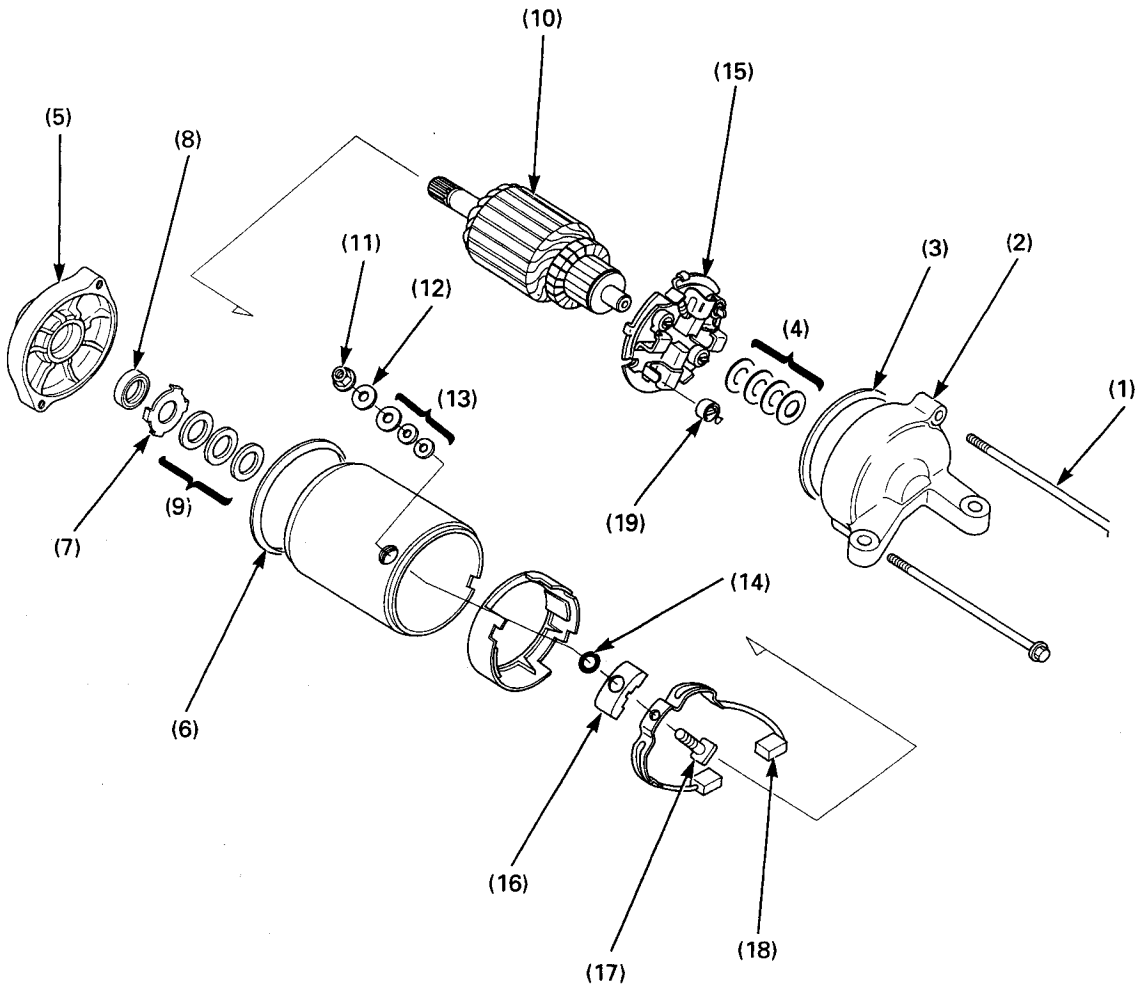

NOTE

- Note the location and number of thrust washers when disassembling.

Requisite Service

- Starter motor removal/installation (page 16-7)

	Procedure	Q'ty	Remarks
	Removal Order		Installation is in the reverse order of removal.
(1)	Flange bolt	2	
(2)	Rear cover	1	At installation, align tabs in the rear cover with the projection of the brush holder plate.
(3)	O-ring	1	
(4)	Shim	–	Note the location and number of shims.
(5)	Front cover	1	
(6)	O-ring	1	
(7)	Lock washer	1	
(8)	Dust seal	1	
(9)	Washer	–	Note the location and number of washers.
(10)	Armature	1	
(11)	Terminal nut	1	
(12)	Washer	1	
(13)	Insulated washer	3	
(14)	O-ring	1	
(15)	Brush holder assembly	1	
	Brush Holder Disassembly Order		Assembly is in the reverse order of disassembly.
(16)	Terminal bolt supporter	1	At installation, install the supporter with its tab facing the blush holder.
(17)	Terminal bolt	1	
(18)	Motor brush	1	
(19)	Brush spring	4	

17. Lights/Meters/Switches

Service Information

⚠WARNING

- **A halogen headlight bulb becomes very hot while the headlight is ON , and remain hot for a while after it is turned OFF. Be sure to let it cool down before servicing.**
- **Use a flame and heated water/coolant mixture for the thermo sensor inspection. Keep all flammable materials away from the burner. Wear protective clothing, gloves and eye protection.**

- Note the following when replacing the halogen headlight bulb.
  - Wear clean gloves while replacing the bulb. Do not put finger prints on the headlight bulb, as they may create hot spots on the bulb and cause it to break.
  - If you touch the bulb with your bare hands, clean it cloth moistened with alcohol to prevent its early failure.
  - Be sure to install the dust cover after replacing the bulb.
- All plastic connectors have locking tabs that must be released before disconnecting, and must be aligned when reconnecting.
- Always turn off the ignition switch before disconnecting any electrical component.
- A continuity test can be made with switches installed on the motorcycle.
- Check the battery condition before performing any inspection that requires proper battery voltage.
- For the following component locations see 17-2 of this manual (System Location); for inspections refer to the applicable pages.

Component	Inspection method	Remarks
Front brake switch	Section 25 of the Common Service Manual	
Horn	Section 25 of the Common Service Manual	
Handlebar switch	Check for continuity on the continuity chart of the Wiring Diagram, page 18-1	
Ignition switch		
Neutral switch	Section 25 of the Common Service Manual	Torque : 12 N • m (1.2 kg-m, 9, ft-lb)
Oil pressure switch/ warning light	Section 25 of the Common Service Manual	Oil pressure check: Section 4 of the Common Service Manual Oil pressure switch torque : 12 N • m (1.2 kg-m, 9, ft-lb) Apply sealant to the threads.
Rear brake switch	Section 25 of the Common Service Manual	
Turn signal lights	Section 25 of the Common Service Manual	

System Location

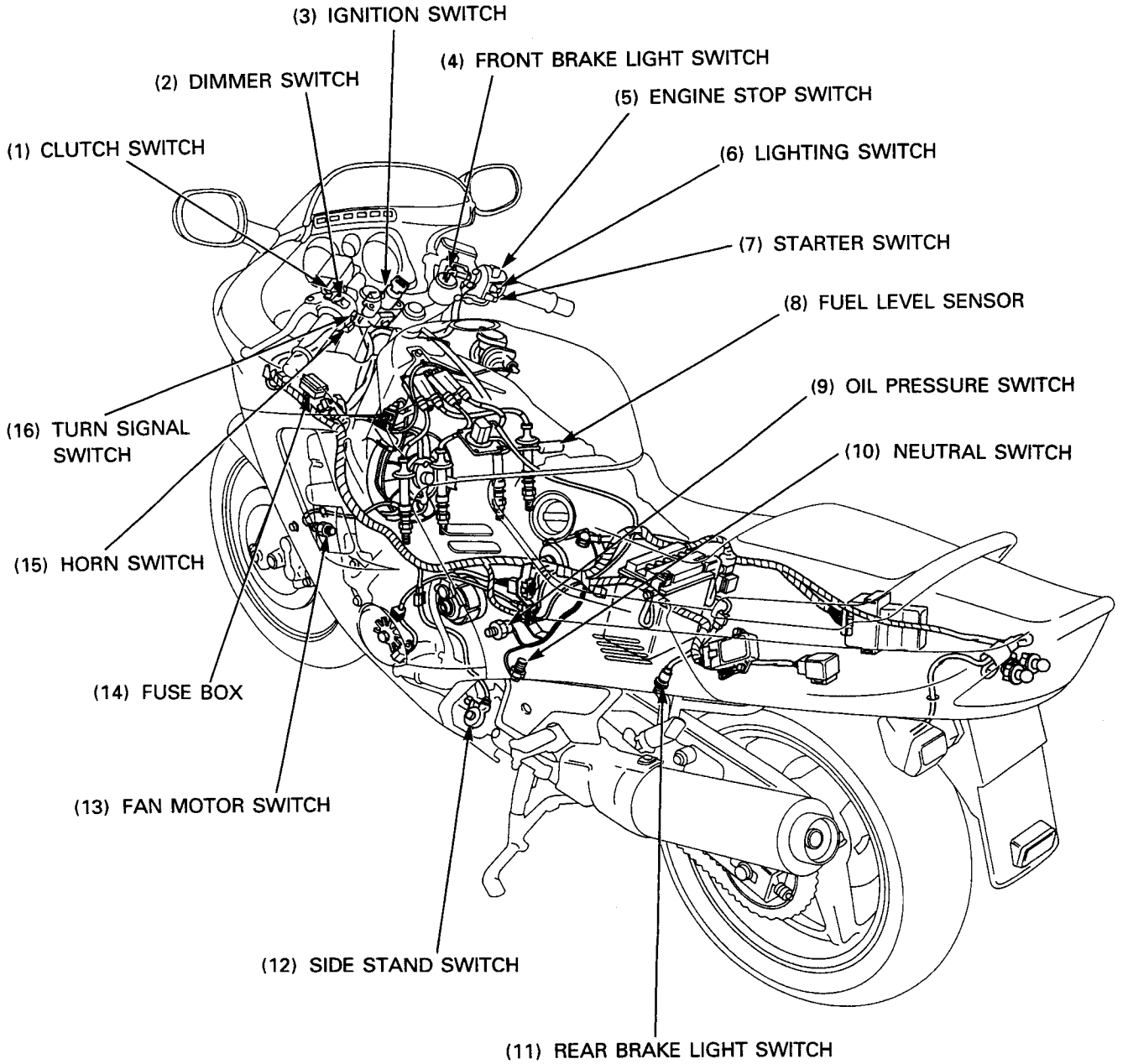

Bulb Replacement

Headlight Bulb

⚠WARNING

- **Halogen headlight bulb becomes very hot while the headlight is ON, and remain hot for a while after it is turned OFF. Be sure to let it cool down before servicing.**

Remove the maintenance lid (2-6).

Remove the headlight bulb socket and dust cover.
Push the retaining tabs.

Unhook the bulb retainer and remove the headlight bulb.

Installation is in the reverse order of removal.

NOTE

- Install the dust cover with its "TOP" mark facing up.

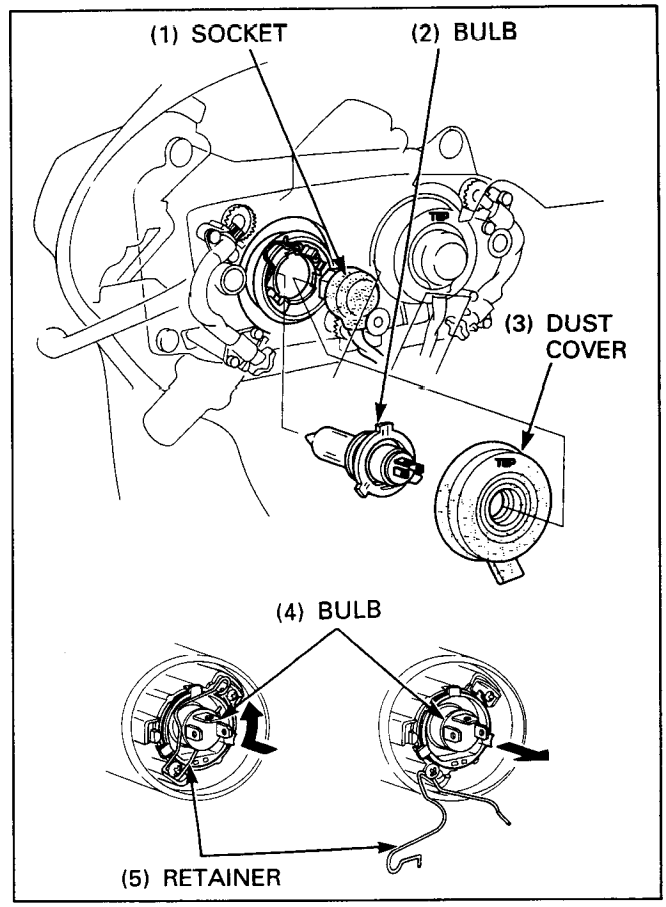

Tail/Brake Light

Remove the seat (page 2-3).

Remove the tail/brake light bulb and socket as an assembly by turning it counterclockwise.

Replace a new bulb and install it in the reverse order of removal.

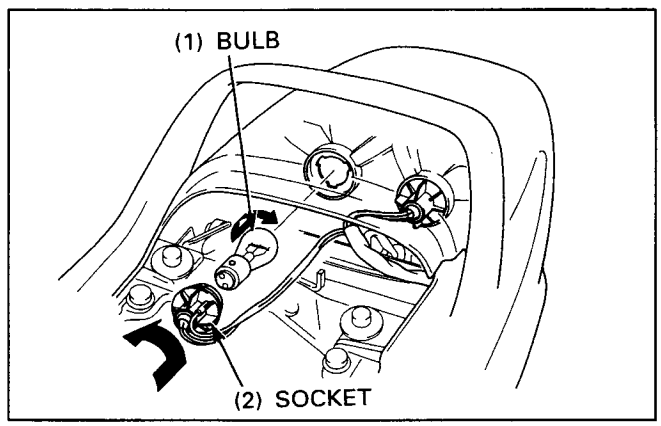

Turn Signal Bulb

Front

Remove the inner cover (page 2-8).

Remove the front turn signal bulb and socket as an assembly by turning it counterclockwise.

Replace a new bulb and install it in the reverse order of removal.

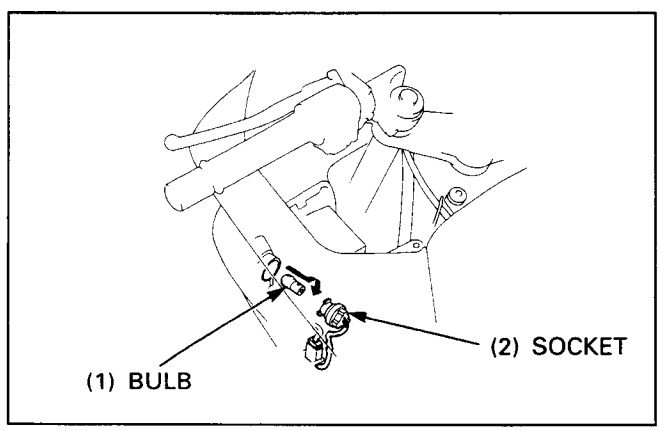

Rear

Remove the screw, lens and rubber.
Remove the rear turn signal bulb by turning it counter-clockwise.

Replace a new bulb and install it in the reverse order of removal.

NOTE

- Align the lug on the lens with the slot in the light case properly.

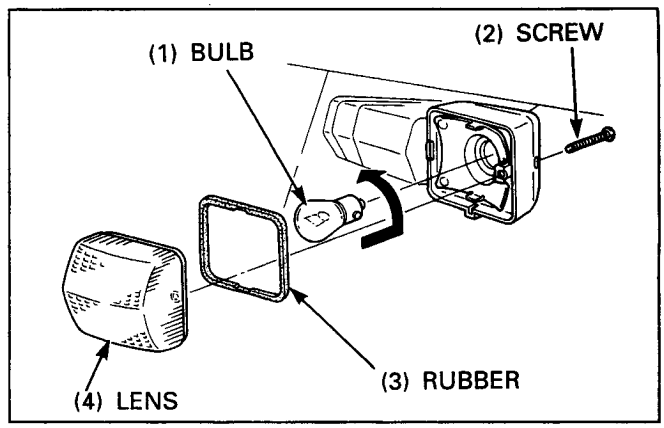

Headlight Removal/Installation

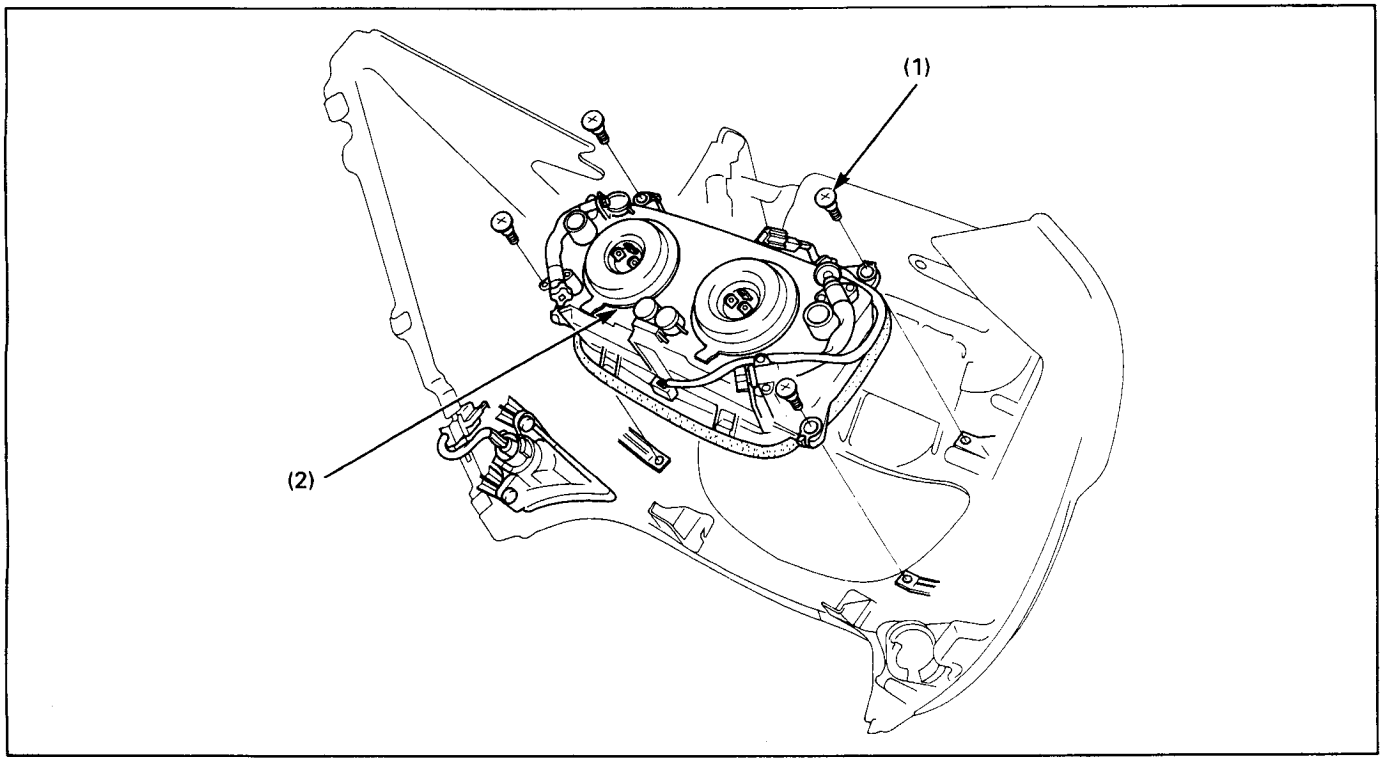

WARNING

- **An improperly adjusted headlight may blind on-coming drivers, or it may fail to light the road for a safe distance.**

NOTE

- Adjust the headlight beam as specified by local laws and regulations.
- After installation, route the wires and cable properly (page 1-23).

Requisite Service

- Upper fairing removal/installation (page 2-7)

	Procedure	Q'ty	Remarks
	Removal Order		Installation is in the reverse order of removal.
(1)	Screw	4	
(2)	Headlight assembly	1	At installation, install the headlight sealed rubber securely as shown.

Ignition Switch Removal/Installation

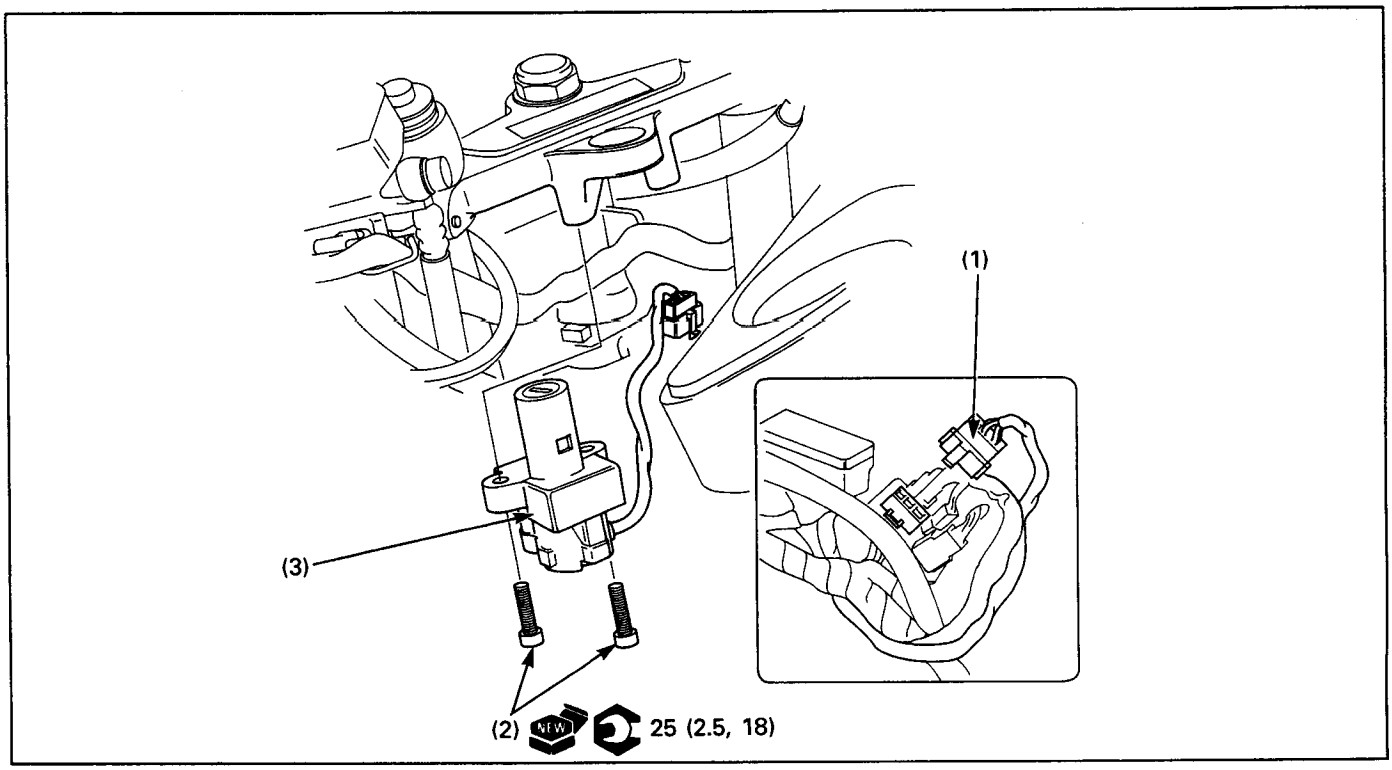

NOTE

- Route the ignition switch wire properly (page 1-23).

Requisite Service

- Upper fairing removal/installation (page 2-7)

	Procedure	Q'ty	Remarks
	Removal Order		Installation is in the reverse order of removal.
(1)	Ignition switch 6P connector	1	Disconnect it at the connector holder.
(2)	Ignition switch mounting bolt	2	
(3)	Ignition switch	1	

Combination Meter Removal/Installation

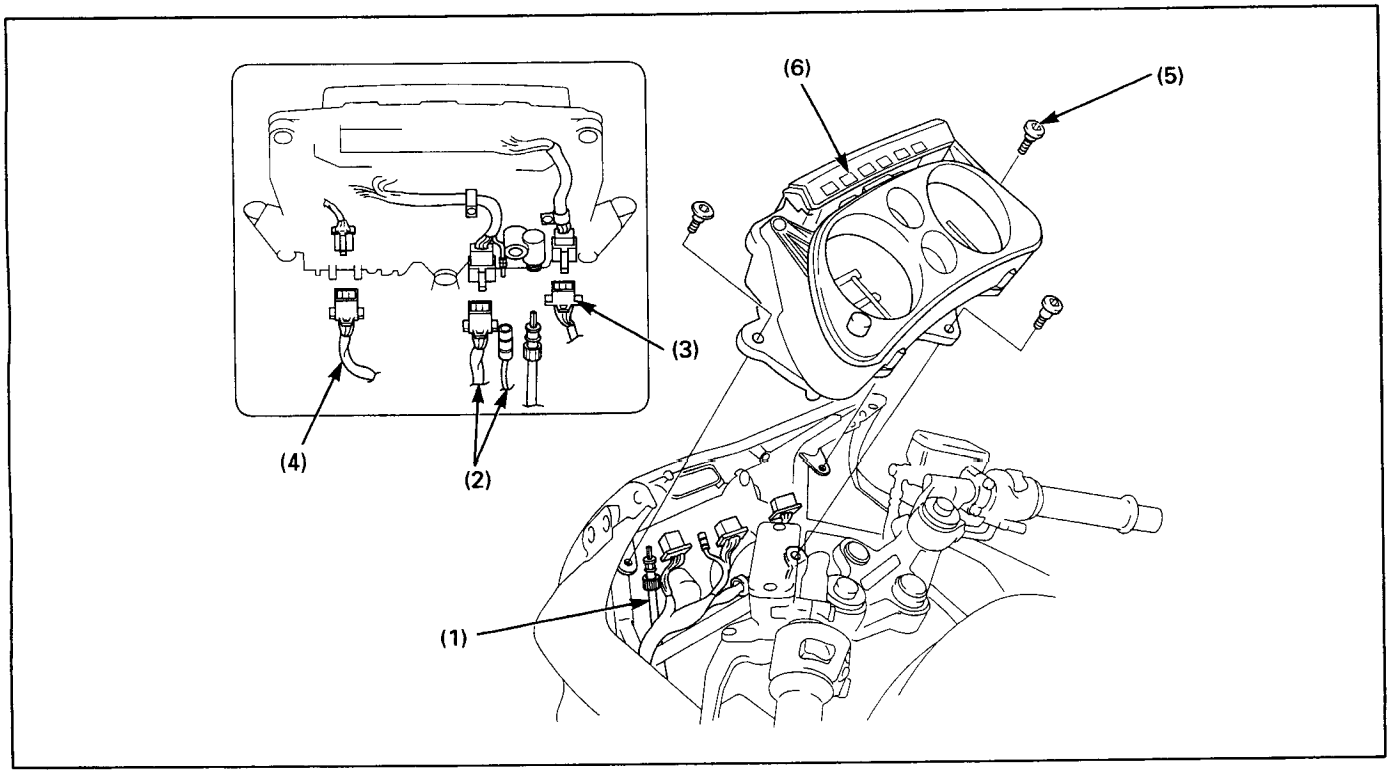

NOTE

- Route the wires and cable properly (page 1-23).

Requisite Service

- Windscreen removal/installation (page 2-7)

	Procedure	Q'ty	Remarks
	Removal Order		Installation is in the reverse order of removal.
(1)	Speedometer meter cable	1	
(2)	Combination meter 9P connector/ connector	1/1	
(3)	Combination meter 3P connector	1	
(4)	Position light 3P connector	1	Except U type
(5)	Combination meter mounting bolt	3	
(6)	Combination meter assembly	1	Disassembly (page 17-8)

Combination Meter Disassembly/Assembly

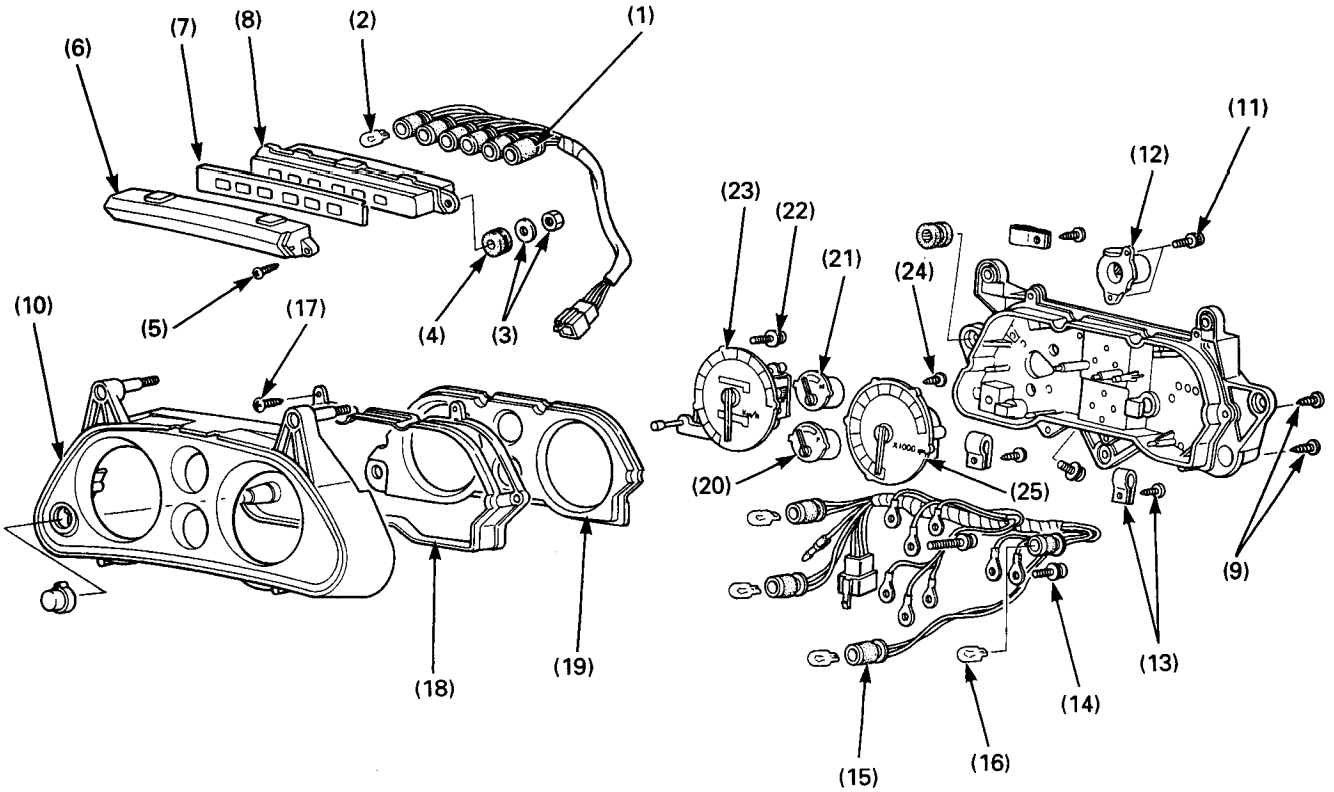

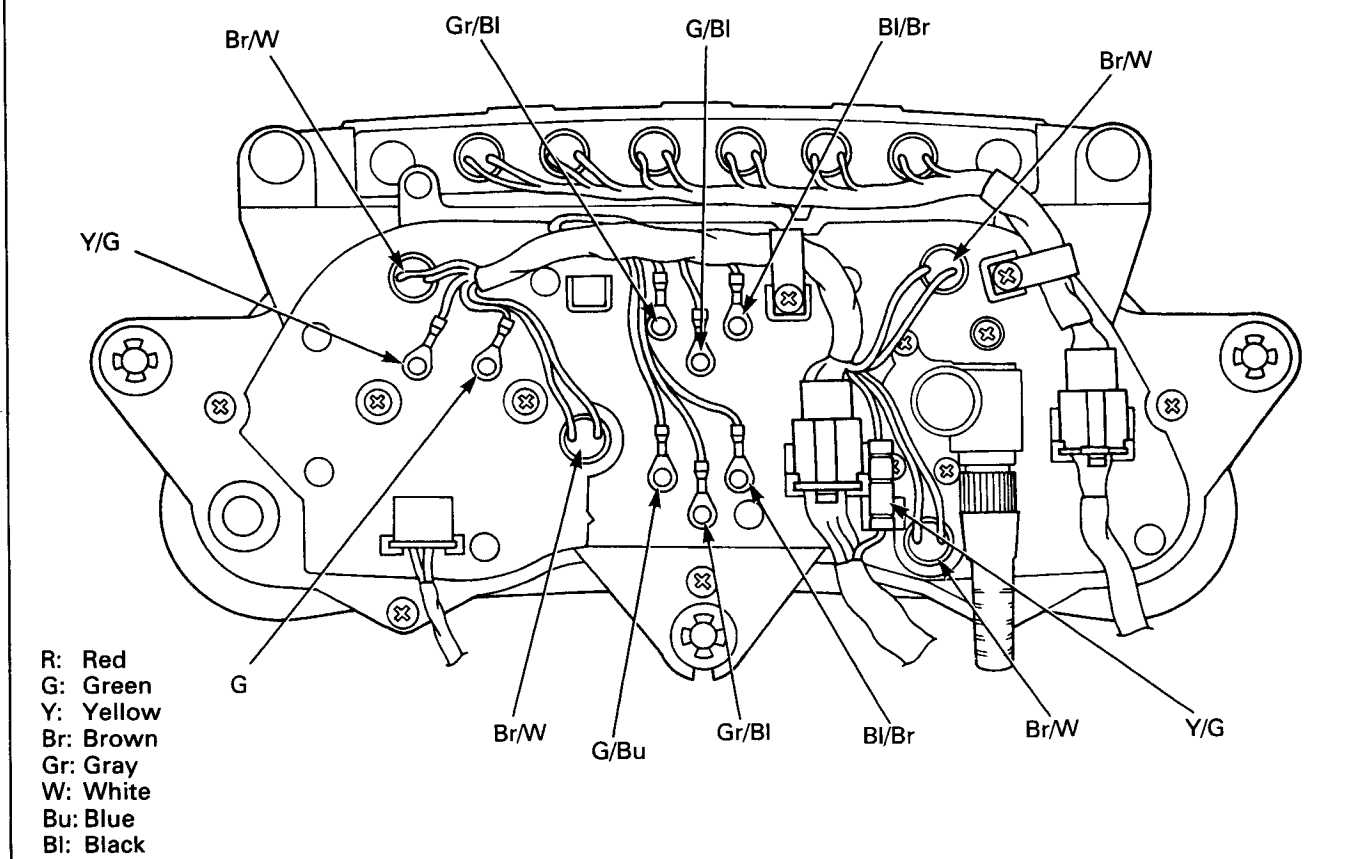

NOTE

- Connect the terminals and install the sockets are according to the color codes indicated on the lower case.
- Route the sub-harness an illustration shown.

Requisite Service

- Combination meter removal/installation (page 17-7)

	Procedure	Q'ty	Remarks
	Removal Order		Installation is in the reverse order of removal.
(1)	Indicator box socket	6	
(2)	Indicator bulb	6	
(3)	Indicator box mounting nut/washer	2	
(4)	Rubber mount	2	
(5)	Indicator box lens mounting screw	2	
(6)	Indicator box lens	1	
(7)	Indicator panel	1	
(8)	Indicator box	1	
(9)	Front cover mounting screw	8	
(10)	Front cover	1	
(11)	Speedometer gearbox mounting screw	3	
(12)	Speedometer gearbox	1	
(13)	Wire clamp/screw	2/2	
(14)	Wire eyelet screw	8	
(15)	Indicator socket	4	
(16)	Indicator bulb	4	
(17)	Combination meter lens screw	2	
(18)	Combination meter lens	1	
(19)	Combination meter panel	1	
(20)	Fuel gauge	1	
(21)	Coolant temperature gauge	1	
(22)	Speedometer mounting screw	1	
(23)	Speedometer	1	
(24)	Tachometer mounting screw	2	
(25)	Tachometer	1	

U type:

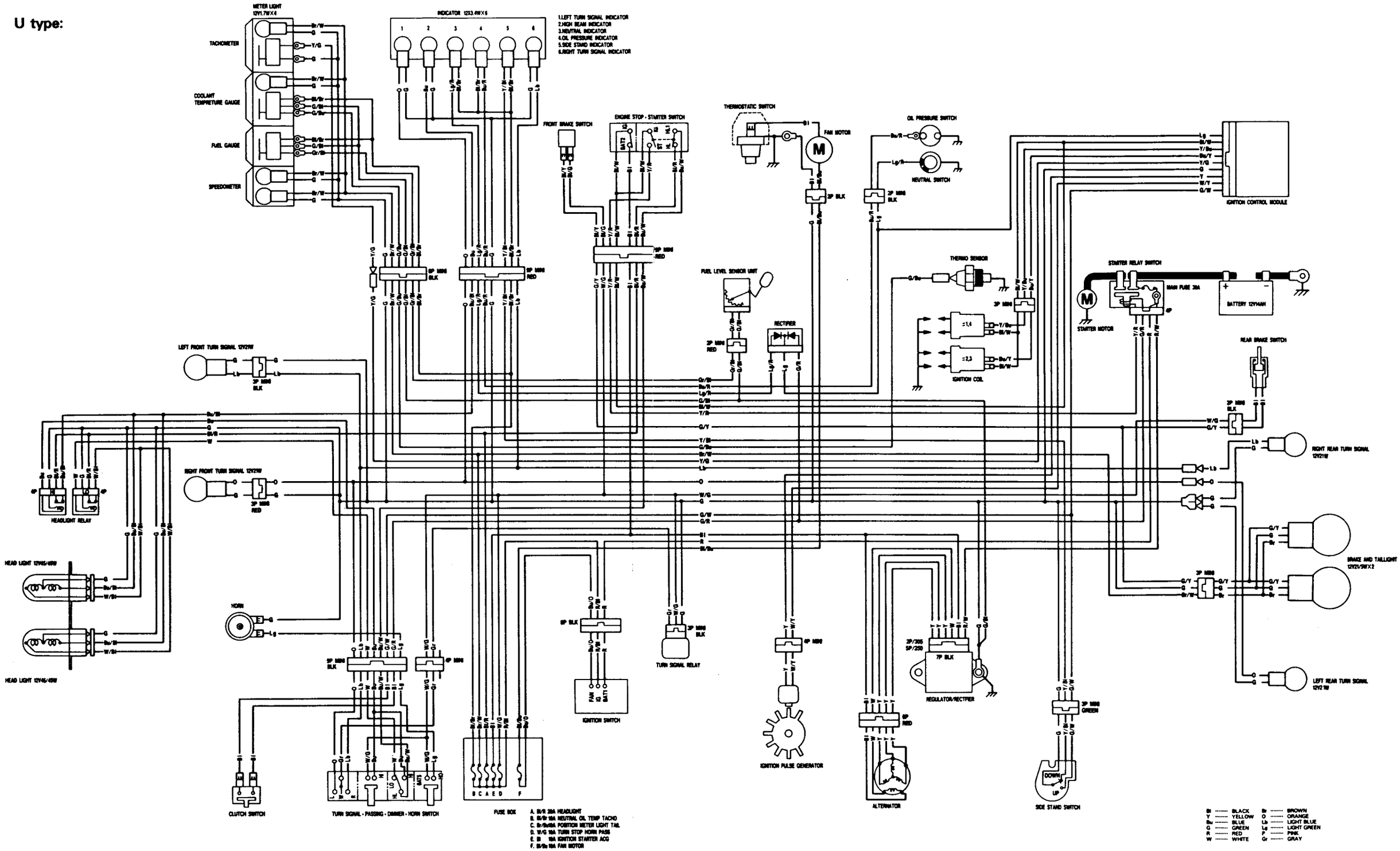
METER LIGHT 12V1.7W X 4
TACHOMETER
COOLANT TEMPRETURE GAUGE
FUEL GAUGE
SPEEDOMETER
INDICATOR 12X3.4W X 6
1.LEFT TURN SIGNAL INDICATOR
2.HIGH BEAM INDICATOR
3.NEUTRAL INDICATOR
4.OIL PRESSURE INDICATOR
5.SIDE STAND INDICATOR
6.RIGHT TURN SIGNAL INDICATOR
FRONT BRAKE SWITCH
ENGINE STOP · STARTER SWITCH
THERMOSTATIC SWITCH
FAN MOTOR
OIL PRESSURE SWITCH
NEUTRAL SWITCH
IGNITION CONTROL MODULE
THERMO SENSOR
FUEL LEVEL SENSOR UNIT
RECTIFIER
IGNITION COIL
STARTER RELAY SWITCH
MAIN FUSE 30A
BATTERY 12V14AH
STARTER MOTOR
REAR BRAKE SWITCH
LEFT FRONT TURN SIGNAL 12V21W
RIGHT FRONT TURN SIGNAL 12V21W
RIGHT REAR TURN SIGNAL 12V21W
BRAKE AND TAILLIGHT 12V21/5W X 2
LEFT REAR TURN SIGNAL 12V21W
HEADLIGHT RELAY
HEAD LIGHT 12V45/45W
HORN
TURN SIGNAL RELAY
IGNITION SWITCH
IGNITION PULSE GENERATOR
REGULATOR/RECTIFIER
ALTERNATOR
SIDE STAND SWITCH
CLUTCH SWITCH
TURN SIGNAL · PASSING · DIMMER · HORN SWITCH
FUSE BOX
A. Bl/R 20A HEADLIGHT
B. Bl/Br 10A NEUTRAL OIL TEMP TACHO
C. Br/Bu 10A POSITION METER LIGHT TAIL
D. W/G 10A TURN STOP HORN PASS
E. Bl 10A IGNITION STARTER ACG
F. Bl/Bu 10A FAN MOTOR
Bl ------ BLACK
Y ------ YELLOW
Bu ------ BLUE
G ------ GREEN
R ------ RED
W ------ WHITE
Br ------ BROWN
O ------ ORANGE
Lb ------ LIGHT BLUE
Lg ------ LIGHT GREEN
P ------ PINK
Gr ------ GRAY
SWITCH CONTINUITY
TURN SIGNAL SWITCH
PASSING SWITCH
DIMMER SWITCH
HORN SWITCH
IGNITION SWITCH
ENGINE STOP SWITCH
STARTER SWITCH
0030Z-MZ2-9600

Dual Combined Brake System

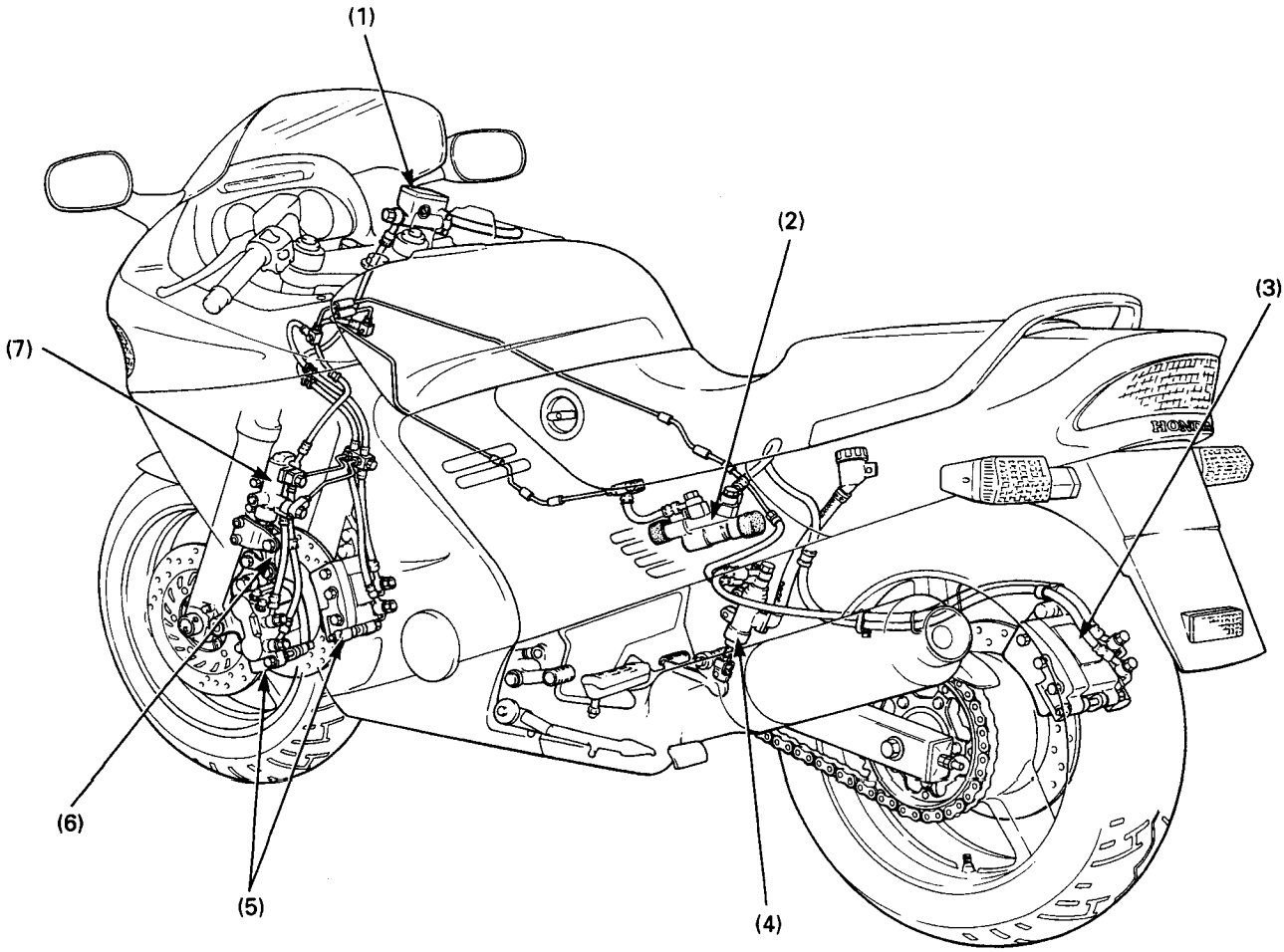

(1) FRONT MASTER CYLINDER
(2) PCV (PROPORTIONAL CONTROL VALVE)
(3) REAR BRAKE CALIPER
(4) REAR MASTER CYLINDER
(5) FRONT BRAKE CALIPER
(6) LINK MECHANISM
(7) SECONDARY MASTER CYLINDER

The Dual Combined Brake System was designed to simultaneously engage both front and rear brakes when either the front brake lever or rear brake pedal is applied.

The Dual Combined Brake System in fact is operated in the same way as a conventional brake system, but simplifies braking operations, increases braking performance and gives the rider a greater feeling of confidence without requiring special practice or training.

Operating Principles

Hand Brake

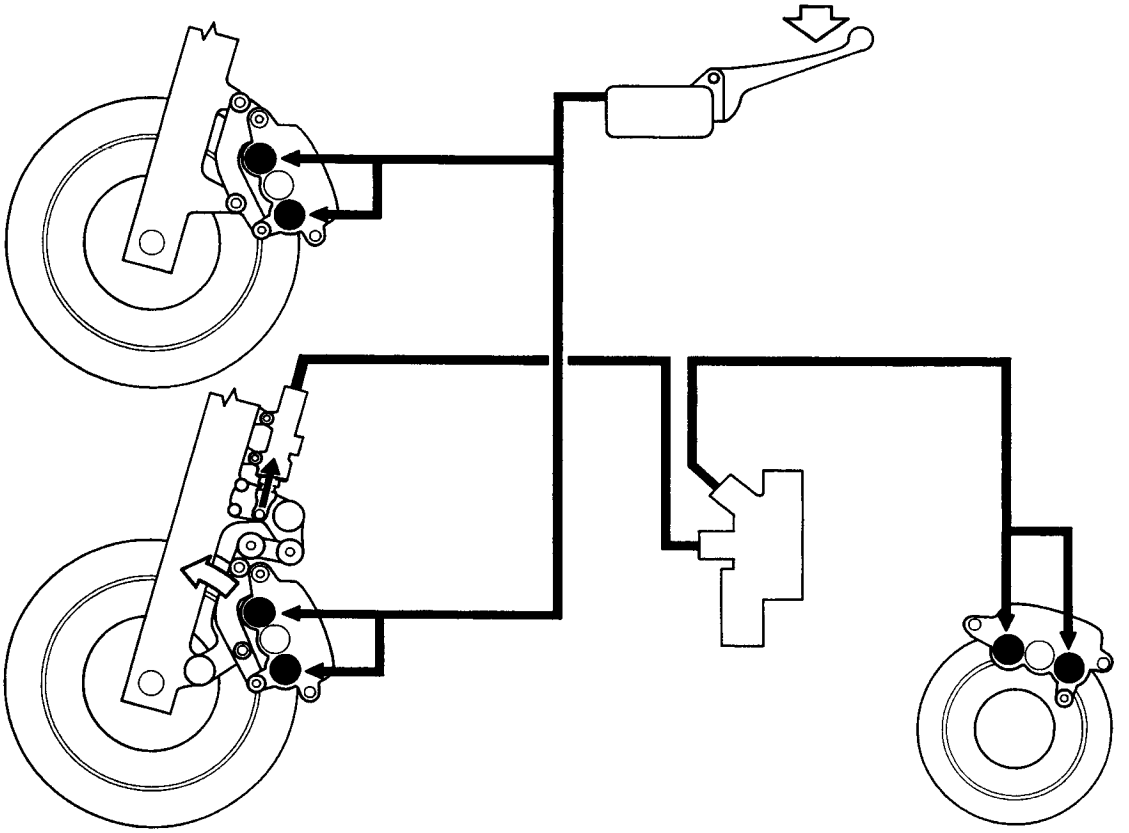

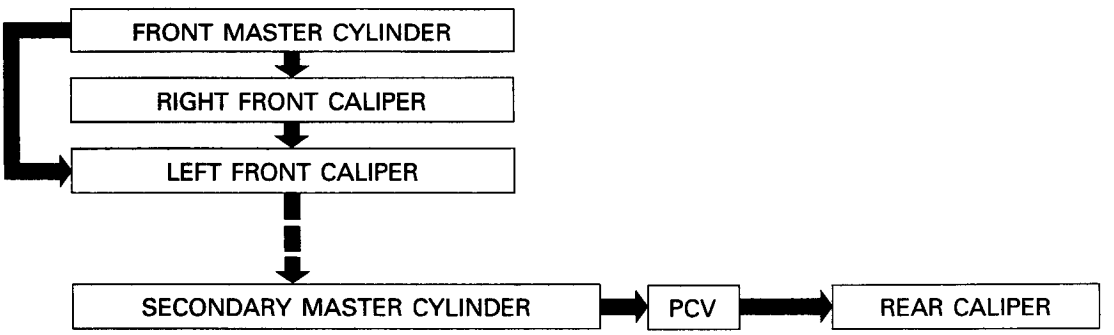

On initial operation, the hand brake works like any conventional motorcycle front brake system. A squeeze on the front brake lever pressurizes the master cylinder which transmits its increased hydraulic pressure to the two outer pistons of the front calipers, causing a corresponding braking force to be applied to the front wheel.

In response to the braking force applied by the front caliper onto the spinning brake rotor, the caliper is pulled in the direction of wheel rotation, around its lower linkage pivot. This forward caliper motion also acts on one end of a pivoting "L" angle link, the other end of which is connected to the secondary master cylinder. This direct pressure on the secondary master cylinder is then transmitted to the outer pistons of the rear caliper by way of the in-line proportional control valve.

Foot Brake

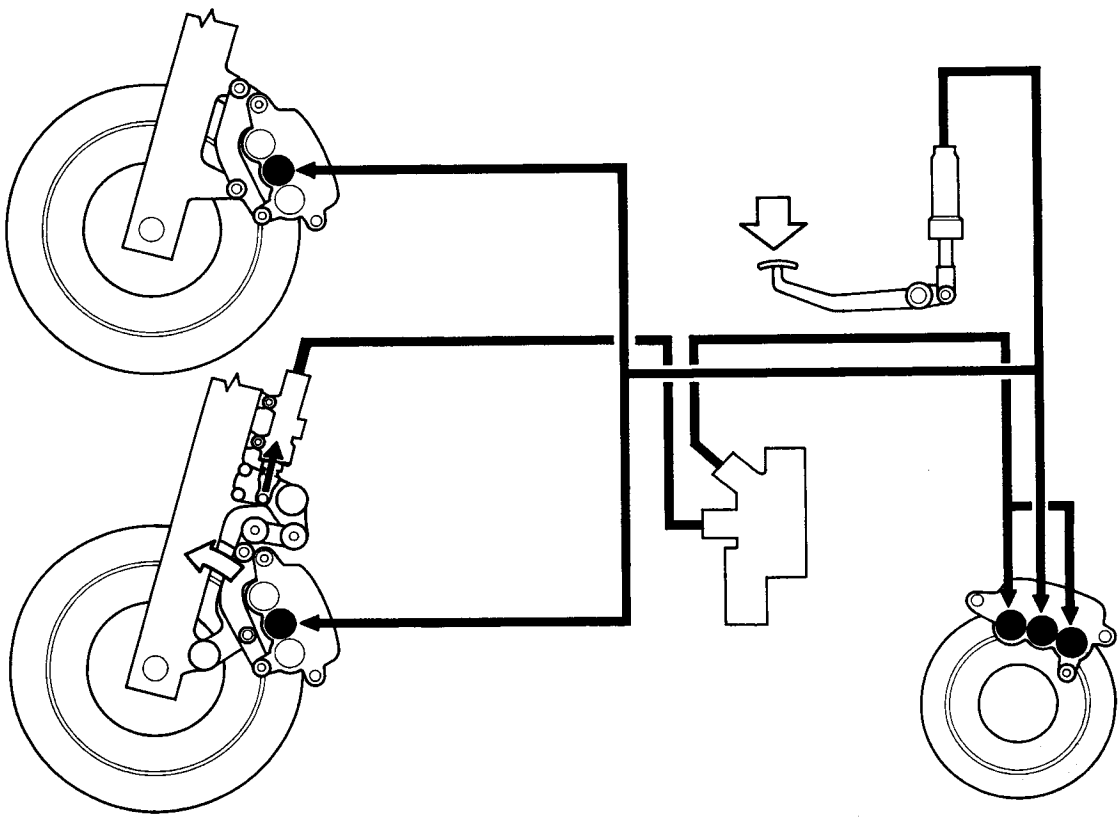

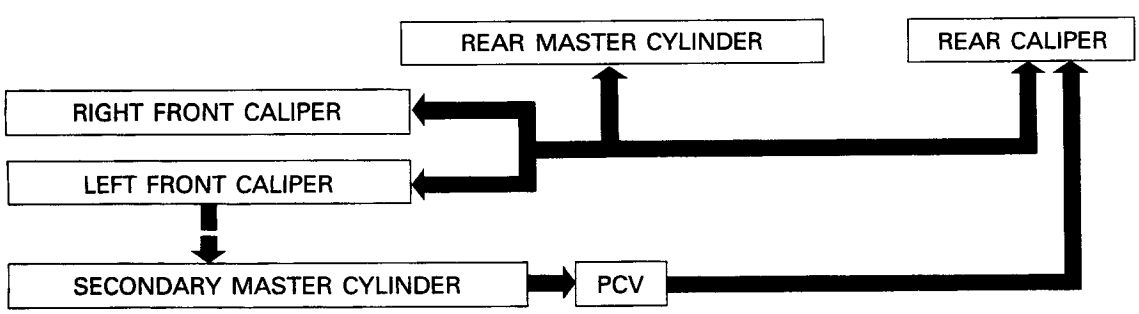

When the rear brake pedal is pressed, hydraulic pressure from the rear master cylinder is routed through two lines. One connects directly to the rear caliper and acts on the center piston. The outer line runs to the center pistons of the two front calipers.

As during hand brake operation, hydraulic pressure from the secondary master cylinder passes through the PCV (Proportional Control Valve), and acts on the outer pistons of the rear brake caliper. Because hydraulic pressure from the foot brake master cylinder is also being applied by the rear caliper's center piston, the braking force applied to the rear wheel is greater than that applied when using the hand brake lever only.

3-Piston Caliper

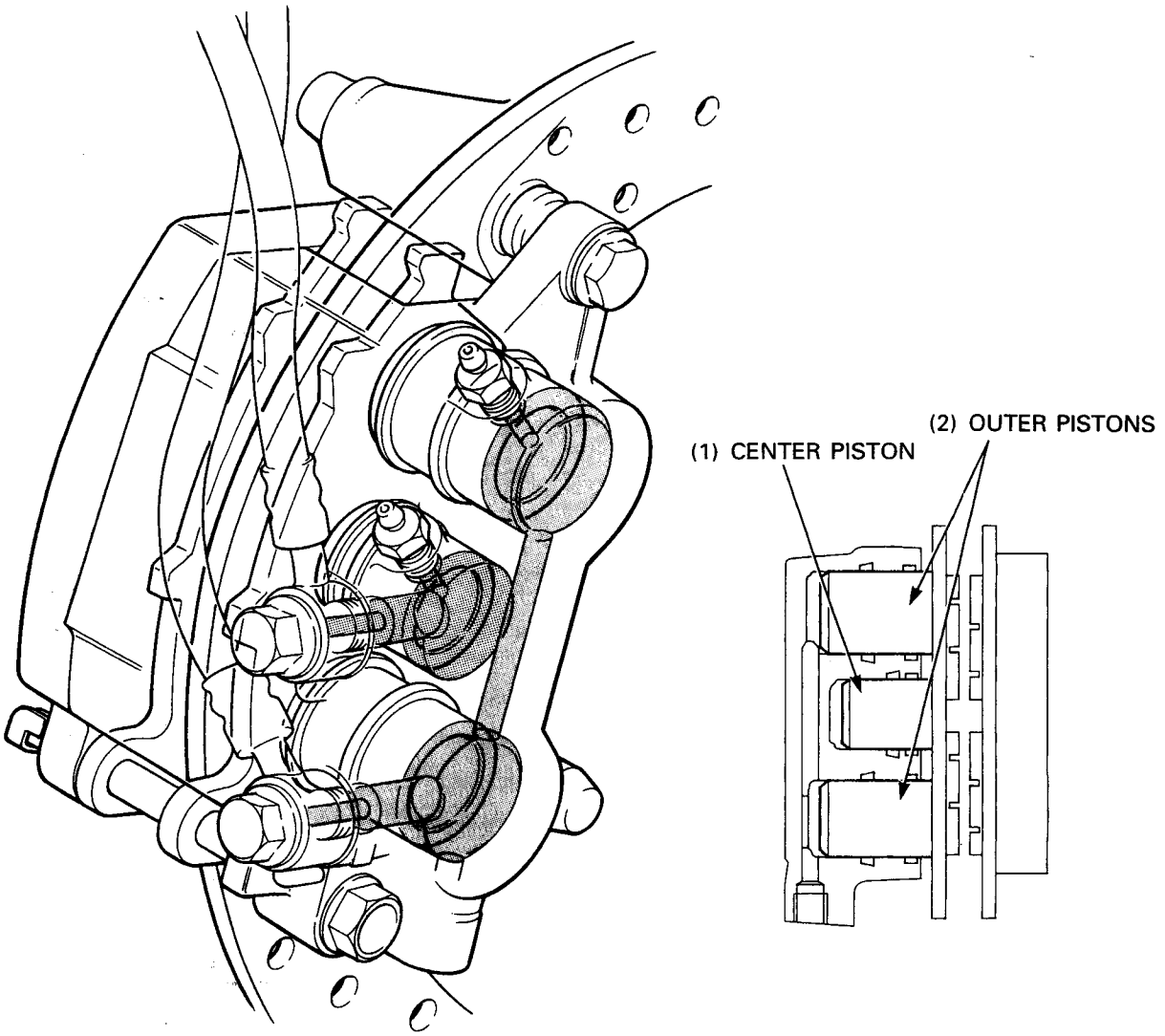

The Dual Combined Brake System 3-piston caliper is controlled by two independent hydraulic systems. The two outer pistons are connected by an internal passage and operated by either the lever-actuated master cylinder or, in case of the rear brake caliper, by the secondary master cylinder. The center piston of all three calipers is connected to the pedal-actuated hydraulic system and controlled by its master cylinder. These three pistons act on each caliper's active brake pad and allow it to be controlled by either or both of the two separate hydraulic systems.

PCV (Proportional Control Valve)

The PCV (Proportional Control Valve) controls three distinct steps in the braking curve.

Figure 1

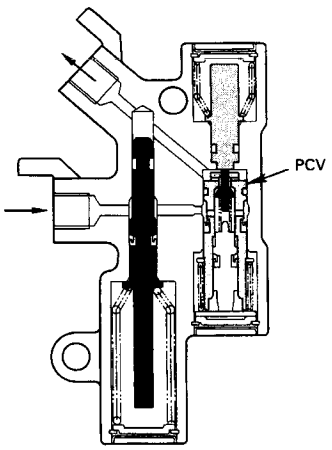

Figure 2

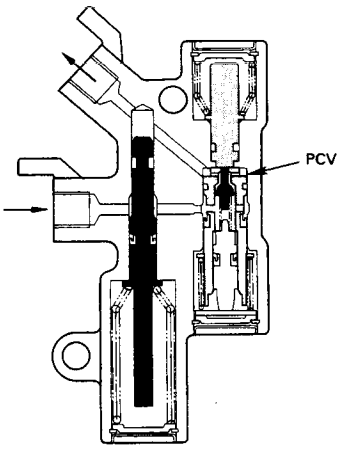

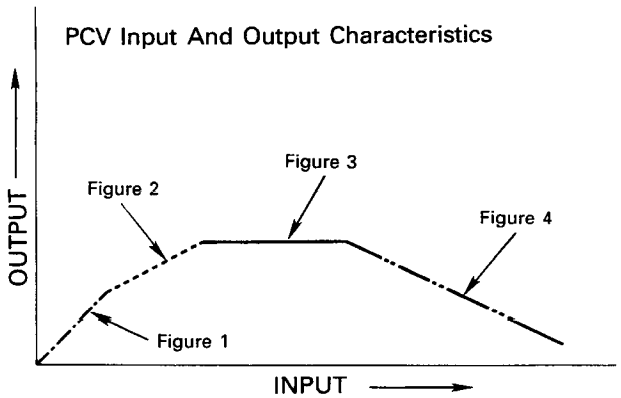

Figure 1: Without PCV
Figure 2: Conventional PCV
Figure 3: Effect of cut piston
Figure 4: Effect of decompression piston

Figure 3

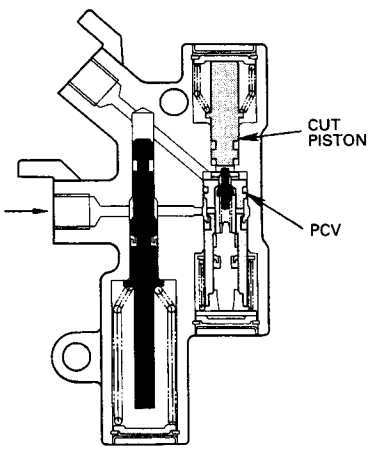

Figure 4

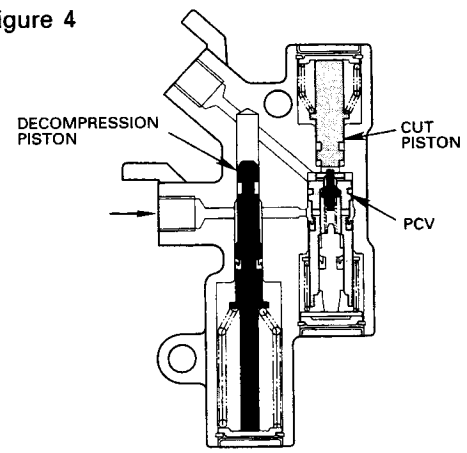

Initially, the PCV's output pressure increases in direct proportion to the increasing input pressure originating from the secondary master cylinder (Fig. 1). Following this, the automobile-type PCV causes the output pressure to increase at a slower rate than the input pressure, resulting in the first change in the pressure curve (Fig. 2).

As input pressure continues to increase, the cut piston activates, closing the valve and causing the output pressure to hold at a constant value (Fig. 3).

A further increase in input pressure forces the decompression piston down, which expands a sub-camber that draws pressure off the output side of the PCV (Fig. 4).

20. Troubleshooting

Engine Does Not Start Or Is Hard To Start

		Possible Cause
1. Check the fuel flow to carburetor	Not Reaching Carburetor	• Clogged fuel tube or fuel strainer screen • Sticking float valve • Clogged fuel tank breather • Disconnected or faulty auto fuel valve vacuum tube
Reaching Carburetor ↓		
2. Perform a spark test	Weak Or No Spark	• Faulty spark plug • Fouled spark plug • Faulty ignition control module • Broken or shorted spark plug wire • Broken or shorted ignition coil • Faulty ignition switch • Faulty ignition pulse generator • Faulty engine stop switch • Loose or disconnected ignition system wires
Good Spark ↓		
3. Test cylinder compression	Low Compression	• Improper valve clearance • Valve stuck open • Worn cylinder or piston • Damaged cylinder head gasket • Seized valve • Improper valve timing • Improper valve and seat contact
Compression Normal ↓		
4. Start by following normal procedure	Engine Starts But Stops	• Improper choke operation • Carburetor incorrectly adjusted • Intake pipe leaking • Improper ignition timing (Faulty ignition coil or ignition pulse generator) • Fuel contaminated
Engine Does Not Fire ↓		
5. Remove and inspect spark plug	Wet Plug	• Flooded carburetor • Choke closed • Throttle valve open • Air cleaner dirty

Engine Lacks Power

		Possible Cause
1. Raise wheels off the ground and spin by hand	Wheels Do Not Spin Freely	• Brake dragging • Worn or damaged wheel bearings • Drive chain too tight • Axle nut excessively tight
Wheel Spins Freely		
2. Check tire pressure	Pressure Low	• Faulty tire valve
Pressure Normal		
3. Accelerate rapidly from low to second	Engine Speed Not Changed When Clutch Is Released	• Clutch slipping • Worn clutch discs/plates • Warped clutch discs/plates • Weak clutch spring
Engine Speed Lowered When Clutch is Released		
4. Accelerate lightly	Engine Speed Does Not Increase	• Carburetor choke closed • Clogged air cleaner • Restricted fuel flow • Clogged muffler • Pinched fuel tank breather
Engine Speed Increases		
5. Check ignition timing	Incorrect	• Faulty ignition control module • Faulty ignition pulse generator
Correct		
6. Check valve clearance	Incorrect	• Improper valve adjustment • Worn valve seat
Correct		
7. Test cylinger compression	Incorrect	• Valve stuck open • Worn cylinder and piston rings • Leaking head gasket • Improper valve timing • Improper valve and seat contact • Seized valve
Normal		
8. Check carburetor for clogging	Clogged	• Carburetor not serviced frequently enough
Not clogging		
9. Remove spark plug	Fouled Or Discolored	• Plug not serviced frequntly enough • Spark plug is incorrect heat range
Not fouled Or Discolored		
10. Check oil level and condition	Incorrect	• Oil level too high • Oil level too low • Contaminated oil
Correct		

		Possible Cause
11. Remove cylinder head cover and inspect lubrication	Valve Train Not Lubricate Properly	• Clogged oil passage • Clogged oil control orifice • Faulty oil pump
Valve Train Lubricate Properly		
12. Check for engine overheating	Overheating	• Coolant level low • Fan motor not working (Faulty fan motor switch) • Thermostat stuck closed • Excessive carbon build-up in combustion chamber • Use of poor quality fuel • Clutch slipping • Lean fuel mixture
Not Overheating		
13. Accelerate or run at high speed	Engine Knocks	• Worn piston and cylinder • Wrong type of fuel • Excessive carbon build-up in combustion chamber • Ignition timing too advanced (Faulty ignition control module) • Lean fuel mixture
Engine Does Not Knock		

Poor Performance At Low And Idle Spped

		Possible Cause
1. Check ignition timing	Incorrect	• Improper valve clearance • Improper ignition timing (Faulty ignition control module)
Correct		
2. Check carburetor pilot screw adjustment	Incorrect	• See section 5
Correct		
3. Check for leaking intake pipe	Leaking	• Loose insulator clamp • Damaged insulator
No Leak		
4. Perform spark test	Weak or Intermittent Spark	• Faulty, carbon or wet fouled spark plug • Faulty ignition control module • Faulty ignition coil • Broken or shorted spark plug wires • Faulty engine stop switch • Faulty ignition pulse generator • Faulty ignition switch • Loose or disconnected ignition system wires
Good Spark		

Poor Performance At High Speed

		Possible Cause
1. Check ignition timing	Incorrect	• Improper valve clearance • Faulty ignition control module • Faulty ignition pulse generator
Correct ↓		
2. Disconnect fuel tube at carburetor	Fuel Flow Restricted	• Clogged fuel line • Clogged fuel tank breather • Clogged fuel strainer screen • Clogged fuel valve
Fuel Flows Freely ↓		
3. Remove carburetor and check for clogged jets	Clogged	• Clean
Not Clogged ↓		
4. Check valve timing	Incorrect	• Cam sprocket not installed properly
Correct ↓		
5. Check valve spring	Weak	• Faulty spring
Not Weakened		

Poor Handling

	Possible Cause
1. If steering is heavy	• Steering stem adjustment nut too tight • Damaged steering head bearings • Bent steering stem
2. If either wheel is wobbling	• Excessive wheel bearing play • Bent rim • Swingarm pivot bearing excessively worn • Bent frame
3. If the motorcycle pulls to one side	• Incorrect drive chain adjustment • Front and rear wheel not aligned • Bent fork legs • Bent swingarm • Bent frame

Index

How To Use This Manual

This addendum contains information for the CBR1000F(S). Refer to the CBR1000F shop manual (62MZ200) for service procedures and data not included in this addendum.

HONDA MOTOR CO., LTD.
Service Publication Office

Contents

Important Safety Notice

⚠WARNING **Indicates a strong possibility of severe personal injury or death if instructions are not followed.**

CAUTION: **Indicates a possibility of personal injury or equipment damage if instructions are not followed.**

NOTE: Gives helpful information.

Detailed descriptions of standard workshop procedures, safety principles and service operations are not included. It is important to note that this manual contains some warnings and cautions against some specific service methods which could cause PERSONAL INJURY to service personnel or could damage a vehicle or render it unsafe. Please understand that those warnings could not cover all conceivable ways in which service, whether or not recommended by Honda, might be done or of the possibly hazardous consequences of each conceivable way, nor could Honda investigate all such ways. Anyone using service procedures or tools, whether or not recommended by Honda,must satisfy himself thoroughly that neither personal safety nor vehicle safety will be jeopardized by the service method or tools selected.

Type Codes

• Throughout this manual, the following abbreviations are used to identify individual model.

Code	Area Type
ED	European direct sales
E	U.K.
F	France
G (GI/GII)	Germany (Full power/Limited power)
U	Australia
ND	North Europe
SW	Switzerland
IT	Italy
H	Netherland
AR	Austria
SP	Spain

Model Identification

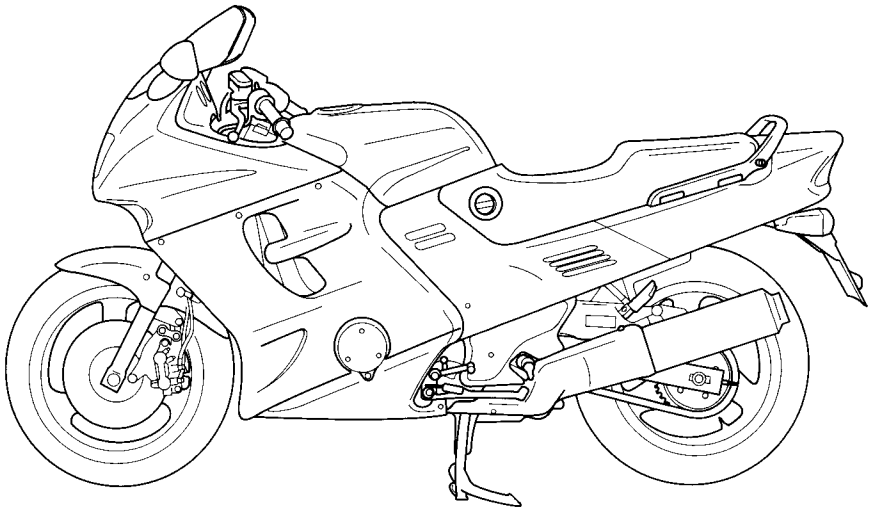

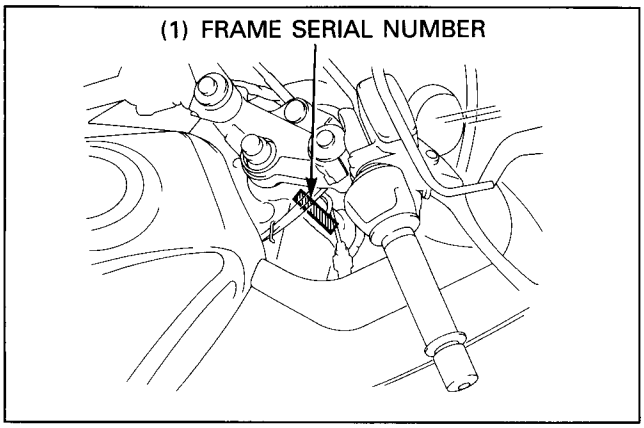

(1) The frame serial number is stamped on the right side of the steering head.

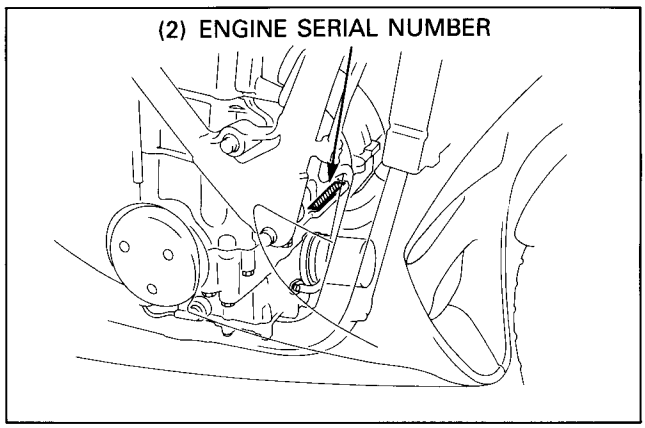

(2) The engine serial number is stamped on the front of the crankcase.

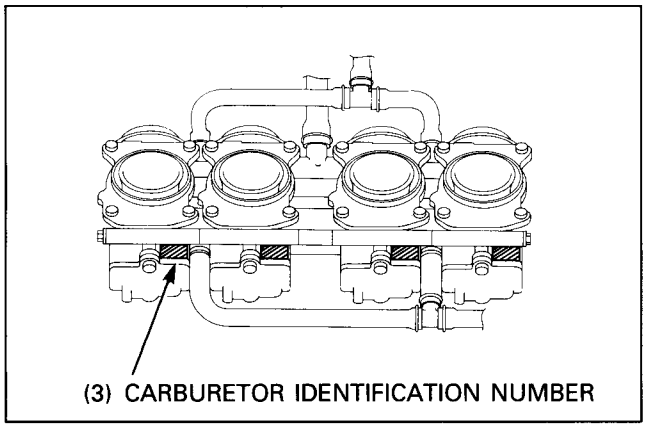

(3) The carburetor identification number is stamped on the rear side of each carburetor.

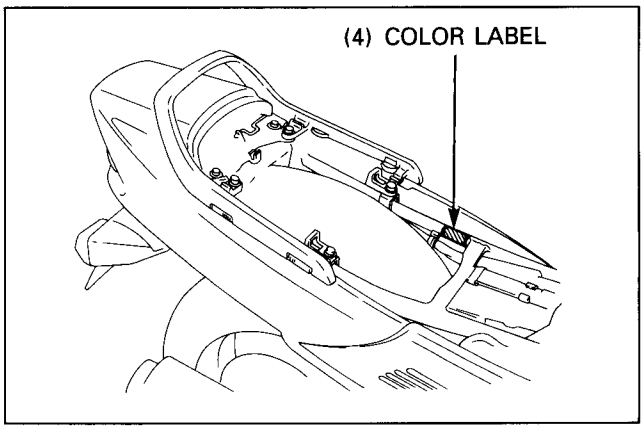

(4) The color label is attached as shown. When ordering color-coded parts, always specify the designated color code.

Specifications

General

Item		Specifications
Dimensions	Overall length (G, SW, IT, ND type)	2,235 mm (88.0 in)
	(ED, E, F, AR, SP, U type)	2,270 mm (89.4 in)
	Overall width	740 mm (29.1 in)
	Overall height	1,215 mm (47.8 in)
	Wheel base	1,500 mm (59.1 in)
	Seat height	780 mm (30.7 in)
	Footpeg height	355 mm (14.0 in)
	Ground clearance	140 mm (5.5 in)
	Dry weight	235 kg (518 lbs)
	Curb weight	271 kg (597 lbs)
	Maximum weight capacity	185 kg (408 lbs)
Frame	Frame type	Diamond
	Front suspension	Telescopic fork
	Front wheel travel	130 mm (5.1 in)
	Rear suspension	Swingarm
	Rear wheel travel	115 mm (4.5 in)
	Rear damper	Nitrogen gas filled damper
	Front tire size	120/70 VR17–V270
	Rear tire size	170/60 VR17–V270
	Tire brand (Bridgestone) FR/RR	CYROX19E/CYROX16E (Except AR type)
	Tire brand (Dunlop) FR/RR	K510A/K510B
	Front brake	Hydraulic double disc brake
	Rear brake	Hydraulic single disc brake
	Caster angle	27°
	Trail length	110 mm (4.3 in)
	Fuel tank capacity	22 liter (5.81 US gal, 4.84 Imp gal)
	Fuel tank reserve capacity	3.5 liter (0.91 US gal, 0.77 Imp gal)
Engine	Bore and stroke	77.0 x 53.6 mm (3.03 x 2.11 in)
	Displacement	998 cm³ (60.9 cu-in)
	Compression ratio	10.5 : 1
	Valve train	Chain drive and DOHC
	Intake valve opens at 1 mm lift	15° BTDC (E, G type); 0° BTDC (SW, AR type); 5° BTDC (F type)
	Intake valve closes at 1 mm lift	38° ABDC (E, G type); 40° ABDC (SW, AR type); 30° ABDC (F type)
	Exhaust valve opens at 1 mm lift	40° BBDC (E, G type); 40° BBDC (SW, AR type); 40° BBDC (F type)
	Exhaust valve closes at 1mm lift	10° ATDC (E, G type); 0° ATDC (SW, AR type); 10° ATDC (F type)
	Lubrication system	Forced pressure and wet sump
	Oil pump type	Trochoid
	Cooling system	Liquid cooled
	Air filtration	Paper filter
	Crankshaft type	Unit type, 6 main journals
	Engine weight	94.7 kg (209 lbs)
	Firing order	1 – 2 – 4 – 3
	Cylinder arrangement	4 cylinder, inline
	Cylinder number	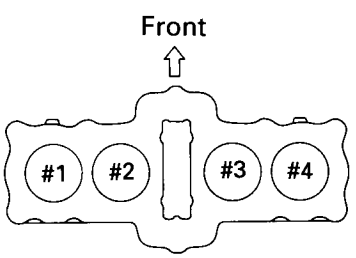

General (Cont'd)

Item		Specifications
Carburetor	Carburetor type Throttle bore	CV (Constant Velocity) type, with flat valve 38 mm (1.5 in)
Drive Train	Clutch system Clutch operation system Transmission Primary reduction Final reduction Gear ratio 1st Gear ratio 2nd Gear ratio 3rd Gear ratio 4th Gear ratio 5th Gear ratio 6th Gearshift pattern	Multi-plate, wet Hydraulic operating 6-speeds constant mesh 1.785 (75/42) 2.470 (42/17) 2.750 (33/12) 2.066 (31/15) 1.647 (28/17) 1.368 (26/19) 1.173 (27/23) 1.045 (23/22) Left foot operated, return system 1 – N – 2 – 3 – 4 – 5 – 6
Electrical	Ignition system Starting system Charging system Regulator/rectifier type Lighting system	Full transistor digital ignition Electric starter motor Triple phase output alternator Transistor opened/triple phase, full-wave rectification Battery

Lubrication System

Unit: mm (in)

Item	Standard	Service Limit
Engine oil capacity at draining	3.6 liter (3.78 US qt, 3.17 Imp qt)	——
at disassembly	4.5 liter (4.76 US qt, 3.96 Imp qt)	——
at oil filter change	3.8 liter (4.02 US qt, 4.43 Imp qt)	——
Recommended engine oil	Use Honda 4-stroke oil or equivalent API Service Classification: SE, SF or SG viscosity: SAE 10W–40 Other viscosities shown in the chart may be used when the average temperature in your riding area is within the indicated range.	——
Oil pressure at oil pressure switch	588–686 kPa (6.0–7.0kg/cm², 85–100 psi) at 5,000 min⁻¹ (rpm) (80°C/176°F)	——
Oil pump rotor tip clearance ①	0.15 (0.006)	0.20 (0.008)
body clearance ②	0.15–0.22 (0.006–0.009)	0.35 (0.014)
end clearance ③	0.02–0.07 (0.001–0.003)	0.10 (0.004)

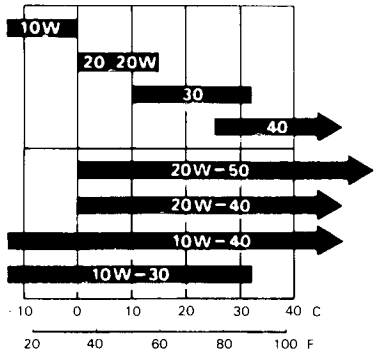

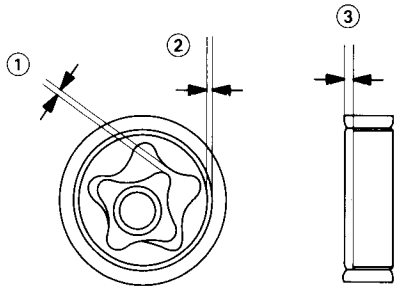

Fuel System

Carburetor identification number		——
(G type)	VP83A	——
(ED, E, ND, SP, IT, U type)	VP83B	——
(F type)	VP83C	——
(SW type)	VP85A	——
(AR type)	VP85B	——
Main jet	#122	——
Slow jet (ED, E, F, ND, SP, IT, U type)	#42	——
(G, SW, AR type)	#40	——
Pilot screw initial opening (Except SW, AR type)	3 turns out	——
(SW type)	1–3/4 turns out	——
(AR type)	2–5/8 turns out	——
Float level	13.7 (0.54)	——
Carburetor vacuum difference	20 mm Hg (0.8 in Hg)	——
Base carburetor (For carburetor synchronization)	No.3	——
Idle speed (Except SW, AR type)	1,000 ± 100 min⁻¹ (rpm)	——
(SW type)	1,050 ± 50 min⁻¹ (rpm)	——
(AR type)	1,050 ± 100 min⁻¹ (rpm)	——
Throttle grip free play	2–6 (0.08–0.24)	——
Secondary air supply system (SW, AR type)	Reed valves are built into the ASV	——
Air injection control valve vacuum pressure (SW, AR type)	420 mm Hg (16.5 in Hg)	——

Unit: mm (in)

Cooling System

Item	Standard	Service Limit
Coolant capacity (Radiator and engine)	2.6 liter (2.75 US qt, 2.29 Imp qt)	———
(Reserve tank)	0.4 liter (0.42 US qt, 0.35 Imp qt)	———
Radiator cap relief pressure	108–137 kPa (1.1–1.4 kg/cm², 16–20 psi)	———
Thermostat begins to open	80°–84°C (176–183°F)	———
Thermostat fully open	95°C (203°F)	———
Thermostat valve lift	8.0 (0.32) minimun	———

Cylinder Head

Cylinder compression	1,050–1,450 kpa (10.5–14.4 kg/cm², 149–206 psi)/400 min⁻¹ (rpm)	———
Cylinder compression synchronization difference	40 mm Hg	———
Valve clearance IN	0.10 ± 0.02 (0.004 ± 0.001)	———
EX	0.18 ± 0.02 (0.007 ± 0.001)	———
Cylinder head warpage	———	0.07 (0.003)
Cam lobe height ① IN (ED, E, G, ND, SP, IT, U type)	35.668–35.748 (1.4042–1.4074)	35.62 (1.402)
IN (F type)	33.352–33.432 (1.3131–1.3162)	33.30 (1.311)
IN (SW, AR type)	34.907–34.987 (1.3743–1.3774)	34.85 (1.372)
EX (ED, E, G, ND, SP, IT, U type)	35.540–35.620 (1.3992–1.4024)	35.49 (1.397)
EX (F type)	35.540–35.620 (1.3992–1.4024)	35.49 (1.397)
EX (SW, AR type)	34.835–34.915 (1.3715–1.3746)	34.79 (1.370)
Camshaft runout	———	0.03 (0.001)
Camshaft oil clearane A	0.020–0.062 (0.0008–0.0024)	0.12 (0.005)
B	0.050–0.092 (0.0020–0.0036)	0.14 (0.006)

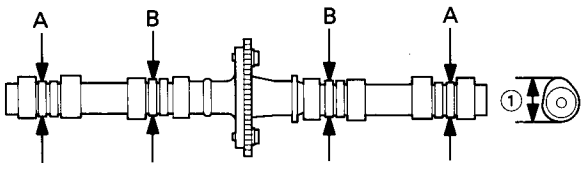

Camshshaft journal O.D A (Except F type)	27.959–27.980 (1.1007–1.1016)	———
A (F type)	27.459–27.480 (1.0811–1.0819)	———
B (Except F type)	27.929–27.950 (1.0996–1.1004)	———
B (F type)	27.421–27.450 (1.0796–1.0807)	———
Valve stem O.D. IN	5.475–5.490 (0.2156–0.2161)	5.47 (0.215)
EX	5.455–5.470 (0.2148–0.2154)	5.45 (0.215)
Valve guide I.D. IN	5.500–5.512 (0.2165–0.2170)	5.55 (0.219)
EX	5.500–5.512 (0.2165–0.2170)	5.55 (0.219)
Stem-to-guide clearance IN	0.010–0.037 (0.0004–0.0015)	———
EX	0.030–0.057 (0.0012–0.0022)	———
Valve guide projection above cylinder head IN	17.8–18.0 (0.70–0.71)	———
EX	17.8–18.0 (0.70–0.71)	———

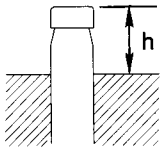

Before guide installation:
1. Chill the valve guides in the freezer section of the refrigerator for about an hour.
2. Heat the cylinder head to 100–150°C (212–300°F)

Valve seat width	0.9–1.1 (0.035–0.043)	1.5 (0.6)
Valve spring free length inner IN	43.15 (1.699)	41.8 (1.65)
inner EX	43.15 (1.699)	41.8 (1.65)
outer IN	47.08 (1.854)	45.7 (1.80)
outer EX	47.08 (1.854)	45.7 (1.80)

Unit: mm (in)

Cylinder/Piston

Item	Standard	Service Limit
Cylinder I.D.	77.000–77.010 (3.0315–3.0319)	77.10 (3.305)
Cylinder out of round	———	0.05 (0.002)
Cylinder taper	———	0.05 (0.002)
Cylinder warpage	———	0.05 (0.002)
Piston mark direction	"IN" mark facing toward the intake side	———
Piston O.D. (D)	76.970–76.990 (3.0303–3.0311)	76.87 (3.026)
Piston O.D. measurement point (H)	15 mm (0.6 in) from the bottom	———
Piston pin hole I.D. (d)	20.002–20.008 (0.7875–0.7877)	20.06 (0.790)
Cylinder-to-piston clearance	0.010–0.040 (0.0004–0.0016)	0.10 (0.004)
Piston pin O.D.	19.994–20.000 (0.7872–0.7874)	19.98 (0.787)
Piston-to-piston pin clearance	0.002–0.014 (0.0001–0.0006)	0.04 (0.002)
Connecting rod-to piston pin clearance	0.016–0.040 (0.0006–0.0016)	0.06 (0.002)
Top ring-to-ring groove clearance	0.025–0.055 (0.0010–0.0022)	0.09 (0.004)
Second ring-to-ring groove clearance	0.015–0.045 (0.0006–0.0018)	0.10 (0.004)
Top Ring end gap	0.250–0.400 (0.0100–0.0157)	0.58 (0.023)
Second Ring end gap	0.320–0.470 (0.0126–0.0185)	0.65 (0.026)
Oil ring (side rail) end gap	0.300–0.900 (0.0118–0.0354)	1.10 (0.043)
Top ring mark	Marking side facing up	———
Second ring mark	Marking side facing up	———

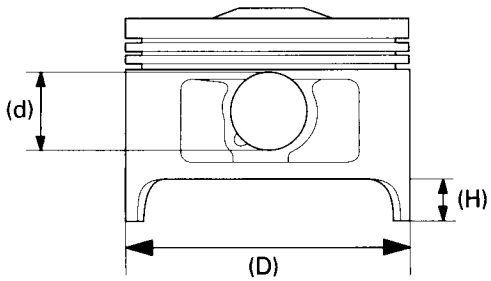

Clutch System

Recommended clutch fluid	DOT 4 brake fluid	———
Clutch master cylinder I.D.	14.000–14.043 (0.5512–0.5529)	14.06 (0.554)
Clutch master piston O.D.	13.957–13.984 (0.5495–0.5506)	13.94 (0.549)
Clutch outer I.D.	47.005–47.030 (1.8506–1.8516)	47.10 (1.854)
Clutch outer guide I.D.	27.995–28.012 (1.1022–1.1028)	28.08 (1.106)
Mainshaft O. D. at clutch outer guide	27.980–27.993 (1.1016–1.1021)	27.97 (1.101)
Clutch spring free length	46.7 (1.839)	44.7 (1.76)
Clutch disc thickness A	3.42–3.58 (0.135–0.141)	3.1 (0.12)
B	3.72–3.33 (0.146–0.153)	3.1 (0.12)
Clutch plate warpage	———	0.30 (0.012)

Transmission

Unit: mm (in)

Item	Standard	Service Limit
Transmission gear I.D. M5, M6	31.000–31.016 (1.2205–1.2211)	31.04 (1.222)
C2, C3, C4	33.000–33.016 (1.2992–1.2998)	33.04 (1.301)
Transmission gear bushing O.D. M5, M6	30.955–30.980 (1.2187–1.2197)	30.93 (1.218)
C2, C3, C4	32.955–32.980 (1.2976–1.2984)	32.93 (1.296)
Transmission gear bushing I.D. M5	27.985–28.006 (1.1018–1.1026)	28.02 (1.103)
C2	29.985–30.006 (1.1805–1.1813)	30.02 (1.182)
Gear-to-bushing clearance at M5, M6 gear	0.020–0.061 (0.0008–0.0024)	0.10 (0.004)
at C2, C3, C4 gear	0.020–0.061 (0.0008–0.0024)	0.10 (0.004)
Mainshaft O.D. at M5 gear	27.967–27.980 (0.1011–1.1016)	27.94 (1.100)
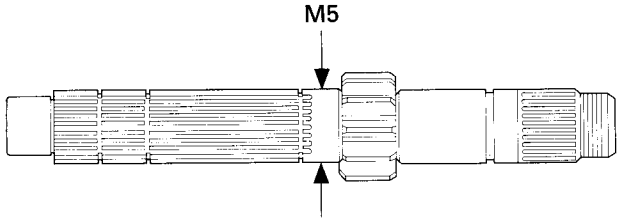		
Countershaft O.D. at C2 gear	29.950–29.975 (1.1791–1.1801)	29.92 (1.178)
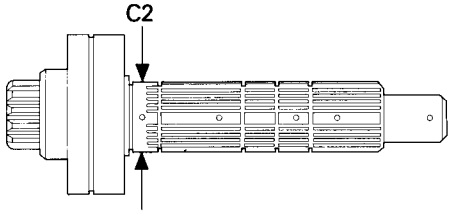		
Gear bushing-to shaft clearance at M5 gear	0.005–0.039 (0.0002–0.0015)	0.06 (0.002)
at C2 gear	0.010–0.056 (0.0004–0.0022)	0.06 (0.002)
Shift fork claw thickness L	5.43–5.50 (0.214–0.217)	5.1 (0.20)
C	6.43–6.50 (0.253–0.256)	6.1 (0.24)
R	5.43–5.50 (0.214–0.217)	5.1 (0.20)
Shift fork I.D. L	14.000–14.018 (0.5112–0.5519)	14.04 (0.553)
C	14.000–14.018 (0.5112–0.5519)	14.04 (0.553)
R	14.000–14.018 (0.5112–0.5519)	14.04 (0.553)
Shift fork shaft O.D. L	13.957–13.968 (0.5495–0.5499)	13.90 (0.547)
C	13.957–13.968 (0.5495–0.5499)	13.90 (0.547)
R	13.957–13.968 (0.5495–0.5499)	13.90 (0.547)

Unit: mm (in)

Crankshaft

Item	Standard	Service Limit
Connecting rod small end I.D.	20.016–20.034 (0.7880–0.7887)	20.08 (0.791)
Connecting rod big end side clearance	0.05–0.20 (0.002–0.008)	0.3 (0.01)
Crankshaft runout ①	———	0.03 (0.001)
Crankpin oil clearance	0.028–0.052 (0.0011–0.0020)	0.08 (0.003)
Crankpin bearing selection	See page 10-21	———
Main journal oil clearance	0.021–0.045 (0.008–0.0018)	0.08 (0.003)
Main journal bearing selection	See page 10-20	———

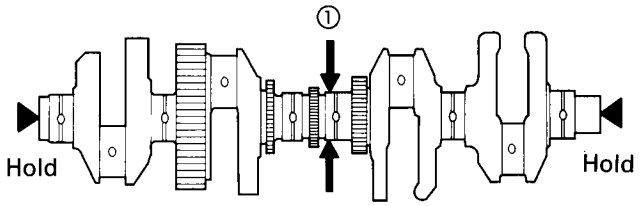

Alternator

Alternator shaft collar spring free height	2.1 (0.08)	1.8 (0.07)

Unit: mm (in)

Wheels/Tires

Item	Standard	Service Limit
Minimum tire tread depth (FR)	———	1.5 (0.06)
(RR)	———	2.0 (0.08)
Cold tire pressure Driver only (FR)	250 kPa (2.5 kg/cm², 36 psi)	———
Driver only (RR)	290 kPa (2.9 kg/cm², 42 psi)	———
Driver and passenger (FR)	250 kPa (2.5 kg/cm², 36 psi)	———
Driver and passenger (RR)	290 kPa (2.9 kg/cm², 42 psi)	———
Front and rear axle runout	———	0.2 (0.01)
Front and rear wheel rim runout (Radial)	———	2.0 (0.08)
(Axial)	———	2.0 (0.08)
Wheel balance weight (Front)	———	60 g (2.1 oz)
(Rear)	———	60 g (2.1 oz)
Drive chain slack	15–25 (0.6–1.0)	———
Drive chain size/link (DID)	DID50ZV/114	———
(RK)	RK50LFO/114	———

Front Suspension

Fork spring free length	446.3 (17.57)	437.4 (17.22)
Fork spring direction	Tapered wound coil facing down	———
Fork tube runout	———	0.2 (0.01)
Recommended fork oil	Fork fluid	———
Fork oil level	173 (6.8)	———
Fork oil capacity	418 cm³ (14.1 US oz, 11.8 Imp oz)	———
Steering bearing preload	1.1–1.6 kg (2.43–3.53 lb)	———

Rear Suspension

Damper compressed gas	Nitrogen	———
Damper drilling point	13 (0.5)	———

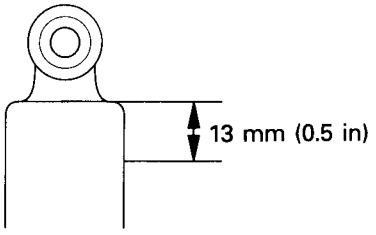

Brakes

Unit: mm (in)

	Item	Standard	Service Limit
Front	brake fluid	DOT 4	——
	brake pad wear indicator ①	——	To the groove
	brake disc thickness	5.0 (0.20)	4.0 (0.16)
	brake disc runout	——	0.30 (0.012)
	master cylinder I.D.	12.700–12.743 (0.5000–0.5017)	12.76 (0.502)
	caliper piston O.D.	12.657–12.684 (0.4983–0.4994)	12.65 (0.498)
	caliper cylinder I.D. (22.6 mm bore)	22.650–22.700 (0.8917–0.8937)	22.710 (0.8941)
	(25.4 mm bore)	25.400–25.450 (1.0000–1.0020)	25.460 (1.0024)
	(27.0 mm bore)	27.000–27.050 (1.0630–1.0650)	27.060 (1.0654)
	caliper piston O.D. (22.6 mm bore)	22.585–22.618 (0.8892–0.8905)	22.560 (0.8882)
	(25.4 mm bore)	25.318–25.368 (0.9968–0.9987)	25.310 (0.9965)
	(27.0 mm bore)	26.916–26.968 (1.0597–1.0617)	26.910 (1.0594)
	Secondary master cylinder I.D.	12.700–12.743 (0.5000–0.5017)	12.76 (0.502)
	Secondary master piston O.D.	12.657– 12.684 (0.4983–0.4994)	12.65 (0.498)
Rear	brake fluid	DOT 4	——
	brake pedal height	75 (3.0)	——
	brake pad wear indicator ②	——	To the groove
	brake disc thickness	5.0 (0.20)	4.0 (0.16)
	brake disc runout	——	0.30 (0.012)
	master cylinder I.D.	17.460–17.503 (0.6874–0.6891)	17.515 (0.6896)
	master piston O.D.	17.417–17.444 (0.6857–0.6868)	17.405 (0.6852)
	caliper cylinder I.D. (22.6 mm bore)	22.650–22.700 (0.8917–0.8937)	22.710 (0.8941)
	(25.4 mm bore)	25.400–25.450 (1.0000–1.0020)	25.460 (1.0024)
	(27.0 mm bore)	27.000–27.050 (1.0630–1.0650)	27.060 (1.0654)
	caliper piston O.D. (22.6 mm bore)	22.585–22.618 (0.8892–0.8905)	22.560 (0.8882)
	(25.4 mm bore)	25.318–25.368 (0.9968–0.9987)	25.310 (0.9965)
	(27.0 mm bore)	26.916–26.968 (1.0597–1.0617)	26.910 (1.0594)

Battery/Charging System

Alternator/charging coil resistance (At 20°C/68°F)	0~1.0Ω	——
Alternator field coil resistance (At 20°C/68°F)	0~4.0Ω	——
Regulator/rectifier regulated voltage	12.6–15.0V/5,000 min^{-1} (rpm)	——
Battery capacity	12V–14Ah	——
Specified current leakage	0.1 mA max.	——
Battery specific gravity (Fully charging)	1.270–1.290	——
(Needs charging)	Below 1.260	——

Ignition System

Item	Standard	Service Limit
Spark plug (Standard : NGK)	DPR9EA-9	——
(Standard : NIPPONDENSO)	X27EPR-U9	——
Spark plug gap	0.8–0.9 mm (0.03–0.04 in)	——
Ignition timing "F"mark (Except SW, type)	10° BTDC/1,000 min^{-1} (rpm)	——
(SW, type)	5° BTDC/1,000 min^{-1} (rpm)	——
Full advance (Except G, F, SW, AR type)	40° BTDC/5,000 min^{-1} (rpm)	——
(G. F, SW, AR type)	37° BTDC/9,500 min^{-1} (rpm)	——
Ignition coil resistance (Primary: at 20°C/68°F)	2.5–3.2Ω	——
(Secondary with plug cap)	21–27kΩ	——
(Secondary without plug cap)	11–17kΩ	——
Pulse generator resistance (At 20°C/68°F)	460–580Ω	——

Starting System

Starter motor brush length	12.0–13.0 mm (0.47–0.51 in)	6.5mm (0.26 in)

Lights/Meters/Switches

Main fuse	30A	——
Fuse	10A x 5, 20A x 1	——
Headlight (High/low beam; E type)	12V–60/55W x 2	——
(High/low beam; Except E, IT, U, type)	12V–60/55W x 1, 12V60W x 1	——
(High/low beam; IT type)	12V–60/55W x 1	——
(High/low beam; U type)	12V–45/45W x 2	——
Tail/brake light	12V–5/21W x 2	——
Position light (Except U type)	12V–5W	——
Front turn signal light	12V–21W x 2	——
Rear turn signal light	12V–21W x 2	——
Instrument light	12V–1.7W x 4	——
Oil pressure warning indicator	12V–3.4W	——
Side stand warning indicator	12V–3.4W	——
High beam indicator	12V–3.4W	——
Turn signal indicator	12V–3.4W x 2	——
Neutral indicator	12V–3.4W	——
Fuel unit resistance (At full level)	10Ω	——
(At low level)	90Ω	——
Coolant temperature sensor resistance (50°C/122°F)	130–180Ω	——
(80°C/176°F)	45–60Ω	——
(120°C/248°F)	10–20Ω	——
Fan motor switch start to close (ON)	98–102°C (208–216°F)	——
stop opening	93–97°C (199–207°F)	——

Torque Values

Standard

Fasteners Type	Torque N • m (kg-m, ft-lb)	Fasteners Type	Torque N • m (kg-m, ft-lb)
5 mm hex bolt and nut	5 (0.5, 3.6)	5 mm screw	4 (0.4, 2.9)
6 mm hex bolt and nut	10 (1.0, 7)	6 mm screw	9 (0.9, 6.5)
8 mm hex bolt and nut	22 (2.2, 16)	6 mm flange bolt (8 mm head)	9 (0.9, 6.5)
10 mm hex bolt and nut	35 (3.5, 25)	6 mm flange bolt (10 mm head) and nut	12 (1.2, 9)
12 mm hex bolt and nut	55 (5.5, 40)	8 mm flange bolt and nut	27 (2.7, 20)
		10 mm flange bolt and nut	40 (4.0, 29)

Torque specifications listed below are for important fasteners. Others should be tightened to standard torque values listed above.

Notes: 1. Apply sealant to the threads.
2. Apply a locking agent to the threads.
3. Apply molybdenum disulfide oil to the threads and flange surface.
4. Stake.
5. Apply oil to the threads and flange surface.
6. Apply clean engine oil to the O-ring.
7. Apply grease to the threads and flange surface.
8. UBS bolt.
9. U-nut.
10. ALOC bolt.

Engine

Item	Q'ty	Thread dia. (mm)	Torque N • m (kg-m, ft-lb)	Remarks
Maintenance:				
Timing hole cap	1	45	18 (1.8, 13)	Note 7
Spark plug	4	12	15 (1.5, 11)	
Lubrication System:				
Oil filter boss	1	20	18 (1.8, 13)	Note 2
Oil filter cartridge	1	20	10 (1.0, 7)	Note 5
Oil drain plug	1	14	30 (3.0, 22)	
Oil pass plate	3	6	12 (1.2, 9)	Note 2
Oil pipe C special bolt	2	6	12 (1.2, 9)	Note 2
Oil pump driven sprocket bolt	1	6	15 (1.5, 11)	Note 2
Oil pump assembly flange bolt	3	6	13 (1.3, 9)	
Oil pressure switch	1	PT 1/8	12 (1.2, 9)	Note 1
Oil pressure switch connector bolt	1	4	2.2 (0.22, 1.6)	
Fuel System:				
Carburetor connecting nut, 6 mm	2	6	10 (1.0, 7)	
5 mm	2	5	5.2 (0.52, 3.8)	
Cooling System:				
Water pump flange bolt	2	6	13 (1.3, 9)	
Water pipe D flange bolt	2	6	13 (1.3, 9)	

Engine (Cont'd)

Item	Q'ty	Thread dia. (mm)	Torque N • m (kg-m, ft-lb)	Remarks
Cylinder Head/Valves:				
Cylinder head flange cap nut	4	10	45 (4.5, 33)	Note 5
Cylinder head flange nut	8	10	45 (4.5, 33)	Note 5
Cylinder head socket bolt	4	8	26 (2.6, 19)	
Cylinder head sealing bolt	1	18	32 (3.2, 23)	Note 2
Vacuum port socket bolt	1	5	3 (0.30, 2.2)	
Camshaft holder flange bolt	16	6	14 (1.4, 10)	
Cylinder head cover bolt	8	6	10 (1.0, 7)	
Boost joint	3	5	2.5 (0.25, 1.8)	
Cam sprocket bolt	4	7	20 (2.0, 14)	Note 2, 8
Valve adjuster screw lock nut	16	7	23 (2.3, 17)	Note 5
Cam chain tensioner bracket bolt	4	6	14 (1.4, 10)	
Rocker arm guide bolt	16	6	12 (1.2, 9)	Note 8
Clutch /Gearshift Linkage:				
Clutch center lock nut	1	25	128 (12.8, 93)	Note 5
Clutch spring bolt	5	6	12 (1.2, 9)	
Clutch slave cylinder bleeder screw	1	8	8 (0.8, 5.8)	
Shift fork shaft stopper plate bolt	2	6	12 (1.2, 9)	Note 2
Shift drum center bolt	1	8	23 (2.3, 17)	Note 2
Gearshift spindle return spring pin	1	8	22 (2.2, 16)	
Drive sprocket special bolt	1	10	54 (5.4, 39)	
Clutch slave cylinder oil bolt	1	10	35 (3.5, 25)	
Crankshaft/Transmission:				
Crankcase main journal bolt	12	9	37 (37, 27)	Note 8
Crankcase flange bolt	10	1	39 (3.9, 28)	
	8	17	24 (2.4, 17)	
Crankcase sealing bolt	20	1	30 (3.0, 22)	
	10	1	12 (1.2, 9)	
Connecting rod nut	8	8	35 (3.5, 25)	Note 5
Balancer shaft holder flange bolt	1	6	12 (1.2, 9)	
Charging System/Alternator:				
Alternator base flange bolt	3	8	25 (2.5, 18)	Note 1
Alternator assembly flange socket bolt	3	6	8 (0.8, 5.8)	Note 2
Alternator shaft flange nut	1	12	49 (4.9, 35)	Note 5
Ignition System:				
Pulse generator rotor flange bolt	1	10	49 (4.9, 35)	Note 2
Lights/Meters/Switches:				
Neutral switch	1	10	12 (1.2, 9)	
Neutral switch terminal nut	1	4	2.2 (0.22, 1.6)	
Other:				
General torque: SH flange bolt	–	6	10 (1.0, 7)	
SHF flange bolt	–	6	12 (1.2, 9)	

Frame

Item	Q'ty	Thread dia. (mm)	Torque N • m (kg-m, ft-lb)	Remarks
Frame/Body Panels/Exhaust System:				
Exhaust pipe joint nut	8	7	17 (1.7, 12)	
Muffler band bolt	4	8	22 (2.2, 16)	
Muffler stay flange nut	3	8	22 (2.2, 16)	
Step holder bolt	4	8	33 (3.3, 24)	
Center stand bolt	1	10	50 (5.0, 36)	
Side stand pivot bolt	1	10	8 (0.8, 5.8)	
Side stand pivot lock nut	1	10	40 (4.0, 29)	Note 9
Side stand bracket bolt	3	10	65 (6.5, 47)	
Grub rail mounting bolt	4	8	35 (3.5, 2.5)	
Lubrication System:				
Oil cooler pipe joint	4	6	9 (0.9, 6.5)	
Fuel System:				
Fuel valve	1	6	10 (1.0, 7)	
Fuel tank cap	7	4	3 (0.30, 2.2)	
Fuel unit	4	6	10 (1.0, 7)	Note 9
Fuel tank mounting bolt	2	6	10 (1.0, 7)	
Fuel tank pivot nut	1	6	10 (1.0, 7)	Note 9
Cooling System:				
Fan motor switch	1	16	18 (1.8, 13)	Note 1
Water hose joint	1	6	9 (0.9, 6.5)	
Water hose band			1.0-1.5 (0.10-0.15, 0.7-1.1)	
Engine Mounting:				
Front engine hanger bolt/nut (Upper)	2	10	45 (4.5, 33)	
Front engine hanger bolt/nut (Lower)	2	10	45 (4.5, 33)	
Rear engine hanger bolt/nut (Upper)	1	12	55 (5.5, 40)	
Rear engine hanger bolt/nut (Lower)	1	12	55 (5.5, 40)	
Engine hanger adjusting bolt	1	20	8 (0.8, 5.8)	
Engine hanger adjusting bolt lock nut	1	20	25 (2.5, 18)	
Clutch/Gearshift Linkage:				
Clutch master cylinder holder bolt	2	6	12 (1.2, 9)	
Clutch master cylinder cap screw	2	4	1.5 (0.15, 1.1)	
Clutch lever pivot bolt	1	6	0.8 (0.08, 0.6)	
Clutch lever pivot nut	1	6	5.9 (0.59, 4.3)	
Clutch switch screw	1	4	1.2 (0.12, 0.8)	
Gearshift pedal arm pinch bolt	1	6	16 (1.6, 12)	
Gearshift pedal arm pivot bolt	1	8	27 (2.7, 20)	
Wheels:				
Front axle bolt	1	14	59 (5.9, 43)	
Front axle holder bolt	4	8	22 (2.2, 16)	
Front brake disc bolt	12	8	42 (4.2, 30)	Note 10
Rear axle nut	1	18	93 (9.3, 67)	
Rear brake disc bolt	6	8	42 (4.2, 30)	Note 10
Driven sprocket nut	5	12	110 (11.0, 78)	Note 9
Front Suspension:				
Steering stem nut	1	24	103 (10.3, 96)	
Top thread A	1	26	25 (2.5, 18)	See page 11–18
Top thread B	1	26	———	
Top bridge pinch bolt	2	8	23 (2.3, 17)	
Bottom bridge pinch bolt	2	10	49 (4.9, 35)	
Handlebar pivot pinch bolt	2	8	27 (2.7, 20)	
Handlebar weight mounting screw	2	6	10 (1.0, 7)	

Frame (Cont'd)

Item	Q'ty	Thread dia. (mm)	Torque N • m (kg-m, ft-lb)	Remarks
Fork:				
Fork oil drain bolt	2	6	8 (0.8, 5.8)	
Fork socket bolt	2	8	20 (2.0, 14)	
Fork cap bolt	2	37	23 (2.3, 17)	
Fork damper rod lock nut	2	10	20 (2.0, 14)	
Secondary master cylinder link rod bracket bolt	2	8	27 (2.7, 20)	Note 10
Rear Suspension:				
Swingarm pivot nut	1	14	108 (10.8, 78)	Note 9
Drive chain adjuster lock nut	2	8	22 (2.2, 16)	
Rear shock absorber mounting bolt/nut	2	10	42 (4.2, 30)	Note 9
Shock link bolt (Frame side)	1	10	59 (5.9, 43)	Note 9
Shock link bolt (Shock arm side)	1	10	42 (4.2, 30)	Note 9
Shock arm bolt (Swingarm side)	1	10	42 (4.2, 30)	
Brake System:				
Front brake master cylinder holder bolt	2	6	12 (1.2, 9)	
Front brake master cylinder cap screw	2	4	1.5 (0.15, 1.1)	
Front brake lever pivot bolt	1	6	0.8 (0.08, 0.6)	
Front brake lever pivot nut	1	6	5.9 (0.59, 4.3)	
Front brake lever adjuster socket bolt	1	5	3.9 (0.39, 2.9)	
Front brake switch screw	1	4	1.2 (0.12, 0.8)	
Right front brake caliper mounting bolt	2	8	32 (3.2, 23)	Note 10
Left front brake caliper lower mounting bolt	1	8	32 (3.2, 23)	Note 10
Caliper body B mounting bolt	9	8	32 (3.2, 23)	Note 10
Brake caliper main slide pin	3	12	27 (2.7, 20)	
Brake caliper slide pin	3	8	23 (2.3, 17)	
Pad pin	3	10	23 (2.3, 17)	
Caliper bleeder screw	6	8	5.4 (0.54, 4.0)	
Secondary master cylinder mounting bolt	2	6	12 (1.2, 9)	
Secondary master cylinder push rod joint nut	1	8	18 (1.8, 13)	
Secondary master cylinder orifice bolt	1	8	5.4 (0.54, 4.0)	
Brake link arm bolt/nut	2	8	27 (2.7, 20)	Note 10
Rear master cylinder mounting bolt	2	6	12 (1.2, 9)	
Rear master cylinder reservoir	1	6	12 (1.2, 9)	
Rear master cylinder push rod lock nut	1	8	18 (1.8, 13)	
Rear master cylinder reservoir joint screw	1	4	1.5 (0.15, 1.1)	
Brake hose oil bolt	12	10	35 (3.5, 25)	
Brake pipe bolt	8	10	17 (1.7, 12)	Note 5
Brake hose joint mounting bolt	5	6	12 (1.2, 9)	
Brake hose clamp mounting bolt	6	6	12 (1.2, 9)	
Other Fasteners:				
Ignition switch torx bolt	2	8	25 (2.5, 18)	Note 10

Ref.	Part No.	AIR CLEANER DESCRIPTION	Ronnies' Price Each
1	16148-MS2-720	PROTECTOR, CARBURETOR HEAT (CALI ONLY)	$37.09
2	17211-MZ2-000	STORAGE ELEMENT, EVAPORATIVE EMISSION	$39.03
3	17215-MZ2-000	HOUSING COMP., AIR CLEANER (EXCEPT CALI)	$108.80
3	17215-MZ2-650	HOUSING COMP., AIR CLEANER (CALI ONLY)	$108.80
4	17217-MM5-000	HOLDER, AIR CLEANER ELEMENT	$2.80
5	17220-MS2-000	COVER COMP., AIR CLEANER	$28.29
6	17235-MS2-000	CUP, TANK OVER FLOW	$5.95
7	17240-MS2-300	DUCT, R. AIR CLEANER IN.	$12.47
8	17241-MS2-300	DUCT, L. AIR CLEANER IN.	$12.47
9	17243-MS2-000	SEPARATOR, R. DUCT	$8.36
10	17244-MS2-000	SEPARATOR, L. DUCT	$8.36
11	17250-MZ2-300	TUBE, AIR CLEANER CONNECTING	$38.91
12	17251-KT8-000	CASE, SUB AIR CLEANER	$13.91
13	17254-KAZ-000	FILTER, SUB AIR CLEANER	$2.30
14	17255-MM4-000	STAY, SUB AIR CLEANER HOUSING (EXCEPT CALI)	$6.67
15	17255-MZ2-750	STAY, SUB AIR CLEANER HOUSING (CALI ONLY)	$18.69
16	17256-MM4-000	COVER, SUB AIR CLEANER	$13.07
17	17258-MS2-000	DUCT, R. RR. IN.	$31.05
18	17259-MS2-000	SCREW, TAPPING (5X8)	$31.05
19	17265-MS2-000	TUBE, AIR CLEANER DRAIN	$11.82
20	17309-MM5-740	CLIP, CANISTER TUBE	$2.42
21	17370-419-700	PLUG, BREATHER TUBE	$2.27
22	17371-MZ2-000	TUBE, SUB AIR CLEANER (EXCEPT CALI)	$6.96
23	17371-MZ2-750	TUBE, SUB AIR CLEANER (CALI ONLY)	$14.62
24	17372-MZ2-000	HOLDER, TUBE (PB)	$1.55
25	17554-MB0-000	CLIP, BREATHER TUBE	$1.85
26	17651-MM5-000	TUBE, BREATHER TANK	$10.44
27	17724-102-700	CLIP, SUB-TANK HOSE (CALI ONLY)	$1.97
28	19102-KT8-000	JOINT, TUBE	$3.84
29	90111-HC4-000	BOLT, FLANGE (6MM)	$2.45
30	90111-187-000	BOLT, FLANGE (6MM)	$3.62

31	90522-028-000	WASHER, CHAIN CASE SETTING	$2.15
32	95018-64250	BAND, AIR CLEANER CONNECTING TUBE (64)	$7.72
33	93500-04025-0G	SCREW, PAN (4X25)	$0.35
34	93891-05020-08	SCREW-WASHER (5X20)	$0.47
35	94050-06000	NUT, FLANGE (6MM) (CALI ONLY)	$0.55
36	95002-02080	CLIP, TUBE (B8)	$0.58
37	95002-02130	CLIP, TUBE (B12.5)	$0.45
38	95002-41250-08	CLIP, TUBE (D12.5)	$0.93
39	95005-75720-20	TUBE (7.3X720)	$16.29
40	95701-06014-00	BOLT, FLANGE (6X14) (EXCEPT CALI)	$0.55
41	96001-06016-00	BOLT, FLANGE (6X16) (CALI ONLY)	$0.62

Ref.	Part No.	ALTERNATOR DESCRIPTION	REQ	Ronnies' Price Each
1	31130-MS2-611	COVER, ALTERNATOR	1	$266.93
2	31133-MS2-611	GASKET, L. CRANKCASE COVER	1	$631.05
3	90094-KE5-000	BOLT, FLANGE SOCKET (6X28)	3	$1.78
4	91302-MM4-003	O-RING (90X2.3) (ARAI)	1	$6.64
5	91306-MS2-611	O-RING (95.5X2.4) (HITACHI)	1	$5.16
6	95701-08045-00	BOLT, FLANGE (8X45)	3	$0.90
		Powered by HLSM		

Ref.	Part No.	BATTERY DESCRIPTION	Ronnies' Price Each
1	31500-MM5-675	BATTERY (YB14L-B2) (YUASA)	$52.50
2	32350-MZ2-000	CABLE, GROUND	$16.13
3	32401-MZ2-000	CABLE, STARTER MAGNETIC SWITCH	$15.93
4	32406-MR5-000	COVER A, STARTER MAGNETIC TERMINAL	$3.38
5	32410-MZ2-000	CABLE, STARTER MOTOR	$19.16
6	32411-MM5-000	COVER, BATTERY	$3.38
7	32411-230-000	COVER, STARTING MOTOR TERMINAL	$5.60
8	35850-MR5-007	SWITCH ASSY., STARTER MAGNETIC	$71.96
9	35856-MW6-610	RUBBER, SHOCK	$5.65
10	50324-MS2-000	LID A, BATTERY BOX	$13.15
11	50325-MS2-000	BOX, BATTERY	$63.87
12	50327-MS2-000	PLATE, BATTERY BOX SETTING	$5.35
13	50328-MS2-000	LID B, BATTERY BOX	$11.75
14	50329-MM5-000	TUBE, BATTERY	$8.18
15	50330-MM5-000	BAND, BATTERY	$9.56
16	50331-MW7-000	TUBE A, BATTERY	$2.78
17	50332-MM5-000	GROMMET, BATTERY BOX	$2.20
18	50335-MM5-000	BAND ASSY., BATTERY	$10.51
19	61103-357-000	RUBBER, FR. FENDER SETTING	$1.89
20	77251-342-000	BAG, SERVICE BOOK	$3.32
21	90014-460-000	BOLT, FLANGE (6X8)	$1.20
22	90109-434-000	BOLT (6MM)	$2.02
23	90111-MR5-000	BOLT, FLANGE (6X35)	$1.47
24	98200-33000	FUSE, BLADE (30A)	$0.56

Ref.	Part No.	BRAKE CALIPER - FRONT DESCRIPTION	Ronnies' Price Each
1	06431-MA3-405	SEAL SET, PISTON	$4.56
2	06451-GE2-405	SEAL SET, PISTON	$6.85
3	06451-MZ2-405	SEAL SET, PISTON	$7.51
4	06455-MZ2-405	PAD SET	$50.55
5	43107-MA3-006	PISTON	$27.31
6	43352-568-003	SCREW, BLEEDER	$4.25
7	43353-461-771	CAP, BLEEDER SCREW	$3.15
9	45102-MZ2-000	BODY B, CALIPER	$47.29
10	45107-GE2-006	PISTON	$24.31
11	45107-MB9-781	PISTON	$27.31
12	45107-MZ2-006	PISTON	$25.95
13	45108-MZ2-006	SPRING, PAD	$6.76
14	45112-MZ2-006	RETAINER, BRACKET	$4.98
15	45116-MZ2-006	HOLDER, L. HANGER PIN	$16.84
16	45120-MZ2-305	BRACKET SET, L. FR.	$147.55
17	45131-MZ2-006	PIN, BOLT	$10.38
18	45131-166-016	BOLT, PIN	$4.73
19	45132-166-016	BUSH, PIN	$3.38
20	45133-MA3-006	BOOT (B)	$3.38
21	45134-KB7-005	DUST SEAL, BRAKE CAM	$1.85
22	45200-MZ2-006	CALIPER ASSY., R. FR. (NISSIN)	$638.51
24	45202-MZ2-000	BODY B, R. CALIPER	$47.29
25	45207-MZ2-006	PISTON	$21.62
26	45210-MZ2-006	BRACKET COMP., R. FR.	$135.33
27	45215-MZ2-006	PIN, HANGER	$12.33
28	45216-MZ2-006	HOLDER, R. HANGER PIN	$7.56
30	45300-MZ2-305	CALIPER SET, L. FR. (NISSIN)	$638.51
32	45442-MZ2-000	COLLAR, CONNECTING ROD	$4.60
33	90107-MT3-003	BOLT, FLANGE (8X32)	$2.62
34	90132-MZ2-000	BOLT, SOCKET (8X48)	$6.35
35	90135-MZ2-000	BOLT, FLANGE (8X35)	$4.84

36	91101-KG8-003	BEARING, NEEDLE (14X20X12)	$21.75

Ref.	Part No.	BRAKE MASTER CYLINDER - FRONT DESCRIPTION	Ronnies' Price Each
1	35340-MM5-600	SWITCH ASSY., FR. STOP	$12.18
2	45124-MZ2-003	HOSE, R. FR. BRAKE MAIN	$49.02
3	45125-MZ2-003	HOSE, L. FR. BRAKE MAIN	$22.84
4	45129-MZ2-000	PIPE, FR. BRAKE MAIN JOINT	$6.73
5	45159-MZ2-000	CLAMP, L. FR. BRAKE HOSE	$5.65
6	45504-410-003	BOOT COMP.	$7.29
7	45510-MZ2-305	CYLINDER SUB-ASSY., FR. MASTER (NISSIN)	$239.40
8	45512-MA6-006	PROTECTOR	$2.65
9	45513-MM5-006	CAP, MASTER CYLINDER (NISSIN)	$13.42
10	45517-166-006	HOLDER, MASTER CYLINDER	$8.13
11	45518-MM5-006	PLATE, DIAPHRAGM	$6.38
12	45520-MM5-006	DIAPHRAGM (NISSIN)	$9.05
13	45523-MV9-006	FLOAT, FR. MASTER CYLINDER	$6.04
14	45530-MG9-951	CYLINDER SET, MASTER	$34.20
15	52115-ML8-670	CLAMP, BRAKE HOSE	$3.07
16	53170-MW0-006	LEVER ASSY., R. HANDLE	$23.00
17	93892-05045-07	BOLT, R. HANDLE PIVOT	$0.82
18	90145-MS9-612	BOLT, OIL (10X22)	$4.16
19	90308-MT8-000	NUT, CAP (6MM)	$1.65
20	90545-300-000	WASHER, OIL BOLT	$1.95
21	90651-MA5-671	CIRCLIP	$1.65
22	93600-04012-0G	SCREW, FLAT (4X12)	$0.35
23	93893-04012-08	SCREW-WASHER (4X12)	$0.53
24	95701-06012-07	BOLT, FLANGE (6X12)	$0.50
25	95701-06025-07	BOLT, FLANGE (6X25)	$0.76
26	96001-06022-07	BOLT, FLANGE (6X22)	$0.92

Ref.	Part No.	BRAKE MASTER CYLINDER - REAR DESCRIPTION	Ronnies' Price Each
1	43156-MZ2-000	CLAMP A, RR. BRAKE HOSE	$10.22
2	43157-MZ2-000	CLAMP B, RR. BRAKE HOSE	$7.09
3	43159-MZ2-000	CLIP, RR. BRAKE HOSE	$4.33
4	43310-MZ2-003	HOSE, RR. BRAKE MAIN	$47.18
5	43510-MZ2-305	CYLINDER ASSY., RR. BRAKE MASTER (NISSIN)	$242.76
6	43503-MB2-006	CONNECTOR, MASTER CYLINDER	$6.78
7	43504-MB2-006	BOOT COMP.	$6.02
8	43510-MZ2-305	CYLINDER SUB-ASSY., RR. BRAKE MASTER (NISSIN)	$242.76
9	43511-MA6-006	CUP, MASTER CYLINDER OIL	$24.27
10	43512-MS2-006	HOSE, MASTER CYLINDER	$11.91
11	43513-MY1-006	CAP, OIL CUP	$17.62
12	43514-445-771	CLAMP, MASTER CYLINDER OIL HOSE	$9.53
13	43520-MZ2-305	PISTON SET, MASTER CYLINDER	$46.02
14	43530-MM5-006	ROD COMP., PUSH	$16.31
15	45520-300-000	DIAPHRAGM	$5.38
16	45521-MJ6-006	PLATE, DIAPHRAGM	$2.51
17	46182-500-013	CIRCLIP	$2.18
18	95015-54000	PIN D, JOINT	$3.02
19	46504-MT4-006	JOINT, BRAKE ROD	$5.29
20	90145-MR8-004	BOLT, OIL (10X34)	$6.49
21	91257-MAY-003	BOLT, OIL (10X22)	$5.47
22	90545-300-000	WASHER, OIL BOLT	$1.95
23	91212-422-006	O-RING (14.8X2.4)	$1.44
24	93893-04012-07	SCREW-WASHER (4X12)	$0.53
25	94002-08000-0S	NUT, HEX. (8MM)	$0.48
26	94201-20120	PIN, COTTER (2.0X12)	$0.35
27	95701-06012-07	BOLT, FLANGE (6X12)	$0.50
28	95701-06014-00	BOLT, FLANGE (6X14)	$0.55
29	95701-06020-07	BOLT, FLANGE (6X20)	$0.47

Ref.	Part No.	BRAKE MASTER CYLINDER - SECOND DESCRIPTION	Ronnies' Price Each
1	43321-MY4-003	JOINT, MASTER CYLINDER PIPE (A)	$20.80
2	43504-MB2-006	BOOT COMP.	$6.02
3	45126-MZ2-003	SUB-HOSE, R. FR. BRAKE	$49.95
4	45127-MZ2-003	SUB-HOSE, L. FR. BRAKE	$19.40
5	45128-MZ2-003	HOSE, SECOND MASTER CYLINDER	$36.98
6	45130-MZ2-000	SUB-PIPE, FR. BRAKE JOINT	$7.87
7	45134-KB7-005	DUST SEAL, BRAKE CAM	$1.85
8	45442-MZ2-000	COLLAR, CONNECTING ROD	$4.60
9	45459-MZ2-305	ARM SET, SECOND MASTER CYLINDER	$64.56
10	45461-MZ2-000	PLATE A, CONNECTING ROD	$4.45
11	45462-MZ2-000	PLATE B, CONNECTING ROD	$3.93
12	45600-MZ2-891	CYLINDER ASSY., SECOND MASTER	$321.80
13	45603-MZ2-006	SCREW, PLUG	$10.33
14	45612-MZ2-006	CLIP, SPRING	$2.78
15	45613-MZ2-006	PLUG, SECOND MASTER CYLINDER	$2.89
16	45620-MZ2-306	PISTON SET, SECOND MASTER CYLINDER	$56.24
17	45630-MZ2-305	JOINT SET, BRAKE ROD	$31.87
18	46182-500-013	CIRCLIP	$2.18
19	46503-MZ2-000	PIN, BRAKE ROD	$4.95
21	51481-MZ2-000	PLATE A, PIVOT	$8.80
22	51482-MZ2-000	PLATE B, PIVOT	$10.71
23	52115-ML8-670	CLAMP, BRAKE HOSE	$3.07
24	90131-MZ2-000	BOLT, FLANGE (8X38)	$4.95
25	90134-MZ2-000	BOLT, SOCKET (8X55)	$7.22
26	90145-MR8-004	BOLT, OIL (10X34)	$6.49
27	90145-MS9-612	BOLT, OIL (10X22)	$4.16
28	90309-428-731	NUT, FLANGE (8MM)	$3.15
29	90545-300-000	WASHER, OIL BOLT	$1.95
30	91101-KG8-003	BEARING, NEEDLE (14X20X12)	$21.75
31	91355-MG9-006	O-RING (NISSIN)	$2.00
32	94201-20350	PIN, COTTER (2.0X35)	$0.37

33	95701-06012-07	BOLT, FLANGE (6X12)	$0.50
34	95701-06022-07	BOLT, FLANGE (6X22)	$0.63
35	95801-06030-07	BOLT, FLANGE (6X30)	$0.68
36	95801-06040-07	BOLT, FLANGE (6X40)	$0.68

Ref.	Part No.	BRAKE MASTER CYLINDER - SECOND DESCRIPTION	Ronnies' Price Each
1	43321-MY4-003	JOINT, MASTER CYLINDER PIPE (A)	$20.80
2	43504-MB2-006	BOOT COMP.	$6.02
3	45126-MZ2-003	SUB-HOSE, R. FR. BRAKE	$49.95
4	45127-MZ2-003	SUB-HOSE, L. FR. BRAKE	$19.40
5	45128-MZ2-003	HOSE, SECOND MASTER CYLINDER	$36.98
6	45130-MZ2-000	SUB-PIPE, FR. BRAKE JOINT	$7.87
7	45134-KB7-005	DUST SEAL, BRAKE CAM	$1.85
8	45442-MZ2-000	COLLAR, CONNECTING ROD	$4.60
9	45459-MZ2-305	ARM SET, SECOND MASTER CYLINDER	$64.56
10	45461-MZ2-000	PLATE A, CONNECTING ROD	$4.45
11	45462-MZ2-000	PLATE B, CONNECTING ROD	$3.93
12	45600-MZ2-891	CYLINDER ASSY., SECOND MASTER	$321.80
13	45603-MZ2-006	SCREW, PLUG	$10.33
14	45612-MZ2-006	CLIP, SPRING	$2.78
15	45613-MZ2-006	PLUG, SECOND MASTER CYLINDER	$2.89
16	45620-MZ2-306	PISTON SET, SECOND MASTER CYLINDER	$56.24
17	45630-MZ2-305	JOINT SET, BRAKE ROD	$31.87
18	46182-500-013	CIRCLIP	$2.18
19	46503-MZ2-000	PIN, BRAKE ROD	$4.95
21	51481-MZ2-000	PLATE A, PIVOT	$8.80
22	51482-MZ2-000	PLATE B, PIVOT	$10.71
23	52115-ML8-670	CLAMP, BRAKE HOSE	$3.07
24	90131-MZ2-000	BOLT, FLANGE (8X38)	$4.95
25	90134-MZ2-000	BOLT, SOCKET (8X55)	$7.22
26	90145-MR8-004	BOLT, OIL (10X34)	$6.49
27	90145-MS9-612	BOLT, OIL (10X22)	$4.16
28	90309-428-731	NUT, FLANGE (8MM)	$3.15
29	90545-300-000	WASHER, OIL BOLT	$1.95
30	91101-KG8-003	BEARING, NEEDLE (14X20X12)	$21.75
31	91355-MG9-006	O-RING (NISSIN)	$2.00
32	94201-20350	PIN, COTTER (2.0X35)	$0.37

33	95701-06012-07	BOLT, FLANGE (6X12)	$0.50
34	95701-06022-07	BOLT, FLANGE (6X22)	$0.63
35	95801-06030-07	BOLT, FLANGE (6X30)	$0.68
36	95801-06040-07	BOLT, FLANGE (6X40)	$0.68

Ref.	Part No.	CAM CHAIN DESCRIPTION	Ronnies' Price Each
1	14321-MZ1-000	SPROCKET, CAM (46T)	$34.44
2	14401-MM5-015	CHAIN, CAM (56L)	$96.13
3	14500-MZ1-000	BRACKET COMP., TENSIONER	$124.47
4	14510-MM5-640	SLIPPER, CAM CHAIN TENSIONER	$37.44
5	14531-KV0-000	PIN, TENSIONER ARM	$2.45
6	14620-MM5-003	GUIDE A, CAM CHAIN	$45.33
7	14630-MS2-610	GUIDE B, CAM CHAIN	$35.95
8	90026-MM8-000	BOLT, UBS (7X15)	$1.78
9	90071-171-010	BOLT, DOWEL (6MM)	$1.36
10	90607-MM5-000	PIN, SPECIAL LOCK (6MM)	$1.36
11	95701-06016-00	BOLT, FLANGE (6X16)	$0.57

Ref.	Part No.	CAMSHAFT DESCRIPTION	Ronnies' Price Each
1	12209-KL4-005	SEAL, VALVE STEM	$6.35
2	12209-422-005	SEAL, VALVE STEM	$8.96
3	14101-MZ1-650	CAMSHAFT, IN.	$284.78
4	14201-MZ1-650	CAMSHAFT, EX.	$284.76
5	14431-MM5-000	ARM, VALVE ROCKER	$42.42
6	14615-MM5-640	PLATE, ROCKER ARM GUIDE	$12.04
7	14617-MM5-010	SPRING, ROCKER ARM	$13.56
8	14711-MM5-010	VALVE, IN.	$27.64
9	14721-MM5-010	VALVE, EX.	$47.18
10	14751-MM5-004	SPRING, VALVE (OUTER)	$6.49
11	14761-MM5-004	SPRING, VALVE (INNER)	$5.55
12	14771-MB6-000	RETAINER, SPRING	$6.36
13	14775-ML7-000	SEAT, VALVE SPRING (OUTER)	$1.85
14	14777-ML7-000	SEAT, VALVE SPRING (INNER)	$2.31
15	14781-MB4-000	COTTER, VALVE	$2.56
16	90010-KT8-000	BOLT, UBS (6X19)	$1.78
17	90012-MS2-610	SCREW, TAPPET ADJ.	$4.05
18	90206-ML7-000	NUT, TAPPET ADJ.	$1.00
19	90702-MB0-000	PIN, DOWEL (8X8)	$2.13

Ref.	Part No.	CARBURETOR ASSY DESCRIPTION	Ronnies' Price Each
1	15772-292-010	CLIP, BREATHER TUBE	$2.27
2	16024-KAZ-000	JOINT	$15.95
3	16024-MV9-670	JOINT SET	$22.84
4	16024-MZ1-000	JOINT SET	$23.89
5	16026-MW0-600	JOINT SET	$24.95
6	16029-MZ2-600	SCREW SET	$11.73
7	16039-MV9-670	GASKET SET C	$30.91
8	16040-MV4-000	BOLT, FLANGE (6X14)	$11.73
9	16051-MZ2-610	SPRING, TORSION COIL	$7.78
10	16053-MA6-003	SPRING	$4.65
11	16081-KAZ-000	SCREW-WASHER	$1.76
12	16083-MZ2-610	BOLT	$17.93
13	16084-MZ2-610	BOLT	$17.44
14	16085-MV4-000	WASHER, PLAIN	$1.55
15	16097-ME9-671	CAP (EXCEPT CALI)	$6.42
16	16100-MZ2-670	CARBURETOR ASSY. (VP83D A) (EXCEPT CALI)	$1,671.82
16	16100-MZ2-750	CARBURETOR ASSY. (VP86A A) (CALI ONLY)	$1,671.82
17	16101-MZ2-670	CARBURETOR ASSY. 1 (EXCEPT CALI)	$468.24
17	16101-MZ2-750	CARBURETOR ASSY. 1 (CALI ONLY)	$468.24
18	16102-MZ2-670	CARBURETOR ASSY. 2 (EXCEPT CALI)	$468.24
18	16102-MZ2-750	CARBURETOR ASSY. 2 (CALI ONLY)	$468.24
19	16103-MZ2-670	CARBURETOR ASSY. 3 (EXCEPT CALI)	$468.24
19	16103-MZ2-750	CARBURETOR ASSY. 3 (CALI ONLY)	$468.24
20	16104-MZ2-670	CARBURETOR ASSY. 4 (EXCEPT CALI)	$468.24
20	16104-MZ2-750	CARBURETOR ASSY. 4 (CALI ONLY)	$468.24
21	16120-MZ2-610	LEVER, STARTER	$47.65
22	16129-MZ2-610	PLATE, STAY	$42.73
23	16163-MB3-671	CLIP, TUBE (EXCEPT CALI)	$0.55
24	16172-MZ1-000	COLLAR	$14.93
25	16172-MZ2-610	COLLAR	$15.29
26	16173-MZ1-000	COLLAR	$16.45

27	16175-MZ1-000	COLLAR	$7.40
28	16178-MV4-000	PIN, KNOCK	$2.62
29	16180-ME5-761	JOINT (T) (CALI ONLY)	$17.85
30	16180-MM5-601	T-JOINT	$23.45
31	16180-195-731	JOINT, T-TYPE (CALI ONLY)	$7.78
32	16195-MZ2-610	TUBE	$8.73
33	16197-MZ2-650	TUBE COMP. (EXCEPT CALI)	$12.24
34	16197-MZ2-610	TUBE	$9.89
35	16198-MZ2-750	TUBE (CALI ONLY)	$9.42
36	16199-MS2-720	TUBE (CALI ONLY)	$4.87
37	17303-MJ1-790	JOINT, THREE-WAY (CALI ONLY)	$12.96
38	17414-PC6-660	JOINT, TW0-WAY (3.5) (EXCEPT CALI)	$3.05
39	94050-05000	NUT, FLANGE (5MM)	$0.47
40	94050-06000	NUT, FLANGE (6MM)	$0.55
41	95002-02079	CLIP, TUBE (B17) (EXCEPT CALI)	$0.76
41	95002-02079	CLIP, TUBE (B17) (CALI ONLY)	$0.76
42	95002-02089	CLIP, TUBE (B18) (CALI ONLY)	$0.76
43	95002-02129	CLIP, TUBE (B12) (CALI ONLY)	$0.93
44	95002-02139	CLIP, TUBE (B12.5) (CALI ONLY)	$0.93
45	95002-02659	CLIP, TUBE (B6.5) (EXCEPT CALI)	$0.73
46	95005-35030-20	TUBE, (3.5X30) (CALI ONLY)	$2.00
47	95005-35001-20M	TUBE (3.5X40) (CALI ONLY)	$4.62
48	95005-35060-20	TUBE (3.5X60) (CALI ONLY)	$0.64
49	95005-35130-20	TUBE (3.5X130) (EXCEPT CALI)	$1.08
50	95005-35150-2A	TUBE (3.5X150) (CALI ONLY)	
51	95005-35230-2A	TUBE (3.5X230) (CALI ONLY)	$2.19
52	95005-35008-10M	BULK HOSE (3.5X8000) (CALI ONLY)	$39.29
53	95005-45100-20	TUBE (4.5X100) (CALI ONLY)	$1.64
54	95005-45150-20	TUBE (4.5X150) (CALI ONLY)	$2.32
55	95005-45240-20	TUBE (4.5X240) (CALI ONLY)	
56	95005-45280-20	TUBE (4.5X280) (CALI ONLY)	$3.14

Ref.	Part No.	CARBURETOR COMPONENTS DESCRIPTION	Ronnies' Price Each
1	16010-MW0-750	GASKET SET D (CALI ONLY)	$8.56
2	16010-MZ2-600	GASKET SET A	$22.24
3	16012-MZ2-670	NEEDLE SET, JET (EXCEPT CALI)	$26.73
3	16012-MZ2-750	NEEDLE SET, JET (CALI ONLY)	$26.73
4	16013-MY1-000	FLOAT SET	$24.96
5	16015-MZ2-600	CHAMBER SET, FLOAT	$88.40
6	16016-MV9-730	SCREW SET	$13.31
7	16023-MZ2-600	CHAMBER SET, FLOAT	$88.40
8	16028-MV4-000	SCREW SET	$27.62
9	16037-MW0-600	PLATE SET, VALVE	$12.13
10	16043-MZ2-600	CHAMBER SET, FLOAT	$88.40
11	16045-MZ2-600	CHAMBER SET, FLOAT	$88.40
12	16046-MW0-600	VALVE SET, STARTER	$29.93
13	16050-MZ2-610	SPRING, COMPRESSION COIL	$11.60
14	16051-MV4-000	SPRING, COMPRESSION COIL	$10.82
15	16052-MV4-000	SPRING, COMPRESSION COIL	$2.31
16	16080-MV4-000	SCREW, PAN	$1.33
17	16107-MW0-670	TOP	$34.49
18	16108-MW0-750	SCREW (CALI ONLY)	$4.42
19	16111-MW0-670	PISTON COMP., VACUUM	$106.37
20	16119-MZ2-600	PLATE, STAY	$10.78
21	16119-MZ2-610	PLATE, STAY	$10.78
22	16141-MZ2-610	FUNNEL, AIR	$14.82
23	16155-MN9-004	VALVE COMP., FLOAT	$18.16
24	16165-MW0-600	HOLDER, NEEDLE JET	$22.65
25	16169-MZ2-600	STAY, WIRE	$11.85
26	16188-MW0-671	PLATE, FUNNEL SETTING	$39.27
27	16510-MZ2-650	VALVE ASSY., AIR CUT (CALI ONLY)	$51.13
28	93892-04010-10	SCREW-WASHER (4X10)	$0.47
29	93892-05010-10	SCREW-WASHER (5X10)	$0.29
30	93892-05016-00	SCREW-WASHER (5X16)	$0.27

31	93893-04014-07	SCREW-WASHER (4X14)	$0.53
32	99101-GHB-1220	JET, MAIN (#122)	$6.07
33	99103-MT2-0400	JET, SLOW (#40)	$16.91
34	99108-MW0-1150	JET, SLOW AIR (#115) (CALI ONLY)	$8.64

Ref.	Part No.	CLUTCH MASTER CYLINDER DESCRIPTION	Ronnies' Price Each
1	22884-MB0-006	ROD, PUSH	$12.38
2	22885-MB0-006	BUSH	$7.76
3	22886-MB0-305	PISTON SET, CLUTCH MASTER CYLINDER	$40.38
4	22890-MZ2-305	CYLINDER SUB-ASSY., CLUTCH MASTER (NISSIN)	$244.78
5	22900-MZ2-000	PIPE COMP., CLUTCH	$132.05
6	35330-MB0-003	SWITCH ASSY., CLUTCH	$14.33
7	45504-410-003	BOOT COMP.	$7.29
8	45512-MA6-006	PROTECTOR	$2.65
9	45513-MM5-006	CAP, MASTER CYLINDER (NISSIN)	$13.42
10	45517-166-006	HOLDER, MASTER CYLINDER	$8.13
11	45518-MB0-006	PLATE, STOPPER	$1.42
12	45518-MM5-006	PLATE, DIAPHRAGM (NISSIN)	$6.38
13	45520-MM5-006	DIAPHRAGM (NISSIN)	$9.05
14	50401-MM5-000	CLAMP, CLUTCH HOSE	$4.47
15	53178-MM5-006	LEVER COMP., L. HANDLE	$11.87
16	90114-MA5-671	BOLT, R. HANDLEBAR PIVOT	$5.65
17	90145-MS9-612	BOLT, OIL (10X22)	$4.16
18	90201-415-000	NUT, CAP (6MM)	$1.58
19	90545-300-000	WASHER, OIL BOLT	$1.95
20	90651-377-003	CIRCLIP (18MM) (INNER)	$1.05
21	93600-04012-0G	SCREW, FLAT (4X12)	$0.35
22	93893-04012-07	SCREW-WASHER (4X12)	$0.53
23	95701-06014-00	BOLT, FLANGE (6X14)	$0.55
24	96001-06022-07	BOLT, FLANGE (6X22)	$0.92

Ref.	Part No.	CLUTCH DESCRIPTION	Ronnies' Price Each
1	22100-MS2-870	OUTER COMP., CLUTCH	$291.24
2	22116-MS2-610	GUIDE, CLUTCH (OUTER)	$20.24
3	22117-MS2-610	COLLAR, DISTANCE	$13.38
4	22120-MS2-610	CENTER COMP., CLUTCH	$80.04
5	22201-MA7-000	DISK, CLUTCH FRICTION	$9.05
6	22201-MM5-000	DISK, CLUTCH FRICTION	$15.42
7	22321-MT3-000	PLATE B, CLUTCH	$8.44
8	22325-MN4-000	SPRING, CLUTCH PLATE	$6.07
9	96001-06022-00	BOLT, FLANGE (6X22)	$0.91
10	22350-MM5-000	PLATE, CLUTCH PRESSURE	$44.62
11	22366-MS2-611	PIECE, CLUTCH JOINT	$9.64
12	22401-MM5-010	SPRING, CLUTCH	$2.58
13	22850-MJ0-000	ROD, CLUTCH LIFTER	$14.09
14	90022-MM5-000	BOLT-WASHER (6X25)	$1.85
15	90231-MS2-610	NUT, LOCK (25MM)	$11.25
16	90401-MS2-610	WASHER, THRUST (28.2X56X2)	$9.11
17	90432-MM8-003	WASHER, SPRING (25MM)	$4.85
18	91010-HC0-003	BEARING, RADIAL BALL (16003)	$12.09
19	91024-MM5-003	BEARING, NEEDLE (40X47X31)	$46.09

Ref.	Part No.	COWL - LOWER DESCRIPTION	Ronnies' Price Each
1	11313-MZ2-000	PROTECTOR COMP., R. CRANKCASE COVER	$20.69
2	11315-MS2-000	STAY, R. COVER PROTECTOR	$18.84
3	11323-MZ2-000	PROTECTOR COMP., L. CRANKCASE COVER	$20.69
4	11325-MS2-000	STAY, L. COVER PROTECTOR	$23.53
5	64310-MZ2-000ZB	COWL, R. (LOWER) (NH105) (MAT BLACK) (EXCEPT CALI)	$135.20
6	64310-MZ2-750ZB	COWL, R. (LOWER) (NH105) (MAT BLACK) (CALI ONLY)	$135.20
7	64311-MS2-670	SHEET, R. COWL (LOWER) (CALI ONLY)	$4.91
8	64325-MZ2-910ZA	COWL SET, R. MIDDLE (NH1) (TYPE19) (BLACK)	$378.73
9	64328-MZ2-000ZE	PROTECTOR, R. MIDDLE COWL (NH196) (ROSS WHITE)	$46.53
10	64340-MZ2-000ZA	COWL COMP., R. (LOWER) (NH1) (BLACK)	$64.56
11	64365-MZ2-910ZA	COWL SET, L. MIDDLE (NH1) (TYPE19) (BLACK)	$378.73
12	64368-MZ2-000ZE	PROTECTOR, L. MIDDLE COWL (NH196) (ROSS WHITE)	$46.84
13	64370-MZ2-000ZB	COWL, L. (LOWER) (NH105) (MAT BLACK) (CALI ONLY)	$135.20
14	64370-MZ2-750ZB	COWL, L. (LOWER) (NH105) (MAT BLACK) (CALI ONLY)	$135.20
15	64371-MS2-670	SHEET, L. COWL (LOWER) (CALI ONLY)	$4.91
16	64402-MS2-000	SEPARATOR, R. MIDDLE COWL AIR	$5.35
17	64403-MS2-000	SEPARATOR, L. MIDDLE COWL AIR	$5.35
18	64404-MM4-000	STAY, R. MIDDLE COWL SEPARATOR	$5.98
19	64406-MS2-000	WIRE, R. SEPARATOR RUBBER	$2.58
20	64407-MS2-000	WIRE, L. SEPARATOR RUBBER	$2.58
21	64408-MS2-000	RUBBER, R. MIDDLE COWL SEAL	$3.27
22	64409-MS2-000	RUBBER, L. MIDDLE COWL SEAL	$2.27
23	64411-MS2-000	RUBBER A, R. MIDDLE COWL SEPERATE	$16.82
24	64412-MS2-000	RUBBER A, L. MIDDLE COWL SEPERATE	$16.82
25	64413-MS2-000	RUBBER B, R. MIDDLE COWL SEPERATE	$10.84
26	64414-MS2-000	RUBBER B, L. MIDDLE COWL SEPERATE	$10.84
27	64440-MZ2-000ZA	COWL COMP., L. (LOWER) (INNER) (NH1) (BLACK)	$77.53
28	64535-ML7-000	SPRING, COWL SETTING	$4.09
29	81240-MZ2-300	RUBBER, SEAL	$4.64
30	83551-MA6-000	GROMMET, SIDE COVER	$2.05
31	90001-MN8-000	SCREW, SPECIAL (5X12)	$2.64

32	90106-KY2-701	SCREW, PAN (6X11)	$2.64
33	90111-162-000	BOLT, FLANGE (6MM)	$2.09
34	90113-MM5-000	SCREW, PAN (6X14)	$1.98
35	90122-MZ2-000	BOLT, MIDDLE COWL	$5.44
36	90133-SD4-000	SCREW, TRUSS (METER VISOR)	$0.88
37	90312-MT3-000	NUT, CLIP (5MM)	$2.84
38	90657-SB0-003	CLIP, SPLASH	$2.27
39	90683-GR1-003	CLIP, BODY COVER	$1.69
40	93500-06010	SCREW, PAN (6X10)	$0.38
41	95701-06012-00	BOLT, FLANGE (6X12)	$0.55
42	96600-06010-07	BOLT, SOCKET (6X10)	$0.63

Ref.	Part No.	COWL - UPPER DESCRIPTION	Ronnies' Price Each
1	37104-MAJ-G00	PROTECTOR, METER	$7.67
2	61311-MZ2-000	STAY, COWL (UPPER) (EXCEPT CALI)	$278.60
2	61311-MZ2-750	STAY, COWL (UPPER) (CALI ONLY)	$278.60
3	61313-422-000	GROMMET B, HEADLIGHT	$3.51
4	64102-MJ0-000	CLIP, SCREEN MOULDING	$2.84
5	64106-MZ2-000	MOULDING, WIND SCREEN	$8.29
6	64205-MZ2-670	SCREEN SET, WIND	$243.65
7	64205-166-610	WASHER, SCREEN SETTING	$1.27
8	64214-MZ2-910ZA	COWL SET, R. (UPPER) (NH1) (TYPE19) (BLACK)	$536.65
9	64215-MZ2-910ZA	COWL SET, L. (UPPER) (NH1) (TYPE19) (BLACK)	$536.65
10	64216-MT4-880	GUIDE, OIL COOLER AIR	$48.80
11	64220-MZ2-000ZC	COVER, COWL (UPPER) (NH1) (BLACK)	$66.49
12	64260-MZ2-910ZA	COVER SET, FR. COWL (UPPER) (NH1) (TYPE19) (BLACK)	$156.00
13	64560-MZ2-000ZA	PANEL, SCREEN (INNER) (NH154R) (TASMAN GREY)	$59.78
14	64580-MZ2-000ZA	PANEL, R. (INNER) (NH154R) (TASMAN GREY)	$30.89
15	64590-MZ2-000ZA	PANEL, L. (INNER) (NH154R) (TASMAN GREY)	$30.89
16	88110-MV9-003ZA	MIRROR, R. (NH1) (BLACK)	$106.22
17	88111-MV9-000	RUBBER, MIRROR MOUNTING	$2.11
18	88120-MV9-003ZA	MIRROR, L. (NH1) (BLACK)	$106.22
20	90107-MM5-000	SCREW, PAN (6X14)	$2.91
21	90109-SB6-000	SCREW, TRUSS (5X16)	$2.55
22	90111-KW3-003	NUT, COWL SETTING (5MM)	$2.82
23	90111-162-000	BOLT, FLANGE (6MM)	$2.09
24	90133-SD4-000	SCREW, TRUSS (METER VISOR)	$0.88
25	90125-MR5-000	SCREW, FLAT SOCKET	$4.67
26	90306-SA0-000	NUT, FLOATING (5MM)	$3.83
27	90310-SB2-003	NUT, SPEED	$1.58
28	90320-MM5-000	NUT, SPRING (6MM)	$2.07
29	90504-964-000	WASHER, THRUST (5MM)	$1.05
30	90677-GR1-003	NUT, CLIP (5MM)	$2.87
31	90683-GR1-003	CLIP, BODY COVER	$1.69

32	90690-GHB-661	CLIP, CABLE (20MM)	$1.60
33	95701-06016-00	BOLT, FLANGE (6X16)	$0.57
34	95701-06025-08	BOLT, FLANGE (6X25)	$0.62

Ref.	Part No.	CRANKCASE COVER - LEFT DESCRIPTION	Ronnies' Price Each
1	11321-MW7-790	COVER, L. CRANKCASE	$51.13
2	11322-MW7-790	GASKET, L. CRANKCASE COVER	$7.49
3	11332-MM5-000	CAP (45MM)	$10.80
4	90001-GHB-670	BOLT, FLANGE (6X25)	$1.78
5	90004-GHB-710	BOLT, FLANGE (6X40)	$2.53
6	91301-ML7-003	O-RING (48.1X3.6) (ARAI)	$2.45

Ref.	Part No.	CRANKCASE COVER - RIGHT DESCRIPTION	Ronnies' Price Each
1	11311-MZ2-610	COVER, R. CRANKCASE	$23.35
2	11331-MZ2-610	COVER, CLUTCH	$164.80
3	11395-MW7-790	GASKET, CLUTCH COVER	$8.65
4	11396-MZ1-000	GASKET, R. CRANKCASE COVER	$4.84
5	15650-MS2-610	DIPSTICK, OIL	$14.11
6	32922-MB2-000	CLAMP, WIRE	$2.78
7	90001-GHB-660	BOLT, FLANGE (6X25)	$1.87
8	91307-425-003	O-RING (22X3.0)	$1.22
9	96001-06022-00	BOLT, FLANGE (6X22)	$0.91

Ref.	Part No.	CRANKCASE DESCRIPTION	Ronnies' Price Each
1	11000-MZ2-610	CRANKCASE SET	$1,844.02
2	11103-MM5-000	COVER, ALTERNATOR CHAMBER	$11.91
3	11104-MM5-000	GASKET, ALTERNATOR CHAMBER COVER	$3.11
4	11105-MS2-610	COLLAR, CRANKCASE (UPPER)	$1.02
5	11208-MM5-000	COLLAR, MAIN GALLERY	$5.09
6	12260-MS2-610	PLATE, OIL PATH	$49.55
7	15162-MS2-610	GUIDE, OIL PUMP CHAIN	$28.72
8	32101-MW7-000	SUB-HARNESS, ENGINE	$16.53
9	32550-MJ6-000	COVER, NEUTRAL SWITCH	$2.84
10	35500-MJ4-024	SWITCH ASSY., OIL PRESSURE (ND)	$25.42
11	35600-MM5-003	SWITCH ASSY., NEUTRAL (TOYO)	$11.29
12	90001-MM5-000	BOLT, UBS (9X86)	$5.78
13	90002-MM5-000	BOLT, UBS (9X131)	$9.24
14	90003-MM5-000	BOLT, UBS (9X151)	$10.89
15	90006-MM5-640	BOLT, FLANGE (8X135)	$3.75
16	90011-MM5-640	BOLT, FLANGE (6X93)	$3.22
17	90015-MM5-640	BOLT, FLANGE (10X75)	$3.22
18	90032-MM5-641	BOLT, STUD (10X153)	$9.73
19	90042-MM5-000	BOLT, SPECIAL (10MM)	$3.75
20	90048-ME5-000	BOLT, SEALING (20MM)	$8.87
21	90048-MM5-000	BOLT, SEALING (20MM)	$10.89
22	90069-MC7-000	BOLT, FLANGE (8X115)	$4.40
23	90403-ML4-610	WASHER, SEALING (10MM)	$3.56
24	90441-ME9-000	WASHER, SEALING (7MM)	$1.51
25	90443-MJ6-000	WASHER, NEUTRAL	$1.07
26	90463-ML7-000	WASHER, SEALING (6.5MM)	$1.78
27	90701-MV9-670	PIN, DOWEL (10X16)	$2.65
28	91301-MC0-000	O-RING (3.6X1.4)	$1.04
29	91307-MM5-641	OIL SEAL, PATH PLATE (ARAI)	$1.85
30	91313-PC9-003	O-RING (9X2.3)	$1.42
31	91370-461-000	O-RING (11.9X2.2)	$1.96

32	92101-06014-0A	BOLT, HEX. (6X14)	$0.48
33	94001-04000-0S	NUT, HEX. (4MM)	$0.37
34	94111-04800	WASHER, SPRING (4MM)	$0.33
35	94301-10160	PIN A, DOWEL (10X16)	$1.03
36	95701-06014-00	BOLT, FLANGE (6X14)	$0.55
37	95701-06050-00	BOLT, FLANGE (6X50)	$0.82
38	95701-08040-00	BOLT, FLANGE (8X40)	$0.75
39	95701-08060-00	BOLT, FLANGE (8X60)	$0.92
40	95701-08080-00	BOLT, FLANGE (8X80)	$1.00
41	96001-06055-00	BOLT, FLANGE (6X55)	$1.05

Ref.	Part No.	CRANKSHAFT DESCRIPTION	Ronnies' Price Each
1	06130-MS2-305	BALANCER SET	$109.10
2	13011-MM5-640	RING SET, PISTON (STD)	$34.18
2	13012-MM5-640	RING SET, PISTON (0.25) (OPT)	$34.18
2	13013-MM5-640	RING SET, PISTON (0.50) (OPT)	$35.62
3	13101-MS2-610	PISTON (STD)	$60.13
3	13102-MS2-305	PISTON (0.25) (OPT)	$60.13
3	13103-MS2-305	PISTON (0.50) (OPT)	$60.13
4	13111-MS2-610	PIN, PISTON	$15.56
5	13210-MZ1-000	ROD ASSY., CONNECTING	$136.73
6	13213-MS2-610	BOLT, CONNECTING ROD	$5.27
7	13215-ML7-000	NUT, CONNECTING ROD	$2.42
8	13224-MS2-611	BEARING A, CONNECTING ROD (BROWN)	$8.65
8	13225-MS2-611	BEARING B, CONNECTING ROD (GREEN)	$8.65
8	13226-MS2-611	BEARING C, CONNECTING ROD (YELLOW)	$8.65
9	13300-MS2-871	CRANKSHAFT COMP.	$1,026.91
10	13311-MM5-003	BEARING A, MAIN (14MM BROWN)	$8.22
10	13312-MM5-003	BEARING B, MAIN (14MM GREEN)	$8.22
10	13313-MM5-003	BEARING C, MAIN (14MM YELLOW)	$8.22
10	13314-MM5-003	BEARING D, MAIN (14MM PINK)	$8.22
11	13315-MJ0-010	BEARING A, MAIN (17MM GREEN)	$7.67
11	13316-MJ0-010	BEARING B, MAIN (17MM YELLOW)	$7.67
11	13317-MJ0-010	BEARING C, MAIN (17MM PINK)	$7.67
11	13318-MM5-004	BEARING D, MAIN (17MM BROWN)	$8.22
12	13421-MM5-641	GEAR, BALANCER	$51.62
13	13433-MM5-000	COLLAR, DISTANCE	$8.45
14	13435-MM5-000	RUBBER, DAMPER	$1.36
15	13436-MM5-000	HOLDER, BALANCER SHAFT	$31.31
16	90004-MM5-000	BOLT, SPECIAL (6X18)	$1.33
17	90457-MM5-000	WASHER, BALANCER SIDE	$3.07
18	90601-KA5-000	CLIP, PISTON PIN (1.2X20)	$1.04
19	91306-329-000	O-RING (16X1.9)	$1.60

20	95700-06018-00	BOLT, FLANGE (6X18)	$0.55
21	95701-08025-00	BOLT, FLANGE (8X25)	$0.83

Ref.	Part No.	CYLINDER HEAD DESCRIPTION	Ronnies' Price Each
1	12010-MZ2-610	CYLINDER HEAD ASSY. (EXCEPT CALI)	$1,265.65
1	12010-MZ2-750	CYLINDER HEAD ASSY (CALI ONLY)	$1,265.65
2	12204-MS2-305	GUIDE, VALVE (OS)	$13.38
3	12251-MW7-791	GASKET, CYLINDER HEAD	$57.60
4	14541-MM5-010	PLATE, OIL GUIDE	$11.09
5	14542-MM5-000	PLATE, OIL GUIDE SETTING	$3.11
6	16211-MZ2-600	INSULATOR A, CARBURETOR	$39.53
7	16212-MZ2-600	INSULATOR B, CARBURETOR	$39.53
8	16213-MZ2-600	INSULATOR C, CARBURETOR	$39.53
9	16214-MB0-000	JOINT, BOOSTER	$3.51
10	16215-MV4-000	CAP, BOOSTER	$1.87
11	16217-MW0-000	BAND A, INSULATOR	$6.07
12	16219-MZ1-000	BAND C, INSULATOR	$5.62
13	16220-MZ1-000	BAND B, INSULATOR	$5.62
14	16222-MV4-300	NUT, SQUARE (5MM)	$1.20
15	90018-425-000	BOLT, FLANGE (6X48)	$2.05
16	90023-MM5-000	BOLT, RECESSED (5X28)	$1.78
17	90035-MZ1-000	BOLT, STUD (8X24)	$3.55
18	90089-MN8-000	BOLT, SOCKET (5X8)	$2.20
19	90186-GM9-000	BOLT, SOCKET (8X55)	$3.22
20	90210-438-000	NUT (10MM)	$2.47
21	90410-HC4-000	WASHER (10MM)	$2.42
22	90452-323-000	WASHER, THRUST (5MM)	$0.85
23	90702-MB0-000	PIN, DOWEL (8X8)	$2.13
24	91302-HB3-004	O-RING (7.5X1.5)	$1.38
25	93500-05032-0G	SCREW, PAN (5X32)	$0.29
26	94050-10000	NUT, FLANGE (10MM)	$0.77
27	94301-08140	PIN A, DOWEL (8X14)	$0.87
28	95002-02070	CLIP, TUBE (B7)	$0.58
29	98069-59916	SPARK PLUG (DPR9EA-9)	$2.11
29	98069-59926	SPARK PLUG (X27EPR-U9)	$3.08

Ref.	Part No.	CYLINDER HEAD DESCRIPTION	Ronnies' Price Each
1	12010-MZ2-610	CYLINDER HEAD ASSY. (EXCEPT CALI)	$1,265.65
1	12010-MZ2-750	CYLINDER HEAD ASSY (CALI ONLY)	$1,265.65
2	12204-MS2-305	GUIDE, VALVE (OS)	$13.38
3	12251-MW7-791	GASKET, CYLINDER HEAD	$57.60
4	14541-MM5-010	PLATE, OIL GUIDE	$11.09
5	14542-MM5-000	PLATE, OIL GUIDE SETTING	$3.11
6	16211-MZ2-600	INSULATOR A, CARBURETOR	$39.53
7	16212-MZ2-600	INSULATOR B, CARBURETOR	$39.53
8	16213-MZ2-600	INSULATOR C, CARBURETOR	$39.53
9	16214-MB0-000	JOINT, BOOSTER	$3.51
10	16215-MV4-000	CAP, BOOSTER	$1.87
11	16217-MW0-000	BAND A, INSULATOR	$6.07
12	16219-MZ1-000	BAND C, INSULATOR	$5.62
13	16220-MZ1-000	BAND B, INSULATOR	$5.62
14	16222-MV4-300	NUT, SQUARE (5MM)	$1.20
15	90018-425-000	BOLT, FLANGE (6X48)	$2.05
16	90023-MM5-000	BOLT, RECESSED (5X28)	$1.78
17	90035-MZ1-000	BOLT, STUD (8X24)	$3.55
18	90089-MN8-000	BOLT, SOCKET (5X8)	$2.20
19	90186-GM9-000	BOLT, SOCKET (8X55)	$3.22
20	90210-438-000	NUT (10MM)	$2.47
21	90410-HC4-000	WASHER (10MM)	$2.42
22	90452-323-000	WASHER, THRUST (5MM)	$0.85
23	90702-MB0-000	PIN, DOWEL (8X8)	$2.13
24	91302-HB3-004	O-RING (7.5X1.5)	$1.38
25	93500-05032-0G	SCREW, PAN (5X32)	$0.29
26	94050-10000	NUT, FLANGE (10MM)	$0.77
27	94301-08140	PIN A, DOWEL (8X14)	$0.87
28	95002-02070	CLIP, TUBE (B7)	$0.58
29	98069-59916	SPARK PLUG (DPR9EA-9)	$2.11
29	98069-59926	SPARK PLUG (X27EPR-U9)	$3.08

Ref.	Part No.	CYLINDER DESCRIPTION	Ronnies' Price Each
1	12100-MS2-610	CYLINDER COMP.	$949.91
2	12191-MS2-611	GASKET, CYLINDER	$29.40
3	19507-MK4-620	CLAMP, BREATHER HOSE	$5.65
4	19513-MZ1-000	HOSE, WATER PUMP	$10.09
5	91301-MM5-004	O-RING (83X2)	$5.16
6	94301-10160	PIN A, DOWEL (10X16)	$1.03
7	95701-06025-00	BOLT, FLANGE (6X25)	$0.67

Ref.	Part No.	EVAP CANISTER (CALI ONLY) DESCRIPTION	Ronnies' Price Each
1	11357-KB1-950	JOINT, HOSE	$13.85
2	15772-376-000	JOINT, BREATHER THREE WAY	$10.35
3	15772-500-010	CLIP, BREATHER TUBE	$2.44
4	16715-MF5-860	SPRING, TUBE COVER	$9.73
5	16958-GJ6-000	JOINT, FUEL TUBE	$3.45
6	17201-MG9-000	JOINT, VACUUM TUBE (A)	$12.51
7	17300-MZ2-750	VALVE ASSY. EVAP EMISSION CAV CONTROL	$98.87
8	17303-MJ1-790	JOINT, THREE-WAY	$12.96
9	17305-MJ4-771	RUBBER, SETTING	$6.40
10	17305-MS2-720	TUBE B, AIR VENT	$27.76
11	17369-KB4-670	CLIP, BREATHER TUBE	$2.10
12	17410-MS2-722	CANISTER COMP.	$224.76
13	17411-MM5-740	PIPE A, CANISTER	$28.38
14	17412-MS2-720	TUBE, CANISTER CHARGE	$8.66
15	17413-MS2-720	TUBE, CANISTER OPEN AIR	$8.66
16	17414-MS2-720	TUBE B, CANISTER CHARGE	$24.48
17	17415-MS2-720	BRACKET, CANISTER	$26.49
18	17416-MS2-720	TUBE COMP., CANISTER	$6.40
19	17440-MS2-721	VALVE COMP., PURGE CONTROL	$71.96
20	17444-MS2-840	TUBE, AIR VENT	$6.58
21	17451-ME5-760	RUBBER, PURGE CONTROL VALVE SETTING	$7.29
22	17467-MS2-720	PLUG, CANISTER AIR TUBE	$5.00
23	17468-MF8-790	SPRING, TUBE COVER (9MM)	$5.84
24	17724-102-700	CLIP, SUB-TANK HOSE	$1.97
25	18615-MM5-740	BRACKET, SUCTION VALVE	$15.29
26	18655-MZ2-750	TUBE A, AIR IN.	$21.34
27	18656-MM5-740	TUBE, R. AIR IN.	$7.00
28	18657-MZ2-750	TUBE, L. AIR IN.	$13.26
29	19051-MB4-880	RUBBER, CANISTER SETTING	$1.85
30	19052-MB4-880	RUBBER, CANISTER SETTING	$2.98
31	50451-GB6-920	RUBBER, TAILLIGHT SETTING	$1.55

32	83601-357-000	COLLAR, COVER SETTING	$3.15
33	93404-06032-00	BOLT-WASHER (6X32)	$0.67
34	94050-06000	NUT, FLANGE (6MM)	$0.55
35	95002-02070	CLIP, TUBE (B7)	$0.58
36	95002-02080	CLIP, TUBE (B8)	$0.58
37	95002-02130	CLIP, TUBE (B12.5)	$0.45
38	95005-35008-10M	BULK HOSE, VACUUM (3.5X8000) (3.5X55)	$39.29
39	95005-35008-10M	BULK HOSE, VACUUM (3.5X8000) (3.5X100)	$39.29
40	95005-35008-10M	BULK HOSE, VACUUM (3.5X8000) (3.5X110)	$39.29
41	95005-35008-10M	BULK HOSE, VACUUM (3.5X8000) (3.5X265)	$39.29
42	95005-35008-10M	BULK HOSE, VACUUM (3.5X8000) (3.5X500)	$39.29
43	95005-45008-10M	BULK HOSE, VACUUM (4.5X8000) (4.5X100)	$73.07
44	95005-80008-10M	BULK HOSE, VACUUM (8X8000) (8X90)	$88.43
45	95005-80008-10M	BULK HOSE, VACUUM (8X8000) (8X175)	$88.43
46	95005-80008-10M	BULK HOSE, VACUUM (8X8000) (8X280)	$88.43
47	95005-80008-10M	BULK HOSE, VACUUM (8X8000) (8X490)	$88.43
48	95005-80008-10M	BULK HOSE, VACUUM (8X8000) (8X650)	$88.43
49	95700-06018-00	BOLT, FLANGE (6X18)	$0.55
50	96600-06016-00	BOLT, SOCKET (6X16)	$0.63

Ref.	Part No.	FENDER - FRONT DESCRIPTION	Ronnies' Price Each
1	33741-MB2-671	REFLECTOR, FR. REFLEX	$10.93
3	45156-MZ2-670	STAY, FR. BRAKE JOINT	$11.73
4	51583-MZ2-670	STAY, L. FR. REFLECTOR	$18.58
5	61100-MT4-000ZF	FENDER COMP., FR. (NH1) (BLACK)	$117.12
6	90106-KY2-701	SCREW, PAN (6X11)	$2.64
7	91015-KT8-005	NUT, FLANGE (5MM)	$29.15
8	95801-06035-07	BOLT, FLANGE (6X35)	$0.68
9	95801-06050-07	BOLT, FLANGE (6X50)	$1.43

Ref.	Part No.	FENDER - REAR DESCRIPTION	Ronnies' Price Each
1	30405-MT6-000	RUBBER, SPARK UNIT	$15.31
2	30410-MZ2-601	MODULE, IGNITION CONTROL (CDI) (SPARK UNIT)	$457.29
3	33741-MS6-921	REFLECTOR, REFLEX	$9.96
4	61304-415-000	RUBBER, HEADLIGHT CASE SETTING	$2.13
5	80100-MZ2-670	FENDER A, RR.	$85.79
6	80101-MS2-000	STAY, R. RR. FENDER	$8.31
7	80102-MS2-000	STAY, L. RR. FENDER	$8.31
8	80200-MS2-660	FENDER COMP. B, RR.	$82.43
9	90501-425-000	COLLAR (6.2X12)	$2.53
10	90683-GR1-003	CLIP, BODY COVER	$1.69
11	94050-05080	NUT, FLANGE (5MM)	$0.12
12	94050-06000	NUT, FLANGE (6MM)	$0.55
13	95701-06012-00	BOLT, FLANGE (6X12)	$0.55
14	95701-06020-00	BOLT, FLANGE (6X20)	$0.47
15	95701-06025-00	BOLT, FLANGE (6X25)	$0.67

Ref.	Part No.	FORK - FRONT DESCRIPTION	Ronnies' Price Each
1	45134-KB7-005	DUST SEAL, BRAKE CAM	$1.85
2	45452-MZ2-000	COLLAR, PIVOT	$6.02
3	51401-MZ2-003	SPRING, FR. FORK	$65.93
4	51402-MS2-003	COLLAR, SPRING (SHOWA)	$10.05
5	51403-KF0-003	SEAT, SPRING	$2.96
6	51405-MB4-003	RING, STOPPER	$3.65
7	51400-MZ2-912	FORK ASSY., R. FR. (SHOWA)	$596.82
8	51410-MZ2-003	PIPE COMP., FR. FORK	$228.07
9	51412-MB4-003	RING, BACK UP	$5.78
10	51414-MN5-003	BUSH, GUIDE (SHOWA)	$8.00
11	51415-MM8-003	BUSH, SLIDER (SHOWA)	$9.56
12	51415-MS2-003	SEAT, SPRING (SHOWA)	$6.67
13	51420-MZ2-891	CASE COMP., R. (LOWER)	$325.07
14	51430-MZ2-003	DAMPER COMP., FR.	$195.89
15	51432-MS2-003	PIECE, OIL LOCK (SHOWA)	$18.00
16	51447-KA4-711	RING, OIL SEAL STOPPER	$2.82
17	51451-KS7-003	NUT, LOCK (SHOWA)	$4.85
18	51455-MT4-003	BOLT, FR. FORK (SHOWA)	$36.05
19	51460-MT3-611	PROTECTOR, FORK PIPE	$6.44
20	51490-MN8-305	SEAL SET, FR. FORK (SHOWA)	$19.85
21	51500-MZ2-912	FORK ASSY., L. FR. (SHOWA)	$596.82
22	51520-MZ2-891	CASE COMP., L. (LOWER)	$325.07
23	90116-383-721	BOLT, SOCKET (8MM) (SHOWA)	$3.20
24	90543-273-000	GASKET, FR. FORK DRAIN VALVE	$1.25
25	90544-283-000	WASHER, SPECIAL (8MM)	$1.64
26	91101-KG8-003	BEARING, NEEDLE (14X20X12)	$21.75
27	91254-MM8-003	DUST SEAL	$10.69
28	91356-KF0-003	O-RING (SHOWA)	$2.29
29	92101-06008-0A	BOLT, HEX (6X8)	$0.50
30	90109-MR7-000	BOLT, FLANGE (8X45)	$3.07

Ref.	Part No.	FRAME DESCRIPTION	Ronnies' Price Each
1	11513-MN5-300	COLLAR (12MM)	$2.05
2	15510-MZ2-000	PIPE COMP., R. OIL HOSE	$118.80
3	15515-MZ2-000	PIPE COMP., L. OIL HOSE	$118.80
4	15521-MA6-000	RUBBER, OIL PIPE CUSHION	$2.31
5	15600-MZ2-G01	COOLER COMP., OIL	$224.82
6	19051-KA3-830	RUBBER, RADIATOR SETTING	$2.67
7	50100-MZ2-600	FRAME COMP.	$1,696.78
8	50121-KV3-830	COLLAR, PIVOT PLATE	$12.35
9	50209-MM5-000	COLLAR A, ENGINE HANGER	$6.40
10	50217-MM5-000	COLLAR, ADJUSTING	$15.75
11	50261-MS2-300	RUBBER A, SEAL	$6.22
12	50262-MS2-300	RUBBER B, SEAL	$4.75
13	50356-KT8-000	COLLAR, FR. ENGINE HANGER (LOWER)	$6.67
14	57071-SB0-800	NUT, ACCUMULATOR	$3.22
15	61102-KF9-900	WASHER, FR. FENDER	$1.78
16	64110-MS2-670	RUBBER COMP., HEAT GUARD (EXCEPT CALI)	$32.62
17	64110-MS2-720	RUBBER COMP., HEAT GUARD (CALI ONLY)	$32.62
18	64327-MS2-000	STAY, BUMPER	$15.75
19	90102-MS2-670	BOLT, FLANGE (12X239)	$12.96
20	90103-MM5-000	BOLT, FLANGE (12X365)	$15.27
21	90304-GJ3-600	NUT, FLANGE (12MM)	$2.78
22	91314-ME5-003	O-RING (10X2.6)	$2.71
23	94050-10000	NUT, FLANGE (10MM)	$0.77
24	95002-70000	CLIP, TUBE (C11)	$0.57
25	95003-19013-31	TUBE (7X11X130)	$1.30
26	95701-06012-00	BOLT, FLANGE (6X12)	$0.55
27	95701-10045-00	BOLT, FLANGE (10X45)	$1.25
28	95701-10070-00	FUSE, BLADE (20A)	$1.33
29	95701-10085-00	BOLT, FLANGE (10X85)	$1.95
30	96001-06016-00	BOLT, FLANGE (6X16)	$0.62
31	96001-06022-00	BOLT, FLANGE (6X22)	$0.91

Ref.	Part No.	FUEL TANK DESCRIPTION	Ronnies' Price Each
1	16950-MZ2-000	PETCOCK ASSY.	$120.24
2	16952-MS2-000	O-RING	$2.51
3	16953-MV9-000	COVER SET, PETCOCK	$28.58
4	16955-MS2-000	TUBE, FUEL	$10.14
5	16956-MS2-000	TUBE, VACUUM	$4.87
6	16958-KY6-003	O-RING	$2.27
7	16965-MS2-010	LEVER, PETCOCK	$16.78
8	17504-MS2-000	SPACER, FUEL VALVE	$27.76
9	17506-MB1-000	RUBBER, FUEL TANK PIVOT	$3.60
10	17515-MM4-000	ROD, TANK OPEN	$6.36
11	17516-MM5-000	SLIDER, TANK ROD	$11.53
12	17520-MZ2-910ZA	TANK SET, FUEL (NH1) (TYPE19) (BLACK)	$831.38
13	17525-MW7-000	PROTECTOR, FUEL TANK HEAT	$87.07
14	17553-MW7-300	TAPE, R. TANK GUARD	$2.89
15	17554-MW7-300	TAPE, L. TANK GUARD	$2.89
16	17555-MS2-300	TAPE B, TANK GUARD	$3.38
17	17620-MT4-010	CAP COMP., FUEL FILLER	$116.25
18	19051-KA3-830	RUBBER, RADIATOR SETTING	$2.67
19	19052-MN8-000	RUBBER, RADIATOR SETTING	$3.18
20	37800-MZ2-000	FUEL UNIT	$47.16
21	90008-KN8-730	BOLT, SOCKET (6X45)	$2.64
22	90073-MT4-000	BOLT, SOCKET (4X6)	$2.11
23	90074-MT4-000	BOLT, SOCKET (4X21)	$1.91
24	90135-MS2-000	BOLT, TANK HINGE	$3.84
25	90301-473-003	NUT, U (6MM)	$4.22
26	90661-GHB-600	CLAMP, TUBE (12.OMM) (B)	$0.93
27	90661-GHB-610	CLAMP, TUBE (12.5MM) (B)	$0.93
28	91305-MC7-000	O-RING (39.5X5)	$2.67
29	93892-04016-08	SCREW-WASHER (4X16)	$0.27
30	93893-05010-07	SCREW-WASHER (5X10)	$0.53
31	94050-06000	NUT, FLANGE (6MM)	$0.55

32	94101-05000	WASHER, PLAIN (5MM)	$0.33
33	94103-05000	WASHER, PLAIN (5MM)	$0.33
34	94103-06700	WASHER, PLAIN (6MM)	$0.20
35	94251-05000	PIN, LOCK (5MM)	$0.37
36	94251-08000	PIN, LOCK (8MM)	$0.48
37	95002-02070	CLIP, TUBE (B7)	$0.58
38	95701-06016-00	BOLT, FLANGE (6X16)	$0.57
39	96001-06025-07	BOLT, FLANGE (6X25)	$0.67

Ref.	Part No.	GEARSHIFT DRUM DESCRIPTION	Ronnies' Price Each
1	24211-MS2-610	FORK, R. GEARSHIFT	$59.49
2	24212-MS2-610	FORK, CENTER GEARSHIFT	$56.35
3	24213-MS2-610	FORK, L. GEARSHIFT	$59.49
4	24231-MS2-610	SHAFT, GEARSHIFT FORK	$13.36
5	24235-MS2-610	STOPPER, GEARSHIFT FORK SHAFT	$4.69
6	24236-MS2-610	PLATE, LOCK	$3.78
7	24310-MZ2-610	DRUM COMP., GEARSHIFT	$115.18
8	24312-KY2-310	CENTER, GEARSHIFT DRUM	$21.55
9	24315-HA0-000	PIN, SHIFTER	$7.55
10	24321-KT8-030	SHIFTER, DRUM	$31.05
11	24322-MM4-000	COLLAR, DRUM SHIFTER	$3.18
12	24324-KA3-711	PAWL A, RATCHET	$7.89
13	24325-KA3-711	PAWL B, RATCHET	$7.89
14	24326-KBH-901	PLUNGER, PAWL	$3.60
15	24328-MM5-000	PLATE, GUIDE	$10.05
16	24329-KA3-740	SPRING, PAWL PLUNGER	$1.65
17	24329-KT8-000	COLLAR, GUIDE PLATE DISTANCE	$3.18
18	24430-MM5-000	STOPPER COMP., DRUM	$10.84
19	24434-KT7-000	COLLAR, DRUM STOPPER	$5.09
20	24435-MM5-000	SPRING, DRUM STOPPER	$2.58
21	24610-MS2-610	SPINDLE COMP., GEARSHIFT	$60.53
22	24651-KT7-000	SPRING, SHIFT RETURN	$4.62
23	24652-035-000	PIN, SHIFT RETURN SPRING	$2.47
24	24655-MM5-000	PLATE, SHIFT DRUM BEARING SETTING	$6.38
25	90451-155-000	WASHER (14MM)	$3.15
26	90485-040-000	WASHER (8MM)	$0.98
27	91008-374-003	BEARING, BALL (16005)	$17.15
28	91104-KT7-000	PIN, DOWEL (8X31.5)	$2.78
29	92101-06014-0A	BOLT, HEX. (6X14)	$0.48
30	94510-14000	CIRCLIP (14MM) (OUTER)	$0.47
31	95701-06014-00	BOLT, FLANGE (6X14)	$0.55

32	95701-06045-07	BOLT, FLANGE (6X45)	$0.80
33	96220-40080	ROLLER (4X8)	$0.31

Ref.	Part No.	HANDLEBAR DESCRIPTION	Ronnies' Price Each
1	17909-MS2-000	GUIDE, L. CABLE	$4.69
2	35010-MZ2-600	LOCK SET	$240.80
3	35100-MZ2-601	SWITCH ASSY., COMBINATION & LOCK	$93.49
4	35101-MZ2-601	BASE COMP., CONTACT	$39.24
5	35121-KW3-771	KEY, BLANK (TYPE1) (OPT)	$6.04
5	35122-KW3-771	KEY, BLANK (TYPE2) (OPT)	$6.04
6	53100-MW7-000	HANDLEBAR, R.	$135.44
7	53104-MS2-000	WEIGHT B, HANDLEBAR	$13.75
8	53106-MM5-000	RUBBER A, HANDLE WEIGHT	$2.42
9	53108-MJ0-000	RING, HANDLE WEIGHT SNAP	$3.84
10	53109-MM5-000	RUBBER B, HANDLE WEIGHT	$2.25
11	53150-MW7-000	HANDLEBAR, L.	$135.44
12	53232-MJ4-670	CAP, STEERING NUT	$8.00
13	53300-MW7-790	BRIDGE COMP., FORK TOP	$168.33
14	87521-MW7-790	EMBLEM, TOP BRIDGE	$4.84
15	90100-MN8-910	BOLT, SOCKET (8MM)	$2.96
16	90122-MM2-000	BOLT, SPECIAL FLANGE (8X40)	$2.42
17	90304-MJ4-670	NUT, STEERING STEM	$9.20
18	91059-KY2-711	SCREW, TAPPING (3X16)	$1.85
19	96600-08050-07	BOLT, SOCKET (8X50)	$1.25

Ref.	Part No.	HANDLEBAR CABLES/SWITCHES DESCRIPTION	Ronnies' Price Each
1	17910-MZ2-000	CABLE COMP. A, THROTTLE	$26.95
2	17920-MZ2-000	CABLE COMP. B, THROTTLE	$26.95
3	17950-MZ2-000	CABLE COMP., CHOKE	$21.13
4	17962-MN8-003	LEVER, CHOKE	$11.36
7	35130-MZ2-670	SWITCH ASSY., STARTING KILL	$80.25
8	35200-MZ2-670	SWITCH ASSY., TURN SIGNAL	$93.15
9	53105-MM5-010	WEIGHT, HANDLEBAR	$16.93
10	53140-422-000	GRIP COMP., R.	$16.45
11	53165-422-000	GRIP, R. HANDLE	$8.76
12	53166-422-000	GRIP, L. HANDLE	$8.76
13	90126-MS2-000	SCREW, HEADLIGHT WEIGHT	$3.11
14	93892-05020-07	SCREW-WASHER (5X20)	$0.53
15	93892-05025-07	SCREW-WASHER (5X25)	$0.53
16	93892-05035-07	SCREW-WASHER (5X35)	$0.53
17	93892-05045-07	SCREW-WASHER (5X45)	$0.82

Ref.	Part No.	HEADLIGHT DESCRIPTION	Ronnies' Price Each
2	33108-MS2-611	CABLE COMP., BEAM ADJUSTING	$26.93
3	33109-MS2-611	GEAR, BEAM ADJUSTING	$6.78
4	33110-MS2-611	CAP, BEAM ADJ. CABLE	$4.04
5	33112-MM5-601	COVER, RUBBER	$10.15
6	33119-MS2-611	PLATE, BEAM ADJ.	$3.78
7	33120-MZ2-671	HEADLIGHT UNIT	$319.61
8	34901-MS2-671	BULB, HEADLIGHT (12V 45.45W)	$23.60
9	90103-SE3-003	BOLT A, BUMPER	$2.18
10	90503-MS2-000	WASHER, HEADLIGHT MOUNTING	$2.96
11	93901-34320	SCREW, TAPPING (4X12)	$0.35

Ref.	Part No.	MUFFLER DESCRIPTION	Ronnies' Price Each
1	18150-MS2-721	PIPE COMP., EX.	$519.16
2	18156-MS2-721	COVER, R. EX. PIPE (CALI ONLY)	$55.02
3	18256-MS2-721	COVER, L. EX. PIPE (CALI ONLY)	$55.02
4	18291-MM5-860	GASKET, EX. PIPE	$3.25
5	18310-MZ2-910	MUFFLER COMP., R. EX.	$699.85
6	18366-GW8-670	GROMMET, MUFFLER PROTECTOR (A)	$2.20
7	18371-MM5-640	BAND, R. MUFFLER	$21.45
8	18372-MM5-640	BAND, L. MUFFLER	$21.45
9	18391-ML0-003	GASKET, MUFFLER	$17.53
10	18410-MZ2-910	MUFFLER COMP., L. EX.	$699.85
11	18421-MA6-000	RUBBER, MUFFLER SETTING	$4.40
12	18422-MA6-000	COLLAR, MUFFLER SETTING	$4.62
13	50524-MG9-000	RUBBER, STAND STOPPER	$3.93
14	64385-MS2-670ZD	COVER COMP., R. PIVOT (LOWER) (NH105) (MAT BLACK)	$178.47
15	64386-MS2-000	RUBBER, PIVOT COVER (LOWER)	$3.11
16	64395-MS2-670ZD	COVER COMP., L. PIVOT (LOWER) (NH105) (MAT BLACK)	$194.31
17	90106-KY2-701	SCREW, PAN (6X11)	$2.64
18	90113-MM5-000	SCREW, PAN (6X14)	$1.98
19	90158-MS9-000	BOLT, SPECIAL FLANGE (8X45)	$2.78
20	90161-ML7-000	BOLT, FLANGE (8X35)	$2.20
21	90304-MM5-000	NUT, FLANGE (7MM)	$3.07
22	90344-MS2-000	NUT, CLIP (6MM)	$4.53
23	90504-MM5-000	WASHER (8.5X26)	$1.33
24	90567-ZV4-000	WASHER, SPRING (6MM) (CALI ONLY)	$1.64
25	93500-06010-49	SCREW, PAN (6X10) (CALI ONLY)	$0.80
26	94050-08000	NUT, FLANGE (8MM)	$0.55
27	94101-06200	WASHER, PLAIN (6MM) (CALI ONLY)	$0.40
28	95701-08045-07	BOLT, FLANGE (8X45)	$0.82

Ref.	Part No.	OIL PUMP DESCRIPTION	Ronnies' Price Each
1	11210-MZ2-610	PAN, OIL	$137.91
2	11398-MW7-790	GASKET, OIL PAN	$10.36
3	15010-MW0-000	FILTER SET, OIL	$19.84
4	15100-MZ2-610	PUMP ASSY., OIL	$152.05
5	15134-MZ1-000	SPROCKET, OIL PUMP DRIVEN	$48.47
6	15153-MS2-610	STRAINER COMP., OIL	$25.42
7	15154-MM5-000	GASKET, OIL STRAINER	$4.11
8	15161-MM5-003	CHAIN, OIL PUMP (62LE)	$21.69
9	15220-MZ1-000	VALVE ASSY., RELIEF	$20.60
10	15311-MS2-610	PIPE A, OIL PATH	$14.91
11	15312-MS2-610	PIPE B, OIL PATH	$14.91
12	15313-MM5-000	PIPE COMP. C, OIL	$21.96
13	15410-MM9-013	CARTRIDGE, OIL FILTER (TOYO)	$11.98
14	32922-MB2-000	BOLT, FLANGE (6X14)	$2.78
15	90019-MB0-000	BOSS, OIL FILTER	$5.36
16	95701-06035-00	BOLT-WASHER (6X12)	$0.62
17	90030-PG2-000	BOLT, SPECIAL (6MM)	$1.95
18	90081-MC7-000	BOLT, PLUG (14MM)	$7.93
19	90702-MJ4-000	PIN, DOWEL (10X10)	$1.85
20	91103-429-000	PIN, DOWEL (8X10)	$0.12
21	91309-ML7-003	O-RING (9.6X2.6) (ARAI)	$1.13
22	91313-MG7-004	O-RING (14.8X2.2)	$2.35
23	91313-PC9-003	O-RING (9X2.3)	$1.42
24	94109-14000	WASHER, DRAIN PLUG (14MM)	$0.25
25	95701-06025-00	BOLT, FLANGE (6X25)	$0.67
26	95701-06032-00	BOLT, FLANGE (6X32)	$0.63
27	95701-06040-00	BOLT, FLANGE (6X40)	$0.68

Ref.	Part No.	OIL PUMP DESCRIPTION	Ronnies' Price Each
1	11210-MZ2-610	PAN, OIL	$137.91
2	11398-MW7-790	GASKET, OIL PAN	$10.36
3	15010-MW0-000	FILTER SET, OIL	$19.84
4	15100-MZ2-610	PUMP ASSY., OIL	$152.05
5	15134-MZ1-000	SPROCKET, OIL PUMP DRIVEN	$48.47
6	15153-MS2-610	STRAINER COMP., OIL	$25.42
7	15154-MM5-000	GASKET, OIL STRAINER	$4.11
8	15161-MM5-003	CHAIN, OIL PUMP (62LE)	$21.69
9	15220-MZ1-000	VALVE ASSY., RELIEF	$20.60
10	15311-MS2-610	PIPE A, OIL PATH	$14.91
11	15312-MS2-610	PIPE B, OIL PATH	$14.91
12	15313-MM5-000	PIPE COMP. C, OIL	$21.96
13	15410-MM9-013	CARTRIDGE, OIL FILTER (TOYO)	$11.98
14	32922-MB2-000	BOLT, FLANGE (6X14)	$2.78
15	90019-MB0-000	BOSS, OIL FILTER	$5.36
16	95701-06035-00	BOLT-WASHER (6X12)	$0.62
17	90030-PG2-000	BOLT, SPECIAL (6MM)	$1.95
18	90081-MC7-000	BOLT, PLUG (14MM)	$7.93
19	90702-MJ4-000	PIN, DOWEL (10X10)	$1.85
20	91103-429-000	PIN, DOWEL (8X10)	$0.12
21	91309-ML7-003	O-RING (9.6X2.6) (ARAI)	$1.13
22	91313-MG7-004	O-RING (14.8X2.2)	$2.35
23	91313-PC9-003	O-RING (9X2.3)	$1.42
24	94109-14000	WASHER, DRAIN PLUG (14MM)	$0.25
25	95701-06025-00	BOLT, FLANGE (6X25)	$0.67
26	95701-06032-00	BOLT, FLANGE (6X32)	$0.63
27	95701-06040-00	BOLT, FLANGE (6X40)	$0.68

Ref.	Part No.	PAIR CONTROL VALVE (CALI ONLY) DESCRIPTION	Ronnies' Price Each
1	18600-MS2-680	VALVE ASSY., AIR SUCTION	$144.13
2	18621-MS6-930	GASKET, AIR PATH PIPE	$2.55
3	18640-MS2-680	PIPE COMP., AIR PATH (#3/#4)	$20.56
4	18641-MS2-680	PIPE COMP., AIR PATH (#1/#2)	$20.56
5	18651-MS2-680	TUBE, AIR SUCTION VALVE	$11.98
6	18652-MS2-680	CLAMP, AIR SUCTION VALVE TUBE	$2.45
7	90072-MF5-860	BOLT, FLANGE SOCKET (6X18)	$2.20
8	91405-PM5-004	CLAMP, TUBE (D17)	$3.40

Ref.	Part No.	PEDAL DESCRIPTION	Ronnies' Price Each
2	24705-MS2-000	PEDAL COMP., CHANGE	$72.65
3	24706-MK3-770	RUBBER, DUST SEAL	$2.78
4	24725-MS2-000	COLLAR, CHANGE PIVOT	$6.22
5	24781-KR3-770	RUBBER, CHANGE PEDAL	$2.07
6	35350-MM5-010	SWITCH ASSY., RR. STOP (TEC)	$10.38
7	35357-MM5-000	SPRING, STOP SWITCH	$2.96
8	46500-MS2-000	PEDAL ASSY., BRAKE	$61.35
9	46514-MS2-000	SPRING, BRAKE PEDAL	$4.05
10	50205-MS2-000	STAY, STOP SWITCH	$7.96
11	53312-657-000	BUSH, WASHER	$3.18
12	90108-KY1-000	BOLT, FLANGE (8X43)	$2.45
13	90118-KY1-000	BOLT, FLANGE (6X20)	$1.78
14	90502-MS2-000	WASHER (24X8.5)	$2.02
15	90514-921-000	WASHER (8MM)	$0.80
16	91251-444-000	DUST SEAL	$2.67
17	94511-15000	CIRCLIP (15MM) (OUTER)	$0.37

Ref.	Part No.	PROPORTION CONTROL VALVE DESCRIPTION	Ronnies' Price Each
1	43158-MZ2-000	CLAMP, FR. BRAKE SUB MASTER CYLINDER HOSE	$7.33
2	43311-MZ2-003	SUB-HOSE, RR. BRAKE	$62.02
3	43312-MZ2-003	HOSE, FR. BRAKE SUB MASTER CYLINDER	$30.38
4	43313-MZ2-003	HOSE, PROPORTIONING CONTROL VALVE	$24.38
5	45131-MZ2-000	PIPE, L. SIDE BRAKE	$23.47
6	45132-MZ2-000	PIPE, R. SIDE BRAKE	$20.22
7	46200-MZ2-006	VALVE ASSY., PROPORTIONING CONTROL	$337.85
8	46215-MZ2-000	RUBBER, PROPORTIONING CONTROL VALVE	$6.69
9	46220-MZ2-000	STAY, PROPORTIONING CONTROL VALVE	$10.78
10	52115-ML8-670	CLAMP, BRAKE HOSE	$3.07
11	90145-MS9-612	BOLT, OIL (10X22)	$4.16
12	90545-300-000	WASHER, OIL BOLT	$1.95
13	95701-06012-07	BOLT, FLANGE (6X12)	$0.50
14	95701-06025-07	BOLT, FLANGE (6X25)	$0.76

Ref.	Part No.	RADIATOR DESCRIPTION	Ronnies' Price Each
1	17465-MS2-720	CLAMP, TUBE (CALI ONLY)	$4.11
2	19010-MS2-003	RADIATOR COMP.	$631.53
3	19015-MS2-013	SHROUD COMP. (EXCEPT CALI)	$69.62
3	19015-MS2-671	SHROUD COMP. (CALI ONLY)	$66.33
4	19020-MM5-003	FAN COMP., COOLING (TOYO)	$34.20
5	19030-MM5-902	MOTOR, FAN	$215.95
6	19032-MS2-000	GRILLE, RADIATOR	$70.35
7	19045-MV9-921	CAP COMP., RADIATOR	$23.51
8	19051-KA3-830	RUBBER, RADIATOR SETTING	$2.67
9	19051-MS2-000	STAY, RADIATOR	$7.96
10	19052-HA2-000	RUBBER, RADIATOR SETTING (B)	$2.91
11	19052-MN8-000	RUBBER, RADIATOR SETTING	$3.18
12	19055-MV9-921	SEAL, RADIATOR CAP	$5.27
13	19056-HA2-000	COLLAR, RADIATOR SETTING (B)	$3.78
14	99006-27000	TANK, RADIATOR RESERVE	$4.40
15	19106-GE2-000	ADAPTER, RESERVE CAP	$6.53
16	19108-KK4-000	CAP, RESERVE TANK	$5.44
17	19300-MG9-000	THERMOSTAT	$42.20
18	19311-MS2-000	CASE, THERMOSTAT	$57.02
19	19312-MS2-000	FILLER, NECK	$81.42
20	19501-MS2-000	JOINT, WATER HOSE	$18.58
21	19502-MS2-000	HOSE B, RADIATOR	$6.67
22	19503-MS2-000	HOSE, RADIATOR (UPPER)	$6.09
23	19504-MS2-000	HOSE C, RADIATOR	$6.09
24	19505-MS2-670	HOSE, RADIATOR (LOWER)	$12.31
25	19508-MS2-000	JOINT, WATER HOSE	$25.35
26	19509-MM5-003	CLAMP, R. RADIATOR HOSE	$8.16
27	19509-MS2-000	HOSE A, RADIATOR	$18.07
28	19515-MS2-670	CLAMP B, RADIATOR HOSE	$5.95
29	19516-ML7-691	CLAMP, HOSE (24-32)	$8.64
30	33613-KG1-610	COLLAR, TURN SIGNAL SETTING	$3.45

31	37750-PC1-004	SENDING UNIT, WATER TEMPERATURE (ND)	$36.20
32	37760-MT2-003	SWITCH ASSY., THERMOSTAT	$49.95
33	64527-KE8-700	NUT, CLIP (4MM)	$3.07
34	90118-MM5-000	BOLT, RESERVE TANK	$1.78
35	90315-MK3-003	NUT, SERRATE (5MM)	$1.33
36	90653-GHB-660	CLAMP, HOSE	$6.40
37	91307-MB0-003	O-RING (54X2)	$1.70
38	91307-PH7-660	O-RING (13.5X1.4)	$1.42
39	91315-KE8-003	O-RING (24X3) (ARAI)	$2.00
40	93500-04014-0B	SCREW, PAN (4X14)	$0.58
41	94050-05000	NUT, FLANGE (5MM)	$0.47
42	95002-70000	CLIP, TUBE (C11)	$0.57
43	95005-70003-30M	BULK HOSE, VACUUM (7X3000) (7X535)	$11.42
44	95005-70003-30M	BULK HOSE, VACUUM (7X3000) (7X910)	$11.42
45	95701-06020-08	BOLT, FLANGE (6X20) (EXCEPT CALI)	$0.08
45	95701-06025-08	BOLT, FLANGE (6X25) (CALI ONLY)	$0.62
46	95701-06025-07	BOLT, FLANGE (6X25)	$0.76
47	95701-06028-00	BOLT, FLANGE (6X28)	$0.68
48	95701-08020-00	BOLT, FLANGE (8X20)	$0.68
49	96001-06010-00	BOLT, FLANGE (6X10)	$0.68
50	96001-06020-00	BOLT, FLANGE (6X20)	$0.68
51	96001-06025-00	BOLT, FLANGE (6X25)	$0.82

Ref.	Part No.	SEAT DESCRIPTION	Ronnies' Price Each
1	17535-KE7-000	COLLAR, FUEL TANK SETTING	$2.67
2	22431-121-880	SPRING, CLUTCH SUB FREE (A/S)	$0.67
3	61103-357-000	RUBBER, FR. FENDER SETTING	$1.89
4	64206-MJ0-000	NUT, SPEED (4MM)	$0.87
5	77200-MS2-670ZC	SEAT ASSY., DOUBLE (NH1L) (BLACK)	$350.04
6	77201-MS2-000	GARNISH A	$6.35
7	77202-MS2-000	GARNISH B	$6.35
8	77203-MS2-000	BRACKET, SEAT LOCK	$9.82
9	77211-MM5-000	RUBBER, R. RR. COWL SETTING	$2.51
10	77212-MM5-000	RUBBER, L. RR. COWL SETTING	$2.51
11	77215-GC2-000	RUBBER B, SEAT STOPPER	$3.15
12	77220-MZ2-000	HOOK, SEAT CATCH	$19.98
13	77225-MS2-003	HOLDER ASSY., HELMET	$30.95
14	77231-MS2-003	HOLDER, ROD	$1.18
15	77232-MM5-770	BAR, SEAT LOCK	$4.47
16	77260-MZ2-910ZA	COWL SET, RR. SEAT (NH1) (TYPE19) (BLACK)	$338.95
17	77300-MS2-670ZB	GRAB RAIL ASSY., RR. (NH196) (ROSS WHITE)	$340.73
18	84120-MS2-670ZB	HOOK A, LAGGAGE (NH196) (ROSS WHITE)	$19.47
19	84121-MS2-000	PLATE, HOOK SETTING	$2.27
20	84130-MS2-670ZB	HOOK B, LAGGAGE (NH196) (ROSS WHITE)	$19.47
21	90004-PE0-000	BOLT, SPECIAL (8X18)	$3.55
22	90112-MS2-000	SCREW, PAN (6X22)	$2.20
23	93892-05016-08	SCREW-WASHER (5X16)	$0.45
24	95701-06012-00	BOLT, FLANGE (6X12)	$0.55
25	95701-06020-08	BOLT, FLANGE (6X20)	$0.08
26	96001-06025-00	BOLT, FLANGE (6X25)	$0.82
27	96211-07000	BALL, STEEL (#7) (7/32)	$0.53

Ref.	Part No.	SHOCK ABSORBER - REAR DESCRIPTION	Ronnies' Price Each
1	52400-MZ2-003	SHOCK ABSORBER ASSY., RR. (SHOWA)	$644.15
2	52406-KB7-003	CAP, DUST SEAL	$3.65
3	52460-MS2-000	ROD ASSY., SHOCK CONNECTING	$130.45
4	52462-MM5-000	COLLAR, CONNECTING ROD PIVOT	$12.96
5	52463-KM3-000	COLLAR, SHOCK ARM PIVOT	$11.45
6	52463-MB2-700	COLLAR, CONNECTING ROD (LOWER)	$13.09
7	52470-MM5-000	ARM ASSY., SHOCK	$180.87
8	52485-KE8-003	BUSH, DAMPER	$12.96
9	52486-ML7-003	COLLAR, BUSH	$8.00
10	90153-KV0-000	BOLT, FLANGE (10X47)	$6.27
11	90154-KE7-000	BOLT, UBS (10X141)	$3.07
12	90181-KE7-000	BOLT, FLANGE (10X113)	$7.78
13	90182-MB2-003	BOLT, FLANGE (10X66)	$5.53
14	90187-MG7-003	BOLT, FLANGE (10X95)	$6.27
15	90304-GE8-003	NUT, U (10MM)	$2.96
16	90305-HC0-770	NUT, SELF LOCK (10MM)	$2.45
17	91072-KT7-003	BEARING, NEEDLE (17X24X20)	$15.87
18	91072-MB2-701	BEARING, NEEDLE	$10.87
19	91072-MJ0-003	BEARING, NEEDLE (17X24X25)	$14.45
20	91262-MB2-005	DUST SEAL, CONNECTING ROD PIVOT	$2.82
21	91202-HC5-005	OIL SEAL (17X27X5)	$2.87
22	91351-KB7-003	DUST SEAL B	$2.00

Ref.	Part No.	SIDE COVER DESCRIPTION	Ronnies' Price Each
1	32501-MM5-770	HOLDER B, COUPLER	$22.24
2	64113-MS2-000	GUARD, SIDE COWL HEAT	$8.02
3	64285-MZ2-000	COVER COMP, R. PIVOT	$101.15
4	64295-MZ2-000	COVER COMP., L. PIVOT	$101.15
5	64301-MS2-300	MAT, R. HEAT GUARD	$16.20
6	64351-MS2-300	MAT, L. HEAT GUARD	$16.20
7	64507-MN4-000	STUD (6X14)	$8.45
8	64509-KE8-700	RETAINER (6MM)	$1.33
9	65300-MZ2-910ZA	COWL SET, R. SIDE (NH1) (TYPE19) (BLACK)	$141.62
10	65350-MZ2-910ZA	COWL SET, L. SIDE (NH1) (TYPE19) (BLACK)	$207.04
11	83602-MS2-000	RUBBER, SIDE COWL	$4.75
12	90106-KY2-701	SCREW, PAN (6X11)	$2.64
13	90107-MM5-000	SCREW, PAN (6X14)	$2.91
14	90407-952-300	WASHER, SPECIAL (6MM)	$2.20
15	93901-25010	SCREW, TAPPING (5X8)	$0.20

Ref.	Part No.	SPEEDOMETER - TACHOMETER DESCRIPTION	Ronnies' Price Each
1	37237-SA5-003	BULB, WEDGE BASE (14V3.4W)	$2.22
2	34908-MB9-871	BULB (12V 1.7W) (158)	$1.95
3	37100-MZ2-671	METER ASSY., COMBINATION (MPH/KMH)	$802.82
4	37102-MS2-601	LENS ASSY., METER	$37.45
5	37105-MT3-003	SOCKET COMP.	$38.38
6	37106-MZ2-003	SOCKET COMP., PILOT BOX	$40.73
7	37110-MZ2-003	BULB, HEADLIGHT (12V 45.45W)	$66.07
8	37111-MT3-003	CASE ASSY.	$59.80
9	37112-MT3-003	KNOB	$6.47
10	37130-MM5-008	SCREW, TAPPING (4X12)	$24.40
11	37200-MZ2-671	SPEEDOMETER ASSY.	$300.67
12	37211-MR7-008	BOSS, ELBOW	$42.73
13	37215-MB6-831	CLAMP	$1.88
14	37243-MM4-000	COLLAR, SPEEDOMETER SETTING	$3.18
15	37244-MA6-008	WASHER, PLAIN	$1.25
16	37244-MB2-008	RUBBER, METER SETTING	$3.65
17	37250-MZ2-671	TACHOMETER ASSY.	$365.24
18	37264-MR7-008	SEAL	$2.02
19	37300-MS2-601	METER ASSY., FUEL	$52.56
20	37305-KE5-008	SCREW-WASHER (3X22)	$2.09
21	37400-MS2-601	METER ASSY., TEMPERATURE	$52.56
22	37600-MZ2-671	BOX ASSY., PILOT	$39.29
23	37601-MY3-781	LENS, SMOKE	$15.42
24	37602-MS2-601	PANEL	$5.29
25	44830-GC8-000	CABLE COMP., SPEEDOMETER	$9.60
26	44831-GC8-000	CABLE (INNER)	$3.71
27	55101-GZ9-000	RUBBER, OIL TANK	$1.22
28	64570-MZ2-000ZA	PNL, METER (NH154R) (TASMAN GRAY)	$86.40
29	86150-MN8-300	EMBLEM, WING MARK	$8.65
30	90032-ML7-671	SCREW, TAPPING (4X3)	$2.35
31	90035-166-008	SCREW-WASHER, SPECIAL	$1.18

32	90108-GN2-008	SCREW-WASHER (3X12)	$1.31
33	90109-SB6-000	SCREW, TRUSS (5X16)	$2.55
34	90133-SD4-000	SCREW, TRUSS (METER VISOR)	$0.88
35	93700-05020-0G	SCREW, OVAL (5X20)	$0.33
36	93901-24410	SCREW, TAPPING (4X16)	$0.35
37	93903-24320	SCREW, TAPPING (4X12)	$0.35
38	93903-24520	SCREW, TAPPING (4X20)	$0.35
39	94001-06200-0S	NUT, HEX. (6MM)	$0.48
40	96001-06025-00	BOLT, FLANGE (6X25)	$0.82

Ref.	Part No.	STAND DESCRIPTION	Ronnies' Price Each
1	35700-MS2-305	SWITCH SET, SIDE STAND	$46.56
2	50150-MZ2-000	BRACKET, SIDE STAND	$85.47
3	50500-MS2-670ZA	STAND COMP., MAIN (NH1) (BLACK)	$94.13
4	50503-MS2-000	COLLAR, MAIN STAND	$10.05
5	50523-MM4-000	TUBE (19X23)	$5.46
6	50523-425-000	PLATE, MAIN STAND SPRING	$4.13
7	50525-MM4-000	SPRING ASSY., MAIN STAND	$10.75
8	50530-MS2-000ZA	BAR, SIDE STAND (NH1) (BLACK)	$40.80
9	50542-MZ2-000	SPRING ASSY., SIDE STAND	$8.76
10	50543-MV4-000	TUBE, SIDE STAND SPRING	$5.16
11	64381-MS2-000	GUIDE, DRAIN TUBE	$7.36
12	64391-MS2-000	STAY, PIVOT COVER (LOWER)	$9.49
13	90108-MK6-670	BOLT, SIDE STAND PIVOT	$4.85
14	90147-MK6-671	BOLT, SPECIAL (6X16)	$3.07
15	90168-SP0-000	BOLT, FLANGE (10X25)	$2.90
16	90203-MF9-710	NUT, SIDE STAND PIVOT	$2.20
17	95801-10075-08	BOLT, FLANGE (10X75)	$1.38

Ref.	Part No.	STARTING CLUTCH DESCRIPTION	Ronnies' Price Each
1	11102-MS2-610	BASE, ALTERNATOR	$58.58
2	28110-MM5-010	GEAR COMP., STARTING DRIVEN (46T)	$93.69
3	28115-MM5-020	COLLAR, ALTERNATOR SHAFT	$13.38
4	28125-MS2-613	OUTER COMP., STARTING CLUTCH	$150.11
5	28130-MS2-610	DAMPER ASSY., ALTERNATOR	$109.20
6	28151-MM0-003	DISK, SPRING	$6.82
7	28161-MM5-013	CHAIN, ALTERNATOR DRIVE (70L)	$78.15
8	28170-MM5-640	TENSIONER, ALTERNATOR	$93.91
9	28191-MM5-000	GUIDE, ALTERNATOR CHAIN	$28.38
10	30291-MZ1-000	ROTOR, PULSE	$9.89
11	30300-MW7-003	ALTERNATOR ASSY., IGNITION PULSE	$42.31
12	90234-MM4-000	NUT, FLANGE (12MM)	$3.07
13	90404-KK0-000	WASHER (20X37X2)	$3.15
14	91006-HA2-008	BEARING, RADIAL BALL (6203)	$15.60
15	91106-ME5-008	BEARING, NEEDLE (25X30X20)	$13.57
16	91303-PA9-004	O-RING (100X2.2)	$4.63
17	94520-42000	CIRCLIP (42MM)	$1.10
18	95701-06014-00	BOLT, FLANGE (6X14)	$0.55
19	95701-06016-00	BEARING, NEEDLE (40X47X31)	$0.57
20	95701-10020-08	BOLT, FLANGE (10X20)	$0.80

Ref.	Part No.	STARTING MOTOR DESCRIPTION	Ronnies' Price Each
1	28101-MM5-000	GEAR, STARTER REDUCTION (17T/68T)	$69.95
2	28102-ME9-000	PIN (10X44)	$6.18
3	28117-MM5-000	PLATE, IDLE SHAFT SETTING	$6.38
4	31200-MZ1-008	MOTOR ASSY., STARTER (MITSUBA)	$424.36
5	31201-MR6-008	TERMINAL SET, BRUSH	$13.22
7	31205-MR1-008	BOLT, SETTING	$3.07
8	31206-MR6-008	HOLDER SET, BRUSH	$13.91
9	31207-KS5-901	RING	$2.58
10	90071-MB0-000	NUT-WASHER (6MM)	$1.53
11	91312-MG7-003	O-RING (24.4X3.1) (ARAI)	$4.28
12	91312-107-000	O-RING (7X1.7)	$1.45
13	91320-MB0-000	O-RING	$1.82
14	95701-06014-00	BOLT, FLANGE (6X14)	$0.55
15	95701-06025-00	BOLT, FLANGE (6X25)	$0.67
16	95701-06035-00	BOLT, FLANGE (6X35)	$0.62

Ref.	Part No.	STEERING STEM DESCRIPTION	Ronnies' Price Each
1	45157-MZ2-000	STAY, FR. BRAKE HOSE CLAMP	$21.80
2	53200-MZ2-000	STEM COMP., STEERING	$234.00
3	53213-MB4-771	DUST SEAL, STEERING HEAD	$7.27
4	53214-371-010	DUST SEAL, STEERING HEAD	$7.53
5	53220-422-000	THREAD COMP., STEERING HEAD (UPPER)	$19.60
6	90302-425-830	THREAD, STEERING HEAD TOP (B)	$13.02
7	90506-425-830	WASHER, LOCK	$4.49
8	91015-KT8-005	BEARING, HEAD PIPE (UPPER)	$29.15
9	91016-KT8-005	BEARING, HEAD PIPE (LOWER)	$36.91
10	95701-06012-07	BOLT, FLANGE (6X12)	$0.50
11	96700-10025-17	BOLT, SOCKET (10X25)	$1.24

Ref.	Part No.	STEP DESCRIPTION	Ronnies' Price Each
1	17503-397-630	COLLAR, FUEL TANK	$1.29
2	50600-MS2-670	HOLDER, R. STEP	$80.65
3	50612-MM5-000	ARM, R. STEP	$40.09
4	50617-MM5-000	SPRING, R. STEP RETURN	$2.96
5	50619-MM5-000	PLATE, STEP SETTING	$4.89
6	50622-MM5-000	RUBBER, STEP HOLDER	$2.51
7	50639-ML0-010	PIN, STEP BAR	$3.22
8	50642-MM5-000	ARM, L. STEP	$40.09
9	50644-MM5-000	SPRING, L. STEP RETURN	$2.96
10	50661-MJ4-670	RUBBER, STEP	$6.44
11	50700-MS2-670	HOLDER, L. STEP	$61.60
12	50710-KE8-000	RUBBER, PILLION STEP	$8.53
13	50711-KE8-000	BAR, R. PILLION STEP	$18.89
14	50712-KE8-000	BAR, L. PILLION STEP	$18.89
15	50715-KE8-000	PLATE, PILLION STEP SIDE	$2.96
16	90115-MJ4-670	BOLT, MAIN STEP RUBBER SETTING	$1.78
17	90115-MM5-000	BOLT, SPECIAL (8X10)	$6.27
18	92501-08025-0A	BOLT, CAP (8X25)	$1.80
19	94101-06800	WASHER, PLAIN (6MM)	$0.18
20	94101-08000	WASHER, PLAIN (8MM)	$0.35
21	94201-16120	PIN, COTTER (1.6X12)	$0.32
22	94201-16250	PIN, COTTER (1.6X25)	$0.40
23	95015-81000	PIN A, PILLION STEP	$1.44

Ref.	Part No.	STRIPE DESCRIPTION	Ronnies' Price Each
1	17550-MZ2-910ZA	STRIPE, R. FUEL TANK (TYPE19) (NH1) BLACK)	$88.22
2	17551-MZ2-910ZA	STRIPE, L F UEL TANK (TYPE19) (NH1) BLACK)	$78.98
3	17553-MZ2-910ZA	MARK, R. FUEL TANK (TYPE19) (NH1) BLACK)	$21.84
4	17554-MZ2-910ZA	MARK, L. FUEL TANK (TYPE19) (NH1) BLACK)	$21.84
5	64212-MZ2-910ZA	MARK, COWL (UPPER) (TYPE19) (NH1) BLACK)	$27.38
6	64216-MZ2-910ZA	STRIPE, R. COWL (UPPER) (TYPE19) (NH1) BLACK)	$20.71
7	64217-MZ2-910ZA	STRIPE, L. COWL (UPPER) (TYPE19) (NH1) BLACK)	$20.71
8	64232-MZ2-910ZA	MARK, FR. COWL COVER (TYPE19) (NH1) BLACK)	$11.38
9	64302-MZ2-910ZA	STRIPE B, R. SIDE COWL (NH206M) (MEDIUM GRAY)	$16.55
10	64326-MZ2-910ZA	STRIPE B, R. MIDDLW COWL (TYPE19) (NH1) BLACK)	$26.38
11	64329-MZ2-910ZA	STRIPE A, R. MIDDLE COWL (TYPE19) (NH1) BLACK)	$33.56
12	64352-MZ2-910ZA	STRIPE B, L. SIDE COWL (NH206M) (MEDIUM GRAY)	$16.55
13	64366-MZ2-910ZA	STRIPE B, L. MIDDLE COWL (TYPE19) (NH1) BLACK)	$26.38
14	64369-MZ2-910ZA	STRIPE A, L. MIDDLE COWL (TYPE19) (NH1) BLACK)	$33.56
15	77215-MZ2-910ZA	MARK A, R. RR. SEAT COWL(TYPE19) (NH1) BLACK)	$20.96
16	77216-MZ2-910ZA	MARK B, RR. (TYPE15) (NH1) BLACK)	$20.96
17	77217-MZ2-910ZA	MARK B, RR. (TYPE19) (NH1) BLACK)	$10.64

Ref.	Part No.	SWINGARM DESCRIPTION	Ronnies' Price Each
1	06405-MZ2-406	CHAIN SET DRIVE (102-120L) (DAIDO)	$256.31
2	40510-MS2-000	CASE, CHAIN	$65.96
3	40545-MZ2-305	MASTER LINK (DAIDO)	$8.22
4	52101-MM5-000	BOLT, RR. SWINGARM PIVOT	$45.24
5	52102-MM5-000	COLLAR, PIVOT DISTANCE	$19.09
6	52105-MM2-670	COLLAR B, SWINGARM PIVOT	$6.40
7	52106-ML4-000	COLLAR B, PIVOT	$12.96
8	52120-MJ0-010	COLLAR COMP., CHAIN TENSIONER	$33.44
9	52121-MJ0-000	PLATE, CHAIN TENSIONER	$12.58
10	52170-MM5-000	SLIDER, CHAIN	$28.78
11	52200-MZ2-305ZA	SWINGARM SET (NH146M) (ACCURATE SILVER METALLIC)	$454.11
12	90111-187-000	BOLT, FLANGE (6MM)	$3.62
13	90305-GE8-003	NUT, U (14MM)	$3.69
14	91071-MJ0-004	BEARING, NEEDLE (TOYO)	$22.07
15	91205-965-003	OIL SEAL (22X31X5) (ARAI)	$4.71
16	91213-MB2-003	DUST SEAL (22X35X7) (ARAI)	$4.64
17	94001-08000-0S	NUT, HEX. (8MM)	$0.47
18	94030-08000	NUT, HEX. (8MM)	$0.43
19	94520-35000	CIRCLIP (35MM) (INNER)	$0.83
20	96100-62020-10	BEARING, RADIAL BALL (6202)	$7.35

Ref.	Part No.	TAILLIGHT DESCRIPTION	Ronnies' Price Each
1	33705-MW0-601	SOCKET COMP., TAILLIGHT	$25.25
2	33710-KM1-003	GASKET, SEAL	$1.89
3	33710-MZ2-671	TAILLIGHT UNIT	$193.96
4	33720-ML7-670	LIGHT ASSY., LICENSE (12V 8W)	$75.05
5	33721-MB2-003	BASE COMP.	$32.75
6	33722-MB1-013	LENS, LICENSE	$11.09
7	33725-ML7-670	WIRE COMP., LICENSE	$8.05
8	33727-ME4-671	COVER COMP., LICENSE LIGHT	$16.11
9	33729-MB1-003	GASKET, LENS	$3.69
10	34909-505-003	BULB, LICENSE LIGHT (12V8W 67)	$0.67
11	34906-MG9-771	BULB, TAILLIGHT (12V27/7W 2057HD)	$0.94
12	61306-167-000	NUT, SPEEDOMETER BODY SETTING	$2.84
13	80102-323-000	GROMMET, CABLE	$0.80
14	84701-ML7-670	BRACKET, NUMBER PLATE	$21.16
15	84702-MS2-670	SPACER, NUMBER PLATE BRACKET	$16.78
16	84703-MS2-670	COLLAR, NUMBER PLATE BRACKET SETTING	$1.85
17	90302-MB2-000	NUT, SPECIAL (4MM)	$2.78
18	90502-VA4-640	WASHER (6X20)	$2.32
19	93891-05012-07	SCREW-WASHER (5X12)	$0.47
20	94050-06000	NUT, FLANGE (6MM)	$0.55
21	94103-06000	WASHER, PLAIN (6MM)	$0.33
22	95701-06016-00	BOLT, FLANGE (6X16)	$0.57
23	94103-05000	BOLT, FLANGE (6X35)	$0.33

Ref.	Part No.	TOOLS DESCRIPTION	Ronnies' Price Each
1	89010-MZ2-000	TOOL SET	$57.71
2	89101-ME5-670	BAG, TOOL	$4.55
3	89211-KJ2-000	WRENCH, BOX (8MM)	$13.89
4	89216-KE5-000	WRENCH, PLUG	$10.35
5	89221-371-000	WRENCH, HEX. (6MM)	$2.16
6	89221-429-000	WRENCH, HEX. (5MM)	$3.35
7	89227-461-000	WRENCH, EYE (10X12)	$19.98
8	99001-08000	WRENCH (8MM) (OPEN END)	$1.83
9	99001-10120	WRENCH (10X12) (OPEN END)	$1.47
10	99001-14170	WRENCH (14X17)	$2.52
11	99002-13500	PLIERS (135)	$3.62
12	99003-10000	DRIVER 1, MINUS SCREW (NO.2)	$1.48
13	99003-30000	DRIVER 3, MINUS SCREW (NO.2)	$0.83
14	99003-50000	GRIP	$1.53
15	99006-12000	HANDLE, EYE WRENCH (120MM)	$2.49
16	99006-22000	WRENCH, EYE (22MM)	$3.31
17	99006-27000	WRENCH, EYE (27MM)	$4.40

Ref.	Part No.	TRANSMISSION DESCRIPTION	Ronnies' Price Each
1	23211-MS2-610	MAINSHAFT (12T)	$131.95
2	23220-MS2-610	COUNTERSHAFT COMP.	$208.31
3	23421-MM5-000	GEAR, COUNTERSHAFT LOW (33T)	$95.07
4	23431-MZ2-610	GEAR, MAINSHAFT SECOND (15T)	$32.47
5	23441-MZ2-610	GEAR, COUNTERSHAFT SECOND (31T)	$84.98
6	23442-MS2-610	COLLAR (30X11.2)	$13.38
7	23451-MZ2-610	GEAR, MAINSHAFT THIRD AND FOURTH (17T/19T)	$96.02
8	23461-MZ2-610	GEAR, COUNTERSHAFT THIRD (28T)	$88.71
9	23463-MM5-000	COLLAR, SPLINE (30X12.7)	$12.96
10	23481-MS2-610	GEAR, COUNTERSHAFT FOURTH (26T)	$93.84
11	23491-MS2-610	GEAR, MAINSHAFT FIFTH (23T)	$80.00
12	23495-MM5-000	COLLAR (28X13)	$12.96
13	23501-MS2-610	GEAR, COUNTERSHAFT FIFTH (27T)	$105.80
14	23511-MS2-611	GEAR, MAINSHAFT SIXTH (22T)	$82.60
15	23512-MM5-000	COLLAR, SPLINE (28X15.9)	$14.22
16	23521-MS2-611	GEAR, COUNTERSHAFT SIXTH (23T)	$96.27
17	23801-438-000	SPROCKET, DRIVE (17T)	$25.67
18	23820-MM5-000	GUIDE, RING	$13.69
19	23821-MB6-000	RING, DAMPER	$19.47
20	24261-283-000	PIN, GEARSHIFT FORK GUIDE	$2.60
21	90020-438-000	BOLT, FLANGE (6X20)	$2.05
22	90037-422-003	BOLT, SPECIAL (10MM)	$4.56
23	90451-MM5-000	WASHER, SPLINE (28X34X1.5)	$3.07
24	90452-MM5-000	WASHER, THRUST SPLINE (30MM)	$3.07
25	90455-ML7-000	WASHER B, THRUST (22MM)	$3.07
26	90458-729-920	WASHER, THRUST (28MM)	$3.07
27	90459-438-000	WASHER (10.2MM)	$3.69
28	90461-MM5-000	WASHER, THRUST (30MM)	$4.85
29	90462-MW7-000	WASHER, LOCK (30MM)	$7.31
30	90464-MM5-000	WASHER, SPLINE (28X1.6)	$4.85
31	90465-MM5-010	LOCK, WASHER (28MM)	$3.65

32	90602-MM5-000	CIRCLIP (28MM)	$2.27
33	95701-08025-00	CIRCLIP (30MM)	$0.83
34	90605-MM5-000	RING, SNAP (72MM)	$5.09
35	90606-MM5-000	RING, SNAP RING (62MM)	$5.09
36	90705-MM5-000	PIN, BEARING SETTING	$3.18
37	91001-MB6-680	BEARING, NEEDLE (22X26X13)	$18.42
38	91004-MM5-003	BEARING, RADIAL BALL (28X62X16)	$20.58
39	91022-MM5-003	BEARING, NEEDLE (22MM) (TOYO)	$30.24
40	91023-MM5-641	BEARING, NEEDLE (22MM)	$34.95

Ref.	Part No.	TURN SIGNAL DESCRIPTION	Ronnies' Price Each
1	33402-MG2-003	LENS, TURN SIGNAL	$6.64
2	33405-MT4-671	SOCKET COMP., R. FR. TURN SIGNAL	$13.07
3	33407-MM5-003	GASKET, LENS	$3.07
4	33410-MZ2-003	LENS COMP., R. TURN SIGNAL	$54.20
5	33455-MT4-671	SOCKET COMP., L. FR. TURN SIGNAL	$13.07
6	33460-MZ2-003	LENS COMP., L. TURN SIGNAL	$54.20
7	33600-MM5-671	TURN SIGNAL ASSY., R. RR.	$36.53
8	33604-MM5-671	BASE COMP., R. RR. TURN SIGNAL	$38.42
9	33650-MM5-671	TURN SIGNAL ASSY., L. RR.	$36.53
10	33654-MM5-671	BASE COMP., L. RR. TURN SIGNAL	$38.42
11	34905-268-671	BULB, TURN SIGNAL (12V 23W)	$2.20
12	34905-425-671	BULB, TURN SIGNAL (12V23.8W)	$3.65
15	80125-MM5-000	COLLAR, TURN SIGNAL SETTING	$2.78
16	80126-MM5-000	RUBBER, TURN SIGNAL MOUNTING	$2.78
17	80135-MM5-000	COLLAR A, TURN SIGNAL SETTING	$2.78
18	83501-MG7-000	GROMMET, SIDE COVER	$1.47
19	90157-MV9-600	SCREW, TAPPING (3X30)	$1.58
21	93891-05014-08	SCREW-WASHER (5X14)	$0.40
22	93894-05025-00	SCREW-WASHER (5X22)	$0.53

Ref.	Part No.	WATER PIPE DESCRIPTION	Ronnies' Price Each
1	19504-MS2-611	PIPE A, WATER	$81.73
2	19507-MS2-610	PIPE D, WATER	$21.93
3	19510-MM5-000	HOSE, WATER CONNECTING (A)	$17.36
4	19516-MB6-000	CLAMP, WATER HOSE	$8.16
5	90014-952-000	BOLT, FLANGE (6X14)	$1.72
6	91312-KE7-003	O-RING (19X3)	$1.47
7	91315-KE8-003	O-RING (24X3)	$2.00
8	95701-06014-00	BOLT, FLANGE (6X14)	$0.55

Ref.	Part No.	WATER PUMP DESCRIPTION	Ronnies' Price Each
2	11360-MZ2-610	HOLDER COMP., L. SIDE	$102.00
3	11365-MM5-000	PLATE, DRIVE CHAIN GUIDE	$6.35
4	11394-MW7-790	GASKET, L. SIDE	$9.01
5	11650-MZ2-610	COVER ASSY., L. RR. CRANKCASE	$120.58
6	19200-MZ2-315	PUMP ASSY., WATER	$168.38
7	19221-MZ2-305	COVER, WATER PUMP	$59.40
8	19226-MM5-003	GASKET, WATER PUMP COVER	$2.80
9	22860-MS2-870	CYLINDER ASSY., CLUTCH SLAVE	$80.51
10	22862-MW7-650	GASKET, SLAVE CYLINDER	$3.45
11	22863-MJ8-003	PISTON, SLAVE CYLINDER	$15.98
12	22864-MB0-003	SPRING, SLAVE CYLINDER	$3.65
13	22865-MJ8-003	CUP, PISTON	$6.91
14	22866-MF2-711	SCREW, BLEEDER	$3.18
15	32171-MS2-000	CLIP, SIDE STAND WIRE	$7.04
16	43353-461-771	CAP, BLEEDER SCREW	$3.15
17	44808-MR7-013	JOINT, SPEEDOMETER	$5.65
18	90004-GHB-710	BOLT, FLANGE (6X40)	$2.53
19	90013-883-000	BOLT, FLANGE (6X12)	$1.16
20	90121-MV9-670	BOLT, FLANGE (6X25)	$1.69
21	90463-ML7-000	WASHER, CEILING (6.5MM)	$1.78
22	91103-429-000	PIN, DOWEL (8X10)	$0.12
23	91204-KE8-003	OIL SEAL (13X22X5)	$2.58
24	91205-MM5-003	OIL SEAL (40X55X7) (ARAI)	$7.65
25	91208-MS2-611	OIL SEAL (8X16X6) (NOK)	$2.10
26	91209-MB0-003	OIL SEAL (8X18X5) (NISSIN)	$2.51
27	91302-MB0-013	O-RING (32.95X2.62)	$1.65
28	94301-08140	PIN A, DOWEL (8X14)	$0.87
29	95701-06028-00	BOLT, FLANGE (6X28)	$0.68
30	95701-06100-00	BOLT, FLANGE (6X100)	$1.20
31	95801-06035-00	BOLT, FLANGE (6X35)	$0.80
32	95801-06040-00	BOLT, FLANGE (6X40)	$0.63

33	95801-06085-00	BOLT, FLANGE (6X85)	$1.25
34	96001-06025-00	BOLT, FLANGE (6X25)	$0.82
35	96001-06040-00	BOLT, FLANGE (6X40)	$0.88
36	96001-06065-00	BOLT, FLANGE (6X65)	$1.24
37	96001-06075-00	BOLT, FLANGE (6X75)	$1.20

Ref.	Part No.	WHEEL - FRONT DESCRIPTION	Ronnies' Price Each
1	42704-MB0-000	WEIGHT, BALANCE (10G)	$8.16
1	42705-MB0-000	WEIGHT, BALANCE (20G)	$8.16
1	42706-MB0-000	WEIGHT, BALANCE (30G)	$8.16
2	42753-ML7-004	VALVE, RIM (DUNLOP)	$7.64
3	44301-MM5-000	AXLE, FR. WHEEL	$32.71
4	44311-MR1-000	COLLAR, FR. WHEEL SIDE	$5.65
5	44311-MS2-000	COLLAR, FR. WHEEL SIDE	$5.95
6	44620-MS2-000	COLLAR, FR. AXLE DISTANCE	$10.84
8	44650-MS2-305ZC	WHEEL SET, FR. (NH1) (BLACK)	$677.36
9	44711-MS2-872	TIRE ASSY., FR. (120.70VR17) (V270CY19) (BS)	$105.04
11	45128-ME2-003	SHIM, DAMPING	$2.29
12	45251-MS2-010	DISK, R. FR. BRAKE	$383.42
13	45351-MS8-020	DISK, FR. BRAKE	$374.51
14	90105-MV9-003	BOLT, DISK (8X24)	$3.82
15	90305-ML7-000	BOLT, FR. AXLE	$6.27
16	91054-MAM-003	BEARING, RADIAL BALL (6004)	$19.31
17	91257-MAY-003	DUST SEAL (28X42X8)	$5.47

Ref.	Part No.	WHEEL - REAR DESCRIPTION	Ronnies' Price Each
1	41200-MZ2-890	SPROCKET COMP., FINAL DRIVEN (42T)	$113.42
2	41241-MM5-000	DAMPER, RR. WHEEL	$8.27
3	42301-MM5-000	AXLE, RR. WHEEL	$54.56
4	42311-MG5-670	COLLAR, RR. WHEEL SIDE	$8.75
5	42313-MS2-670	COLLAR, RR. BRAKE SIDE	$15.75
6	42606-MS2-000	SLEEVE, RR. AXLE	$12.58
7	42610-MS2-000	FLANGE COMP., FINAL DRIVEN	$208.75
9	42620-MZ1-000	COLLAR, RR. AXLE DISTANCE	$13.82
11	42650-MZ2-305ZB	WHEEL SET, RR. (NH1) (BLACK)	$798.49
12	42704-MB0-000	WEIGHT, BALANCE (10G)	$8.16
12	42705-MB0-000	WEIGHT, BALANCE (20G)	$8.16
12	42706-MB0-000	WEIGHT, BALANCE (30G)	$8.16
13	42711-MS2-872	TIRE ASSY., RR. (170.60VR17) (V270CY16) (DUNLOP)	$135.77
15	42753-ML7-003	VALVE, RIM (BS)	$7.64
16	43251-MZ2-000	DISK, RR. BRAKE	$400.31
17	90105-MV9-003	BOLT, FLANGE (8X35)	$3.82
18	90305-KA4-003	NUT, AXLE (18MM)	$4.27
19	90306-KF0-003	NUT, FLANGE (12MM)	$3.15
20	90559-MJ0-630	WASHER, RR. AXLE	$8.00
21	90753-MG5-670	OIL SEAL (34X62.2X7)	$7.27
22	91051-MM5-003	BEARING, RADIAL BALL (6305UU)	$33.22
23	91053-MM5-004	BEARING, RADIAL BALL (6304UU)	$19.24
24	91253-442-003	DUST SEAL (30X52X7)	$8.38
25	91302-MS2-003	O-RING (69X2)	$2.42
26	92918-12028-0E	BOLT, STUD (2.12X28)	$1.95

Ref.	Part No.	WIRE HARNESS DESCRIPTION	Ronnies' Price Each
1	19056-MZ2-000	STAY, HORN	$5.95
2	30505-MS2-000	STAY, IGNITION COIL	$39.18
3	30510-KT7-023	COIL COMP., IGNITION	$85.38
4	30520-ML7-000	SPACER, IGNITION COIL	$2.25
5	30751-MM5-020	CAP ASSY. 1, IGNITION	$28.27
6	30752-MM5-020	CAP ASSY. 2, IGNITION	$28.27
7	30753-MM5-020	CAP ASSY. 3, IGNITION	$28.27
8	30754-MM5-020	CAP ASSY. 4, IGNITION	$29.35
9	31600-MS2-601	RECTIFIER ASSY., REGULATE	$191.38
10	31700-196-000	RECTIFIER COMP.	$20.31
11	32100-MZ2-670	WIRE HARNESS	$432.98
12	32105-MS2-000	SUB-HARNESS, IGNITION	$16.47
13	36037-657-000	GROMMET A, TUBE	$3.22
14	38120-MS2-004	HORN COMP. LOW	$42.05
15	38215-MZ2-670	LABEL, FUSE BOX	$3.55
16	38301-KK9-952	RELAY COMP., TURN SIGNAL (MITSUBA)	$36.89
17	38306-GE7-000	SUSPENSION, TURN SIGNAL RELAY	$2.93
18	38501-GAM-007	RELAY COMP., STARTER	$27.75
19	38506-MY2-691	SUSPENSION, STARTER RELAY	$3.45
20	84706-415-000	COLLAR, NUMBER PLATE BRACKET	$1.75
21	90690-GHB-641	CLIP, CABLE (10MM)	$1.60
22	90690-GHB-651	CLIP, CABLE (15MM)	$1.60
23	92101-06016-0A	BOLT, HEX. (6X16)	$0.50
24	98200-33000	BOLT, HEX. (6X20)	$0.56
25	95701-06012-00	BOLT, FLANGE (6X12)	$0.55
26	96001-06016-00	BOLT, FLANGE (6X16)	$0.62
27	98200-31000	FUSE, BLADE (10A)	$0.56
28	98200-32000	FUSE, BLADE (20A)	$0.56

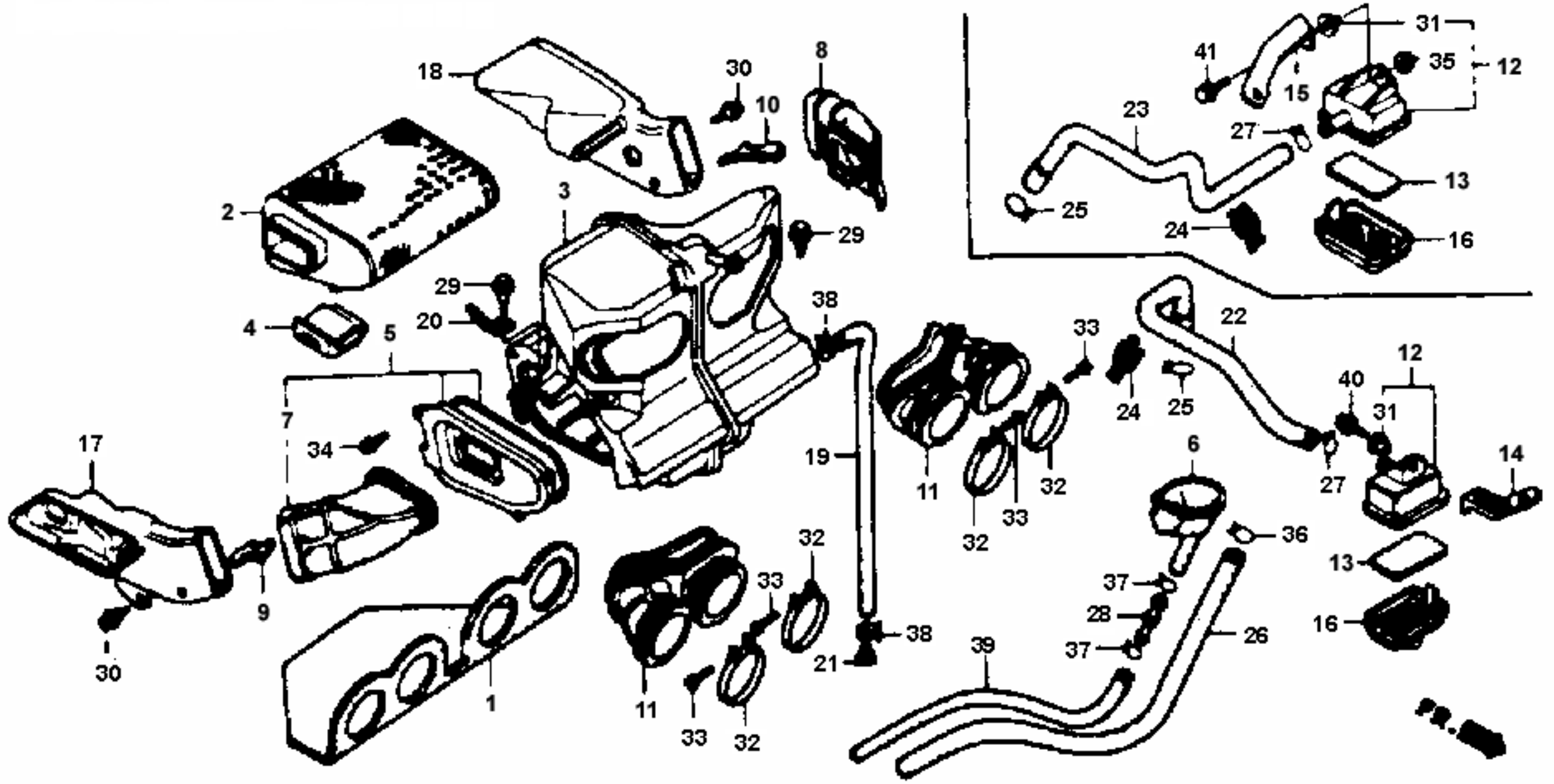
18
30
10
8
2
3
29
29
20
4
5
7
34
17
9
30
1
38
19
21
38
11
33
32
33
32
11
33
32
33
32
22
24
25
12
40
31
27
6
14
36
13
37
28
37
26
16
39
41
31
35
12
15
23
27
13
25
24
16

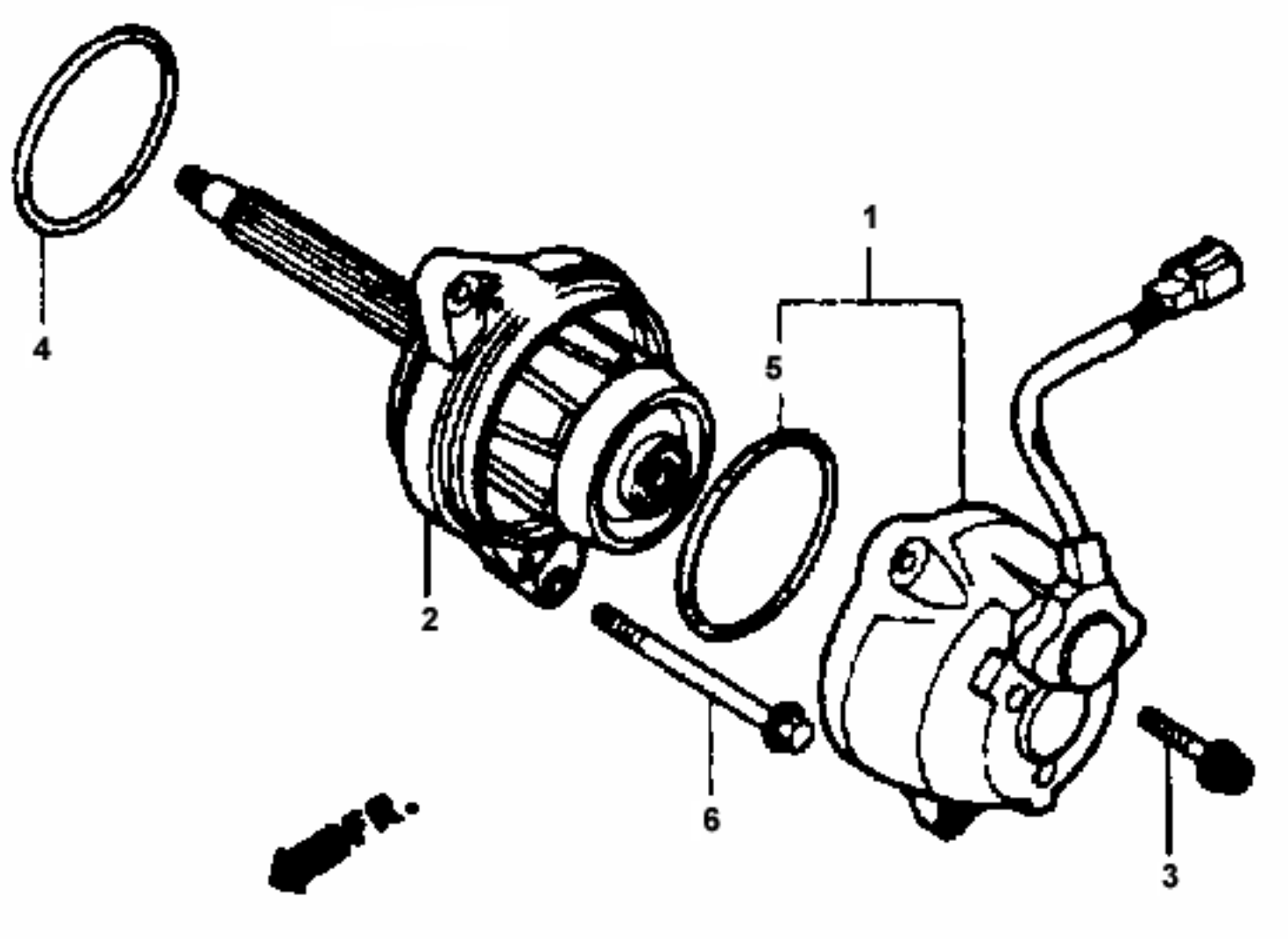
1
2
3
4
5
6

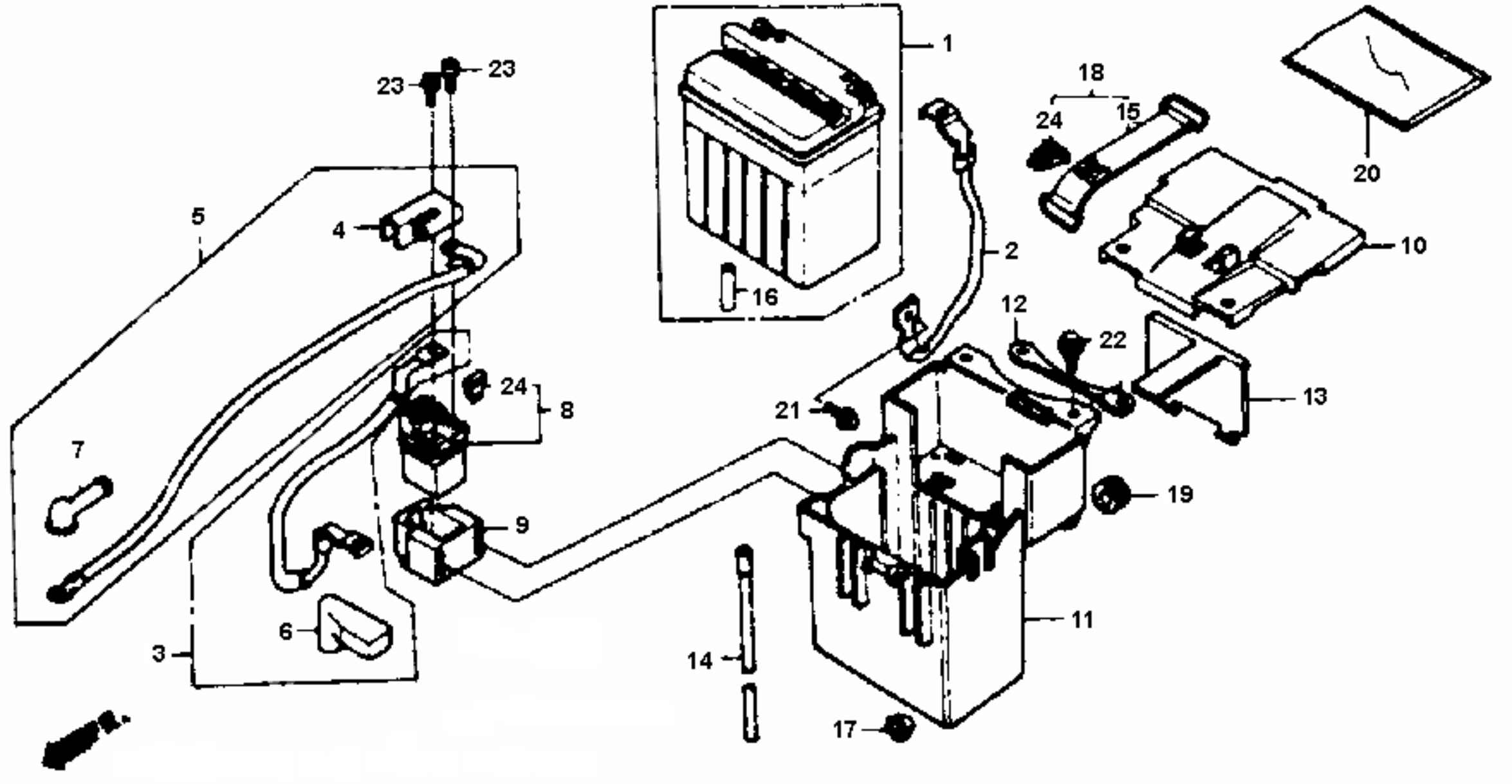
1
2
3
4
5
6
7
8
9
10
11
12
13
14
15
16
17
18
19
20
21
22
23
23
24
24

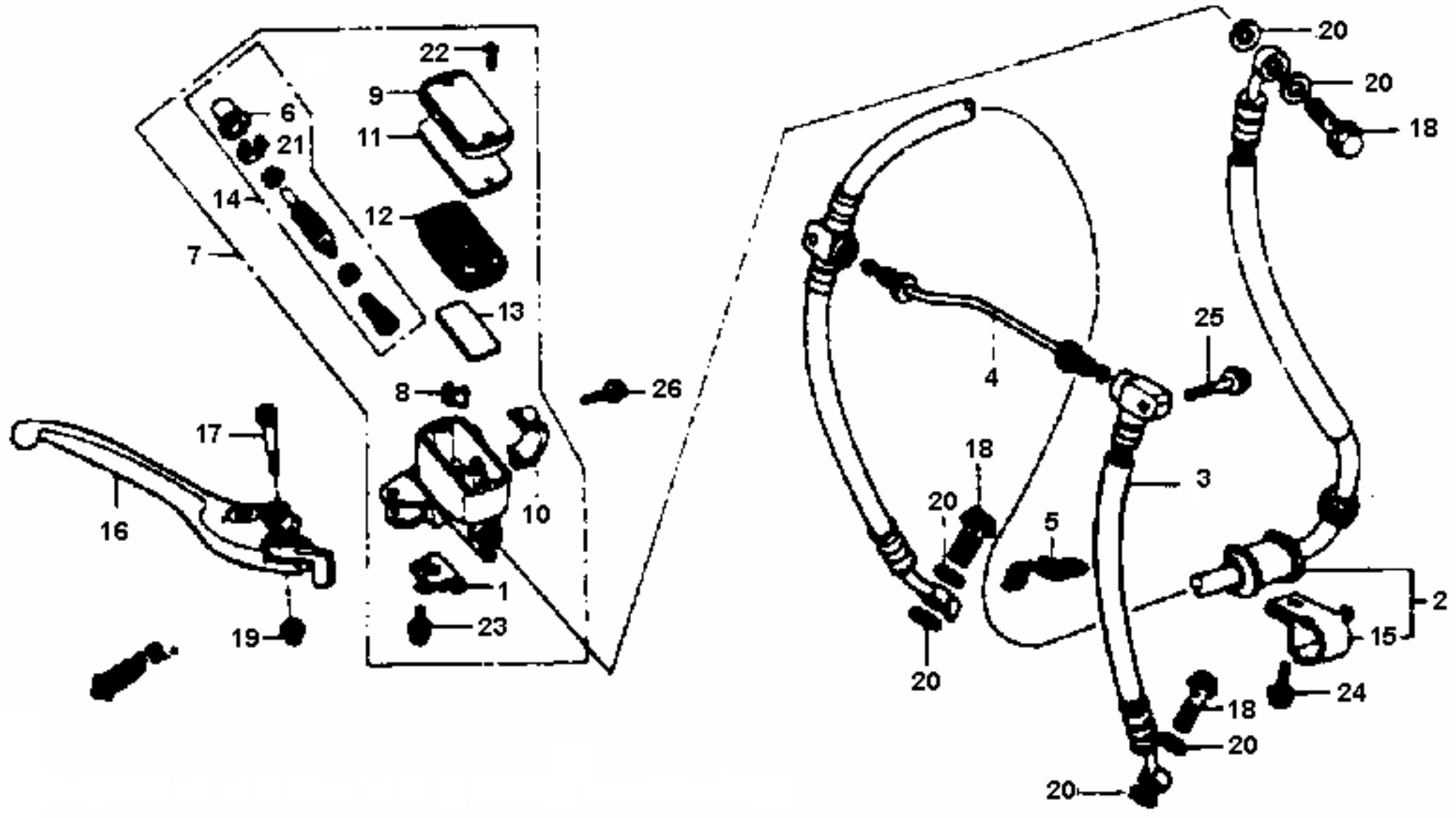
22
9
6
21
11
14
12
7
13
8
26
17
16
10
1
23
19
20
20
18
25
4
18
3
20
5
2
15
20
24
18
20
20

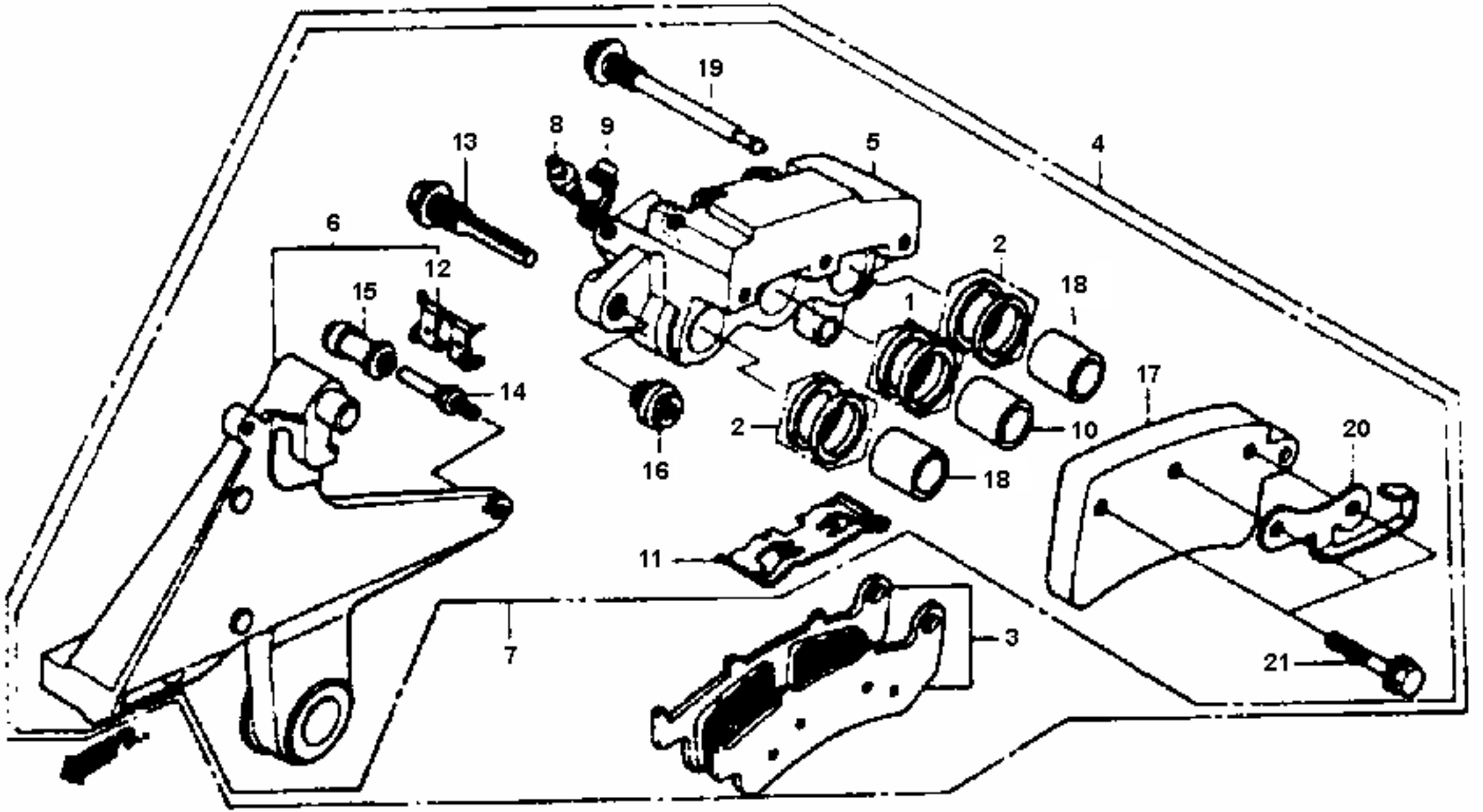
19
8
9
13
5
4
6
12
2
18
15
1
17
14
2
10
20
16
18
11
7
3
21

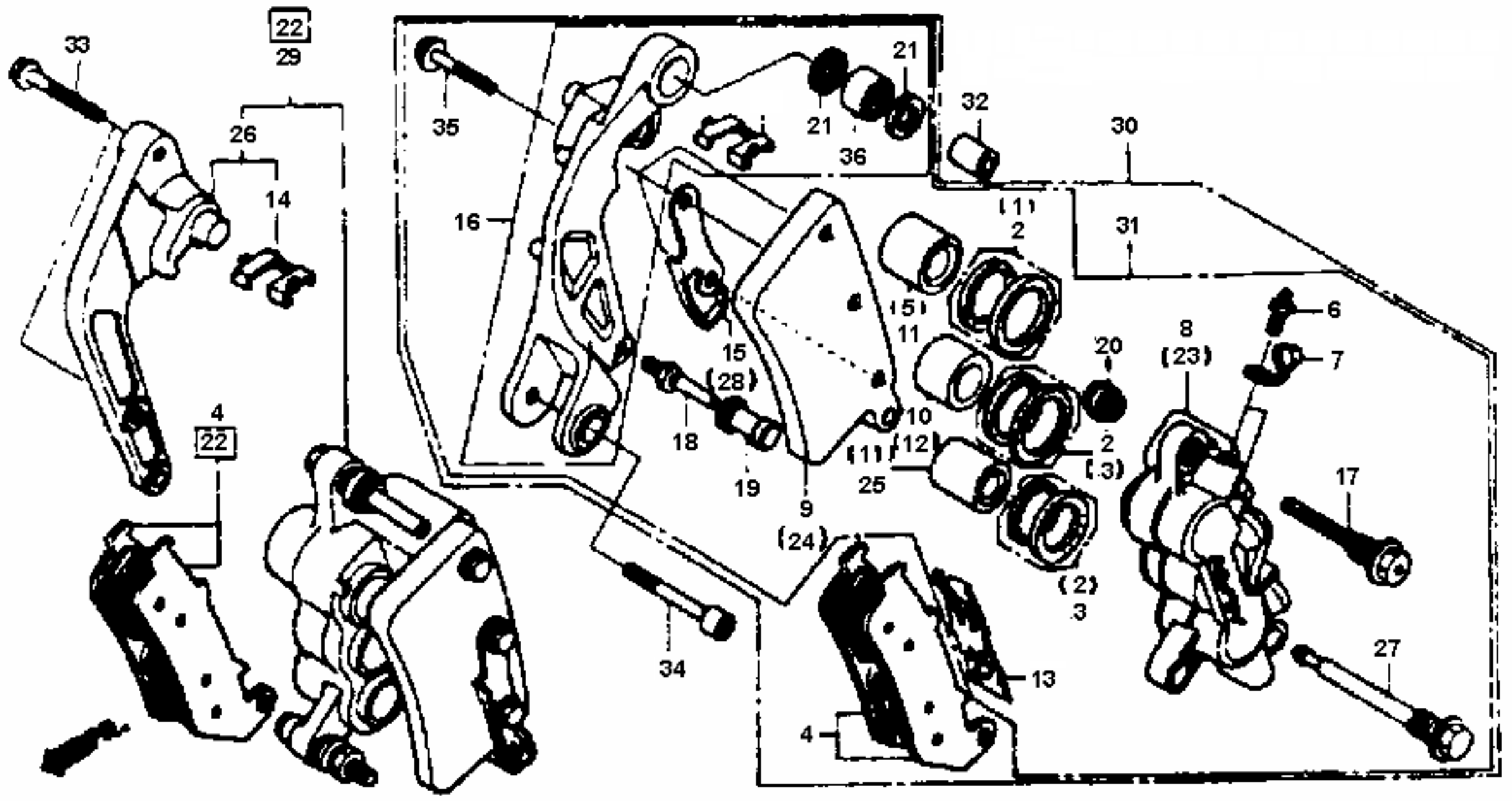
33
22
29
26
14
35
16
21
21
36
32
30
(1)
2
31
(5)
11
15
(28)
18
19
10
(12)
(1)
25
9
(24)
20
2
(3)
8
(23)
6
7
17
4
22
34
(2)
3
13
4
27

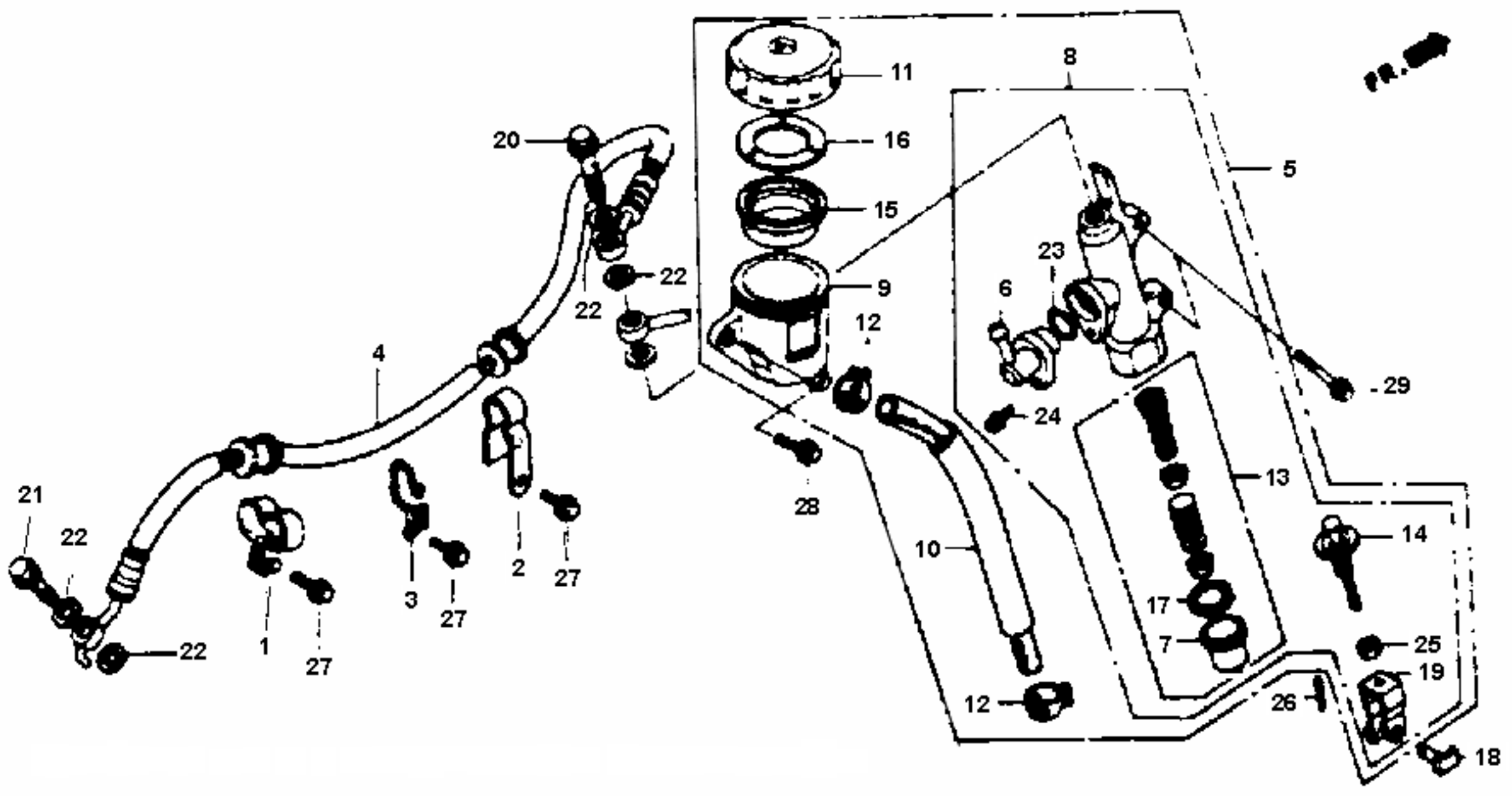
11
8
16
5
20
15
23
22
9
6
22
12
4
29
24
13
21
28
14
22
10
2
27
3
27
17
1
27
7
25
22
19
12
26
18

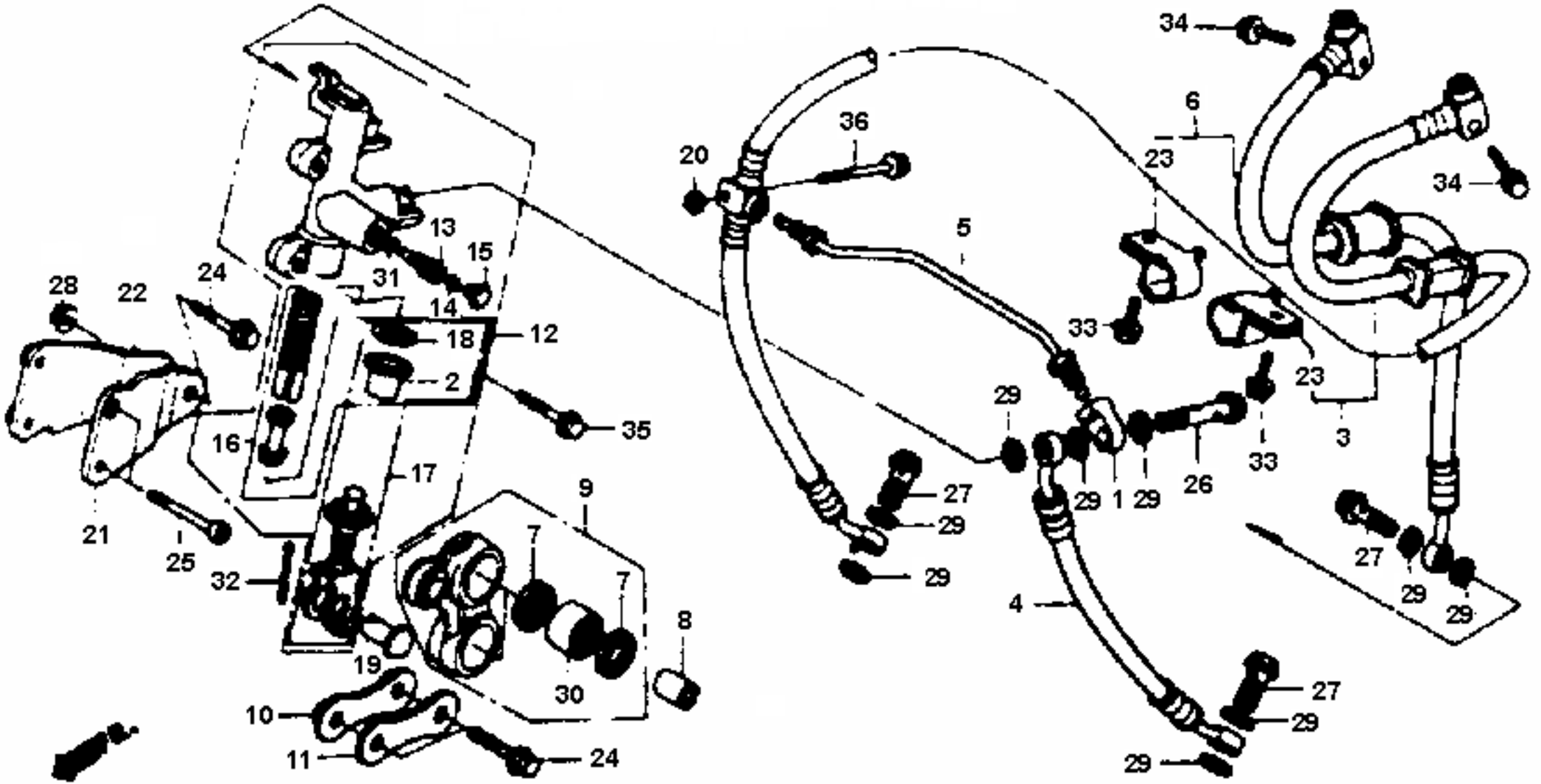
34
6
36
20
23
34
5
13
15
28
22
24
31
14
33
18
12
23
2
29
35
3
16
33
26
29
1
29
17
9
27
29
21
7
27
25
29
29
32
7
29
4
8
19
30
27
29
10
29
11
24

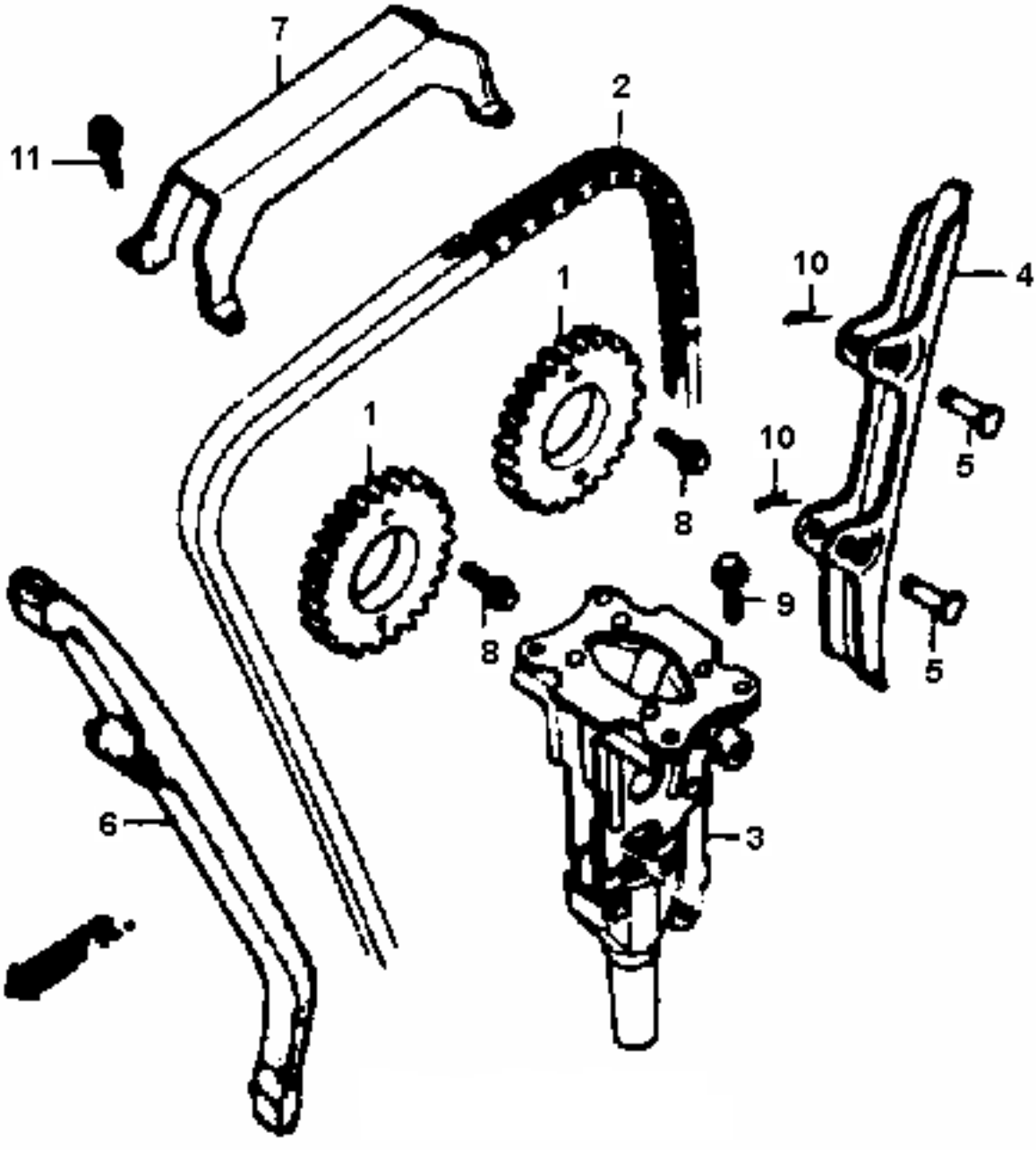
7
2
11
10
4
1
1
10
5
8
9
8
5
6
3

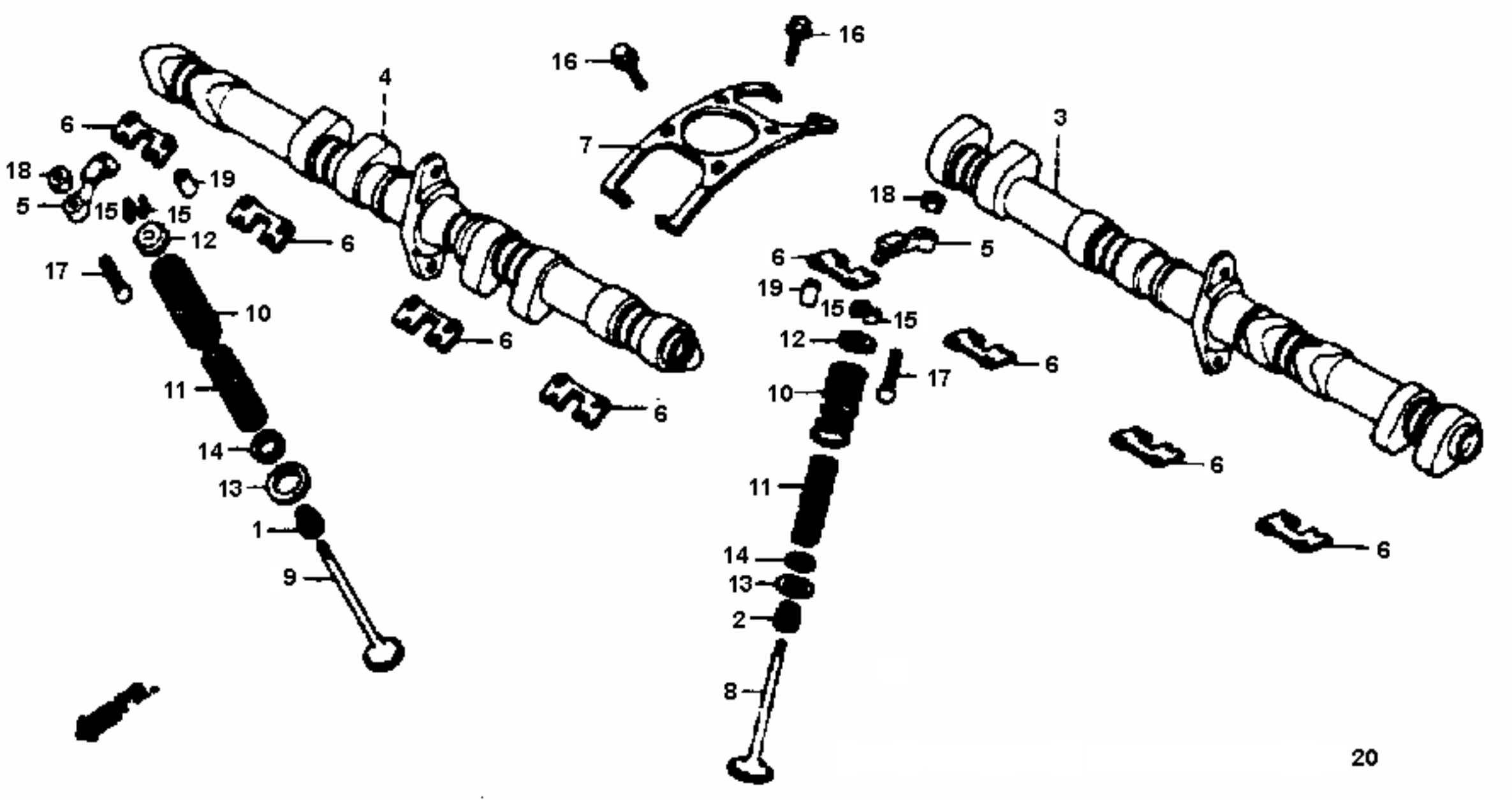
16
16
4
6
18
19
5
15
15
12
6
17
10
6
11
6
14
13
1
9
7
3
18
5
6
19
15
15
12
6
17
10
6
11
6
14
13
2
8
20

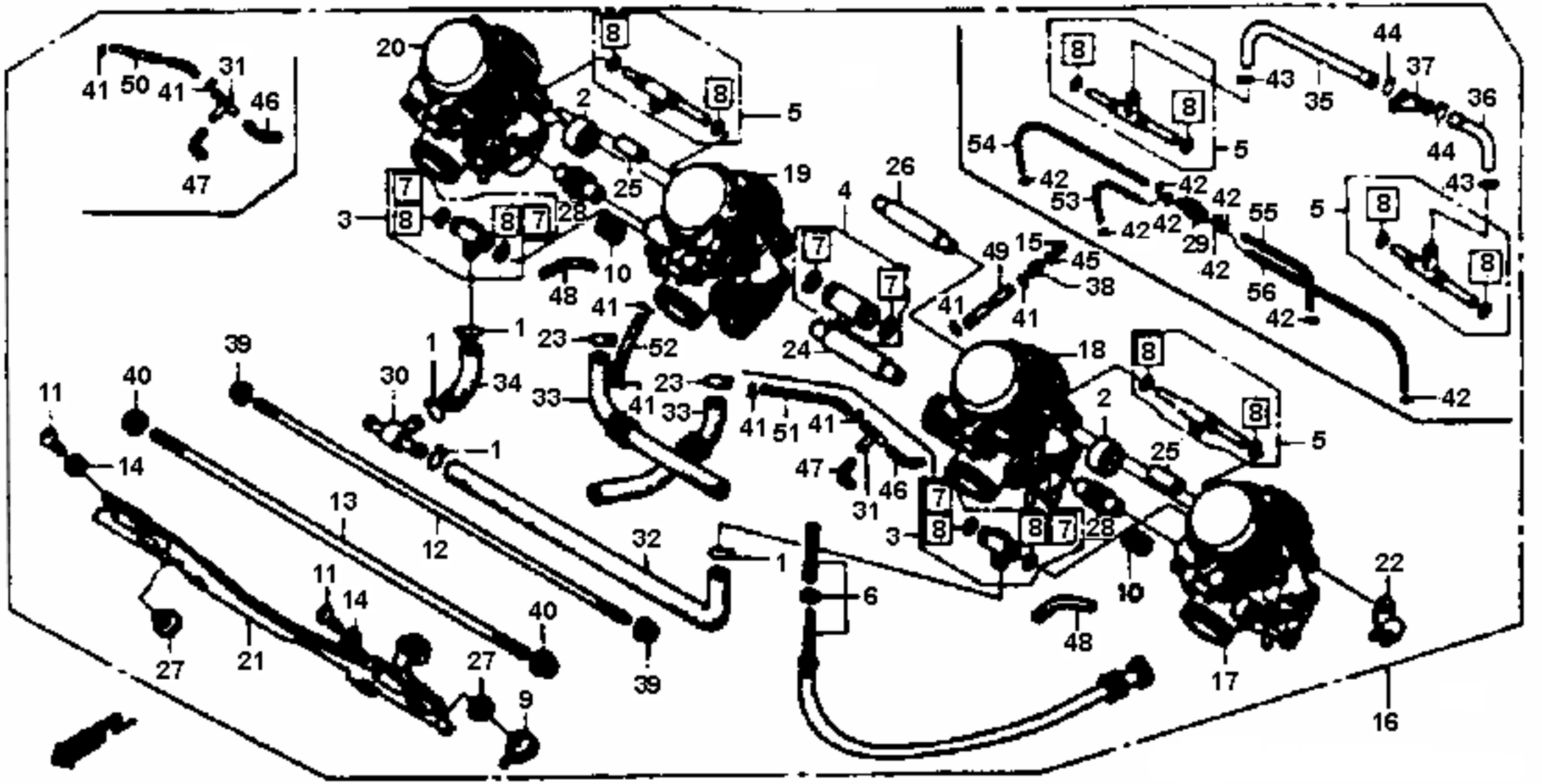
41
50
41
31
46
47
20
8
8
2
5
25
19
7
3
8
8
7
28
10
48
41
1
23
52
1
34
39
30
33
23
41
33
41
51
41
47
31
46
4
7
7
26
49
15
45
38
41
41
24
18
8
2
8
5
25
7
3
8
8
7
28
10
48
17
22
16
32
1
6
39
9
27
27
21
11
14
40
11
14
40
13
12
1
14
54
42
53
42
42
42
42
29
42
55
56
42
42
5
8
8
43
44
37
36
44
43
35
8
8
5

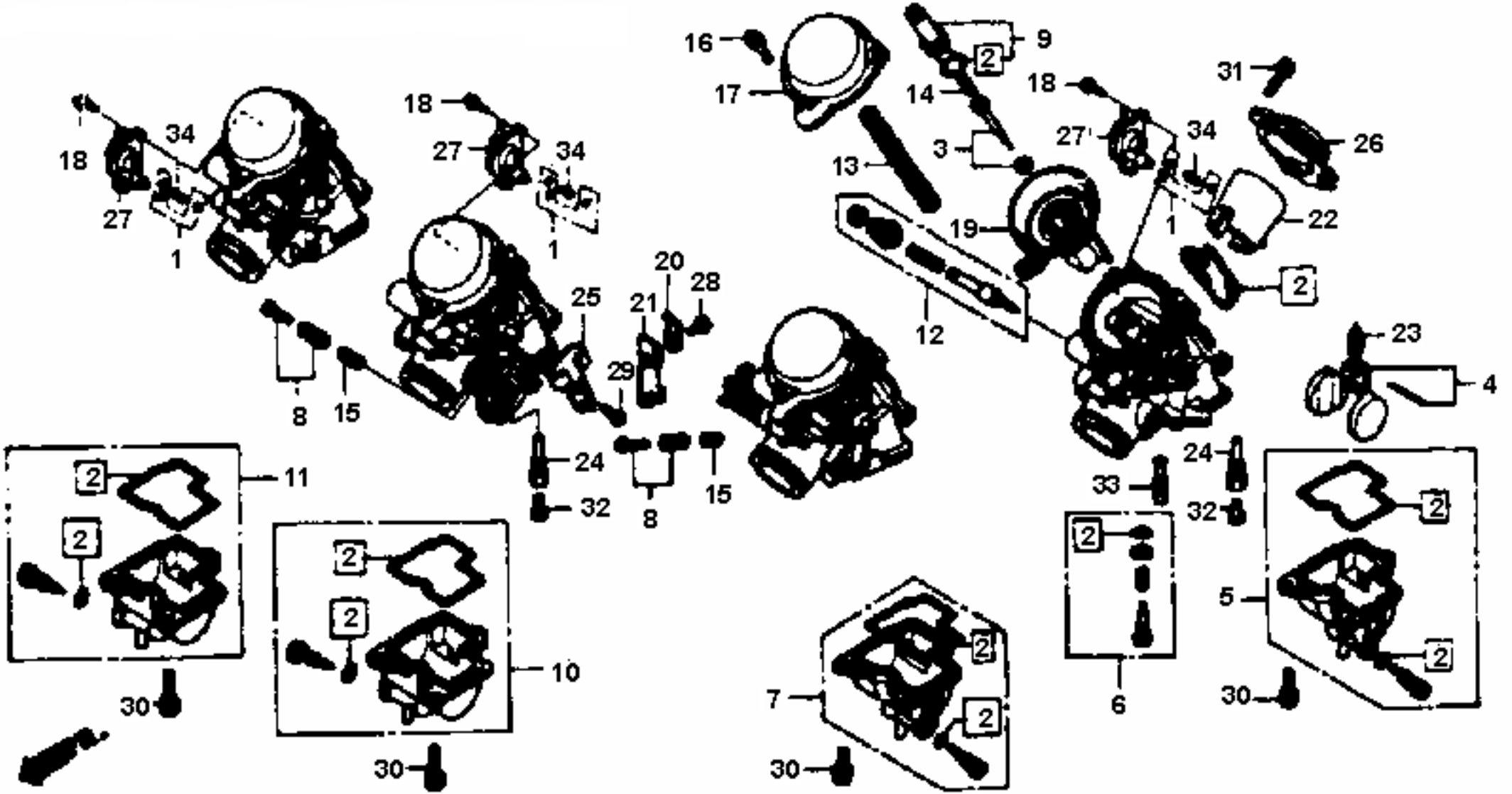
16
17
9
2
14
18
31
3
27
34
26
13
19
1
22
12
2
23
4
24
33
32
5
6
30
7
10
11
8
15
20
21
28
25
29

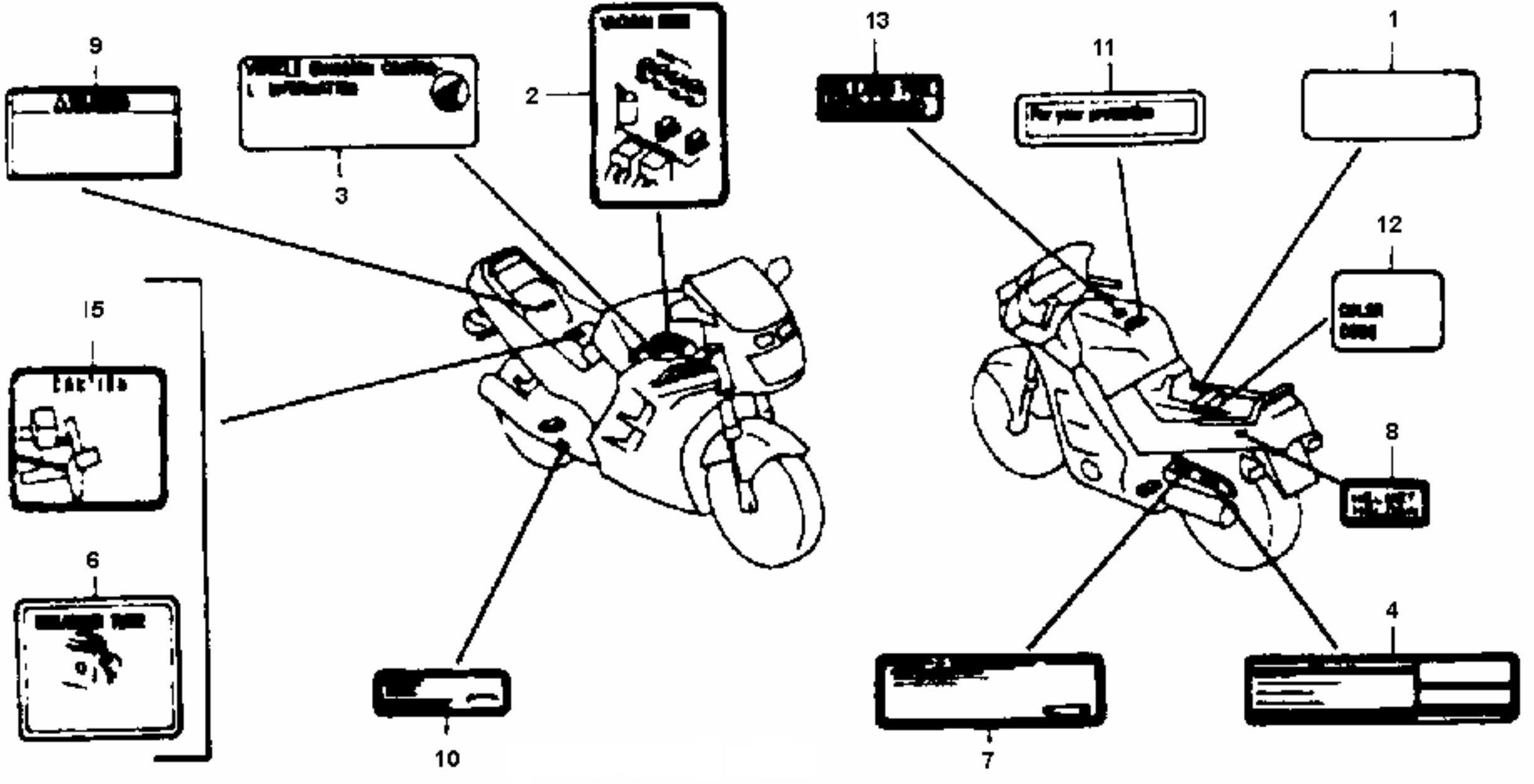
9
3
2
15
6
10
13
11
1
12
8
4
7

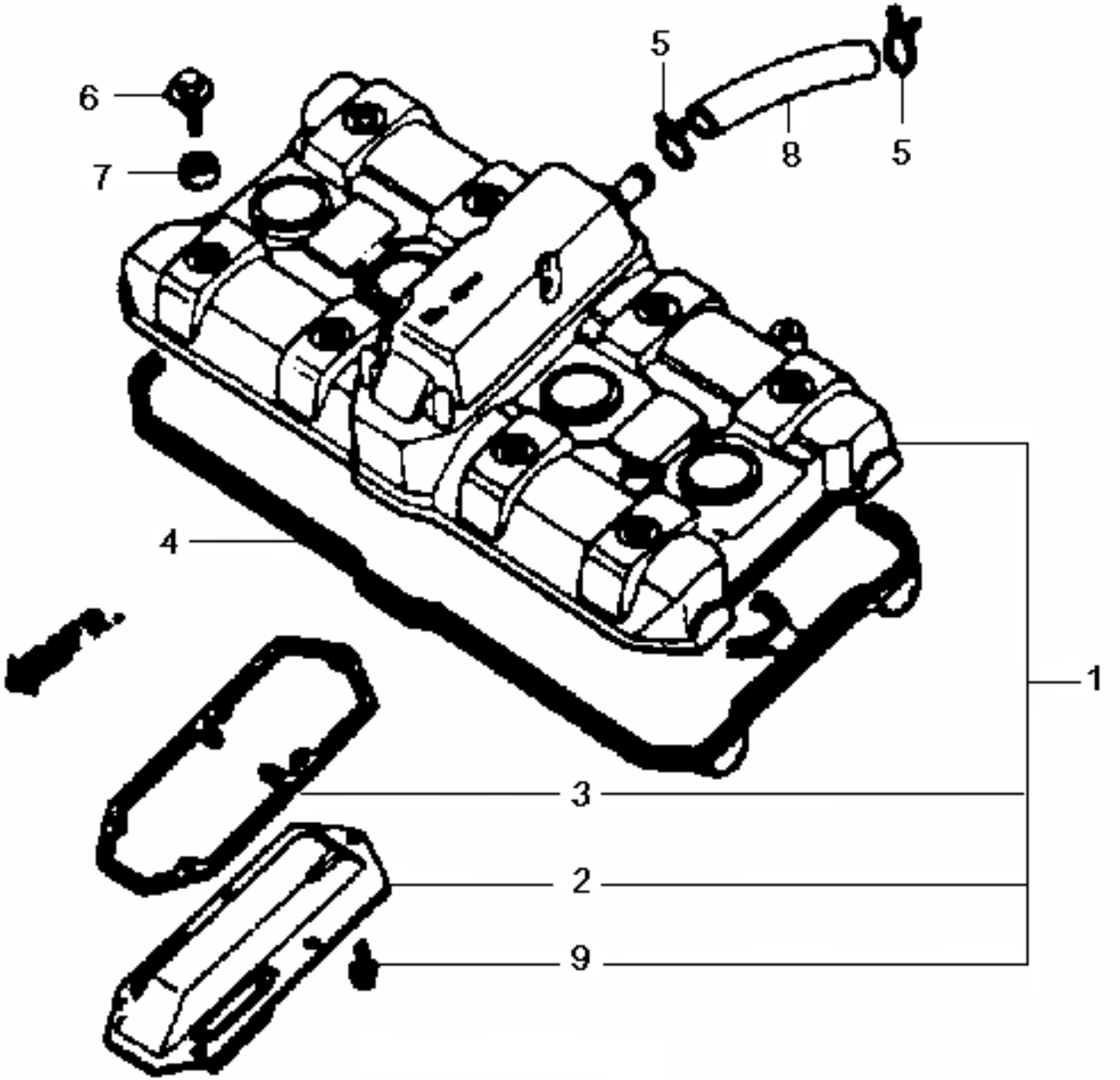
5
6
8
5
7
4
1
3
2
9

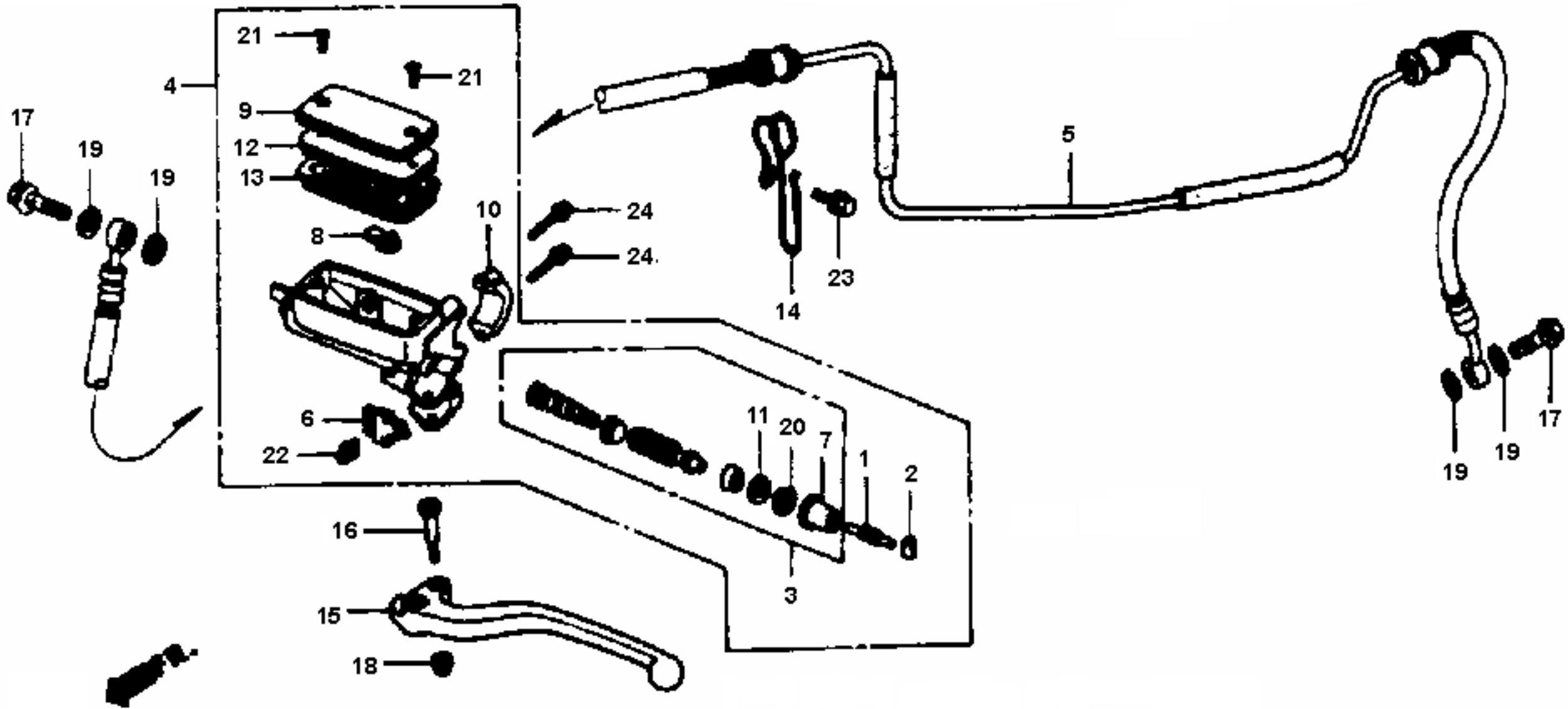
21
21
4
9
12
13
17
19
19
8
10
24
24
5
14
23
6
22
11
20
7
1
2
3
16
15
18
19
19
17

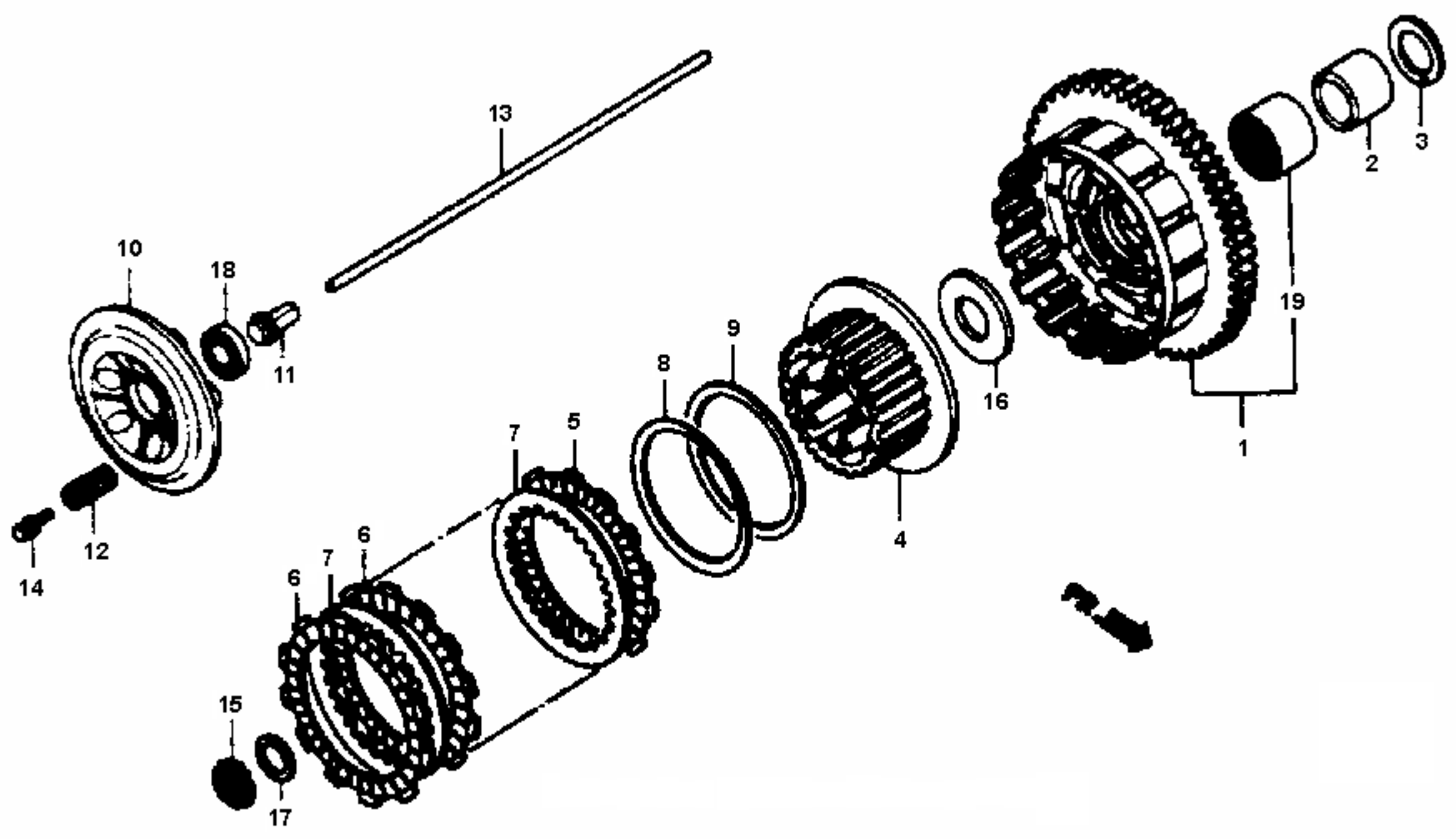
13
10
18
11
14
12
15
17
6
7
6
7
5
8
9
4
16
1
19
2
3

COLOR TABLES

CBR1000F'94 (A) SC240*RM300002 To Subsequent
CBR1000F'94 (AC) SC241*RM300002 To Subsequent

No	Model		CBR1000'94			
	Color		Black NH-1	Serial Number		Area Code
	Code		NH1D	From	To	
	Name of colored parts	Basic part no				
1	BAR, SIDE STAND	50530-MS2-000	ZA			
2	COVER COMP , L PIVOT UNDER	64395-MS2-670	ZD			
3	COVER COMP , R PIVOT UNDER	64385-MS2-670	ZD			
4	COVER SET, R MIDDLE (WL)	64260-MZ2-910	ZA			
5	COVER, UPPER COWL LOWER	64220-MZ2-000	ZC			
6	COWL COMP , L INNER LOWER	64440-MZ2 000	ZA			
7	COWL COMP , R INNER LOWER	64340-MZ2-000	ZA			
8	COWL SET, L MIDDLE (WL)	64365-MZ2-910	ZA			
9	COWL SET, L SIDE (WL)	65350-MZ2-910	ZA			
10	COWL SET, L UPPER (WL)	64215-MZ2-910	ZA			
11	COWL SET, R MIDDLE (WL)	64325-MZ2-910	ZA			
12	COWL SET, R SIDE (WL)	65300-MZ2 910	ZA			
13	COWL SET, R UPPER (WL)	64214-MZ2-910	ZA			
14	COWL SET, RR SEAT (WL)	77260-MZ2-910	ZA			
15	COWL, L UNDER	64370-MZ2-000	ZB			A
16	COWL, L UNDER	64370-MZ2-750	ZB			AC
17	COWL, R UNDER	64310-MZ2-000	ZB			A
18	COWL, R UNDER	64310-MZ2-750	ZB			AC
19	FENDER COMP , FR	61100-MT4-000	ZF			
20	HOOK A, LAGGAGE	84120-MS2-670	ZB			
21	HOOK B, LAGGAGE	84130-MS2-670	ZB			
22	LABEL, COLOR	87565-MZ2-890	ZD			
23	LABEL, DAMPER ADJUSTER	87519-MW7-790	ZA			
24	LABEL, DRIVE	87560-MW0-670	ZB			
25	LABEL, FUEL	87586-MR6-670	ZA			
26	LABEL, HELMET HOLDER	87511-MW0-670	ZA			
27	MARK A, L RR SEAT COWL	77216-MZ2-910	ZA			
28	MARK A, R RR SEAT COWL	77215-MZ2-910	ZA			
29	MARK B, RR SEAT COWL	77217-MZ2-910	ZA			
30	MARK, FR UPPER COWL COVER	64232-MZ2-910	ZA			
31	MARK, L FUEL TANK	17554-MZ2-910	ZA			
32	MARK, R FUEL TANK	17553-MZ2-910	ZA			
33	MARK, UPPER COWL	64212-MZ2-910	ZA			

COLOR TABLES

CBR1000F'94 (A) SC240*RM300002 To Subsequent
CBR1000F'94 (AC) SC241*RM300002 To Subsequent

No	Model		CBR1000'94			
	Color		Black NH-1	Serial Number		Area Code
	Code		NH1D	From	To	
	Name of colored parts	Basic part no				
34	MIRROR L BACK	88120-MV9-003	ZA			
35	MIRROR, R BACK	88110-MV9-003	ZA			
36	PANEL, L INNER	64590-MZ2-000	ZA			
37	PANEL, METER	64570-MZ2-000	ZA			
38	PANEL, R INNER	64580-MZ2-000	ZA			
39	PANEL, SCREEN INNER	64560-MZ2-000	ZA			
40	PROTECTOR, L MIDDLE COWL	64368-MZ2-000	ZE			
41	PROTECTOR, R MIDDLE COWL	64328-MZ2-000	ZE			
44	STAND COMP , MAIN	50500-MS2-670	ZA			
45	STRIPE A, L MIDDLE COWL	64369-MZ2-910	ZA			
46	STRIPE A, R MIDDLE COWL	64329-MZ2-910	ZA			
47	STRIPE B, L MIDDLE COWL	64366-MZ2-910	ZA			
48	STRIPE B, L SIDE COWL	64352-MZ2-910	ZA			
49	STRIPE B, R MIDDLE COWL	64326-MZ2-910	ZA			
50	STRIPE B, R SIDE COWL	64302-MZ2-910	ZA			
51	STRIPE, L FUEL TANK	17551-MZ2-910	ZA			
52	STRIPE, L UPPER COWL	64217-MZ2-910	ZA			
53	STRIPE, R FUEL TANK	17550-MZ2-910	ZA			
54	STRIPE, R UPPER COWL	64216-MZ2-910	ZA			
55	SWINGARM SET	52200-MZ2-305	ZA			
56	TANK ASSY , FUEL (WL)	17520-MZ2-910	ZA			
57	WHEEL SET, FR	44650-MS2-305	ZC			
58	WHEEL SET, RR	42650-MZ2-305	ZB			

COLOR TABLES

Color chart

- (WL) = Stripes and labels other than caution labels are included in parts whose part name end in (WL)
- (WOL) = Stripes and labels are not included in parts whose part name end in (WOL)

COLOR CODE TABLE (Color descriptions omitted from the main text of the catalog)

TYPE OF PARTS	COLOR CODE	COLOR DESCRIPTION
PAINTED PARTS	A	WHITE
	B	BLACK
	C	SCARLET
	E	ROYAL BLUE
	N	DARK BLUE
	Q	MARUEM BLUE
	R	IVORY YELLOW
	S	DARK SILVER
	T	METALLIC SILVER
	Z	PRIMER
	ZZ	PRIMER
	XW	CHROME
VINYL PARTS	A	BLACK
	B	BLUE
	D	LIGHT BLUE
	E	SCARLET
	G	DARK ROSE
	N	ELEPHANT GRAY & IVORY
	Q	WHITE
	V	IVORY

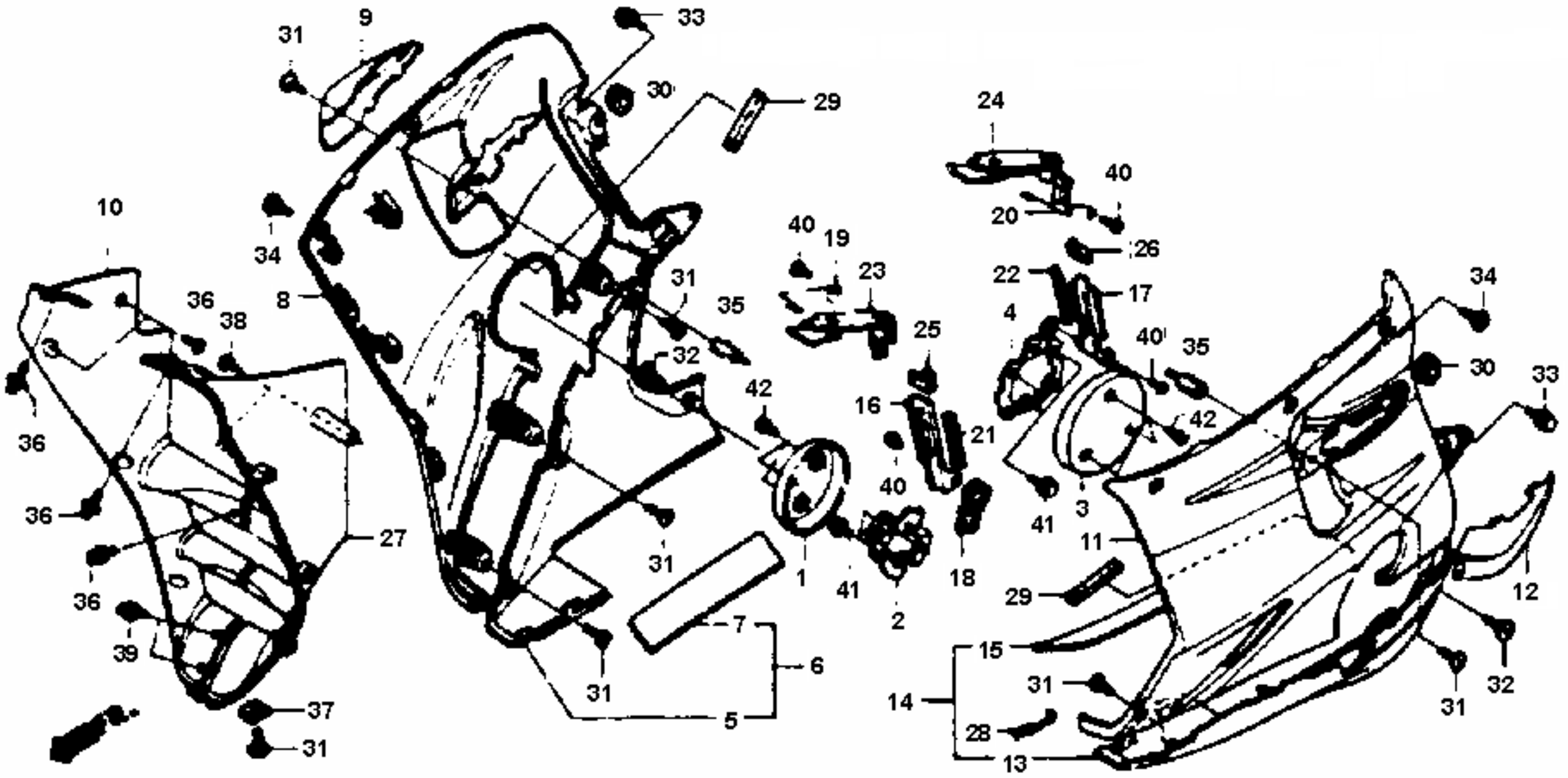
31
9
33
30
29
24
40
20
26
10
34
40
19
23
22
17
36
38
8
31
35
4
25
40
35
34
32
30
33
42
16
21
42
36
40
3
41
36
27
31
11
1
41
18
12
36
2
29
7
39
6
15
31
32
14
31
37
5
31
28
31
13

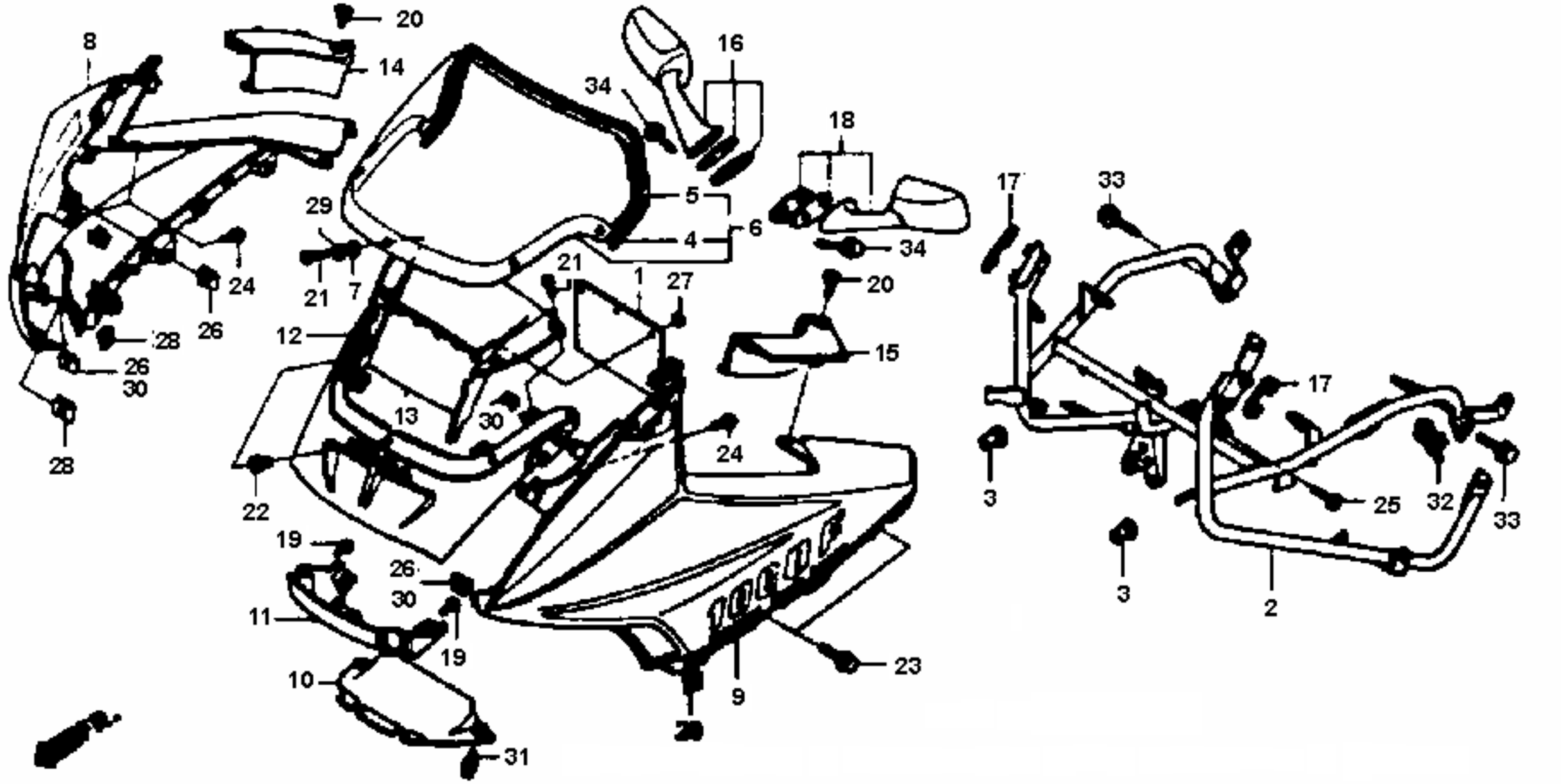
20
8
14
16
34
18
5
29
4
6
34
17
33
21
7
24
21
1
27
20
26
28
12
15
26
30
17
13
30
24
28
3
25
32
33
22
19
26
30
3
2
11
19
23
10
9
31

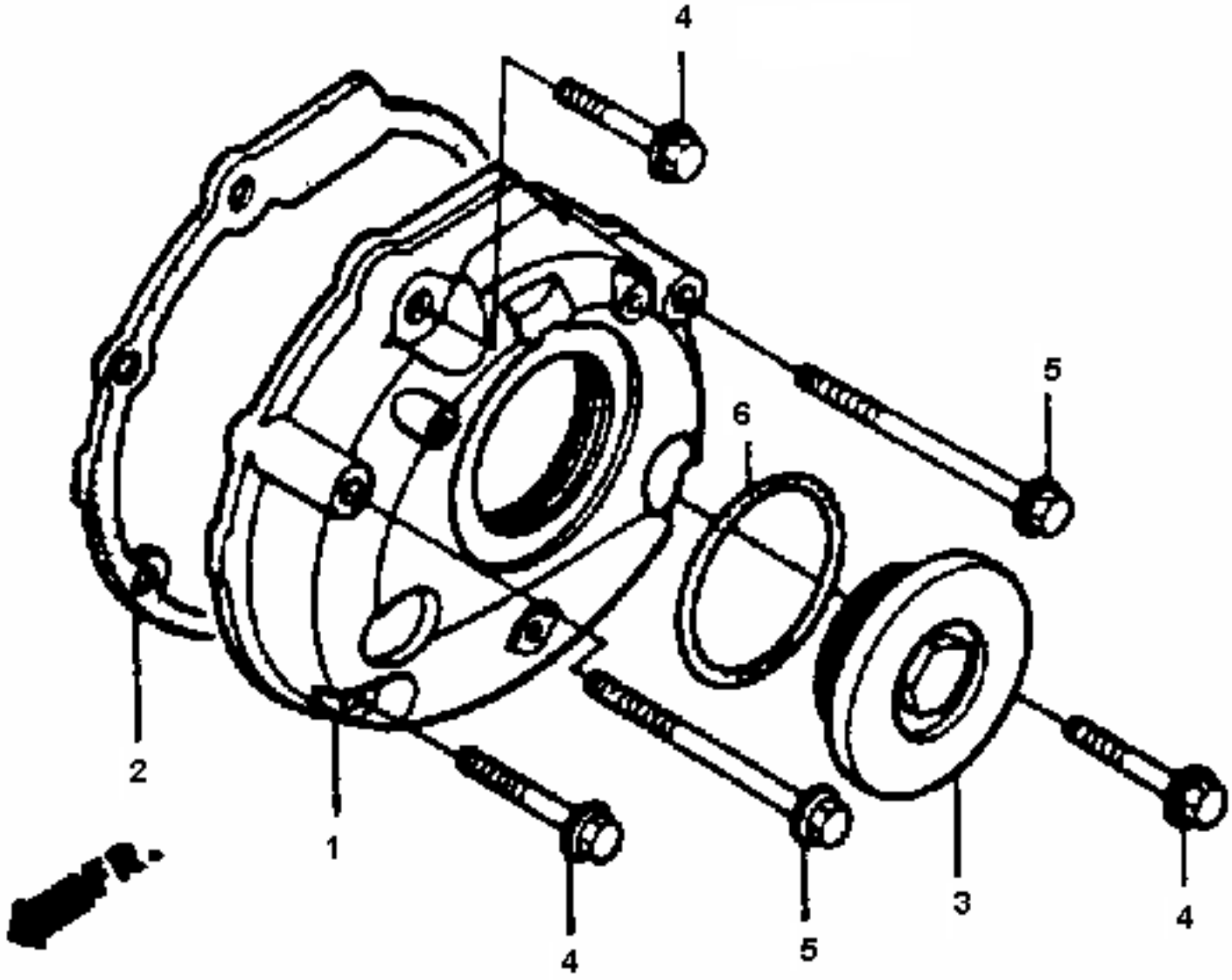
4
5
6
2
1
4
5
3
4

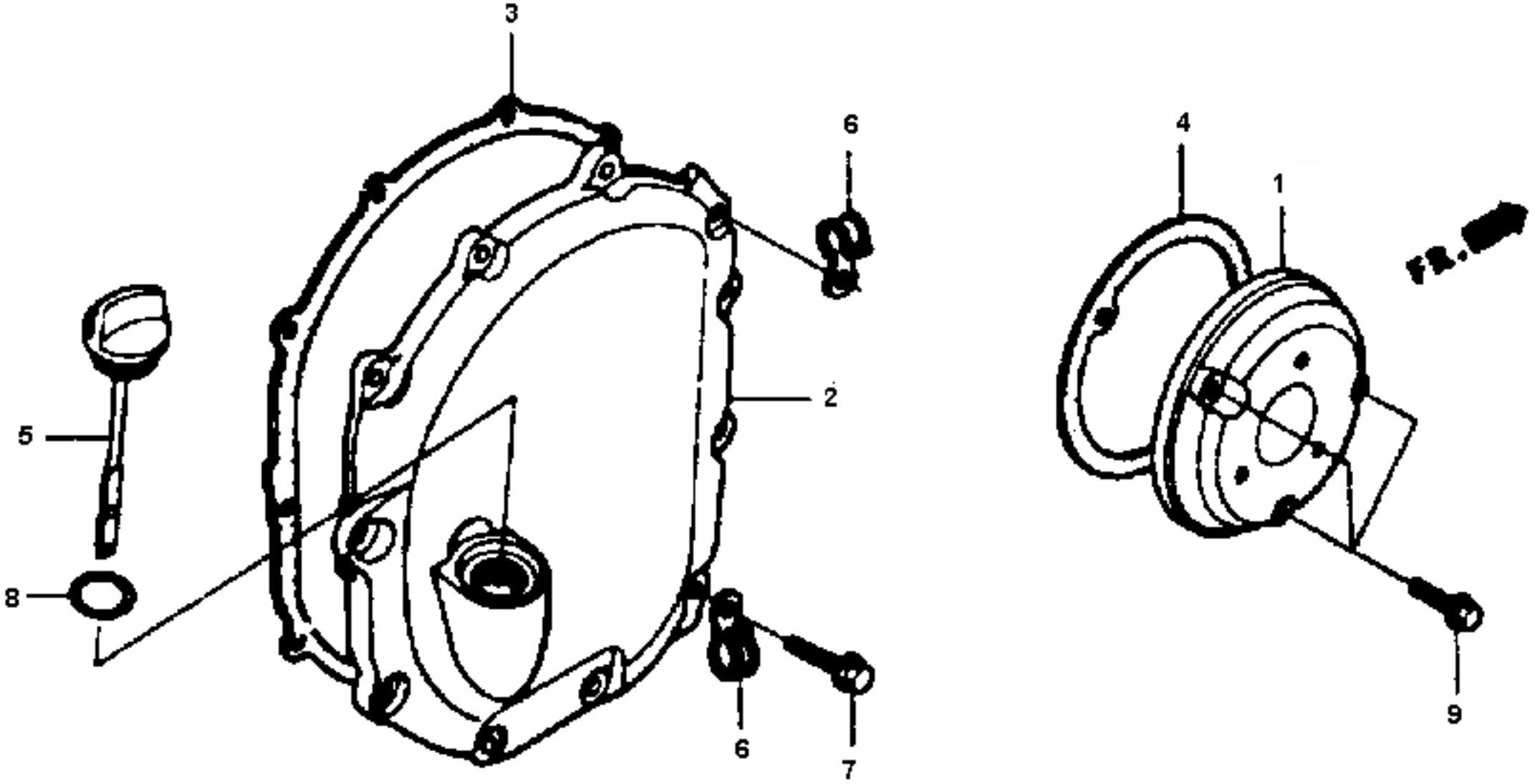
3
6
4
1
FR.
2
5
8
6
7
9

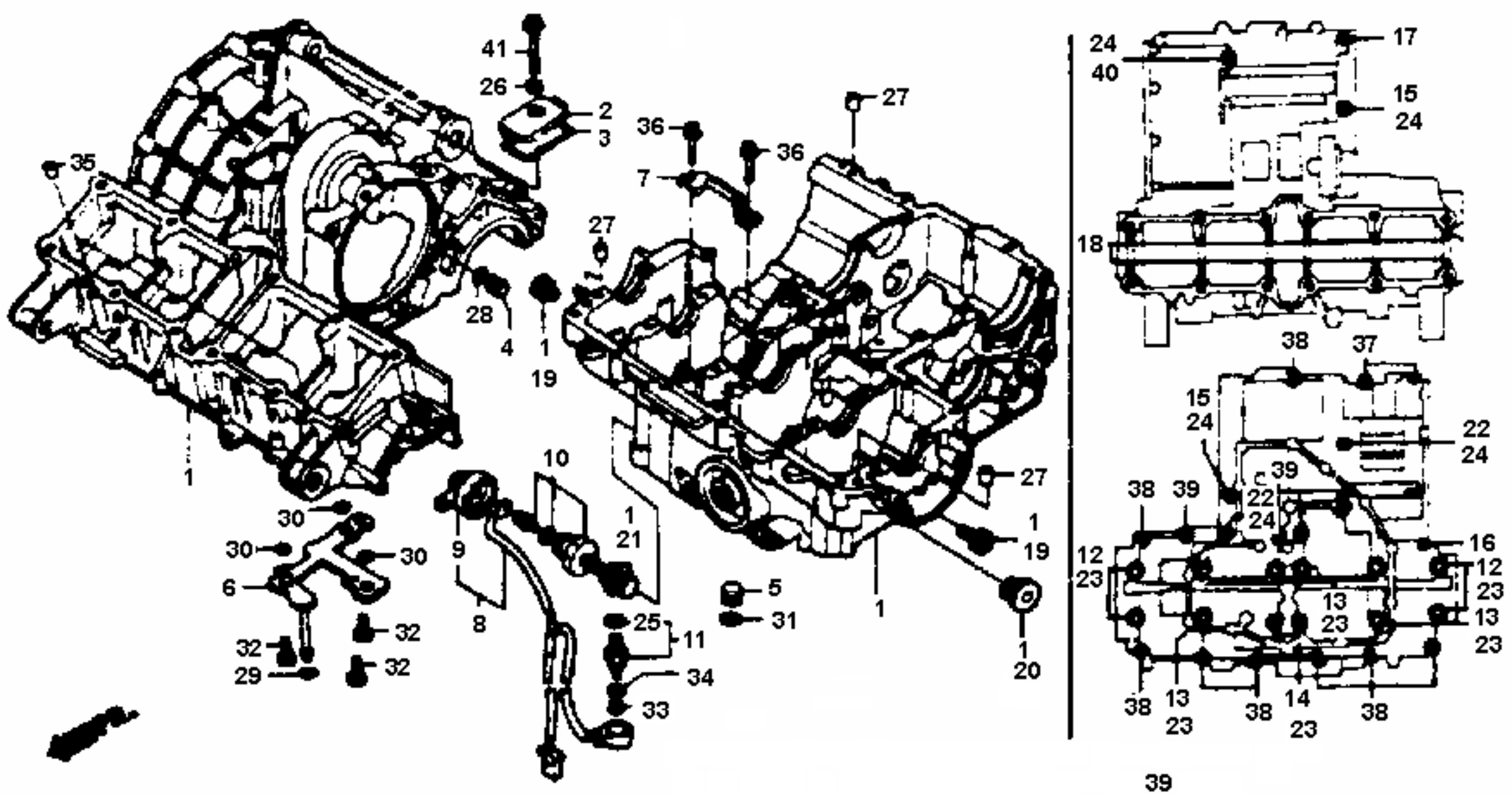
41
26
2
3
35
36
36
7
27
27
28
4
1
19
1
10
30
30
30
6
9
8
1
21
25
11
34
33
32
32
32
29
5
31
27
1
19
1
1
20
24
40
17
15
24
18
38
37
15
24
22
24
39
38
39
22
24
16
12
23
12
23
13
23
13
23
38
13
23
38
14
23
38

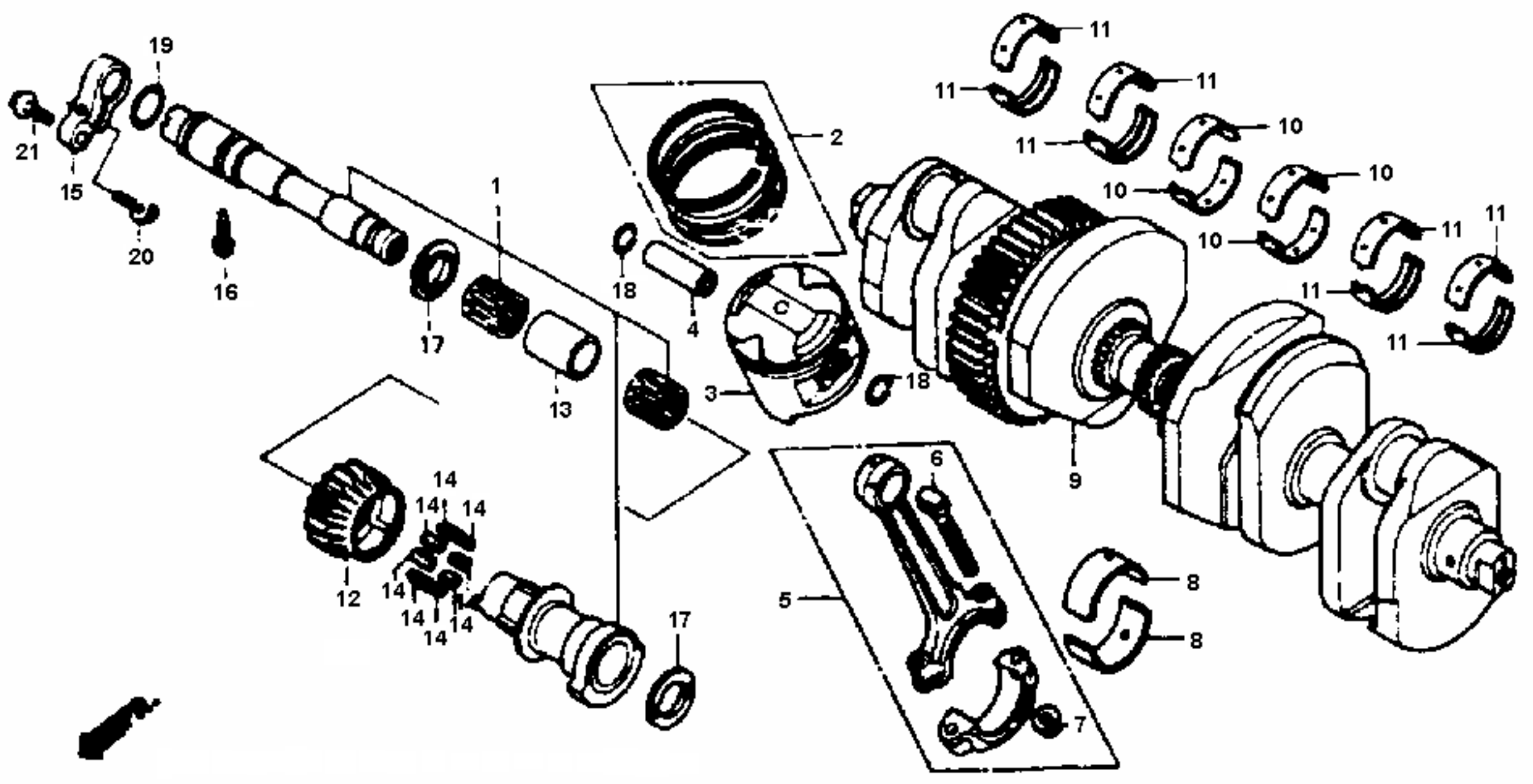
19
21
15
20
16
1
17
13
2
18
4
3
18
11
11
11
10
10
10
11
11
11
11
9
6
5
7
8
8
12
14
14
14
14
14
14
14
17

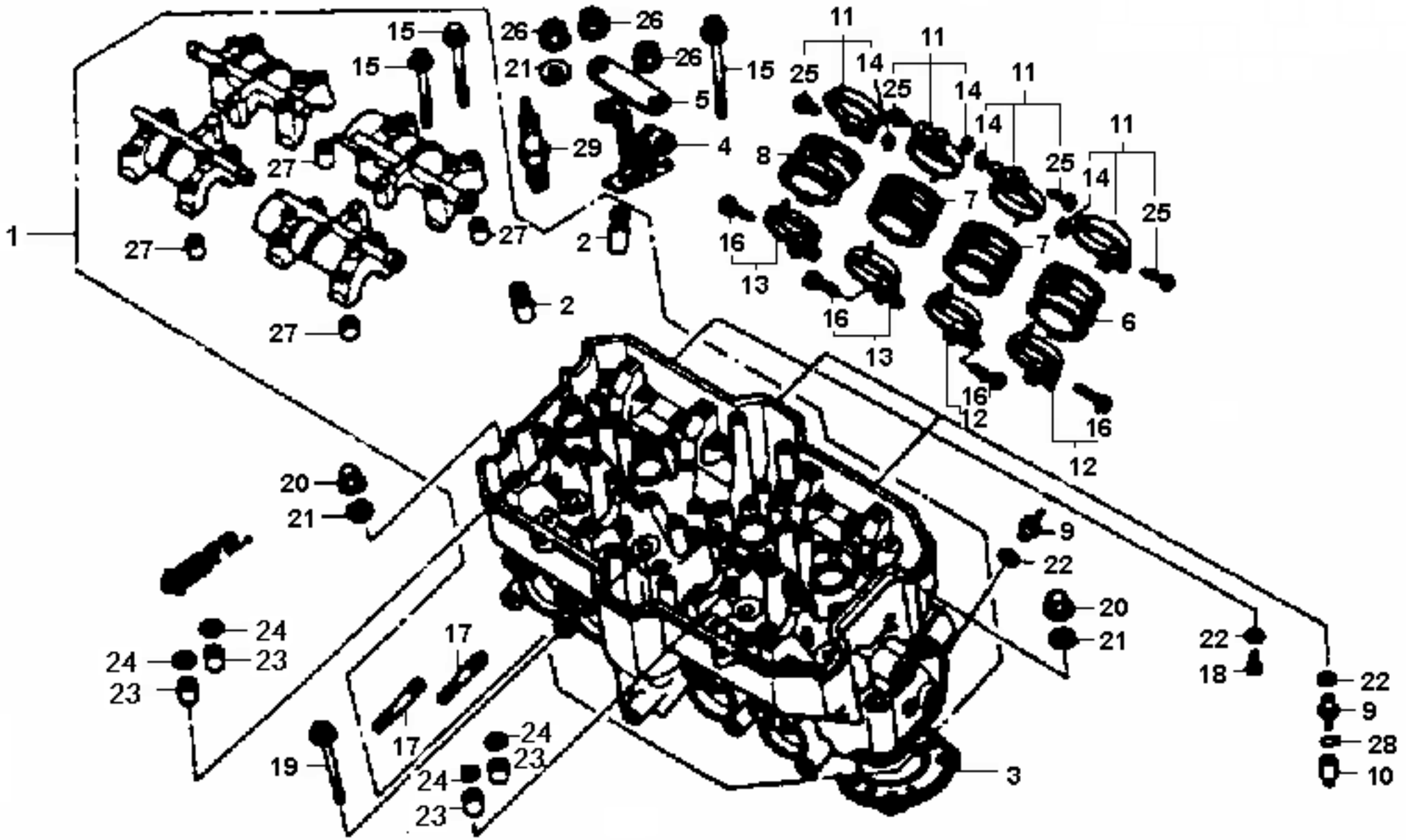
1
2
2
3
4
5
6
7
7
8
9
9
10
11
11
11
11
12
12
13
13
14
14
14
14
15
15
15
16
16
16
16
17
17
18
19
20
20
21
21
21
22
22
22
23
23
23
23
24
24
24
24
25
25
25
25
26
26
26
27
27
27
27
28
29

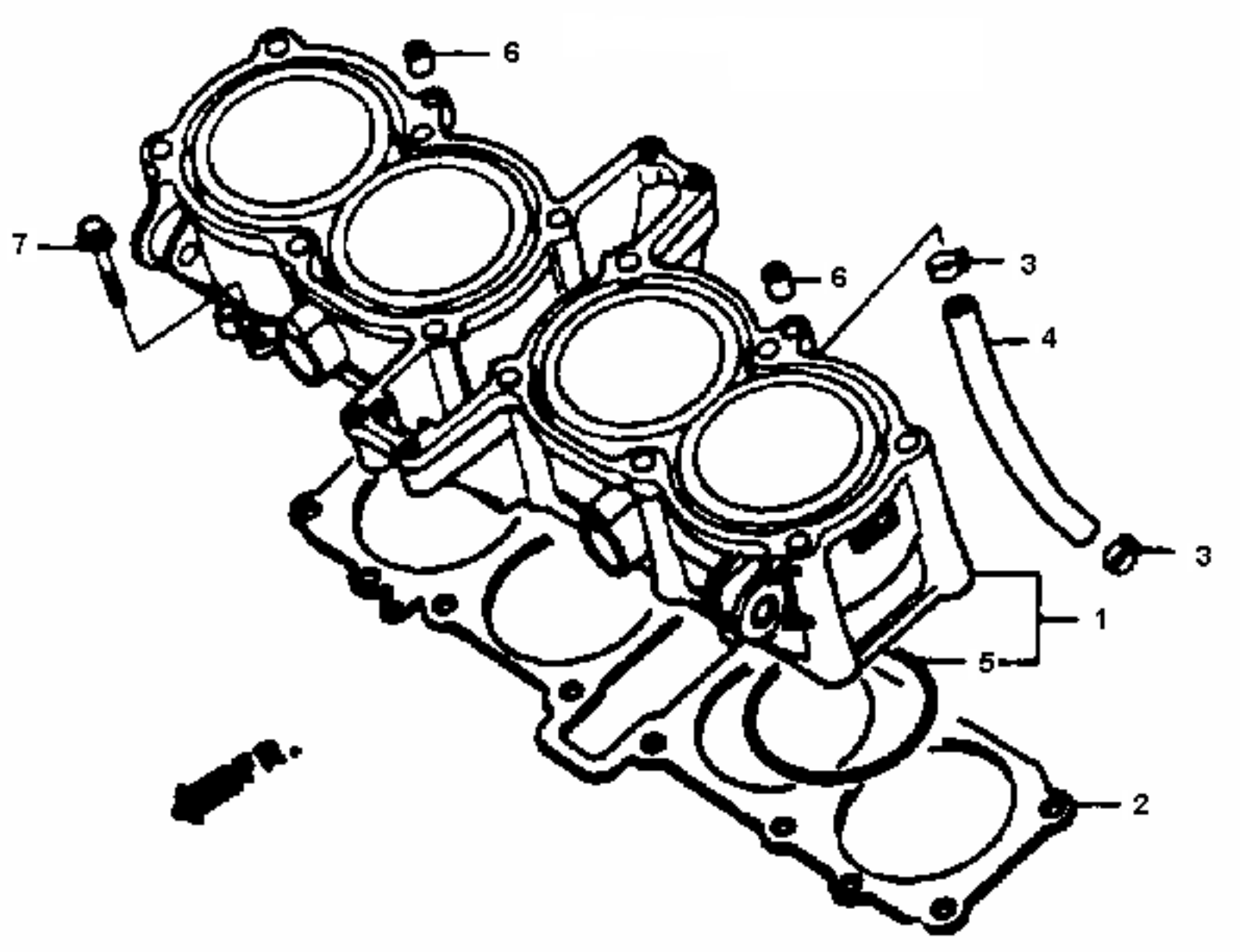
6
7
6
3
4
3
1
5
2

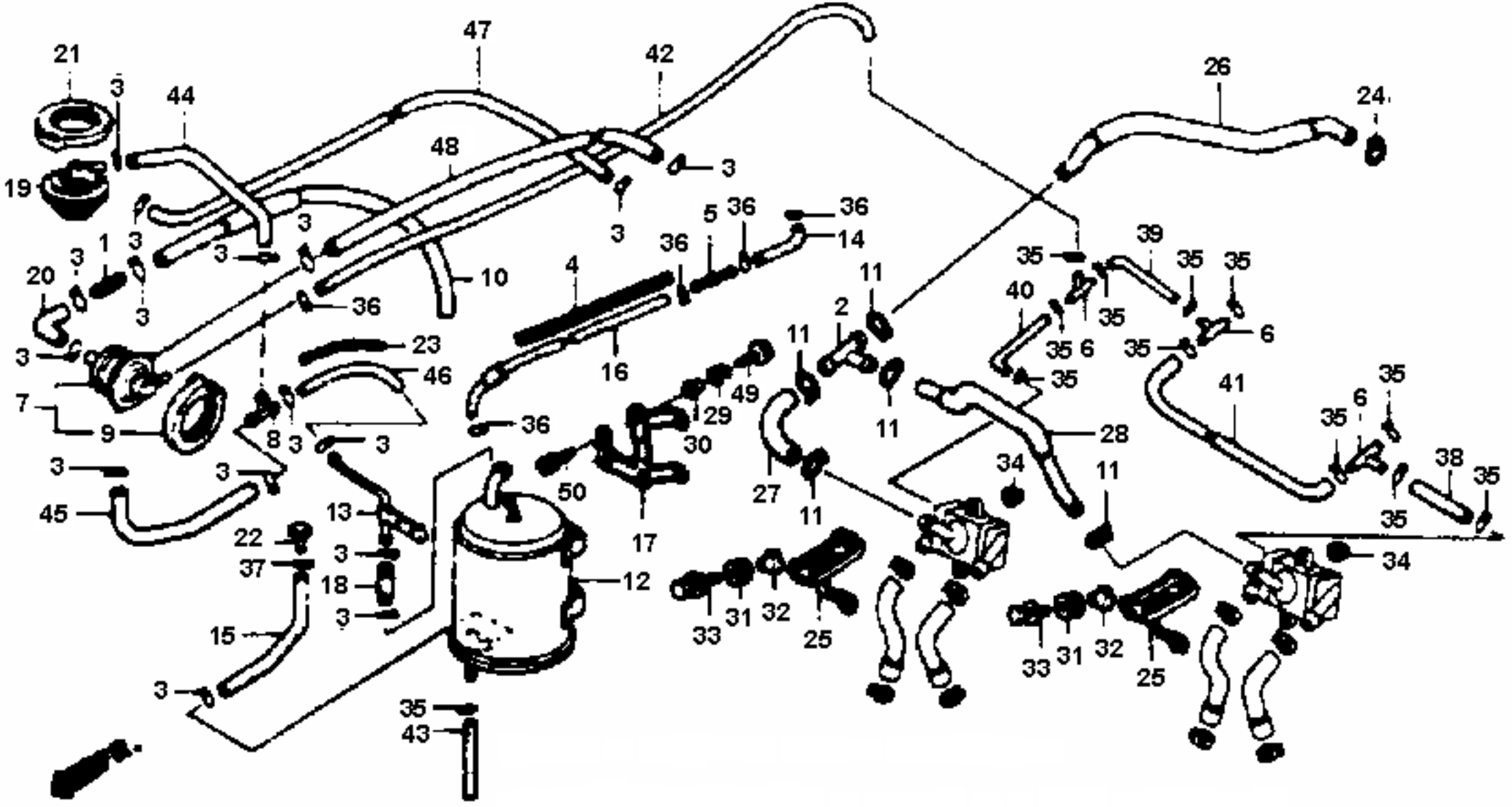
21
3
44
47
42
26
24
19
48
3
3
3
3
1
3
3
20
3
3
10
36
36
5
36
14
4
36
11
2
39
35
35
35
40
35
6
35
6
35
23
46
16
11
49
29
30
11
35
41
35
6
35
7
9
8
3
3
36
28
3
3
45
50
27
11
34
11
38
35
35
13
22
3
37
18
3
17
12
34
15
3
33
31
32
25
33
31
32
25
35
43

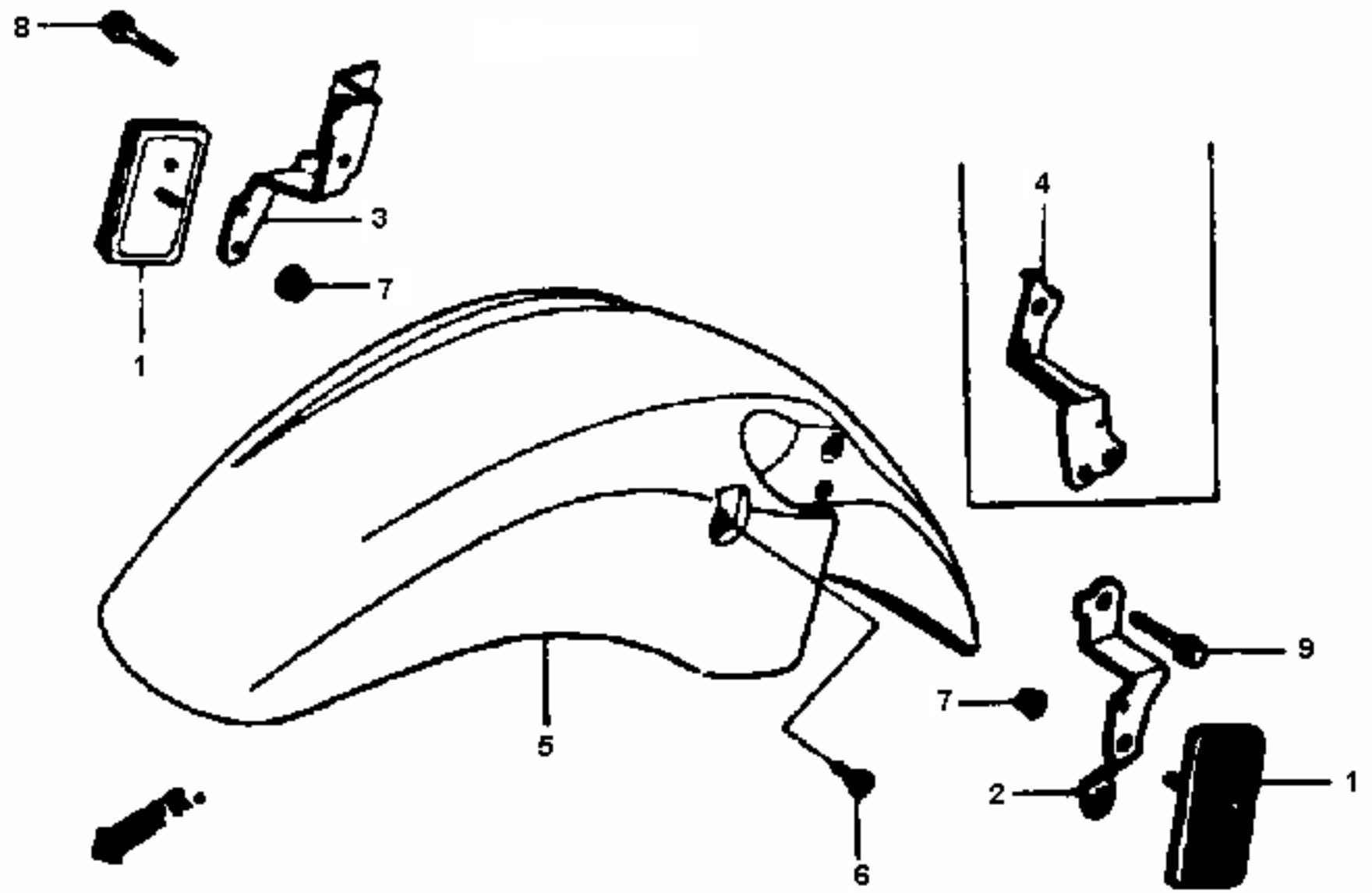
8
3
7
1
4
5
9
7
2
1
6

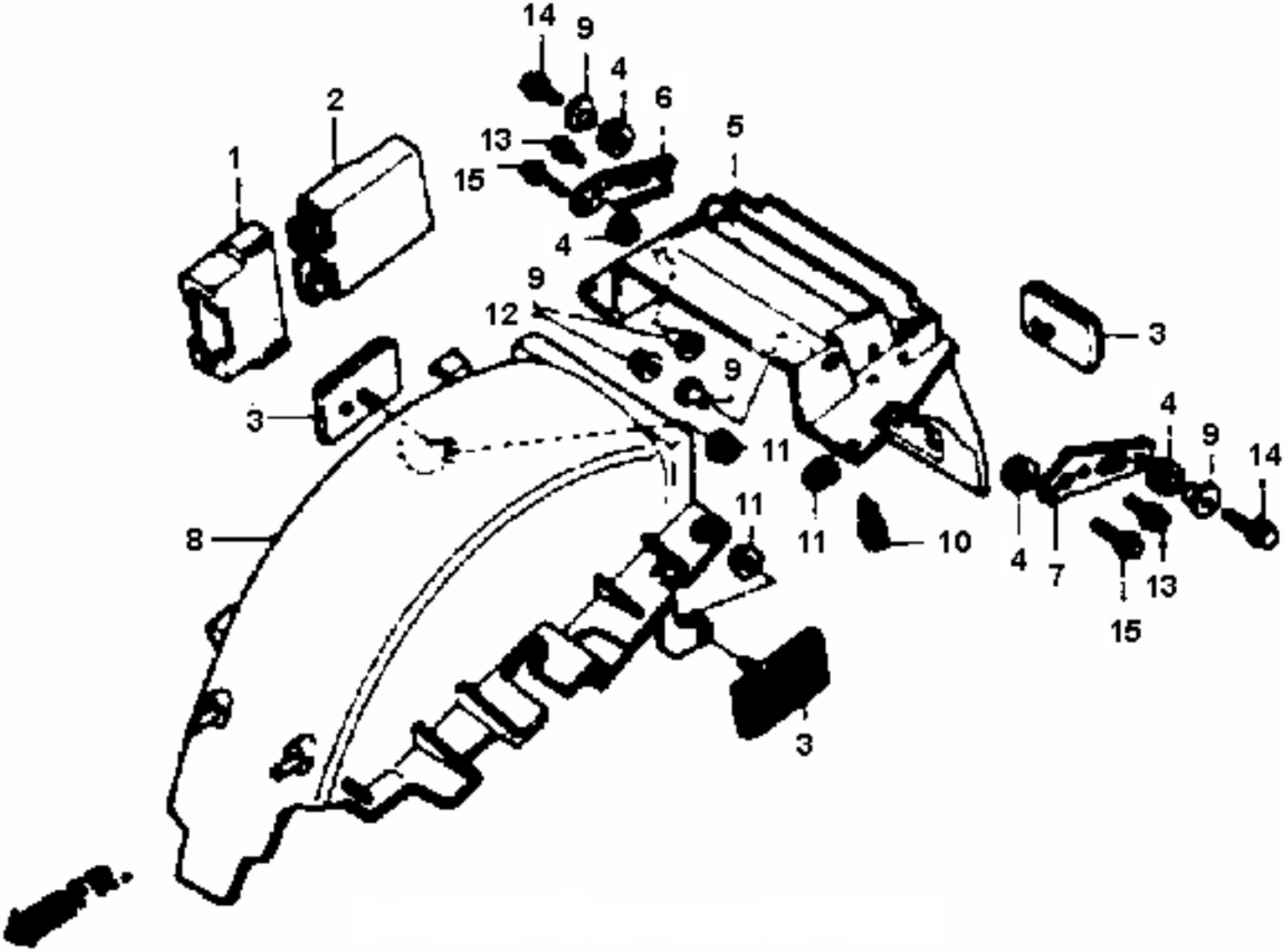
14
9
4
6
2
13
5
1
15
4
9
12
3
9
3
4
9
14
11
11
8
11
10
4
7
13
15
3

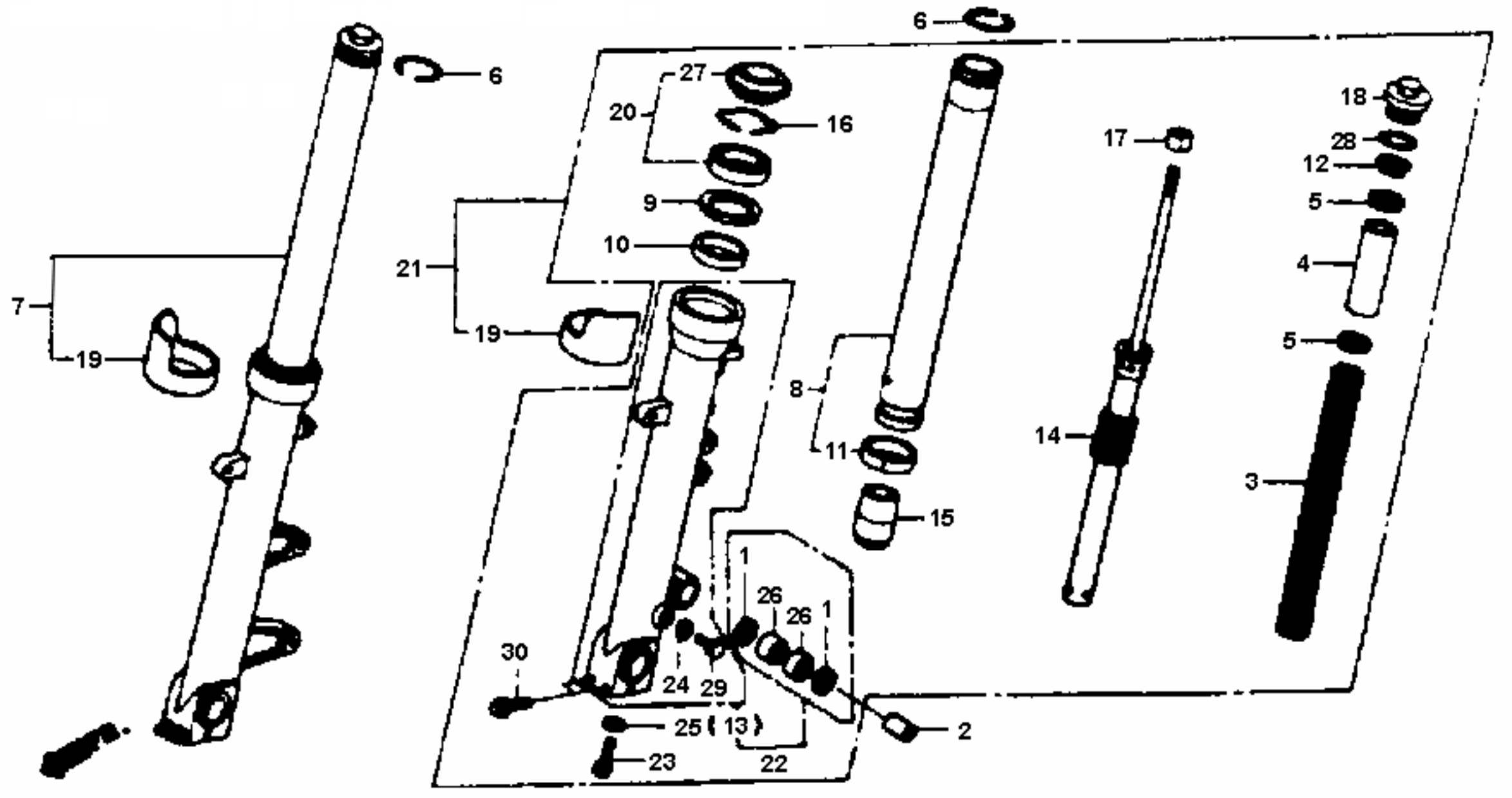
6
6
27
20
16
18
17
28
12
5
9
10
4
21
7
19
19
5
8
14
11
3
15
1
26
26
1
30
24
29
25 (13)
2
23
22

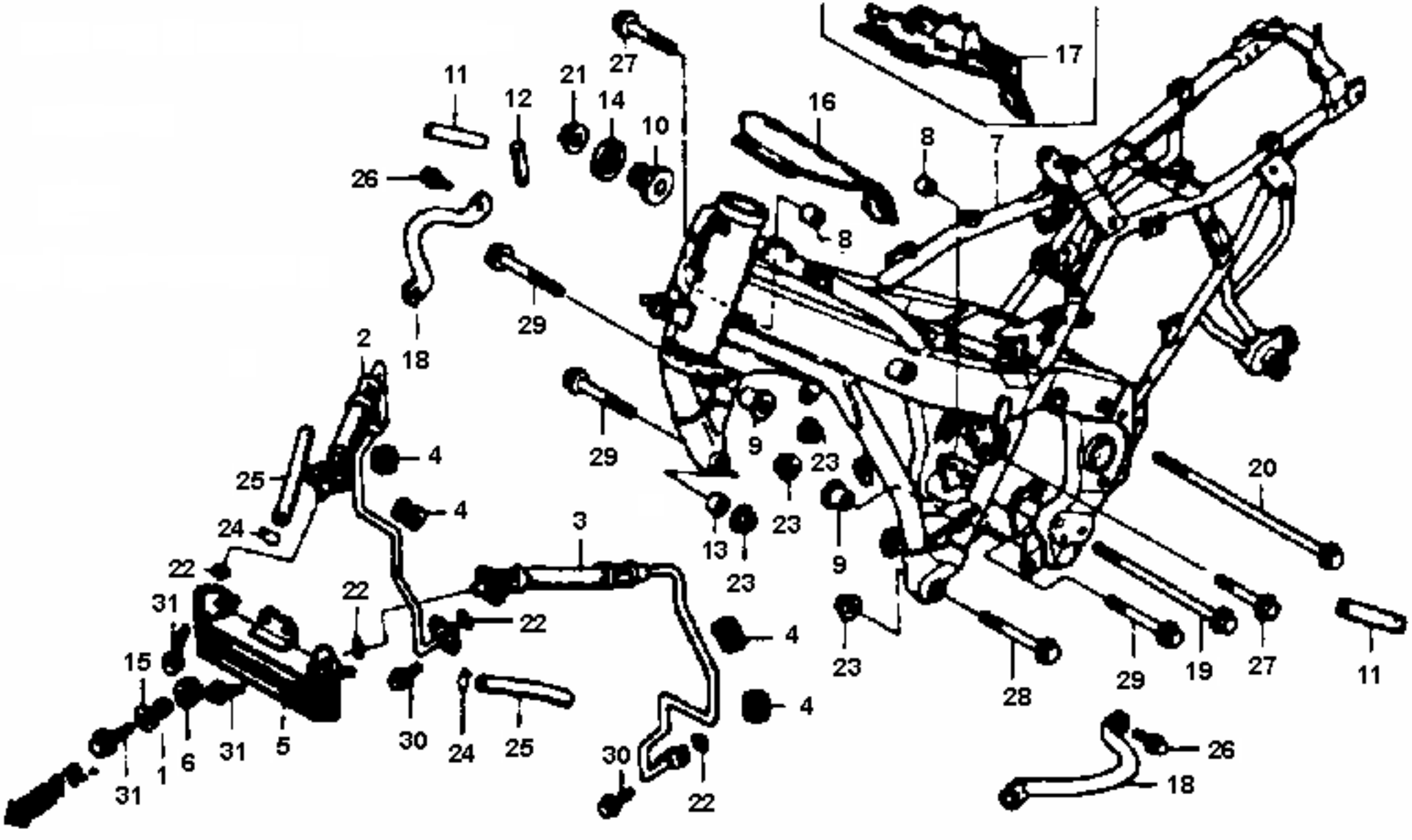
17
27
11
21
12
14
10
16
8
7
26
8
29
18
2
29
9
23
4
25
4
23
20
24
3
13
23
22
9
22
31
22
22
4
23
15
28
29
19
27
11
4
30
24
25
26
31
1
6
31
5
30
22
18

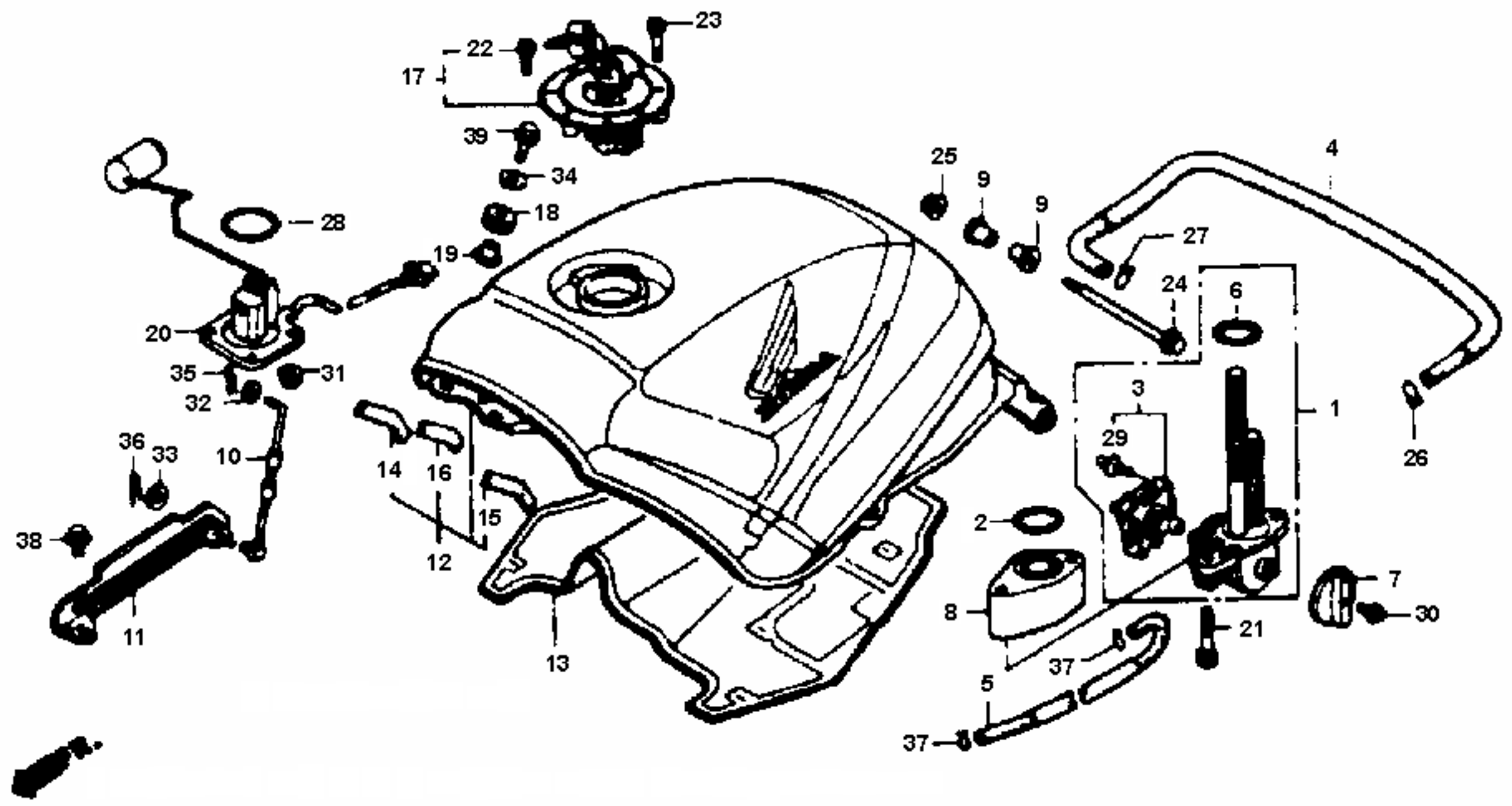
23
22
17
39
34
18
28
19
20
35
31
32
36
33
10
38
11
14
16
15
12
13
25
9
9
4
27
24
6
3
29
1
26
2
8
7
30
21
37
5
37

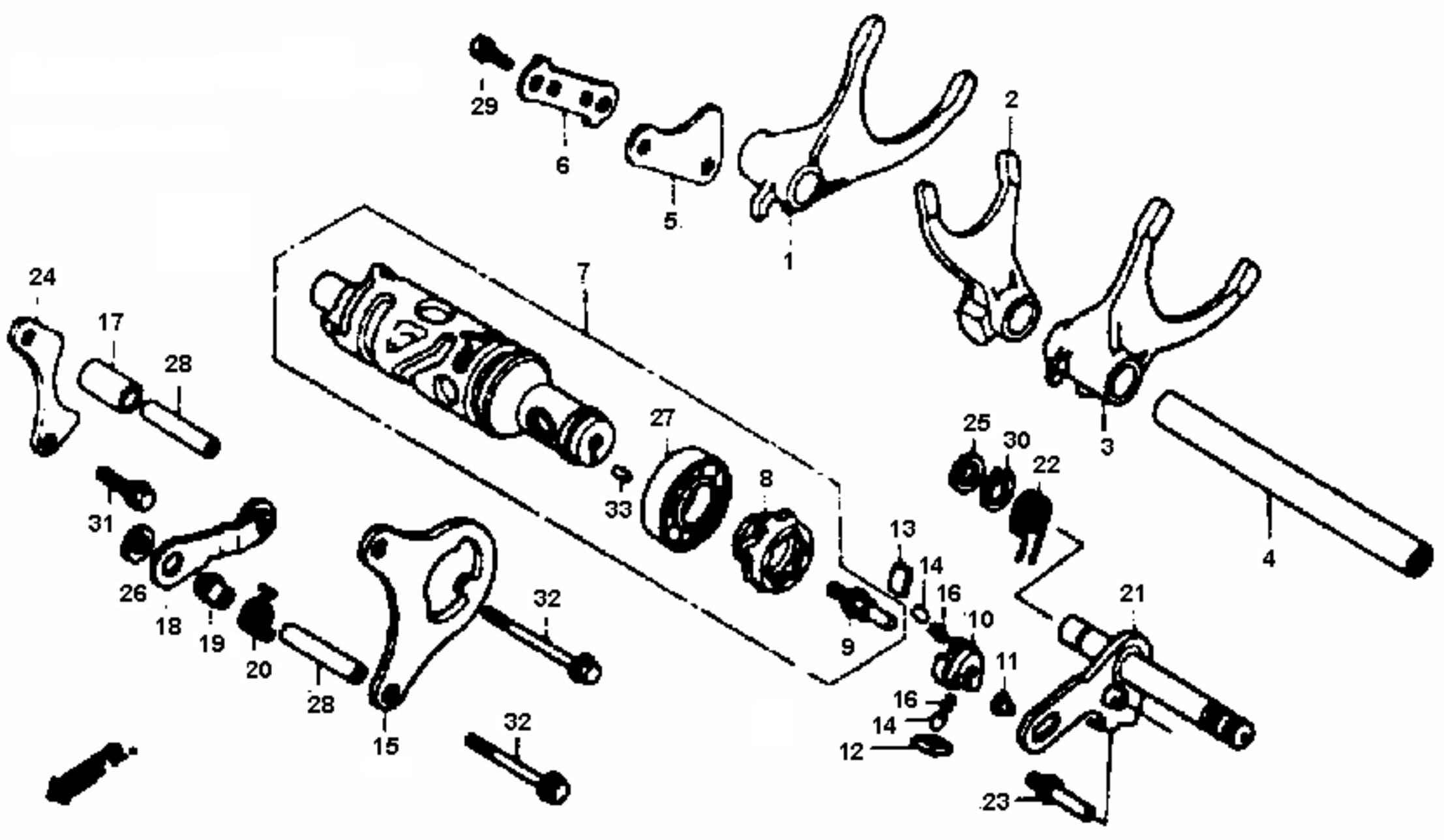
29
6
5
1
2
3
4
7
24
17
28
27
33
8
25
30
22
31
26
18
19
20
28
15
32
32
13
14
16
10
9
11
16
14
12
21
23

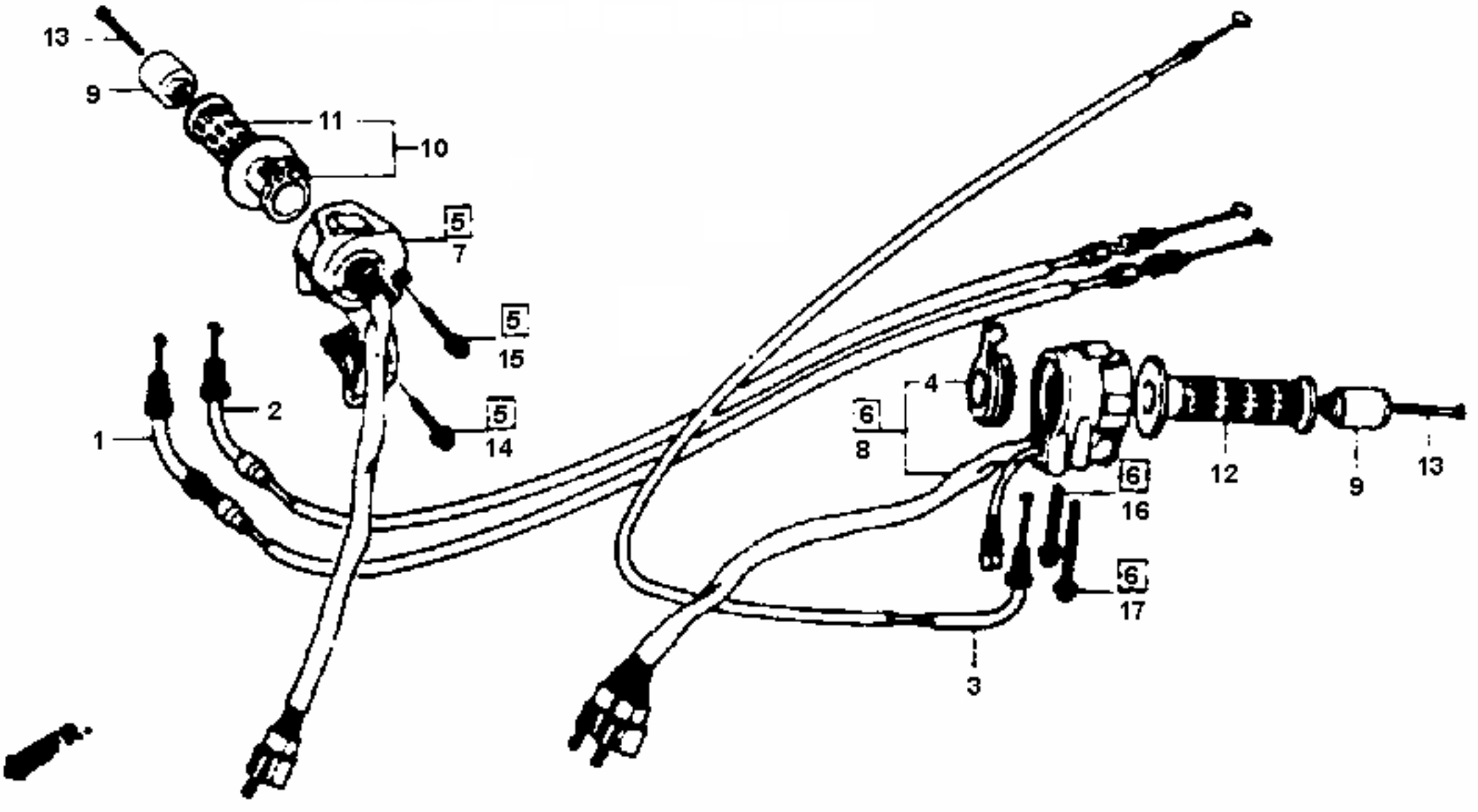
13
9
11
10
5
7
5
15
5
14
1
2
4
6
8
6
16
6
17
12
9
13
3

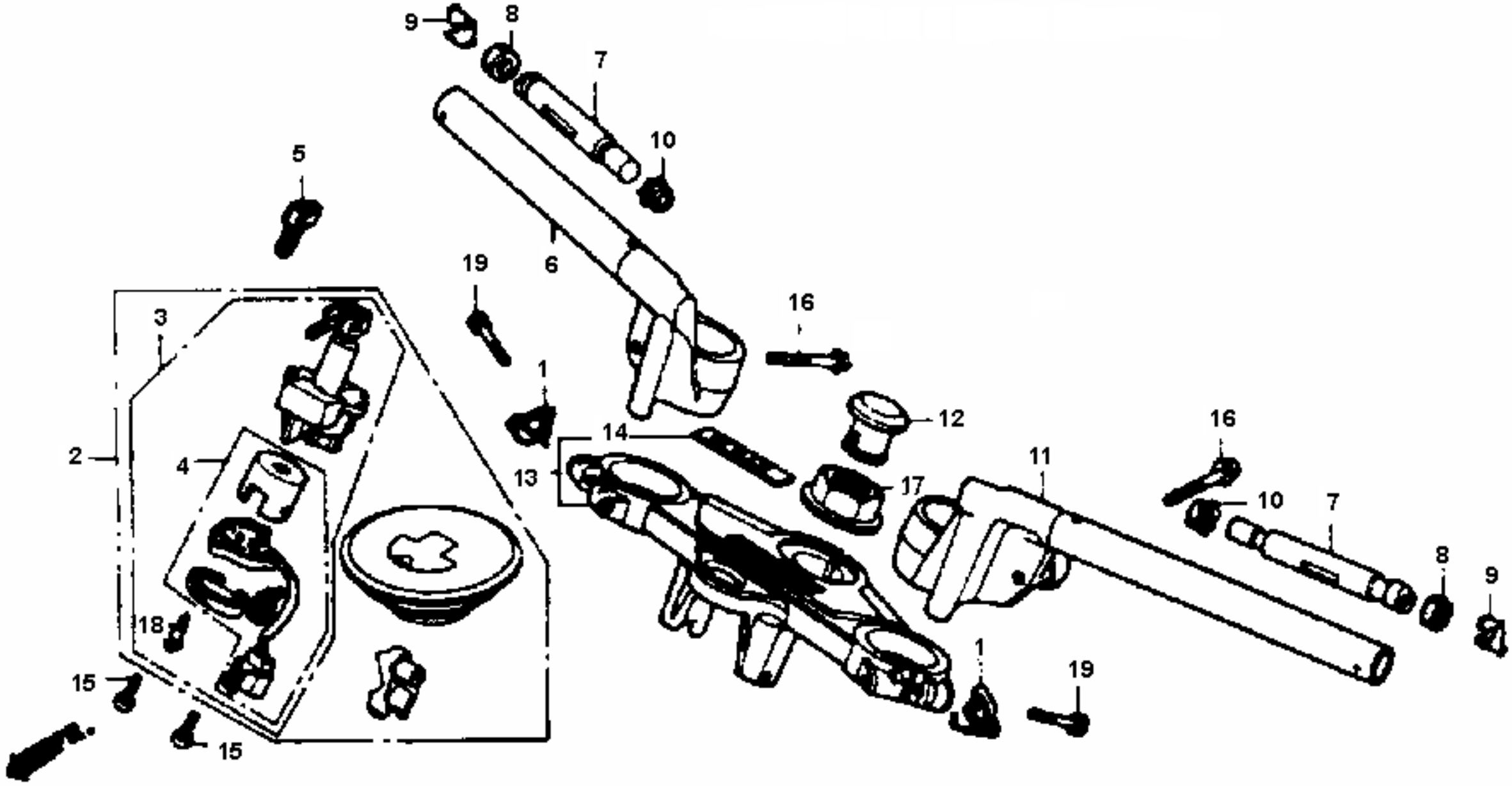
9
8
7
10
5
6
19
16
3
1
12
14
2
4
13
17
11
16
10
7
8
9
18
1
19
15
15

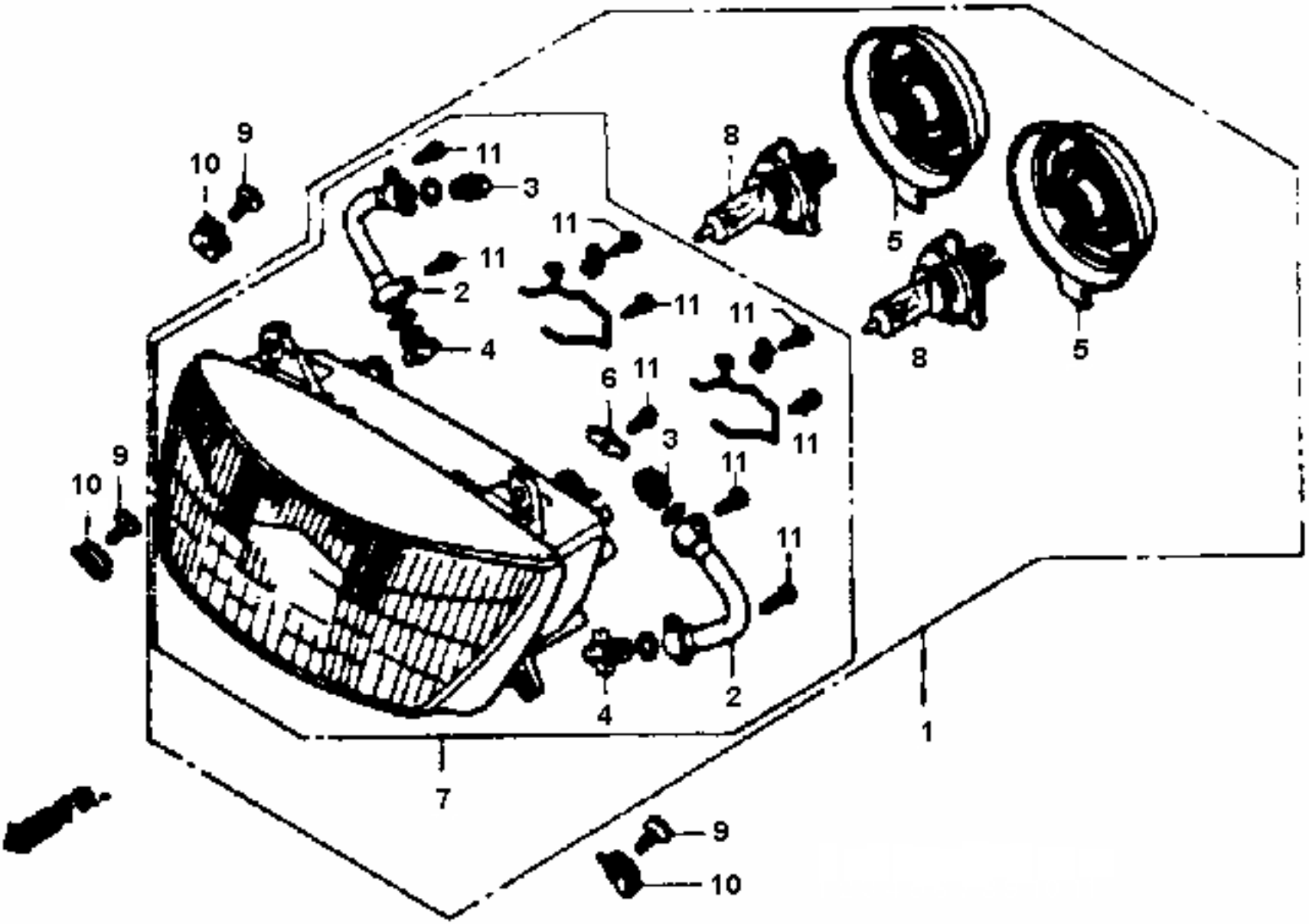
9
10
11
3
11
11
2
4
8
5
11
11
8
5
6
11
3
11
11
9
10
11
4
2
1
7
9
10

MANUALS

DESCRIPTION	PART NUMBER	H/C
CBR1000F'93,'94,'95,'96 MICROFICHE	14MZ2PM	4724373
CBR1000F'93 SERVICE MANUAL	61MZ200	4178828
CBR1000F'94 SERVICE MANUAL	61MZ201	4296661
CBR1000F'95 SERVICE MANUAL	61MZ202	4545760
CBR1000F'96 SERVICE MANUAL	61MZ203	4911178
CBR1000F'93 OWNER'S MANUAL	31MZ2600	4082046
CBR1000F'94 OWNER'S MANUAL	31MZ2610	4296612
CBR1000F'95 OWNER'S MANUAL	31MZ2620	4545752
CBR1000F'96 OWNER'S MANUAL	31MZ2630	4911160

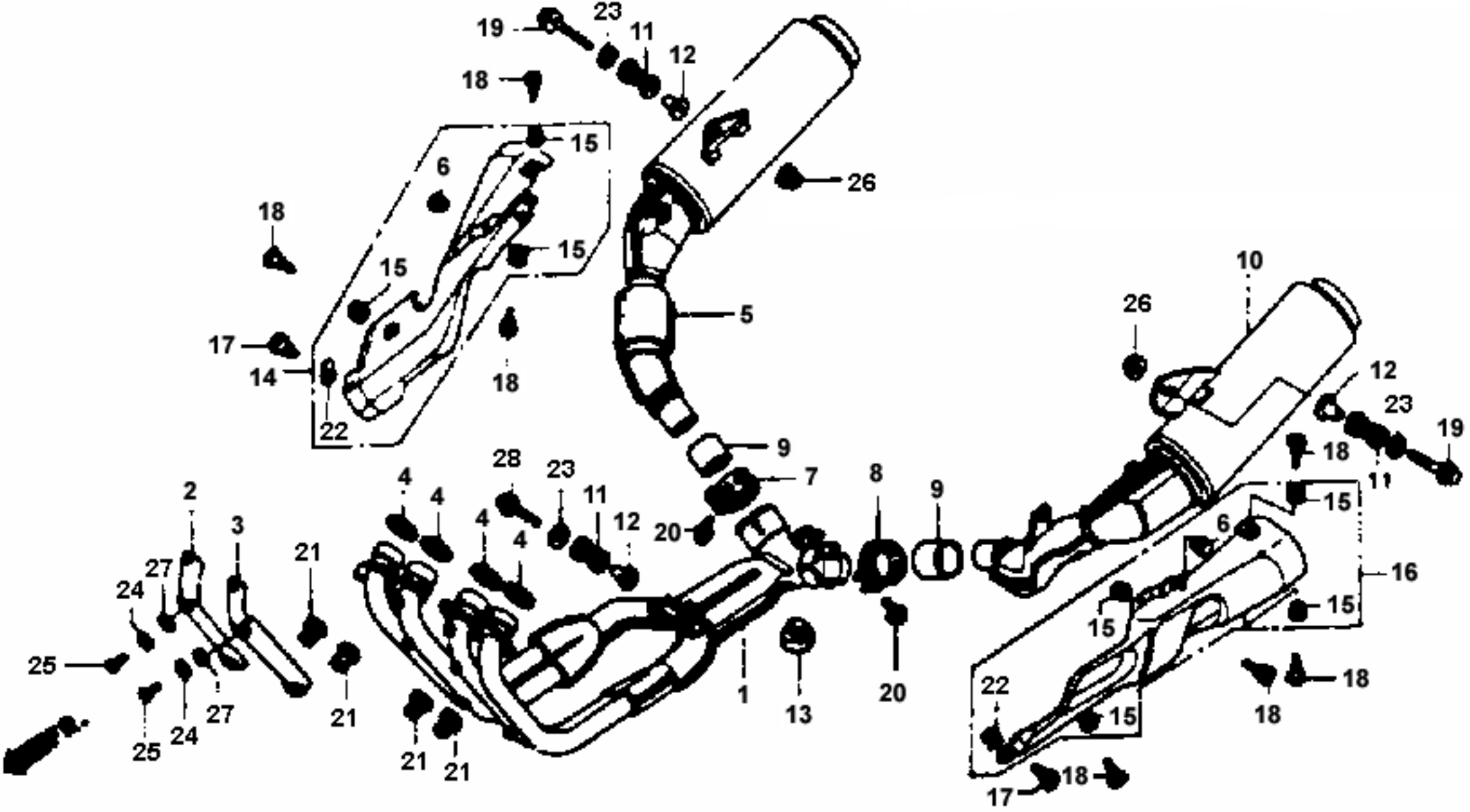
19
23
11
12
18
15
6
26
18
15
15
10
26
5
17
14
22
18
12
23
19
9
18
28
23
7
8
9
11
15
2
4
4
4
12
20
6
3
4
21
27
24
16
15
15
25
1
13
20
22
18
21
27
18
25
24
15
21
21
21
17
18

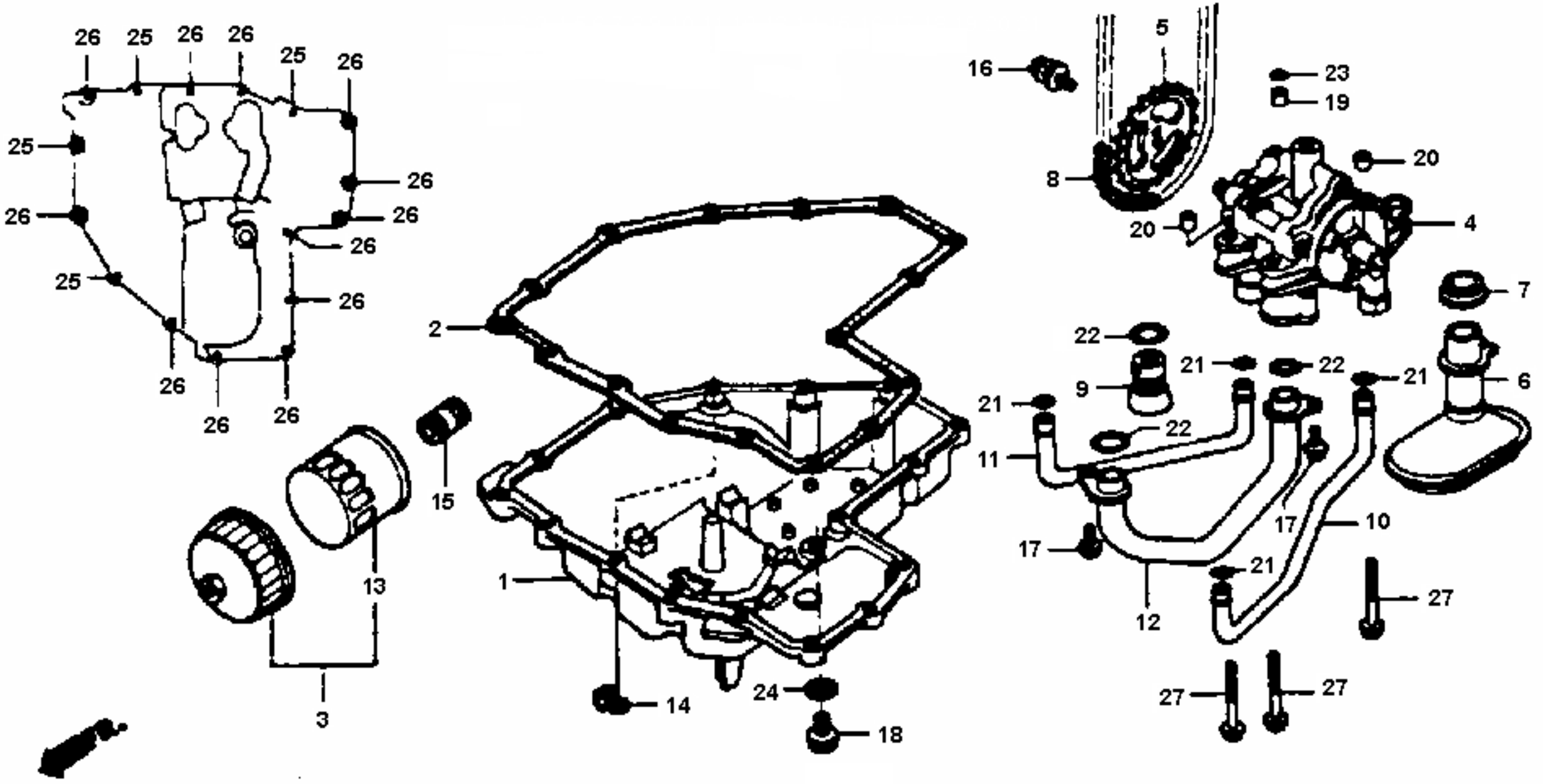
26
25
26
26
25
26
25
26
26
26
26
25
26
26
26
26
26
2
15
13
3
1
14
24
18
16
5
8
23
19
20
20
4
7
22
21
22
21
9
6
21
22
11
17
10
17
21
12
27
27
27

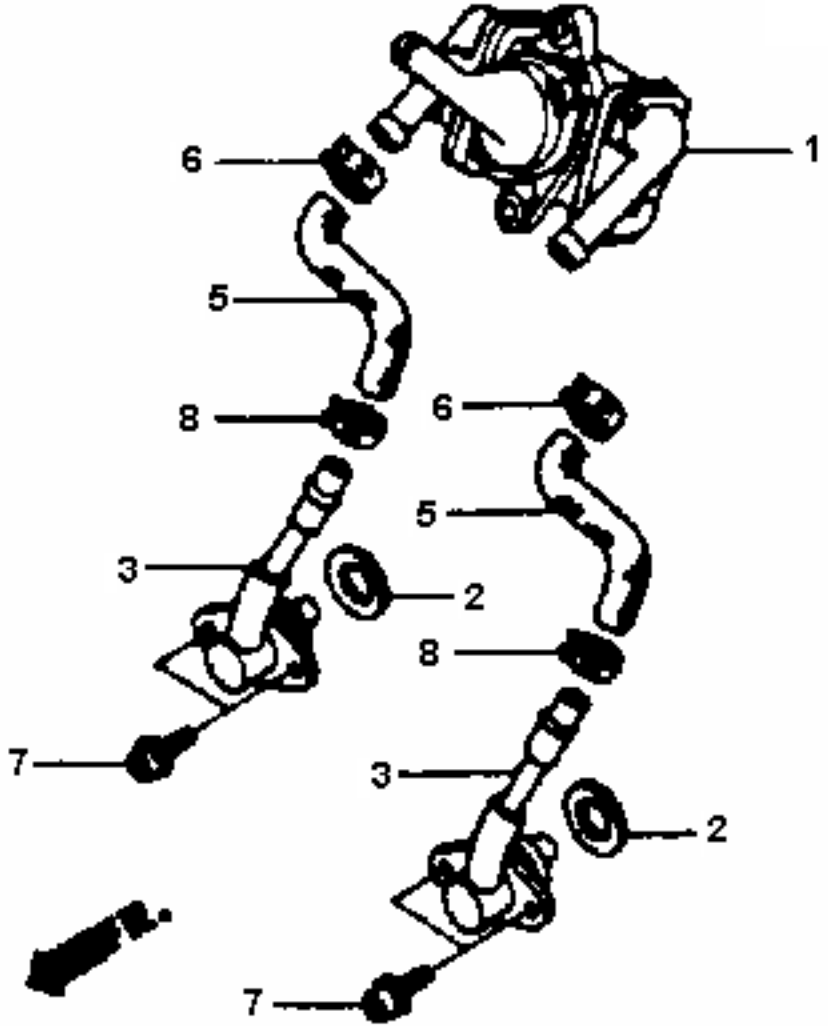
6
1
5
8
6
5
3
2
8
7
3
2
7

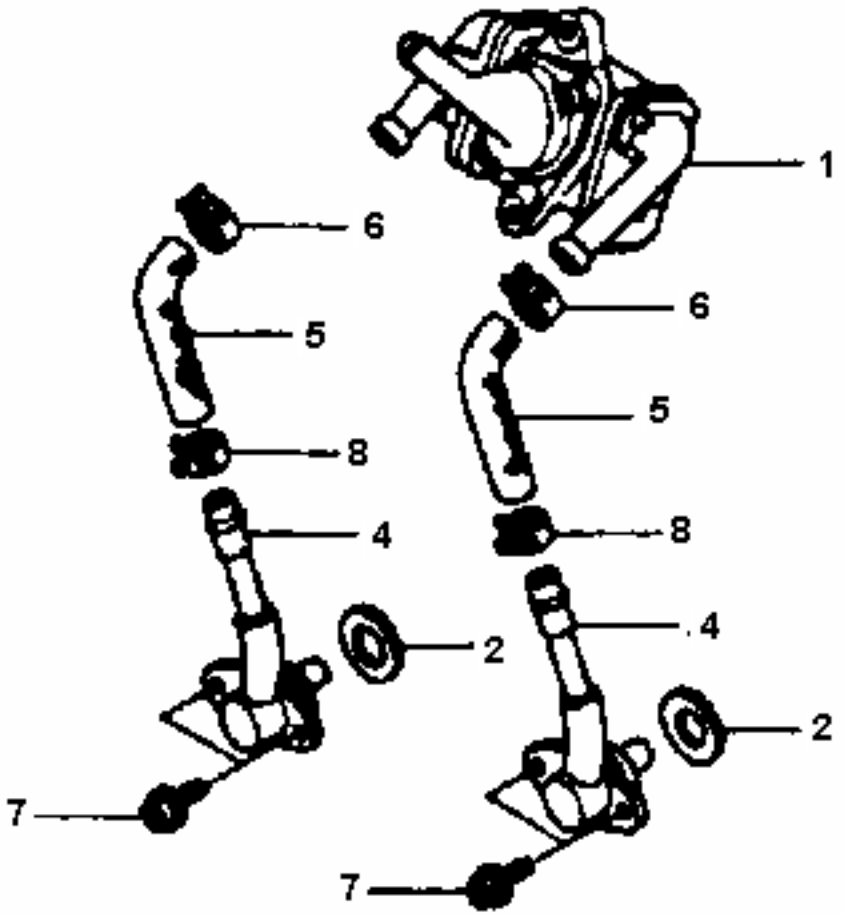
1
6
6
5
5
8
8
4
4
2
2
7
7

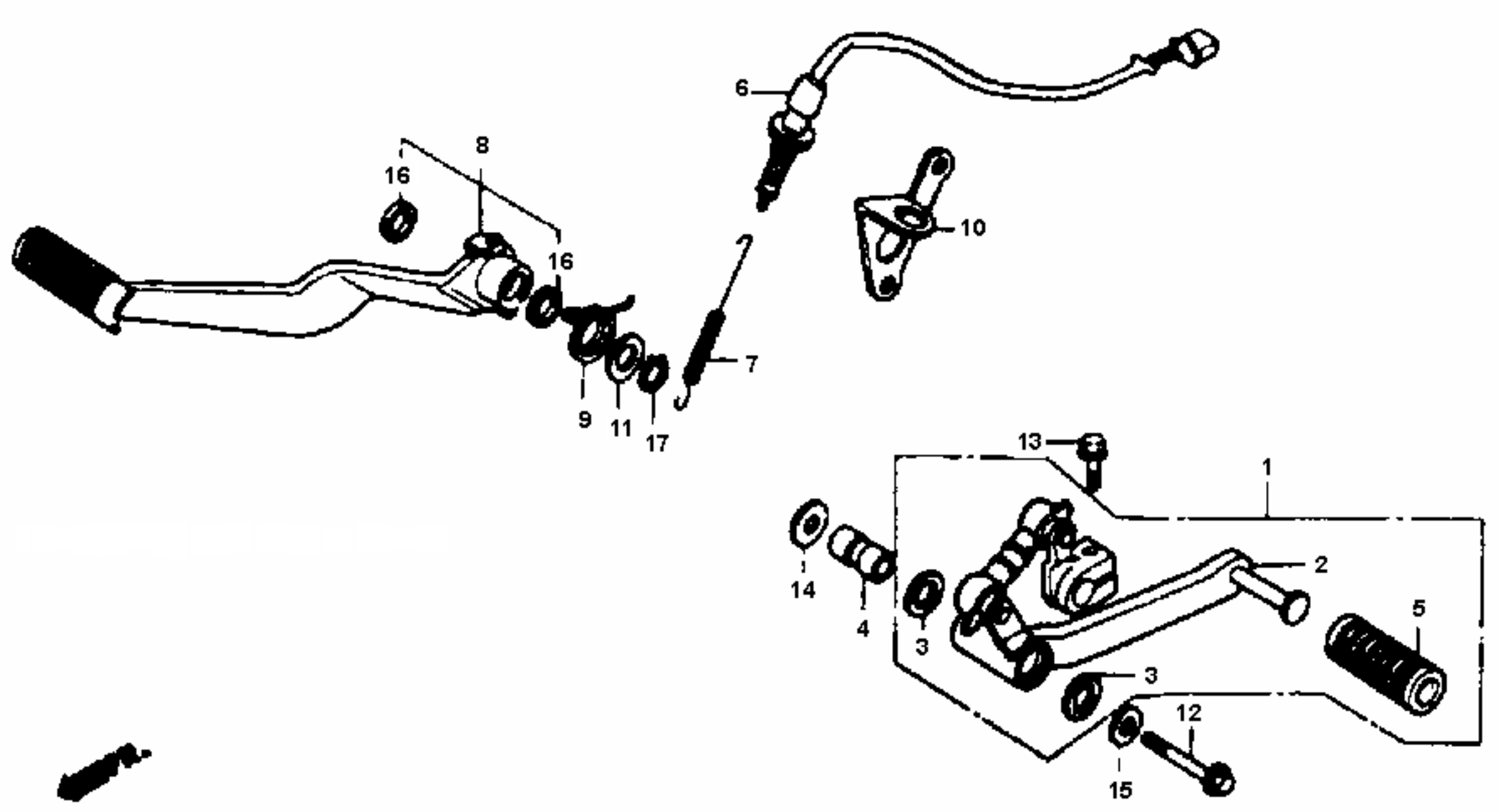
6
8
16
16
10
7
9
11
17
13
1
14
2
4
3
5
3
12
15

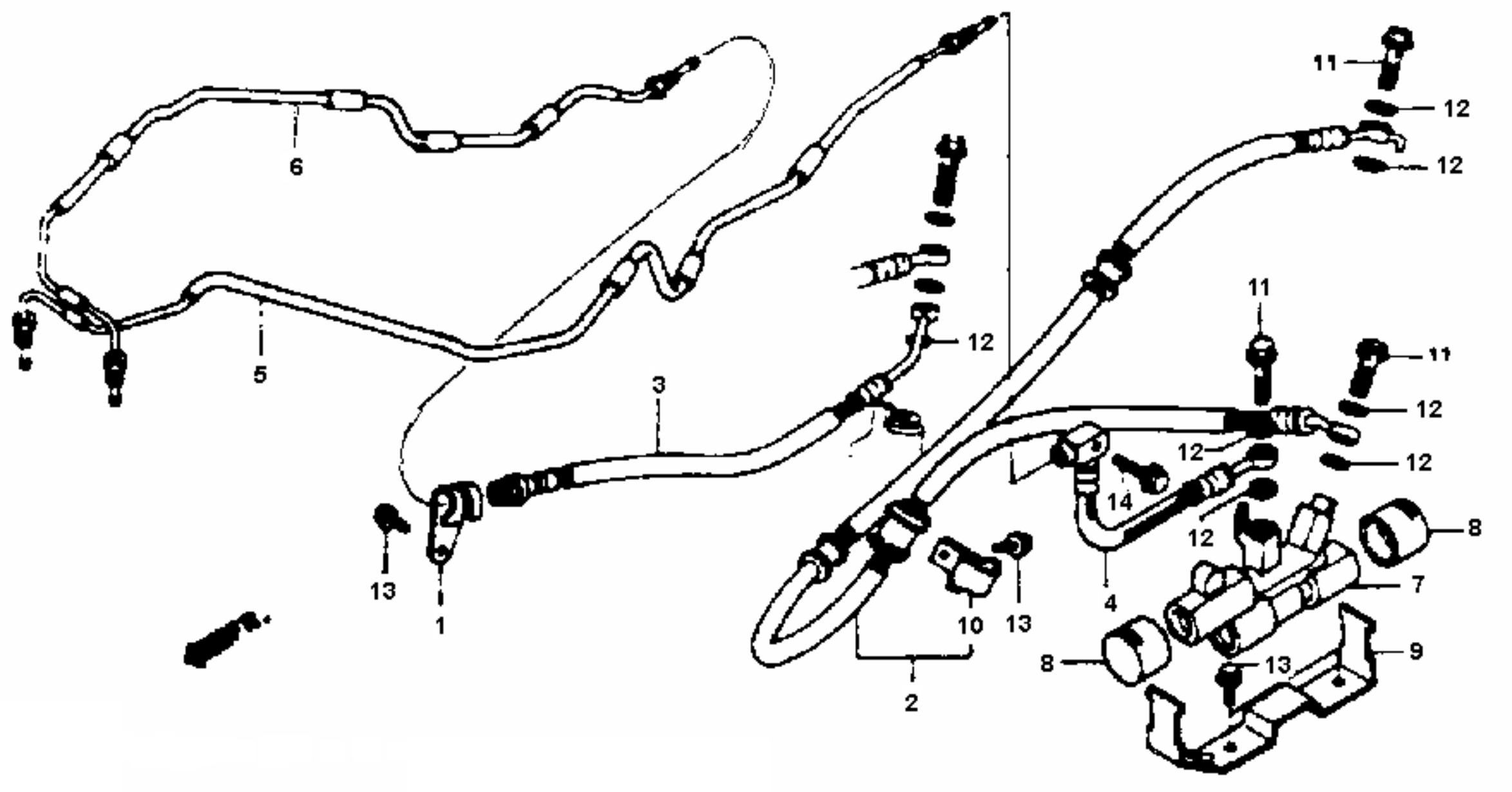
6
5
3
12
11
12
12
11
11
12
12
12
12
14
12
8
7
9
8
13
4
10
13
2
13
1

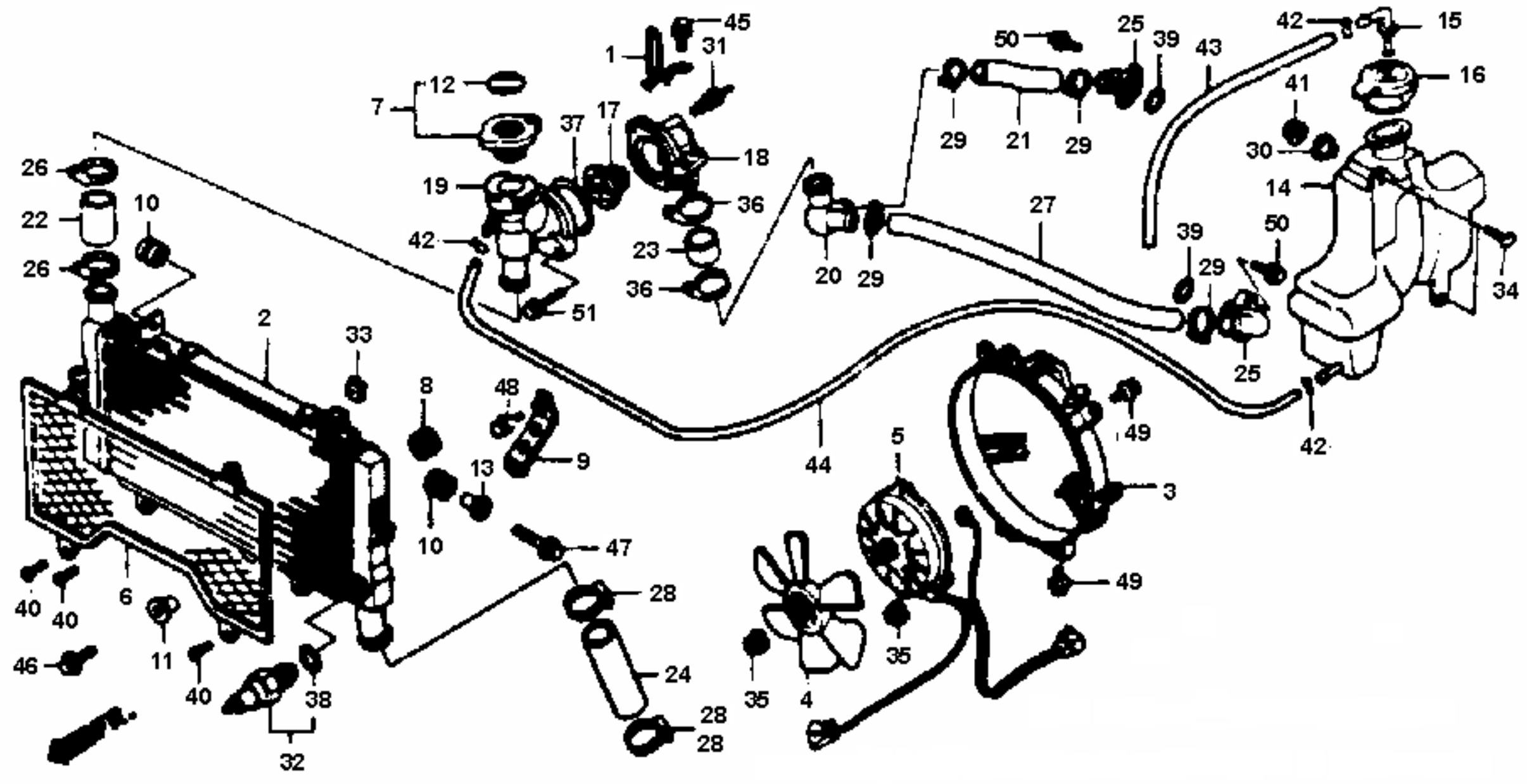
45
31
1
12
7
37
17
18
19
36
42
23
36
51
50
25
39
43
42
15
16
41
30
14
29
21
29
27
39
50
29
25
34
42
26
22
26
10
2
33
8
48
9
13
10
47
28
24
28
28
32
38
40
40
6
11
40
46
35
4
35
5
44
49
3
49

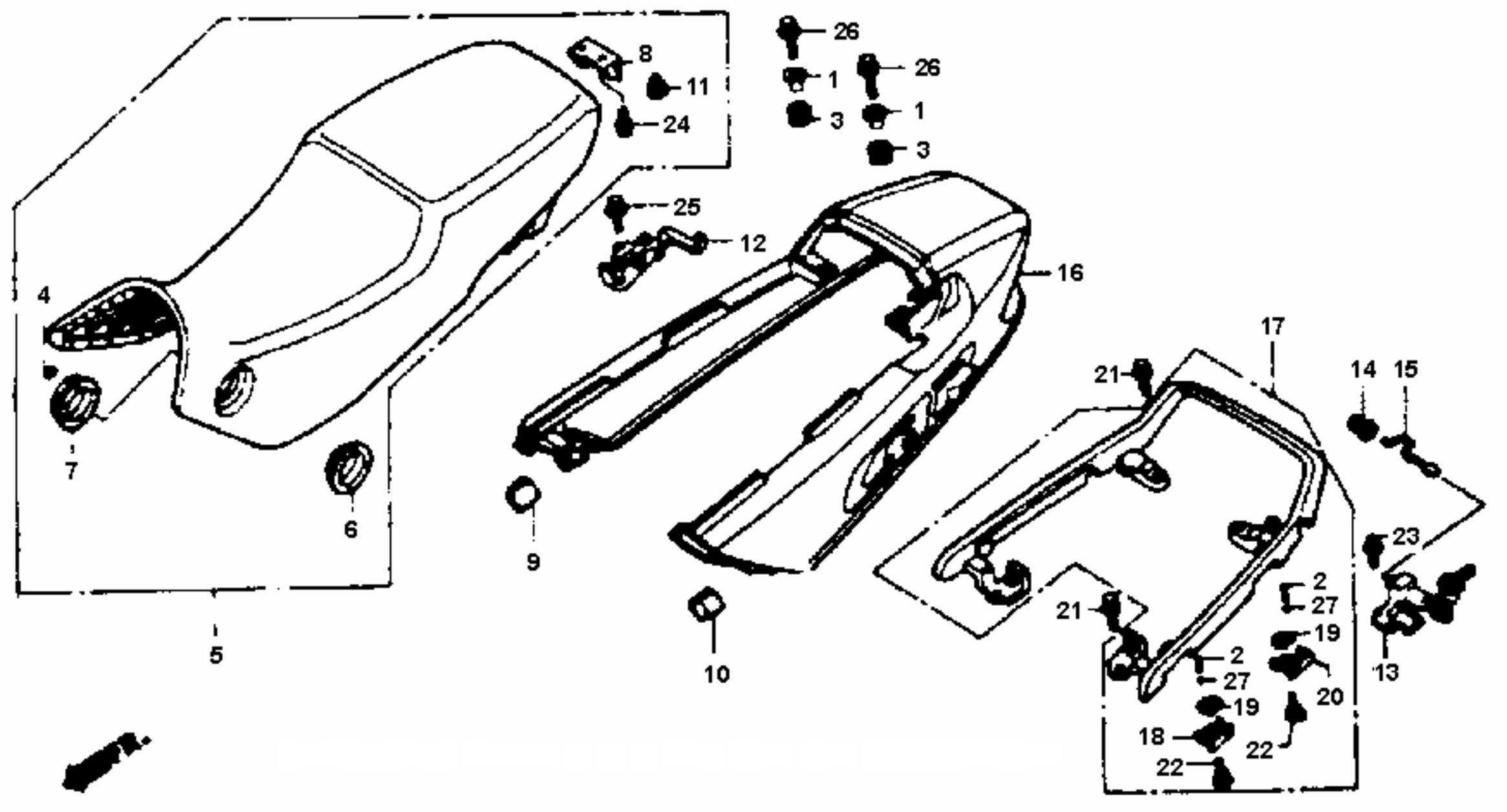
26
8
11
24
1
3
26
1
3
25
12
16
4
7
6
5
9
10
17
21
14
15
23
2
27
21
19
2
27
13
20
19
18
22
22

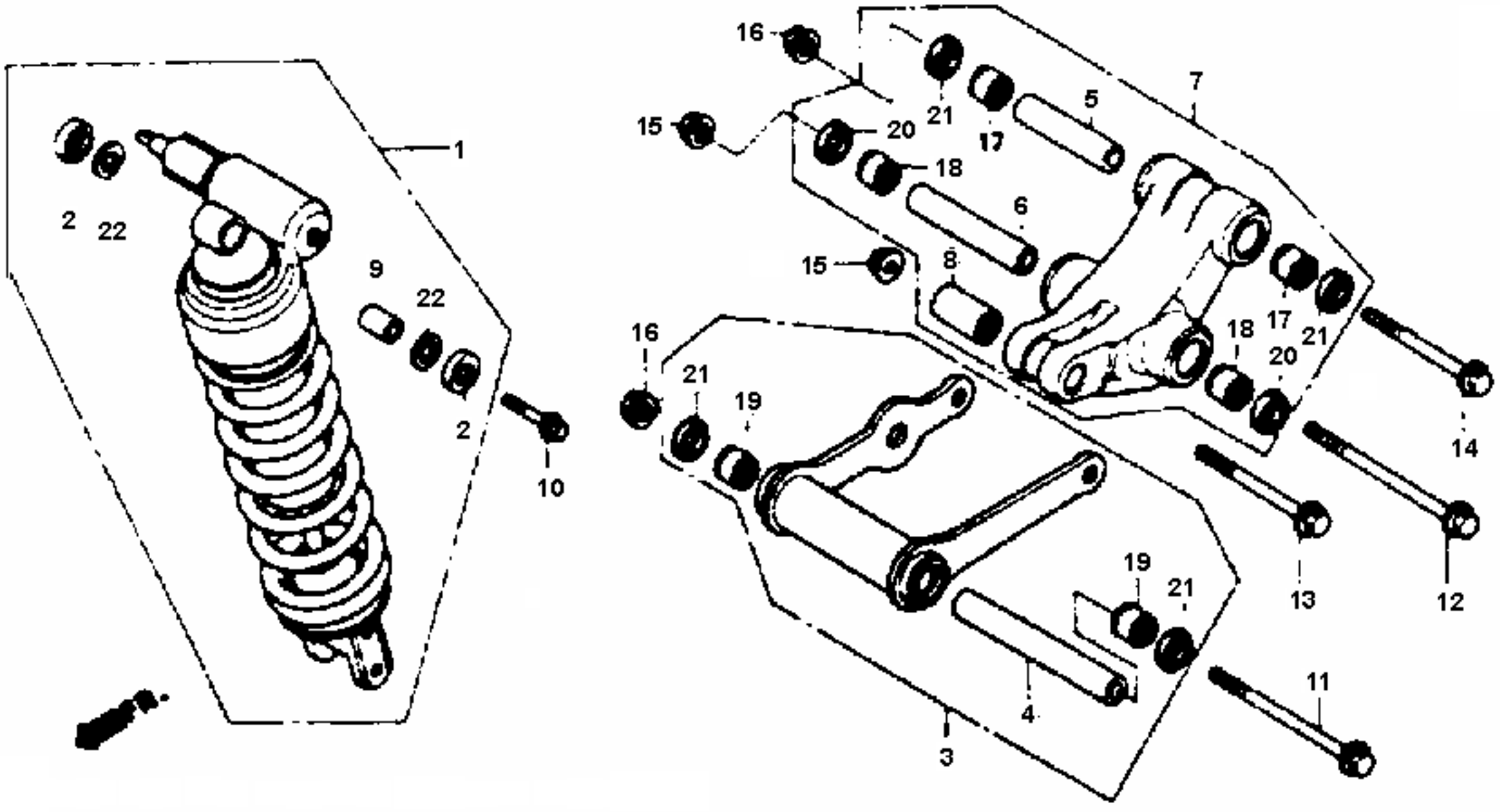
1
2
22
9
22
2
10
16
21
17
5
7
15
20
18
6
15
8
16
21
19
18
17
21
20
14
13
12
19
21
11
4
3

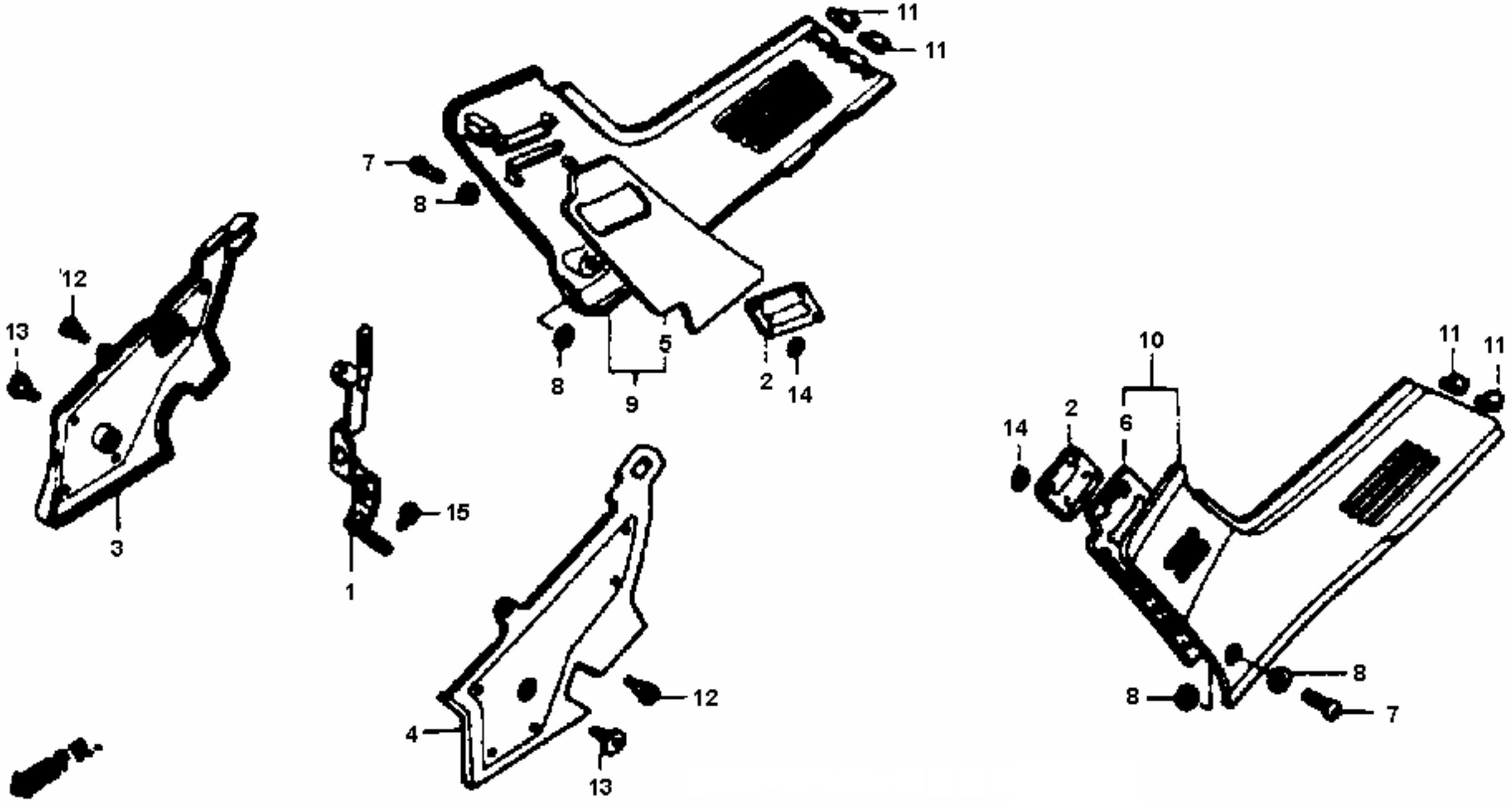
11
11
7
8
12
13
8
5
9
2
14
3
15
1
12
4
13
10
11
11
14
2
6
8
8
7

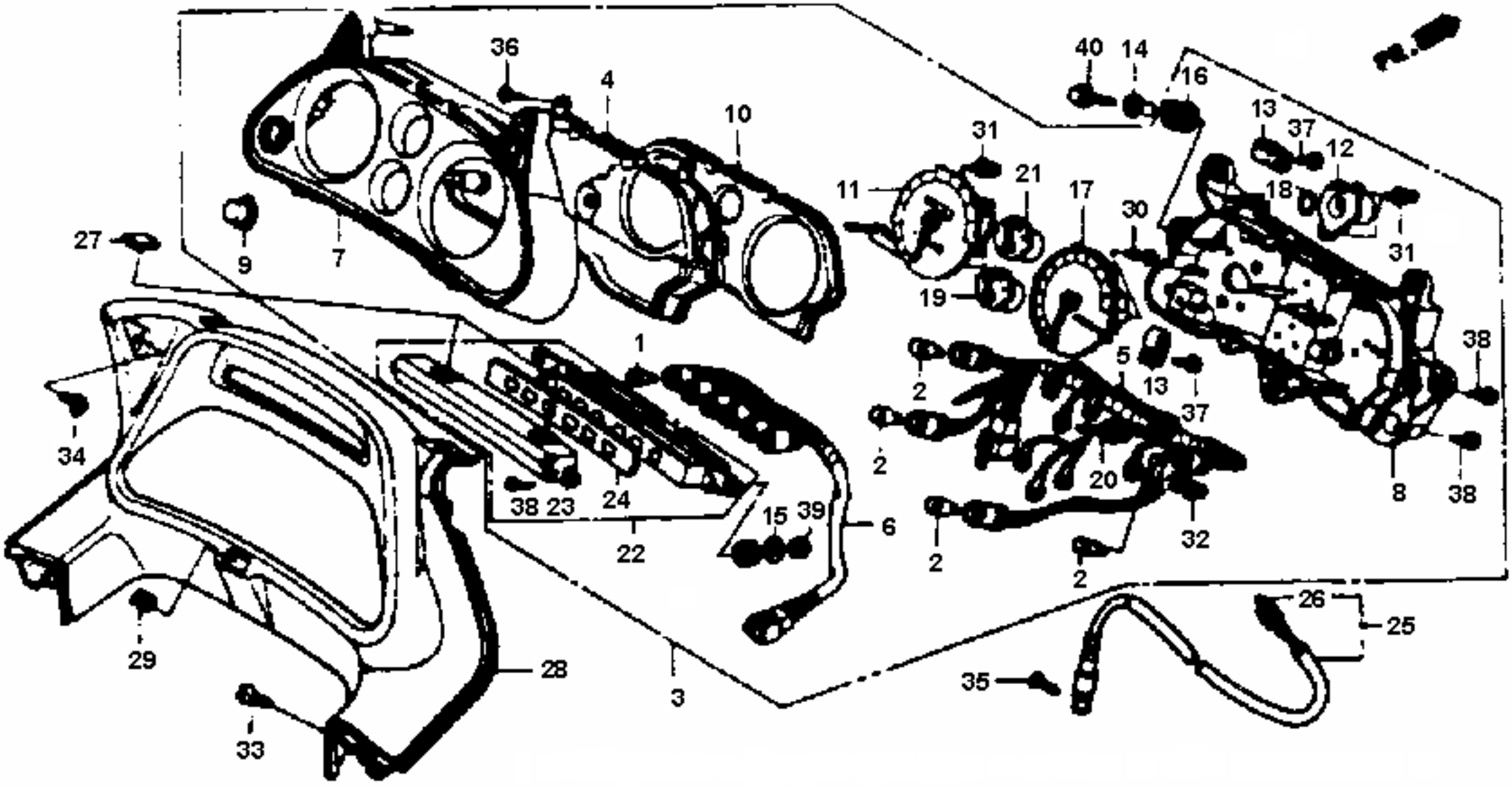
36
4
10
40
14
16
13
37
12
31
21
11
17
30
18
31
27
9
7
19
1
38
5
13
37
2
2
20
8
38
34
38
23
24
15
39
6
22
32
2
2
26
25
29
28
3
35
33

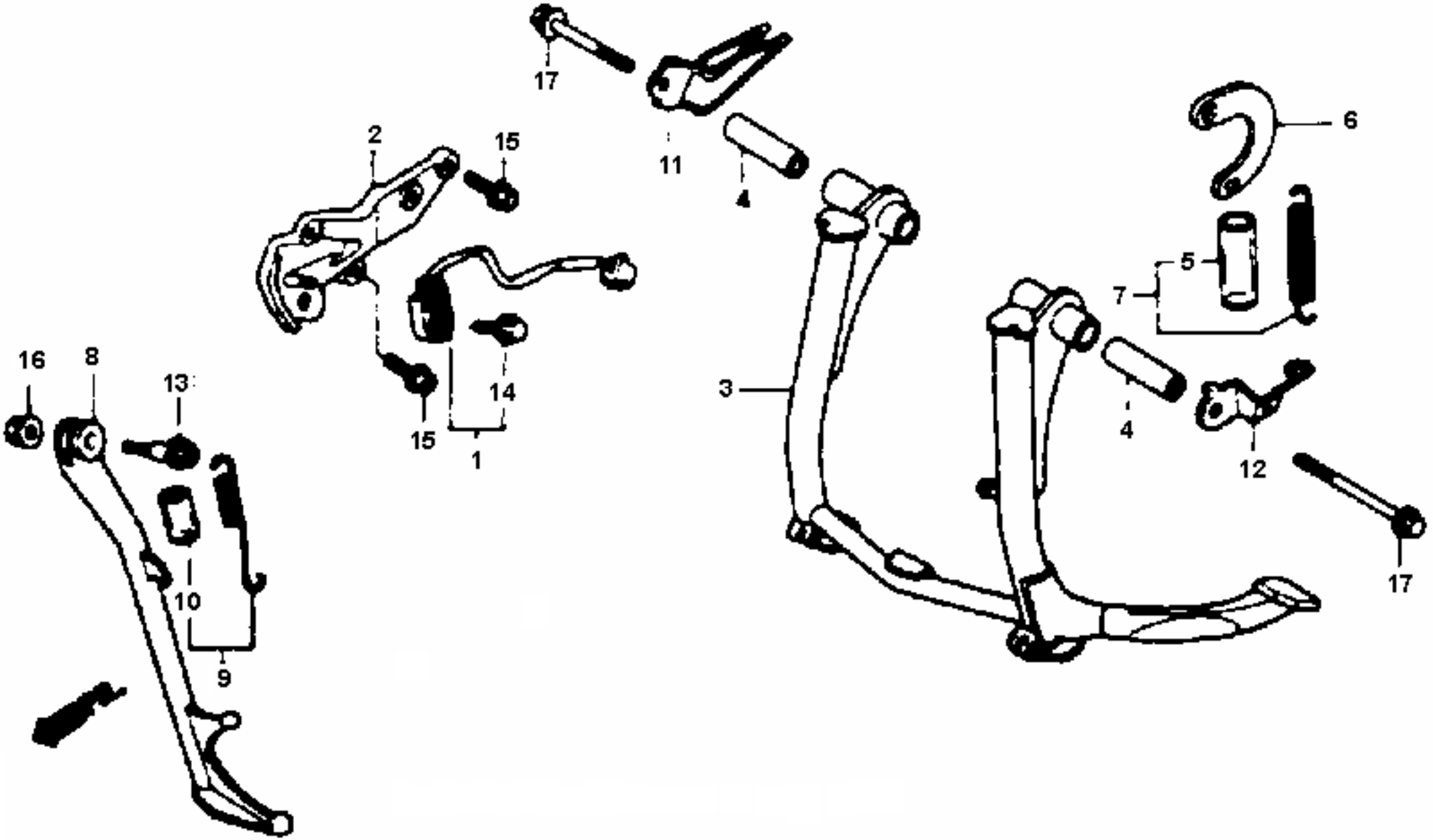
17
11
4
2
15
6
5
7
3
4
12
17
16
8
13
14
15
1
10
9

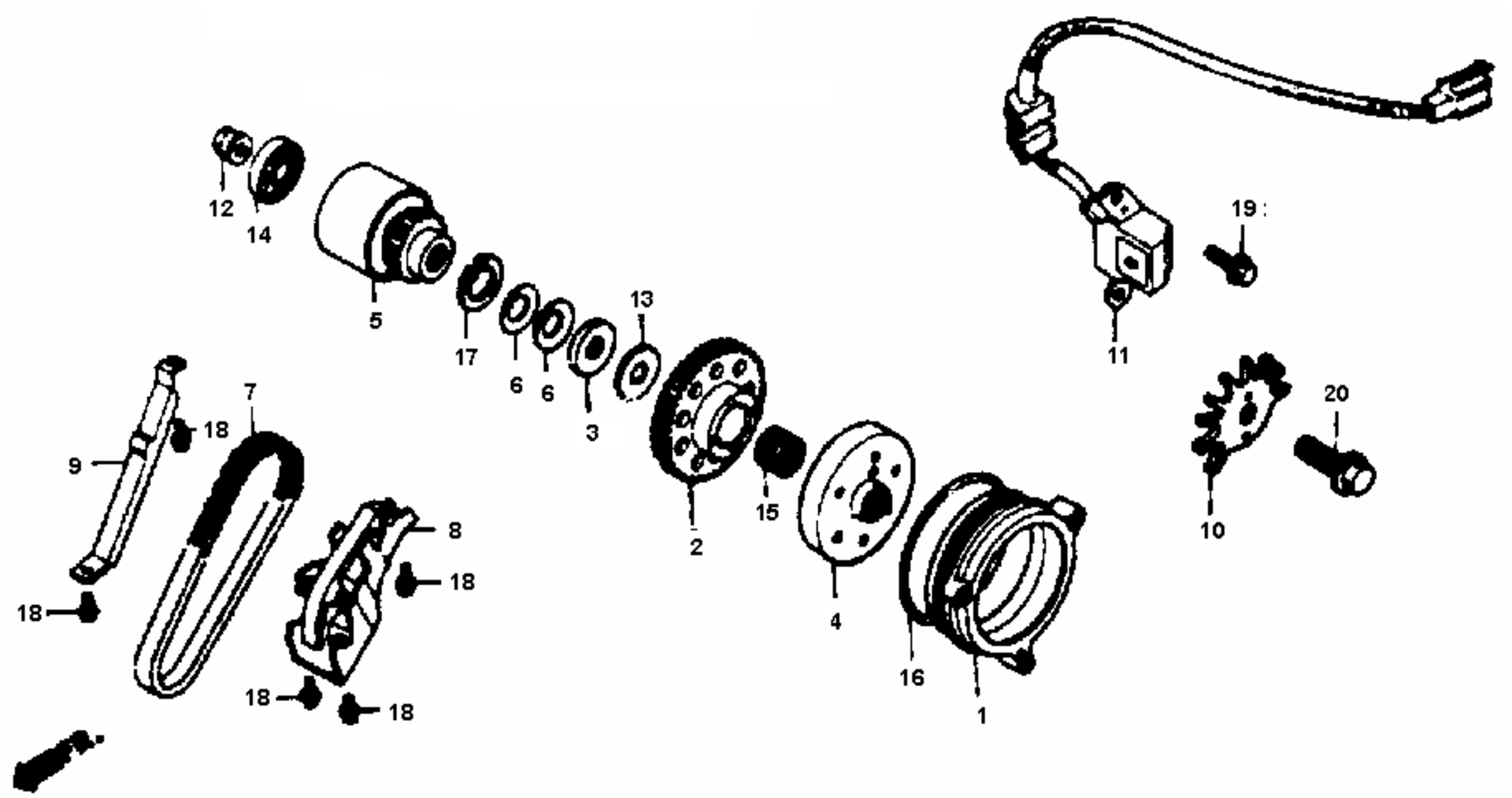
12
14
5
17
6
6
3
13
2
15
4
16
1
11
19
10
20
9
18
7
8
18
18
18
18

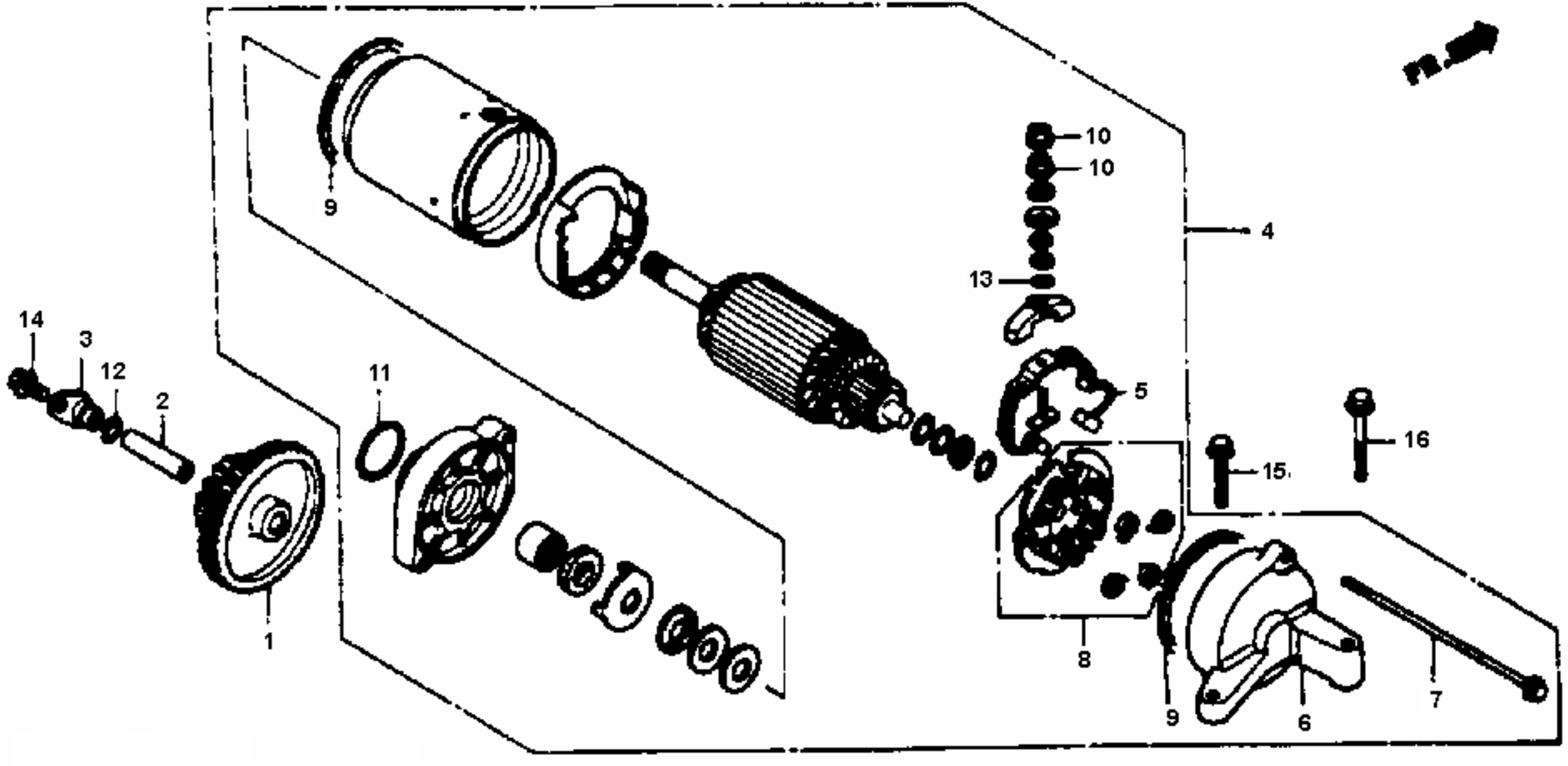
9
10
10
4
13
14
3
12
2
11
5
16
15
1
8
9
6
7

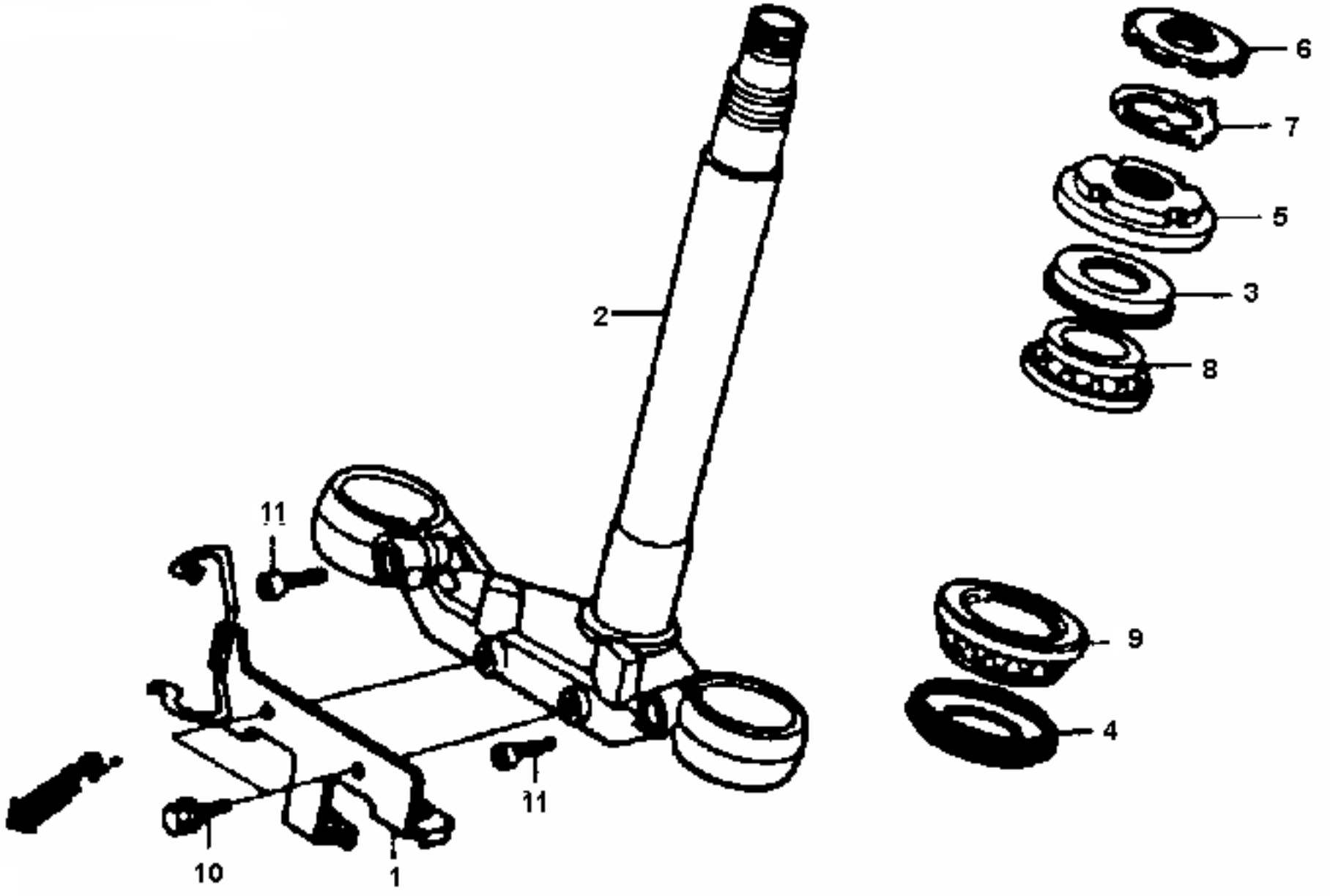
6
7
5
3
8
2
11
9
4
11
10
1

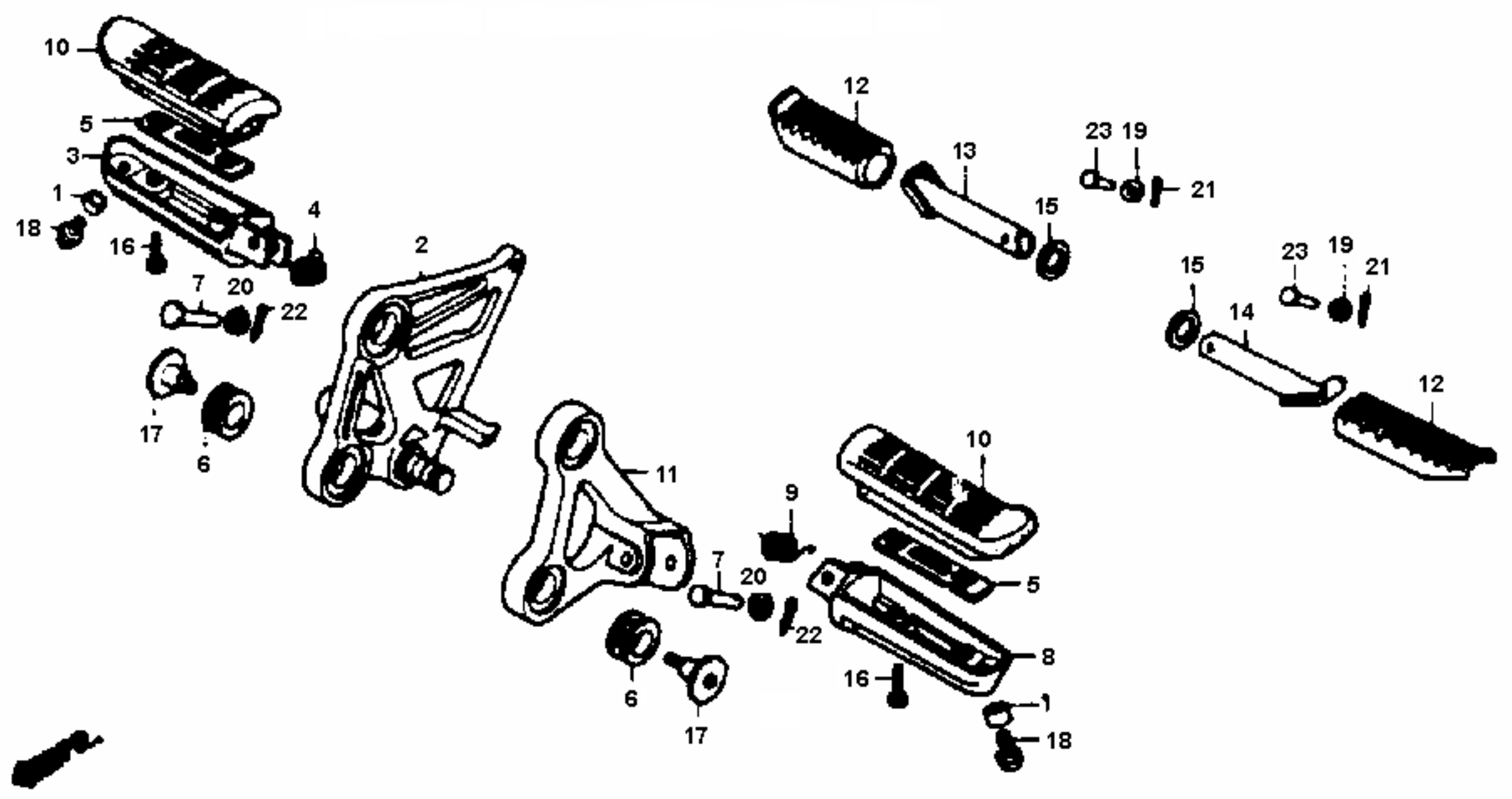
10
5
3
1
18
16
4
2
7
20
22
17
6
12
13
15
23
19
21
15
23
19
21
14
12
11
9
10
7
20
5
22
8
6
16
1
17
18

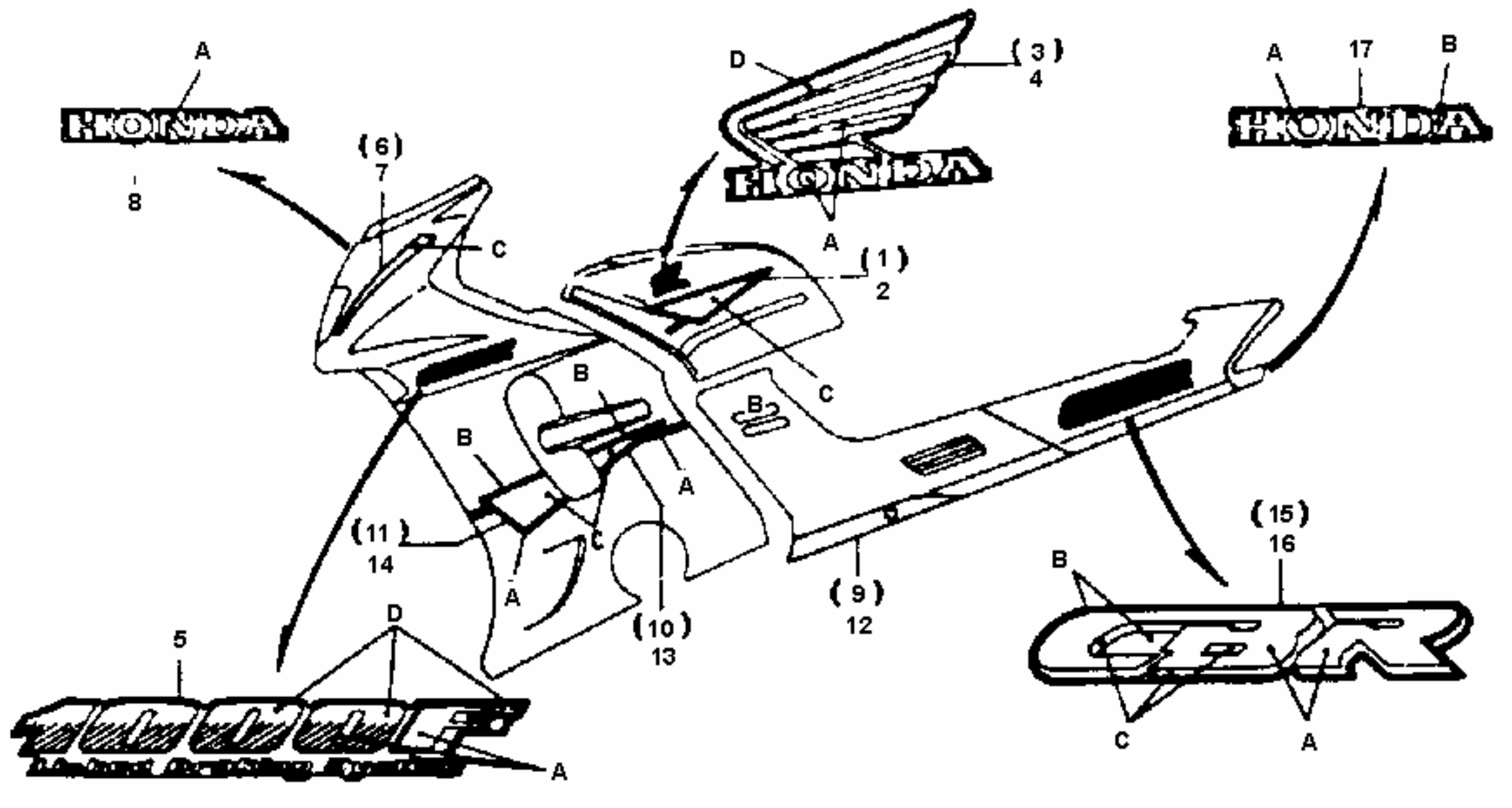
A
8
(6)
7
C
D
(3)
4
A
(1)
2
C
A
17
B
B
B
A
(11)
14
C
A
(10)
13
B
(9)
12
(15)
16
B
C
A
5
D
A

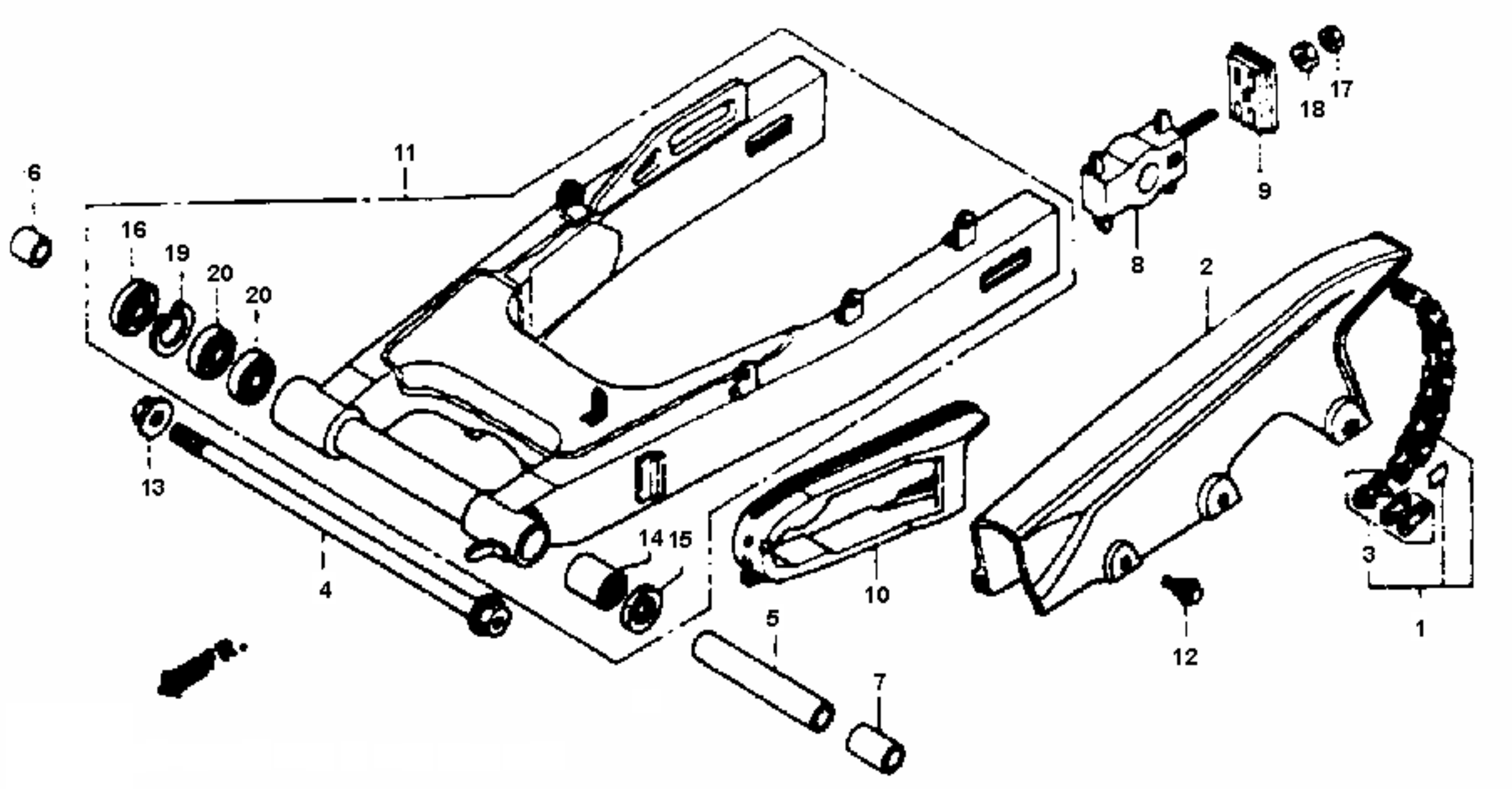
6
11
16
19
20
20
13
4
14
15
10
5
7
8
9
18
17
2
3
1
12

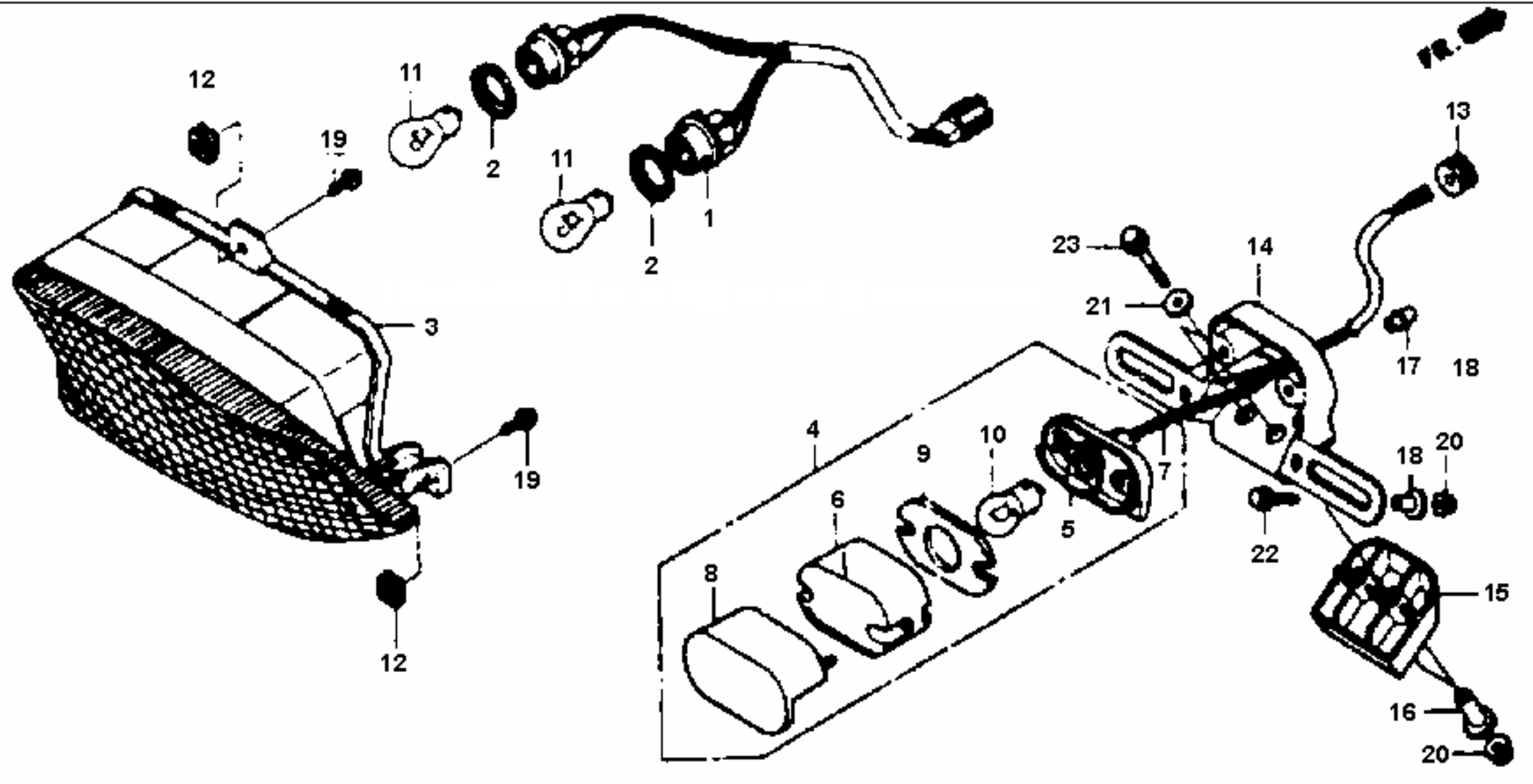
12
11
19
2
11
2
1
3
19
12
13
23
14
21
17
18
4
9
10
7
18
20
6
5
22
8
15
16
20

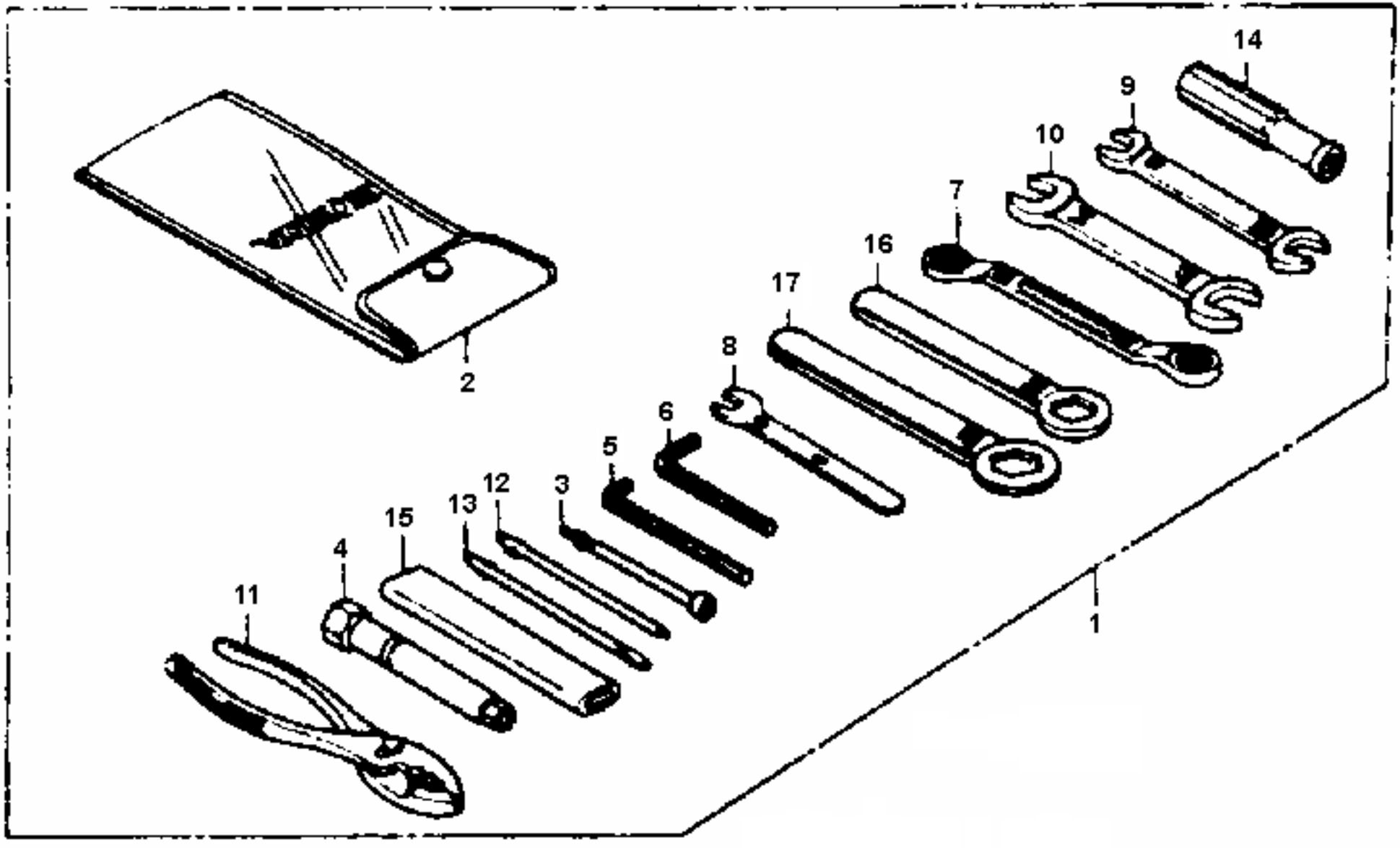
14
9
10
7
16
17
8
6
5
3
12
13
15
4
11
2
1

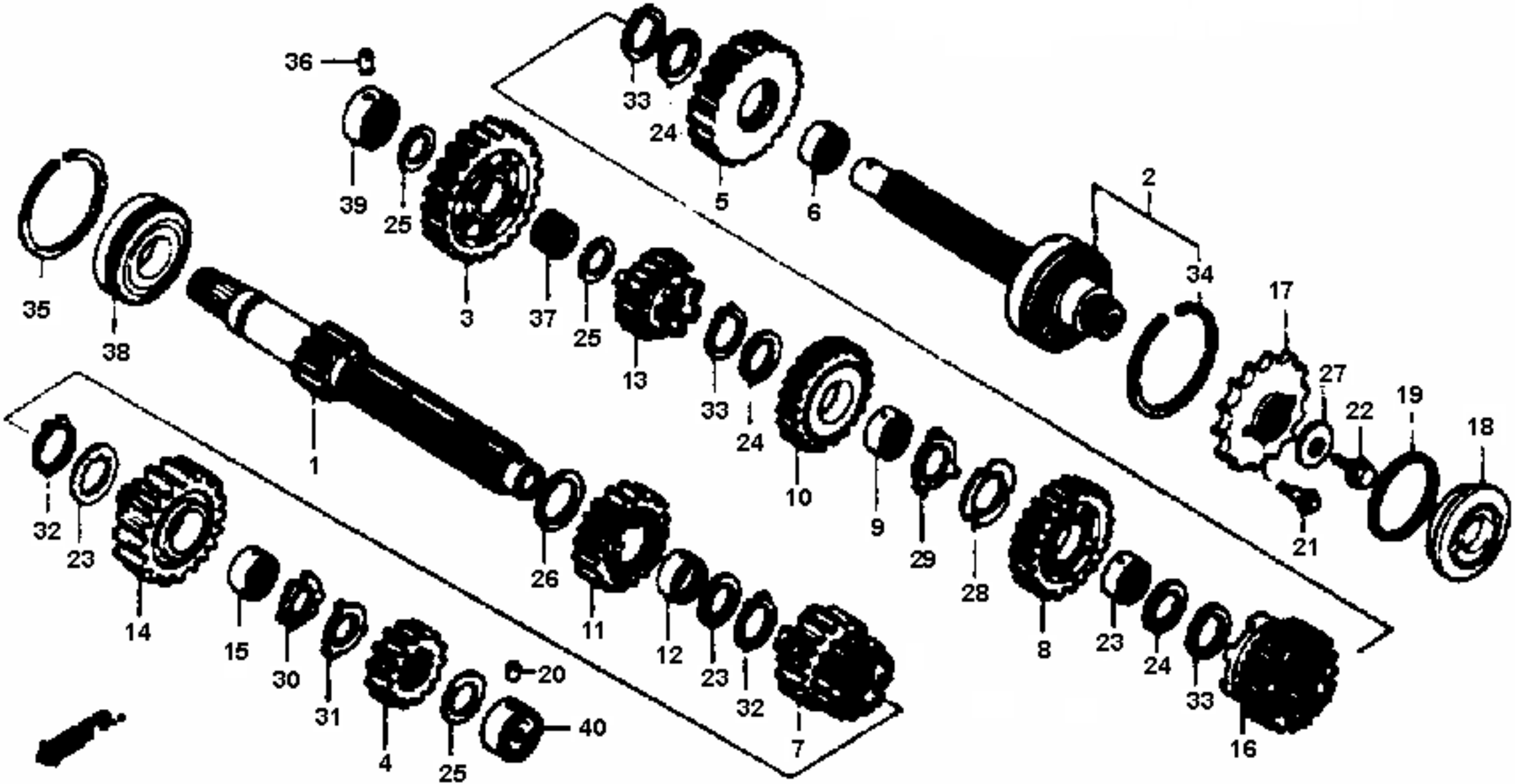
36
39
25
3
37
25
13
33
24
10
9
29
28
8
23
24
33
16
7
32
23
12
11
26
1
35
38
33
24
5
6
2
34
17
27
22
19
18
21
32
23
14
15
30
31
4
25
20
40

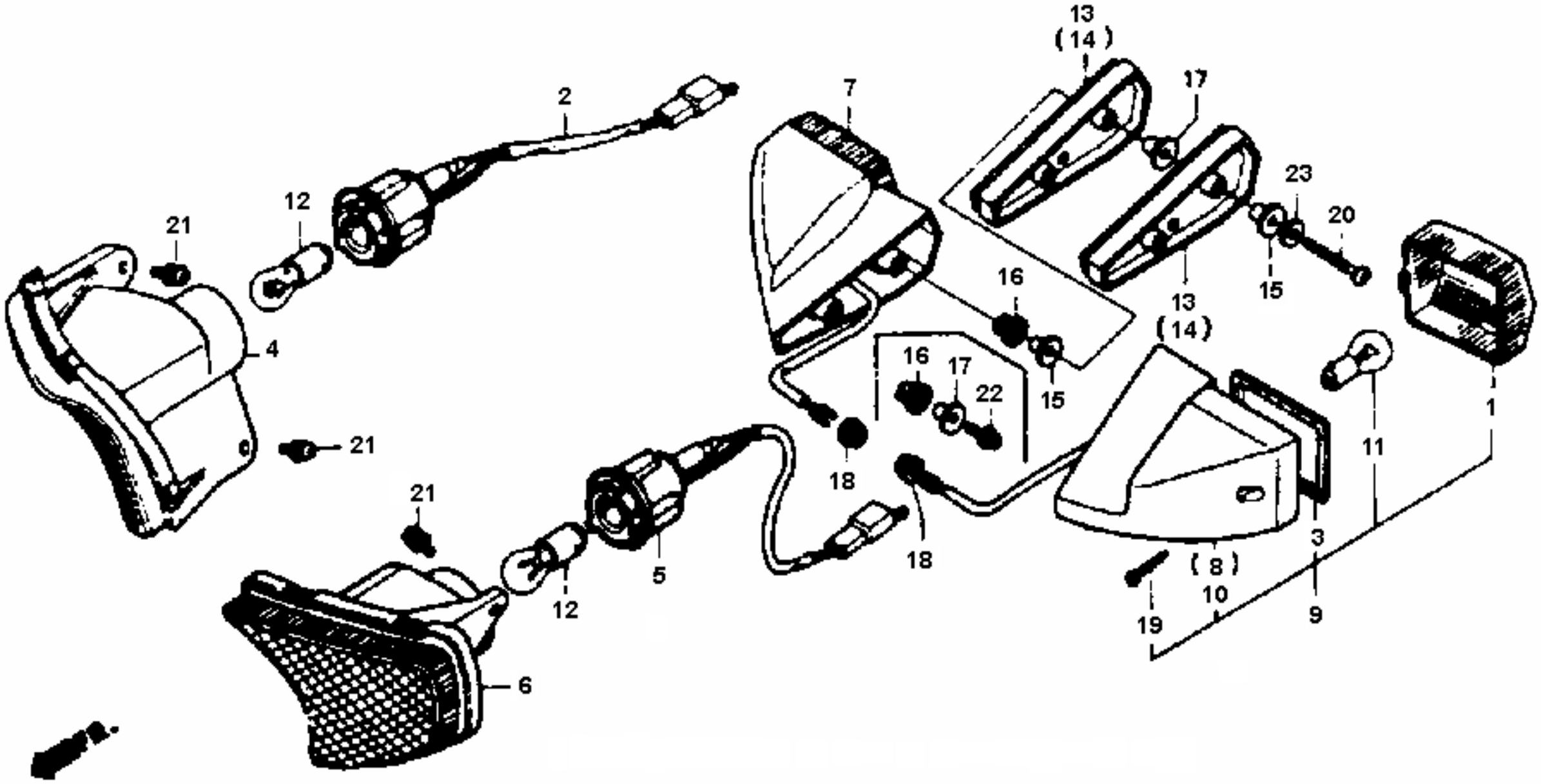
13
(14)
17
2
7
23
20
12
21
16
15
13
(14)
4
16
17
22
15
1
21
11
18
21
3
18
5
(8)
12
10
19
9
6

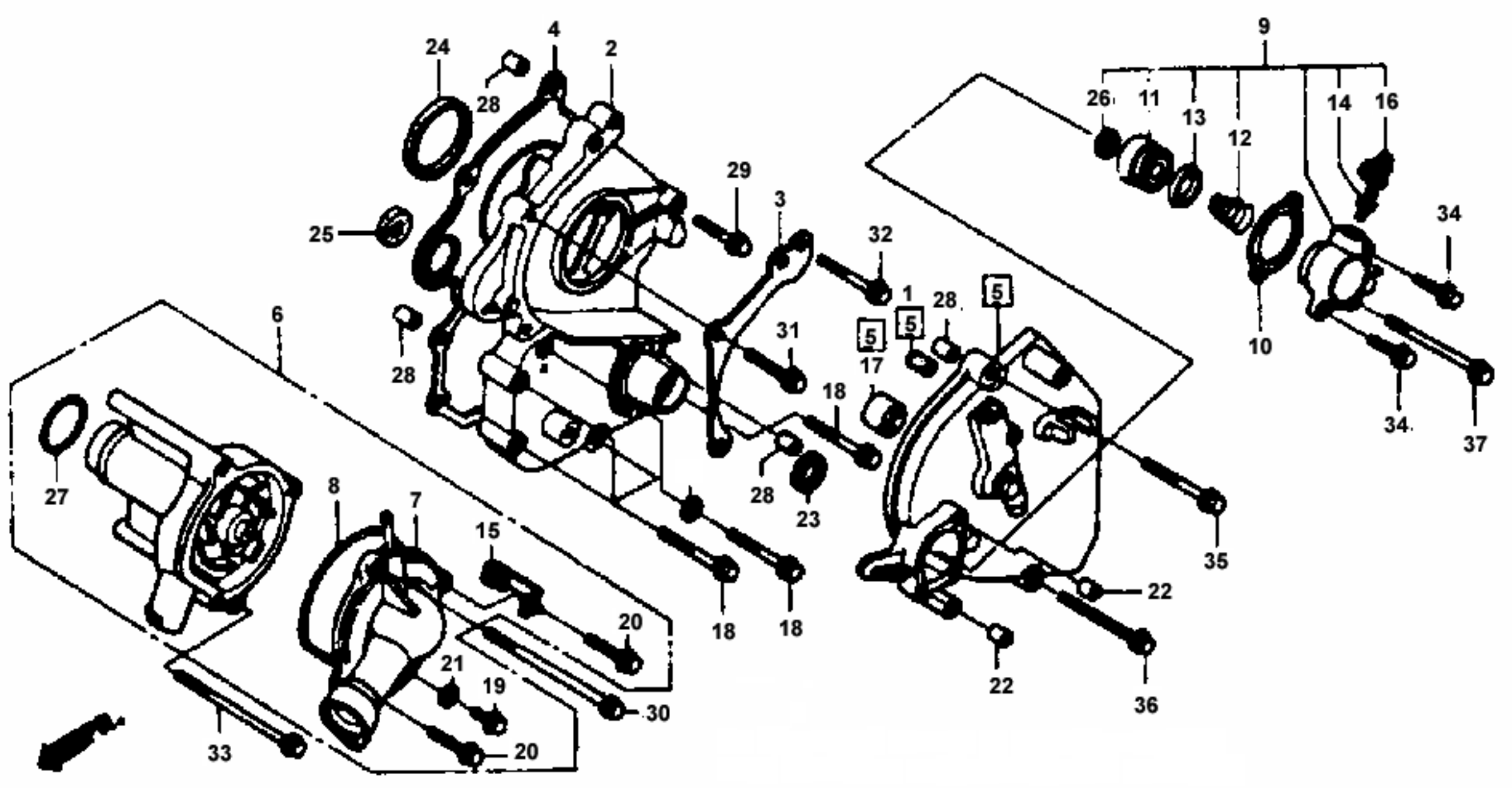
24
4
2
28
9
26
11
13
12
14
16
29
3
25
32
34
1
28
5
6
31
5
5
17
10
28
18
34
37
27
8
7
15
28
23
35
22
20
18
18
21
19
22
36
30
33
20

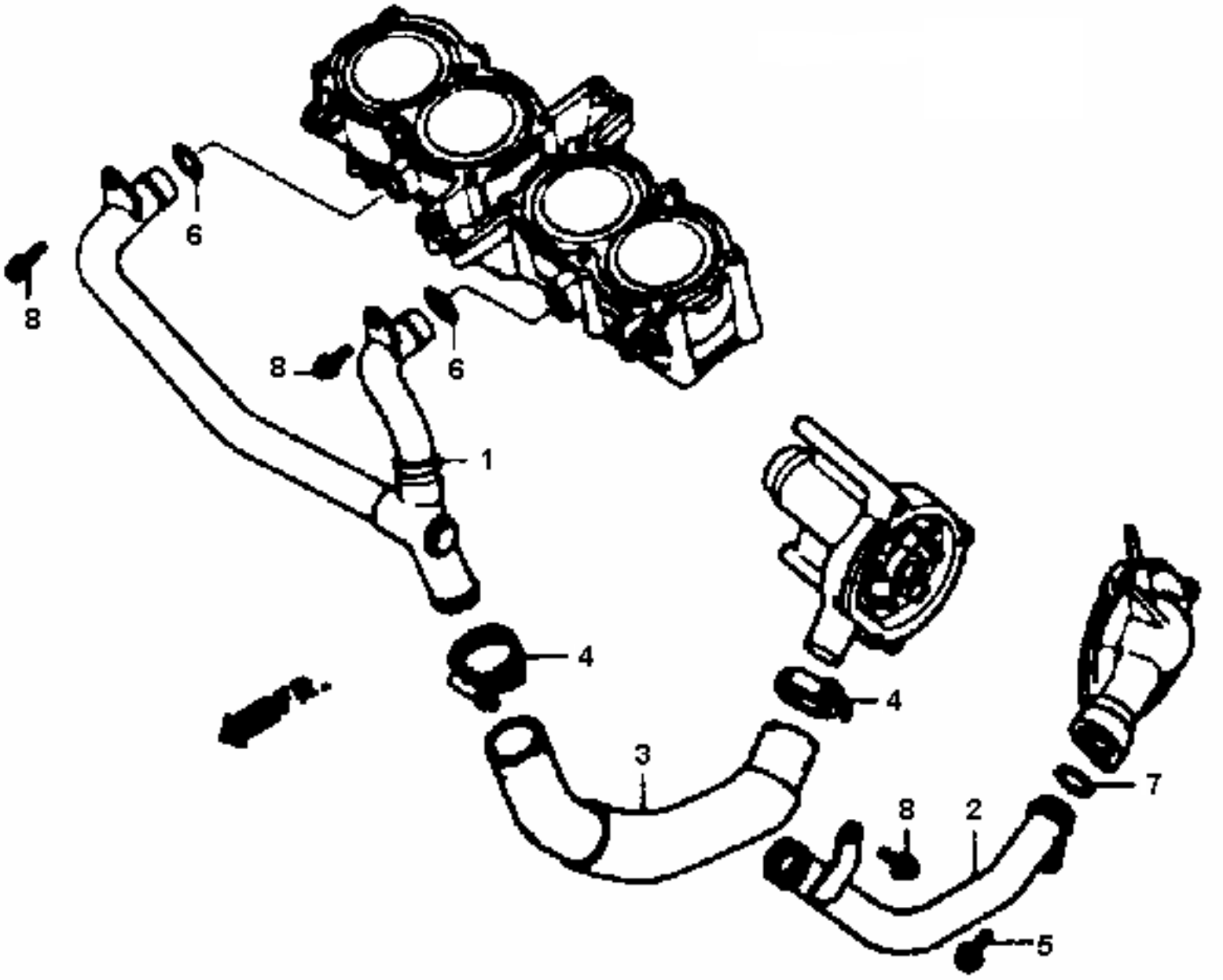
6
8
8
6
1
4
4
3
8
2
7
5

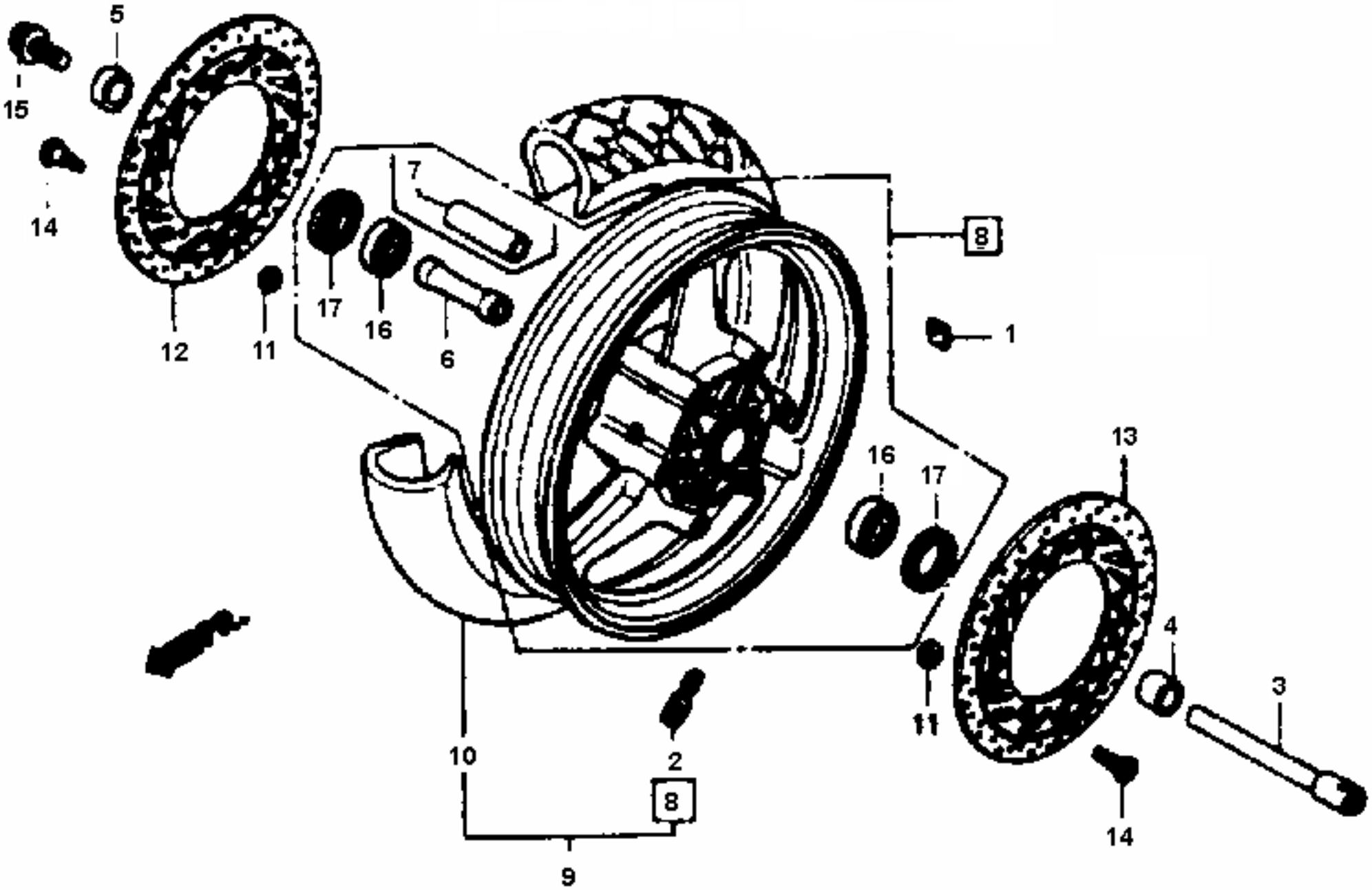
5
15
14
12
11
7
17
16
6
8
1
16
17
13
4
3
11
10
2
8
14
9

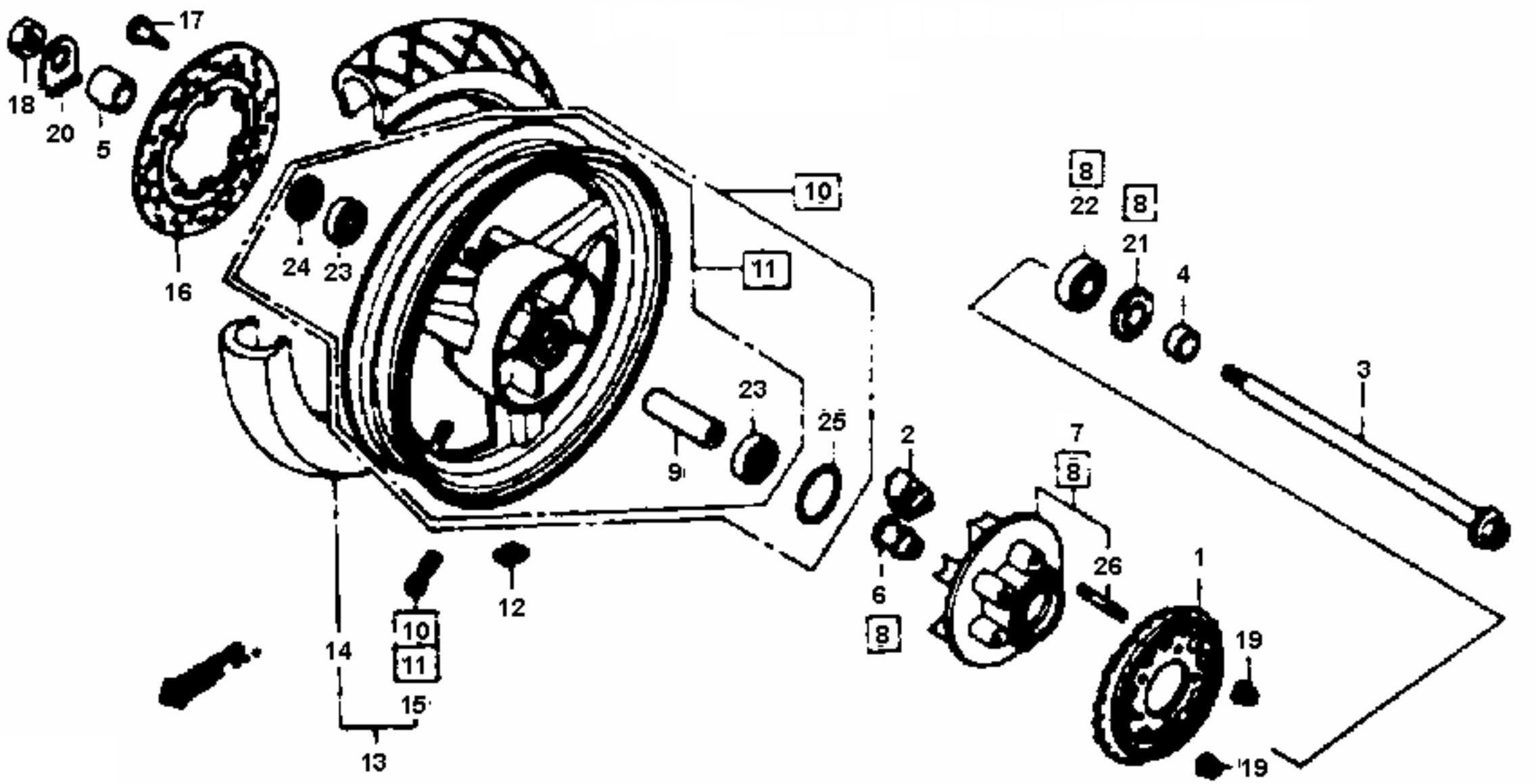
17
18
20
5
16
24
23
10
11
22
8
21
4
3
23
25
9
2
7
8
26
1
6
8
12
10
11
14
15
13
19
19

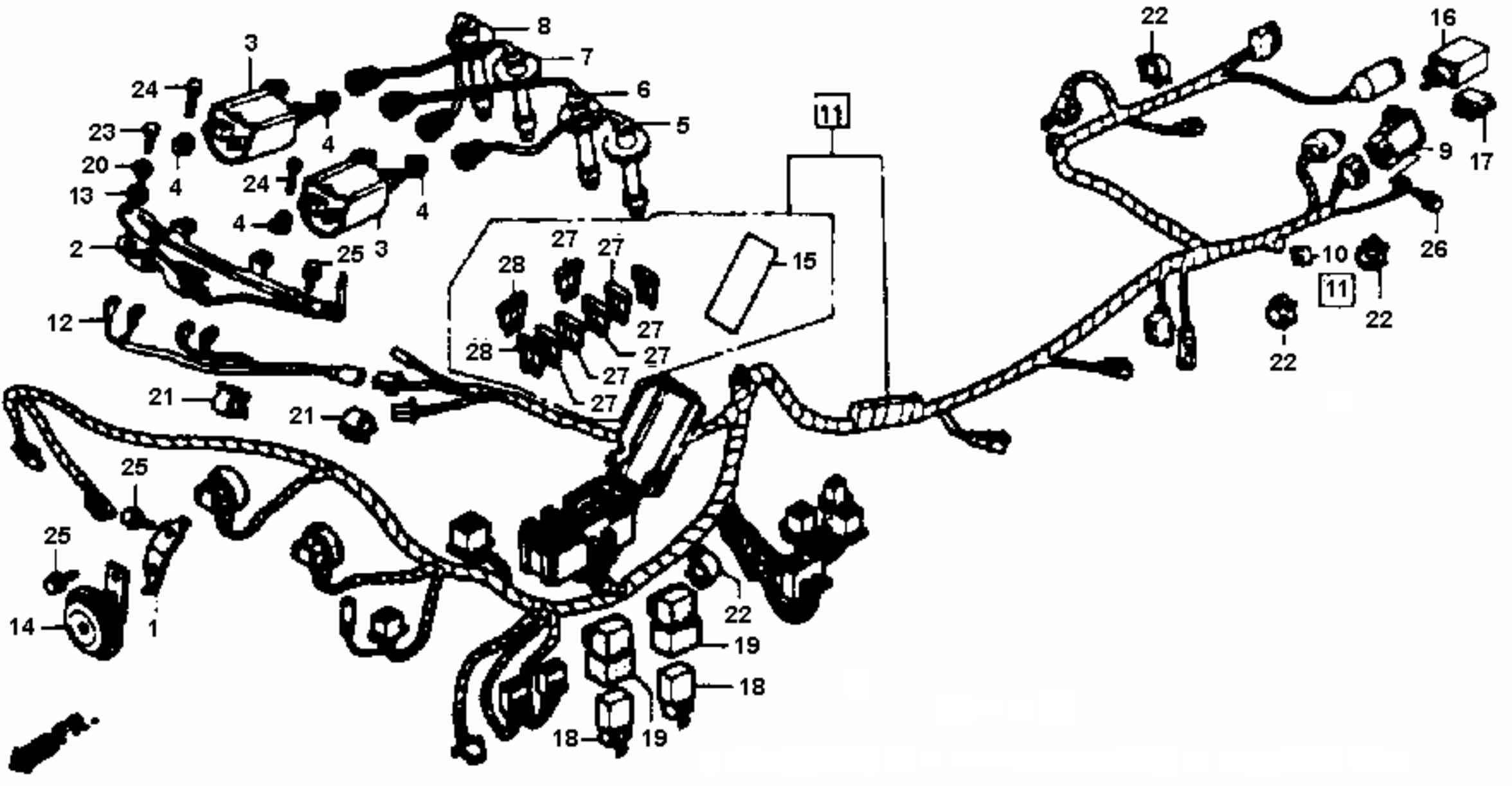
3
8
7
6
5
24
23
20
13
2
4
4
24
4
4
3
25
12
11
15
27
27
28
28
27
27
27
27
21
21
22
16
17
9
26
10
11
22
22
25
25
14
1
22
19
18
18
19