HONDA

CBR600F

SHOP MANUAL
MANUAL DE TALLER
MANUALE D'OFFICINA

IMPORTANT SAFETY NOTICE

WARNING *Indicates a strong possibility of severe personal injury or loss of life if instructions are not followed.*

CAUTION: *Indicates a possibility of personal injury or equipment damage if instructions are not followed.*

NOTE: Gives helpful information.

Detailed descriptions of standard workshop procedures, safety principles and service operations are not included. It is important to note that this manual contains *some* warnings and cautions against some specific service methods which could cause **PERSONAL INJURY** to service personnel or could damage a vehicle or render it unsafe. Please understand that those warnings could not cover all conceivable ways in which service, whether or not recommended by Honda might be done or of the possibly hazardous consequences of each conceivable way, nor could Honda investigate all such ways. Anyone using service procedures or tools, whether or not recommended by Honda *must satisfy himself thoroughly* that neither personal safety nor vehicle safety will be jeopardized by the service methods or tools selected.

AVISO IMPORTANTE DE SEGURIDAD

ADVERTENCIA *Indica que existe un gran riesgo de lesión personal grave o accidente mortal si no se siguen las instrucciones.*

PRECAUCION: *Indica la posibilidad de ocasionar lesiones personales o daños en el equipo si no se siguen las instrucciones.*

NOTA: Ofrece información útil.

No se incluyen descripciones detalladas de procedimientos normales de taller, principios de seguridad y operaciones de servicio. Es importante observar que este manual contiene algunas advertencias contra ciertos métodos de servicio que pueden causar **LESIONES PERSONALES** al personal de servicio o que pueden dañar el vehiculo o deteriorar su seguridad de funcionamiento. Le rogamos que comprenda que esas advertencias no pueden cubrir todas las formas concebibles en que se realiza el servicio, ya esté recomendado o no por Honda, ni las posibles consecuencias que puedan originarse de cada forma concebible, ni tampoco puede Honda investigar todas las formas. Cualquiera que emplee procedimientos de servicio o herramientas, ya estén recomendados o no por Honda, *debe asegurarse absolutamente* de que no quedará afectada la seguridad personal ni la del vehículo por los métodos o herramientas empleadas.

AVVISO IMPORTANTE

ATTENZIONE *Indica la forte possibilità di importanti lesioni a persone e pericolo di morte in caso di mancata osservanza delle istruzioni.*

AVVERTENZA: *Indica la possibilitá di lesioni a persone o di danni alla motocicletta in caso di mancata osservanza delle istruzioni.*

NOTA: Contiene utili informazioni.

Questo manuale non contiene la descrizione dettagliata delle normali procedure di lavoro, dei principi di sicurezza e degli interventi di servizio. E importante notare che questo manuale contiene certi avvertenze e inviti all'attenzione relativamente ad alcuni metodi specifici di servizio, i quali potrebbero causare LESIONI PERSONALI al meccanico o danni tali al veicolo da renderlo insicuro. Tuttavia, le avvertenze date non potevano ragionevolmente coprire tutte le condizioni immaginabili di intervento sul veicolo. Chiunque si appresti ad eseguire degli interventil sulla motocicletta deve assicurarsi da sé che i metodi e gli attrezzi scelti per l'intervento non sono suscettibili di mettere in pericolo la sua persona o la motocicletta.

MEMO

HOW TO USE THIS MANUAL

This shop manual describes the servicing procedures for the CBR600F.
Throughout the manual, the following abbreviations are used to identify individual models.

CODE	AREA (TYPE)	CODE	AREA (TYPE)
E	U.K.	NR	Norway
F	France	IT	Italy
G	Germany	ND	Northern Europe
ED	Europe		
SA	South Africa	AR	Austria
U	Australia	SP	Spain
SW	Switzerland	SD	Sweden

Follow the Maintenance Schedule (Section 3) recommendations to ensure that the vehicle is in peak operating condition.
Performing the first scheduled maintenance is very important. It compensates for the initial wear that occurs during the break-in period.

Sections 1 through 3 apply to the whole motorcycle, while sections 4 through 21 describe parts of the motorcycle, grouped according to location.

Find the section you want on this page, then turn to the table of contents on the first page of that section.

Most sections start with an assembly or system illustration, service information and troubleshooting for the section. The subsequent pages give detailed procedures.

If you don't know the source of the trouble, go to section 22, TROUBLESHOOTING.

HONDA MOTOR CO., LTD.
SERVICE PUBLICATIONS OFFICE

CONTENTS

GENERAL INFORMATION

INFORMACION GENERAL

INFORMAZIONI GENERALI

GENERAL SAFETY

WARNING

If the engine must be running to do some work, make sure the area is well-ventilated. Never run the engine in a closed area. The exhaust contains poisonous carbon monoxide gas that may cause loss of consciousness and lead to death.

WARNING

Gasoline is extremely flammable and is explosive under certain conditions. Do not smoke or allow flames or sparks in your working area.

WARNING

The battery electrolyte contains sulfuric acid. Protect your eyes, skin and clothing. In case of contact, flush thoroughly with water and call a doctor if electrolyte gets in your eyes.

WARNING

The battery generates hydrogen gas which can be highly explosive. Do not smoke or allow flames or sparks near the battery, especially while charging it.

SERVICE RULES

1. Use genuine HONDA or HONDA-recommended parts and lubricants or their equivalent. Parts that do not meet HONDA's design specifications may damage the motorcycle.
2. Use the special tools designed for this product.
3. Use only metric tools when servicing this motorcycle. Metric bolts, nuts, and screws are not interchangeable with English fasteners. The use of incorrect tools and fasteners may damage the motorcycle.
4. Install new gaskets, O-rings, cotter pins, lock plates, etc. when reassembling.
5. When tightening a series of bolts or nuts, begin with larger-diameter or inner bolts first, and tighten to the specified torque diagonally, unless a particular sequence is specified.
6. Clean parts in cleaning solvent upon disassembly. Lubricate any sliding surfaces before reassembly.
7. After reassembly, check all parts for proper installation and operation.

MODEL IDENTIFICATION

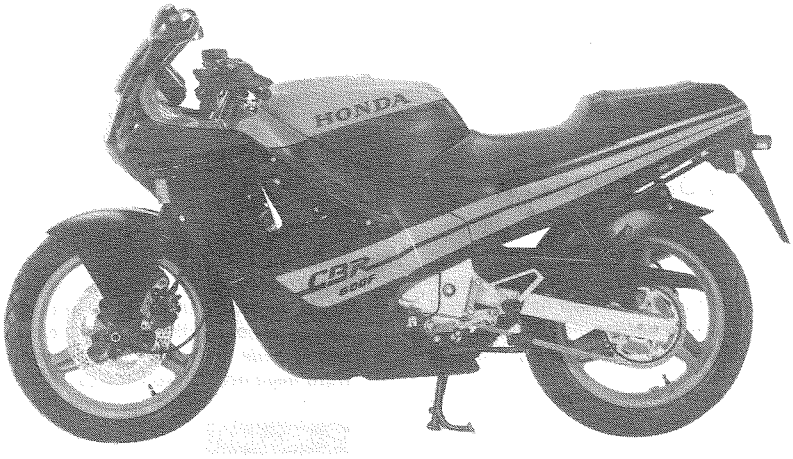

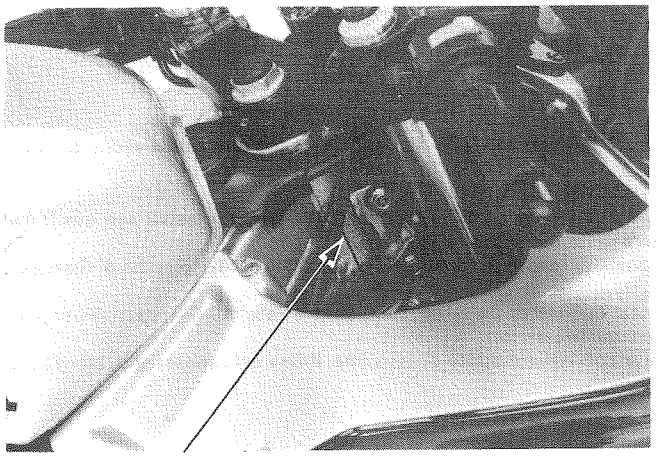

(1) FRAME SERIAL NUMBER
The frame serial number is stamped on the right side of the steering head.

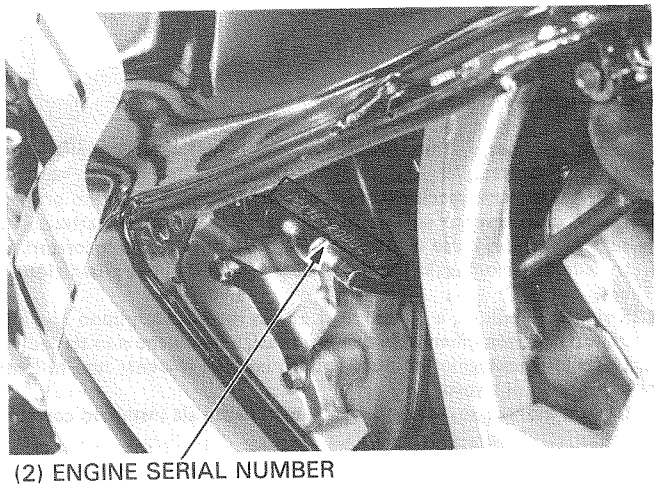

(2) ENGINE SERIAL NUMBER
The engine serial number is stamped on the right side of the crankcase.

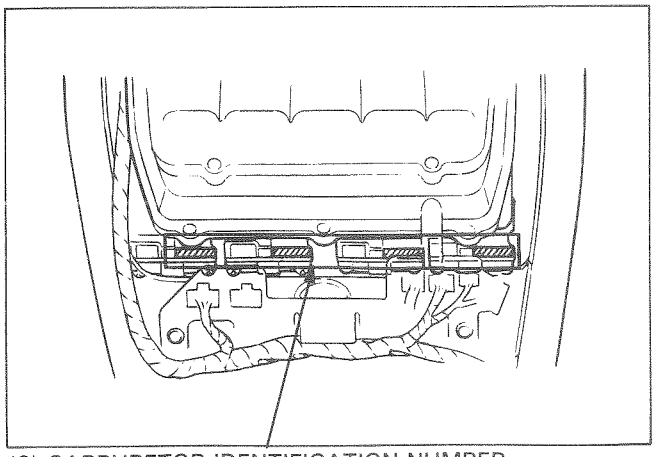

(3) CARBURETOR IDENTIFICATION NUMBER
The carburetor identification numbers are stamped on the rear side of each carburetor.

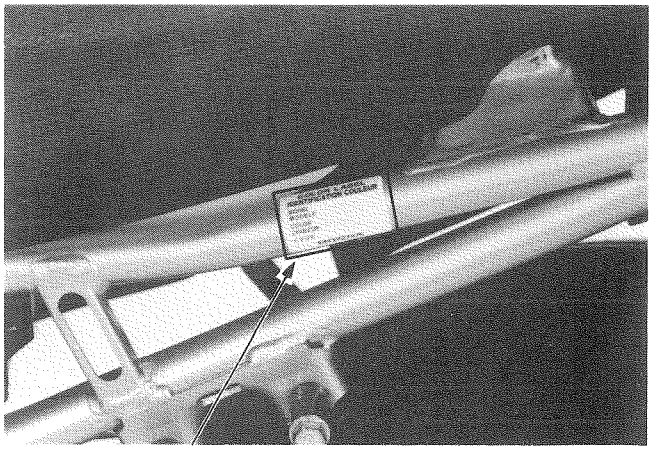

(4) COLOR LABEL
The color label is attached to the left frame tube under the seat. When ordering a color coded part, always specify its designated color.

SPECIFICATIONS

ITEM				SPECIFICATIONS
DIMENSIONS	Overall length			2,130 mm (83.9 in)
	Overall width			685 mm (27.0 in)
	Overall height			1,115 mm (44.1 in)
	Wheelbase			1,410 mm (55.5 in)
	Ground clearance			140 mm (5.5 in)
	Dry weight			182 kg (401 lb)
	Curb weight			201 kg (443 lb)
FRAME	Type			Diamond, rectangular section steel tube
	Front suspension, travel			Telescopic fork, 130 mm (5.1 in)
	Rear suspension, travel			Swing arm/Shock absorber, 110 mm (4.3 in)
	Front suspension air pressure			0–40 kPa (0–0.4 kg/cm², 0–6 psi)
	Vehicle capacity load			157 kg (346 lb)
	Front tire size			110/80 V17–V240, Tubeless
	Rear tire size			130/80 V17–V240, Tubeless
	Cold tire pressures	Driver only	Front	250 kPa (2.50 kg/cm², 36 psi)
			Rear	290 kPa (2.90 kg/cm², 42 psi)
		Driver and one passenger	Front	250 kPa (2.50 kg/cm², 36 psi)
			Rear	290 kPa (2.90 kg/cm², 42 psi)
	Fuel capacity			16.5 liters (4.4 US gal, 3.6 Imp gal)
	Fuel reserve capacity			3 liters (0.8 US gal, 0.7 Imp gal)
	Caster angle			26°
	Trail			104 mm (4.1 in)
	Fork leg oil capacity			Right: 361 cm³ (12.2 US oz, 12.7 Imp oz) Left: 371 cm³ (12.5 US oz, 13.0 Imp oz)
ENGINE	Type			Water cooled 4 stroke, DOHC 16-valve
	Cylinder arrangement			30° from the vertical
	Bore and stroke			63.0 x 48.0 mm (2.48 x 1.89 in)
	Displacement			598 cm³ (36.5 cu in)
	Compression ratio			11.0 : 1
	Valve train			Chain driven DOHC, 4 valves per cylinder
	Oil capacity			4.0 liters (4.23 US qt, 3.52 Imp qt) after disassembly 3.0 liters (3.17 US qt, 2.64 Imp qt) after draining 3.4 liters (3.59 US qt, 2.99 Imp qt) at oil and oil filter change
	Coolant capacity			2.0 liters (2.11 US qt, 1.76 Imp qt)
	Lubrication system			Forced pressure and wet sump
	Air filtration			Paper filter
	Cylinder compression			1176 ± 196 kPa (13.0 ± 2.0 kg/cm², 185 ± 28 psi)
	Intake valve	Opens		7° (BTDC)
		Closes		40° (ABDC)
	Exhaust valve	Opens		40° (BBDC) at 1 mm lift
		Closes		9° (ATDC)
	Valve clearance (at between camshaft and rocker arm)	(Cold)		IN: 0.16 mm (0.006 in) EX: 0.20 mm (0.008 in)
	Engine weight	(Dry)		63 kg (138.9 lb)
	Idle speed			1200 ± 100 min⁻¹ (rpm)

ITEM		SPECIFICATIONS	
CARBURETION	Carburetor type/throttle bore	VG-L4/32 mm (1.3 in)	
	Identification number	VG22A	
	Pilot screw initial setting	2—1/4 turns out	
	Float level	8 mm (0.3 in)	
DRIVE TRAIN	Clutch	Wet, multi-plate with coil spring	
	Transmission	6-speed constant-mesh	
	Primary reduction	1.775 (71/40)	
	Final reduction	2.867 (43/15)	
	Gear ratios 1st	3.230 (42/13)	
	2nd	2.235 (38/17)	
	3rd	1.800 (36/20)	
	4th	1.500 (33/22)	
	5th	1.272 (28/22)	
	6th	1.130 (26/23)	
	Gearshift pattern	Left foot operated return system 1-N-2-3-4-5-6	
ELECTRICAL	Ignition	Full transistor ignition	
	Ignition timing "F" mark	10° BTDC at idle	
	Starting system	Starting motor	
	Alternator	0.315 KW at 5,000 min^{-1} (rpm)	
	Battery capacity	12V—8AH	
	Spark plugs	NGK	ND
		DPR8EA—9	X24EPR—U9
	Spark plug gap	0.8—0.9 mm (0.03—0.04 in)	
	Firing order	1-2-4-3	
	Fuse/main fuse	10A x 6, 15A/30A	
LIGHTS	Headlight (high/low beam)	12V 60/55W	
	Stop/taillight	12V 21/5W x 2	
	Position light	12V 4W (U: 12V 3.4W)	
	Turn signal light	12V 21W x 4 (U: 12V 23W x 4)	
	Instrument light	12V 3W x 4	
	Oil pressure warning indicator	12V 3W	
	Neutral indicator	12V 3W	
	Turn signal indicators	12V 3W x 2	
	High beam indicator	12V 3W	
	License light	12V 5W	

TORQUE VALUES

ENGINE

ITEM	Q'TY	THREAD DIA. (mm)	TORQUE: N•m (kg-m, ft-lb)	REMARKS
Oil filter	1	20	10 (1.0, 7)	
Oil drain bolt	1	12	35 (3.5, 25)	
Oil pressure switch	1	—	12 (1.2, 9)	Apply sealant.
Oil pump bolt	2	6	12 (1.2, 9)	
Spark plug	4	12	14 (1.4, 10)	
Timing hole cap	1	14	3.5 (0.35, 2.5)	
Crankshaft hole cap	1	30	7 (0.7, 5)	
Tappet adjusting lock nut	16	7	23 (2.3, 17)	
Shift drum center pin	1	8	23 (2.3, 17)	Apply locking agent.
Oil pump driven sprocket	1	6	15 (1.5, 11)	Apply locking agent.
Clutch lock nut	1	20	85 (8.5, 61)	
Flywheel bolt	1	10	85 (8.5, 61)	UBS bolt
Cylinder head nut	12	9	37 (3.7, 27)	
Rocker arm holder bolt	16	6	12 (1.2, 9)	UBS bolt
Camshaft holder bolt	16	6	12 (1.2, 9)	
Cam sprocket bolt	4	7	21 (2.1, 15)	UBS bolt/Apply locking agent.
Cylinder head cover breather plate bolt	2	6	12 (1.2, 9)	Apply locking agent.
Cylinder head cover bolt	8	—	10 (1.0, 7)	Head cover bolt
Lower crankcase sealing bolt	2	20	30 (3.0, 22)	
Lower crankcase special bolt	1	14	25 (2.5, 18)	
Crankcase bolt	13	6	12 (1.2, 9)	
	12	8	24 (2.4, 17)	
	1	10	40 (4.0, 29)	
Connecting rod bearing nut/bolt	8	—	24 (2.4, 17)	Apply oil.
Starter clutch setting socket bolt	6	6	16 (1.6, 12)	Apply locking agent
Starter clutch bolt	1	10	85 (8.5, 61)	UBS bolt
Pulse generator setting socket bolt	5	5	5.3 (0.53, 3.8)	Apply locking agent.
Neutral switch	1	10	12 (1.2, 9)	
Center shift fork bolt	1	7	18 (1.8, 13)	

FRAME

ITEM	Q'TY	THREAD DIA. (mm)	TORQUE: N•m (kg-m, ft-lb)	REMARKS
Side stand bolt	1	10	15 (1.5, 11)	
Side stand lock nut	1	10	35 (3.5, 25)	
Side stand bracket	1	10	40 (4.0, 29)	
Fuel tank mounting bolt (front)	1	6	10 (1.0, 7)	
(rear)	1	8	27 (2.7, 20)	
Engine mounting bolt	6	10	50 (5.0, 36)	
Drive sprocket bolt	1	10	55 (5.5, 40)	
Exhaust pipe joint nut	8	6	12 (1.2, 9)	
Muffler band bolt	2	8	27 (2.7, 20)	
Gearshift pedal bolt	1	8	27 (2.7, 20)	
Windshield mounting screw	2	4	1.5 (0.15, 1.1)	
Muffler stay bolt	1	8	27 (2.7, 20)	
Rear grip bolt	6	8	27 (2.7, 20)	
Handlebar pinch bolt	2	8	27 (2.7, 20)	
Brake disc socket bolt (front/rear)	12/3	8	40 (4.0, 29)	
Front axle pinch bolt	4	8	22 (2.2, 16)	
Front axle bolt	1	14	60 (6.0, 43)	
Fork slider socket bolt	2	8	20 (2.0, 14)	Apply locking agent.
Fork leg pinch bolt (top)	2	7	11 (1.1, 8)	
(bottom)	2	10	35 (3.5, 25)	
Fork tube cap	2	34	22 (2.2, 16)	

FRAME (continued)

ITEM	Q'TY	THREAD DIA. (mm)	TORQUE: N•m (kg-m, ft-lb)	REMARKS
Steering head bearing adjustment nut	1	26	22 (2.2, 16)	
Steering stem nut	1	24	105 (10.5, 76)	
Left handlebar bracket holder bolt	2	6	9 (0.9, 7)	SH bolt
Upper fairing stay bolt	2	8	27 (2.7, 20)	
Ignition switch bolt	2	8	25 (2.5, 18)	
Driven sprocket nut	5	10	65 (6.5, 47)	
Rear axle nut	1	16	90 (9.0, 65)	
Shock absorber lower joint lock nut	1	14	65 (6.5, 47)	
Shock absorber mounting bolt (upper)	1	10	55 (5.5, 40)	
(lower)	1	10	55 (5.5, 40)	
Shock arm-to-shock link bolt	1	10	55 (5.5, 40)	
Shock link-to-frame bolt	1	10	55 (5.5, 40)	
Shock arm-to-swing arm bolt	1	10	55 (5.5, 40)	
Swing arm pivot nut	1	14	65 (6.5, 47)	
Brake torque rod nut (front)	1	8	22 (2.2, 16)	
Brake torque rod bolt (rear)	1	10	35 (3.5, 25)	
Brake caliper bleed valve	3	6	5.5 (0.55, 4)	
Brake caliper bracket bolt	3	8	27 (2.7, 20)	
Anti-dive piston bolt	1	6	12 (1.2, 9)	
Rear pad pin retainer bolt	1	6	11 (1.1, 8)	
Rear brake caliper mounting bolt	1	8	23 (2.3, 17)	
Brake hose bolt	5	10	30 (3.0, 22)	
Brake caliper pad pin (front)	4	10	18 (1.8, 13)	
Footpeg bracket bolt	4	8	27 (2.7, 20)	
Rear master cylinder mounting bolt	2	6	12 (1.2, 9)	
Reservoir mounting bolt	1	6	9 (0.9, 7)	
Brake hose two way joint bolt	2	10	35 (3.5, 25)	

Torque specifications listed above are for important fasteners. Others should be tightened to the standard torque values listed below.

STANDARD TORQUE VALUES

Item	Torque Values N•m (kg-m, ft-lb)	Item	Torque Values N•m (kg-m, ft-lb)
5 mm bolt and nut	5 (0.5, 3.5)	5 mm screw	4 (0.4, 3)
6 mm bolt and nut	10 (1.0, 8)	6 mm screw	9 (0.9, 7)
8 mm bolt and nut	22 (2.2, 16)	6 mm bolt with 8 mm head	9 (0.9, 7)
10 mm bolt and nut	35 (3.5, 25)	6 mm flange bolt and nut	12 (1.2, 9)
12 mm bolt and nut	55 (5.5, 40)	8 mm flange bolt and nut	27 (2.7, 20)
		10 mm flange bolt and nut	40 (4.0, 29)

TOOLS

SPECIAL

DESCRIPTION	TOOL NUMBER	REF. SEC.
Oil pressure gauge	07506–3000000	2
Oil pressure gauge attachment	07510–MA70000	2
*Oil filter wrench	07HAA–PJ70100	2
Vacuum gauge	07404–0030000 or	3
	07404–0020000	3
Valve adjusting wrench set	07GMA–ML70100	3
– lock nut wrench	07GMA–ML70120	
– adjusting wrench	07GMA–ML70110	
*Clutch center holder	07GMB–KT80100	7
Valve spring compressor attachment	07959–KM30100	8
Valve guide reamer, 5.010 mm	07984–MA60001	8
Valve guide driver	07942–MA60000	8
Piston ring compressor (2 reguired)	07954–4140000	9
Piston base (2 reguired)	07958–2500001	9
Steering stem socket	07916–3710100	14
Snap ring pliers	07914–3230001	14, 16, 12
Steering stem driver	07946–MB00000	14
Ball race remover	07953–MA00000	14
Ball race remover attachment	07946–3710500	14
Bearing remover	07936–3710300	15
– bearing remover handle	07936–3710100	
– bearing remover weight	07741–0010201	
Driver shaft	07946–MJ00100	15
*Needle bearing remover	07GMD–KT70200	15
Attachment, 28 x 30 mm	07946–1870100	15
*Driver pin	07GMD–KT80100	15
Inspection adaptor (P 1)	07508–0013600	18
Shock absorber compressor attachment	07959–MB10000	15
Compression gauge	07305–0010000	3
Compression gauge attachment	07GMJ–KT70100	3

: The tools marked "" are new for this model.

COMMON

DESCRIPTION	TOOL NUMBER	REF. SEC.
Float level gauge	07401–0010000	4
Flywheel holder	07725–0040000	7
Rotor puller	07733–0020001	7
Valve spring compressor	07757–0010000	8
Valve guide driver	07743–0020000	8
Driver B	07746–0020100	12
Attachment, 20 mm	07746–0020400	12
Driver C	07746–0030100	12
Attachment, 30 mm	07746–0030300	12
Lock nut wrench, 30 x 32 mm	07716–0020400	14
Extension bar	07716–0020500	7, 14
Driver	07749–0010000	14, 15
Attachment, 42 x 47 mm	07746–0010300	14, 15
Pilot, 20 mm	07746–0040500	14
Fork seal driver	07747–0010100	14
Fork seal driver attachment	07747–0010600	14
Bearing remover shaft	07746–0050100	14, 15
Bearing remover head, 20 mm	07746–0050600	14, 15
Attachment, 52 x 55 mm	07746–0010400	14
Pilot, 17 mm	07746–0040400	15
*Shock absorber compressor screw assy	07GME–0010100	15
Attachment, 24 x 26 mm	07746–0010700	15
Pilot, 15 mm	07746–0040300	15
Pilot, 22 mm	07746–0041000	15
Remover head, 17 mm	07746–0050500	15
Attachment, 32 x 35 mm	07746–0010100	15

: The tools marked "" are new for this model.

VALVE SEAT CUTTER

DESCRIPTION	TOOL NUMBER	REMARKS	REF. SEC.
Seat cutter, 24.5 mm	07780–0010100	45° IN	8
Seat cutter, 22 mm	07780–0010701	45° EX	
Flat cutter, 25 mm	07780–0012000	32° IN	
Flat cutter, 22 mm	07780–0012601	32° EX	
Interior cutter, 22 mm	07780–0014202	60° EX	
Interior cutter, 26 mm	07780–0014500	60° IN	
Cutter holder, 5 mm	07781–0010400		

TESTER

DESCRIPTION	TOOL NUMBER	REF. SEC.
Digital multitester (KOWA)	07411–0020000	17
Circuit tester (KOWA)	TH–5H	4, 5, 17, 18, 19
or		
Circuit tester (SANWA)	07308–0020000	

CABLE & HARNESS ROUTING

Note the following when routing cables and wire harnesses.

- A loose wire, harness or cable can be a safety hazard. After clamping, check each wire to be sure it is secure.
- Do not squeeze a wire against the weld or end of its clamp.
- Secure wires and wire harnesses to the frame with their respective wire bands at the designated locations. Tighten the bands so that only the insulated surfaces contact the wires or wire harnesses.
- Route harnesses so they are neither pulled taut nor have excessive slack.
- Protect wires and harnesses with electrical tape or tube if they contact a sharp edge or corner. Clean the attaching surface thoroughly before applying tape.
- Do not use a wire or harnesses with a broken insulator. Repair by wrapping them with protective tape or replace them.
- Route wire harnesses to avoid sharp edges, corners or the projected ends of bolts and screws.
- Keep wire harnesses away from the exhaust pipes and other hot parts.
- Be sure grommets are seated in their grooves properly.
- After clamping, check each harness to be certain that it is not interfering with any moving or sliding parts.
- After routing, check that the wire harnesses are not twisted or kinked.
- Wire harnesses routed along the handlebars should not be pulled taut, have excessive slack, be pinched by or interfere with adjacent or surrounding parts in all steering positions.
- Do not bend or twist control cables. Damaged control cables will not operate smoothly and may stick or bind.

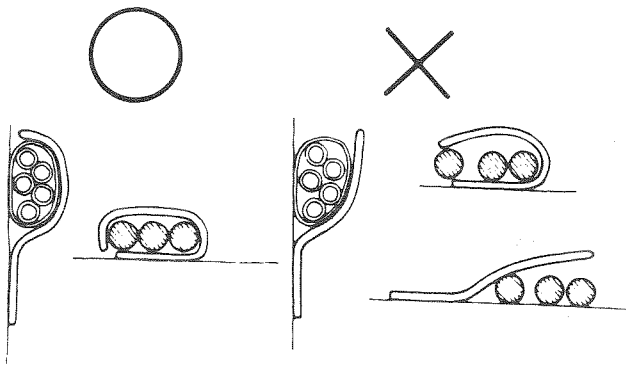

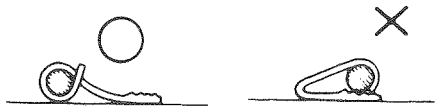

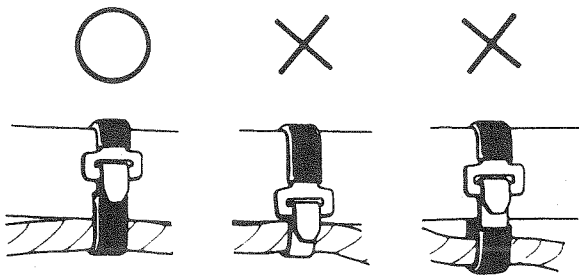

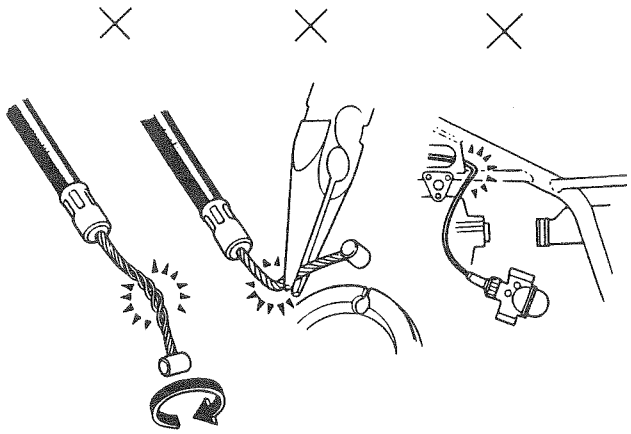

O: CORRECT
×: INCORRECT

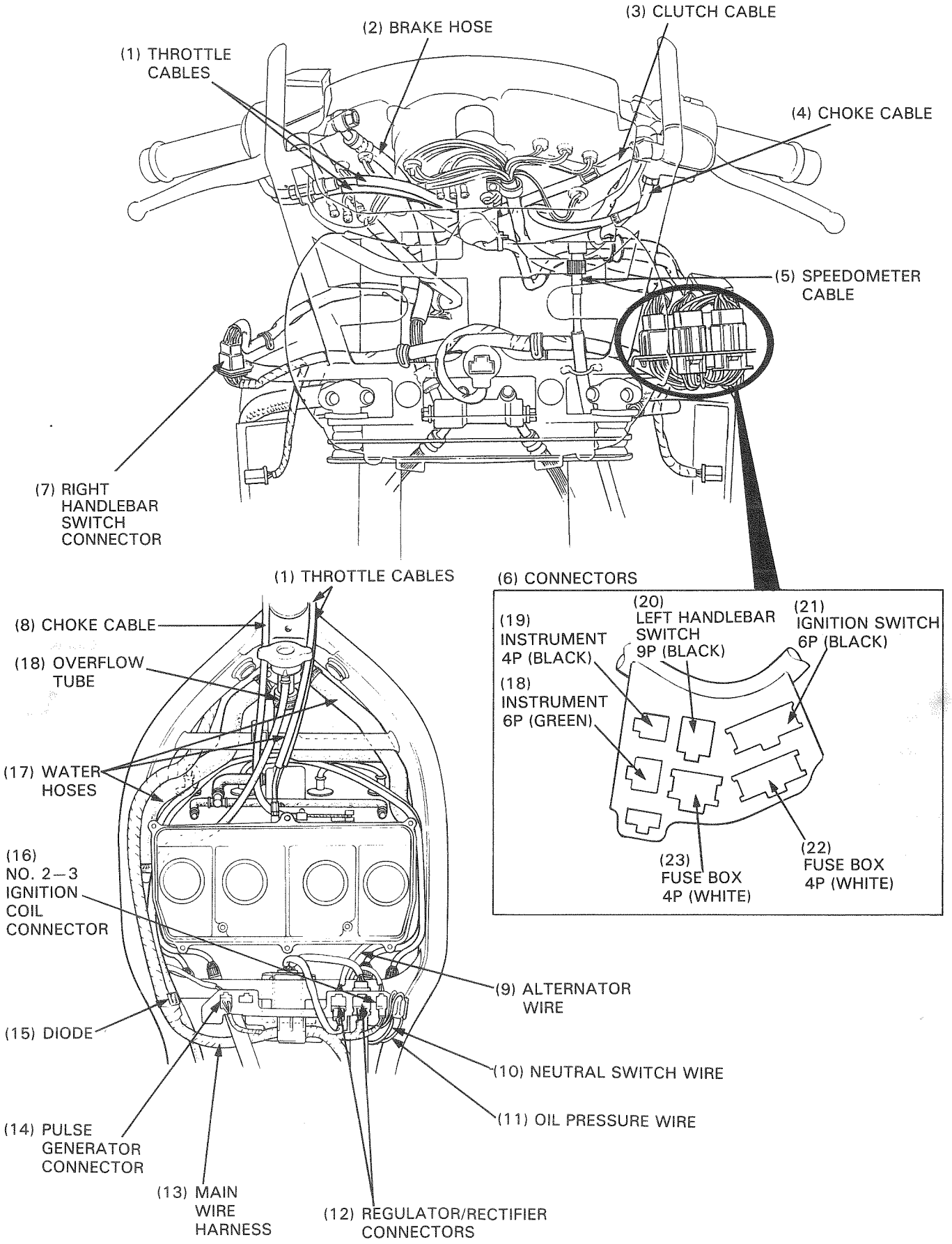
(1) THROTTLE CABLES
(2) BRAKE HOSE
(3) CLUTCH CABLE
(4) CHOKE CABLE
(5) SPEEDOMETER CABLE
(7) RIGHT HANDLEBAR SWITCH CONNECTOR
(1) THROTTLE CABLES
(8) CHOKE CABLE
(18) OVERFLOW TUBE
(17) WATER HOSES
(16) NO. 2–3 IGNITION COIL CONNECTOR
(15) DIODE
(14) PULSE GENERATOR CONNECTOR
(13) MAIN WIRE HARNESS
(12) REGULATOR/RECTIFIER CONNECTORS
(9) ALTERNATOR WIRE
(10) NEUTRAL SWITCH WIRE
(11) OIL PRESSURE WIRE
(6) CONNECTORS
(19) INSTRUMENT 4P (BLACK)
(18) INSTRUMENT 6P (GREEN)
(20) LEFT HANDLEBAR SWITCH 9P (BLACK)
(21) IGNITION SWITCH 6P (BLACK)
(23) FUSE BOX 4P (WHITE)
(22) FUSE BOX 4P (WHITE)

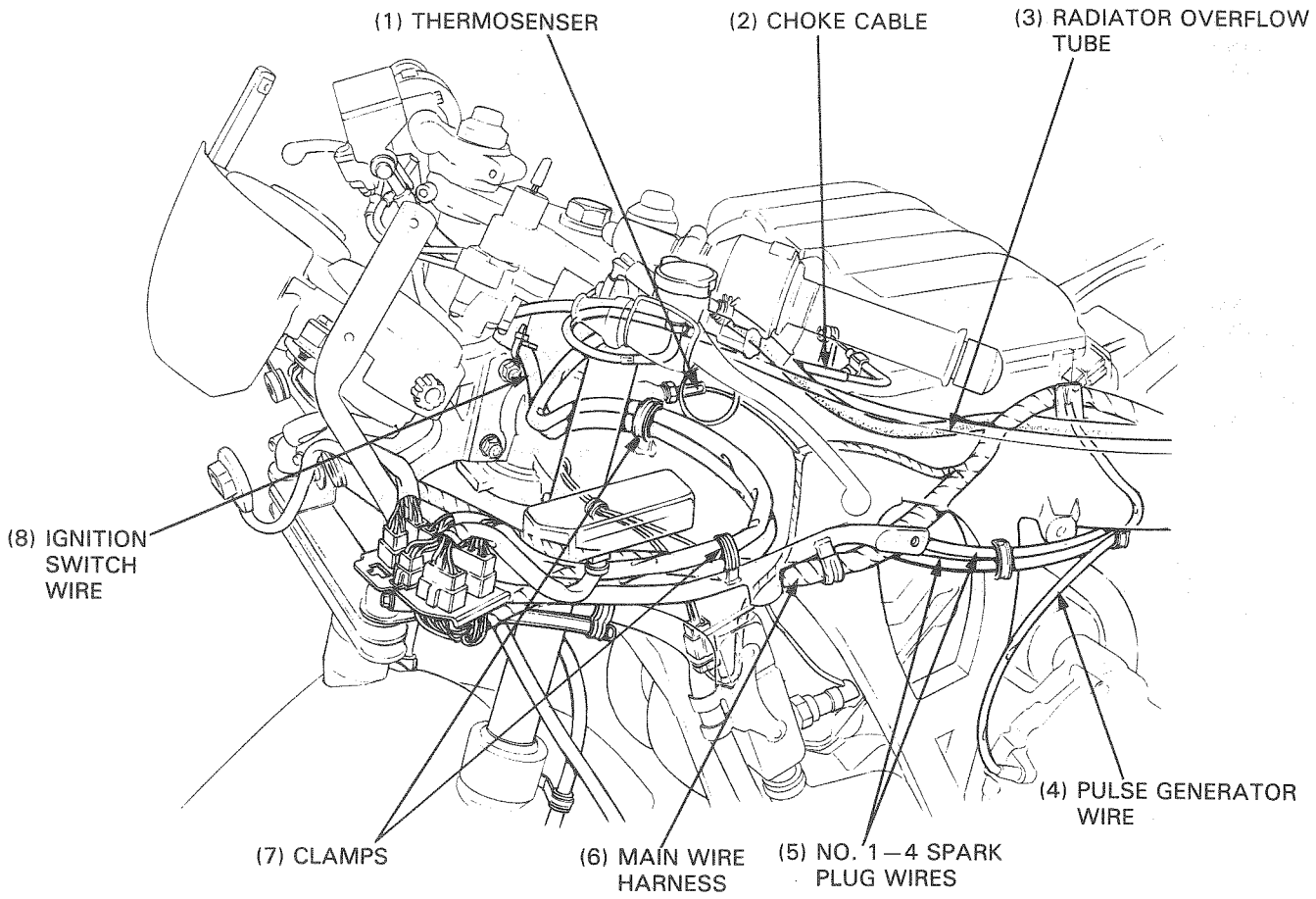
(1) THERMOSENSER
(2) CHOKE CABLE
(3) RADIATOR OVERFLOW TUBE
(8) IGNITION SWITCH WIRE
(4) PULSE GENERATOR WIRE
(7) CLAMPS
(6) MAIN WIRE HARNESS
(5) NO. 1–4 SPARK PLUG WIRES

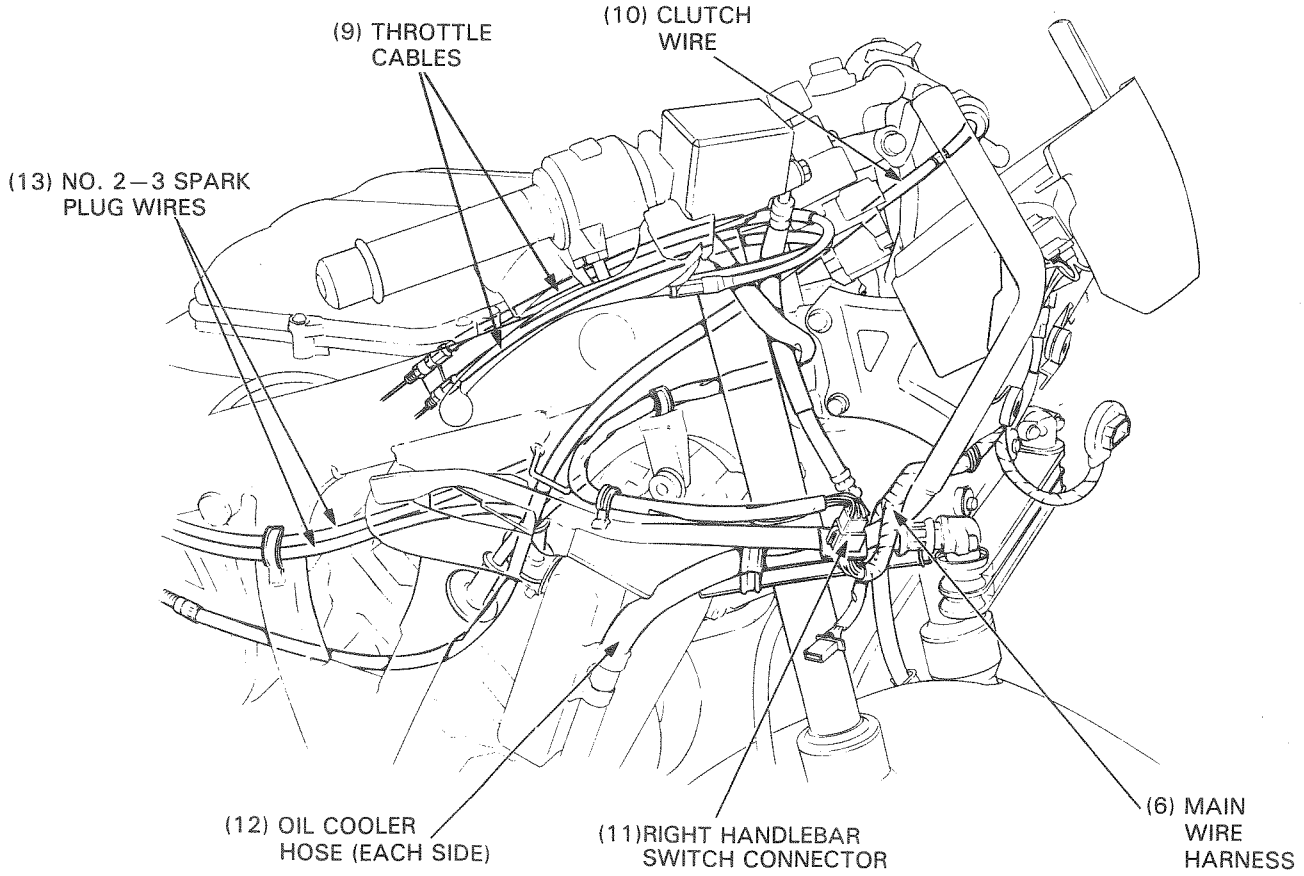
(9) THROTTLE CABLES
(10) CLUTCH WIRE
(13) NO. 2–3 SPARK PLUG WIRES
(12) OIL COOLER HOSE (EACH SIDE)
(11)RIGHT HANDLEBAR SWITCH CONNECTOR
(6) MAIN WIRE HARNESS

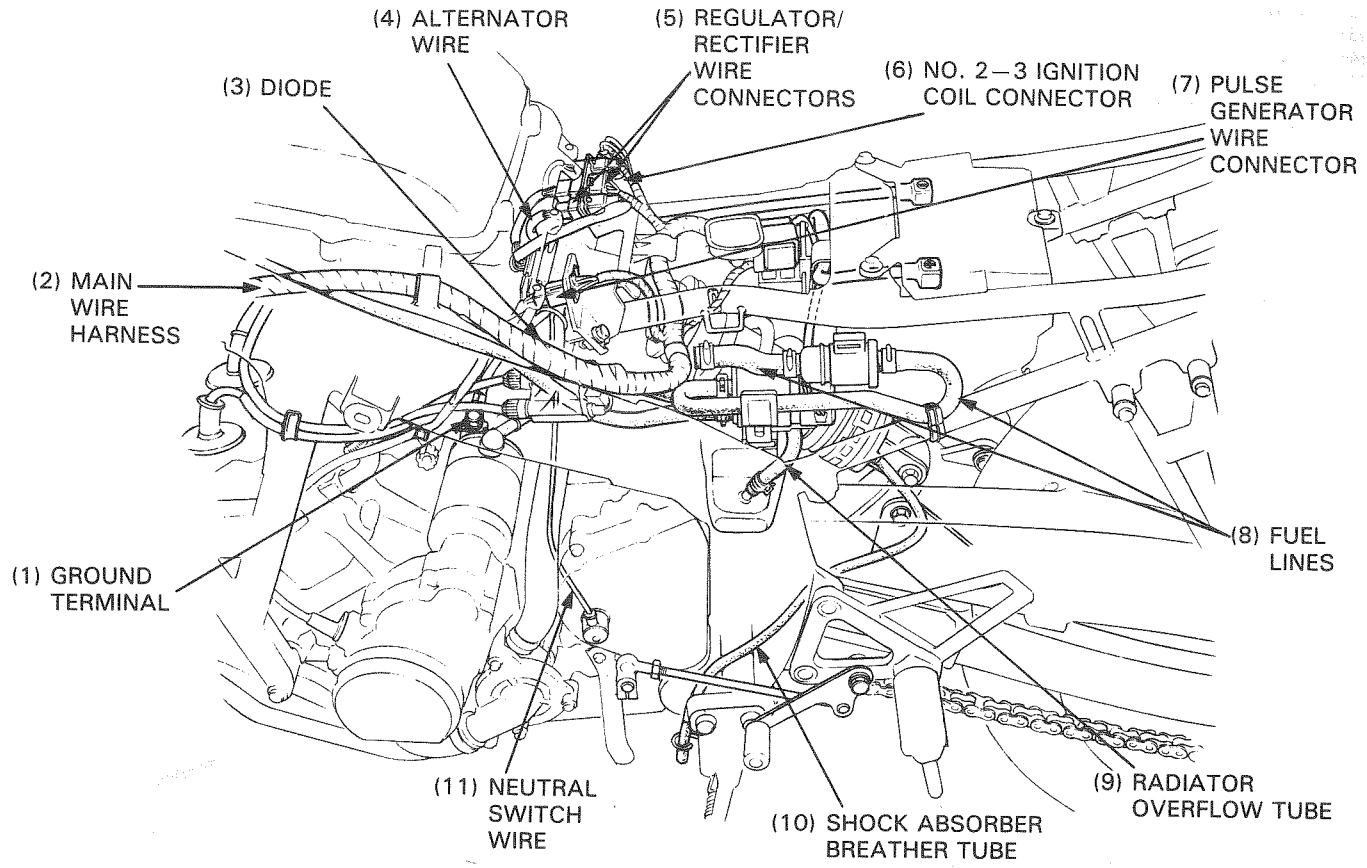
(4) ALTERNATOR WIRE
(5) REGULATOR/ RECTIFIER WIRE CONNECTORS
(3) DIODE
(6) NO. 2–3 IGNITION COIL CONNECTOR
(7) PULSE GENERATOR WIRE CONNECTOR
(2) MAIN WIRE HARNESS
(8) FUEL LINES
(1) GROUND TERMINAL
(11) NEUTRAL SWITCH WIRE
(10) SHOCK ABSORBER BREATHER TUBE
(9) RADIATOR OVERFLOW TUBE

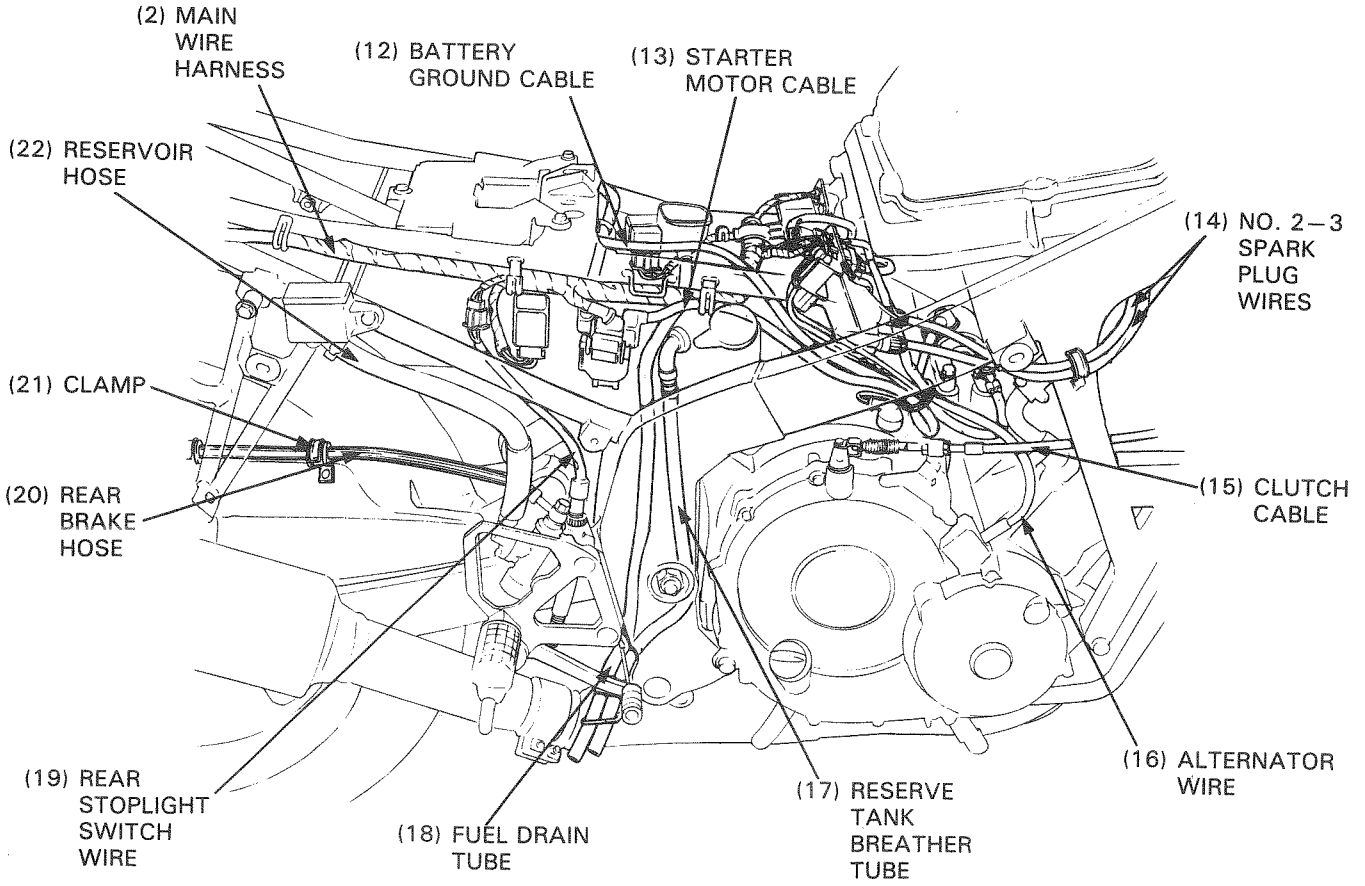
(2) MAIN WIRE HARNESS
(12) BATTERY GROUND CABLE
(13) STARTER MOTOR CABLE
(22) RESERVOIR HOSE
(14) NO. 2–3 SPARK PLUG WIRES
(21) CLAMP
(20) REAR BRAKE HOSE
(15) CLUTCH CABLE
(16) ALTERNATOR WIRE
(19) REAR STOPLIGHT SWITCH WIRE
(18) FUEL DRAIN TUBE
(17) RESERVE TANK BREATHER TUBE

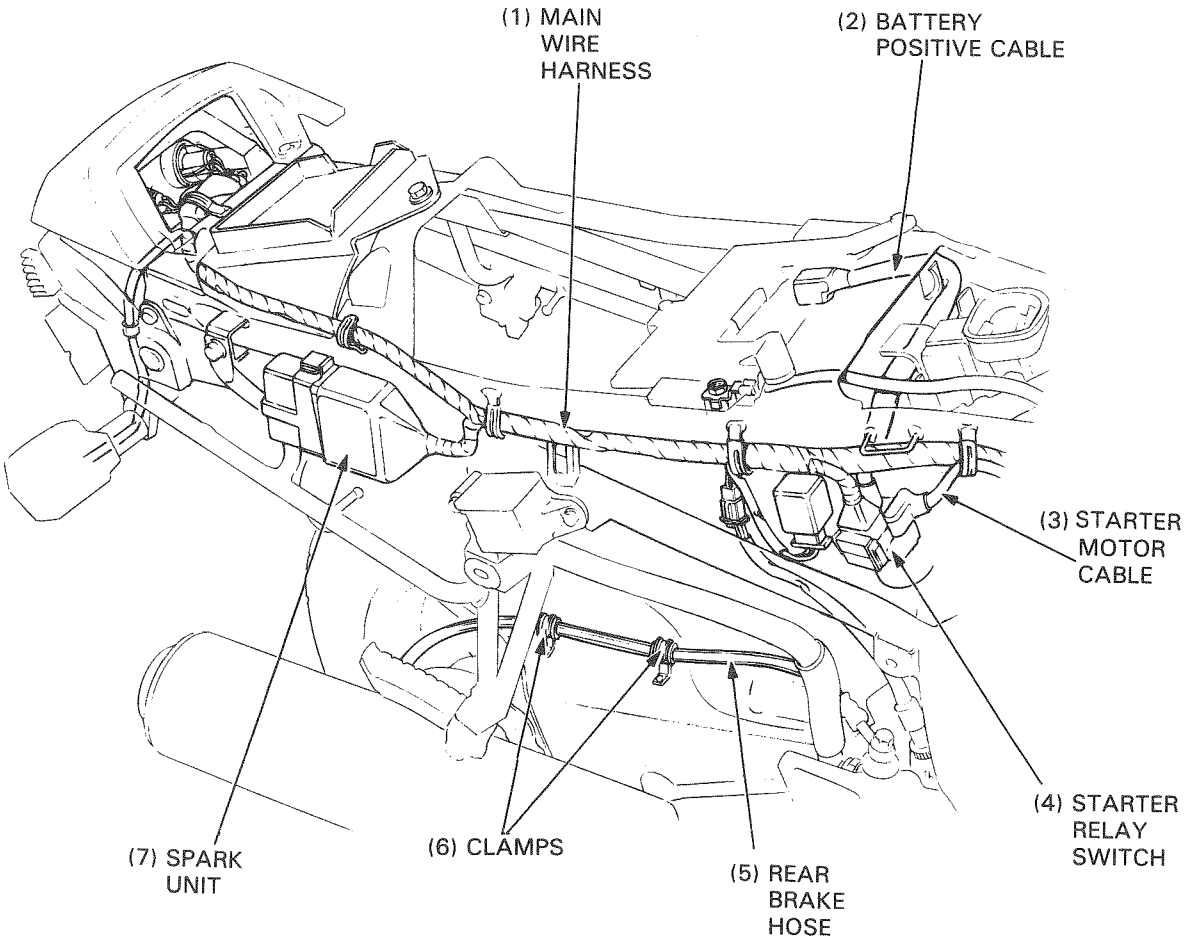

NOTE

- Set the spark unit cover to the unit stay groove properly.

LUBRICATION
LUBRICACION
LUBRIFICAZIONE

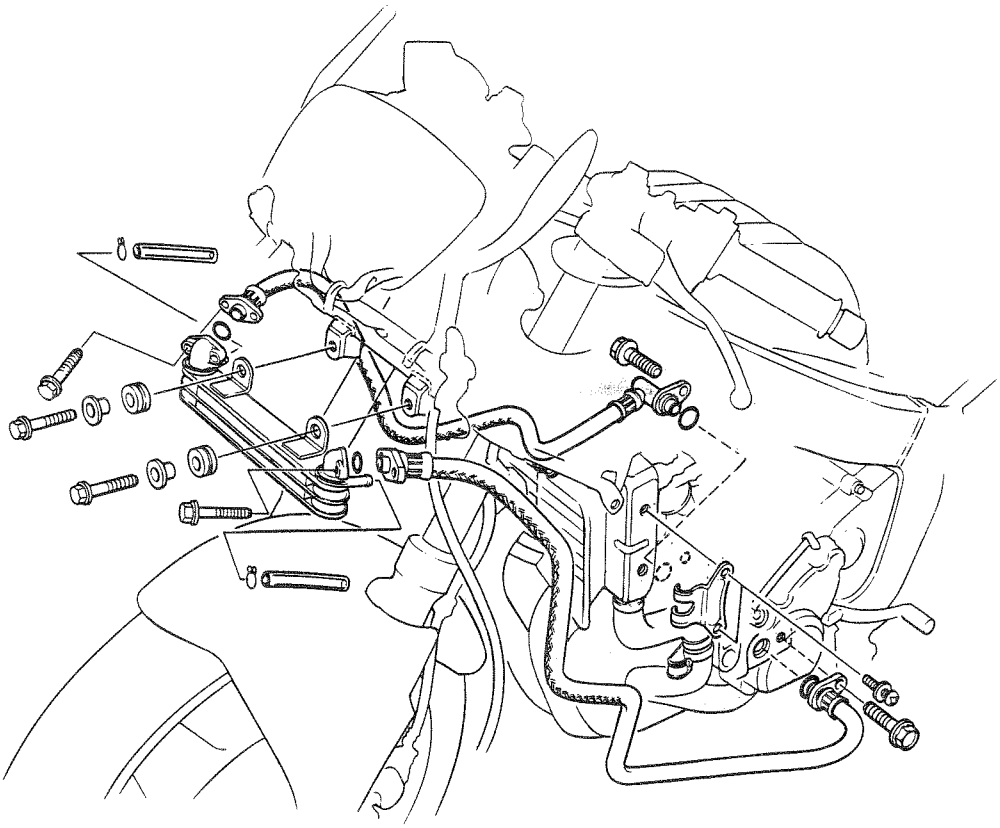

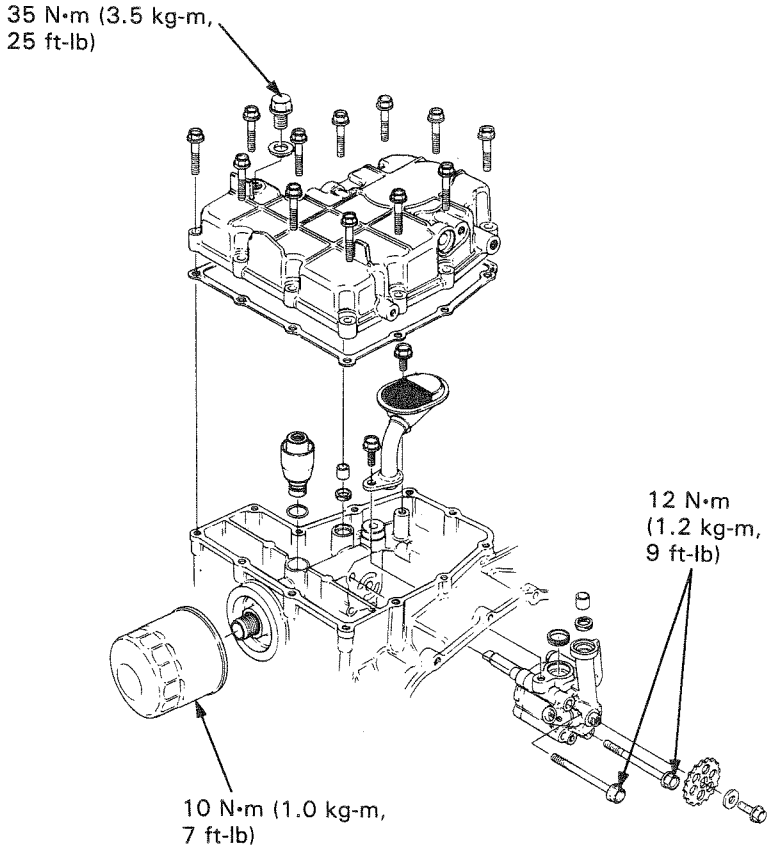
35 N•m (3.5 kg-m,
25 ft-lb)
12 N•m
(1.2 kg-m,
9 ft-lb)
10 N•m (1.0 kg-m,
7 ft-lb)

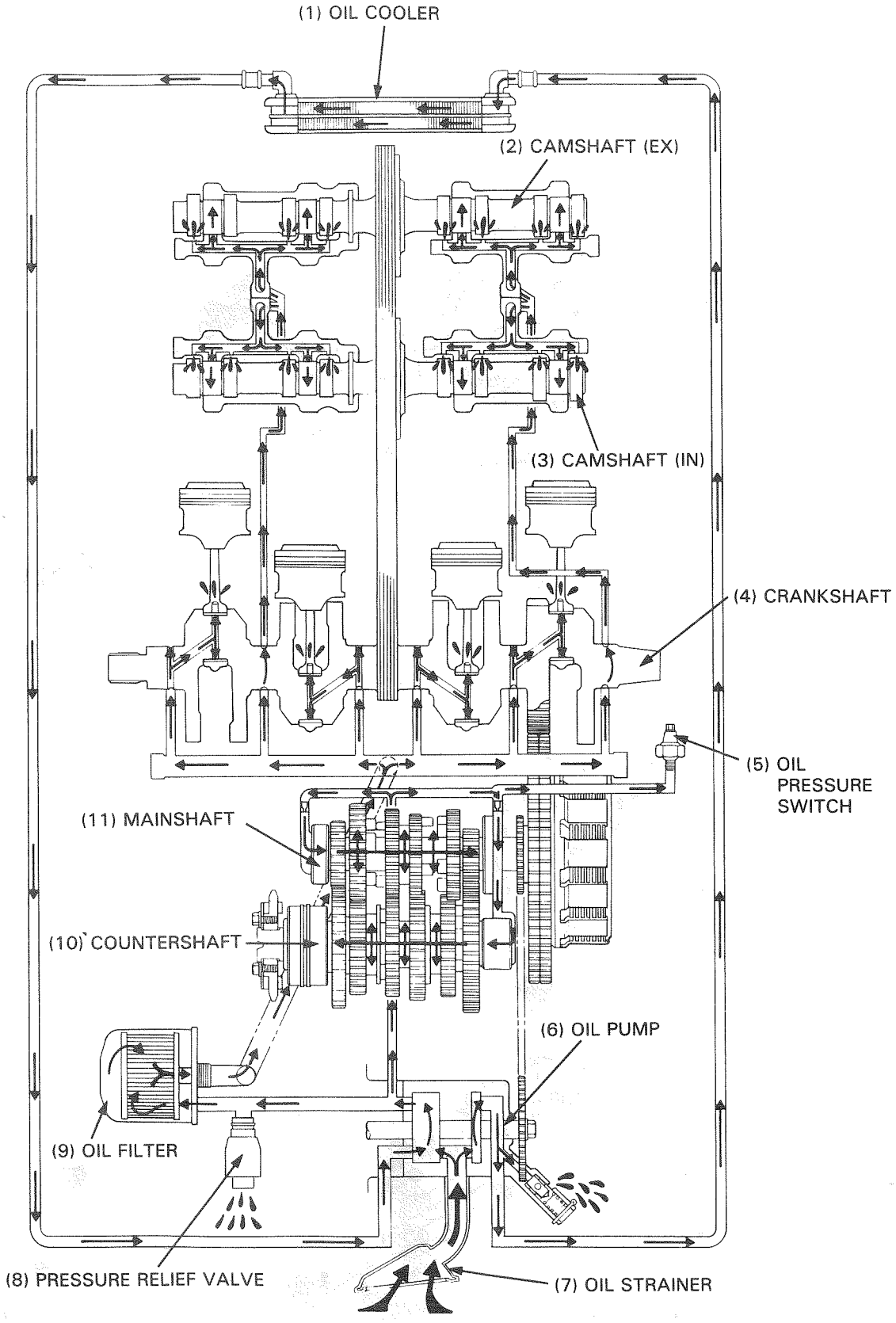
(1) OIL COOLER
(2) CAMSHAFT (EX)
(3) CAMSHAFT (IN)
(4) CRANKSHAFT
(5) OIL PRESSURE SWITCH
(11) MAINSHAFT
(10) COUNTERSHAFT
(6) OIL PUMP
(9) OIL FILTER
(8) PRESSURE RELIEF VALVE
(7) OIL STRAINER

SERVICE INFORMATION

GENERAL

- The oil pump can be removed with the engine mounted in the frame.

SPECIFICATIONS

Engine oil

Oil capacity	3.0 lit (3.17 US qt, 2.64 Imp qt) after draining 3.4 lit (3.59 US qt, 2.99 Imp qt) at oil and oil filter change 4.0 lit (4.23 US qt, 3.52 Imp qt) after disassembly
Oil recommendation	Use HONDA 4-STROKE OIL or equivalent. API SERVICE CLASSIFICATION: SE or SF VISCOSITY: SAE 10W—40 Other viscosities shown in the chart may be used when the average temperature in your riding area is within the indicated range. 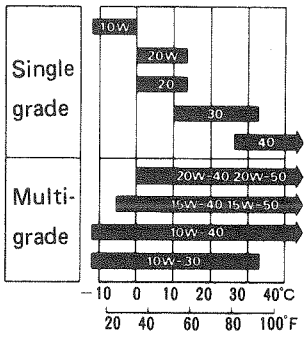
Oil pressure (at oil pressure switch)	490 kPa (5.0 kg/cm², 71 psi) at 5,000 min⁻¹ (rpm) (80°C/176°F)
Oil pump delivery	39.4 lit (41.63 US qt, 34.67 Imp qt)/min. at 6,000 min⁻¹ (rpm)

Oil pump service data

Unit: mm (in)

ITEM	STANDARD	SERVICE LIMIT
Rotor tip clearance	0.15 (0.006)	0.20 (0.008)
Pump body clearance	0.15—0.22 (0.006—0.009)	0.35 (0.014)
Pump end clearance	0.02—0.07 (0.001—0.003)	0.10 (0.004)

TORQUE VALUES

Oil filter	10 N•m (1.0 kg-m, 7 ft-lb)
Oil drain bolt	35 N•m (3.5 kg-m, 25 ft-lb)
Oil pressure switch	12 N•m (1.2 kg-m, 9 ft-lb) —Apply sealant
Oil pump bolt	12 N•m (1.2 kg-m, 9 ft-lb)

TOOLS

Special

Oil pressure gauge	07506—3000000
Oil pressure gauge attachment	07510—MA70000
Oil filter wrench	07HAA—PJ70100

TROUBLESHOOTING

Oil level too low
- Oil level not replenished frequently enough
- External oil leaks
- Worn valve stem seal
- Worn valve guide
- Worn piston rings
- Improperly installed piston rings
- Worn cylinder

Oil pressure too high
- Pressure relief valve stuck closed
- Clogged oil filter, gallery, or metering orifice
- Incorrect oil used

Low oil pressure
- Oil level low
- Plugged oil filter or screen
- Pressure relief valve stuck open
- Oil pump faulty
- Internal oil leaks
- Incorrect oil used

Oil contamination
- Oil or filter not changed often enough
- Worn piston rings

Oil emulsification
- Radiator coolant contamination
  - Blown cylinder head gasket
  - Leaky coolant passage
- Water contamination

No oil pressure
- Oil level too low; no oil
- Broken oil pump drive chain
- Broken oil pump drive shaft
- Internal leaks
- Faulty oil pump

Oil pressure warning indicator stays on
- Faulty oil pressure switch
- Short circuit in indicator wire
- Low or no oil pressure

ENGINE OIL LEVEL

Start the engine and let it to idle for 2—3 minutes.
Turn the engine off.
Support the motorcycle on its main stand.
Remove the dipstick, wipe it clean and insert it without screwing it in.

NOTE

- Check the oil level 2—3 minutes after the engine stops.

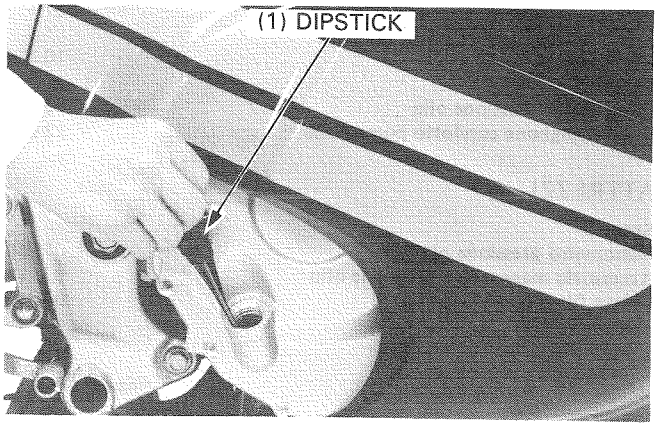

Remove the dipstick and check the oil level.
If the level is below the lower level mark on the dipstick, fill to the upper level mark with recommended oil (page 2-2).

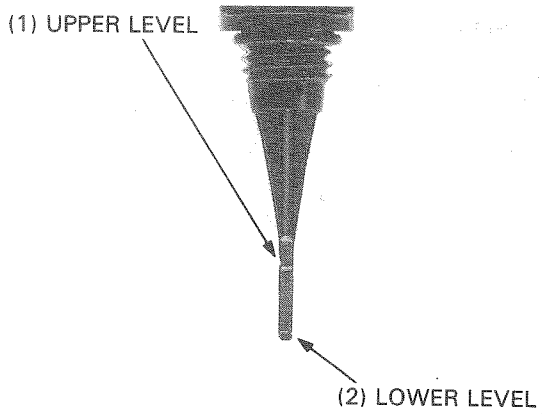

ENGINE OIL & FILTER CHANGE

NOTE

- Change engine oil with the engine warm and support the motorcycle on its main stand to assure complete and rapid draining.

Stop the engine.
Remove the oil filler cap and oil drain bolt.
Drain the engine oil.

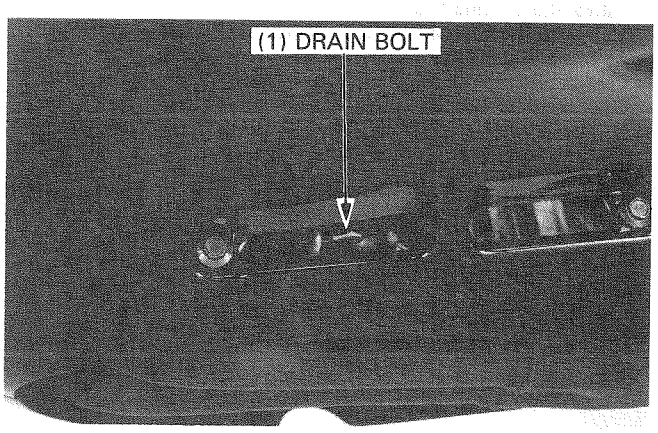

Remove the oil filter with a filter wrench and let the remaining oil drain out. Discard the oil filter.

TOOL:
Oil filter wrench **07HAA—PJ70100**

NOTE

- The oil filter can be replaced without removing the lower fairings.

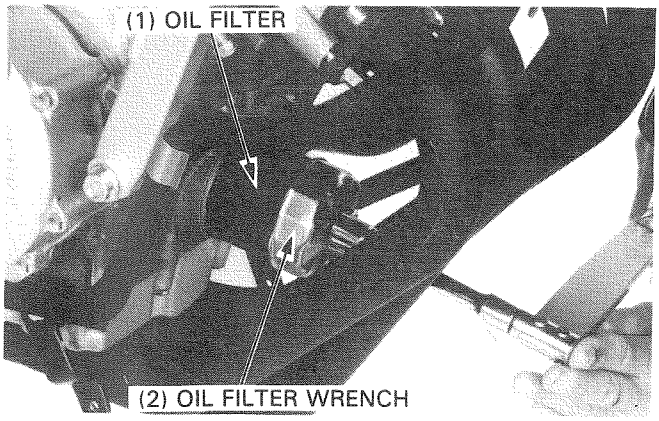

Check that the sealing washer on the drain bolt is in good condition, and install and tighten the bolt.
TORQUE: 35 N·m (3.5 kg-m, 25 ft-lb)

Check that the oil filter O-ring is in good condition, and coat it with oil before installing it.
Install and tighten the oil filter.
TORQUE: 10 N·m (1.0 kg-m, 7 ft-lb)

Fill the crankcase with recommended oil.
ENGINE OIL CAPACITY:
3.0 lit (3.17 US qt, 2.64 Imp qt) after draining
3.4 lit (3.59 US qt, 2.99 Imp qt) at oil and oil filter change
4.0 lit (4.23 US qt, 3.52 Imp qt) after disassembly

Reinstall the oil filler cap/dipstick.
Start the engine and let it idle for 2—3 minutes, then stop the engine.
Make sure that the oil level is at the upper level mark on the dipstick.
Make sure that there are no oil leaks.

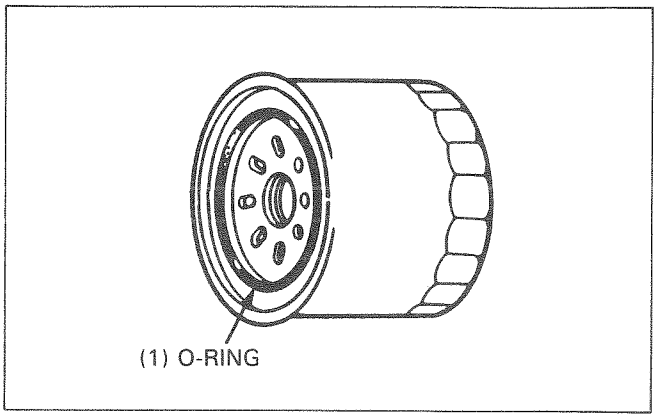

OIL PRESSURE CHECK

NOTE

- If the oil pressure warning light remains on a few seconds, check the warning system (page 20-8) before checking the oil pressure.

Check the oil level.
Warm the engine up to the normal operating temperature (approximately 80°C/176°F).
Stop the engine and disconnect the oil pressure switch wire from the switch.

Remove the oil pressure switch and connect an oil pressure gauge to the pressure switch hole.
TOOL:

Oil pressure gauge	**07506—3000000**
Oil pressure gauge attachment	**07510—MA70000**

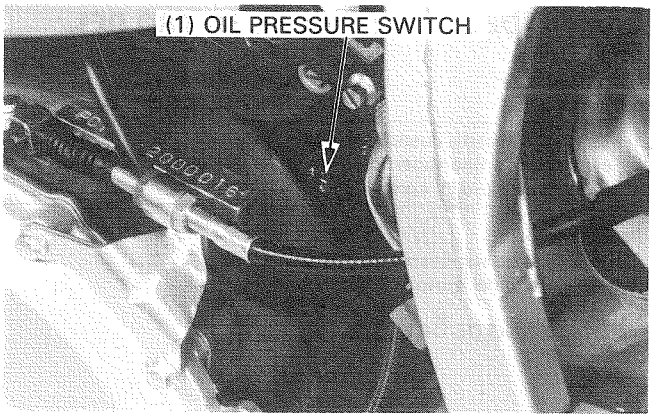

Start the engine and check the oil pressure at 5,000 min^{-1} (rpm)
OIL PRESSURE:
490—588 kPa (5.0—6.0 kg/cm², 71—85 psi)

Stop the engine and remove the oil pressure gauge.
Apply sealant to the pressure switch threads and install.
TORQUE: 12 N·m (1.2 kg-m, 9 ft-lb)

CAUTION

- *To prevent crankcase damage, do not overtighten the switch.*

Connect the oil pressure switch wire.

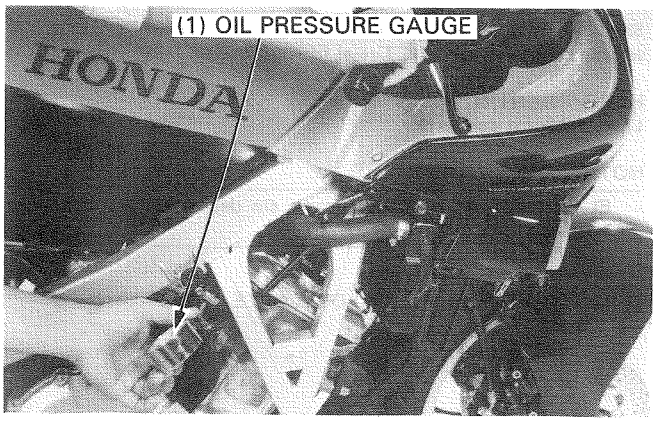

OIL STRAINER/PRESSURE RELIEF VALVE REMOVAL

NOTE

- The oil strainer can be removed with the engine mounted in the frame.

Remove the exhaust pipes (page 13-7).
Drain the engine oil (page 2-4).
Remove the oil hoses from the oil pan (each side).
Remove the oil pan bolts.

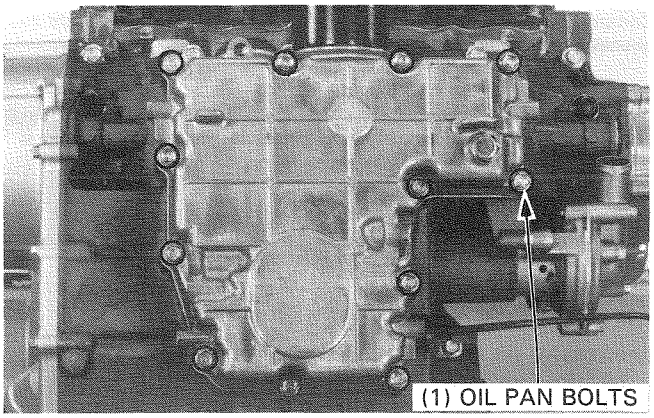

Remove the oil pan and gasket.
Remove the O-rings and dowel pins.

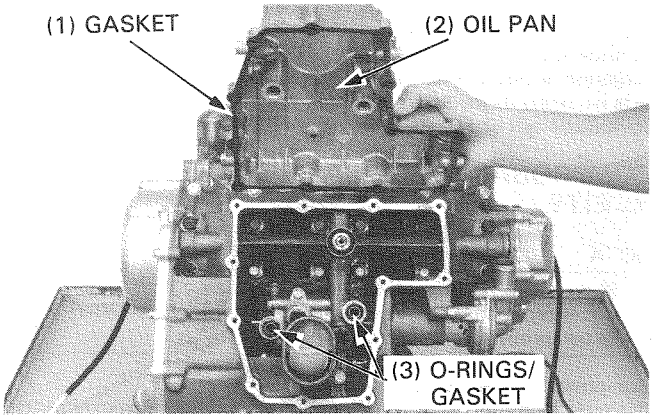

Remove the pressure relief valve.
Remove the bolts and oil strainer.

Check the oil strainer for damage or clogging.
Clean the oil strainer.

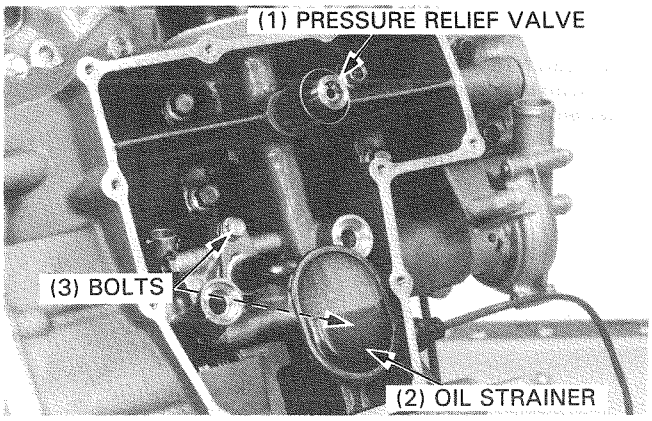

Check the operation of the pressure relief valve by pushing on the piston.
Remove the snap ring and disassemble the pressure relief valve.

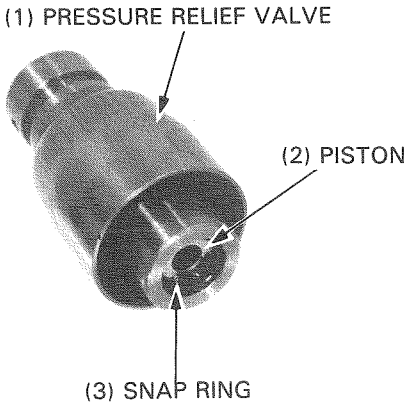

Inspect the piston for wear, sticking or damage.
Inspect the spring for fatigue or damage.
Clean the remaining parts and assemble the relief valve in the reverse order of disassembly.

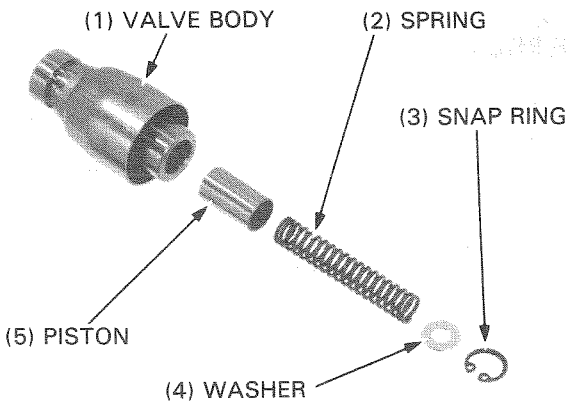

OIL PUMP

REMOVAL

NOTE

- The oil pump can be removed with the engine mounted in the frame.

Drain the engine oil (page 2-4).
Remove the clutch (page 7-3).
Remove the oil pan, oil strainer and pressure relief valve (page 2-6).
Remove the bolts and oil pump from the crankcase.

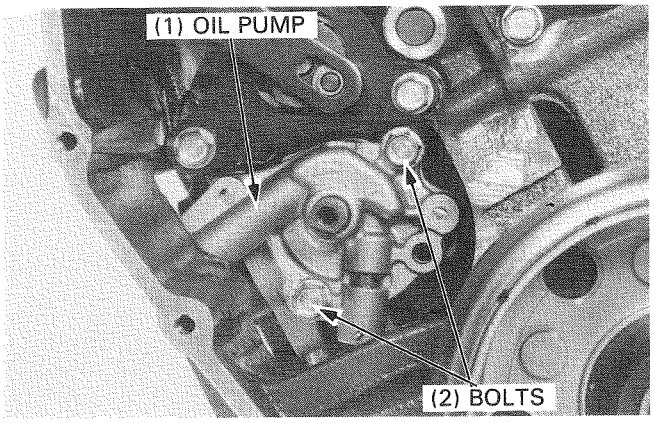

RELIEF VALVE INSPECTION

Remove the cotter pin, relief valve seat, spring and relief valve.

Inspect the relief valve and inside of the pump for wear, scratches or scoring.
Inspect the spring for fatigue or damage.
Clean the remaining parts and assemble the relief valve and secure with a new cotter pin.

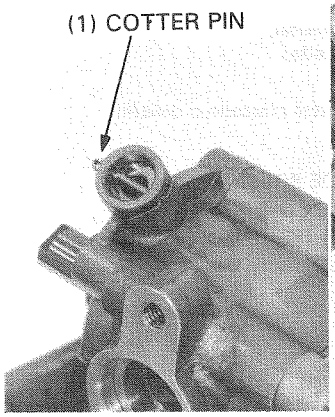

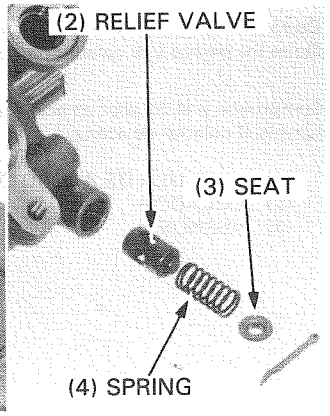

DISASSEMBLY

Remove the dowel pins and screws.
Disassemble the oil pump and clean the removed parts.

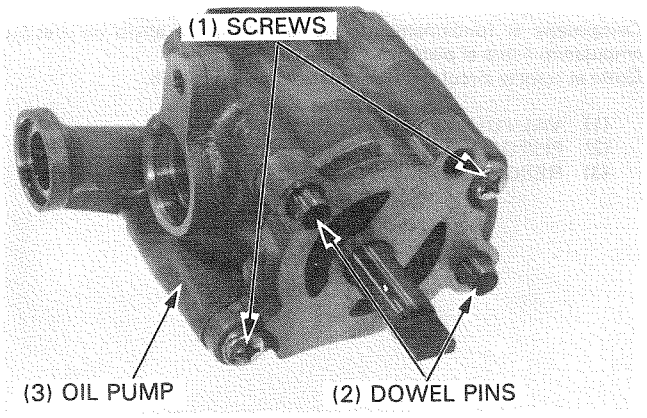

INSPECTION

Install the feed pump and cooler pump (page 2-9).
measure the pump body clearance.

SERVICE LIMIT: 0.35 mm (0.014 in)

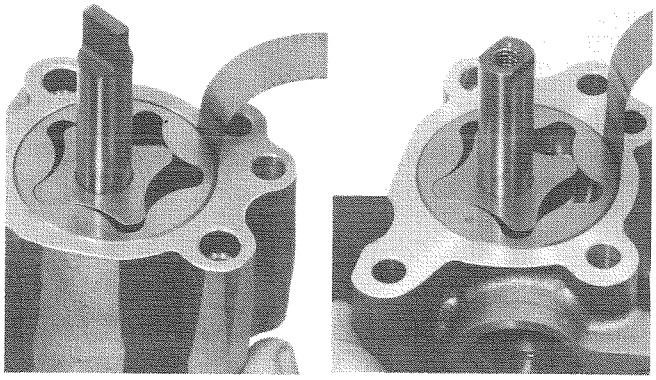

Measure the rotor tip clearance.

SERVICE LIMIT: 0.20 mm (0.008 in)

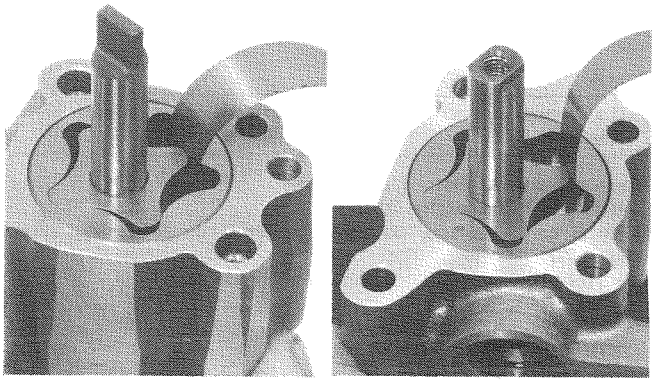

Measure the pump end clearance.

SERVICE LIMIT: 0.10 mm (0.004 in)

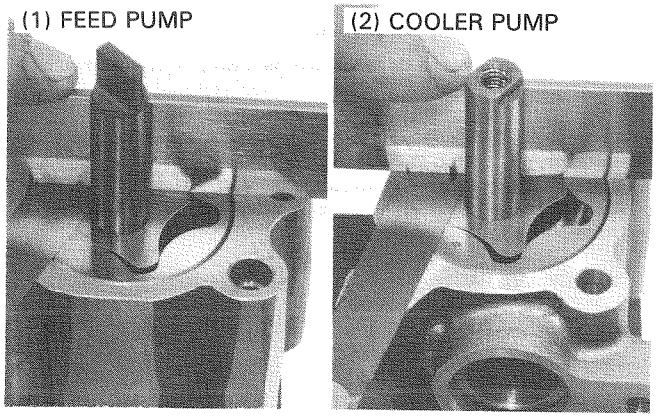

ASSEMBLY

Apply oil to the remaining parts.
Install the washer to the feed pump body.
Install the shaft with the tab facing the feed pump and insert the drive pin to the shaft.

Install the outer rotor with the punch mark facing up.
Install the inner rotor with its grooves aligned with the drive pin.

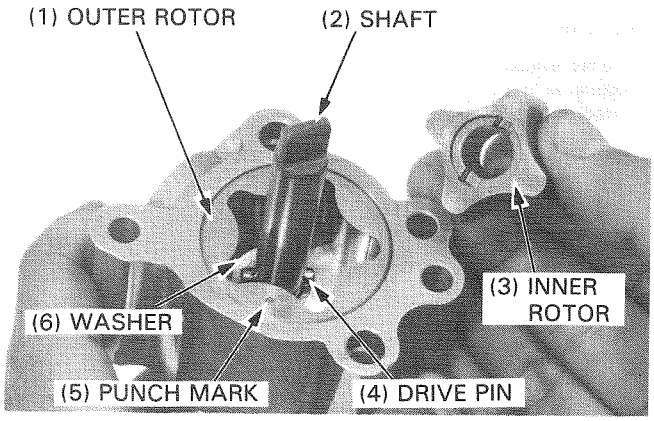

Install the feed pump cover.

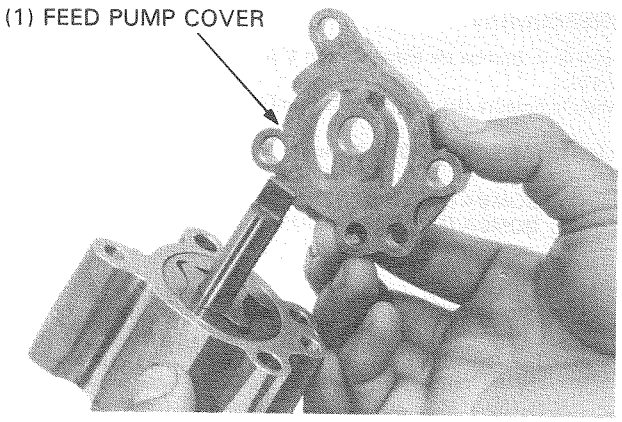

Insert the drive pin into the shaft.
Install the outer rotor with the punch mark facing up to the cooler pump body.

Install the inner rotor with its grooves aligned with the drive pin.

Install the dowel pin.

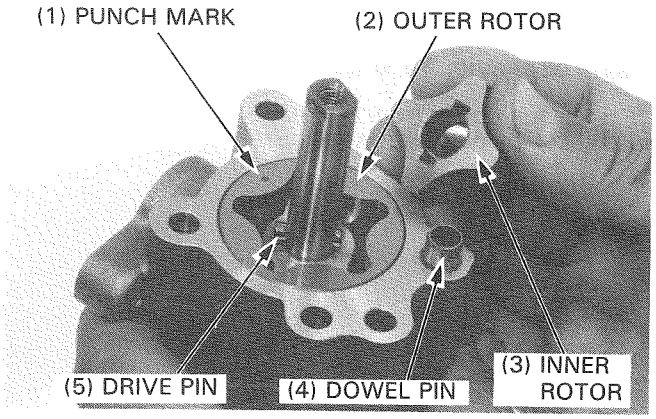

Install the cooler pump cover.

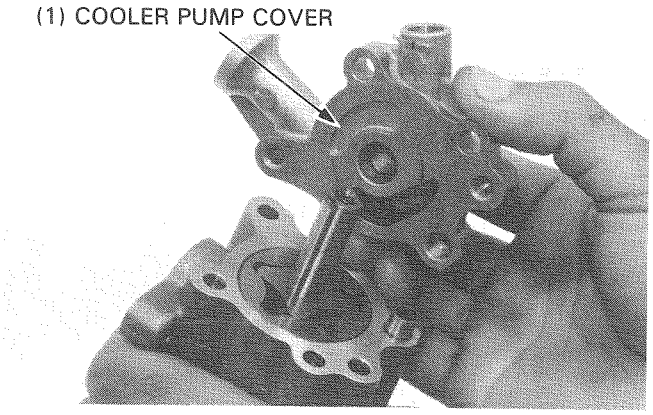

Install and securely tighten the screws from the feed pump side.
Install the dowel pins.

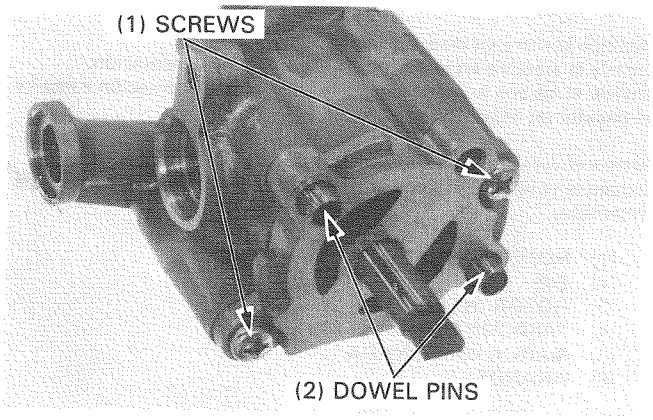

INSTALLATION

Align the oil pump shaft with the water pump shaft and install the oil pump to the crankcase.

Install the clutch (page 7-10).
Install the oil strainer, pressure relief valve and oil pan.
Fill the engine oil (page 2-4).

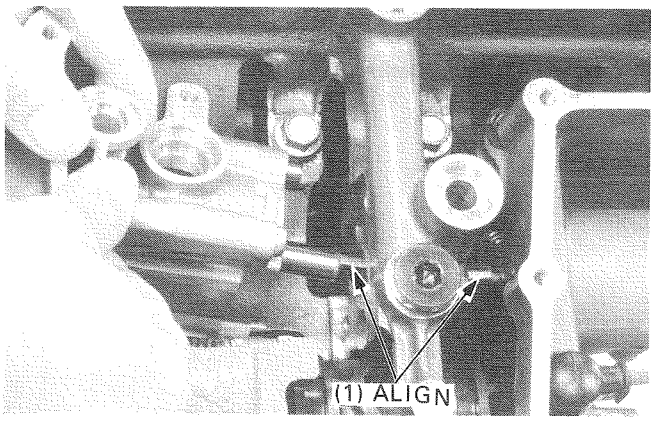

Install and tighten the oil pump mounting bolts.

TORQUE: 12 N·m (1.2 kg-m, 9 ft-lb)

NOTE

- Make sure that the oil pump shaft rotates freely after tightening the bolts.

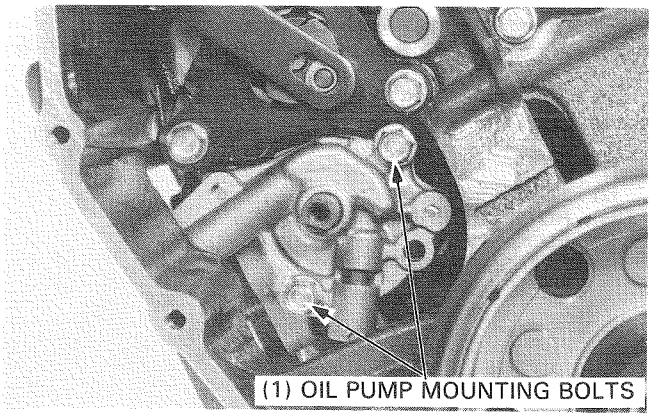

OIL STRAINER/PRESSURE RELIEF VALVE INSTALLATION

Apply oil to the O-ring and install the oil strainer to the crankcase.
Tighten the bolts securely.

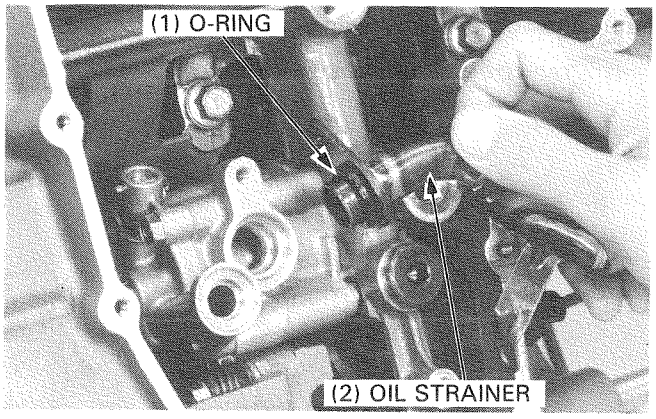

Apply oil to the O-ring and install the pressure relief valve to the crankcase.

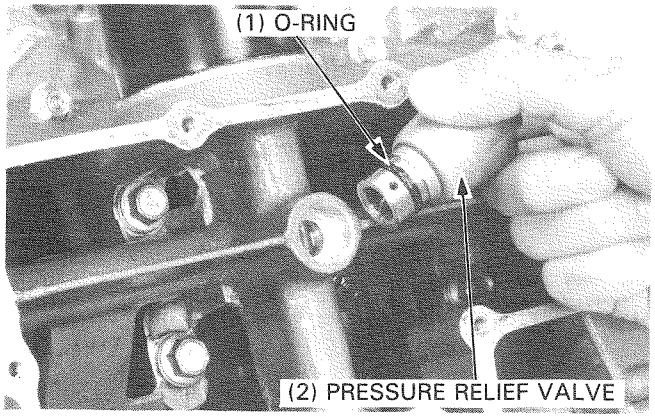

Install the O-rings and dowel pins.
Install the gasket and oil pan.

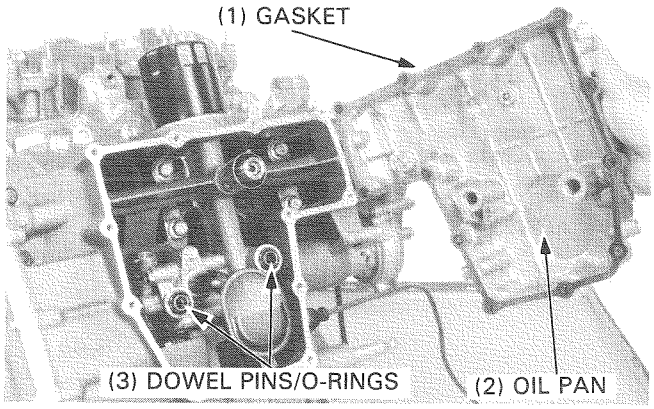

Install and tighten the bolts securely.

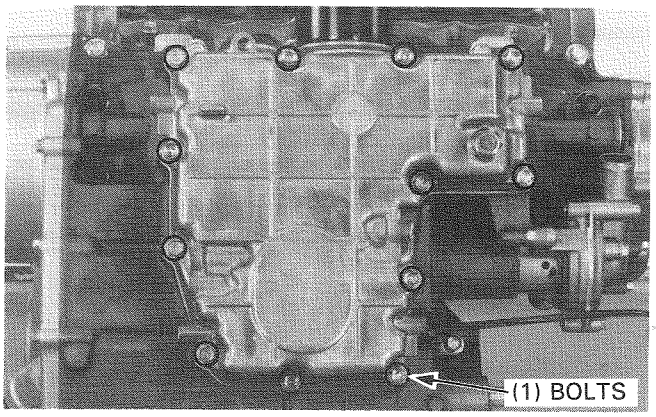

Apply oil to the O-rings and connect oil hoses to the oil pan.

Install the exhaust pipe (page 13-7).
Fill the engine oil (page 2-4).

Check for oil leaks.

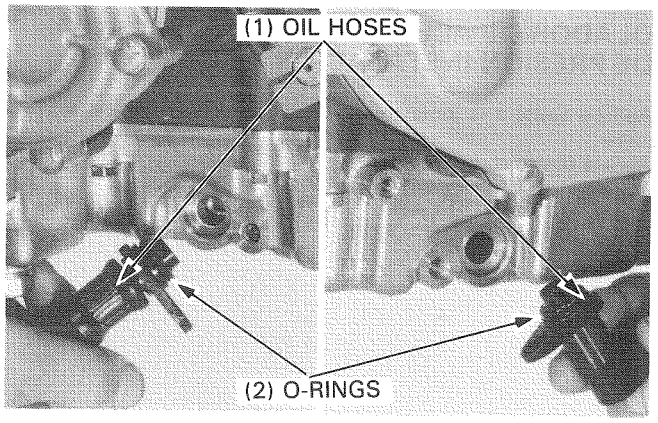

OIL COOLER

INSPECTION

Check the oil cooler core for clogging or damage.

Straighten bent fins and collapsed core tubes.
Remove insects, mud or any obstruction with compressed air or low water pressure.

Inspect the oil cooler hose joints and seams for leaks.
For oil cooler replacement, refer to page 2-12.

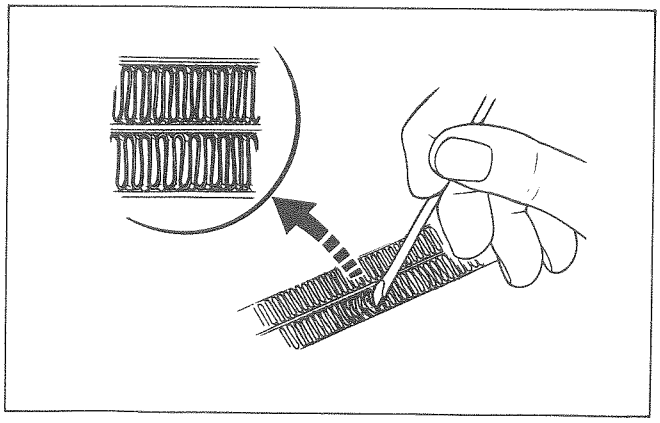

REMOVAL

Remove the upper fairing (page 13-5).
Remove the oil hoses bolts and disconnect the hoses from the oil cooler.

Suspend the oil hoses so that oil does not leak out.

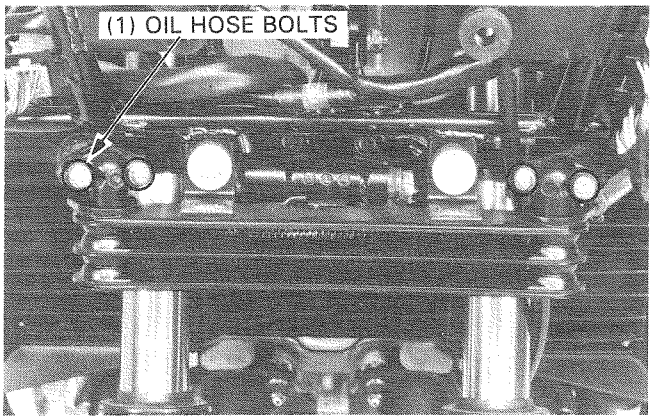

Remove the oil cooler mounting bolts and oil cooler.

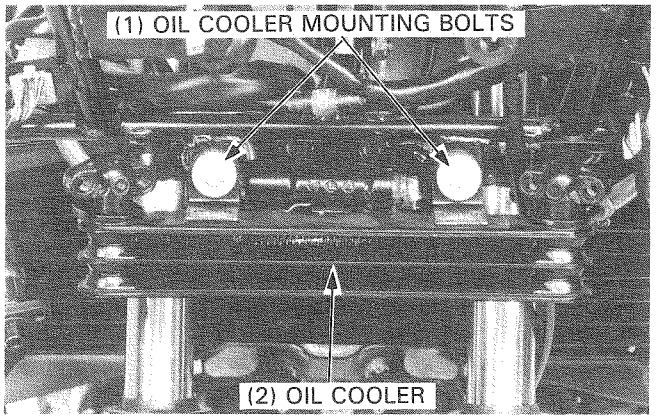

INSTALLATION

Install the oil cooler to the upper fairing stay securely.

Apply oil to the O-rings and install the oil hoses to the oil cooler securely.

After installation, start the engine and check for oil leaks.

Install the upper fairing (page 13-5).

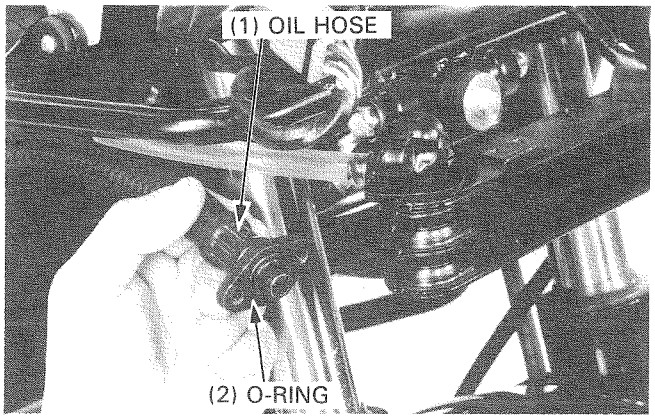

LUBRICATION POINTS

Use general purpose grease when not specified here.
Apply oil or grease to the other sliding surfaces and cables not shown here.

CONTROL CABLE LUBRICATION

Periodically disconnect the throttle and choke cables at their upper ends. Thoroughly lubricate the cables and their pivot points with a commercially available cable lubricant or a light weight oil.

Apply paste grease with 40% or more molybdenum disulfide to the * mark components.

NOTE

Some sources of MoS_2 paste grease with 40% or more molybdenum are:

- Molykote® G-n Paste manufactured by Dow Corning, U.S.A.
- Honda Moly 45 (U.S.A. only)
- Rocol ASP manufactured by Rocol Limited, U.K.
- Rocol Paste manufactured by Sumico Lubricant, Japan

Any other manufacturer's paste grease equivalent to the above may also be used.

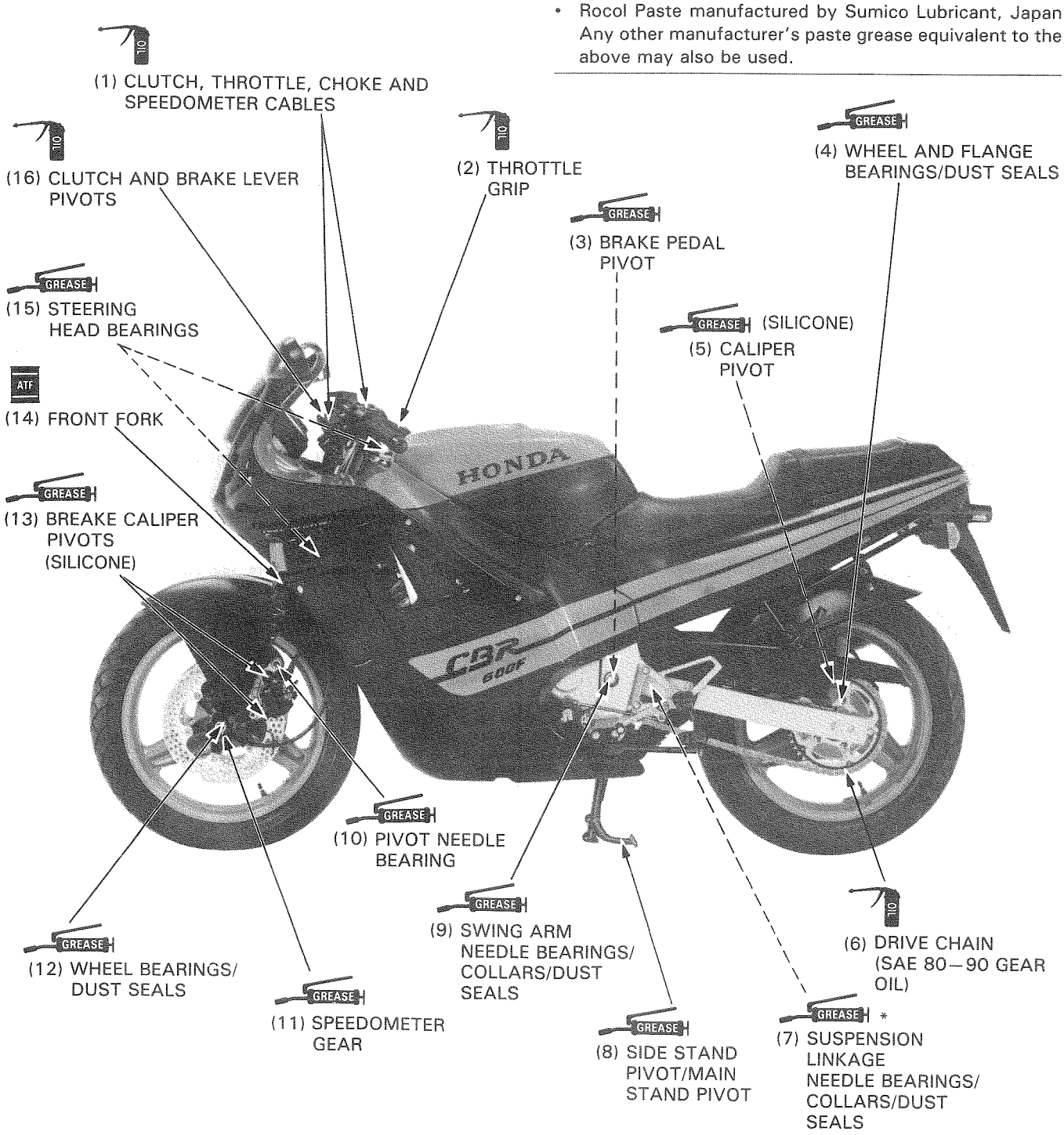

MEMO

MAINTENANCE
MANTENIMIENTO
MANUTENZIONE

SERVICE INFORMATION

GENERAL

Engine oil	See page 2-4
Engien oil filter	See page 2-4

WARNING

- *When the engine must be running to do some work, make sure the area is well ventilated. Never run the engine in a closed area. The exhaust contains poisonous carbon monoxide gas that may cause loss of consciousness and lead to death.*

SPECIFICATIONS

<ENGINE>

Throttle grip free play:		2—6 mm (1/12—1/4 in)
Spark plugs:	NGK:	DPR8EA-9
	ND :	X24EPR-U9
Spark plug gap:		0.8—0.9 mm (0.03—0.04 in)
Valve clearance	Intake :	0.16 mm (0.006 in) — between camshaft and rocker arm
	Exhaust:	0.20 mm (0.008 in) — between camshaft and rocker arm
Carburetor synchronization:		All carburetors within 40 mm (1.6 in) Hg of each other
Idle speed:		1200 ± 100 min^{-1} (rpm)
Cylinder compression:		1176 ± 196 kpa (13.0 ± 2.0 kg/cm^2, 185 ± 28 psi)

<CHASSIS>

Drive chain slack:	15—25 mm (5/8—1 in)
Clutch lever free play:	10—20 mm (3/8—3/4 in)
Fork leg air pressure:	0—40 kPa (0—0.4 kg-cm², 0—6 psi)

Tires:

		Front	Rear
Tire size		110/80 V17—V240	130/80 V17—V240
Cold tire pressure kPa (kg/cm², psi)	UP to 90 kg (200 lbs) load	250 (2.50, 36)	290 (2.90, 42)
	90 kg (200 lbs) load to vehicle capacity load	250 (2.50, 36)	290 (2.90, 42)

Minimum tire tread depth:	Front: 1.5 mm (1/16 in) Rear : 2.0 mm (3/32 in)

TORQUE VALUES

Spark plug	14 N•m (1.4 kg-m, 10 ft-lb)
Timing hole cap	3.5 N•m (0.35 kg-m, 2.5 ft-lb)
Crankshaft hole cap	7 N•m (0.7 kg-m, 5 ft-lb)
Rear axle nut	90 N•m (9.0 kg-m, 65 ft-lb)
Side stand bolt	15 N•m (1.5 kg-m, 11 ft-lb)
Side stand lock nut	35 N•m (3.5 kg-m, 25 ft-lb)
Side stand bracket	40 N•m (4.0 kg-m, 29 ft-lb)
Valve adjusting lock nut	23 N•m (2.3 kg-m, 17 ft-lb)

TOOLS

Special

Vacuum gauge	07404—0030000 or 07404—0020000
Valve adjusting wrench set	07GMA—ML70100
— lock nut wrench	07GMA—ML70120
— adjusting wrench	07GMA—ML70110
Compression gauge	07305—0010000
Compression gauge attachment	07GMJ—KT70100

MAINTENANCE SCHEDULE

Perform the PRE-RIDE INSPECTION in the Owner's Manual at each scheduled maintenance period.
I: Inspect and clean, Adjust, Lubricate, or Replace if necessary.
R: Replace L: Lubricate

	ITEM \ FREQUENCY	WHICHEVER COMES FIRST		ODOMETER READING NOTE (2)							
			x 1,000 km	1	6	12	18	24	30	36	REFER TO PAGE
			x 1,000 mi	0.6	4	8	12	16	20	24	
		EVERY	MONTH		6	12	18	24	30	36	
*	FUEL LINE					I		I		I	3-4
*	THROTTLE OPERATION					I		I		I	3-4
*	CARBURETOR-CHOKE					I		I		I	3-5
*	AIR CLEANER	NOTE 1					R			R	3-5
	SPARK PLUGS				I	R	I	R	I	R	3-6
*	VALVE CLEARANCE			I		I		I		I	3-6
	ENGINE OIL			R		R		R		R	2-4
	ENGINE OIL FILTER			R		R		R		R	2-4
*	CARBURETOR-SYNCHRONIZATION					I		I		I	3-8
*	CARBURETOR-IDLE SPEED			I	I	I	I	I	I	I	3-9
	RADIATOR COOLANT	NOTE 3				I		I		I	3-9
*	COOLING SYSTEM					I		I		I	3-9
	DRIVE CHAIN			I, L EVERY 600 mi (1,000 km)							3-10
	BRAKE FLUID	NOTE 4			I	I	I	I	I	I	3-12
	BRAKE PAD WEAR				I	I	I	I	I	I	3-12
	BRAKE SYSTEM			I		I		I		I	3-13
*	BRAKE LIGHT SWITCH					I		I		I	3-13
*	HEADLIGHT AIM					I		I		I	3-13
	CLUTCH SYSTEM			I	I	I	I	I	I	I	3-14
	SIDE STAND					I		I		I	3-14
*	SUSPENSION					I		I		I	3-15
*	NUTS, BOLTS, FASTENERS			I		I		I		I	3-16
**	WHEELS/TIRES					I		I		I	3-16
**	STEERING HEAD BEARINGS			I		I		I		I	3-16

* Should be serviced by an authorized HONDA dealer, unless the owner has proper tools and service data and is mechanically qualified.
** In the interest of safety, we recommended these items be serviced ONLY by an authorized HONDA dealer.

NOTES:
1. Service more frequently when riding in dusty areas.
2. For higher odometer reading, repeat at the frequency interval established here.
3. Replace every 36,000 km (24,000 mile) or every 2 year whichever comes first.
4. Replace every 18,000 km (12,000 mile) or every 2 year whichever comes first.

FUEL LINE

Remove the left side cover.
Check the fuel line and replace any that show deterioration, damage or leakage.

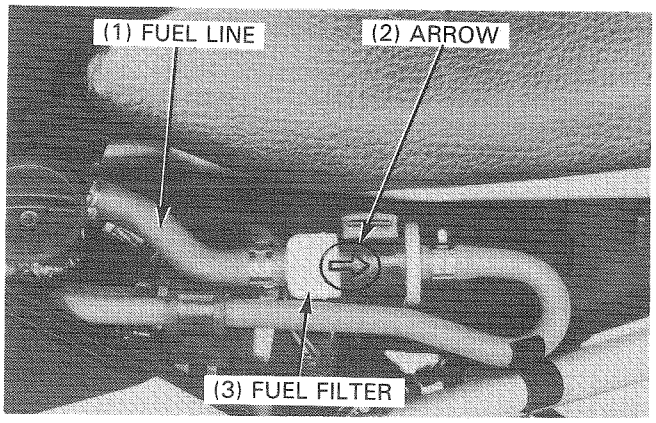

FUEL FILTER

WARNING

- *Gasoline is flammable and is explosive under certain conditions. Do not smoke or allow flames or sparks in your working area.*

Remove the left side cover.
Turn the fuel valve OFF.
Pull the fuel filter out, remove the rubber stay and check the filter for clog.

Replace the fuel filter with a new one, if necessary.
Install the fuel filter with its arrow pointing toward the outlet side.

After installing, turn the fuel valve on and check for fuel leads.

THROTTLE OPERATION

Check that the throttle grip for smooth operation to full throttle and that it closes automatically, in all steering positions.
Check the throttle cables and replace them if they are deteriorated, kinked or damaged.

Lubricate the throttle cables (page 2-13), if throttle operation is not smooth.

Measure the throttle grip free play at the throttle grip flange.

FREE PLAY: 2–6 mm (1/12–1/4 in)

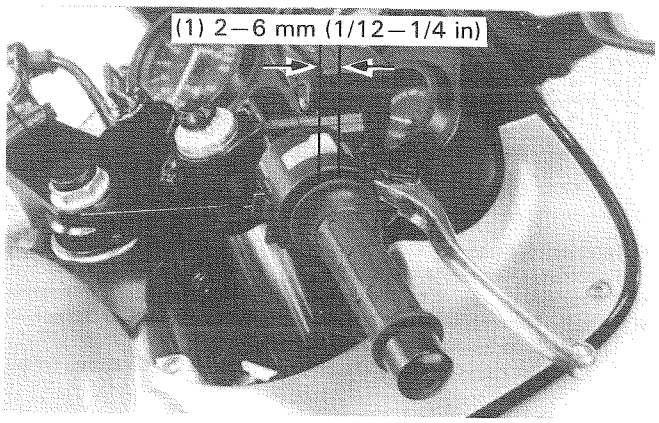

Adjustment can be made at either end of the throttle cable.
Minor adjustments are made with the upper adjuster and major adjustments are made with the lower adjuster.

Adjust by loosening the lock nut and turning the adjuster.
Tighten the lock nut and recheck throttle operation.

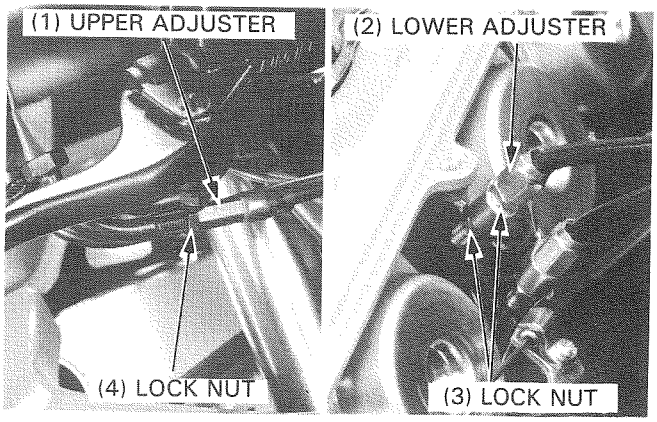

CARBURETOR CHOKE

The choke system uses a fuel enrichening circuit controlled by a by-starter valve. The by-starter valve opens the enrichening circuit via cable when the choke lever on the handlebar is moved back.

Check for smooth operation of the choke lever.
Lubricate the choke cable, if the operation is not smooth.
Remove the fuel tank and air cleaner case.
Move the choke lever all the way back to the fully open position. Make sure the by-starter valve is open by trying to move the choke lever on the carburetor, there should be no free play.

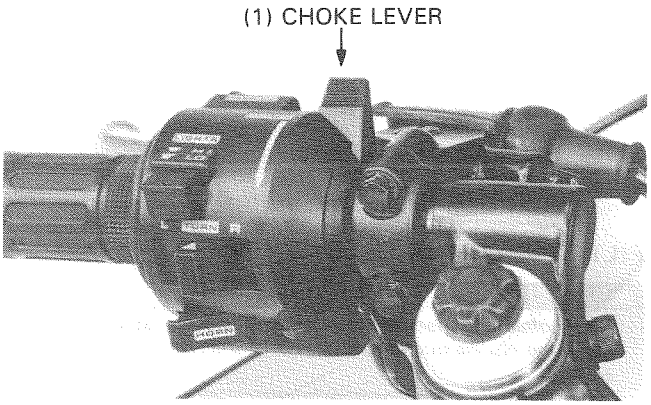

Adjust the free play, by loosening the choke cable clamp on the carburetor and moving the choke cable casing so the choke lever is fully open.
Tighten the clamp.

Push the choke lever fully closed. Make sure the by-starter valve is fully closed by checking for free play in the cable between the lever on the carburetor and cable casing.
Reinstall the removed parts in the reverse order of disassembly.

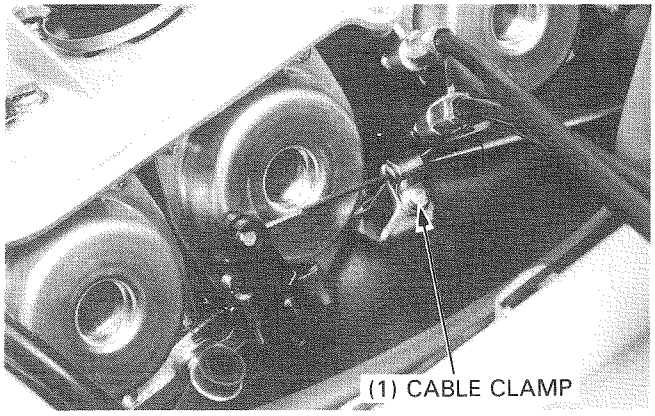

AIR CLEANER

Remove the fuel tank (page 4-3).
Remove the air cleaner case cover screws and the cover.

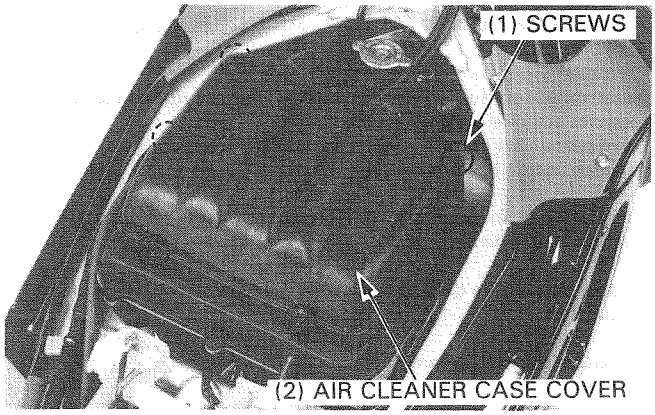

Remove the air cleaner element. Discard the element in accordance with the maintenance schedule.

Also, replace the element any time it is excessively dirty or damaged.

Install the air cleaner element with the "↑" (Arrow) mark facing up.

Install the air cleaner case cover and fuel tank.

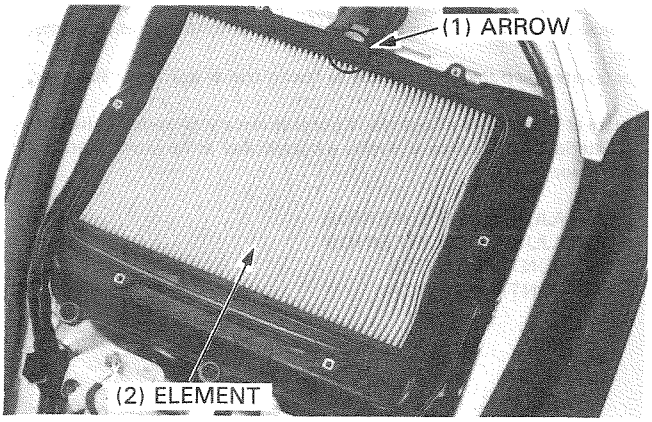

SPARK PLUGS

Remove the maintenance covers (page 13-3).
Remove the spark plug caps and clean any dirt from around the spark plug basses.
Remove and discard the spark plugs.

Measure the spark plug gaps with a wire-type feeler gauge.

SPARK PLUG GAP: 0.8–0.9 mm (0.03–0.04 in)

Adjust by bending the side electrode carefully.

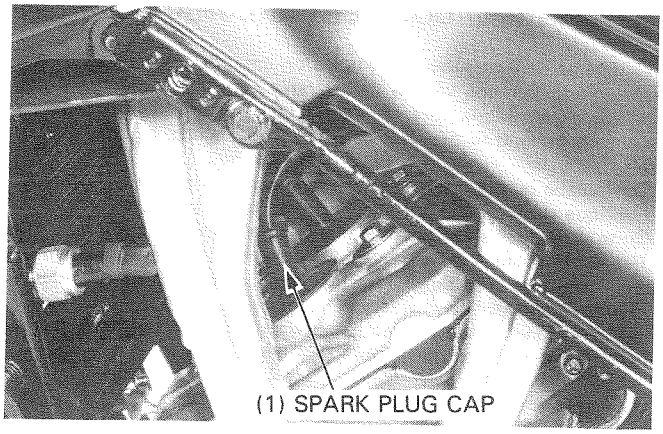

RECOMMENDED SPARK PLUGS:

NGK	ND
DPR8EA-9	X24EPR-U9

With the plug washer attached, thread each spark plug in by hand to prevent crossthreading. Continue tightening by hand until the spark plug bottoms.

Tighten the spark plug another 1/2 turn with a spark plug wrench to compress the washer.

TORQUE: 14 N·m (1.4 kg-m, 10 ft-lb)

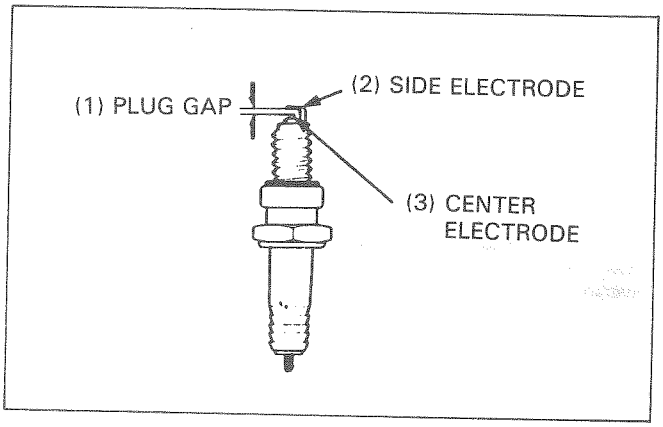

VALVE CLEARANCE

INSPECTION

NOTE

- Inspect and adjust valve clearance while the engine is cold (below 35°C, 95°F).

Remove the lower fairings (page 13-4).
Loosen the radiator mounting bolt. Remove the radiator grille and radiator lower mounting bolts. Swing the radiator from the frame and secure it with a piece of wire.

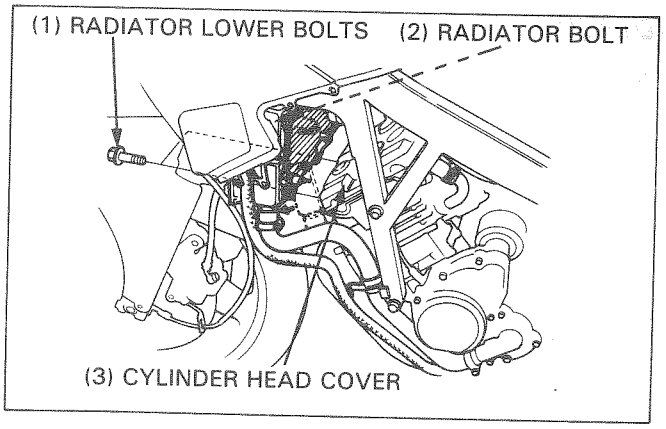

CAUTION

- *Be careful not to damage the radiator fins.*

Remove the cylinder head cover (page 8-3).

Remove the timing hole cap and crankshaft hole cap.

Rotate the crankshaft clockwise and align the T mark on the flywheel with the index mark on the right crankcase cover.

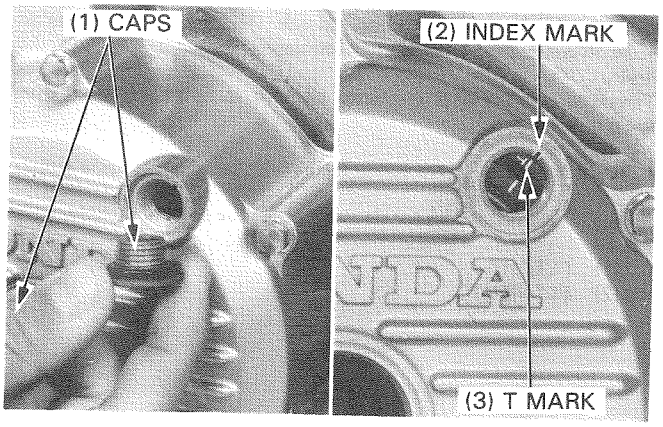

With each timing mark on the sprockets aligned with the cylinder head upper surface, if each No. 4 cam lobe is faced outside, go to STEP 1.
With each timing mark aligned, if each No. 4 cam lobe is faced inside, go to STEP 2.

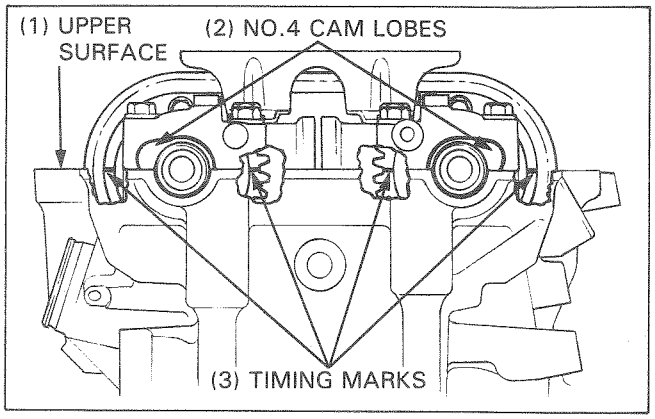

Insert the feeler gauge between the rocker arm slipper surface and the camshaft.
STEP 1—Measure the valve clearance as follow:
— No. 2 (IN)
— No. 3 (EX)
— No. 4 (IN/EX)
STEP 2—Measure the valve clearance as follow:
— No. 1 (IN/EX)
— No. 2 (EX)
— No. 3 (IN)

VALVE CLEARANCES:
IN: 0.16 mm (0.006 in)
EX: 0.20 mm (0.008 in)

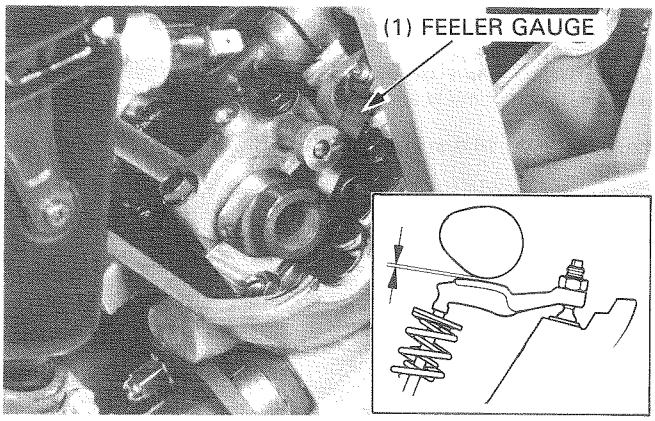

Rotate the crankshaft 360° and align the T mark with the index mark again and go to STEP 2 or 1 to check other valve clearances.

Install the valve adjusting wrench set.

TOOL:

Valve adjusting wrench set	**07GMA—ML70100**
— lock nut wrench	**07GMA—ML70120**
— adjusting wrench	**07GMA—ML70110**

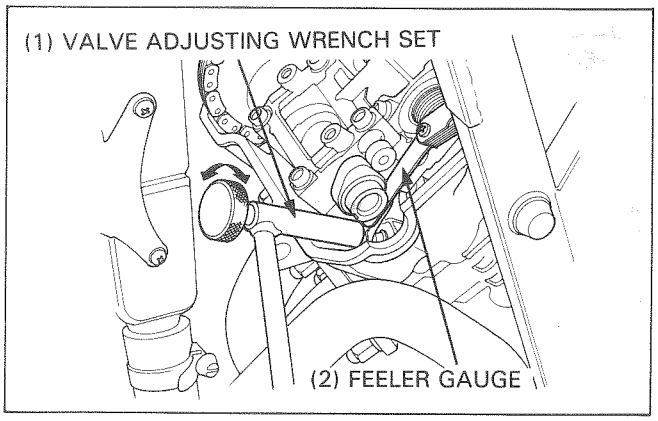

Adjust by loosening tappet adjusting screw lock nut and turning the adjusting screw with the adjuster until there is a slight drag on the feeler gauge.

Hold the adjuster and tighten the adjusting screw lock nut.

TORQUE: 23 N·m (2.3 kg-m, 17 ft-lb)

Install new O-rings to the hole caps.
Tighten the hole caps.

TORQUE:
Timing hole cap: 3.5 N·m (0.35 kg-m, 2.5 ft-lb)
Crankshaft hole cap: 7 N·m (0.7 kg-m, 5 ft-lb)

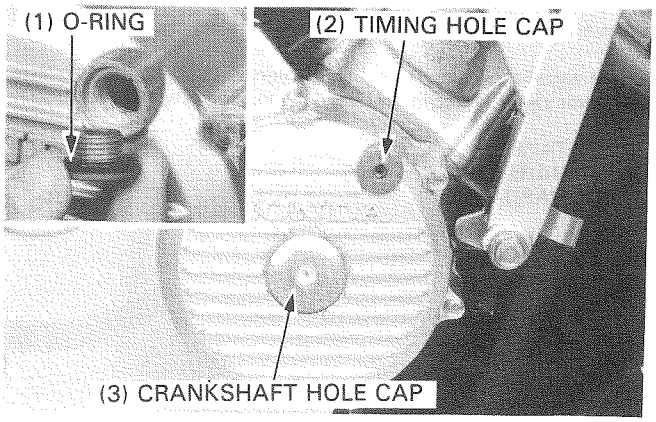

Install the removed parts in the reverse order of removal.

CARBURETOR-SYNCHRONIZATION

NOTE

- Synchronize the carburetors with the engine at normal operating temperature, transmission in neutral and motorcycle supported upright.

Remove the lower fairings (page 13-4).
Remove the fuel tank (page 4-3) and air cleaner case cover.
Remove the plugs from the cylinder head ports.

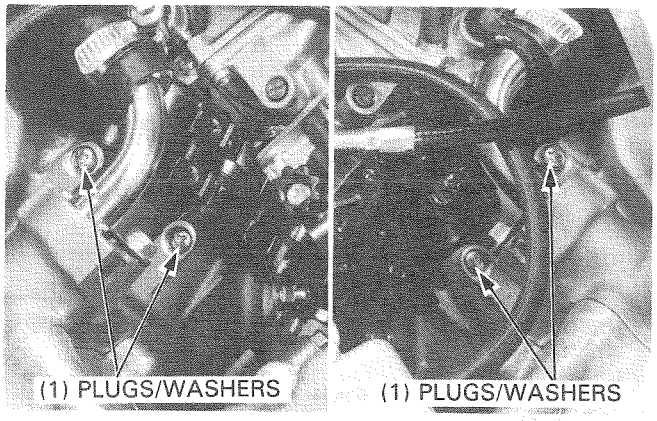

Install the four vacuum gauge adapters.
Connect the vacuum gauge.

TOOL:
Vacuum gauge: **07404—0030000 or 07404—0020000**

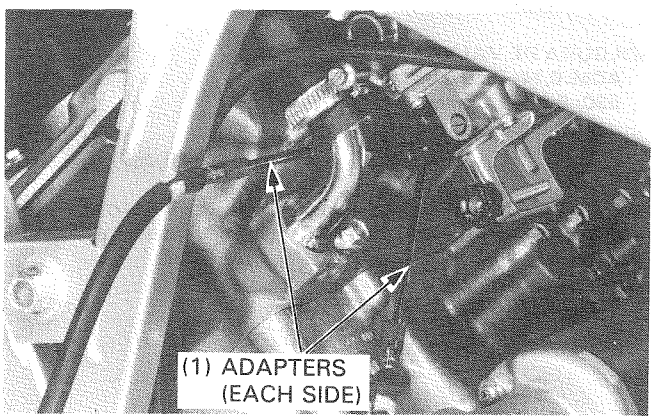

Start the engine and adjust the idle speed with the throttle stop screw.

IDLE SPEED: 1200 ± 100 rpm

Check that all carburetors are within 40 mm (1.6 in) Hg of each other.

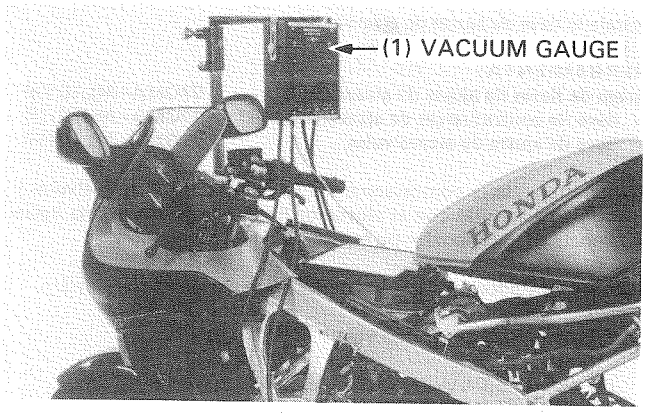

Synchronize to specification by turning the adjusting screws with a screwdriver.

NOTE

- No. 2 carburetor is the base.

After adjustment, install the air cleaner case cover and recheck the idle speed and synchronization.
Remove the gauge adapters and install the plugs.
Install the fuel tank (page 4-3).
Install the lower fairing (page 13-4).

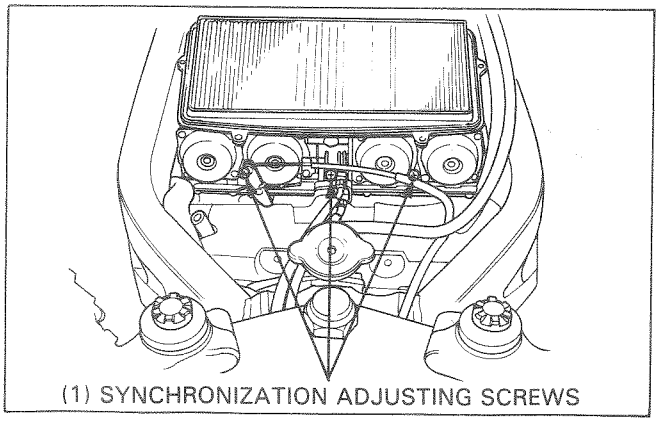

CARBURETOR-IDLE SPEED

NOTE

- Inspect and adjust idle speed after all other engine adjustments are within specification.
- The engine must be warm for accurate adjustment. Ten minutes of stop-and-go riding is sufficient.

Warm up the engine, shift the transmission into neutral and support the motorcycle upright.
Check the idle speed and adjust by turning the throttle stop screw if necessary.

IDLE SPEED: 1200 ± 100 rpm

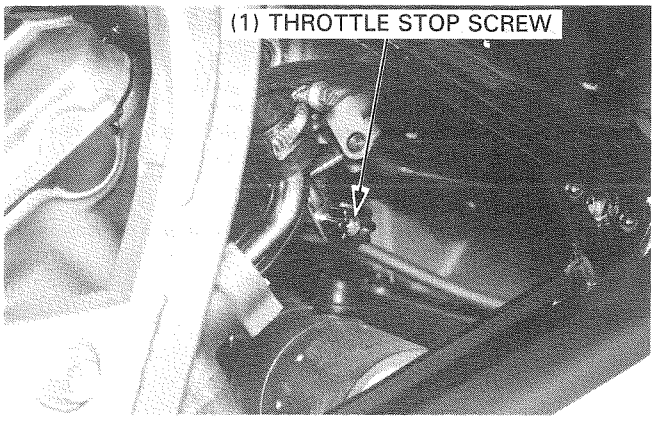

RADIATOR COOLANT

Remove the left side cover.
Check the coolant level of the reserve tank with the engine running at normal operating temperature.
The level should be between the "UP" and "LOW" level lines.

If necessary, remove the reserve tank cap and fill to the UP level line with 50/50 mixture of distilled water and anti-freeze.
Reinstall the cap and left side cover.

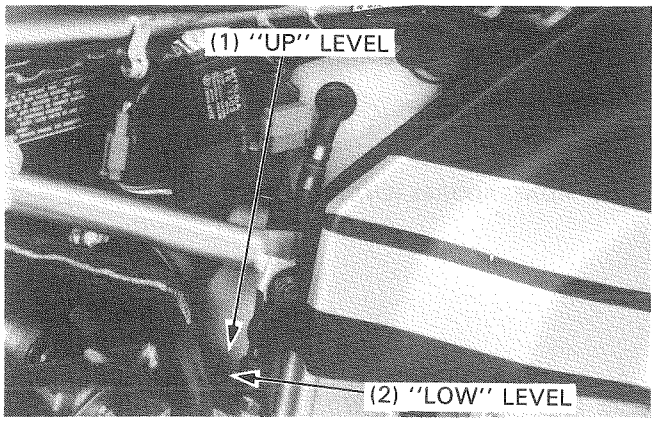

COOLING SYSTEM

Remove the lower fairings (page 13-4).

Check the radiator core for clogging or damage.

Straighten bent fins and collapsed core tubes.
Remove insects, mud or any obstruction with compressed air or low water pressure.
Replace the radiator if the air flow is restricted over more than 20% of the radiating surface.

For radiator replacement, refer to page 5-6.

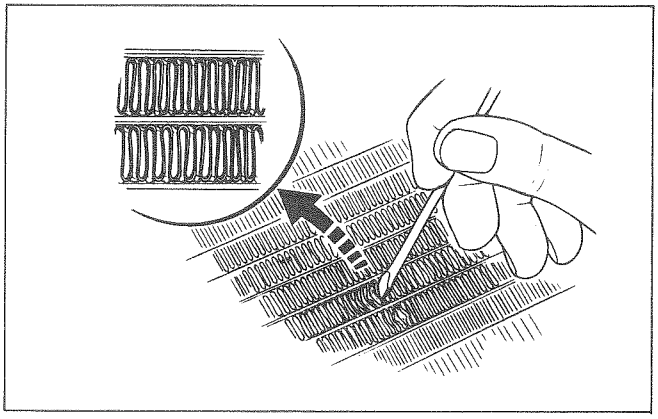

Check th cooling system hoses for cracks, deterioration or other damage, and replace if necessary.
Check that all hose clamps are tight.

Install the lower fairings (page 13-4).

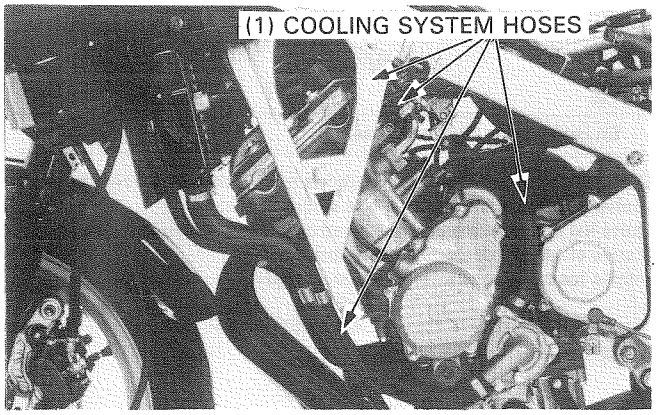

CYLINDER COMPRESSION

Warm up the engine.
Stop the engine, then disconnect the spark plug caps and remove the spark plugs.
Insert the compression gauge.

TOOL:

Compression gauge	**07305–0010000**
Compression gauge attachment	**07GMJ–KT70100**

Open the throttle all the way and crank the engine with the starter motor.

NOTE

- Crank the engine until the gauge reading stops rising. The maximum reading is usually reached within 4-7 seconds.

COMPRESSION PRESSURE:
1176 ± 196 kPa (13.0 ± 2.0 kg/cm², 185 ± 28 psi)

If compression is low, check for the following:
– Improper valve clearance
– Leaky valves
– Leaking cylinder head gasket
– Worn piston/ring/cylinder
If compression is high, it indicates that carbon deposits have accumulated on the combustion chamber and/or the piston crown.

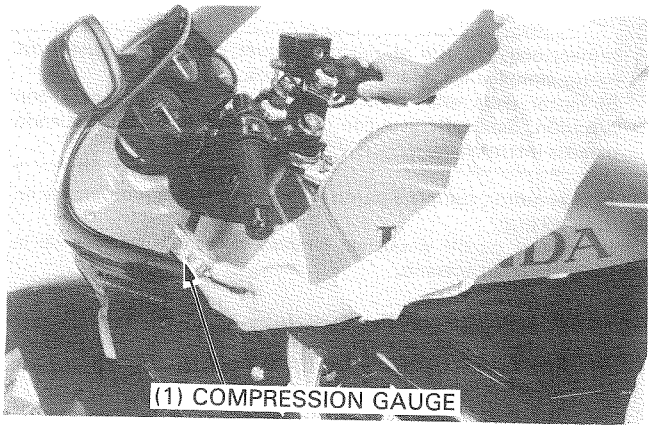

DRIVE CHAIN

DRIVE CHAIN SLACK INSPECTION

WARNING

- ***Never inspect or adjust the drive chain while the engine is running.***

Turn the engine off, place the motorcycle on its main stand and shift the transmission into neutral.
Check slack in the drive chain lower run midway between the sprockets.

SLACK: 15–25 mm (5/8–1 in)

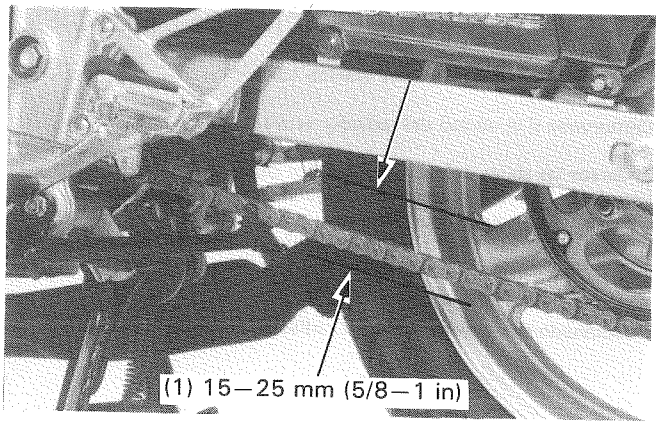

DRIVE CHAIN ADJUSTMENT

Loosen the axle nut.
Loosen both lock nuts and turn both adjusting nuts as necessary.
Make sure the index marks on the both adjusters are aligned with the rear edges of the axle slots in the swing arm.

Tighten both the lock nuts.
Tighten the rear axle nut.

TORQUE: 90 N·m (9.0 kg-m, 65 ft-lb)

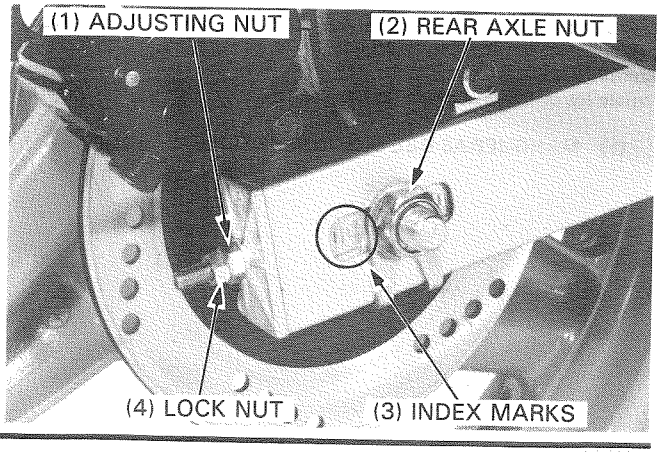

Recheck chain slack and free wheel rotation.
Lubricate the drive chain with SAE #80 or 90 gear oil

Check the chain wear label. If the red zone on the label aligns with the arrow mark of the chain adjuster after the chain has been adjusted, the chain must be replaced.

REPLACEMENT CHAIN: RK50MF0

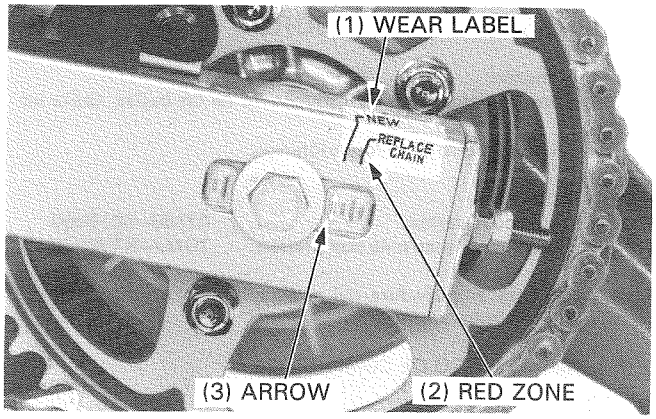

Inspect the drive chain and sprockets for damage or wear. A drive chain with damaged rollers, loose pins, or missing O-rings must be replaced. Replace any sprocket which is damaged or excessively worn.

NOTE

- Never install a new drive chain on worn sprockets or a worn drive chain on new sprockets. Both chain and sprockets must be in good condition or the replacement chain or sprockets will wear rapidly.
- Refer to page 15—16 for drive chain slider replacement.

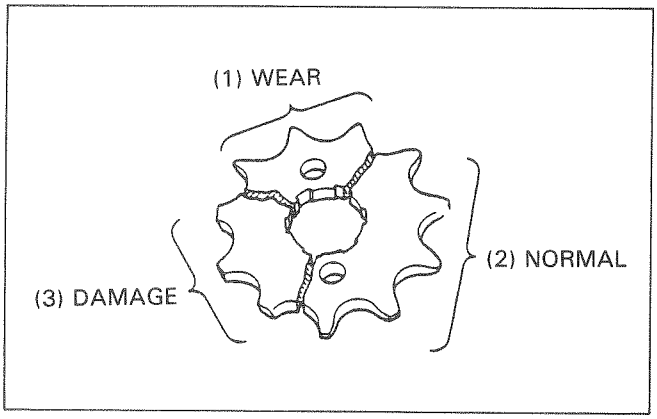

DRIVE CHAIN SLIDER INSPECTION

Inspect the drive chain slider for wear or damage.
Replace it if necessary.

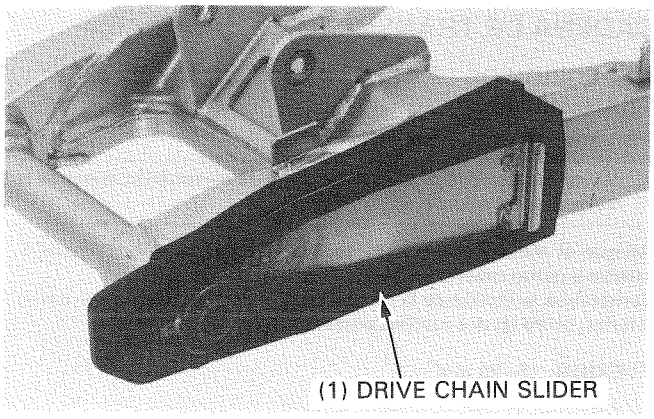

LUBRICATION AND CLEANING

The drive chain on this motorcycle is equipped with small O-rings between the link plates. The O-rings can be damaged by steam cleaners, high pressure washers and certain solvents.

Clean the drive chain with a small amount of kerosene and wipe dry.

Lubricate only with SAE #80 or 90 gear oil.
Commercial chain lubricants may contain solvents which could damage the rubber O-rings.

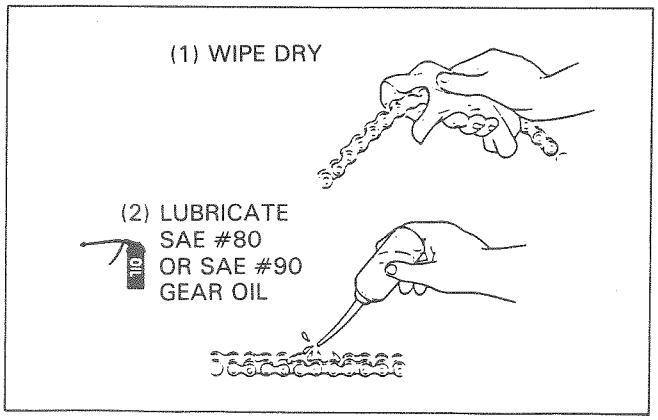

BATTERY

Remove the seat and battery holder cover.

Make sure the battery cables are securely connected to the battery terminals.
Apply grease to the terminals.

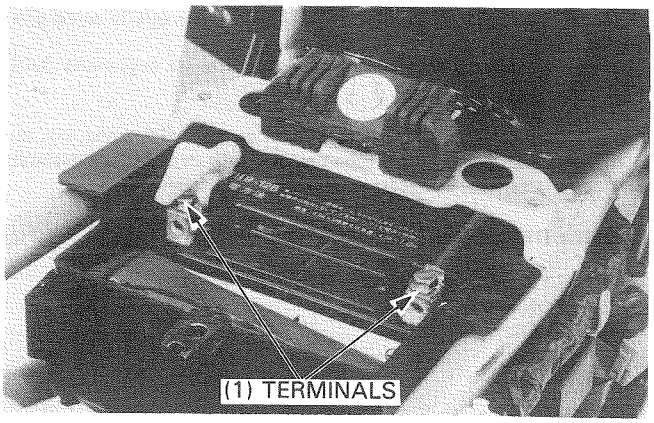

BRAKE FLUID

Check the front brake fluid level with the handlebar turned so that the reservoir is level.
Check the rear brake fluid level after supporting the motorcycle uprignt on level ground.

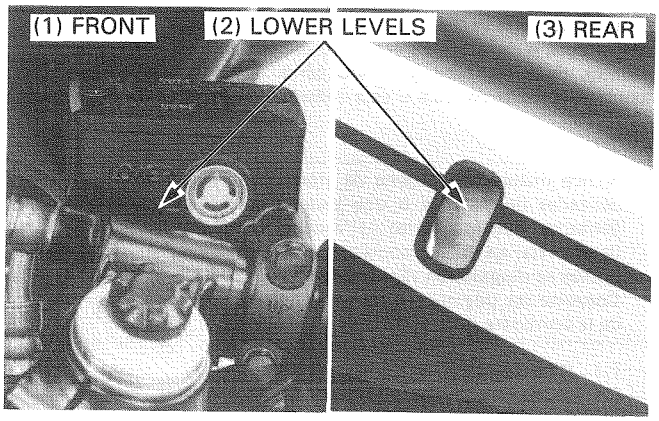

If the level nears the lower level mark, remove the reservoir cover and diaphragm and fill the reservoir to the upper level with [FRONT AND REAR: DOT 4] from a sealed container.
Check the entire system for leaks.

CAUTION

- *Do not remove the reservoir cover until the handlebar has been turned so that the reservoir is level.*
- *Do not mix different types of fluid, as they are not compatible with each other.*
- *Do not allow foreign material to enter the system when filling the reservoir.*
- *Avoid spilling the fluid on painted, plastic or rubber parts.*

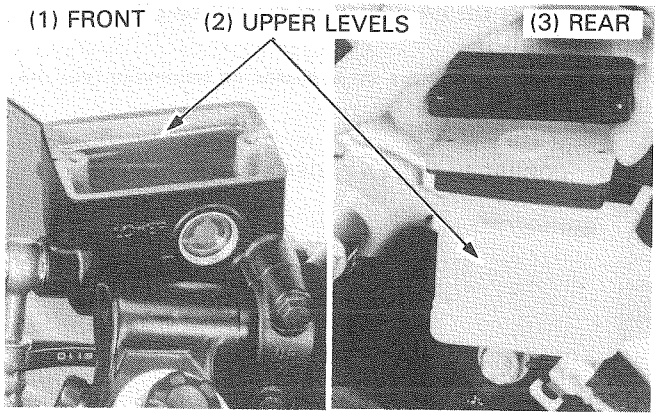

Refer to section 16 for brake bleeding procedures.

BRAKE PAD WEAR

Check the brake pads for wear by looking through the slot indicated by the arrow cast on the caliper assembly.

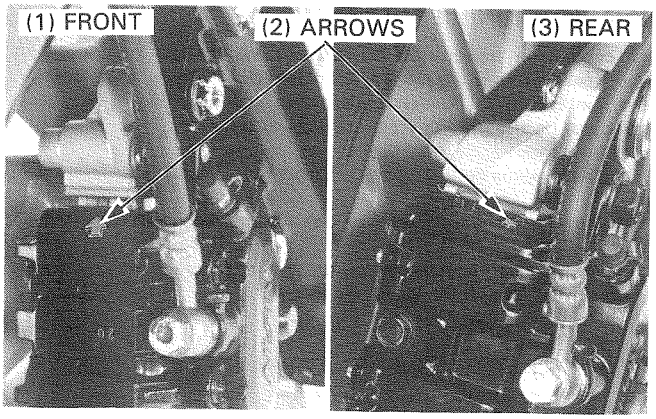

Replace the brake pads if they are worn down to the wear groove on the pads.

CAUTION

- *Always replace the brake pads in pairs to assure even disc pressure.*

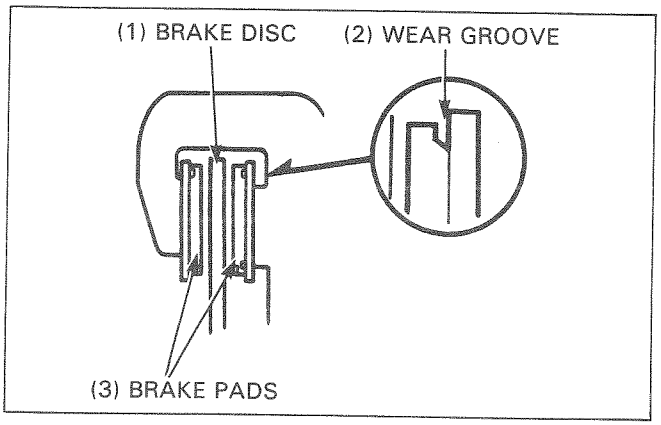

BRAKE SYSTEM

BRAKE PEDAL HEIGHT

Loosen the lock nuts and adjust the pedal height to your desire height by turning the push rod.

After adjustment, check the brake light switch operation.

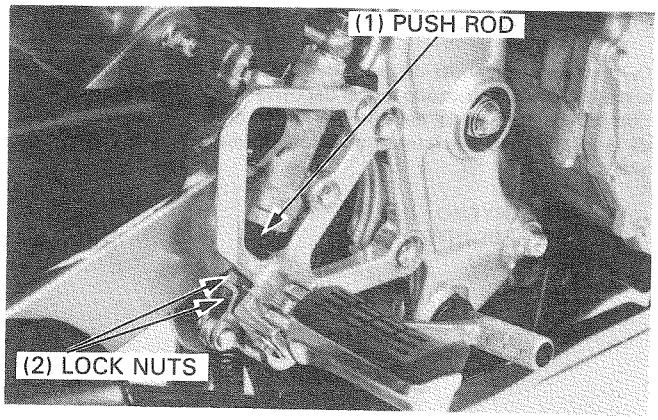

BRAKE LIGHT SWITCH

NOTE

- Perform rear brake light switch adjustment after adjusting the brake pedal height.
- The front brake light switch does not require adjustment.

Adjust the brake light switch so that the brake light will come on when the brake engagement begins.

Adjust by turning the adjuster and recheck the brake light switch operation.

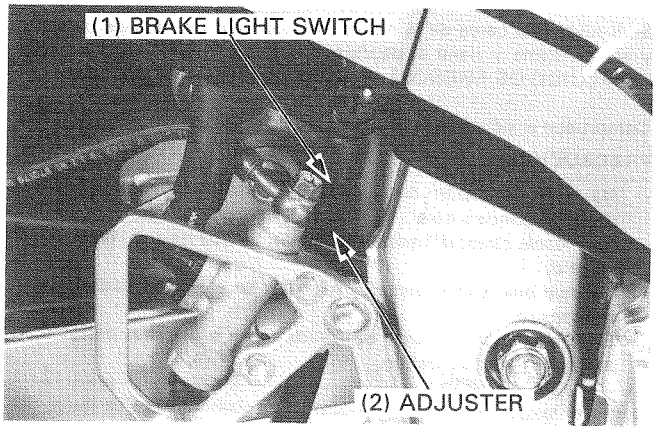

HEADLIGHT AIM

Adjust vertically be turning the vertical adjusting knob. Turn the adjusting knob clockwise to direct the beam down.
Adjust horizontally by turning the horizontal adjusting knob. Turn the adjusting knob clockwise to direct thge beam toward the right side of the rider.

NOTE

- Adjust the headlight beam as specified by local laws and regulations.

WARNING

- ***An improperly adjusted headlight may blind oncoming drivers, or it may fail to light the road for a safe distance.***

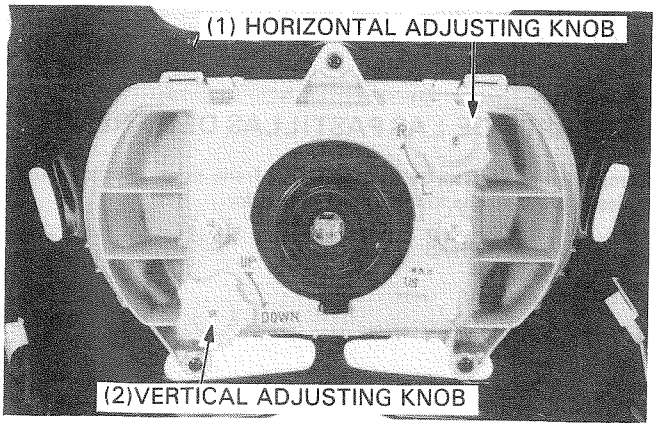

CLUTCH SYSTEM

Measure the clutch lever free play at the lever end.

FREE PLAY: 10—20 mm (3/8—3/4 in)

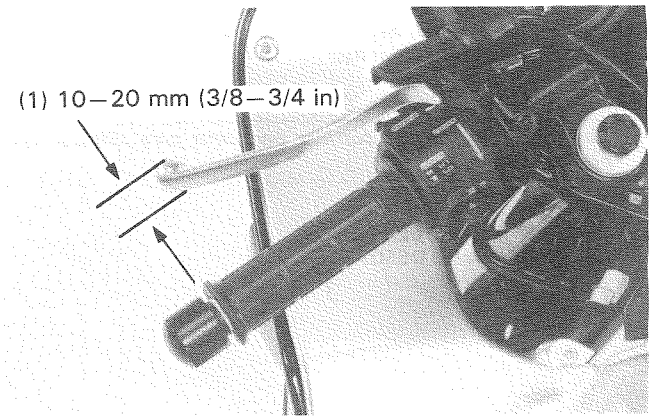

Adjustment can be made at either end of the throttle cable. Generally minor adjustments are made with the upper adjuster and major adjustments are made with the lower adjuster.

Adjust by loosening the lock nut and turning the adjuster. Tighten the lock nut and recheck throttle operation.

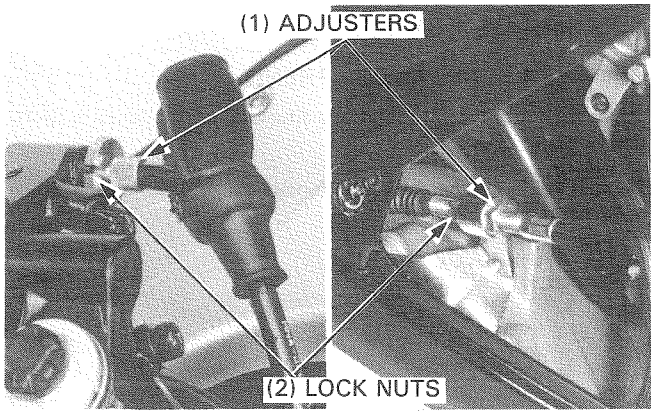

SIDE STAND

Check the rubber pad on the side stand for deterioration and wear.
Replace the rubber pad if wear extends to the wear line.

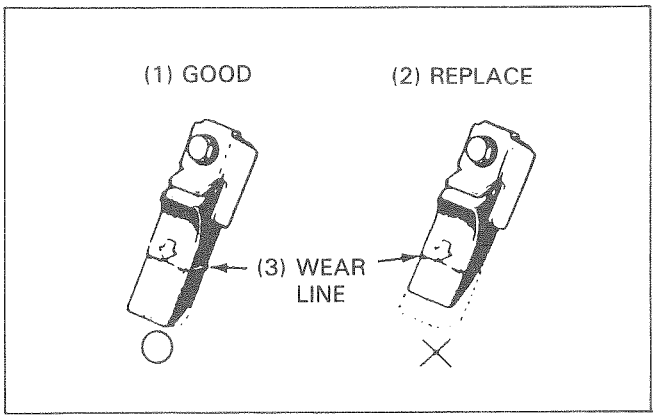

Support the motorcycle on its main stand.
Check the side stand spring for damage or loss of tension.
Using a spring scale, measure the force required to retract the side stand. It should be within 2—3 kg (4.4—6.6 lbs), as shown.
Check the side stand assembly for freedom of movement.
Make sure that the side stand is not bent.

TORQUE:
Side stand bolt: 15 N·m (1.5 kg-m, 11 ft-lb)
Side stand lock nut: 35 N·m (3.5 kg-m, 25 ft-lb)
Side stand bracket: 40 N·m (4.0 kg-m, 29 ft-lb)

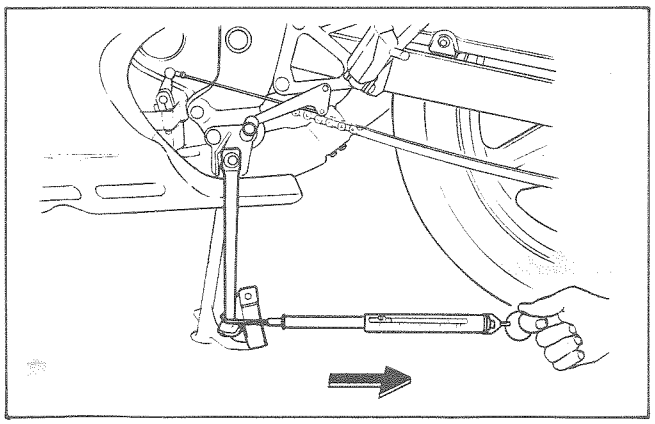

AUTOMATIC RETURN SIDE STAND (G/SW/NR only)

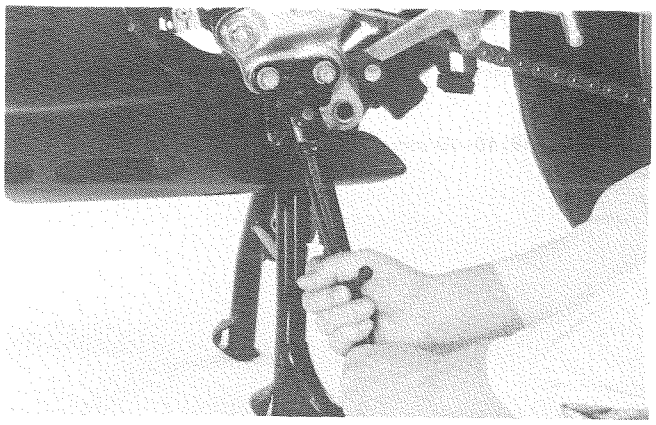

Support the motorcycle with its side stand.
Check the side stand for operation. The side stand should be fully retract automatically when move the motorcycle upright.
If the side stand does not retract automatically, lubricate the side stand pivot with grease.
Replace the side stand pivot bolt or springs, if the side stand is still abnormally after lubricate the grease.
Move the side stand sideways with forth to see if the side stand pivot is worn.

TORQUE (Side stand pivot nut): 35 N·m (3.5 kg-m, 25 ft-lb)

SUSPENSION

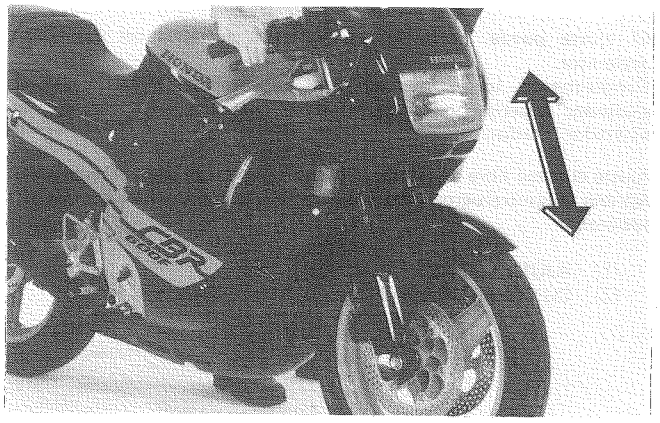

WARNING

- ***Do not ride a vehicle with faulty suspension. Loose, worn or damaged suspension parts impair vehicle stability and control.***

FRONT

Check the action of the fork by compressing them several times.

Check the entire fork assembly for leaks or damage. Replace damaged components which cannot be repaired.
Tighten all nuts and bolts.

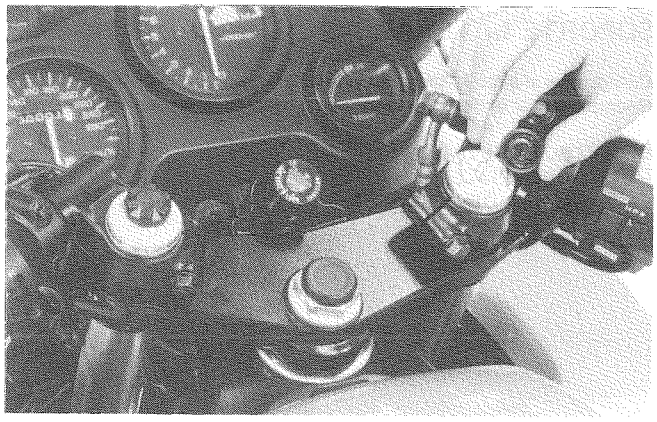

Check the fork leg air pressure when the legs are cold.

Raise the front wheel off the ground.

Remove each air valve cap and measure the air pressure.

AIR PRESSURE: 0—40 kPa (0—0.4 kg/cm², 0—6 psi)

REAR

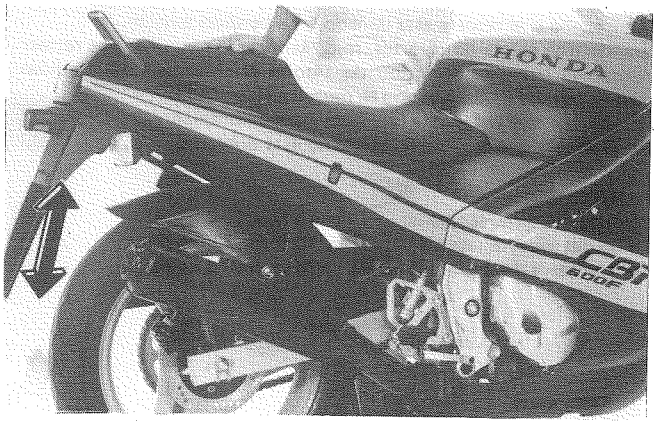

Check the action of the rear shock absorber by compressing the rear end several times.

Check entire shock absorber assembly for leaks or damage. Replace any damaged components which cannot be repaired.

Tighten all nuts and bolts.

Raise the rear wheel off the ground.

Check for worn swing arm bearings by grabbing the rear wheel, and attempting to move the wheel side to side. Replace the bearings if any looseness is noted (page 15-15).

NUTS, BOLTS, FASTENERS

Check that all chassis nuts and bolts are tightened to correct torque values (page 1-5).
Check that all cotter pins, safety clips, hose clamps and cable stays are in place.

WHEELS/TIRES

Check the tires for cuts, imbedded nails, or other damage.

TIRE PRESSURE

NOTE

- Tire pressure should be checked when tires are COLD.

Recommended tire pressures and tire sizes:

		Front	Rear
Tire size		110/80 V17–V240	130/80 V17–V240
Cold tire pressure kPa (kg/cm², psi)	Up to 90 kg (200 lbs) load	250 (2.50, 36)	290 (2.90, 42)
	90 kg (200 lbs) load to vehicle capacity load	250 (2.50, 36)	290 (2.90, 42)

Measure the tread depth at the center of the tires.
Replace the tires when the tread dapth reaches the following limits:

Minimum tread depth: Front: 1.5 mm (1/16 in)
Rear: 2.0 mm (1/12 in)

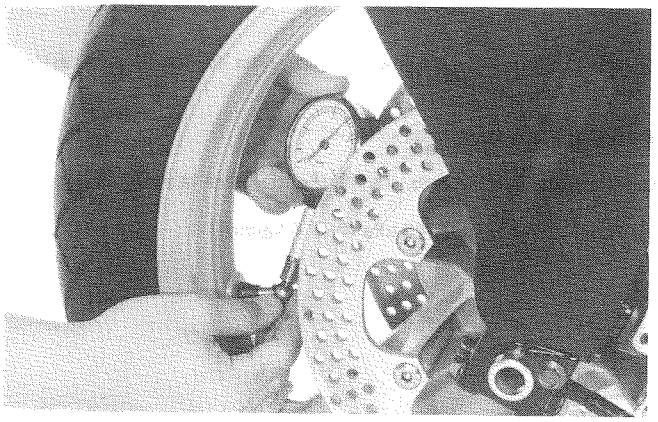

STEERING HEAD BEARINGS

NOTE

- Check that the control cables do not interfere with handlebar rotation.

Support the motorcycle on its main stand.
Raise the front wheel off the ground.
Check that the handlebar moves freely from side to side. If the handlebar moves unevenly, binds, or has vertical movement, inspect the steering head bearings (Section 14).

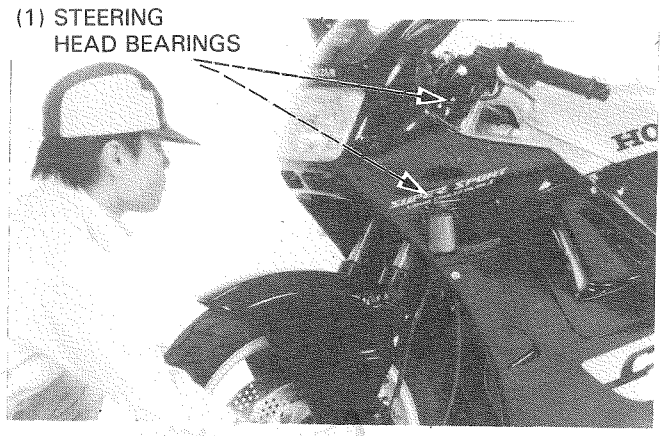

MEMO

FUEL SYSTEM

SISTEMA DE COMBUSTIBLE

SISTEMA ALIMENTAZIONE

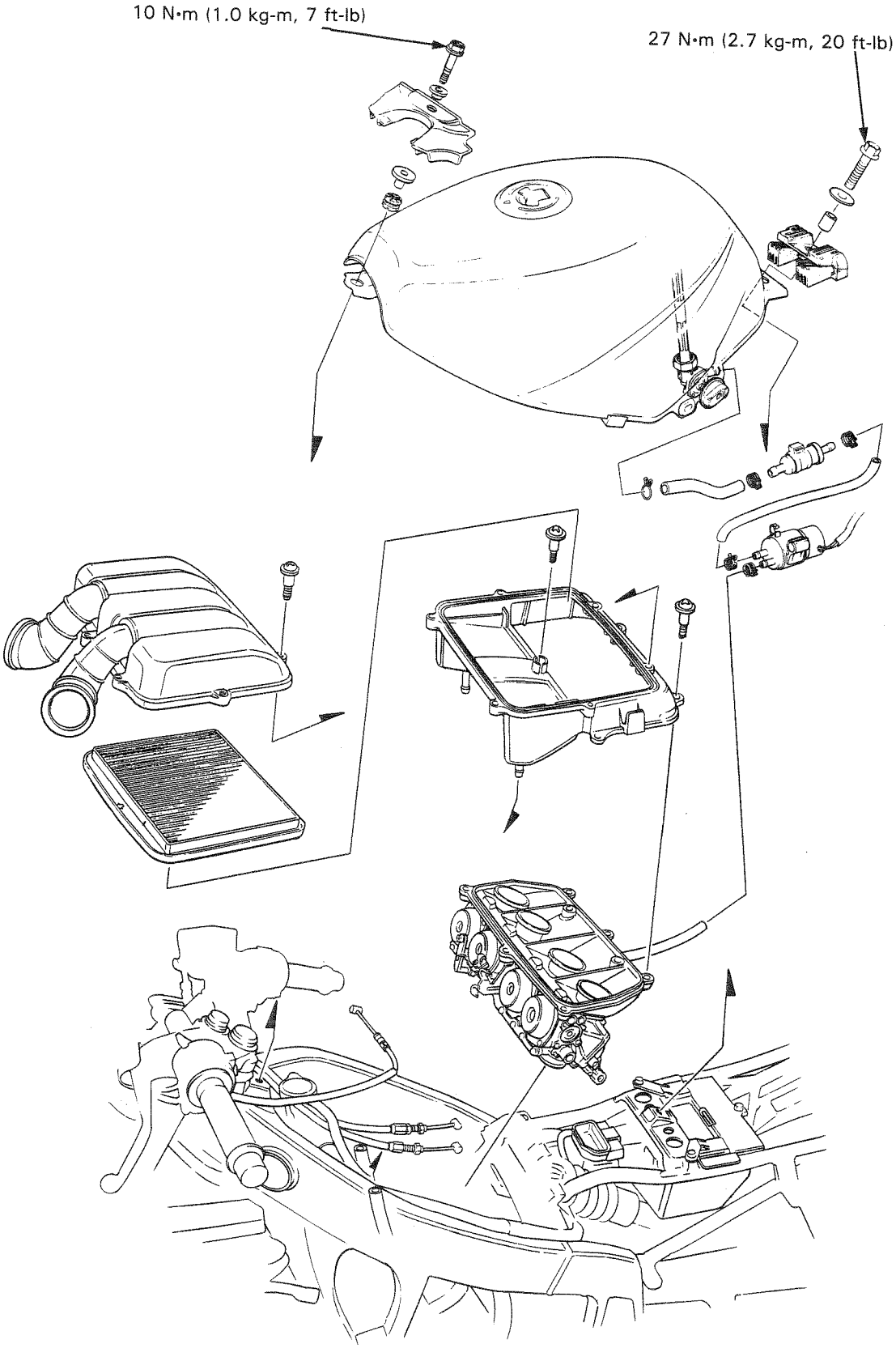
10 N•m (1.0 kg-m, 7 ft-lb)
27 N•m (2.7 kg-m, 20 ft-lb)

SERVICE INFORMATION

GENERAL

WARNING

- *Gasoline is extremely flammable and is explosive under certain conditions. Work in a well ventilated area. Do not somke or allow flames or spark in the work area.*

- Refer to section 3 for throttle and choke cable adjustments.
- When disassembling fuel system parts, note the locations of the O-rings. Replace them with new ones on reassembly.

CAUTION

- *Do not bend or twist control cables. Damaged control cables will not operate smoothly and may stick or bind.*

SPECIFICATIONS

Fuel capacity	16.5 liters (4.4 US gal, 3.6 Imp gal)
Fuel reserve capacity	3.0 liters (0.8 US gal, 0.7 Imp gal)

Throttle valve dia.	32 mm (1.3 in)
Identificaion No.	VG22A
Slow jet	#35
Main jet	#105
Float level	8 mm (5.8 in)
Idle speed	1,200 ± 100 min^{-1} (rpm)
Throttle grip free play	2—6 mm (1/12—1/4 in)
Pilot screw initial opening	2-1/4 turns out

TORQUE VALUE

Fuel tank mounting bolt (front)	10 N•m (1.0 kg-m, 7 ft-lb)
(rear)	27 N•m (2.7 kg-m, 20 ft-lb)

TOOLS

Common

Float level gauge	07401—0010000

TROUBLESHOOTING

Engine cranks but won't start
- No fuel in tank
- No fuel to carburetors
- Engine flooded with fuel
- No spark at plug (ignition system faulty)
- Clogged air cleaner
- Intake air leak
- Improper choke operation
- Improper throttle operation
- Faulty fuel pump
- Faulty fuel pump relay

Engine idles roughly, runs poorly or stalls
- Improper choke operation
- Ignition malfunction
- Fuel contaminated
- Intake air leak
- Incorrect idel speed
- Incorrect carburetor synchronization
- Incorrect pilot screw adjustment
- Low cylinder compression
- By-starter valve stuck open
- Damaged by-starter valve seat
- Rich mixture
- Lean mixture
- Clogged carburetor

Misfiring during acceleration
- Ignition system faulty
- Lean mixture
- Rich mixture

Afterburn during deceleration
- Ignition system faulty
- Lean mixture
- Rich mixture

Poor performance (driveability) and poor fuel economy
- Fuel system clogged
- Ignition system faulty
- Air cleaner clogged

Backfiring
- Ignition malfunction
- Carburetor malfunction
- Lean mixture
- Rich mixture

Lean mixture
- Clogged fuel jets
- Faulty float valve
- Float level low
- Blocked fuel tank cap vent hole
- Clogged fuel strainer screen
- Restricted fuel line
- Clogged air vent tube
- Intake air leak
- Restricted or faulty fuel pump or relay
- Vacuum piston stuck closed

Rich mixture
- Clogged air cleaner
- Worn jet needle or needle jet
- Faulty float valve
- Float level too high
- By-starter valve stuck open
- Damaged by-starter valve seat
- Clogged air jet

Incorrect fast idle speed
- Incorrect choke cable free play
- Choke valve stuck or damage
- Choke valve not adjusted correctly

FUEL TANK

REMOVAL

WARNING

- *Do not allow flames or sparks near gasoline. Wipe up spilled gasoline at one.*

Turn the fuel valve OFF.
Remove the side covers and the seat.
Disconnect the fuel line at the fuel valve.
Remove the fuel tank mounting bolts.

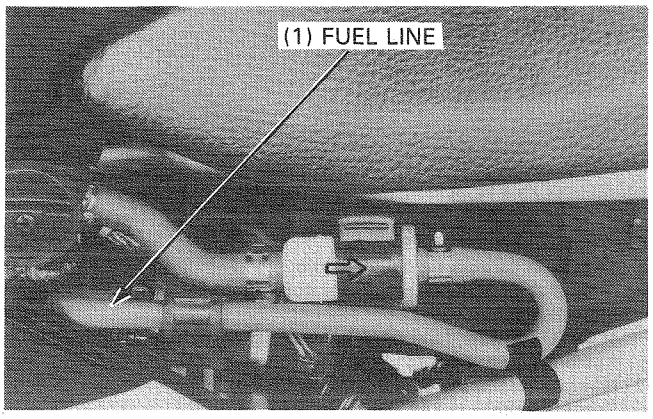

NOTE

- Do not pull the fuel line when disconnecting because it may be disconnected at the carburetor.

Use a suitable gasoline container and check that the fuel flows freely by turning the fuel valve ON.
If the fuel flow is restricted, drain the fuel tank and clean the fuel strainer and fuel tank.

Check the vent hole of the fuel tank cap for blockage.

INSTALLATION

Install the fuel tank in the reverse order of removal.

NOTE

- After installation, make sure there are no fuel leaks.
- Route the throttle and choke cables properly through the cable guide.

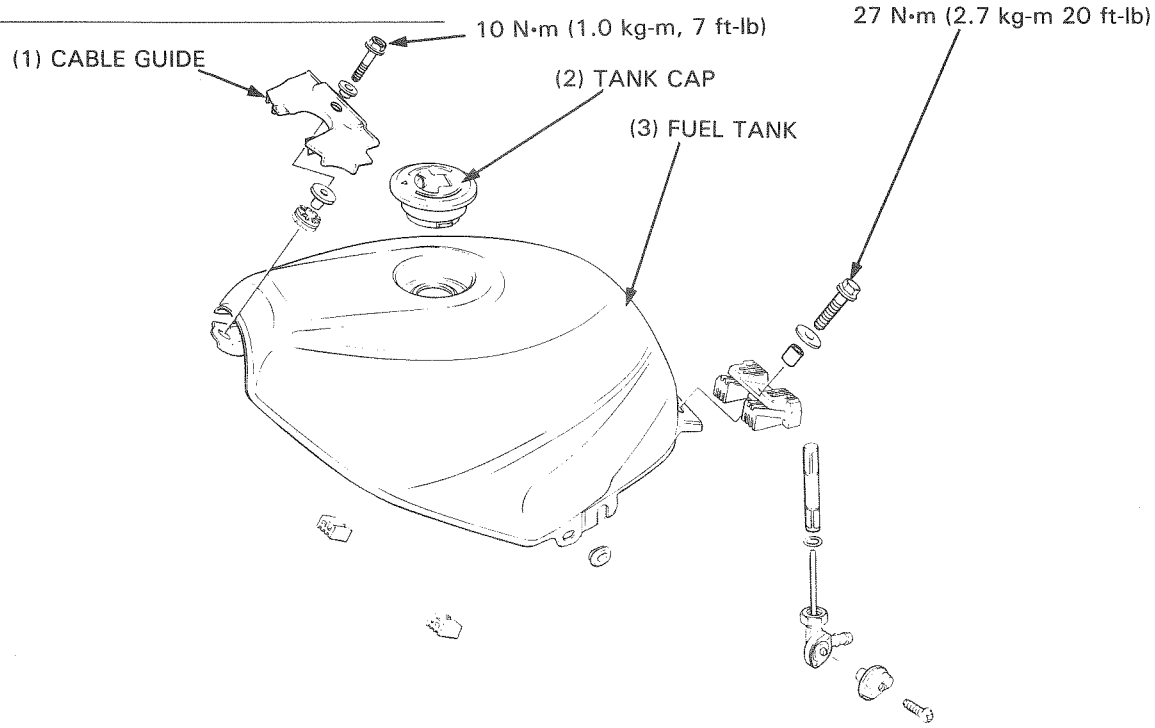

AIR CLEANER CASE

REMOVAL

Remove the fuel tank (page 4-3).
Remove the air cleaner case element (page 3-5).

Remove the air cleaner case.

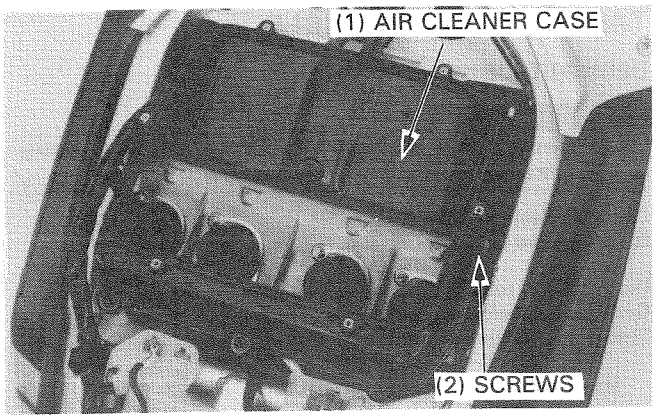

INSTALLATION

Installation is in the reverse order of removal.

NOTE

- Install the breather tubes to the case properly.
- Install the air cleaner element with the "TOP" mark forward.

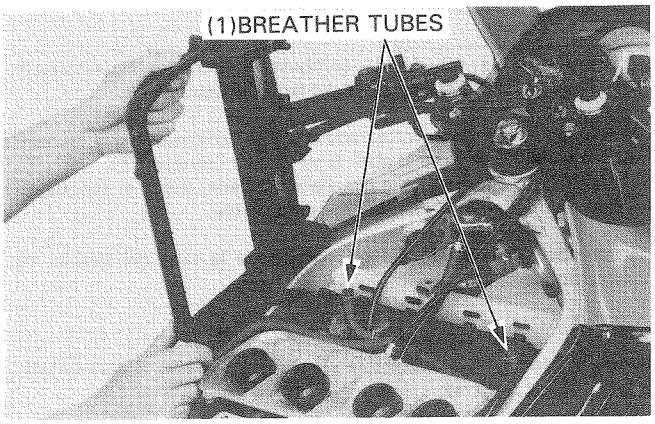

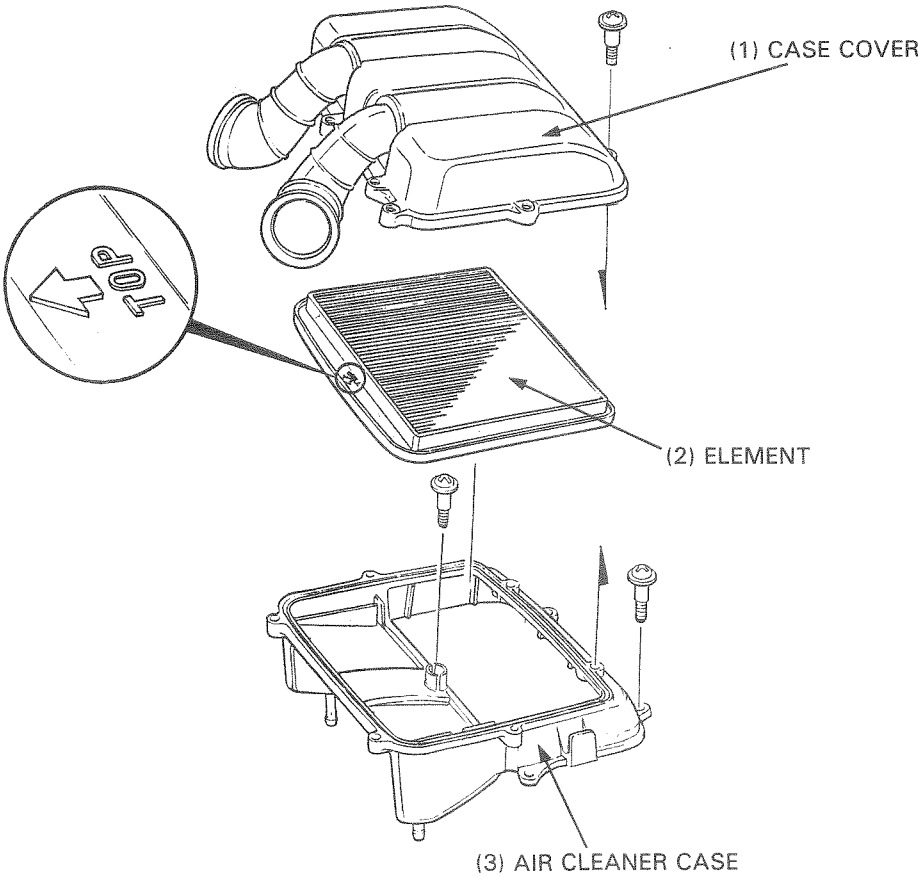

CARABURETOR

REMOVAL

Remove the fuel tank (page 4-3).
Remove the air cleaner case (page 4-4).

WARNING

- *Do not allow flames or sparks near gasoline. Wipe up spilled gasoline at once.*

Drain the gasoline in the float chambers by loosening the drain screws.
Loosen all carburetor bands and remove the carburetor assembly from the intake pipes.

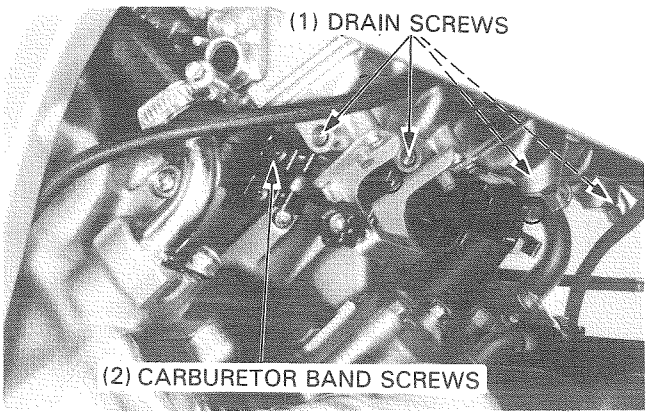

NOTE

- Seal the cylinder head intake ports with the tape or a clean cloth to keep dirt and debris from entering the intake ports.

Disconnect the fuel line at the fuel joint.

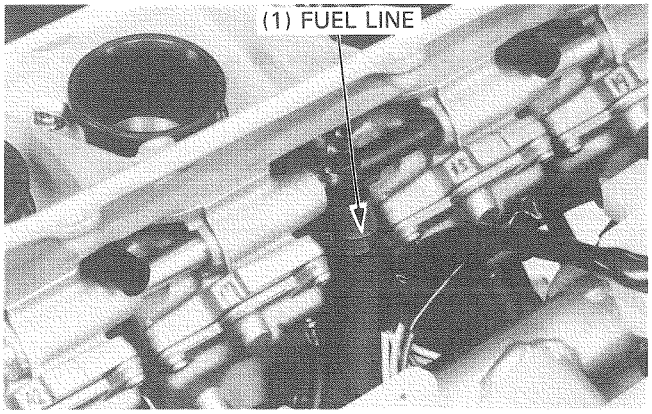

Loosen the cable clamp screw and disconnect the choke cable from the carburetors.

Remove the throttle cables from the cable holder and disconnect the throttle cables from the throttle drum.

Disconnect the drain tubes.

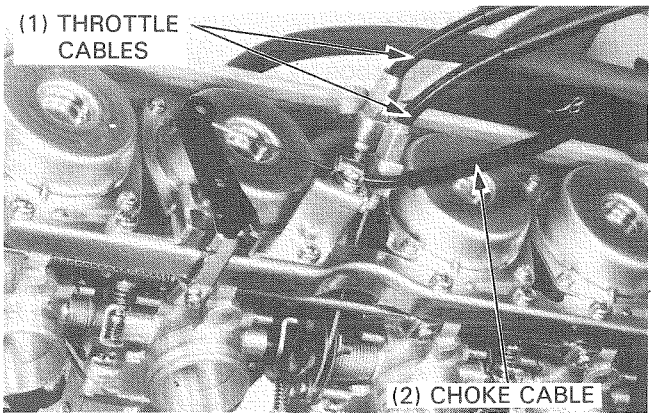

DISASSEMBLY

NOTE

- The vacuum chambers and float chambers can be serviced without separating the carburetor.

Align the edge of the by-pass holes with the throttle valves by adjusting the throttle stop screw.

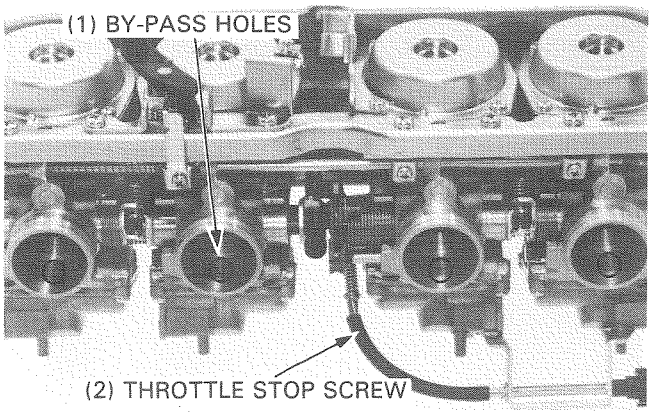

Loosen three by-starter arm screws and remove the by-starter arm shaft, spring and by-starter arms.

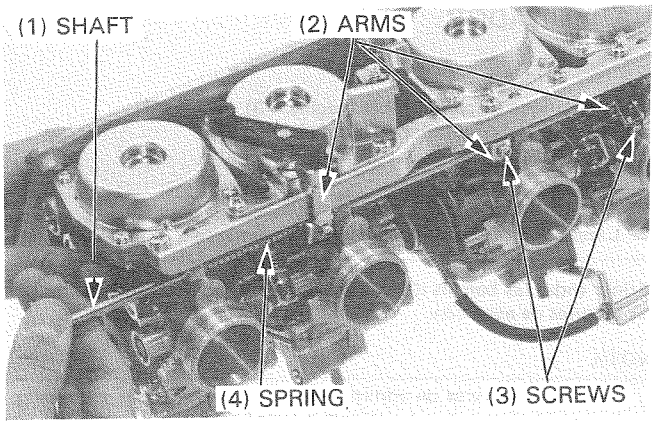

Bend up the claws of the lock washers and remove the screws.
Remove the lock washers, rear bracket and dowel pins.

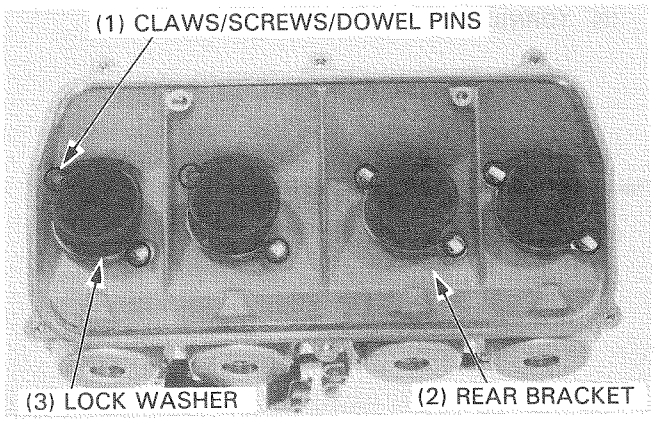

Remove the eight screws and front bracket.
Separate the carburetors.

NOTE

- Do not lose the three synchronization adjusting springs and two thrust springs.
- Do not damage the fuel and air joint pipes.

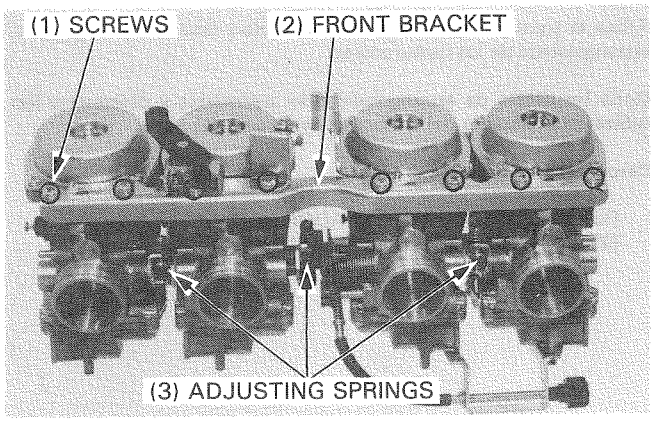

Before you separate the No. 1 and No. 2 carburetors, remove the throttle stop screw holder.

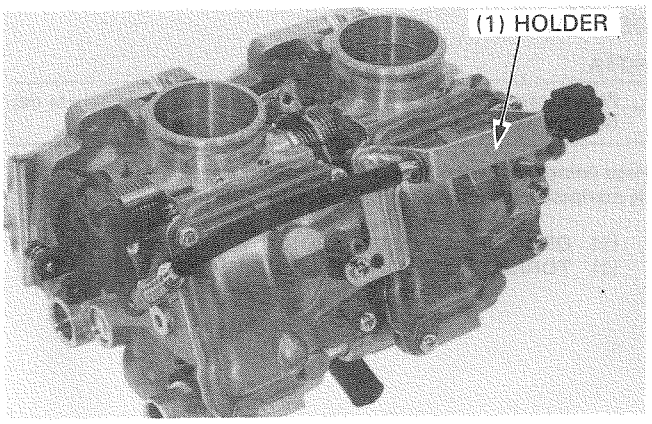

Remove the screws and vacuum chamber cover.

CAUTION

- *Do not interchange vacuum chamber covers, springs, pistons or jet needles between carburetors.*

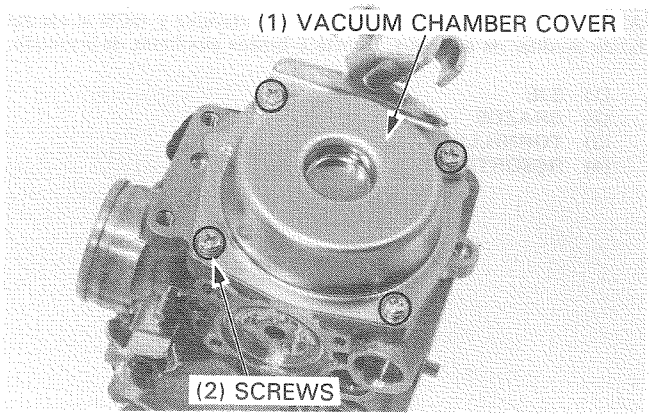

Remove the compression spring and diaphragm/vacuum piston.
Inspect the vacuum piston for wear, nicks, or other damage. Make sure the piston moves up and down freely in the chamber.

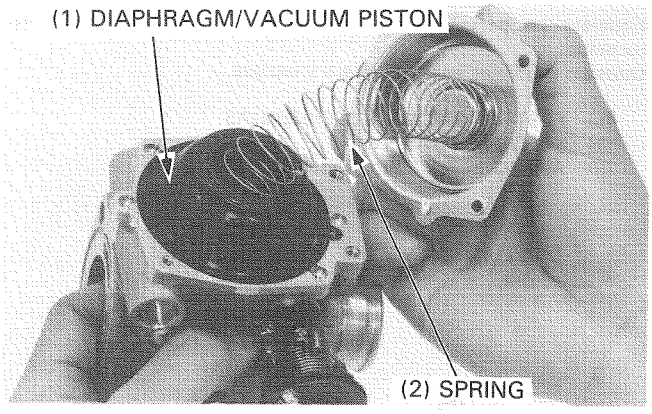

Push the jet needle holder down and turn it counterclockwise 90 degrees with an 8 mm socket. Then remove the needle holder, spring, jet needle and washer from the vacuum piston.

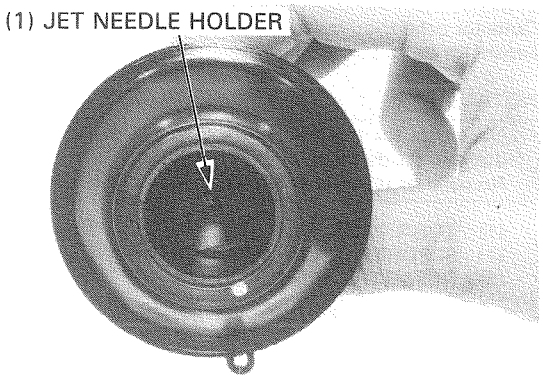

Inspect the jet needle for excessive wear at the tip or other damage.

Check for a torn diaphragm or other deterioration.

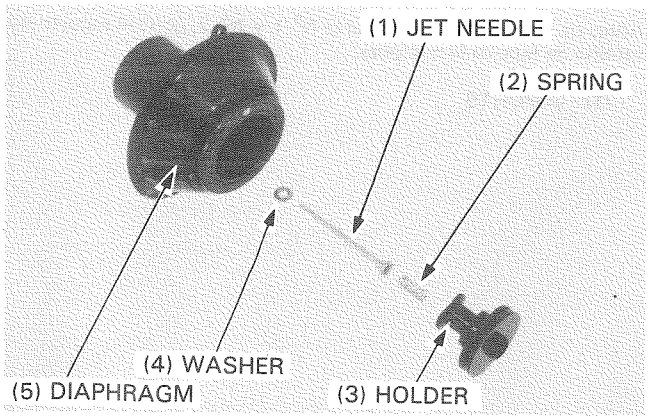

Remove the four float chamber screws and the float chamber.

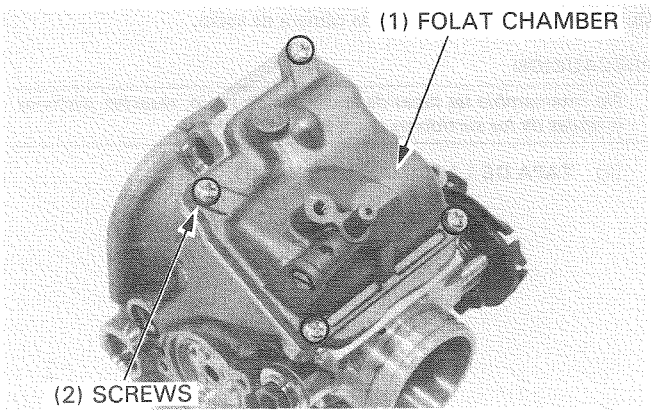

Remove the float pin, float and float valve.

Inspect the float for deformation or damage.

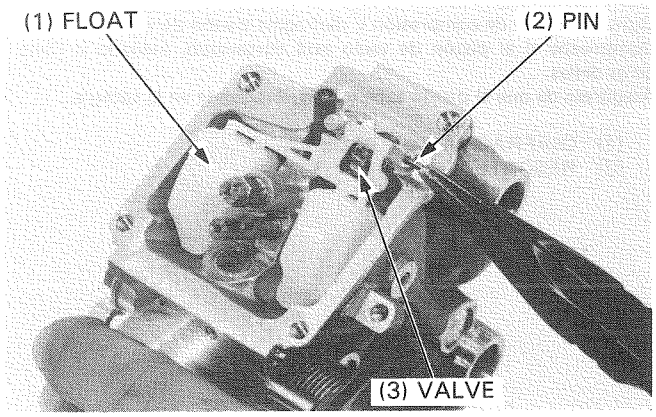

Inspect the float valve seat for grooves and nicks.
Check the operation of the float valve.

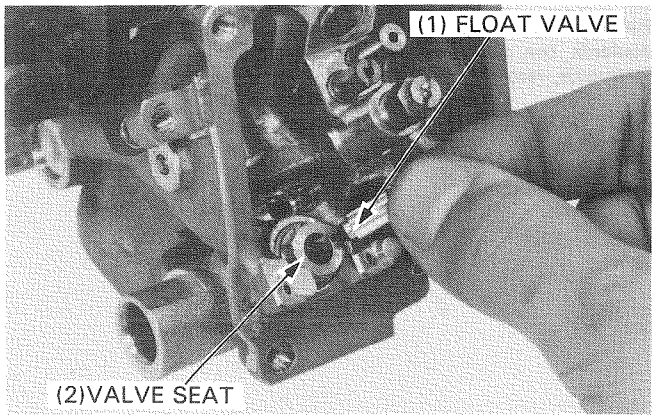

Remove the main jet, needle jet holder, slow jet and float valve seat/filter.

Turn the pilot screw in and carefully count the number of turns before it seats lightly.
Make a note of this to use as a reference when reinstalling the pilot screw.

CAUTION

- *Damage to the pilot screw seat will occur if the pilot screw is tightened against the seat.*

Remove the pilot screw.

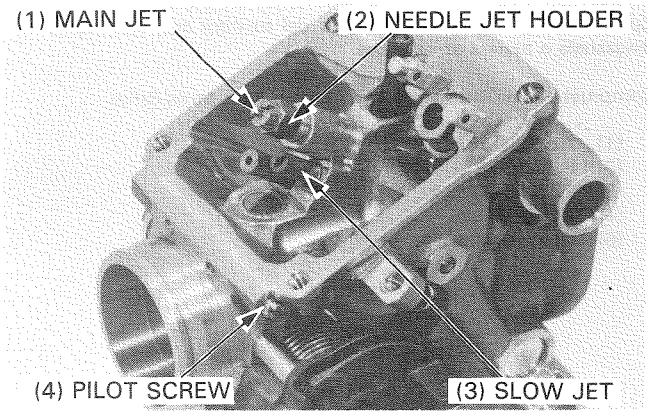

Inspect the float valve seat and filter for grooves, nicks or deposits.

Clean the filter with compressed air.

NOTE

- Do not use high pressure air.

Inspect each jet for wear or damage and replace if necessary.
Clean each jet with non-flammable or high flash point solvent.

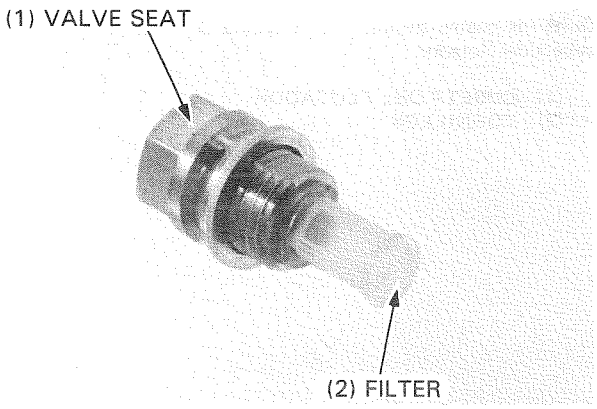

Remove the by-starter nut, spring and valve.
Check the valve for wear or damage.
Check the spring for damage or fatigue.

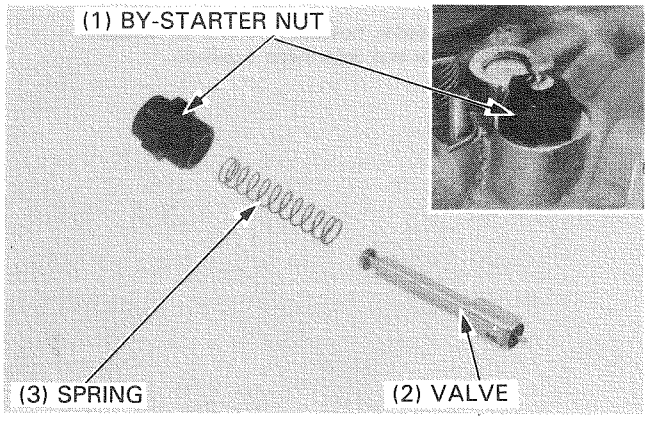

Blow open each jet with compressed air.

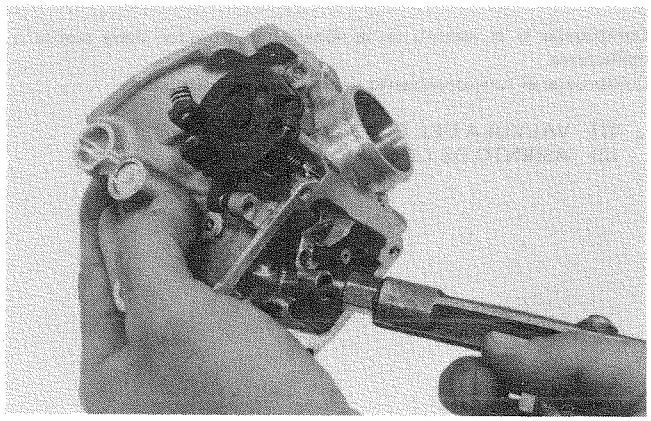

ASSEMBLY

(1) REAR BRACKET
(2) LOCK WASHER
(21) THRUST SPRING
(20) BY-STARTER ARM SHAFT
(3) BY-STARTER VALVE
(4) VALVE SEAT
(5) SLOW JET
(6) FLOAT VALVE
(7) PILOT SCREW
(8) NEEDLE JET HOLDER
(10) MAIN JET
(11) FLOAT CHAMBER
(19) FRONT BRACKET
(18) VACUUM PISTON
(13) FLOAT
(16) SPRING
(14) JET NEEDLE
(12) FLOAT PIN
(17) VACUUM CHAMBER COVER
(15) JET NEEDLE HOLDER

Install the by-starter valve, spring and by-starter nut to the carburetor body.

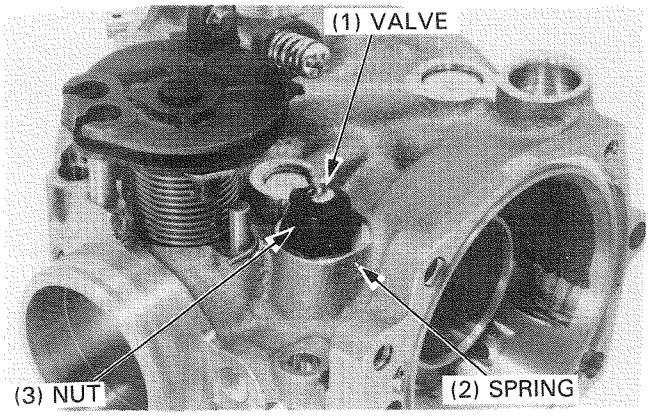

Install the pilot screw and turn it in until it seats lightly.
Turn the pilot screw out the same number of turns as when it was removed.
Turn the pilot screw out the initial opening if the pilot screw or carburetor body is replaced.

INITIAL OPENING: 2-1/4 turns out

NOTE

- If you replace the pilot screw in one carburetor, you must replace the pilot screws in the other carburetors for proper pilot screw adjustment.

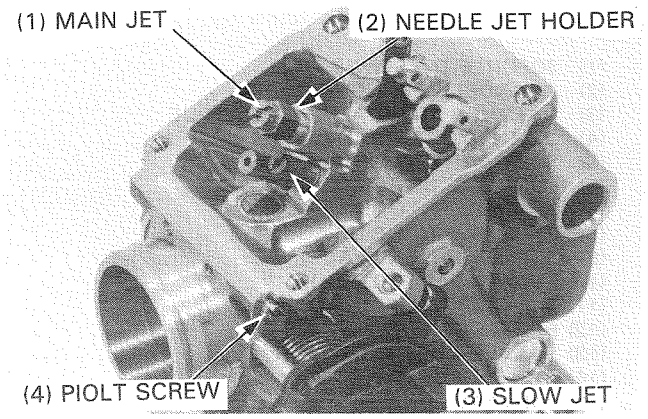

CAUTION

- *Damage to the pilot screw seat will occur if the pilot screw is tightened against the seat.*

Install the valve seat, slow jet, needle jet holder and main jet.

Install the float with float valve to the carburetor body and install the float arm pin through the body and float.

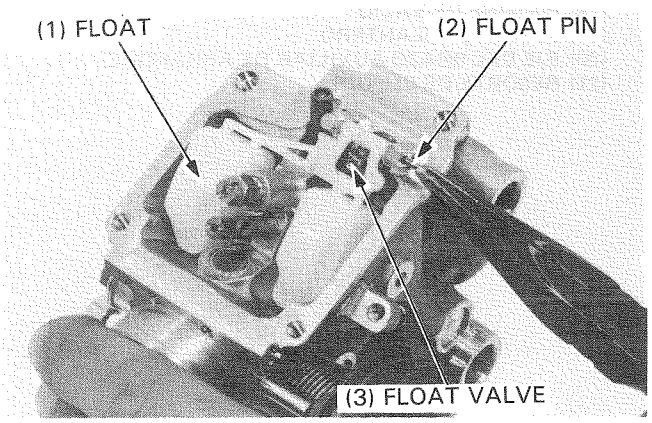

FLOAT LEVEL

Measure the float level with the carburetor inclined 15°—45° from vertical so that the float tang just contacts the float valve.

FLOAT LEVEL: 8 mm (5.8 in)

TOOL:
Float level gauge **07401—0010000**

Adjust the float level by carefully bending the float tang.

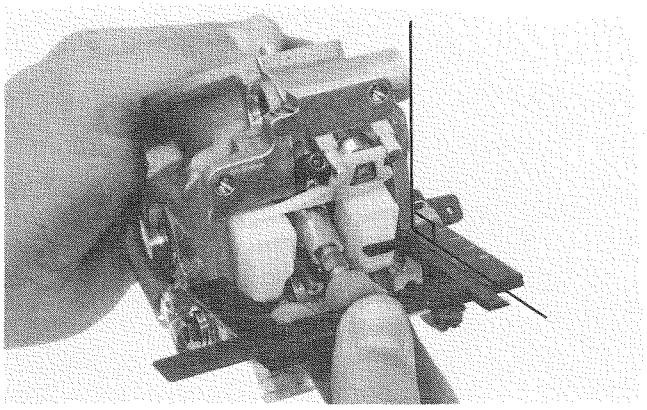

Install a new O-ring to the float chamber.

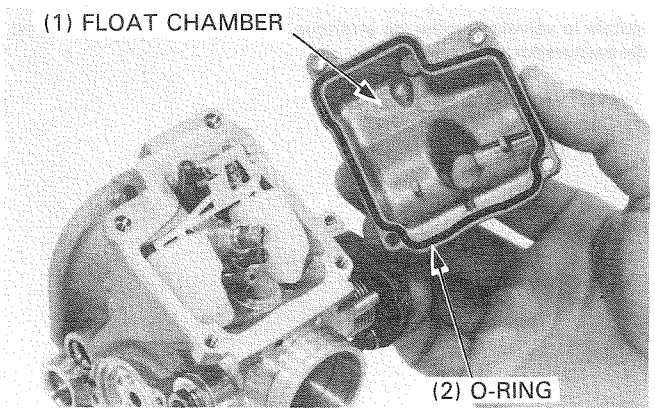

Install the float chamber and tighten the screws securely.

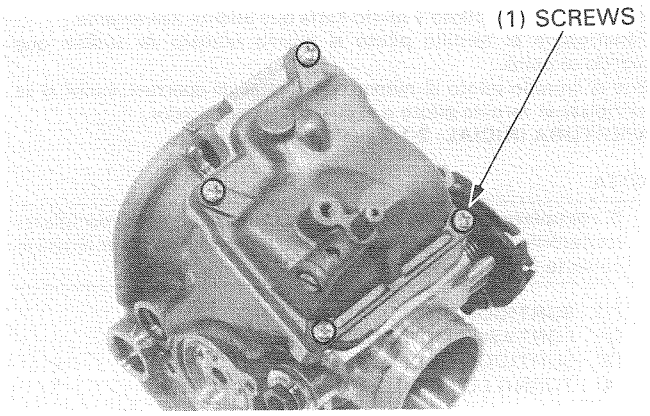

Install the washer, jet needle, spring and jet needle holder to the vacuum piston.
Push the jet needle holder in and turn it in 90 degrees clockwise.

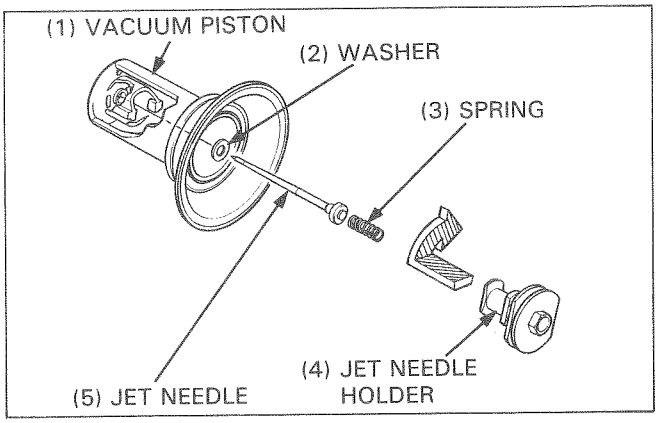

Install the vacuum chamber with the tab of the diaphragm aligned with the groove of the carburetor and with the vacuum piston held up to almost full open not to bite the diaphragm into the chamber cover.

Install the chamber cover with the spring, aligning its cavity with the hole in the carburetor, and secure with at least two screws before releasing the vacuum piston.

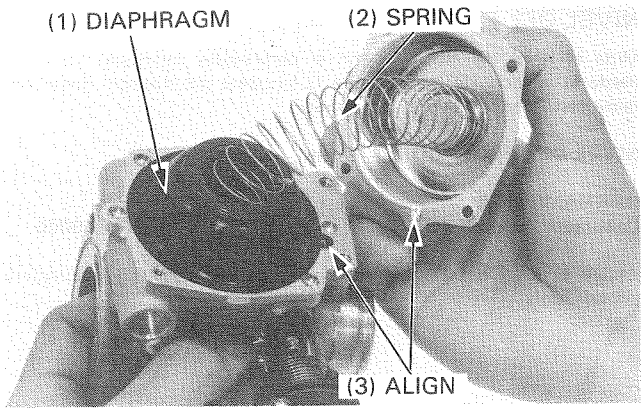

Install the remaining screws of the vacuum chamber cover.

NOTE

- Do not pinch the diaphragm with the chamber cover.

For No. 2 carburetor, install the screws with the throttle cable holder.

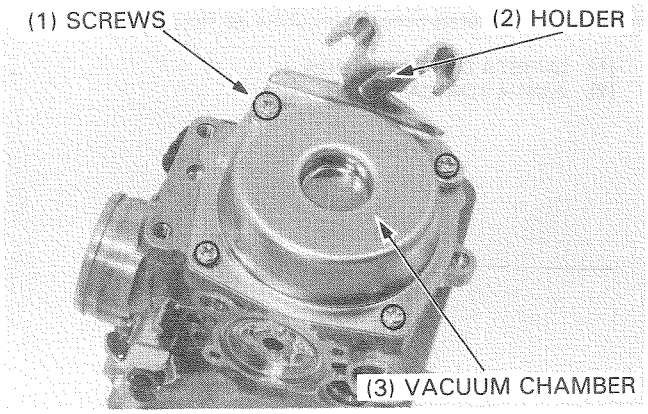

Assemble No. 1 and No. 2 carburetors as follows:
— install new O-rings to the fuel joint and air joint.
— assemble the carburetors with the joints and thrust spring.
— install the synchronization adjusting screw.

Set each part in proper position as shown.

CAUTION

- *Be careful not to damage the O-rings during assembly.*

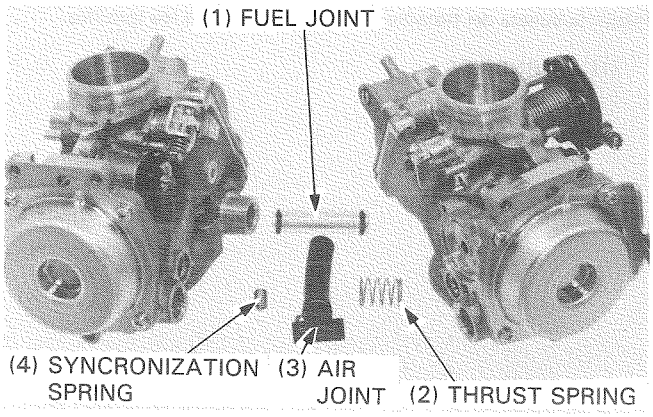

Assemble No. 3 and No. 4 carburetors in the same way.

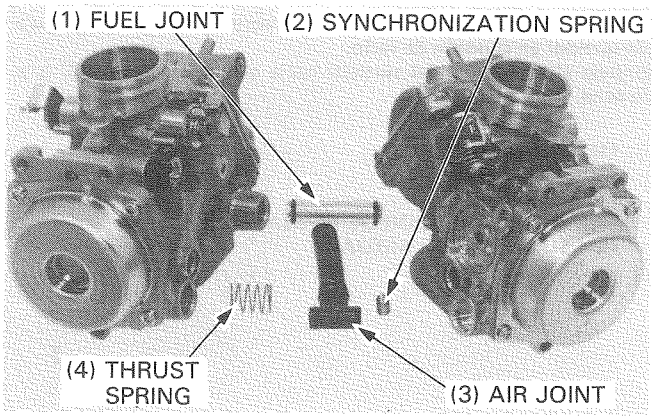

Install the throttle stop screw to the No. 1 and No. 2 carburetors.

Assemble (No. 1 and No. 2) and (No. 3 and No. 4) carburetors in the same way.

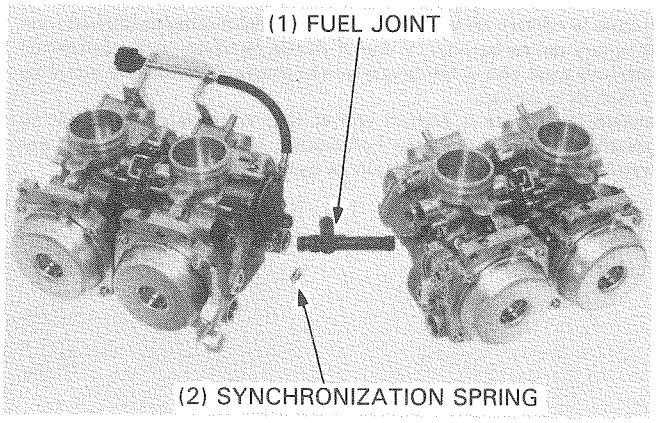

Loosely install the front bracket.

Loosely tighten the screws in a shown pattern in 2-3 steps with the secondary side kept horizontal as shown.

NOTE

- Install the bracket with the by-starter arm properly.

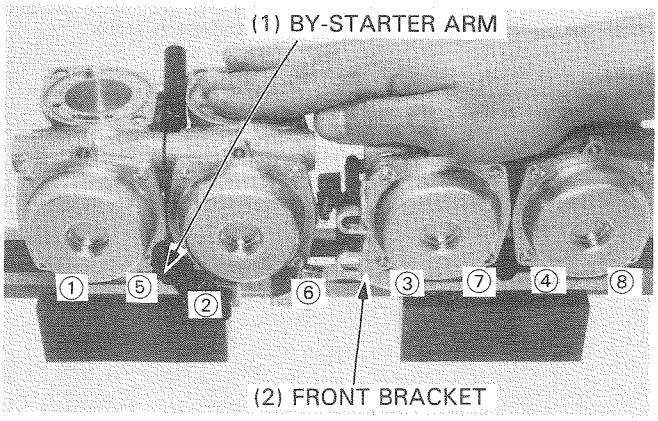

Install the dowel pins.
Install the rear bracket.

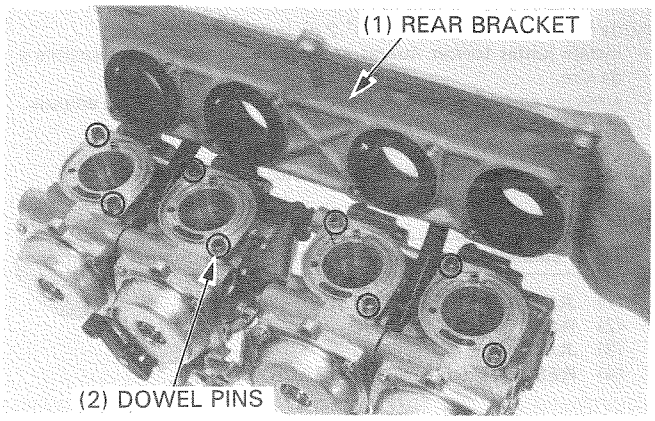

Install the new lock washers.
Tighten the screws in the pattern shown in 2-3 steps with the secondary sides kept horizontal as shown.

Tighten the front bracket screws securely.
Bend down the claws of the lock washers.

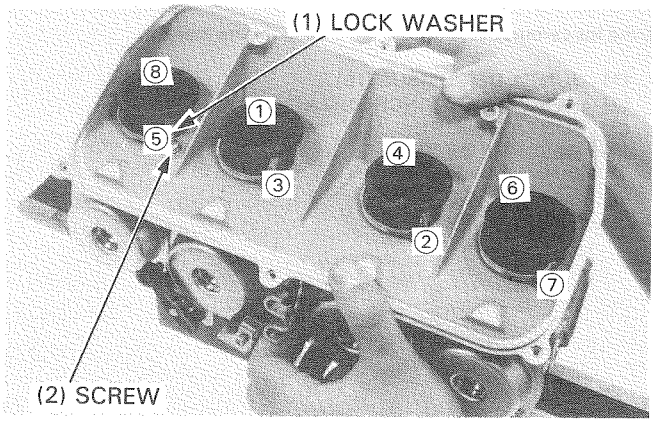

Install the spring, by-starter arms and by-starter arm shaft.

Tighten the screws securely.

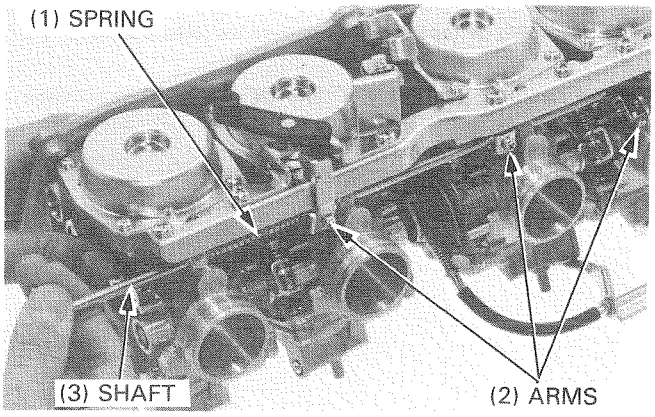

Operate the by-starter arm shaft and check its operation for drag.

Operate the throttle valve and check its operation for drag.

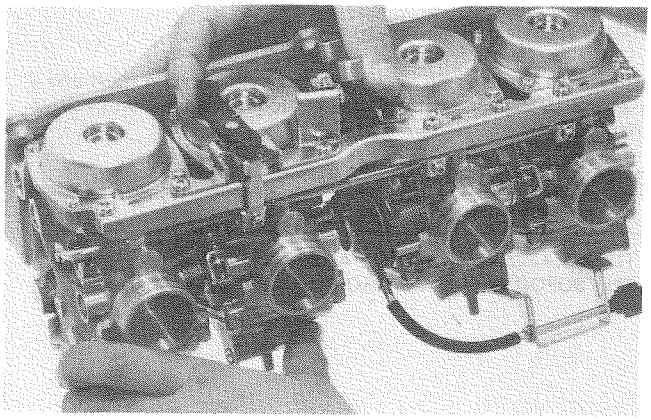

Check and adjust the carburetor synchronization visually as follows:
Turn the throttle stop screw to align the No. 2 carburetor throttle valve with the edge of the by-pass hole.
Align each throttle valve with the by-pass hole edge by turning the synchronization adjusting screws.

NOTE

- Check carburetor synchronization (page 3-8) after instaling the carburetor assembly.

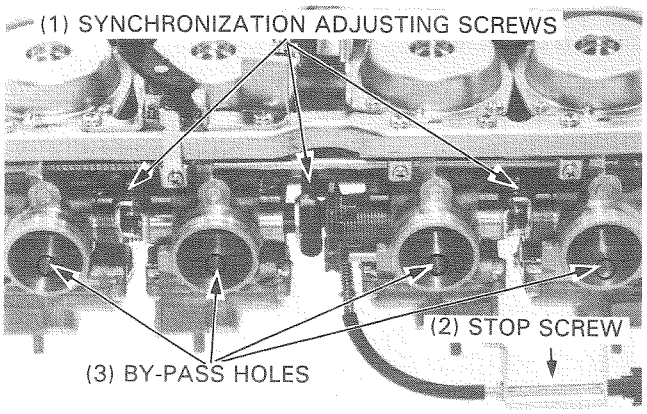

INSTALLATION

If you remove the insulators, install the carburetor insulators with the ''CARB'' mark facing to the carburetor and with the ''UP'' mark facing up.

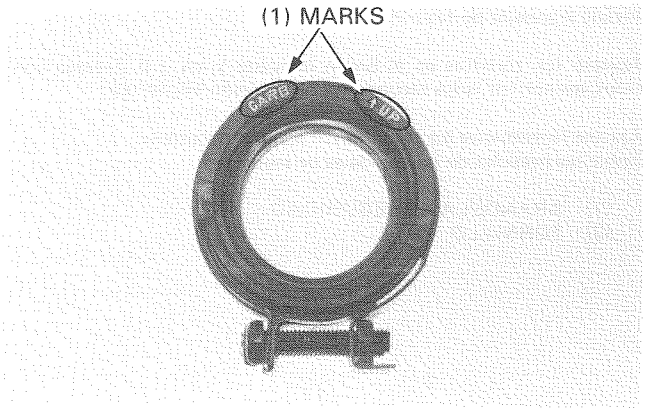

Connect the throttle cable ends to the throttle drum and install the throttle cables onto the cable holder.

Connect the choke cable end to the choke lever and install the choke cable with the cable clamp.

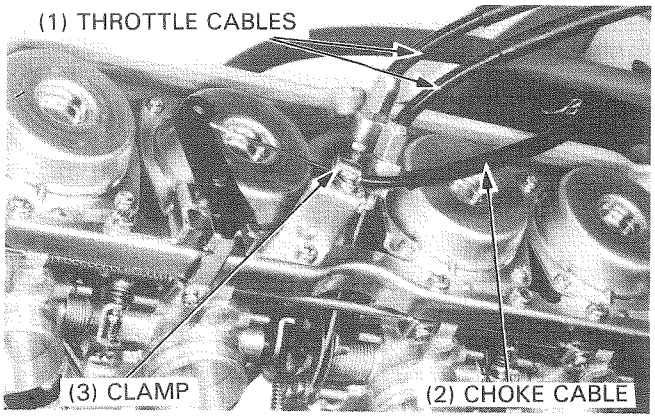

Connect the fuel line at the fuel joint.

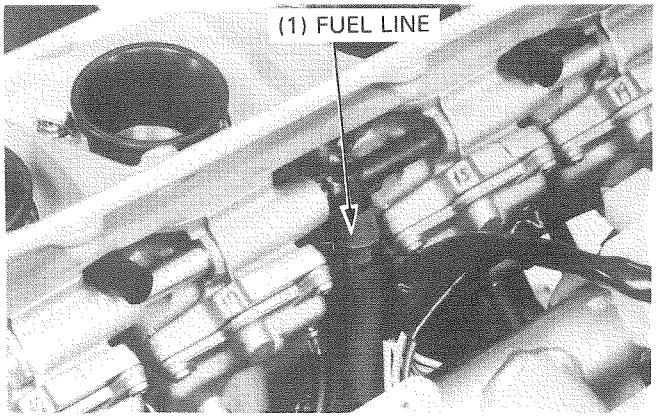

Coat the inside of the carburetor insulators with engine oil.
Install the carburetors onto the cylinder head.
Tighten the carburetor band screws securely.

Instal the air cleaner case (page 4-4).
Install the fuel tank (page 4-3).

Adjust as follows:
— pilot screw (page 4-17)
— carburetor synchronization (page 3-8)
— throttle grip free play (page 3-4)
— carburetor idle speed (page 3-9)
— carburetor choke (page 3-5)

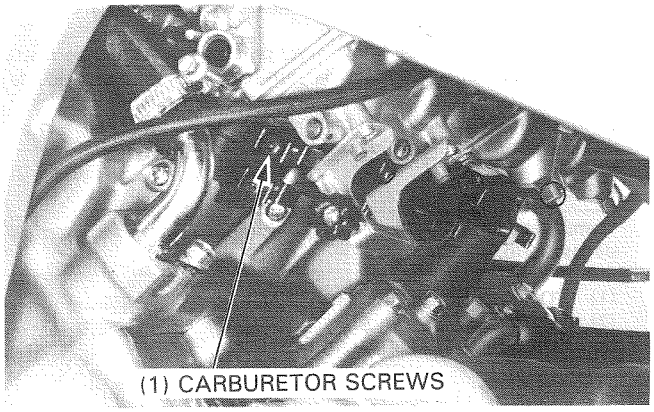

FUEL PUMP

FUEL PUMP INSPECTION

Turn the ignition switch off.
Disconnect the fuel pump relay wire connector and temporarily connect the black and black/blue wire teminals at the main wire harness connector with a jumper wire.

Disconnect the fuel outlet tube at the fuel pump and connect a fuel tube or equivalent to the pump outlet line.
Hold a graduated beaker under the pump outlet line.

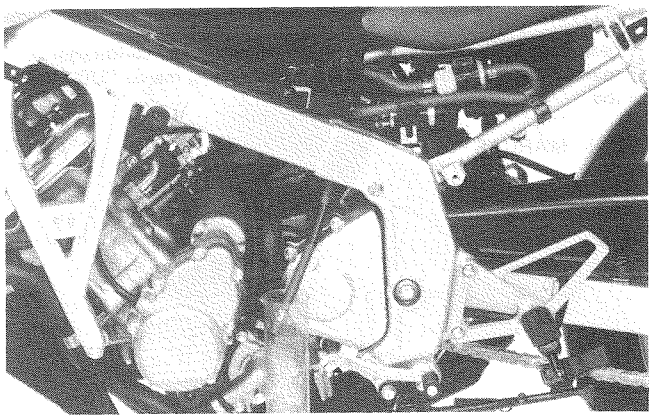

WARNING

- ***Do not allow flames or sparks near gasoline.***

Turn the ignition switch on and let fuel flow into the beaker for 5 seconds, then turn the ignition switch off.
Multiply the amount in the beaker by 12 to determine the fuel pump flow capacity per minute.

FUEL PUMP FLOW CAPACITY:
650 cc (21.9 US oz. 18.3 Imp oz) min./minute

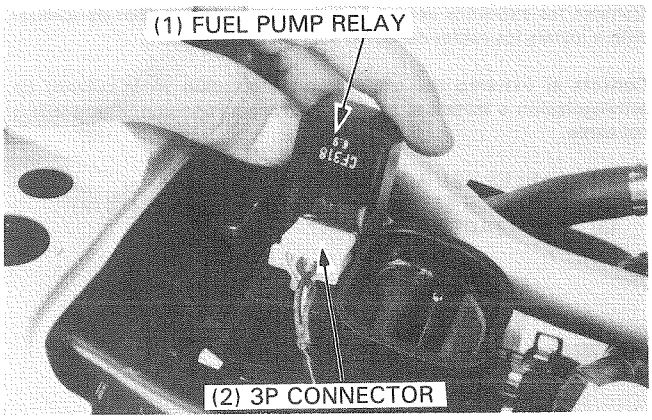

FUEL PUMP RELAY INSPECTION

If the pump flow capacity is out of order, check the fuel pump relay circuit as below:
Disconnect the 3P mini connector and check it for loose contact or corroded terminals.

Inspect as follows:
Measure the following resistances of the wire harness side.

ITEM	STANDARD
Between Bl (+) and body ground (−) with the ignition switch "ON"	Battery voltage should come.
Y/Bu wire between the pump relay and spark unit	CONTINUITY
Bl/Bu wire between the pump relay and fuel pump	CONTINUITY

PILOT SCREW ADJUSTMENT

IDLE DROP PROCEDURE

NOTE

- The pilot screws are factory pre-set and no adjustment is necessary unless the pilot screws are replaced (page 4-8).
- Use a tachometer with graduations of 50 rpm or smaller that will accurately indicate a 50 rpm change.

1. Turn each pilot screw clockwise until it seats lightly and back it out to the specification given. This is an initial setting prior to the final pilot screw adjustment.
   INITIAL OPENING: 2-1/4 turns out

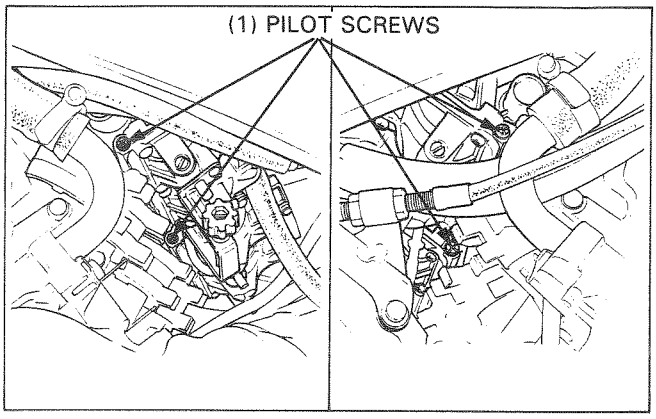

CAUTION

- *Damage to the pilot screw seat will occur if the pilot screw is tightened against the seat.*

2. Warm up the engine to operating temperature.
   Stop and go driving for 10 minutes is sufficient.
3. Attach a tachometer according to its manufacturer's instructions.
4. Adjust the idle speed with the throttle stop screw.
   IDLE SPEED: 1,200 ± 100 min^{-1} (rpm)
5. Turn all pilot screws 1/2 turn out from the initial setting.
6. If the engine speed increases by 50 rpm or more, turn all pilot screws out by sucessive 1/2 turn increments until engine speed does not increase.
7. Adjust the idle speed with the throttle stop screw.
8. Turn the No. 2 carburetor pilot screw in until the engine speed drops 50 rpm.
9. Turn the No. 2 carburetor pilot screw 1 turn out from the position obtained in step 8.
10. Adjust the idle speed with the throttle stop screw.
11. Perform steps 8, 9 and 10 for the No. 1,3 and 4 carburetor pilot screws.

MEMO

COOLING SYSTEM

SISTEMA DE REFRIGERACION DEL MOTOR

CIRCUITO RAFFREDDAMENTO

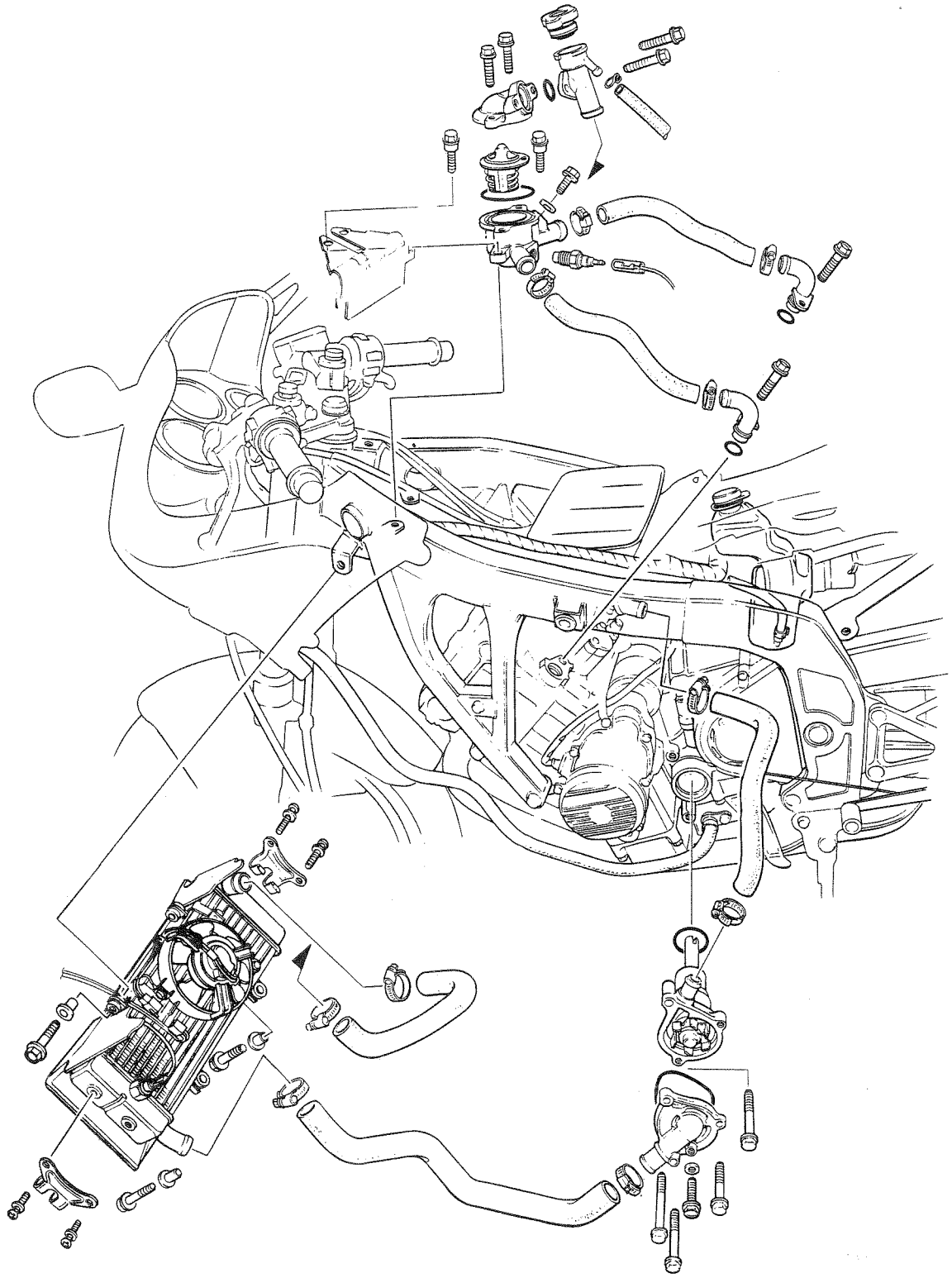

SERVICE INFORMATION

GENERAL

WARNING

- *Do not remove the radiator cap when the eninge is hot. The coolant is under pressure and severe scalding could result. The engine must be cool before servicing the cooling system.*

- Use only distilled water and ethylene glycol in the cooling system. A 50—50 mixture is recommended for maximum corrosion protection. Do not use alcohol-based antifreeze.
- Add coolant at the reserve tank. Do not remove the radiator cap except to refill or drain the system.
- All cooling system service can be done with the engine in the frame.
- Avoid spilling coolant on painted surfaces.
- After servicing the system, check for leaks with a cooling system tester.
- Refer to Section 20 for the temperature gauge inspections.

SPECIFICATIONS

Radiator cap relief pressure	95—125 kPa (0.95—1.25 kg/cm², 14—18 psi)
Freezing point (Hydrometer test):	55% Distilled water +45% ethylene glycol: −32°C (−25°F) 50% Distilled water +50% ethylene glycol: −37°C (−34°F) 45% Distilled water +55% ethylene glycol: −44.5°C (−48°F)
Coolant capacity: Total system	2.0 lit (2.11 US qt, 1.76 Imp qt)
Thermostat	Begins to open: 80° to 84°C (176° to 183°F) Valve lift: Minimum of 8 mm at 95°C (0.32 in at 203°F)
Boiling point (with 50—50 mixture):	Unpressurized: 107.7°C (226°F) Cap on, pressurized: 125.6°C (258°F)

TROUBLESHOOTING

Engine temperature too high
- Faulty temperature gauge or gauge sensor
- Thermostat stuck closed
- Faulty radiator cap
- Insufficient coolant or coolant level too low
- Passages blocked in radiator, hoses, or water jacket
- Cooling fan motor does not turn
  - Broken or loose subfuse
  - Faulty fan motor
  - Faulty thermostatic switch
  - Poor contact or open circuit in harness
- Faulty water pump

Engine temperature too low
- Faulty temperature gauge or gauge sensor
- Thermostat stuck open

Coolant leaks
- Faulty pump mechanical seal
- Deteriorated O-rings

SYSTEM TESTING

COOLANT

Remove the right side cover.

Test the coolant mixture with an antifreeze tester.
For maximum corrosion protection, a 50—50% solution of ethylene glycol and distilled water is recommended.

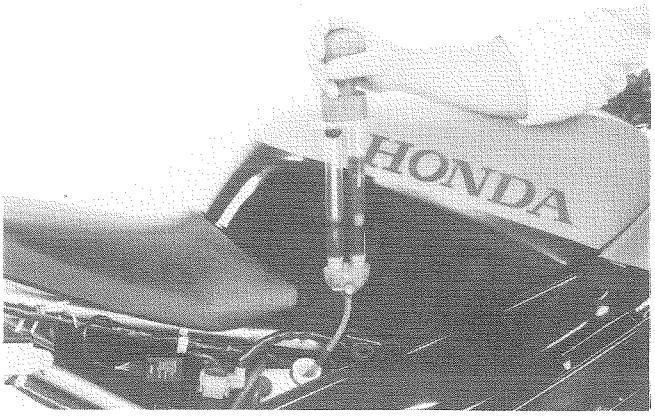

RADIATOR CAP INSPECTION

Remove the fuel tank (page 4-3) and the radiator cap.

WARNING

- *Be sure the engine is cool before removeing the cap.*

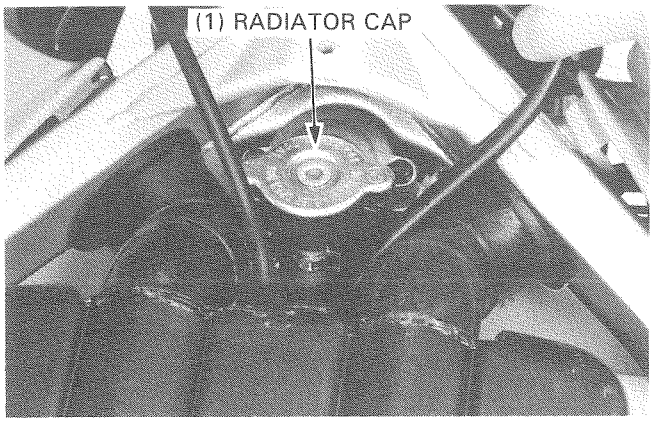

Pressure test the radiator cap. Replace the radiator cap if it does not hold pressure, or if it's relief pressure is too high or too low. It must hold the specified pressure for at least six seconds.

NOTE

- Before installing the cap on the tester, wet the sealing surfaces with water.

RADIATOR CAP RELIEF PRESSURE:
95—125 kPa (0.95—1.25 kg/cm², 14—18 psi)

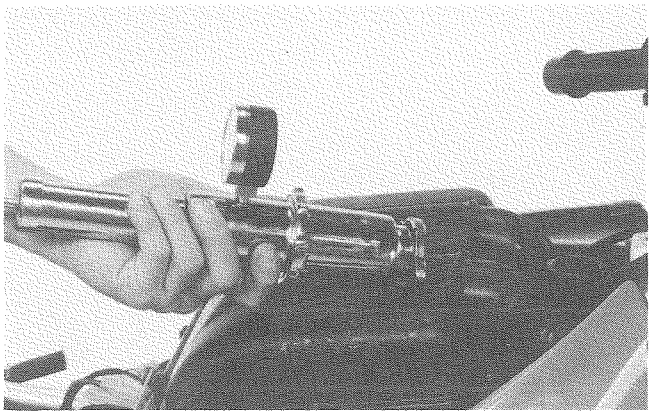

SYSTEM PRESSURE TEST

Remove the radiator cap (see above).

Pressurize the radiator, engine and hoses, and check for leaks.

CAUTION

- *Excessive pressure can damage the radiator.*
  Do not exceed 125 kPa (1.25 kg/cm², 18 psi)

Repair or replace components if the system will not hold the specified pressure for at least six seconds.

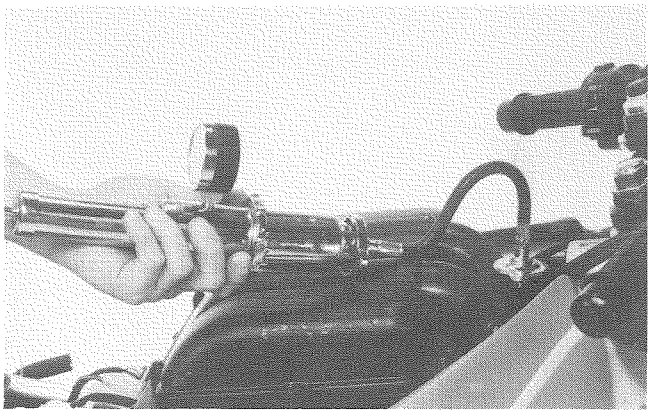

COOLANT REPLACEMENT

WARNING

- *The engine must be cool before servicing the cooling system, or severe scalding may result.*

Remove the radiator cap (page 5-2).
Remove the lower fairings(page 13-4).

Drain the coolant from the system by removing the drain bolt on the water pump cover.

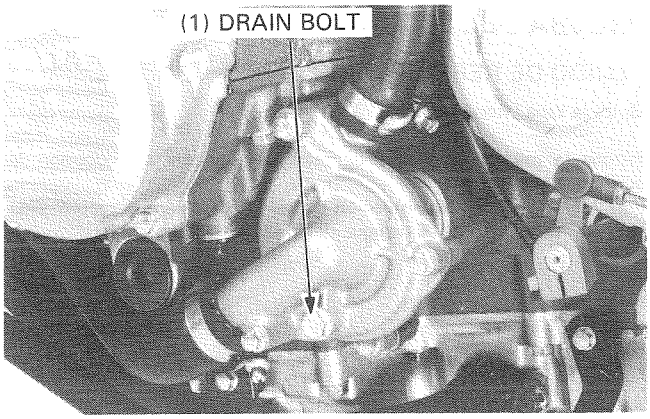

Drain the coolant from the cylinders by removing the drain bolts.

Install the drain bolts after making sure their sealing washers are in good condition.

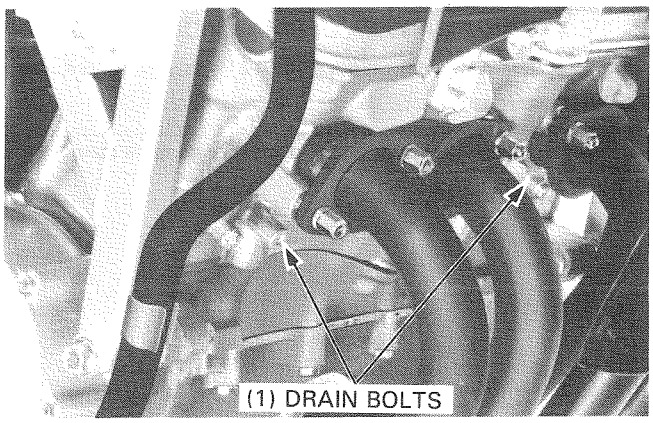

Fill the system with a 50—50 mixture of distilled water and ethylene glycol.

Bleed air from the cooling system as follows:

- Lower the side stand and shift the transmission into neutral.
- Start the engine and snap the throttle grip 3—4 times at 4,000—5,000 rpm. Then add coolant up to the radiator filler neck.
- Install the radiator cap.
- Check the level of coolant in the reserve tank and fill to the "UP" level if the level is low.
- Install the lower fairings (page 13-4).

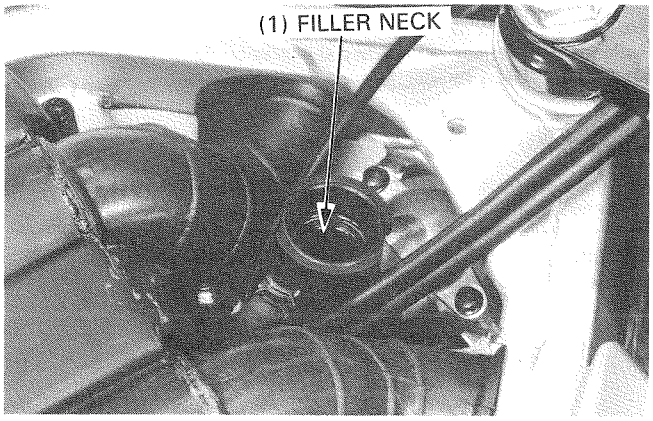

THERMOSTAT

REMOVAL

Remove the radiator cap (page 5-2).
Drain the coolant (see above).

Remove the two bolts.

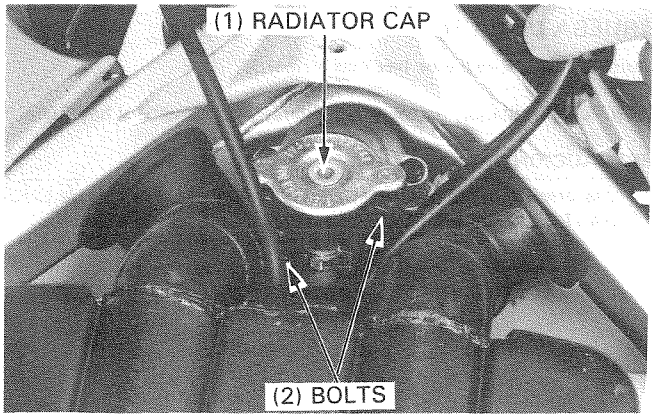

Move the radiator pipe rearward, and check the O-ring for wear or fatigue.

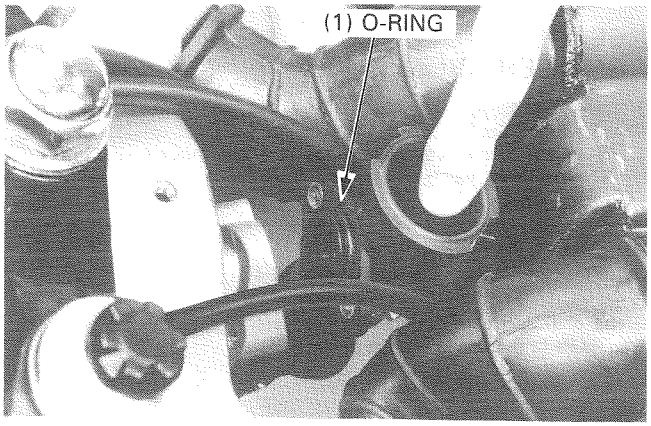

Remove the thermostat housing cover by removing the two cover bolts.

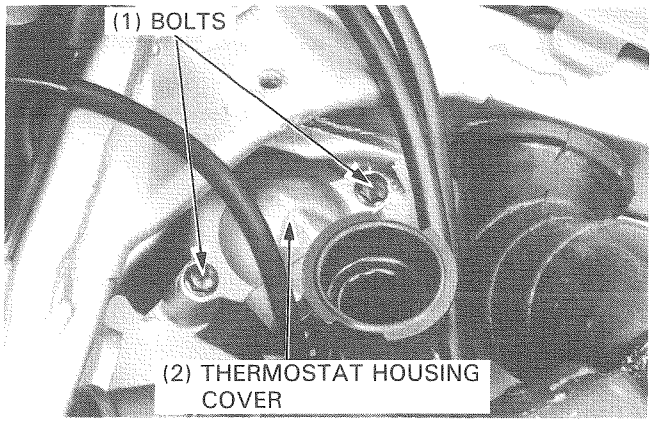

Remove the thermostat from the housing.
Make sure that the O-ring is not damaged or deteriorated.

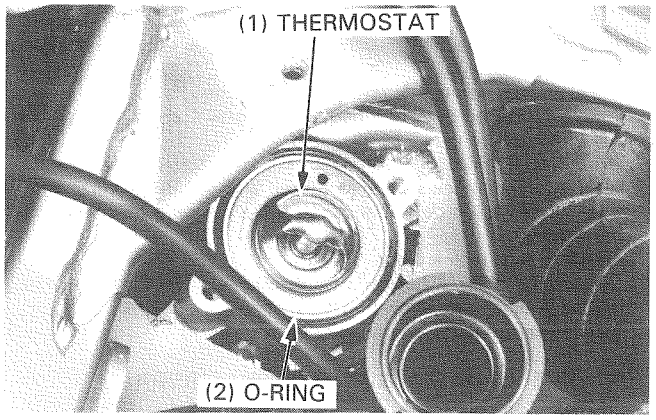

INSPECTION

Inspect the thermostat visually for damage.
Suspend the thermostat in heated water to check its operation.

NOTE

- If the thermostat or thermometer touches the pan, you'll get a false reading.

Replace the thermostat if the valve stays open at room temperature, or if it responds at temperatures other than those specified.

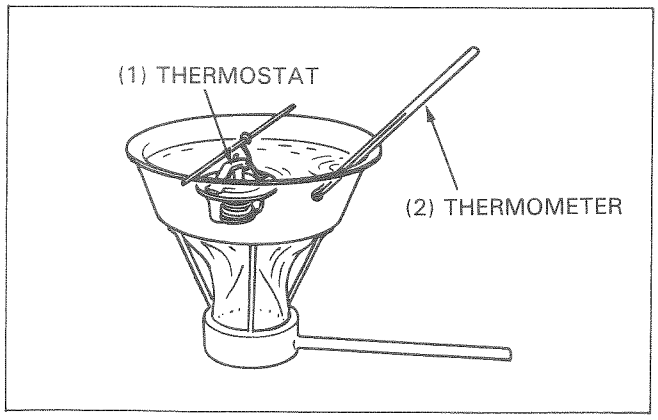

Technical Data

Start to open	80° to 84°C (176–183°F)
Valve lift	8 mm (0.31 in) minimum when heated to 95°C (203°F) for five minutes.

INSTALLATION

Install the thermostat into the housing.
Install the O-ring and housing cover.
Tighten the two cover bolts securely to keep the temperature gauge from operating faulty.
Install and tighten the pipe bolts.
Fill the cooling system (page 5-3).

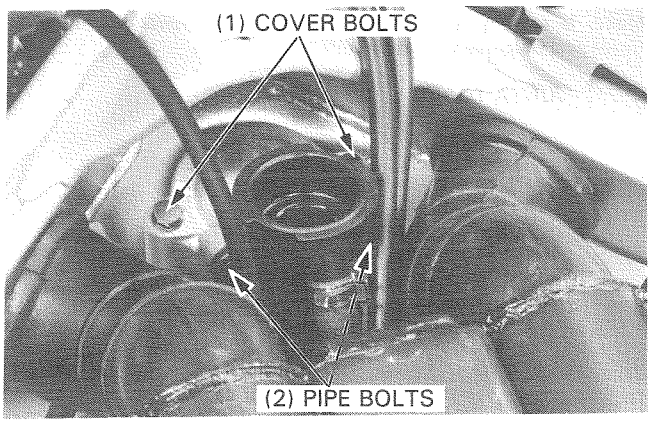

THERMOSENSOR

INSPECTION

Remove the air cleaner case (page 4-4).
Remove the guard plate.

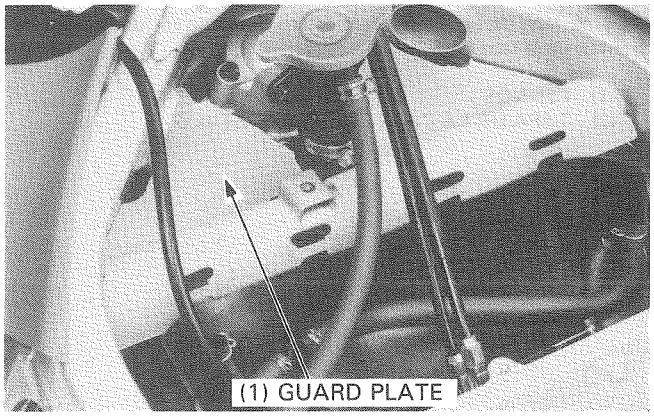

Disconnect the left water hose.
Disconnect the thermosensor wire from the thermosensor.

Check for continuity between the thermosensor and ground. There should be continuity.

Drain the coolant (page 5-3) and remove the thermosensor from the thermostat housing.

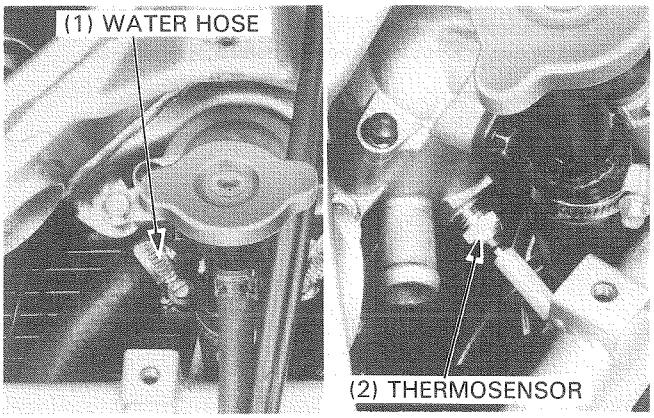

Suspend the sensor in oil over a burner and measure the resistance through the sensor as the oil heats up.

Temperature	60°C	85°C	110°C	120°C
	140°F	185°F	230°F	248°F
Resistance	104.0 Ω	43.9 Ω	20.3 Ω	16.1 Ω

WARNING

- *Wear gloves and eye protection.*
- *Heated oil is highly flammable. Keep it away from open flames.*

NOTE

- Oil must be used as the heated liquid to check the function above 100°C (212°F).
- You will get false readings if either the sensor or thermometer touch the pan.

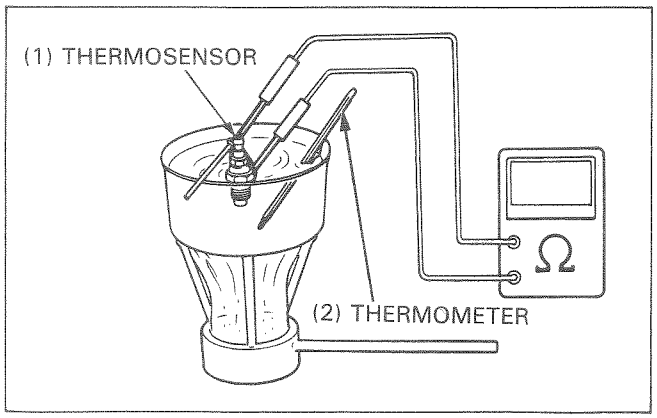

Apply sealant to the thread; tighten and reconnect the thermosensor.

THERMOSTATIC SWITCH

INSPECTION

Remove the left maintenance cover.

The cooling fan motor is actuated by the thermostatic switch located in the radiator.
If the fan motor does not start, disconnect the switch wire from the thermostatic switch and ground the wire with a jumper wire.
Turn the igntion switch on. The cooling fan motor should start running.

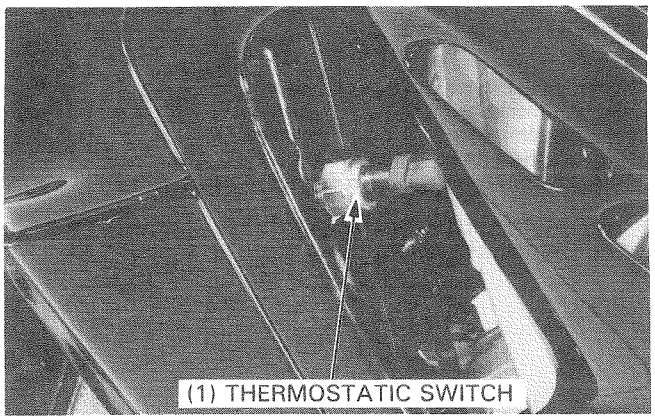

If it does not run, check for battery voltage between the fan motor connector Black/Blue and Green wires with the ignition switch turned to ON.
If there is no voltage, check for a blown or faulty fuse, loose or disconnected terminal or connector, or an open circuit.

If the fan runs, inspect the thermostatic switch as follows:

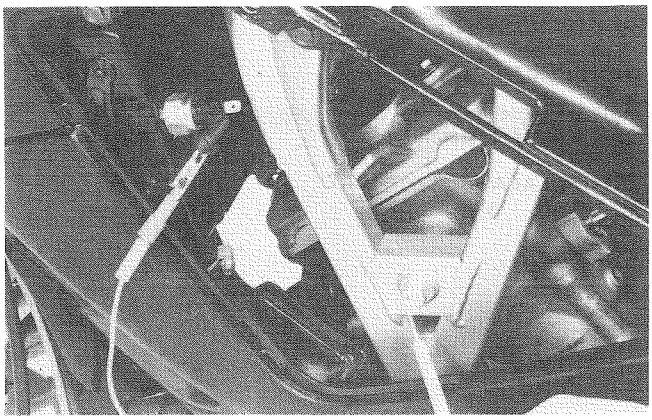

Drain the radiator coolant (page 5-3) and remove the thermostatic switch from the radiator.

Suspend the switch in a pan of coolant (50—50 mixture) and check at which temperature the switch opens and closes.

Make sure that there is no switch continuity with room temperature and gradually raise the coolant temperature. The switch should show continuity (close) at 98—102°C (208—216°F).

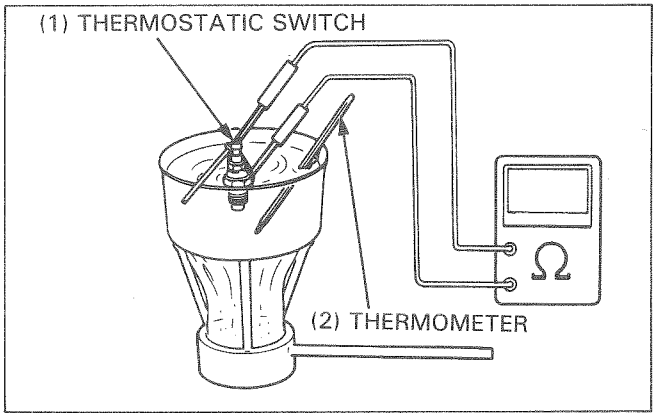

NOTE

- Keep temperature constant for 3 minutes before testing continuity. A sudden change of temperature will cause an error of the temperature reading between the thermometer and the switch.
- Do not let the thermometer or switch touch the pan as it will cause a false reading.
- Suspend the switch in coolant up to its threads.

RADIATOR/COOLING FAN

Remove the lower fairings (page 13-4).
Drain the coolant (page 5-3).
Remove the fuel tank (page 4-3).
Remove the radiator lower mounting bolts.

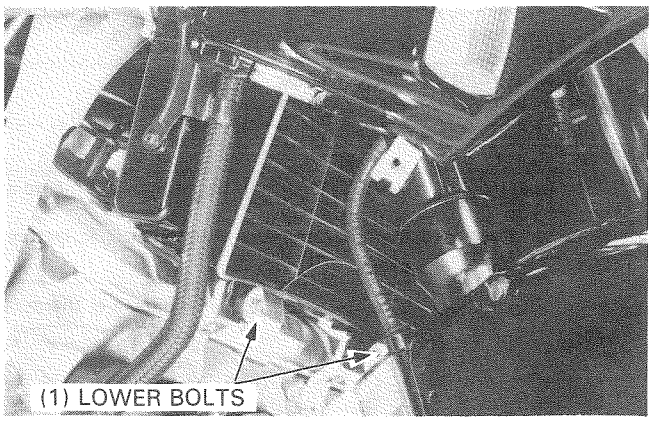

Disconnect the fan motor connector and thermostatic switch connector.
Disconnect the upper and lower radiator hoses.
Remove the oil hose clamps (each side).

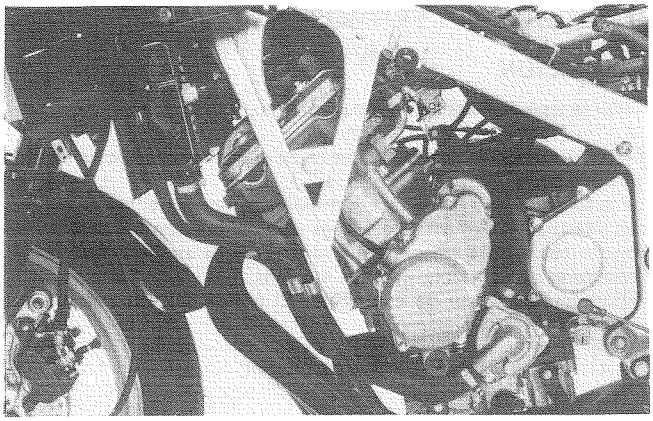

Remove the radiator upper mounting bolt.
Remove the radiator.

NOTE

- Take care not to damage the radiator fins.

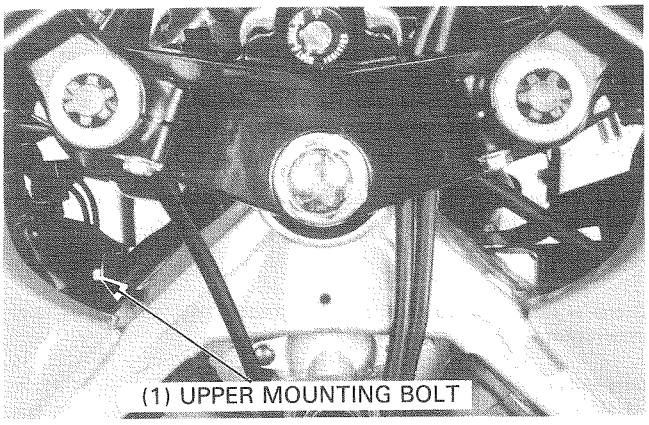

COOLING FAN DISASSEMBLY

Remove the radiator grille from the radiator, releasing the tabs and grooves.

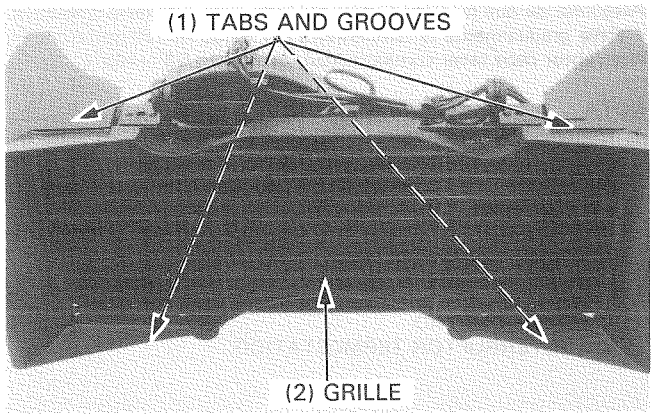

Release the wire from the clamp.
Remove the two bolts and remove the fan motor with the fan shroud.

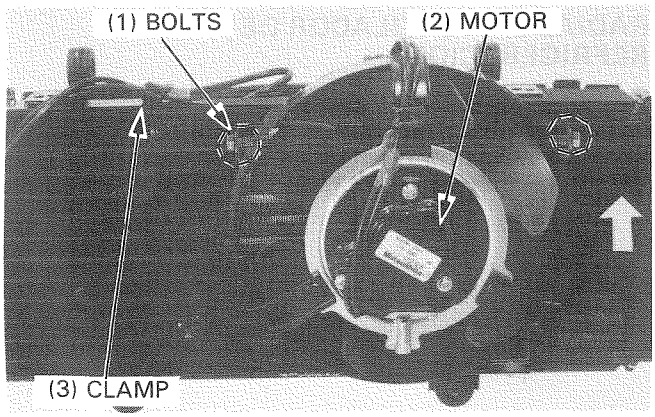

Release the wire from the clamp.
Remove the nut and fan motor.

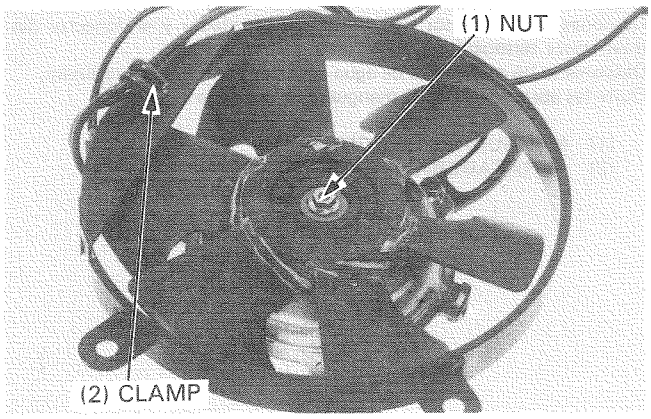

Remove the nut and fan motor from the fan shroud.

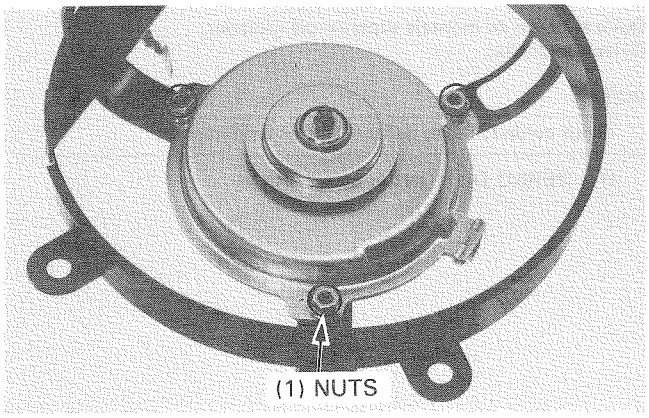

COOLING FAN ASSEMBLY

Check each part for damage.
Assembly and installation is in the reverse order of removal.

NOTE

- Align the motor shaft with the fan groove.
- Clamp the wires properly and securely.
- Take care not to damage the radiator fins.

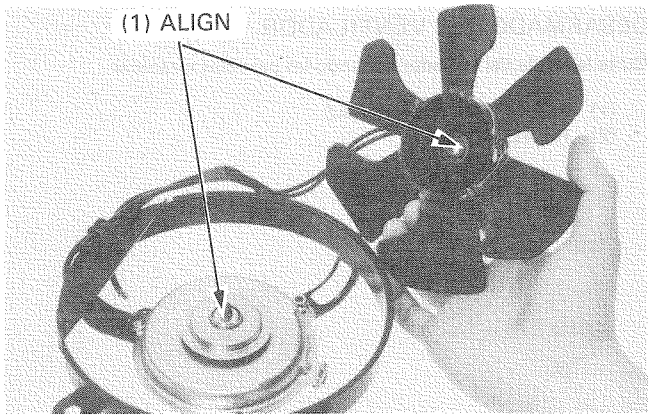

WATER PUMP

MECHANICAL SEAL INSPECTION

Inspect the telltale hole for signs of mechanical seal coolant leakage.
Replace the water pump as an assembly if the mechanical seal is leaking.

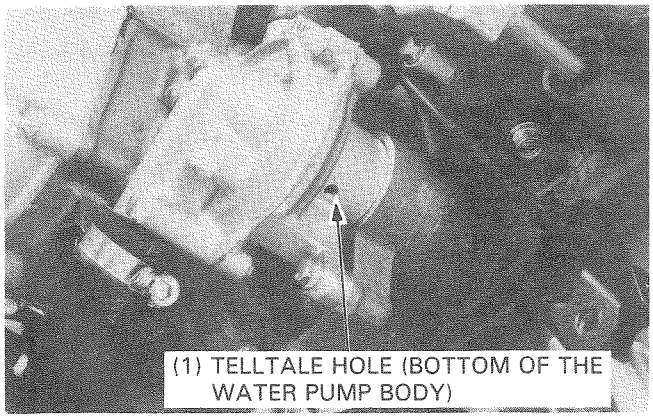

REMOVAL

Remove the left lower fairing (page 13-4).
Drain the engine oil (page 2-4).
Drain the coolant (page 5-3).

Disconnect the radiator hoses from the water pump.
Remove the two bolts and water pump.

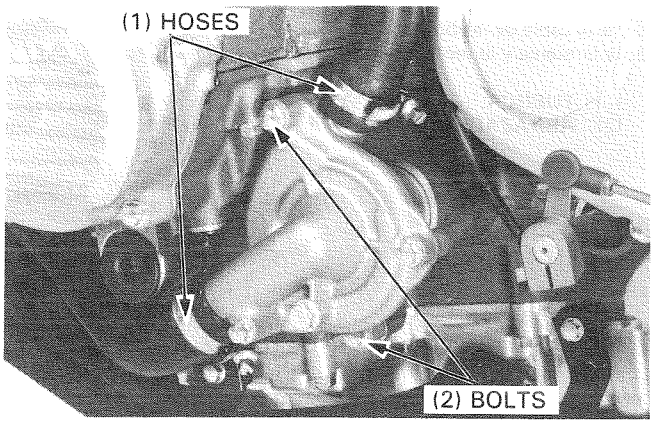

Remove the bolts and disassemble the water pump.

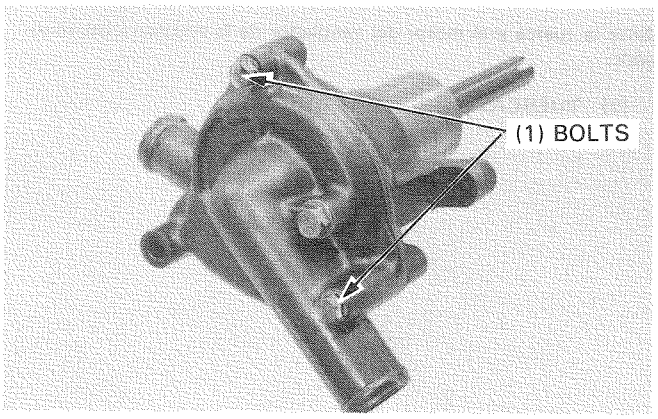

INSPECTION

Check the water pump rotor for damage.
Replace the pump as an assembly if necessary.

NOTE

- Do not disassemble the pump rotor.

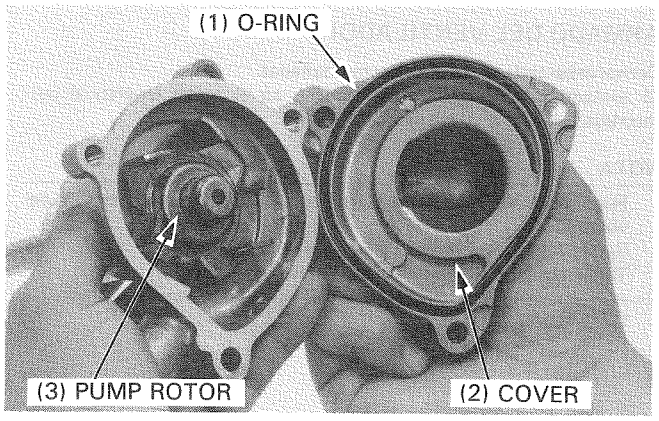

INSTALLATION

Install a new O-ring onto the pump cover.

Assemble the water pump with two attaching bolts.
Install a new O-ring to the water pump.

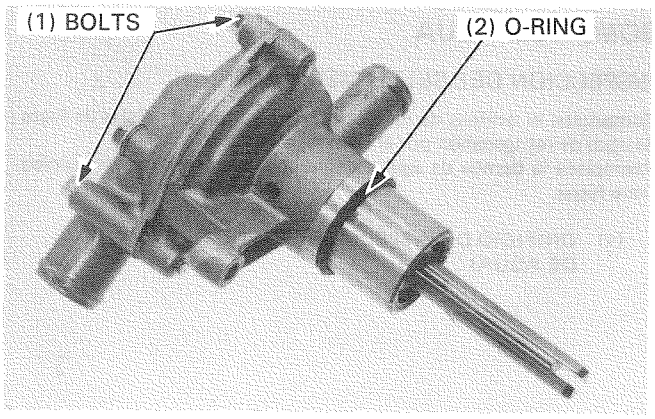

Install the water pump onto the crankcase, aligning the groove of the water pump shaft with the oil pump shaft.

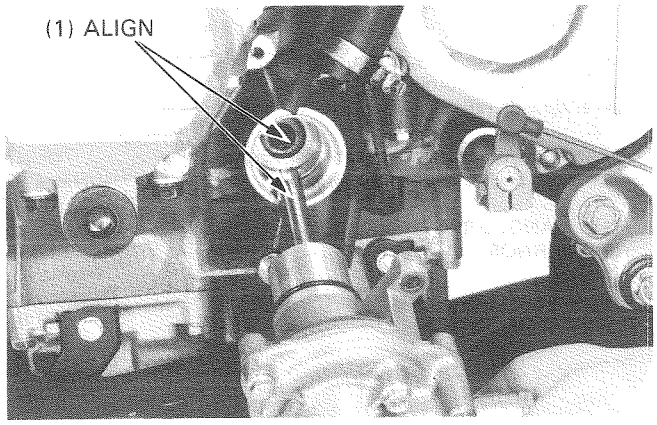

Install and tighten the two mounting bolts.
Connect the water hoses with the bands securely.

Fill the cooling system (page 5-3).
Fill the engine oil (page 2-4)

Inspect any leakage after installation.
Install the left lower fairing (page 13-4).

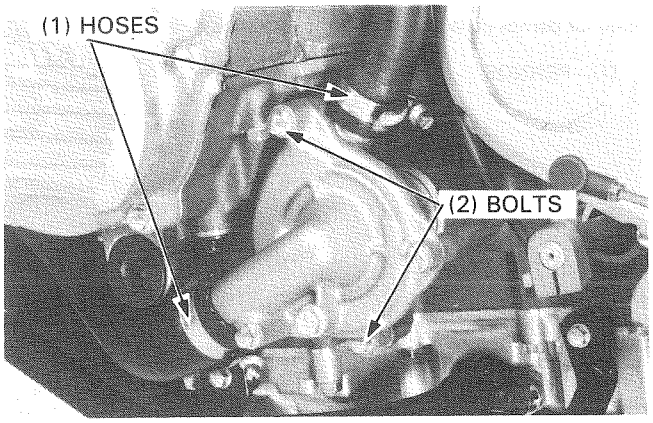

RESERVE TANK

REMOVAL

Remove the side covers.
Remove the shock absorber (page 15-7).

Remove the tank mounting bolts.
Disconnect the overflow tube.

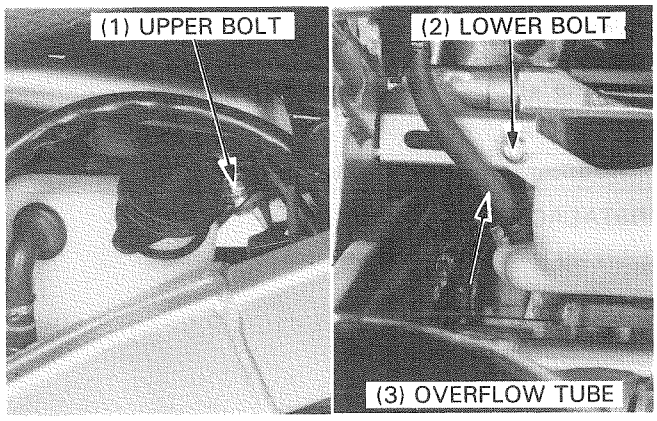

Remove the reserve tank to the left side as shown.

INSTALLATION

Install the reserve tank from the left side.

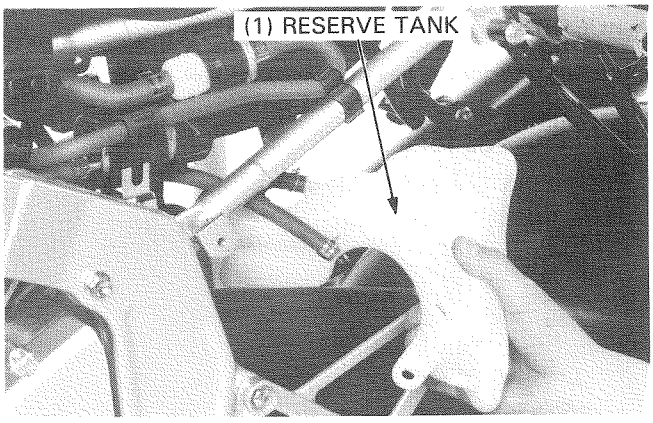

Install and tighten the reserve tank upper mounting bolt with the ground cable.

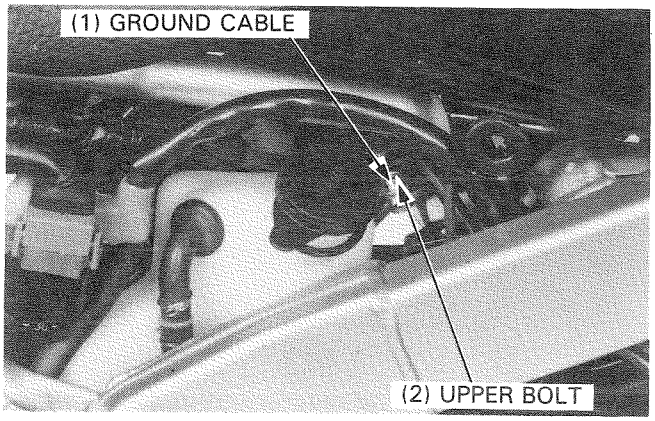

Install and tighten the lower mounting bolt.
Connect the radiator overflow tube.

NOTE

- Route the tubes properly (page 1-9).

Install the shock absorber (page 15-12).
Install the side covers.

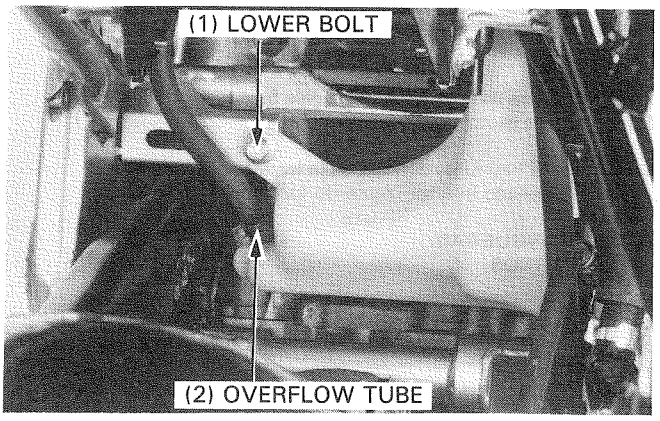

MEMO

ENGINE REMOVAL/ INSTALLATION

DESMONTAJE/ INSTALACION DEL MOTOR

RIMOZIONE E INSTALLAZIONE MOTORE

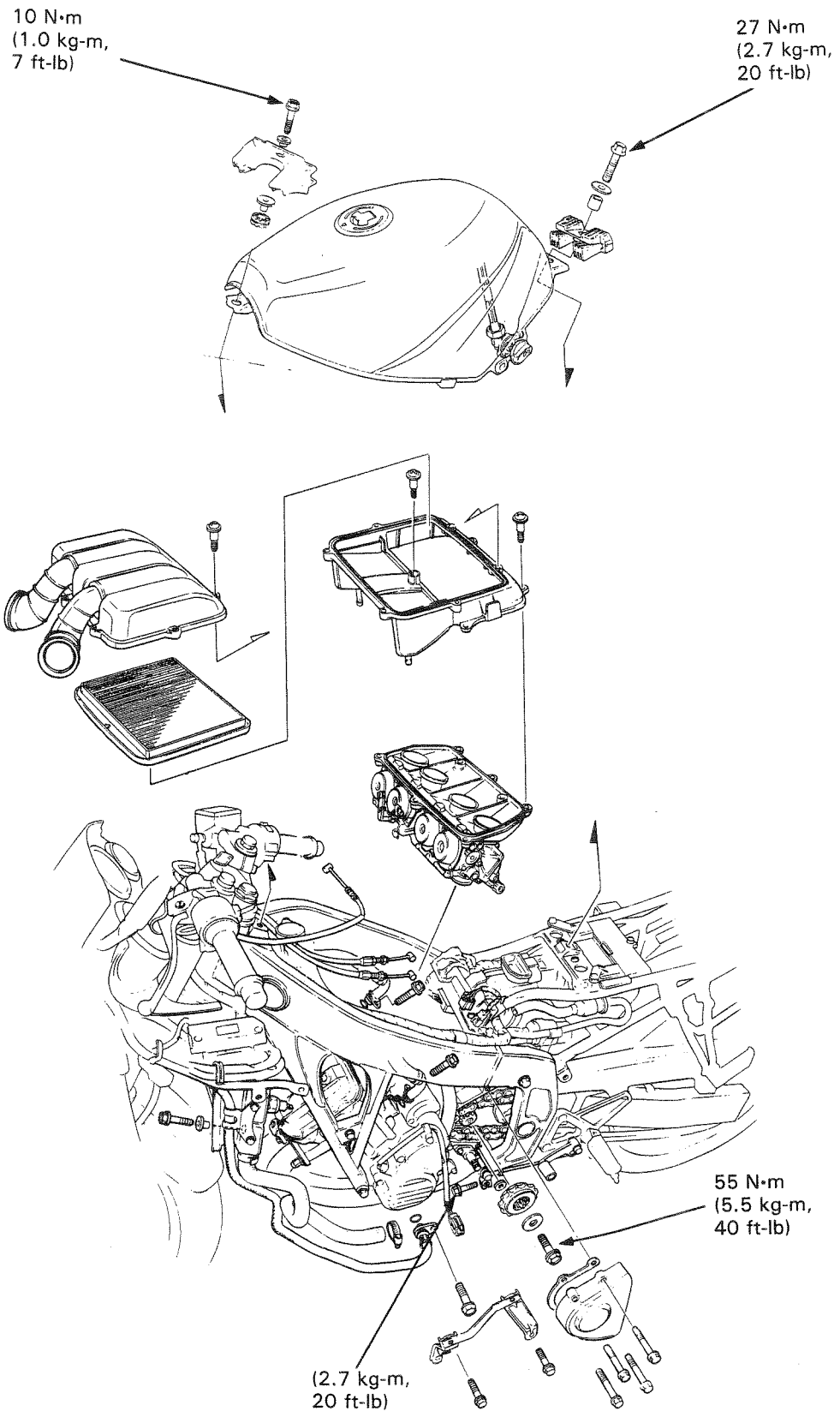
10 N•m
(1.0 kg-m,
7 ft-lb)
27 N•m
(2.7 kg-m,
20 ft-lb)
55 N•m
(5.5 kg-m,
40 ft-lb)
(2.7 kg-m,
20 ft-lb)

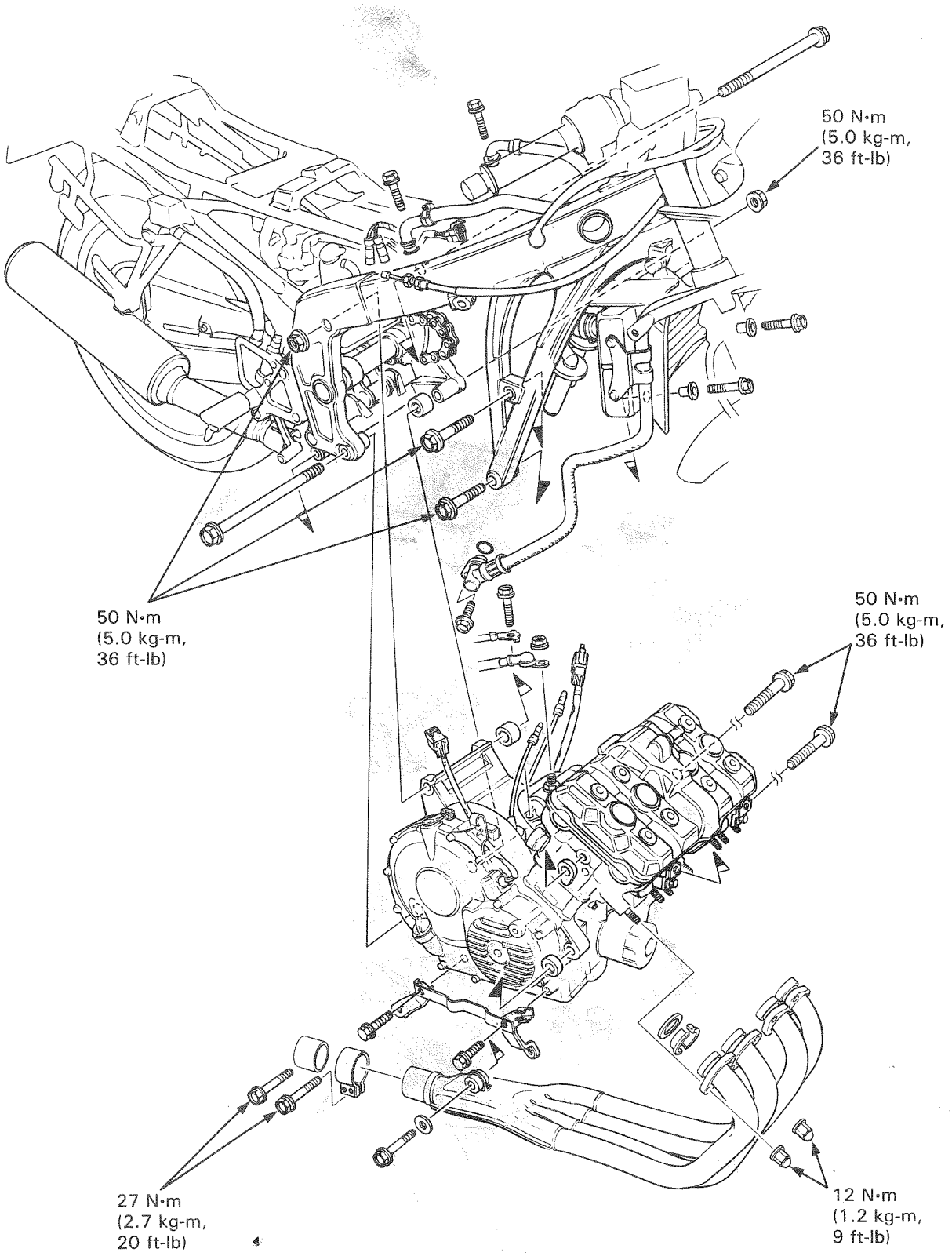
50 N•m
(5.0 kg-m,
36 ft-lb)
50 N•m
(5.0 kg-m,
36 ft-lb)
50 N•m
(5.0 kg-m,
36 ft-lb)
27 N•m
(2.7 kg-m,
20 ft-lb)
12 N•m
(1.2 kg-m,
9 ft-lb)

SERVICE INFORMATION

GENERAL

CAUTION

- *Do not jack up the engine at the oil filter.*

During removal and installation, support the vehicle with its main stand.
Parts requiring engine removal for servicing:
— crankshaft/connecting rod (section 11)
— transmission (section 12)

SPECIFICATION

Engine dry weight	63 kg (138.9 lb)	
Oil capacity	4.0 lit (4.23 US qt, 3.52 Imp qt)	after disassembly
Coolant capacity (total system)	2.0 lit (2.11 US qt, 1.76 Imp qt)	

TORQUE VALUES

Engine mounting bolt	50 N•m (5.0 kg-m, 36 ft-lb)
Drive sprocket bolt	55 N•m (5.5 kg-m, 40 ft-lb)
Exhaust pipe joint nut	12 N•m (1.2 kg-m, 9 ft-lb)
Muffler band bolt	27 N•m (2.7 kg-m, 20 ft-lb)
Gearshift pedal bolt	27 N•m (2.7 kg-m, 20 ft-lb)

ENGINE REMOVAL

CAUTION

- *Do not jack up the engine at the oil filter.*

Drain the oil from the engine (page 2-4).
Drain the coolant from the cooling system (page 5-3).

Remove the following components:
- lower fairings (page 13-4).
- fuel tank (page 4-3).
- air cleaner case (page 4-4).
- carburetors (page 4-5).
- drive sprocket.
- water hoses and oil hoses.
- radiator lower mounting bolts.
- exhaust pipes (page 13-7).
- clutch cable.
- alternator, pulse generator, neutral switch and oil pressure switch wire connectors.
- starter motor cable.
- engine ground cable.

NOTE

- Disconnect the battery negative cable before disconnecting the engine ground cable.

Remove the engine mounting bolts/nuts and engine.

NOTE

- Do not damage the radiator fin.

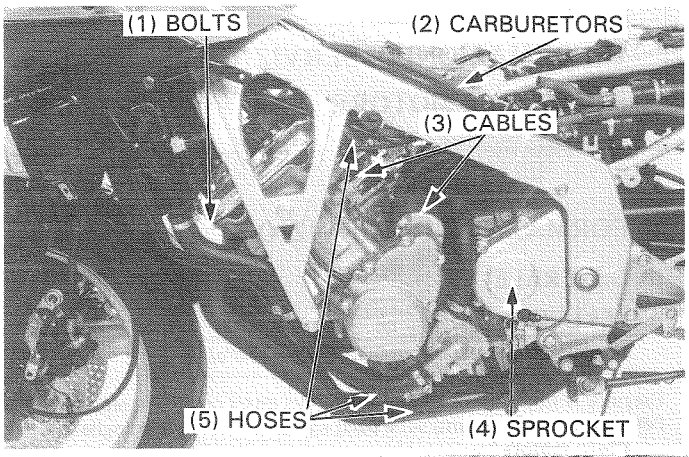

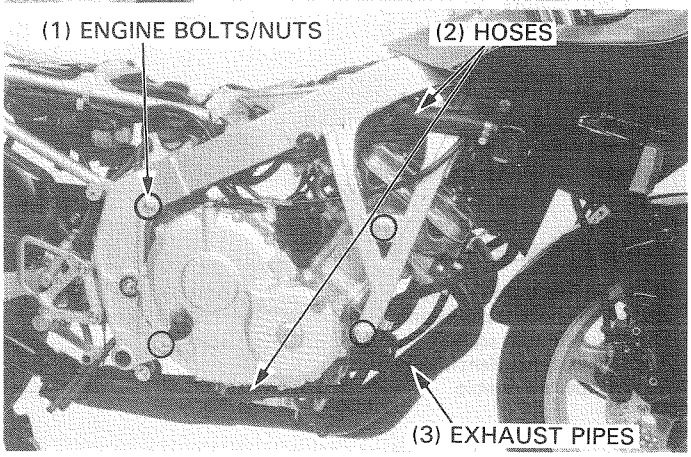

ENGINE INSTALLATION

NOTE

- Do not damage the frame, wire harness, cables, radiator fin and bolt threads.
- Route the harness and cables properly.

Use a floor jack or other adjustable support to carefully maneuver the engine into place.

CAUTION

- *Do not jack up the engine at the oil filter.*

Install the engine mounting bolts (rear) and collars.

NOTE

- Insert the engine mounting bolts (rear) as follow:
  lower—from the right side
  upper—from the left side

Install the engine mounting bolts (front) and collars as shown.

Tighten the engine mounting bolts.

TORQUE: 50 N·m (5.0 kg-m, 36 ft-lb)

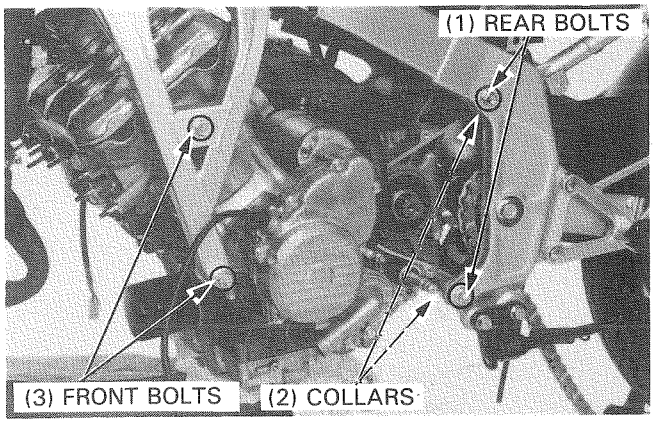

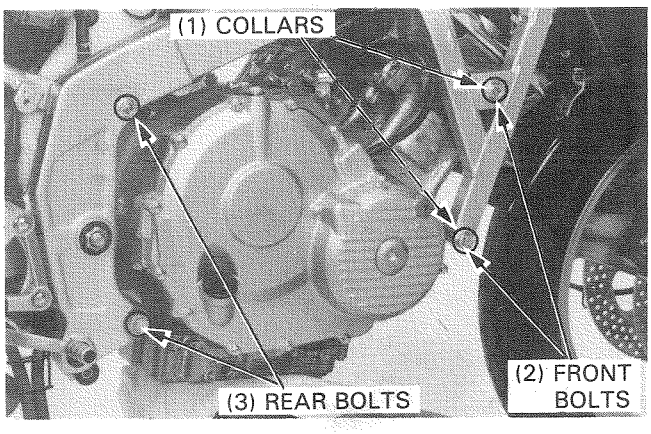

Install the drive sprocket, and drive chain, with its marked side facing out.
Tighten the drive sprocket bolt.

TORQUE: 55 N·m (5.5 kg-m, 40 ft-lb)

Install the spacer and drive sprocket cover.
Install and tighten the gearshift pedal.

TORQUE: 27 N·m (2.7 kg-m, 20 ft-lb)

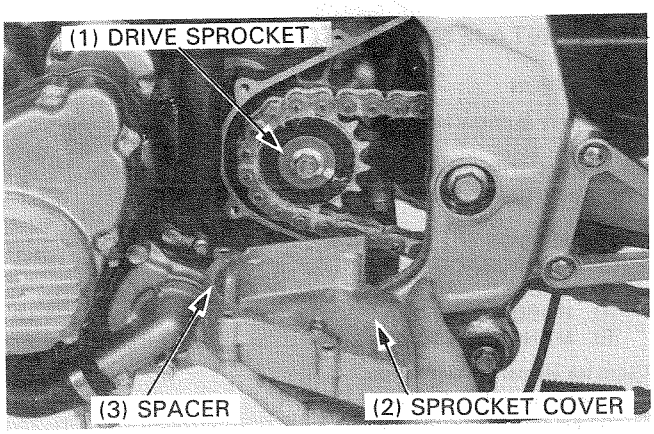

Install a new O-ring to the oil hose and install its hose to the engine securely (each side).

Install the water hoses to the engine securely.

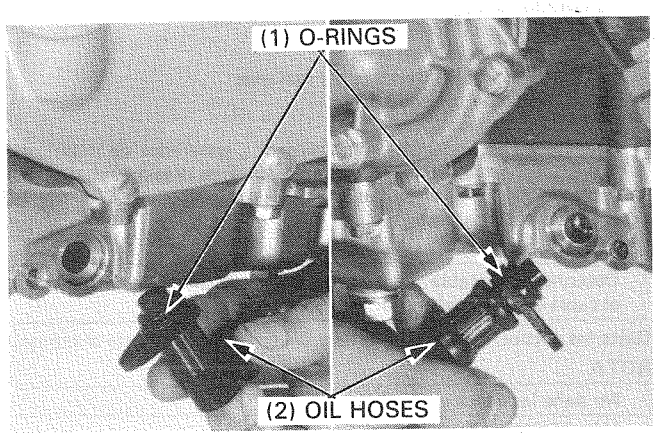

Connect the followings:
- alternator connector.
- pulse generator connector.
- neutral switch connector.
- oil pressure switch connector.
- starter motor cable.
- ground cable with the motor mounting bolt.
- clutch cable.

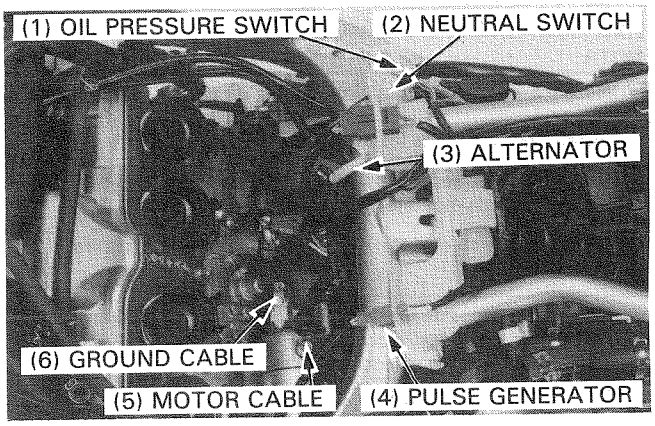

Install the following components:
- carburetor (page 4-15).
- air cleaner (page 4-4).
- fuel tank (page 4-3).
- exhaust pipe (page 13-7).
- radiator lower mounting bolts.
- lower fairings (page 13-4).

Route all wire harness and cables properly (page 1-9).

Perform the following inspections and adjustments:
Engine oil (page 2-4).
Coolant (page 5-3).
Throttle grip free play (page 3-4).
Drive chain (page 3-11).
Clutch operation (page 3-14).

Check all electrical equipment.

CLUTCH/ GEARSHIFT LINKAGE/ ALTERNATOR

EMBRAGUE/ VARILLAJE DE CAMBIO DE VELOCIDADES/ ALTERNADOR

FRIZIONE/ SELETTORE CAMBIO E ALTERNATORE

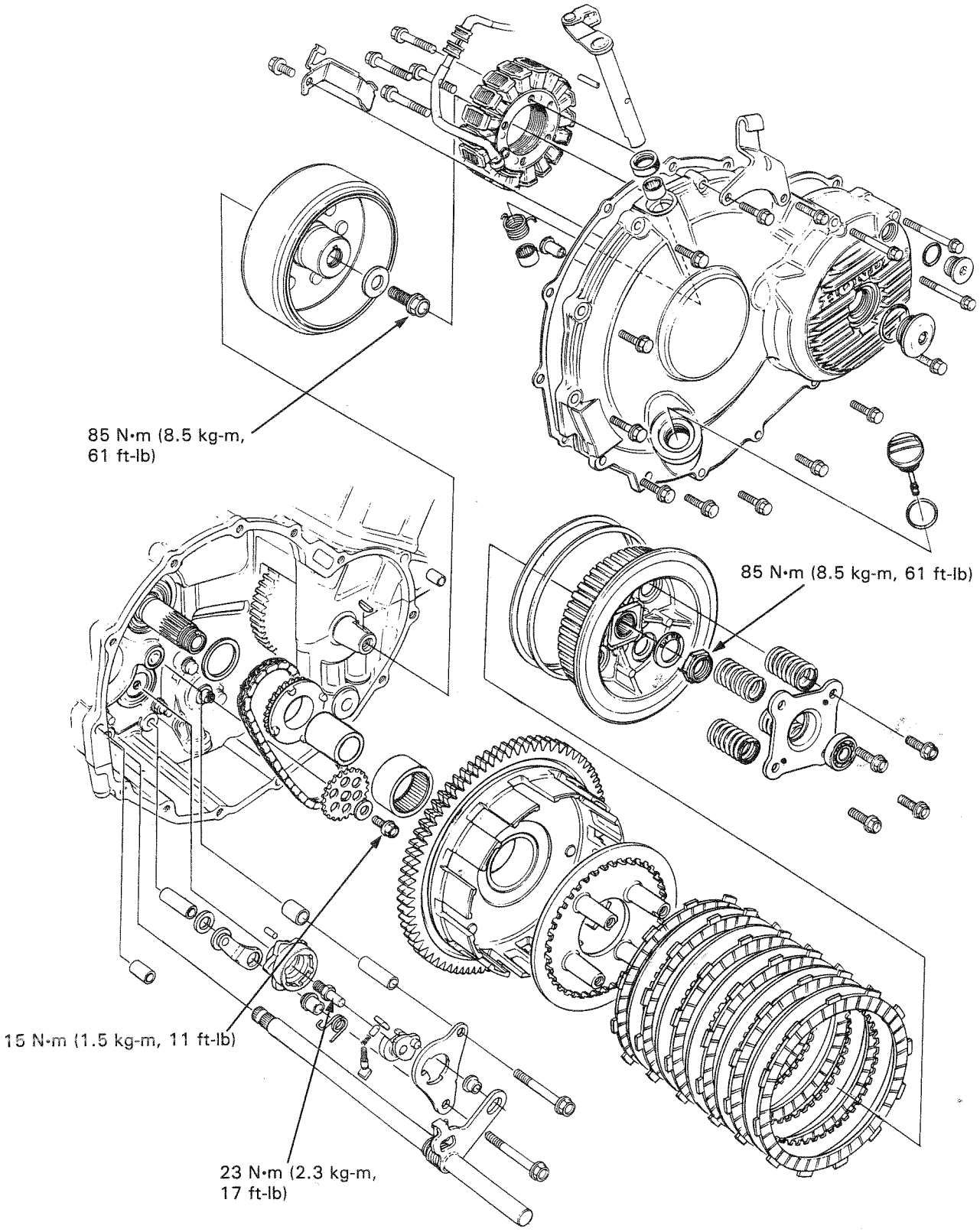
85 N•m (8.5 kg-m,
61 ft-lb)
85 N•m (8.5 kg-m, 61 ft-lb)
15 N•m (1.5 kg-m, 11 ft-lb)
23 N•m (2.3 kg-m,
17 ft-lb)

SERVICE INFORMATION

GENERAL

- This section covers removal and installation of the right crankcase cover, clutch, gearshift linkage and alternator. These services can be performed with the engine in the frame.
- Refer to Section 17 for alternator inspection procedures.

SPECIFICATIONS

Unit: mm (in)

ITEM			STANDARD	SERVICE LIMIT
Clutch	Spring free length		42.5 (1.67)	41.0 (1.61)
	Disk thickness	A	3.22–3.38 (0.127–0.133)	2.90 (0.114)
		B	3.42–3.58 (0.135–0.141)	3.20 (0.126)
	Plate warpage		——	0.30 (0.012)
	Clutch outer guide	I.D.	21.993–22.007 (0.8659–0.8664)	22.05 (0.868)
		Height	39.90–40.00 (1.571–1.575)	39.8 (1.57)
	Mainshaft O.D.at outer guide		21.980–21.991 (0.8654–0.8658)	21.94 (0.864)
	Oil pump drive sprocket I.D.		30.025–30.075 (1.1821–1.1841)	30.11 (1.185)

TORQUE VALUES

Shift drum center pin	23 N•m (2.3 kg-m,17 ft-lb) Apply locking agent.
Oil pump driven sprocket bolt	15 N•m (1.5 kg-m,11 ft-lb) Apply locking agent.
Clutch lock nut	85 N•m (8.5 kg-m, 61 ft-lb)
Flywheel bolt	85 N•m (8.5 kg-m, 61 ft-lb)
Gearshift pedal bolt	27 N•m (2.7 kg-m, 20 ft-lb)

TOOLS

Special

Clutch center holder	07GMB-KT80100

Common

Flywheel holder	07725–0040000
Rotor puller	07733–0020001
Extension bar	07716–0020500

TROUBLESHOOTING

Clutch slips
- Discs worn
- Spring weak
- Faulty clutch lifter

Clutch will not disengage
- Faulty clutch lifter
- Plates warped

Clutch operation feels rough
- Outer drum slots rough
- Faulty clutch cable
- Faulty clutch lifter

Hard to shift
- Incorrect clutch adjustment
- Faulty clutch lifter
- Faulty gearshift linkage
  - — faulty gearshift spindle
  - — faulty drum shifter
- Improper transmission (⇨section 12)

Transmission jumps out of gear
- Damaged stopper arm
- Improper transmission (⇨section 12)

Gearshift pedal will not return
- Worn or broken shift return spring
- Faulty gearshift linkage
- Improper transmission (⇨section 12)

RIGHT CRANKCASE COVER REMOVAL

Drain the engine oil (page2-4).
Remove the fuel tank (page4-3).
Remove the lower fairing (right) (page13-4).

Disconnect the alternator 3P connector.

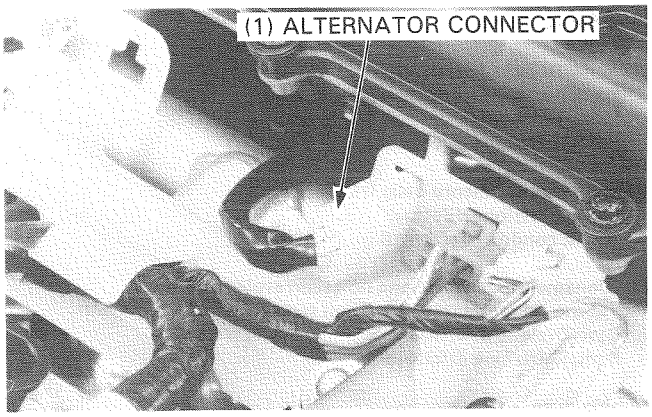

Remove the right crankcase cover mounting bolts.
Disconnect the clutch cable from the clutch lifter arm.
Remove the right crankcase cover.

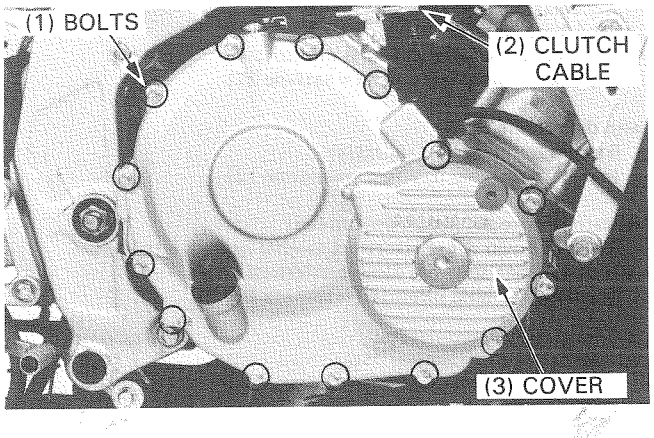

Remove the dowel pins and gasket.

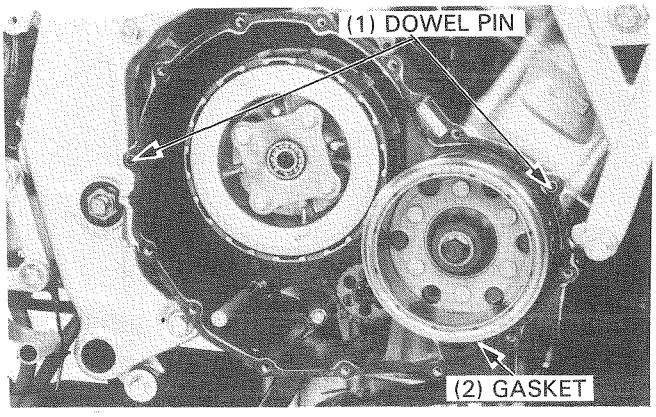

CLUTCH REMOVAL

CLUTCH LIFTER INSPECTION

Remove the clutch lifter piece and spring.
Remove the spring pin and clutch lifter shaft.

Check the spring for fatigue or damage.
Check the lifter piece and lifter shaft for damage or bending.

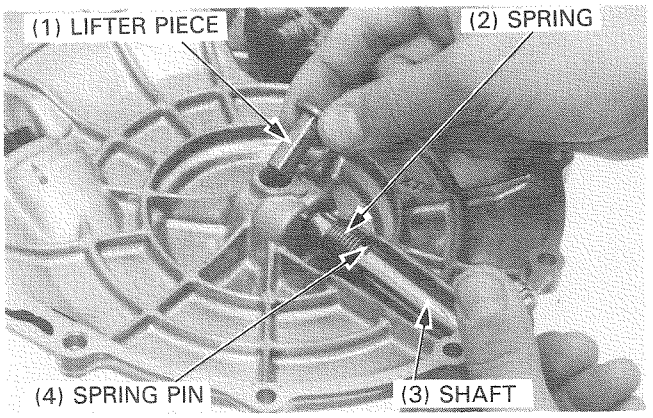

Check the needle bearings for wear, damage or loose fit.
Check the oil seal for fatigue or damage.

Apply grease to the oil seal lip and needle bearings.

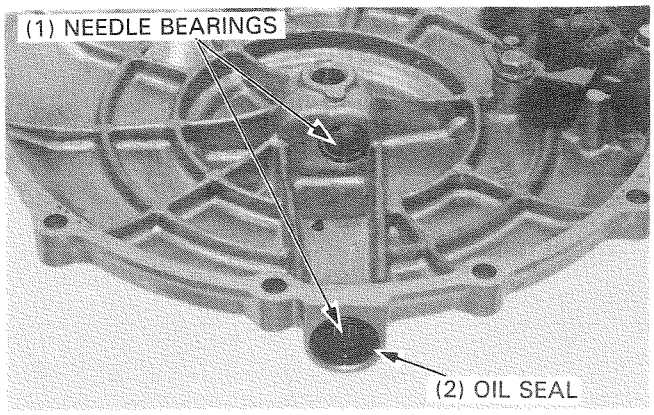

CLUTCH REMOVAL

Remove the clutch bolts, lifter plate and springs.

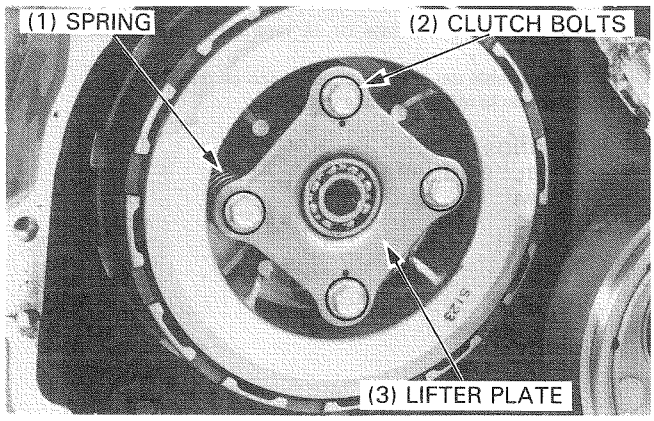

Unstake the clutch lock nut with a drill or grinder.

NOTE

- Be careful not to damage the shaft threads.

Install the clutch center holder, and remove and discard the clutch lock nut.

TOOL:

Clutch center holder	**07GMB–KT80100**
Extension bar	**07716–0020500**

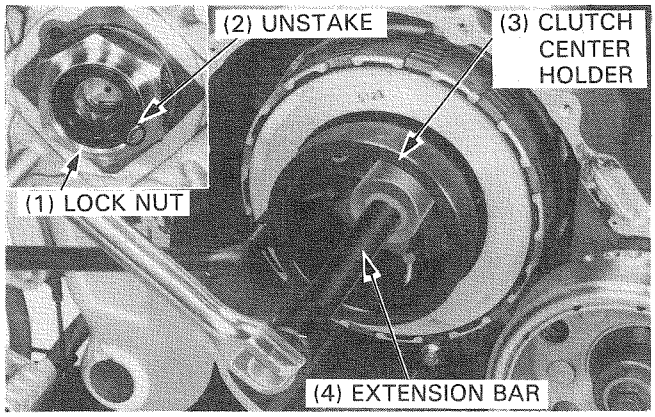

Remove the washer, clutch center, clutch plates, discs and pressure plate from the clutch outer.

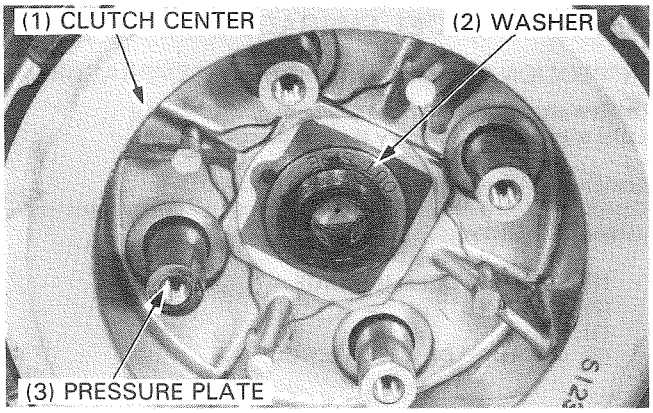

Remove the clutch outer and needle bearing.

NOTE

- Turn the flywheel clockwise to the position that the clutch outer can be removed.

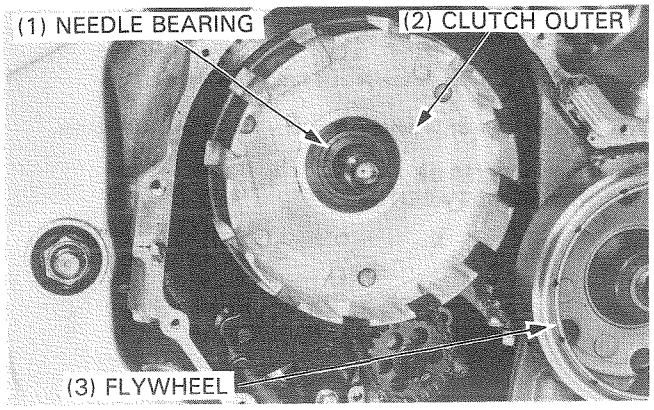

Remove the oil pump driven sprocket mounting bolt, driven sprocket, oil pump drive chain and oil pump drive sprocket.

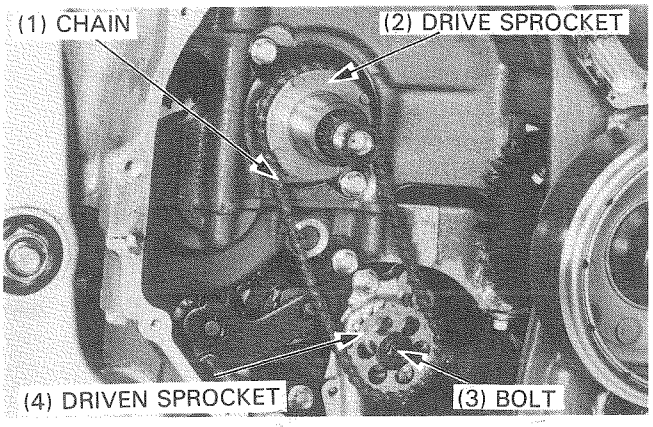

Remove the clutch outer guide and oil pump drive sprocket collar from the mainshaft.

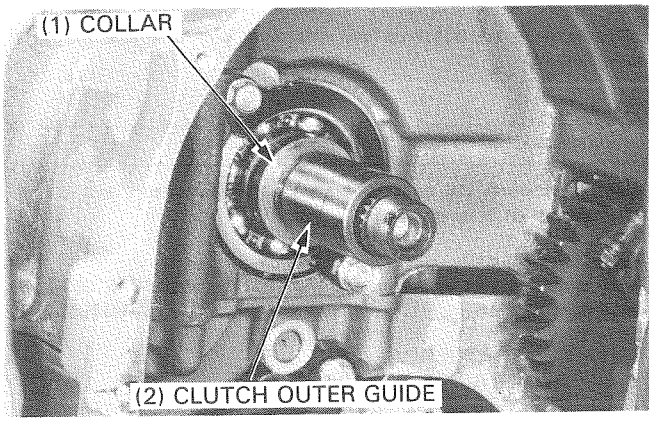

INSPECTION

Check the bearing lifter plate for wear or damage.
Turn the bearing inner race with your finger.
The bearing should turn smoothly and quietly.
Also check that the bearing outer race fits securely in the clutch lifter plate.
Replace the bearing with the new one if necessary.

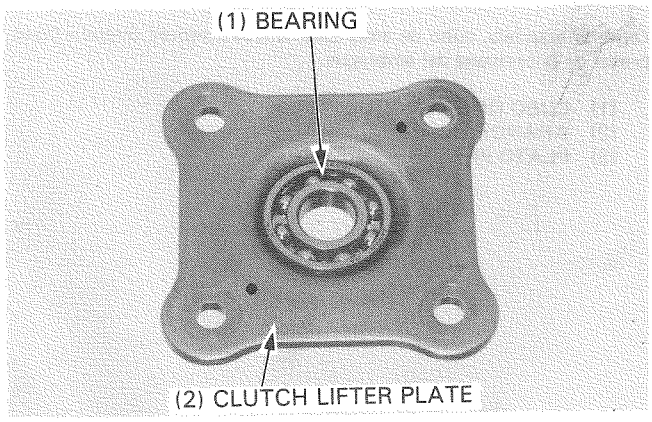

Measure the spring free length.

SERVICE LIMIT: 41.0 mm (1.61 in)

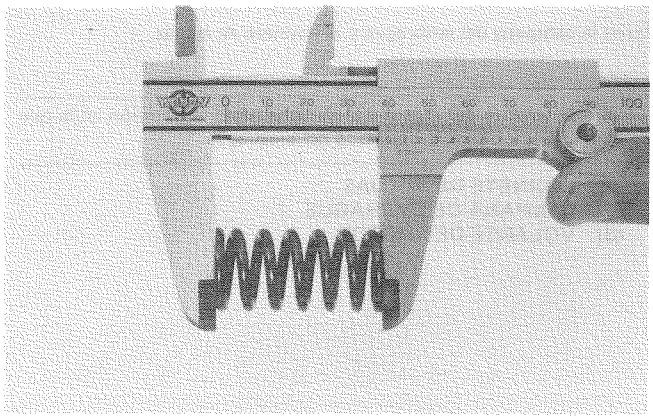

Check the warpage on a surface plate using a thickness gauge.

SERVICE LIMIT: 0.30 mm (0.012 in)

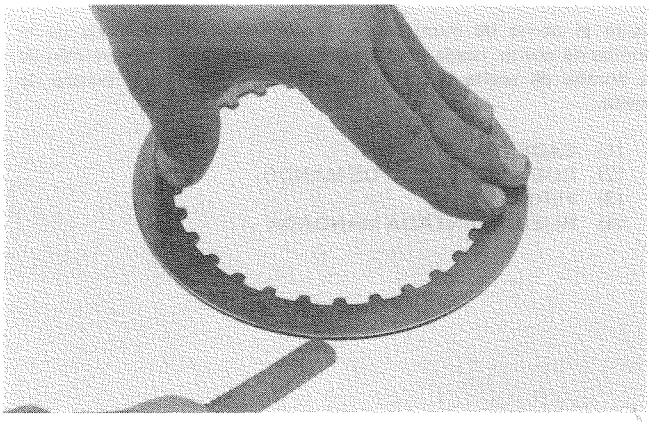

Replace the clutch discs if they show signs of scoring or discoloration.

Measure the thickness of the disc A and B.

SERVICE LIMIT: Disc A: 2.90 mm (0.114 in)
Disc B: 3.20 mm (0.126 in)

NOTE

- Replace the discs and plates as a set.

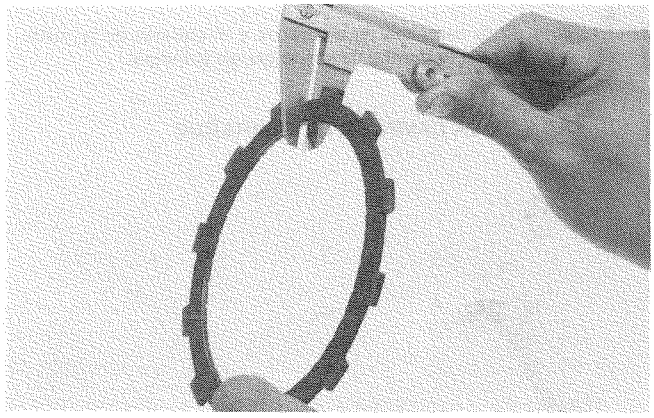

Check the slots in the clutch outer for nicks or indentations made by clutch discs.

Check the serrated teeth of the primary driven gear for its operation, wear or damage.

Check the needle bearing for wear, damage or loose fit.

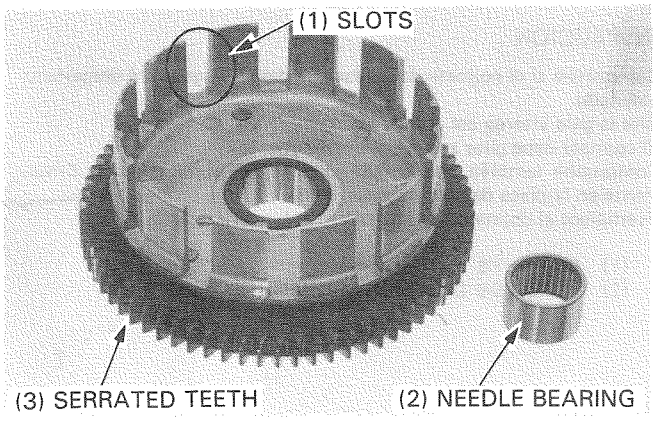

Check the clutch center for nicks or indentations made by clutch plate.

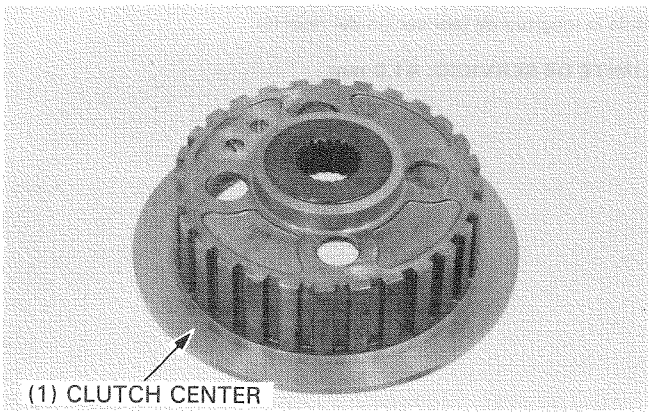

Check the spring seat and judder spring for distortion, wear or damage.
Replace them if necessary.

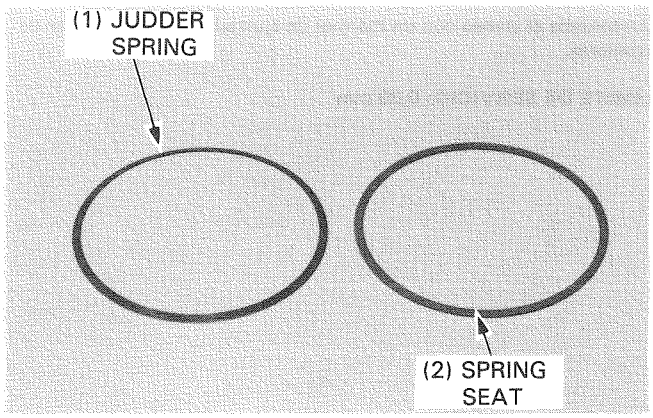

Measure as below.

SERVICE LIMIT:
Clutch outer guide
ID: 22.05 mm (0.868 in)
Height: 39.8 mm (1.57 in)
Oil pump drive sprocket
ID: 30.11 mm (1.185 in)

Inspect the oil pump drive sprocket collar for damage or wear.

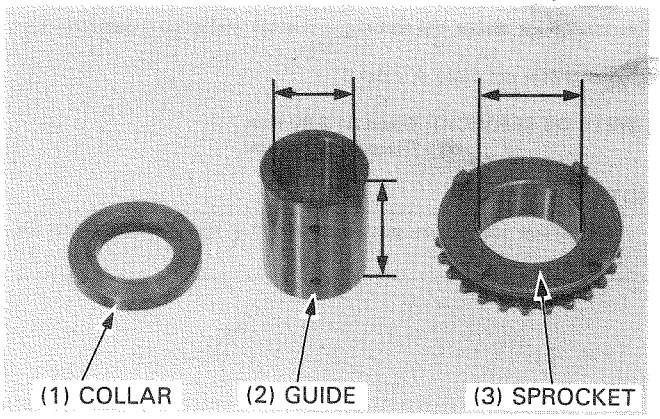

Measure the mainshaft O.D. at the clutch outer guide.

SERVICE LIMIT: 21.94 mm (0.864 in)

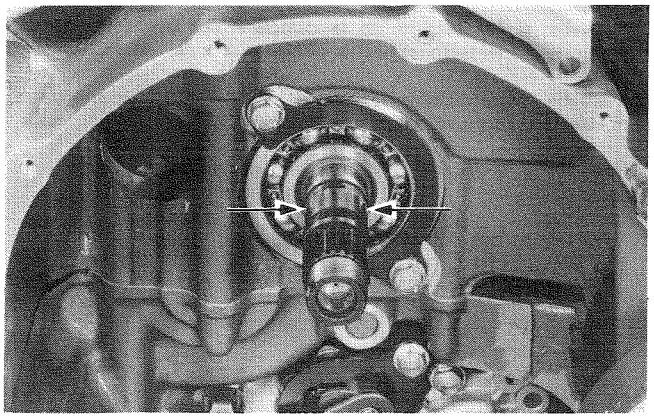

GEARSHIFT LINKAGE

REMOVAL

Remove the right crankcase cover (page7-3).
Remove the clutch (page 7-4).

Remove the gearshift pedal.

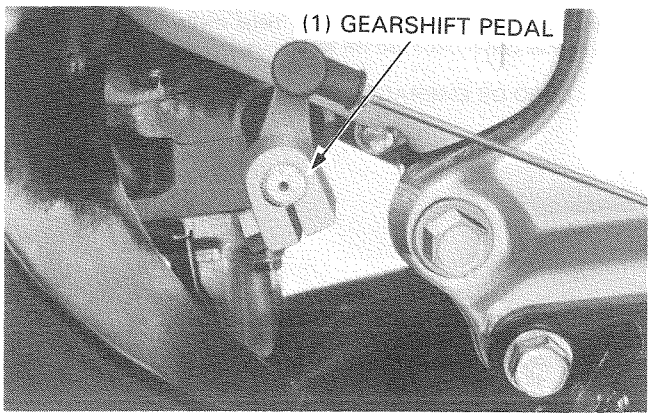

Remove the gearshift spindle and washer.
Remove the shifter collar from the drum shifter.

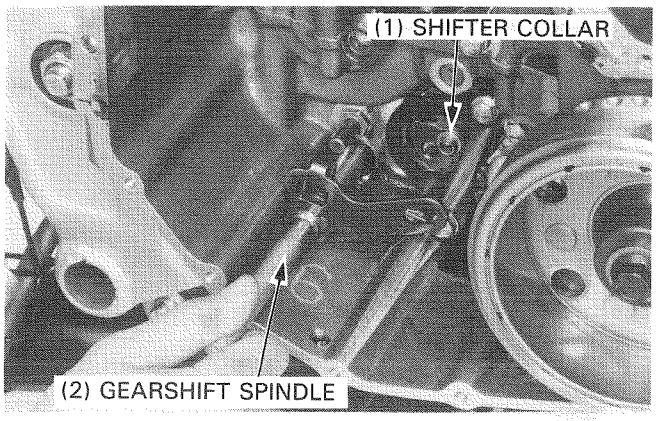

Remove the drum shifter and guide plate as an assembly by removing two bolts.
Disassemble them.

NOTE

- Do not let the ratchet pawls, plungers or springs fall when removing the drum shifter.

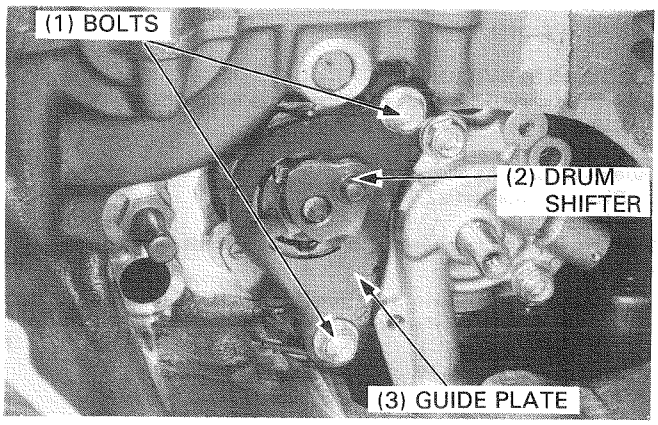

Remove the spring, collar, stopper arm, washer and dowel pins.

Remove the center pin and drum center.
Remove the drum pin from the shift drum.

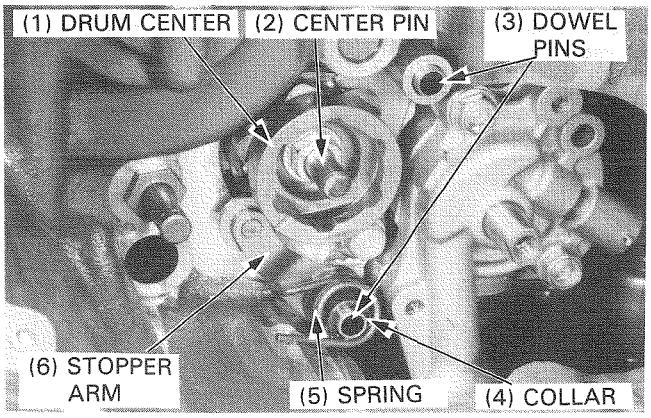

INSPECTION

Check the gearshift spindle for wear, damage or bending.
Check the return springs for fatigue or damage.

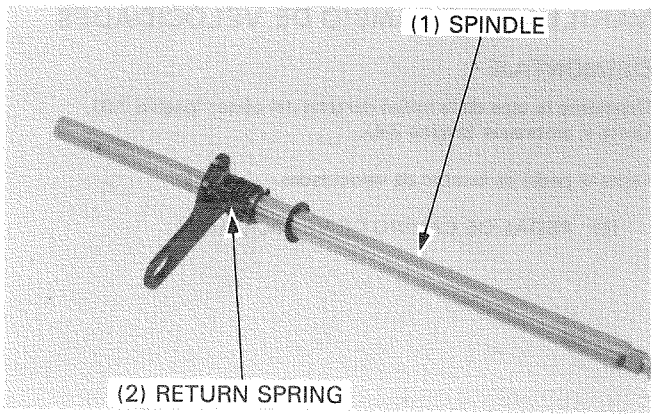

Check the ratchet pawls, plungers and drum shifter for wear or damage.
Check the springs for fatigue or damage.

ASSEMBLY

Apply clean engine oil to the ratchet pawls, plungers, springs and drum shifter.

NOTE

- Pawl A and pawl B are not interchangeable.

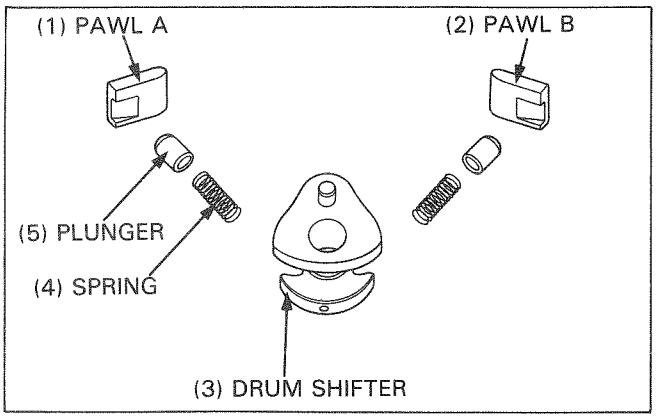

Assemble the drum shifter, springs, plungers and ratchet pawls to the guide plate as shown.

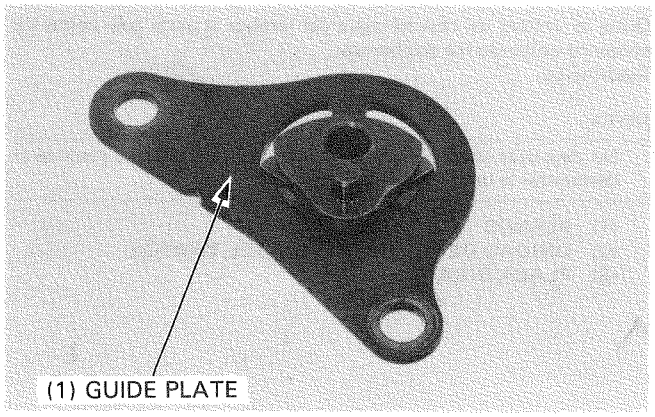

INSTALLATION

Install the drum pin to the shift drum.
Apply locking agent to the center pin threads and install the drum center and center pin in the shift drum.
Tighten the center pin.

TORQUE: 23 N·m (2.3 kg-m, 17 ft-lb)

Install the dowel pins, washer, stopper arm, collar and return spring.

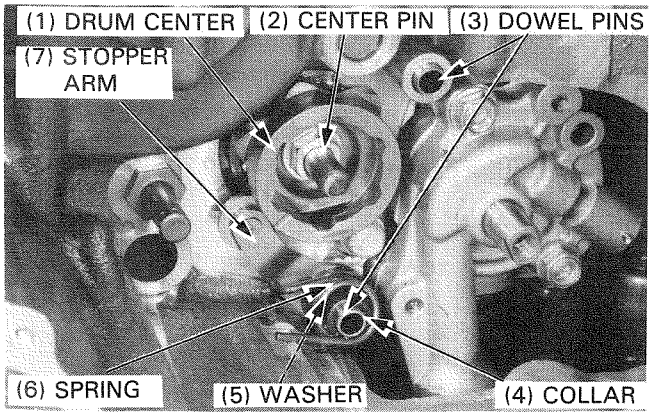

Apply locking agent to the guide plate bolt threads.

Install the drum shifter and guide plate as an assembly by tightening the two bolts securely.

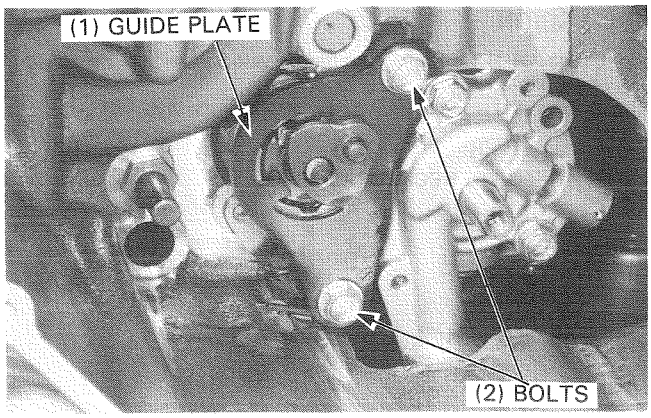

Install the shifter collar to the drum shifter.

Install the gearshift spindle, aligning the return spring ends with the gearshift spindle return pin.

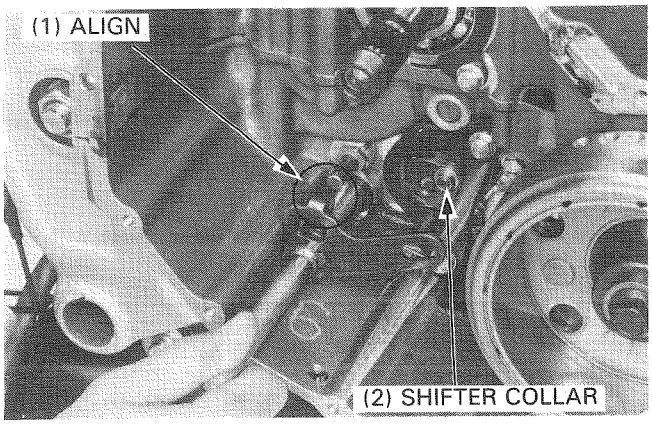

Install the gearshift pedal, aligning the punch marks of the pedal and shaft.

TORQUE: 27 N·m (2.7 kg-m, 20 ft-lb)

NOTE

- After installation, make sure the gearshift linkage operates properly by moving the gearshift pedal.

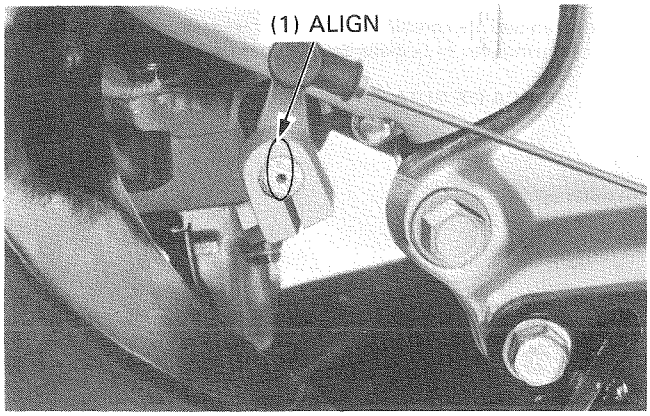

CLUTCH INSTALLATION

Install the oil pump drive sprocket collar and clutch outer guide to the mainshaft.

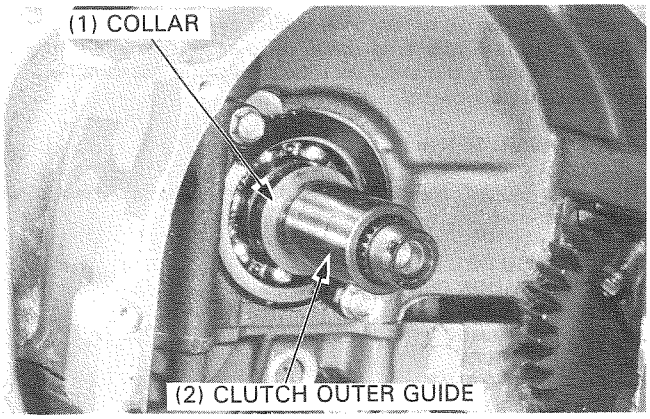

Install the oil pump drive chain over the oil pump drive sprocket and oil pump driven sprocket with the marks on the driven sprocket facing out.
Install the oil pump drive sprocket over the clutch outer guide and install the oil pump driven sprocket onto the oil pump shaft.

Apply locking agent to the threads of the oil pump driven sprocket mounting bolt and tighten it to the specified torque.

TORQUE: 15 N·m (1.5 kg-m, 11 ft-lb)

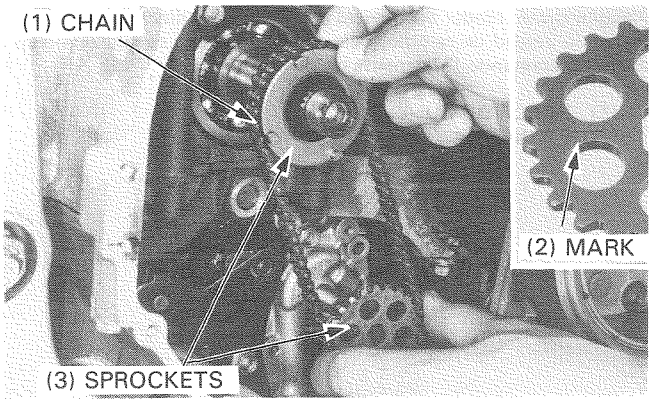

Install the needle bearing onto the clutch outer guide.

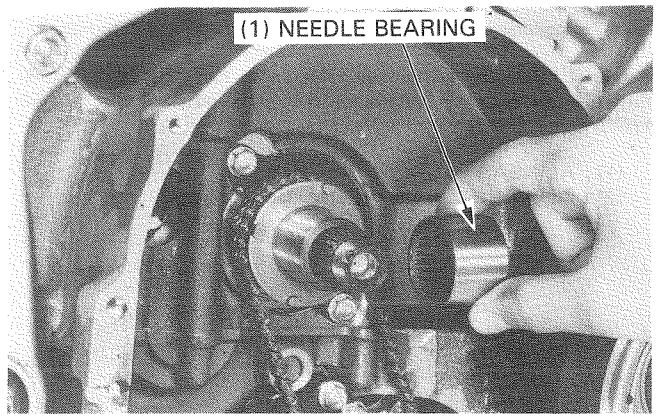

Apply MoS_2 grease (page 2-13) to the inside of the clutch outer.
Install the clutch outer onto the oil pump drive sprocket, aligning the bosses of the sprocket with the slots of the clutch outer by rotating the oil pump driven sprocket bolt as shown.

NOTE

- Align the serrated teeth of the primary driven gear with the primary drive gear teeth.

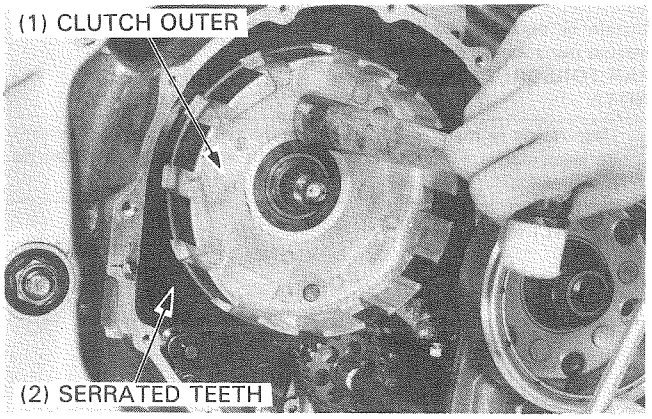

Install the spring seat, judder spring and clutch disc A on the clutch center.

NOTE

- Note the direction of the spring seat, judder spring and disc A.

Install the clutch disc B, clutch plates and pressure plate on the clutch center and install them on the clutch outer as an assembly.

NOTE

- Stack the discs and plates alternately as shown.
- Coat the new clutch discs with engine oil.

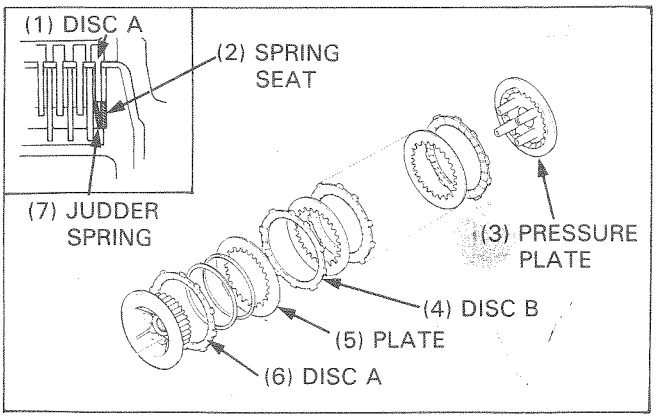

Install the washer on the mainshaft with the "OUT SIDE" mark facing out.

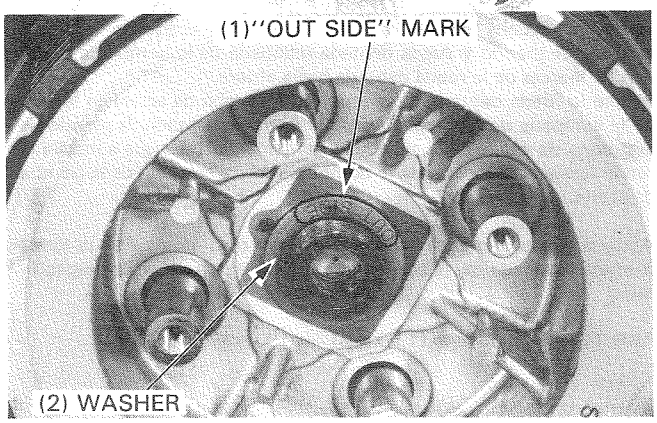

Hold the clutch center with the clutch center holder, and tighten the new lock nut to the specified torque.

TORQUE: 85 N·m (8.5 kg-m, 61 ft-lb)

NOTE

- Never re-use the removed nut.

TOOL:
Clutch center holder **07GMB–KT80100**

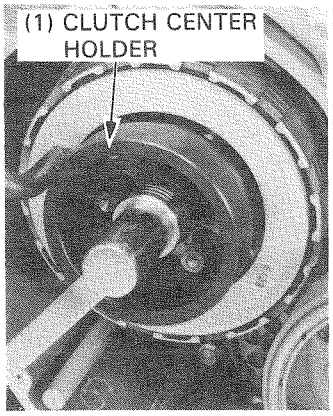

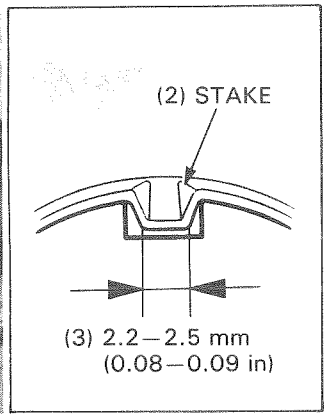

Stake the lock nut into the mainshaft end groove with the center punch.

NOTE

- It is important that the lock nut is securely staked as illustrated.

Install the clutch springs, lifter plate and bolts.

Tighten the bolts of the punch marks on the plate first, and then tighten the other bolts.

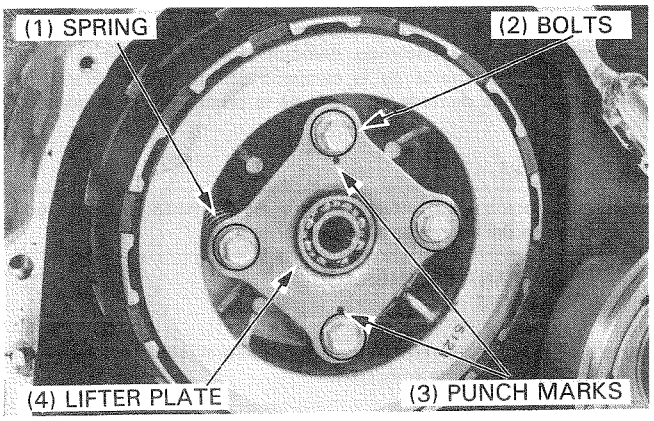

CLUTCH LIFTER ASSEMBLY

Install the clutch lifter shaft.
Install the spring pin and spring.

NOTE

- After installing the spring pin , make sure the lifter shaft rotates freely.

Install the clutch lifter piece, aligning the piece with the groove of the lifter shaft.

Install the right crankcase cover (page 7-14).

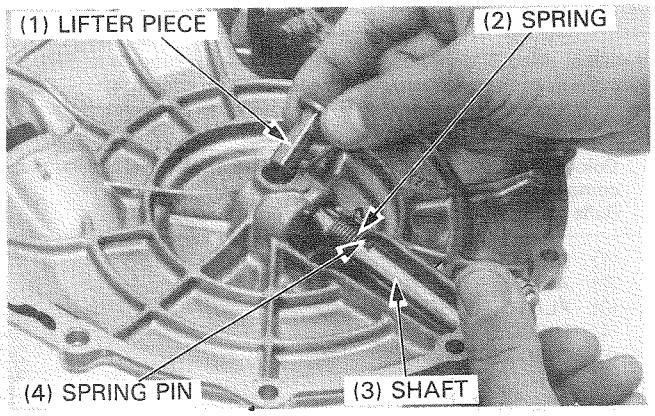

ALTERNATOR

STATOR COIL REPLACEMENT

Remove the right crankcase cover (page 7-3).
Remove the stator wire clamp.
Remove the bolts and stator.

Install the stator in the reverse order of removal.

NOTE

- Install the wire grommet into the groove of the cover properly.

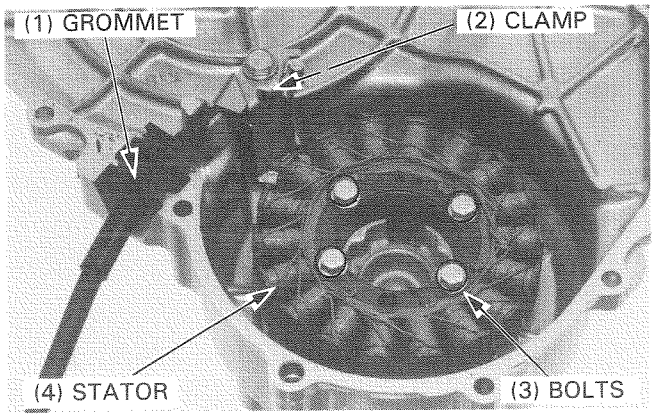

FLYWHEEL REMOVAL

Hold the flywheel with the flywheel holder.
Remove the flywheel bolt and washer.

TOOL:
Flywheel holder **07725–0040000**

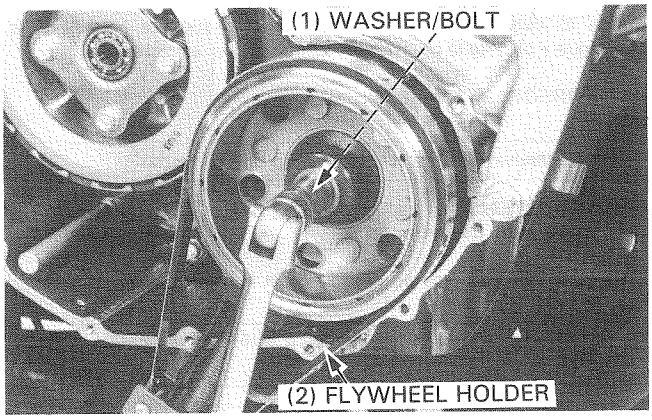

Remove the flywheel from the crankshaft using the rotor puller.

TOOL:
Rotor puller **07733–0020001**

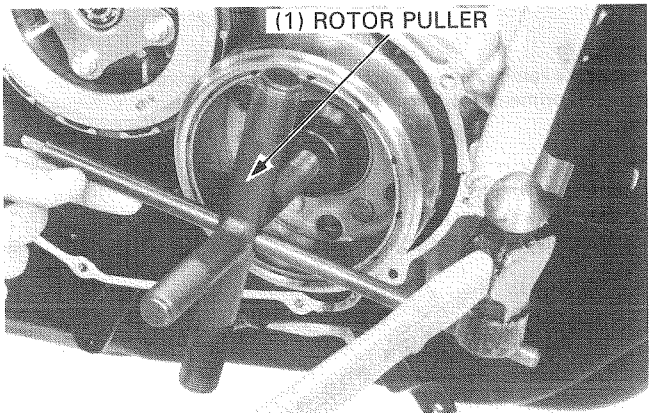

Remove the woodruff key from the crankshaft.

NOTE

- Clean the crankshaft of any oil.

FLYWHEEL INSTALLTION

Install the woodruff key onto the crankshaft.

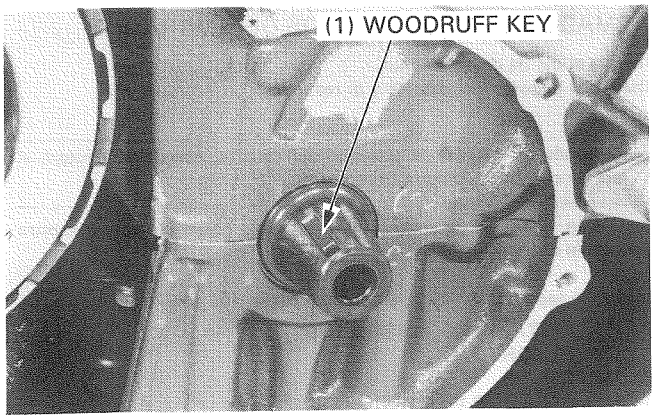

Install the flywheel by aligning the key way in the flywheel with the key on the crankshaft.
Install the washer and bolt.
Hold the flywheel with the flywheel holder and tighten the bolt.

TOOL:
Flywheel holder 07725–0040000

TORQUE: 85 N·m (8.5 kg-m, 61 ft-lb)

Install the right crankcase cover.

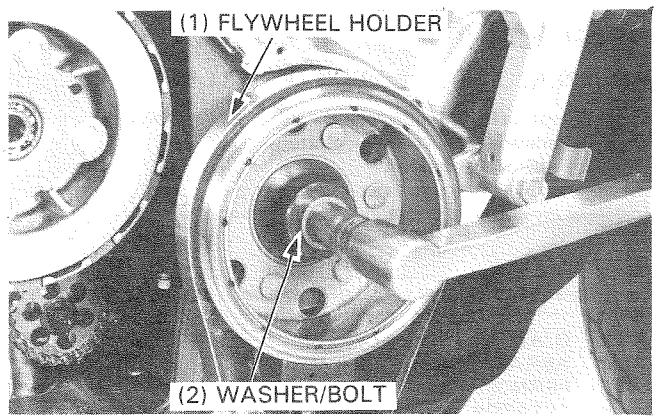

RIGHT CRANKCASE COVER INSTALLATION

Install the dowel pins and gasket.

NOTE

- Make sure that the gearshift spindle is installed to the drum shifter properly.

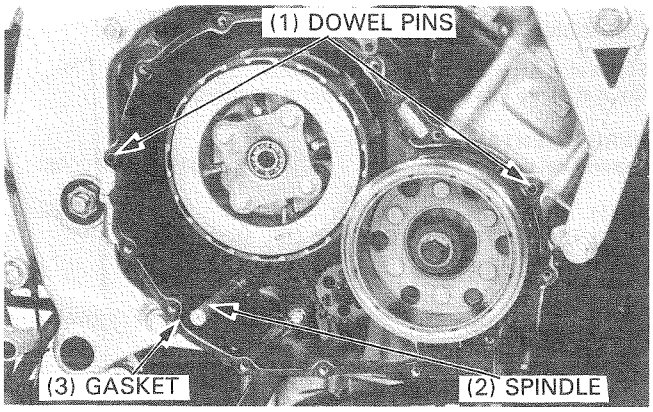

Install the right crankcase cover.
Connect the clutch cable to the lifter arm.

Tighten the cover bolts with the clutch cable holder securely.

NOTE

- Apply locking agent to the arrow (⇧) shown bolt.

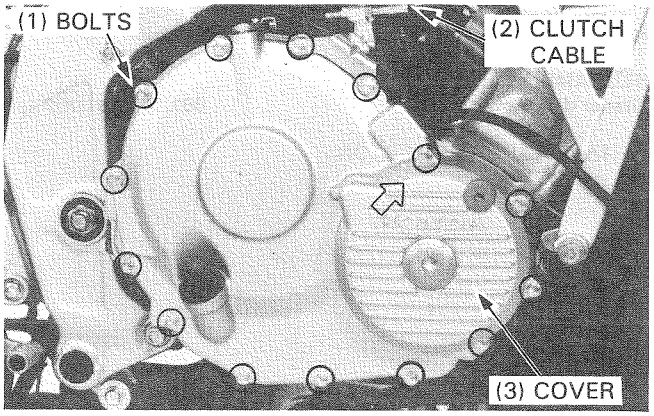

Connect the alternator 3P connector.
Install the lower fairing (right) (page 13-4).
Install the fuel tank(page 4-3).

Fill the crankcase with the proper amount and type of engine oil (page 2-4).

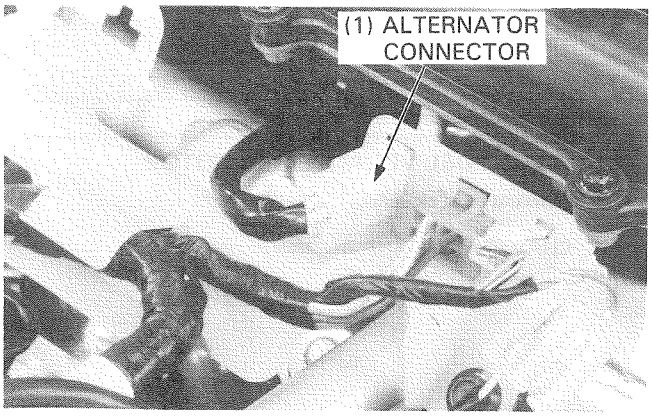

CYLINDER HEAD/VALVE

CULATA/VALVULAS

TESTA CILINDRI E VALVOLE

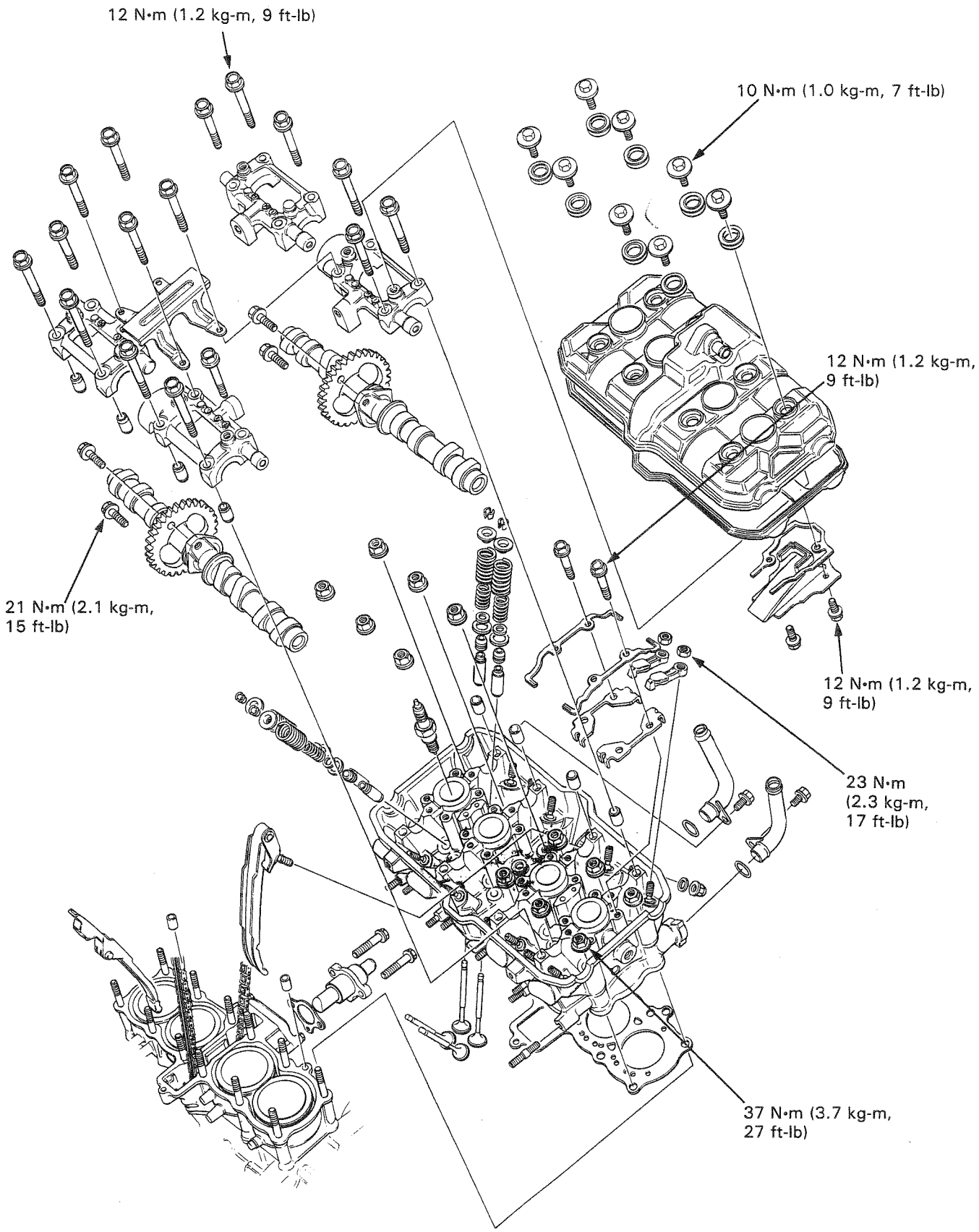
12 N•m (1.2 kg-m, 9 ft-lb)
10 N•m (1.0 kg-m, 7 ft-lb)
12 N•m (1.2 kg-m, 9 ft-lb)
21 N•m (2.1 kg-m, 15 ft-lb)
12 N•m (1.2 kg-m, 9 ft-lb)
23 N•m (2.3 kg-m, 17 ft-lb)
37 N•m (3.7 kg-m, 27 ft-lb)

SERVICE INFORMATION

GENERAL

- The cylinder head can be removed with the engine in the frame.
- During assembly, apply MoS_2 grease (page 2-13) to the lobes and journals of the camshaft to provide initial lubrication.

SPECIFICATIONS

Unit: mm (in)

ITEM			STANDARD	SERVICE LIMIT
Compression pressure			1176 ± 196 kPa (13.0 ± 2.0 kg/cm², 185 ± 28 psi)	——
Camshaft	Cam lobe height	IN	31.582–31.882 (1.2434–1.2552)	31.53 (1.241)
		EX	31.550–31.850 (1.2421–1.2539)	31.50 (1.240)
	Runout		——	0.05 (0.002)
	Journal O.D.		22.939–22.980 (0.9031–0.9047)	22.935 (0.9030)
	Journal oil clearance	1	0.020–0.062 (0.0008–0.0024)	0.10 (0.004)
		2	0.020–0.082 (0.0008–0.0032)	0.12 (0.005)
		3	0.020–0.082 (0.0008–0.0032)	0.12 (0.005)
		4	0.020–0.062 (0.0008–0.0024)	0.10 (0.004)
Valve	Valve stem O.D.	IN	4.975–4.990 (0.1959–0.1965)	4.97 (0.196)
		EX	4.955–4.970 (0.1951–0.1957)	4.94 (0.194)
	Valve guide I.D.		5.000–5.012 (0.1969–0.1973)	5.04 (0.198)
	Stem-to-guide clearance	IN	——	0.07 (0.003)
		EX	——	0.09 (0.004)
	Valve seat width		0.9–1.1 (0.035–0.043)	1.5 (0.06)
Valve spring	Free length	Inner	33.4 (1.31)	32.1 (1.26)
		Outer	34.2 (1.35)	32.7 (1.29)
	Preload/length	Inner	4.25/25.8 kg/mm (9.370/1.02 lb/in)	——
		Outer	9.98/28.3 kg/mm (22.002/1.11 lb/in)	——
Cylinder head warpage			——	0.10 (0.004)

TORQUE VALUES

Cylinder head nut	37 N•m (3.7 kg-m, 27 ft-lb)
Rocker arm holder bolt	12 N•m (1.2 kg-m, 9 ft-lb)
Camshaft holder bolt	12 N•m (1.2 kg-m, 9 ft-lb)
Cam sprocket bolt	21 N•m (2.1 kg-m, 15 ft-lb) Apply locking agent
Cylinder head cover breather plate bolt	12 N•m (1.2 kg-m, 9 ft-lb) Apply locking agent
Cylinder head cover bolt	10 N•m (1.0 kg-m, 7 ft-lb)
Engine mounting bolt	50 N•m (5.0 kg-m, 36 ft-lb)

TOOLS

Special

Valve spring compressor attachment	07959—KM30100	
Valve guide reamer, 5.010 mm	07984—MA60001	
Valve guide driver	07942—MA60000	

Common

Valve spring compressor	07757—0010000	
Valve guide driver	07743—0020000	
Valve seat cutter	Seat cutter, 24.5 mm	07780—0010100 45° IN
	Seat cutter, 22 mm	07780—0010701 45° EX
	Flat cutter, 25 mm	07780—0012000 32° IN
	Flat cutter, 22 mm	07780—0012601 32° EX
	Interior cutter, 22 mm	07780—0014202 60° EX
	Interior cutter, 26 mm	07780—0014500 60° IN
	Cutter holder, 5 mm	07780—0010400

TROUBLESHOOTING

Engine top-end problems usually affect engine performance. These can be diagnosed by a compression test, or by tracing noises with a sounding rod or stethoscope.

Low compression
- Valves
  - Incorrect valve adjustment
  - Burned or bent valves
  - Incorrect valve timing
  - Broken valve spring
- Cylinder head
  - Leaking of damaged head gasket
  - Warped or cracked cylinder head
- Cylinder and piston (Refer to Section 9)

Compression too high
- Excessive carbon build-up on piston or combustion chamber

Excessive noise
- Incorrect valve adjustment
- Sticking valve or broken valve spring
- Damaged or worn camshaft
- Faulty cam chain tensioner
- Worn rocker arm and/or shaft
- Loose or damaged cam chain

CYLINDER HEAD COVER REMOVAL

Remove the lower fairings (page13-4).
Loosen the radiator mounting bolt.
Remove the radiator grille.
Remove the radiator lower mounting bolts and swing the radiator away from the frame and secure it with a piece of wire.

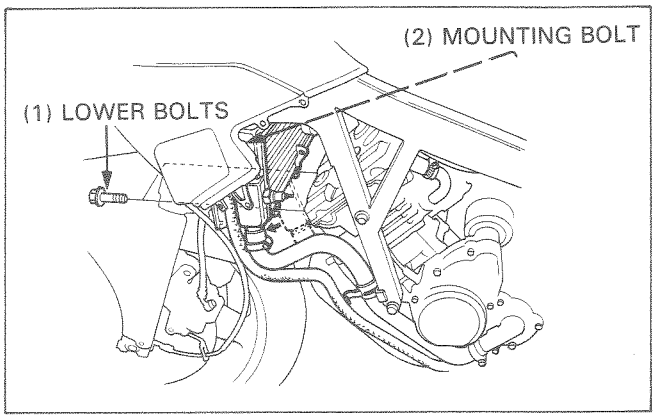

Disconnect the spark plug caps and breather tube.

Remove the cylinder head cover mounting bolts and cylinder head cover.

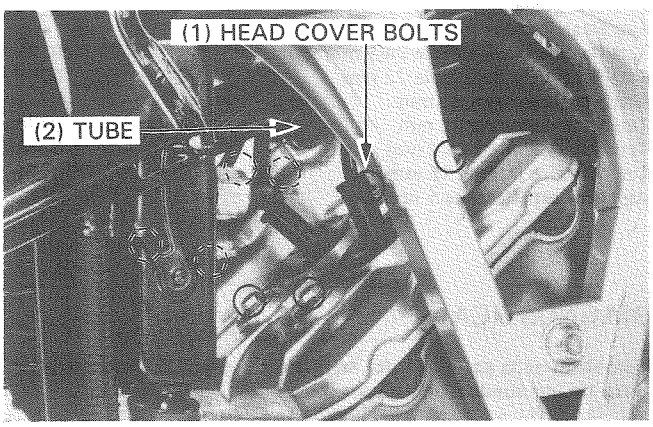

Check the head cover gasket for fatigue or damage.

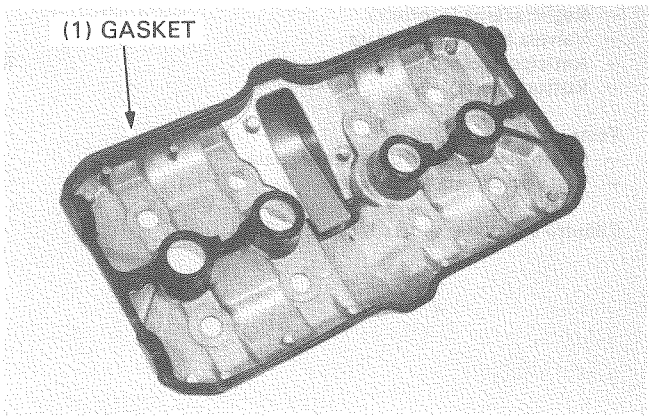

CAMSHAFT/ROCKER ARM REMOVAL

CAM CHAIN TENSIONER REMOVAL

Remove the cam chain tensioner by removing two bolts.

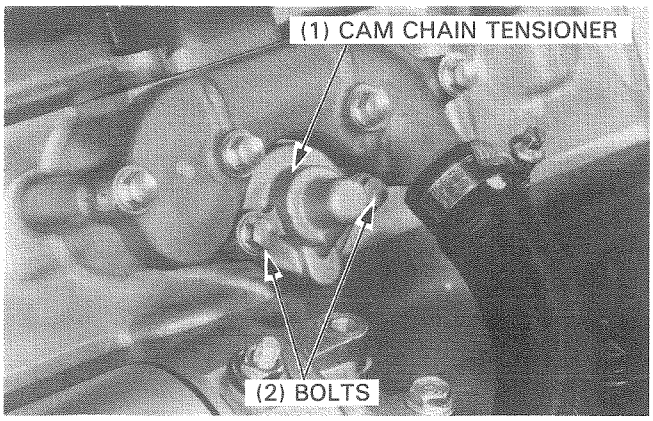

CAM CHAIN TENSIONER INSPECTION

Inspect the tensioner for damage and operation.
The tensioner shaft should move in and out smoothly.

NOTE

- Make sure the shaft gradually should start to move slow and heavy if you repeat to push the shaft into the oil.

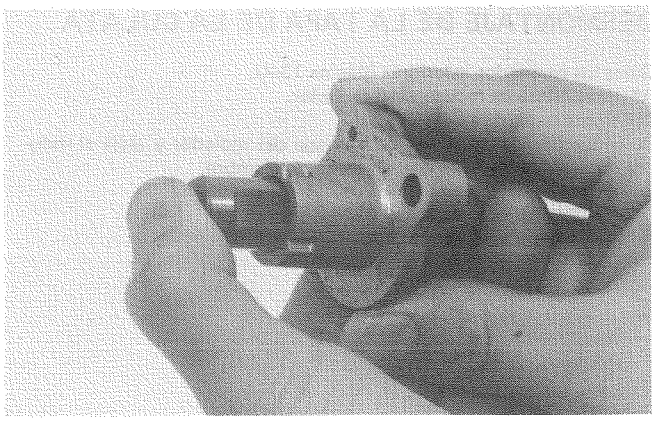

CAMSHAFT REMOVAL

NOTE

- The camshaft service can be performed with the engine in the frame.

Remove the cylinder head cover (page 8-3).

Remove the cam chain guide.

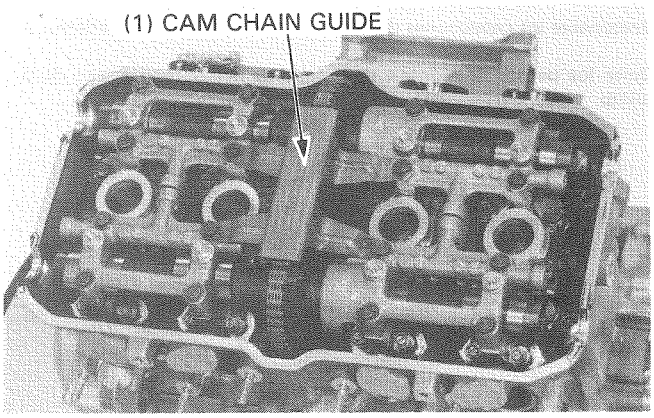

Remove the cam sprocket bolts (intake and exhaust).
Remove the cam sprockets from the shoulders of the camshafts.

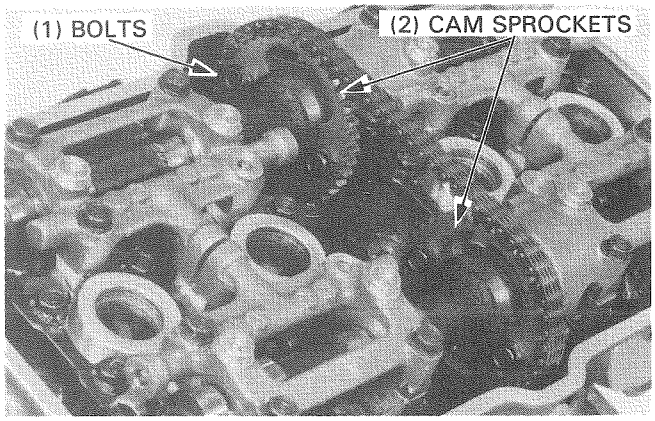

Remove the camshaft holder bolts and holders.

NOTE

- Loosen the holder bolts in 2—3 steps in a criss-cross pattern.
- No need to remove the dowel pins from the holders

Remove the camshafts and cam sprockets from the cam chain.

NOTE

- Suspend the cam chain with a piece of wire to keep it from falling into crankcase.

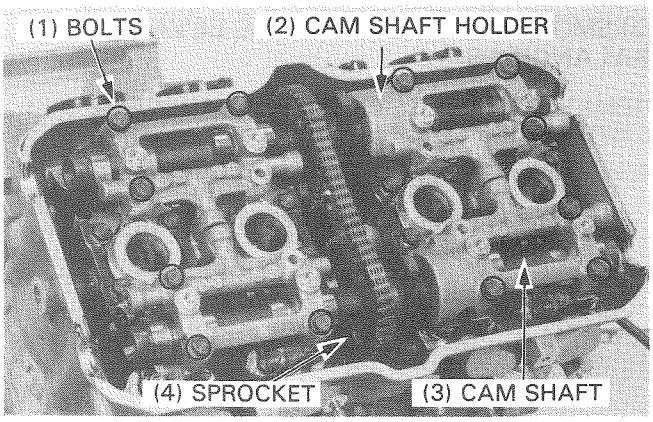

CAMSHAFT HOLDER INSPECTION

Inspect the bearing surfaces of the camshaft holders for scorings, scratches or evidence of insufficient lubrication. Inspect the oil orifices of the holders for clogging.

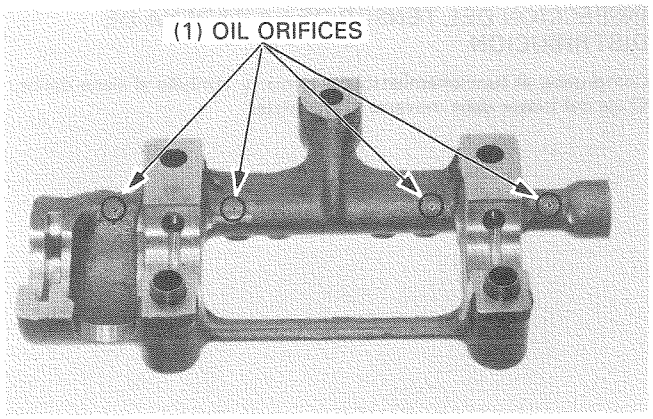

CAMSHAFT INSPECTION

Support both ends of the camshaft with V-blocks and check camshaft runout with dial indicator.

SERVICE LIMIT: 0.05 mm (0.002 in)

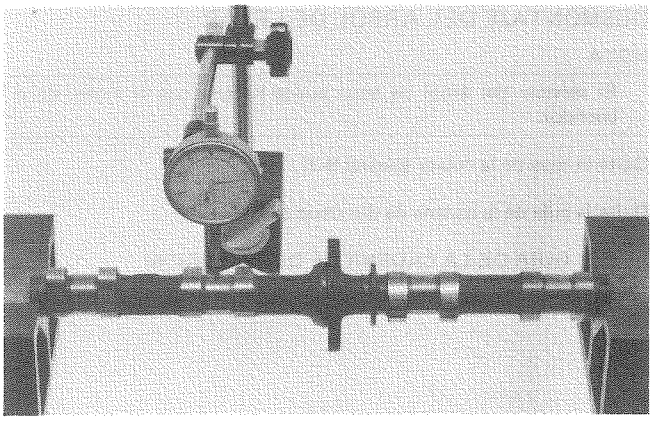

Using a micrometer, measure each cam lobe.

SERVICE LIMIT: IN : 31.53 mm (1.241 in)
EX : 31.50 mm (1.240 in)

Check the cam lobes for wear or damage.

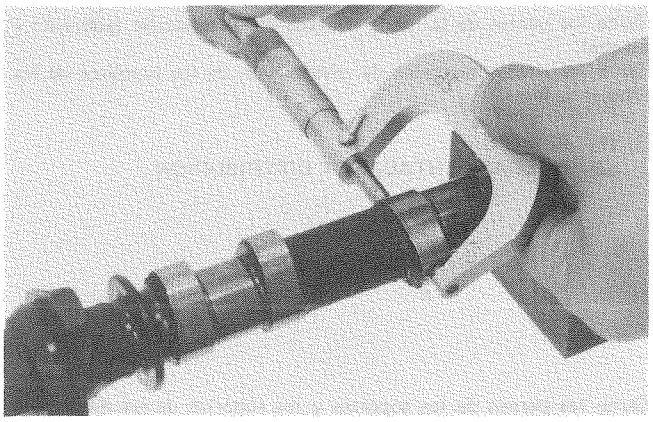

Measure each camshaft journal O.D.

SERVICE LIMIT: 22.935 mm (0.9030 in)

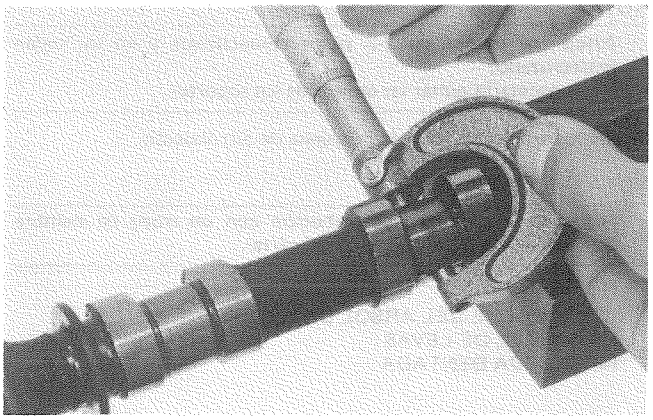

CAMSHAFT OIL CLEARANCE INSPECTION

Wipe any oil from the journals of the camshaft, cylinder head and cam shaft holders.

Lay a strip of plastigauge lengthwise on top of each camshaft journal.

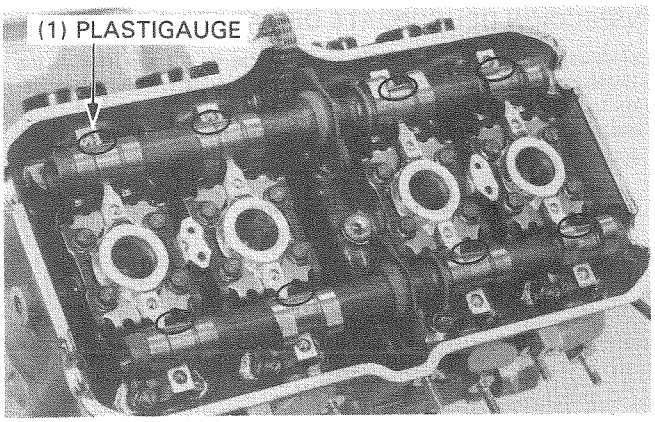

Install the camshaft holders and tighten the bolts in 2—3 steps in a criss-cross pattern.

NOTE

- Do not rotate the camshaft when using plastigauge.

TORQUE: 12 N•m (1.2 kg-m, 9 ft-lb)

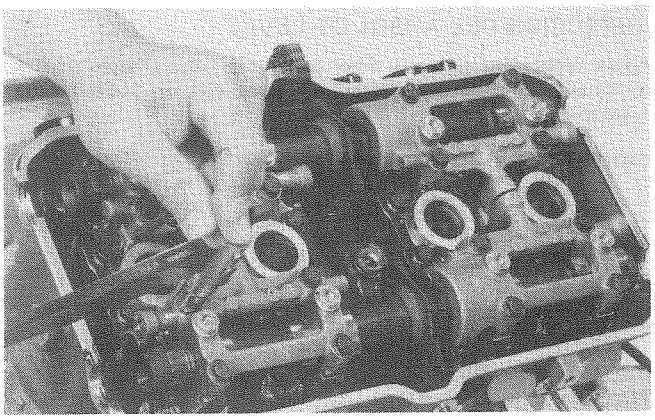

Remove the camshaft holders and measure the width of each plastigauge. The widest thickness determines the oil clearance.

SERVICE LIMIT:
No. 1, No. 4: 0.10 mm (0.004 in)
No. 2, No. 3: 0.12 mm (0.005 in)

When the service limits are exceeded, replace the camshaft and recheck the oil clearance. Replace the cylinder head and camshaft holders if the clearance still exceeds service limits.

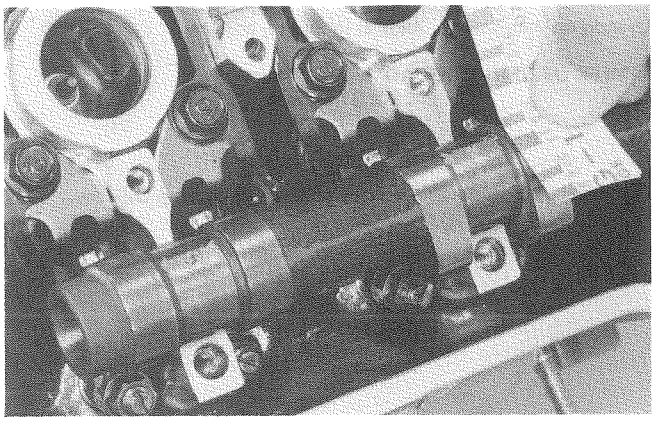

ROCKER ARM REMOVAL

Remove the rocker arm holder bolts.
Remove the springs and rocker arm holders.
Remove the rocker arms by removing the lock nuts if necessary.

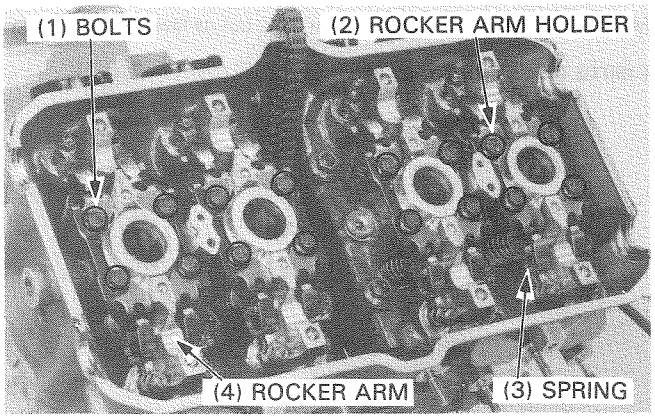

ROCKER ARM INSPECTION

Inspect the rocker arms for wear or damage to the camshaft slipper surface.

Inspect the springs and holders for wear, damage or fatigue. If you must replace the adjusting screw, see below.

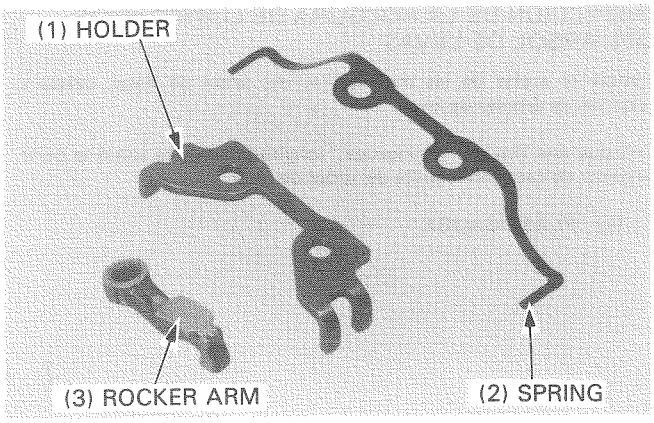

PIVOT BOLT (ADJUSTING SCREW) REPLACEMENT

Remove the lock nut and rocker arm from the pivot bolt. Install the 8 x 16 mm dowel pin and lock nut to the pivot bolt. Pull the pivot bolt out of the cylinder head gradually and carefully so as not to damage the pivot seat, tightening the lock nut while holding the bolt with a screwdriver.

If the screw threads are damaged, place a small piece of wood between the rocker arm and the cylinder head and remove the bolt by tapping the edge of the rocker arm with a soft hammer.

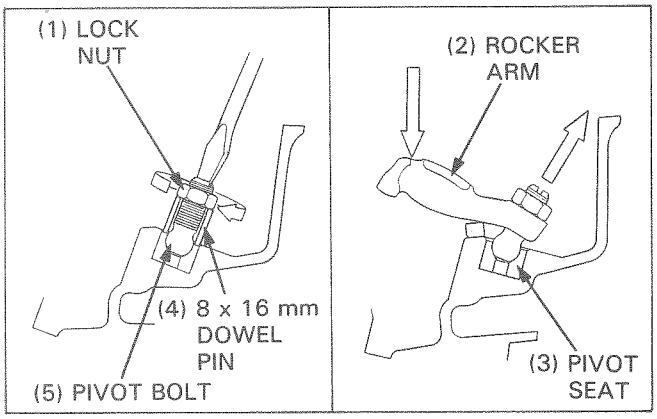

NOTE

- Make sure the pivot seat is firmly seated to the cylinder head after removing the bolt.

Install the rocker arm and lock nut to a new pivot bolt as shown position.

Install the socket attachment to the lock nut and install the pivot bolt to the pivot seat, tapping the attachment gently with a soft hammer and keeping vertical against the pivot seat.

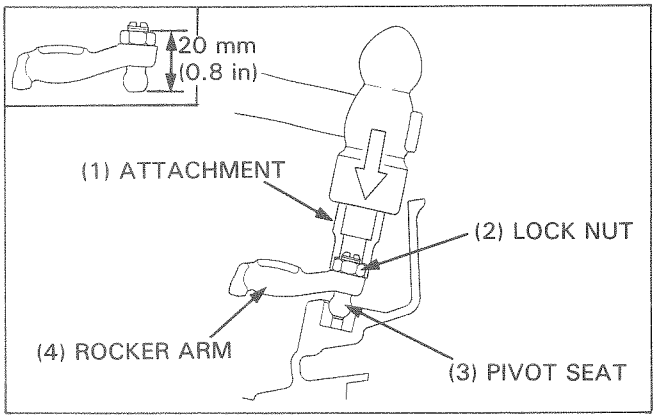

CAM CHAIN GUIDE (REAR) REMOVAL

Remove the cam chain guide (rear) mounting nut and washer. Remove the guide from the cylinder head.

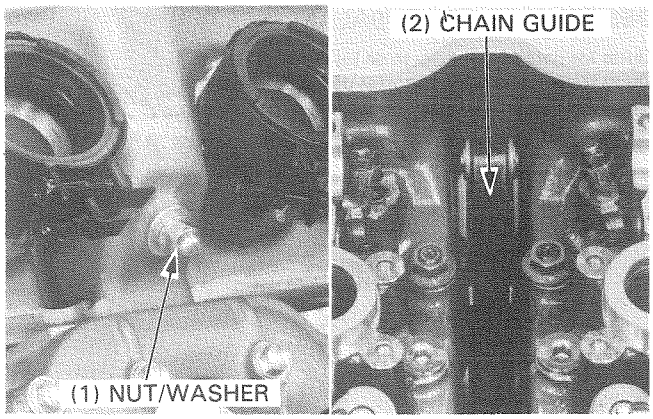

CAM CHAIN GUIDE (REAR) INSPECTION

Check the cam chain guide (rear) for wear or damage.
Inspect the pivot for hard movement.
If excessive wear or hard movement, replace it.

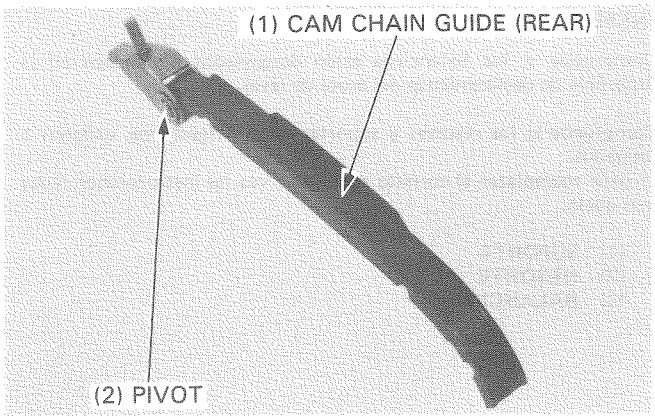

CYLINDER HEAD REMOVAL

NOTE

- The cylinder head removal can be performed with the engine in the frame.

Remove the fuel tank (page 4-3).
Remove the carburetors (page 4-5).
Remove the exhaust pipe (page 13-7).
Remove the cylinder head cover (page 8-3).
Remove the camshafts (page 8-3).

Remove the engine mounting bolt (front/upper-each side).

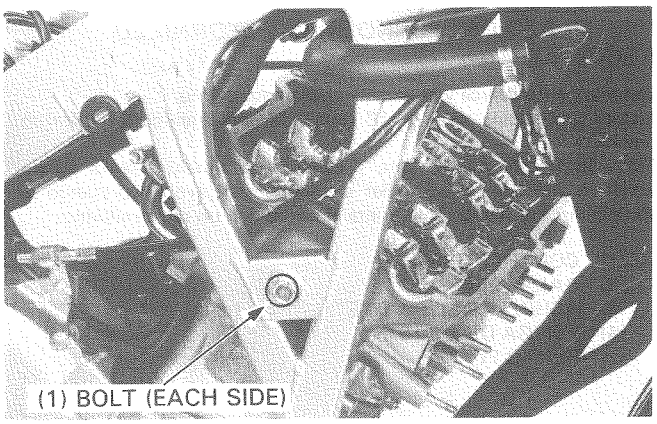

Disconnect the water pipe from the cylinder head (each side).

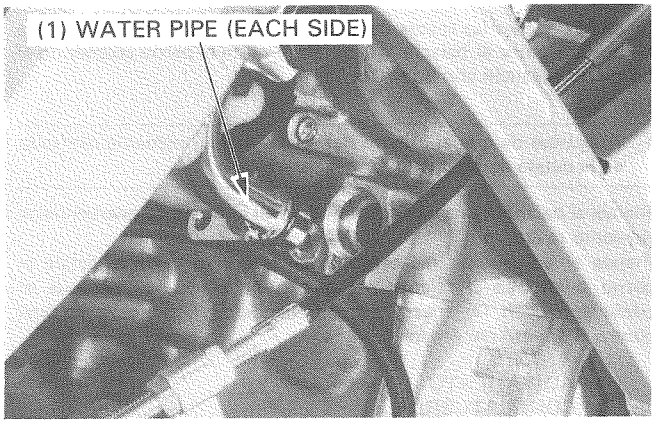

Remove the nuts and cylinder head.

NOTE

- Loosen the cylinder head nuts in 2—3 steps in a criss-cross pattern.
- Protect the frame with tapes or shop towels so as not to damage the cylinder head and frame, when removing the head.

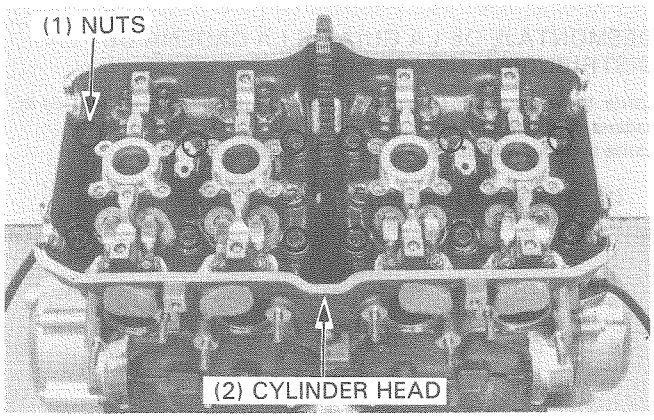

Remove the cylinder head gasket and dowel pins.

NOTE

- Do not let the dowel pins fall into the crankcase.

Remove the cam chain guide (front) from the cylinder.

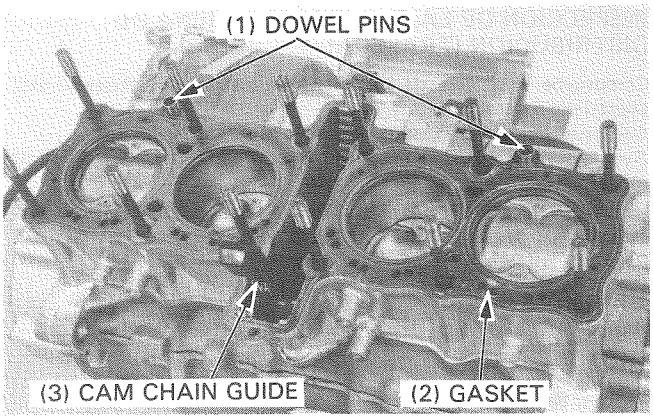

Check the cam chain guide (front) for wear or damage; if excessive wear, replace it.

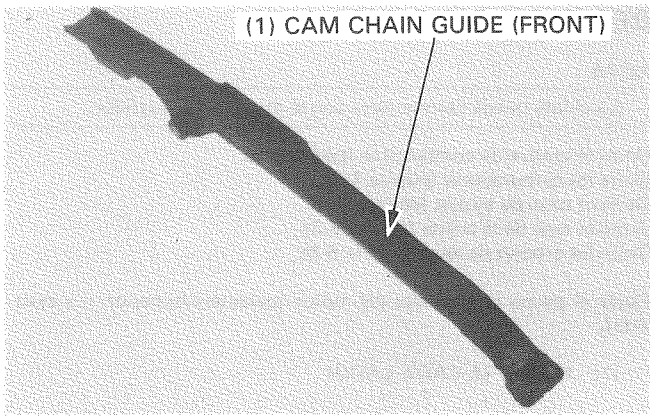

CYLINDER HEAD DISASSEMBLY

Remove the insulators from the cylinder head.
Remove the valve spring cotters, retainers, springs, stem seals and spring seats with the compressor.

TOOL:

Valve spring compressor	**07757–0010000**
–Attachment	**07959–KM30100**

CAUTION

- *To prevent a loss of tension, do not compress the valve springs more than necessary to remove the cotters.*

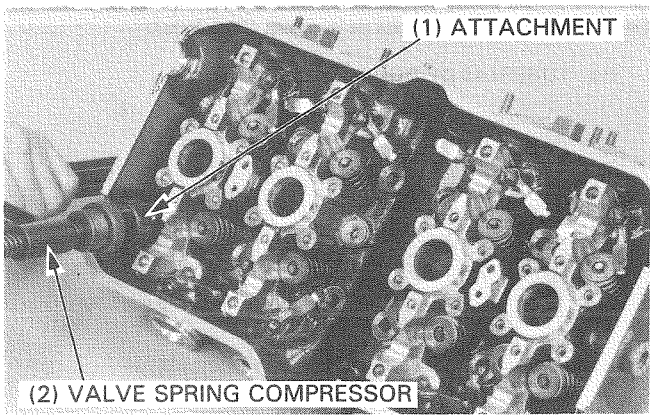

NOTE

- Make all disassembled parts to ensure correct reassembly.

CYLINDER HEAD INSPECTION

Check the spark plug hole and valve areas for cracks.
Check the cylinder head for warpage with a straight edge and feeler gauge.

SERVICE LIMIT: 0.10 mm (0.004 in)

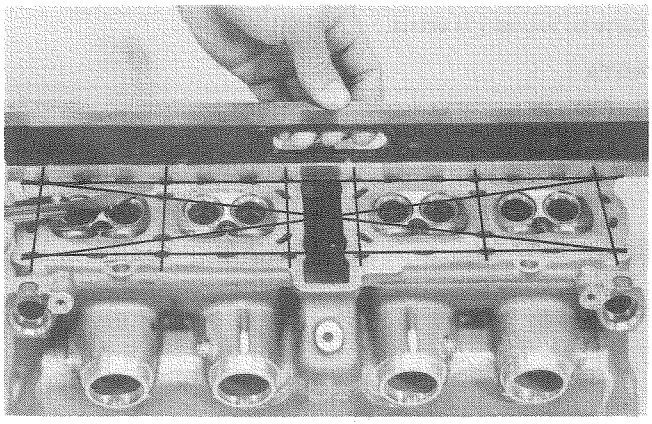

VALVE SPRING INSPECTION

Measure the free length of the inner and outer valve springs.

SERVICE LIMIT: Inner: 32.1 mm (1.26 in)
Outer: 32.7 mm (1.29 in)

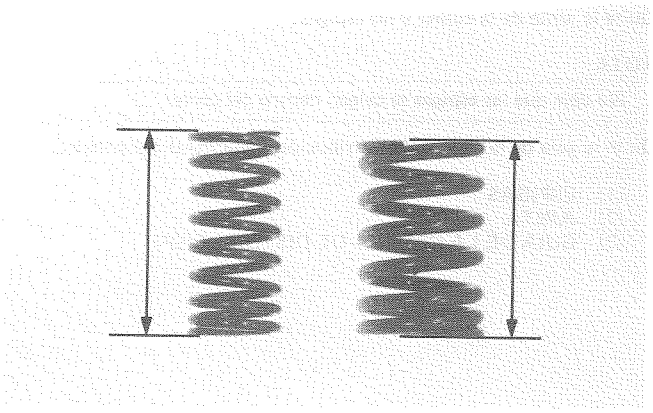

VALVE, VALVE GUIDE INSPECTION

Clean all intake and exhaust valves thoroughly to remove carbon deposits.

Inspect each valve for bending, or abnormal stem wear.

Measure and record the O.D.of each valve stem.

SERVICE LIMIT: IN: 4.97 mm (0.196 in)
EX: 4.94 mm (0.194 in)

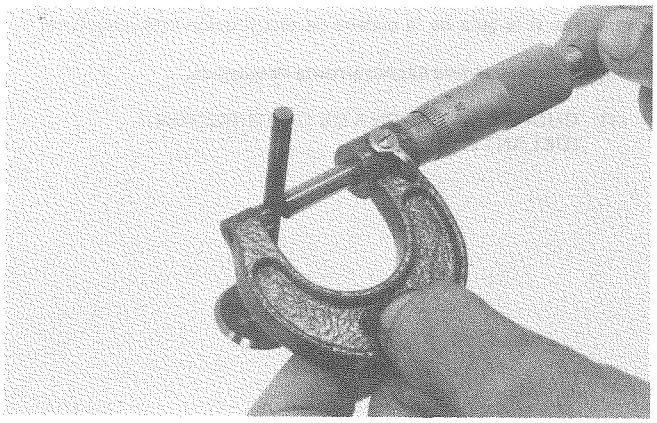

Run the proper reamer through the guides to remove carbon deposits.

NOTE

- Always rotate the reamer clockwise, never counter-clockwise.

TOOL:
Valve guide reamer, 5.010 mm 07984—MA60001

Measure and record the I.D. of each valve guide.

SERVICE LIMIT: 5.04 mm (0.198 in)

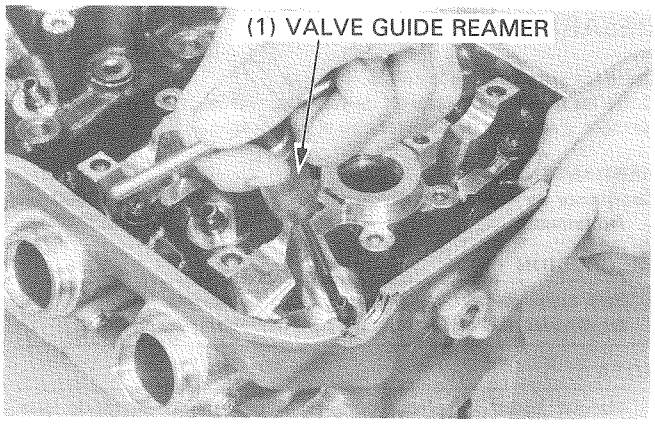

Calculate the valve stem-to-guide clearance.

SERVICE LIMIT: IN: 0.07 mm (0.003 in)
EX: 0.09 mm (0.004 in)

If the stem-to-guide clearance exceeds the service limits determine if a new guide would bring the clearance within tolerance. If so, replace any guides as necessary and ream to fit.

If clearance is still over the service limit, replace the valves.

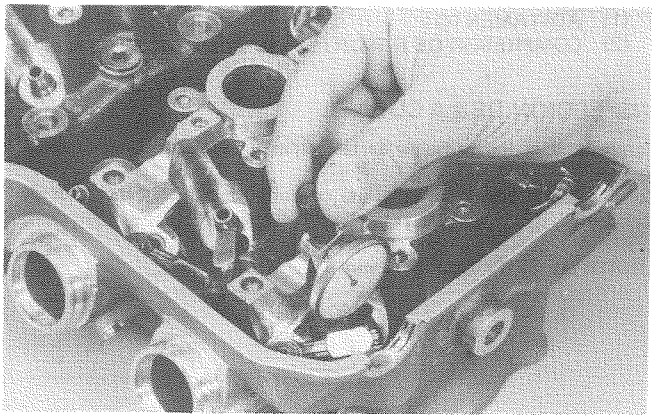

VALVE GUIDE REPLACEMENT

Measure the valve guide height from the cylinder head as shown.

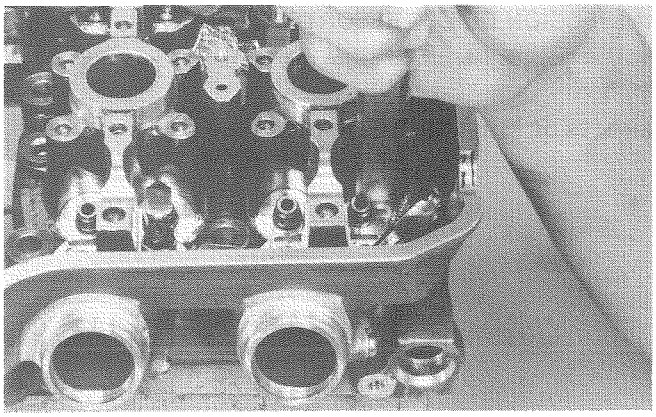

Adjust the valve guide driver to the valve guide height (see above).

TOOL:
Valve guide driver **07743–0020000**

NOTE

- Reface is the valve seat whenever the valve guide is replaced (page 8-12).

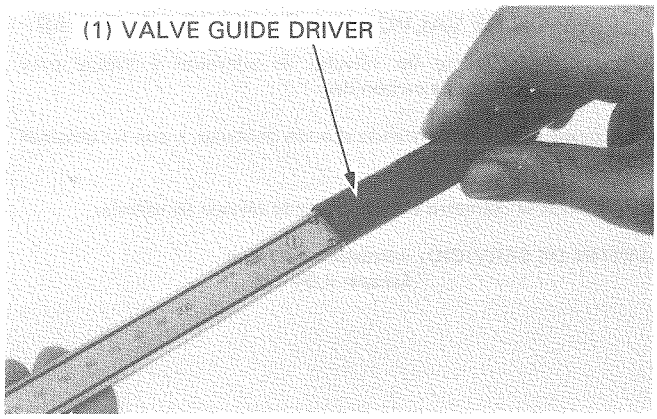

Heat the cylinder head to 100°–150°C (212°–300°F) with a hot plate or oven.

WARNING

- *To avoid burns, wear heavy gloves when handling the heated cylinder head.*

CAUTION

- *Do not use a torch to heat the cylinder, it may cause warping.*

Support the cylinder head and drive out the old guide from the combustion chamber side of the cylinder head.

TOOL:
Valve guide driver **07942–MA60000**

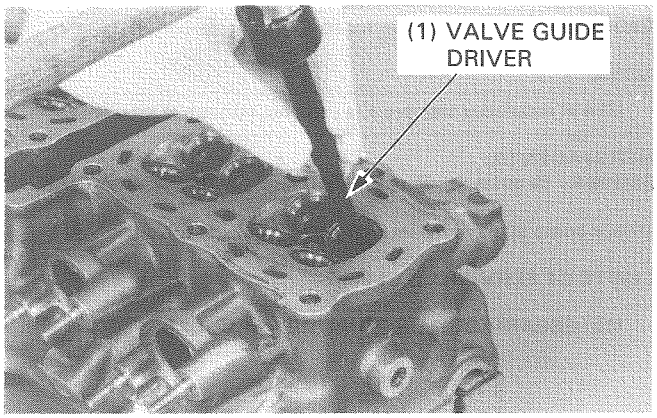

Drive in the new guide about 5 mm (0.2 in) from the rocker arm side with the valve guide driver (07942–MA60000) temporarily.

Securely drive in the new guide with the adjusted valve guide driver (07743–0020000).

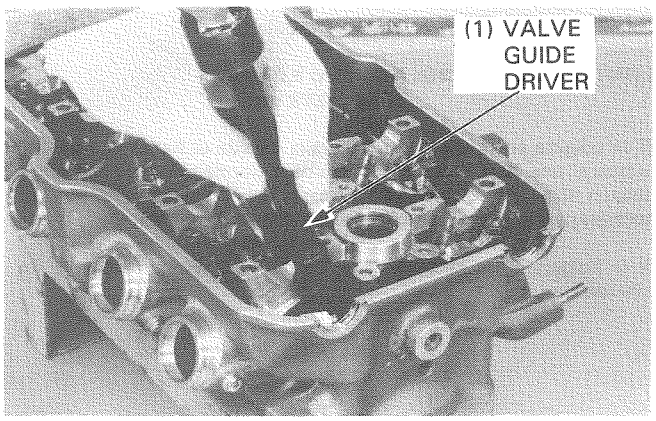

Let the cylinder head cool to room temperature and ream the new valve guide.

TOOL:
Valve guide reamer, 5.010 mm 07984–MA60001

NOTE

- Use cutting oil on the reamer during this operation.
- Always rotate the reamer clockwise, never counter-clockwise.

Reface the valve seat and clean the cylinder head thoroughly to remove any metal particles.

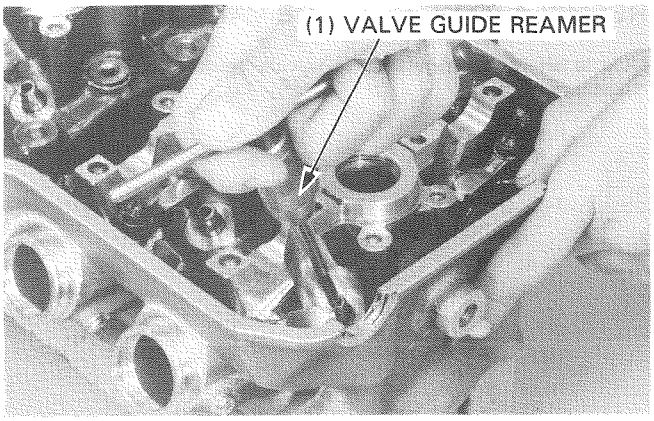

VALVE SEAT INSPECTION/REFACING

Clean all intake and exhaust valves thoroughly to remove carbon deposits.
Apply a thin coating of Prussian blue to each valve face.
Lap each valve and seat lightly using a rubber hose or other handlapping tool.

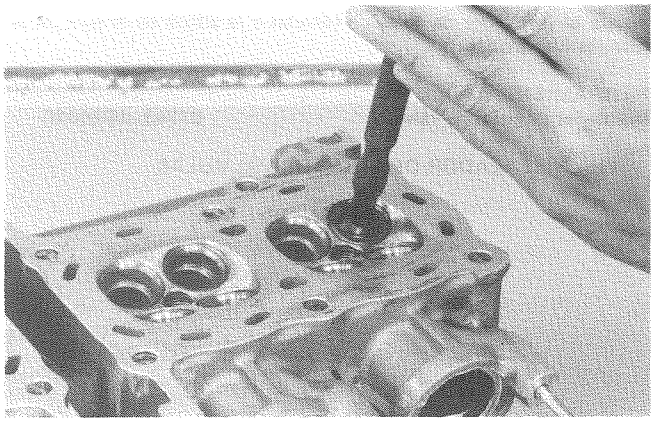

Remove the valve and inspect the face.

CAUTION

- *The valves cannot be ground. If the valve face is rough, worn unevenly, or contacts the seat improperly, the valve must be replaced.*

Inspect the valve seat width.

STANDARD: 0.9–1.1 mm (0.035–0.043 in)
SERVICE LIMIT: 1.5 mm (0.06 in)

If the seat is too wide, too narrow, or has low sports, the seat must be ground.

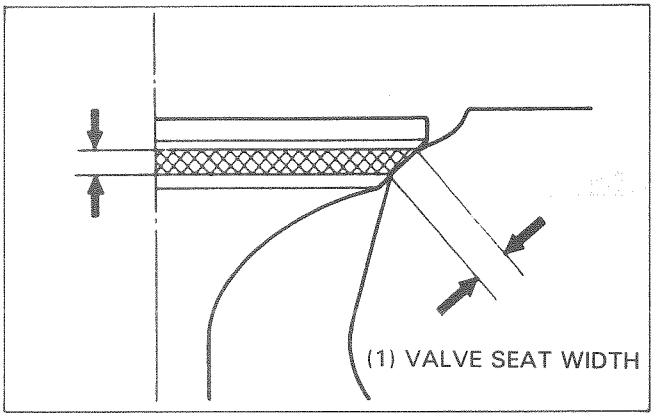

Honda Valve Seat Cutters, grinder or equivalent valve seat refacing equipment is recommended to correct a worn valve seat.

NOTE

- Follow the refacer manufacturer's operating instructions.

Seat cutter, 24.5 mm	**07780–0010100 45° IN**
Seat cutter, 22 mm	**07780–0010701 45° EX**
Flat cutter, 25 mm	**07780–0012000 32° IN**
Flat cutter, 22 mm	**07780–0012601 32° EX**
Interior cutter, 22 mm	**07780–0014202 60° EX**
Interior cutter, 26 mm	**07780–0014500 60° IN**
Cutter holder, 5 mm	**07780–0010400**

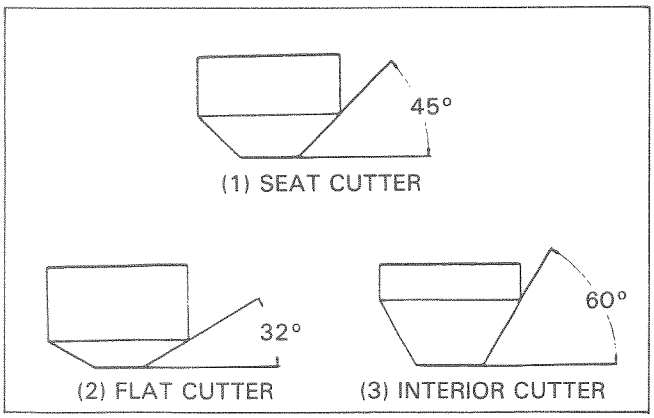

Use a 45 degree cutter to remove any roughness or irregularities from the seat.

NOTE

- Reface the seat with a 45 degree cutter when the valve guide is replaced.

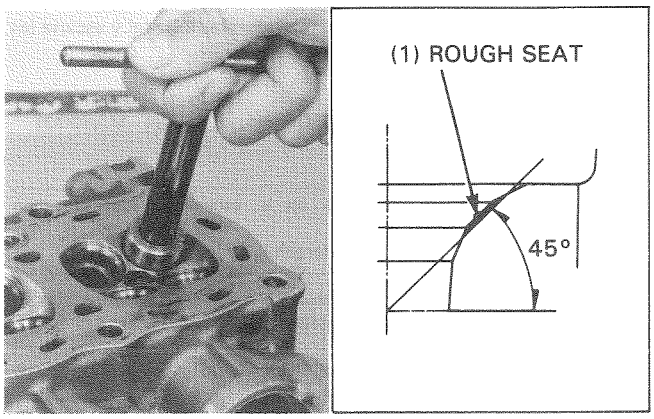

Using a 32 degree flat cutter remove 1/4 of the existing valve seat material.

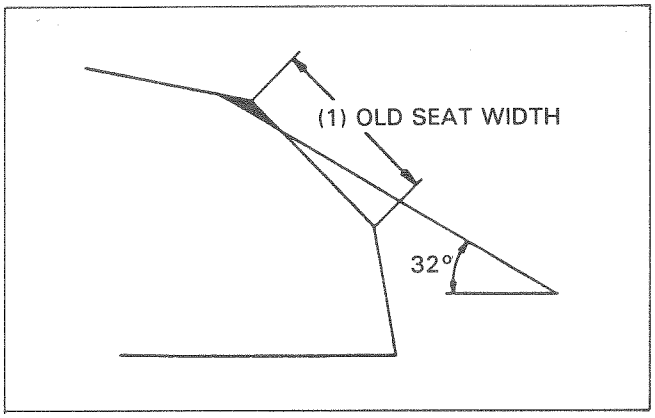

Use a 60 degree interior cutter to remove the bottom 1/4 of the old seat. Remove the cutter and inspect the area.

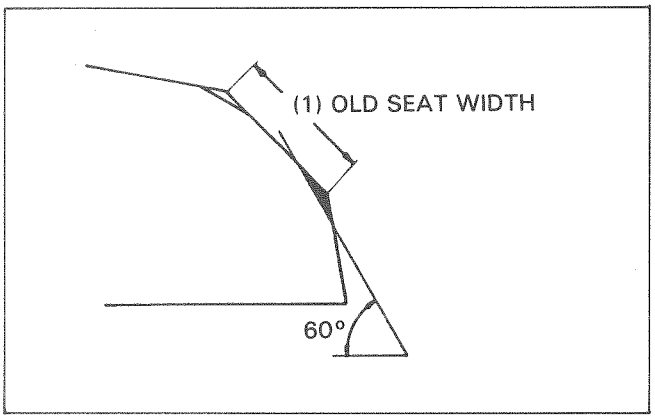

Install a 45 degree seat cutter and cut the seat to the proper width.

STANDARD: 0.9–1.1 mm (0.035–0.043 in)

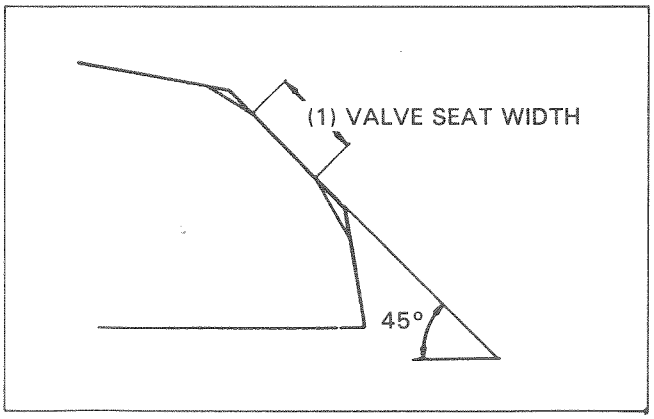

Apply a thin coating of Prussian Blue to the valve seat.

Press the valve lightly through the valve guide and onto the seat to make a clear pattern.

NOTE

- The location of the valve seat in relation to the valve face is very important for good sealing.

If the contact area is too high on the valve, the seat must be lowered using the 32 degree flat cutter.

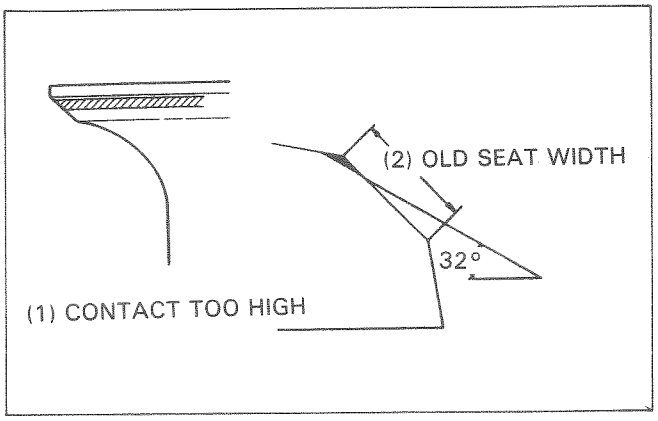

If the contact area is too low on the valve, the seat must be raised using a 60 degree interior cutter.

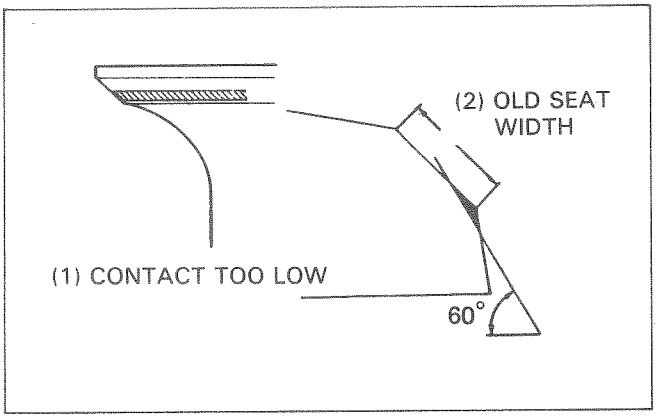

Refinish the seat to specifications, using a 45 degree seat cutter.

After cutting the seat, apply lapping compound to the valve face, and lap the valve using light pressure.

After lapping, wash all residual compound off the cylinder head and valve.

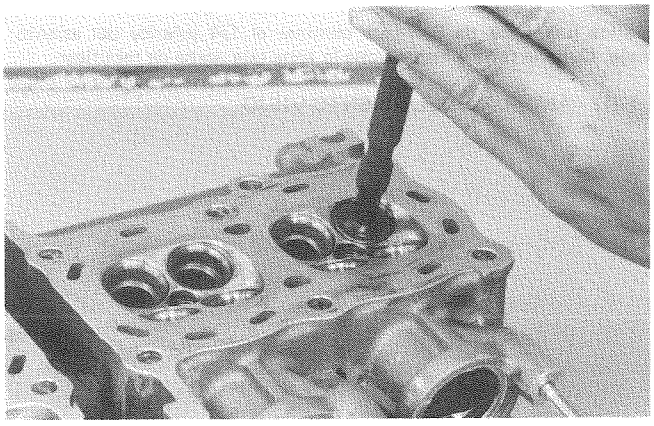

CYLINDER HEAD ASSEMBLY

Apply sealant to the threads and tighten the special bolts securely, if removed.

Clean the cylinder head assembly with solvent and blow through all oil passages with compressed air.

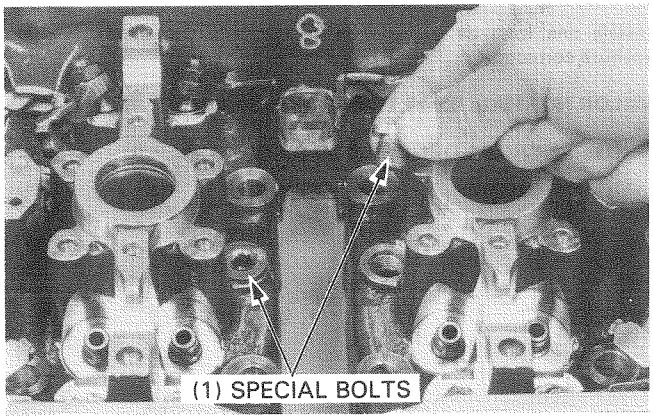

Install the inner spring seats, outer spring seats and new stem seals onto the valve guides.

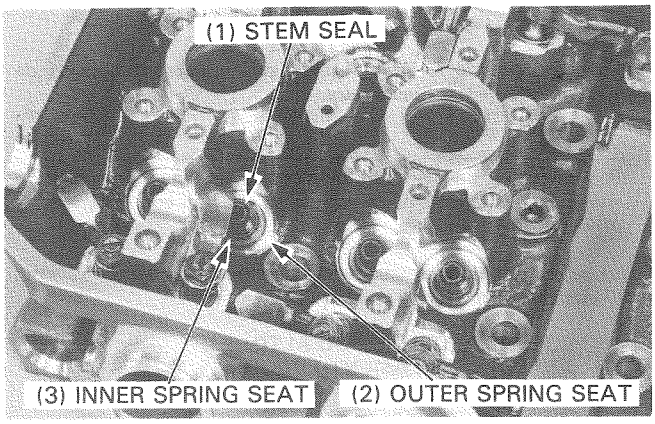

Install the outer and inner springs with the tightly wound coils facing toward the cylinder head.

Lubricate each valve stem with MoS_2 grease (page 2-13) and insert the valve into the valve guide.

NOTE

- To avoid damage to the stem seal, turn the valve slowly when inserting.

Install the retainers and valve cotters.

TOOL:

Valve spring compressor	**07757–0010000**
– Attachment	**07959–KM30100**

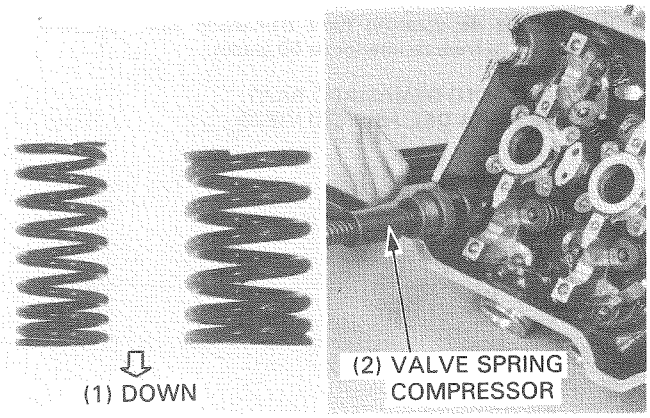

CAUTION

- *To prevent loss of tension, do not compress the valve spring more than necessary to install the valve cotters.*

Tap the valve stems gently with a soft hammers to firmly seat the cotters.

NOTE

- Support the cylinder head above the work bench surface to prevent the valves from damage.

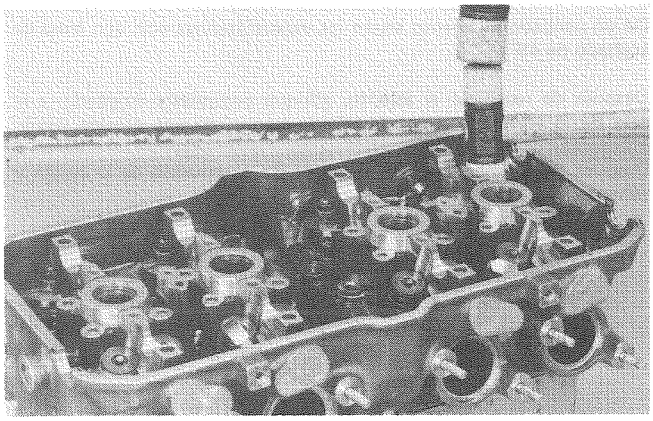

Install the insulators with the "CARB" mark facing to the carburetor and with the "UP" mark facing up.

Install the clamps.

NOTE

- Note the directions the screw heads should face for proper access, as indicated in photograph.

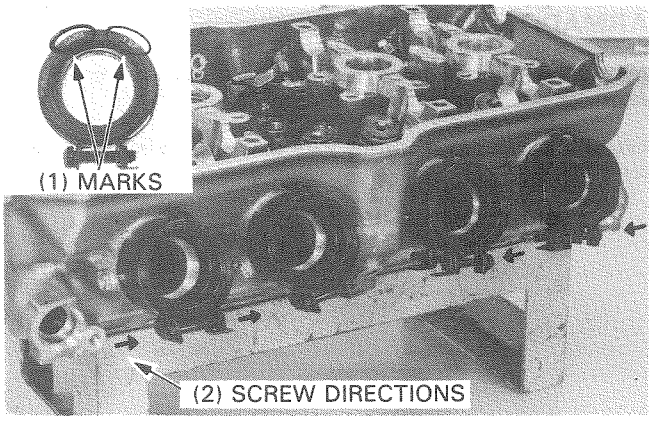

CYLINDER HEAD INSTALLATION

Clean the cylinder head surfaces of any gasket material.

Install the dowel pins and a new gasket.

Install the cam chain guide (front), aligning the guide boss with the cylinder groove.

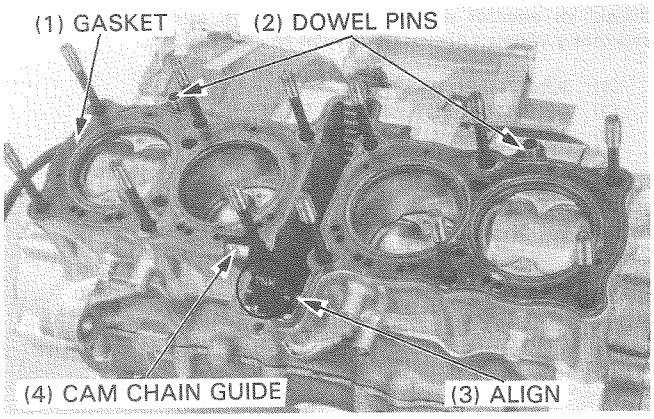

Install the cylinder head.

Tighten the 12 cylinder head nuts in 2-3 steps in the sequence shown.

TORQUE: 37 N·m (3.7 kg-m, 27 ft-lb)

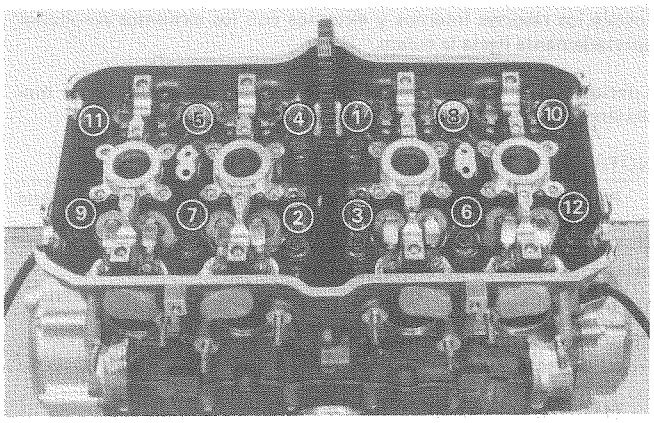

Install the engine mounting bolt (front/upper-each side).

TORQUE: 50 N·m (5.0 kg-m, 36 ft-lb)

NOTE

- Install the collar to the right side bolt.

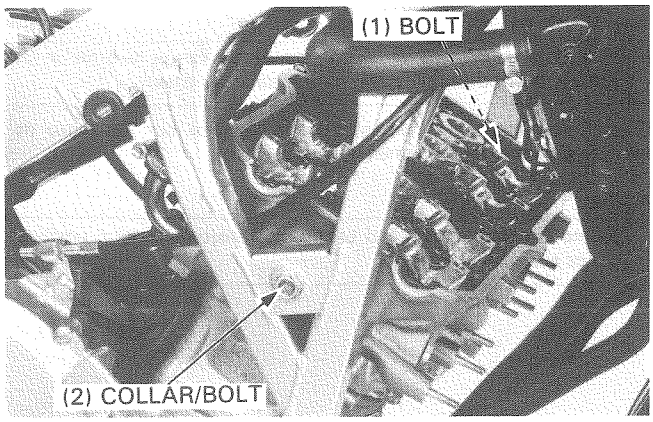

Install a new O-ring to the water pipe and connect the pipe to the cylinder head (each side).

Install the following components:
— rocker arms/camshaft (page 8-17).
— cylinder head cover (page 8-20).
— exhaust pipe (page 13-7).
— carburetors (page 4-15).
— air cleaner case (page 4-4).
— fuel tank (page 4-3).

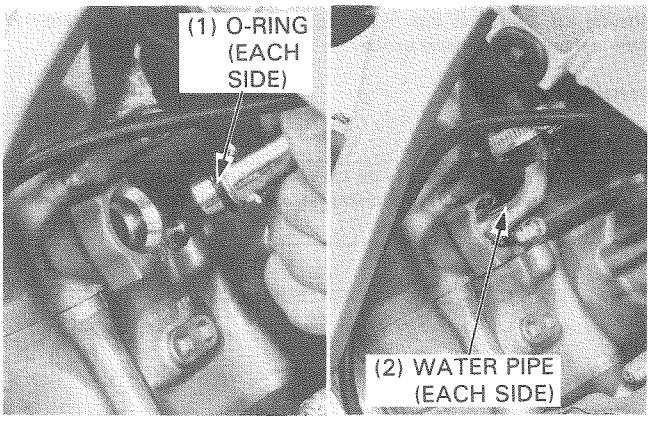

ROCKER ARM/CAMSHAFT INSTALLATION

CAM CHAIN GUIDE (REAR) INSTALLATION

Install the cam chain guide (rear) to the cylinder head properly.

Install a new sealing washer and cap nut.
Tighten the cap nut securely.

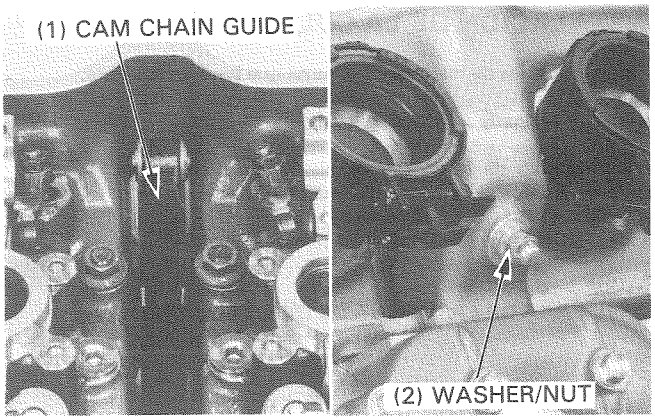

ROCKER ARM INSTALLATION

NOTE

- Before installation, apply oil to the adjusting screw threads, lock nut threads and flanges, rocker arm slipper surface and rocker arm contact surface of the holder.

Install the adjusting screw and lock nut if removed.
Install the rocker arm holders and springs.
Install and tighten the rocker arm holder bolts.

TORQUE: 12 N•m (1.2 kg-m, 9 ft-lb)

Make sure the springs hold the rocker arms firmly.

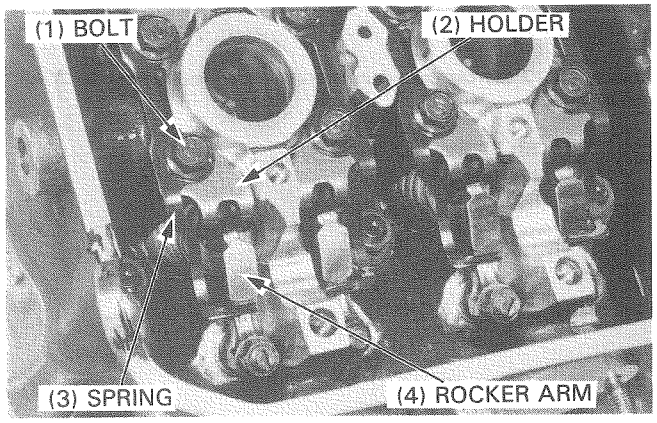

CAMSHAFT INSTALLATION

Remove the timing hole cap and crankshaft hole cap.
Rotate the crankshaft clockwise and align the T mark on the flywheel with the index mark on the right crankcase cover.

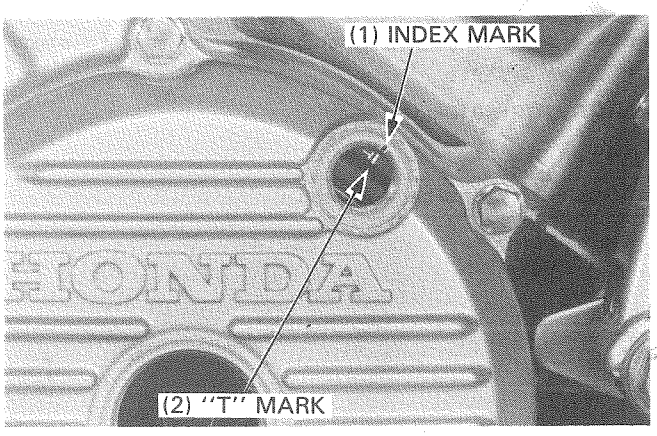

Apply MoS_2 grease (page 2-13) to the camshaft journals of the cylinder head.

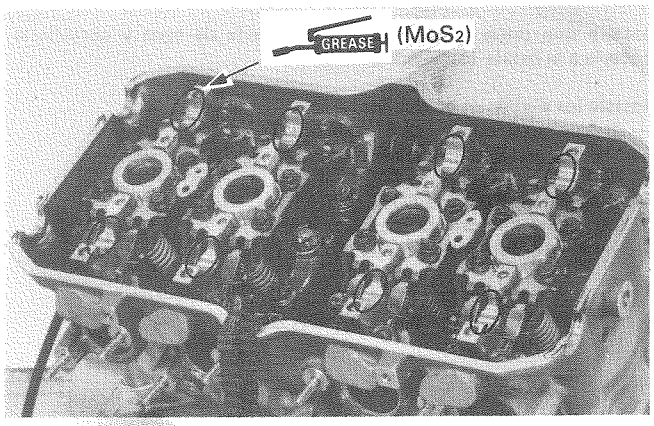

Apply MoS_2 grease (page 2-13) to the camshaft journals and cam lobes.

NOTE

- The "EX" mark ("IN" mark) camshaft is the exhaust side (intake side) camshaft.

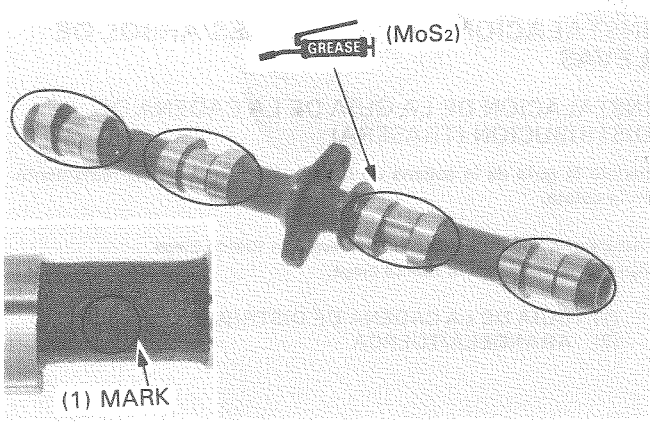

Install the cam sprockets with the timing marks facing to the right side and install the camshafts through the sprockets, taking care of "IN" or "EX" marks.

NOTE

- Place the camshafts onto the cylinder head so that No. 4 cam lobes can be faced out each other as shown to make the No. 4 cylinder TDC.

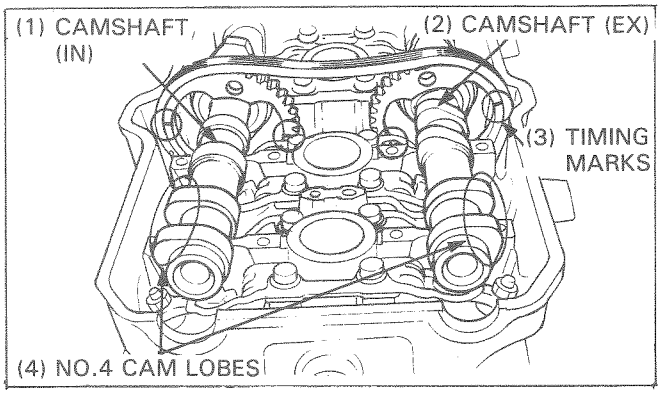

Install the dowel pins to the camshaft holders.

Install each camshaft holder on its original position.

NOTE

- The camshaft holders have their location marks.
  "INR" mark: Intake right
  "INL" mark: Intake left
  "EXR" mark: Exhaust right
  "EXL" mark: Exhaust left

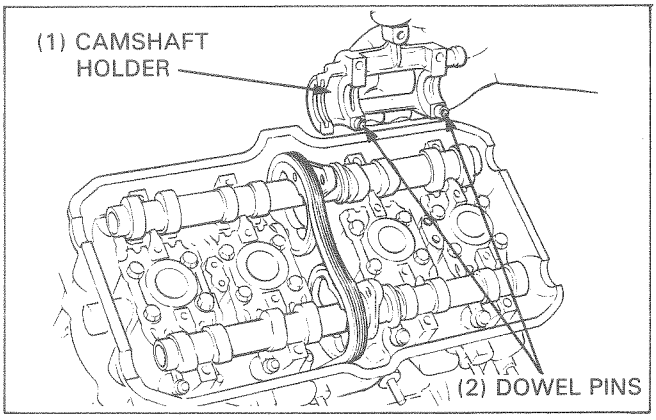

Tighten the camshaft holder bolts in a criss-cross pattern in 2-3 steps.

TORQUE: 12 N·m (1.2 kg-m, 9 ft-lb)

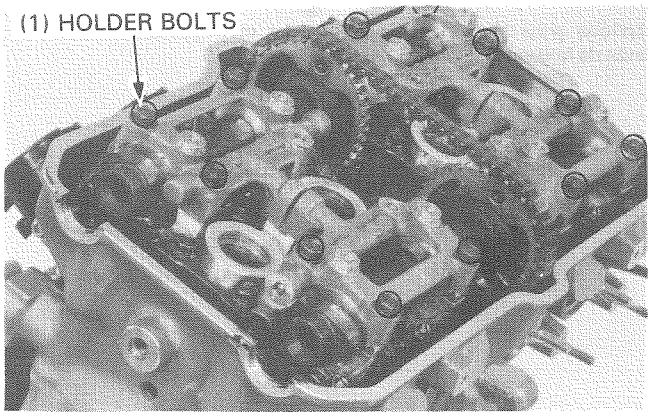

Place the cam chain over the cam sprockets.
Apply locking agent to the cam sprocket bolts.
Install the cam sprockets onto the camshaft flange shoulders.

Loosely tighten the cam sprocket bolt (each shaft).
Make sure each timing mark is aligned with the cylinder head upper surface.

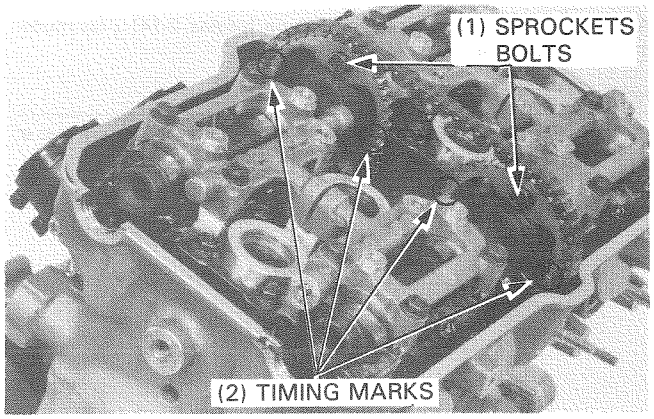

Turn the crankshaft 360° clockwise and install another cam sprocket bolt (each shaft).

Tighten the cam sprocket bolts in 2-3 steps to the specified torque.

TORQUE: 21 N·m (2.1 kg-m, 15 ft-lb)

Align the T mark with the index mark and make sure each timing mark is aligned with the cylinder head upper surface once more.

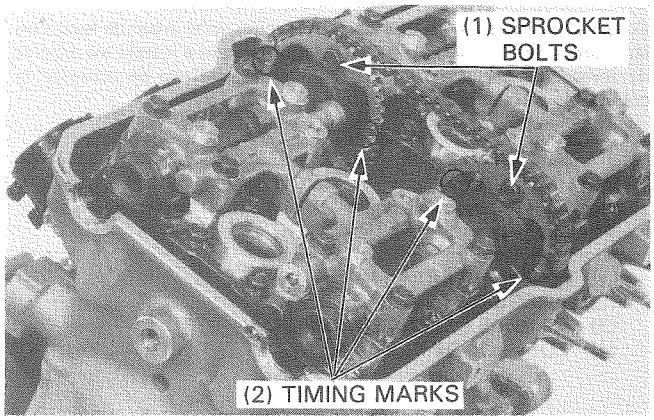

Install the cam chain guide and tighten the bolts.

TORQUE: 12 N·m (1.2 kg-m, 9 ft-lb)

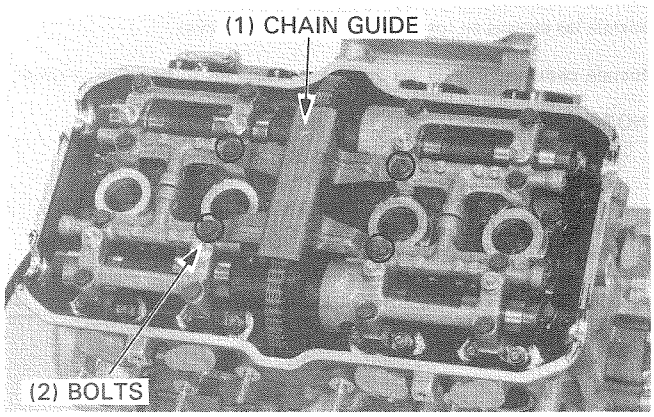

CAM CHAIN TENSIONER INSTALLATION

Install a new gasket and cam chain tensioner, and tighten the tensioner bolts securely.

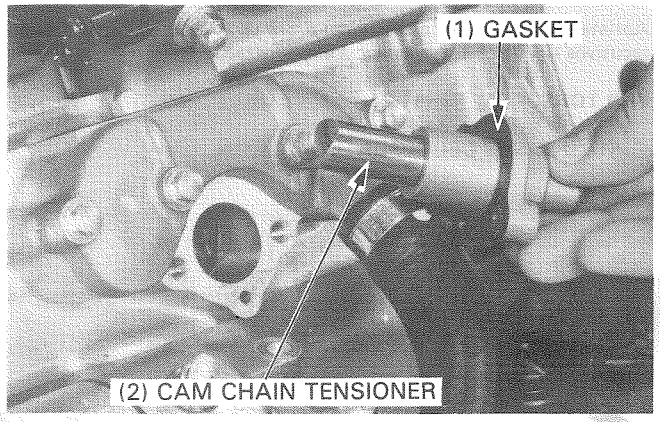

CYLINDER HEAD COVER INSTALLATION

If you remove the head cover breather plate, replace the gasket with a new one.

Apply locking agent to the threads, and tighten the cylinder head cover breather plate bolts.

TORQUE: 12 N·m (1.2 kg-m, 9 ft-lb)

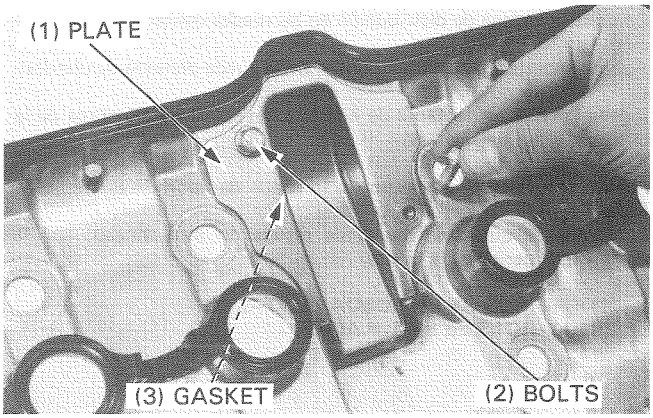

Clean the gasket and apply contact cement to the gasket groove of the cylinder head cover.

Apply sealant to the parts of the half circle on the gasket as shown.

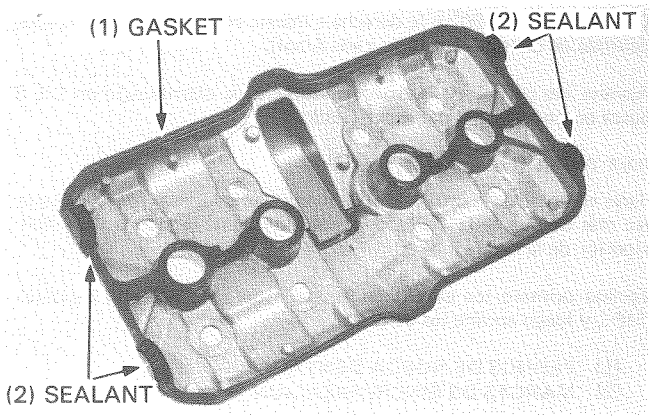

Install the cylinder head gasket to the cylinder head with "F ⇧" mark toward the front.

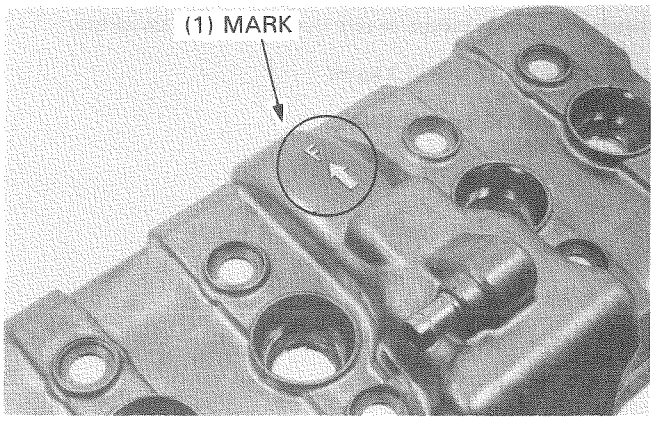

Install the washers to the head cover with the "UP" marks facing up.

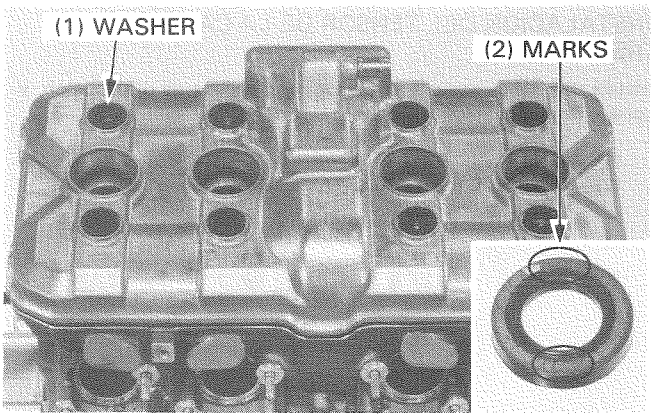

Install and tighten the cylinder head cover bolts in 2-3 steps in the sequence shown.

NOTE

- Tighten the ''△'' mark bolts (① and ②) first, to locate the head cover gasket properly.

TORQUE: 10 N·m (1.0 kg-m, 7 ft-lb)

Install the following components;
— breather tube.
— spark plug caps.
— radiator lower mounting bolts.
— lower fairings (page 13-4).

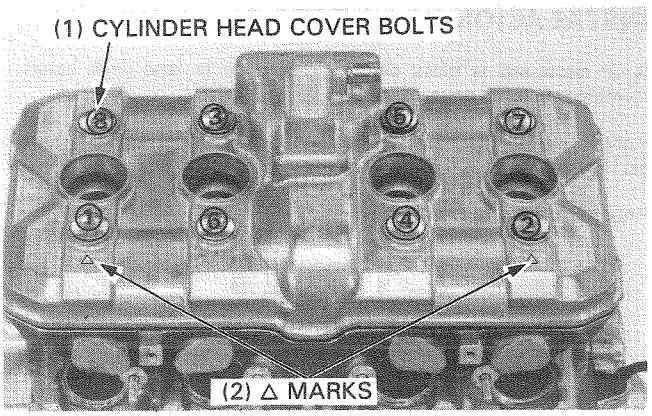

MEMO

CYLINDER/PISTON
CILINDROS/PISTONES
CILINDRI E PISTONI

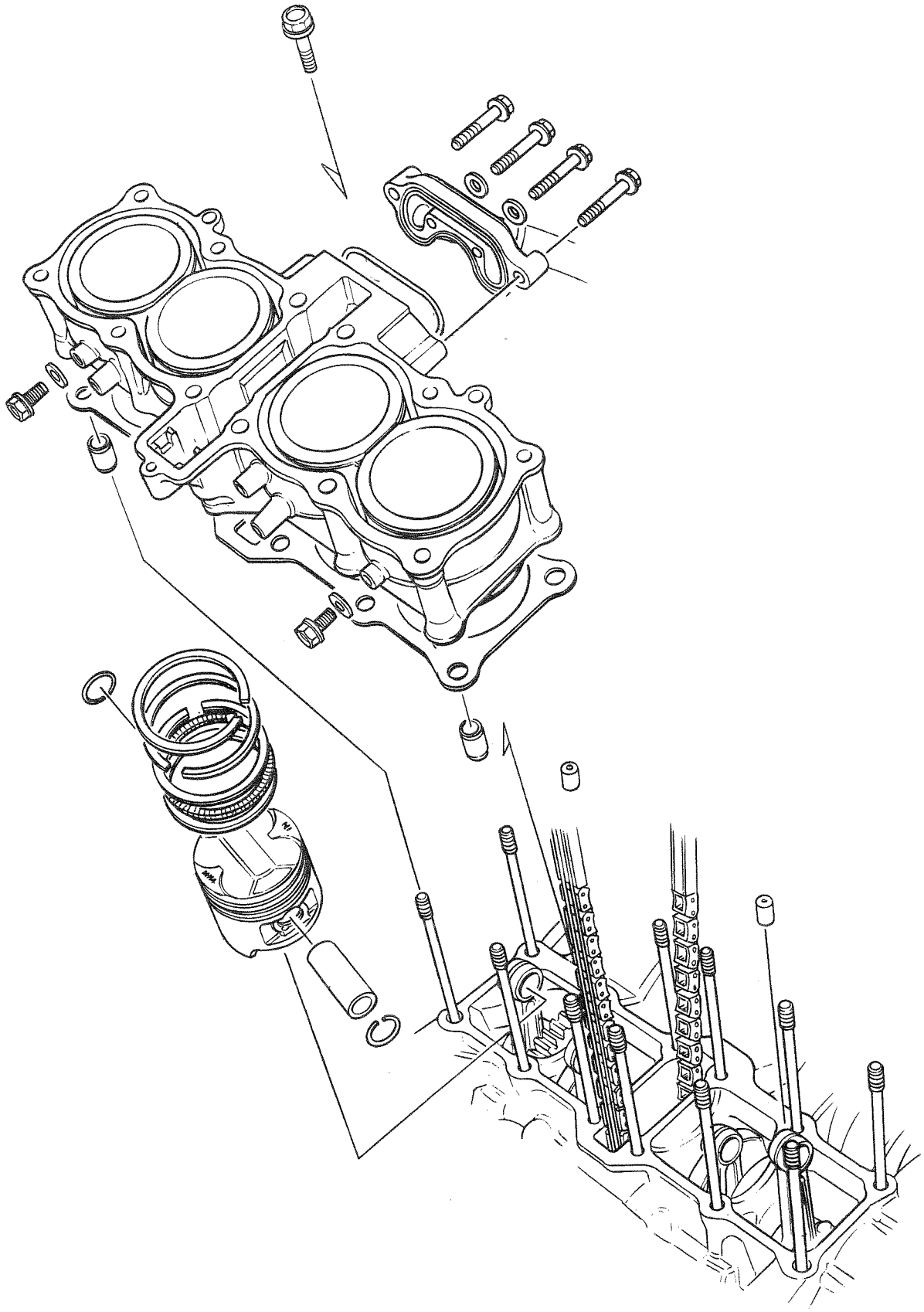

SERVICE INFORMATION

GENERAL

- The Cylinder service can be performed with the engine in the frame.

SPECIFICATIONS

Unit: mm (in)

ITEM			STANDARD	SERVICE LIMIT
Cylinder	I.D.		63.000–63.010 (2.4803–2.4807)	63.10 (2.484)
	Taper		—	0.10 (0.004)
	Out of round		—	0.10 (0.004)
	Warpage across top		—	0.10 (0.004)
Piston, piston pin, piston rings	Piston O.D.		62.960–62.990 (2.4787–2.4799)	62.90 (2.476)
	Piston pin bore		16.002–16.008 (0.6300–0.6302)	16.05 (0.632)
	Piston pin O.D.		15.994–16.000 (0.6297–0.6299)	15.98 (0.629)
	Piston-to-pin clearance		0.002–0.014 (0.0001–0.0006)	0.04 (0.002)
	Piston ring-to-ring groove clearance	TOP	0.025–0.060 (0.0010–0.0023)	0.08 (0.003)
		SECOND	0.015–0.050 (0.0006–0.0020)	0.08 (0.003)
	Piston ring end gap	TOP	0.20–0.35 (0.008–0.014)	0.50 (0.020)
		SECOND	0.3–0.5 (0.01–0.02)	0.08 (0.003)
		OIL	0.2–0.8 (0.01–0.03)	1.1 (0.04)
Cylinder-to-piston clearance			0.010–0.050 (0.0004–0.0020)	0.10 (0.004)
Connecting rod small end I.D.			16.016–16.034 (0.6305–0.6313)	16.07 (0.633)
Connecting rod small end-to-piston pin clearance			0.016–0.040 (0.0006–0.0016)	0.06 (0.002)

TOOLS

Special

Piston ring compressor (2 reguired)	07954–4140000
Piston base (2 reguired)	07958–2500001

TROUBLESHOOTING

Low or unstable compression
- Worn cylinder or piston rings

Excessive smoke
- Worn cylinder, piston, or piston rings
- Improper installation of piston rings
- Scored or scratched piston or cylinder wall

Overheating
- Excessive carbon build-up on piston or combustion chamber wall

Knocking or abnormal noise
- Worn piston and cylinder
- Excessive carbon build-up

Excessive noise
- Worn piston or cylinder
- Worn piston pin,or piston pin hole
- Worn connecting rod small end

CYLINDER REMOVAL

NOTE

- The cylinder service can be performed with the engine in the frame.

Remove the cylinder head (page 8-8).

Remove tha water joint by removing four bolts.

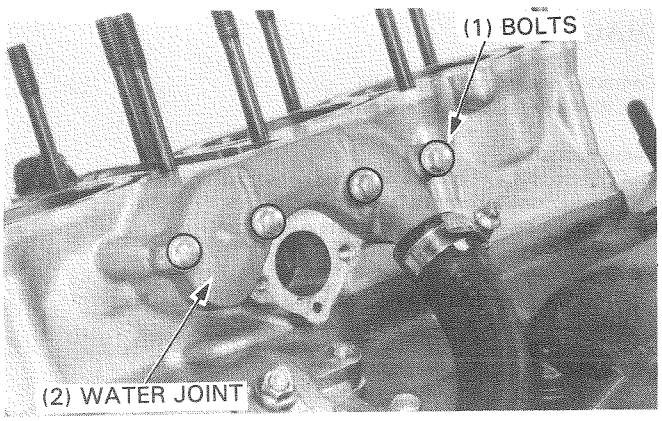

Remove the cylinder bolt and cylinder.

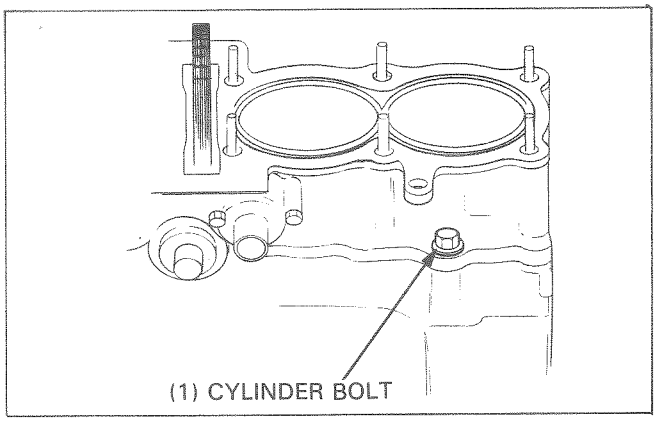

Remove the dowel pins, gasket and oil orifices.
Check the oil orifices for clogging.

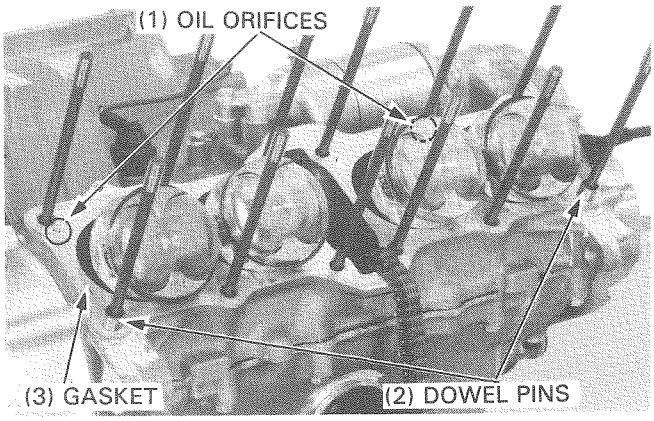

CYLINDER INSPECTION

Inspect the top of the cylinder for warpage.

SERVICE LIMIT: 0.10 mm (0.004 in)

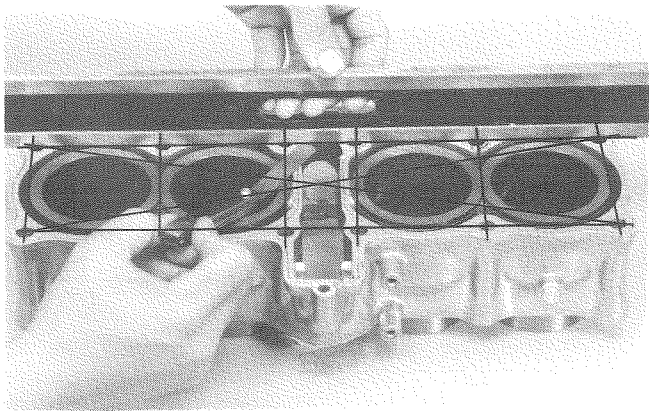

Measure and record the cylinder I.D. at three levels in both an X and Y axis. Take the maximum reading to determine the cylinder wear.

SERVICE LIMIT: 63.10 mm (2.484 in)

Calculate the piston-to-cylinder clearance. Take the maximum reading to determine the clearance.
Refer to page 9-5 for measurement of the piston O.D.

SERVICE LIMIT: 0.10 mm (0.004 in)

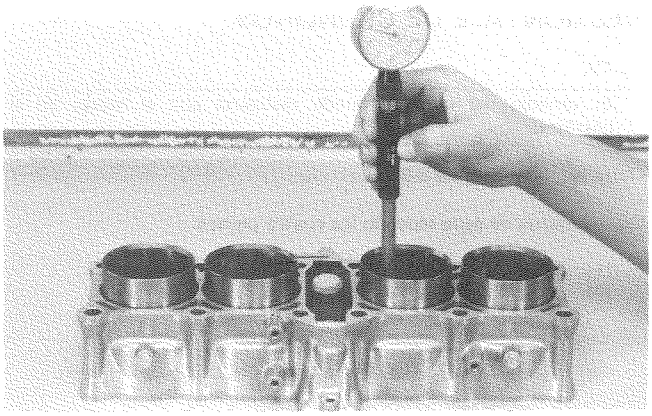

Calculate cylinder taper at three levels in an X and Y axis. Take the maximum reading to determine the taper.

SERVICE LIMIT: 0.10 mm (0.004 in)

Calculate the cylinder out-of-round at three levels in an X and Y axis. Take the maximum reading to determine the out-of-round.

SERVICE LIMIT: 0.10 mm (0.004 in)

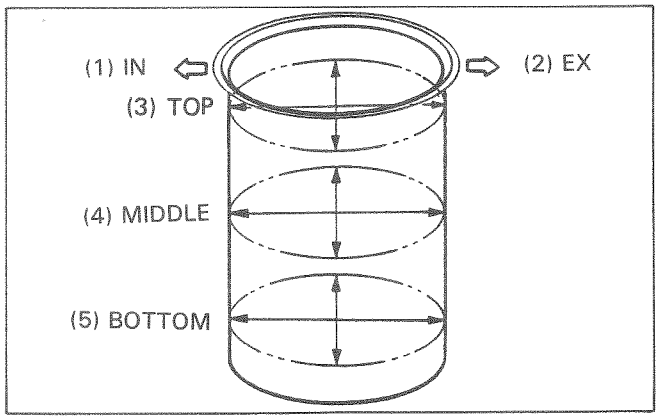

Check the O-rings for damage or fatigue.

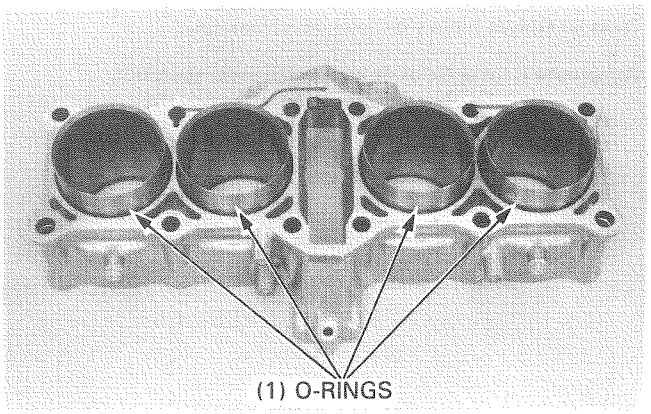

PISTON REMOVAL

Stuff a shop towel into the crankcase.

Remove the piston pin clips with needle nose pliers.

NOTE

- Do not allow the clips fall into the crankcase.

Press the piston pin out of the piston.
Remove the piston.

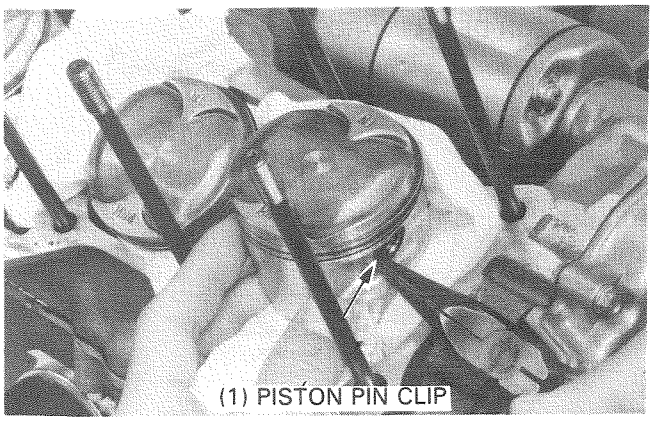

Spread each piston ring and remove it by lifting up at a point opposite the gap.

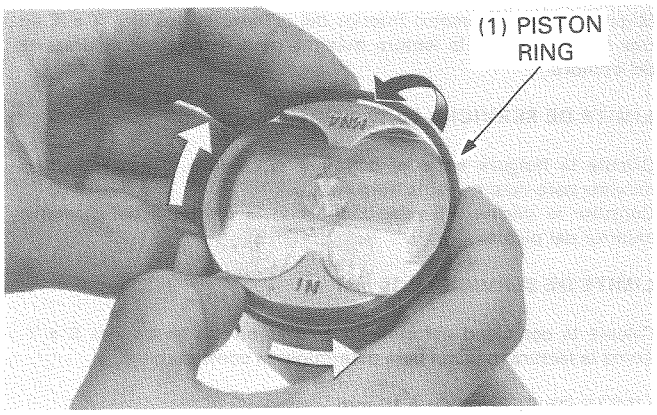

PISTON/PISTON RING INSPECTION

Measure the piston ring-to-groove clearance.

SERVICE LIMIT: TOP: 0.08 mm (0.003 in)
SECOND: 0.08 mm (0.003 in)

Inspect the piston for wear or damage.

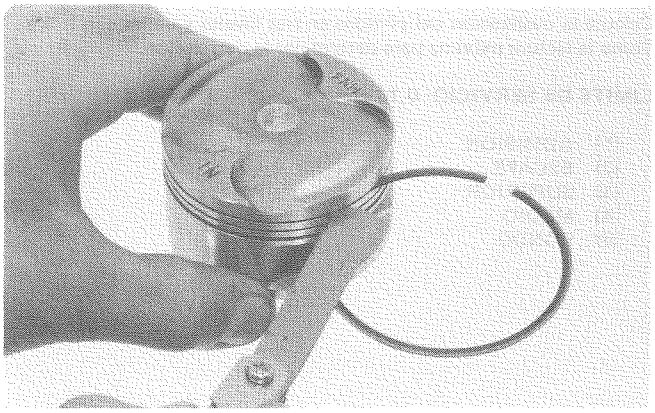

Insert each piston ring into the cylinder and measure the ring end gap.

NOTE

- Push the rings into the cylinder with the top of the piston to be sure they are squarely set in the cylinder.

SERVICE LIMIT: TOP: 0.50 mm (0.020 in)
SECOND: 0.08 mm (0.003 in)
OIL: 1.1 mm (0.04 in)

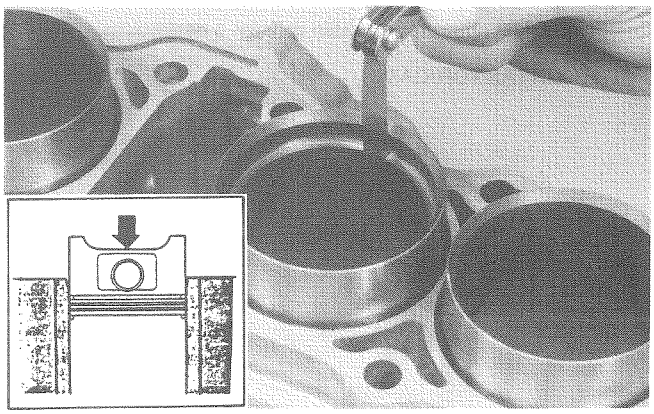

Measure the piston skirt diameter at 10 mm (0.4 in) from the bottom and 90° to the pistion pin bore.

SERVICE LIMIT: 62.90 mm (2.476 in)

Compare this measurement against the service limit and calculate piston-to-cylinder clearance.
Refer to page 9-4 for cylinder bore inspection.

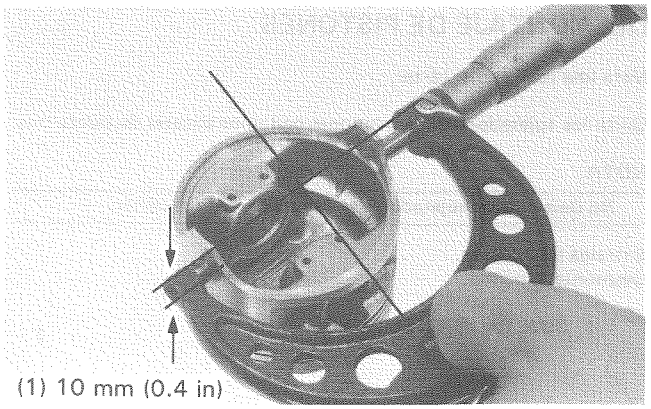

Mesure the piston pin bore.

SERVICE LIMIT: 16.05 mm (0.632 in)

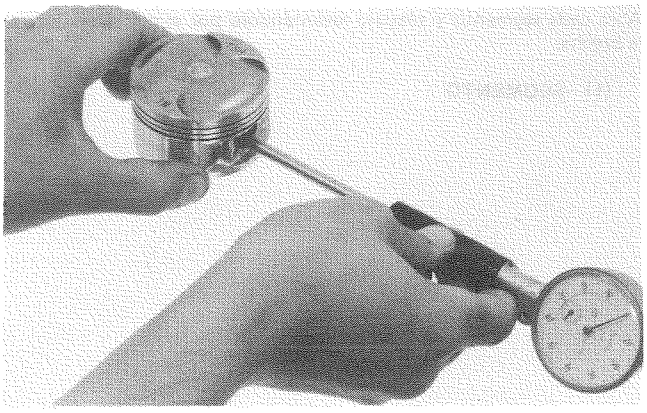

Measure the connecting rod small end I.D.

SERVICE LIMIT: 16.07 mm (0.633 in)

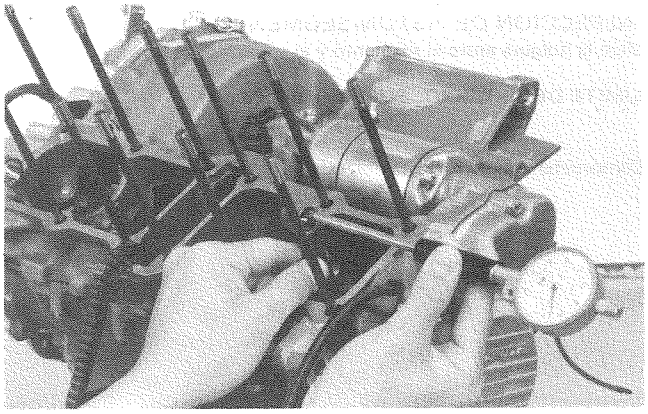

Measure the piston pin O.D.

SERVICE LIMIT: 15.98 mm (0.629 in)

Calculate the piston-to-piston pin clearance.

SERVICE LIMIT: 0.04 mm (0.002 in)

Calculate the connecting rod small end-to-piston pin clearance.

SERVICE LIMIT: 0.06 mm (0.002 in)

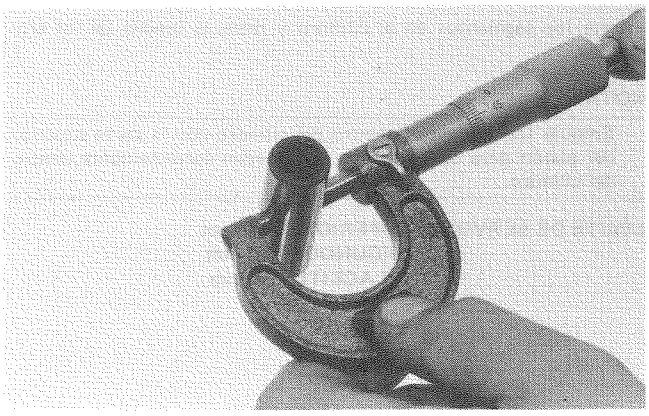

PISTON INSTALLATION

PISTON RING INSTALLATION

Clean the piston ring grooves thoroughly and install the piston rings with the marks facing up.

NOTE

- Aviod piston and piston ring damage during installation.
- Do not interchange the top and second rings.

Space the piston ring end gaps 120 degrees apart. Do not align the gaps in the oil rings (side rails).

After installation, the rings should be free to rotate in the ring grooves.

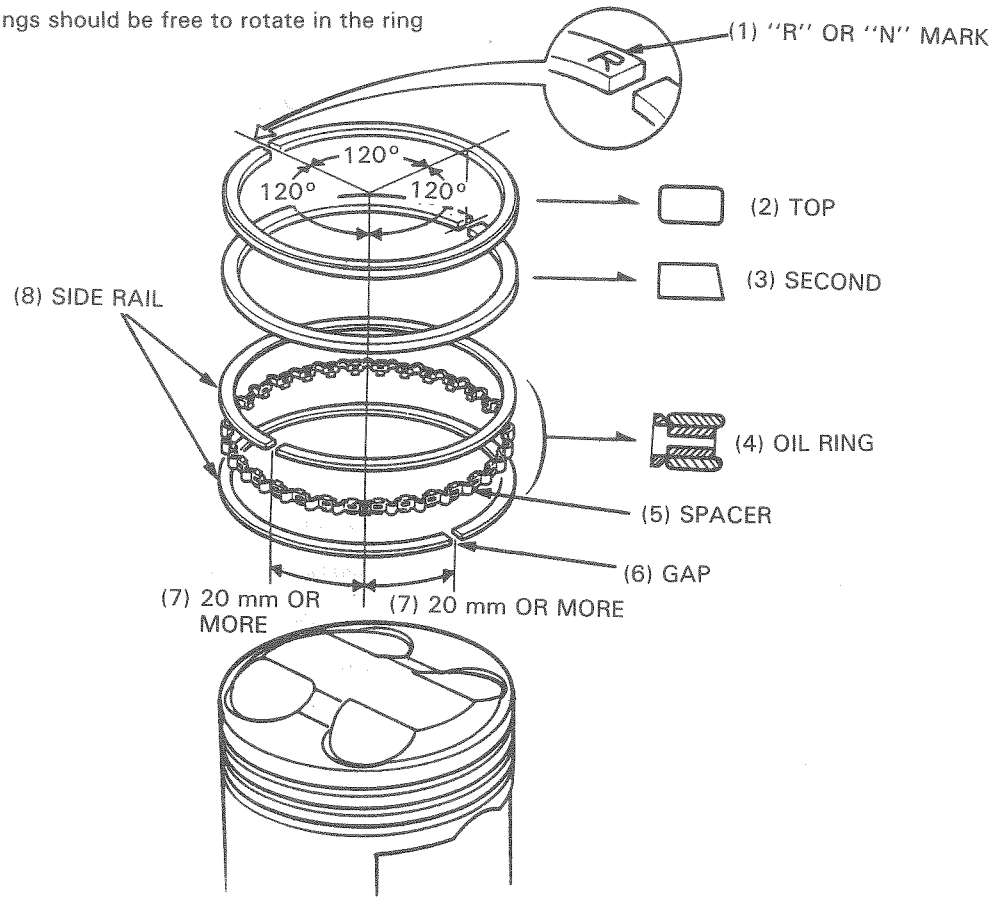

PISTON INSTALLATION

Apply MoS_2 grease (page 2-13) to the inside of the connecting rod small end.
Install the piston with its "IN" mark on the intake valve side.

Install the piston pin with new pin clips.
Do not align the piston pin clip end gap with the piston cutout.

NOTE

- Do not allow the clip to fall into the crankcase.

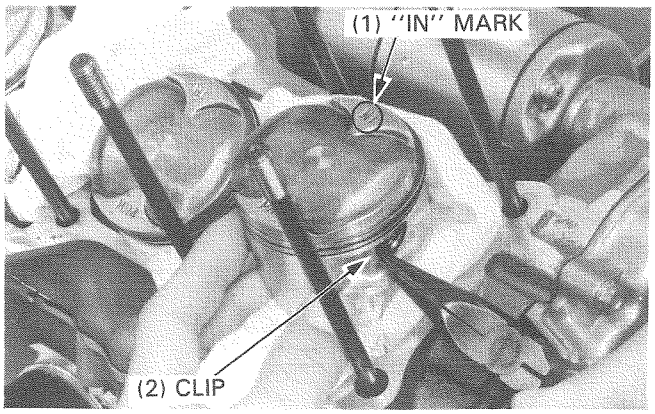

CYLINDER INSTALLATION

Install the oil orifices, dowel pins and gasket.

NOTE

- Install the oil orifices with their smaller holes facing up.

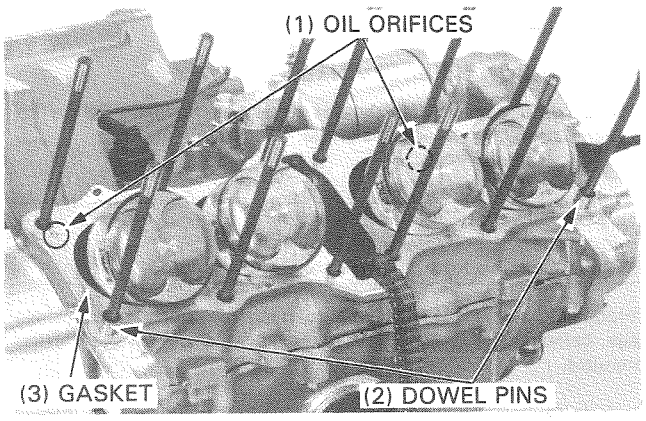

Coat the cylinder bore with the clean engine oil.
Position the No. 2 and No. 3 pistons at T.D.C.
Insert the piston bases under the pistons and attach the piston ring compressors to the pistons.

Slide the cylinder over the No.2 and No. 3 pistons and remove the piston bases and compressors.

TOOL:

Piston ring compressor	**07954–4140000**
Piston base	**07958–2500001**

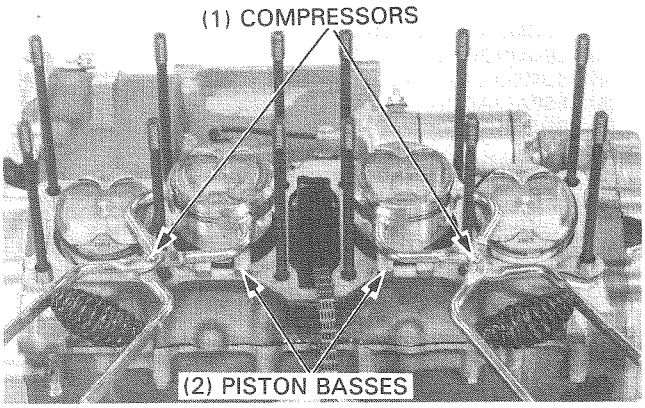

Attach the piston ring compressors to the No. 1 and No. 4 pistons.
Slide the cylinder over the No. 1 and No. 4 pistons and remove the compressors.

TOOL:

Piston ring compressor	**07954–4140000**

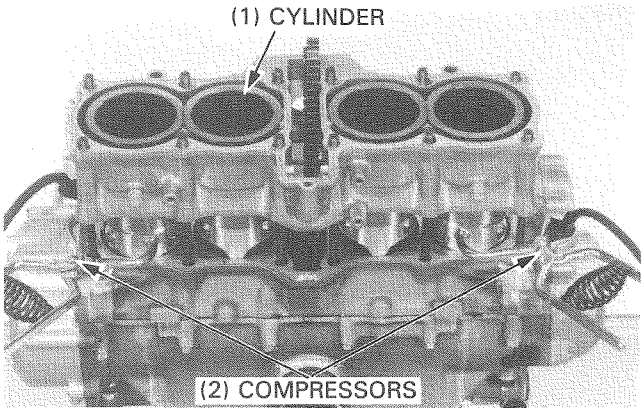

Install the cylinder bolt and tighten it securely.

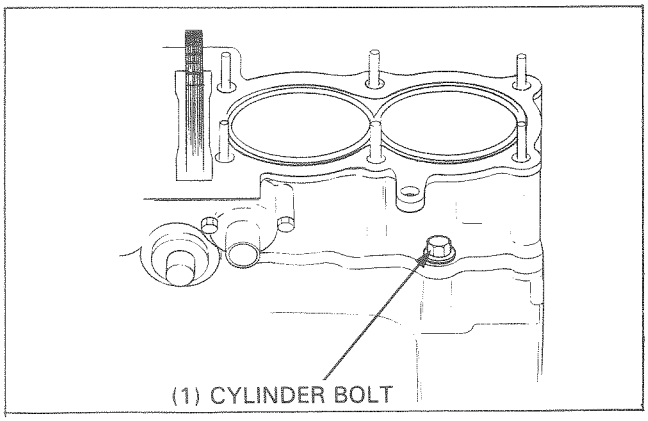

Check the O-ring for damage or fatigue.

Install the water joint to the cylinder.

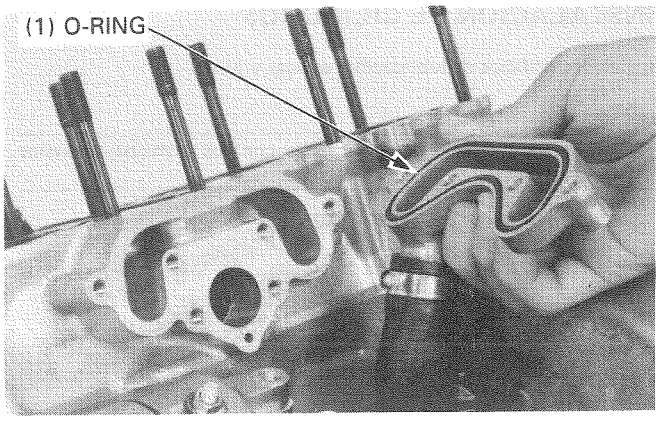

Install and tighten the water joint bolts securely.

NOTE

- Install new sealing washers to the shown positions.

Install the cylinder head (page 8-16).

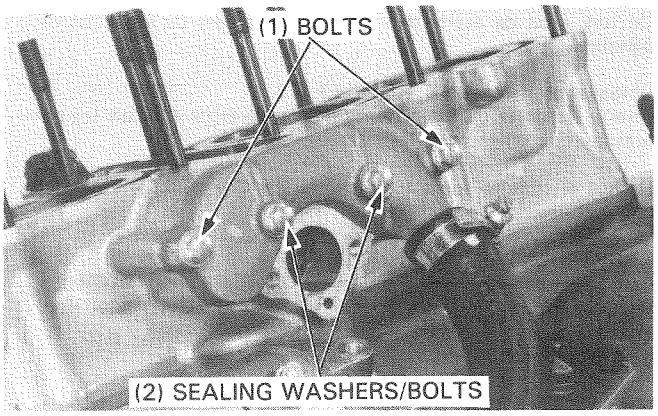

MEMO

CRANKCASE
CARTER
BASAMENTO

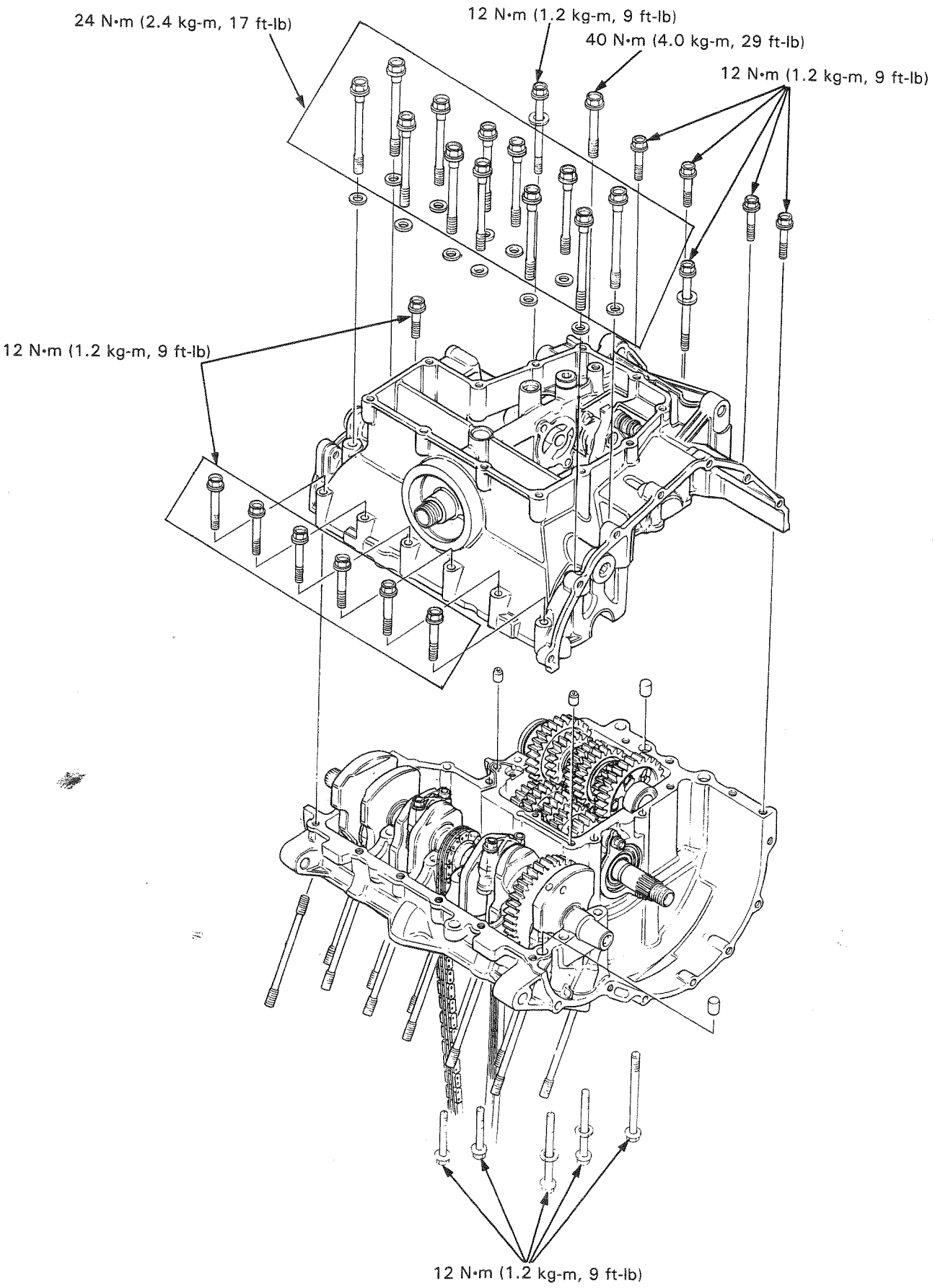
24 N•m (2.4 kg-m, 17 ft-lb)
12 N•m (1.2 kg-m, 9 ft-lb)
40 N•m (4.0 kg-m, 29 ft-lb)
12 N•m (1.2 kg-m, 9 ft-lb)
12 N•m (1.2 kg-m, 9 ft-lb)
12 N•m (1.2 kg-m, 9 ft-lb)

SERVICE INFORMATION

GENERAL

- The crankshaft, connecting rods and transmission service must be performed after crankcase separation.
- The following components must be removed before separating the crankcase.

ITEM	REMOVED COMPONENTS
Connecting rod	Cylinder head (Section 8) Cylinder/Piston (Section 9) Left and right crankcase covers (Section 7 and 19) Starter motor (Section 19) Oil pan (Section 2)
Crankshaft	Clutch/flywheel (Section 7) Starter motor/Starter clutch (Section 19) Oil pan (Section 2) Camshaft (Section 8)
Transmission NOTE • The mainshaft and countershaft service can be performed without removing the gearshift linkage.	Clutch/Gearshift linkage (Section 7) Starter motor/Left crankcase cover (Section 19) Oil pan (Section 2)

TORQUE VALUE

20 mm sealing bolt		30 N·m (3.0 kg-m, 22 ft-lb)
14 mm special bolt		25 N·m (2.5 kg-m, 18 ft-lb)
Crankcase bolt	(6 mm)	12 N·m (1.2 kg-m, 9 ft-lb)
	(8 mm)	24 N·m (2.4 kg-m, 17 ft-lb)
	(10 mm)	40 N·m (4.0 kg-m, 29 ft-lb)

CRANKCASE SEPARATION

NOTE

- The relative components must be removed before separating the crankcase (page 10-1).

Remove the upper crankcase mounting bolts.

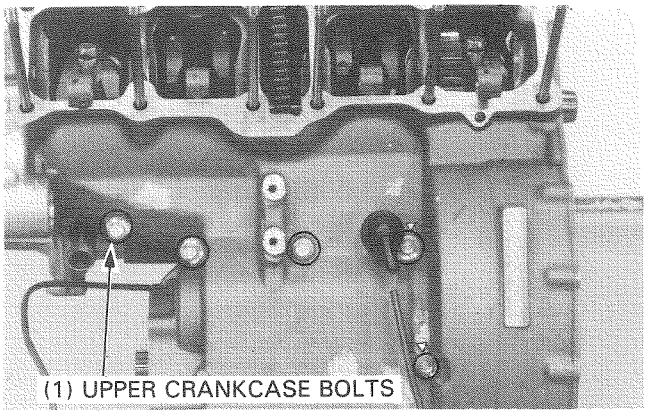

Turn the engine upside down and remove the lower crankcase mounting bolts.

NOTE

- Loosen the bolts in 2—3 steps in a criss-cross pattern to prevent crankcase warpage.

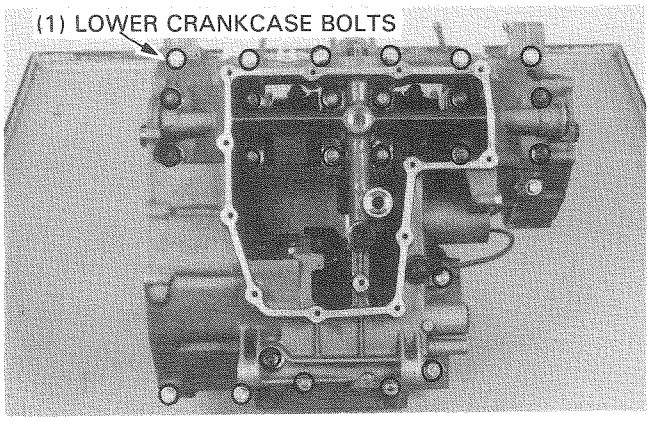

Remove the lower crankcase from the upper crankcase.
Remove the dowel pins.

CAUTION

- *Do not pry between the upper and lower cases.*

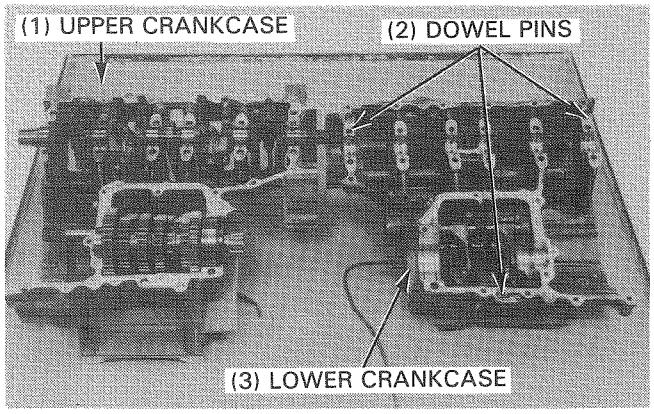

CRANKCASE ASSEMBLY

Tighten the bolts to the specified torque, if you removed them to clean out all the oil.

TORQUE:
20 mm sealing bolt: 30 N·m (3.0 kg-m, 22 ft-lb)
14 mm special bolt: 25 N·m (2.5 kg-m, 18 ft-lb)

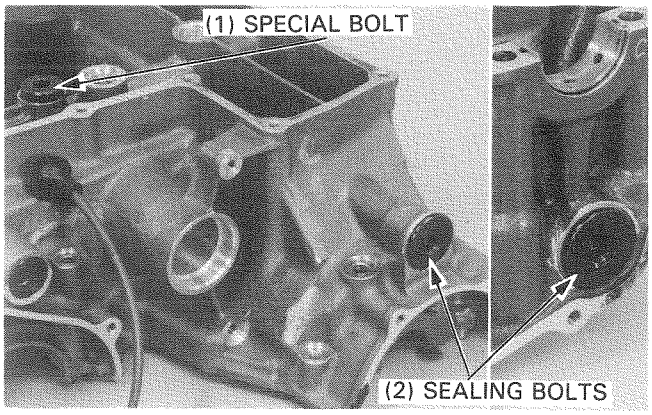

Clean the crankcase mating surface thoroughly.

Make sure the oil orifices are not clogged and install them to the upper and lower crankcase with their bigger holes facing up.

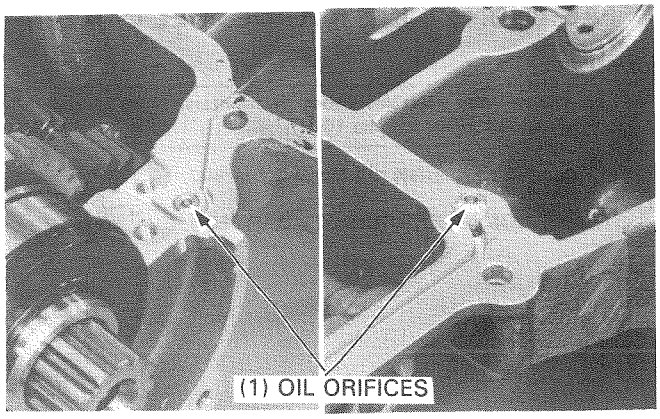

Apply liquid sealant to both of the lower crankcase mating surfaces.

CAUTION

- *Apply sealant to the only area as shown of the lower crankcase; do not apply it to the inside area marked by the grooves.*

Install the dowel pins.

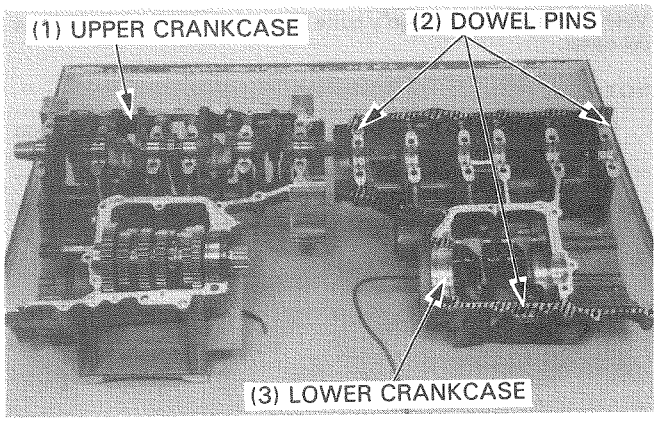

Assemble the crankcase halves, aligning the shift fork claws with the grooves in the corresponding gears.
Tighten the lower crankcase mounting bolts in 2—3 steps in the sequence shown.

TORQUE:
6 mm bolt: 12 N·m (1.2 kg-m, 9 ft-lb)
(㉑ with a copper washer)
8 mm bolt: 24 N·m (2.4 kg-m, 17 ft-lb)
(②—⑬ with copper washers)
10 mm bolt: 40 N·m (4.0 kg-m, 29 ft-lb) (①)

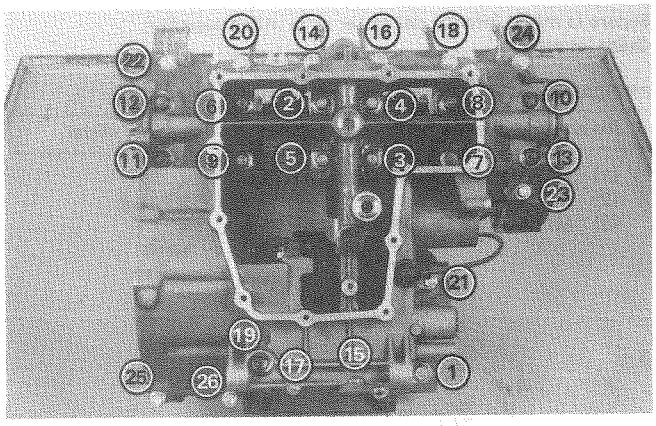

Tighten the upper crankcase mounting bolts.

TORQUE: 12 N·m (1.2 kg-m, 9 ft-lb)

NOTE

- Install the sealing washars to the "▽" mark bolts.

Install the remaining parts in the reverse order of removal (page 10-1).

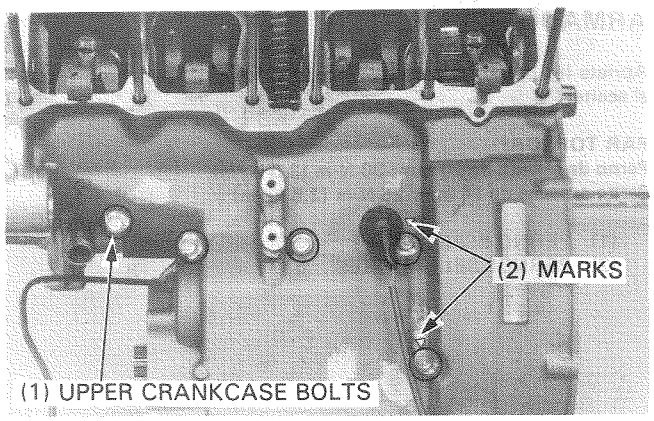

MEMO

CRANKSHAFT
CIGÜEÑAL
ALBERO MOTORE

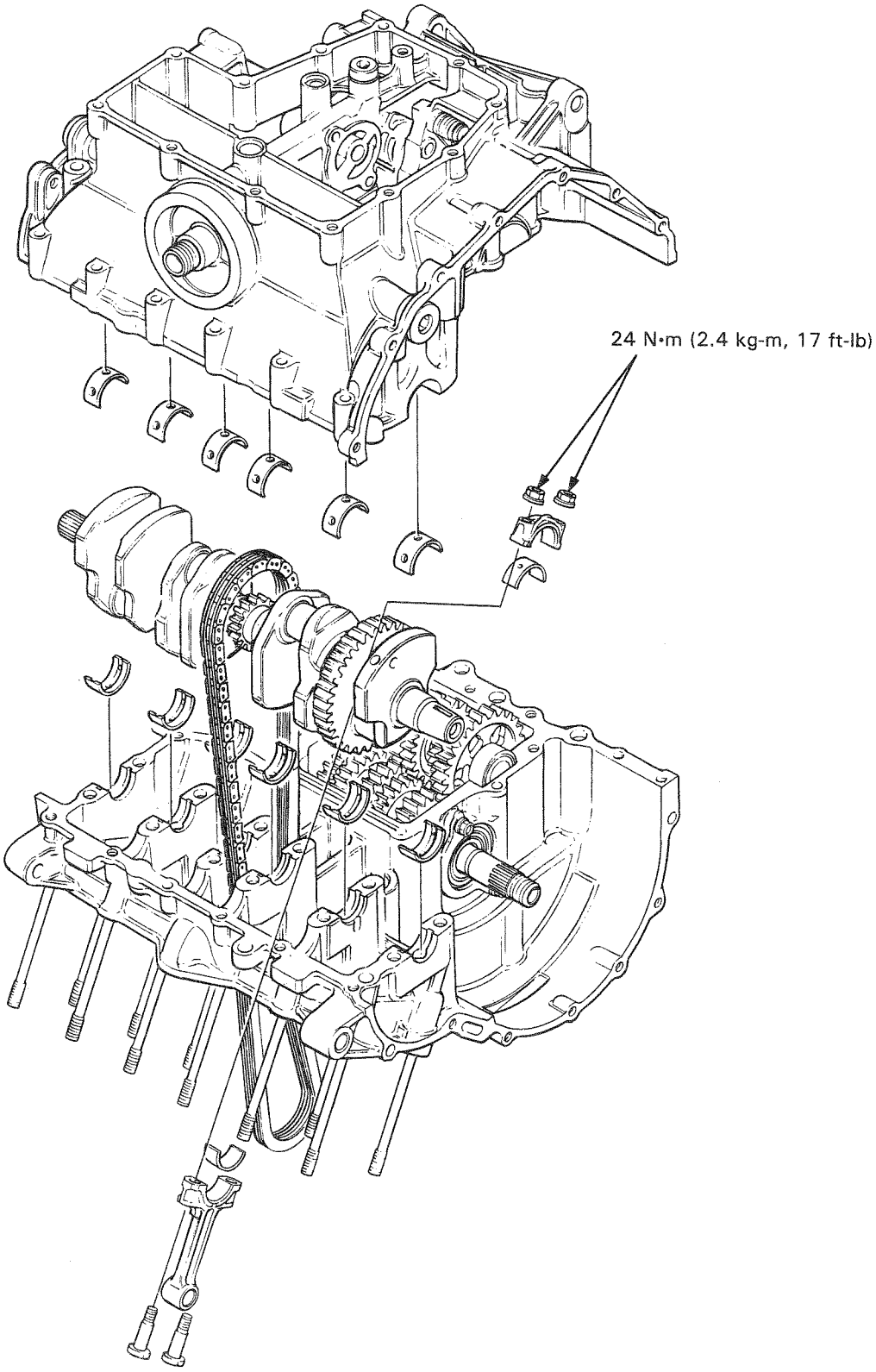
24 N•m (2.4 kg-m, 17 ft-lb)

SERVICE INFORMATION

GENERAL

- For crankcase separation, refer to section 10.
- All bearing inserts are select fit and are identified by color code. Select replacement bearings from the code tables. After installing new bearings, recheck them with plastigauge to verify clearance.
- Apply MoS_2 grease (page 2-13) to the main journals and crankpins during assembly.

SPECIFICATIONS

Unit: mm (in)

ITEM		STANDARD	SERVICE LIMIT
Crankshaft	Connecting rod big end side clearance	0.05—0.20 (0.002—0.008)	0.3 (0.01)
	Runout	——	0.05 (0.002)
	Crankpin oil clearance	0.028—0.052 (0.0011—0.0020)	0.06 (0.002)
	Main journal oil clearance	0.023—0.047 (0.0009—0.0019)	0.05 (0.002)

TORQUE

Connecting rod bearing nut/bolt	24 N•m (2.4 kg-m, 17 ft-lb) Apply oil.
8 mm crankcase bolt	24 N•m (2.4 kg-m, 17 ft-lb)

TROUBLESHOOTING

Excessive noise

- Worn main bearing
- Worn crankpin bearing
- Worn piston or cylinder (Section 9)

CRANKSHAFT/CONNECTING ROD REMOVAL

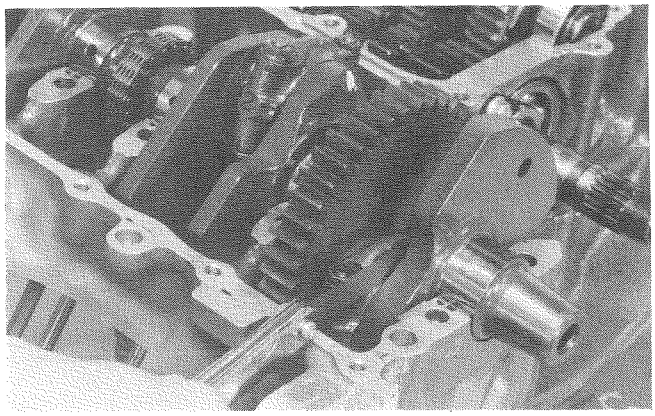

SIDE CLEARANCE INSPECTION

Separate the crankcase (Section 10).
Check the connecting rod side clearances.

SERVICE LIMIT: 0.3 mm (0.01 in)

REMOVAL

CAUTION

- *Do not interchange the bearing inserts. They must be installed in their original positions or the correct bearing oil clearance may not be obtained causing engine damage.*

NOTE

- Mark the connecting rods and bearing caps to indicate the correct cylinder on the crankpins before removal.

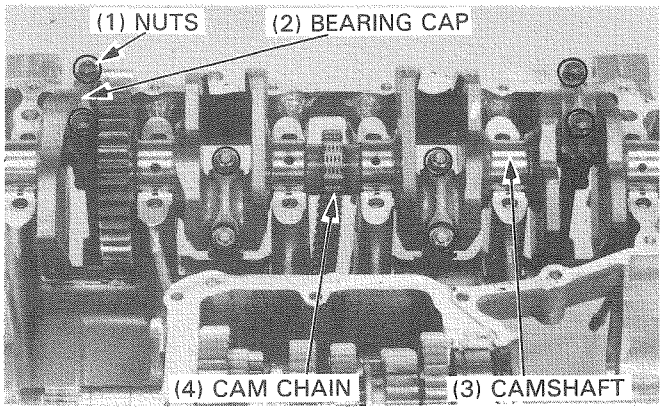

Remove the bearing cap nuts, bearing caps connecting rods, cam chain and crankshaft.

CRANKSHAFT INSPECTION

Set the crankshaft on a stand or V blocks.
Set a dial indicator on the center main bearing journal. Rotate the crankshaft two revolutions and read the runout.

SERVICE LIMIT: 0.05 mm (0.002 in)

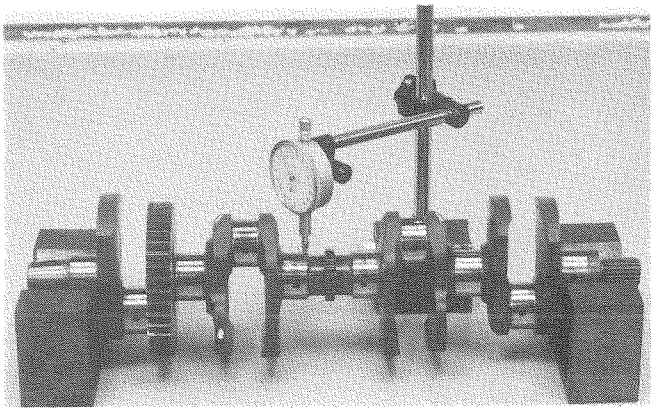

CRANKSHAFT BEARING INSPECTION/SELECTION

Inspect the main and crankpin bearing inserts for damage or separation.

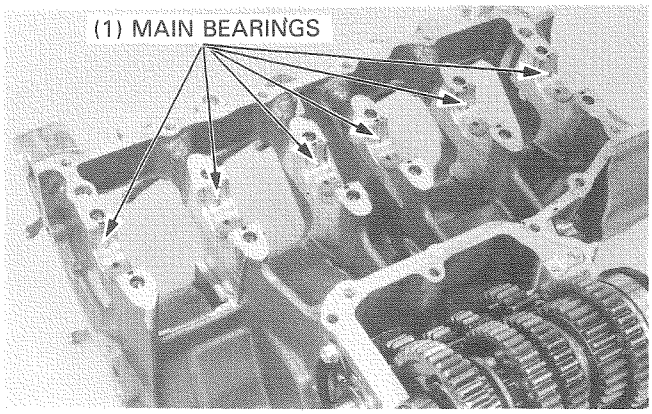

CRANKPIN BEARING INSPECTION

Wipe all oil from the bearing inserts and crankpins.
Put a piece of plastigauge on each crankpin.

NOTE

- Do not put the plastigauge over the oil hole in the crankpin.

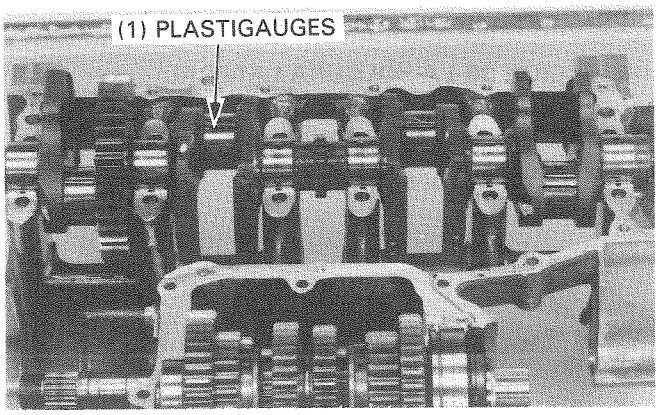

Install the connecting rods and bearing caps on their original crankpins, and tighten the nuts.

TORQUE: 24 N•m (2.4 kg-m, 17 ft-lb)

NOTE

- Do not rotate the crankshaft during inspection.

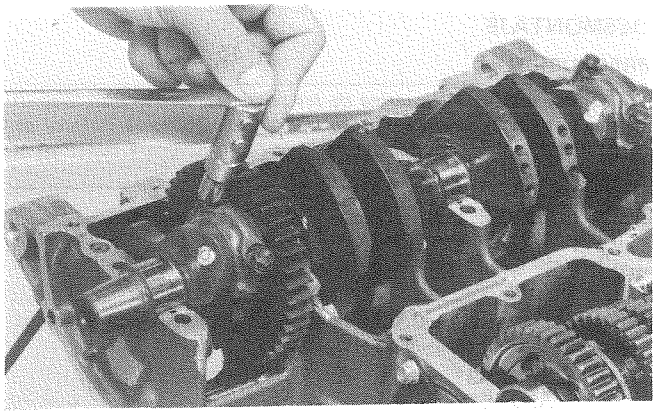

Remove the caps and measure the compressed plastigauge on each crankpin.

SERVICE LIMIT: 0.06 mm (0.002 in)

If the rod bearing clearance is beyond tolerance, select replacement bearings.

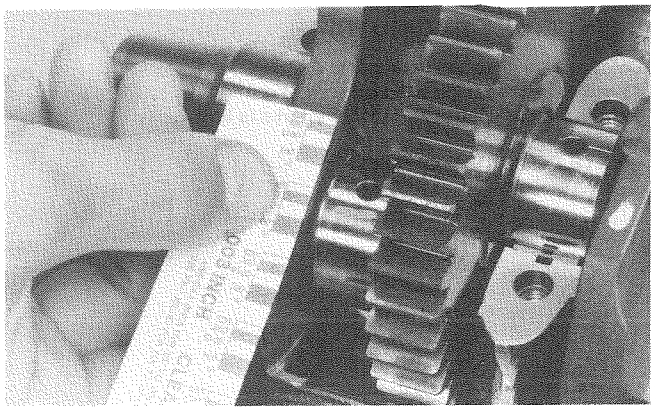

CRANKPIN BEARING SELECTION

The code number (1 or 2) stamped on each connecting rod identifies its inside diameter.

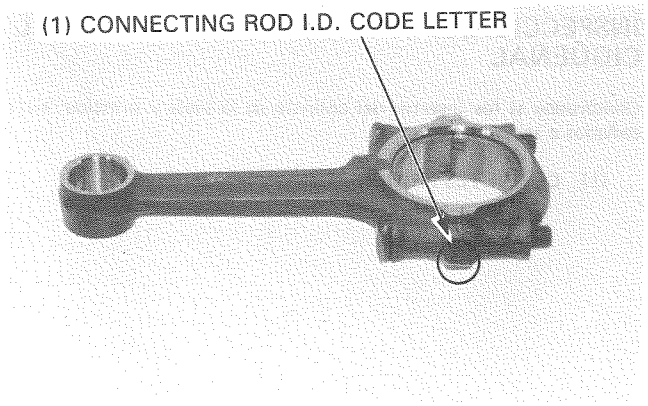

The code letter (A or B) stamped on the left crankshaft weight identifies the outside diameter of its crankpin.

NOTE

No. 2 crankpin

- example: L Ⓐ Ⓑ B A

No. 1 crankpin

Cross reference the crankpin and connecting rod codes to select the correct replacement bearing.

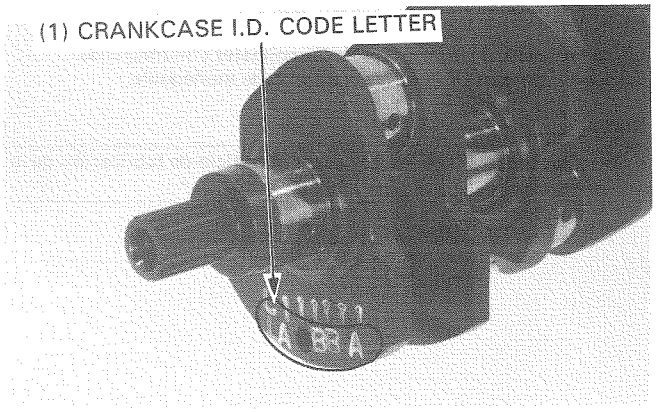

Crankpin O.D. Code Letter \ Rod I.D. Code Letter		1	2
		36.000–36.008 mm (1.4173–1.4176 in)	36.008–36.016 mm (1.4176–1.4179 in)
A	32.992–33.000 mm (1.2989–1.2992 in)	C (YELLOW)	B (GREEN)
B	32.984–32.992 mm (1.2986–1.2989 in)	B (GREEN)	A (BROWN)

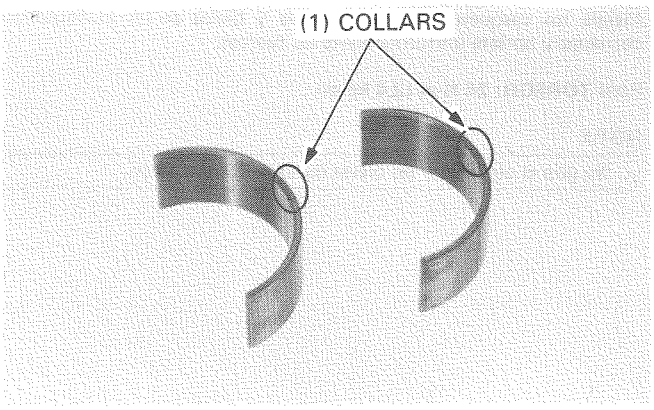

THICKNESS:
A (BROWN): 1.494–1.498 mm (0.0588–0.0590 in)
B (GREEN): 1.490–1.494 mm (0.0587–0.0588 in)
C (YELLOW): 1.486–1.490 mm (0.0585–0.0587 in)

CAUTION

- *After selecting new bearings, recheck the clearance with plastigage. Incorrect clearance can cause major engine damage.*

CONNECTING ROD SELECTION

If a connecting rod requires replacement, you should select a rod with the same weight code as the original.

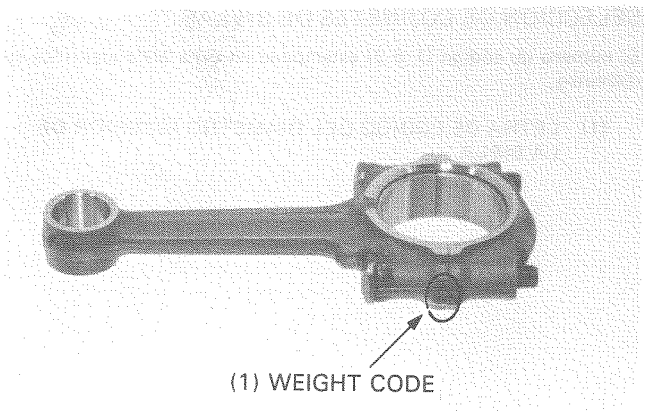

MAIN BEARING INSPECTION

Wipe all oil from the bearing inserts and journals.
Put a piece of plastigauge on each journal.

NOTE

- Do not put the plastigauge over the oil hole in the main bearing journal of the crankshaft.

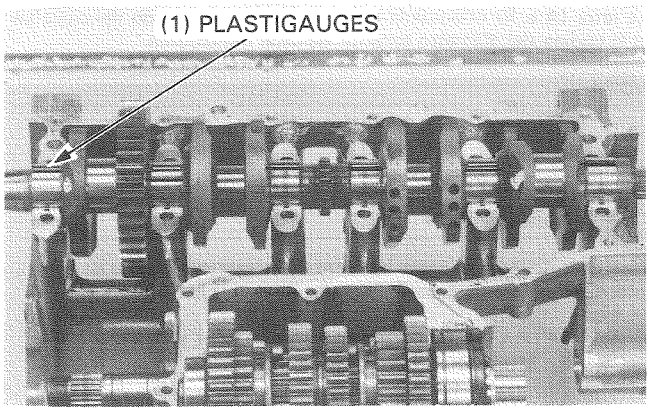

Assemble the crankcase halves, aligning the shift forks with gears.
Tighten the 8 mm crankcase bolts to the specified torque.

TORQUE: 24 N·m (2.4 kg-m, 17 ft-lb)

NOTE

- Do not rotate the crankshaft during inspection.

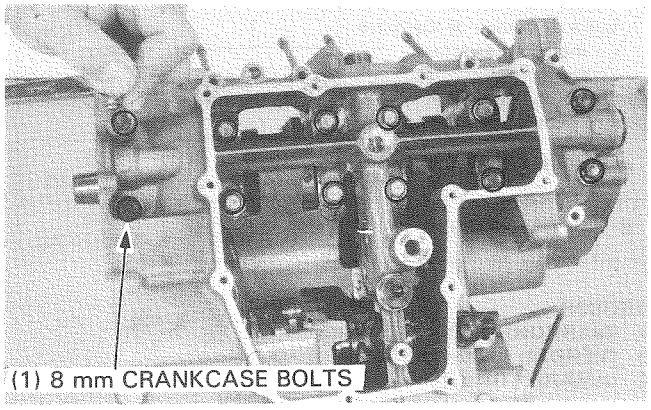

Remove the lower crankcase and measure the compressed plastigauge on each journal.

SERVICE LIMIT: 0.05 mm (0.002 in)

If main bearing clearance is beyond tolerance, select a replacement bearing.

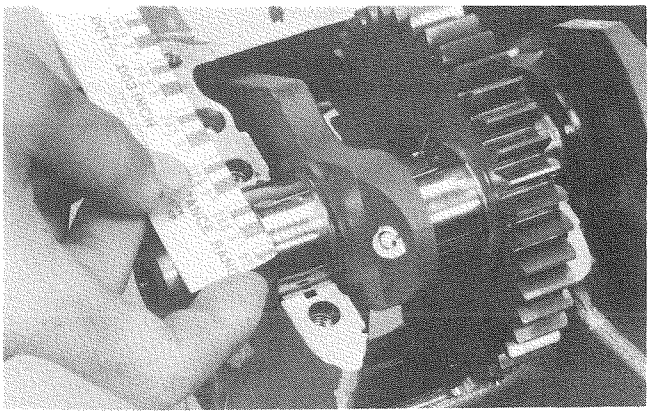

MAIN BEARING SELECTION

Each code letter (A, B or C) stamped on the left side of the upper crankcase identifies the inside diameter (I.D.) of each main bearing journal (No. 1—No. 6), from left-to-right.

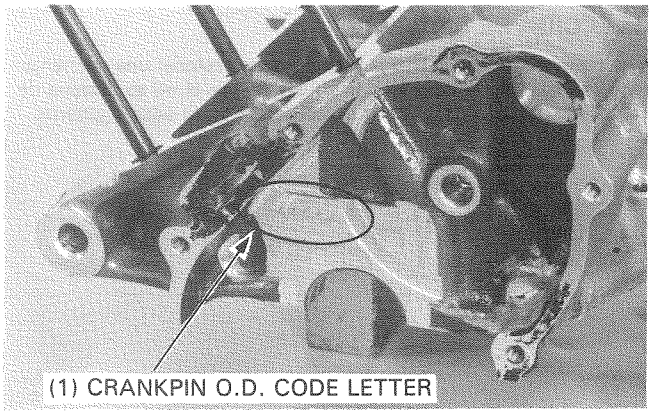

The code number (1 or 2) stamped on the left crankshaft weight identifies the outside diameter (O.D.) of its main journal.

NOTE

No. 2 main journal

- example: L ① ① 1 1 1 1

No. 1 main journal

Cross reference the crankcase and main journal codes to select the correct replacement bearing.

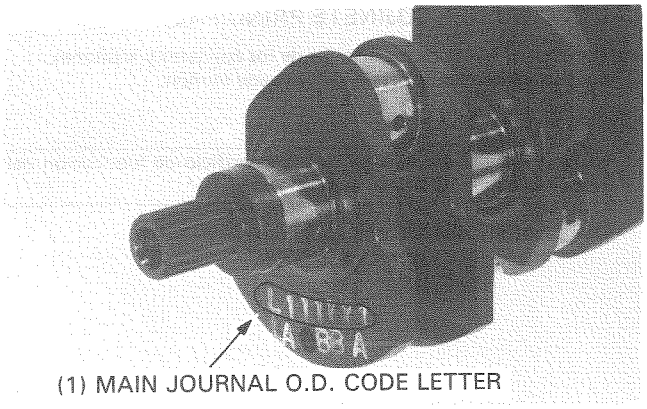

Main Journal O.D. Code Letter		Crankcase I.D. Code Letter: A	B	C
		36.000–36.008 mm (1.4173–1.4176 in)	36.008–36.016 mm (1.4176–1.4179 in)	36.016–36.024 mm (1.4179–1.4183 in)
1	32.992–33.000 mm (1.2989–1.2992 in)	D (PINK)	C (YELLOW)	B (GREEN)
2	32.984–32.992 mm (1.2986–1.2989 in)	C (YELLOW)	B (GREEN)	A (BROWN)

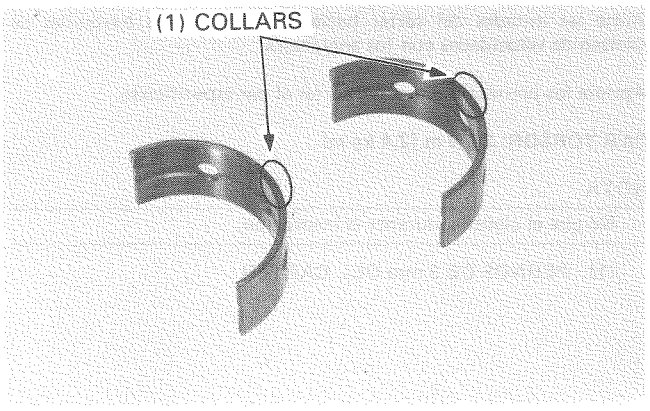

THICKNESS:
A (BROWN): 1.492–1.496 mm (0.0587–0.0589 in)
B (GREEN): 1.488–1.492 mm (0.0586–0.0587 in)
C (YELLOW): 1.484–1.488 mm (0.0584–0.0586 in)
D (PINK): 1.480–1.484 mm (0.0583–0.0584 in)

CAUTION

- *After selecting new bearings, recheck clearance with plastigauge. Incorrect clerance can cause major engine damage.*

CRANKSHAFT/CONNECTING ROD INSTALLATION

Install the main journal bearings to the upper and lower crankcases.

CAUTION

- *The bearing tabs should be aligned with the grooves in the cases.*

Apply MoS_2 grease (page 2-13) to the upper and lower main bearings.

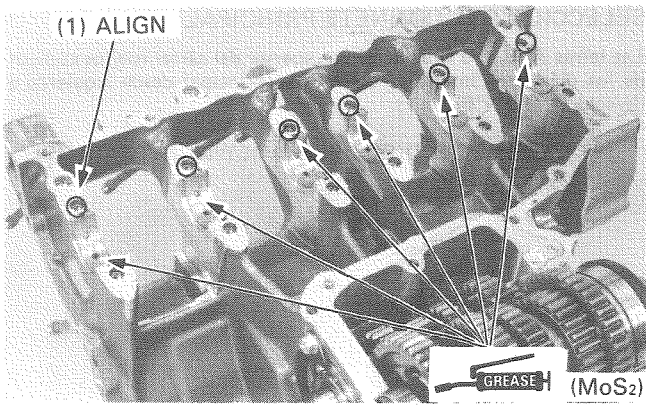

Install the cam chain and crankshaft to the upper crankcase. Apply MoS_2 grease (page 2-13) to the crankshaft journals and crankpin journals.

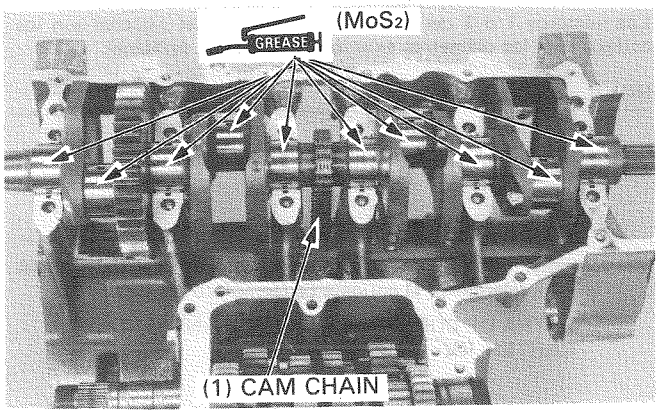

Install the crankpin bearings to the connecting rod and bearing cap.

CAUTION

- *The bearing tabs should be aligned with the grooves in the rods and caps.*

Apply MoS_2 grease (page 2-13) to the crankpin bearings.

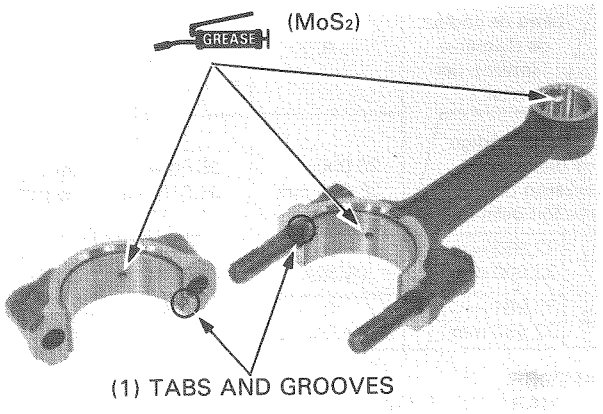

Install the connecting rods to their original positions with the marked side facing to the clutch.
Install the bearing caps to their original positions with its code letter read properly.

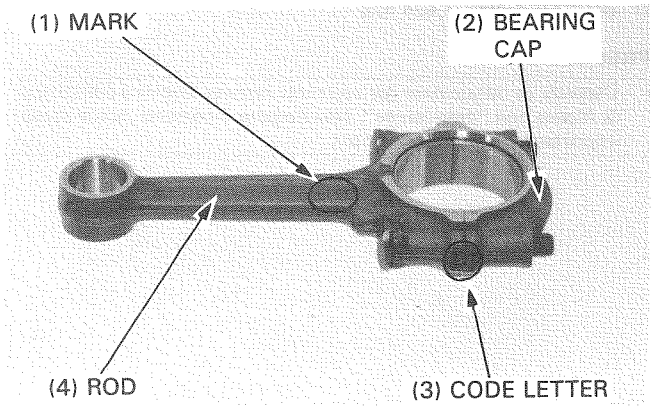

Apply oil to the connecting rod bolt and nut threads and tighten the nut in 2—3 steps.

TORQUE: 24 N·m (2.4 kg-m, 17 ft-lb)

Assemble the crankcase (Section 10).

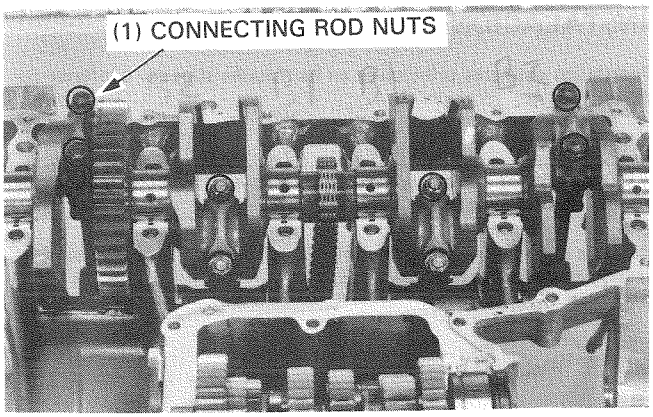

MEMO

TRANSMISSION

CAJA DE CAMBIOS

SCATOLA CAMBIO

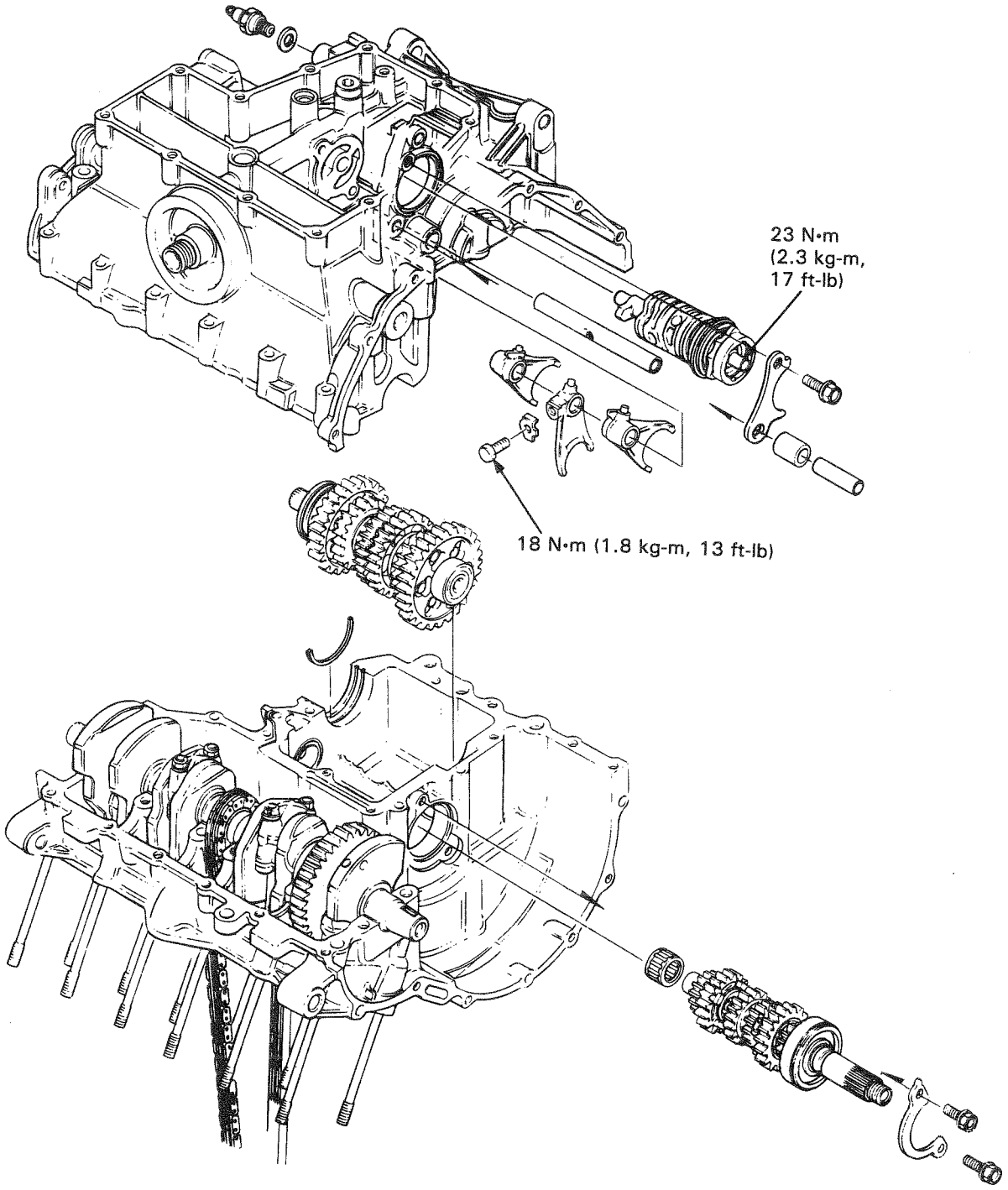
23 N•m
(2.3 kg-m,
17 ft-lb)
18 N•m (1.8 kg-m, 13 ft-lb)

SERVICE INFORMATION

GENERAL

- For crankcase separation, refer to section 10.

SPECIFICATIONS

Unit: mm (in)

ITEM				STANDARD	SERVICE LIMIT
Transmission	Backlash	1st–5th		0.044–0.133 (0.0017–0.0052)	0.30 (0.012)
		6th		0.068–0.136 (0.0027–0.0054)	0.18 (0.007)
	Gear I.D.	M5/M6		28.000–28.021 (1.1024–1.1032)	28.04 (1.104)
		C2/C3/C4		31.000–31.025 (1.2205–1.2215)	31.04 (1.222)
	Gear bushing O.D.	M5/M6		27.959–27.980 (1.1007–1.1016)	27.92 (1.099)
		C2/C3/C4		30.950–30.975 (1.2185–1.2195)	30.93 (1.218)
	Gear to bushing clearance	M5/M6		0.020–0.062 (0.0008–0.0024)	0.10 (0.0039)
		C2/C3/C4		0.025–0.070 (0.0010–0.0028)	0.11 (0.0043)
Shift fork/ Shift fork shaft	Shift fork	Claw thickness	L, R	5.43–5.50 (0.214–0.217)	5.10 (0.200)
			C	5.93–6.00 (0.233–0.236)	5.60 (0.220)
		I.D.		12.000–12.021 (0.4724–0.4733)	12.04 (0.474)
	Shift fork shaft O.D.			11.969–11.980 (0.4712–0.4717)	11.90 (0.469)

TORQUE VALUE

Shift drum center pin	23 N•m (2.3 kg-m, 17 ft-lb)
Center shift fork bolt	18 N•m (1.8 kg-m, 13 ft-lb)

TOOLS

Common

Driver B	07746–0020100
Attachment, 20 mm	07746–0020400
Driver C	07746–0030100
Attachment, 30 mm	07746–0030300

TROUBLESHOOTING

Hard to Shift
- Faulty clutch system (clutch drag)
- Bent shift fork
- Bent shift spindle
- Bent shift claw
- Sticking shift drum stopper
- Incorrect engine oil weight

Transmission Jumps out of Gear
- Gear dogs worn or damaged
- Bent shift shaft
- Shift drum stopper worn or sticking
- Worn shift forks
- Broken shift linkage return spring

TRANSMISSION DISASSEMBLY

BACKLASH INSPECTION

Separate the crankcase (Section 10).
Measure the backlash of each gear.

SERVICE LIMITS:
1st–5th: 0.30 mm (0.012 in)
6th : 0.18 mm (0.007 in)

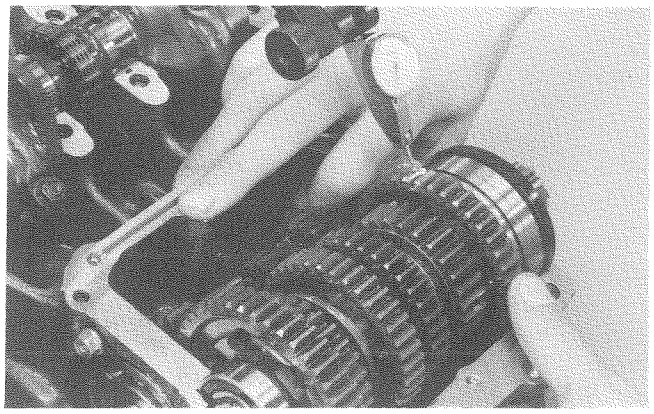

REMOVAL

Remove the countershaft and disassemble it.

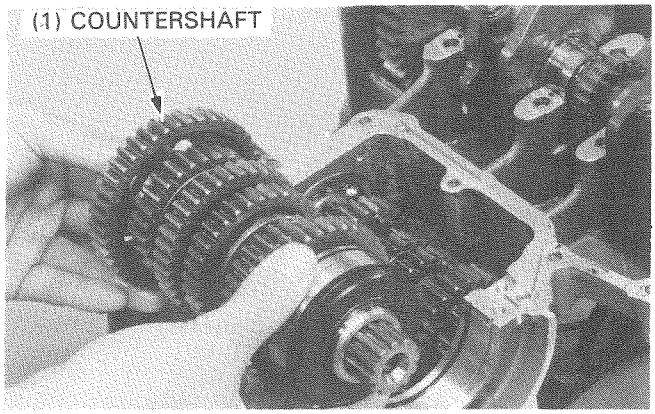

Remove the bolts and mainshaft setting plate.

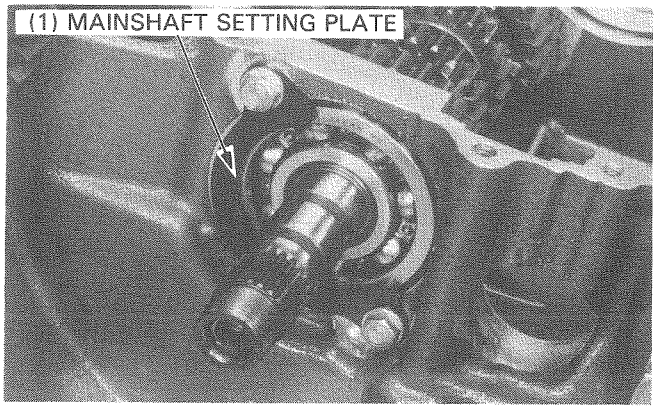

Remove the mainshaft and disassemble it.

Inspect the needle bearing of the mainshaft for damage or wear.

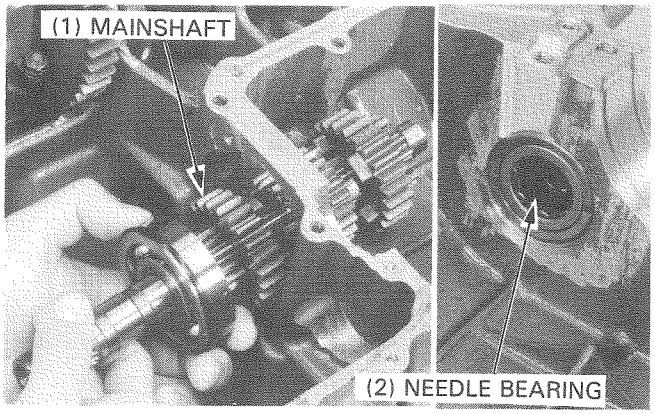

Bend down the lock washer tabs and remove the bolt and lock washer from the center shift fork.

Remove the shift fork shaft and shift forks.

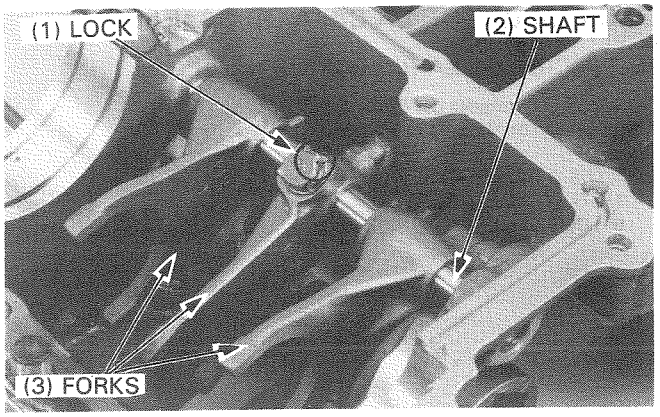

Remove the center pin, drum center and drum pin from the shift drum.

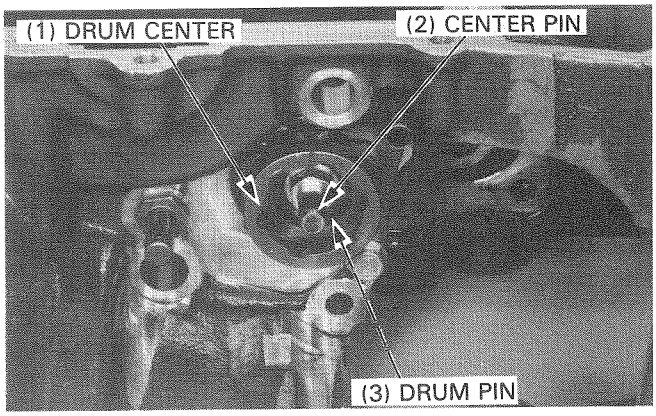

Inspect the journals of the shift fork shaft and shift drum for damage or wear.

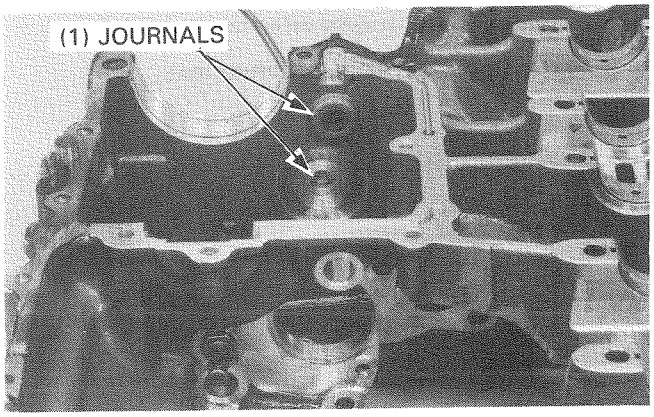

INSPECTION

Turn the inner and outer races of the bearing with your finger. The bearing should turn smoothly and quietly.

Inspect the shift drum end for scoring, or evidence of insufficient lubrication.
Check the shift drum grooves for damage.

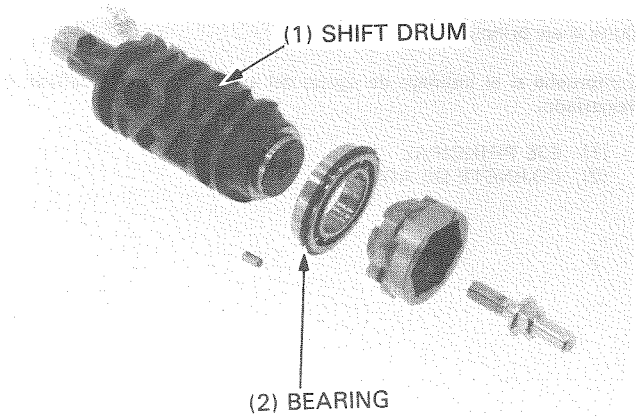

Measure the shift fork hole I.D.

SERVICE LIMIT: 12.04 mm (0.474 in)

Measure the shift fork claw thickness.

SERVICE LIMITS:
L, R: 5.10 mm (0.200 in)
C: 5.60 mm (0.220 in)

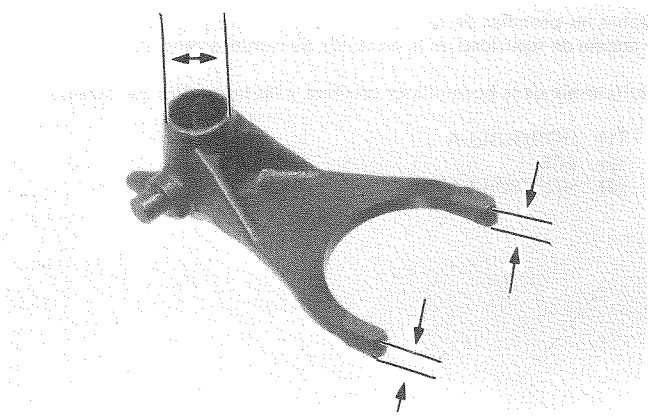

Check for scratches, scoring or evidence of insufficient lubrication.
Measure the shift fork shaft O.D. at the right and left shift fork surfaces.

SERVICE LIMIT: 11.90 mm (0.469 in)

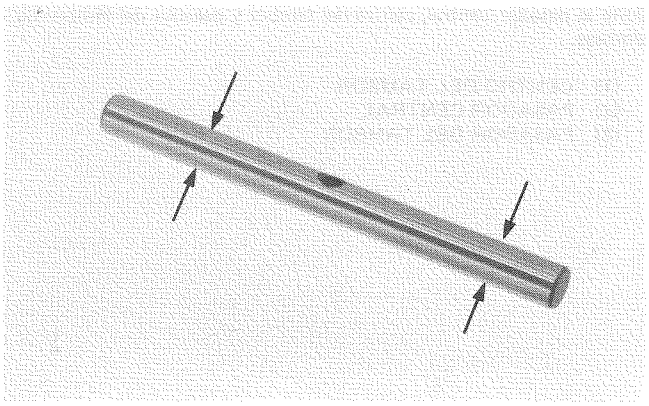

Check gear dogs, dog holes and gear teeth for excessive or abnormal wear, or evidence of insufficient lubrication.
Measure the I.D. of each gear.

SERVICE LIMITS:
M5, M6: 28.04 mm (1.104 in)
C2, C3, C4: 31.04 mm (1.222 in)

Measure the O.D. of the gear bushings.

SERVICE LIMITS:
M5, M6: 27.92 mm (1.099 in)
C2, C3, C4: 30.93 mm (1.218 in)

Calculate the clearance between the gear bushings and the gears.

SERVICE LIMITS:
M5, M6: 0.10 mm (0.0039 in)
C2, C3, C4: 0.11 mm (0.0043 in)

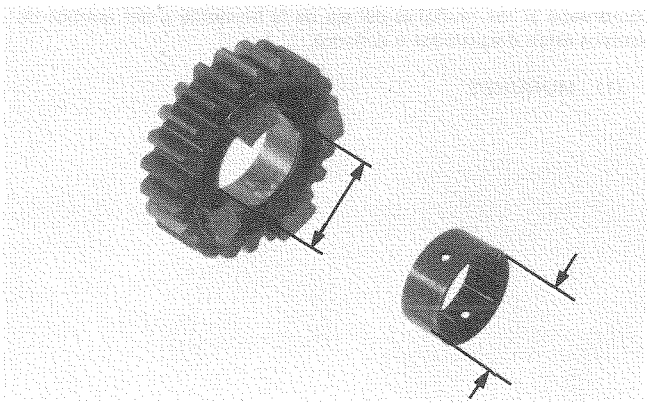

Check shaft splines for excessive or abnormal wear or evidence of insufficient lubrication.

Turn the outer race of the each bearing with your finger. The bearings should turn smoothly and quietly. Also check that the inner race of the each bearing fits tightly on the shaft.
For the replacement of the bearings, see page 12-5.

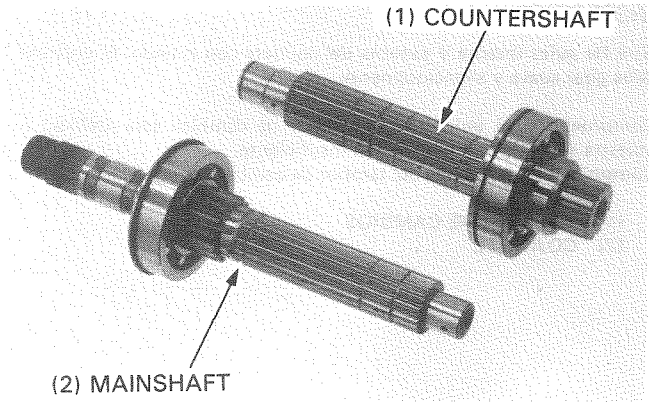

BEARING REPLACEMENT

Press the bearings off of the mainshaft or countershaft with the special tools.
Press the bearings into the mainshaft or countershaft with the special tools.

TOOL:

Mainshaft bearing	
Driver B	**07746–0020100**
Attachment, 20 mm	**07746–0020400**
Countershaft bearing	
Driver C	**07746–0030100**
Attachment, 30 mm	**07746–0030300**

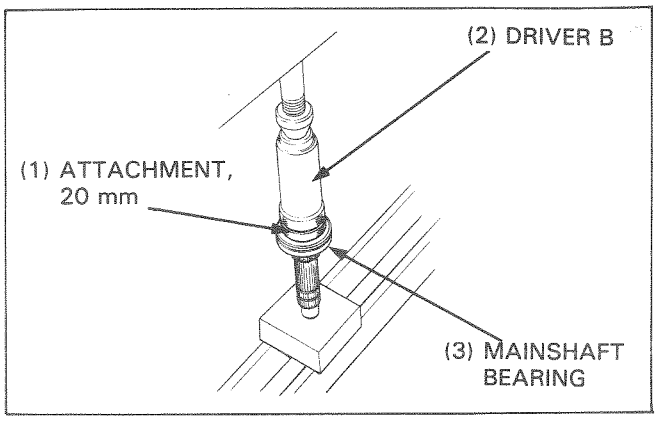

TRANSMISSION ASSEMBLY

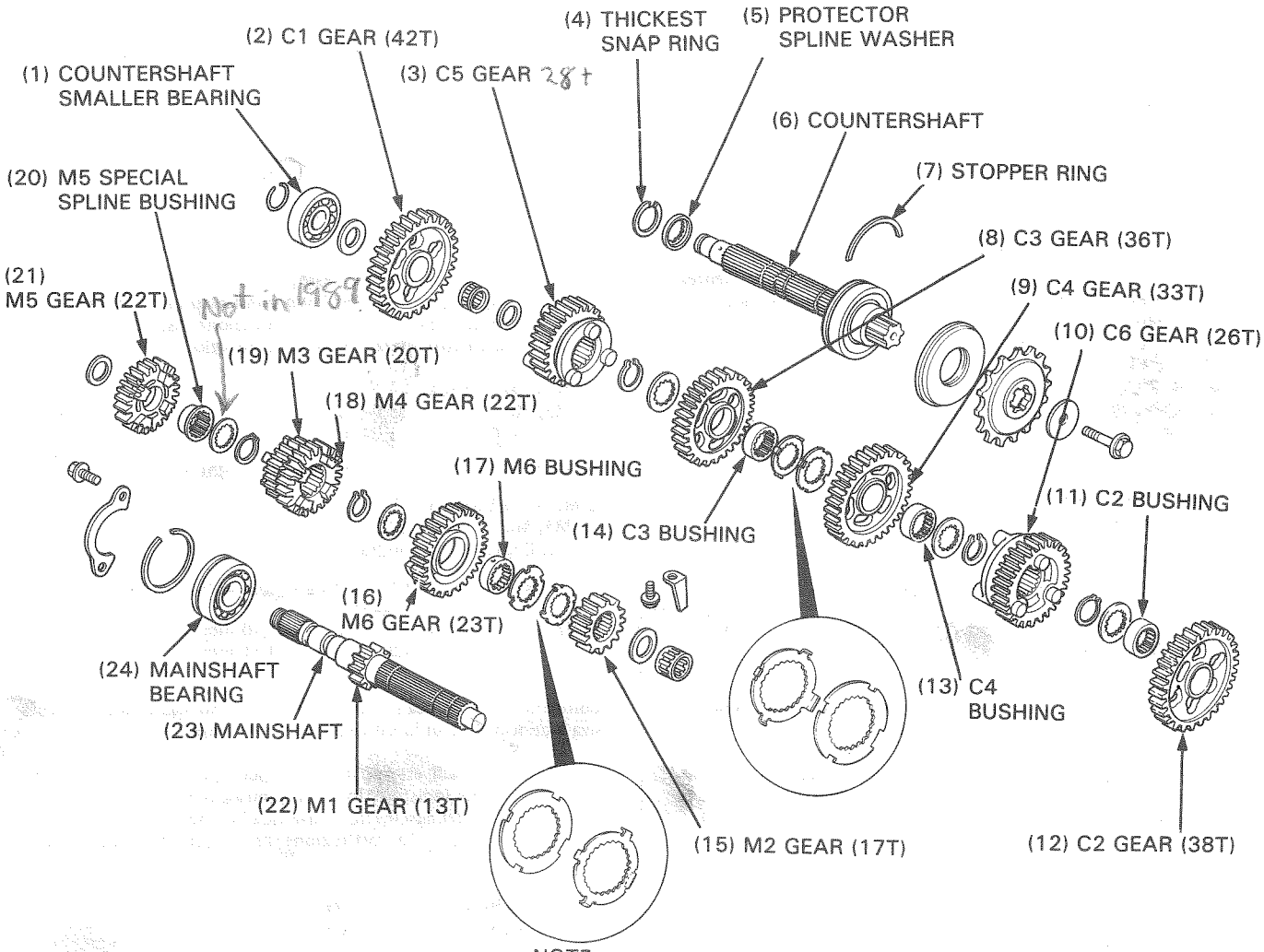

NOTE

- Align the bigger groove of the stopper washer with bigger tab of the lock washer (M6 & M4 gears).

Apply MoS_2 grease (page 2-13) to the shift fork journals of the M3/M4, C5 and C6 gears.

Clean all parts in solvent and dip them in clean engine oil.

CAUTION

- *Align the oil holes in the bushings and gears with the oil holes in the shaft.*

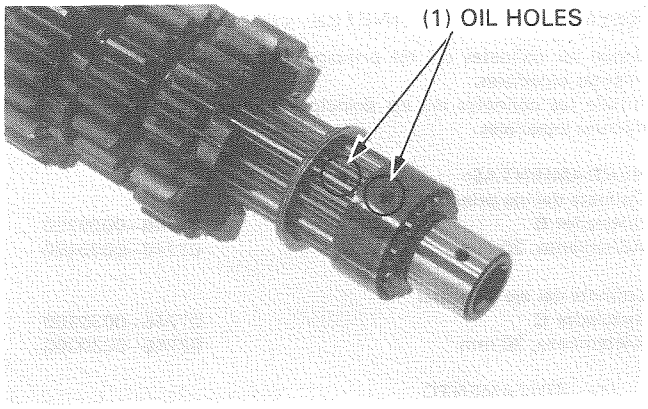

NOTE

- Install the thickest snap ring and protector spline washer to the countershaft bearing as illustrated.
- Align the bigger groove of the stopper washer with bigger tab of the lock washer (M6 & C4 gears).
- Install the countershaft smaller bearing with the sealed end facing out.
- Lock the M5 gear securely with the M5 spline bushing.

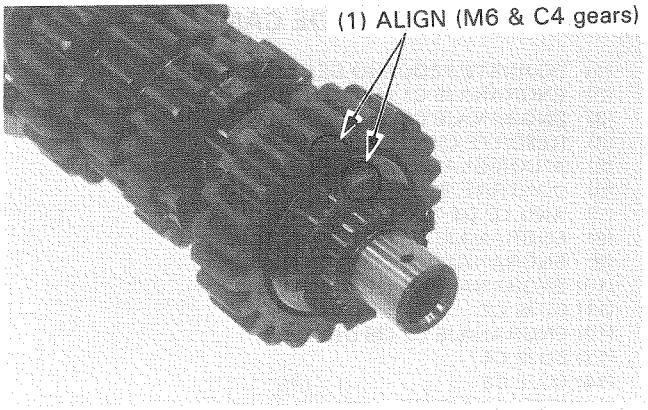

Install the mainshaft.

NOTE

- Install the stopper rings to the mainshaft bearing.

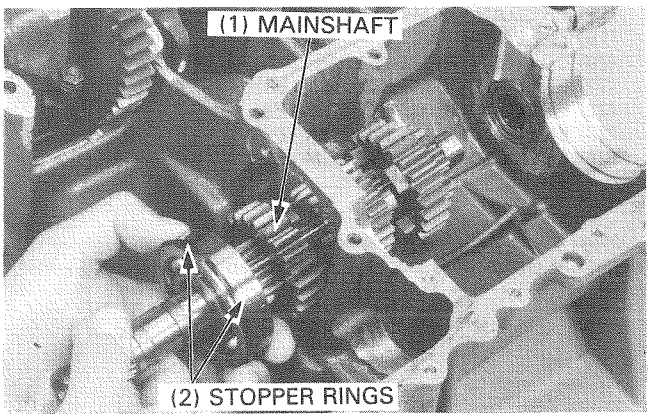

Apply locking agent to the mainshaft setting plate bolts.

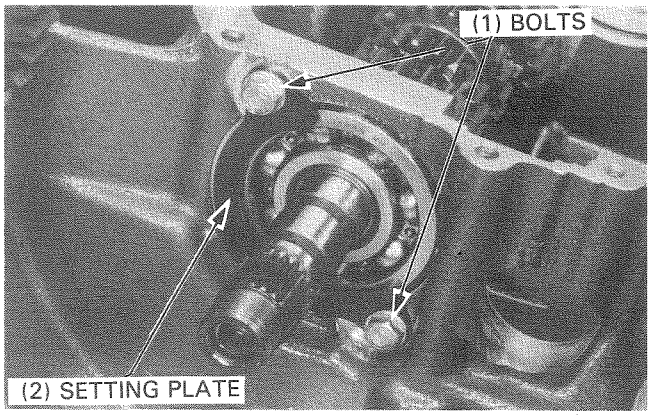

Install the stopper ring onto the upper crankcase.

Install the countershaft assembly onto the upper crankcase.

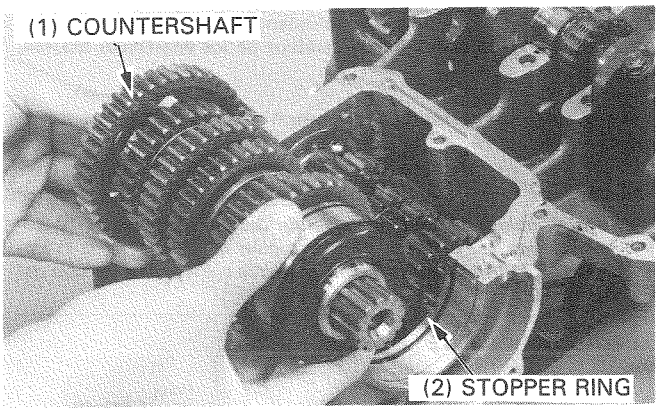

Install the drum pin in the shift drum.
Apply locking agent to the center pin threads and install the drum center and center pin in the shift drum.
Tighten the center pin.

TORQUE: 23 N·m (2.3 kg-m, 17 ft-lb)

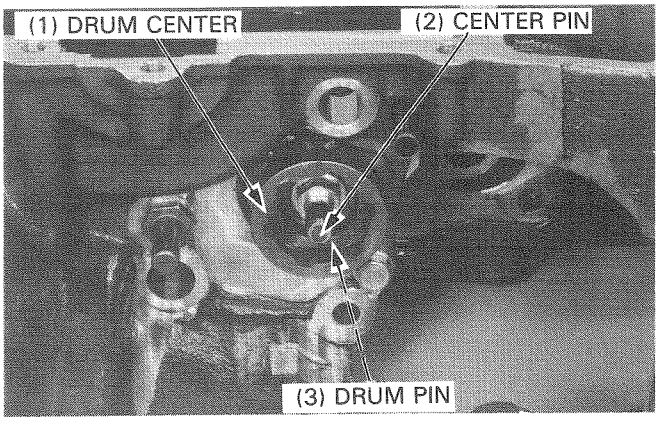

Install the shift forks and shift fork shaft.

NOTE

- Install the shift forks with the marked side facing to the clutch.

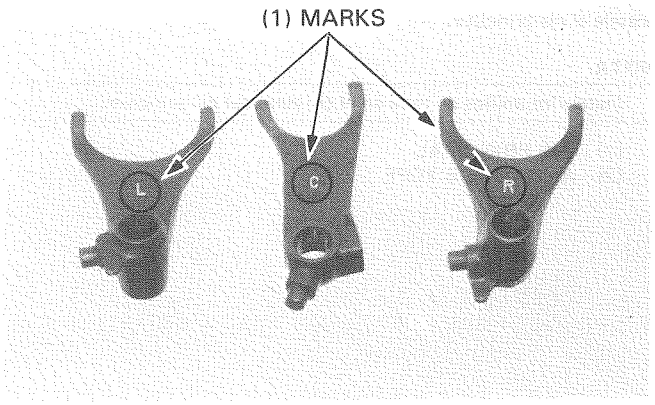

Install a new lock washer and bolt securely, aligning the holes of the shaft and center fork.

TORQUE: 18 N·m (1.8 kg-m, 13 ft-lb) Not 1989

Bend up the tabs of the lock washer.

Assemble the crankcase (Section 10).

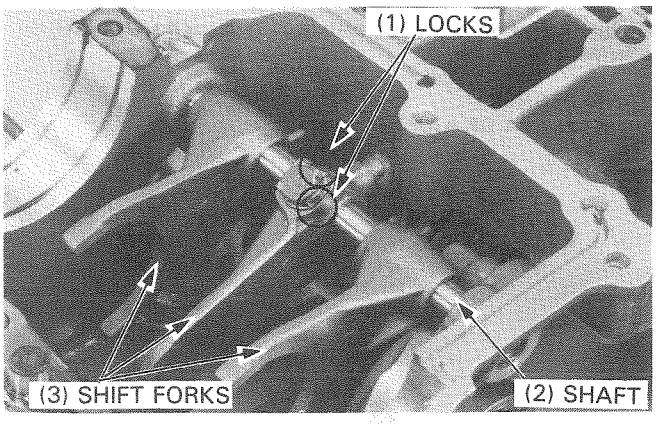

MEMO

FAIRING/GEAR FENDER/ MUFFLER

CARENADO/ ALETA TRASERA/ SILENCIADOR

CARENATURA/ PARAFANGO POSTERIORE E SILENZIATORE

SERVICE INFORMATION

GENERAL

WARNING

- *Do not service the exhaust system while it is hot.*

TORQUE VALUES

Windshield mounting screw	1.5 N•m (0.15 kg-m,1.1 ft-lb)
Exhaust pipe joint nut	12 N•m (1.2 kg-m,9 ft-lb)
Muffler band bolt	27 N•m (2.7 kg-m,20 ft-lb)
Muffler stay bolt	27 N•m (2.7 kg-m,20 ft-lb)
Rear grip bolt	27 N•m (2.7 kg-m,20 ft-lb)

FAIRING

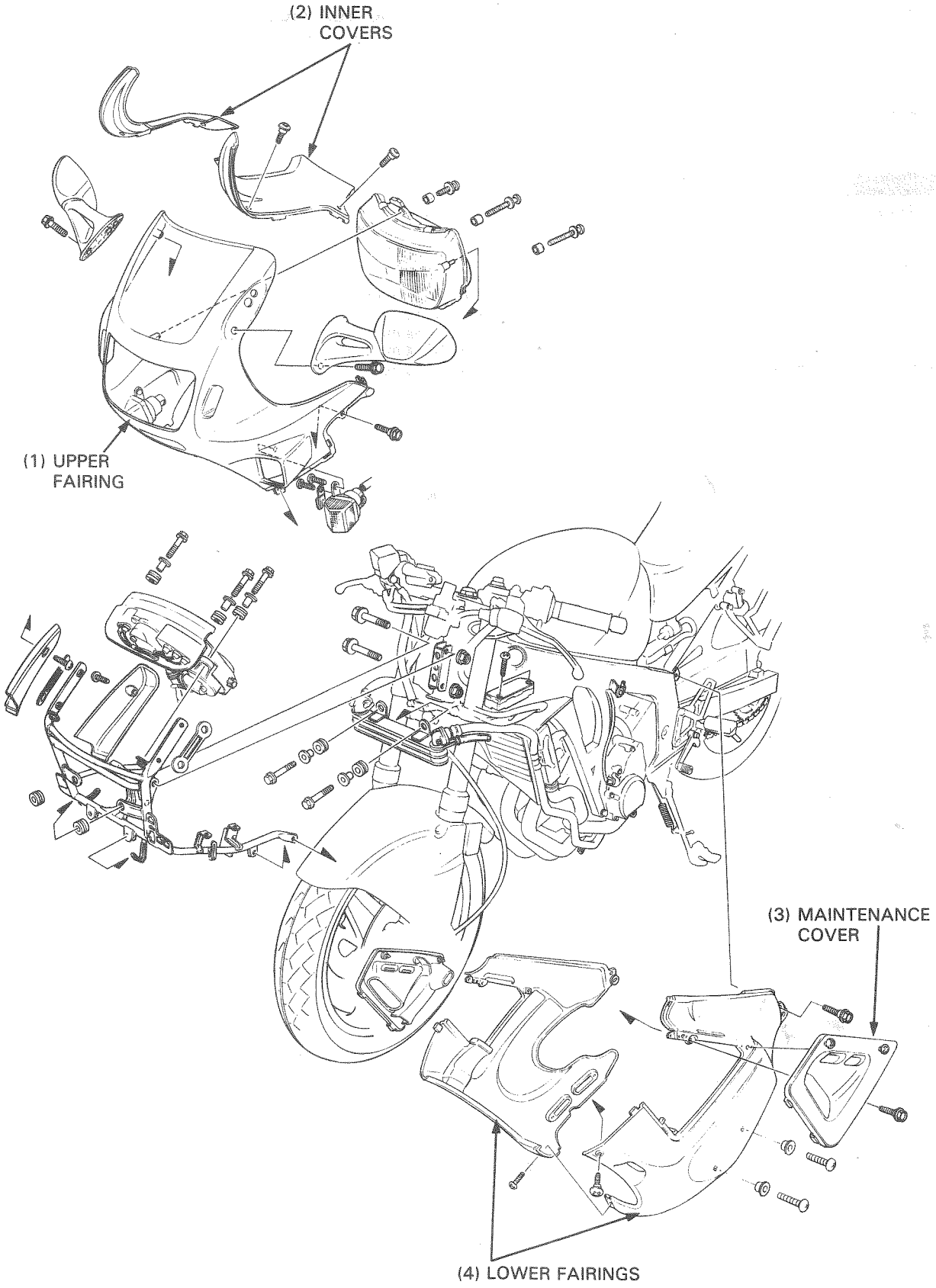
(2) INNER COVERS
(1) UPPER FAIRING
(3) MAINTENANCE COVER
(4) LOWER FAIRINGS

SIDE COVER

Turn the seat holder 90° and release it.
Release the three bosses from each grommet and remove the seat.

Remove the side covers.

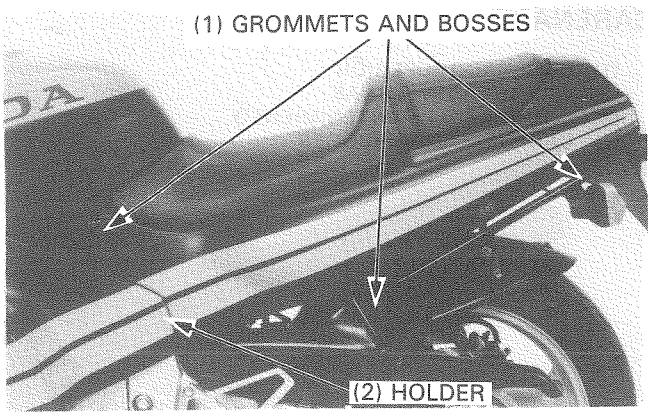

Install the side covers in the reverse order of removal.

Turn the seat holder 90° and lock the side cover.

NOTE

- Align each boss and grommet.
- Align the tab of the seat cowling with the groove of the seat securely.
- Do not damage the seat bosses.

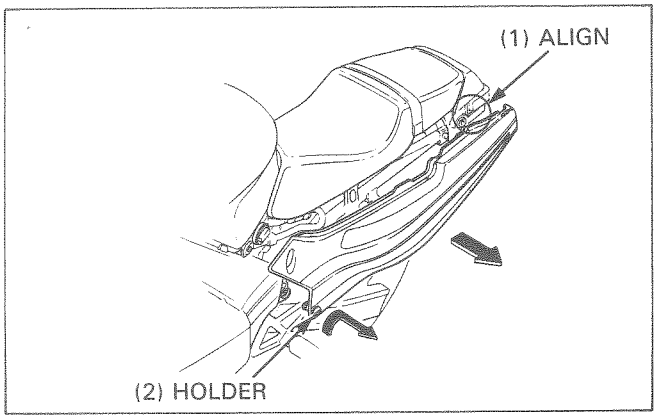

SEAT COWLING

Remove the side covers and seat.
Remove the two bolts and seat cowling.

Install the seat cowling in the reverse order of removal.

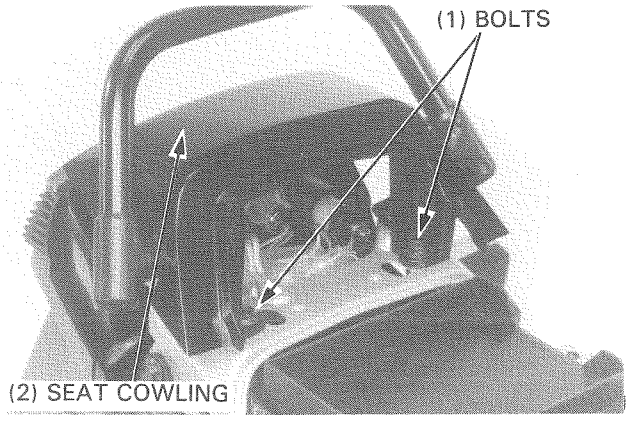

MAINTENANCE COVER

Unlock the two screws of the maintenance cover.
Remove the maintenance cover backward.

Install the maintenance cover in the reverse order of removal.

NOTE

- Align the tabs of the maintenance cover with the grooves of the upper and lower fairing securely.

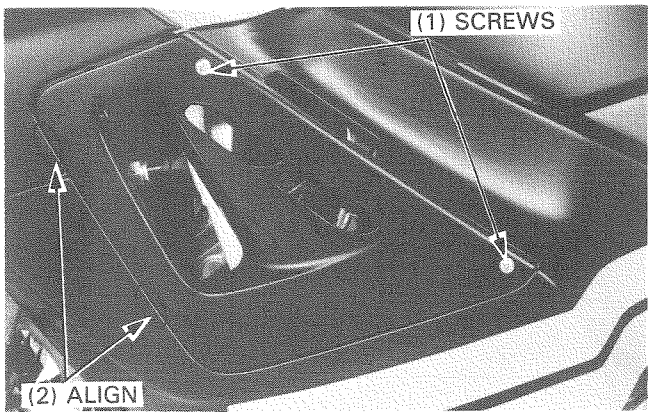

LOWER FAIRING

Remove the side cover (page 13-3).
Remove four bolts and two screws.
Release the boss from the frame grommet and remove the lower fairing backward.

Install the lower fairing in the reverse order of removal.

NOTE

- Align each tab and groove.
- Do not damage the boss.

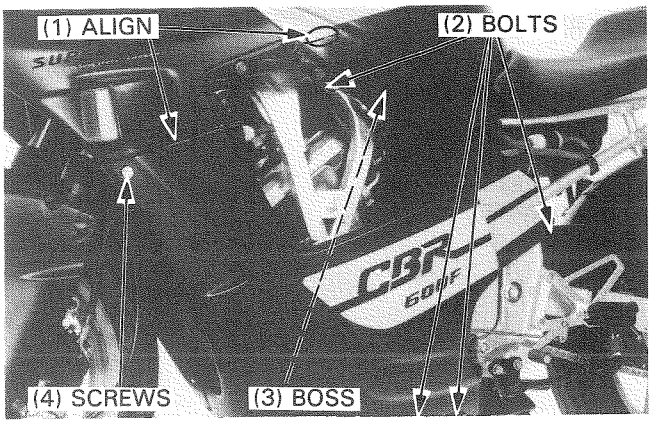

WINDSHIELD

Remove the two screws and windshield holders.
Remove the two screws, two collars and two nuts, and remove the windshield from the upper fairing.

Install the windshield in the reverse order of removal.

TORQUE: 1.5 N·m (0.15 kg-m, 1.1 ft-lb)

NOTE

- The windshieid can be removed without removing the upper fairing.

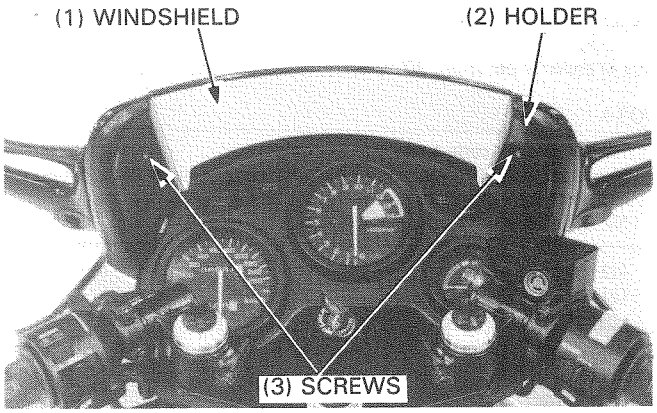

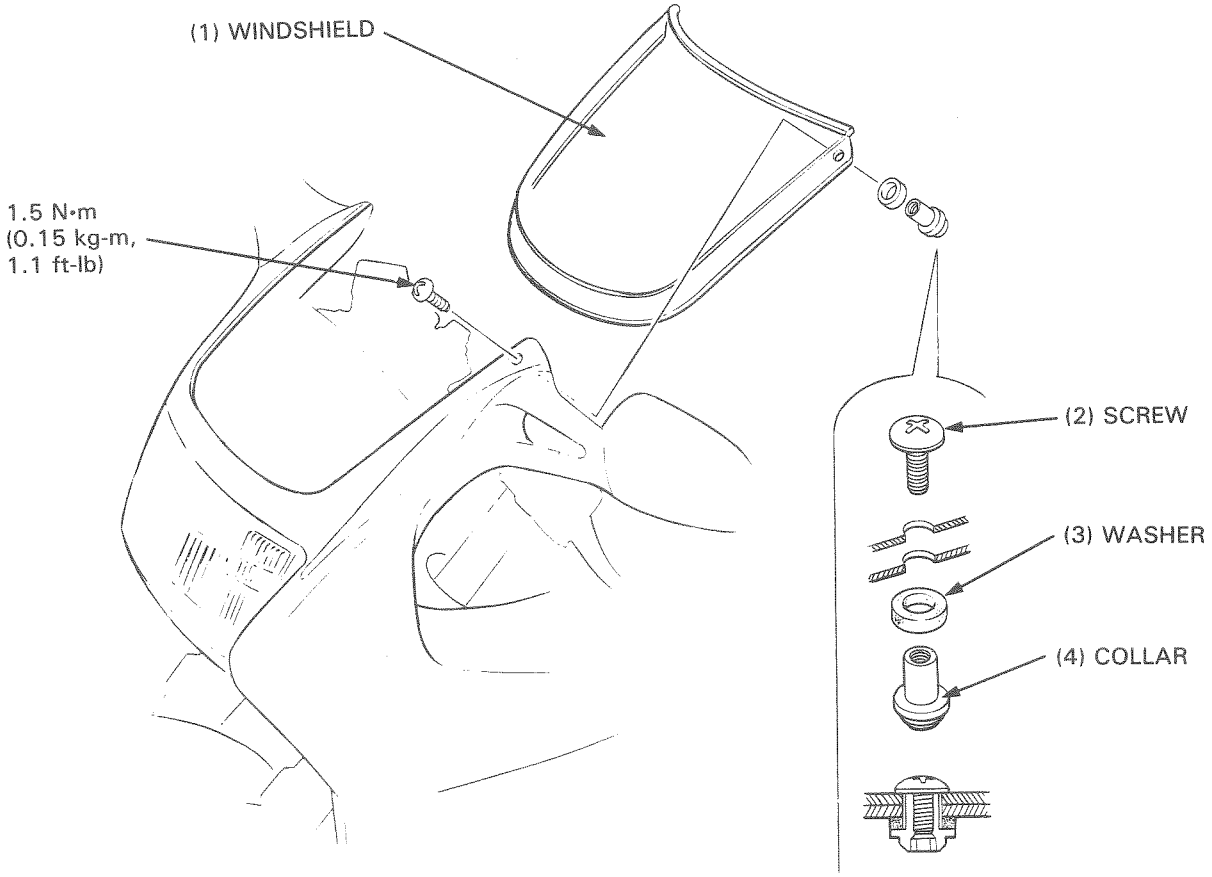

INNER COVER

Remove the two screws and inner cover.

Install the inner cover in the reverse order of removal.

NOTE

- Align the tabs of the inner cover with the grooves of the upper and lower fairings.

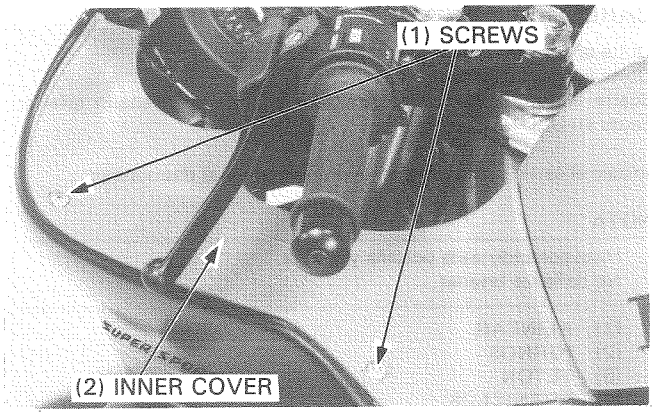

UPPER FAIRING

Remove the lower fairings and inner covers (page 13-4,5).
Disconnect the turn signal wire connector (each side).

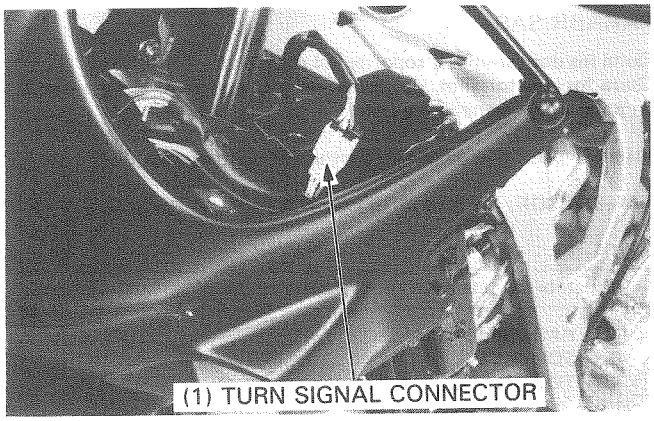

Remove the rear view mirrors.
Remove the two bolts and upper fairing.
Remove the headlight case (page 20-3).
Remove the windshield (page 13-4).

Install the upper fairing in the reverse order of removal.

NOTE

- Align the studs of the headlight case with the holes of the fairing stay.

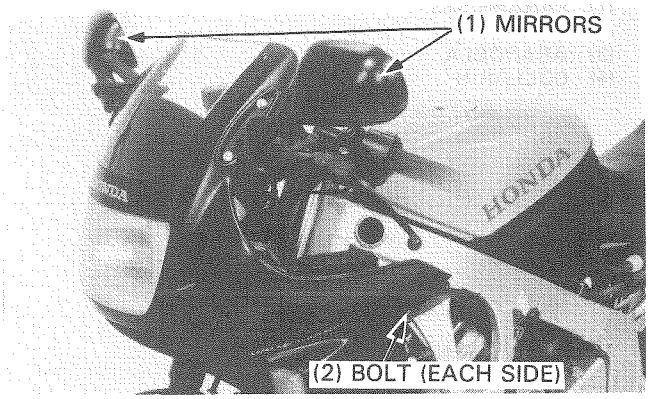

REAR FENDER

REAR FENDER B

Remove the side covers (page 13-3).
Remove the rear fender B mounting bolts (each side).

Remove the rear grip (only left side).

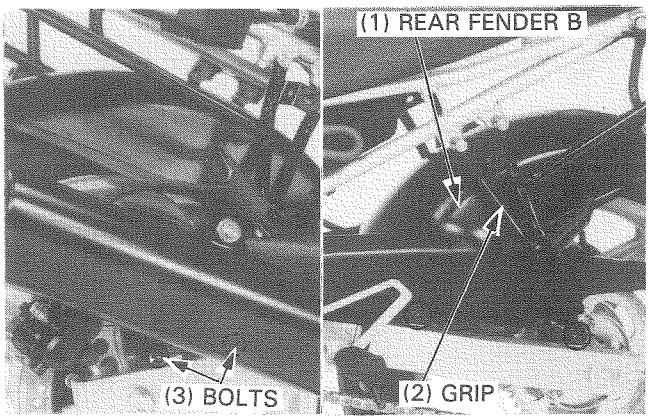

Remove the rear fender B backward to the left.

Install the rear fender B in the reverse order of removal.

TORQUE:
Rear grip bolt: **27 N•m (2.7 kg-m, 20 ft-lb)**

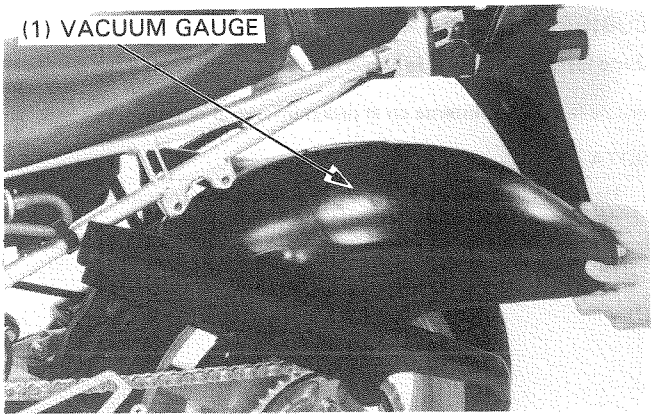

REAR FENDER A

Remove the seat cowling (page 13-3).
Remove the taillight assembly, spark unit and seat cowling stay.
Remove the rear fender A mounting bolts and rear fender A.

Install the rear fender A in the reverse order of removal.

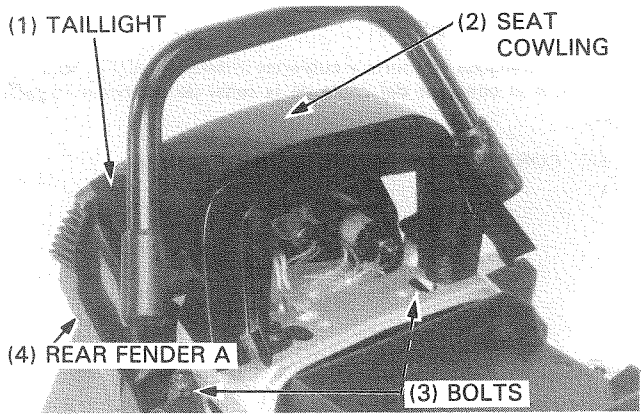

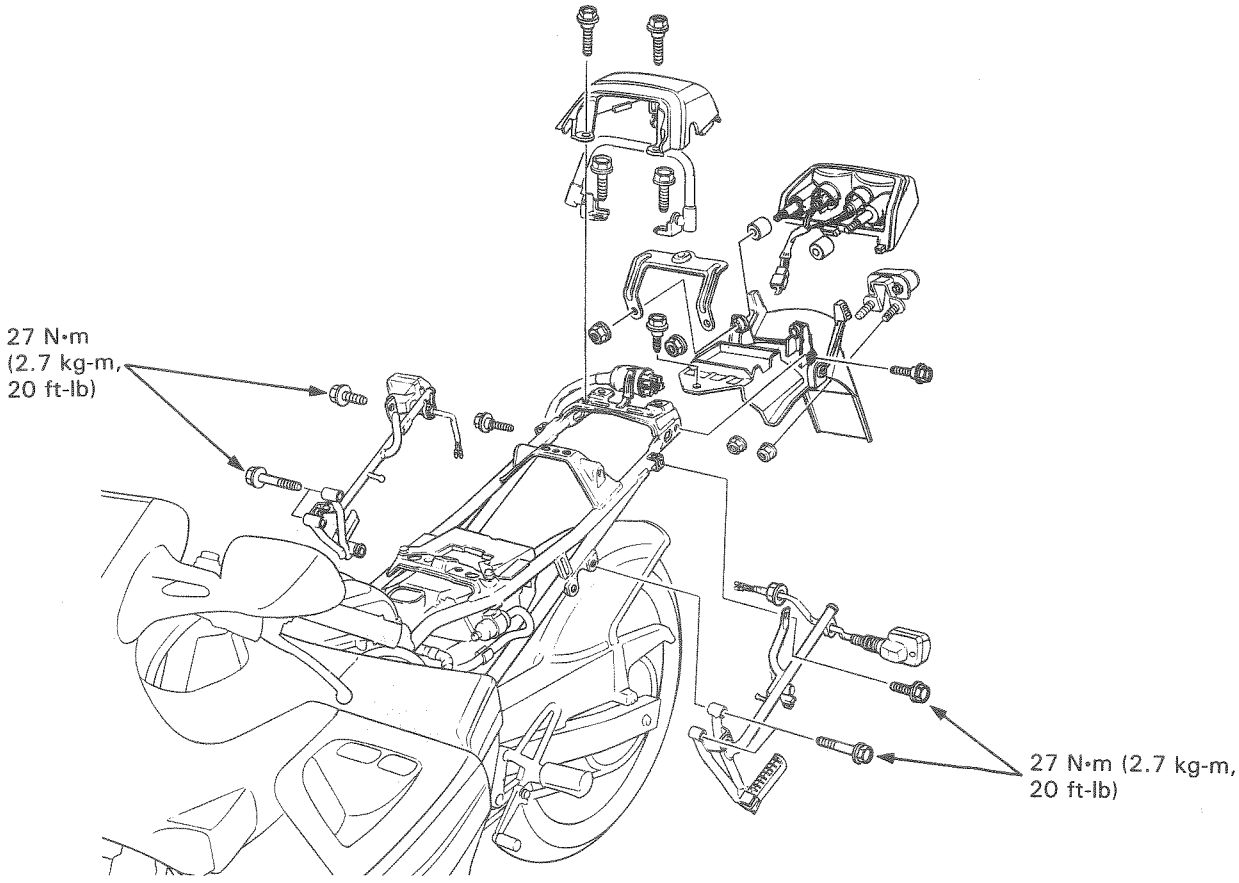

EXHAUST PIPE/MUFFLER

WARNING

- *Do not service the exhaust system while it is hot.*

Remove the side covers (page 13-3).
Remove the lower fairings (page 13-4).

Remove the exhaust pipe by removing the joint nuts, mounting bolt and muffler band bolts.

Install the exhaust pipe in the reverse order of removal.

TORQUE:

exhaust pipe joint nut:	**12 N·m (1.2 kg-m, 9 ft-lb)**
muffler band bolt:	**27 N·m (2.7 kg-m, 20 ft-lb)**

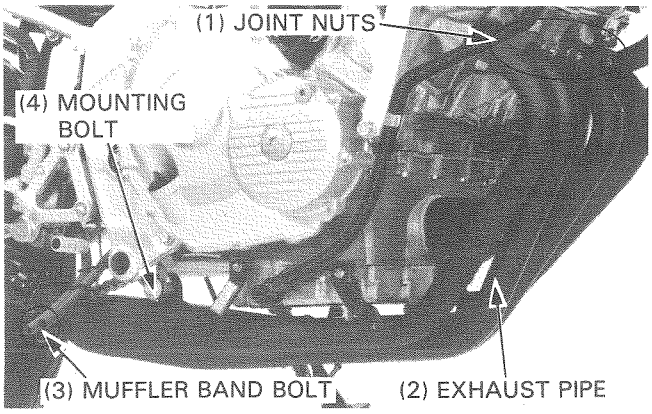

Remove the muffler by removing the muffler stay bolt and muffler band bolts.

Install the muffler in the reverse order of removal.

TORQUE:

muffler band bolt:	**27 N·m (2.7 kg-m, 20 ft-lb)**
muffler stay bolt:	**27 N·m (2.7 kg-m, 20 ft-lb)**

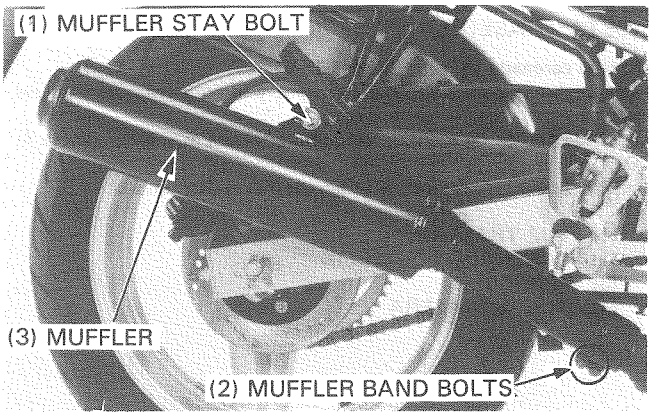

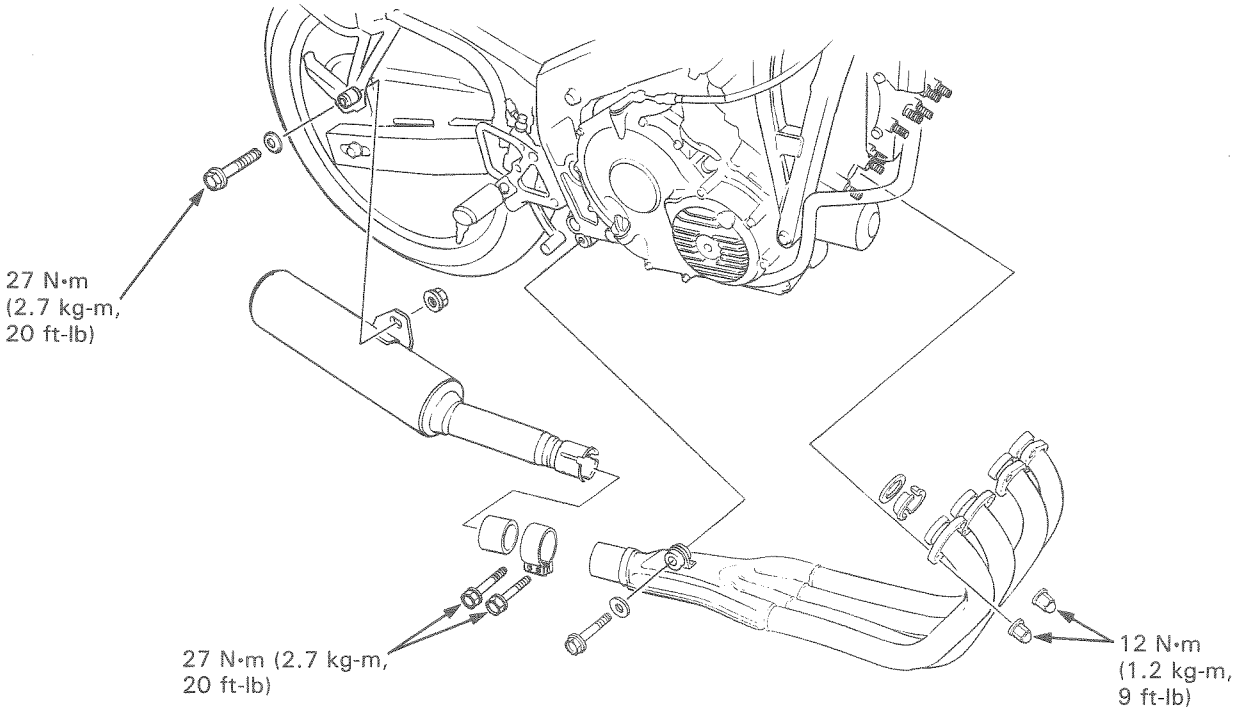

FRONT WHEEL/ SUSPENSION/STEERING

RUEDA DELANTERA/ SUSPENSION/ DIRECCION

RUOTA E SOSPENSIONI ANTERIORI E STERZO

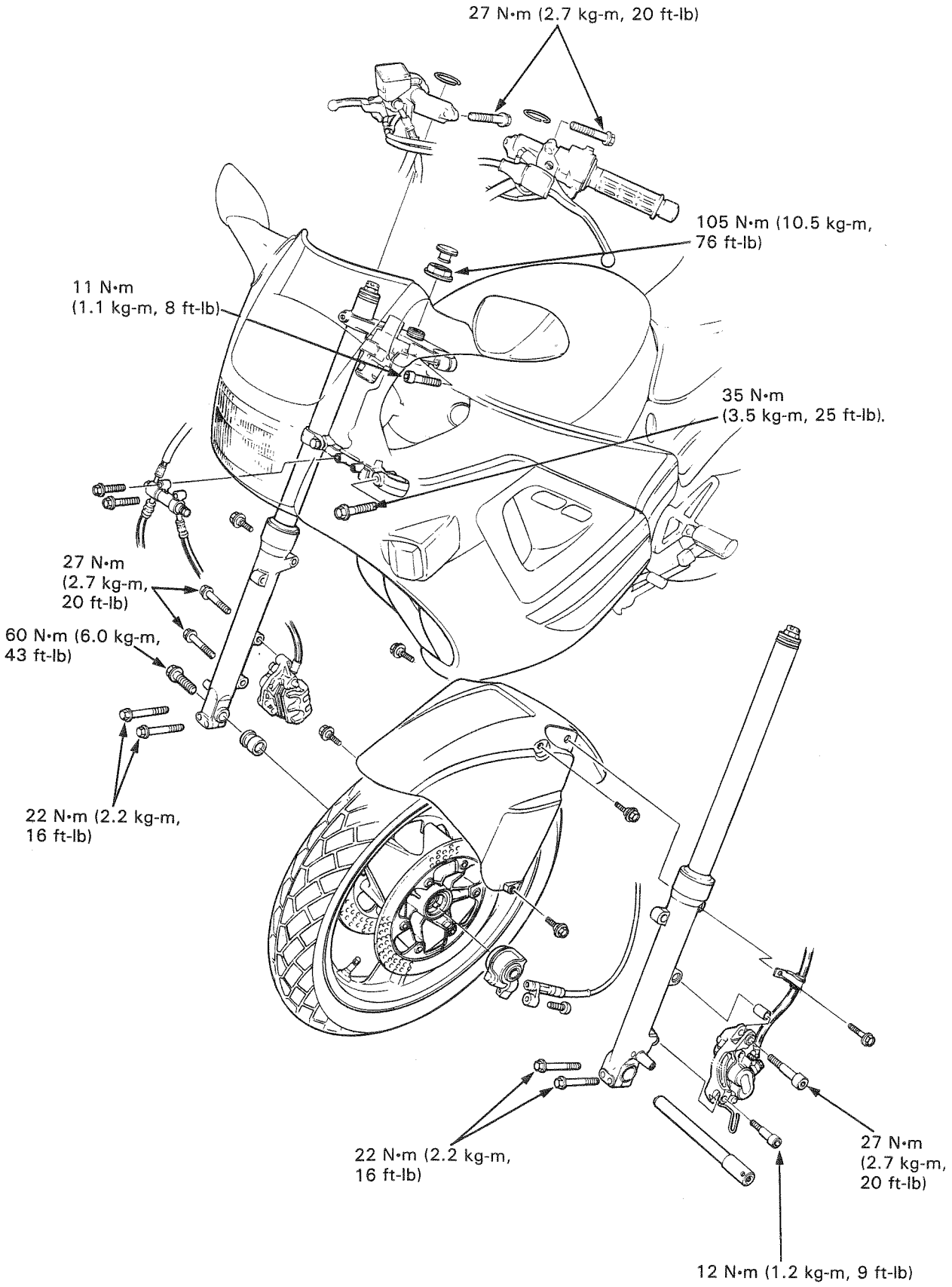
27 N•m (2.7 kg-m, 20 ft-lb)
105 N•m (10.5 kg-m, 76 ft-lb)
11 N•m (1.1 kg-m, 8 ft-lb)
35 N•m (3.5 kg-m, 25 ft-lb).
27 N•m (2.7 kg-m, 20 ft-lb)
60 N•m (6.0 kg-m, 43 ft-lb)
22 N•m (2.2 kg-m, 16 ft-lb)
22 N•m (2.2 kg-m, 16 ft-lb)
27 N•m (2.7 kg-m, 20 ft-lb)
12 N•m (1.2 kg-m, 9 ft-lb)

SERVICE INFORMATION

GENERAL

WARNING

- *A contaminated brake disc or pad reduces stopping power. Discard contaminated pads and clean a contaminated disc with a high quality brake degreasing agent.*

- A jack or other support is required to support the front of the motorcycle when you are working on the front wheel or fork.
- The front wheel uses a tubeless tire. For tubeless tire repairs, refer to the TUBELESS TIRE MANUAL.

SPECIFICATIONS

Unit: mm (in)

ITEM		STANDARD	SERVICE LIMIT
Axle shaft runout		—	0.2 (0.01)
Front wheel rim runout	Radial	—	2.0 (0.08)
	Axial	—	2.0 (0.08)
Fork spring free length		397.3 (15.64)	389.3 (15.33)
Fork tube runout		—	0.20 (0.008)
Fork oil capacity	Right	361 cm^3 (12.2 US oz, 12.7 Imp oz)	—
	Left	371 cm^3 (12.5 US oz, 13.0 Imp oz)	—
Fork oil level		120 mm (4.7 in)	—
Fork air pressure		0–40 kPa (0–0.4 kg/cm^2, 0–6 psi)	—

TORQUE VALUES

Handlebar pinch bolt		27 N·m (2.7 kg-m, 20 ft-lb)
Brake disc socket bolt		40 N·m (4.0 kg-m, 29 ft-lb)
Front axle pinch bolt		22 N·m (2.2 kg-m, 16 ft-lb)
Front axle bolt		60 N·m (6.0 kg-m, 43 ft-lb)
Front caliper bracket bolt		27 N·m (2.7 kg-m, 20 ft-lb)
Fork slider socket bolt		20 N·m (2.0 kg-m, 14 ft-lb) Apply locking agent.
Fork leg pinch bolt	(top)	11 N·m (1.1 kg-m, 8 ft-lb)
	(bottom)	35 N·m (3.5 kg-m, 25 ft-lb)
Fork tube cap		22 N·m (2.2 kg-m, 16 ft-lb)
Steering bearing adjustment nut		22 N·m (2.2 kg-m, 16 ft-lb)
Steering stem nut		105 N·m (10.5 kg-m, 76 ft-lb)
Left handlebar bracket holder bolt		9 N·m (0.9 kg-m, 7 ft-lb)

TOOLS

Special

Steering stem socket	07916–3710100
Snap ring pliers	07914–3230001
Steering stem driver	07946–MB00000
Ball race remover	07953–MA00000
Ball race remover attachment	07946–3710500

Common

Lock nut wrench, 30 x 32 mm	07716–0020400
Extension bar	07716–0020500
Driver	07749–0010000
Attachment, 42 x 47 mm	07746–0010300
Pilot, 20 mm	07746–0040500
Fork seal driver	07747–0010100
Fork seal driver attachment	07747–0010600
Bearing remover shaft	07746–0050100
Bearing remover head, 20 mm	07746–0050600
Attachment, 52 x 55 mm	07746–0010400

TROUBLESHOOTING

Hard steering
- Steering bearing adjustment nut too tight
- Faulty steering stem bearings
- Damaged steering stem bearings
- Insufficient tire pressure

Steers to one side or does not track straight
- Bent fork legs
- Bent front axle
- Wheel installed incorrectly

Front wheel wobbling
- Bent rim
- Worn front wheel bearings
- Faulty tire
- Axle nut tightened improperly

Soft suspension
- Weak fork springs
- Insufficient fluid in fork legs
- Fork air pressure incorrect

Hard suspension
- Incorrect fluid weight in fork legs
- Fork air pressure incorrect
- Bent fork tubes
- Clogged fluid passage
- Clogged anti-dive orifice

Front suspension noise
- Worn slider or guide bushings
- Insufficient fluid in fork legs
- Loose fork leg fasteners

HANDLEBARS

REMOVAL

Remove the following components:
- handlebar weights.
- handlebar switches.
- throttle grip.
- master cylinder.

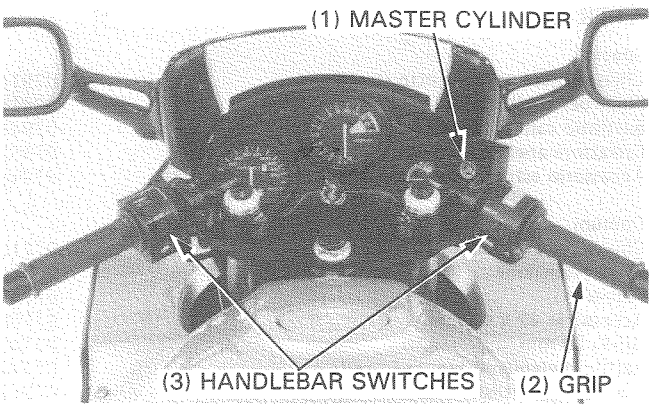

CAUTION

- *Suspend the master cylinder, with a suitable wire, at least as high as originally installed so as to prevent air from getting into the brake fluid.*

Remove the handlebar weight, grip and choke lever.

Remove the left handlebar retainer ring and loosen the left handlebar pinch bolt.

Remove the left handlebar from the fork tube.

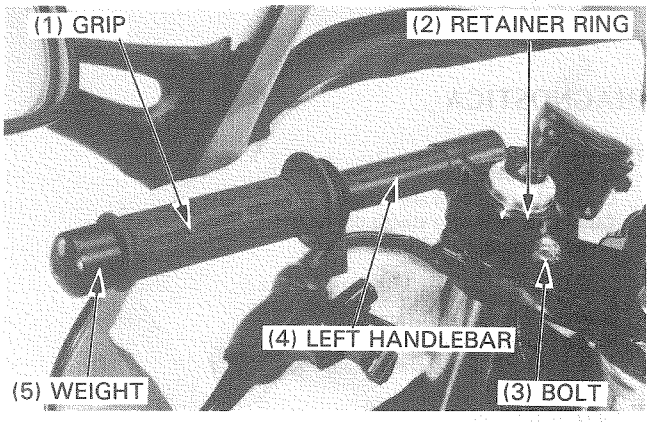

Remove the right handlebar retainer ring and loosen the handlebar pinch bolt.
Remove the right handlebar from the fork tube.

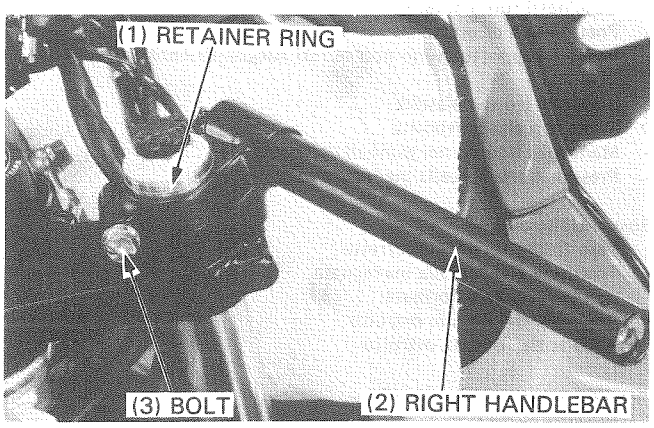

INSTALLATION

Install the left handlebar onto the fork tube, aligning the pin on the bottom of the handlebar holder with the cut-out in the top bridge.

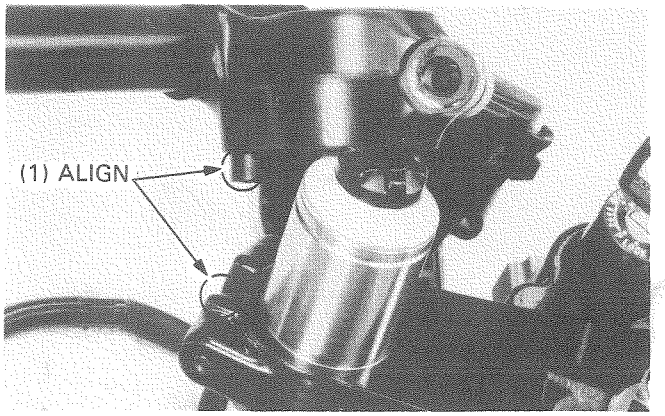

Install the retainer ring and tighten the handlebar pinch bolt.

TORQUE: 27 N•m (2.7kg-m, 20 ft-lb)

Install the choke lever to the left handlebar.

Apply Honda bond A to the inside surface of the grips and to the clean surface of the left handlebar and throttle pipe. Wait 3—5 minutes and install the grips.
Rotate the grips for even application of the adhesive.

NOTE

- Allow the adhesive to dry for an hour before using.

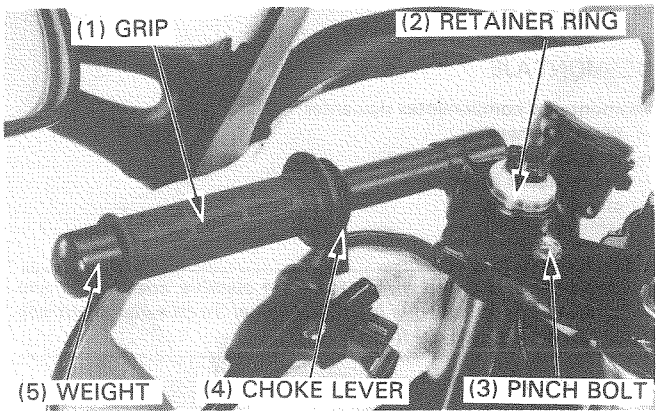

Install the right handlebar grip and handle weight to the handlebars.

Connect the choke cable to the choke lever.
Install the left handlebar switch by aligning the locating pin with the hole in the handlebar.

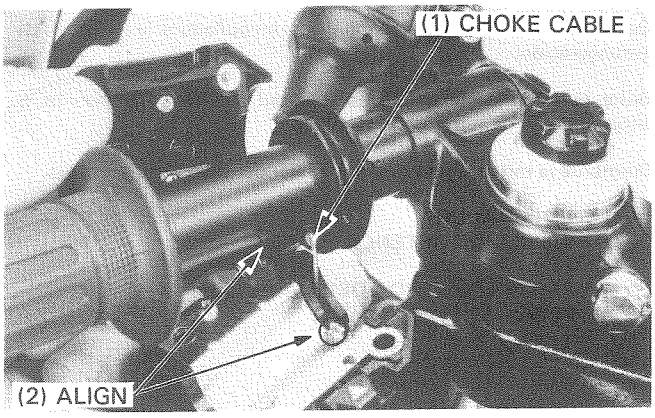

Tighten the front screw first, then tighten the rear screw.

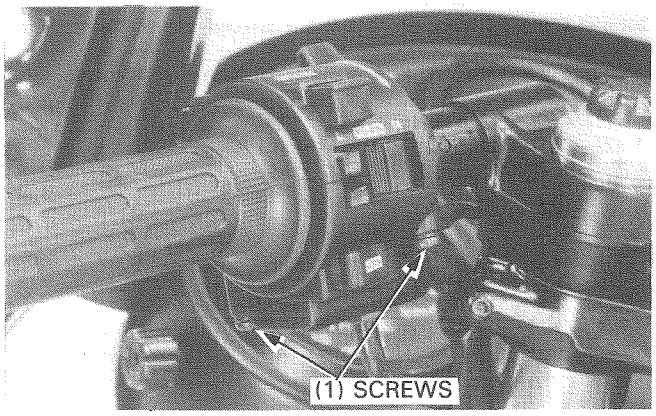

Install the left handlebar bracket and holder, and tighten the holder bolts.

TORQUE: 9 N•m (0.9 kg-m, 7 ft-lb)

NOTE

- Install the holder with the "UP" mark facing up.
- Align the end of the holder with the punch mark on the handlebar.
- Tighten the upper bolt first, then tighten the lower bolt.

Connect the clutch switch wires.

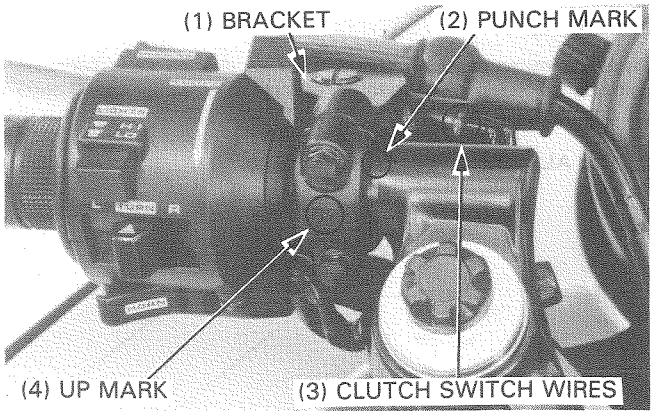

Install the right handlebar onto the fork tube, aligning the pin on the bottom of the handlebar holder with the cut-out in the top bridge.

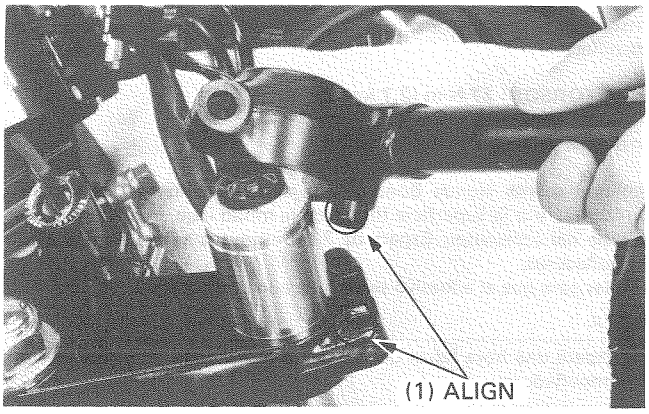

Install the retainer ring and tighten the handlebar pinch bolt.

TORQUE: 27 N·m (2.7 kg-m, 20 ft-lb)

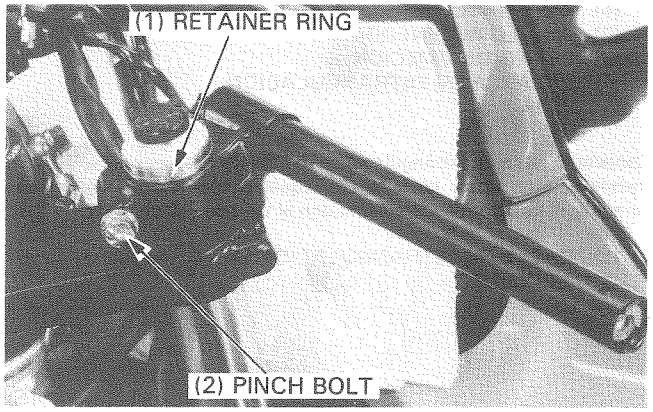

Apply oil to the throttle pipe sliding surface and slide the throttle pipe over the right handlebar.

For replacement of the grip, see page 14-4.

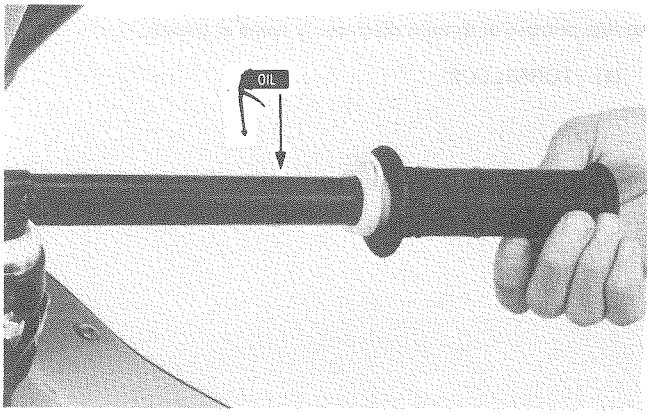

Install the handlebar weight.

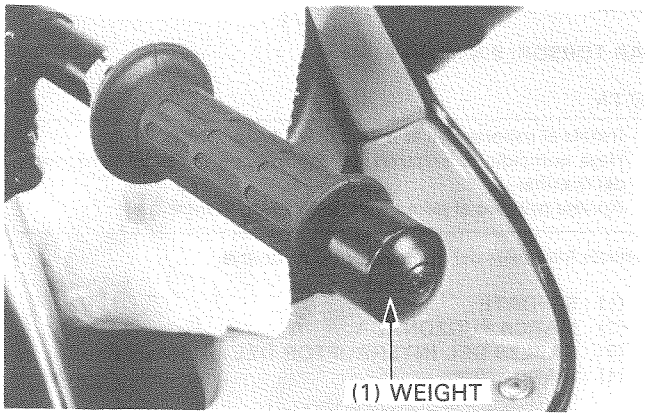

Align the locating pin on the right handlebar switch with the hole in the handlebar.

Apply grease to the throttle cable ends and connect the throttle cables to the throttle pipe.

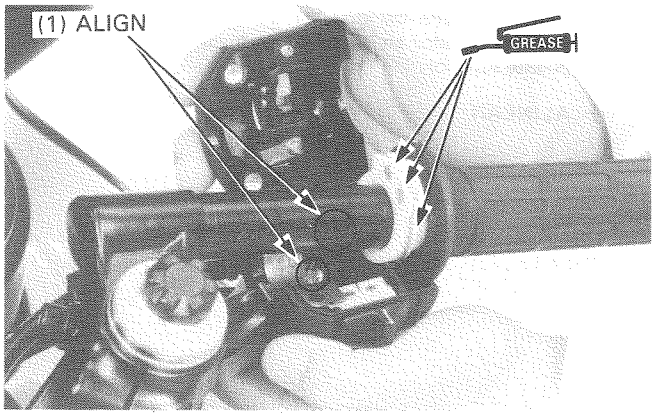

Install the right handlebar switch mounting screws.
Tighten the front screw first, then tighten the rear screw.

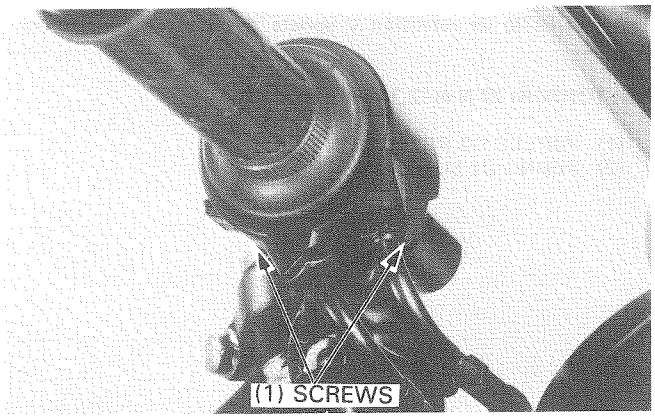

Place the front brake master cylinder on the handlebar and install the master cylinder holder with the "UP" mark facing up.

Align the end of the holder with the punch mark on the handlebar. Tighten the upper holder bolt first, then tighten the lower bolt.

Connect the front brake switch wires.

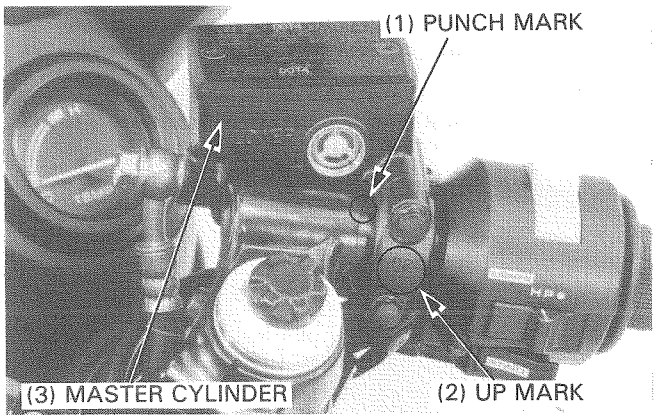

FRONT WHEEL

REMOVAL

Raise the front wheel off the ground by placing a floor or other support jack under the engine.

Disconnect the speedometer cable from the speedometer gear box by removing the cable set screw.

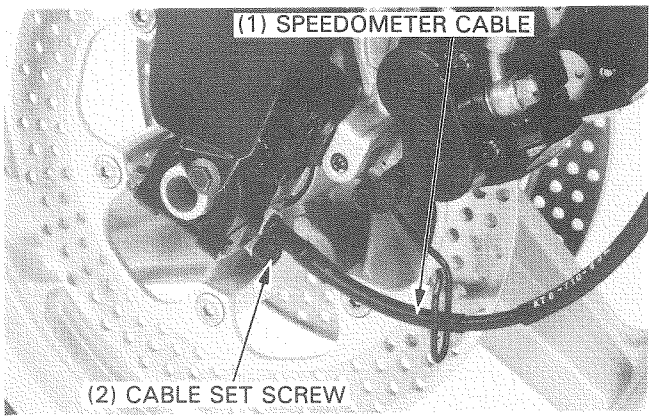

Remove the right brake caliper bracket bolts and right brake caliper.

CAUTION

- *Support the caliper assembly so that it does not hang on the brake hose. Do not twist the brake hose.*

NOTE

- If you squeeze the front brake lever after the caliper is removed, the caliper piston will move out and make assembly difficult.

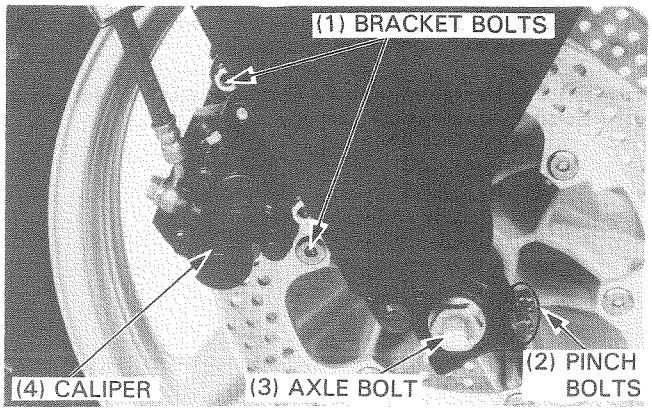

Loosen the right and left front axle pinch bolts, and remove the axle bolt.

Withdraw the front axle and remove the front wheel.

AXLE INSPECTION

Set the axle in V block and measure the runout.

SERVICE LIMIT: 0.2 mm (0.01 in)

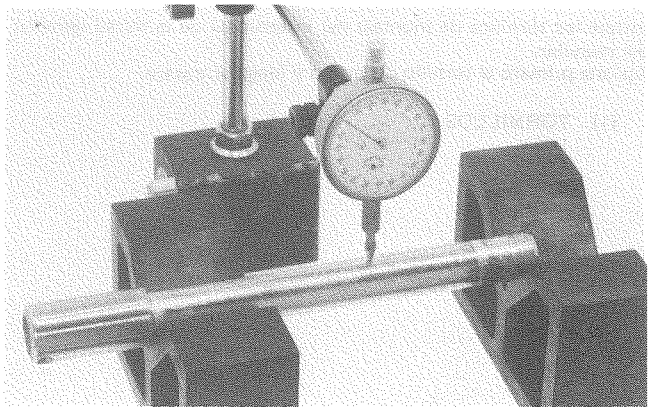

WHEEL RIM RUNOUT

Check the rim runout by placing the wheel in a truing stand. Spin the wheel slowly and read the runout using a dial indicator.

SERVICE LIMITS:
Radial runout: 2.0 mm (0.08 in)
Axial runout: 2.0 mm (0.08 in)

NOTE

- The wheel cannot be repaired and must be replaced with a new one if the service limits are exceeded.

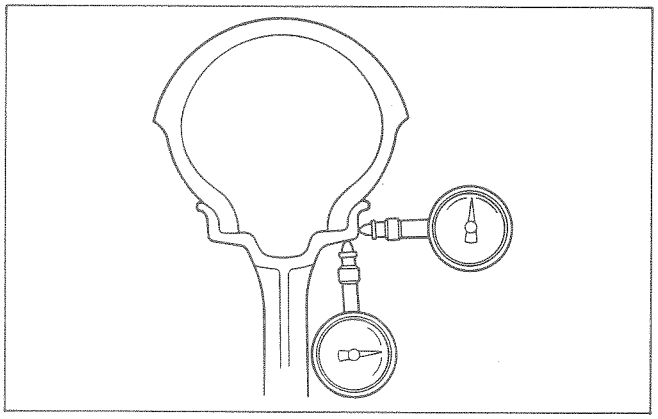

WHEEL BEARING INSPECTION

Turn the inner race of the each bearing with your finger. The bearings should turn smoothly and quietly. Also check that the outer race of the each bearing fits tightly in the hub.

Remove and discard the bearings if the races do not turn smoothly, quietly, or if loosely in the hub.

NOTE

- Replace hub bearings in paris.

For replacement of the bearings, see page 14-9.

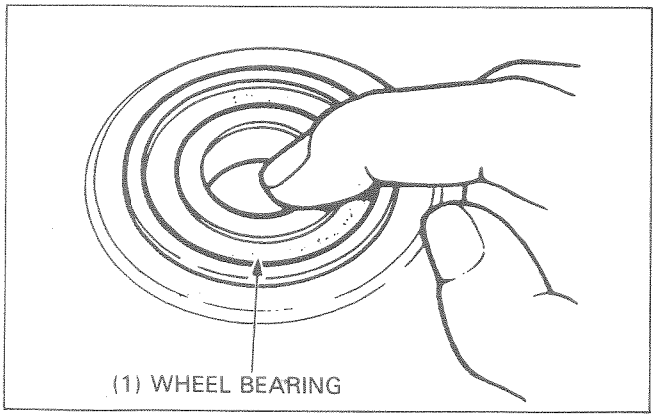

WHEEL BALANCE

CAUTION

- *Wheel balance directly affects the stability, handling and overall safety of the motorcycle. Always check balance when the tire has been removed from the rim.*

NOTE

- For optimum balance, the tire balance mark (a paint dot on the side wall) must be located next to the valve stem. Remount the tire if necessary.

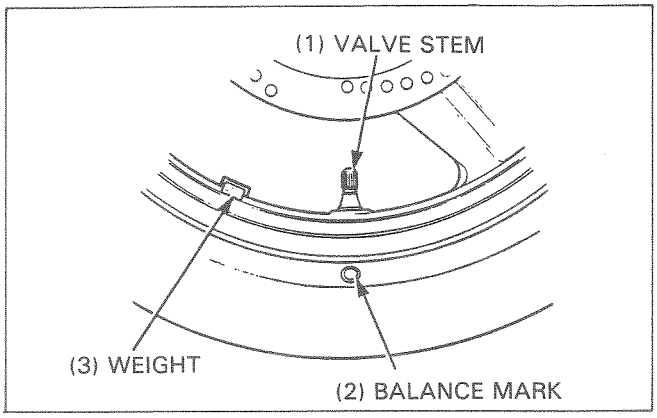

Remove the dust seal and speedometer gearbox from the wheel.
Mount the wheel, tire and brake disc assembly in an inspection stand.
Spin the wheel, allow it to stop, and mark the lowest (heaviest) point of the wheel with chalk.
Do this two or three times to verify the heaviest area. If the wheel is balanced, it will not stop consistently in the same position.

To balance the wheel, install wheel weights on the highest side of the rim, the side opposite the chalk marks. Add just enough weight so the wheel will no longer stop in the same position when it is spun. Do not add more than 60 grams to the front wheel (rear wheel: 60 grams).

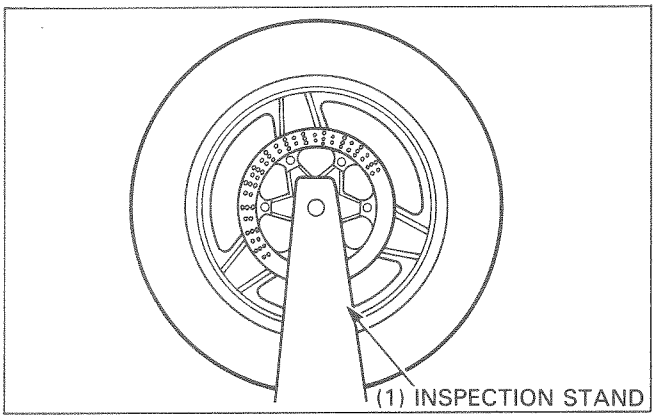

DISASSEMBLY

Remove the speedometer gear box from the left side.
Remove the dust seal and speedometer gear retainer.

Remove the socket bolts and left brake disc.

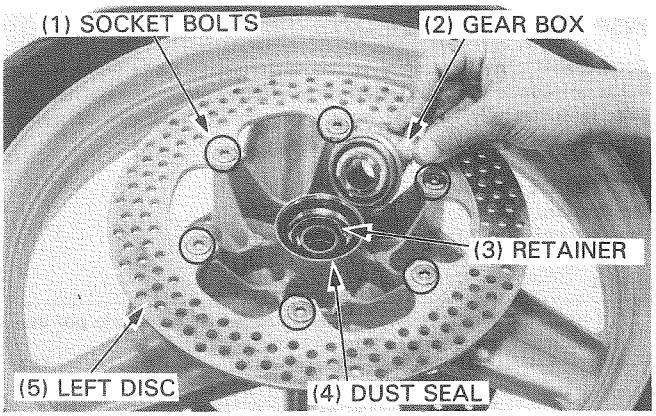

Remove the right side collar and dust seal.
Remove the socket bolts and right brake disc.

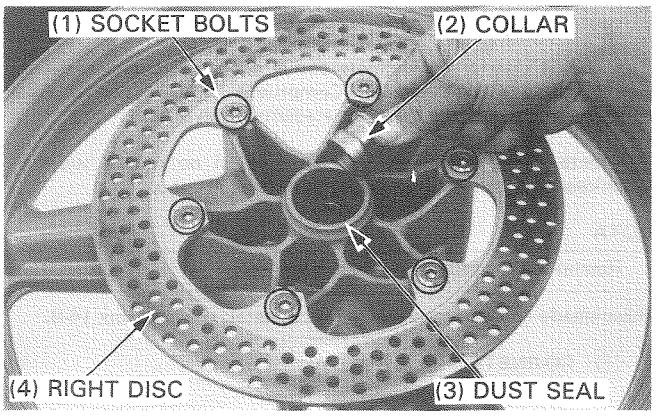

Remove the bearings and distance collar.

NOTE

- Never reinstall old bearings: once the bearings are removed, they must be replaced with new ones.

TOOL:

Bearing remover shaft	**07746–0050100**
Bearing remover head, 20 mm	**07746–0050600**

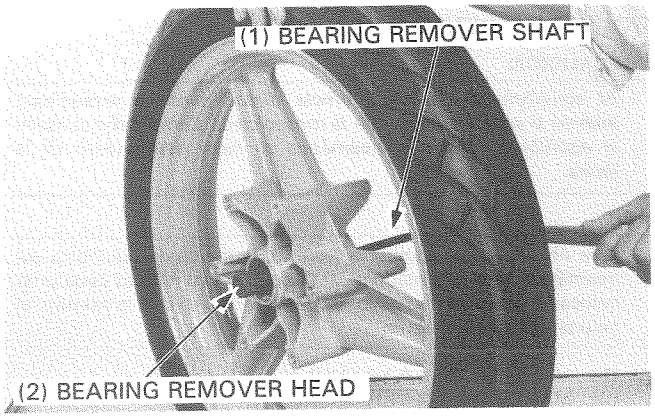

ASSEMBLY

WARNING

- ***A contaminated brake disc or pad reduces stopping power. Discard contaminated pads and clean a contaminated disc with a high quality brake degreasing agent.***

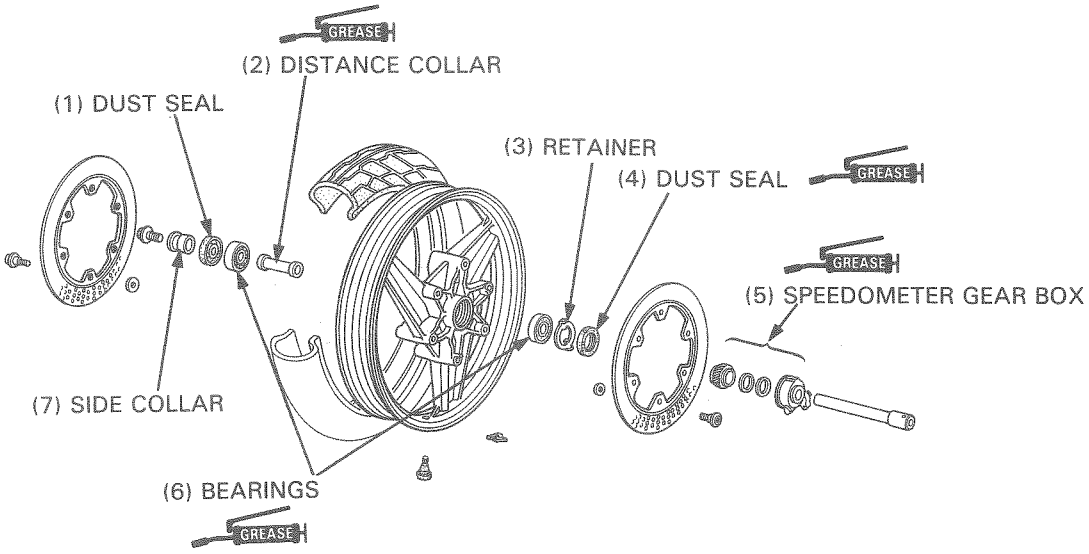

Pack the wheel bearings with grease.
Drive in the right bearing first, then install the distance collar into place.

NOTE

- Be certain the distance collar is in position before installing the left bearing.

Drive in the left bearing.

TOOL:

Drive	**07749–0010000**
Attachment, 42 x 47 mm	**07746–0010300**
Pilot, 20 mm	**07746–0040500**

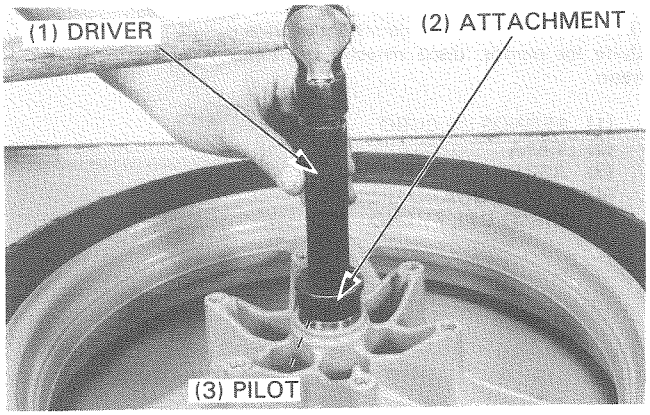

Install the washers to the right wheel hub.

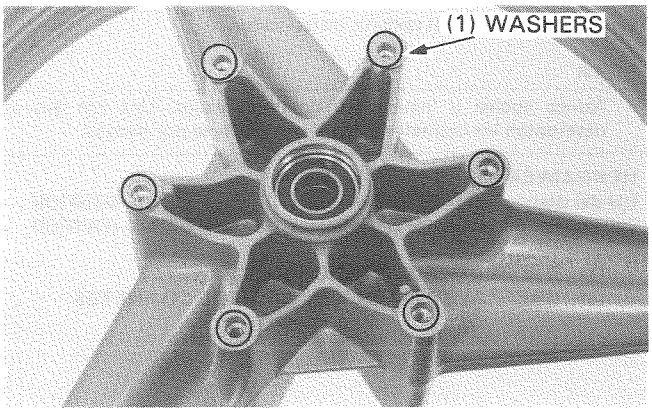

Install the right brake disc and socket bolts.
Tighten the bolts.

TORQUE: 40 N·m (4.0 kg-m, 29 ft-lb)

Install the dust seal and right side collar.

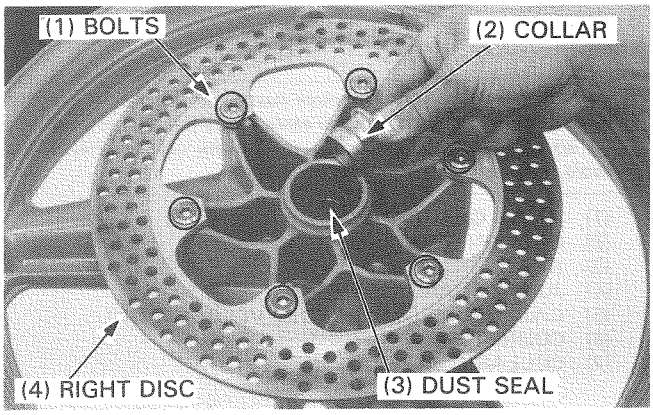

Install the washers to the left wheel hub.

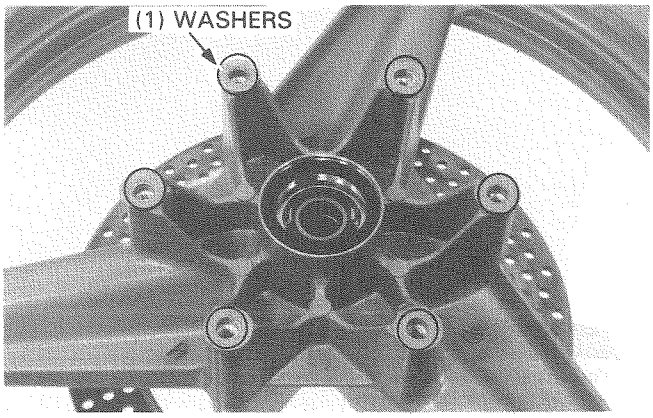

Install the left brake disc and socket bolts.
Tighten the bolts.

TORQUE: 40 N·m (4.0 kg-m, 29 ft-lb)

Install the speedometer gear retainer in the left side of the wheel bub, aligning its tang with the slots in the hub.
Install the dust seal.

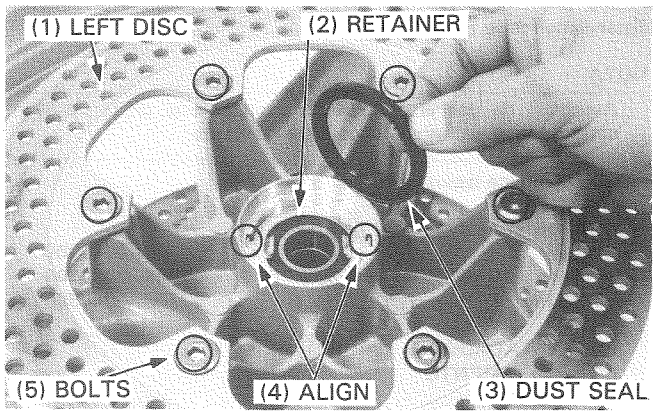

Install the washers into the gear box.

Fill the speedometer gear box with grease and install the drive gear.

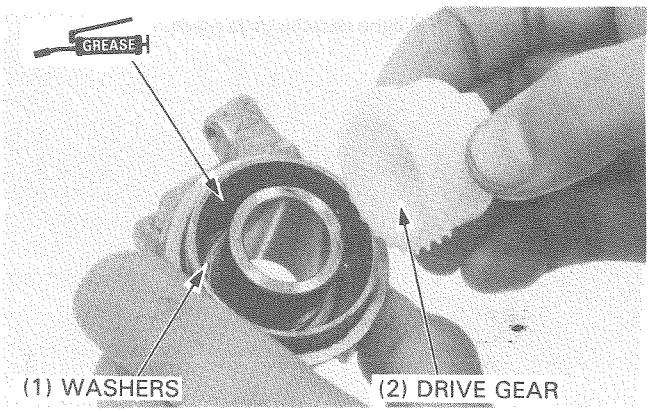

Install the speedometer gear box in the wheel hub, aligning the tangs with the slots.

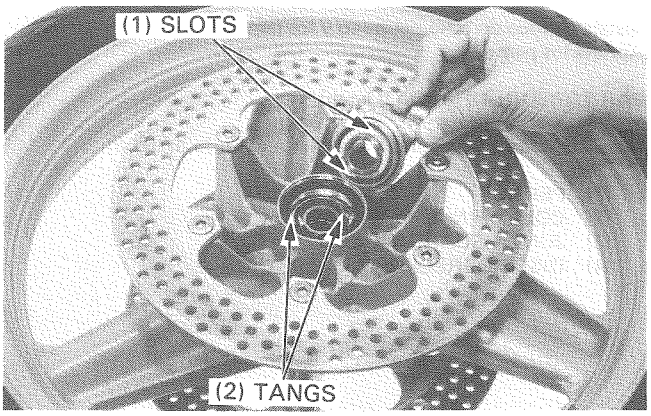

INSTALLATION

Position the front wheel between the fork legs and insert the front axle from the left side.

CAUTION

- *When installing the front wheel, fit the left brake disc carefully between the brake pads to avoid damaging the pads.*

Align the stoppers on the gear box and left fork leg.

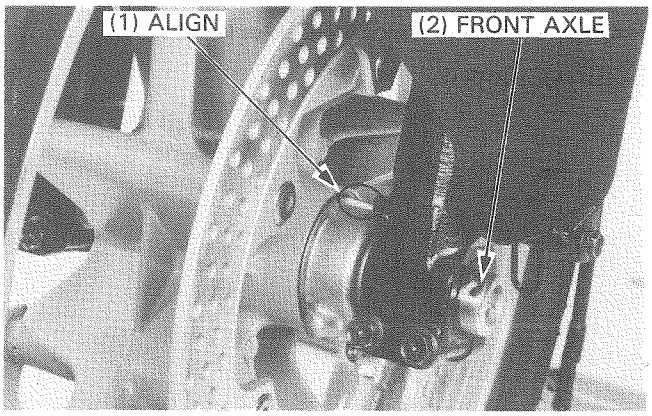

Tighten the front axle right pinch bolts.

TORQUE: 22 N·m (2.2 kg-m, 16 ft-lb)

Install and tighten the axle bolt.

TORQUE: 60 N·m (6.0 kg-m, 43 ft-lb)

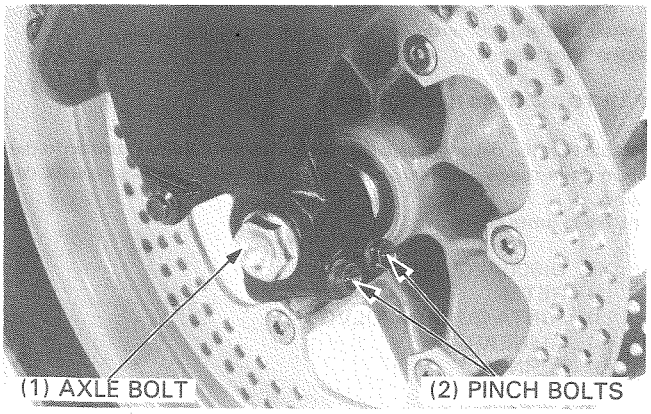

Install a new O-ring to the cable.
Connect the speedometer cable with the set screw.

Install the right caliper with the caliper bracket.
Install the caliper bracket bolts and tighten the bolts.

TORQUE: 27 N·m (2.7 kg-m, 20 ft-lb)

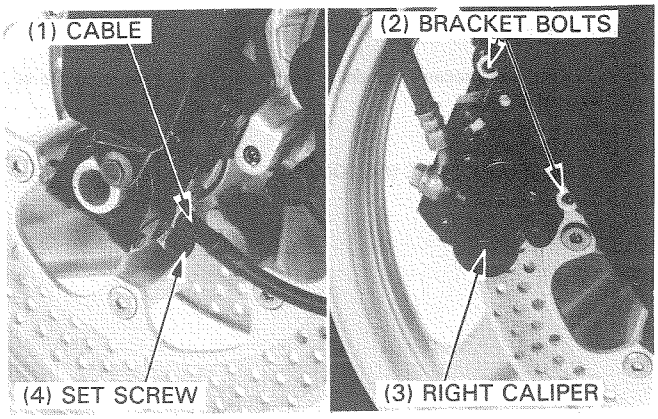

Measure the clearance between each surface of the left brake disc and the left caliper bracket with a 0.7 mm (0.028 in) feeler gauge. If the gauge inserts easily, tighten the front axle left pinch bolts.

TORQUE: 22 N·m (2.2 kg-m, 16 ft-lb)

If the feeler gauge cannot be inserted easily, pull the left fork out or push it in until the gauge can be inserted. After installing the wheel, apply the brake several times, then recheck both discs for caliper bracket-to-disc clearance.

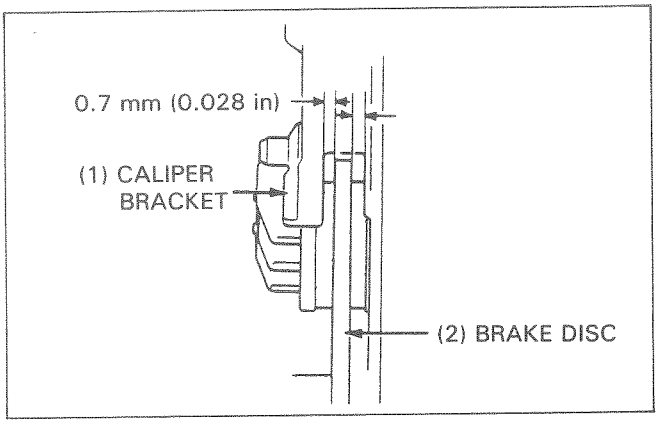

WARNING

- *Failure to provide adequate disc to caliper holder clearance may damage the brake disc and impair braking efficiency.*

FORK LEGS

REMOVAL

Remove the front wheel (page 14-6).
Remove the front fender mounting bolts and front fender.

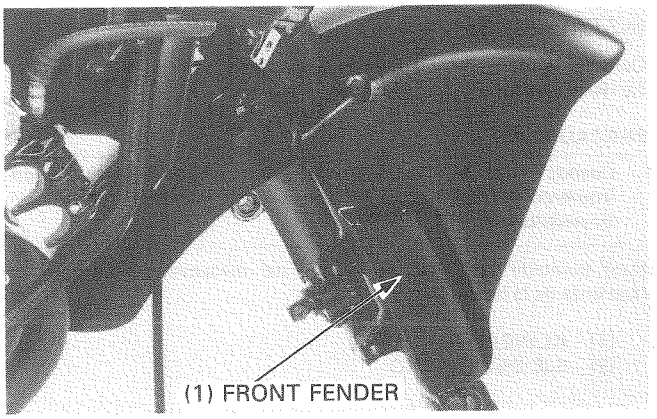

Remove the brake caliper by removing the caliper bracket bolt and anti-dive pistion bolt. (page 16-5).

CAUTION

- *Support the caliper assembly so that it does not hang on the brake hose. Do not twist the brake hose.*

Remove the right and left handlebar (page 14-3).
Remove the fork tube air valve cap and release the air pressure in the fork leg.
Loosen the fork tube cap.

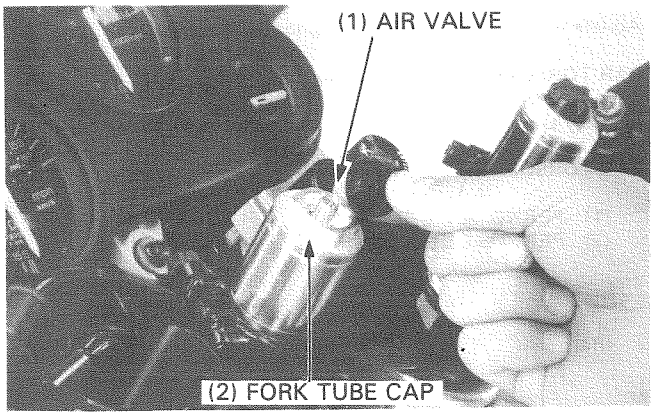

Loosen the top pinch bolt.

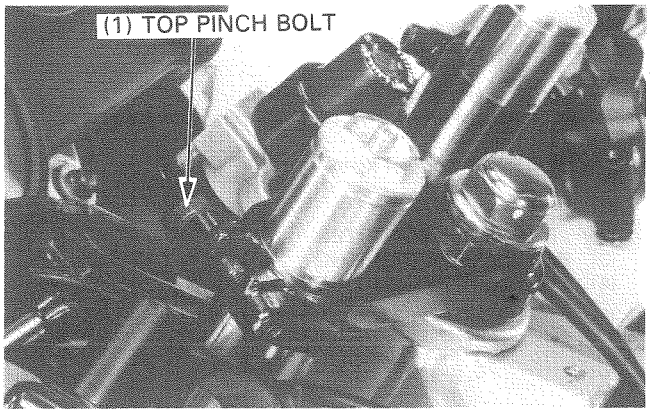

Loosen the bottom pinch bolt.
Pull each fork tube out of the top bridge and steering stem.

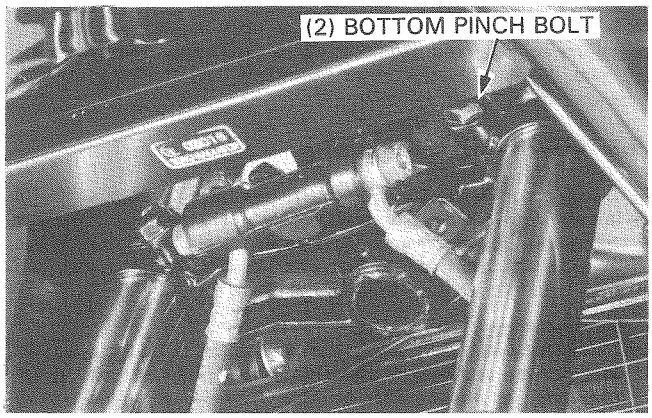

FORK NEEDLE BEARING REPLACEMENT

Remove the pivot collar.
Check the needle bearing for wear or damage.
Replace if necessary.

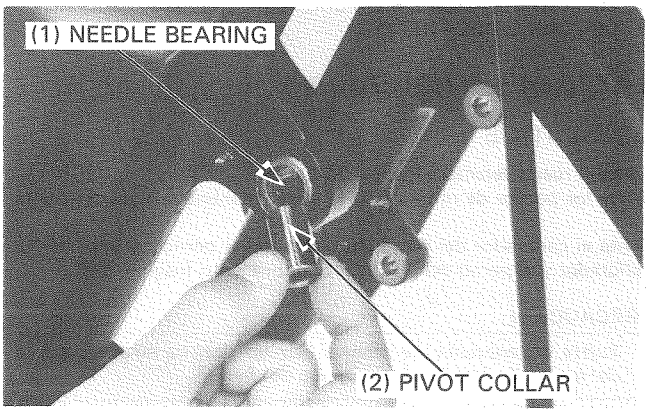

Remove the needle bearing using hydraulic press with suitable tools as shown.
Install a new needle bearing in the reverse order of removal.
Apply grease to the needle bearing and collar.
Install the pivot collar to the needle bearing.

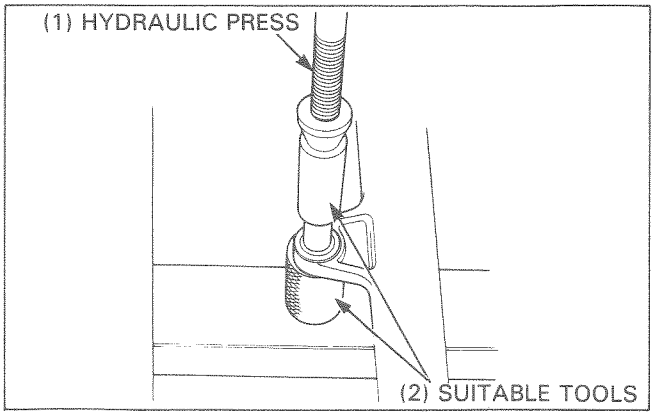

DISASSEMBLY

Hold the fork tube in a vise, with soft jaws or a shop towel and remove the fork tube cap.

CAUTION

- *Be careful not to damage the fork tube's sliding surface.*

WARNING

- ***The cap is also under spring pressure. Use care when removing and wear eye and face protection.***

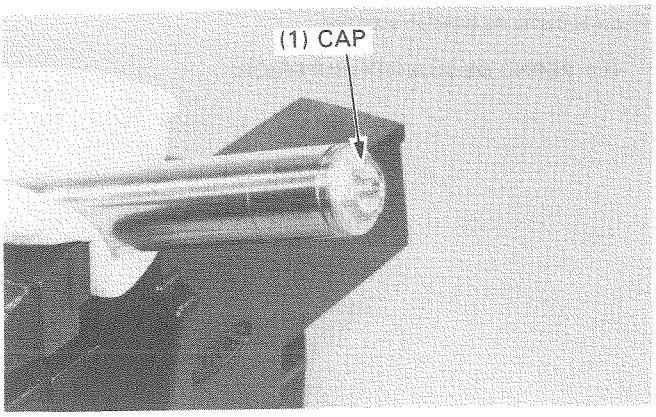

Remove the fork spring, spring seat and spacer.
Drain the fork fluid by pumping the fork tube up and down several times.

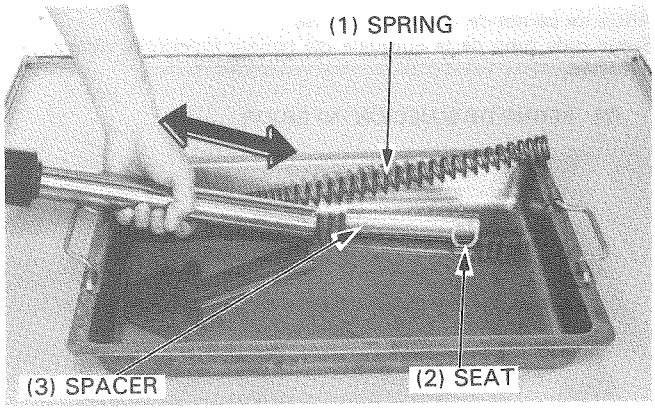

Hold the fork slider in a vise with soft jaws or a shop towel.
Remove the socket bolt.

NOTE

- Temporarily install the spring and fork cap if difficulty is encountered in removing the socket bolt.

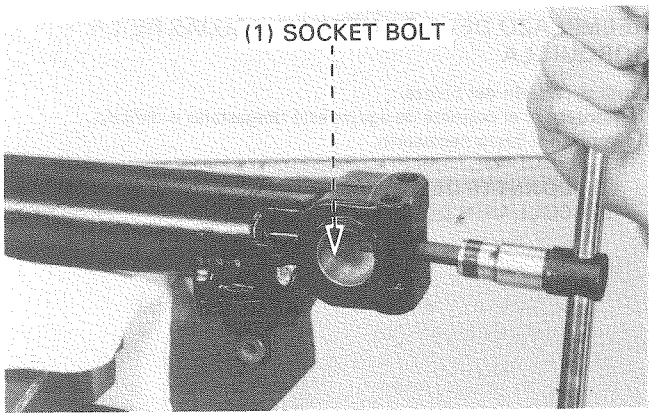

Remove the dust seal and snap ring.

NOTE

- When removing the snap ring, do not damage the fork tube.

TOOL:
Snap ring pliers **07914—3230001**

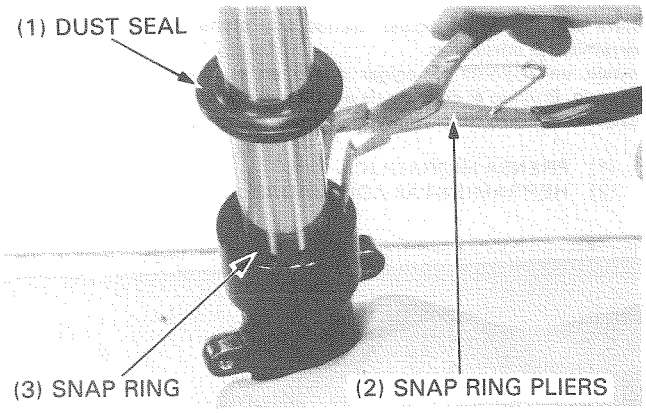

Pull the fork tube out until resistance from the slider bushing is felt. Then move it in and out, tapping the bushing lightly until the fork tube separates from the slider. The slider bushing will be forced out by the fork tube bushing.

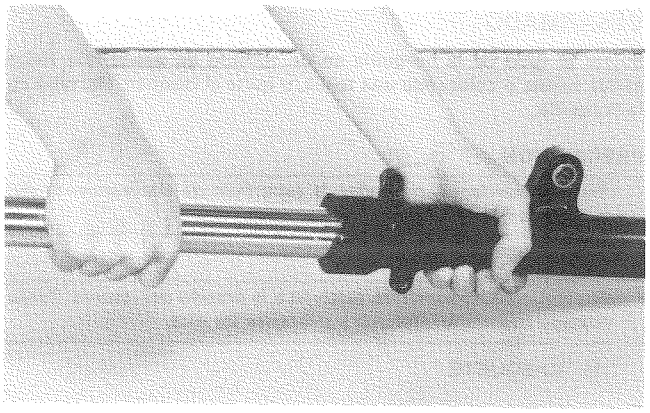

Remove the oil seal, back-up ring and slider bushing from the fork tube.

NOTE

- Do not remove the fork tube bushing unless it is necessary to replace it with a new one.

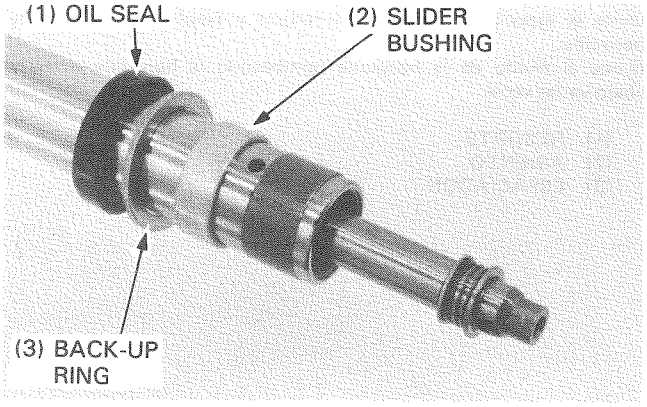

On the left fork, remove the stopper rings, oil lock valve, spring, and spring seat from the piston. Remove the piston and rebound spring from the left fork tube.
On the right fork, remove the oil lock piece and stopper ring. Remove the piston and rebound spring from the right fork tube.

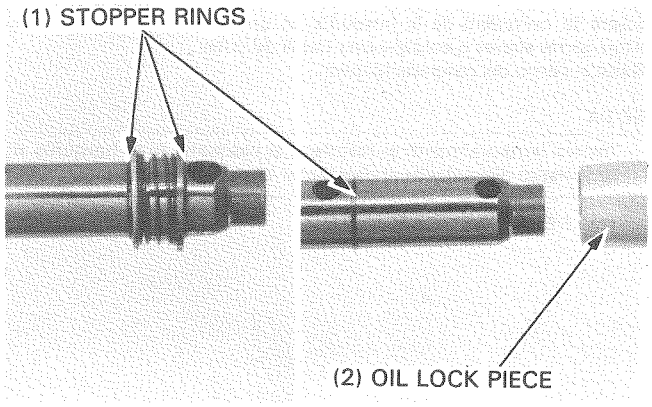

INSPECTION

Measure the fork spring free length.

SERVICE LIMIT: 389.3 mm (15.33 in)

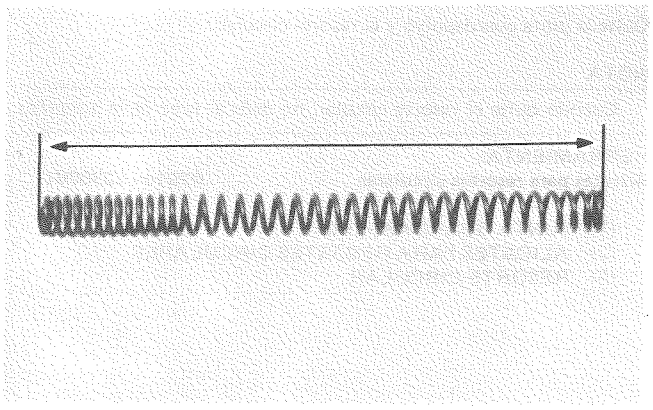

Check the fork tube, slider and piston for scoring, scratches, or excessive or abnormal wear.
Replace any components which are worn or damaged.

Check the fork piston ring for wear or damage.
Check the rebound spring for fatigue or damage.

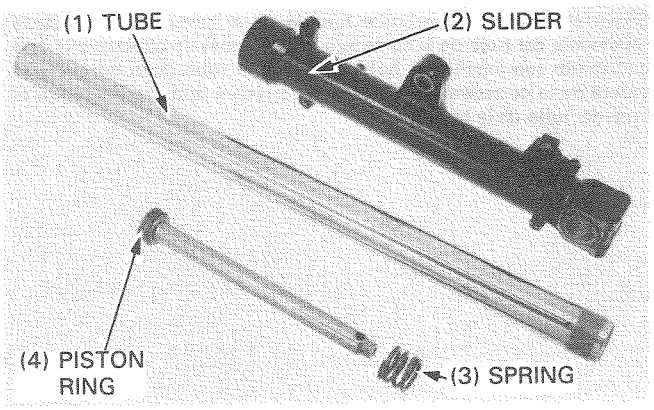

Check the spacer and spring seat for wear or damage.

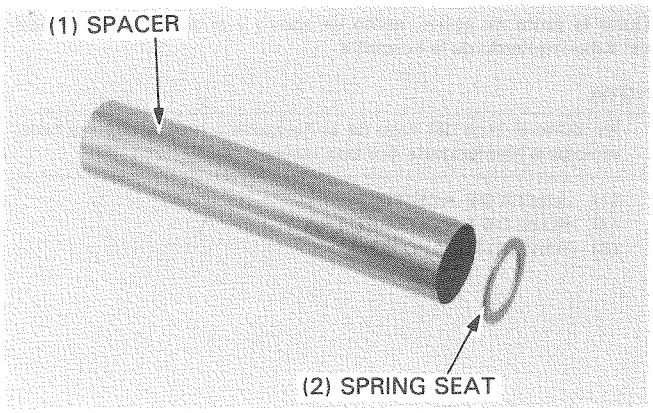

Place the fork tube in a set of V blocks and measure the run-out.

SERVICE LIMIT: 0.2 mm (0.01 in)

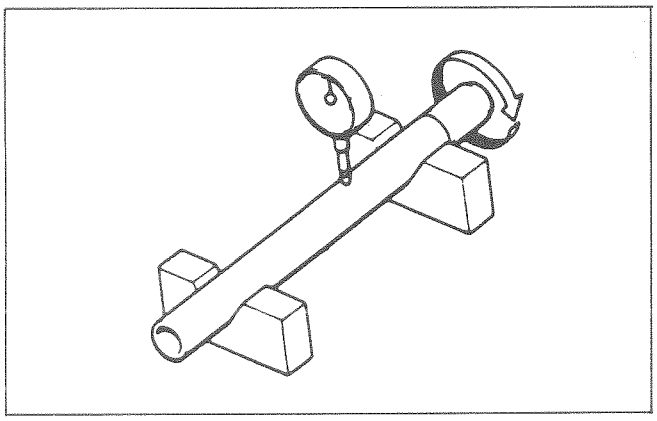

Visually inspect the slider and fork tube bushing.
Replace the bushing if there is excessive scoring or scratching, or if the teflon is worn so that the copper surface appears on more than 3/4 of the entire surface.

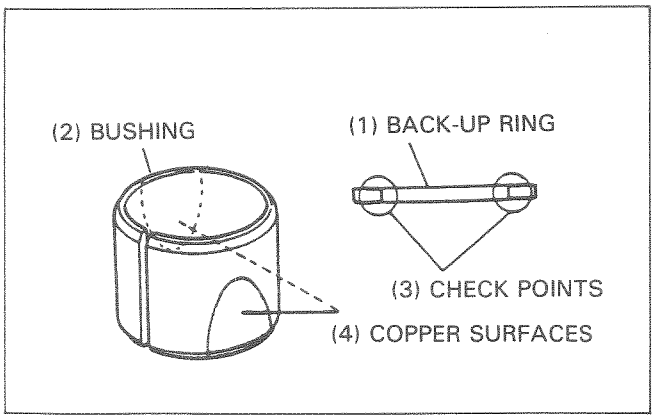

ANTI-DIVE CASE

Remove the four socket bolts and anti-dive case from the left fork slider.

Remove the O-ring, piston and spring.
Check the piston, spring and rubber boot for wear, deterioration or damage.
Replace if necessary.

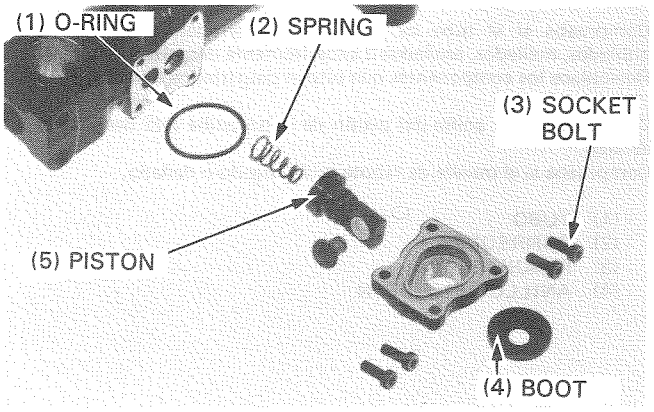

Assemble the anti-dive case in the reverse order of disassembly.
Apply locking agent to the socket bolt threads and tighten the socket bolts.

NOTE

- Apply ATF to the piston and piston O-ring.

Check the operation of the piston.

STANDARD PISTON STROKE: 1.5 mm (1.08 in)

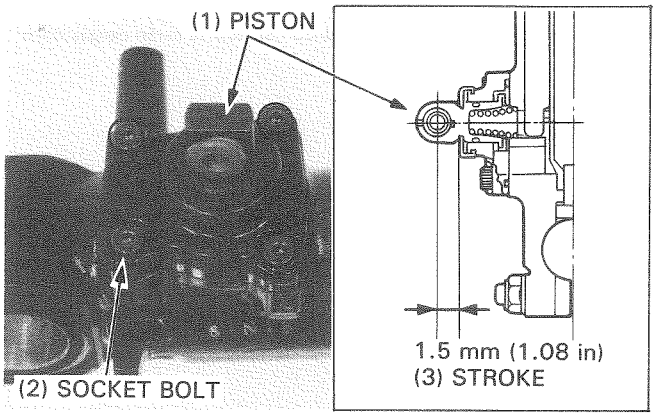

ASSEMBLY

NOTE

- Wash all remaining parts in solvent and wipe them off thoroughly before assembly.

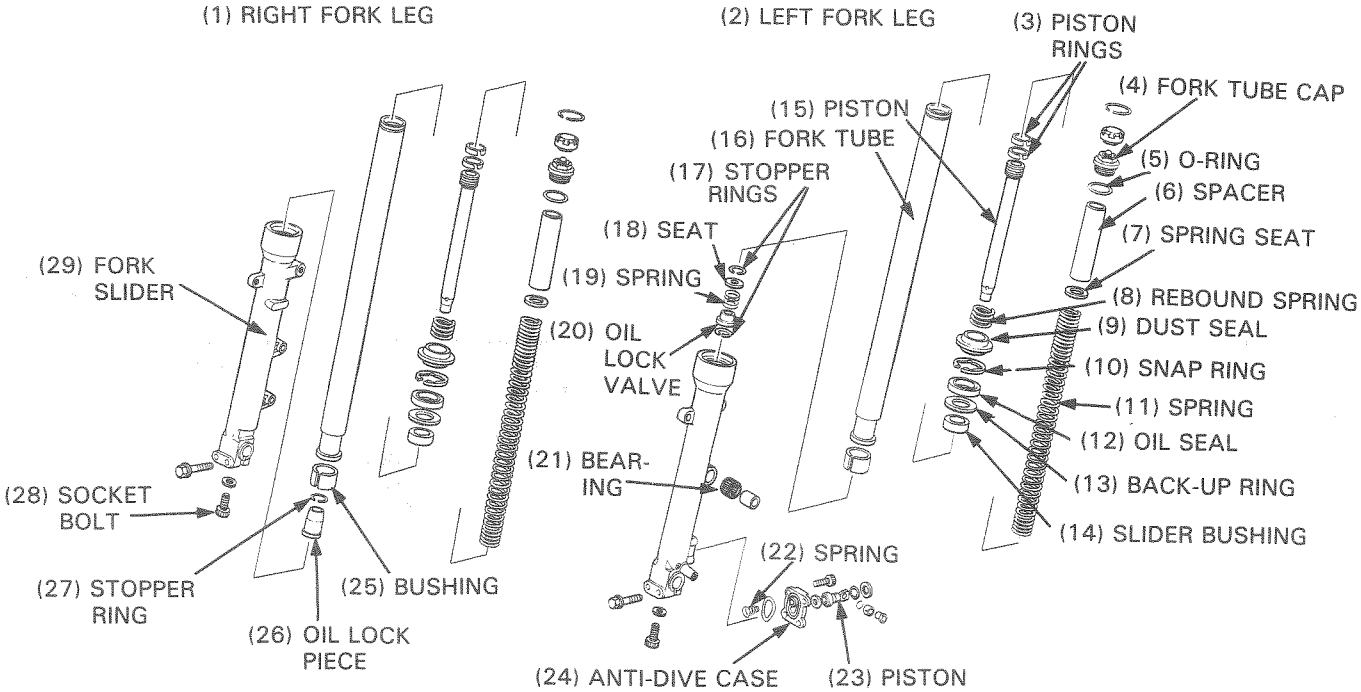

Insert the rebound spring and piston into the fork tube.

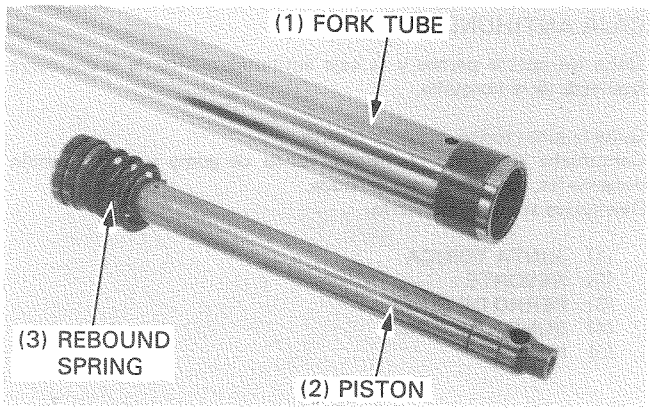

On the left fork leg, install the outer stopper ring, spring seat, spring, oil lock valve and inner stopper ring.

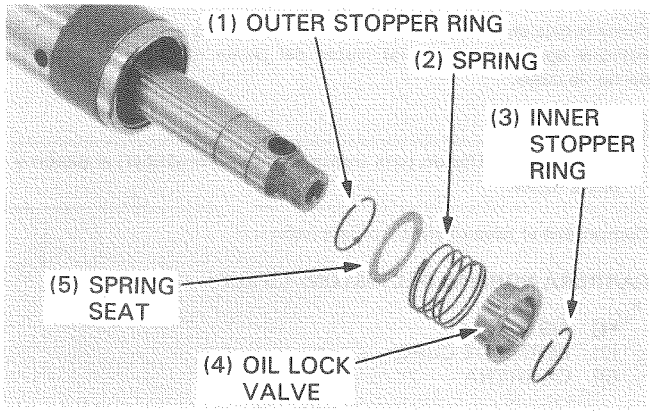

Install the slider bushing, back-up ring and oil seal with the mark facing up to the left fork tube.

Insert the left fork tube into the left slider.

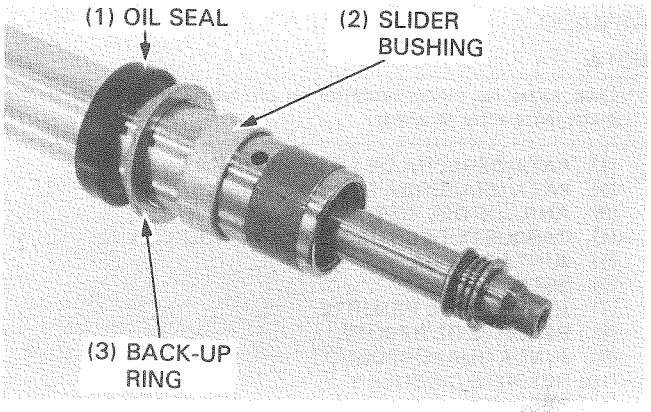

On the right fork leg, install the stopper ring and oil lock piece.

Install the slider bushing, back-up ring and oil seal with the mark facing up to the right fork tube.

Insert the right fork tube into the right slider.

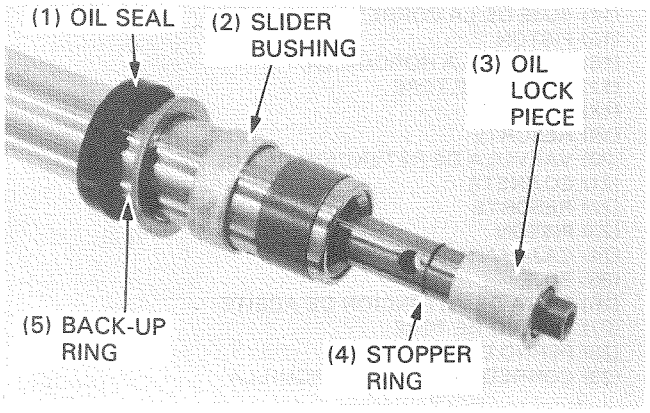

Place the fork slider in a vise with soft jaws or a shop towel. Apply locking agent to the socket bolt and thread it into the piston. Tighten socket bolts.

NOTE

- Temporarily install the fork spring and fork cap bolt to tighten the socket bolt.

TORQUE: 20 N·m (2.0 kg-m, 14 ft-lb)

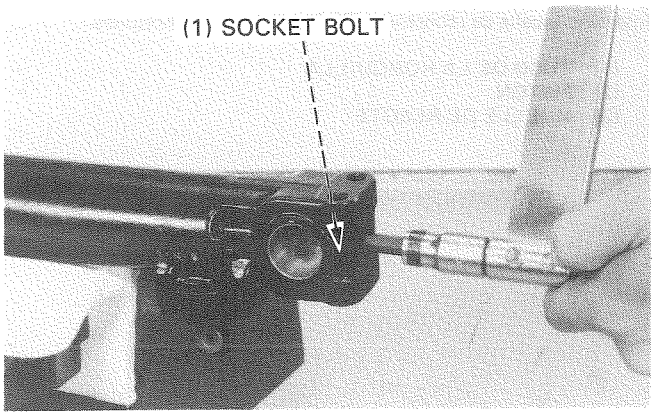

Coat a new oil seal lip with ATF.
Drive the slider bushing, back-up ring and oil seal with the seal driver.

TOOLS:

Fork seal driver	**07747–0010100**
Fork seal driver attachment	**07747–0010600**

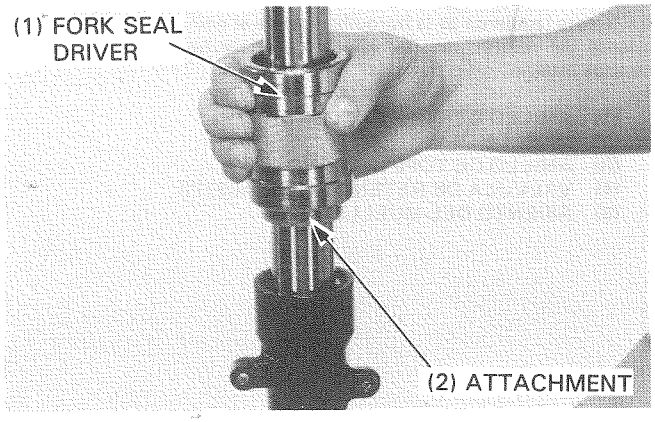

Install the snap ring and dust seal.

TOOL:

Snap ring pliers	**07914–3230001**

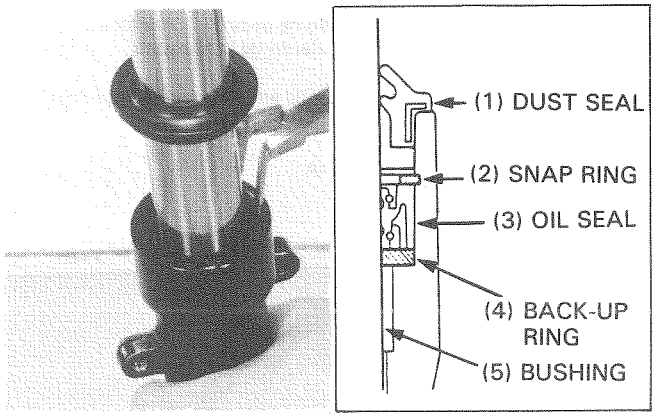

Fill the fork with ATF.

CAPACITY:
RIGHT 361 cm³ (12.2 US oz, 12.7 Imp oz)
LEFT 371 cm³ (12.5 US oz, 13.0 Imp oz)

Pump the fork tube several times.

Compress the fork tube and measure the ATF level from the top of the tube after the level stabilizes.

SPECIFIED LEVEL: 120 mm (4.7 in)

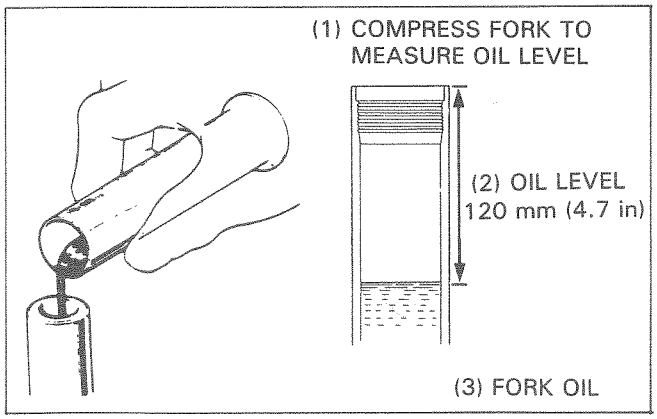

Wipe oil off the spring thoroughtly using a clean cloth.
Install the fork spring with the narrow pitched end facing down.

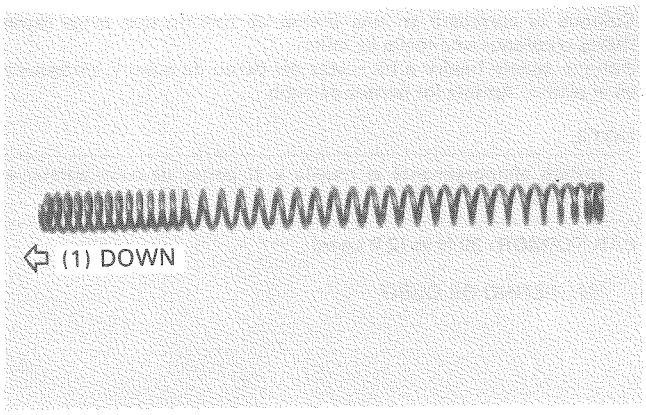

Install the spring seat and the spacer.

Install the O-ring and fork tube cap.

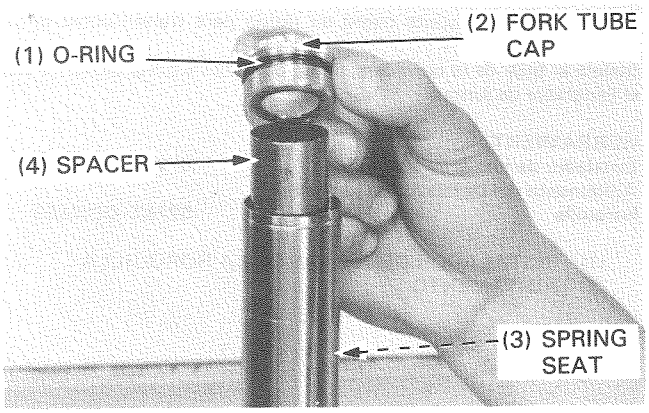

INSTALLATION

Install the fork leg into the steering stem and top bridge and align the lower groove of the fork tube with the top surface of the top bridge.

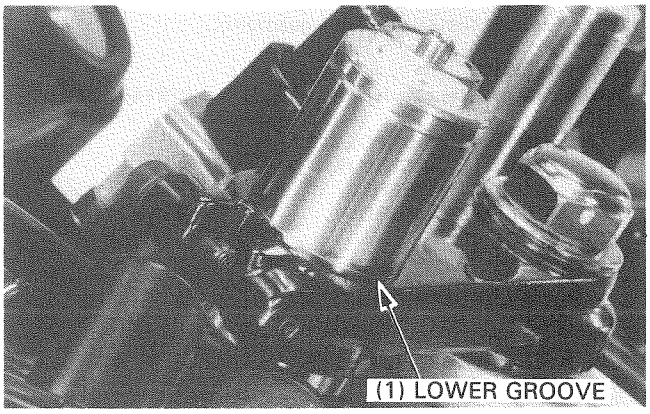

Tighten the fork tube top and bottom pinch bolts.

TORQUE:
Top: 11 N·m (1.1 kg-m, 8 ft-lb)
Bottom: 35 N·m (3.5 kg-m, 25 ft-lb)

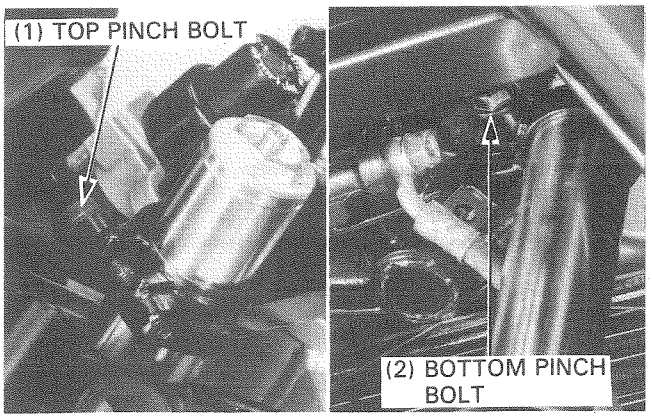

Tighten the fork tube cap.

TORQUE: 22 N·m (2.2 kg-m, 16 ft-lb)

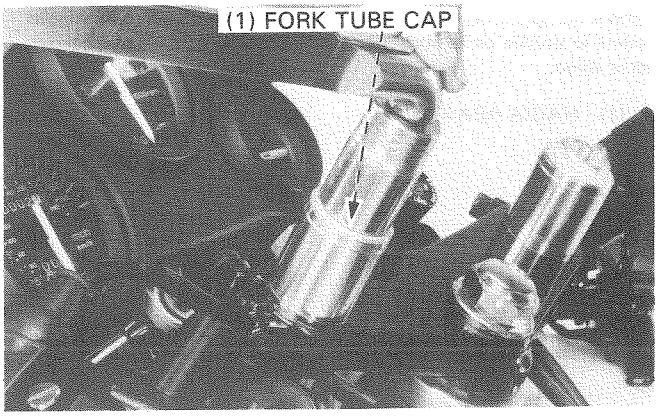

Apply MoS_2 grease (page 2-13) to the pivot collar and install it to the left fork slider.

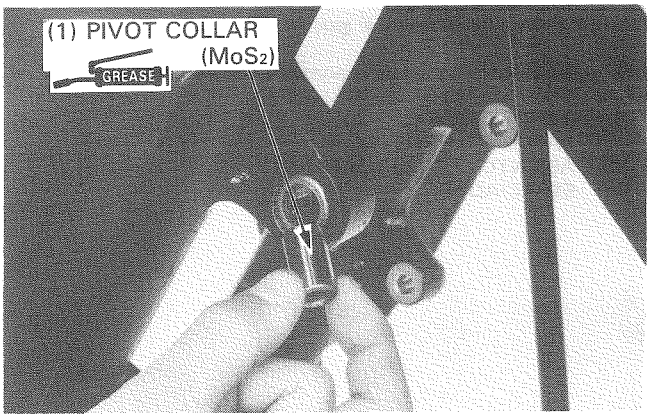

Adjust the fork leg air pressure.

AIR PRESSURE: 0—40 kPa (0—0.4 kg/cm², 0—6 psi)

Install the air valve cap.

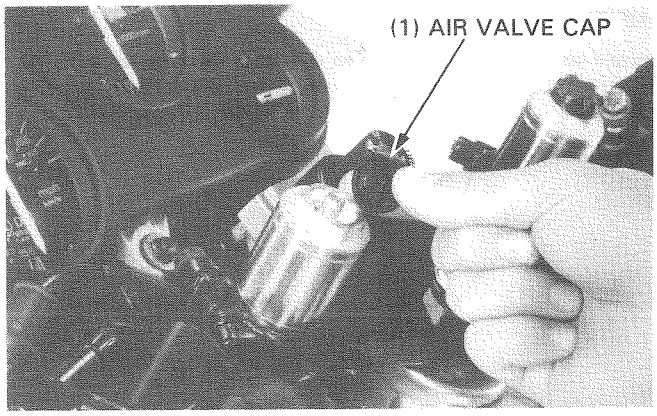

Install the following components:
- front fender.
- caliper (page 16-16).
- front wheel (page 14-11).
- handlebar (page 14-3).

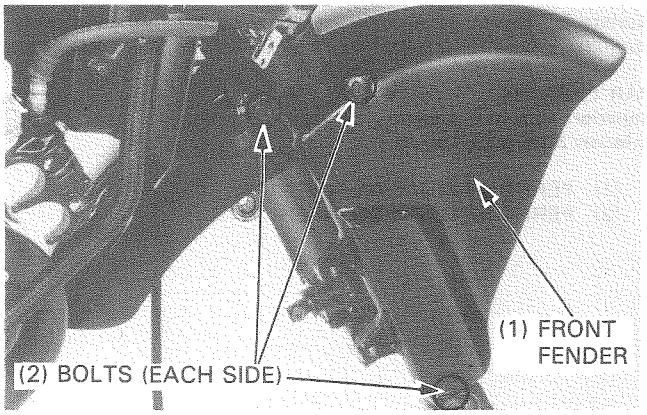

STEERING STEM

REMOVAL

Remove the following components:
- handlebars (page 14-3).
- front wheel (page 14-6).
- ignition switch connection.
- front brake 2 way joint.

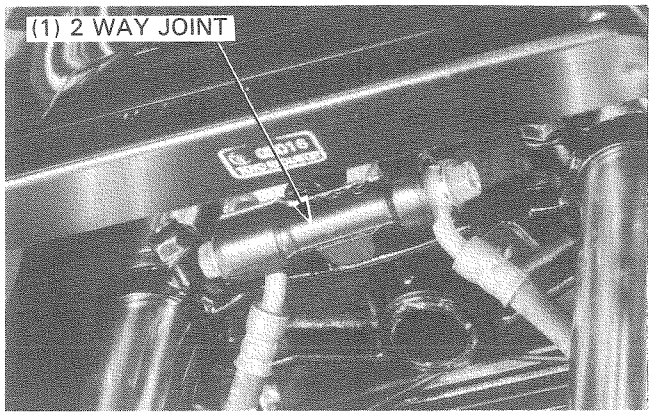

Remove the cap and steering stem nut.

TOOL:

Lock nut wrench, 30 x 32 mm	**07716–0020400**
Extension bar	**07716–0020500**

Remove the washer.
Remove the fork legs (page 14-12) and top bridge.

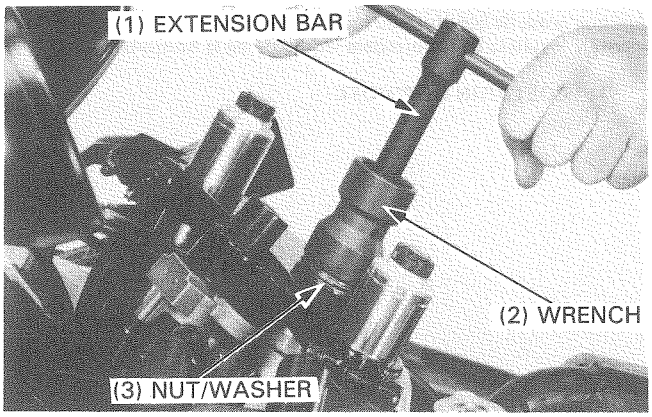

Unlock the tab of the lock washer and remove the lock nut.

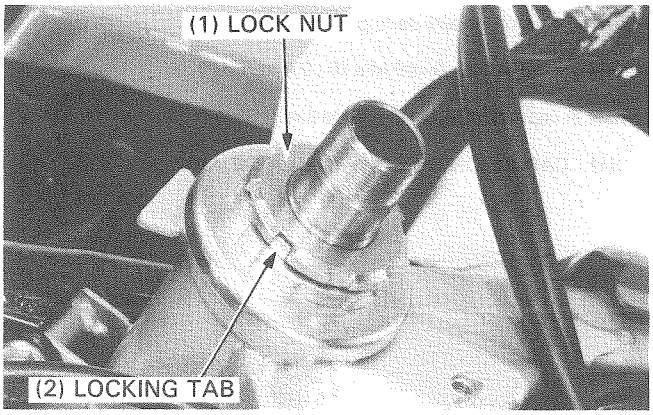

Remove the lock washer and discard it.

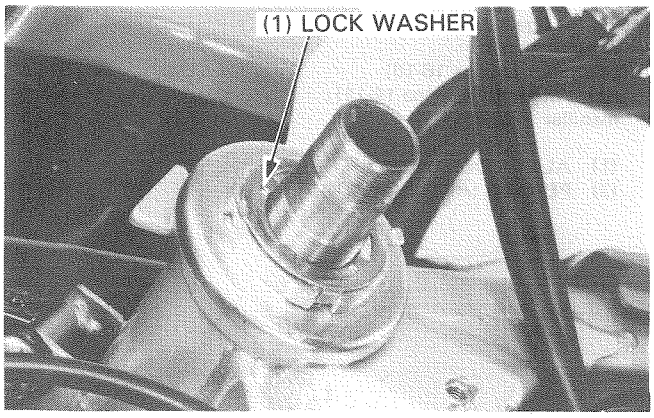

Remove the bearing adjustment nut.

TOOL:

Steering stem socket	**07916–3710100**
Extension bar	**07716–0020500**

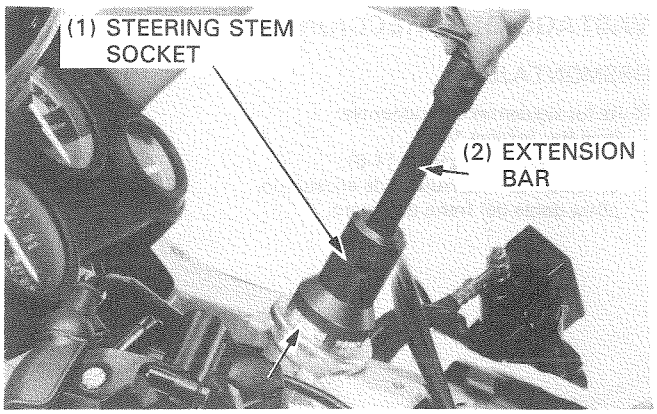

Remove the dust seal, upper bearing inner race, upper bearing and steering stem.

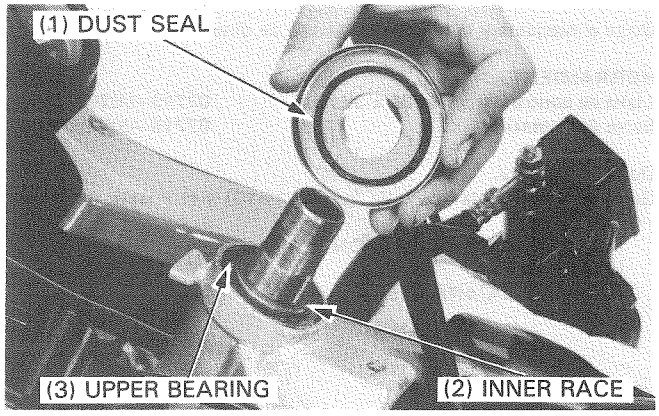

Remove the lower bearing from the steering stem.

Check the steering stem bearings, inner races and outer races for damage or wear.

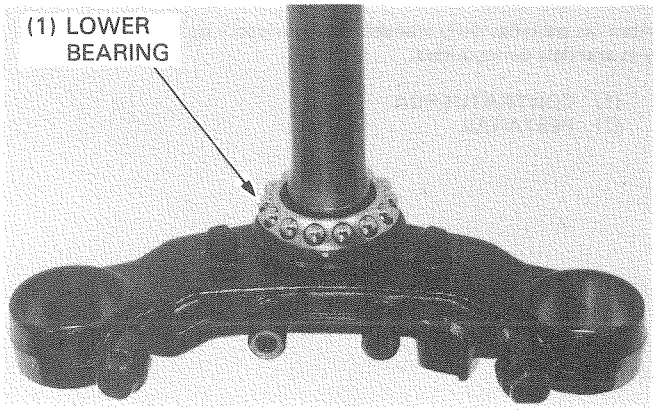

BEARING REPLACEMENT

NOTE

- Replace the bearing and bearing race as a set.

Remove the bearing inner race and dust seal from the steering stem.

NOTE

- Temporarily install the steering stem nut onto the steering stem so as not to damage the steering stem threads when removing the lower inner race.

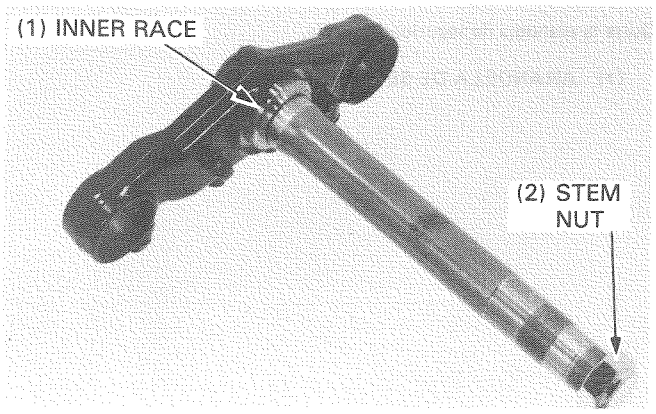

Install a dust seal onto the steering stem and press the lower bearing inner race over the stem with the special tool.

TOOL:

Steering stem driver	**07946—MB00000**

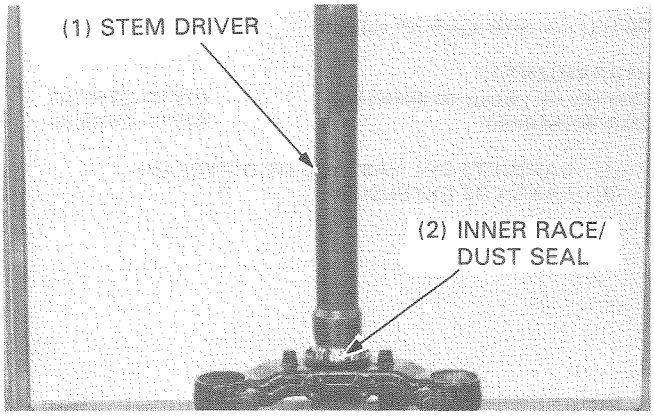

Set the ball race remover attachment to the lower outer race. Drive the lower outer race out of the steering head.

TOOL:

Ball race remover	**07953—MA00000**
Ball race remover attachment	**07946—3710500**

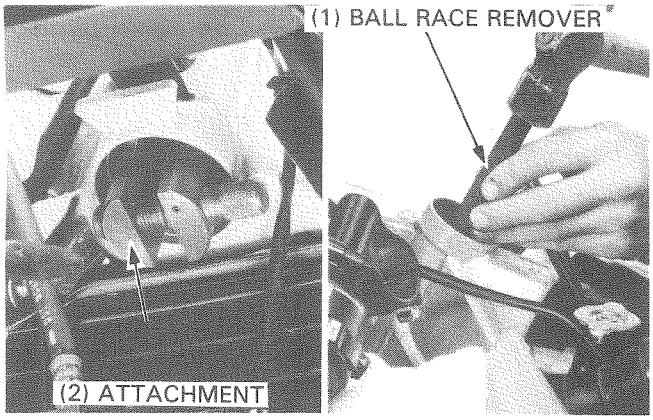

Drive the upper outer race out of the steering head.

TOOL:

Ball race remover	**07953—MA00000**

Drive the outer races into the steering head.

TOOL:

Upper:	
Driver	**07749—0010000**
Attachment, 42 x 47 mm	**07746—0010300**
Lower:	
Driver	**07749—0010000**
Attachment, 52 x 55 mm	**07746—0010400**

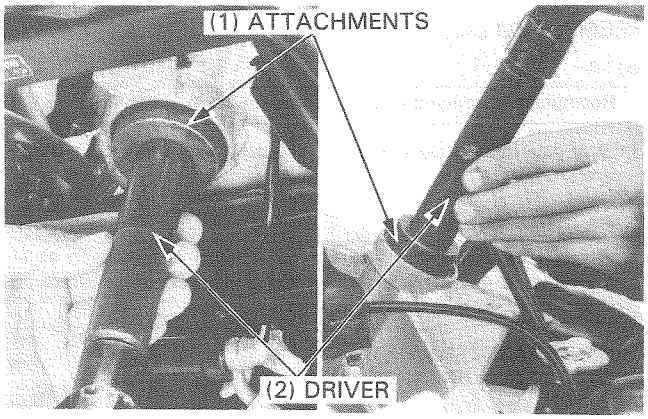

INSTALLATION

Pack the bearing cavities with bearing grease.

Install the lower bearing onto the steering stem, then insert the steering stem into the steering head.

Install the upper bearing and upper bearing inner race.

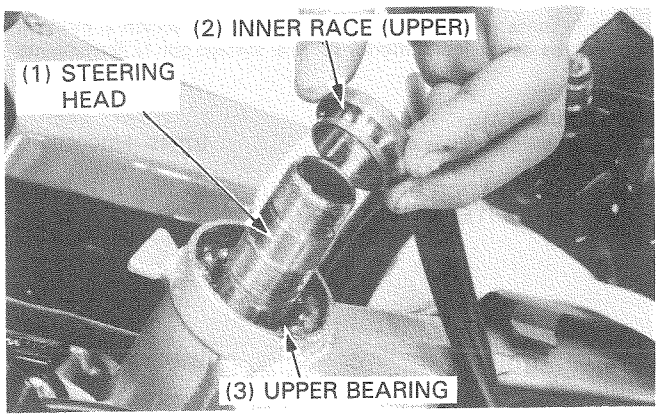

Apply grease to the dust seal.
Install the dust seal to the steering head.

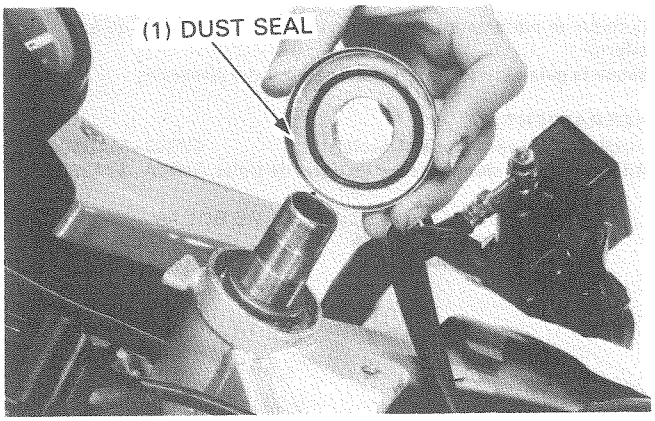

Install and tighten the adjustment nut to the specified torque.

TORQUE: 22 N·m (2.2 kg-m, 16 ft-lb)

TOOL:

Steering stem socket	**07916—3710100**
Extension bar	**07716—0020500**

Turn the steering stem lock-to-lock 4—5 times to seat the bearings, then tighten the nut to the same torque.

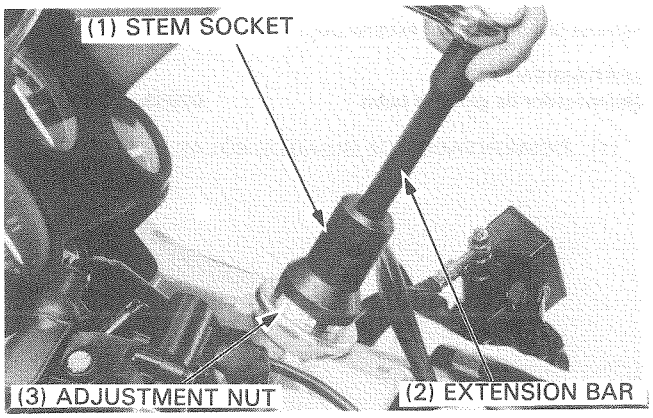

Install a new bearing adjustment nut lock washer aligning the tabs with the grooves in the nut. Bend two opposite tabs down into the grooves.

NOTE

- Do not install a used bearing adjustment nut lock washer.

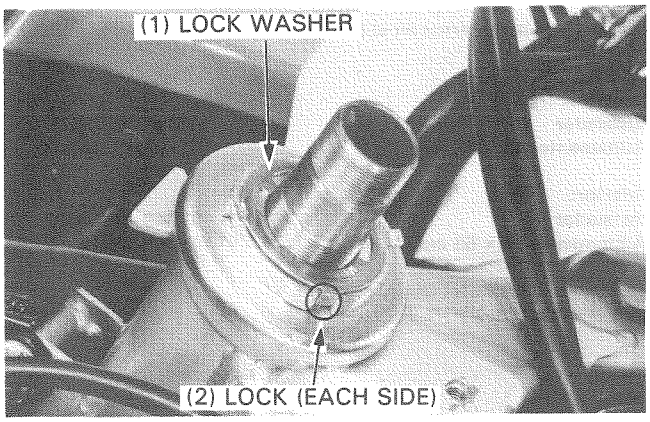

Finger tighten the lock nut all the way.
Hold the adjustment nut and further tighten the lock nut within 90 degrees enough to align its grooves with the lock washer tabs.
Bend the lock washer tabs up into the lock nut grooves.

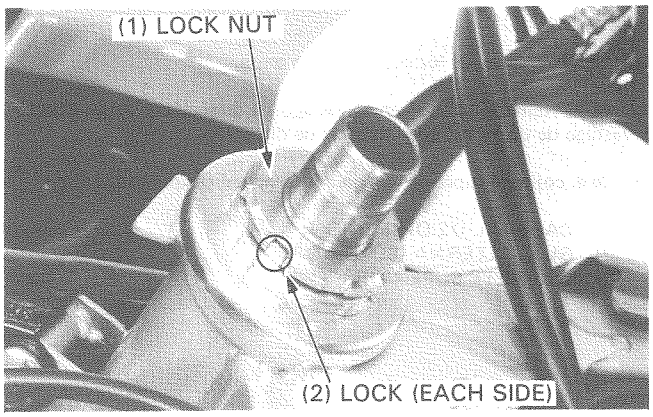

Install the top bridge and install the washer and steering stem nut.
Temporarily install the fork legs.
Tighten the steering stem nut and cap.

TORQUE: 105 N·m (10.5 kg-m, 76 ft-lb)

TOOL:

Lock nut wrench, 30 x 32 mm	**07716–0020400**
Extension bar	**07716–0020500**

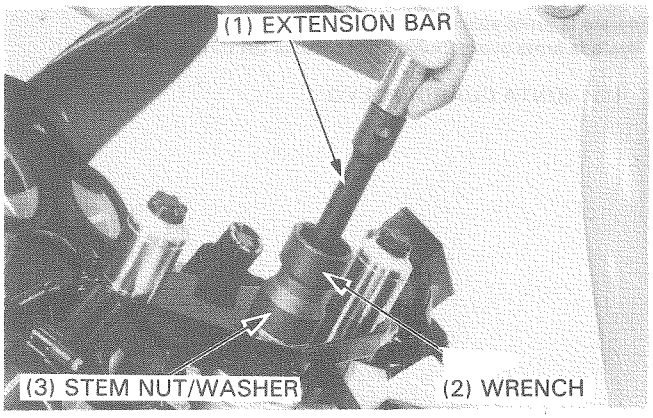

Install the following components:
– fork legs (page 14-20).
– front brake 2 way joint.

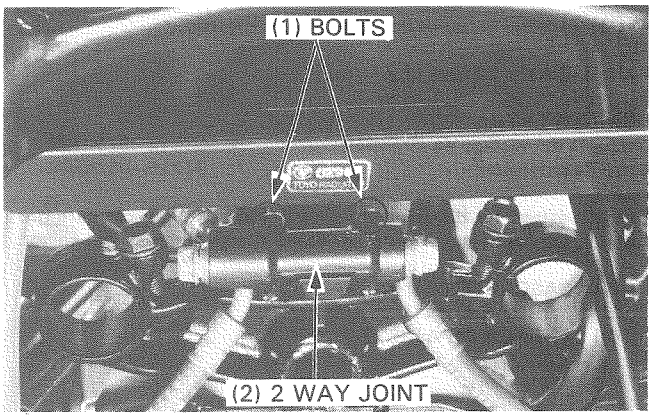

– fork legs (page 14-20).
– front wheel (page 14-11).
– handlebars (page 14-3).
– ignition switch connection.

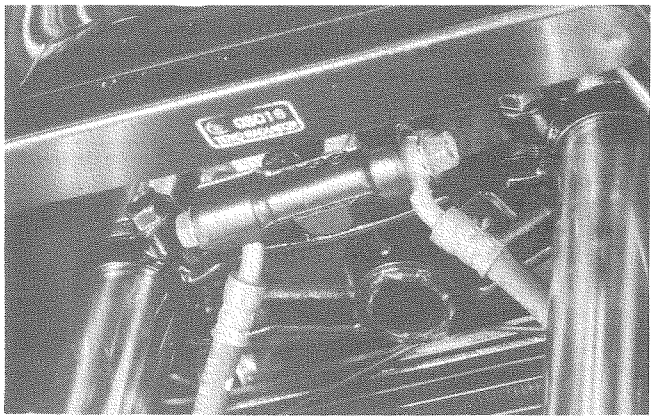

STEERING HEAD BEARING PRELOAD

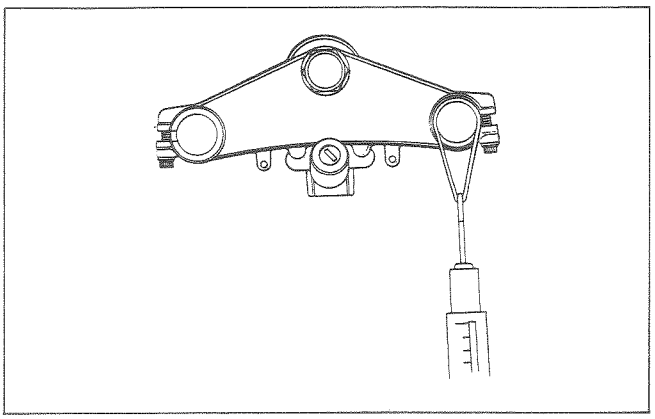

Remove the upper and lower fairings (page 13-4, 5).
Place a stand under the engine and raise the front wheel off the ground.
Position the steering stem in the straight ahead position.
Hook a spring scale to the fork tube and measure the steering head bearing preload.

NOTE

- Make sure that there is no cable or wire harness interference.

The preload should be within 1.0—1.5 kg (2.20—3.31 lb) for right and left turns.
If the readings do not fall within the range, lower the front wheel and adjust the bearing adjustment nut.

MEMO

REAR WHEEL/ SUSPENSION

RUEDA TRASERA/ SUSPENSION

RUOTA E SOSPENSIONI POSTERIORI

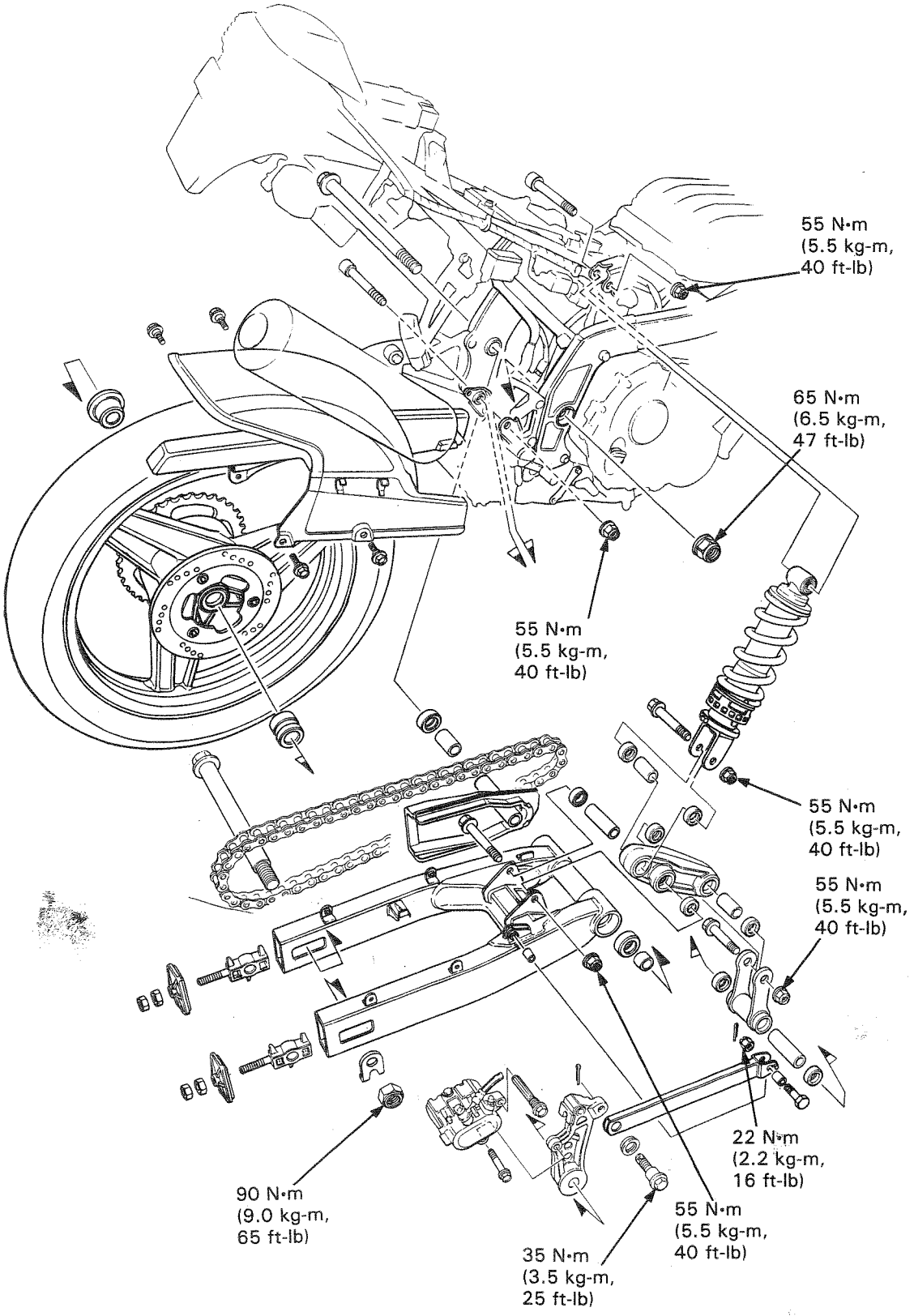
55 N•m
(5.5 kg-m,
40 ft-lb)
65 N•m
(6.5 kg-m,
47 ft-lb)
55 N•m
(5.5 kg-m,
40 ft-lb)
55 N•m
(5.5 kg-m,
40 ft-lb)
55 N•m
(5.5 kg-m,
40 ft-lb)
22 N•m
(2.2 kg-m,
16 ft-lb)
90 N•m
(9.0 kg-m,
65 ft-lb)
55 N•m
(5.5 kg-m,
40 ft-lb)
35 N•m
(3.5 kg-m,
25 ft-lb)

SERVICE INFORMATION

GENERAL

WARNING

- *A contaminated brake disc or pad reduces stopping power. Discard contaminated pads and clean a contaminated disc with a high quality brake degreasing agent.*

● The rear wheel uses a tubeless tire. For tubeless tire repaires, refer to the TUBELESS TIRE MANUAL.

WARNING

- *The shock absorber contains nitrogen gas under high pressure. Do not allow fire or heat near the shock absorber.*
- *Before disposal of the shock absorber, release the nitrogen. (see page 15-10).*

SPECIFICATION

Unit: mm (in)

ITEM		STANDARD	SERVICE LIMIT
Axle runout		——	0.2 (0.01)
Rear wheel rim runout	Radial	——	2.0 (0.08)
	Axial	——	2.0 (0.08)
Shock absorber spring free length		148.9 (5.86)	146.0 (5.75)
Compression force		9.0 kg (19.8 lb)	——

TORQUE VALUES

Driven sprocket mounting bolts	65 N•m (6.5 kg-m, 47 ft-lb)
Rear brake disc socket bolts	40 N•m (4.0 kg-m, 29 ft-lb)
Rear axle nut	90 N•m (9.0 kg-m, 65 ft-lb)
Shock absorber lower joint lock nut	65 N•m (6.5 kg-m, 47 ft-lb)
Shock absorber upper mounting bolt	55 N•m (5.5 kg-m, 40 ft-lb)
Shock absorber lower mounting bolt	55 N•m (5.5 kg-m, 40 ft-lb)
Shock arm-to-shock link bolt	55 N•m (5.5 kg-m, 40 ft-lb)
Shock link-to-frame bolt	55 N•m (5.5 kg-m, 40 ft-lb)
Shock arm-to-swing arm bolt	55 N•m (5.5 kg-m, 40 ft-lb)
Swing arm pivot nut	65 N•m (6.5 kg-m, 47 ft-lb)
Brake torque rod mounting nut (front)	22 N•m (2.2 kg-m, 16 ft-lb)
Brake torque rod mounting bolt (rear)	35 N•m (3.5 kg-m, 25 ft-lb)

TOOLS

Special

Bearing remover	07936—3710300
— bearing remover handle	07936—3710100
— bearing remover weight	07741—0010201
Driver pin	07GMD—KT80100
Driver shaft	07946—MJ00100
Needle bearing remover	07GMD—KT70200
Attachment, 28 x 30 mm	07946—1870100
Shock absorber compressor attachment	07959—MB10000

Common

Bearing remover head, 17 mm	07746–0050500
Bearing remover shaft	07746–0050100
Driver	07749–0010000
Attachment, 42 x 47 mm	07746–0010300
Pilot, 17 mm	07746–0040400
Shock absorber compressor screw assy	07GME–0010100
Attachment, 24 x 26 mm	07746–0010700
Pilot, 15 mm	07746–0040300
Pilot, 22 mm	07746–0041000
Remover head, 17 mm	07746–0050500
Attachment, 32 x 35 mm	07746–0010100

TROUBLESHOOTING

Oscillation
- Rim bent
- Wheel bearings loose
- Faulty tire
- Axle loose
- Tire pressure incorrect
- Swing arm bearings worn
- Tires worn
- Wheel out of balance

Soft suspension
- Spring weak
- Spring adjustment incorrect
- Oil leaking or fatigue of damper

Hard suspension
- Damper rod bent
- Damaged swing arm pivot bearing
- Spring adjustment incorrect

Suspension noise
- Shock absorber binding
- Fasteners loose
- Shock linkage pivots worn or lack of lublication

REAR WHEEL

REMOVAL

Support the motorcycle on its main stand.
Remove the rear axle nut.
Loosen the lock nut and adjusting nut, and push the rear wheel forward, and remove the drive chain from the driven sprocket.
Remove the rear axle and rear wheel.

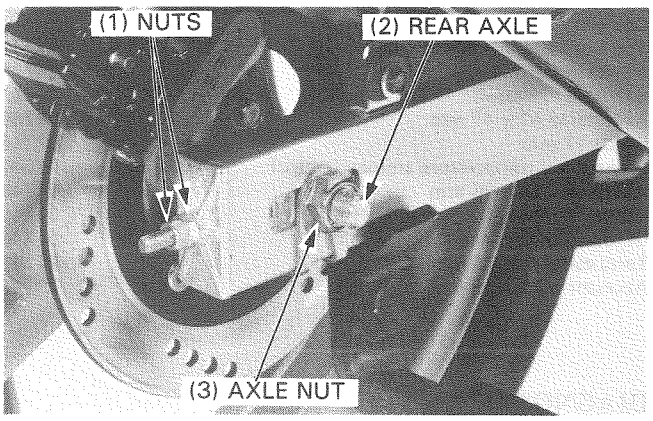

AXLE INSPECTION

Set the axle in V-blocks and read the axle runout with a dial indicator.

SERVICE LIMIT: 0.2 mm (0.01 in)

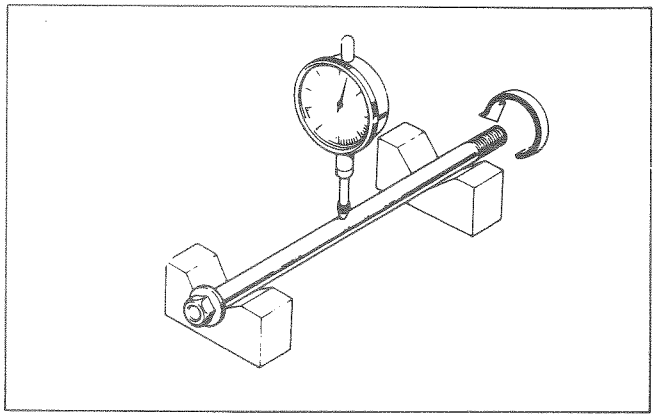

WHEEL RIM RUNOUT

Check the rim for runout by placing the wheel in a truing stand. Spin the wheel slowly, and read the runout using a dial indicator.

SERVICE LIMITS:
Radial runout: 2.0 mm (0.08 in)
Axial runout: 2.0 mm (0.08 in)

NOTE

- The wheel cannot be serviced and must be replaced if the above limits are exceeded.

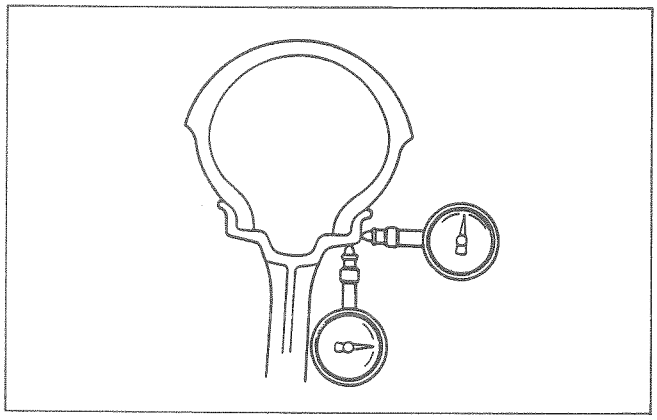

WHEEL BEARING INSPECTION

Turn the inner race of each bearing with your finger. The bearings should turn smoothly and quietly. Also check that the outer race of the each bearing fits tightly in the hub.

Remove and discard the bearings if the races do not turn smoothly, quietly, or if they fit loosely in the hub (page 15-5).

NOTE

- Replace hub bearings in pairs.

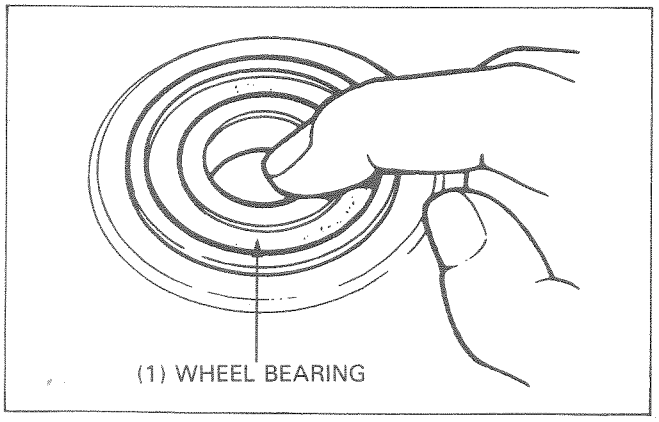

FINAL DRIVEN SPROCKET

Check the condition of the final driven sprocket teeth. Replace the sprocket if worn or distorted.

NOTE

- The drive chain and drive sprocket must also be inspected if the driven sprocket is worn or damaged. Never install a new drive chain on worn sprockets or a worn chain on new sprockets. Both chain and sprocket must be in good condition or the new replacement chain or sprockets will wear rapidly.

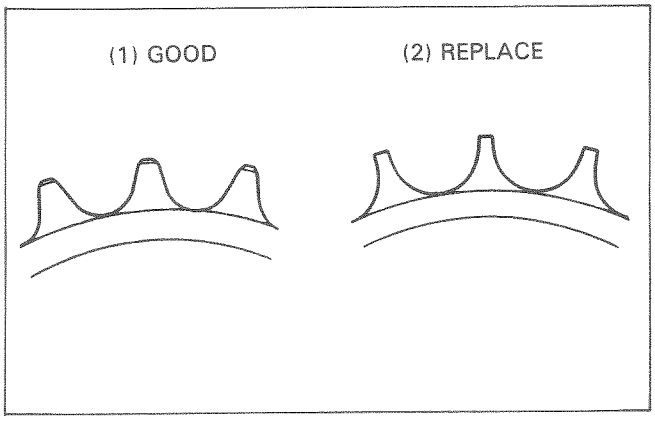

WHEEL BALANCE

- Refer to page 14-8.

DISASSEMBLY

Remove the right and left side collar.

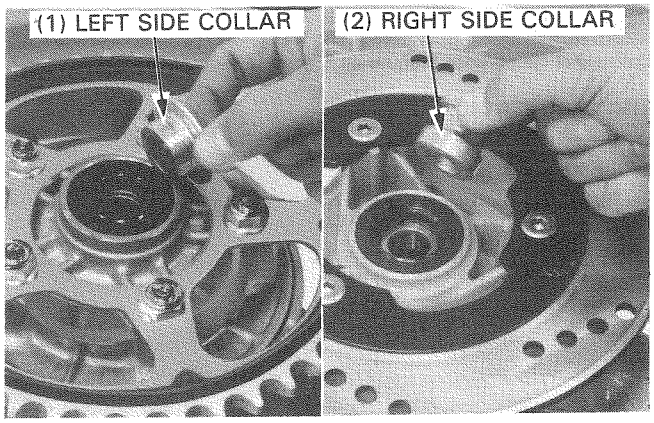

Remove the brake disc mounting bolts and disc.
Remove the dust seal (each side).

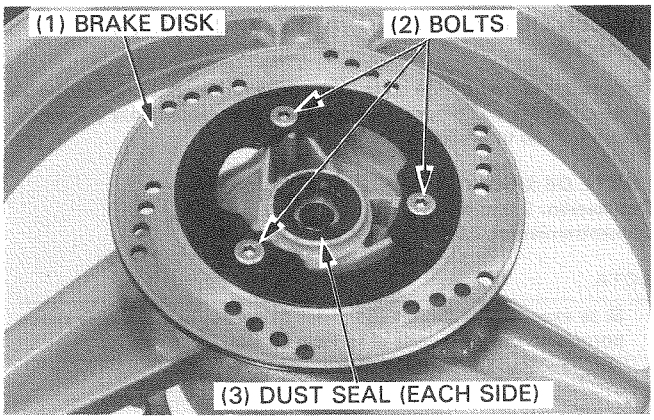

Remove the final driven sprocket and driven flange together.

NOTE

- Do not separate the driven sprocket and flange, unless replacement of the driven sprocket or flange is necessary.

Replace the damper rubbers if they are damaged or deteriorated.

Check the O-ring for wear or damage. Replace if necessary.
Remove the damper rubbers.

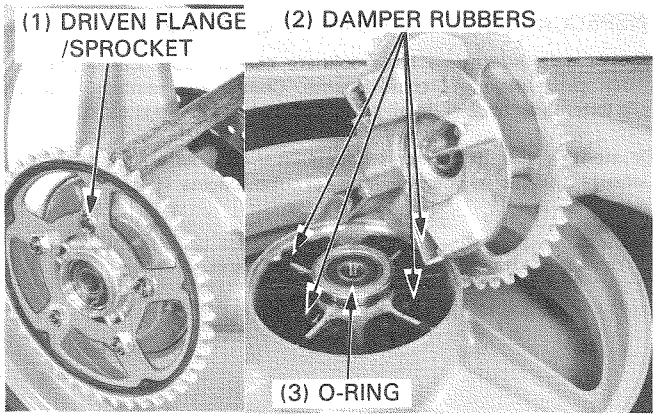

Remove the axle sleeve from the driven flange.
Drive out the flange bearing.

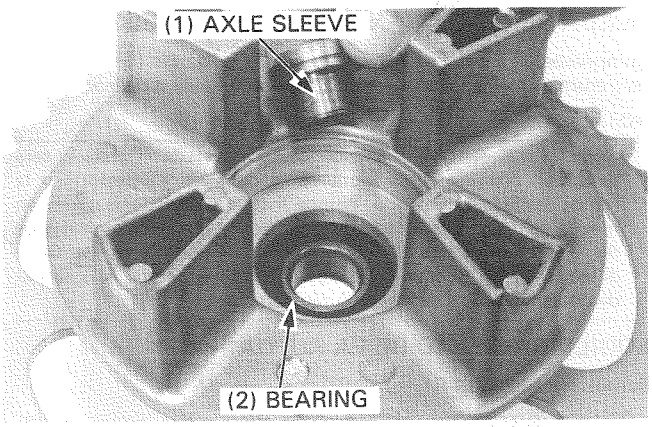

Remove the wheel bearings and distance collar from the wheel hub.

TOOL:

Bearing remover head, 17 mm	**07746–0050500**
Bearing remover shaft	**07746–0050100**

NOTE

- Never reinstall old bearings: once bearings are removed, they must be replaced with new ones.

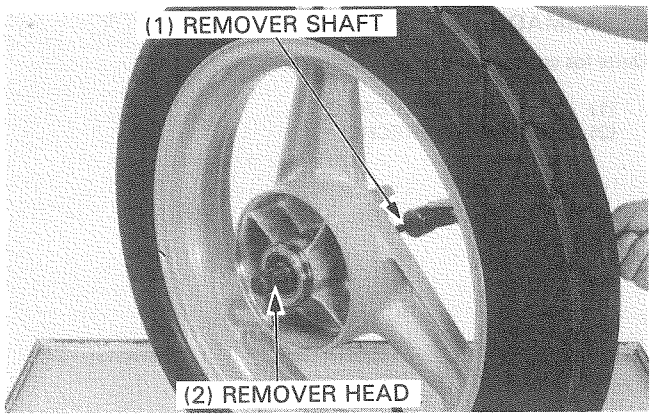

ASSEMBLY

WARNING

- *A contaminated brake disc or pad reduces stopping power. Discard contaminated pads and clean a contaminated disc with a high quality brake degreasing agent.*

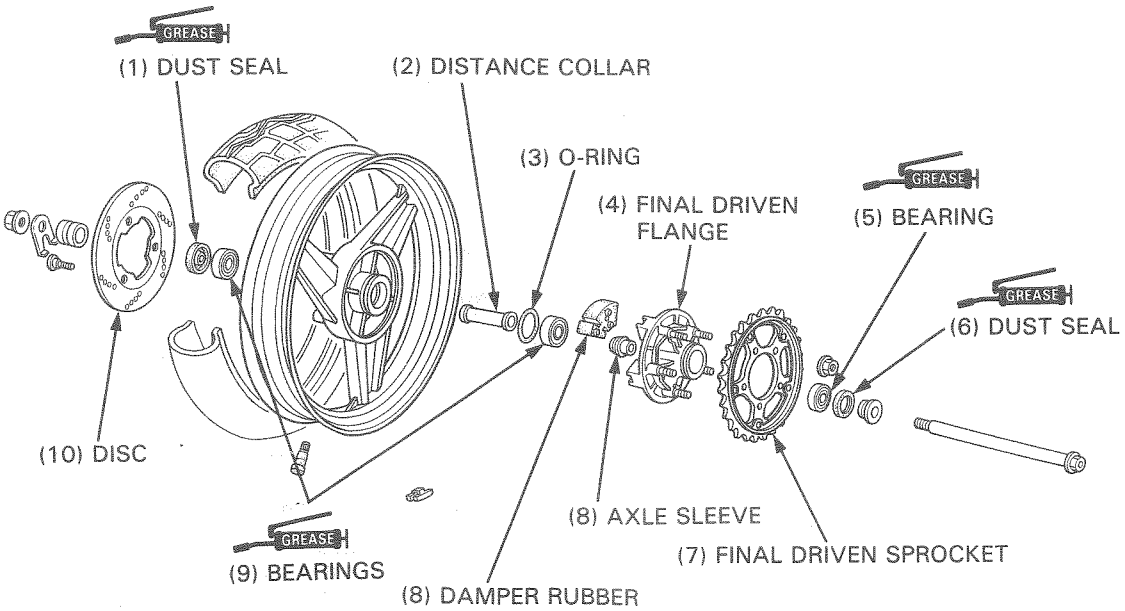

Pack the wheel bearings with grease.
Drive the right bearing first, then install the distance collar and left bearing.

NOTE

- Drive the wheel bearings in with their sealed sides facing out.

TOOL:

Driver	**07749–0010000**
Attachment, 42 x 47 mm	**07746–0010300**
Pilot, 17 mm	**07746–0040400**

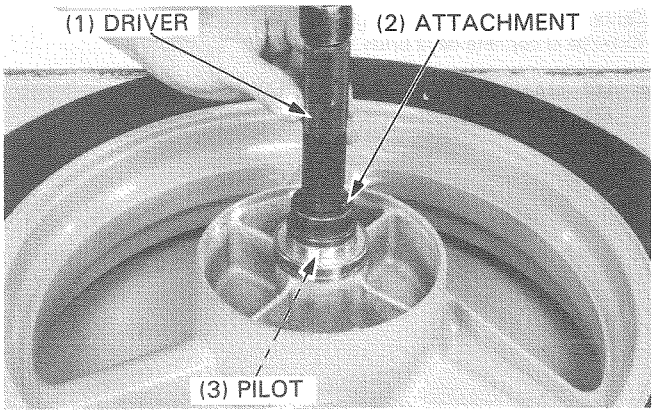

Install the axle sleeve onto the final driven sprocket bearing.

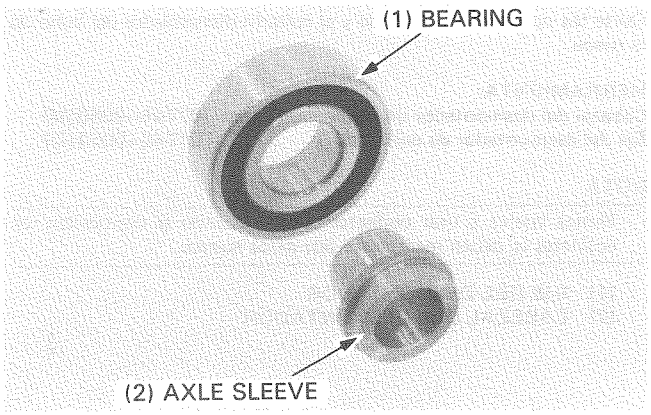

Drive in a new bearing into the final driven sprocket.

TOOL:

Driver	**07749–0010000**
Attachment, 42 x 47 mm	**07746–0010300**
Pilot, 17 mm	**07746–0040400**

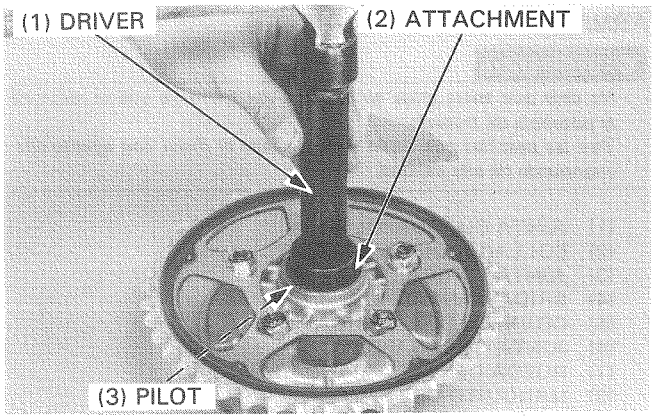

Apply oil to the O-ring and install it in the groove in the wheel hub.
Install the damper rubbers.
Install the final driven flange.
If the final driven sprocket is removed, install the washers and apply the oil to the driven sprocket mounting nuts and tighten the bolts to the specified torque.

TORQUE: 65 N·m (6.5 kg-m, 47 ft-lb)

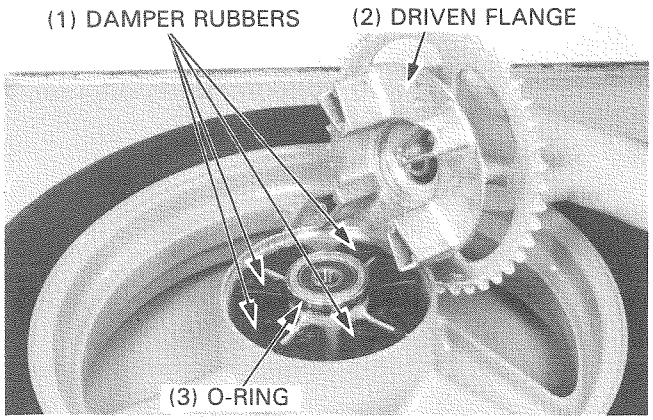

Apply grease to the dust seal lip and install the dust seal onto the wheel hub.
Install the left side collar.

NOTE

- Do not exchange the left and right dust seals.

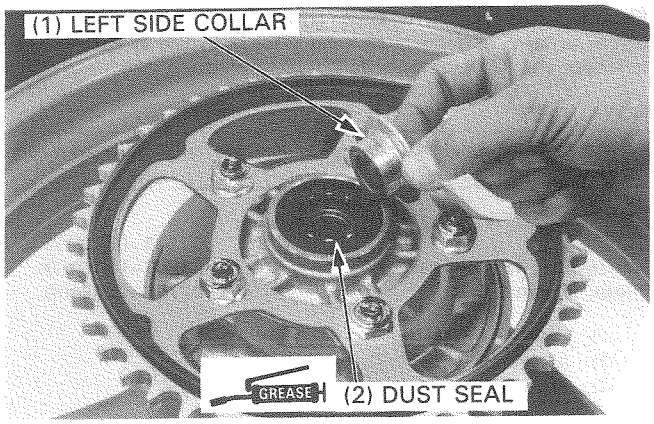

Apply grease to the dust seal lip and install the dust seal onto the wheel hub.
Install the right side collar.
Install the brake disc and mounting bolts.

TORQUE: 40 N·m (4.0 kg-m, 29 ft-lb)

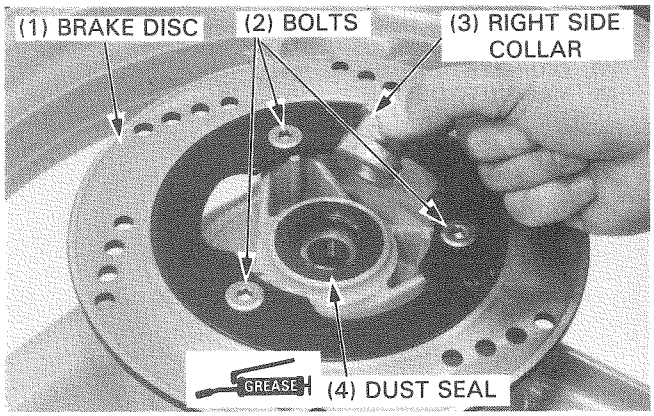

INSTALLATION

Install the rear wheel, fitting the brake disc carefully between the brake pads.

Install the drive chain over the drive sprocket.
Install the drive chain adjusters with the "up" marks facing up and install the rear axle from left side.
Adjust the drive chain (page 3-10).
Tighten the rear axle nut.

TORQUE: 90 N·m (9.0 kg-m, 65 ft-lb)

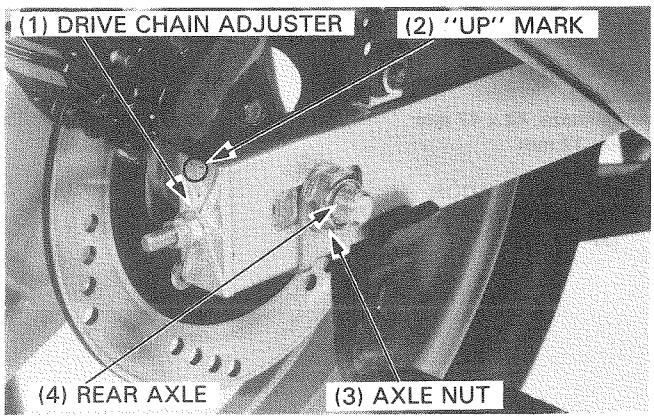

SHOCK ABSORBER

REMOVAL

- Support the motorcycle on its main stand.

Remove the right side cover (page 13-3).
Remove the shock absorber upper mounting bolt.

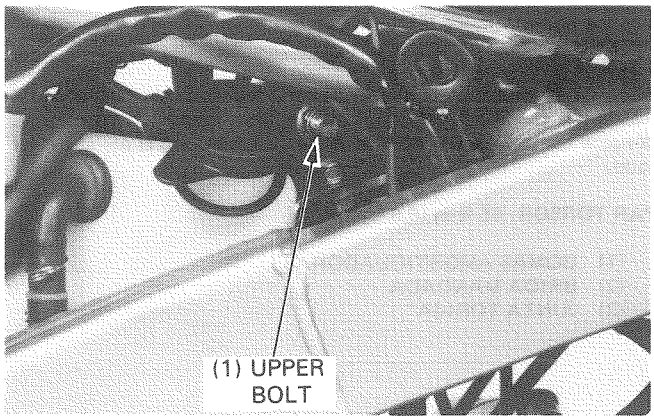

Remove the shock absorber lower mounting bolt.

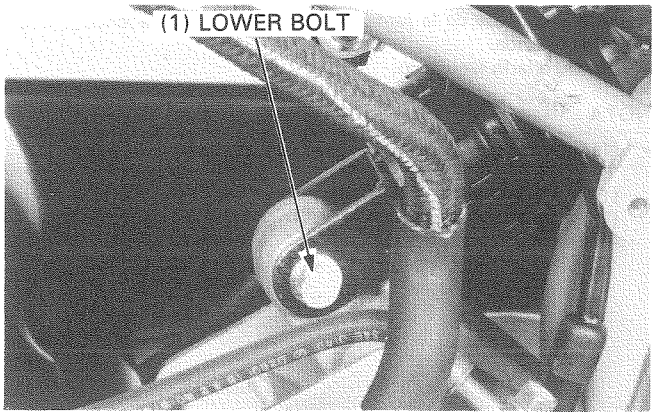

Remove the shock absorber from the frame as shown.

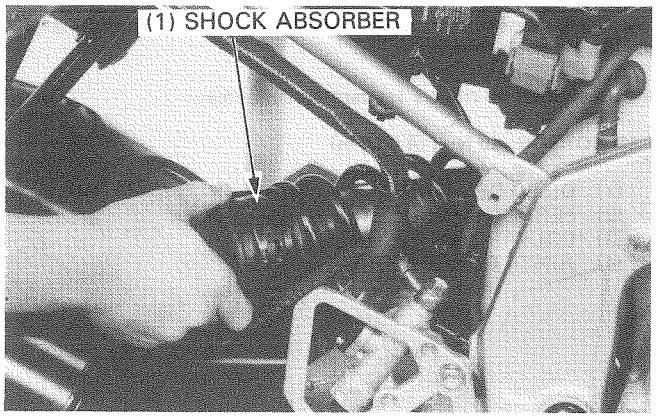

DISASSEMBLY

Set the shock absorber in the shock absorber compressor.

TOOL:
Shock absorber compressor attachment 07959—MB10000
Shock absorber compressor screw assy 07GME—0010100

Compress the spring until the stopper ring can be removed, and remove the stopper ring.
Remove the shock absorber compressor and remove the spring, dust seal, lower seat, adjuster and spring guide.

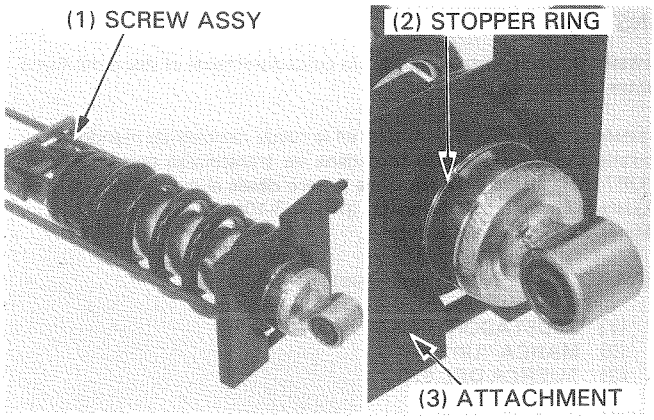

Move the damper rubber until the lock nut can be loosened and loosen the lock nut.
Remove the lower joint and seat stopper.

WARNING

- *The damper unit is filled with nitrogen gas under high pressure, do not try to disassemble.*

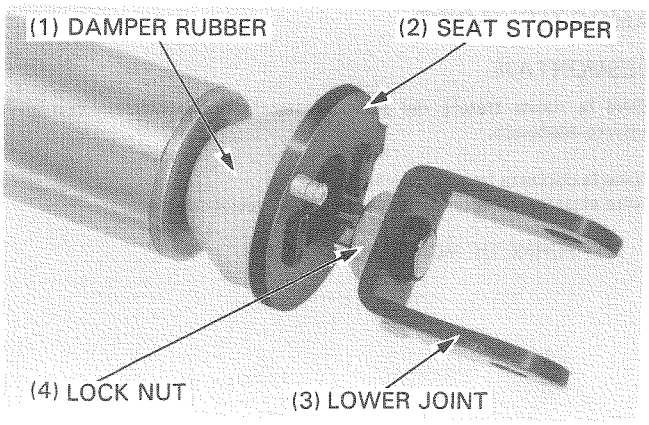

INSPECTION

Measure the spring free length.

SERVICE LIMIT: 146.0 mm (5.75 in)

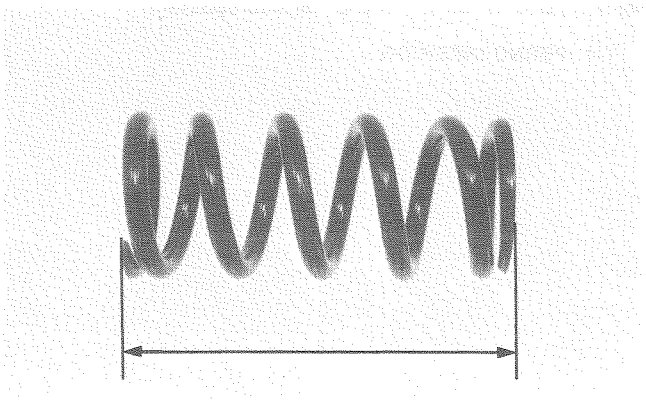

Check the rear damper for deformation, oil leaking, bending of the rod or smooth operation.
Check the damper rubber for wear or damage.

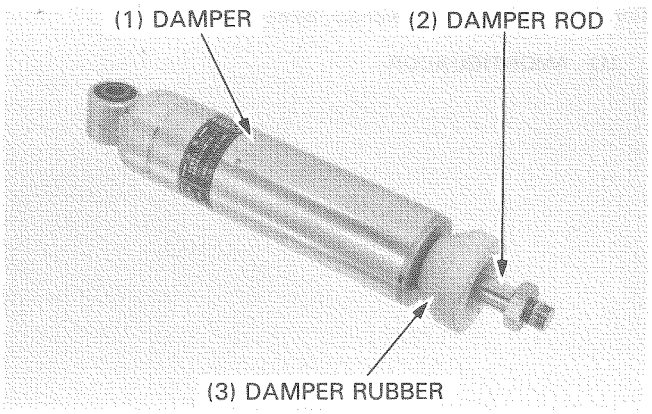

Mark the 10 mm position as shown of the damper rod.
Place the damper rod on a scale and measure the force required to compress the damper until 10 mm (0.4 in).

COMPRESSION FORCE: 9.0 kg (19.8 lb)

If the force required is less than 7.2 kg (15.9 lb), gas is leading.

Examine the damper rod and replace the damper unit if it is bent or scored.

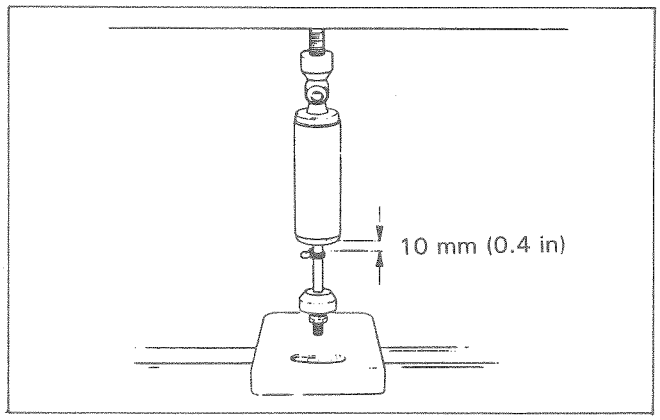

Check the upper seat, dust seal, lower seat, adjuster, slider seat and spring guide for deformation, wear, damage or fatigue.

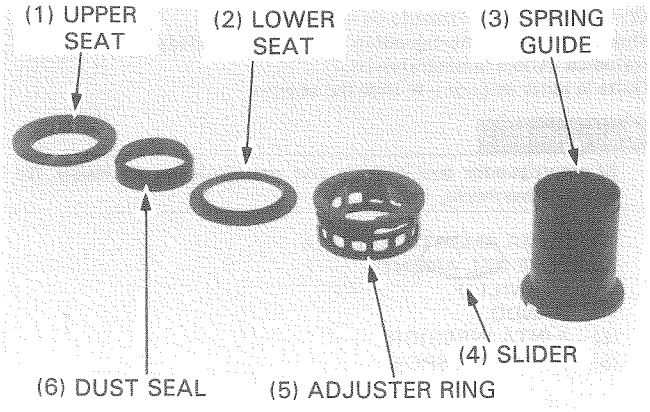

SHOCK ABSORBER DISPOSAL PROCEDURE

Center punch the damper case to mark the drilling point, approximately 25 mm (1.0 in) from the top surface.
Wrap the damper unit inside a plastic bag.
support the damper unit upright in a vise as shown.

Through the open end of the bag, insert a drill motor with a sharp 2—3 mm (5/64—1/8 in) drill bit.

WARNING

- *Do not use a dull drill bit which could cause a build-up of excessive heat and pressure inside the damper, leading to explosion and severe personal injury.*
- *The shock absorber contains nitrogen gas and oil under high pressure. Do not drill any farther down the damper case than the measurement given above, or you may drill into the oil chamber; oil escaping under high pressure may cause serious personal injury.*
- *Always wear eye protection to avoid getting metal shavings in your eyes when the gas pressure is released.*
  The plastic bag is only intended to shield you from the escaping gas.

Hold the bag around the drill motor and briefly run the drill motor inside the bag; this will inflate the bag with air from the motor and help keep the bag from getting caught in the bit when you start.

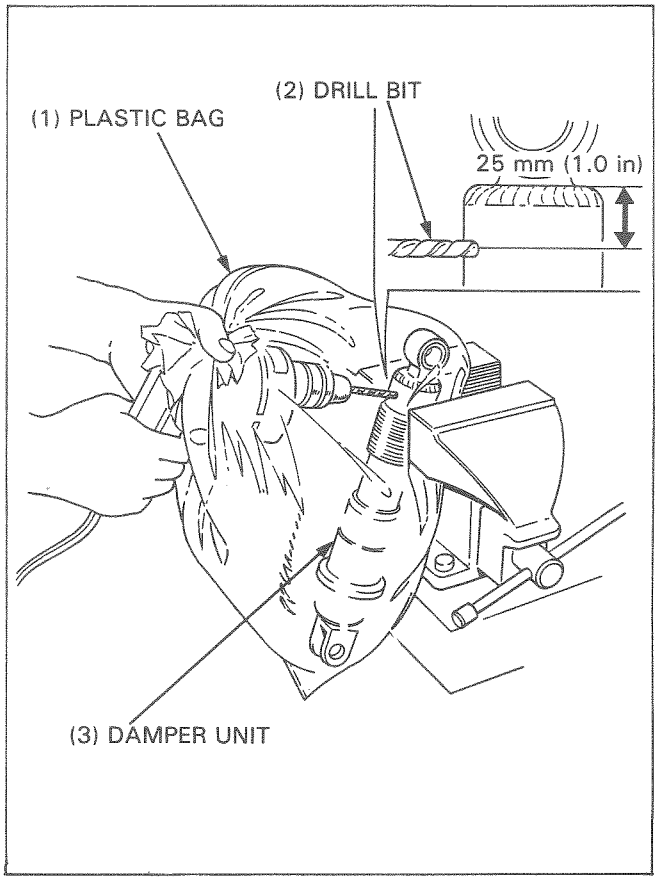

ASSEMBLY

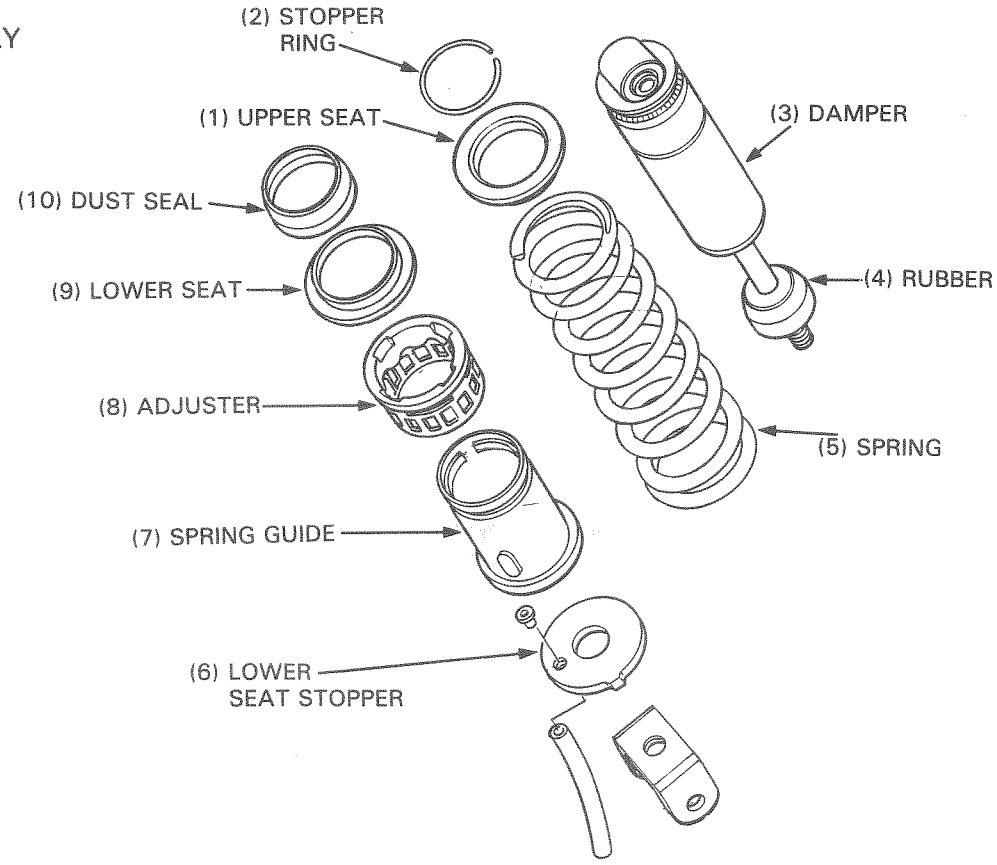

Apply locking agent to the rod threads and install the lock nut. Screw in the lock nut fully.

Install the seat stopper.
Screw the lower joint onto the damper rod fully, hold it and tighten the lock nut.

TORQUE: 65 N·m (6.5 kg-m, 47 ft-lb)

NOTE

- Align the tabs of the seat stopper with the lower joint.

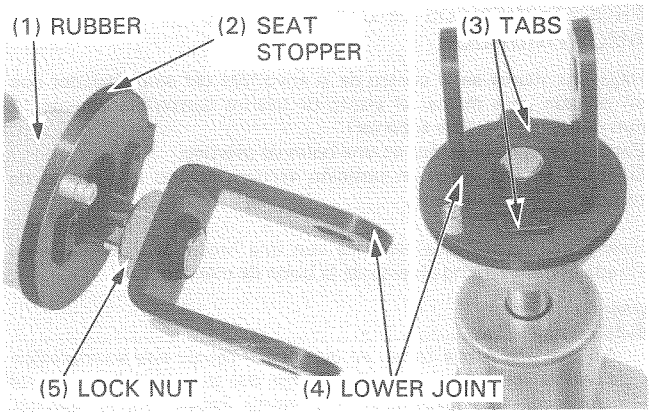

Install the spring guide, adjuster, dust seal, lower seat, spring and upper seat to the damper.
Set the shock absorber in the shock absorber compressor and compress the spring until the stopper ring can be installed.

TOOL:
Shock absorber compressor attachment 07959—MB10000
Shock absorber compressor screw assy 07GME—0010100

Install the stopper ring and remove the compressor.

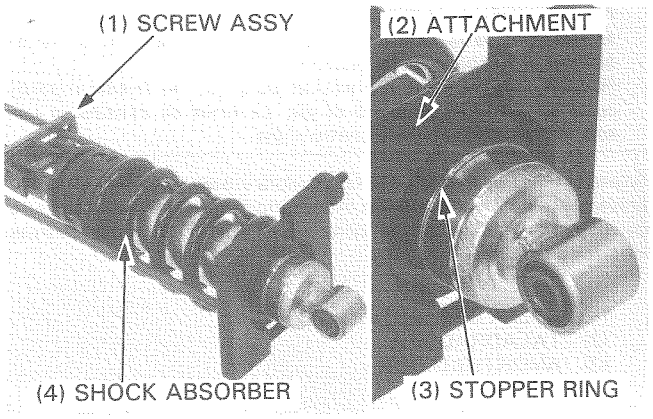

Install the shock absorber breather tube to the seat stopper.

Make sure the tab of the seat stopper is aligned with the groove of the spring guide.

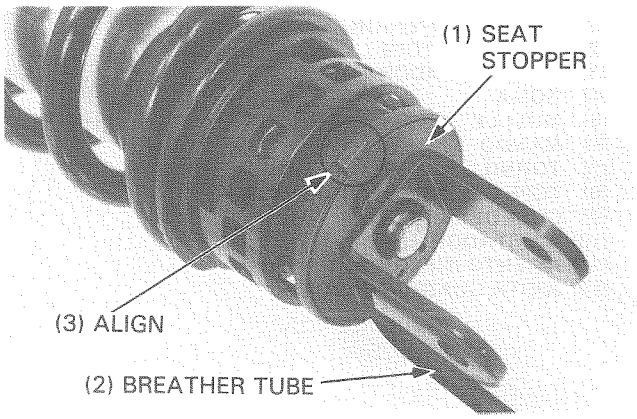

UPPER MOUNT BUSHING AND COLLAR

Check the upper joint collar and rubber bushing for wear or damage.

Apply MoS_2 grease (page 2-13) to the joint collar.

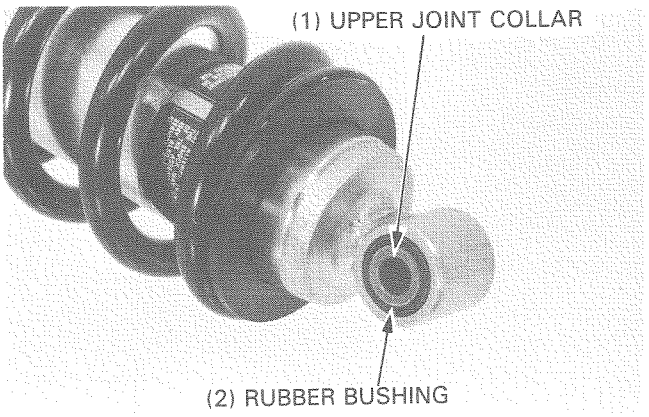

INSTALLATION

Install the shock absorber to the frame with the aligning point of the spring seat and spring guide facing up as shown.

Tighten the shock absorber upper mounting bolt.

TORQUE: 55 N·m (5.5 kg-m, 40 ft-lb)

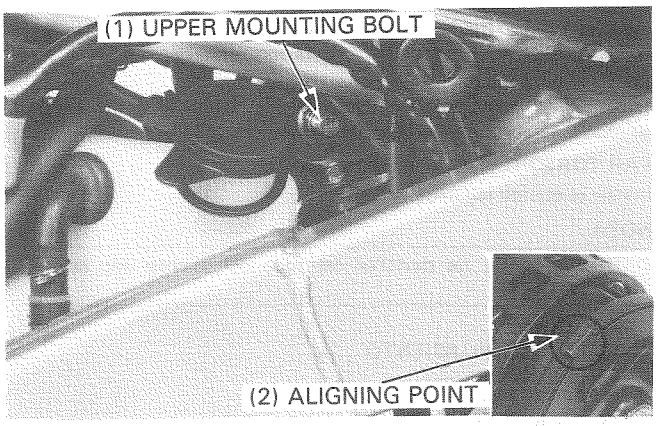

Tighten the shock absorber lower mounting bolt.

TORQUE: 55 N·m (5.5 kg-m, 40 ft-lb)

Install the right side cover (page 13-3).

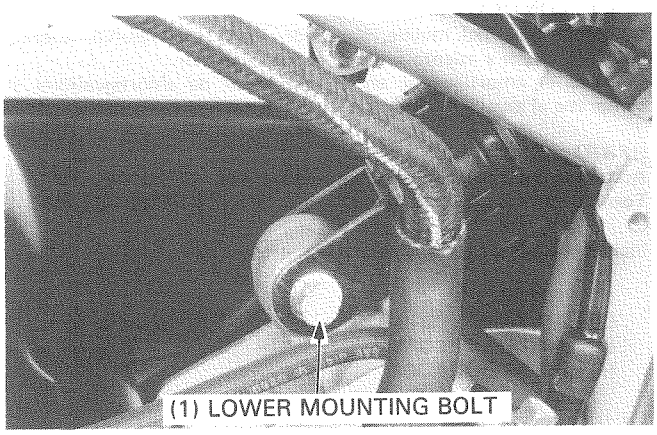

SHOCK LINKAGE

REMOVAL

Support the motorcycle on its main stand.
Remove the side covers (page 13-3).
Remove the shock absorber lower mounting bolt and shock arm-to-swing arm bolt.

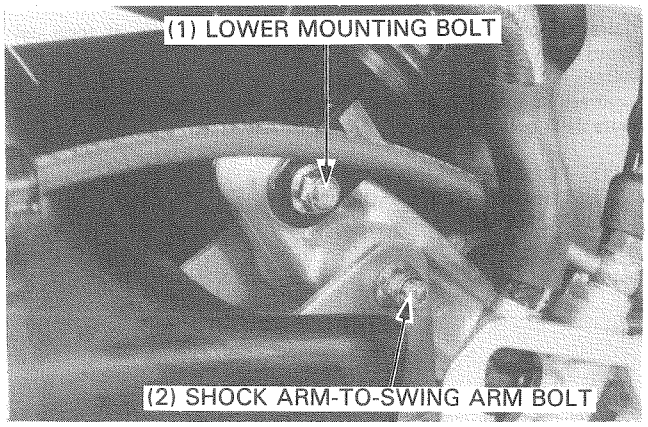

Remove the shock link-to-frame bolt and remove the shock arm and shock link as assembly.
Remove the shock arm-to-shock link bolt and separate the shock link from the shock arm.

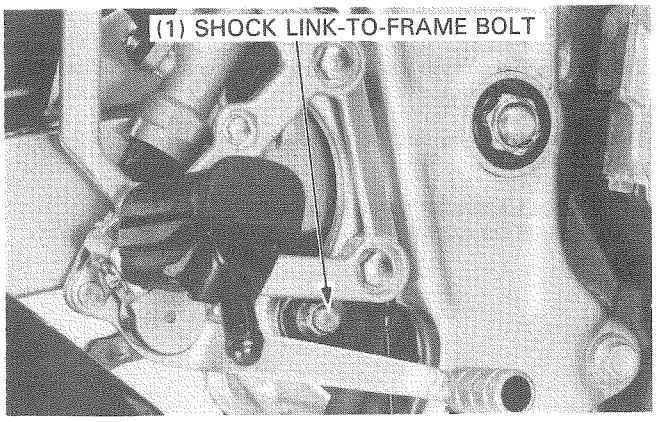

DISASSEMBLY/INSPECTION

Remove the dust seals and collars, and check them for wear, damage or fatigue.
Check the needle bearings of the shock arm for damage or loose fit.
If the needle bearings are loose or damaged, replace them.

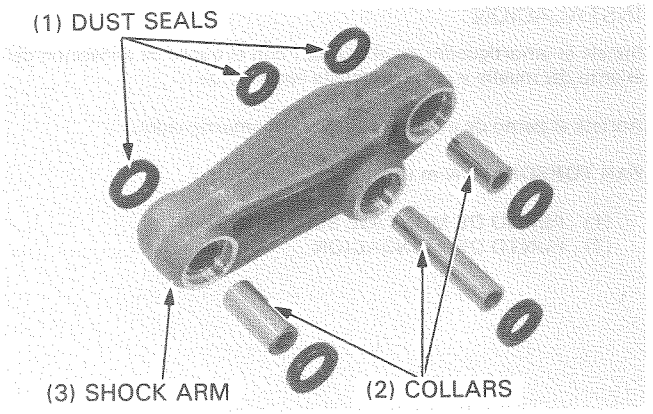

Remove the dust seals and collar from the shock link, and check them for wear, damage or fatigue.
If the shock link needle bearing are loose or damaged, replace them.

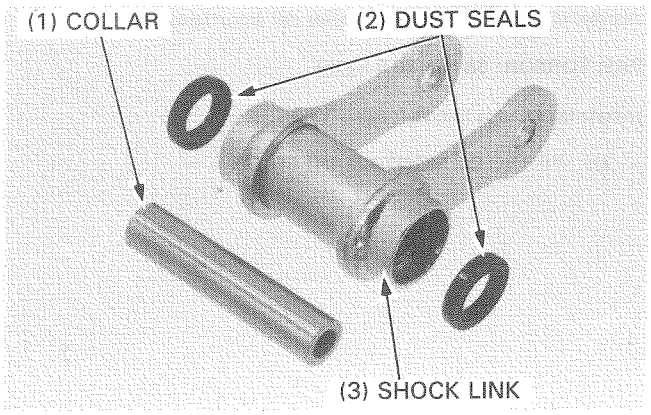

NEEDLE BEARING REPLACEMENT

Remove the needle bearings from the shock arm using a hydraulic press.

TOOL:
Shock absorber and shock link joints:

Driver pin:	**07GMD—KT80100**
Swing arm joint:	
Driver shaft:	**07946—MJ00100**
	Bearing remover

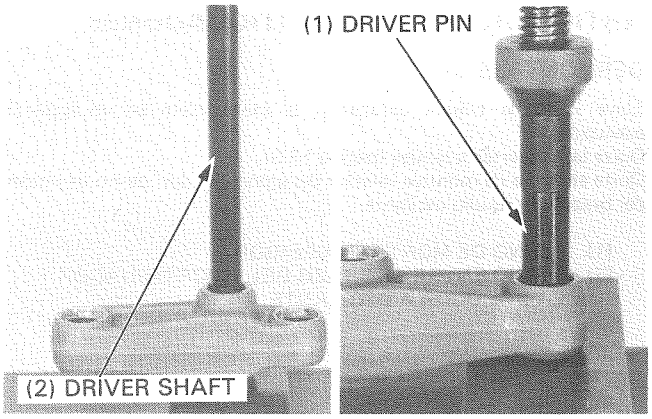

Remove the shock link needle bearings using a bearing remover.

TOOL:

Bearing remover	**07936—3710300**
— bearing remover handle	**07936—3710100**
— bearing remover weight	**07741—0010201**

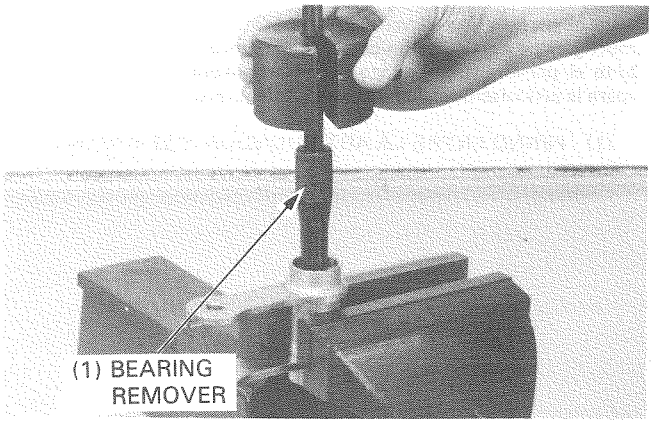

Apply grease to the needle bearings of the shock arm.
Press the needle bearings into the shock arm.

TOOL:

Driver	**07749–0010000**
Attachment, 24 x 26 mm	**07746–0010700**
Pilot, 15 mm (shock arm and shock link joint)	**07746–0040300**
Pilot, 17 mm (swing arm joint)	**07746–0040400**

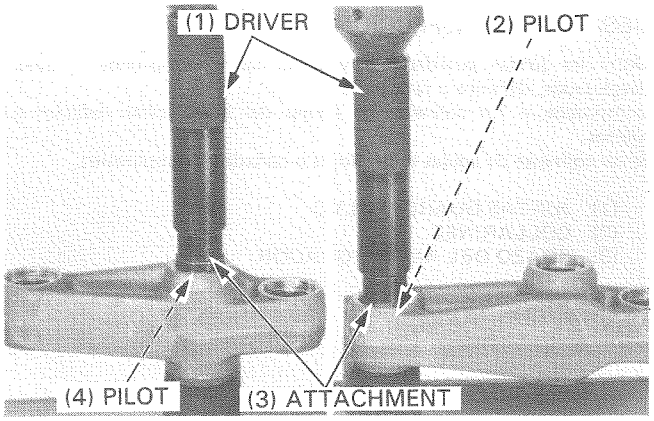

Apply grease to the needle bearings of the shock link.
Press the bearings into the shock link.

TOOL:

Driver	**07749–0010000**
Attachment, 24 x 26 mm	**07746–0010700**
Pilot, 17 mm	**07746–0040400**

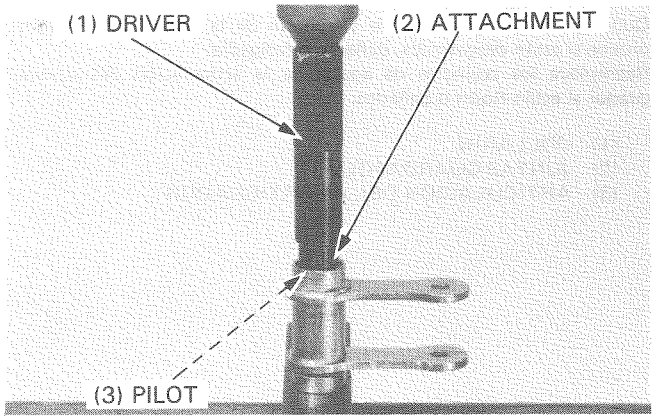

ASSEMBLY

Apply grease to the needle bearings, collars, and dust seal lips.
Install the collars and dust seals to the shock arm.

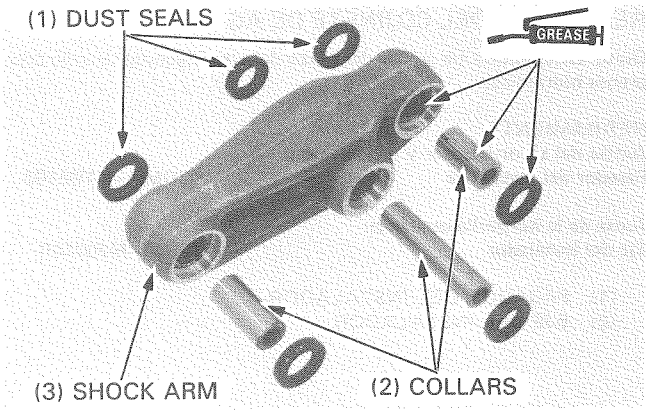

Apply grease to the needle bearings, collar and dust seal lips.
Install the collar and dust seals to the shock link.

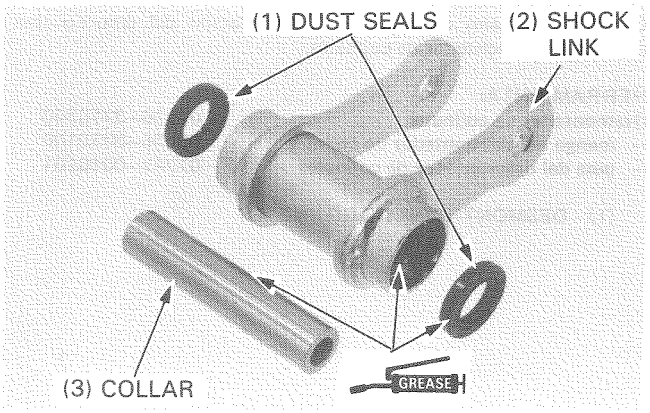

Install the shock link to the shock arm and tighten the shock arm-to-shock link bolt.

TORQUE: 55 N·m (5.5 kg-m, 40 ft-lb)

NOTE

- Install the shock arm-to-shock link bolt from the "up" mark side of the shock arm.

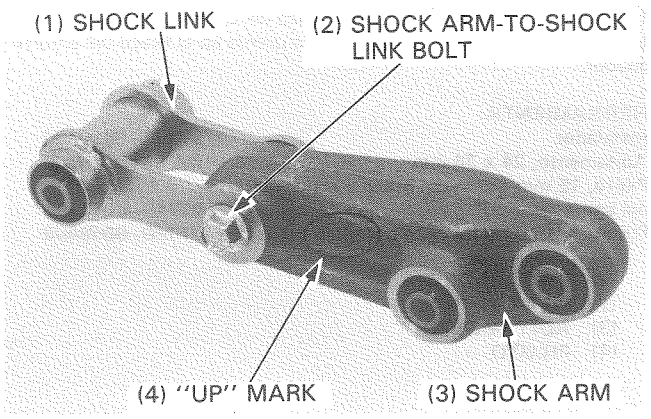

Install the shock arm and shock link assembly to the frame. Tighten the shock link-to-frame bolt from the left side.

TORQUE: 55 N·m (5.5 kg-m, 40 ft-lb)

NOTE

- Install the shock arm and shock link assembly with the "up" mark on the shock arm facing up.

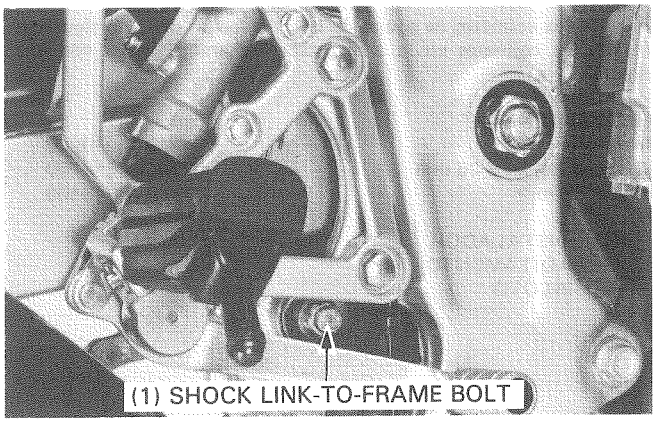

Install the shock arm-to-swing arm bolt from the left side and tighten it.

TORQUE: 55 N·m (5.5 kg-m, 40 ft-lb)

Install the shock absorber lower mounting bolt from the left side and tighten it.

TORQUE: 55 N·m (5.5 kg-m, 40 ft-lb)

Install the side covers (page 13-3).

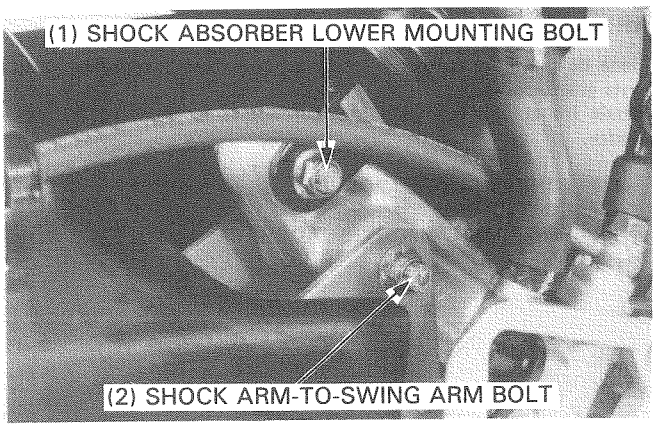

SWING ARM

REMOVAL

Remove the rear wheel (page 15-3).
Remove the rear fender B (page 13-5).
Remove the shock arm-to-swing arm bolt and shock absorber lower mounting bolt.
Remove the cotter pin, bolt, nut and washer, and remove the brake torque rod from the swing arm.

NOTE

- Guard the brake caliper by wrapping with a piece of cloth.
- Do not hang the brake caliper with the brake hose.

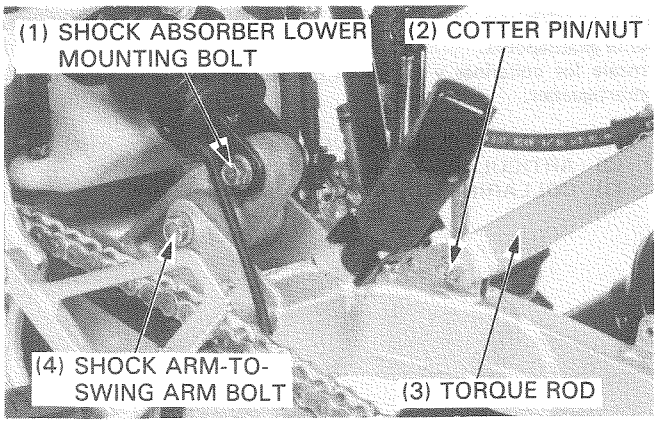

Remove the swing arm pivot nut and bolt.
Remove the swing arm from the frame.

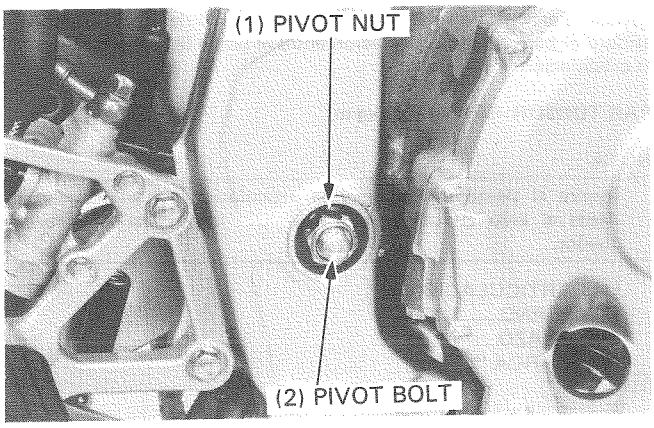

DISASSEMBLY

Remove the drive chain slider and brake torque rod collar from the swing arm.

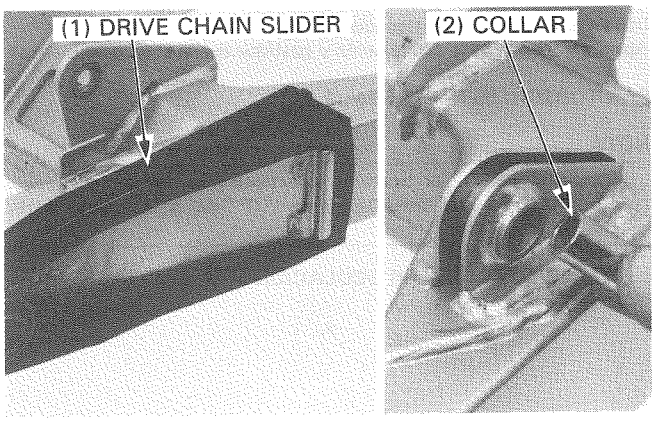

Remove the dust seal, left pivot collar and distance collar.
Check the dust seal, left pivot collar and distance collar for damage or fatigue.
Check the needle bearing for damage.

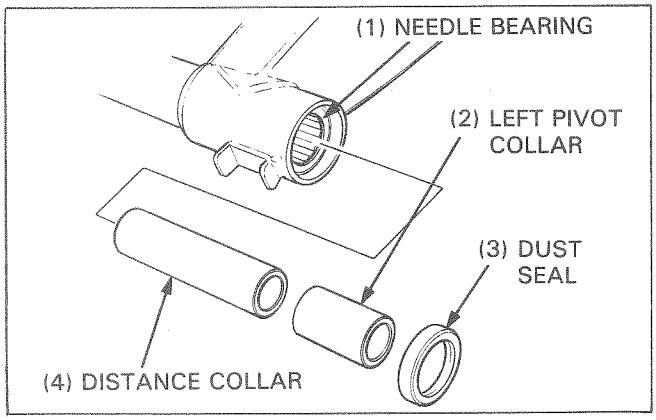

Remove the right pivot collar and dust seal, and check them for damage or fatigue.
Check that the ball bearing turn smoothly and quietely and fits tightly in the swing arm.
In case the bearing must be replaced, remove the snap ring.

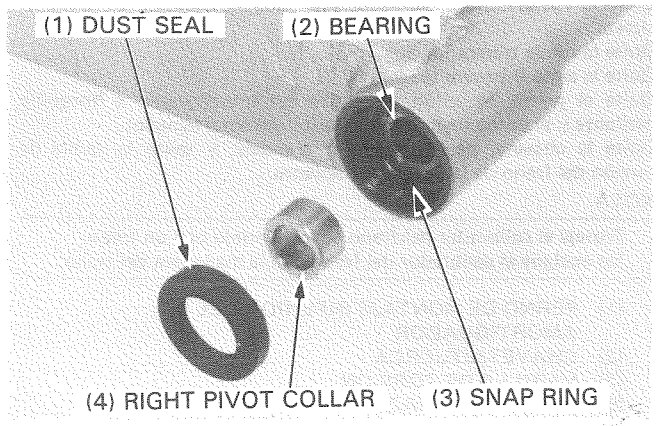

PIVOT BEARING REPLACEMENT

Press the right pivot bearing out of the swing arm using a hydraulic press and driver shaft.

TOOL:

Driver shaft	**07946–MJ00100**

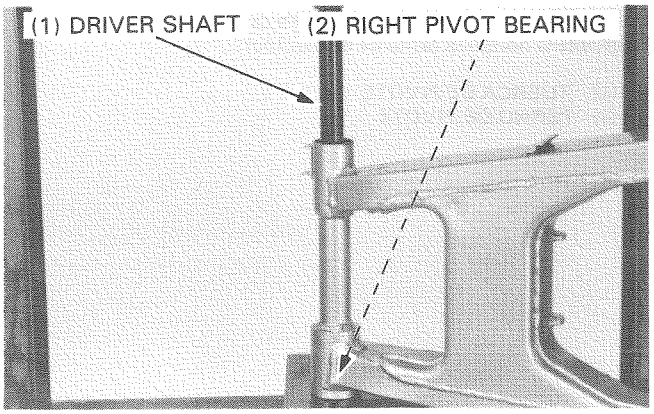

Install the needle bearing remover to the left needle bearing.

TOOL:

Needle bearing remover	**07GMD-KT70200**

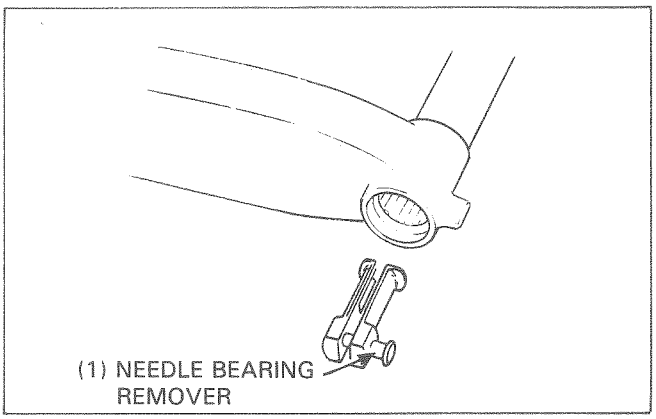

Set the driver shaft as shown and press the left needle bearing out of the swing arm.

TOOL:

Driver shaft	**07946–MJ00100**

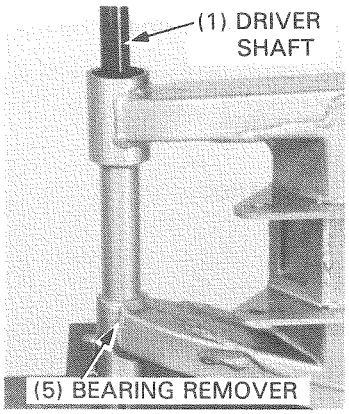

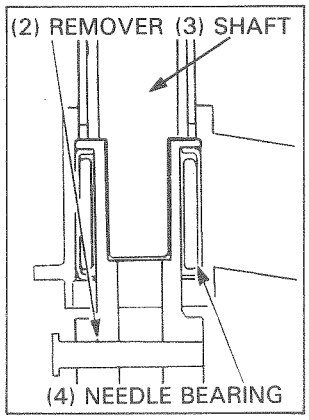

Press the left needle bearing into the swing arm using a hydraulic press.

TOOL:

Driver	**07749–0010000**
Attachment, 28 x 30 mm	**07946–1870100**
Pilot, 22 mm	**07746–0041000**

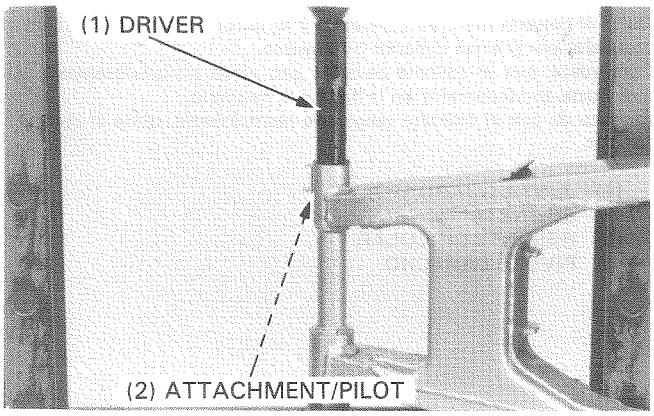

Press the right pivot bearing into the swing arm using a hydraulic press.

TOOL:

Driver	**07749–0010000**
Attachment, 32 x 35 mm	**07746–0010100**
Pilot, 15 mm	**07746–0040300**

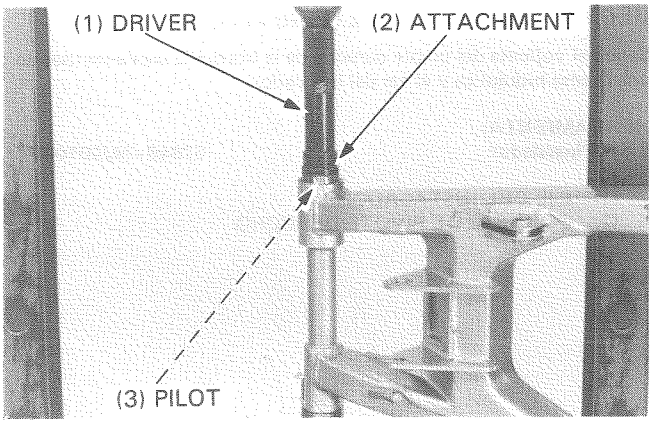

ASSEMBLY

Install the snap ring into the groove in the swing arm if the right pivot bearing is replaced.
Apply grease to the dust seal lip and install the dust seal in the swing arm pivot.
Install the right pivot collar.

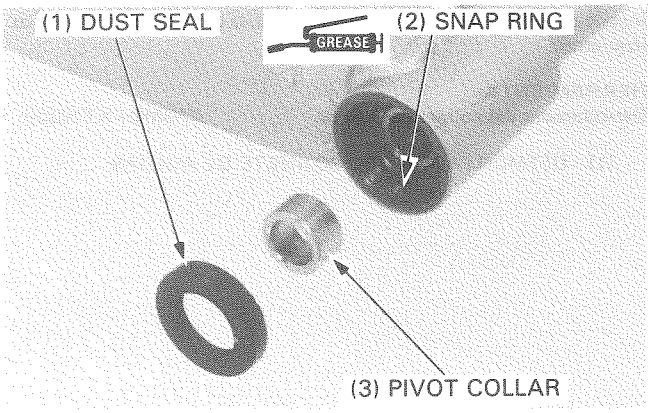

Apply grease to the left needle bearing.
Install the distance collar.
Apply grease to the dust seal lip and install the dust seal in the swing arm pivot.
Install the left pivot collar.

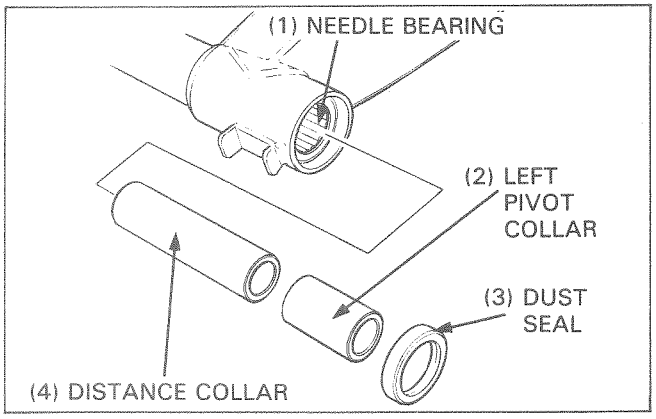

Install the drive chain slider to the swing arm.

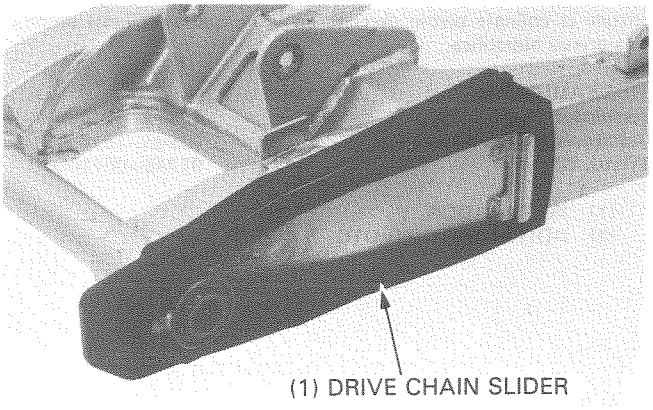

Install the brake torque rod collar to the swing arm.

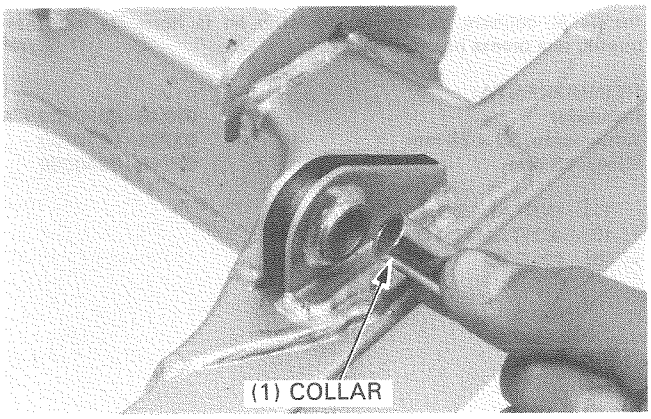

INSTALLATION

Install the swing arm to the frame.
Install the swing arm pivot bolt and nut, and tighten the nut.

TORQUE: 65 N·m (6.5 kg-m, 47 ft-lb)

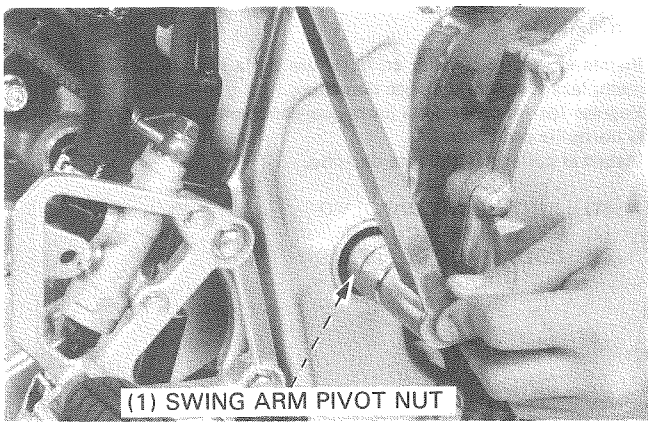

Tighten the shock arm-to-swing arm bolt.

TORQUE: 55 N·m (5.5 kg-m, 40 ft-lb)

Tighten the shock absorber lower mounting bolt.

TORQUE: 55 N·m (5.5 kg-m, 40 ft-lb)

Install the brake torque rod to the swing arm.
Install the brake torque rod mounting bolt, washer and nut, and tighten the nut.

TORQUE: 22 N·m (2.2 kg-m, 16 ft-lb)

Install the cotter pin through the bolt.

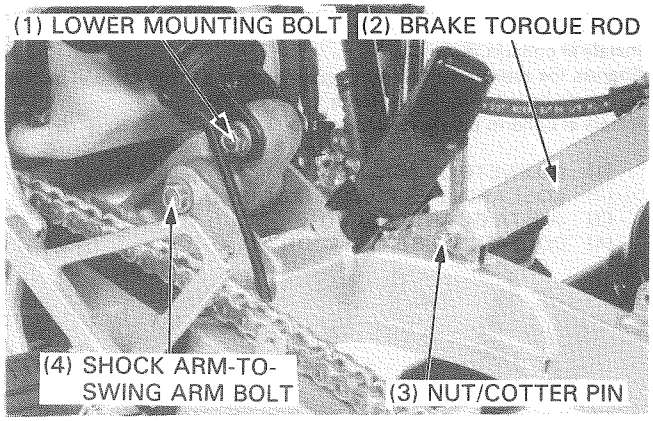

Install the rear fender B (page 13-5).
Install the rear wheel (page 15-7).

MEMO

HYDRAULIC BRAKES

FRENOS HIDRAULICOS

FRENO IDRAULICO

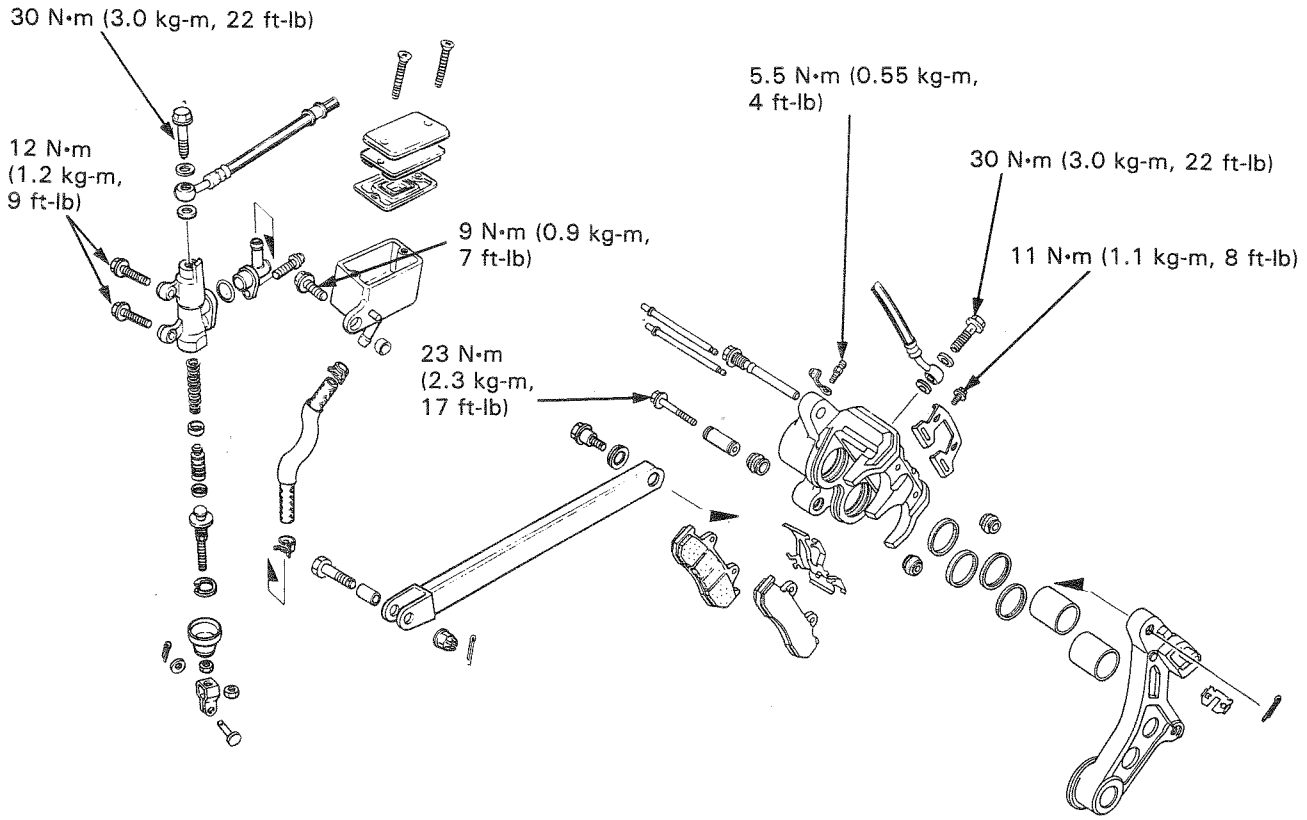
30 N•m (3.0 kg-m, 22 ft-lb)
12 N•m
(1.2 kg-m,
9 ft-lb)
9 N•m (0.9 kg-m,
7 ft-lb)
23 N•m
(2.3 kg-m,
17 ft-lb)
5.5 N•m (0.55 kg-m,
4 ft-lb)
30 N•m (3.0 kg-m, 22 ft-lb)
11 N•m (1.1 kg-m, 8 ft-lb)

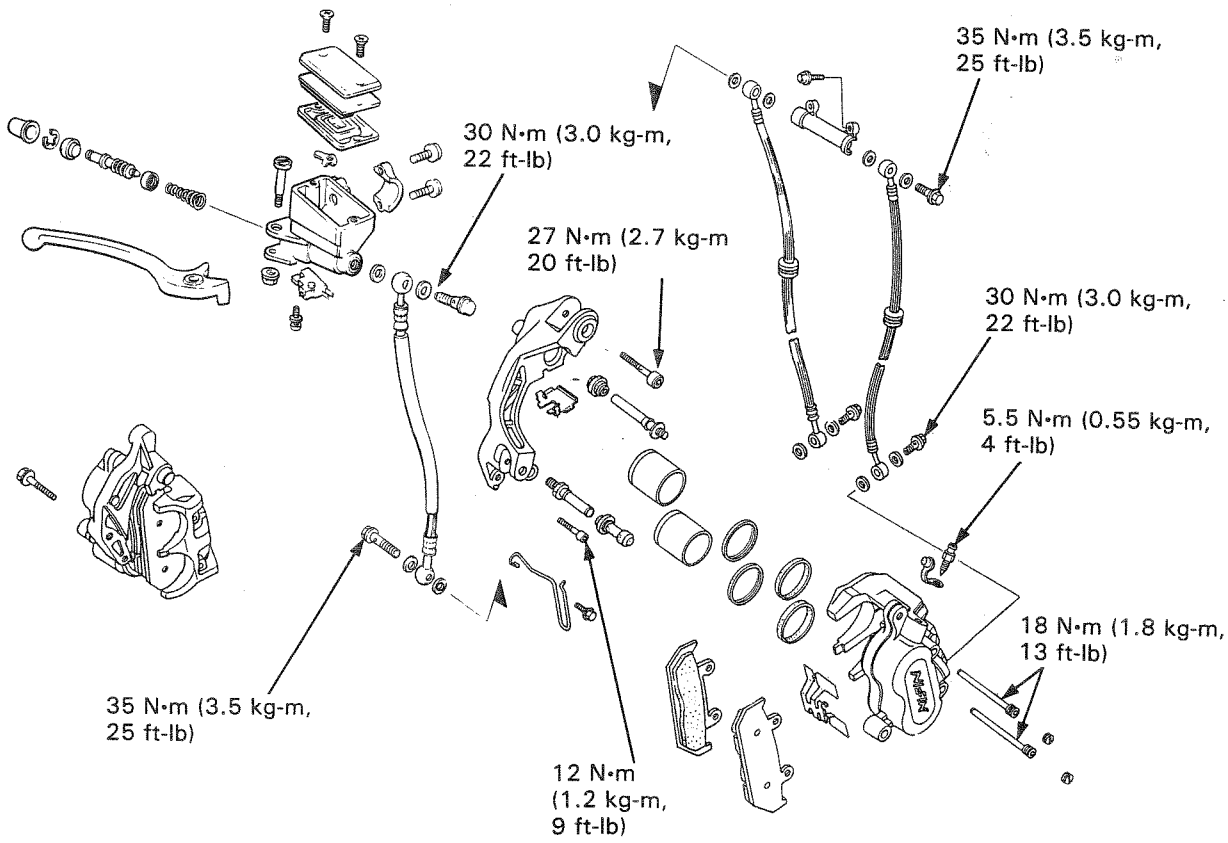
35 N•m (3.5 kg-m,
25 ft-lb)
30 N•m (3.0 kg-m,
22 ft-lb)
27 N•m (2.7 kg-m
20 ft-lb)
30 N•m (3.0 kg-m,
22 ft-lb)
5.5 N•m (0.55 kg-m,
4 ft-lb)
18 N•m (1.8 kg-m,
13 ft-lb)
35 N•m (3.5 kg-m,
25 ft-lb)
12 N•m
(1.2 kg-m,
9 ft-lb)

16

SERVICE INFORMATION

GENERAL

WARNING

- *A contaminated brake disc or pad reduces stopping power. Discard contaminated pads and clean a contaminated disc with a high quality brake degreasing agent.*

- The brake calipers can be removed without disconnecting the hydraulic system.
- Bleed the hydraulic system if it has been disassembled or if the brake feels spongy.
- Do not allow foreign material to enter the system when filling the reservoir.
- Avoid spilling brake fluid on painted, plastic or rubber parts. Place a rag over these parts whenever the system is serviced.
- Always check brake operation before riding the motocycle.

SPECIFICATIONS

Unit: mm (in)

ITEM			STANDARD	SERVICE LIMIT
Brake disc	Thickness	Front	4.3–4.7 (0.17–0.19)	3.5 (0.14)
		Rear	4.8–5.2 (0.19–0.20)	4.0 (0.16)
	Warpage		——	0.3 (0.01)
Master cylinder I.D.		Front	14.000–14.043 (0.5512–0.5529)	14.055 (0.5533)
		Rear	12.700–12.743 (0.5000–0.5017)	12.755 (0.5022)
Master piston O.D.		Front	13.957–13.984 (0.5495–0.5506)	13.984 (0.5506)
		Rear	12.657–12.684 (0.4983–0.4994)	12.645 (0.4978)
Caliper cylinder I.D.		Front	27.000–27.050 (1.0630–1.0650)	27.06 (1.065)
		Rear	27.000–27.050 (1.0630–1.0650)	27.06 (1.065)
Caliper piston O.D.		Front	26.918–26.968 (1.0598–1.0617)	26.91 (1.059)
		Rear	26.918–26.968 (1.0598–1.0617)	26.91 (1.059)
Brake fluid		Front	DOT 4	——
		Rear	DOT 4	——

TORQUE VALUES

Brake caliper bleed valve	5.5 N•m (0.55 kg-m, 4 ft-lb)
Brake caliper bracket bolt	27 N•m (2.7 kg-m, 20 ft-lb)
Anti-drive piston bolt	12 N•m (1.2 kg-m, 9 ft-lb)
Pad pin retainer bolt (rear)	11 N•m (1.1 kg-m, 8 ft-lb)
Rear brake caliper mounting bolt	23 N•m (2.3 kg-m, 17 ft-lb)
Brake hose bolt	30 N•m (3.0 kg-m, 22 ft-lb)
Brake hose 2 way joint bolt	35 N•m (3.5 kg-m, 25 ft-lb)
Brake caliper pad pin (front)	18 N•m (1.8 kg-m, 13 ft-lb)
Footpeg bracket bolt	27 N•m (2.7 kg-m, 20 ft-lb)
Rear master cylinder mounting bolt	12 N•m (1.2 kg-m, 9 ft-lb)
Reservoir mounting bolt	9 N•m (0.9 kg-m, 7 ft-lb)

TOOL

Special

Snap ring pliers	07914—3230001

TROUBLESHOOTING

Brake lever/pedal soft or spongy
- Air in hydraulic system
- Low fluid level
- Hydraulic system leaking

Brake lever/pedal too hard
- Sticking piston(s)
- Clogged hydraulic system
- Pads glazed or worn excessively

Brake drag
- Hydraulic system sticking
- Sticking piston(s)
- Clogged hydraulic system
- Incorrect pedal adjustment
- Caliper slide pins sticking
- Disc or wheel misaligned

Brakes grab
- Pads contaminated
- Disc or wheel misaligned

Brake chatter or squeal
- Pads contaminated
- Excessive disc runout
- Caliper installed incorrectly
- Disc or wheel misaligned

BRAKE FLUID REPLACEMENT/ AIR BLEEDING

CAUTION

- *Avoid spilling fluid on painted, plastic or rubber parts. Place a rag over these parts whenever the system is serviced.*
- *Do not mix different types of the brake fluid and never reuse the contaminated fluid.*
  FRONT/REAR— DOT 4 BRAKE FLUID

BRAKE FLUID DRAINING

FRONT: Turn the handle left and remove the reservoir cover with the master cylinder parallel to the ground.
REAR: Remove the right side cover and reservoir cover.

Connect a bleed hose to the bleed valve.

Loosen the caliper bleed valve and slowly pump the brake lever or pedal.
Stop operating the lever or pedal when fluid stops flowing out of the bleed valve.

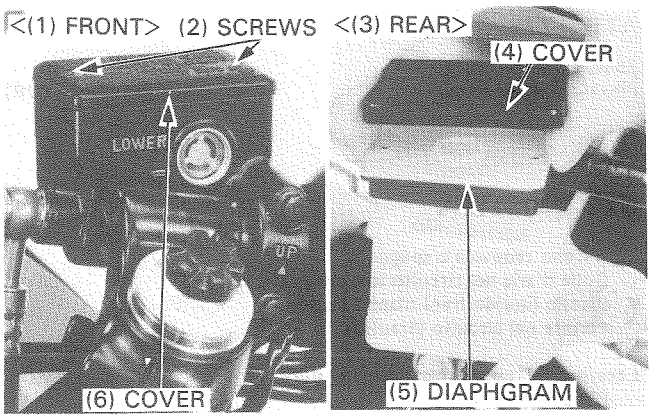

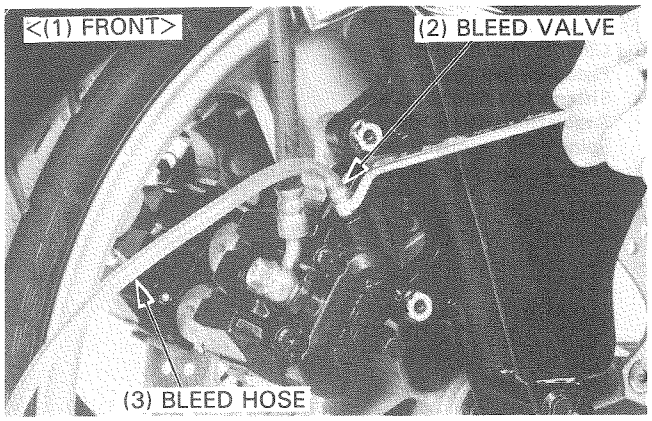

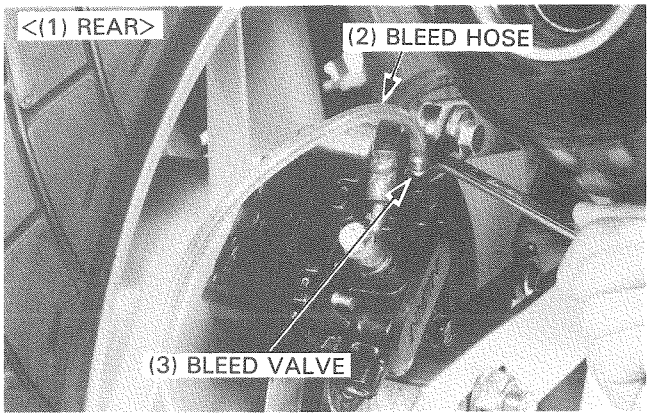

BRAKE FLUID FILLING/AIR BLEEDING

NOTE

- Check the fluid level often while bleeding the brakes to prevent air from being pumped into the system.
- When using a brake bleeding tool, follow the manufacture's operating instructions.

Close the bleed valve, and fill the reservoir with the specified brake fluid to the casting ledge level (rear: upper level).

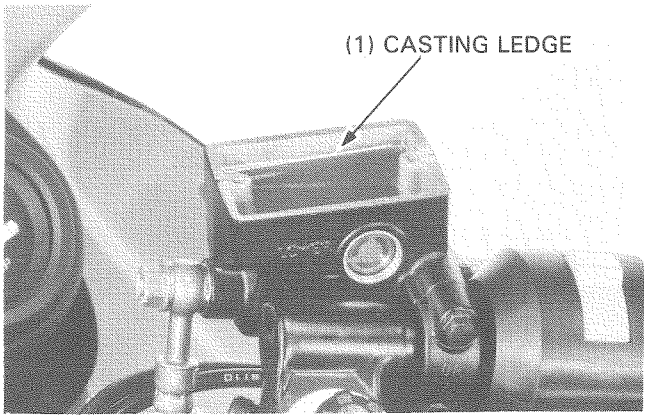

Connect the Mityvac Brake Bleeder No. 6860 or equivalent to the bleeder valve.

Pump the brake bleed and loosen the bleed valve.
Add fluid when the fluid level in the reservoir is low.
Repeat above procedures until no air bubbles appear in the plastic hose.

NOTE

- If air is entering the bleed from around the bleed valve threads, seal the threads with teflon tape.

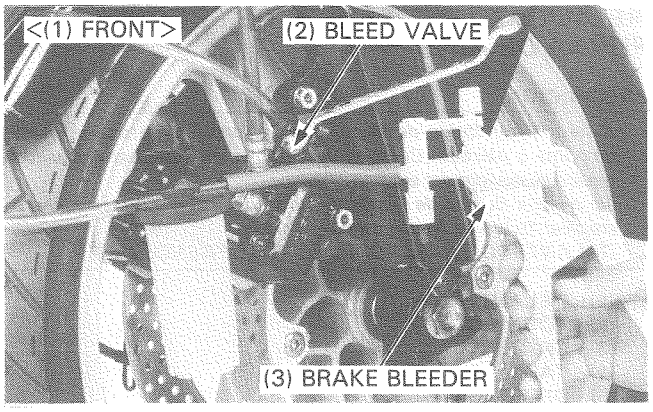

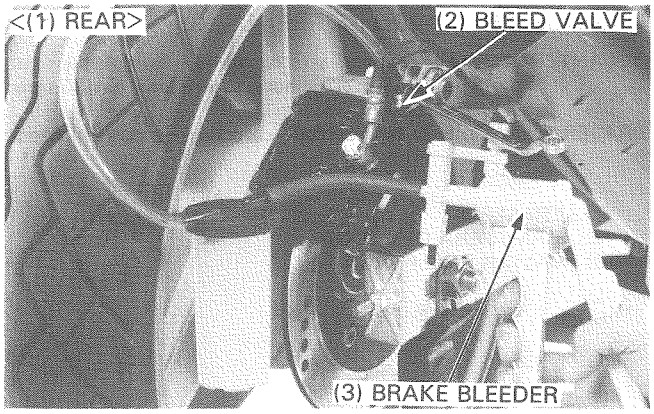

If a brake bleeder is not available, fill the system as follows:

Pump up the system pressure with the lever or pedal until there are no air bubbles in the fluid flowing out of the reservoir hole and lever or pedal resistance is felt.

1) Squeeze the brake lever (or depress the brake pedal), then open the bleed valve 1/2 turn and close the valve.

NOTE

- Do not release the brake lever (or pedal) until the bleed valve has been closed.

2) Release the brake lever (or pedal) slowly and wait several seconds after it reaches the end of its travel.

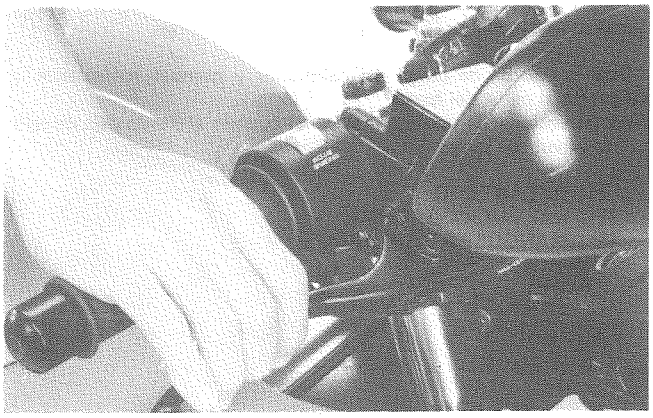

Repeat steps 1 and 2 until bubbles cease to appear in the fluid at the end of the hose.

Tighten the bleed valve.

TORQUE: 5.5 N·m (0.55 kg-m, 4 ft-lb)

Close the bleed valve, fill the reservoir with the specified brake fluid to the casting ledge level (rear: upper level)

Reinstall the diaphragm and cover.

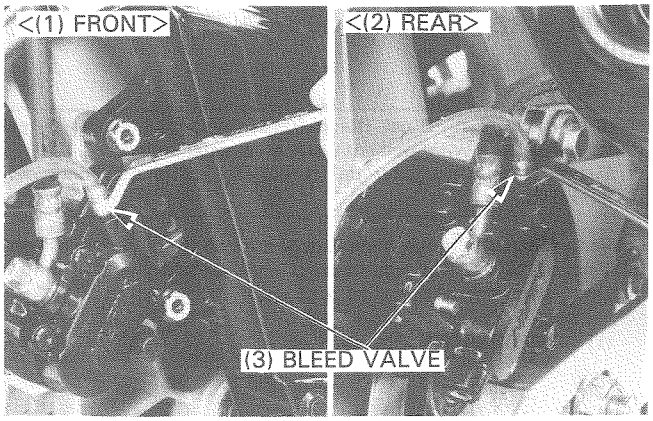

WARNING

- *A contaminated brake disc or pad reduces stopping power. Discard contaminated pads and clean a contaminated disc with a high quality brake degreasing agent.*

BRAKE PAD/DISC

FRONT BRAKE PAD REPLACEMENT

NOTE

- Always replace the brake pads in pairs to assure even disc pressure.

Right caliper:
Remove the pad pin plugs and loosen the pad pins.
Remove the caliper bracket bolts, then remove the right front brake caliper and bracket.

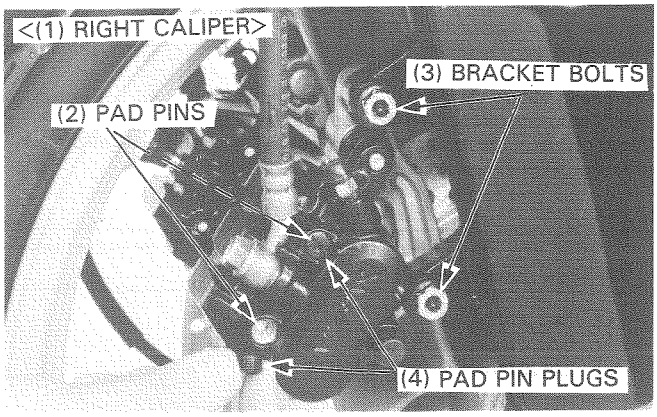

Left caliper:
Remove the pad pin plugs and loosen the pad pins.
Remove the speedometer cable guide.
Remove the caliper bracket bolt and anti-dive piston bolt, then remove the left front brake caliper and bracket.

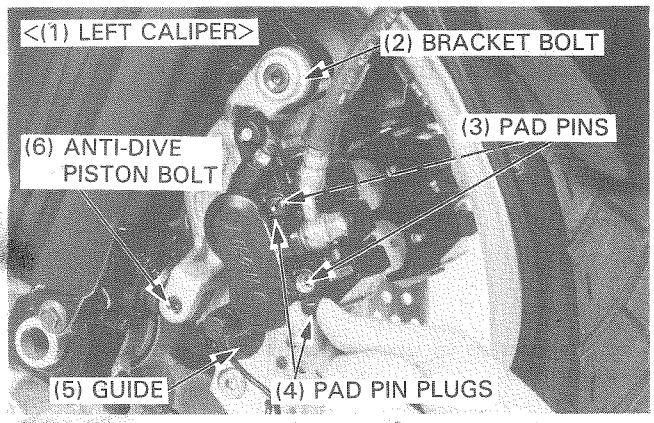

Pry one old pad against the caliper with a screwdriver to push the pistons into the caliper.

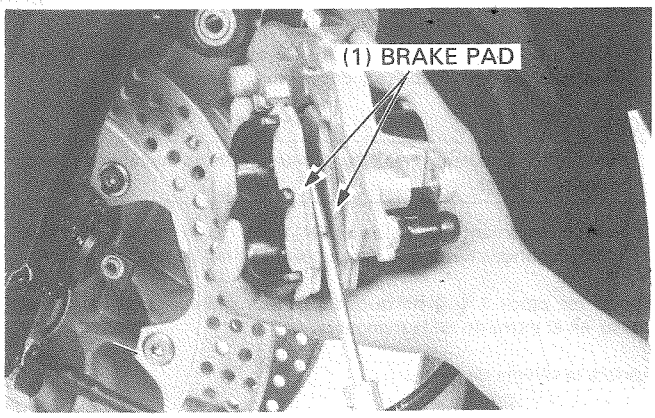

Pull the pad pins out of the caliper.
Remove the brake pads.

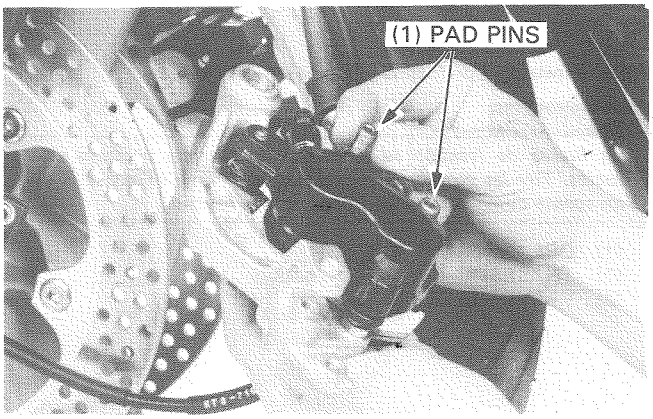

Position the pad spring in the caliper as shown.

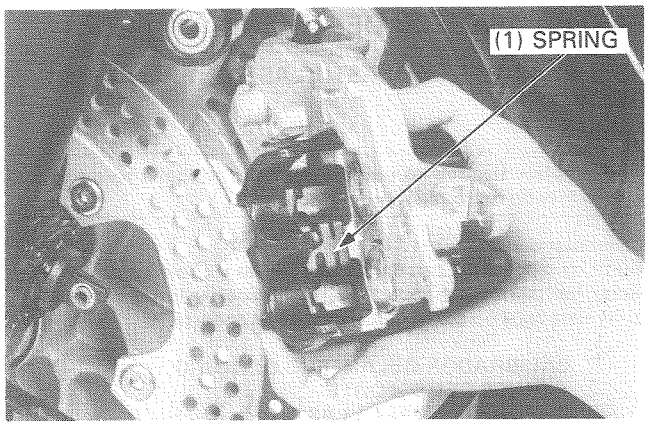

Apply silicone grease to the caliper bracket pins.

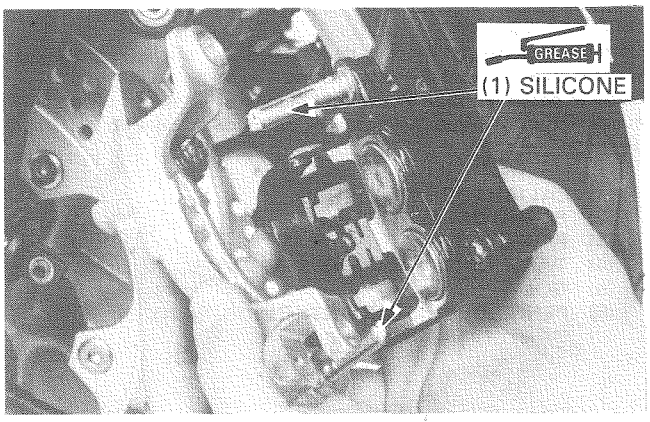

Install new pads in the caliper.

NOTE

- Always replace the brake pads in pair to assure even disc pressure.

Install the pad pins, first one pin, then the other, by pushing the pads against the caliper to depress the pad spring.

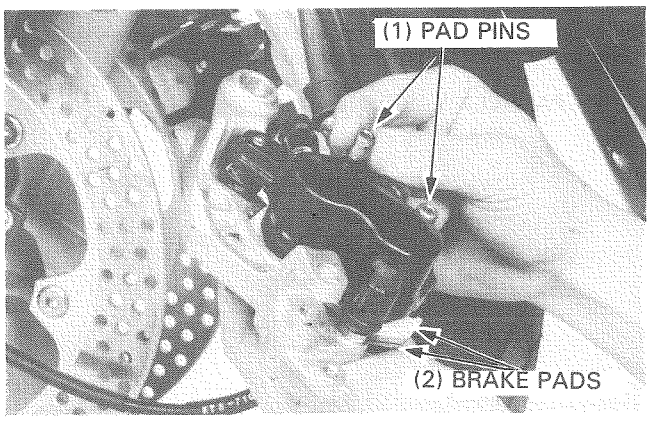

Left caliper:
Install the left front brake caliper, making sure not to damage the pads, then tighten the caliper bracket bolt and anti-dive piston bolt.

TORQUE:
Caliper bracket bolt: 27 N·m (2.7 kg-m, 20 ft-lb)
Anti-dive piston bolt: 12 N·m (1.2 kg-m, 9 ft-lb)

Tighten the pad pins.

TORQUE: 18 N·m (1.8 kg-m, 13 ft-lb)

Install the pad pin plugs securely.
Install the speedometer cable guide.

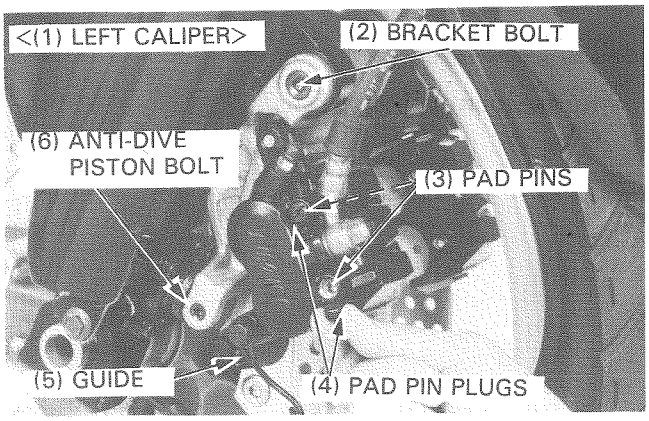

Right caliper:
Install the right front brake caliper, making sure not to damage the pads, then tighten the caliper bracket bolt.

TORQUE: 27 N•m (2.7 kg-m, 20 ft-lb)

Tighten the pad pins.

TORQUE: 18 N•m (1.8 kg-m, 13 ft-lb)

Install the pad pin plugs securely.

NOTE

- Operate brake lever to seat the caliper pistons against the pads.

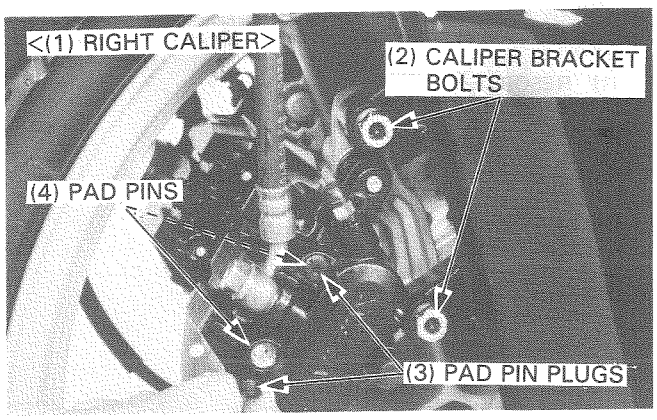

REAR BRAKE PAD REPLACEMENT

Remove the pad pin retainer bolt and retainer.
Remove the caliper mounting bolt.
Remove the rear caliper from the bracket.

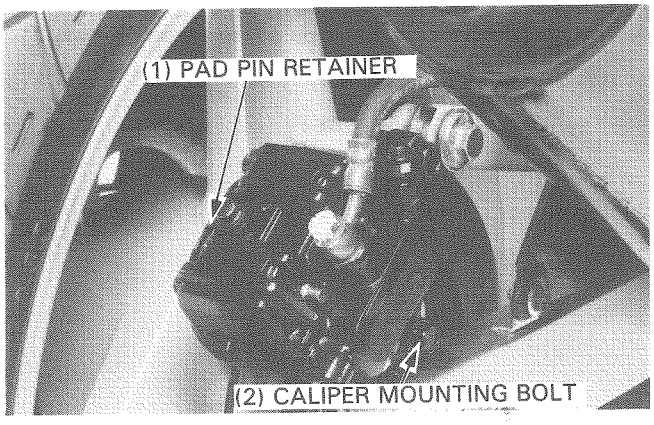

Pry one old pad against the caliper with a screwdriver to push the pistons into the caliper.

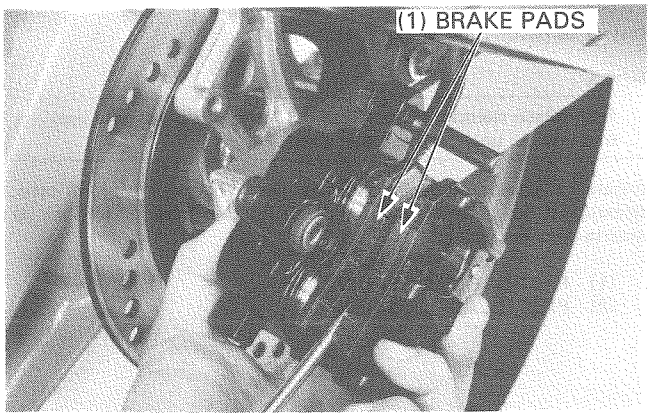

Pull the pad pins out of the caliper.
Remove the brake pads.

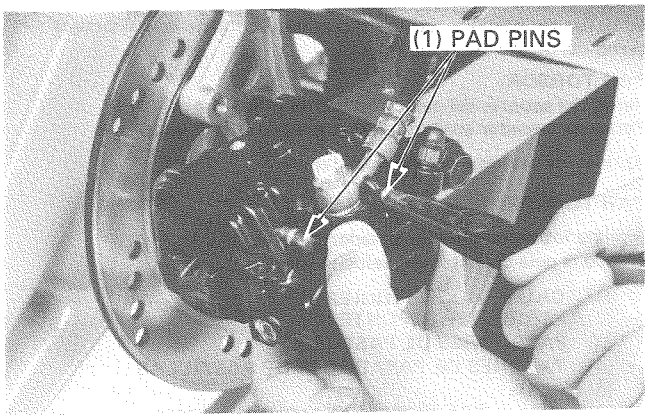

Position the pad spring in the caliper as shown.

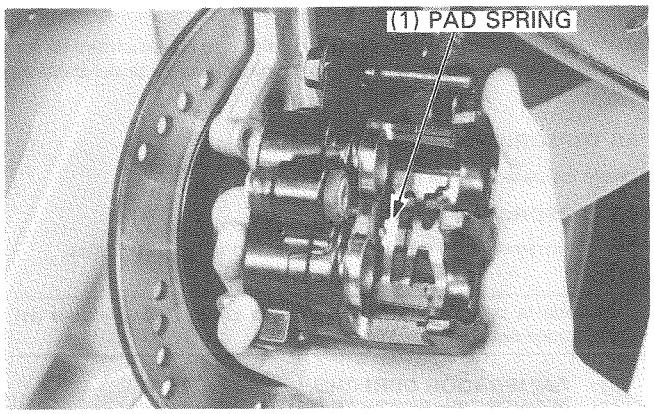

Install the new pads in the caliper.

NOTE

- Always replace the brake pads in pair to assure even disc pressure.

Install the pad pins, first one pin, then the other, by pushing the pads against the caliper to depress the pad spring.

Apply silicone grease to the caliper mounting bolt and caliper bracket pin.

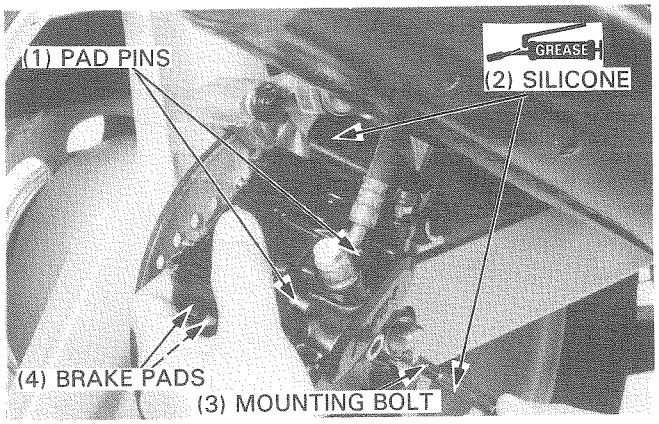

Install the caliper, making sure not to damage the pads, then tighten the caliper mounting bolt.

TORQUE: 23 N·m (2.3 kg-m, 17 ft-lb)

Install the pad pin retainer to the pad pins securely, and tighten the pad pin retainer bolt.

TORQUE: 11 N·m (1.1 kg-m, 8 ft-lb)

NOTE

- Operate brake pedal to seat the caliper pistons against the pads.

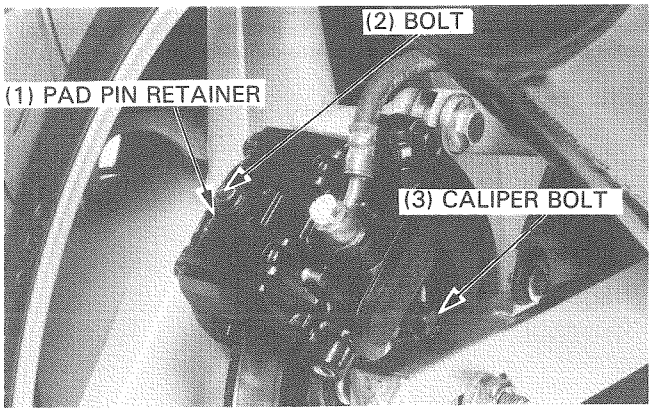

DISC THICKNESS

Measure the thickness of each disc.

SERVICE LIMIT:
Front: 3.5 mm (0.14 in)
Rear: 4.0 mm (0.16 in)

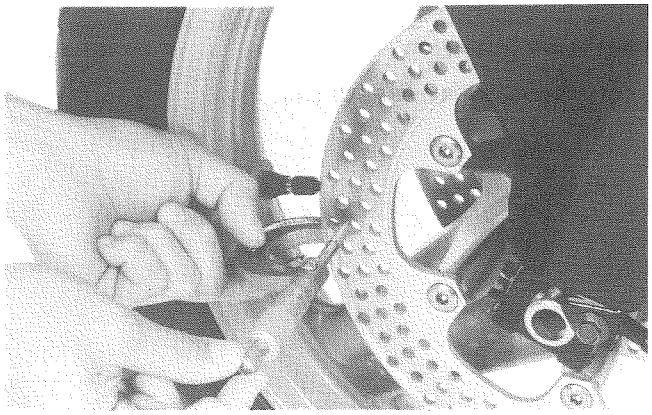

BRAKE DISC WARPAGE

Measure the brake disc for warpage on a surface plate.

SERVICE LIMIT: Front/Rear: 0.3 mm (0.01 in)

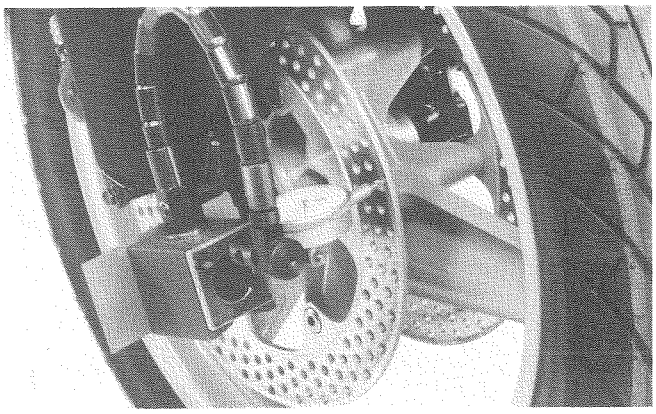

FRONT MASTER CYLINDER

REMOVAL

CAUTION

- *Avoid spilling fluid on painted, plastic, or rubber parts. Place a rag over these parts whenever the system is serviced.*
- *When removing the brake hose, cover the end of the hose to prevent contamination. Secure the hose to prevent fluid from leaking out.*

Drain the brake fluid from the hydraulic system (page 16-3).

Disconnect the brake hose.
Disconnect the front brake switch wires.
Remove the master cylinder holder bolts and master cylinder.

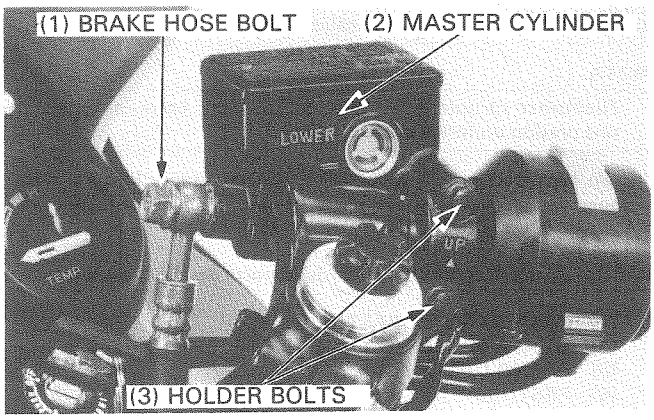

Remove the brake lever pivot nut, bolt and brake lever.
Remove the front stop light switch.
Remove the piston boot.

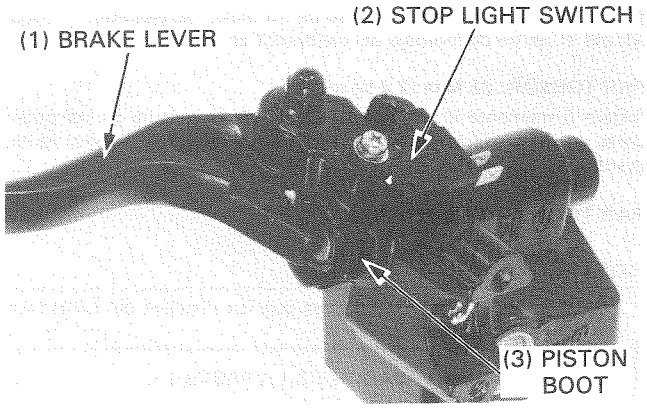

DISASSEMBLY

Remove the snap ring from the master cylinder body.

TOOL:
Snap ring pliers **07914—3230001**

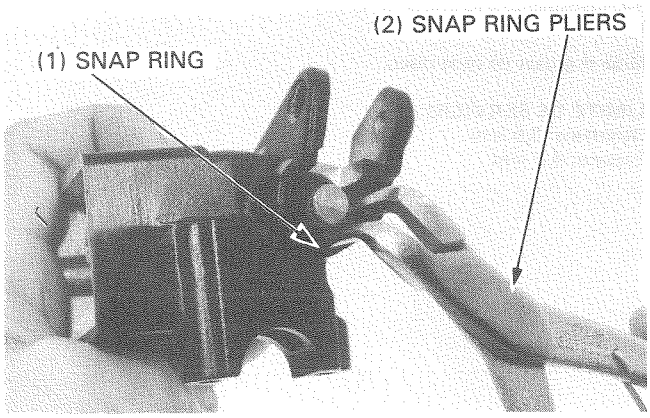

Remove the piston, primary cup and spring from the master cylinder.

Clean the inside of the master cylinder and master piston with brake fluid.

NOTE

- Clean the disassembled parts with brake fluid and make sure air can ventilate the master cylinder port by compressed air.

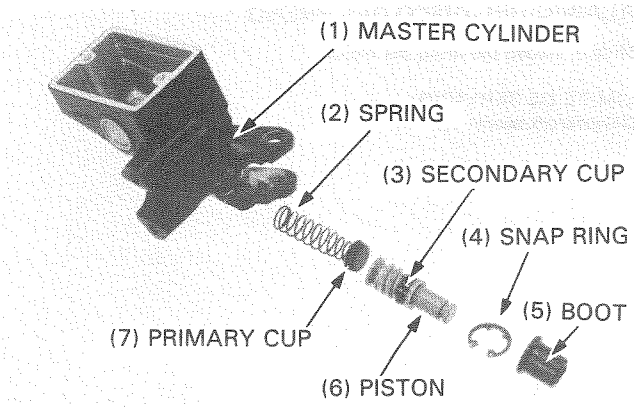

INSPECTION

Check the master cylinder for scores, scratches or nicks.
Measure the master cylinder I.D.

SERVICE LIMIT: 14.055 mm (0.5533 in)

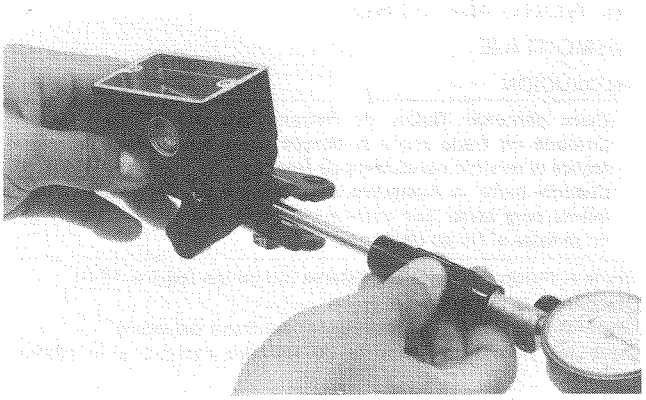

Measure the master piston O.D. of the shown position.

SERVICE LIMIT: 13.984 mm (0.5506 in)

Check the primary and secondary cups for damage before assembly.

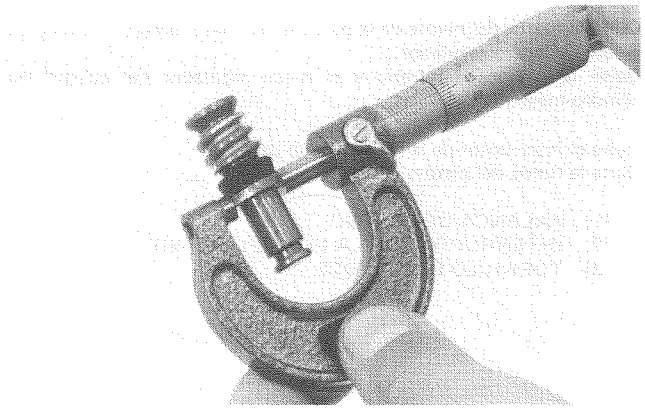

ASSEMBLY

CAUTION

- *Keep the master cylinder piston, cups and spring as a set; do not replace individual parts.*

Assemble the master cylinder.
Install the spring and primary cup together, with the spring narrow end facing to the piston.

CAUTION

- *When installing the cups, do not allow the lips to turn inside out and be certain the snap ring firmly seated in the groove.*

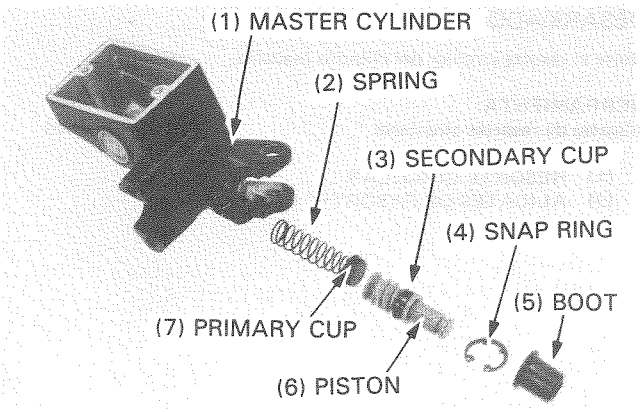

Install the snap ring to the master cylinder body.

TOOL:
Snap ring pliers **07914—3230001**

Install the piston boot.

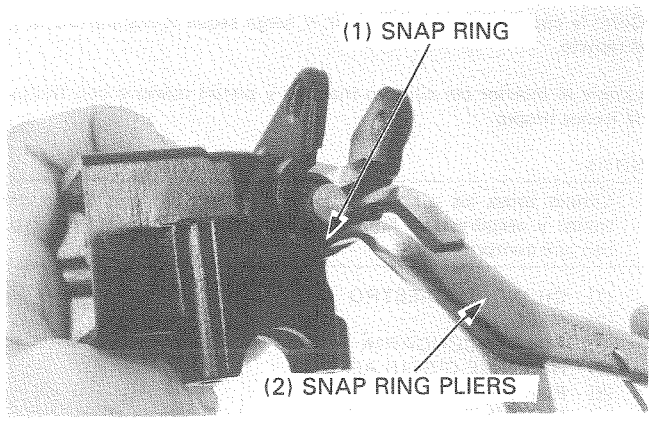

Apply grease to the brake lever pivot.
Install the front stop light switch.
Install the brake lever.

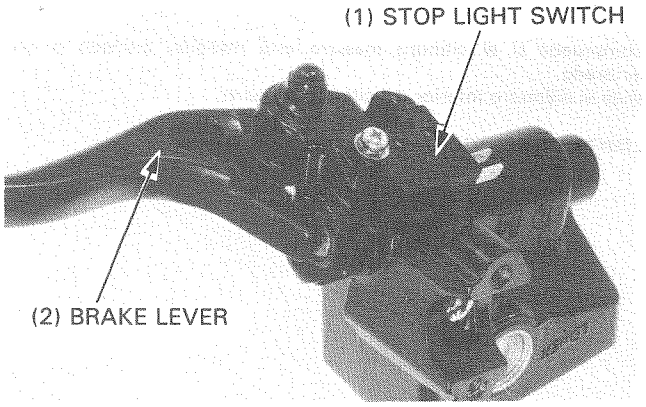

INSTALLATION

Install the front master cylinder on the handlebar

NOTE

- Install the holder with its "UP" mark facing up.
- Align the end of the holder with the punch mark on the handlebar.
- Tighten the upper holder bolt first, then tighten the lower bolt.

Install the brake hose with the bolt and two sealing washers.

TORQUE: 30 N·m (3.0 kg-m, 22 ft-lb)

Connect the front brake switch wires.
Fill the reservoir to the upper level and bleed the air. (page 16-3)

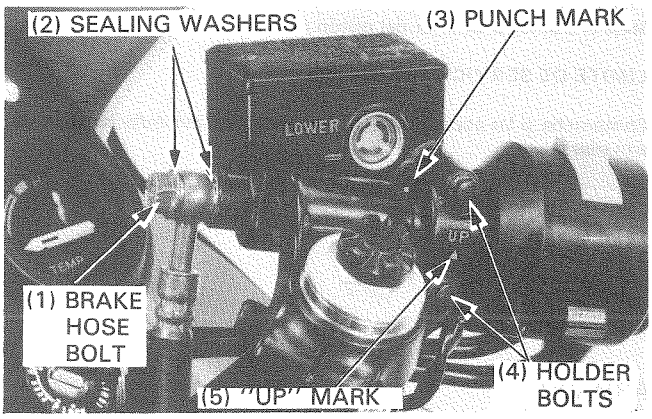

REAR MASTER CYLINDER

REMOVAL

Remove the right side cover.
Drain the rear brake hydraulic system (page 16-3).

Remove the brake hose bolt and disconnect the brake hose.
Loosen the rear master cylinder mounting bolt.
Remove the right footpeg bracket and reservoir.

CAUTION

- *Avoid spilling fluid on painted, plastic, or rubber parts. Place a rag over these parts whenever the system is serviced.*
- *When removing the brake hose, cover the end of the hose to prevent contamination. Secure the hose to prevent fluid from leaking out.*

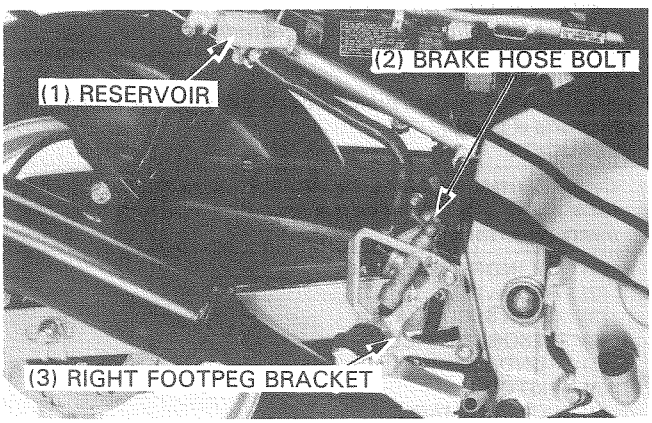

Remove the master cylinder from the right footpeg bracket.
Remove the brake rod joint pin by removing the cotter pin.

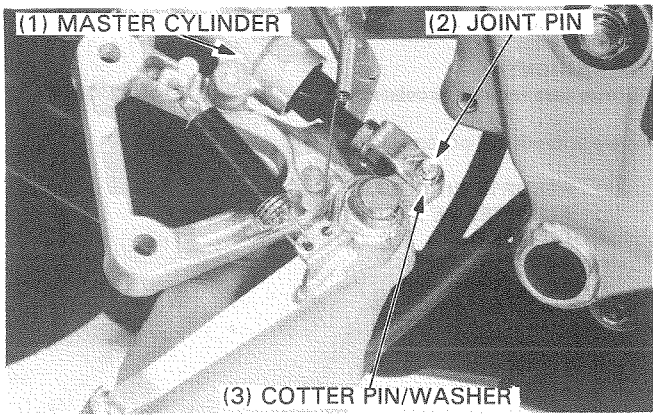

DISASSEMBLY

Remove the reservoir hose from the master cylinder.

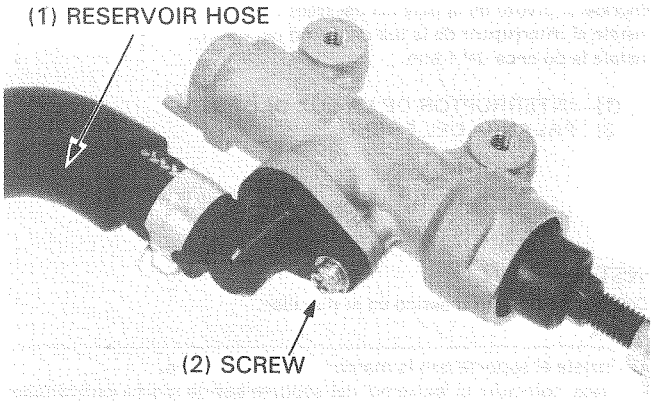

Remove the dust boot.

Remove the snap ring from the master cylinder body.

CAUTION

- *Beware that the push rod will pop out when removing the circlip.*

TOOL:
Snap ring pliers **07914–3230001**

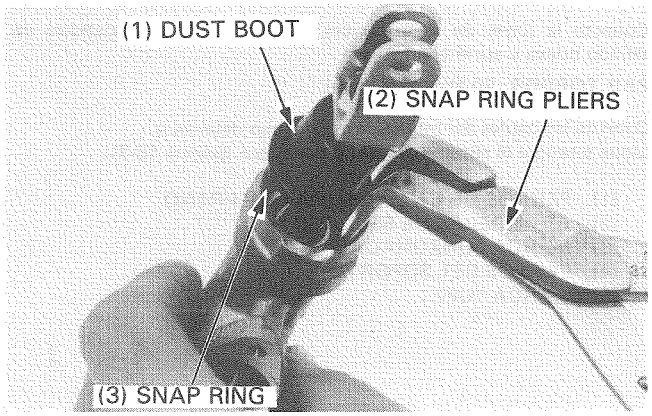

Remove the piston, piston cup and spring from the master cylinder.
Clean the inside of the master cylinder and piston with brake fluid.

NOTE

- Clean the disassembled parts with brake fluid and make sure air passes through the master cylinder port by applying compressed air.

Check to be sure the push rod is not bent or damaged.

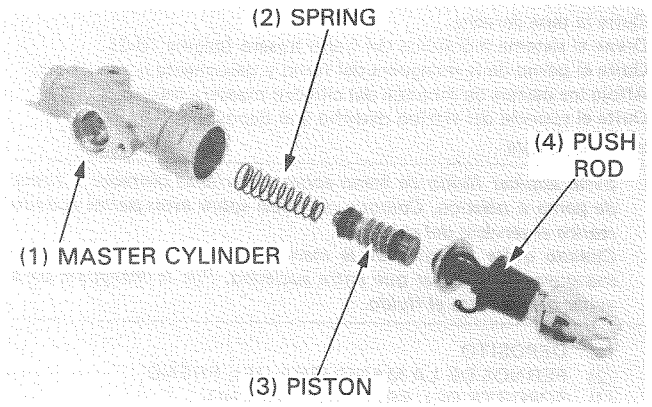

INSPECTION

Check the master cylinder for scores, scratches or nicks.

Measure the master cylinder I.D.

SERVICE LIMIT: 12.755 mm (0.5022 in)

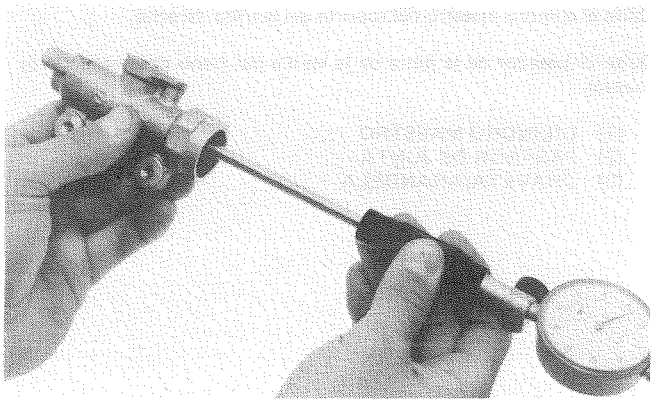

Check the piston and piston cups for damage, wear or deterioration.

Measure the master piston O.D. of the shown position.

SERVICE LIMIT: 12.645 mm (0.4978 in)

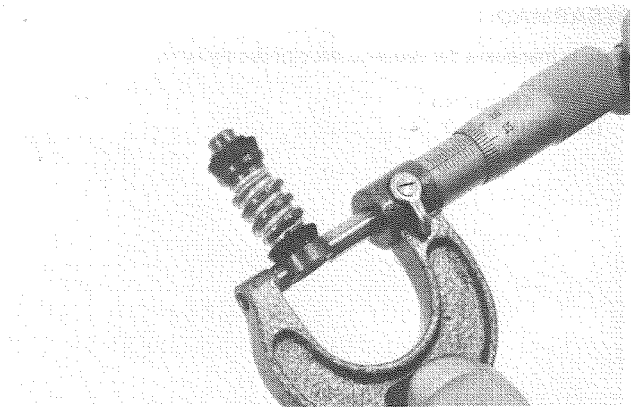

ASSEMBLY

Dip the piston cups in clean brake fluid before assembly.

CAUTION

- *When installing the cups, do not allow the lips to turn inside out.*

Install the spring and piston together, with the spring narrow end facing to the piston.

NOTE

- The master cylinder piston, cups and spring must be installed as a set.

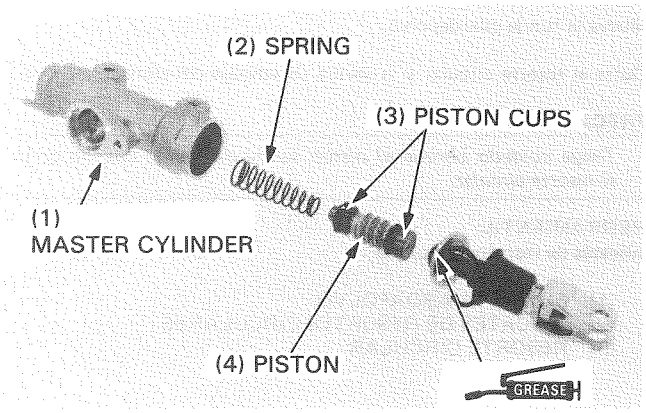

Apply grease to push rod.

Install the push rod in to the master cylinder.
Install the snap ring.

TOOL:
Snap ring pliers **07914–3230001**

CAUTION

- *Be certain the snap ring is seated firmly in the groove.*

Install the dust boot.

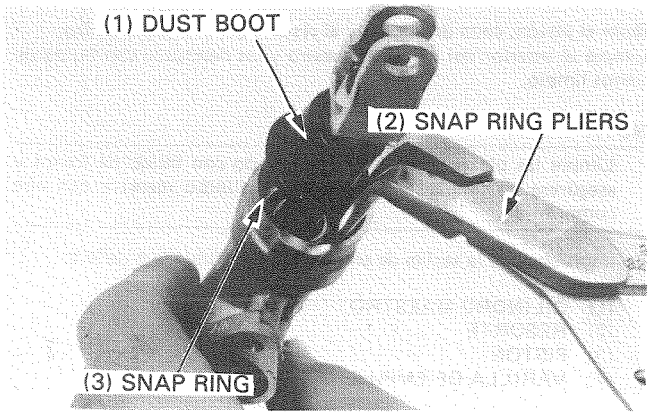

Check the O-ring of reservoir hose for fatigue.

Install the reservoir hose to the master cylinder with a screw.

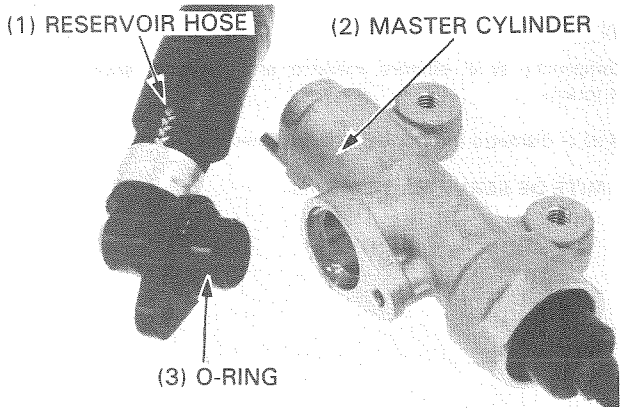

Connect the push rod joint and brake pedal using a joint pin with the washer and new cotter pin.

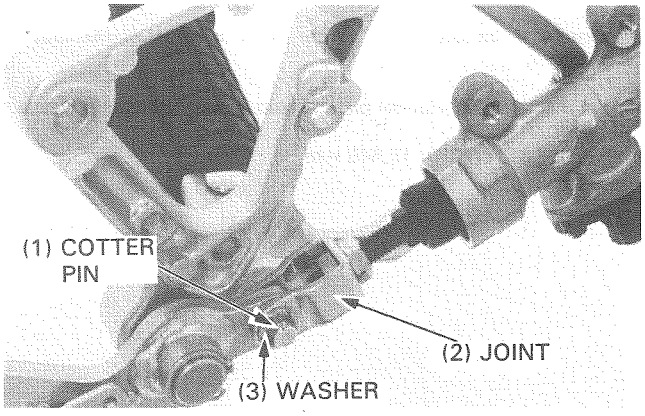

Temporarily install the rear master cylinder to the footpeg.

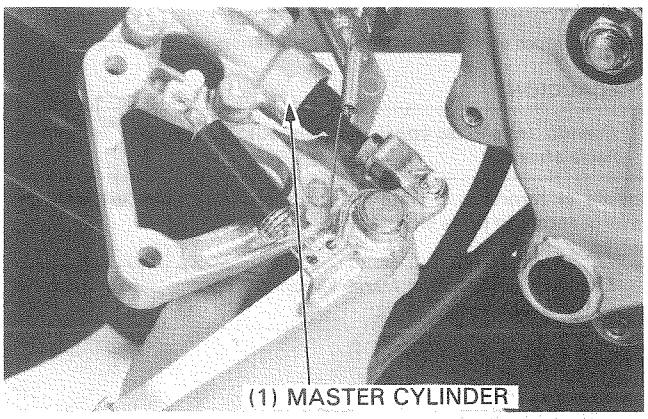

Install the right footpeg bracket with two bolts and tighten them.

TORQUE: 27 N•m (2.7 kg-m,, 20 ft-lb)

Tighten the master cylinder mounting bolts.

TORQUE: 12 N•m (1.2 kg-m, 9 ft-lb)

Connect the rear brake hose with the bolt and two sealing washers.

TORQUE: 30 N•m (3.0 kg-m, 22 ft-lb)

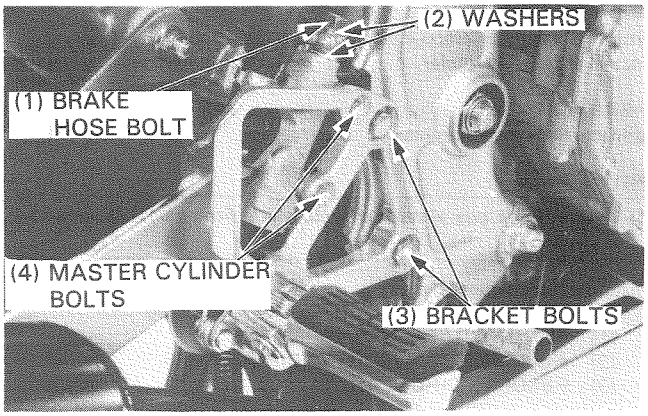

Install the reservoir with its mounting bolt and tighten it.

TORQUE: 9 N·m (0.9 kg-m, 7 ft-lb)

Fill and bleed the rear brake system (page 16-3).
Install the right side cover.

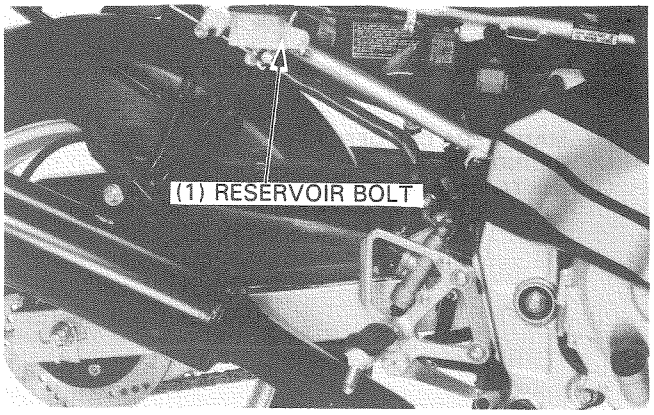

FRONT BRAKE CALIPER

REMOVAL

Place a clean container under the caliper and disconnect the brake hose from the caliper.

CAUTION

- *Avoid spilling brake fluid on painted surfaces.*

Remove the caliper bracket bolt, anti-dive piston bolt and speedometer cable guide from the left front brake caliper.
Remove the caliper bracket bolts from the right front brake caliper.
Remove the calipers.

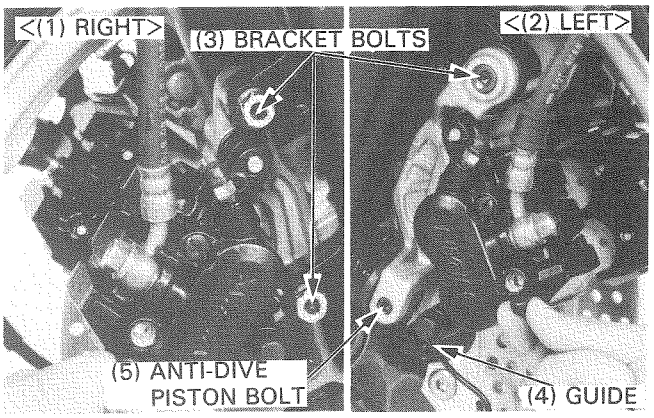

Remove the following:
— pad pins and pads (page 16-5).
— caliper bracket.
— pad spring.
— pivot boots.

DISASSEMBLY

Position the caliper with the pistons down and apply short bursts of air pressure to the fluid inlet.

WARNING

- ***Do not use high pressure air or bring the nozzle too close to the inlet.***

NOTE

- Place a shop towel over the pistons to prevent them from flying out.

Examine the pistons and cylinders for scoring, scratches or other damage and replace if necessary.

Push the piston seals and dust seals in, lift them out and discard them.

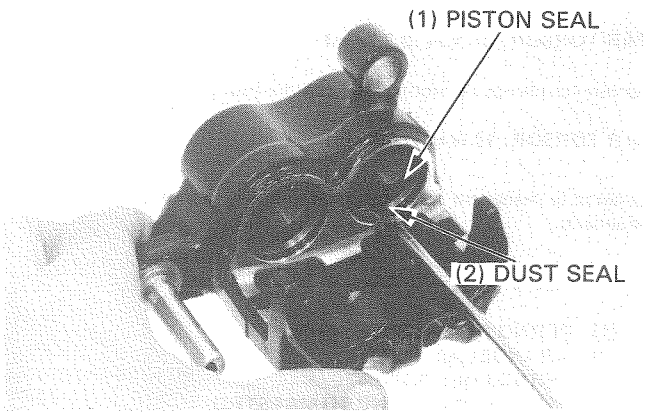

CAUTION

- *Be careful not to damage the piston sliding surfaces when removing the seals.*

Clean the brake piston seal grooves with brake fluid.

CYLINDER INSPECTION

Check the caliper cylinder bores for scoring, scratches or other faults.

Measure the caliper cylinder bores.

SERVICE LIMIT: 27.06 mm (1.065 in)

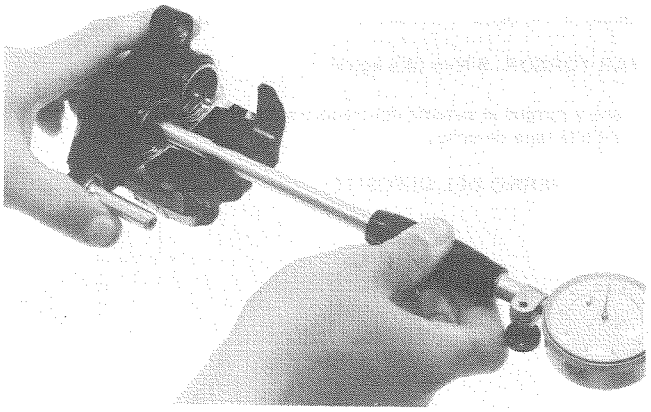

PISTON INSPECTION

Check the pistons for scoring, scratches or other damage.

Measure the piston diameter with a micrometer.

SERVICE LIMIT: 26.91 mm (1.059 in)

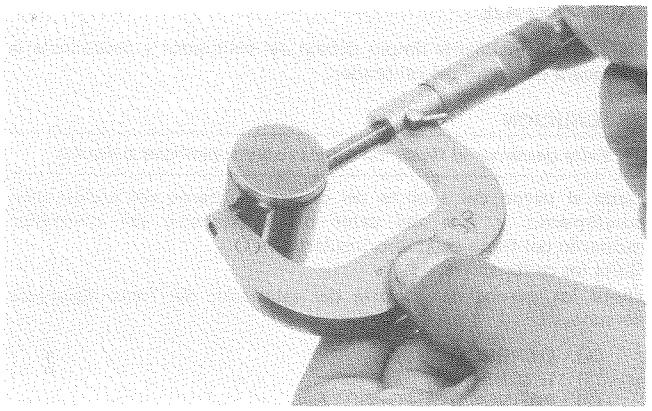

ASSEMBLY/INSTALLATION

If the piston boots are hardened or deteriorated, replace them with new ones. The seals must be replaced with new ones whenever they are removed.
Coat the seals with silicone grease or brake fluid before assembly.

Install the piston and dust seals.

Install the pistons with the insulated ends toward the pads.

Install the boots, making sure that they are seated in the caliper grooves properly.

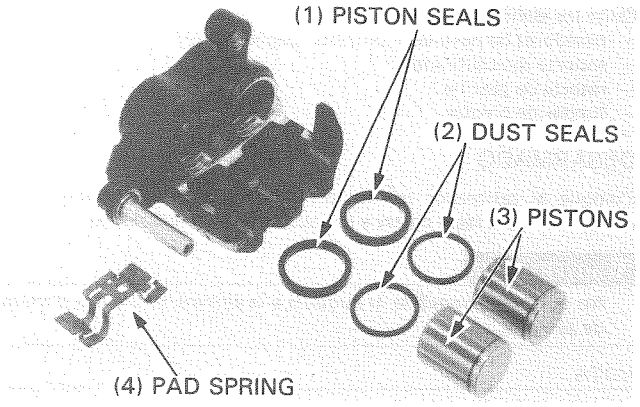

Apply silicone grease to the caliper bracket pins.

Install the pad spring and caliper bracket.

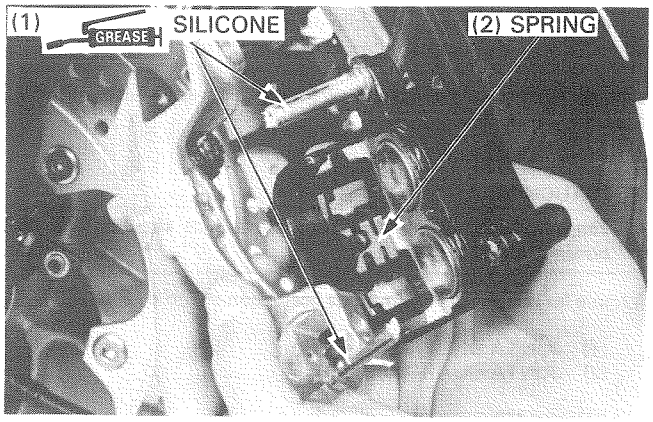

Install the pad and pad pins (page 16-5).
Install the caliper, making sure not to damage the pads, then tighten the bracket bolts and anti-dive bolt.

TORQUE:
Bracket bolt: 27 N·m (2.7 kg-m, 20 ft-lb)
Anti-dive bolt: 12 N·m (1.2 kg-m, 9 ft-lb)

Tighten the pad pins.

TORQUE: 18 N·m (1.8 kg-m, 13 ft-lb)

Install the pad pin plugs.

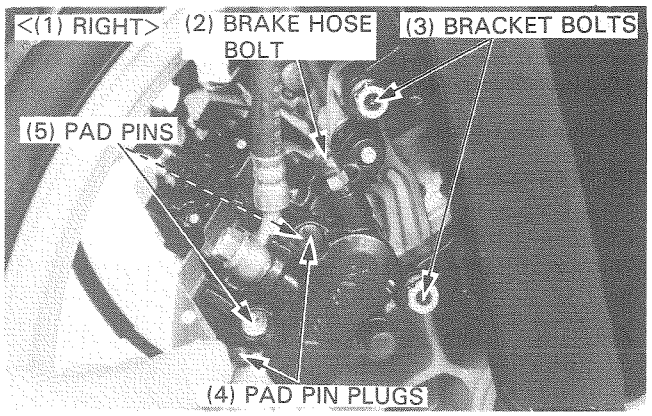

Install the speedometer cable guide.
Connect the brake hose and tighten the hose bolt with new sealing washers.

TORQUE: 30 N·m (3.0 kg-m, 22 ft-lb)

Fill the master cylinder and bleed the brake system (page 16-3).

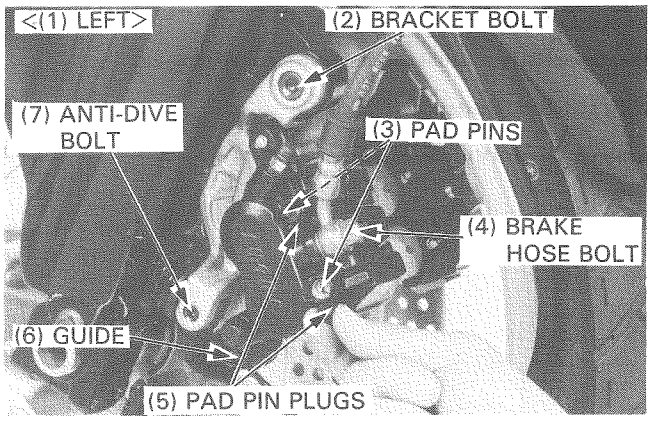

REAR BRAKE CALIPER

REMOVAL

Drain the brake fluid from the hydraulic system (page 16-3).

Disconnect the brake hose from the caliper.
Remove the pad pin retainer.

Remove the rear caliper mounting bolt and remove the rear caliper.

Remove the rear brake pad (page 16-7).

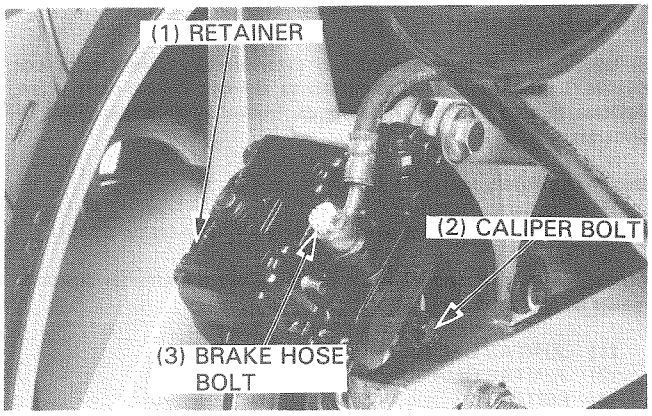

DISASSEMBLY

Remove the pad spring, boots and pivot collar from the rear brake caliper.

Check the boot for fatigue or damage, replace if necessary.

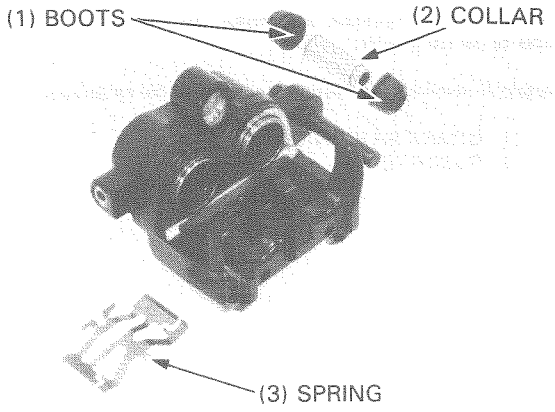

Position the caliper with the pistons down and apply short bursts of air pressure to the fluid inlet.

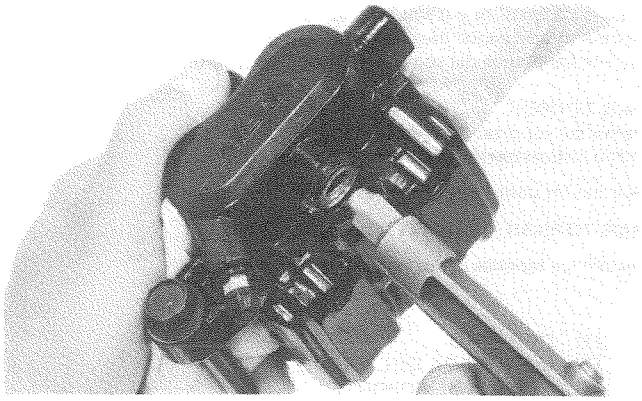

WARNING

- *Do not use high pressure air or bring the nozzle too close to the inlet.*

NOTE

- Place a shop towel over the pistons to prevent them from flying out.

Push the dust and piston seals in and lift them out.

Wash the caliper cylinders, seal grooves and caliper pistons with clean brake fluid.

CAUTION

- *Be careful not to damage the piston sliding surfaces.*

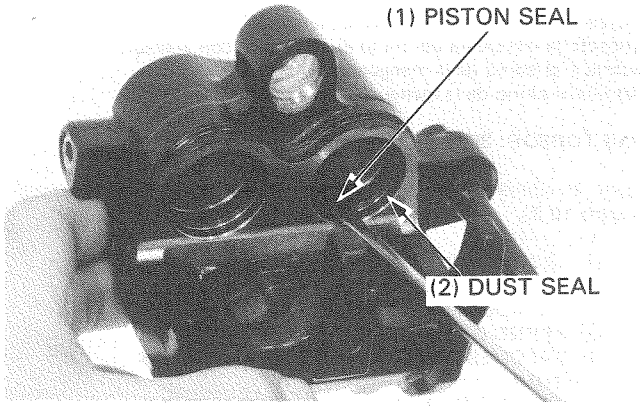

CYLINDER INSPECTION

Check the caliper pistons for scratches, scoring or other faults.

Measure the caliper cylinder bores.

SERVICE LIMIT: 27.06 mm (1.065 in)

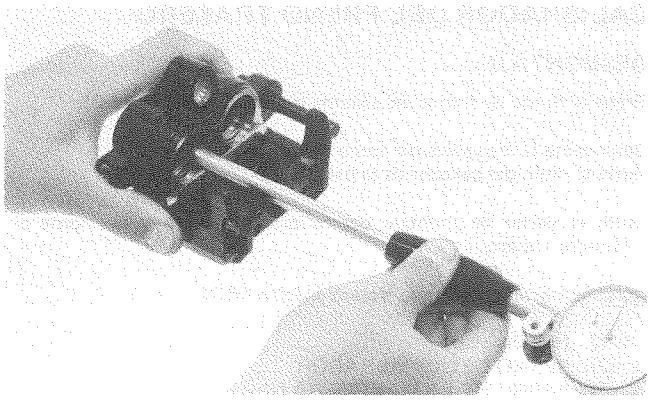

PISTON INSPECTION

Check the pistons for scoring, scratches or other damage.

Measure the piston diameter with a micrometer.

SERVICE LIMIT: 26.91 mm (1.059 in)

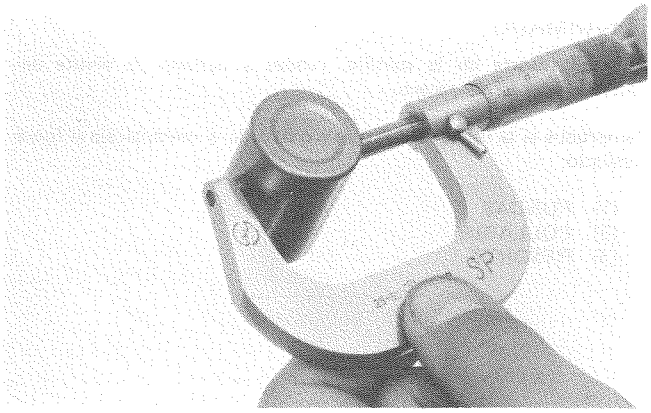

ASSEMBLY

The piston and dust seals must be replaced whenever they are removed.
Coat the seals with silicone grease or brake fluid before assembly.

Install the piston and dust seals.
Install the pistons with the opened ends toward the pads.

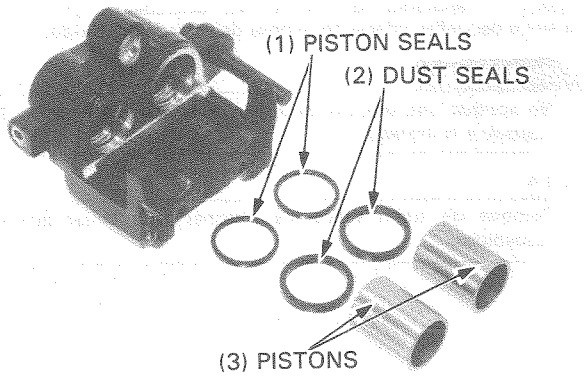

Apply silicone grease to the pivot collar and the insides of the boots and install them into the caliper.

Install the boots, making sure that they are seated in the caliper grooves properly.

Install the pad spring.

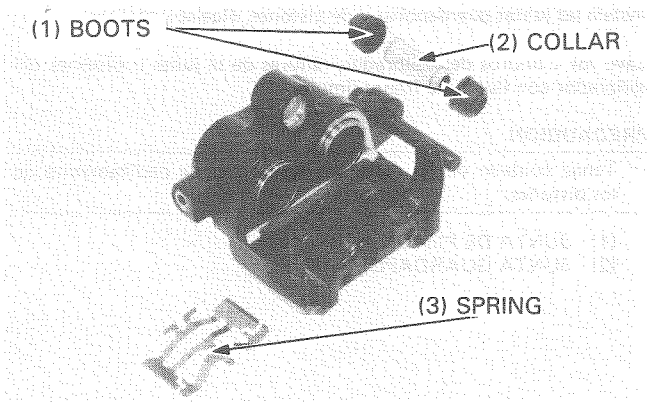

INSTALLATION

Install the rear brake pad (page 16-7).

Apply silicone grease to the brake caliper mounting bolt and brake caliper pin.

Install the rear brake caliper to the bracket.

CAUTION

- *Be careful not to damage brake pad.*

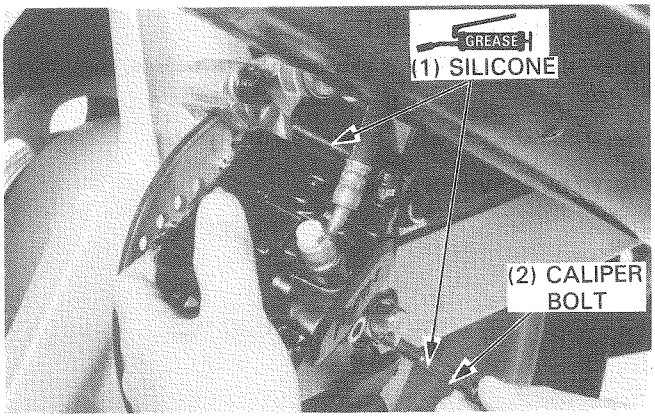

Tighten the caliper mounting bolt.

TORQUE: 23 N·m (2.3 kg-m, 17 ft-lb)

Install the pad pin retainer and tighten the bolt.

TORQUE: 11 N·m (1.1 kg-m, 8 ft-lb)

Install the fluid hose with the bolt and two sealing washers. Tighten the hose bolt.

TORQUE: 30 N·m (3.0 kg-m, 22 ft-lb)

Fill and bleed the brake hydraulic system (page 16-3).

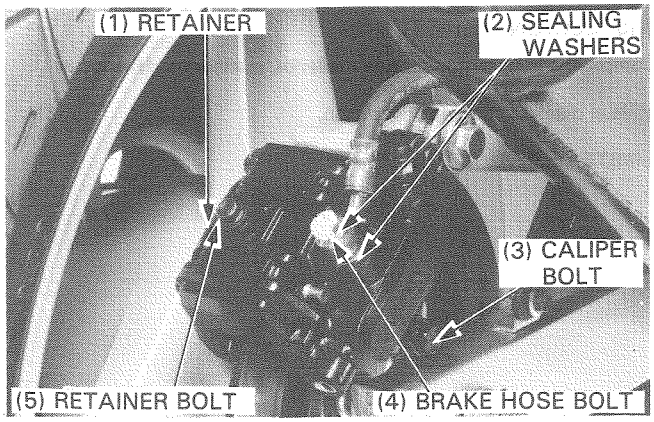

BRAKE PEDAL

REMOVAL

Remove the right side cover.
Remove the reservoir and hold it to the frame with it parallel to the ground.

Remove the right footpeg bracket bolts.

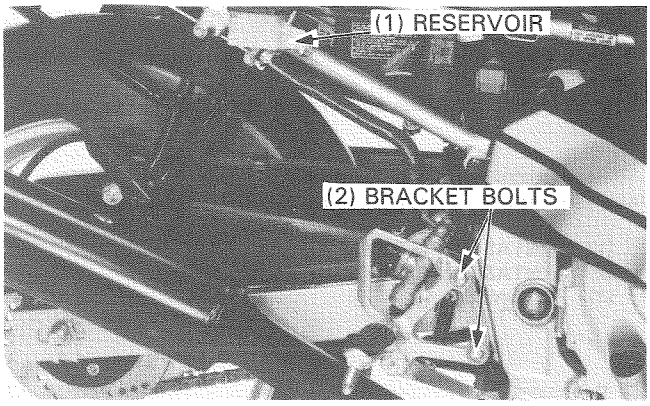

Remove the brake pedal return spring and stop light switch spring from the brake pedal.

Remove the brake rod joint pin by removing the cotter pin.
Remove the snap ring and brake pedal.

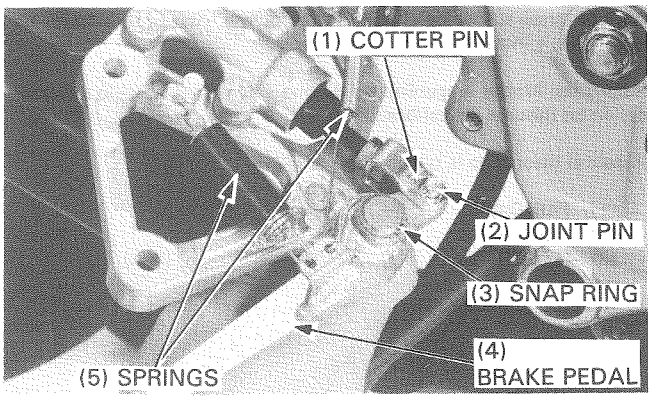

INSTALLATION

Apply grease to the right footpeg bracket pivot and install the brake pedal to footpeg bracket.

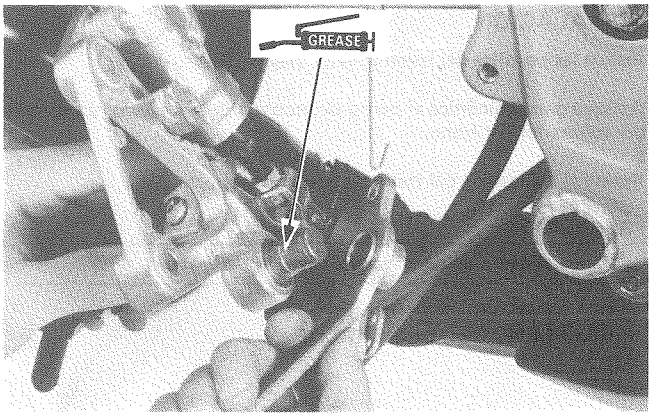

Install the snap ring on the pivot of the right footpeg bracket securely.

Connect the push rod joint and brake pedal using joint pin with the washer and new cotter pin.

Install the rear brake pedal return spring and rear stop light switch spring on the brake pedal.

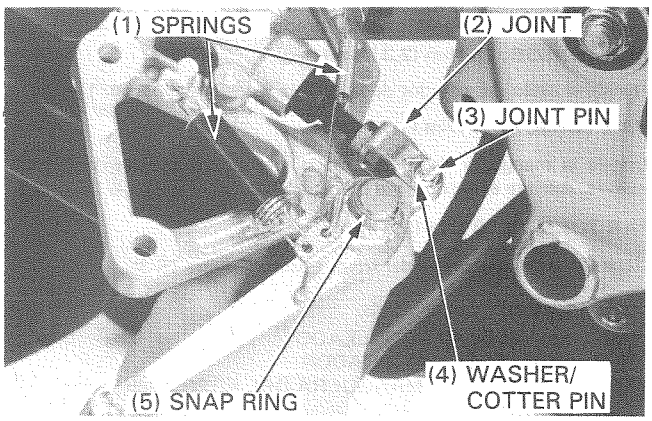

Install the right footpeg bracket and tighten the bolt.

TORQUE: 27 N·m (2.7 kg-m, 20 ft-lb)

Install the reservoir and tighten the mounting bolt.

TORQUE: 9 N·m (0.9 kg-m, 7 ft-lb)

Install the right side cover.

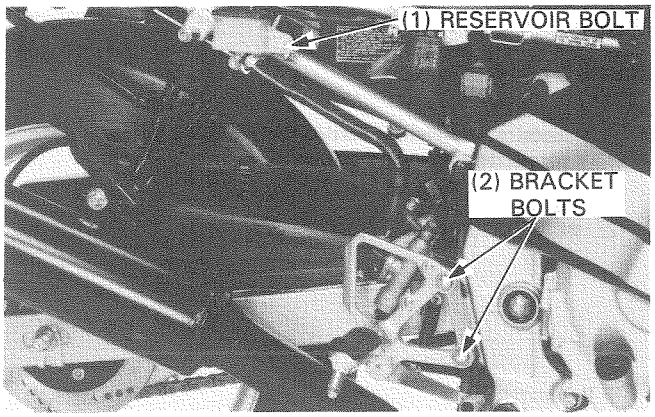

MEMO

BATTERY/ CHARGING SYSTEM

BATERIA/ SISTEMA DE CARGA

BATTERIA E CIRCUITO DI RICARICA

(1) REGULADOR/RECTIFICADOR
(2) ALTERNADOR
(3) FUSIBLE PRINCIPAL 30A
(4) BATERIA 12V8AH

(1) REGOLATORE/RADDRIZZATORE
(2) ALTERNATORE
(3) FUSIBILE PRINCIPALE 30 A
(4) BATTERIA 12 V 8 AH

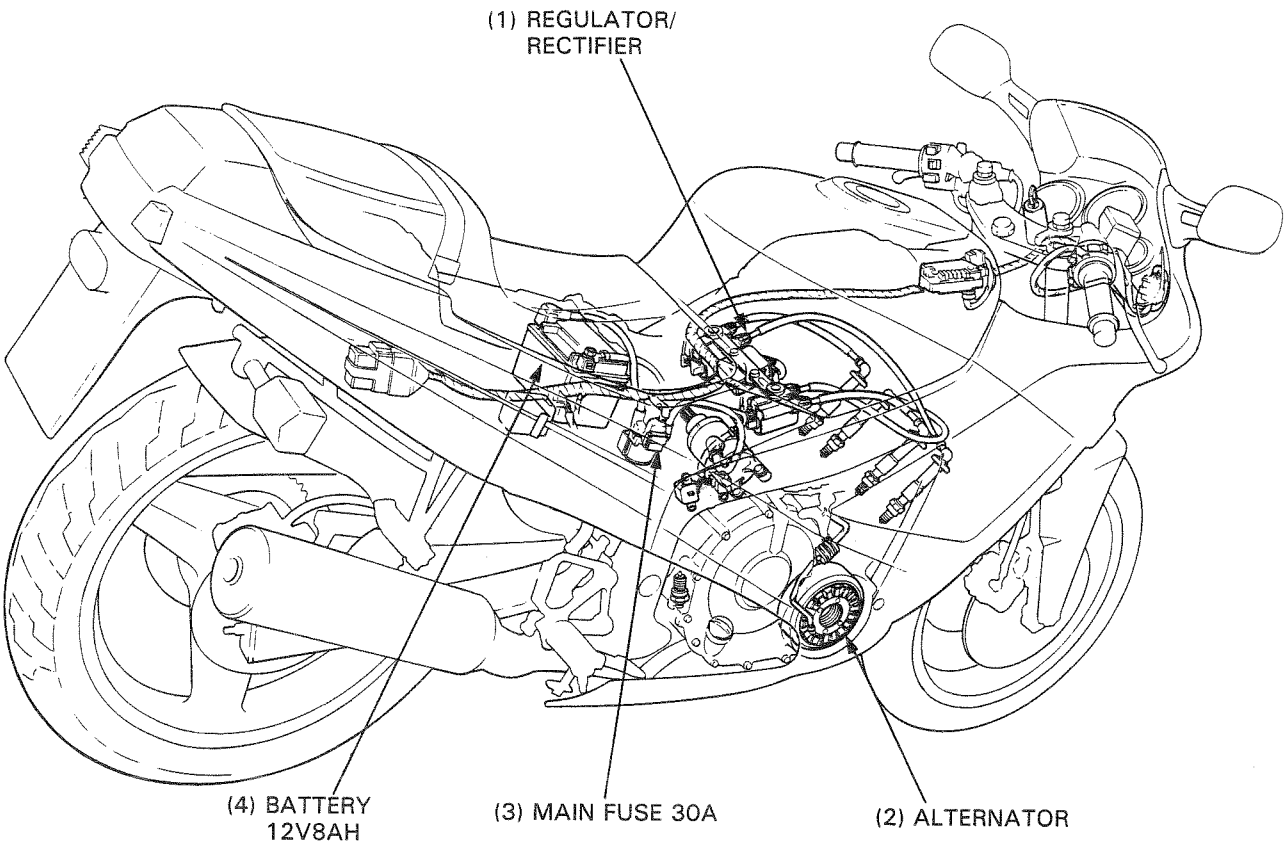
(1) REGULATOR/
RECTIFIER
(4) BATTERY
12V8AH
(3) MAIN FUSE 30A
(2) ALTERNATOR

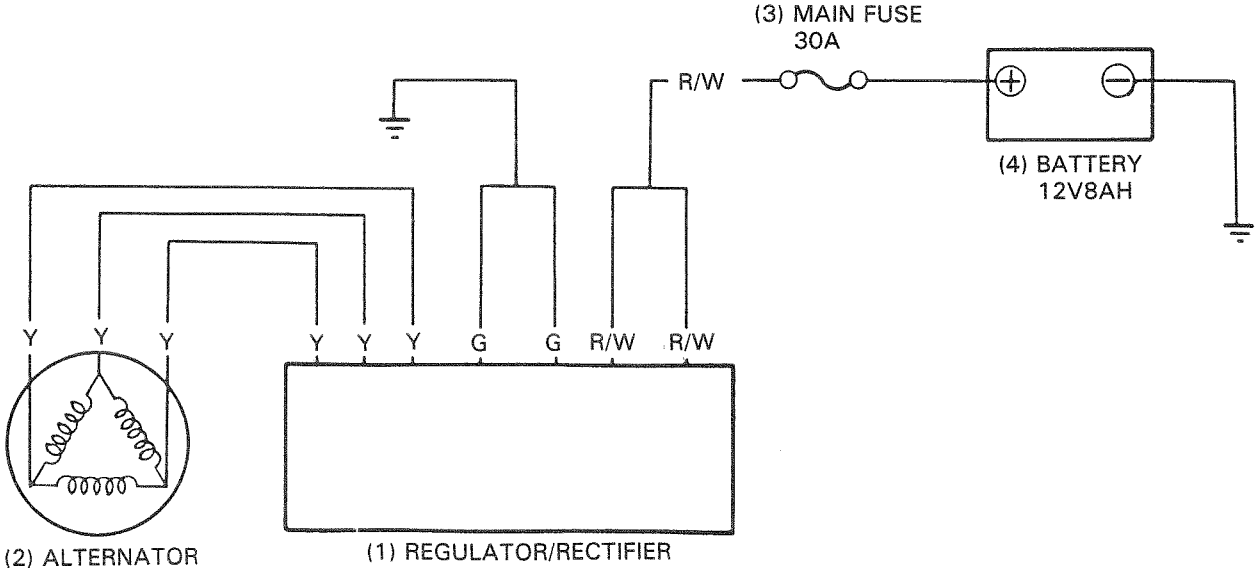
(3) MAIN FUSE
30A
R/W
(4) BATTERY
12V8AH
Y
Y
Y
Y
Y
Y
G
G
R/W
R/W
(2) ALTERNATOR
(1) REGULATOR/RECTIFIER

SERVICE INFORMATION

GENERAL

WARNING

- *Do not smoke, and keep flames away from a charging battery. The gas produced by a battery will explode if a flame or spark is brought near.*

CAUTION

- *For battery charging, do not exceed the charging current and time specified on the battery (and shown below). Use of excessive current or charging time may damage the battery.*

- The following color codes are used throughout the electrical system.

Bu = Blue	G = Green	Lg = Light Green	R = Red
Bl = Black	Gr = Gray	O = Orange	W = White
Br = Brown	Lb = Light Blue	P = Pink	Y = Yellow

- Slow charge the battery whenever possible, quick charging should be an emergency procedure only.
- Remove the battery from the motorcycle for charging.
- The battery on this motorcycle is a sealed type. Do not try to remove the filler hole caps even during charging. Do not use a non-sealed battery as a replacement.
- All charging system components can be checked on the motorcycle.
- When inspect the charging system, check the system components and lines step-by-step according to the troubleshooting on next page.
- Alternator removal is given in Section 7.

SPECIFICATIONS

ITEM			STANDARD
Battery	Capacity		12 V—8 AH
	Voltage at 20°C (68°F)	Fully charged	13.0—13.2 V
		Needs charging	12.3 V
	Charging current		0.9 amperes
	Charging time		5 Hr
Regulator/rectifier	Type		Three-phase/full-wave rectify
	Regulated voltage		13.5—15.5 V/5000 rpm
Alternator	Charging coil resistance at 20°C (68°F)		0.1—1.0 Ω
	Output		0.346 kw/5,000 rpm
	Charging start rpm		1,000 ± 100 rpm.

TOOLS

Digital multitester (KOWA)	07411—0020000
or	
Circuit tester (SANWA)	07308—0020000
or	
Circuit tester (KOWA)	TH-5H

TROUBLESHOOTING

NOTE

- If the battery would be overcharged, replace the regulator/rectifier.

Battery undercharged

1. Perform the leakage inspection (page 17-4).
   - ABNORMAL → • Open or short circuit in wire harness • Loose or poorly contact connectors
   - NORMAL ↓
2. Start the engine and perform the regulated voltage inspection (page 17-4).
   - REGULATED → • Faulty battery
   - LOW VOLTAGE (SAME AS BATTERY VOLTAGE) ↓
3. Check the alternator stator coil (page 17-5).
   - OUT OF ORDER → • Faulty stator coil
   - NORMAL ↓
4. Measure the voltage between the R/W (+) and G (−) of the regulator/rectifier connector (wire harness side) (page 17-5).
   - NO VOLTAGE → • Open or short circuit in wire harness • Loose or poorly contact connector
   - BATTERY VOLTAGE COMES → • Faulty regulator/rectifier

BATTERY

VOLTAGE INSPECTION

Remove the side covers and seat.
Remove the bolts and battery case cover.

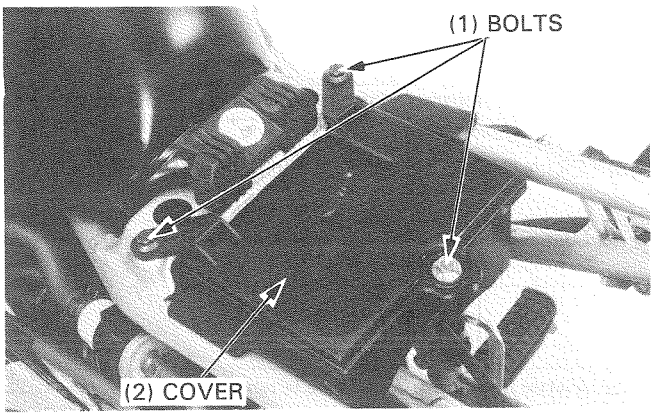

Measure the battery voltage using a digital multimeter.

VOLTAGE: Fully charged: 13.0–13.2 V
Under charged Below: 12.3 V

TOOL:
Digital multimeter 07411–0020000 (KOWA)

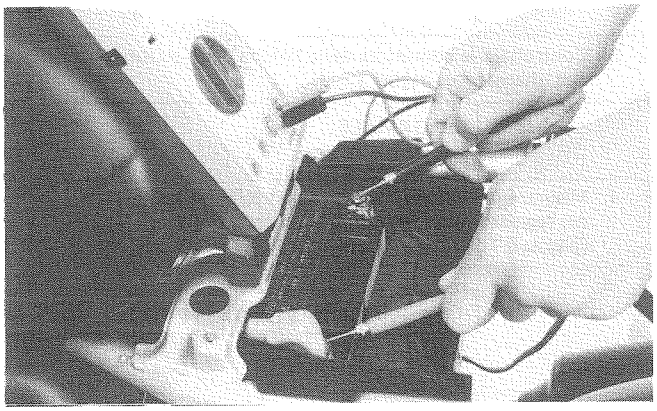

REMOVAL/CHARGING

Disconnect the battery negative cable first, then the positive cable from the battery.
Remove the battery.
Connect the charger positive (+) cable to the battery positive (+) terminal.
Connect the charger negative (–) cable to the battery negative (–) terminal.

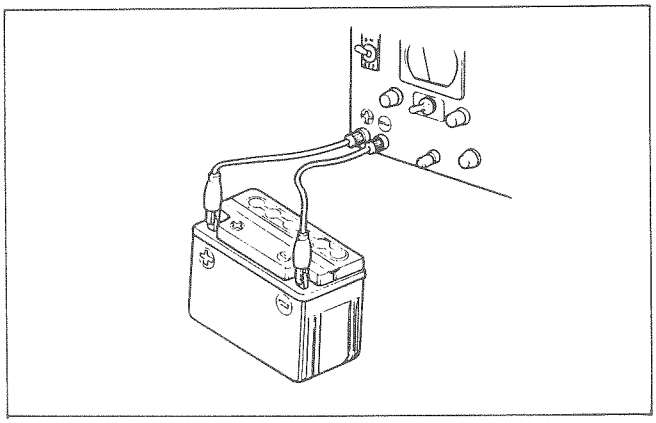

	Standard	Quick
Charging current	0.9 A	4.0 A
Charging time	5 hours	1 hour
Specified voltage	12.8 V min.	

WARNING

- *Keep flames and sparks away from a charging battery.*
- *Turn power ON/OFF at the charger, not at the battery terminals.*

CAUTION

- *Quick-charging should only be done in an emergency; slow charging is preferred.*
- *For battery charging, do not exceed the charging current and time specified on the battery. Using excessive current or extending the charging time may damage the battery.*

INSTALLATION

Install the battery to the case.
Connect the battery positive cable to the battery first, then the negative cable.
Install the tool box.
Coat the terminals with clean grease.
Install the battery cover, seat and side covers.

NOTE

- Install the battery cover properly so that its stopper can separate the battery from the tool box.

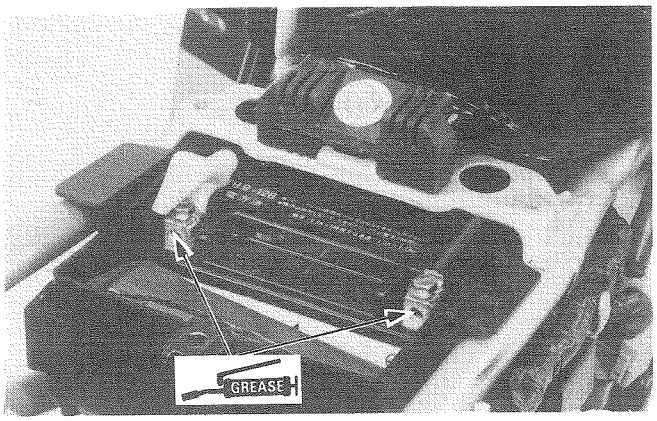

CHARGING SYSTEM

NOTE

- When inspect the charging system, check the system components and lines step-by-step according to the troubleshooting on page 17-2.

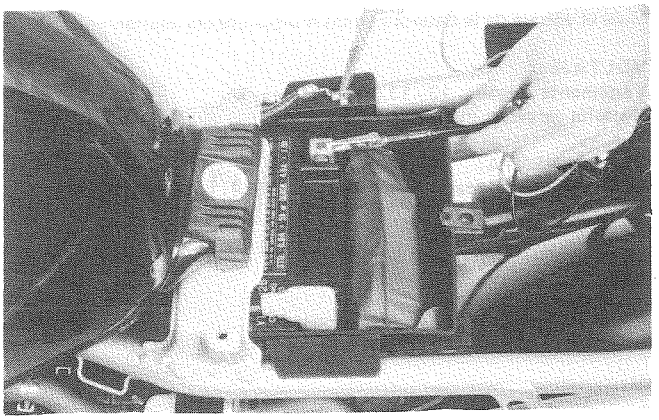

LEAKAGE INSPECTION

Check for battery voltage leakage before making the regulated voltage inspection.
Turn the ignition switch off and disconnect the battery negative cable from the battery.
Connect the voltmeter between the negative cable and the negative battery terminal.

1. The voltmeter should indicate 8 V with the ignition switch off.
2. Disconnect the regulator/rectifier 3P and 4P connectors (page 17-5). The voltmeter should indicate 0 V with the ignition switch off.

If there is OK of Step 1 and 2, there is no leakage.

REGULATED VOLTAGE INSPECTION

NOTE

- Be sure the battery is in good condition before performing this test.

Warm up the engine to normal operating temperature.
Stop the engine, and connect the voltmeter as shown.
Allow the engine to idle, and increase the engine speed gradually.
The voltage should be controlled to 13.5–15.5 V at 5,000 rpm.

CAUTION

- *Be careful not to contact the battery positive cable to the frame while testing.*

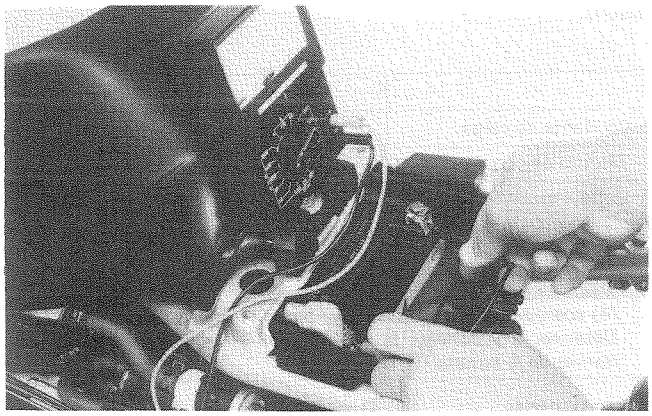

REGULATOR/RECTIFIER

INSPECTION

Remove the fuel tank (page 4-3).
Disconnect the 3P and 4P (RED) connectors of the regulator/rectifier from the holder.
Check them for loose contact or corroded terminals.

If the regulated voltage reading is out of the specification, check the items between connector terminals (wire harness side and alternator side) following below chart.

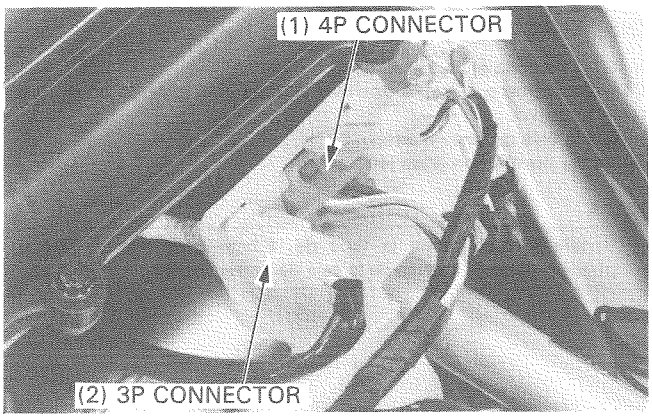

ITEM	TERMINALS	STANDARDS (20°C/68°F)
Battery charging line	Red/White (+) and Green (−)	Battery voltage should come.
Alternator coil line	Yellow and Yellow	0.1 – 1.0 Ω

REPLACEMENT

Remove the fuel tank (page 4-3).
Remove the left lower fairing (page 13-4).
Disconnect the 3P and 4P (RED) connectors of the regulator/rectifier.
Remove the bolts and regulator/rectifier.

Install the regulator/rectifier in the reverse order of removal.

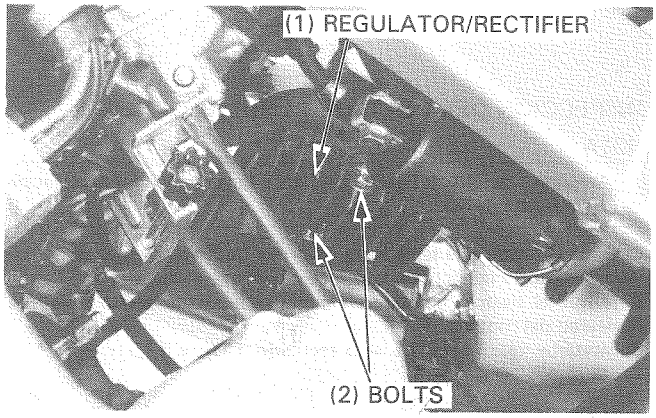

ALTERNATOR

INSPECTION

NOTE

- It is not necessary to remove the stator coil to make this test.

Remove the fuel tank (page 4-3).

Disconnect the alternator 3P connector.

Measure the resistance between the yellow wire terminals and check for no continuity between each terminal and ground.

STANDARD: 0.1 – 1.0 Ω

Replace the stator if the resistance is out of specification or if there is continuity between the each yellow wire terminal and gournd (page 7-13).

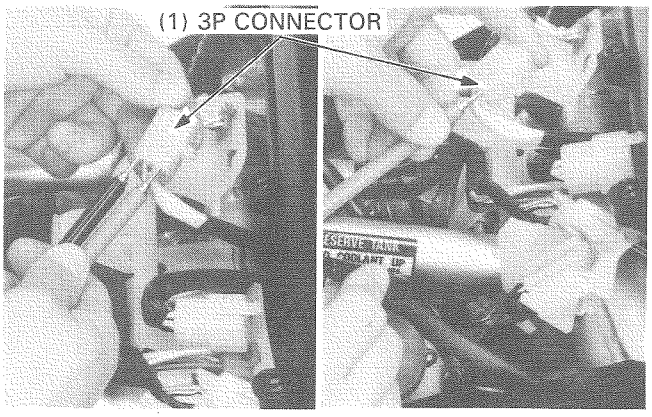

MEMO

IGNITION SYSTEM

SISTEMA DE ENCENDIDO

IMPIANTO DI ACCENSIONE

(1) UNIDAD DE CHISPAS
(2) BATERIA
(3) BOBINAS DE ENCENDIDO
(4) INTERRUPTOR DE ENCENDIDO
(5) INTERRUPTOR DE PARADA DEL MOTOR
(6) GENERADORES DE IMPULSOS
(7) FUSIBLE PRINCIPAL
(8) FUSIBLE AUXILIAR
(9) NUMERO DE CILINDRO

(1) CENTRALINA ACCENSIONE
(2) BATTERIA 12 V 8 AH
(3) BOBINE ACCENSIONE
(4) CHIAVE ACCENSIONE
(5) INTERRUTTORE ARRESTO MOTORE
(6) GENERATORE IMPULSI
(7) FUSIBILE PRINCIPALE 30 A
(8) FUSIBILE SECONDARIO 10 A
(9) NUMERO CILINDRO

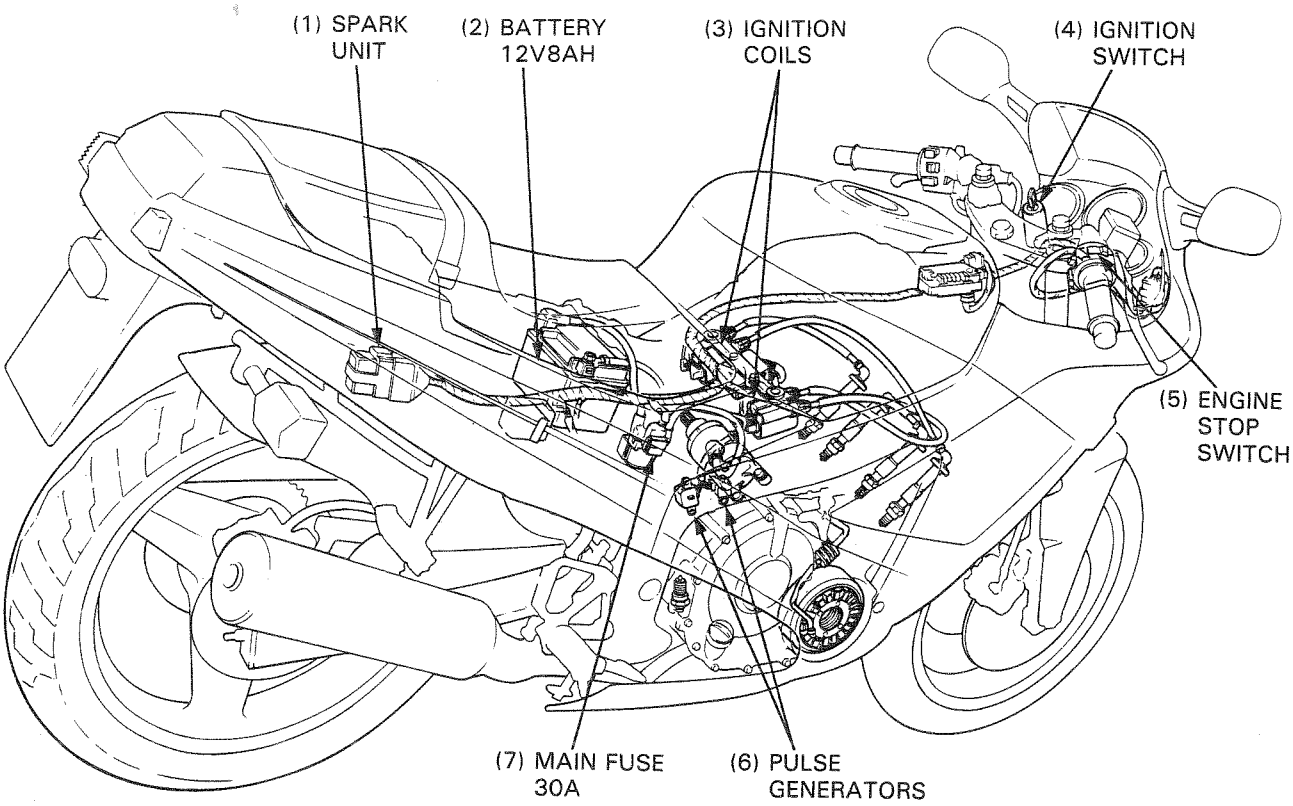
(1) SPARK UNIT
(2) BATTERY 12V8AH
(3) IGNITION COILS
(4) IGNITION SWITCH
(5) ENGINE STOP SWITCH
(7) MAIN FUSE 30A
(6) PULSE GENERATORS

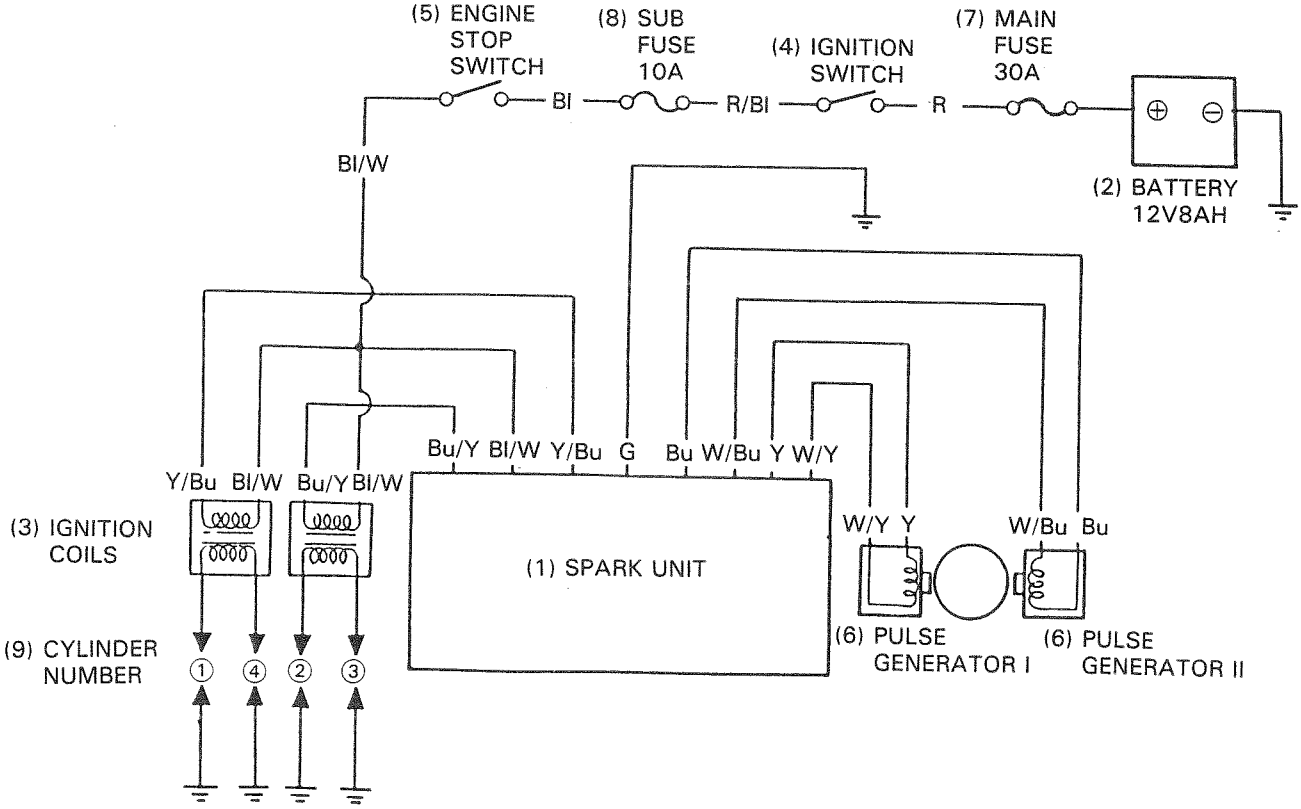
(5) ENGINE STOP SWITCH
(8) SUB FUSE 10A
(4) IGNITION SWITCH
(7) MAIN FUSE 30A
Bl
R/Bl
R
Bl/W
(2) BATTERY 12V8AH
Bu/Y Bl/W Y/Bu G Bu W/Bu Y W/Y
Y/Bu Bl/W Bu/Y Bl/W
(3) IGNITION COILS
(1) SPARK UNIT
W/Y Y
W/Bu Bu
(9) CYLINDER NUMBER
1 4 2 3
(6) PULSE GENERATOR I
(6) PULSE GENERATOR II

18

SERVICE INFORMATION

GENERAL

- Ignition timing cannot be adjusted since the spark unit is non-adjustable. If ignition timing is incorrect, check the system inspection and replace the faulty parts.
- For spark plug gap inspection and adjustment procedure, see page 3-6
- For altrenator removal and installation, see section 7.
- For pulse generator removal and installation, see section 19.
- When inspect the ignition system, check the system components and lines step-by-step according to the troubleshooting on next page.
- Each pair of the spark plugs (No. 1-4 and No. 2-3) has its own ignition circuit.

SPECIFICATIONS

ITEM			STANDARDS (20°C/68°F)	
Spark plug			NGK	ND
			DPR8EA-9	X24EPR-U9
Spark plug			0.8–0.9 mm (0.03–0.04 in)	
Ignition timing	Initial (F mark)		10° BTDC/idle	
Ignition coil resistance	Primary		2.5–3.1 Ω	
	Secondary	With plug wire	21–25 kΩ	
		Without plug wire	11–15 kΩ	
Pulse generator	Coil resistance		450–550 Ω	
Firing order			1–2–4–3	

TOOLS

Special

Inspection adaptor	07508–0013600

Tester

Digital multitester (KOWA)	07411–0020000
or	
Circuit tester (SANWA)	07308–0020000
or	
Circuit tester (KOWA)	TH-5H

TROUBLESHOOTING

No spark at one spark plug
- Faulty spark plug
- Faulty spark plug wire

No spark at all plugs

1. Check the spark unit connectors for loose or poorly contact.
   - ABNORMAL → • Loose or poorly contact connectors.
   - NORMAL ↓
2. Measure voltage between the Bl/W (+) and G (−)/between the Bu/Y (+) and G (−) of the spark unit 6P connector. Battery voltage should be appear with the ignition switch ON and engine stop switch RUN.
   - ABNORMAL → • Faulty ignition or engine stop switches • Open or short circuit in wire harness
   - NORMAL ↓
3-1. Check the pulse generator resistances at the spark unit 4P connector (page 18-3).
   - ABNORMAL → 3-2. Check the pulse generator (page 18-5).
     - NORMAL ↓ • Open or short circuit in wire harness • Loose or poorly contact connectors
     - ABNORMAL ↓ • Faulty pulse generator
   - NORMAL ↓
4. Perform the spark unit performance test (page 18-3).
   - ABNORMAL → • Faulty spark unit

No spark at either spark group (No. 1-4 or 2-3) — (CHECK WRONG SPARK GROUP)

1. Check the ignition secondary coil resistance (page 18-4).
   - ABNORMAL → • Faulty ignition coil • Faulty spark plug wire
   - NORMAL ↓
2-1. Check the ignition primary coil resistance at the spark unit 6P connector (page 18-3).
   - ABNORMAL → 2-2. Check the ignition coil (page 18-4).
     - NORMAL ↓ • Loose or poorly contact connectors • Open or short circuit in wire harness
     - ABNORMAL ↓ • Faulty ignition coil
   - NORMAL ↓
3-1. Check the pulse generator resistances at the spark unit 4P connector (page 18-3).
   - ABNORMAL → 3-2. Check the pulse generator (page 18-5).
     - NORMAL ↓ • Open or short circuit in wire harness • Loose or poorly contact connectors.
     - ABNORMAL ↓ • Faulty pulse generator
   - NORMAL ↓
4. Exchange the ignition coil and try the spark test.
   - GOOD JUMP → • Faulty ignition coil
   - DO NOT JUMP ↓
5. Perform the spark unit performance test (page 18-3).
   - ABNORMAL → • Faulty spark unit

SPARK UNIT SYSTEM INSPECTION

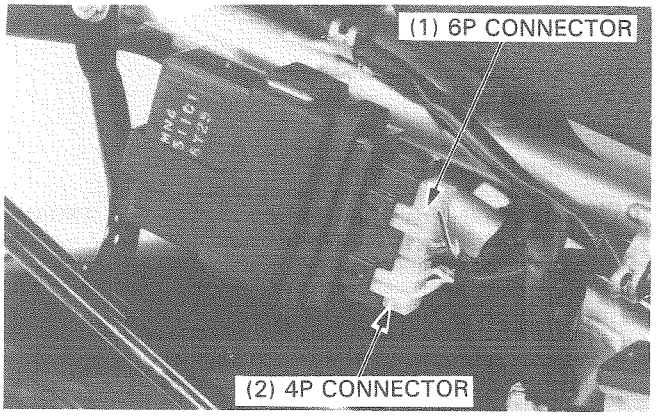

NOTE

- Check the system components and lines step-by-step according to the troubleshooting on page 18-2.

Disconnect the spark unit connectors and check them for loose contact or corroded terminals.

Measure the resistance between connector terminals of the following chart.

<6P CONNECTOR>

ITEM	TERMINALS	STANDARD (20°C/68°F)
Ignition primary coil	Y/Bu and Bl/W (No. 1-4) Bu/Y and Bl/W (No. 2-3)	2.5–3.1 Ω
DC power supply circuit line	Bl/W (+) and G (–) with the ignition switch "ON" and engine stop switch "RUN"	Battery voltage should come.

<4P CONNECTOR>

ITEM	TERMINALS	STANDARD (20°C/68°F)
Pulse generator coil	W/Y and Y (No. 1) W/Bu and Bu (No. 2)	450–550 Ω
	each terminal and body ground	NO CONTINUITY

PERFORMANCE TEST

NOTE

- Follow the tester manufacture's instructions.

Connect the inspection adapter (P1) to spark unit connector, and connect the tester.

TOOL:
Inspection adaptor (P1) **07508–0013600**

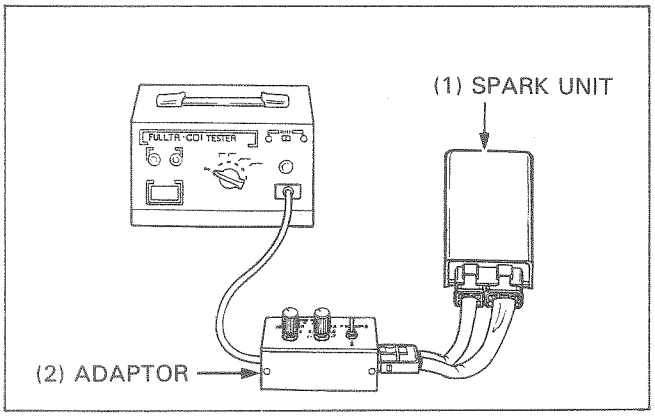

Turn the selectors of the inspection adapter as follows:

IG COIL SELECTOR: 2
P. SELECTOR A: 4
P. SELECTOR B: 1

Inspect the spark unit following table.

	Good condition	No good condition
OFF	No Fire	——
P	↑	——
EXT	↑	Fire
ON1	Fire	No Fire
ON2	↑	↑

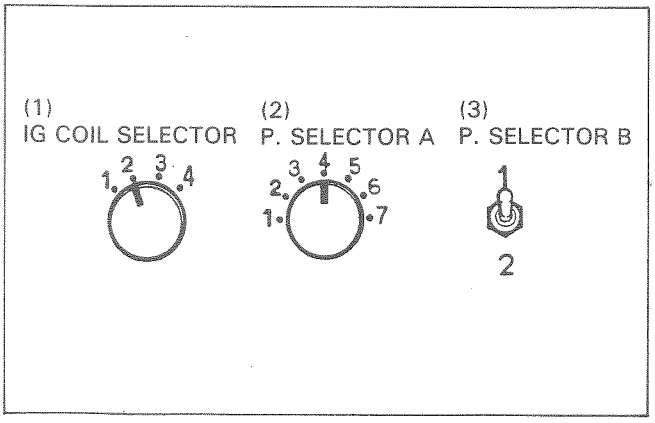

Replace the spark unit if it is not in good condition.

NOTE

- Spark unit is normal if fired when turn the P. SELECTOR A of the inspection adaptor to all positions except "1" and "7" positions.

IGNITION COIL

INSPECTION

Remove the ignition coil.
Measure the primary coil resistance by checking for continuity between the primary terminals.

STANDARD: 2.5–3.1 Ω (20°C/68°F)

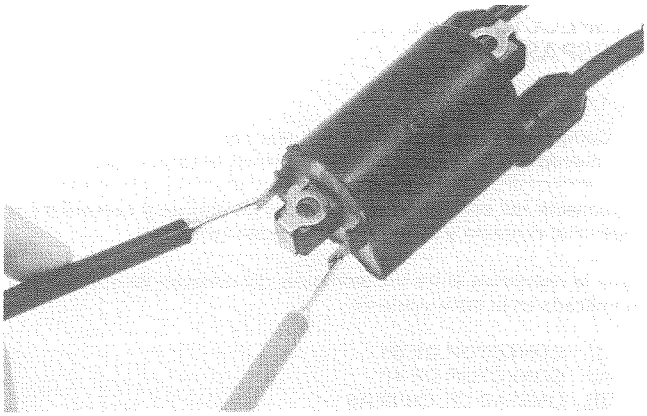

Measure the secondary coil resistance with the spark plug cap in place by checking for continuity between the plug cap and green terminal.

STANDARD: 21–25 kΩ (20°C/68°F)

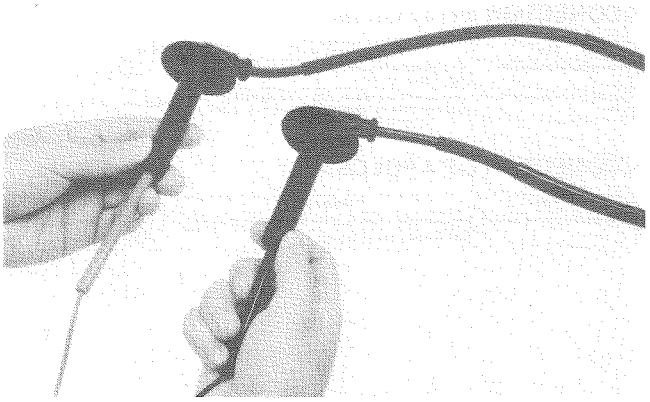

If the resistance is out of range, remove the spark plug wire and measure the resistance between the secondary terminals.

STANDARD: 11–15 kΩ (20°C/68°F)

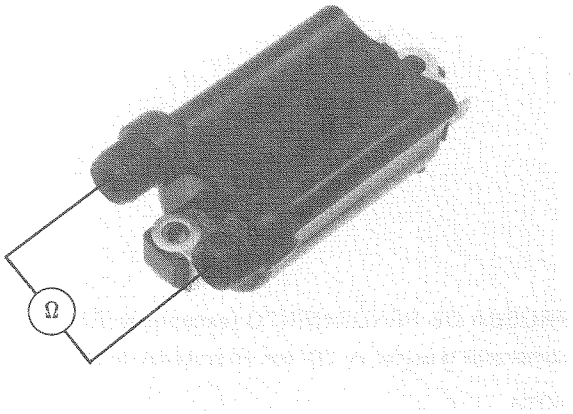

REPLACEMENT

Remove the fuel tank (page 4-3).
Disconnect the primary terminals from the coil.
Remove the spark plug cap from the spark plug.
Remove the ignition coil mounting bolts and coil.

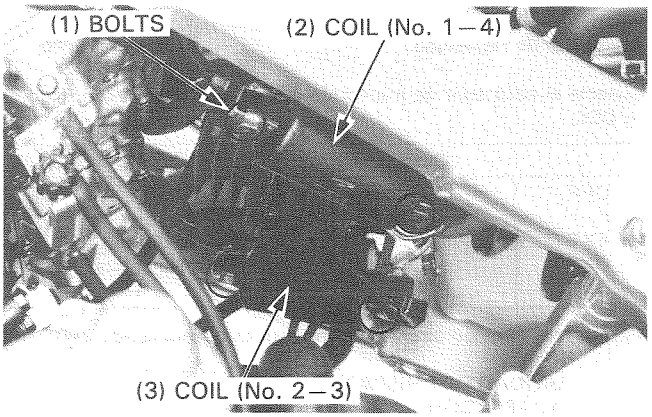

Install the new ignition coil in the reverse order of the removal.

NOTE

- Connect the primary wire terminals properly.
  No. 1-4 coil: black terminal—black/white wire
  green terminal—yellow/blue wire
  No. 2-3 coil: black terminal—black/white wire
  green terminal—blue/yellow wire

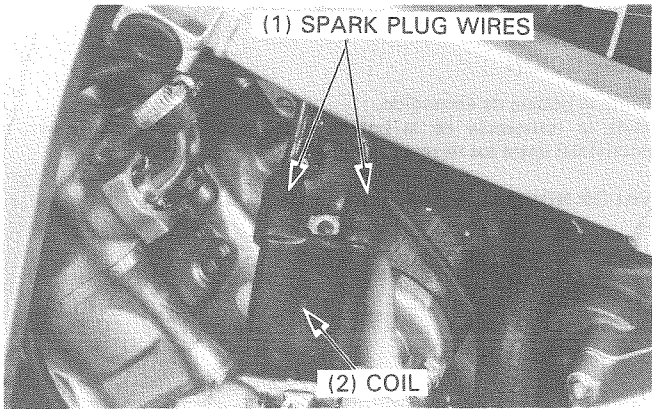

PULSE GENERATOR

INSPECTION

NOTE

- It is not necessary to remove the pulse generator to make this inspection.

Remove the fuel tank (page 4-3).
Disconnect the pulse generator 4P mini connector (RED).
Measure the resistances between the white/yellow and yellow wires (No. 1 pulse generator) and the white/blue and blue wires (No. 2 pulse generator).

STANDARD: 450—550 Ω (20°C/68°F)

For the replacement, refer to section 19.

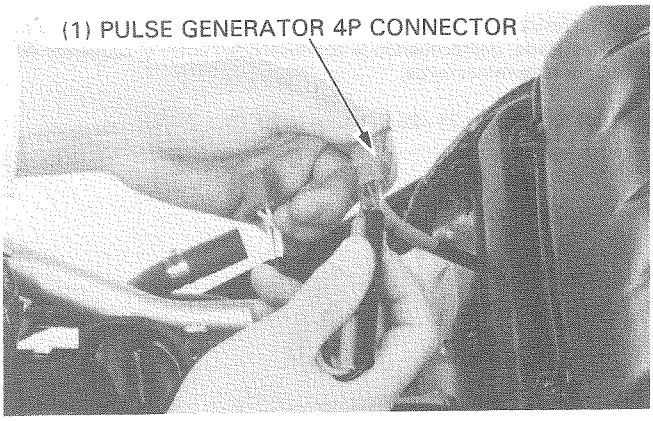

IGNITION TIMING

NOTE

- The spark unit system is factory pre-set and cannot be adjusted. Ignition timing inspection procedures are given to inspect the function of the spark unit components.
- Connect the timimg light to the other spark plug wire if you see that the ignition timing is incorrect, and you might be able to see the timing is correct.

Warm up the engine to the operating temperature.
Remove the timing inspection hole cap on the right crankcase cover.

Connect the timing light.

The timing is correct if the "F" mark aligns with the index mark on the right crankcase cover at idle for each cylinder.

Raise the engine rpm and the "F" mark should begin to rotate to the counterclockwise for each cylinder.

If the ignition timing is incorrect, check the system inspection (page 18-3) and replace any faulty parts.

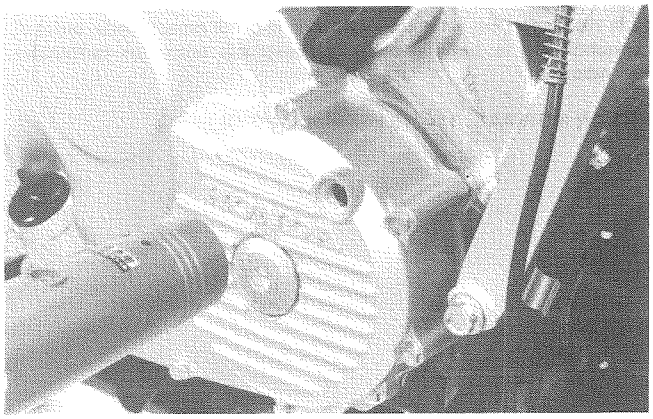

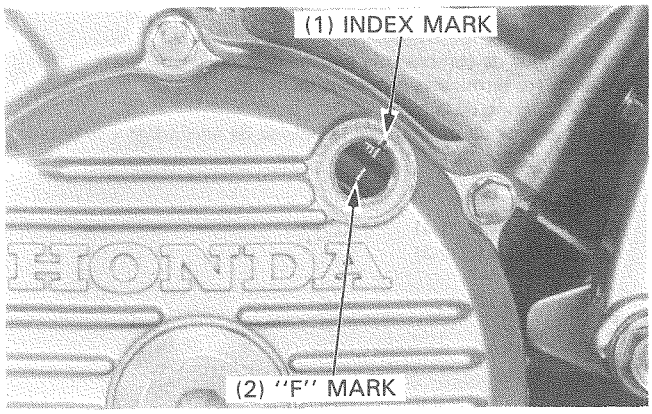

MEMO

ELECTRIC STARTER

MOTOR DE ARRANQUE ELECTRICO

MOTORINO DI AVVIAMENTO

(1) BATERIA
(2) DIODO
(3) INTERRUPTOR DE EMBRAGUE
(4) INTERRUPTOR DE ENCENDIDO
(5) INTERRUPTOR DE ARRANQUE
(6) MOTOR DE ARRANQUE
(7) INTERRUPTOR DEL RELE DE ARRANQUE
(8) FUSIBLE PRINCIPAL
(9) INTERRUPTOR DEL RELE DE ARRANQUE

(1) BATTERIA 12 V 8 AH
(2) DIODO
(3) INTERRUTTORE FRIZIONE
(4) INTERRUTTORE ACCENSIONE
(5) INTERRUTTORE MOTORINO AVVIAMENTO
(6) MOTORINO AVVIAMENTO
(7) INTERRUTTORE NEUTRO
(8) FUSIBILE PRINCIPALE 30 A
(9) TELERUTTORE MOTORINO AVVIAMENTO

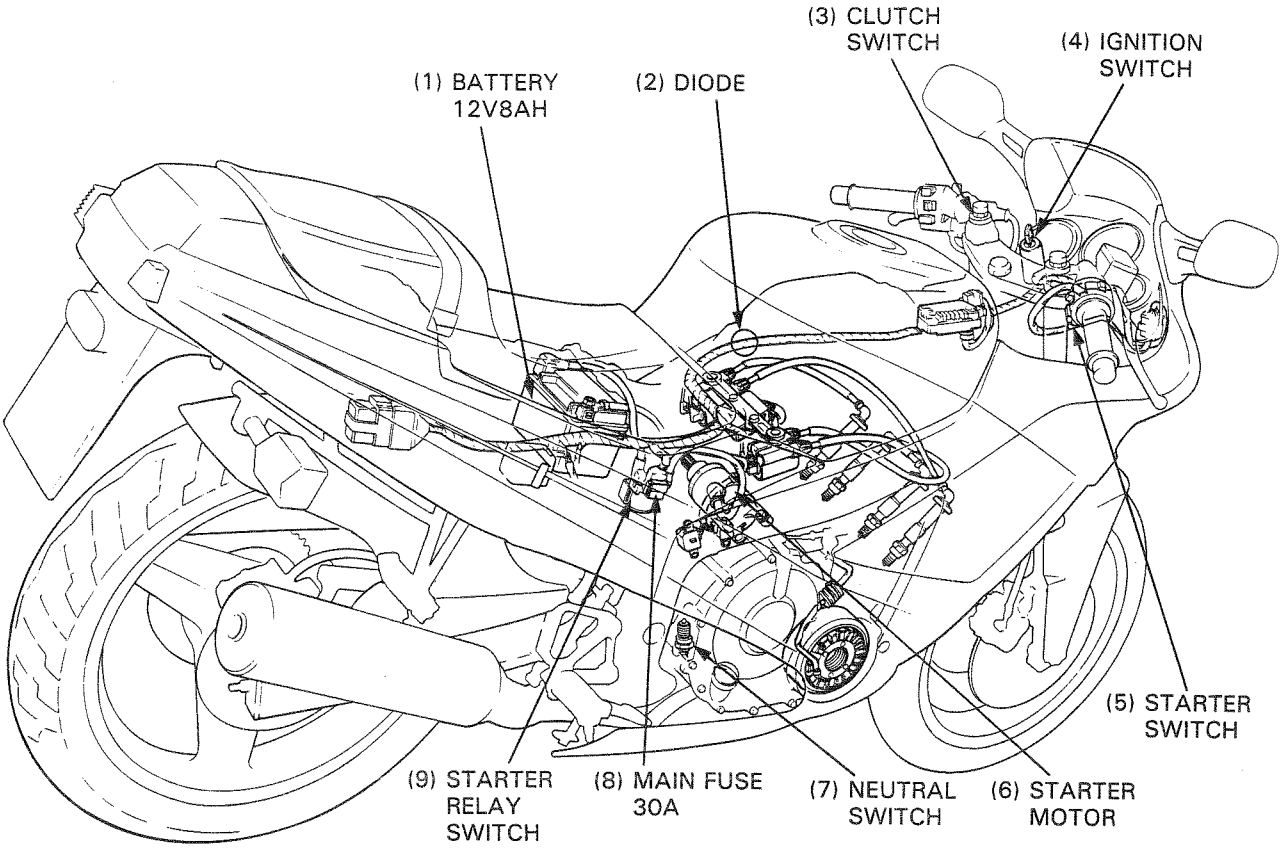
(3) CLUTCH SWITCH
(4) IGNITION SWITCH
(1) BATTERY 12V8AH
(2) DIODE
(5) STARTER SWITCH
(9) STARTER RELAY SWITCH
(8) MAIN FUSE 30A
(7) NEUTRAL SWITCH
(6) STARTER MOTOR

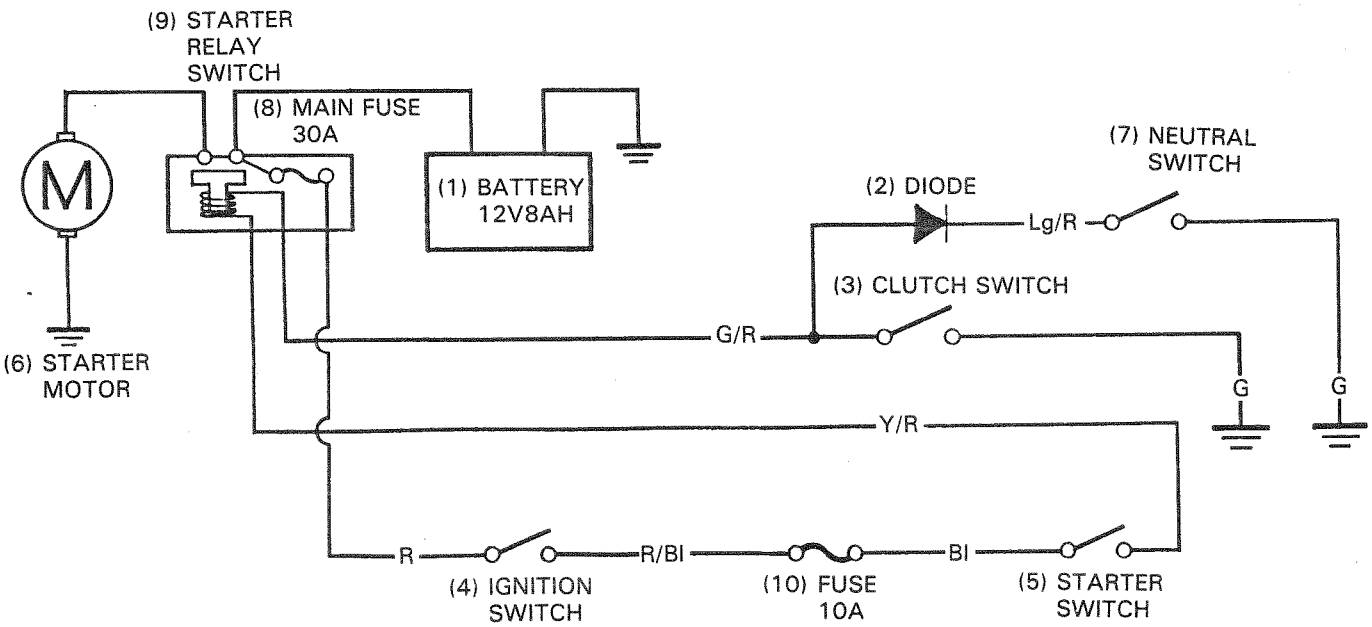
(9) STARTER RELAY SWITCH
(8) MAIN FUSE 30A
M
(1) BATTERY 12V8AH
(7) NEUTRAL SWITCH
(2) DIODE
Lg/R
(3) CLUTCH SWITCH
G/R
G
G
(6) STARTER MOTOR
Y/R
R
R/Bl
Bl
(4) IGNITION SWITCH
(10) FUSE 10A
(5) STARTER SWITCH

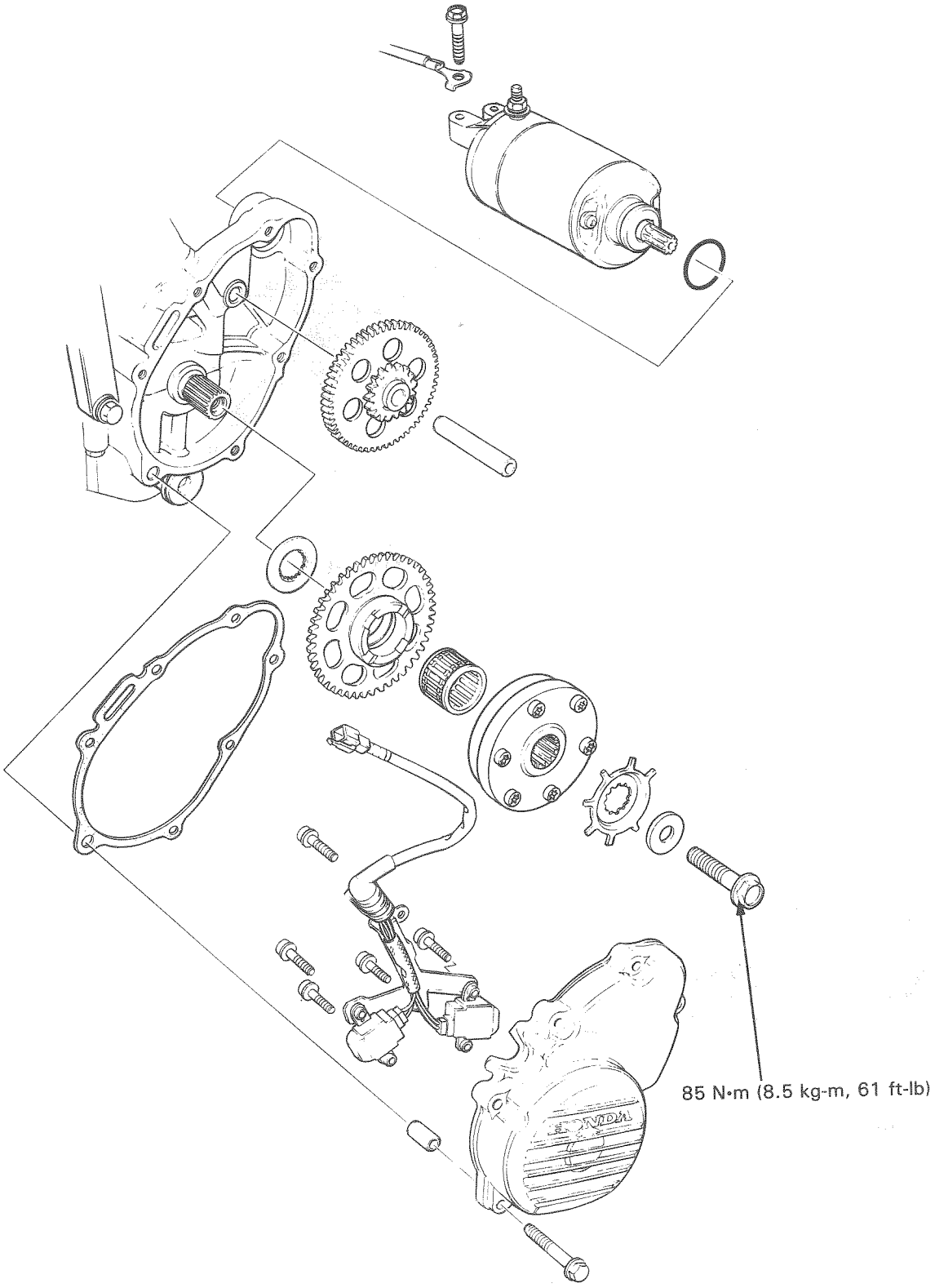
85 N•m (8.5 kg-m, 61 ft-lb)

SERVICE INFORMATION

GENERAL

- The starter motor and pulse generator can be removed with the engine in the frame.
- For the inspection of the pulse generator, refer to Section 18.

SPECIFICATIONS

Unit: mm (in)

ITEM	STANDARD	SERVICE LIMIT
Starter motor brush length	12.5 (0.49)	8.5 (0.33)
Starter driven gear boss O.D.	45.657–45.673 (1.7975–1.7981)	45.57 (1.794)

TORQUE VALUES

Starter clutch setting socket bolt	16 N·m (1.6 kg-m, 12 ft-lb)	Apply locking agent
Starter clutch bolt	85 N·m (8.5 kg-m,61 ft-lb)	
Pulse generator setting socket bolt	5.3 N·m (0.53 kg-m, 3.8 ft-lb)	Apply locking agent

TROUBLESHOOTING

NOTE

- The starter motor could turn when the transmission is in neutral or the clutch disengaged.
- Check the following items before troubleshooting the system.
  - Main (30A) and sub (10A) fuses for burn.
  - Battery and starter motor cables for loose connection.
  - Battery discharged.

Starter motor do not turn

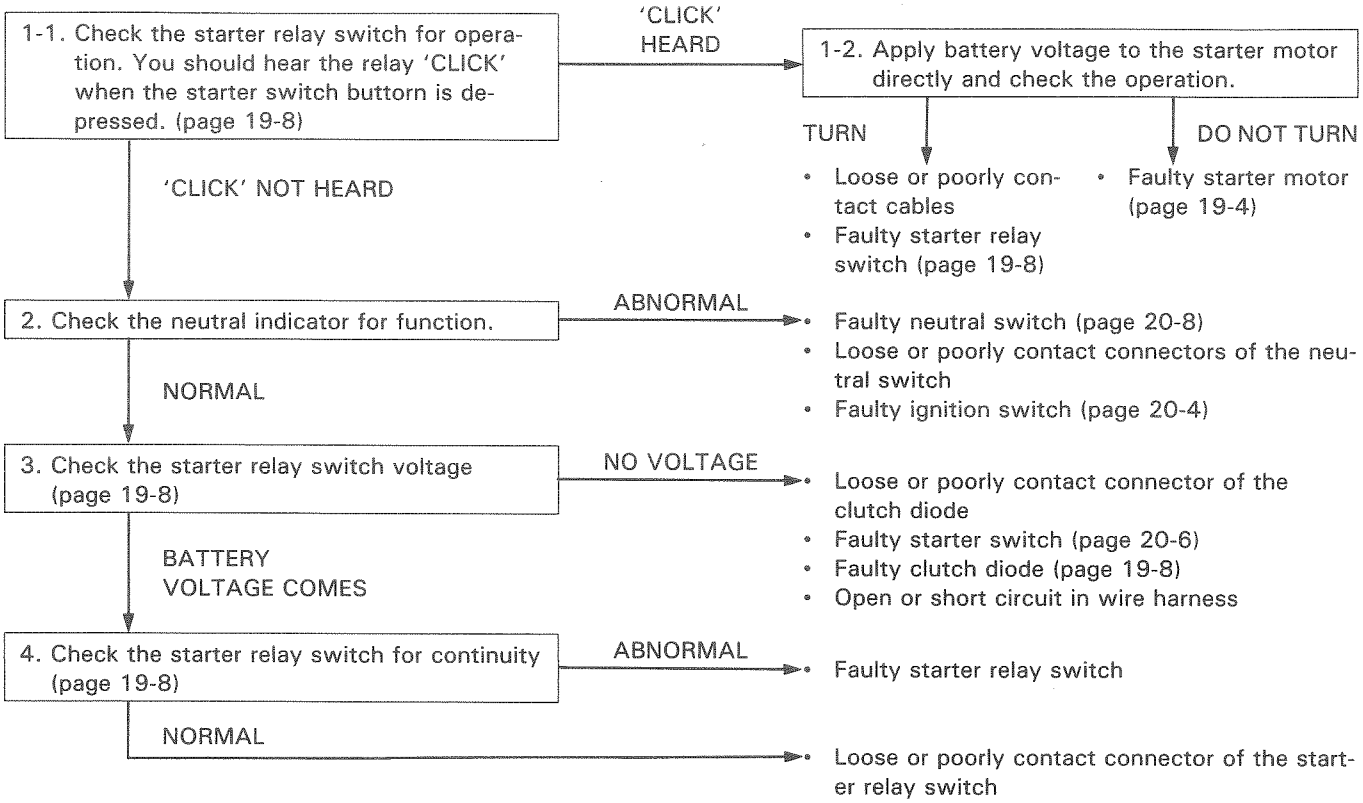

Starter motor turns engine slowly
- Low specific gravity
- Excessive resistance in circuit
- Binding in starter motor

Starter motor turns, but engine does not turn
- Faulty starter clutch
- Faulty starter motor gears
- Faulty starter motor or idle gear

Starter motor and engine turns, but engine does not start
- Faulty ignition system
- Engine problems
  - Low compression
  - Fouled spark plugs

STARTER MOTOR

REMOVAL

WARNING

- *With the ignition switch OFF, remove the negative cable at the battery before servicing the starter motor.*

Remove the left lower fairing (page 13-4).

Disconnect the starter motor cable.
Remove the motor mounting bolts and motor.

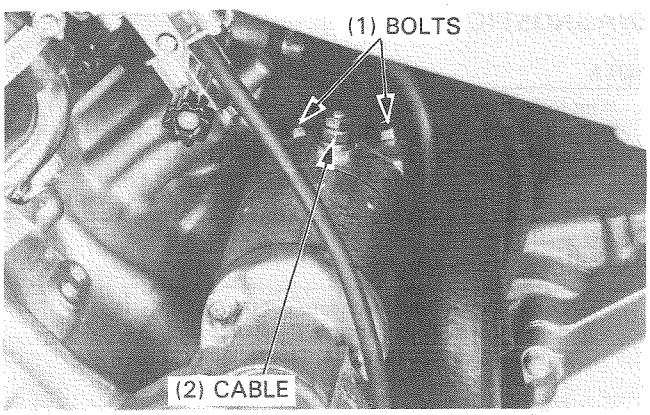

DISASSEMBLY

Remove the following components:
— motor case screws.
— front cover and rear cover.
— armature.

NOTE

- Record the location and number of shims.

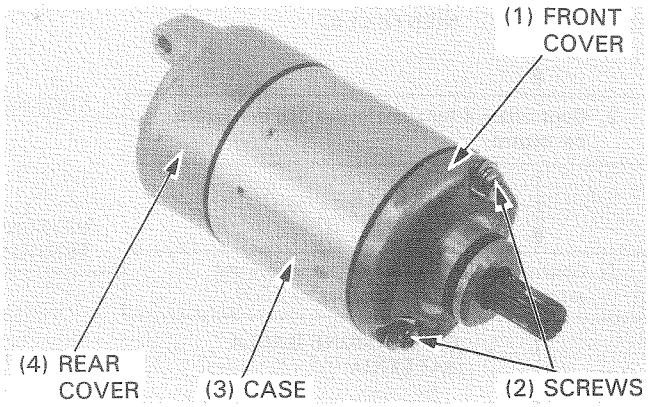

INSPECTION

Check for continuity from the cable terminal to the rear cover and from the cable terminal to the brush wire (black).

CABLE TERMINAL-COVER
NO CONTINUITY: NORMAL

CABLE TERMINAL-BRUSH (BLACK WIRE)
CONTINUITY: NORMAL

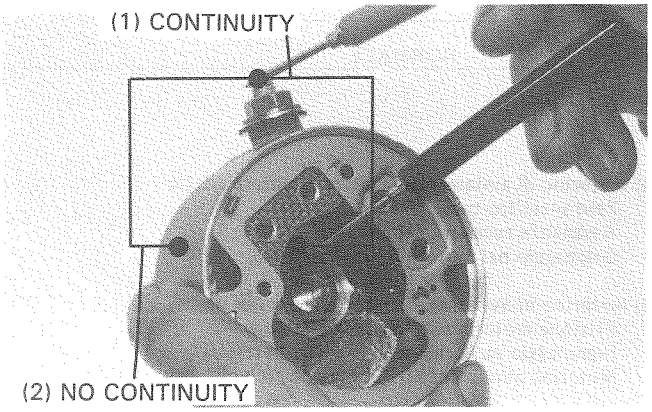

Measure the brush length.

SERVICE LIMIT: 8.5 mm (0.33 in)

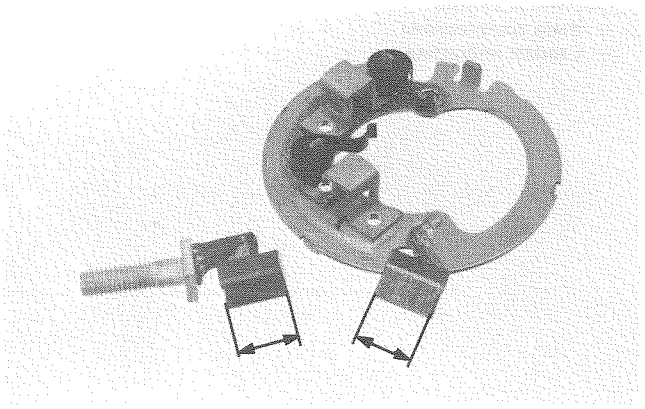

Check the needle bearing for wear, damage or excessive free play.
Check the dust seal for wear or damage and apply a small amount of grease to the dust seal.

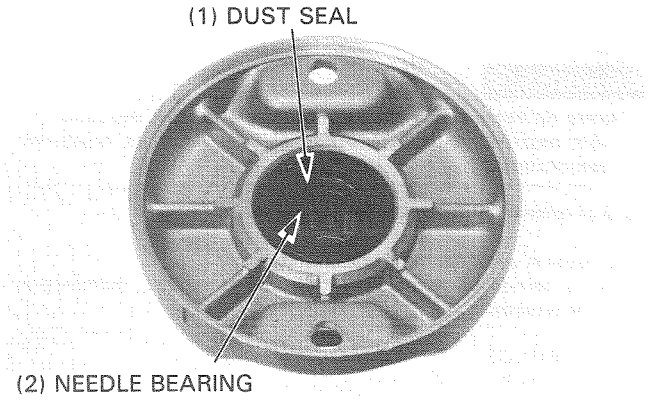

Inspect the commutator bars for discoloration.
The bars discolored in pairs indicate grounded armature coils.

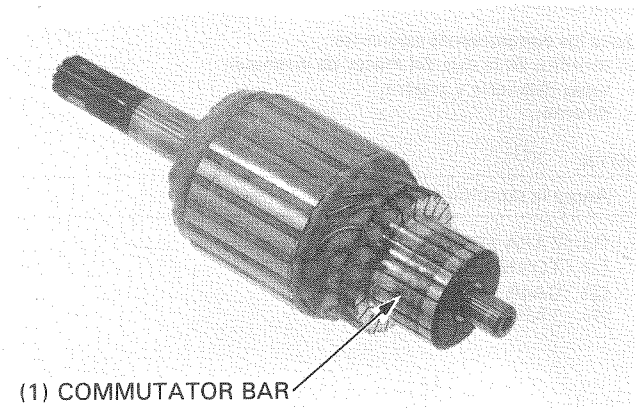

Check for continuity between pairs of commutator bars.

There should be continuity.

Check for continuity between individual commutator bars and the armature shaft.

There should be no continuity.

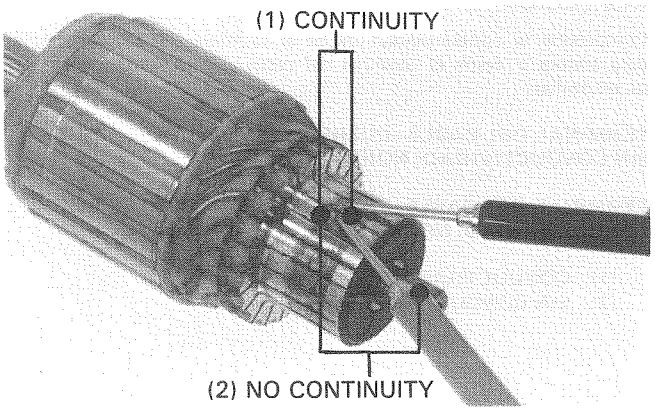

ASSEMBLY

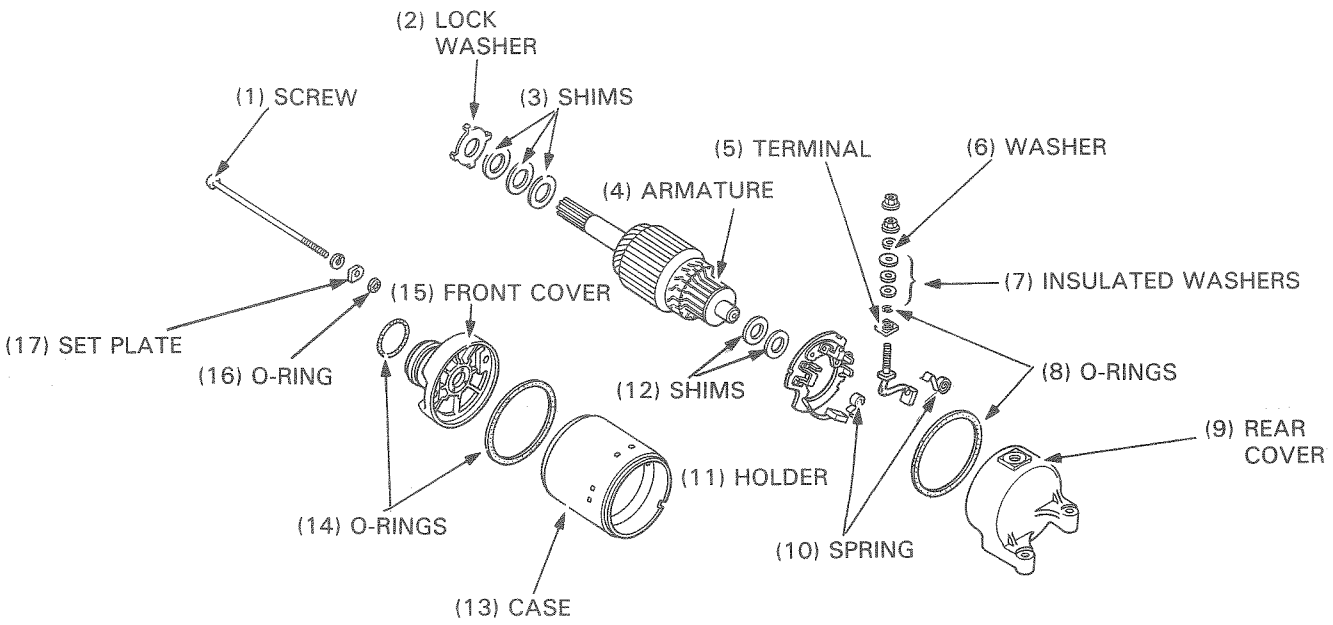

Install the brushes to the holder.

Align the rear cover groove with the brush holder tab.

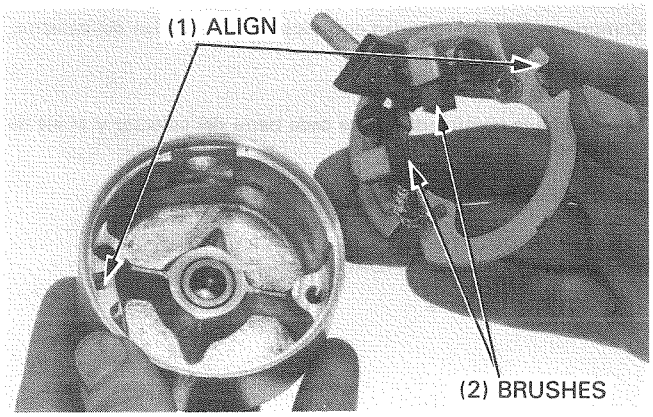

Install the O-ring, insulated washers, washer and nut in the same location and number of disassembly.

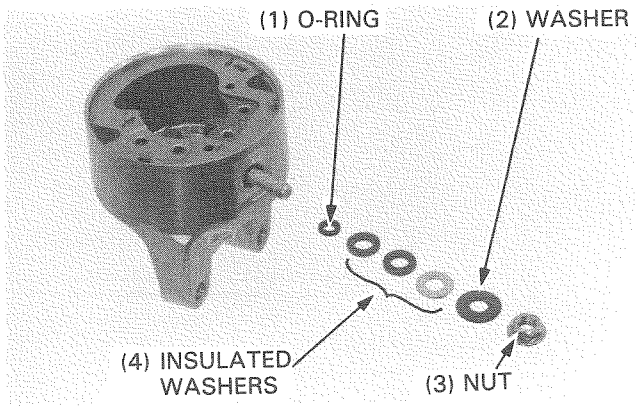

Install the shims to the armature shaft.
Apply grease to the shaft and its journal of the cover, and install the armature in the cover.

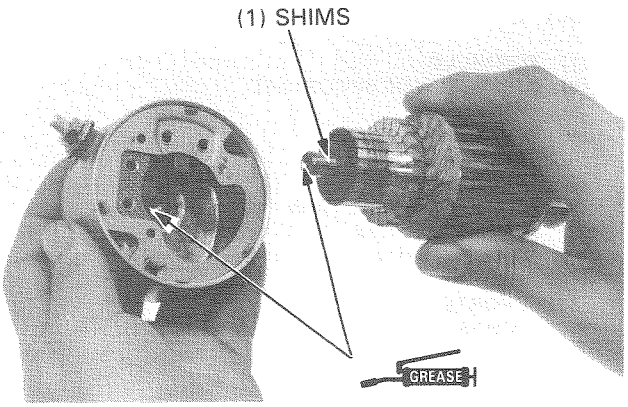

Install the O-rings on the case.
Align the slot of the case with the brush holder pin.

NOTE

- Take care that the magnet of the case doesn't attract the armature.

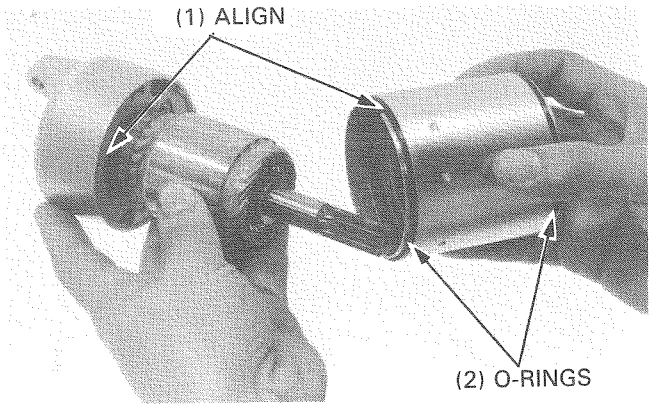

Install the shims to the shaft.
Install the lock washer on the front cover.

NOTE

- Take care not to damage the dust seal lip.

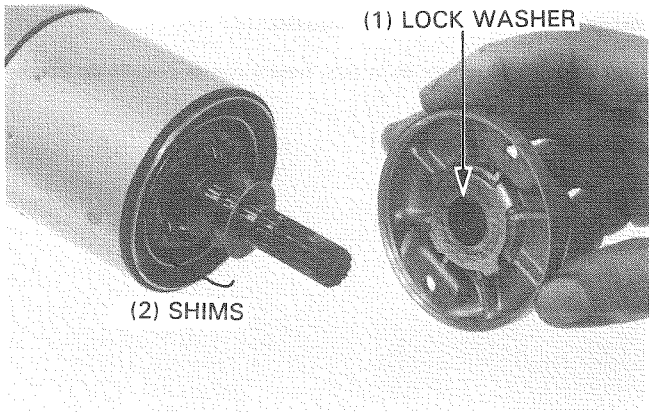

Align the index marks on the front and rear covers.
Install and tighten the O-rings, set plates, washers and screws.

Apply oil to the O-ring of the front cover.

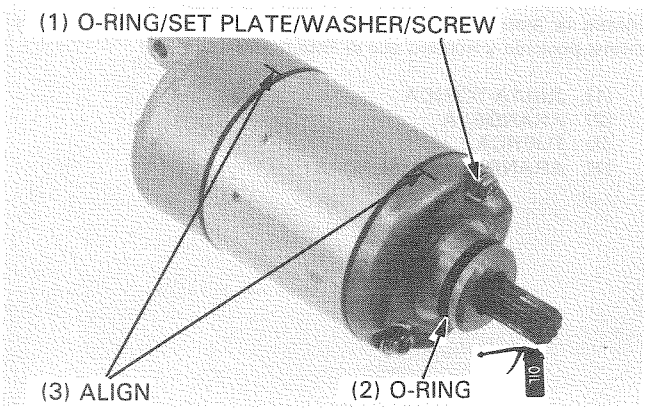

INSTALLATION

Install the starter motor.
Install and tighten the motor mounting bolts securely.

NOTE

- Install the ground cable with one mounting bolt as shown.

Connect the motor cable to the motor terminal.
Install the rubber cap onto the terminal.
Connect the battery negative cable.

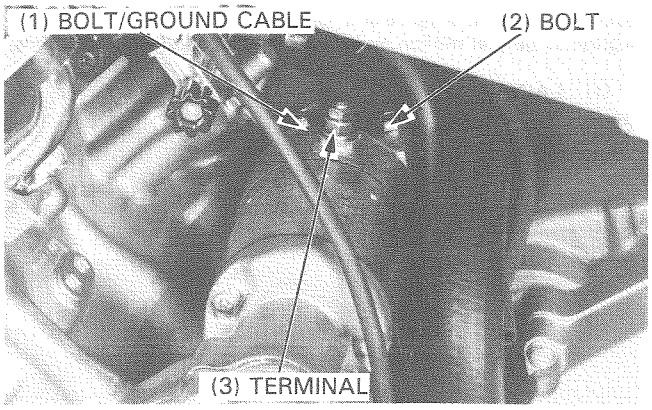

STARTER RELAY SWITCH

OPERATION INSPECTION

Depress the starter switch button with the ignition ON.
The coil is normal if the starter relay switch clicks.

VOLTAGE INSPECTION

If the switch 'CLICK' is not heard, measure the voltage between the yellow/red (+) and green/red (−) wires of the relay connector. The battery voltage should appear when the starter switch button is depressed with the ignition switch ON and neutral position.
Perform the following inspection if the battery voltage appeared between the yellow/red and green/red wires.

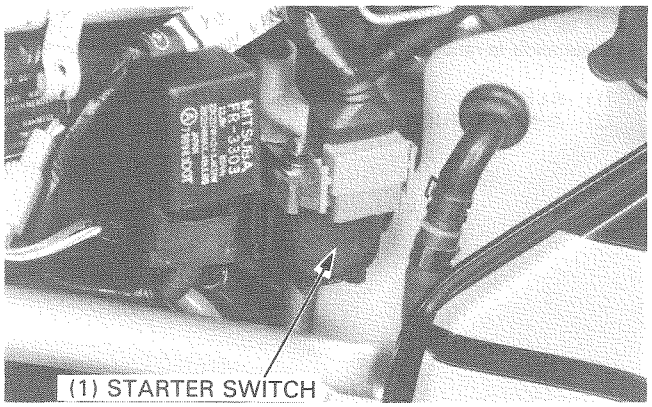

CONTINUITY INSPECTION

Remove the starter relay switch.
Connect an ohmmeter to the starter relay switch large terminals.

Connect a fully charged 12 V battery positive wire to the starter relay switch Yellow/Red wire terminal and battery negative wire to the Green/Red wire terminal.

Check for continuity between the starter relay switch terminals.

There should be continuity while 12 V battery is connected to the starter relay switch terminals and should be no continuity when the battery is disconnected.

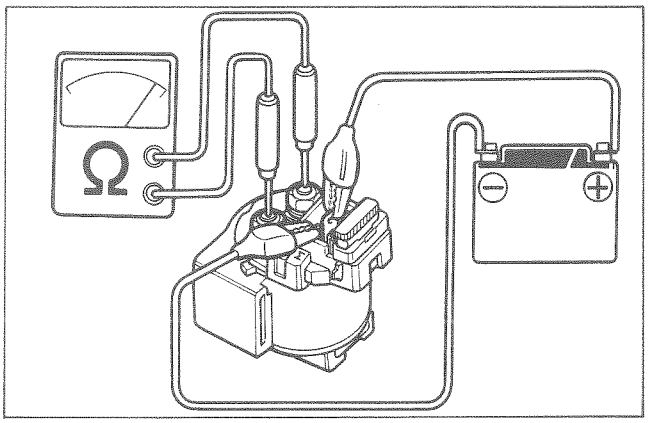

CLUTCH DIODE

REMOVAL

Remove the fuel tank (page 4-3).
Remove the clutch diode from the wire harness.

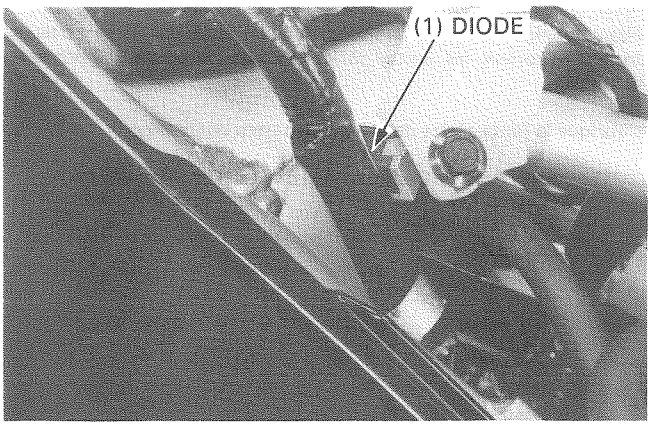

INSPECTION

Check for continuity with an ohmmeter.

NORMAL DIRECTION: CONTINUITY
REVERSE DIRECTION: NO CONTINUITY

INSTALLATION

Install the diode in the reverse order of removal.

(1) CONTINUITY

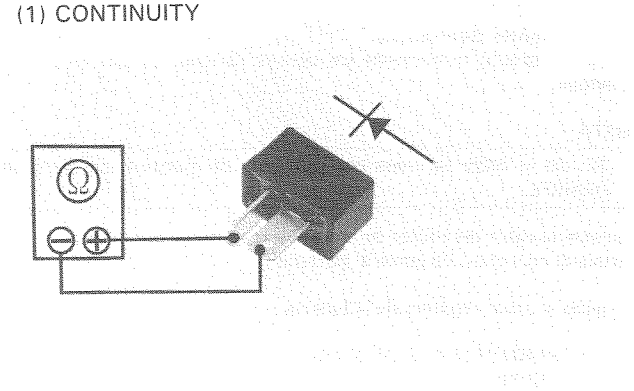

LEFT CRANKCASE COVER REMOVAL

Drain the engine oil (page 2-4).
Remove the fuel tank (page 4-3).
Remove the left lower fairing (page 13-4).
Disconnect the pulse generator 4P mini connector (RED).

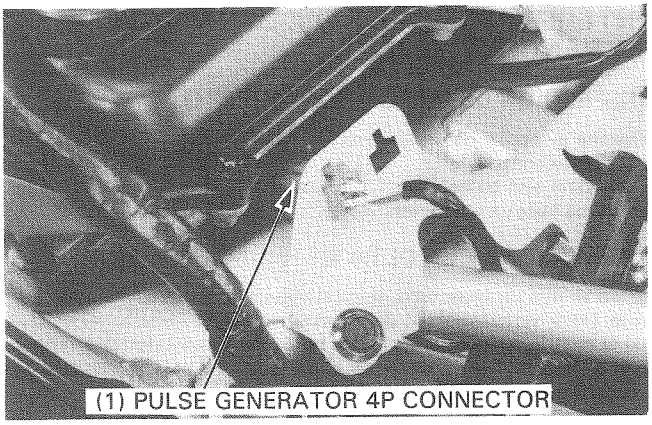

Remove the bolts and left crankcase cover.

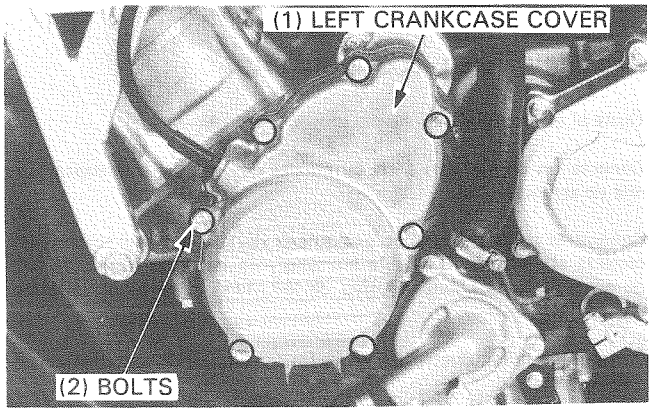

Remove the gasket and dowel pin.

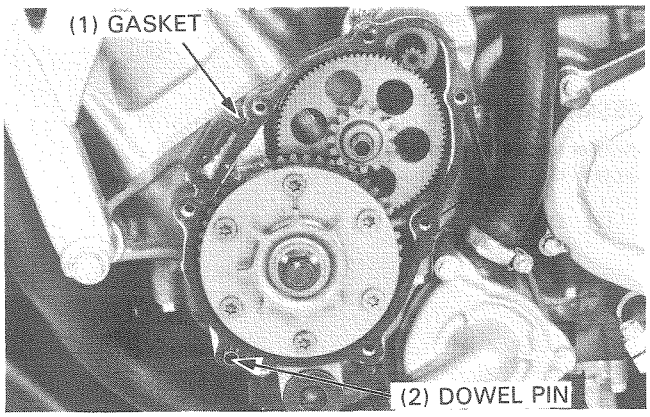

PULSE GENERATOR REMOVAL

Remove the socket bolts and pulse generators.

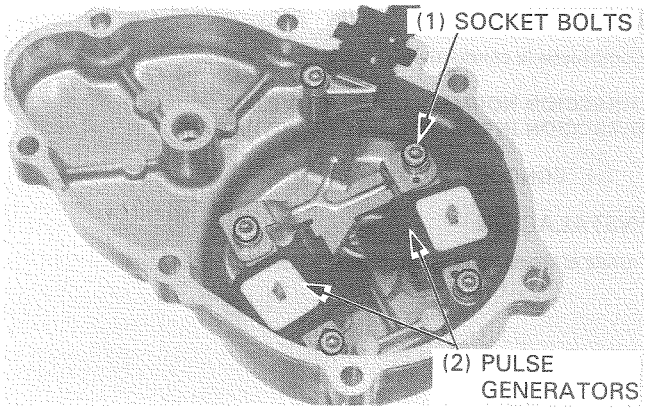

STARTER CLUTCH

REMOVAL

Remove the starter clutch bolt.
Remove the pulse rotor and starter clutch with the driven gear.

Inspect the rotor for damage.

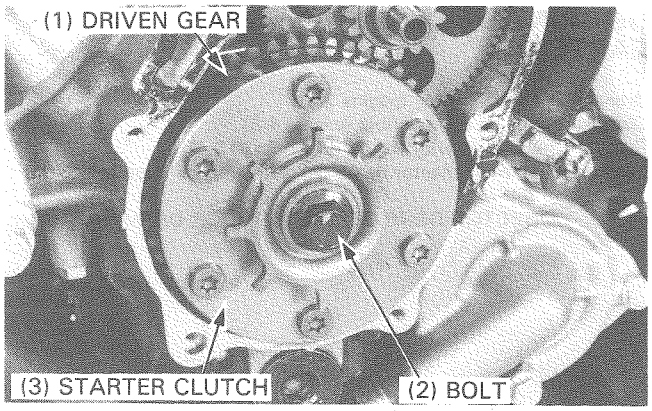

Remove the washer.

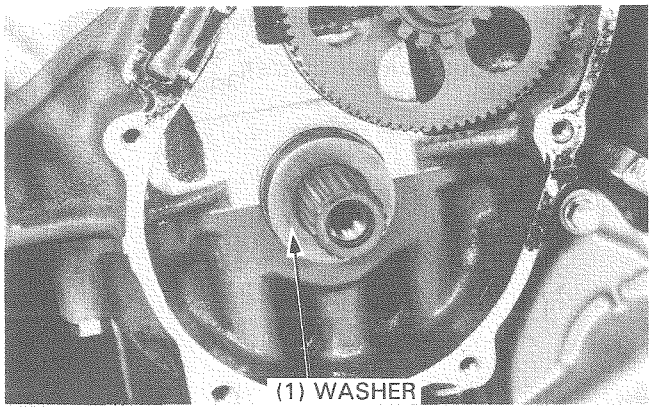

Remove the shaft and starter drive gear.

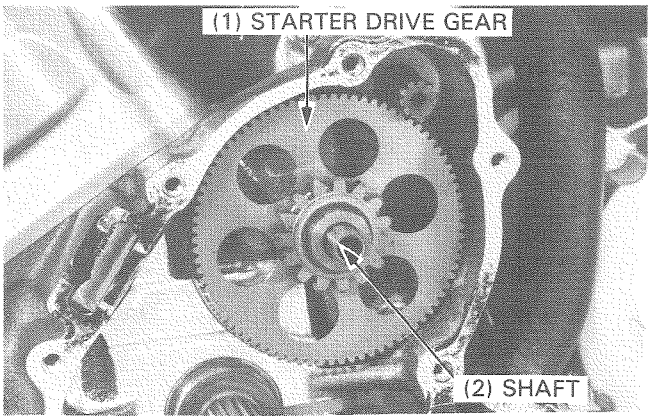

INSPECTION

Make sure that the starter driven gear only rotates counter-clockwise.
Remove the starter driven gear and needle bearing from the starter one-way clutch.

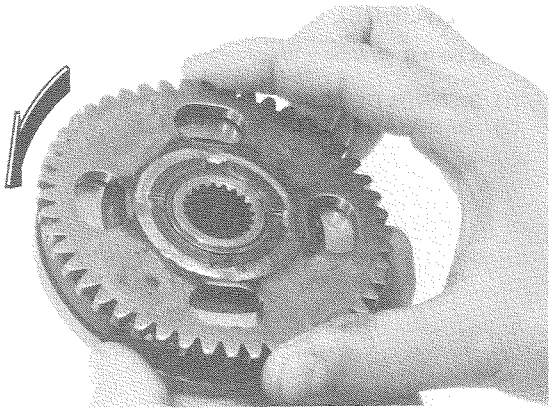

Check the starter driven gear for wear or damage.
Check the oil orifice for clogging.

Measure the O.D. of the starter driven gear boss.

STANDARD: 45.57 mm (1.794 in)

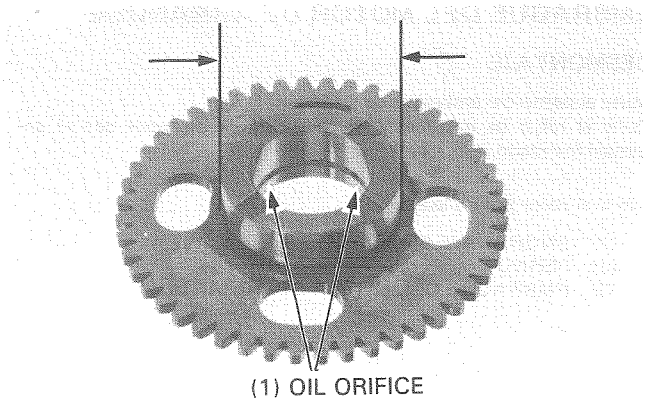

Check the starter drive gear shaft journal for damage.

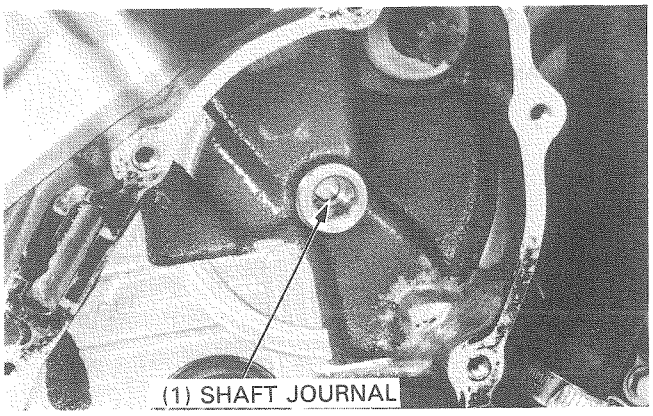

Check the needle bearing for wear, damage or excessive free play.

Check the rollers of the one-way clutch for wear or damage.

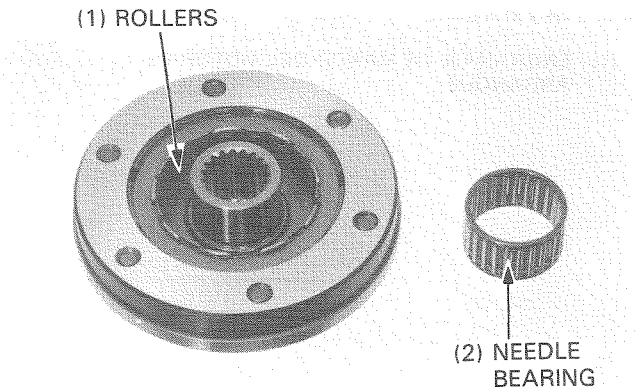

STARTER CLUTCH DISASSEMBLY/ASSEMBLY

If the starter clutch is faulty, remove the socket bolts using a torx bit (07703—0010100).
Remove the starter clutch outer and one-way clutch.

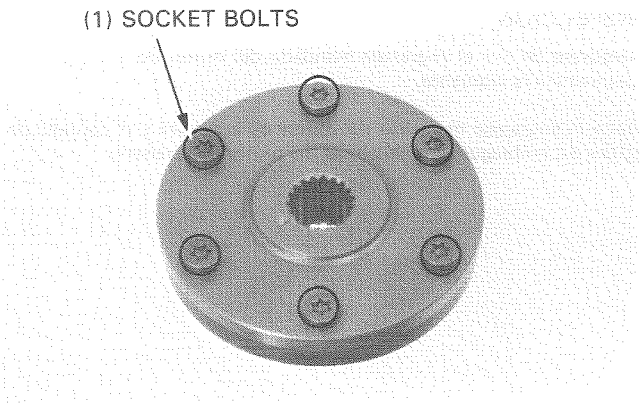

If you disassemble the one-way clutch, assemble it with the roller ditches put in order.

Install the one-way clutch onto the starter clutch outer with its flange side facing inside.

Install the clutch outer and one-way clutch, apply locking agent to the torx bit bolts and tighten the bolts using a torx bit (07703—0010100).

TORQUE: 16 N·m (1.6 kg-m, 12 ft-lb)

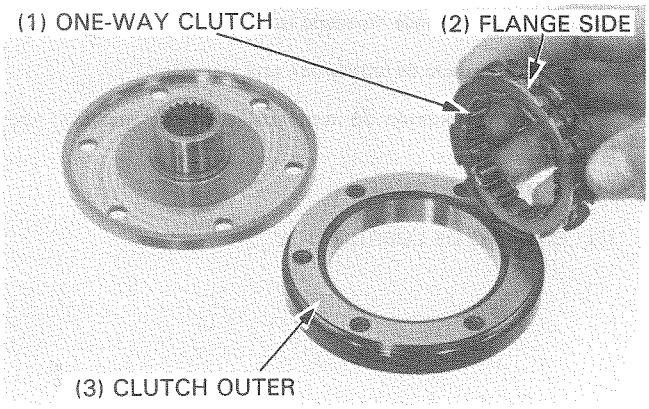

INSTALLATION

Install the needle bearing into the starter clutch.
Install the starter driven gear into the starter clutch, rotating it counterclockwise.

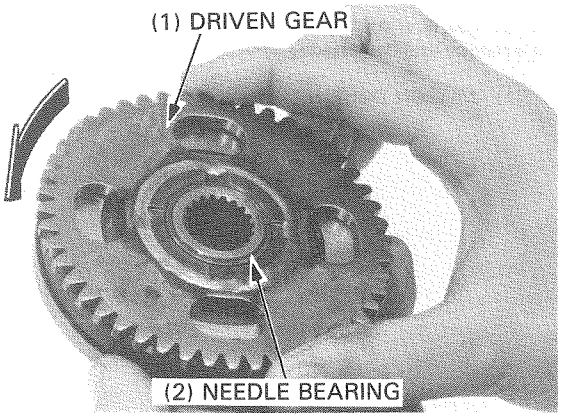

Install the starter drive gear and shaft.

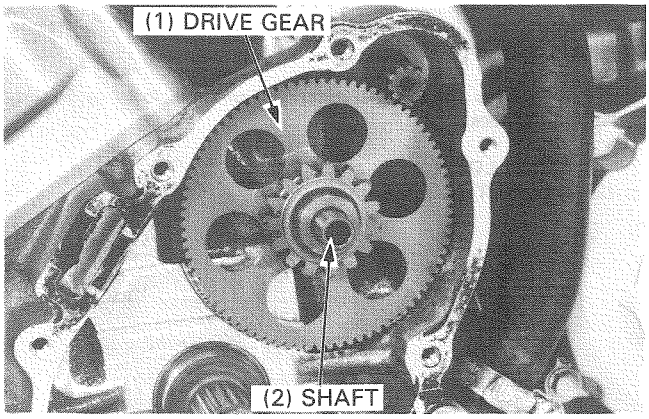

Install the washer onto the crankshaft.

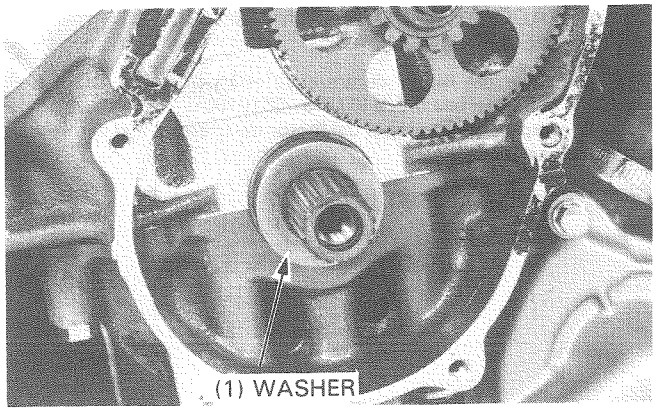

Install the starter clutch wire the driven gear.

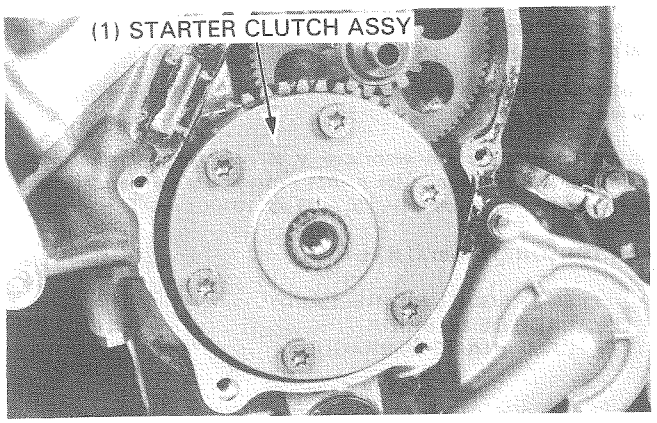

Install the pulse rotor, aligning the punch mark with the extra-wide spline of the rotor.

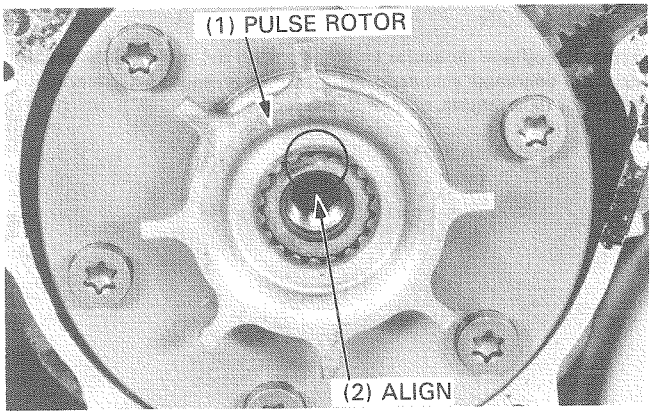

Install and tighten the starter clutch bolt.

TORQUE: 85 N•m (8.5 kg-m, 61 ft-lb)

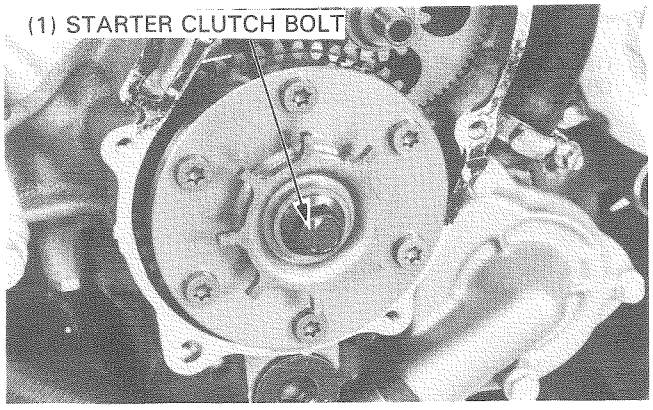

LEFT CRANKCASE COVER INSTALLATION

PULSE GENERATOR INSTALLATION

Set the wire grommet into the groove of the left crankcase cover properly.
Install the pulse generators with the wire holder, apply locking agent to the socket bolt thread and tighten the bolts.

TORQUE: 5.3 N·m (0.53 kg-m, 3.8 ft-lb)

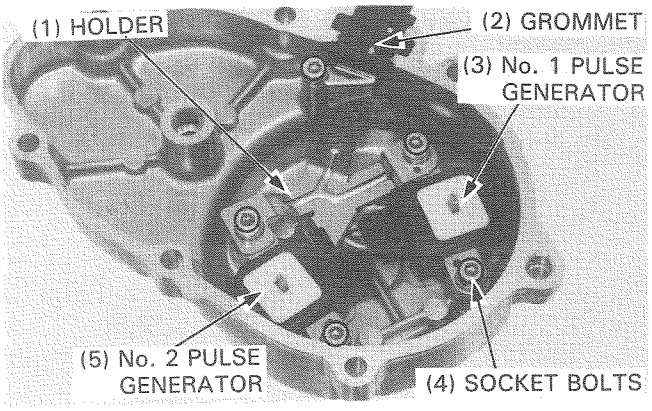

LEFT CRANKCASE COVER INSTALLATION

Install the dowel pin and gasket.

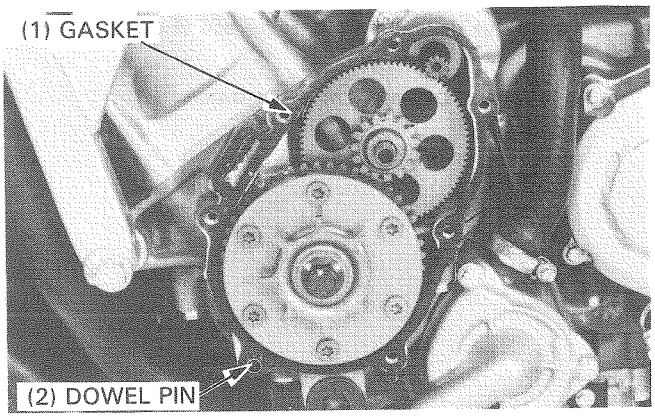

Install the left crankcase cover and tighten the cover bolts.

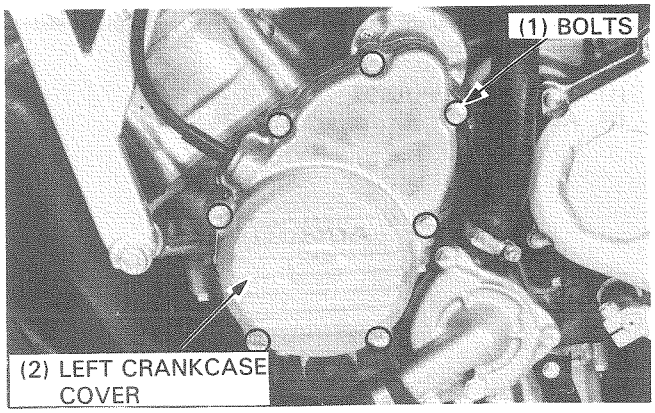

Route the pulse generator wire properly (page 1-9).
Connect the pulse generator 4P mini connector (RED).

Install the left lower fairing (page 13-4).
Install the fuel tank (page 4-3).
Fill the crankcase with the recommended engine oil (page 2-5).

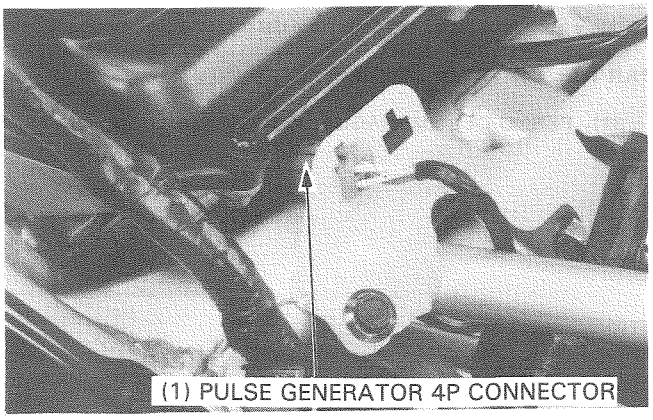

LIGHTS/SWITCHES
LUCES/INTERRUPTORES
LUCI E INTERRUTTORI

SERVICE INFORMATION

GENERAL

- Some wires have different colored bands around them near the connector. These are connected to other wires which correspond to the band color.
- All plastic connectors have locking tabs that must be released before disconnecting, and must be aligned when reconnecting.
- To isolate an electrical failure, check the continuity of the electrical path through the part. A continuity check can usually be made without removing the part from the motorcycle. Simply disconnect the wires and connect a continuity tester or volt-ohmmeter to the terminals or connections.
- A continuity tester is useful when checking to find out whether or not there is an electrical connection between the two points. An ohmmeter is needed to measure the resistance of a circuit, such as when there is a specific coil resistance involved, or when checking for high resistance caused by corroded connections.

SPECIFICATION

Headlight		12V 60/55W
Stop/taillight		12V 21/5W x 2
Position light		12V 4W (U: 12V 3.4W)
Turn signal light		12V 21W x 4 (U: 12V 23W x 4)
License light		12V 5W
Pilot light	turn signal	12V 3W x 2
	oil pressure	12V 3W
	neutral	12V 3W
	high beam	12V 3W
Instrument light		12V 3W x 4
Main fuse		30A
Sub fuse (turn signal, stoplight, horn passing)		15A
Sub fuse		10A x 6

TORQUE VALUE

Ignition switch	25 N•m (2.5 kg-m, 18 ft-lb)

TROUBLESHOOTING

No Lights Come On When Ignition Switch Is Turned ON:
- Bulb at fault or burned out
- Faulty switch
- Wiring to that component has open circuit
- Fuse blown
- Wiring loose, broken, or at fault
- Battery dead or disconnected

All Lights Come On, but Dimly, when Ignition Switch Is Turned ON:
- Battery voltage low
- Faulty bulb

Headlight Beam Does Not Shift When HI-LO Switch Is Operated:
- Beam filament burned out
- Faulty dimmer switch
- Wiring loose, broken,or at fault

HEADLIGHT/POSITION LIGHT

BULB REPLACEMENT

NOTE

- You can service the headlight and position light without removing anything.

Pull the position light out of the headlight and replace the bulb with a new one.

Disconnect the headlight connector and remove the seal rubber.
Remove the bulb retainer and replace the bulb with a new one.

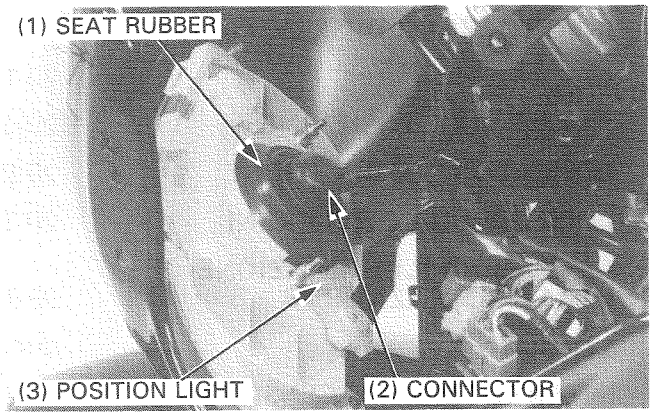

CAUTION

- *Wear gloves when installing a halogen bulb.*
  If you touch, the bulb with your bare hands, clean it with a cloth moistened with alcohol to prevent early failure.

Install the bulb retainer and seal rubber with the "TOP" mark on the seal rubber facing up.

Connect the headlight connector and check its operation.

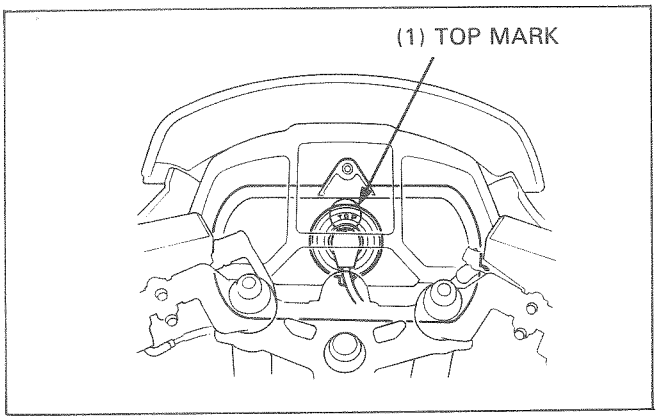

REMOVAL/INSTALLATION

Remove the upper fairing (page 13-5).
Remove the three screws attaching the headlight to the upper fairing.

Install the headlight in the reverse order of removal.

NOTE

- Adjust the headlight aim after installation (page 3-14).

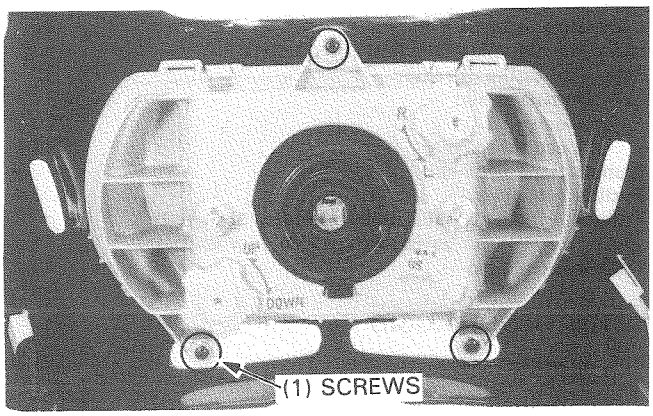

TURN SIGNAL

BULB REPLACEMENT

Front
Remove the bulb socket and bulb, rotating the socket to release its tabs.

Rear
Remove the screw and lens.
Remove the bulb and replace it with a new one.

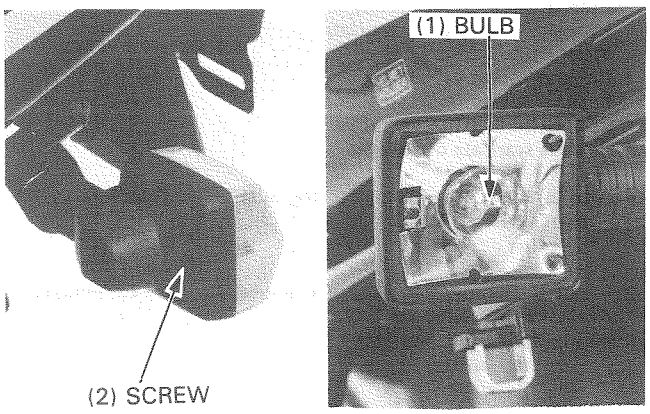

STOP/TAILLIGHT

REPLACEMENT

Remove the seat.
Remove the bolts and seat cowling.

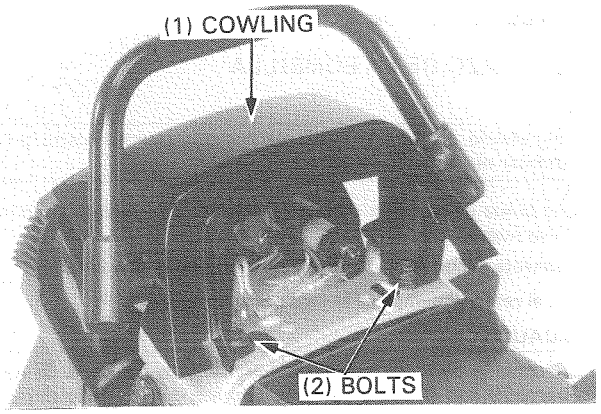

Remove the bulb socket, rotating the socket to release its tabs.
Replace the bulb with a new one.

NOTE

- Align the bigger tab of the socket with the bigger groove of the case.

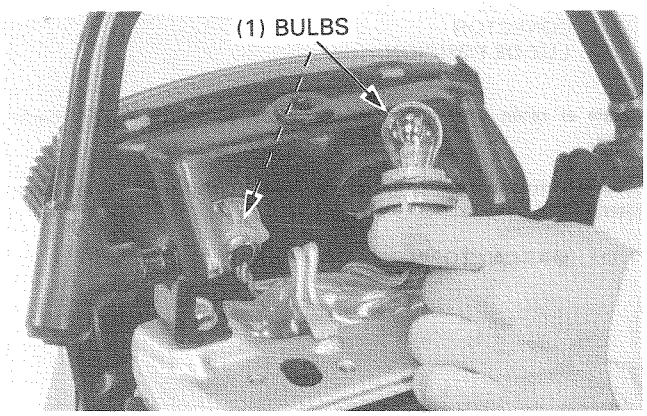

LICENSE LIGHT

BULB REPLACEMENT

Remove the bolts and license light lens.
Replace the bulb with a new one.

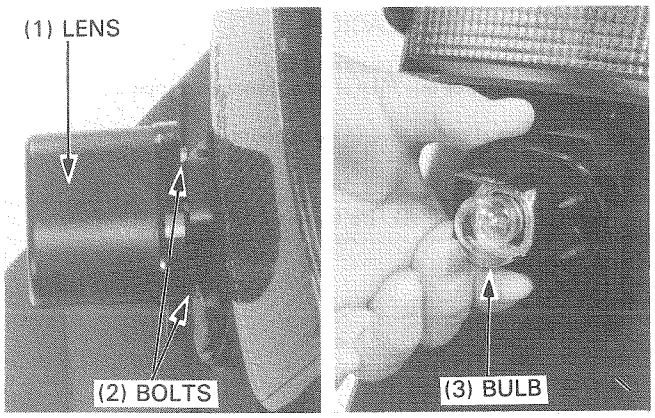

INSTRUMENTS

BULB REPLACEMENT

Remove the inner cover (page 13-5).
Remove the instruments mounting bolts.

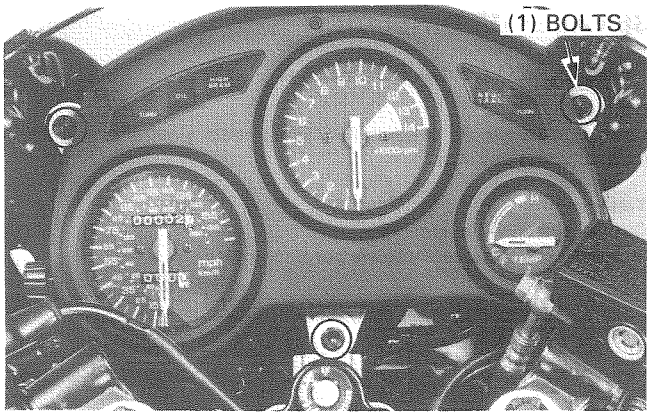

Disconnect the instruments 6P mini and 4P mini connector.
Disconnect the speedometer cable.
Remove the instruments.

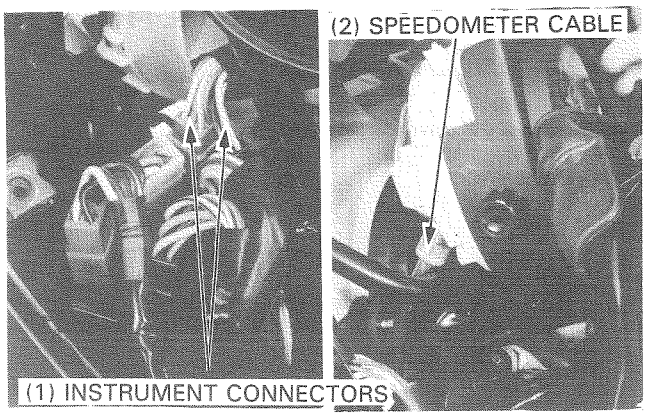

Pull the bulb sockets from the instruments and replace the bulbs with new ones.

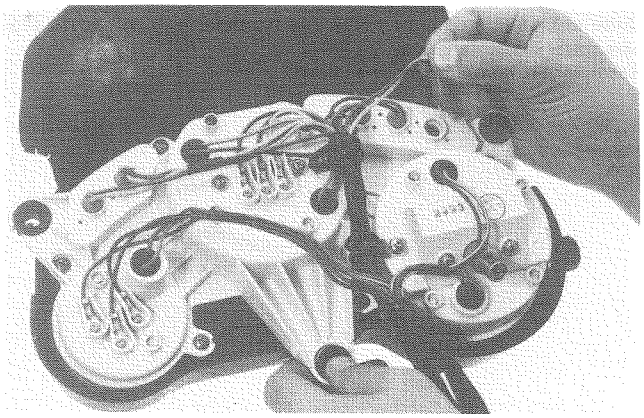

DISASSEMBLY/ASSEMBLY

Remove the instruments mounting screws and disassemble them.
Assemble and install the instruments in the reverse order of removal and disassembly.

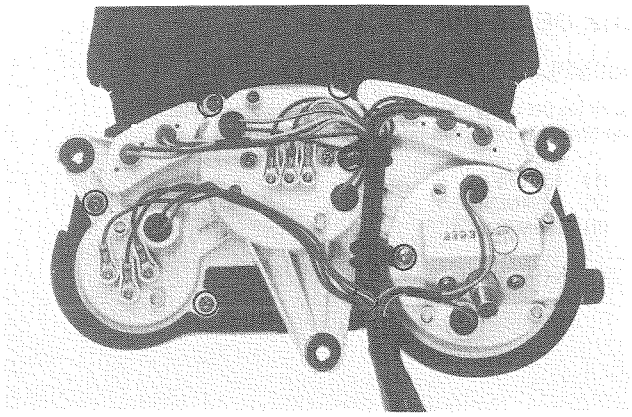

NOTE

- Align the color code of the instruments case with the wire color, when installing.

IGNITION SWITCH

INSPECTION

Remove the inner cover (page 13-5).

Disconnect the ignition switch 6P (BLACK) connector.
Check for continuity between the ignition switch connector terminals in each switch position.

Continuity should exsist between the color coded wires in each chart below.

	BAT_1	IG	FAN	TL_1	TL_2	PA
ON	○	○	○	○	○	
OFF						
P	○					○
COLOR	R	R/Bl	Bu/O	Br/W	Br	Y/Bl

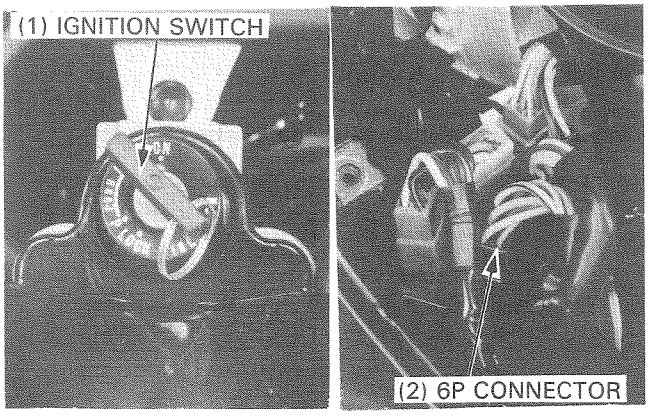

REMOVAL

Disconnect the ignition switch 6P connector (page 20-5).
Remove the ignition switch mounting bolts and ignition switch.

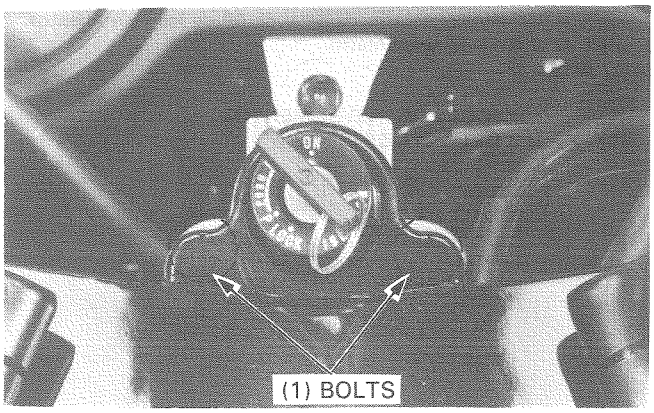

DISASSEMBLY

Cut the wire clamp.
Remove the three screws, pull the contact base out of the cylinder.

Replace the contact base with a new one.

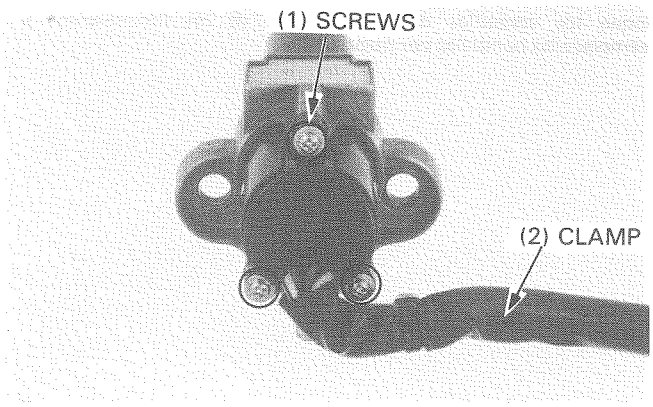

ASSEMBLY

Install the contact base, aligning the hole of the base with the shaft of the cylinder.

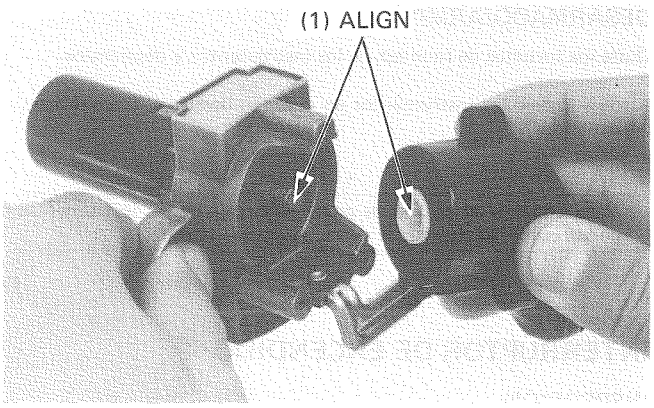

Install and tighten the three screws.
Clamp the wire.

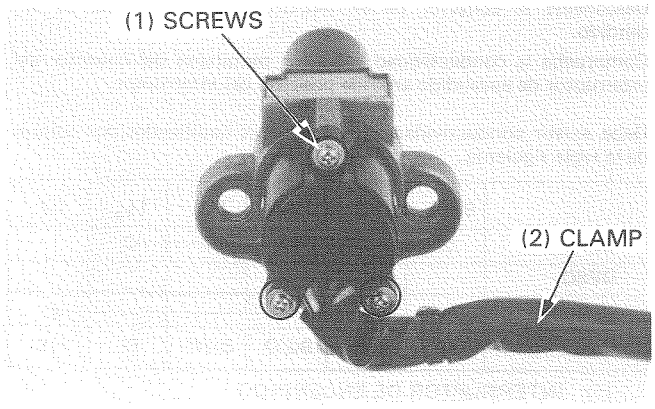

INSTALLATION

Install the ignition switch in the reverse order of removal.

TORQUE: 25 N·m (2.5 kg-m, 18 ft-lb)

Inspect the ignition switch after installation (page 20-5).

HANDLEBAR SWITCH

The handlebar switches (turn signals, horn, starter, engine stop and dimmer) must be replaced as assemblies.

Remove the inner covers (page 13-5) and disconnect the handlebar switch connectors from the coupler holder.

Continuity checks for the components of the handlebar cluster switches are as follows.
Continuity should exsist between the color coded wires in each chart below.

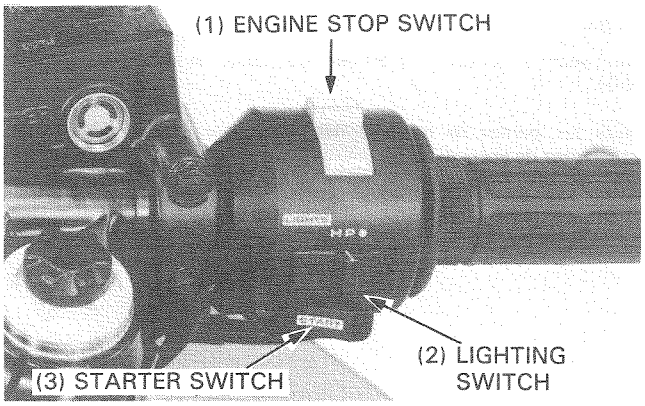

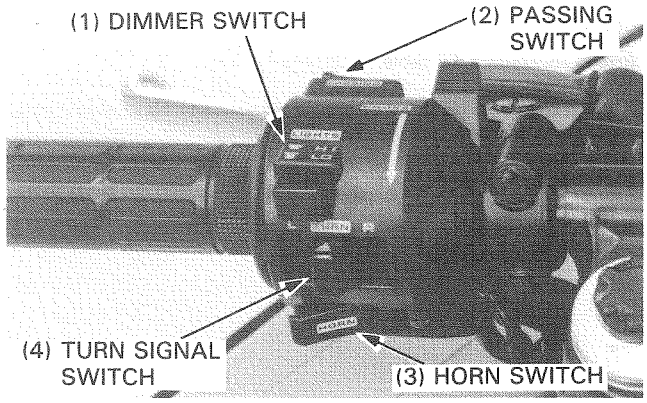

STARTER SWITCH

	ST	BAT2
FREE		
PUSH	O——O	
COLOR	Y/R	Bl

ENGINE STOP SWITCH

	BAT2	IG
OFF		
RUN	O——O	
COLOR	Bl	Bl/W

HORN SWITCH

	Ho	BAT3
FREE		
PUSH	O——O	
COLOR	Lg	W/G

PASSING SWITCH

	BAT3	Hi
FREE		
PUSH	O——O	
COLOR	W/G	Bu

TURN SIGNAL SWITCH

	W	R	L
R	O——O		
N			
L	O———	———O	
COLOR	Gr	Lb	O

DIMMER SWITCH

	HL	Lo	Hi
Lo	O——O		
(N)	O——O	———O	
Hi	O———	———O	
COLOR	Bu/W	W	Bu

LIGHTING SWITCH

	BAT4	TL	BAT5	HL
•				
P	O——O			
H	O——O		O——O	
COLOR	Br/Bu	Br/W	Bl/R	Bu/W

OIL PRESSURE SWITCH

Make sure that the oil pressure warning light comes on with the ignition switch "ON".

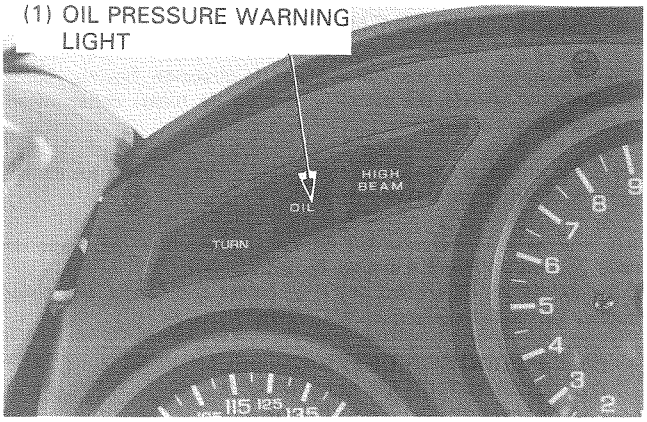

If the light does not come on, inspect as follow:
Remove the right lower fairing (page 13-4).
Disconnect the oil pressure switch wire from the switch by removing the terminal screw.
Short it to ground using a jumper wire. Turn the ignition switch "ON".

The oil pressure warning light should come on.
If the light does not come on, check the bulb, sub fuse (10A) and wires for a loose connection or an open circuit.

Start the engine and make sure that the light goes out. If the light does not go out, check the oil pressure (page 2-5).
If the oil pressure is normal, replace the oil pressure switch (page 2-5).

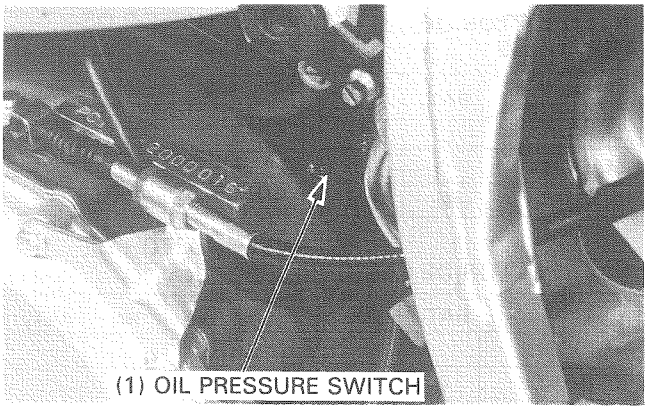

TEMPERATURE GAUGE

Remove the fuel tank (page 4-3).
Disconnect the sensor wire from the thermosensor and short it to ground using a jumper wire.

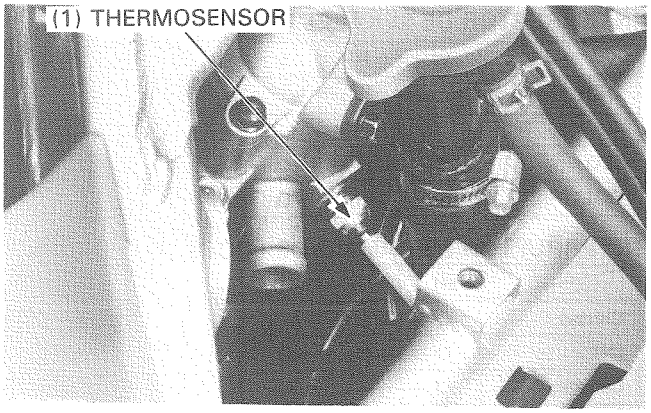

Turn the ignition switch ON.

Temperature gauge should move all the way to the up side (H).

CAUTION

- *Do not leave the thermosensor wire grounded for longer than a few seconds, or the temperature gauge will be damaged.*

If the gauge does not move, check the sub fuse (10A) and wires for a loose connection or an open circuit; if normal, replace the gauge with a new one (page 20-5).

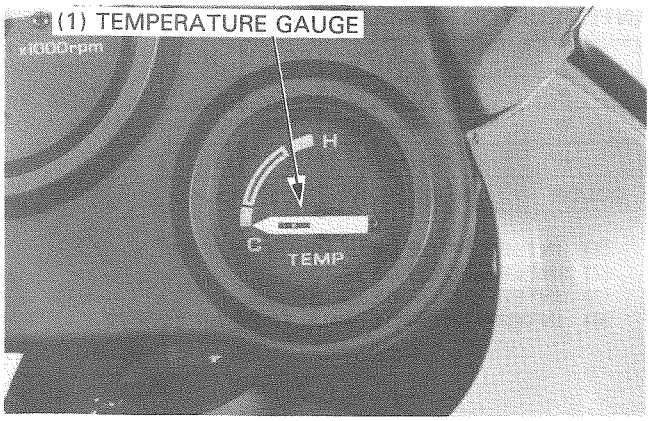

TACHOMETER

If the tachometer does not work properly, inspect as follow:
Turn the ignition switch ON, and check the voltage between black/brown (+) and green (−) wire terminals.
There should be battery voltage.

If there is no voltage, check the sub fuse (10A) and wire for a loose connection or an open circuit.

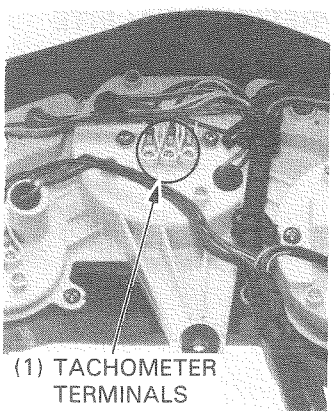

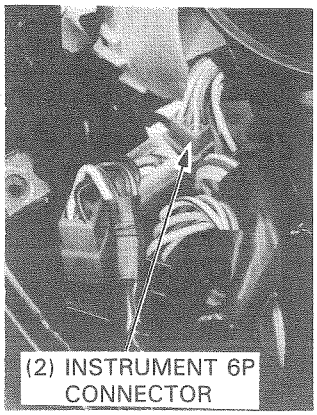

If that checks out all right, check the yellow/blue wire for an open circuit.
— between tachometer and instruments 6P connector.
— between instruments connector and spark unit.

If the problem still appears, replace the tachometer (page 20-5).

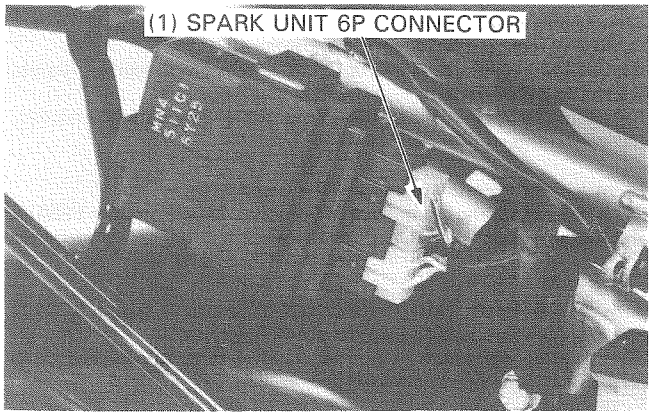

NEUTRAL SWITCH

INSPECTION

Remove the fuel tank (page 4-3).
Check the neutral switch for continuity between the light green/red connector and body ground.

There should be continuity with the transmission in neutral and should be no continuity with the transmission in any gear.

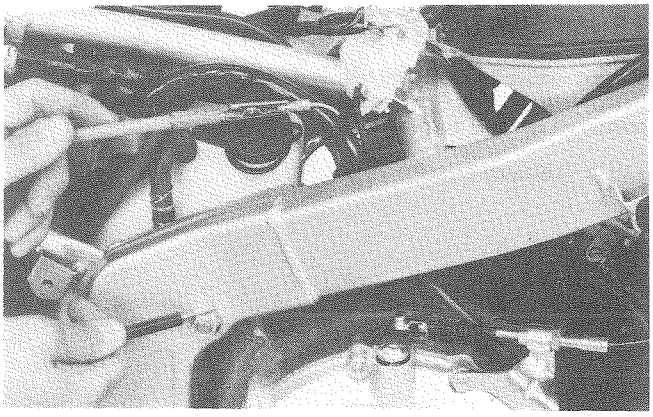

BRAKE LIGHT SWITCH

FRONT INSPECTION

Disconnect the front brake light switch connectors and check for continuity between the switch terminals.

There should be continuity with the front brake applied, and should be no continuity with the brake released.

Replace the switch if necessary.

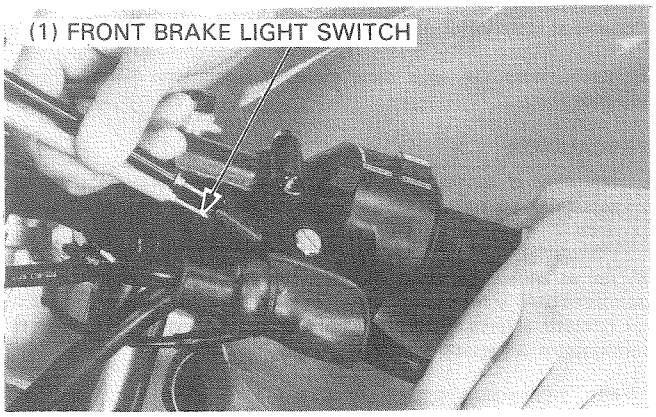

REAR INSPECTION

Remove the seat.

Disconnect the rear brake light switch connector and check for continuity between the terminals.

There should be continuity with the rear brake applied and should be no continuity with the rear brake released.

Replace the rear brake light switch, if necessary.

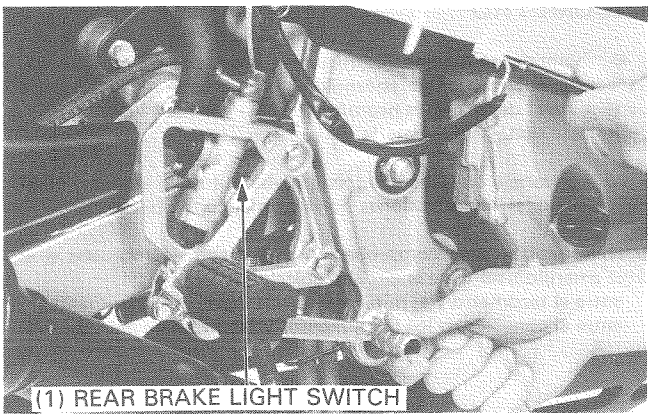

CLUTCH SWITCH

INSPECTION

Disconnect the clutch switch wire connectors.

Check for continuity between the switch terminals.

There should be continuity with the clutch applied and should be no continuity with the clutch released.

Replace the clutch switch with a new one if necessary.

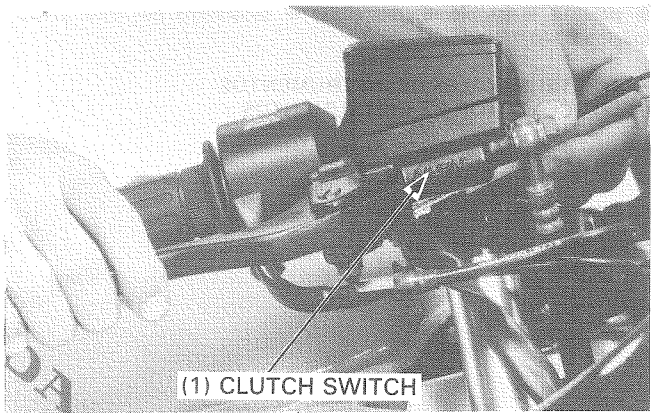

HORN

INSPECTION

Disconnect the horn wire connectors and connect a fully charged 12V battery to the horn terminals.

The horn is normal if it sounds when the battery is connected across the terminals.

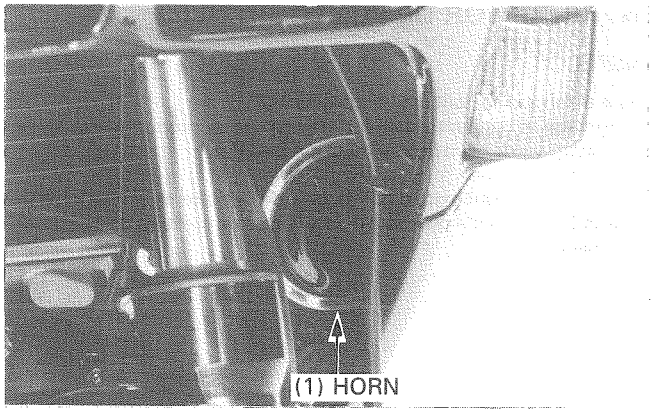

WIRING DIAGRAM

ESQUEMAS DE CONEXIONES

SCHEMA DI CABLAGGIO

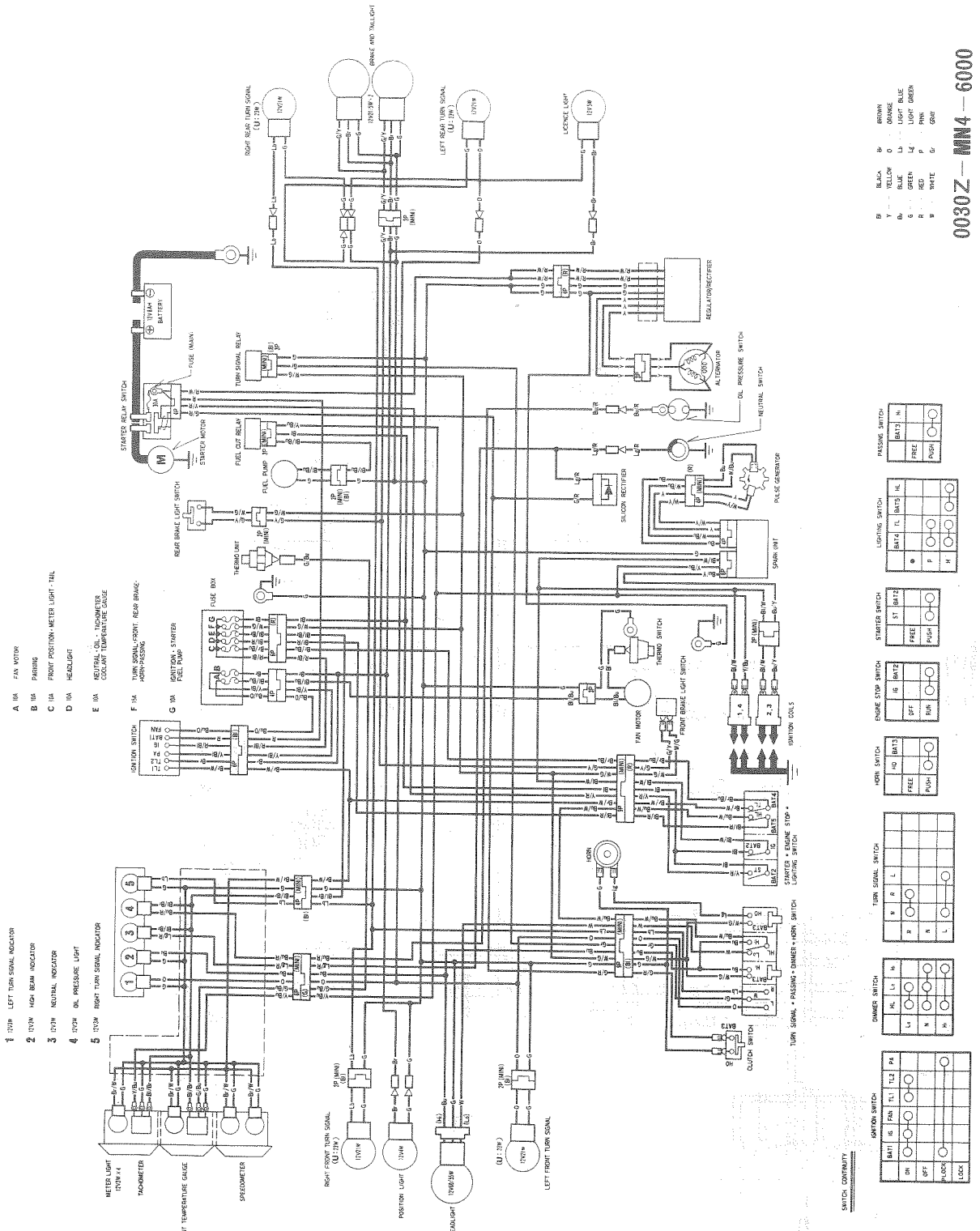
0030Z — MN4 — 6000
Bl : BLACK
Y : YELLOW
Bu : BLUE
G : GREEN
R : RED
W : WHITE
Br : BROWN
O : ORANGE
Lb : LIGHT BLUE
Lg : LIGHT GREEN
P : PINK
Gr : GRAY
A 10A FAN MOTOR
B 10A PARKING
C 10A FRONT POSITION · METER LIGHT · TAIL
D 10A HEADLIGHT
E 10A NEUTRAL · OIL · TACHOMETER COOLANT TEMPERATURE GAUGE
F 15A TURN SIGNAL · FRONT REAR BRAKE · HORN · PASSING
G 10A IGNITION · STARTER FUEL PUMP
1 12V3W LEFT TURN SIGNAL INDICATOR
2 12V3W HIGH BEAM INDICATOR
3 12V3W NEUTRAL INDICATOR
4 12V3W OIL PRESSURE LIGHT
5 12V3W RIGHT TURN SIGNAL INDICATOR
METER LIGHT 12V3W x 1
TACHOMETER
COOLANT TEMPERATURE GAUGE
SPEEDOMETER
RIGHT FRONT TURN SIGNAL (U1:12W)
12V21W
POSITION LIGHT 12V4W
HEADLIGHT 12V60/55W
LEFT FRONT TURN SIGNAL (U1:12W)
RIGHT REAR TURN SIGNAL (U1:12W)
BRAKE AND TAILLIGHT 12V21/5W x 1
LEFT REAR TURN SIGNAL (U1:12W)
LICENCE LIGHT 12V5W
BATTERY 12V14AH
STARTER RELAY SWITCH
FUSE (MAIN)
STARTER MOTOR
TURN SIGNAL RELAY
FUEL CUT RELAY
FUEL PUMP
REAR BRAKE LIGHT SWITCH
THERMO UNIT
FUSE BOX
IGNITION SWITCH
REGULATOR/RECTIFIER
ALTERNATOR
OIL PRESSURE SWITCH
NEUTRAL SWITCH
SILICON RECTIFIER
PULSE GENERATOR
SPARK UNIT
THERMO SWITCH
FAN MOTOR
FRONT BRAKE LIGHT SWITCH
IGNITION COILS
HORN
STARTER + ENGINE STOP + LIGHTING SWITCH
TURN SIGNAL + PASSING + DIMMER + HORN SWITCH
CLUTCH SWITCH
PASSING SWITCH
LIGHTING SWITCH
STARTER SWITCH
ENGINE STOP SWITCH
HORN SWITCH
TURN SIGNAL SWITCH
DIMMER SWITCH
IGNITION SWITCH
SWITCH CONTINUITY

2

TROUBLESHOOTING

INVESTIGACION DE AVERIAS

DIAGNOSTICA

ENGINE DOES NOT START OR IS HARD TO START

		POSSIBLE CAUSE
1. Check fuel flow to carburetor	NOT REACHING CARBURETOR →	• Fuel tank empty • Clogged fuel line or fuel filter • Sticking float valve • Faulty fuel pump • Faulty fuel pump relay • Clogged fuel tank vent hole • Loose or disconnected fuel pump relay wire
REACHING CARBURETOR ↓		
2. Perform spark test	WEAK OR NO SPARK →	GO TO PAGE 18-2
GOOD SPARK ↓		
3. Remove and inspect spark plug	WET PLUG →	• Mixture too rich • Carburetor flooded • Carburetor choke excessively closed • Cylinder flooded • Air cleaner dirty
SPARKS JUMP ↓		
4. Test cylinder compression	LOW COMPRESSION →	• Improper valve clearance (too small) • Valve stuck open • Worn cylinder and piston rings • Damaged cylinder head gasket • Seized valve • Improper valve timing • Improper valve and seat contact
COMPRESSION NORMAL ↓		
5. Start by following normal procedure	ENGINE STARTS BUT STOPS →	• Improper choke operation • Carburetor incorrectly adjusted • Intake pipe leaking • Improper ignition timing (Faulty spark unit or pulse generator) • Fuel contaminated
ENGINE DOES NOT FIRE ↓		
6. Start with choke applied		

22

ENGINE LACKS POWER

		POSSIBLE CAUSE
1. Raise wheels off ground and spin by hand	WHEELS DO NOT SPIN FREELY →	• Brake dragging • Worn or damaged wheel bearings • Wheel bearing needs lubrication • Drive chain too tight • Axle nut excessively tight
WHEEL SPINS FREELY ↓		
2. Check tire pressure	PRESSURE LOW →	• Punctured tire • Faulty tire valve
PRESSURE NORMAL ↓		
3. Check for clutch slippage	CLUTCH SLIPS →	• Faulty clutch lifter system • Worn clutch disc/plate • Warped clutch disc/plate • Weak clutch spring
CLUTCH ENGAGED PROPERLY ↓		
4. Accelerate lightly	ENGINE SPEED DOES NOT INCREASE →	• Carburetor choke closed • Clogged air cleaner • Restricted fuel flow • Clogged muffler • Clogged fuel cap vent hole • Faulty fuel pump • Faulty fuel pump relay • Loose, broken or shorted wire or connection of pump relay
ENGINE SPEED INCREASES ↓		
5. Check ignition timing	INCORRECT →	• Faulty spark unit • Faulty pulse generator
CORRECT ↓		
6. Check valve clearance	INCORRECT →	• Improper valve adjustment • Worn valve seat
CORRECT ↓		
7. Test cylinder compression	TOO LOW →	• Valve stuck open • Worn cylinder and piston rings • Leaking head gasket • Improper valve timing • Seized valve • Improper valve and seat contact
NORMAL ↓		
8. Check carburetor for clogging	CLOGGED →	Carburetor not serviced frequently enough
NOT CLOGGED ↓		
9. Check spark plug condition	FOULED OR DISCOLORED →	• Plugs not serviced frequently enough • Spark with incorrect heat range
NOT FOULED OR DISCOLORED ↓		
10. Check oil level and condition	INCORRECT →	• Oil level too high • Oil level too low • Contaminated oil
CORRECT ↓		

		POSSIBLE CAUSE
11. Remove cylinder head cover and inspect lubrication VALVE TRAIN LUBRICATED PROPERLY	VALVE TRAIN NOT LUBRICATED PROPERLY →	• Clogged oil passage • Clogged oil control orifice • Contaminated oil • Faulty oil pump
12. Check for engine overheating NOT OVERHEATING	OVERHEATING →	• Coolant level low • Fan motor not working (thermostatic switch) • Thermostat stuck closed • Excessive carbon build-up in combustion chamber • Use of poor quality fuel • Clutch slipping • Lean fuel mixture
13. Accelerate or run at high speed ENGINE DOES NOT KNOCK	ENGINE KNOCKS →	• Worn piston and cylinder • Wrong type of fuel • Excessive carbon build-up in combustion chamber • Ignition timing too advanced (Faulty spark unit) • Lean fuel mixture

POOR PERFORMANCE AT LOW AND IDLE SPEEDS

		POSSIBLE CAUSE
1. Check ignition timing and valve clearance CORRECT	INCORRECT →	• Improper valve cearance • Improper ignition timing — Faulty spark unit — Faulty pulse generator
2. Check carburetor pilot screw adjustment CORRECT	INCORRECT →	• See Fuel System, Section 4
3. Check for leaking intake pipe NO LEAKAGE	LEAKING →	• Loose carburetor • Damaged insulator
4. Perform the spark test GOOD SPARK	WEAK OR INTERMITTENT SPARK →	• Faulty, carbon or wet fouled spark plug • GO TO PAGE 18-2

POOR PERFORMANCE AT HIGH SPEED

		POSSIBLE CAUSE
1. Check ignition timing and valve clearance	INCORRECT →	• Improper valve clearance • Improper ignition timing — Faulty spark unit — Faulty pulse generator
CORRECT ↓		
2. Disconnect fuel line at carburetor	FUEL FLOW RESTRICTED →	• Fuel tank empty • Clogged fuel line • Clogged fuel cap vent hole • Clogged fuel valve • Faulty fuel pump or relay • Clogged fuel filter
FUEL FLOWS FREELY ↓		
3. Remove carburetors and check for clogged jets	CLOGGED →	• Clogged jets
NO CLOGGED JETS ↓		
4. Check valve timing	INCORRECT →	• Camshaft not installed properly
CORRECT ↓		
5. Check valve spring tension	WEAK →	• Faulty valve spring

POOR HANDLING → Check tire and suspension pressure

	POSSIBLE CAUSE
1. If steering is heavy →	• Bearing adjustment nut too tight • Damaged steering head bearings • Bent steering stem
2. If either wheel is wobbling →	• Excessive wheel bearing play • Bent rim • Improperly installed wheel hub • Swing arm pivot bearing excessively worn • Bent frame
3. If the motorcycle pulls to one side →	• Incorrect drive chain adjustment • Front and rear wheels not aligned • Bent fork legs • Bent swing arm • Bent frame

HONDA

HONDA MOTOR CO., LTD. TOKYO, JAPAN

67MN430

PRINTED IN JAPAN