2013 ENGINE

Engine Mechanical - 5.4L (2V) - E-Series

SPECIFICATIONS

MATERIAL SPECIFICATIONS

Item	Specification	Fill Capacity
Motorcraft® Gasket Maker TA-16	WSK-M2G348-A5	-
Motorcraft® Instant Gel Adhesive TA-19	WSK-M2G402-A4	-
Motorcraft® Metal Surface Prep ZC-31-A	-	-
Motorcraft® Gold Antifreeze/Coolant Concentrated VC-7-B (US); CVC-7-B2 (Canada)	WSS-M97B51-A1	-
Motorcraft® SAE 5W-20 Premium Synthetic Blend Motor Oil (US); Motorcraft® SAE 5W-20 Super Premium Motor Oil (Canada) XO-5W20-QSP (US); CXO-5W20-LSP12 (Canada)	WSS-M2C945-A	5.7L (6.0 qt) with filter
Motorcraft® Silicone Brake Caliper Grease and Dielectric Compound XG-3-A	ESE-M1C171-A	-
Motorcraft® Silicone Gasket and Sealant TA-30	WSE-M4G323-A4	-
Motorcraft® Silicone Gasket Remover ZC-30	-	-

GENERAL SPECIFICATIONS

Item	Specification
Displacement	5.4L (330 cu in)
Number of cylinders	8
Bore	90.2 mm (3.55 in)
Stroke	105.8 mm (4.17 in)
Firing order	1-3-7-2-6-5-4-8
Spark plug	12405
Oil pressure at 2, 000 rpm (engine at normal	275.8-517.1 kPa (40-75 psi)

operating temperature)	
Compression ratio	9.0:1
Engine weight (without accessory drive components and with flexplate)	239 kg (528 lb)
Cylinder Head and Valve Train	
Combustion chamber volume	42.45-45.45 cc (2.59-2.77 cu in)
Head gasket surface flatness	0.025 mm (0.001 in) in any 25 mm (1 in) x 25 mm (1 in) area; 0.05 mm (0.002 in) in any 150 mm (6 in) x 150 mm (6 in) area; 0.1 mm (0.004 in) overall
Valve arrangement (front to rear) - LH	E-I-E-I-E-I-E-I
Valve arrangement (front to rear) - RH	I-E-I-E-I-E-I-E
Valve guide bore diameter	7.015-7.044 mm (0.2762-0.2773 in)
Valve stem diameter - intake	6.975-6.995 mm (0.2746-0.2754 in)
Valve stem diameter - exhaust	6.949-6.970 mm (0.2736-0.2744 in)
Valve stem-to-guide clearance - intake	0.020-0.069 mm (0.0008-0.0027 in)
Valve stem-to-guide clearance - exhaust	0.045-0.095 mm (0.0018-0.0037 in)
Valve head diameter - intake	44.37-44.63 mm (1.7469-1.7571 in)
Valve head diameter - exhaust	36.01 mm (1.4177 in)
Valve face runout	0.05 mm (0.0020 in)
Valve face angle	45.25-45.75 degrees
Valve seat width - intake	1.3-1.5 mm (0.0512-0.0591 in)
Valve seat width - exhaust	1.9-2.1 mm (0.0748-0.0827 in)
Valve seat runout (T.I.R.)	0.025 mm (0.0010 in)
Valve seat angle	45.50 degrees
Valve spring free length	53.37 mm (2.10 in)
Valve spring squareness	2.0 degrees
Valve spring compression pressure	720-800 N (161.862-179.847 lb) @ 28.02 mm (1.10 in)
Valve spring installed height	42.3-42.9 mm (1.6654-1.6890 in)
Valve spring installed pressure - valve open	760 N @ 28.80 mm (170.855 lb @ 1.1339 in)
Valve spring installed pressure - valve closed	302 N @ 42.56 mm (67.8923 lb @ 1.6756 in)
Roller follower ratio	1.75:1
Hydraulic Lash Adjuster	
Diameter	15.988-16.000 mm (0.6295-0.6299 in)
Clearance-to-bore	0.018-0.069 mm (0.0007-0.0027 in)
Service limit	0.016 mm (0.0006 in)
Hydraulic leakdown rate	5-25 seconds(1)
Collapsed lash adjuster gap	0.085-0.450 mm (0.0335-0.0177 in)
Camshaft	
Theoretical valve lift @ 0 lash - intake	12.02 mm (0.4732 in)
Theoretical valve lift @ 0 lash - exhaust	12.67 mm (0.4988 in)

Lobe lift - intake	7.1104 mm (0.2799 in)
Lobe lift - exhaust	7.4979 mm (0.2952 in)
Allowable lobe lift loss	0
Journal diameter	26.936-26.962 mm (1.0605-1.0615 in)
Camshaft journal bore inside diameter (cap assembled)	26.987-27.012 mm (1.0625-1.0635 in)
Camshaft journal-to-bearing clearance	0.025-0.076 mm (0.0010-0.0030 in)
Runout(2)	0.03 mm (0.0012 in)
End play	0.027-0.190 mm (0.001-0.007 in)
Cylinder Block	
Cylinder bore diameter - grade 1	90.200-90.210 mm (3.5512-3.5516 in)
Cylinder bore diameter - grade 2	90.210-90.220 mm (3.5516-3.5520 in)
Cylinder bore diameter - grade 3	90.220-90.230 mm (3.5520-3.5524 in)
Cylinder bore maximum taper	0.006 mm (0.00023 in)
Cylinder bore maximum out-of-round	0.020 mm (0.00079 in)
Head gasket surface flatness	0.03 mm (0.001 in) in any 40 mm (1.5 in) x 40 mm (1.5 in) area; 0.05 mm (0.002 in) in any 150 mm (6 in) x 150 mm (6 in) area; 0.15 mm (0.006 in) overall
Main bearing bore inside diameter	72.400-72.424 mm (2.850-2.851 in)
Cylinder bore diameter - surface finish (RMS)	0.2-0.6 microns
Crankshaft	
Main bearing journal diameter	67.482-67.504 mm (2.6568-2.6576 in)
Main bearing journal maximum taper (straightness)	0.004 mm (0.0002 in)
Main bearing journal maximum out-of-round	0.0075 mm (0.0003 in) between cross sections
Main bearing journal-to-cylinder block clearance	0.024-0.048 mm (0.0009-0.0019 in)
Connecting rod journal diameter	52.983-53.003 mm (2.0859-2.0867 in)
Connecting rod journal maximum taper	0.004 mm (0.0002 in)
Connecting rod journal maximum out-of-round	0.0075 mm (0.0003 in) between cross sections
Crankshaft maximum end play	0.075-0.377 mm (0.0030-0.0148 in)
Piston and Connecting Rod	
Piston diameter - grade 1 (at right angle to pin bore)	90.165-90.175 mm (3.5498-3.5502 in)
Piston diameter - grade 2 (at right angle to pin bore)	90.175-90.185 mm (3.5502-3.5506 in)
Piston diameter - grade 3 (at right angle to pin bore)	90.185-90.195 mm (3.5506-3.5510 in)
Piston-to-cylinder bore clearance (at grade size)	0.25-0.045 mm (0.0010-0.0018 in)
Piston ring end gap - top	0.15-0.30 mm (0.0006-0.0012 in)
Piston ring end gap - intermediate	0.25-0.50 mm (0.0098-0.0197 in)
Piston ring end gap - oil control	0.15-0.65 mm (0.0059-0.0256 in)
Piston ring groove width - top	1.53-1.55 mm (0.0602-0.0610 in)
Piston ring groove width - intermediate	1.52-1.54 mm (0.0598-0.0606 in)
Piston ring groove width - oil control	3.030-3.050 mm (0.1193-0.1201 in)
Piston ring width - top and intermediate	1.47-1.50 mm (0.0579-0.0591 in)

Piston ring-to-groove clearance - top	0.03-0.08 mm (0.0012-0.0032 in)
Piston ring-to-groove clearance - intermediate	0.02-0.07 mm (0.0007-0.0028 in)
Piston pin bore diameter	22.008-22.014 mm (0.8665-0.8667 in)
Piston pin diameter	22.001-22.003 mm (0.8662-0.8663 in)
Piston pin length	61.601-62.030 mm (2.425-2.442 in)
Piston pin-to-piston fit (clearance)	0.005-0.013 mm (0.0002-0.0005 in)
Connecting rod-to-pin clearance	0.009-0.023 mm (0.0004-0.0009 in)
Connecting rod pin bore diameter	22.012-22.024 mm (0.8666-0.8671 in)
Connecting rod length (centerline bore-to-bore)	169.1 mm (6.6575 in)
Connecting rod maximum allowed bend	±0.038 mm (±0.0015 in)
Connecting rod maximum allowed twist	±0.038 mm (±0.0015 in)
Connecting rod bearing bore diameter (with assembled liners)	53.027-53.049 mm (2.0877-2.0885 in)
Connecting rod bearing-to-crankshaft clearance	0.026-0.064 mm (0.0010-0.0025 in)
Connecting rod side clearance	0.125-0.475 mm (0.0049-0.0187 in)

(1) Time required for the plunger to leak down 1.6 mm of travel with 222 N force and leak-down fluid in the lash adjuster.

(2) Full indicator measurement on all journals when supported on front and rear journals (4 places).

TORQUE SPECIFICATIONS

Description	Nm	lb-ft	lb-in
A/C compressor bolts	25	18	-
A/C compressor discharge tube nut	15	-	133
A/C compressor suction tube nut	15	-	133
A/C condenser core bracket bolts	12	-	106
A/C evaporator tube nut	15	-	133
Accessory drive belt idler pulley bolt	25	18	-
Camshaft bearing cap bolts(1)	-	-	-
Camshaft Position (CMP) sensor bolt	10	-	89
Camshaft sprocket bolts (1)	-	-	-
Connecting rod bolts(1)	-	-	-
Coolant pump bolts	25	18	-
Coolant pump pulley bolts	25	18	-

Cooling fan clutch nut	133	98	-
Cooling fan shroud bolts	6	-	53
Crankshaft main bearing side bolts(1)	-	-	-
Crankshaft main bearing bolts (vertical)(1)	-	-	-
Crankshaft main bearing jackscrews(1)	-	-	-
Crankshaft Position (CKP) sensor bolt	10	-	89
Crankshaft pulley bolt(1)	-	-	-
Crankshaft rear seal retainer plate bolts(1)	-	-	-
Cylinder block drain plugs	20	-	177
Cylinder heads bolts(1)	-	-	-
Cylinder Head Temperature (CHT) sensor	26	19	-
Engine coolant crossover assembly bolts	10	-	89
Engine front cover bolts (1)	-	-	-
Engine oil filler tube support bracket	9	-	80
Engine Oil Pressure (EOP) switch(1)	-	-	-
Engine support insulator-to-cylinder block bolts and nut	80	59	-
Engine support insulator-to-engine support insulator bracket nuts	90	66	-
Engine support insulator bracket-to-crossmember nuts	90	66	-
Engine wiring harness support bracket nut	10	-	89
Evaporative Emission (EVAP) canister purge valve bolt	10	-	89
Exhaust manifold nuts(1)	-	-	-

Exhaust manifold studs	12	-	106
Exhaust manifold-to-Y-pipe flange nuts	40	30	-
Flexplate bolts(1)	-	-	-
Flexplate inspection cover bolts	34	25	-
Fuel rail bolts	10	-	89
Generator B+ terminal nut	8	-	71
Generator support bracket bolts and stud bolts	10	-	89
Generator lower mounting bolts	25	18	-
Ground cable bolt	10	-	89
Ground cable nut	10	-	89
Heater outlet tube studs	40	30	-
Hood latch bolts	12	-	106
Ignition coil bolt	6	-	53
Intake manifold bolts(1)	-	-	-
Knock Sensor (KS)	20	-	177
Lower radiator support bolts	20	-	177
Oil cooler threaded insert	58	43	-
Oil filter	16	-	142
Oil filter adapter front bolts and nuts	25	18	-
Oil filter adapter rear nut	48	35	-
Oil filter adapter studs	12	-	106
Oil level indicator tube front support bracket nut	25	18	-
Oil level indicator tube rear support bracket bolt	10	-	89
Oil pan bolts(1)	-	-	-
Oil pan drain plug	23	17	-
Oil pump bolts(1)	-	-	-
Oil pump screen and pickup tube-to-oil pump bolts	10	-	89
Oil pump screen and pickup tube spacer	25	18	-
Oil pump screen and pickup tube-to-spacer	25	18	-

bolt			
Power Distribution Box (PDB) battery feed cable nut	8	-	71
Power Steering Pressure (PSP) tube	20	-	177
Power steering pump bolts	25	18	-
Power steering reservoir bracket bolts	20	-	177
Radio ignition interference capacitor nut	25	18	-
Spark plugs	14	-	124
Thermostat housing bolts (1)	-	-	-
Throttle Body (TB) bolts (1)	-	-	-
Timing chain guide bolts	10	-	89
Timing chain hydraulic tensioner bolts	25	18	-
Transmission shift cable mounting bracket bolts	25	18	-
Transmission fluid cooler bolt	10	-	89
Transmission fluid cooler tube support bracket nut	28	21	-
Transmission fluid filler tube support bracket bolt	10	-	89
Transmission fluid filler tube support bracket nut	28	21	-
Transmission fluid filler tube lower bolt	28	21	-
Transmission-to-engine bolts	60	44	-
Torque converter-to-flexplate nuts	35	26	-
Upper radiator support bolts	20	-	177
Valve cover bolts(1)	-	-	-
(1) Refer to the appropriate procedure.			

DESCRIPTION AND OPERATION

ENGINE

The 5.4L (2V) is a V-8 engine with the following features:

- Single overhead camshafts
- Two valves per cylinder
- Sequential Multi-Port Fuel Injection (SFI)
- Aluminum cylinder heads
- Cast iron cylinder block
- Individually chain-driven camshafts with a hydraulic timing chain tensioner on each timing chain
- Distributorless ignition system
- Mechanical Returnless Fuel System (MRFS)

Engine Identification

Always refer to these labels when installation of new parts is necessary, or when checking engine calibrations. The engine parts often differ within a CID family. Verification of the identification codes will make sure that the correct parts are obtained. These codes contain all the pertinent information relating to the dates, optional equipment and revisions. The Ford Advantage Catalog™ or equivalent contains a complete listing of the codes and their application.

Engine Code Information Label

The engine code information label, located on the front side of the valve cover, contains the following:

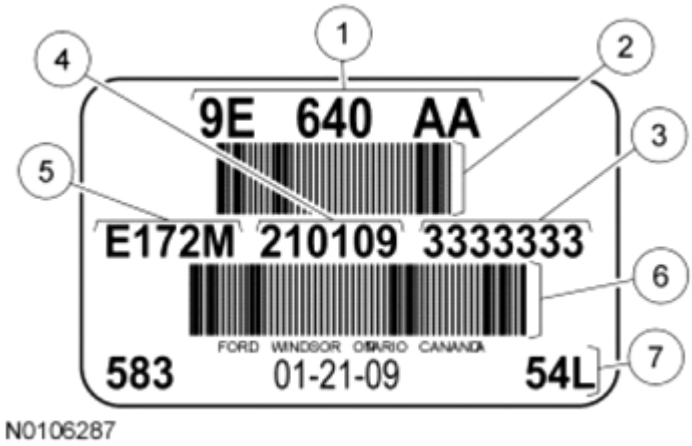

Fig. 1: Identifying Engine Code Information Label
Courtesy of FORD MOTOR CO.

Item	Description
1	Engine part number
2	Bar code
3	Running number

4	Engine build date (DDMMYY)
5	Windsor engine plant
6	Bar code
7	Engine displacement

Engine Cylinder Identification

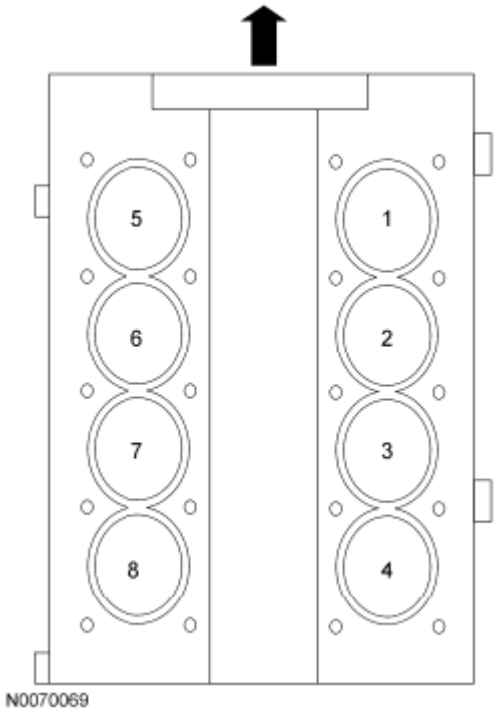

Fig. 2: Identifying Engine Cylinder Identification
Courtesy of FORD MOTOR CO.

Exhaust Emission Control System

Operation and necessary maintenance of the exhaust emission control devices used on this engine are covered in the **ENGINE CONTROLS - INTRODUCTION (EXCEPT DIESEL & HYBRID) (SECTION 0)** .

Induction System

The Sequential Multi-Port Fuel Injection (SFI) provides the fuel/air mixture needed for combustion in the cylinders. The 8 solenoid-operated fuel injectors:

- are mounted in the intake manifold.
- meter fuel into the air intake stream in accordance with engine demand.
- are positioned so that their tips direct fuel just ahead of the engine intake valves.
- supply fuel from the fuel tank with a fuel pump mounted in the fuel tank.

A constant fuel pressure is maintained across the fuel injectors by the fuel pressure sensor. The fuel pressure

sensor is positioned upstream from the fuel injectors on the fuel rail.

Valve Train

The valve train operates as follows:

- Ball-tip hydraulic lash adjusters provide automatic lash adjustment.
- Roller followers ride on the camshaft lobe, transferring the up-and-down motion of the camshafts to the valves in the cylinder heads.

PCV System

All engines are equipped with a closed-type PCV system recycling the crankcase vapors to the upper intake manifold.

Lubrication System

The engine lubrication system operates as follows:

- Oil is drawn into the oil pump through the oil pump screen cover and tube in the sump of the oil pan.
- Oil is pumped through the oil filter on the left front side of the cylinder block.
- Oil enters the main gallery where it is distributed to the crankshaft main journals and to both cylinder heads.
- From the main journals, the oil is routed through cross-drilled passages in the crankshaft to lubricate the connecting rod bearings. Controlled leakage through the crankshaft main bearings and connecting rod bearings is slung radially outward to cool and lubricate the cylinder walls as well as the entire connecting rod, piston and piston ring assembly.
- The left cylinder head is fed from a drilling into the supply passage feeding the main gallery at the front of the cylinder block. The right cylinder head is fed from a drilling into the rear of the main gallery. Main gallery pressure is reduced as it enters the cylinder head galleries through fixed serviceable orifices, located at the upper part of the feed passages. It is this reduced pressure in the cylinder head galleries which feeds the camshaft journals, the hydraulic lash adjusters and the primary and secondary timing chain tensioners.
- The camshaft lobe and roller followers are lubricated by splash created through valve train operation.

Oil Pump

The lubrication system is designed to provide optimum oil flow to critical components of the engine through its entire operating range. The heart of the system is a positive displacement internal gear oil pump using top seal rotors. Generically, this design is known as a gerotor pump, which operates as follows:

- The oil pump is mounted on the front face of the cylinder block.
- The inner rotor is piloted on the crankshaft post and is driven through flats on the crankshaft.
- System pressure is limited by an integral, internally-vented relief valve which directs the bypassed oil back to the inlet side of the oil pump.
- Oil pump displacement has been selected to provide adequate volume to make sure of correct oil pressure,

both at hot idle and maximum speed.

- The relief valve calibration protects the system from excessive pressure during high viscosity conditions.
- The relief valve is designed to provide adequate connecting rod bearing lubrication under high-temperature and high-speed conditions.

DIAGNOSIS AND TESTING

ENGINE

For basic engine mechanical concerns, refer to **ENGINE SYSTEM - GENERAL INFORMATION** .

For driveability concerns, refer to the **ENGINE CONTROLS - INTRODUCTION (EXCEPT DIESEL & HYBRID) (SECTION 0)** .

IN-VEHICLE REPAIR

INTAKE MANIFOLD

MATERIAL SPECIFICATIONS

Item	Specification
Motorcraft® Metal Surface Prep ZC-31-A	-
Motorcraft® Silicone Brake Caliper Grease and Dielectric Compound XG-3-A	ESE-M1C171-A
Motorcraft® Silicone Gasket Remover ZC-30	-

Evaporative Emission (EVAP) Purge Valve, PCV Tube, Fuel Supply Tube Quick Connect Coupling, Transmission Fluid Level Indicator Tube and Electrical Connectors

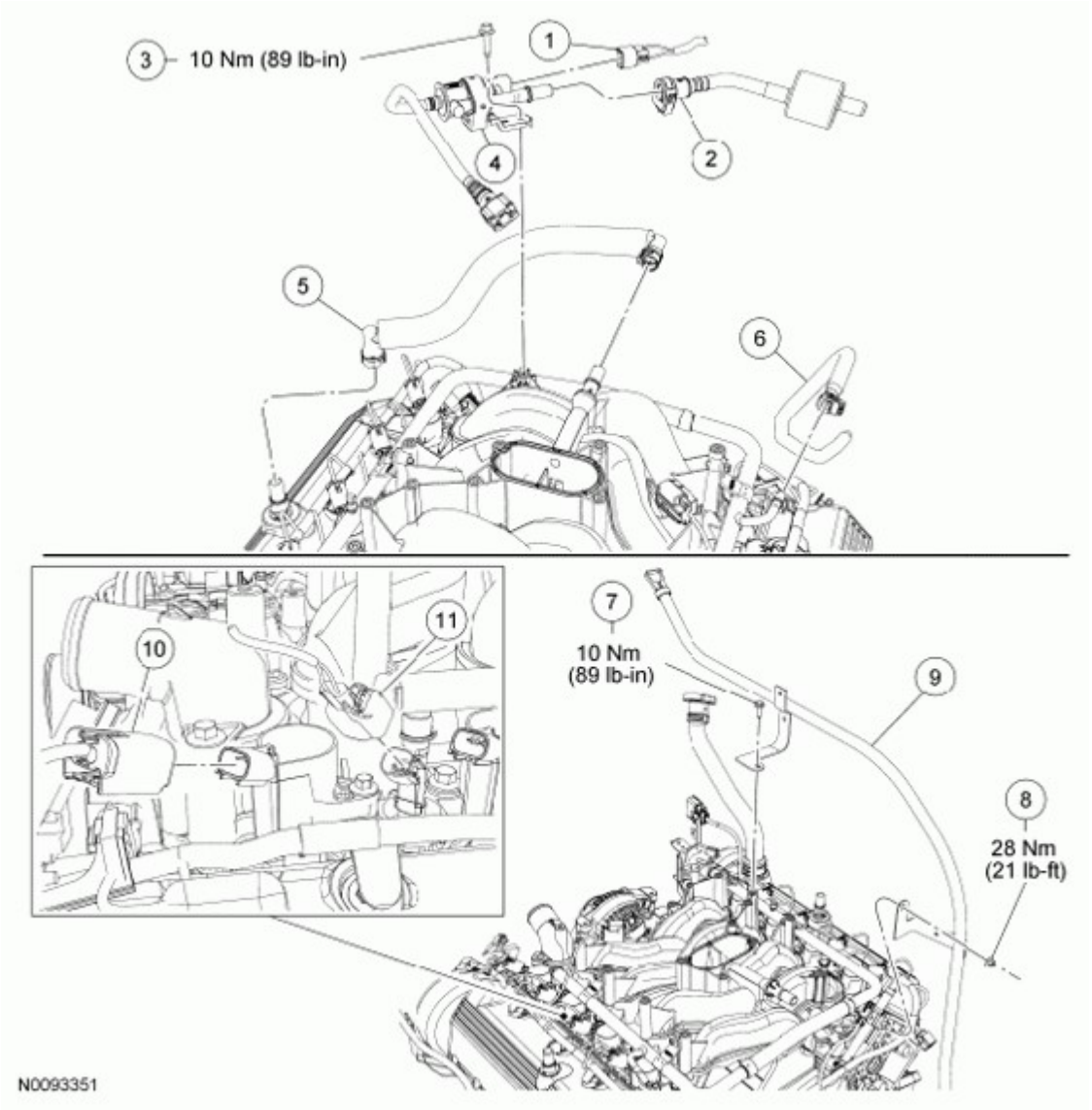

Fig. 3: Identifying Evaporative Emission Purge Valve, PCV Tube And Fuel Supply Tube Quick Connect Coupling With Torque Specifications
Courtesy of FORD MOTOR CO.

Item	Part Number	Description
1	-	Evaporative Emission (EVAP) purge valve electrical connector (part of 12C508)
2	-	EVAP canister-to-EVAP canister purge valve tube quick connect coupling (part of 9D446)
3	N806523	EVAP canister purge valve assembly support bracket bolt
4	9F933	EVAP canister purge valve and tube assembly

5	6K817	PCV tube
6	-	Fuel supply tube quick connect coupling (part of 6K856)
7	N806523	Transmission fluid filler tube front support bracket bolt
8	W506213	Transmission fluid filler tube rear support bracket nut
9	-	Transmission fluid filler tube
10	-	Ignition coil electrical connector (part of 12C508) (8 required)
11	-	Fuel injector electrical connector (part of 12C508) (8 required)

Generator Support Bracket, Upper Radiator Hose, Heater Coolant Hose and Crankcase Ventilation Tube

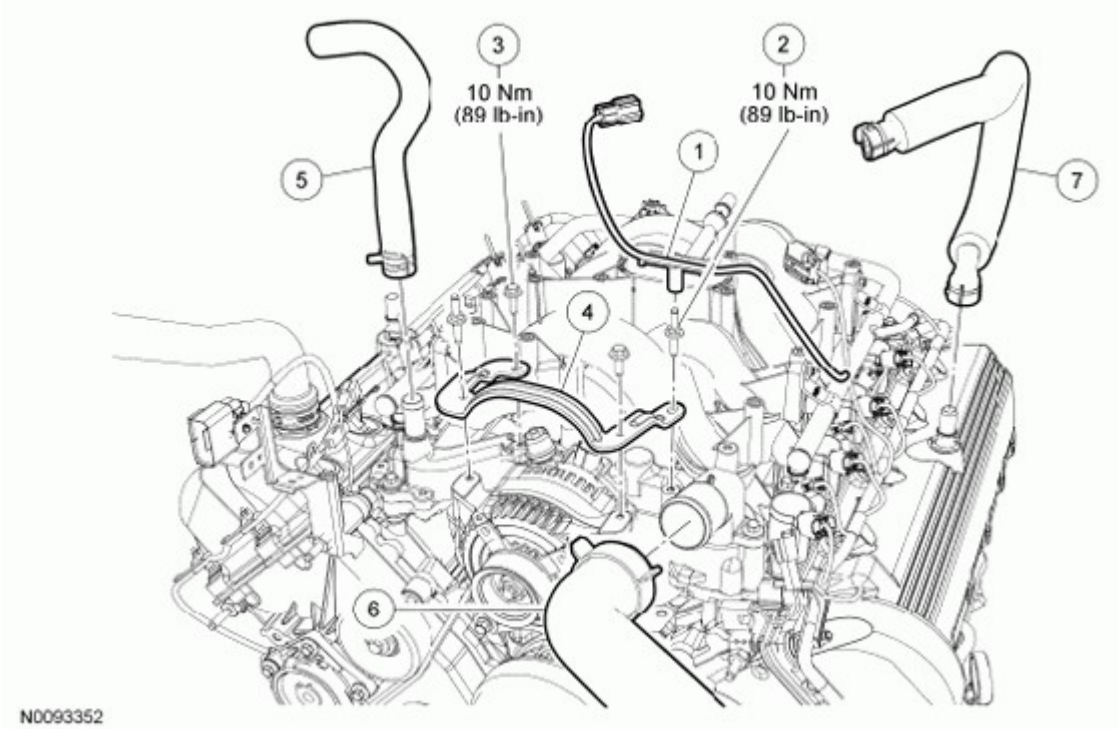

Fig. 4: Identifying Generator Support Bracket, Upper Radiator Hose, Heater Coolant Hose And Crankcase Ventilation Tube With Torque Specifications
Courtesy of FORD MOTOR CO.

Item	Part Number	Description
1	-	Electronic Throttle Control (ETC) wiring harness retainer (part of 12C508)
2	N807691	Generator support bracket stud bolt (2 required)

3	N807309	Generator support bracket bolt (2 required)
4	10153	Generator support bracket
5	18K580	Heater coolant hose
6	8B274	Upper radiator coolant hose
7	6758	Crankcase ventilation tube

Ignition Coils, Intake Manifold and Gaskets

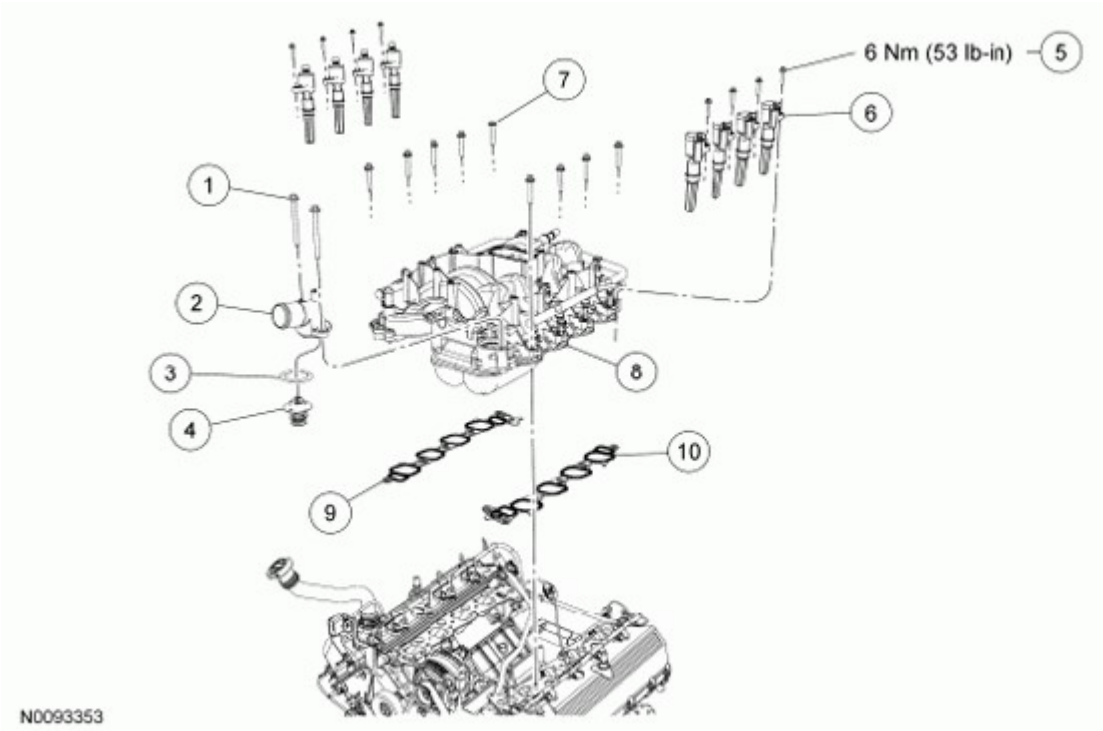

Fig. 5: Identifying Ignition Coils, Intake Manifold And Gaskets With Torque Specifications
Courtesy of FORD MOTOR CO.

Item	Part Number	Description
1	N806178	Thermostat housing bolt (2 required)
2	8594	Thermostat housing
3	N806807	Thermostat housing O-ring seal
4	8575	Thermostat
5	W711062	Ignition coil bolt (8 required)
6	12A366	Ignition coil (8 required)
7	W503300	Intake manifold bolt (9 required)
8	9424	Intake manifold
9	9439	RH intake manifold gasket
10	9441	LH intake manifold gasket

Removal

WARNING: Do not smoke, carry lighted tobacco or have an open flame of any type when working on or near any fuel-related component. Highly flammable mixtures are always present and may be ignited. Failure to follow these instructions may result in serious personal injury.

WARNING: Before working on or disconnecting any of the fuel tubes or fuel system components, relieve the fuel system pressure to prevent accidental spraying of fuel. Fuel in the fuel system remains under high pressure, even when the engine is not running. Failure to follow this instruction may result in serious personal injury.

1. Remove the engine cover. For additional information, refer to **INTERIOR TRIM AND ORNAMENTATION** .
2. Disconnect the fuel supply tube quick connect coupling. For additional information, refer to **FUEL SYSTEM - GENERAL INFORMATION** .
3. Drain the cooling system. For additional information, refer to **ENGINE COOLING** .
4. Disconnect the battery ground cable. For additional information, refer to **BATTERY, MOUNTING AND CABLES** .
5. Remove the Air Cleaner (ACL) assembly and the ACL outlet pipe. For additional information, refer to **INTAKE AIR DISTRIBUTION & FILTERING** .
6. Disconnect the quick connect coupling and remove the crankcase ventilation tube from the LH valve cover. For additional information, refer to **FUEL SYSTEM - GENERAL INFORMATION** .
7. Remove the Throttle Body (TB) spacer. For additional information, refer to **FUEL CHARGING AND CONTROLS - 5.4L (2V)** .
8. Disconnect the upper radiator hose.
9. Disconnect the heater coolant hose.
10. Disconnect the Electronic Throttle Control (ETC) wiring harness retainer.
11. Disconnect the generator wiring harness retainer from the generator support bracket stud bolt.

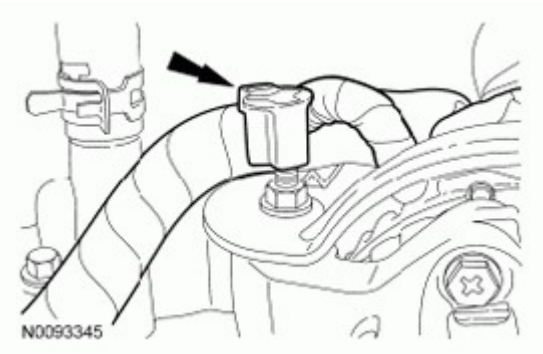

Fig. 6: Locating Generator Wiring Harness Retainer On Generator Support Bracket Stud Bolt
Courtesy of FORD MOTOR CO.

12. Remove the 2 bolts, the 2 stud bolts and the generator upper support bracket.
13. Remove the front transmission fluid filler tube support bracket bolt.
14. Remove the rear transmission fluid filler tube support bracket nut and position the transmission fluid filler tube aside.
15. Disconnect the electrical connector and the Evaporative Emission (EVAP) canister-to-EVAP canister purge valve tube quick connect coupling from the EVAP purge valve. For additional information, refer to **FUEL SYSTEM - GENERAL INFORMATION** .
16. Remove the bolt and the EVAP canister purge valve.
17. If equipped, disconnect the auxiliary heater hoses and position aside. For additional information, refer to **CLIMATE CONTROL SYSTEM - GENERAL INFORMATION AND DIAGNOSTICS** .

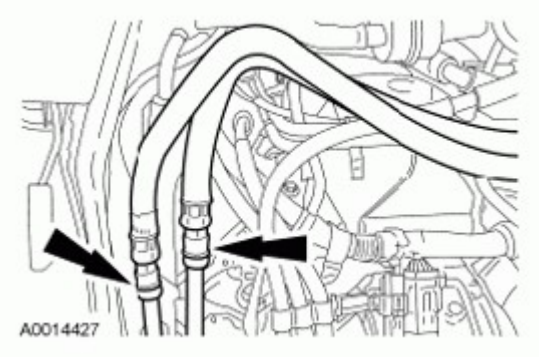

Fig. 7: Locating Auxiliary Heater Hoses
Courtesy of FORD MOTOR CO.

18. Disconnect the quick connect coupling and remove the PCV tube from the RH valve cover. For additional information, refer to **FUEL SYSTEM - GENERAL INFORMATION** .
19. Disconnect the 8 fuel injector electrical connectors.
20. Disconnect the 8 ignition coil electrical connectors.
21. **NOTE: Use a twisting motion while pulling up on the ignition coil.**

    Remove the 8 bolts and the 8 ignition coils.

22. Remove the 2 bolts, the thermostat housing and the thermostat.
    - Discard the O-ring seal.
23. Remove the 9 bolts, the intake manifold assembly and discard the intake manifold gaskets.

Installation

1. **NOTE: Do not use metal scrapers, wire brushes, power abrasive discs or other abrasive means to clean the sealing surfaces. These tools cause scratches and gouges which make leak paths. Use a plastic scraping tool to remove all traces of old sealant.**

   Clean the mating surfaces of the cylinder head and the intake manifold with metal surface prep and

silicone gasket remover. Follow the directions on the packaging.

NOTE: **If the engine is repaired or replaced because of upper engine failure, typically including valve or piston damage, check the intake manifold for metal debris. If metal debris is found, install a new intake manifold. Failure to follow these instructions can result in engine damage.**

2.

Install the intake manifold in the following sequence.

1. Position the new intake manifold gaskets.
2. Position the intake manifold.
3. Loosely install the 9 intake manifold bolts.

3. Using a new O-ring seal, install the thermostat.

NOTE: **The thermostat housing bolts are tightened in sequence with the intake manifold bolts.**

4.

Loosely install the thermostat housing and the 2 bolts.

5. Tighten the 11 bolts in 2 stages in the sequence shown in illustration.
   - Stage 1: Tighten to 2 Nm (18 lb-in).
   - Stage 2: Tighten to 25 Nm (18 lb-ft).

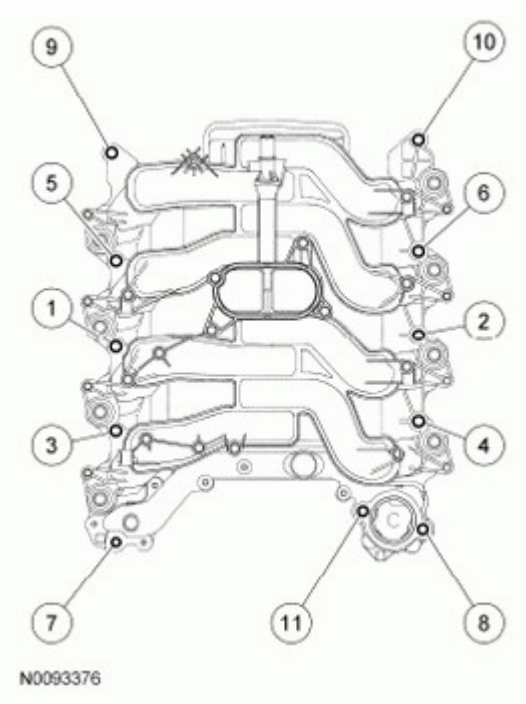

Fig. 8: Identifying Intake Manifold Bolts Tightening Sequence
Courtesy of FORD MOTOR CO.

6

6. **NOTE: Verify that the ignition coil spring is correctly located inside the ignition coil boot and that there is no damage to the tip of the boot.**

Install the 8 ignition coils and the 8 bolts.

- Apply a light coat of dielectric compound to the inside of the coil boots prior to installation.
- Tighten to 6 Nm (53 lb-in).

7. Connect the 8 ignition coil electrical connectors.
8. Connect the 8 fuel injector electrical connectors.
9. Position the PCV tube and connect the quick connect couplings. For additional information, refer to **FUEL SYSTEM - GENERAL INFORMATION** .
10. If equipped, connect the auxiliary heater hoses. For additional information, refer to **CLIMATE CONTROL SYSTEM - GENERAL INFORMATION AND DIAGNOSTICS** .

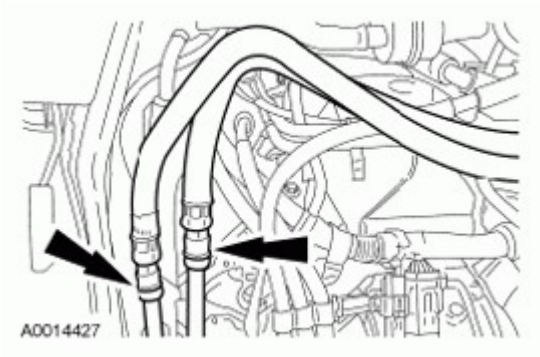

Fig. 9: Locating Auxiliary Heater Hoses
Courtesy of FORD MOTOR CO.

11. Position the EVAP canister purge valve and install the bolt.
    - Tighten to 10 Nm (89 lb-in).
12. Connect the electrical connector and the EVAP canister-to-EVAP canister purge valve tube quick connect coupling to the EVAP purge valve. For additional information, refer to **FUEL SYSTEM - GENERAL INFORMATION** .
13. Position the transmission fluid filler tube and install the rear retaining nut.
    - Tighten to 28 Nm (21 lb-ft).
14. Install the transmission fluid filler tube front support bracket bolt.
    - Tighten to 10 Nm (89 lb-in).
15. Position the generator support bracket and install the 2 bolts and the 2 stud bolts.
    - Tighten to 10 Nm (89 lb-in).
16. Connect the generator wiring harness retainer to the generator support bracket stud bolt.

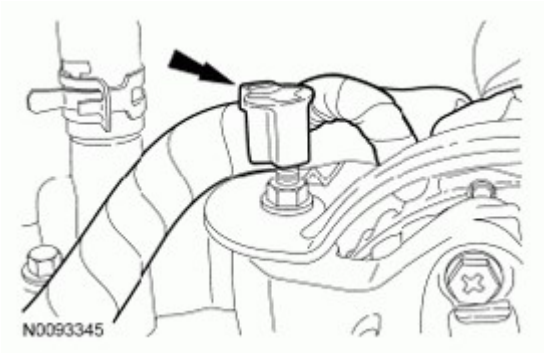

Fig. 10: Locating Generator Wiring Harness Retainer On Generator Support Bracket Stud Bolt
Courtesy of FORD MOTOR CO.

17. Connect the ETC wiring harness retainer to the generator support bracket stud bolt.
18. Connect the heater coolant hose.
19. Connect the upper radiator hose.
20. Install the TB spacer. For additional information, refer to **FUEL CHARGING AND CONTROLS - 5.4L (2V)** .
21. Position the crankcase ventilation tube and connect the quick connect coupling to the LH valve cover. For additional information, refer to **FUEL SYSTEM - GENERAL INFORMATION** .
22. Install the Air Cleaner (ACL) assembly and the ACL outlet pipe. For additional information, refer to **INTAKE AIR DISTRIBUTION & FILTERING** .
23. Connect the fuel supply tube quick connect coupling. For additional information, refer to **FUEL SYSTEM - GENERAL INFORMATION** .
24. Install the engine cover. For additional information, refer to **INTERIOR TRIM AND ORNAMENTATION** .
25. Connect the battery ground cable. For additional information, refer to **BATTERY, MOUNTING AND CABLES** .
26. Fill and bleed the engine cooling system. For additional information, refer to **ENGINE COOLING** .

VALVE COVER - LH

MATERIAL SPECIFICATIONS

Item	Specification
Motorcraft® Instant Gel Adhesive TA-19	WSK-M2G402-A4
Motorcraft® Metal Surface Prep ZC-31-A	-
Motorcraft® Silicone Gasket and Sealant TA-30	WSE-M4G323-A4
Motorcraft® Silicone Gasket Remover ZC-30	-

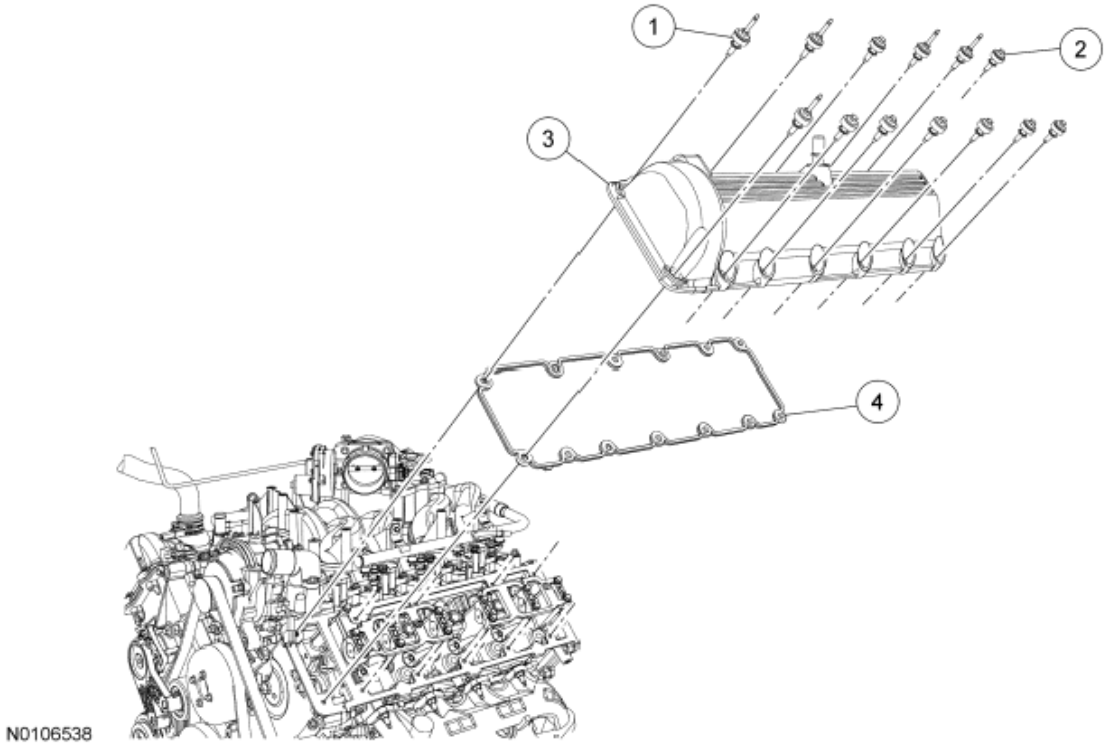

Fig. 11: Exploded View Of Valve Cover - LH
Courtesy of FORD MOTOR CO.

Item	Part Number	Description
1	6C519	LH valve cover stud (5 required)
2	6C519	LH valve cover bolt (8 required)
3	6A505	LH valve cover
4	6A559	LH valve cover gasket

Removal

1. Remove the Air Cleaner (ACL) assembly and the ACL outlet pipe. For additional information, refer to **INTAKE AIR DISTRIBUTION & FILTERING** .
2. Remove the engine cover. For additional information, refer to **INTERIOR TRIM AND ORNAMENTATION** .
3. Disconnect the crankcase ventilation tube quick connect coupling from the valve cover. For additional information, refer to **FUEL SYSTEM - GENERAL INFORMATION** .

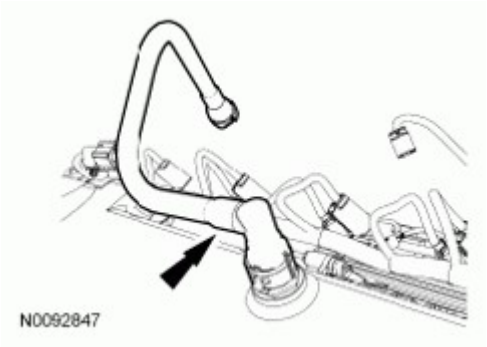

Fig. 12: Locating Crankcase Ventilation Tube
Courtesy of FORD MOTOR CO.

4. Remove the oil level indicator and tube support bracket nut.

Fig. 13: Locating Oil Level Indicator Tube Support Bracket Nut
Courtesy of FORD MOTOR CO.

5. Remove the bolt and position the oil level indicator and tube aside.

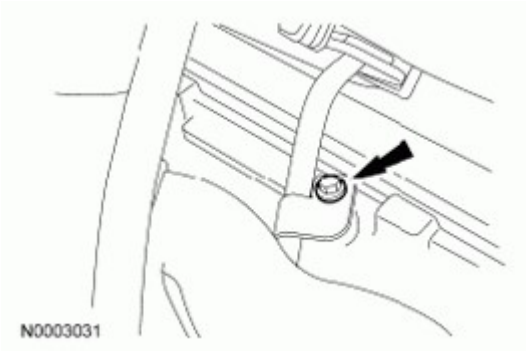

Fig. 14: Locating Oil Level Indicator Tube Bracket Bolt
Courtesy of FORD MOTOR CO.

6. Disconnect the 4 LH fuel injector electrical connectors, 4 LH ignition coil electrical connectors and the 4 LH wire harness retainers.

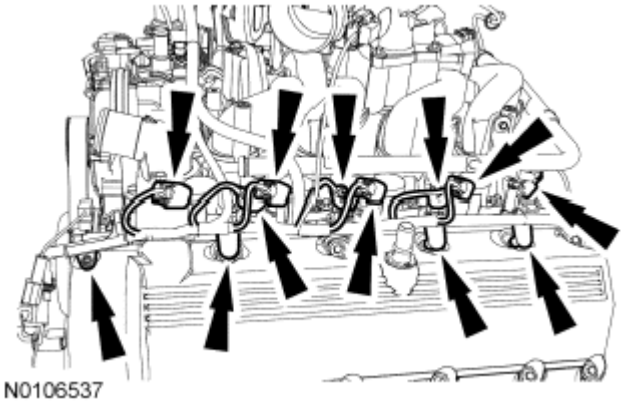

Fig. 15: Locating LH Fuel Injector Electrical Connectors, Ignition Coil Electrical Connectors And Wire Harness Retainers
Courtesy of FORD MOTOR CO.

7. Disconnect the wiring harness retainer and position the engine control wiring harness aside.

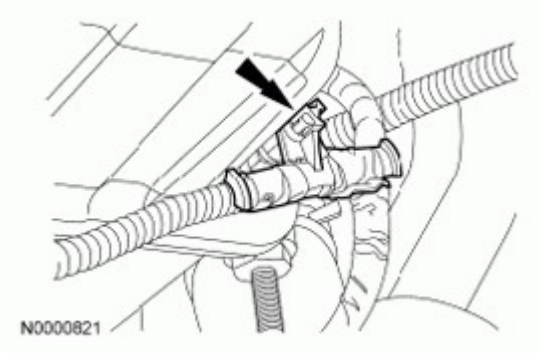

Fig. 16: Locating Engine Control Wiring Harness Retainer On Valve Cover Stud
Courtesy of FORD MOTOR CO.

8. Disconnect the electrical connector.

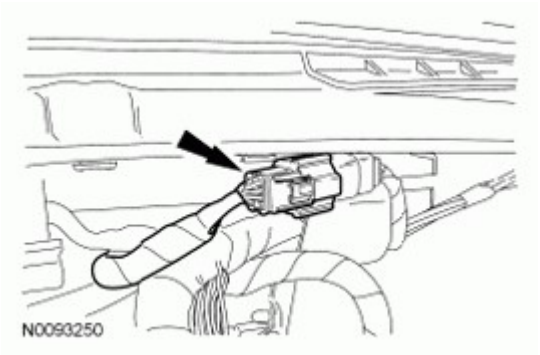

Fig. 17: Locating Electrical Connector
Courtesy of FORD MOTOR CO.

9. Disconnect the engine wiring harness retainer and the 2 PCM electrical connectors.

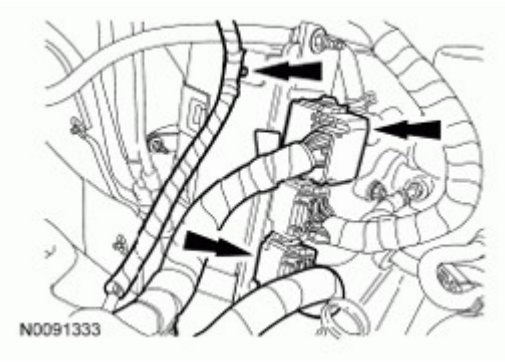

Fig. 18: Locating Engine Wiring Harness Retainer And PCM Electrical Connectors
Courtesy of FORD MOTOR CO.

NOTE: Do not use metal scrapers, wire brushes, power abrasive discs or other abrasive means to clean the sealing surfaces. These tools cause scratches and gouges which make leak paths. Use a plastic scraping tool to clean sealing surfaces.

10. Remove the LH valve cover.

- Fully loosen the fasteners and remove the valve cover.
- Clean the valve cover mating surface of the cylinder head with silicone gasket remover and metal surface prep. Follow the directions on the packaging.
- Inspect the valve cover gasket. If the gasket is damaged, remove and discard the gasket. Clean the valve cover gasket groove with soap and water or a suitable solvent.

Installation

1. Apply instant gel adhesive completely around the gasket groove in the valve cover. Install the new valve cover gasket.

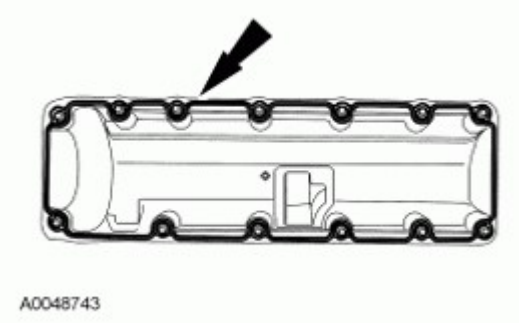

Fig. 19: Identifying Adhesive Applying Area Around Gasket
Courtesy of FORD MOTOR CO.

NOTE: If not secured within 4 minutes, the sealant must be removed and the sealing area cleaned with silicone gasket remover and metal surface prep. Follow the directions on the packaging. Allow to dry until there is no sign

2.

2. **of wetness, or 4 minutes, whichever is longer. Failure to follow this procedure can cause future oil leakage.**

Apply a bead of silicone gasket and sealant in 2 places where the engine front cover meets the cylinder head.

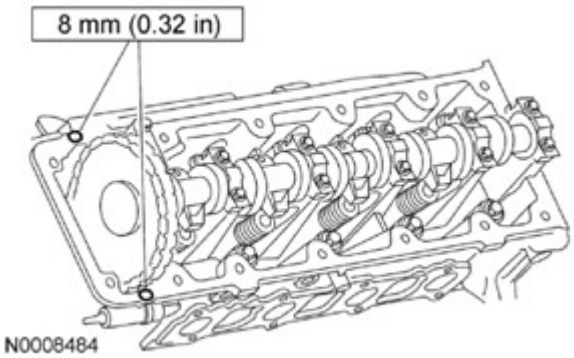

Fig. 20: Applying Silicone Gasket And Sealant To Valve Cover Gasket Surface
Courtesy of FORD MOTOR CO.

3. Position the valve cover and gasket on the cylinder head and loosely install all of the fasteners.
4. Tighten the 13 fasteners in the sequence shown in illustration.
   - Tighten to 10 Nm (89 lb-in).

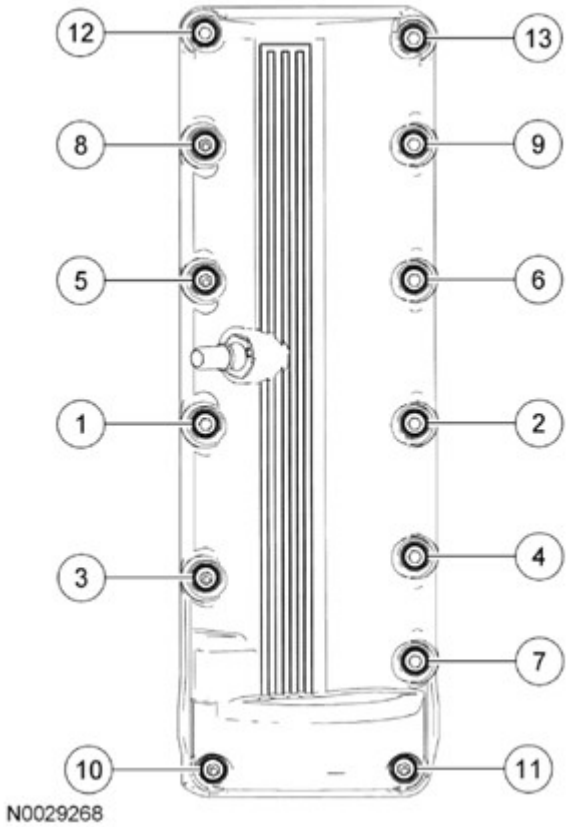

Fig. 21: Identifying Cylinder Head Fasteners Tightening Sequence
Courtesy of FORD MOTOR CO.

5. Connect the engine wiring harness retainer and the 2 PCM electrical connectors.

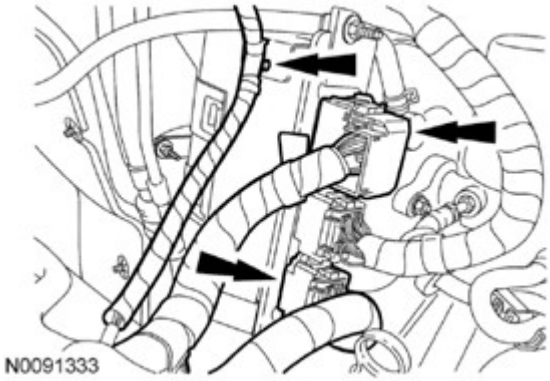

Fig. 22: Locating Engine Wiring Harness Retainer And PCM Electrical Connectors
Courtesy of FORD MOTOR CO.

6. Connect the electrical connector.

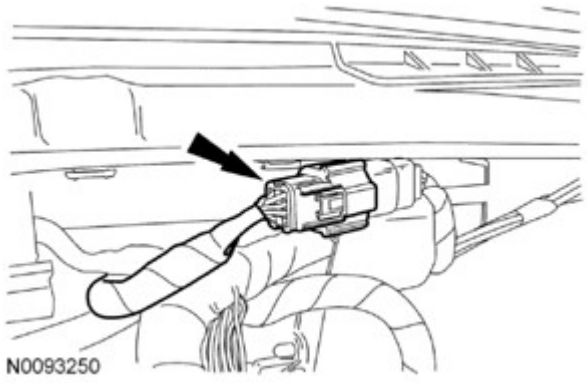

Fig. 23: Locating Electrical Connector
Courtesy of FORD MOTOR CO.

7. Position the engine control wiring harness retainer onto the valve cover stud.

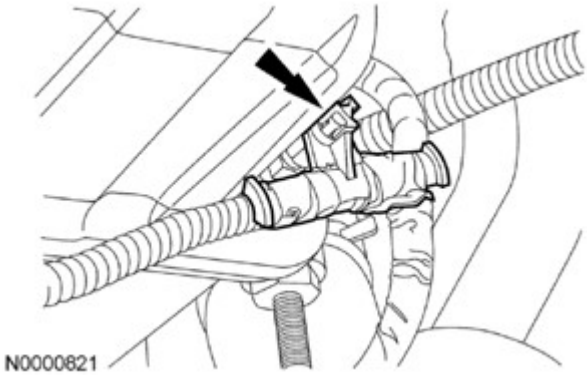

Fig. 24: Locating Engine Control Wiring Harness Retainer On Valve Cover Stud
Courtesy of FORD MOTOR CO.

8. Connect the 4 LH ignition coils, the 4 LH fuel injector electrical connectors and the 4 wiring harness retainers.

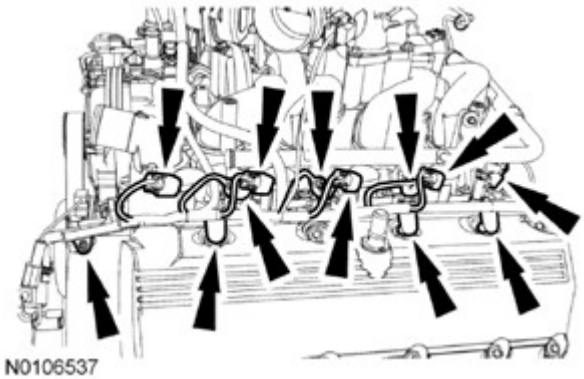

Fig. 25: Locating LH Fuel Injector Electrical Connectors, Ignition Coil Electrical Connectors And Wire Harness Retainers

Courtesy of FORD MOTOR CO.

9. Position the oil level indicator and tube and install the bolt.
   - Tighten to 10 Nm (89 lb-in).

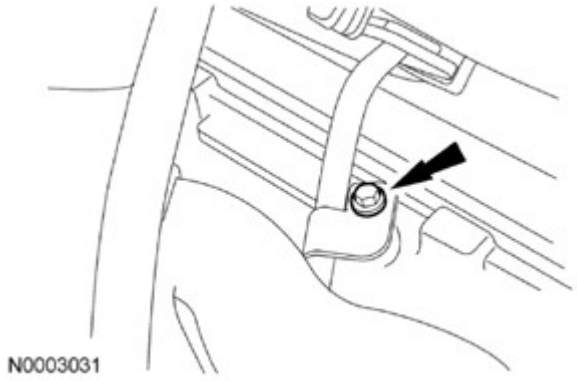

Fig. 26: Locating Oil Level Indicator Tube Bracket Bolt
Courtesy of FORD MOTOR CO.

10. Install the oil level indicator and tube support bracket nut.
    - Tighten to 25 Nm (18 lb-ft).

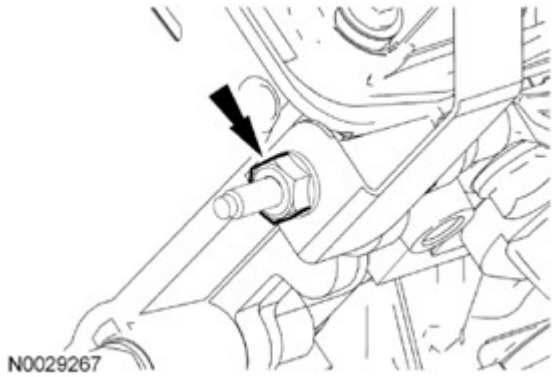

Fig. 27: Locating Oil Level Indicator Tube Support Bracket Nut
Courtesy of FORD MOTOR CO.

11. Position the crankcase ventilation tube and connect the quick connect coupling to the valve cover. For additional information, refer to **FUEL SYSTEM - GENERAL INFORMATION** .

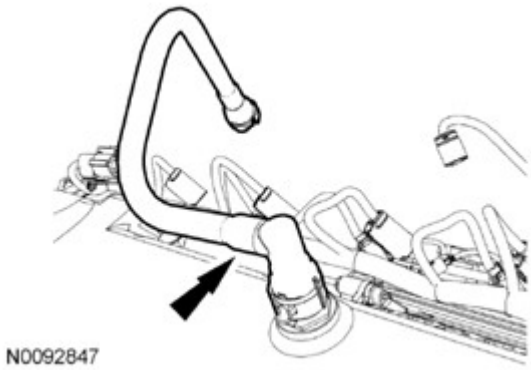

Fig. 28: Locating Crankcase Ventilation Tube
Courtesy of FORD MOTOR CO.

12. Install the engine cover. For additional information, refer to **INTERIOR TRIM AND ORNAMENTATION** .
13. Install the ACL housing and ACL outlet pipe. For additional information, refer to **INTAKE AIR DISTRIBUTION & FILTERING** .

VALVE COVER - RH

MATERIAL SPECIFICATIONS

Item	Specification
Motorcraft® Instant Gel Adhesive TA-19	WSK-M2G402-A4
Motorcraft® Metal Surface Prep ZC-31-A	-
Motorcraft® Silicone Gasket and Sealant TA-30	WSE-M4G323-A4
Motorcraft® Silicone Gasket Remover ZC-30	-

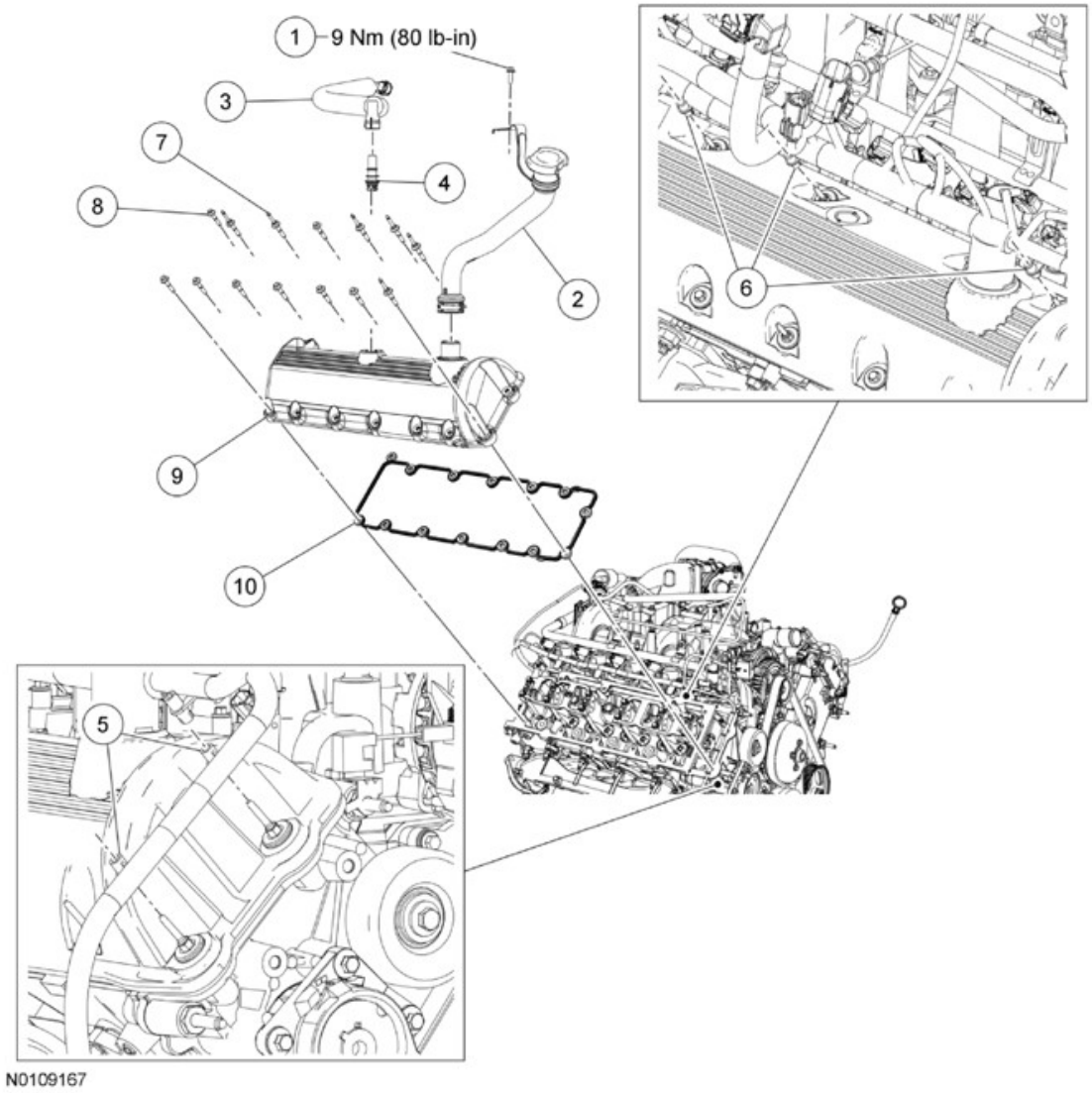

Fig. 29: Exploded View Of Valve Cover With Torque Specifications - RH
Courtesy of FORD MOTOR CO.

Item	Part Number	Description
1	W701082	Engine oil fill tube bolt
2	6763	Engine oil fill tube
3	6K817	PCV tube
4	6A666	PCV valve
5	-	Engine wiring harness retainers (part of 12C508) (2 required)
6	-	Engine wiring harness retainers (part of 12C508) (3 required)
7	6C519	RH valve cover stud (6 required)
8	6C519	RH valve cover bolt (8 required)

9	6582	RH valve cover
10	6584	RH valve cover gasket

Removal

1. Remove the 4 RH ignition coils. For additional information, refer to **ENGINE IGNITION - 5.4L (2V)** .
2. Remove the oil fill tube support bracket bolt.

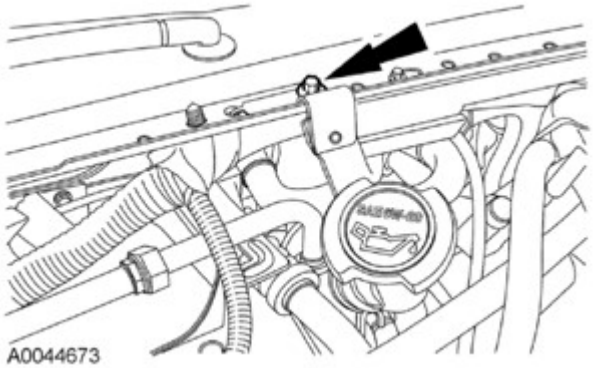

Fig. 30: Locating Oil Fill Tube Support Bracket Bolt
Courtesy of FORD MOTOR CO.

3. Remove the clamp and the oil filler tube.
4. Disconnect the quick connect couplings and remove the PCV tube. For additional information, refer to **FUEL SYSTEM - GENERAL INFORMATION** .

NOTE: A new Positive Crankcase Ventilation (PCV) valve must be installed if removed. When removed, the plastic retaining ears of the PCV valve are sheared.

5. Rotate the PCV valve counterclockwise and remove the PCV valve from the valve cover.
   - Discard the PCV valve.
6. Disconnect the 2 generator wiring harness retainers and position the wiring harness aside.

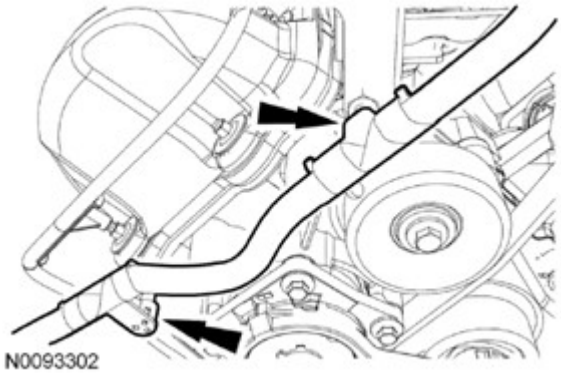

Fig. 31: Locating Generator Wiring Harness Retainers
Courtesy of FORD MOTOR CO.

7. Disconnect the electrical connector, remove the nut and ground strap.

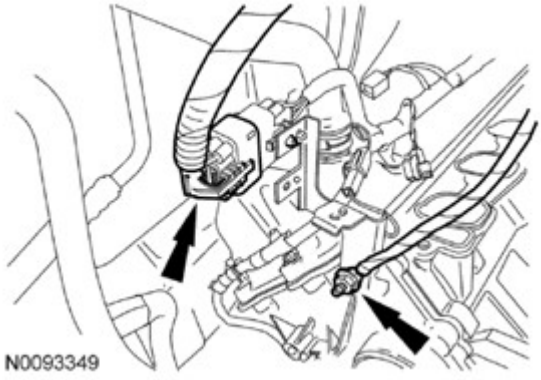

Fig. 32: Locating Electrical Connector, Ground Strap And Nut
Courtesy of FORD MOTOR CO.

8. Remove the fluid level indicator and disconnect the attachments at the transmission fluid filler tube.
   1. Remove the fluid level indicator.
   2. Disconnect the rear heater hose hanger.

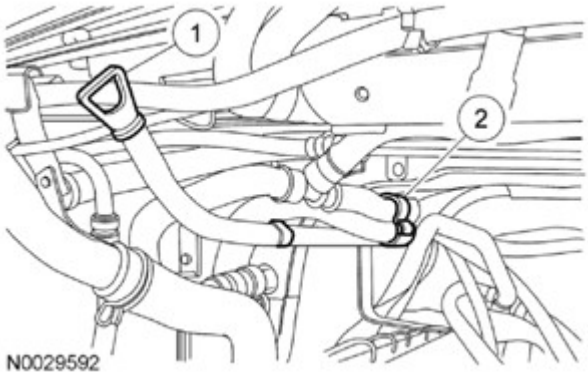

Fig. 33: Identifying Fluid Level Indicator And Rear Heater Hose Hanger
Courtesy of FORD MOTOR CO.

9. Remove the bolt, nut and position the transmission fluid filler tube aside.

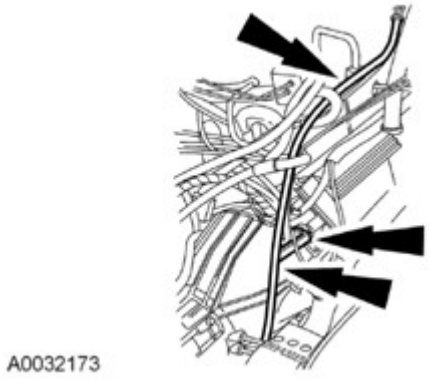

Fig. 34: Locating Transmission Fluid Filler Tube
Courtesy of FORD MOTOR CO.

10. Disconnect the 4 RH fuel injector electrical connectors.
11. Remove the fuel charging wiring harness from the valve cover studs and position the wiring harness and support bracket aside.

NOTE: Do not use metal scrapers, wire brushes, power abrasive discs or other abrasive means to clean the sealing surfaces. These tools cause scratches and gouges which make leak paths. Use a plastic scraping tool to clean sealing surfaces.

12. Remove the RH valve cover.
    - Fully loosen the 14 fasteners and remove the valve cover.
    - Clean the valve cover mating surface of the cylinder head with silicone gasket remover and metal surface prep. Follow the directions on the packaging.
    - Inspect the valve cover gasket. If the gasket is damaged, remove and discard the gasket. Clean the valve cover gasket groove with soap and water or a suitable solvent.

Installation

1. Apply instant gel adhesive completely around the gasket groove in the valve cover. Install the new valve cover gasket.

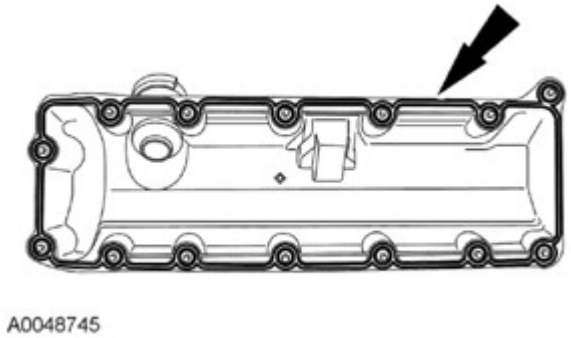

Fig. 35: Identifying Adhesive Applying Area Around Gasket
Courtesy of FORD MOTOR CO.

NOTE: If not secured within 4 minutes, the sealant must be removed and the sealing area cleaned with silicone gasket remover and metal surface prep. Follow the directions on the packaging. Allow to dry until there is no sign of wetness, or 4 minutes, whichever is longer. Failure to follow this procedure can cause future oil leakage.

2. Apply a bead of silicone gasket and sealant in 2 places where the engine front cover meets the cylinder head.

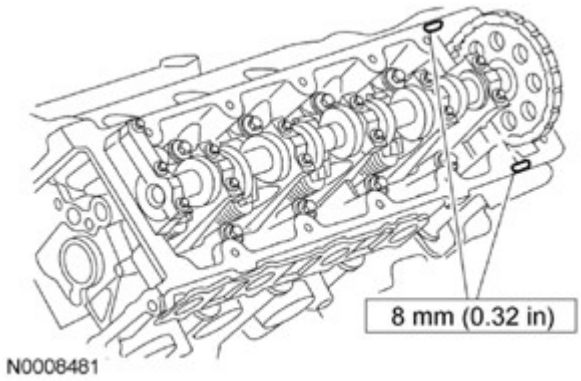

Fig. 36: Identifying Silicone Gasket And Sealant Applying Area On Gasket Surface
Courtesy of FORD MOTOR CO.

3. Position the valve cover on the cylinder head and loosely install the 14 fasteners.
4. Tighten the 14 fasteners in the sequence shown in illustration.
   - Tighten to 10 Nm (89 lb-in).

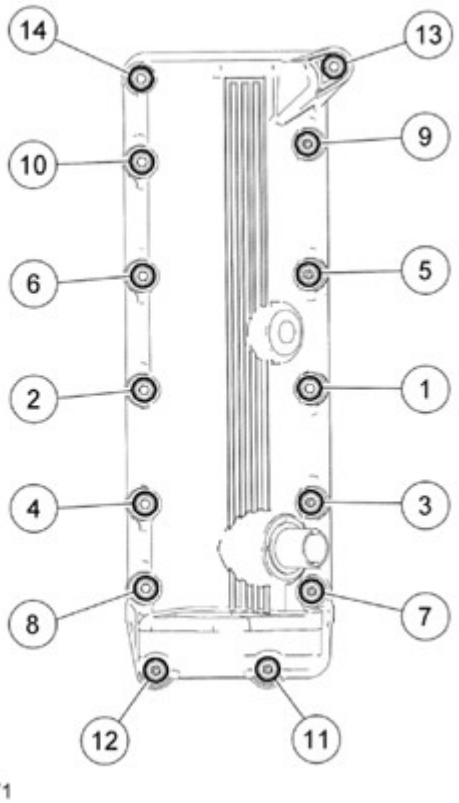

Fig. 37: Identifying Cylinder Head Fasteners Tightening Sequence
Courtesy of FORD MOTOR CO.

5. Position the fuel charging wiring harness and connect the retainers to the valve cover studs.
6. Connect the 4 RH fuel injector electrical connectors.
7. Position the transmission fluid filler tube and install the bolt and the nut.
    - Tighten the nut to 28 Nm (21 lb-ft).
    - Tighten the bolt to 10 Nm (89 lb-in).

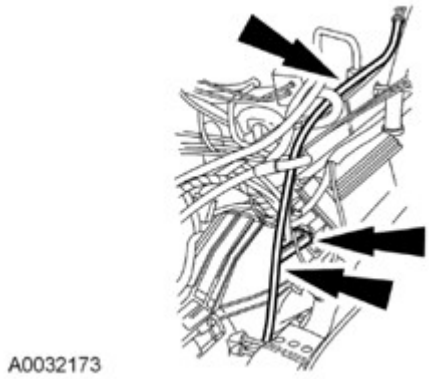

Fig. 38: Locating Transmission Fluid Filler Tube
Courtesy of FORD MOTOR CO.

8. Install the fluid level indicator and connect the attachments to the transmission fluid filler tube.
    1. Install the fluid level indicator.
    2. Connect the rear heater hose hanger.

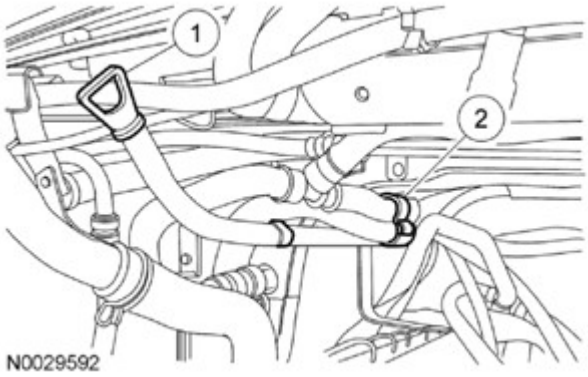

Fig. 39: Identifying Fluid Level Indicator And Rear Heater Hose Hanger
Courtesy of FORD MOTOR CO.

9. Position the engine wiring harness support bracket, ground strap and install the nut and connect the electrical connector.
    - Tighten to 10 Nm (89 lb-in).

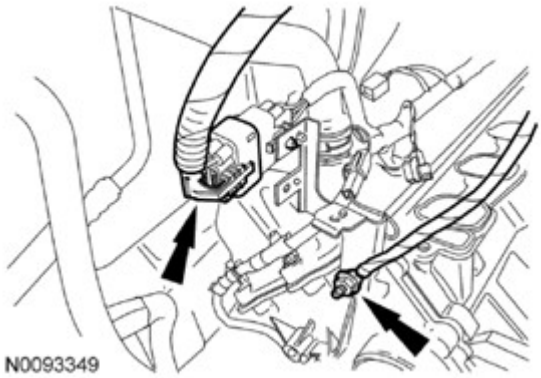

Fig. 40: Locating Electrical Connector, Ground Strap And Nut
Courtesy of FORD MOTOR CO.

10. Connect the 2 generator wiring harness retainers.

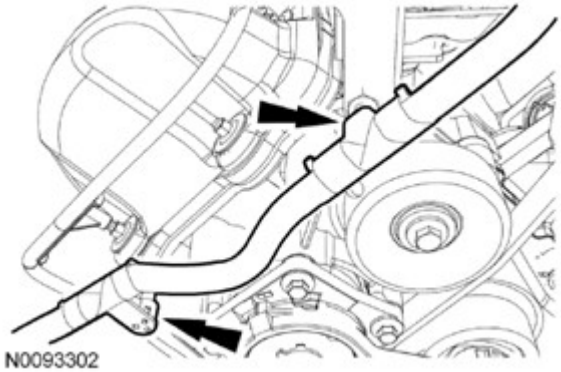

Fig. 41: Locating Generator Wiring Harness Retainers
Courtesy of FORD MOTOR CO.

NOTE: A new Positive Crankcase Ventilation (PCV) valve must be installed if removed. When removed, the plastic retaining ears of the PCV valve are sheared.

11. Position a new PCV valve in the valve cover and rotate it clockwise to lock it in place.
12. Position the PCV tube and connect the quick connect couplings. For additional information, refer to **FUEL SYSTEM - GENERAL INFORMATION** .
13. Install the oil filler tube and clamp onto the valve cover.
14. Install the engine oil filler tube support bracket bolt.
    - Tighten to 9 Nm (80 lb-in).

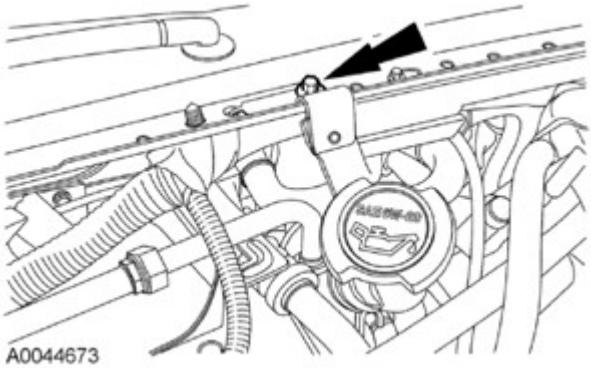

Fig. 42: Locating Oil Fill Tube Support Bracket Bolt
Courtesy of FORD MOTOR CO.

15. Install the 4 RH ignition coils. For additional information, refer to **ENGINE IGNITION - 5.4L (2V)** .

CRANKSHAFT PULLEY

SPECIAL TOOLS

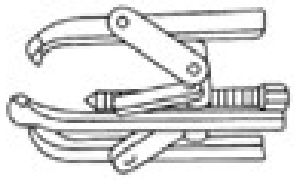 ST1184-A	3-Jaw Puller 303-D121 or equivalent
 ST2428-A	Installer, Crankshaft Vibration Damper 303-102 (T74P-6316-B)
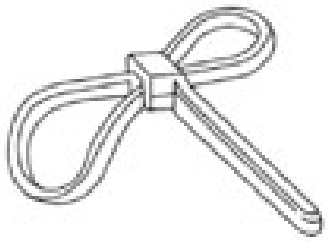 ST1438-A	Strap Wrench 303-D055 (D85L-6000-A) or equivalent

MATERIAL SPECIFICATIONS

Item	Specification
Motorcraft® Metal Surface Prep ZC-31-A	-
Motorcraft® SAE 5W-20 Premium Synthetic Blend Motor Oil (US); Motorcraft® SAE 5W-20 Super Premium Motor Oil (Canada) XO-5W20-QSP (US); CXO-5W20-LSP12 (Canada)	WSS-M2C945-A
Motorcraft® Silicone Gasket and Sealant TA-30	WSE-M4G323-A4
Motorcraft® Silicone Gasket Remover ZC-30	-

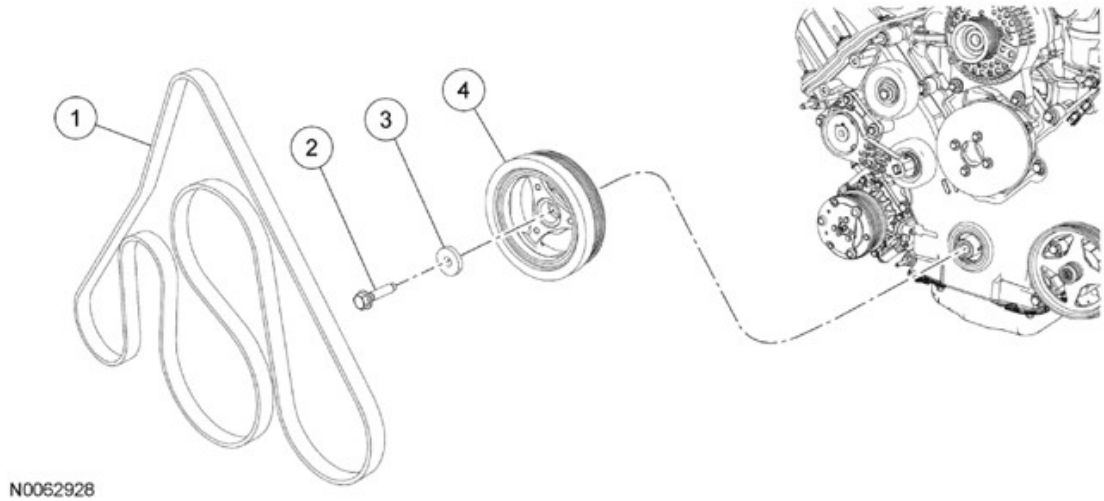

Fig. 43: Identifying Crankshaft Pulley Bolt, Crankshaft Pulley And Washer
Courtesy of FORD MOTOR CO.

Item	Part Number	Description
1	8620	Accessory drive belt
2	W701512	Crankshaft pulley bolt
3	N806165	Washer
4	6316	Crankshaft pulley

Removal

1. With the vehicle in NEUTRAL, position it on a hoist. For additional information, refer to **JACKING & LIFTING** .
2. Remove the engine cooling fan and fan shroud. For additional information, refer to **ENGINE COOLING** .
3. Rotate the tensioner clockwise and remove the accessory drive belt from the crankshaft pulley.

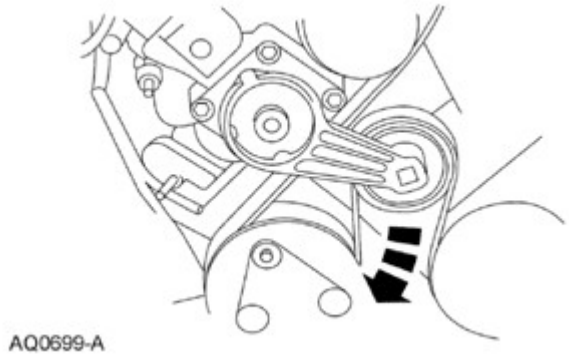

Fig. 44: Rotating Tensioner Clockwise
Courtesy of FORD MOTOR CO.

4.

4. **NOTE: This bolt is a torque-to-yield design and cannot be reused. Failure to follow these instructions may result in engine damage.**

Using the Strap Wrench, remove the crankshaft pulley bolt and washer.

- Discard the crankshaft pulley bolt.

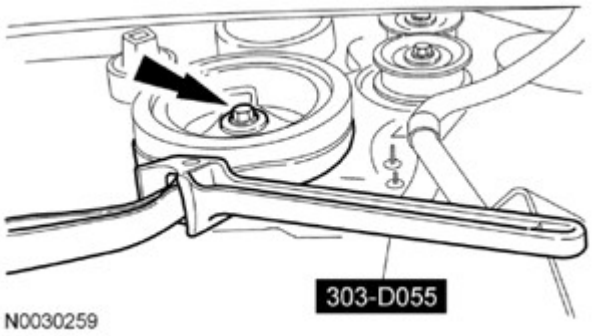

Fig. 45: Removing Crankshaft Pulley Bolt And Washer Using Strap Wrench
Courtesy of FORD MOTOR CO.

5. Using the 3 Jaw Puller, remove the crankshaft pulley.

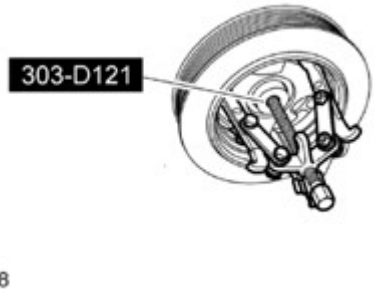

Fig. 46: Removing Crankshaft Pulley Using Jaw Puller
Courtesy of FORD MOTOR CO.

Installation

1. **NOTE: If not secured within 4 minutes, the sealant must be removed and the sealing area cleaned with silicone gasket remover and metal surface prep. Follow the directions on the packaging. Allow to dry until there is no sign of wetness, or 4 minutes, whichever is longer. Failure to follow this procedure can cause future oil leakage.**

Apply silicone gasket and sealant to the Woodruff key slot on the crankshaft pulley.

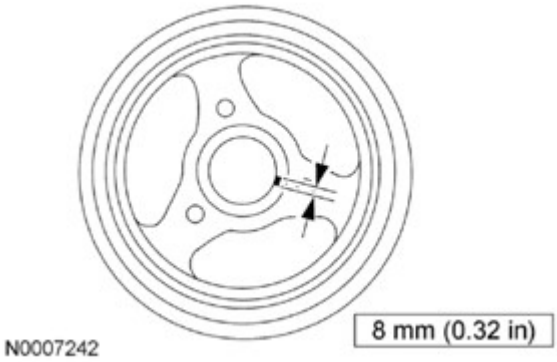

Fig. 47: Identifying Crankshaft Pulley Sealant Applying Area On Woodruff Key Slot
Courtesy of FORD MOTOR CO.

2. Lubricate the crankshaft pulley sealing area with clean engine oil prior to installation.

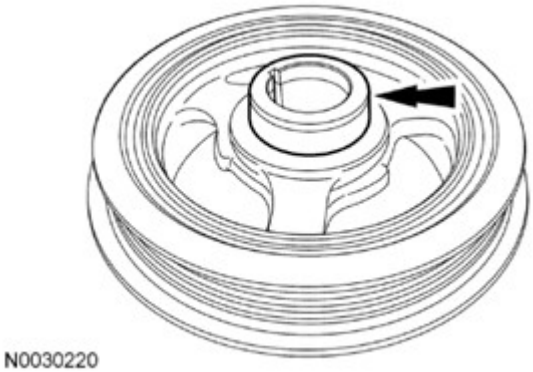

Fig. 48: Locating Crankshaft Pulley Sealing Area
Courtesy of FORD MOTOR CO.

3. Using the Crankshaft Vibration Damper Installer, install the crankshaft pulley.

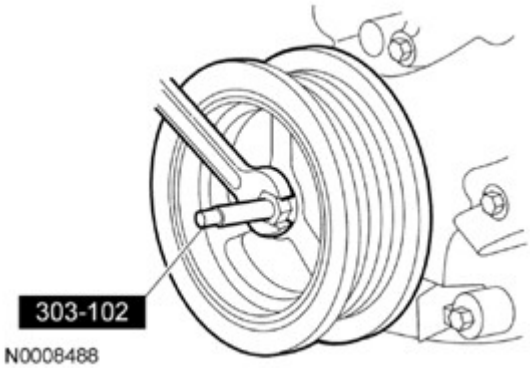

Fig. 49: Installing Crankshaft Pulley Using Crankshaft Vibration Damper Installer
Courtesy of FORD MOTOR CO.

4. Using a new crankshaft pulley bolt, install the crankshaft pulley bolt and washer. Using the Strap Wrench

to hold the crankshaft pulley, tighten the bolt in 4 stages:

- Stage 1: Tighten to 90 Nm (66 lb-ft).
- Stage 2: Loosen one full turn.
- Stage 3: Tighten to 50 Nm (37 lb-ft).
- Stage 4: Tighten an additional 90 degrees.

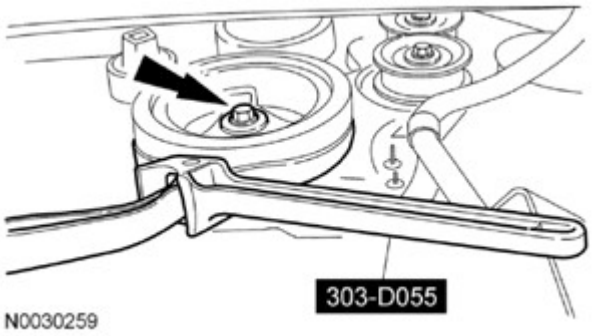

Fig. 50: Removing Crankshaft Pulley Bolt And Washer Using Strap Wrench
Courtesy of FORD MOTOR CO.

5. Rotate the tensioner clockwise and install the accessory drive belt onto the crankshaft pulley.

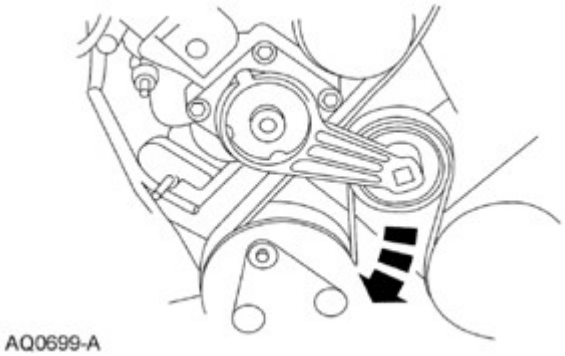

Fig. 51: Rotating Tensioner Clockwise
Courtesy of FORD MOTOR CO.

6. Install the engine cooling fan and the fan shroud. For additional information, refer to **ENGINE COOLING** .

CRANKSHAFT FRONT SEAL

SPECIAL TOOLS

	3-Jaw Puller 303-D121 or equivalent

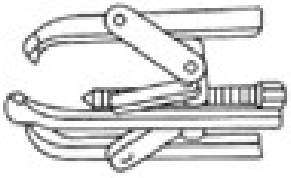 ST1184-A	
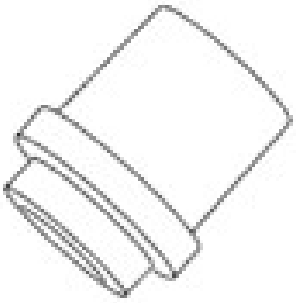 ST2197-A	Installer, Crankshaft Front Oil Seal 303-635
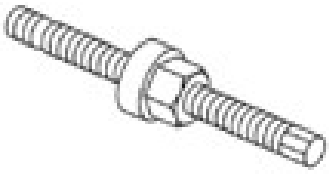 ST1287-A	Installer, Crankshaft Vibration Damper 303-102 (T74P-6316-B)
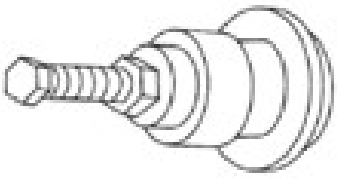 ST1328-A	Installer, Front Cover Oil Seal 303-335 (T88T-6701-A)
	Remover, Crankshaft Front Oil Seal 303-107 (T74P-6700-A)

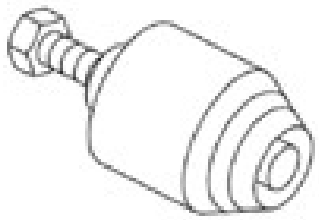 ST1288-A	
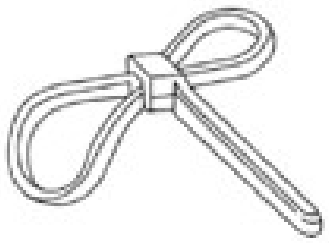 ST1438-A	Strap Wrench 303-D055 (D85L-6000-A) or equivalent

MATERIAL SPECIFICATIONS

Item	Specification
Motorcraft® Metal Surface Prep ZC-31-A	-
Motorcraft® SAE 5W-20 Premium Synthetic Blend Motor Oil (US); Motorcraft® SAE 5W-20 Super Premium Motor Oil (Canada) XO-5W20-QSP (US); CXO-5W20-LSP12 (Canada)	WSS-M2C945-A
Motorcraft® Silicone Gasket and Sealant TA-30	WSE-M4G323-A4
Motorcraft® Silicone Gasket Remover ZC-30	-

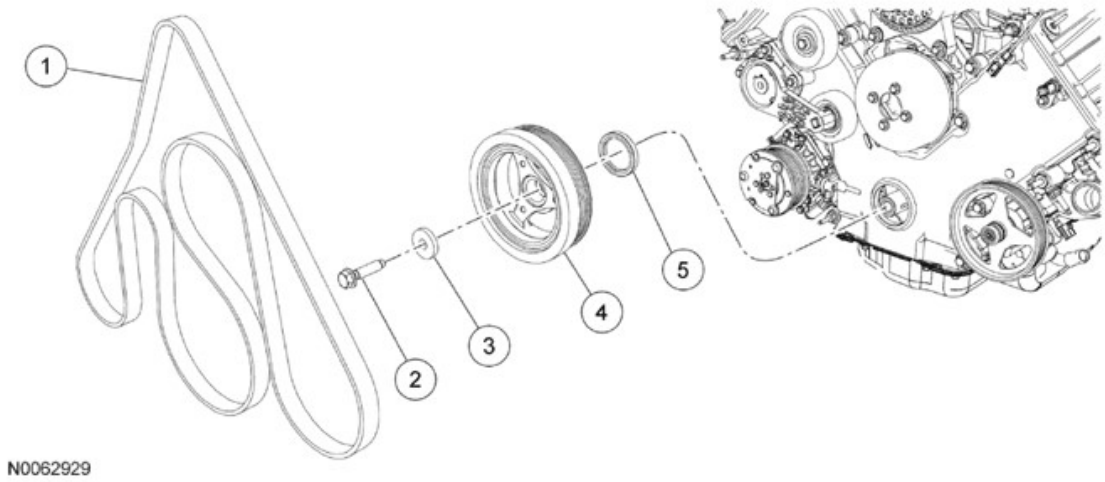

Fig. 52: Identifying Crankshaft Pulley, Crankshaft Pulley Bolt And Washer
Courtesy of FORD MOTOR CO.

Item	Part Number	Description
1	8620	Accessory drive belt
2	W701512	Crankshaft pulley bolt
3	N806165	Washer
4	6316	Crankshaft pulley
5	6700	Crankshaft front seal

Removal

1. With the vehicle in NEUTRAL, position it on a hoist. For additional information, refer to **JACKING & LIFTING** .
2. Remove the engine cooling fan and fan shroud. For additional information, refer to **ENGINE COOLING** .
3. Rotate the tensioner clockwise and remove the accessory drive belt from the crankshaft pulley.

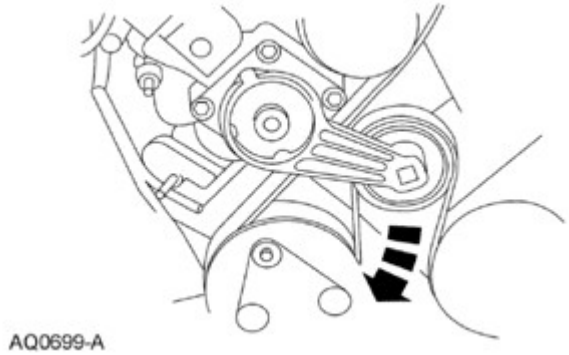

Fig. 53: Rotating Tensioner Clockwise
Courtesy of FORD MOTOR CO.

4. **NOTE: This bolt is a torque-to-yield design and cannot be reused. Failure to follow these instructions may result in engine damage.**

Using the Strap Wrench, remove the crankshaft pulley bolt and washer.

- Discard the crankshaft pulley bolt.

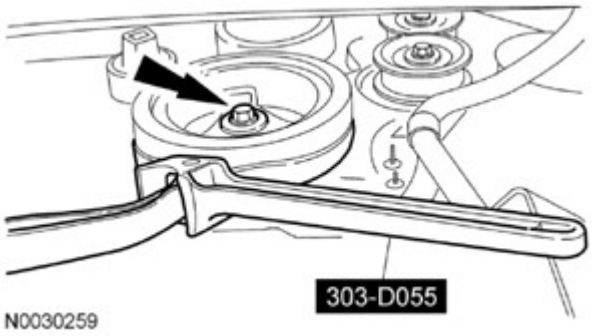

Fig. 54: Removing Crankshaft Pulley Bolt And Washer Using Strap Wrench
Courtesy of FORD MOTOR CO.

5. Using the 3 Jaw Puller, remove the crankshaft pulley.

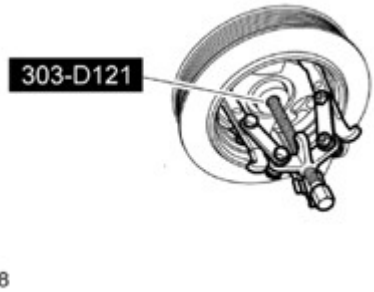

Fig. 55: Removing Crankshaft Pulley Using Jaw Puller
Courtesy of FORD MOTOR CO.

6. Using the Crankshaft Front Oil Seal Remover, remove and discard the crankshaft front seal.

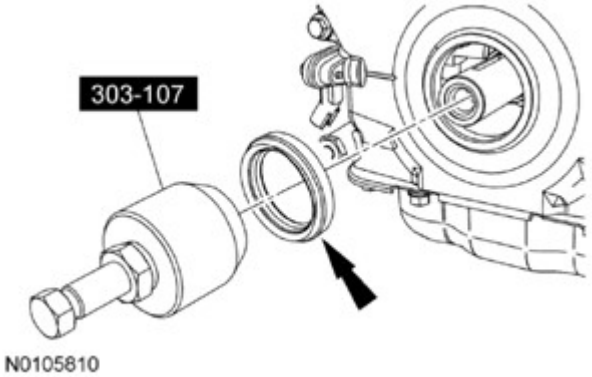

Fig. 56: Removing Crankshaft Front Seal Using Crankshaft Front Oil Seal Remover
Courtesy of FORD MOTOR CO.

Installation

1. Lubricate the engine front cover and the crankshaft front seal inner lip with clean engine oil.

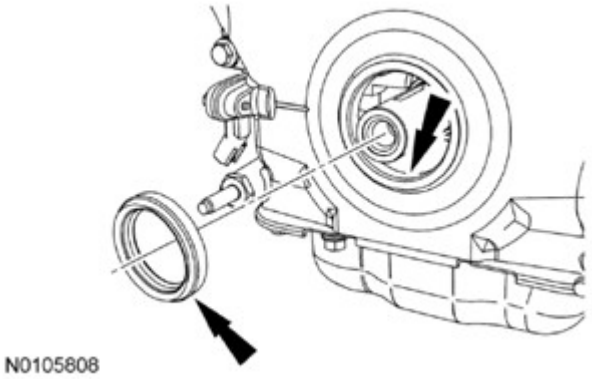

Fig. 57: Locating Crankshaft Front Seal Inner Lip
Courtesy of FORD MOTOR CO.

2. Using the Crankshaft Front Oil Seal Installer, Front Cover Oil Seal Installer and Crankshaft Vibration Damper Installer, install a new crankshaft front seal.

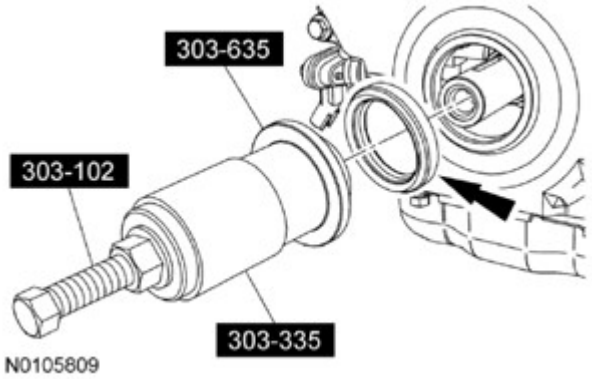

Fig. 58: Installing Crankshaft Front Seal Using Crankshaft Front Oil Seal Installer
Courtesy of FORD MOTOR CO.

NOTE: If not secured within 4 minutes, the sealant must be removed and the sealing area cleaned with silicone gasket remover and metal surface prep. Follow the directions on the packaging. Allow to dry until there is no sign of wetness, or 4 minutes, whichever is longer. Failure to follow this procedure can cause future oil leakage.

3. Apply silicone gasket and sealant to the Woodruff key slot on the crankshaft pulley.

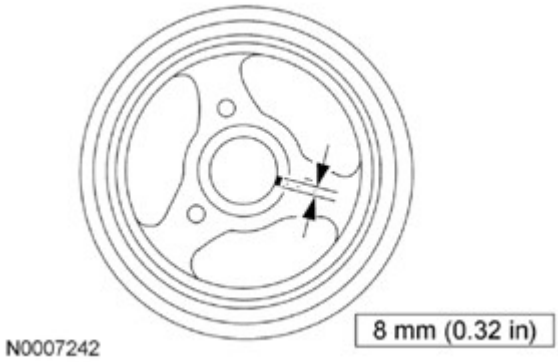

Fig. 59: Identifying Crankshaft Pulley Sealant Applying Area On Woodruff Key Slot
Courtesy of FORD MOTOR CO.

4. Using the Crankshaft Vibration Damper Installer, install the crankshaft pulley.

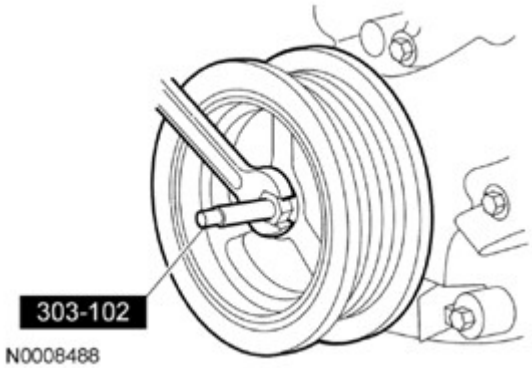

Fig. 60: Installing Crankshaft Pulley Using Crankshaft Vibration Damper Installer
Courtesy of FORD MOTOR CO.

5. Using a new crankshaft pulley bolt, install the crankshaft pulley bolt and washer. Using the Strap Wrench to hold the crankshaft pulley, tighten the bolt in 4 stages:
   - Stage 1: Tighten to 90 Nm (66 lb-ft).
   - Stage 2: Loosen one full turn.
   - Stage 3: Tighten to 50 Nm (37 lb-ft).

- Stage 4: Tighten an additional 90 degrees.

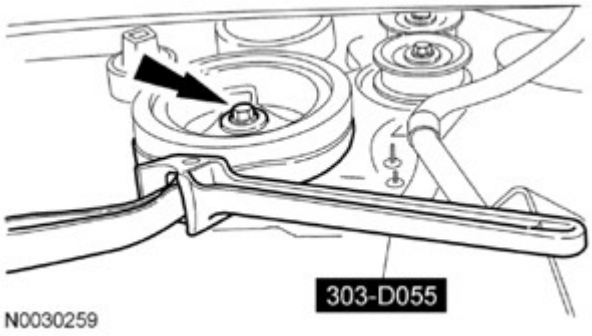

Fig. 61: Removing Crankshaft Pulley Bolt And Washer Using Strap Wrench
Courtesy of FORD MOTOR CO.

6. Rotate the tensioner clockwise and install the accessory drive belt onto the crankshaft pulley.

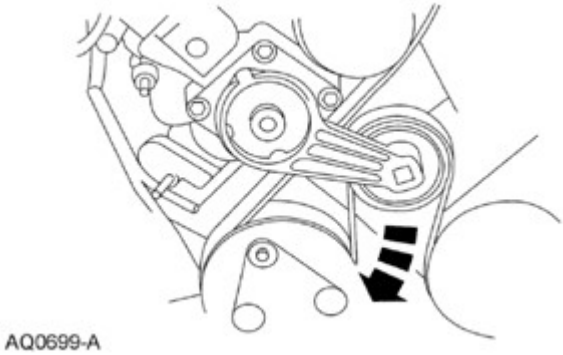

Fig. 62: Rotating Tensioner Clockwise
Courtesy of FORD MOTOR CO.

7. Install the engine cooling fan and the fan shroud. For additional information, refer to **ENGINE COOLING** .

ENGINE FRONT COVER

SPECIAL TOOLS

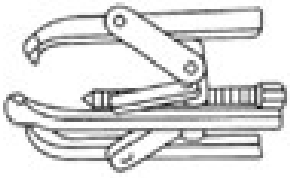 ST1184-A	3-Jaw Puller 303-D121 or equivalent

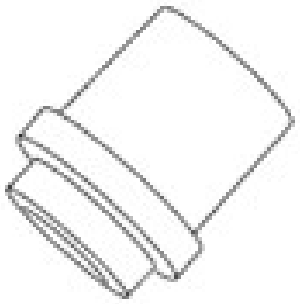 ST2197-A	Installer, Crankshaft Front Oil Seal 303-635
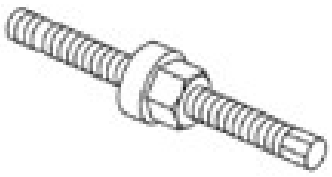 ST1287-A	Installer, Crankshaft Vibration Damper 303-102 (T74P-6316-B)
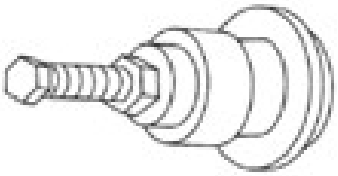 ST1328-A	Installer, Front Cover Oil Seal 303-335 (T88T-6701-A)
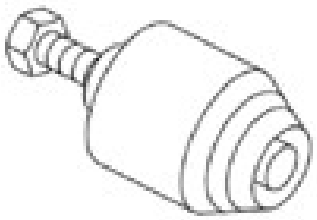 ST1288-A	Remover, Crankshaft Front Oil Seal 303-107 (T74P-6700-A)
	Strap Wrench 303-D055 (D85L-6000-A) or equivalent

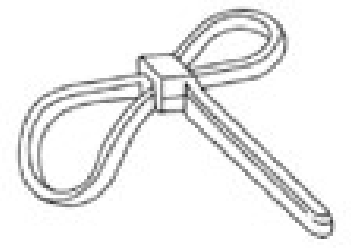 ST1438-A	

MATERIAL SPECIFICATIONS

Item	Specification
Motorcraft® Metal Surface Prep ZC-31-A	-
Motorcraft® SAE 5W-20 Premium Synthetic Blend Motor Oil (US); Motorcraft® SAE 5W-20 Super Premium Motor Oil (Canada) XO-5W20-QSP (US); CXO-5W20-LSP12 (Canada)	WSS-M2C945-A
Motorcraft® Silicone Gasket and Sealant TA-30	WSE-M4G323-A4
Motorcraft® Silicone Gasket Remover ZC-30	-

Accessory Drive Belt, Idler Pulley and Crankshaft Pulley

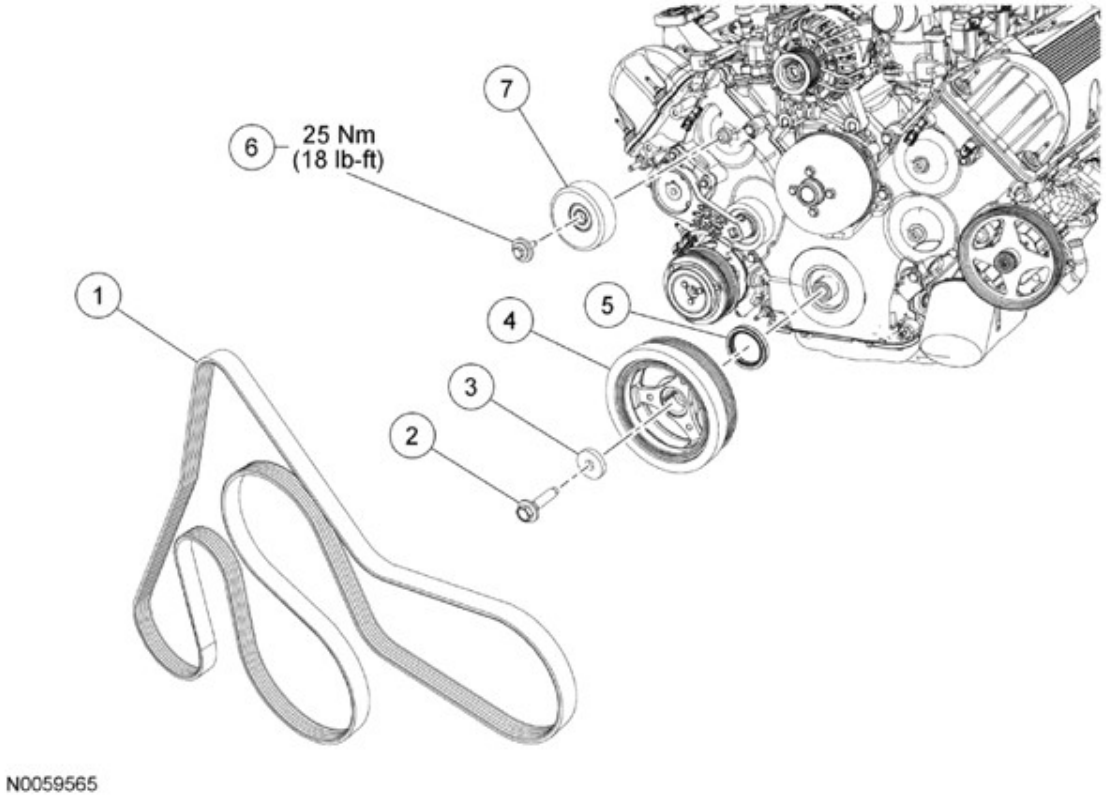

Fig. 63: Identifying Accessory Drive Belt, Idler Pulley And Crankshaft Pulley With Torque Specifications
Courtesy of FORD MOTOR CO.

Item	Part Number	Description
1	8620	Accessory drive belt
2	W701512	Crankshaft pulley bolt
3	N806165	Washer
4	6316	Crankshaft pulley
5	6700	Crankshaft front oil seal
6	N808102	Accessory drive belt idler pulley bolt
7	19A216	Accessory drive belt idler pulley

Power Steering Pump, Coolant Pump Pulley, Radio Interference Capacitors and Electrical Connections

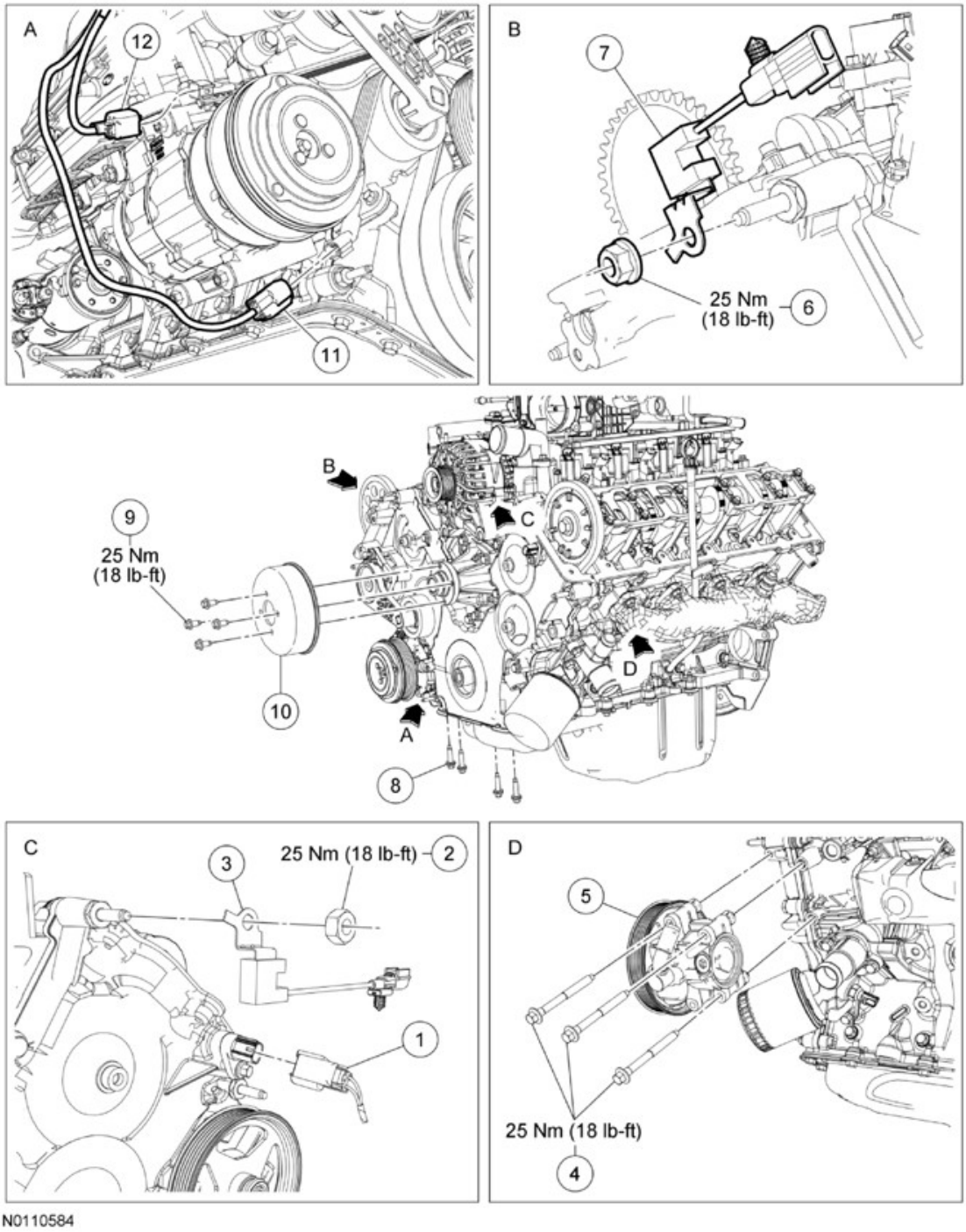

Fig. 64: Identifying Power Steering Pump, Coolant Pump Pulley, Radio Interference Capacitors And Electrical Connections With Torque Specifications
Courtesy of FORD MOTOR CO.

Item	Part Number	Description
1	-	Camshaft Position (CMP) sensor electrical connector (part of

		12B637)
2	N804758	LH radio ignition interference capacitor nut
3	18801	LH radio ignition interference capacitor
4	W500315	Power steering pump bolts (3 required)
5	3A696	Power steering pump
6	N804758	RH radio ignition interference capacitor nut
7	18801	RH radio ignition interference capacitor
8	W701605	Oil pan bolt (4 required)
9	N806282	Coolant pump pulley bolt (4 required)
10	8A528	Coolant pump pulley
11	-	Crankshaft Position (CKP) sensor electrical connector (part of 12B637)
12	-	A/C compressor electrical connector (part of 12B637)

Engine Front Cover and Gaskets

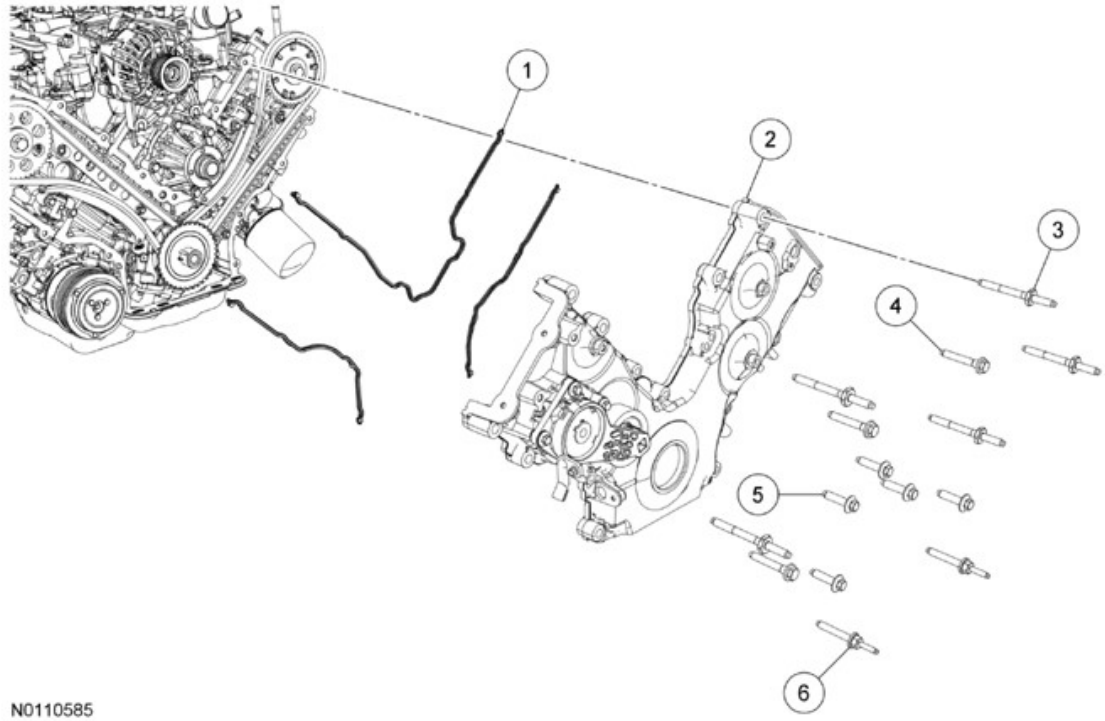

Fig. 65: Exploded View Of Engine Front Cover And Gaskets

Courtesy of FORD MOTOR CO.

Item	Part Number	Description
1	6D081	Engine front cover gasket (3 required)
2	6C086	Engine front cover
3	N808140	Engine front cover upper stud bolt (5 required)
4	N808142	Engine front cover bolt (3 required)
5	N806177	Engine front cover bolt (5 required)
6	N808259	Engine front cover lower stud bolt (2 required)

Removal

1. With the vehicle in NEUTRAL, position it on a hoist. For additional information, refer to **JACKING & LIFTING** .
2. Remove the radiator. For additional information, refer to **ENGINE COOLING** .
3. Remove the LH and RH valve covers. For additional information, refer to **VALVE COVER - LH** or **VALVE COVER - RH**.
4. Remove the oil drain plug and drain the engine oil. Install the drain plug when finished.
   - Tighten to 23 Nm (17 lb-ft).

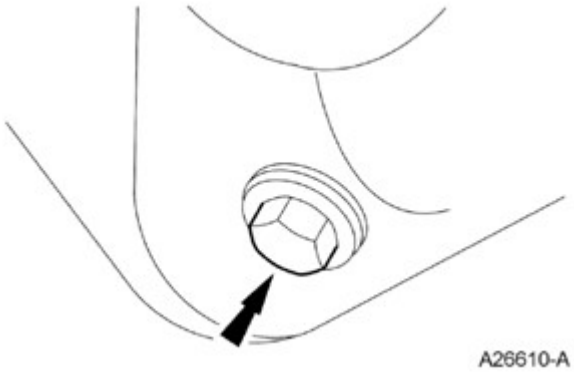

Fig. 66: Locating Oil Drain Plug
Courtesy of FORD MOTOR CO.

5. Remove the nut and position the LH radio interference capacitor aside.
6. Remove the nut and position the RH radio interference capacitor aside.
7. Loosen the 4 coolant pump pulley bolts.
8. Rotate the tensioner clockwise and remove the accessory drive belt.

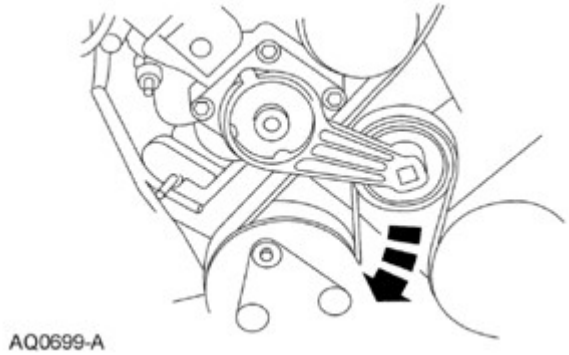

Fig. 67: Rotating Tensioner Clockwise
Courtesy of FORD MOTOR CO.

9. Remove the 4 coolant pump pulley bolts and the coolant pump pulley.
10. Remove the bolt and the accessory drive belt idler pulley.

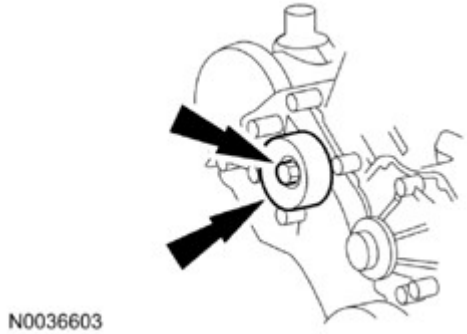

Fig. 68: Locating Accessory Drive Belt Idler Pulley And Bolt
Courtesy of FORD MOTOR CO.

11. Remove the 3 bolts and position the power steering pump aside.

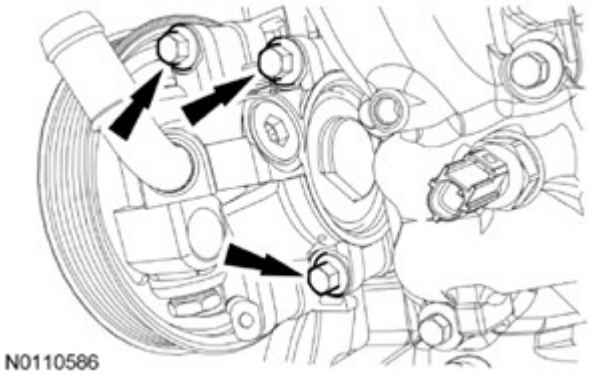

Fig. 69: Locating Power Steering Pump Aside Bolts
Courtesy of FORD MOTOR CO.

12. Disconnect the A/C compressor electrical connector.

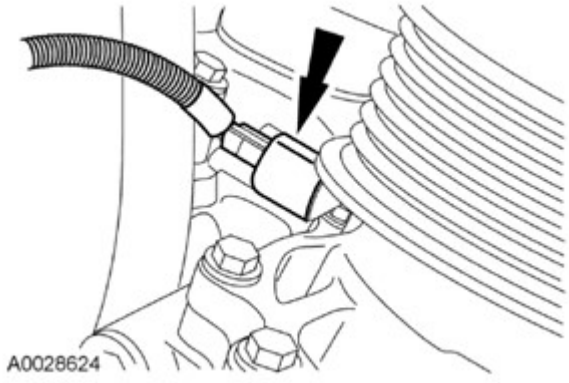

Fig. 70: Locating A/C Compressor Electrical Connector
Courtesy of FORD MOTOR CO.

13. Disconnect the Crankshaft Position (CKP) sensor electrical connector.
14. Remove the nut and position aside the transmission cooler tube support bracket and the starter wiring harness support bracket.

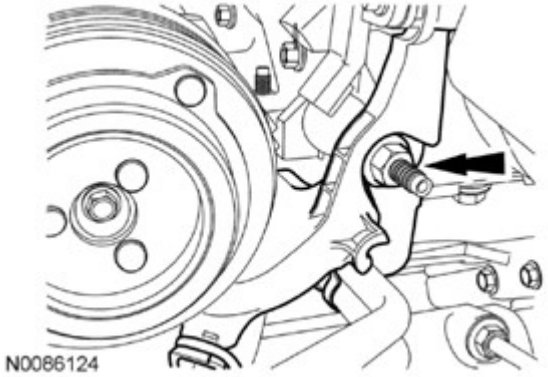

Fig. 71: Locating Transmission Cooler Tube Support Bracket Nut
Courtesy of FORD MOTOR CO.

15. Disconnect the Camshaft Position (CMP) sensor electrical connector.
16. **NOTE: This bolt is a torque-to-yield design and cannot be reused. Failure to follow these instructions may result in engine damage.**

    Using the Strap Wrench, remove the bolt and washer and discard the bolt.

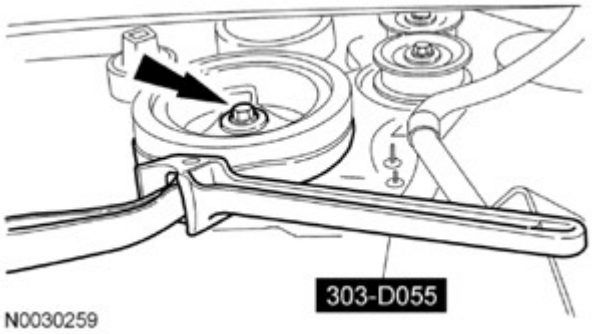

Fig. 72: Removing Crankshaft Pulley Bolt And Washer Using Strap Wrench
Courtesy of FORD MOTOR CO.

17. Using the 3 Jaw Puller, remove the crankshaft pulley.

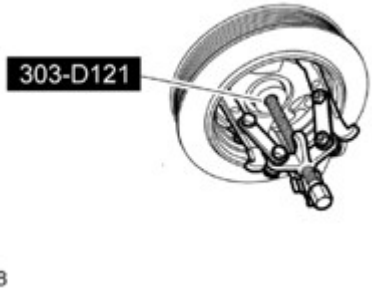

Fig. 73: Removing Crankshaft Pulley Using Jaw Puller
Courtesy of FORD MOTOR CO.

18. Using the Crankshaft Front Oil Seal Remover, remove and discard the crankshaft seal.

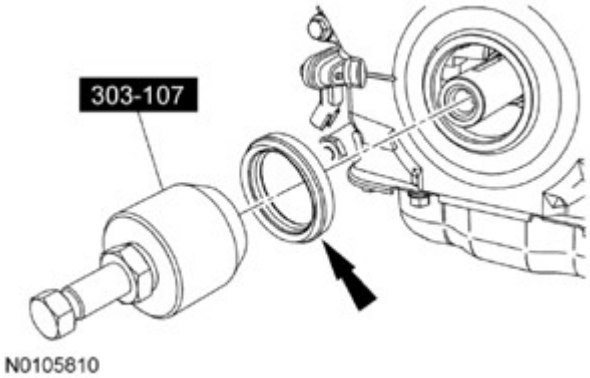

Fig. 74: Removing Crankshaft Front Seal Using Crankshaft Front Oil Seal Remover
Courtesy of FORD MOTOR CO.

19. Remove the front 4 oil pan bolts.

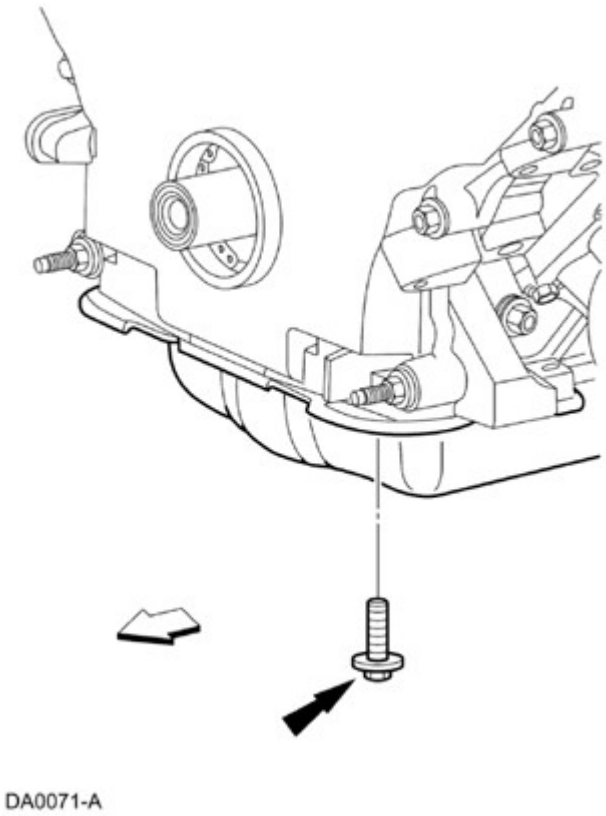

Fig. 75: Locating Oil Pan Bolts
Courtesy of FORD MOTOR CO.

20. Remove the 15 fasteners.

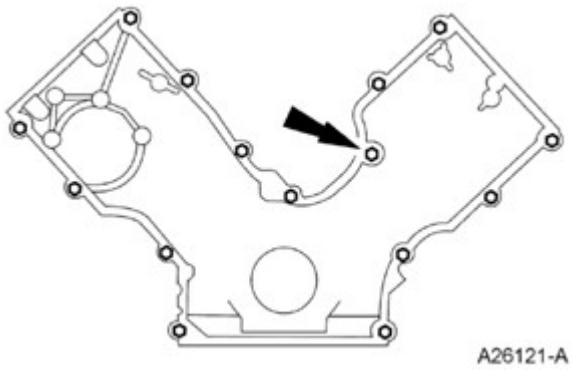

Fig. 76: Locating Front Cover Fasteners
Courtesy of FORD MOTOR CO.

21. Remove the engine front cover from the front cover-to-cylinder block dowel.
    - Remove and discard the engine front cover gaskets.

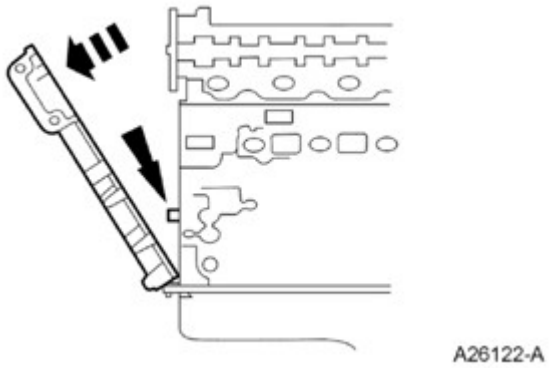

Fig. 77: Removing Engine Front Cover From Front Cover To Cylinder Block Dowel
Courtesy of FORD MOTOR CO.

22. **NOTE: Do not use metal scrapers, wire brushes, power abrasive discs or other abrasive means to clean the sealing surfaces. These tools cause scratches and gouges which make leak paths. Use a plastic scraping tool to remove all traces of old sealant.**

Clean the mating surfaces with silicone gasket remover and metal surface prep. Follow the directions on the packaging.

- Inspect the mating surfaces.

Installation

1. **NOTE: Do not use metal scrapers, wire brushes, power abrasive discs or other abrasive means to clean the sealing surfaces. These tools cause scratches and gouges which make leak paths. Use a plastic scraping tool to remove all traces of old sealant.**

NOTE: If the engine front cover is not secured within 4 minutes, the sealant must be removed and the sealing area cleaned with silicone gasket remover and metal surface prep. Follow the directions on the packaging. Allow to dry until there is no sign of wetness, or 4 minutes, whichever is longer. Failure to follow this procedure can cause future oil leakage.

NOTE: Make sure that the engine front cover gasket is in place on the engine front cover before installation.

Apply a bead of silicone gasket and sealant along the cylinder head-to-cylinder block surface and the oil pan-to-cylinder block surface, at the locations shown in illustration.

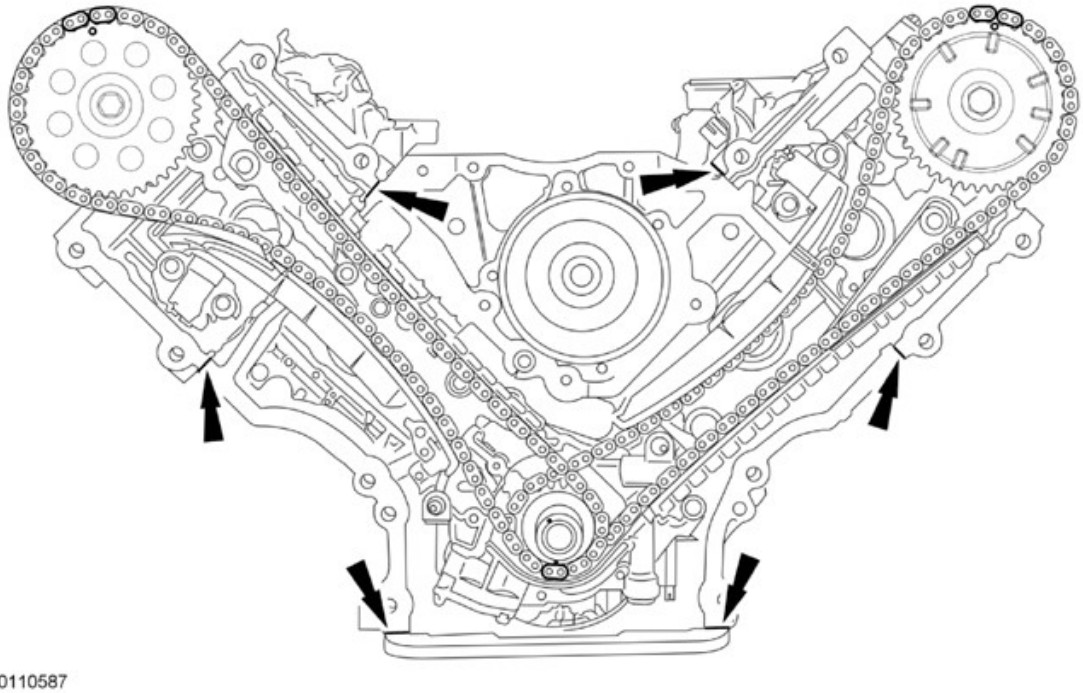

Fig. 78: Identifying Bead Of Silicone Gasket And Sealant Applying Area Along Cylinder Head-To-Cylinder Block Surface
Courtesy of FORD MOTOR CO.

2. Install the engine front cover with the engine front cover gasket on the front cover-to-cylinder block dowel and loosely install the bolts.

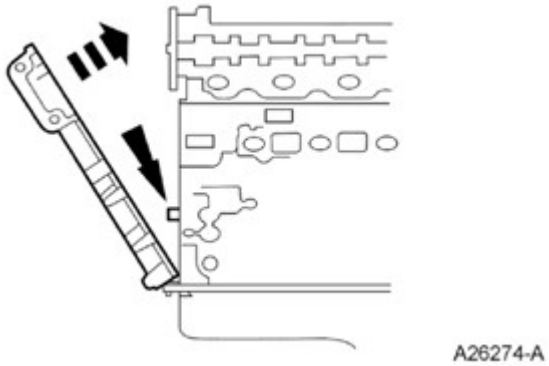

Fig. 79: Installing Engine Front Cover With Engine Front Cover Gasket
Courtesy of FORD MOTOR CO.

3. Tighten the 15 engine front cover fasteners in 3 stages, in the sequence shown in illustration.
   - Stage 1: Tighten fasteners 1 through 5 to 25 Nm (18 lb-ft).
   - Stage 2: Tighten fasteners 6 and 7 to 48 Nm (35 lb-ft).
   - Stage 3: Tighten fasteners 8 through 15 to 48 Nm (35 lb-ft).

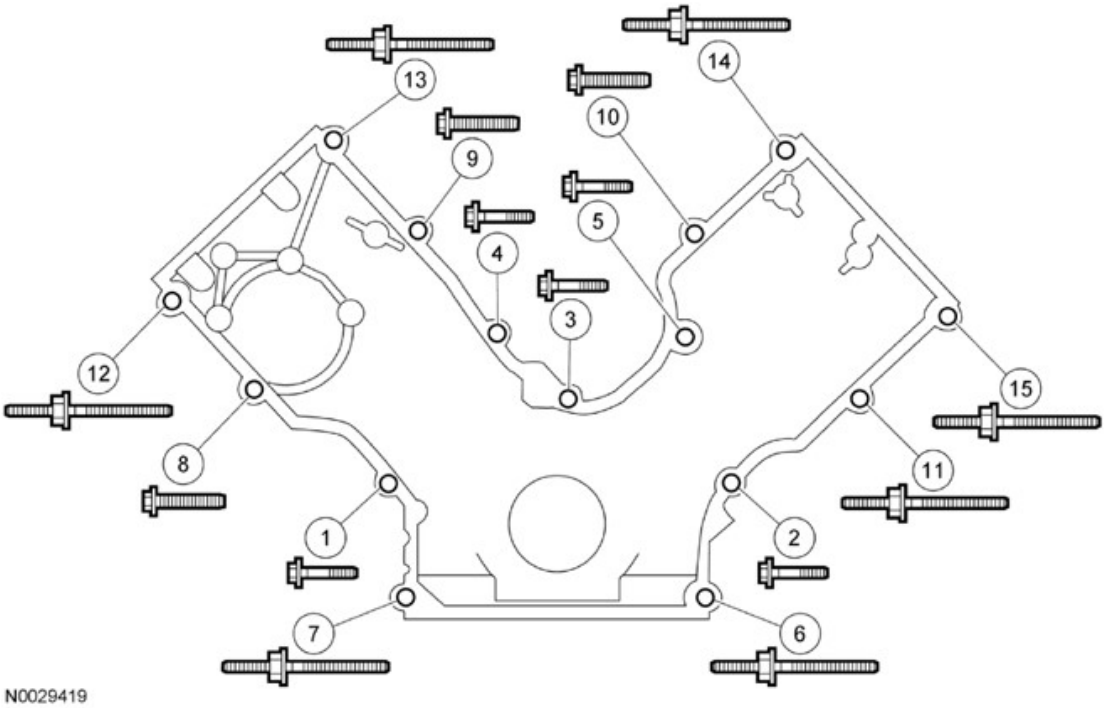

Fig. 80: Identifying Engine Front Cover Fasteners Tightening Sequence
Courtesy of FORD MOTOR CO.

Item	Part Number	Description
1	N806177	Bolt, Hex Flange Head Pilot, M8 x 1.25 x 53
2	N806177	Bolt, Hex Flange Head Pilot, M8 x 1.25 x 53
3	N806177	Bolt, Hex Flange Head Pilot, M8 x 1.25 x 53
4	N806177	Bolt, Hex Flange Head Pilot, M8 x 1.25 x 53
5	N806177	Bolt, Hex Flange Head Pilot, M8 x 1.25 x 53
6	N808529	Stud, Hex Head Pilot, M10 x 1.5 x 59 - M10 x 1.5 x 30
7	N808529	Stud, Hex Head Pilot, M10 x 1.5 x 59 - M10 x 1.5 x 30
8	N808142	Screw and Washer,

		Hex Pilot, M10 x 1.5 x 57.5
9	N808142	Screw and Washer, Hex Pilot, M10 x 1.5 x 57.5
10	N808142	Screw and Washer, Hex Pilot, M10 x 1.5 x 57.5
11	N808140	Stud and Washer, Hex Head Pilot, M10 x 1.5 x 68 - M8 x 1.25 x 27
12	N808140	Stud and Washer, Hex Head Pilot, M10 x 1.5 x 68 - M8 x 1.25 x 27
13	N808140	Stud and Washer, Hex Head Pilot, M10 x 1.5 x 68 - M8 x 1.25 x 27
14	N808140	Stud and Washer, Hex Head Pilot, M10 x 1.5 x 68 - M8 x 1.25 x 27
15	N808140	Stud and Washer, Hex Head Pilot, M10 x 1.5 x 68 - M8 x 1.25 x 27

4. Loosely install the 4 oil pan bolts, then tighten the bolts in 2 stages, in the sequence shown in illustration.
   - Stage 1: Tighten to 20 Nm (177 lb-in).
   - Stage 2: Tighten an additional 60 degrees.

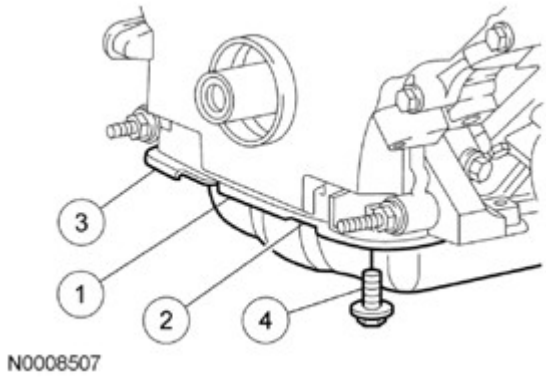

Fig. 81: Identifying Tightening Sequence Of Oil Pan Bolts

Courtesy of FORD MOTOR CO.

5. Lubricate the engine front cover and the crankshaft front seal inner lip with clean engine oil.

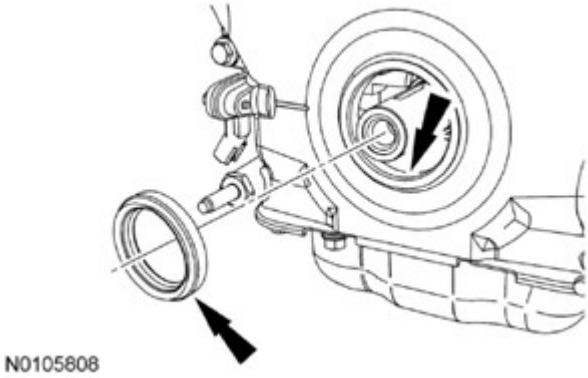

Fig. 82: Locating Crankshaft Front Seal Inner Lip
Courtesy of FORD MOTOR CO.

6. Using the Crankshaft Front Oil Seal Installer, the Crankshaft Vibration Damper Installer and the Front Cover Oil Seal Installer, install the new crankshaft front seal into the engine front cover.

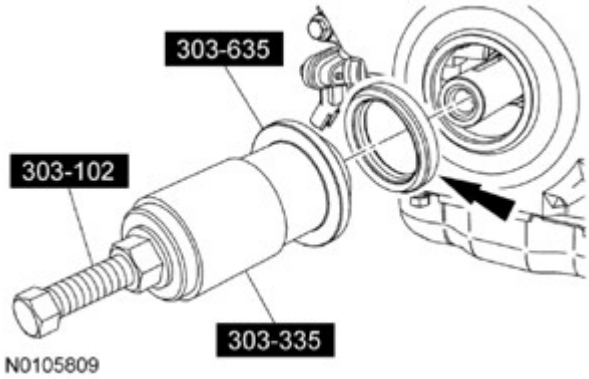

Fig. 83: Installing Crankshaft Front Seal Using Crankshaft Front Oil Seal Installer
Courtesy of FORD MOTOR CO.

NOTE: If not secured within 4 minutes, the sealant must be removed and the sealing area cleaned with metal surface prep and silicone gasket remover. Allow to dry until there is no sign of wetness, or 4 minutes, whichever is longer. Failure to follow this procedure can cause future oil leakage.

7. Apply silicone gasket and sealant to the Woodruff key slot in the crankshaft pulley.

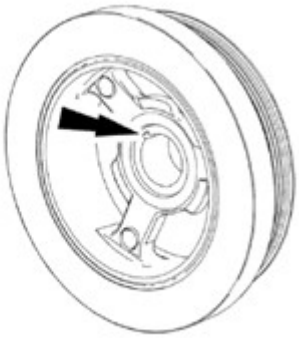

Fig. 84: Locating Silicone Gasket And Sealant Applying Area To Woodruff Key Slot In Crankshaft Pulley
Courtesy of FORD MOTOR CO.

8. Lubricate the crankshaft pulley sealing area with clean engine oil prior to installation.

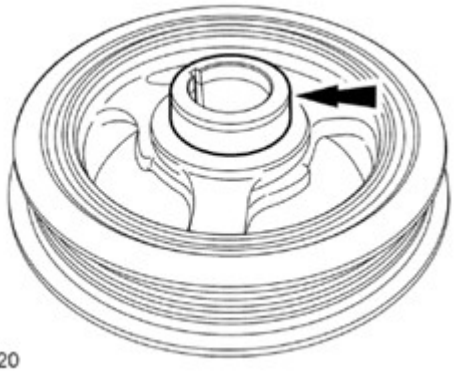

Fig. 85: Locating Crankshaft Pulley Sealing Area
Courtesy of FORD MOTOR CO.

9. Using the Crankshaft Vibration Damper Installer, install the crankshaft pulley.

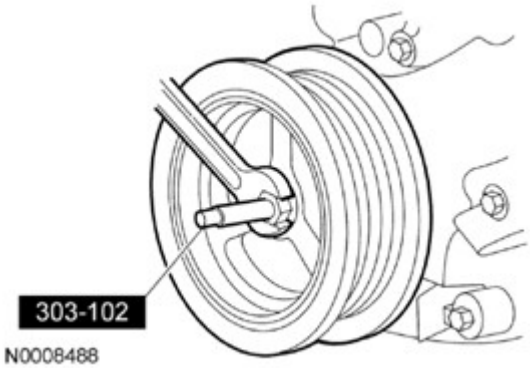

Fig. 86: Installing Crankshaft Pulley Using Crankshaft Vibration Damper Installer
Courtesy of FORD MOTOR CO.

10. Using a new crankshaft pulley bolt, install the crankshaft pulley bolt and washer. Using the Strap Wrench to hold the crankshaft pulley, tighten the bolt in 4 stages:
    - Stage 1: Tighten to 90 Nm (66 lb-ft).
    - Stage 2: Loosen one full turn.
    - Stage 3: Tighten to 50 Nm (37 lb-ft).
    - Stage 4: Tighten an additional 90 degrees.

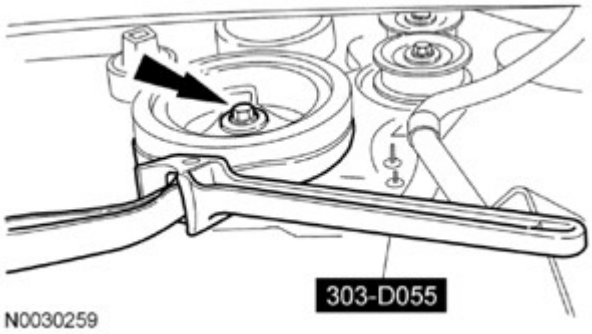

Fig. 87: Removing Crankshaft Pulley Bolt And Washer Using Strap Wrench
Courtesy of FORD MOTOR CO.

11. Connect the CMP sensor electrical connector.
12. Position the transmission cooler tube support bracket and the starter wiring harness support bracket and install the nut.
    - Tighten to 28 Nm (21 lb-ft).

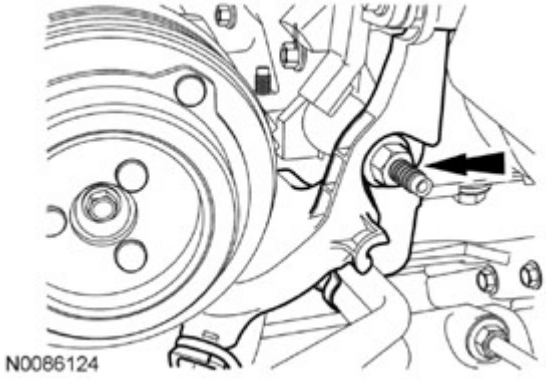

Fig. 88: Locating Transmission Cooler Tube Support Bracket Nut
Courtesy of FORD MOTOR CO.

13. Position the power steering pump and install the 3 bolts.
    - Tighten to 25 Nm (18 lb-ft).

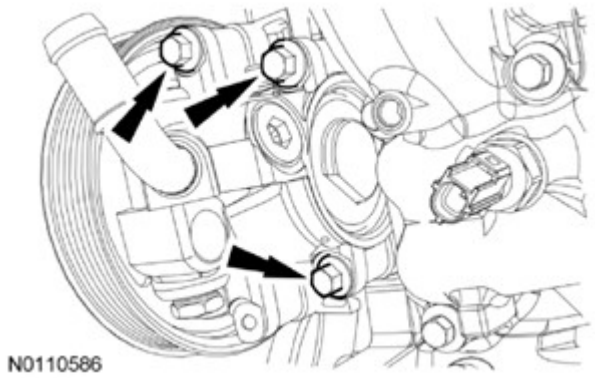

Fig. 89: Locating Power Steering Pump Bolts
Courtesy of FORD MOTOR CO.

14. Connect the A/C compressor electrical connector.
15. Connect the CKP sensor electrical connector.
16. Position the accessory drive belt idler pulley and install the bolt.
    - Tighten to 25 Nm (18 lb-ft).
17. Position the coolant pump pulley and install the 4 bolts.
    - Tighten to 25 Nm (18 lb-ft).
18. Rotate the tensioner clockwise and install the accessory drive belt.

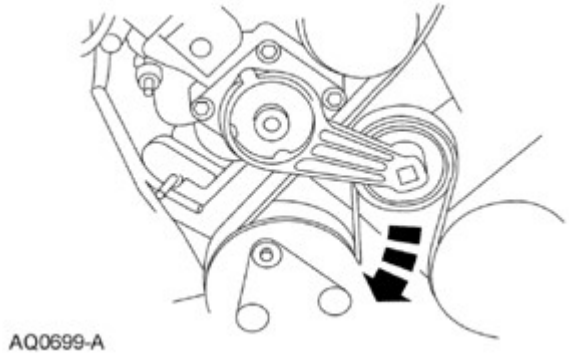

Fig. 90: Rotating Tensioner Clockwise
Courtesy of FORD MOTOR CO.

19. Position the RH radio interference capacitor and install the nut.
    - Tighten to 25 Nm (18 lb-ft).
20. Position the LH radio interference capacitor and install the nut.
    - Tighten to 25 Nm (18 lb-ft).
21. Install the RH and LH valve covers. For additional information, refer to **VALVE COVER - LH** or **VALVE COVER - RH**.
22. Fill the engine with clean engine oil.
23. Install the radiator. For additional information, refer to **ENGINE COOLING** .

TIMING DRIVE COMPONENTS

SPECIAL TOOLS

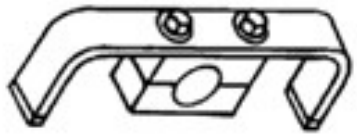	Aligner, Camshaft Position 303-557 (T96T-6256-B)
 ST2565-A	Alignment Set, Camshaft 303-S568 (T96T-6256-AR)
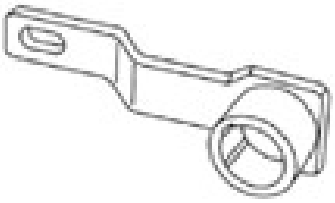 ST1335-A	Holding Tool, Crankshaft 303-448 (T93P-6303-A)

GENERAL EQUIPMENT

Hydraulic Chain Tensioner Retaining Clip 1L3Z-6P250-AA

Removal

NOTE: Since the engine is not free-wheeling, the timing procedures must be followed exactly or piston and valve damage can occur.

1. Remove the engine front cover. For additional information, refer to **ENGINE FRONT COVER**.
2. Remove the crankshaft sensor ring from the crankshaft.

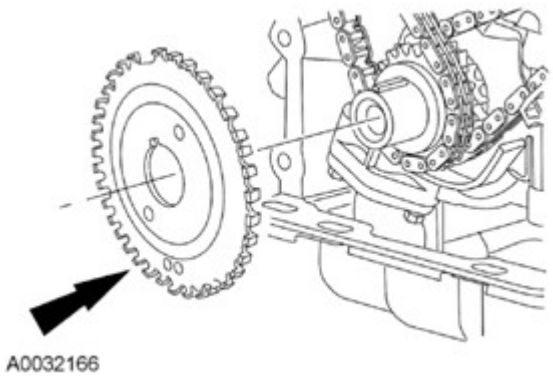

Fig. 91: Locating Crankshaft Sensor Ring
Courtesy of FORD MOTOR CO.

NOTE: Unless otherwise instructed, at no time when the timing chains are removed and the cylinder heads are installed is the crankshaft or camshaft to be rotated. Severe piston and valve damage will occur.

3. Position the crankshaft with the keyway at the 12 o'clock position.

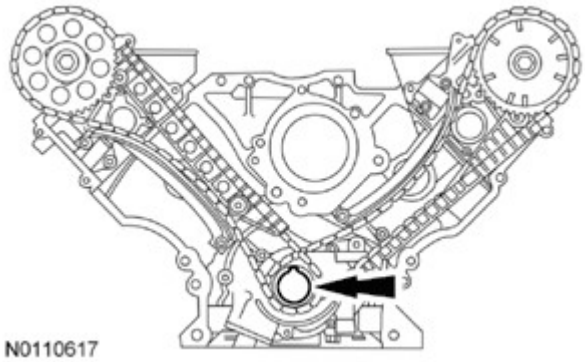

Fig. 92: Locating Crankshaft With Keyway At 12 O'Clock Position
Courtesy of FORD MOTOR CO.

4. Install and fully tighten the Camshaft Position Aligners on both camshafts.

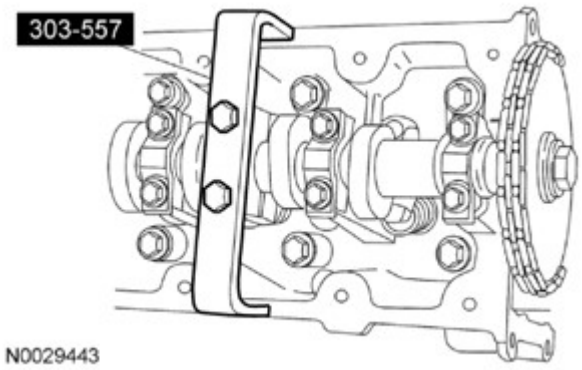

Fig. 93: Installing/Removing Camshaft Position Aligners On Camshafts
Courtesy of FORD MOTOR CO.

NOTE: **If one or both of the tensioner mounting bolts are loosened or removed, the tensioner-sealing bead must be inspected for seal integrity. If cracks, tears or separation from the tensioner body or permanent compression of the seal bead is observed, install a new tensioner or engine damage may occur.**

5. Remove the timing chain tensioning system from both timing chains.

   1. Remove the 4 bolts.
   2. Remove the 2 timing chain tensioners.
   3. Remove the 2 timing chain tensioner arms.

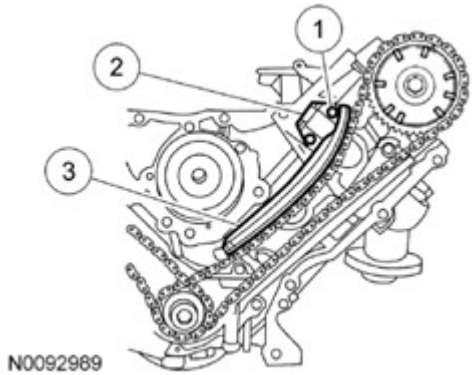

Fig. 94: Identifying Timing Chain Tensioner Arms, Timing Chain Tensioners And Bolts
Courtesy of FORD MOTOR CO.

6. Remove the 2 timing chains and crankshaft sprocket.

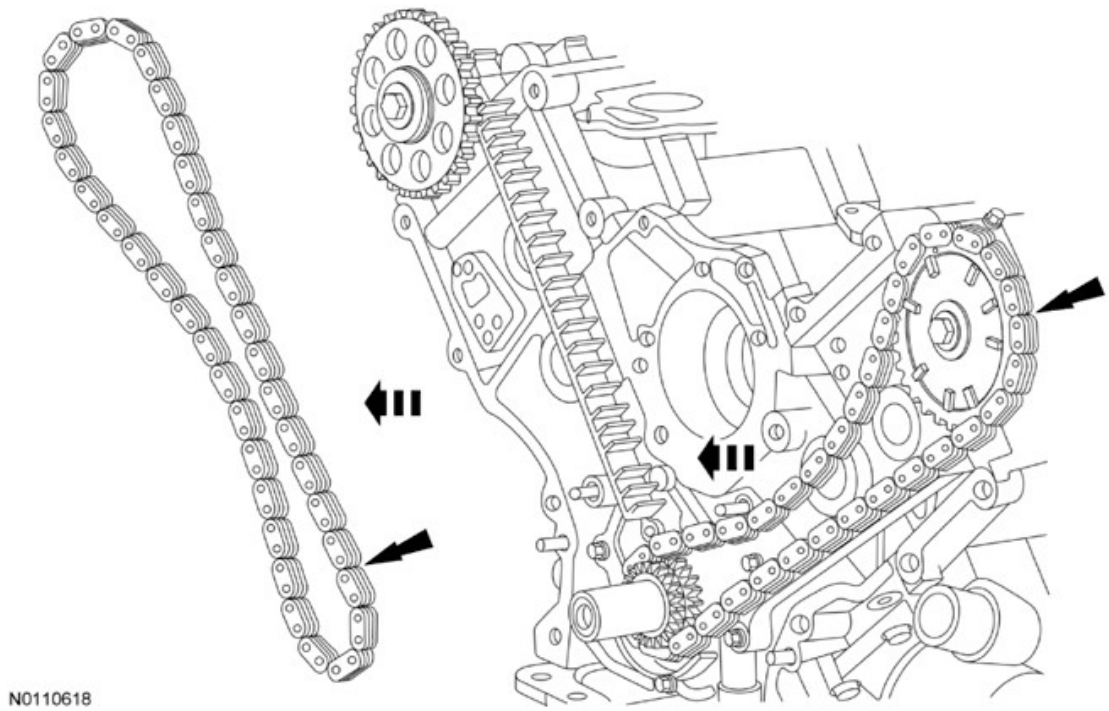

Fig. 95: Removing Timing Chains And Crankshaft Sprocket
Courtesy of FORD MOTOR CO.

7. Remove the timing chain guides.
    1. Remove the 2 bolts.
    2. Remove the LH timing chain guide.
    3. Remove the 2 bolts.
    4. Remove the RH timing chain guide.

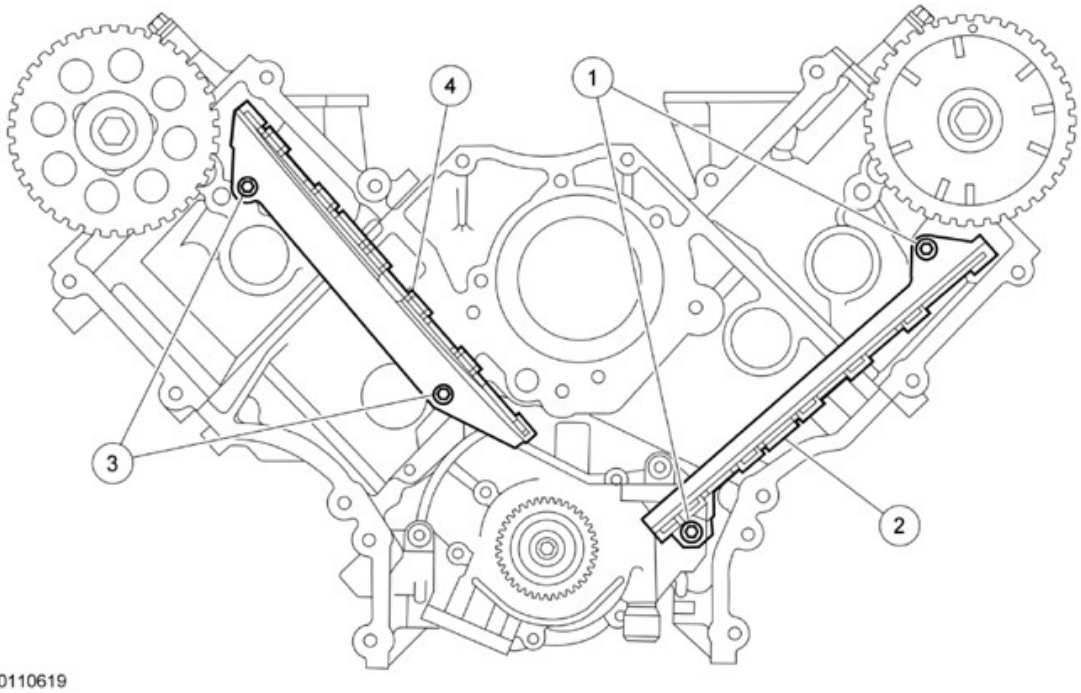

Fig. 96: Identifying Timing Chain Guides And Bolts Removing Sequence
Courtesy of FORD MOTOR CO.

Installation

1. **NOTE: Timing chain procedures must be followed exactly or damage to valves and pistons will result.**

   NOTE: Prior to installation, inspect the tensioner-sealing bead for seal integrity. If cracks, tears, separation from the tensioner body or permanent compression of the seal bead is observed, install a new tensioner or engine damage may occur.

   Compress the tensioner plunger, using a vise.

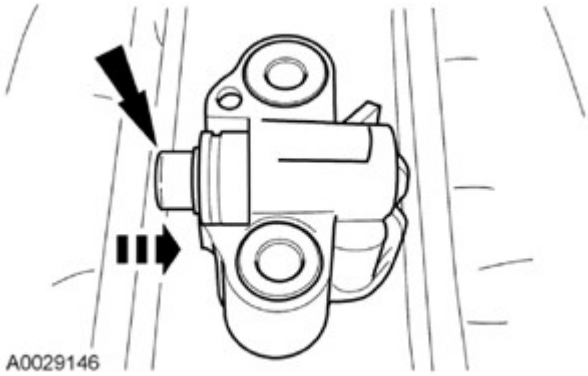

Fig. 97: Compressing Tensioner Plunger Using Vise
Courtesy of FORD MOTOR CO.

2. Install a retaining clip on the tensioner to hold the plunger in during installation.

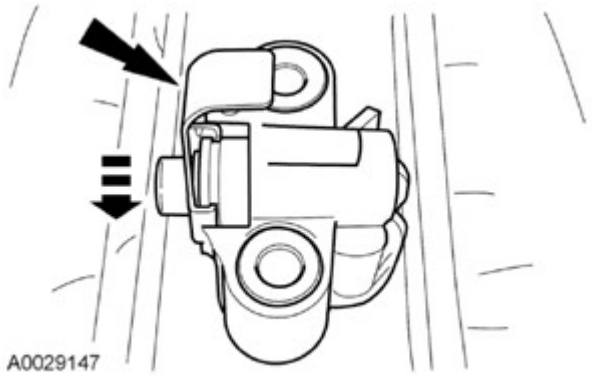

Fig. 98: Installing Retaining Clip On Tensioner
Courtesy of FORD MOTOR CO.

3. If the blue links are not visible, mark 2 links on one end and 1 link on the other end, and use as timing marks.

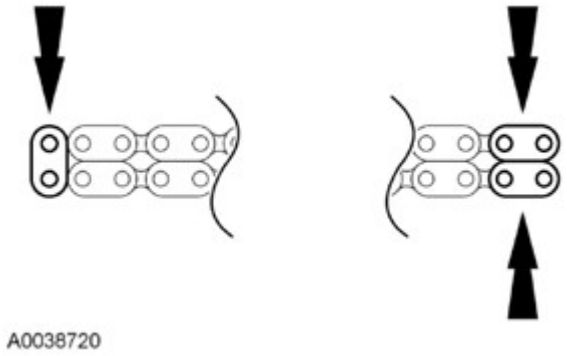

Fig. 99: Locating Copper Link Timing Marks
Courtesy of FORD MOTOR CO.

4. Install the timing chain guides.
    1. Position the LH timing chain guide.
    2. Install the 2 LH bolts.
        - Tighten to 10 Nm (89 lb-in).
    3. Position the RH timing chain guide.
    4. Install the 2 RH bolts.
        - Tighten to 10 Nm (89 lb-in).

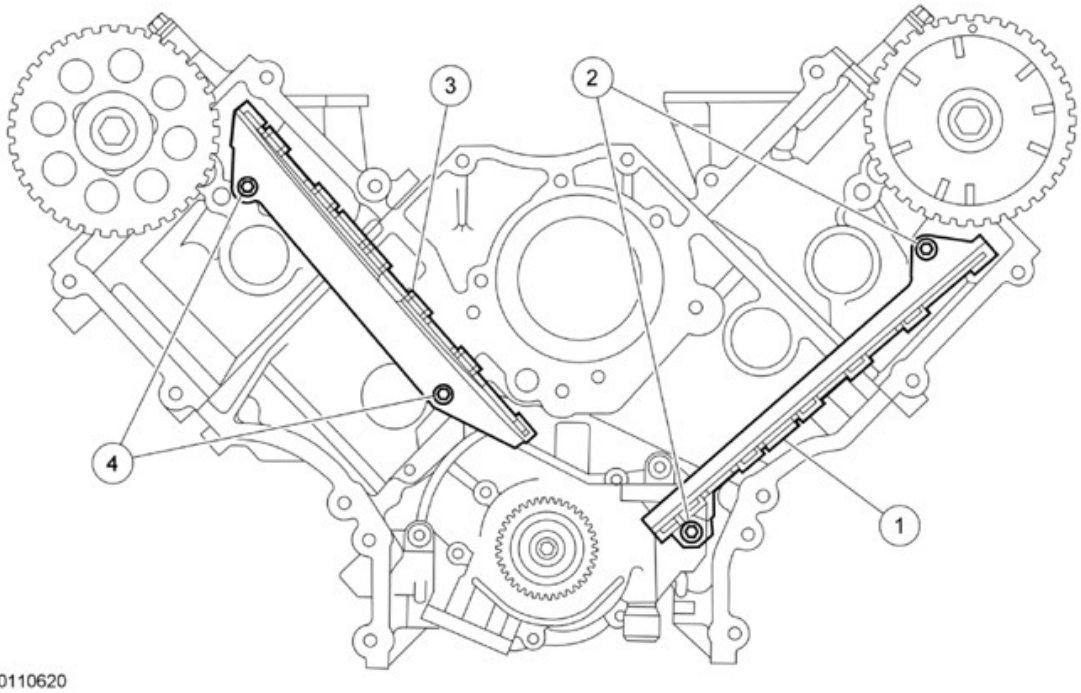

Fig. 100: Identifying Timing Chain Guides And Bolts Installing Sequence
Courtesy of FORD MOTOR CO.

NOTE: Do not turn the engine over with the Camshaft Alignment Set installed or damage to the camshaft sprocket or the bolt can occur.

5. Install the Camshaft Alignment Set.

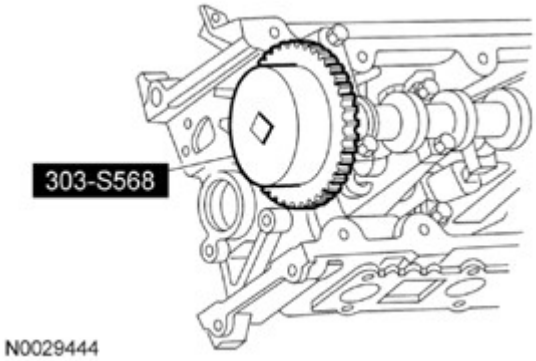

Fig. 101: Installing/Removing Camshaft Alignment Set
Courtesy of FORD MOTOR CO.

NOTE: Slightly loosen the Camshaft Position Aligner tools to allow slight camshaft movement.

6. Pre-position the camshafts.

1. Rotate the LH camshaft until the timing mark is approximately at 12 o'clock.
   - Tighten the Camshaft Position Aligner tools to maintain camshaft pre-positioning.
2. Rotate the RH camshaft until the timing mark is approximately at 11 o'clock.
   - Tighten the Camshaft Position Aligner tools to maintain camshaft pre-positioning.

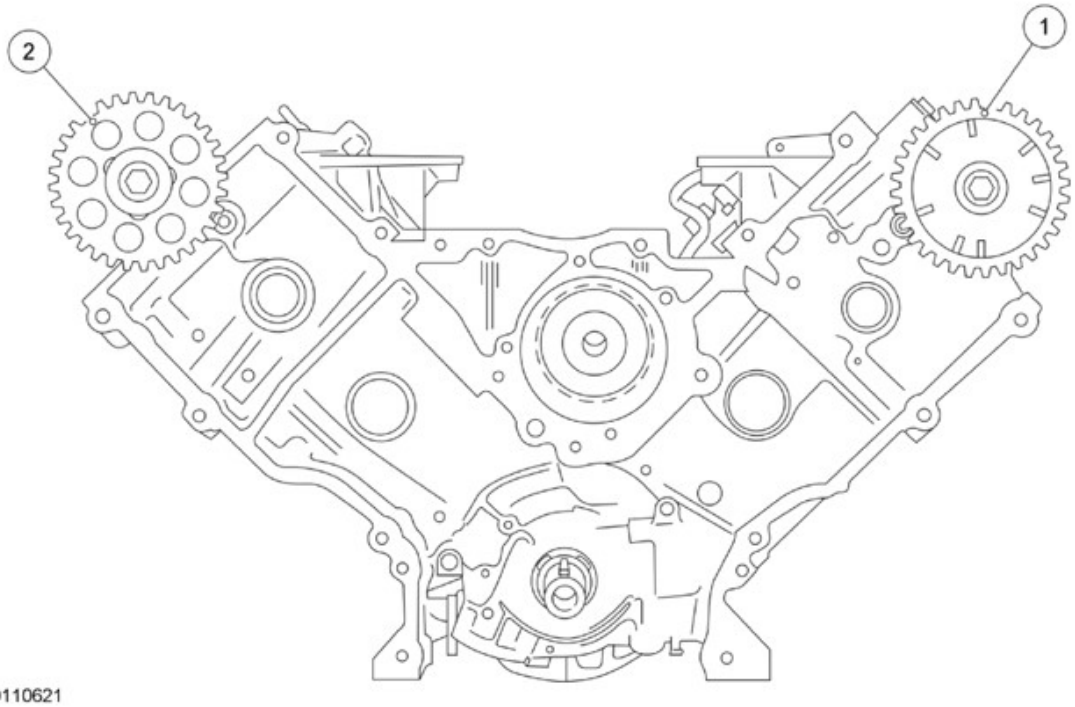

Fig. 102: Identifying LH Camshaft Timing Mark And RH Camshaft Timing Mark
Courtesy of FORD MOTOR CO.

7.

NOTE: **Unless otherwise instructed, at no time when the timing chains are removed and the cylinder heads are installed is the crankshaft or camshaft to be rotated. Severe piston and valve damage will occur.**

NOTE: **Rotate the crankshaft counterclockwise only. Do not rotate past position shown in illustration or severe piston and valve damage can occur.**

NOTE: **The No. 1 cylinder is at Top Dead Center (TDC) when the stud on the engine block fits into the slot in the handle of the Crankshaft Holding Tool.**

Position the crankshaft so the No. 1 cylinder is at TDC with the Crankshaft Holding Tool.

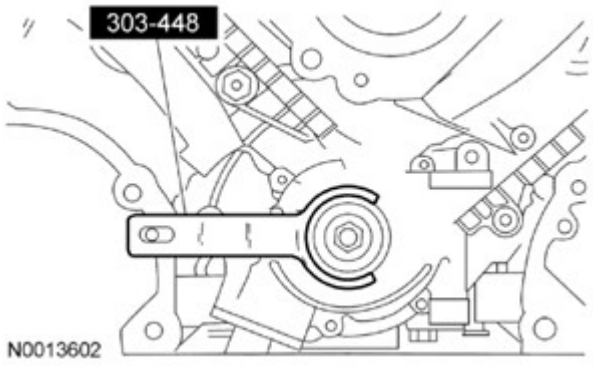

Fig. 103: Positioning Crankshaft Using Crankshaft Holding Tool
Courtesy of FORD MOTOR CO.

8. Install the crankshaft sprocket, making sure the flange faces forward.

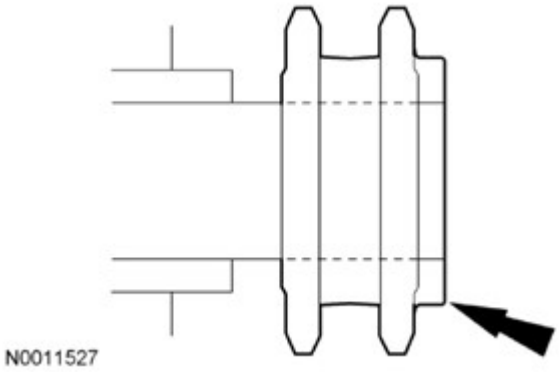

Fig. 104: Locating Crankshaft Sprocket Flange Faces Forward
Courtesy of FORD MOTOR CO.

9. Position the lower end of the LH (inner) timing chain on the crankshaft sprocket, aligning the timing mark on the outer flange of the crankshaft sprocket with the single blue (marked) link on the chain.

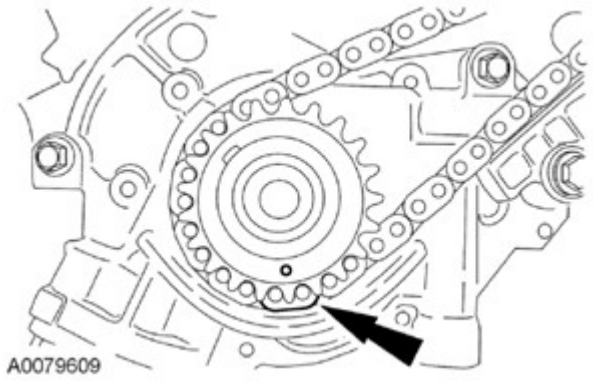

Fig. 105: Aligning Timing Mark On Outer Flange Of Crankshaft Sprocket With Single Copper Link On Chain
Courtesy of FORD MOTOR CO.

10. **NOTE: Make sure the upper half of the timing chain is below the tensioner arm dowel.**

NOTE: If necessary, use the Camshaft Alignment Set to adjust the camshaft sprocket slightly to obtain timing mark alignment.

Position the timing chain on the camshaft sprocket with the camshaft sprocket timing mark positioned between the 2 blue (marked) chain links.

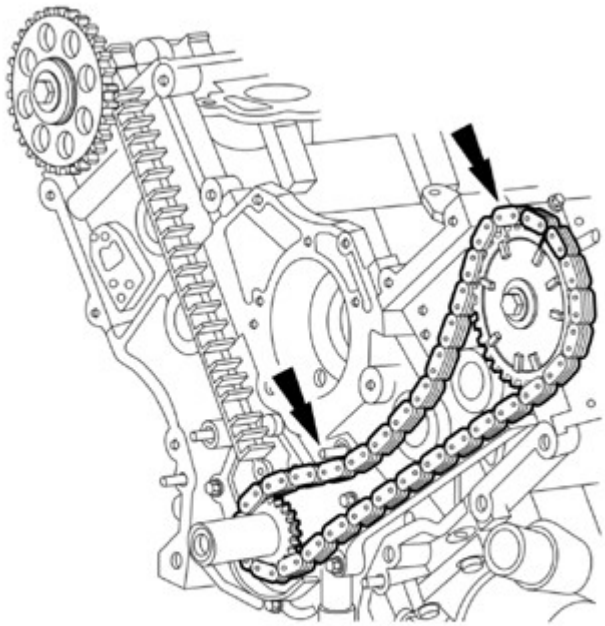

N0110622

Fig. 106: Locating Camshaft Sprocket Timing Mark
Courtesy of FORD MOTOR CO.

11. **NOTE: The LH timing chain tensioner arm has a bump near the dowel hole for identification.**

Position the LH timing chain tensioner arm on the dowel pin and install the LH timing chain tensioner and the 2 bolts.

- Tighten to 25 Nm (18 lb-ft).

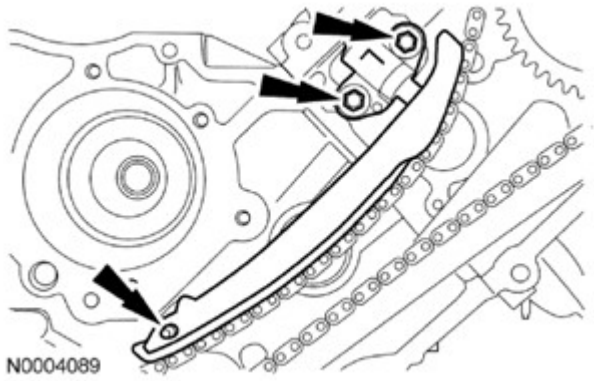

Fig. 107: Locating LH Timing Chain Tensioner And Bolts
Courtesy of FORD MOTOR CO.

12. Remove the retaining clip from the LH timing chain tensioner.

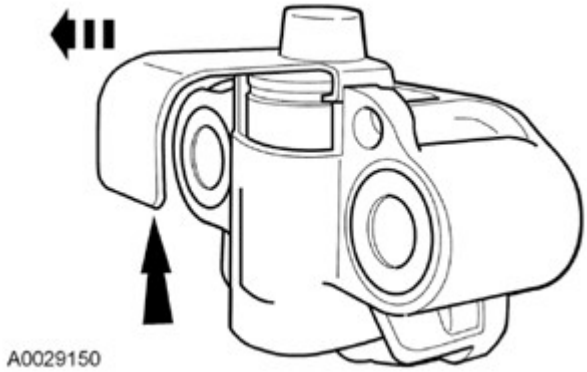

Fig. 108: Removing Retaining Clip From LH Timing Chain Tensioner
Courtesy of FORD MOTOR CO.

NOTE: The lower half of the timing chain must be positioned above the tensioner arm dowel.

13. Position the lower end of the RH (outer) timing chain on the crankshaft sprocket, aligning the timing mark on the sprocket with the single blue (marked) link on the timing chain.

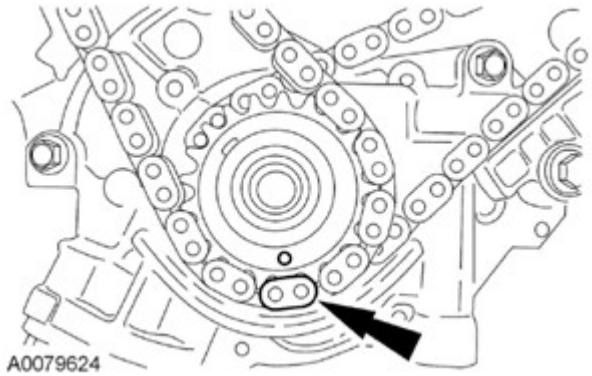

Fig. 109: Locating Timing Mark On Crankshaft Sprocket With Single Copper Chain Link
Courtesy of FORD MOTOR CO.

NOTE: If necessary, use the Camshaft Alignment Set to adjust the camshaft sprocket slightly to obtain timing mark alignment.

14. Position the RH timing chain on the camshaft sprocket. Make sure the camshaft sprocket timing mark is positioned between the 2 blue (marked) chain links.

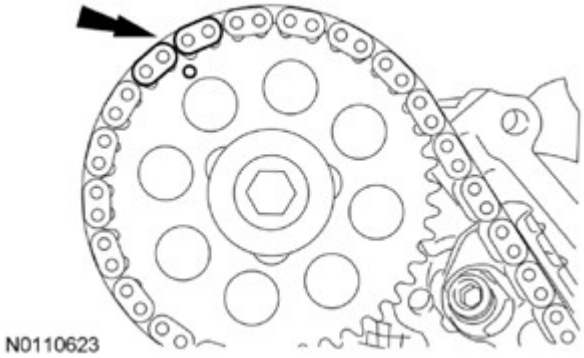

Fig. 110: Locating RH Camshaft Sprocket Timing Mark
Courtesy of FORD MOTOR CO.

15. Position the RH timing chain tensioner arm on the dowel pin and install the RH timing chain tensioner and the 2 bolts.
    - Tighten to 25 Nm (18 lb-ft).

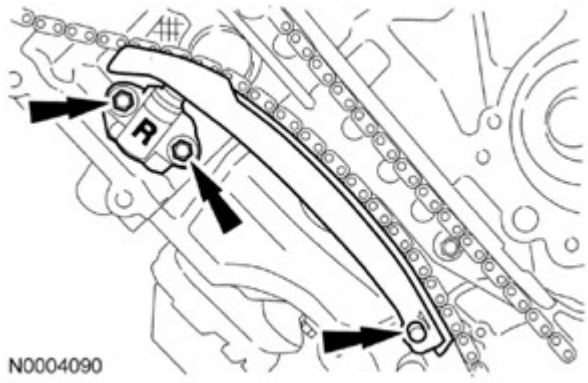

Fig. 111: Locating RH Timing Chain Tensioner And Tensioner Arm Bolts
Courtesy of FORD MOTOR CO.

16. Remove the retaining clip from the RH timing chain tensioner.

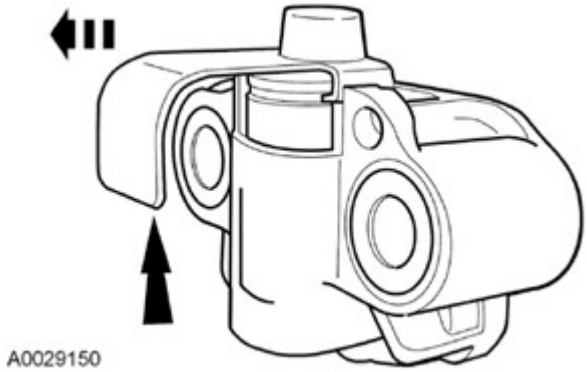

Fig. 112: Removing Retaining Clip From LH Timing Chain Tensioner
Courtesy of FORD MOTOR CO.

17. Remove the Camshaft Alignment Set.

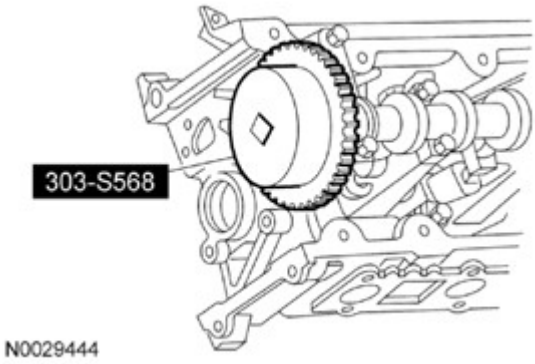

Fig. 113: Installing/Removing Camshaft Alignment Set
Courtesy of FORD MOTOR CO.

18. As a post-check, verify correct alignment of all timing marks.

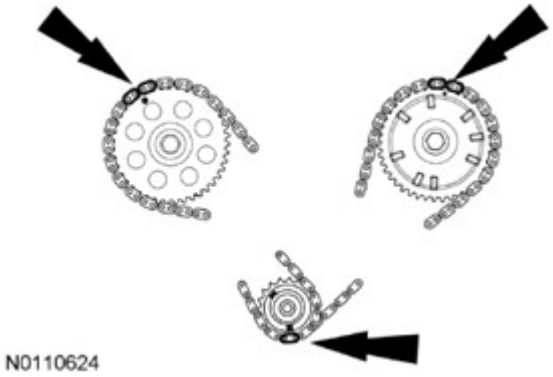

Fig. 114: Locating Timing Marks
Courtesy of FORD MOTOR CO.

19. Remove the Camshaft Position Aligner.

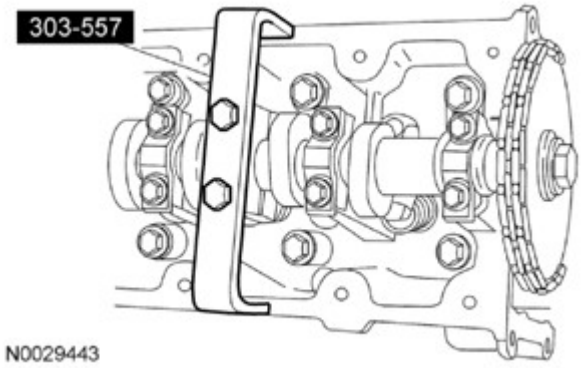

Fig. 115: Installing/Removing Camshaft Position Aligners On Camshafts
Courtesy of FORD MOTOR CO.

20. Position the crankshaft sensor ring on the crankshaft.

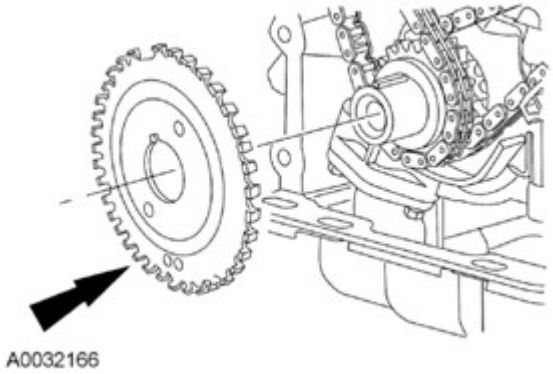

Fig. 116: Locating Crankshaft Sensor Ring

Courtesy of FORD MOTOR CO.

21. Install the engine front cover. For additional information, refer to **ENGINE FRONT COVER**.

VALVE TRAIN COMPONENTS - EXPLODED VIEW

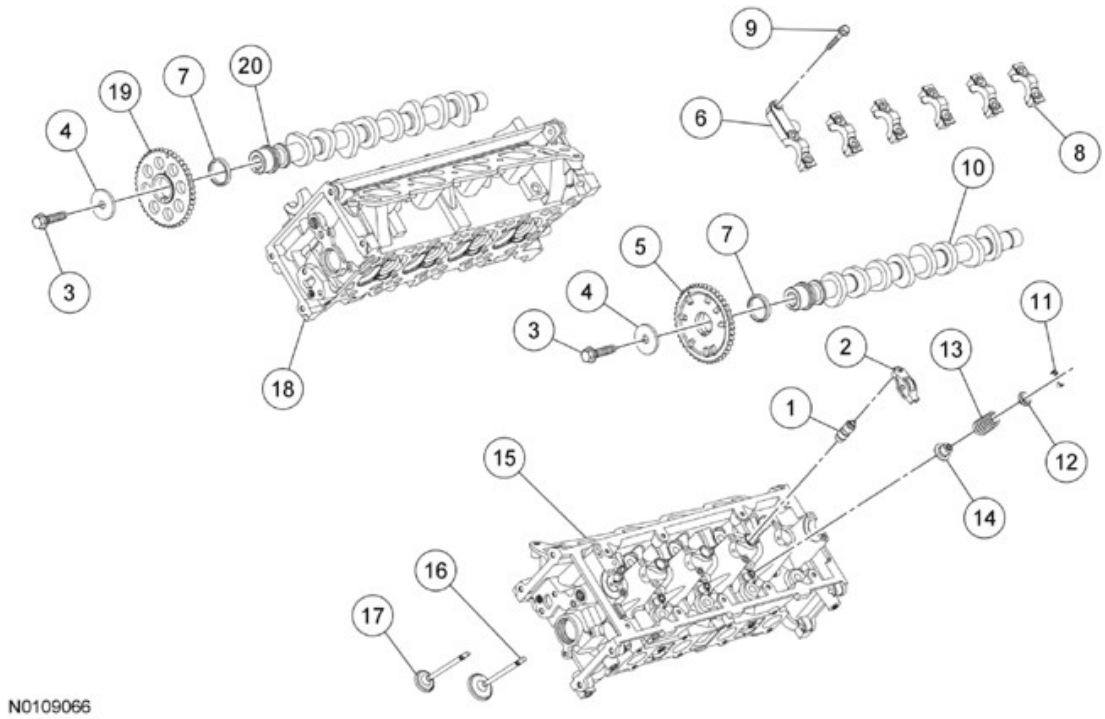

Fig. 117: Exploded View Of Valve Train Components
Courtesy of FORD MOTOR CO.

Item	Part Number	Description
1	6C501	Hydraulic lash adjuster (16 required)
2	6529	Roller follower (16 required)
3	W710926	Camshaft sprocket bolt (2 required)
4	N806164	Camshaft sprocket washer (2 required)
5	6256	LH camshaft sprocket
6	6B284	Camshaft bearing cap (2 required)
7	6265	Camshaft sprocket spacer (2 required)
8	6B280	Camshaft bearing cap (10 required)
9	N807834	Camshaft bearing cap bolt (26 required)

10	6A274	LH camshaft
11	6518	Valve spring retainer key (32 required)
12	6514	Valve spring retainer (16 required)
13	6513	Valve spring (16 required)
14	6A517	Valve stem seal (16 required)
15	6049	LH cylinder head
16	6507	Intake valve (8 required)
17	6505	Exhaust valve (8 required)
18	6049	RH cylinder head
19	6256	RH camshaft sprocket
20	6250	RH camshaft

1. For additional information, refer to the appropriate procedures.

CAMSHAFTS

MATERIAL SPECIFICATIONS

Item	Specification
Motorcraft® SAE 5W-20 Premium Synthetic Blend Motor Oil (US); Motorcraft® SAE 5W-20 Super Premium Motor Oil (Canada) XO-5W20-QSP (US); CXO-5W20-LSP12 (Canada)	WSS-M2C945-A

Removal

NOTE: At no time, when the timing chains are removed and the cylinder heads are installed, may the crankshaft or camshaft be rotated. Severe piston and valve damage will occur.

1. Remove the camshaft roller followers. For additional information, refer to **CAMSHAFT ROLLER FOLLOWER**.
2. Remove the timing chains. For additional information, refer to **TIMING DRIVE COMPONENTS**.
3. Remove the bolt, the washer and the camshaft sprocket.
4. Remove the camshaft gear spacer.
5. **NOTE: The camshaft bearing caps must be installed in their original location. Record camshaft bearing cap location.**

   Remove the 13 bolts, the 6 bearing caps and the camshaft.

6. Clean and inspect the camshaft bearing caps.
   - The front bearing cap contains an oil flow restriction groove. Make sure the groove is free of foreign material.

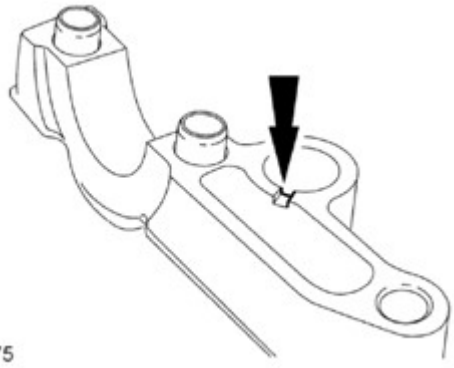

Fig. 118: Locating Oil Flow Restriction Groove
Courtesy of FORD MOTOR CO.

Installation

1. Lubricate the camshaft journals with clean engine oil.

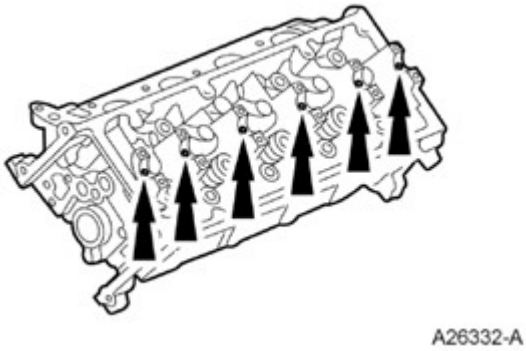

Fig. 119: Locating Camshaft Bearing Caps
Courtesy of FORD MOTOR CO.

2. Install the camshaft and the 6 camshaft bearing caps in their original locations.
   - Lubricate the camshaft bearing caps with clean engine oil.
   - Position the 6 camshaft bearing caps.
   - Install the 13 bolts loosely.
3. **NOTE: LH shown in illustration, RH similar.**

   Tighten the 13 bolts in the sequence shown in illustration.

   - Tighten to 10 Nm (89 lb-in).

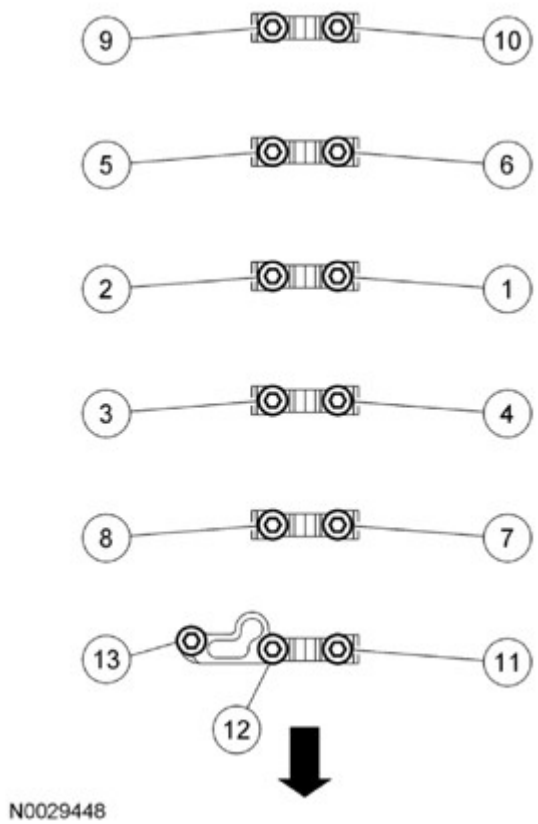

Fig. 120: Identifying Camshaft Bearing Caps Bolts Tightening Sequence
Courtesy of FORD MOTOR CO.

4. Install the camshaft gear spacer.
5. Install the camshaft sprocket, the bolt and the washer. Tighten the bolt in 2 stages.
   - Stage 1: Tighten to 40 Nm (30 lb-ft).
   - Stage 2: Tighten an additional 90 degrees.
6. Install the timing chains. For additional information, refer to **TIMING DRIVE COMPONENTS**.
7. Install the camshaft roller followers. For additional information, refer to **CAMSHAFT ROLLER FOLLOWER**.

CAMSHAFT ROLLER FOLLOWER

SPECIAL TOOLS

	Compressor, Valve Spring 303-567 (T97P-6565-AH)

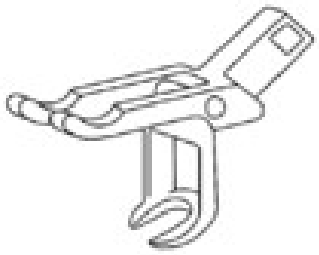 ST1330-A	
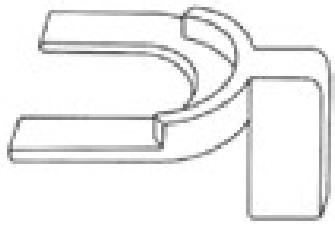 ST1331-A	Compressor Spacer, Valve Spring 303-382 (T91P-6565-AH)

MATERIAL SPECIFICATIONS

Item	Specification
Motorcraft® SAE 5W-20 Premium Synthetic Blend Motor Oil (US); Motorcraft® SAE 5W-20 Super Premium Motor Oil (Canada) XO-5W20-QSP (US); CXO-5W20-LSP12 (Canada)	WSS-M2C945-A

Removal

1. If servicing the RH cylinder valvetrain components, remove the RH valve cover. For additional information, refer to **VALVE COVER - RH**.
2. If servicing the LH cylinder valvetrain components, remove the LH valve cover. For additional information, refer to **VALVE COVER - LH**.
3. Position the piston of the cylinder being repaired at the bottom of the stroke.

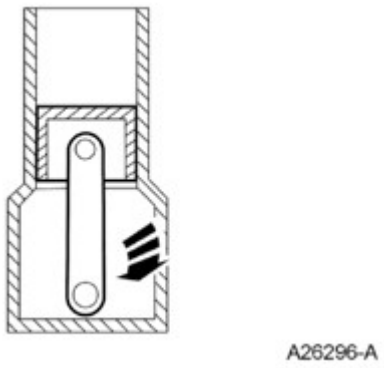

Fig. 121: Positioning Piston At Bottom Of Stroke
Courtesy of FORD MOTOR CO.

4. Install the Valve Spring Compressor Spacer between the valve spring coils to protect the valve stem seal from damage.

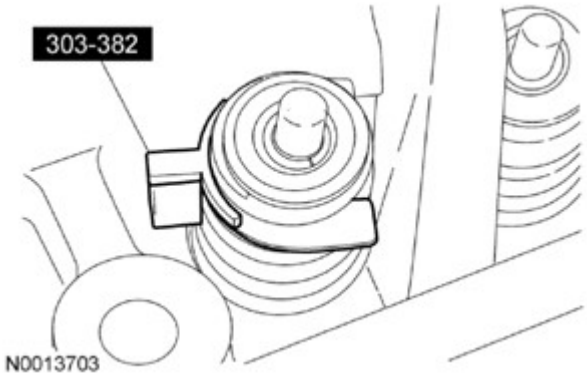

Fig. 122: Installing/Removing Valve Spring Compressor Spacer
Courtesy of FORD MOTOR CO.

5.

NOTE: **The camshaft roller followers must be installed in their original locations. Record the camshaft roller follower locations. Failure to follow these instructions may result in engine damage.**

NOTE: **Do not allow the valve keepers to fall off the valve or the valve may drop into the cylinder. If a valve drops into the cylinder, the cylinder head must be removed. For additional information, refer to ENGINE.**

NOTE: **It may be necessary to push the valve down while compressing the spring.**

Using the Valve Spring Compressor, compress the valve spring and remove the camshaft roller follower.

Fig. 123: Compressing Valve Spring Using Valve Spring Compressor
Courtesy of FORD MOTOR CO.

6. Repeat the previous 3 steps for each of the roller followers being serviced.

Installation

1. Install the Valve Spring Compressor Spacer between the valve spring coils to protect the valve stem seal from damage.

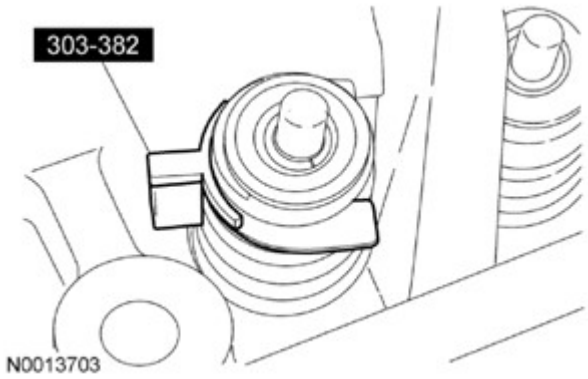

Fig. 124: Installing/Removing Valve Spring Compressor Spacer
Courtesy of FORD MOTOR CO.

2.

NOTE: **The camshaft roller followers must be installed in their original locations. Failure to follow these instructions may result in engine damage.**

NOTE: **Do not allow the valve keepers to fall off the valve or the valve may drop into the cylinder. If a valve drops into the cylinder, the cylinder head must be removed. For additional information, refer to ENGINE.**

NOTE: **It may be necessary to push the valve down while compressing the spring.**

NOTE: **Lubricate the camshaft roller follower with clean engine oil prior to**

installation.

Using the Valve Spring Compressor, compress the valve spring and install the camshaft roller follower.

Fig. 125: Compressing Valve Spring Using Valve Spring Compressor
Courtesy of FORD MOTOR CO.

3. Repeat the previous 3 steps for each camshaft roller follower being serviced.
4. If servicing the RH cylinder valvetrain components, install the RH valve cover. For additional information, refer to **VALVE COVER - RH**.
5. If servicing the LH cylinder valvetrain components, install the LH valve cover. For additional information, refer to **VALVE COVER - LH**.

VALVE SPRINGS

SPECIAL TOOLS

	Compressor, Valve Spring 303-567 (T97P-6565-AH)
	Compressor Spacer, Valve Spring 303-382 (T91P-6565-AH)

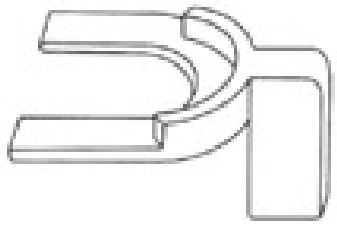 ST1331-A	

MATERIAL SPECIFICATIONS

Item	Specification
Motorcraft® SAE 5W-20 Premium Synthetic Blend Motor Oil (US); Motorcraft® SAE 5W-20 Super Premium Motor Oil (Canada) XO-5W20-QSP (US); CXO-5W20-LSP12 (Canada)	WSS-M2C945-A

Removal and Installation

1. **NOTE: If replacing the valve stems, only the steps not required during removal of the engine are needed to remove the valve cover.**

   If servicing the RH cylinder valvetrain components, remove the RH valve cover. For additional information, refer to **VALVE COVER - RH**.

2. **NOTE: If replacing the valve stems, only the steps not required during removal of the engine are needed to remove the valve cover.**

   If servicing the LH cylinder valvetrain components, remove the LH valve cover. For additional information, refer to **VALVE COVER - LH**.

3. Position the piston of the cylinder being serviced at the bottom of the stroke.
4. Install the Valve Spring Compressor Spacer between the valve spring coils to protect the valve stem seal from damage.

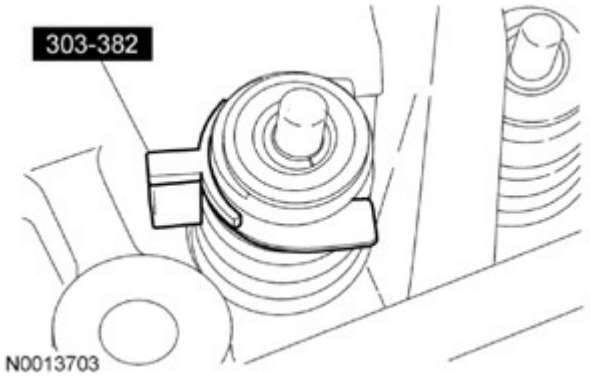

Fig. 126: Installing/Removing Valve Spring Compressor Spacer
Courtesy of FORD MOTOR CO.

5.

NOTE: **The camshaft roller followers must be installed in their original locations. Record the camshaft roller follower locations. Failure to follow these instructions may result in engine damage.**

NOTE: **Do not allow the valve keepers to fall off the valve or the valve may drop into the cylinder. If a valve drops into the cylinder, the cylinder head must be removed. For additional information, refer to ENGINE.**

NOTE: **It may be necessary to push the valve down while compressing the spring.**

Use the Valve Spring Compressor to compress the valve springs and remove the camshaft roller follower.

Fig. 127: Compressing Valve Spring Using Valve Spring Compressor
Courtesy of FORD MOTOR CO.

6. Repeat the previous steps for each of the roller followers being serviced.

7.

NOTE: **Only use hand tools when removing or installing the spark plugs or damage can occur to the cylinder head or spark plug.**

NOTE: Use compressed air to remove any foreign material from the spark plug well before removing the spark plugs.

NOTE: If an original spark plug is used, make sure it is installed in the same cylinder from which it was taken. New spark plugs can be used in any cylinder.

NOTE: Refer to the SPECIFICATIONS for correct spark plug identification.

Remove the spark plug for the cylinder being serviced.

- To install, tighten to 14 Nm (124 lb-in).

8. **NOTE: Carry out the following steps for each cylinder requiring service.**

NOTE: Position the piston of the cylinder to be serviced at the bottom of the stroke.

Use compressed air in the cylinder to hold both valves in position.

9. **NOTE: If a valve drops into the cylinder, the cylinder head must be removed. For additional information, refer to CYLINDER HEAD.**

Using the Valve Spring Compressor, compress the valve spring and remove the valve spring retainer keys.

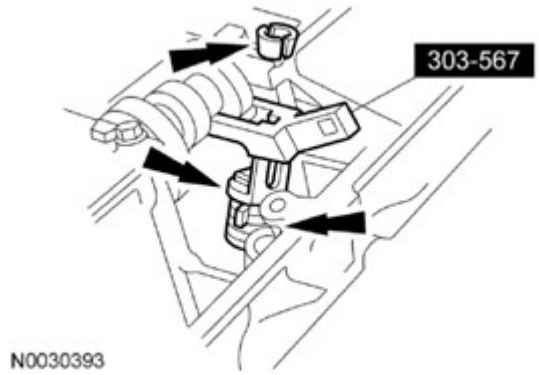

Fig. 128: Removing/Installing Valve Spring Retainer Keys
Courtesy of FORD MOTOR CO.

10. Remove the valve spring retainer and the valve spring.

11. **NOTE: Lubricate the camshaft roller follower with clean engine oil prior to installation.**

To install, reverse the removal procedure.

HYDRAULIC LASH ADJUSTER

MATERIAL SPECIFICATIONS

Item	Specification
Motorcraft® SAE 5W-20 Premium Synthetic Blend Motor Oil (US); Motorcraft® SAE 5W-20 Super Premium Motor Oil (Canada) XO-5W20-QSP (US); CXO-5W20-LSP12 (Canada)	WSS-M2C945-A

Removal

1. Remove the camshaft roller followers. For additional information, refer to **CAMSHAFT ROLLER FOLLOWER**.

NOTE: The hydraulic lash adjusters must be installed in their original locations. Record the hydraulic lash adjuster locations. Failure to follow these instructions may result in engine damage.

2. Remove the 8 hydraulic lash adjusters.

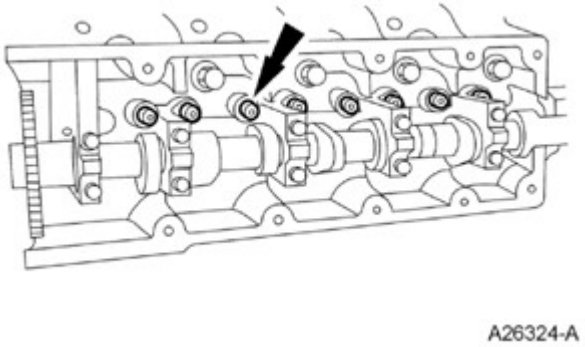

Fig. 129: Locating Hydraulic Lash Adjuster
Courtesy of FORD MOTOR CO.

Installation

NOTE: The hydraulic lash adjusters must be installed in their original locations. Failure to follow these instructions may result in engine damage.

1. **NOTE: Lubricate the hydraulic lash adjusters with clean engine oil prior to installation.**

Install the hydraulic lash adjusters in their original locations.

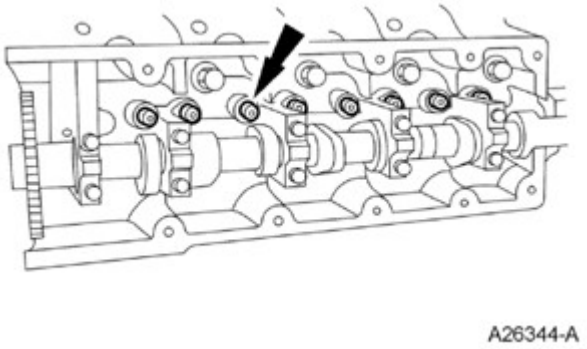

Fig. 130: Locating Hydraulic Lash Adjusters
Courtesy of FORD MOTOR CO.

2. Install the camshaft roller followers. For additional information, refer to **CAMSHAFT ROLLER FOLLOWER**.

EXHAUST MANIFOLD - RH

MATERIAL SPECIFICATIONS

Item	Specification
Motorcraft® Metal Surface Prep ZC-31-A	-

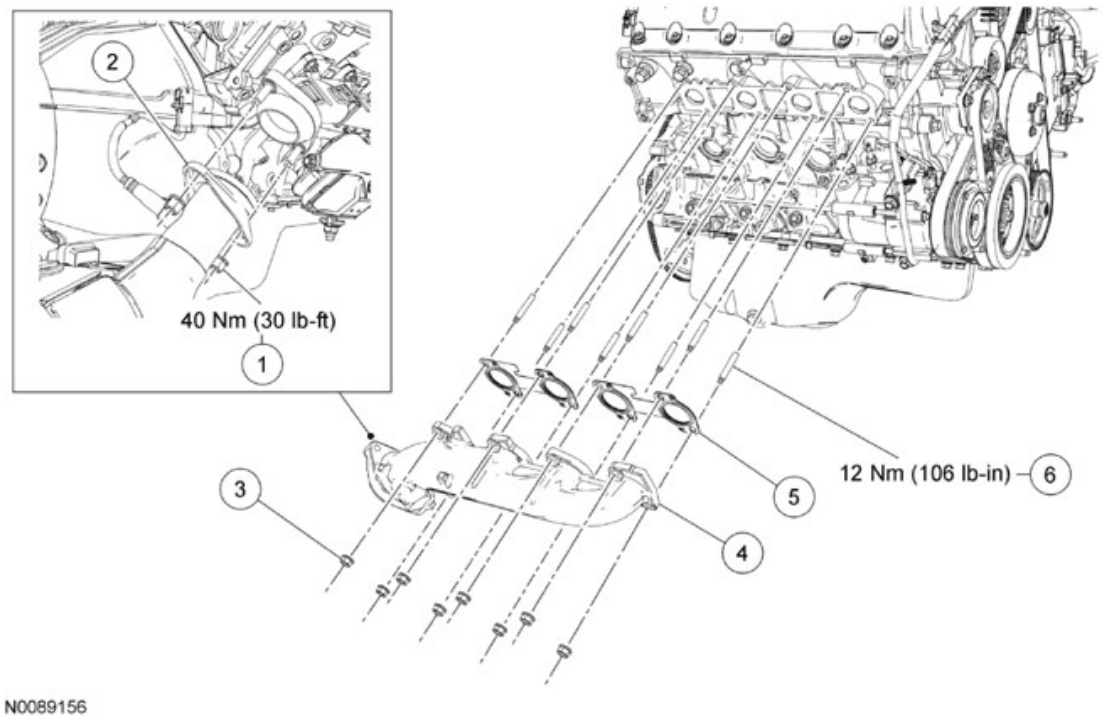

Fig. 131: Exploded View Of Exhaust Manifold With Torque Specifications - RH
Courtesy of FORD MOTOR CO.

Item	Part Number	Description
1	W705443	Exhaust Y-pipe flange nut (2 required)
2	5F250	Exhaust Y-pipe flange
3	W701706	Exhaust manifold nut (8 required)
4	9430	Exhaust manifold
5	9Y431	Exhaust manifold gasket
6	W811313	Exhaust manifold-to-cylinder head stud (8 required)

Removal

1. With the vehicle in NEUTRAL, position it on a hoist. For additional information, refer to **JACKING & LIFTING** .
2. Disconnect the battery ground cable. For additional information, refer to **BATTERY, MOUNTING AND CABLES** .
3. Remove the 4 exhaust Y-pipe flange nuts (2 RH and 2 LH).
   - Discard the flange 4 nuts.

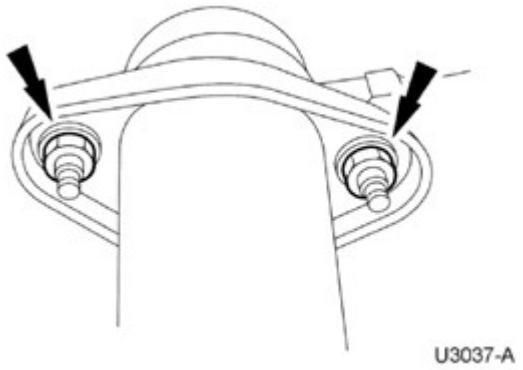

Fig. 132: Locating Exhaust Manifold Flange Nuts
Courtesy of FORD MOTOR CO.

4. Remove and discard the 8 exhaust manifold nuts.

NOTE: **It may be necessary to raise the exhaust Y-pipe for additional clearance when removing the exhaust manifold from the vehicle.**

5. Remove the RH exhaust manifold and discard the gaskets.
6. Remove and discard the 8 exhaust manifold-to-cylinder head studs.
7. Clean and inspect the exhaust manifold. For additional information, refer to **ENGINE SYSTEM - GENERAL INFORMATION** .

Installation

NOTE: **Do not use metal scrapers, wire brushes, power abrasive discs, or other abrasive means to clean the sealing surfaces. These may cause scratches and gouges resulting in leak paths. Use a plastic scraper to clean the sealing surfaces.**

1. Clean the sealing surfaces with metal surface prep.
2. Install 8 new exhaust manifold-to-cylinder head studs.
   - Tighten to 12 Nm (106 lb-in).
3. Using new exhaust manifold gaskets, position the exhaust manifold and install the 8 new nuts in the sequence shown in illustration.
   - Tighten to 25 Nm (18 lb-ft).

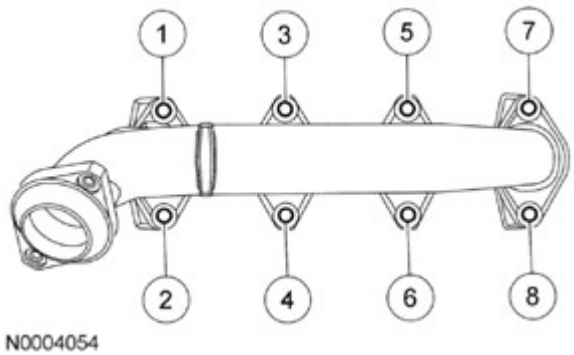

Fig. 133: Identifying Tightening Sequence Of RH Exhaust Manifold Bolts
Courtesy of FORD MOTOR CO.

4. Position the Y-pipe flange and install the 4 new nuts (2 RH and 2 LH).
   - Tighten to 40 Nm (30 lb-ft).

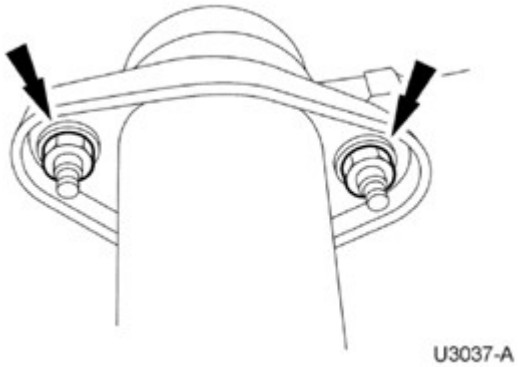

Fig. 134: Locating Exhaust Manifold Flange Nuts
Courtesy of FORD MOTOR CO.

5. Connect the battery ground cable. For additional information, refer to **BATTERY, MOUNTING AND**

CABLES .

EXHAUST MANIFOLD - LH

MATERIAL SPECIFICATIONS

Item	Specification
Motorcraft® Metal Surface Prep ZC-31-A	-

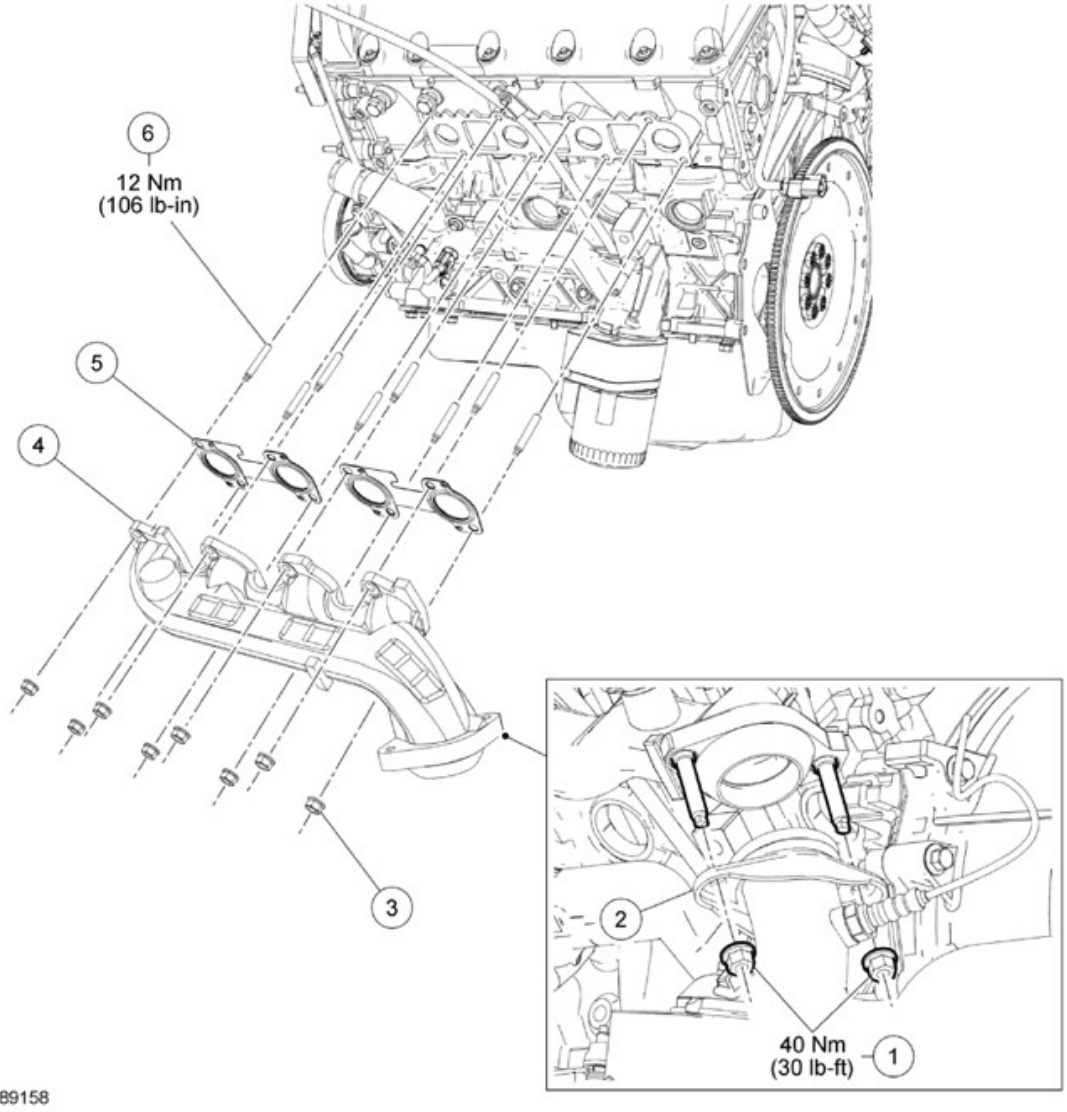

Fig. 135: Exploded View Of Exhaust Manifold With Torque Specifications - LH
Courtesy of FORD MOTOR CO.

Item	Part Number	Description
1	W705443	Exhaust Y-pipe flange nuts (2 required)

2	5F250	Exhaust Y-pipe flange
3	W701706	Exhaust manifold nut (8 required)
4	9431	Exhaust manifold
5	9Y431	Exhaust manifold gasket (2 required)
6	N811313	Exhaust manifold-to-cylinder head stud (8 required)

Removal

1. With the vehicle in NEUTRAL, position it on a hoist. For additional information, refer to **JACKING & LIFTING** .
2. Remove the engine cover. For additional information, refer to **INTERIOR TRIM AND ORNAMENTATION** .
3. Remove the 4 exhaust Y-pipe flange nuts (2 RH and 2 LH).
   - Discard the 4 flange nuts.

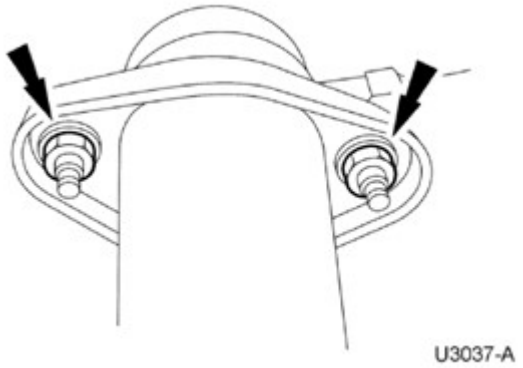

Fig. 136: Locating Exhaust Manifold Flange Nuts
Courtesy of FORD MOTOR CO.

4. Remove the 8 nuts and the exhaust manifold.
   - Discard the 8 exhaust manifold nuts.
5. Remove and discard the exhaust manifold gasket.
   - Clean the sealing surfaces with metal surface prep. Follow the directions on the packaging.
6. Remove and discard the 8 exhaust manifold-to-cylinder head studs.
7. Clean and inspect the exhaust manifold. For additional information, refer to **ENGINE SYSTEM - GENERAL INFORMATION** .

Installation

NOTE: Do not use metal scrapers, wire brushes, power abrasive discs, or other abrasive means to clean the sealing surfaces. These may cause scratches and gouges resulting in leak paths. Use a plastic scraper to clean the

1.

1. **sealing surfaces.**

   Clean the sealing surfaces with metal surface prep.

2. Install 8 new exhaust manifold-to-cylinder head studs.
   - Tighten to 12 Nm (106 lb-in).
3. Using new exhaust manifold gaskets, position the LH exhaust manifold and install the 8 new nuts in the sequence shown in illustration.
   - Tighten to 25 Nm (18 lb-ft).

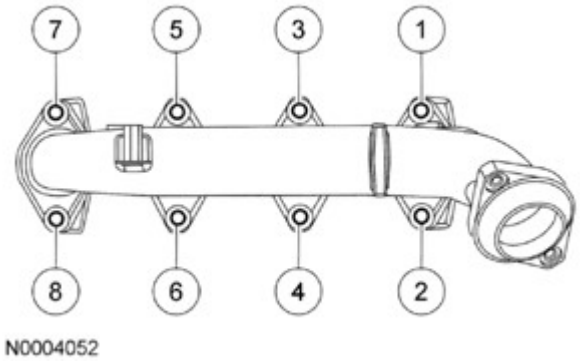

Fig. 137: Identifying Exhaust Manifold Bolts Tightening Sequence
Courtesy of FORD MOTOR CO.

4. Position the Y-pipe flange and install the 2 new RH and 2 new LH nuts.
   - Tighten to 40 Nm (30 lb-ft).
5. Install the engine cover. For additional information, refer to **INTERIOR TRIM AND ORNAMENTATION** .

ENGINE LUBRICATION COMPONENTS - EXPLODED VIEW

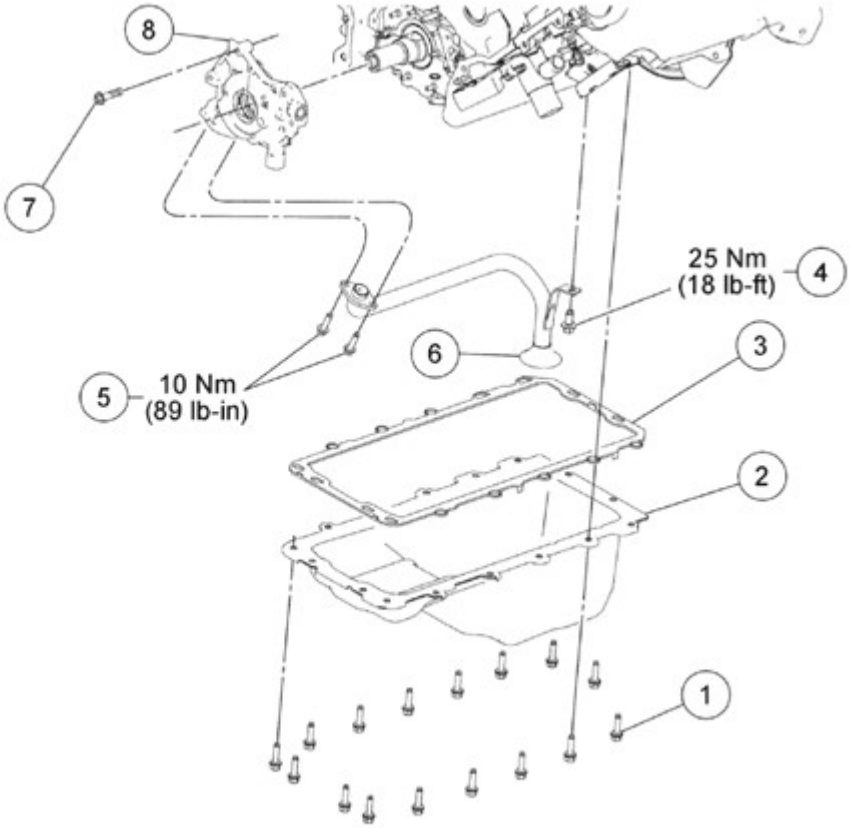

Fig. 138: Exploded View Of Engine Lubrication Components With Torque Specifications
Courtesy of FORD MOTOR CO.

Item	Part Number	Description
1	W701605	Oil pan bolt (16 required)
2	6675	Oil pan
3	6710	Oil pan gasket
4	N605904	Oil pump screen and pickup tube-to-spacer bolt
5	N806155	Oil pump screen and pickup tube bolts (2 required)
6	6622	Oil pump screen and pickup tube
7	N806183	Oil pump bolt (3 required)
8	6621	Oil pump

1. For additional information, refer to the appropriate procedures.

OIL PAN

SPECIAL TOOLS

	Lift Bar Adapter, Modular Engine

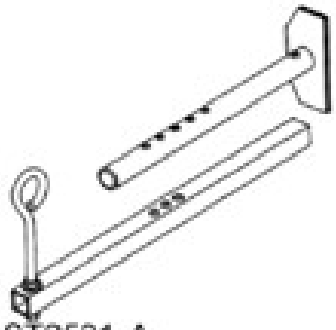 ST2531-A	303-F694
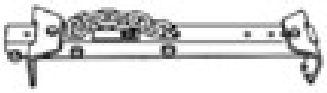 ST1377-A	Lifting Bracket, Engine 303-F047 (014-00073)
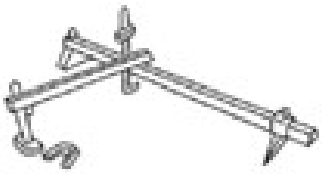 ST2176-B	Support Bar, Engine 303-F070

MATERIAL SPECIFICATIONS

Item	Specification
Motorcraft® Metal Surface Prep ZC-31-A	-
Motorcraft® Gold Antifreeze/Coolant Concentrated VC-7-B (US); CVC-7-B2 (Canada)	WSS-M97B51-A1
Motorcraft® SAE 5W-20 Premium Synthetic Blend Motor Oil (US); Motorcraft® SAE 5W-20 Super Premium Motor Oil (Canada) XO-5W20-QSP (US); CXO-5W20-LSP12 (Canada)	WSS-M2C945-A
Motorcraft® Silicone Gasket and Sealant TA-30	WSE-M4G323-A4
Motorcraft® Silicone Gasket Remover ZC-30	-

Removal

1. With the vehicle in NEUTRAL, position it on a hoist. For additional information, refer to **JACKING & LIFTING** .
2. Remove the intake manifold. For additional information, refer to **INTAKE MANIFOLD**.
3. Remove the fan shroud and the engine cooling fan. For additional information, refer to **ENGINE COOLING** .
4. Disconnect the generator electrical connections.
    1. Remove the B+ terminal nut and disconnect the terminal.
    2. Disconnect the S electrical connector.
    3. Disconnect the ASI electrical connector.

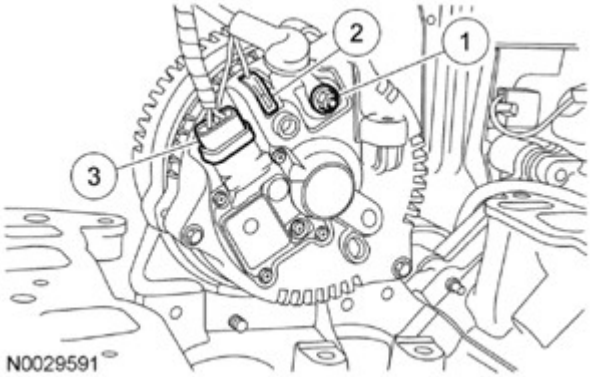

Fig. 139: Identifying ASI Electrical Connector And S Electrical Connector
Courtesy of FORD MOTOR CO.

5. Loosen the 2 bolts and position the generator aside.

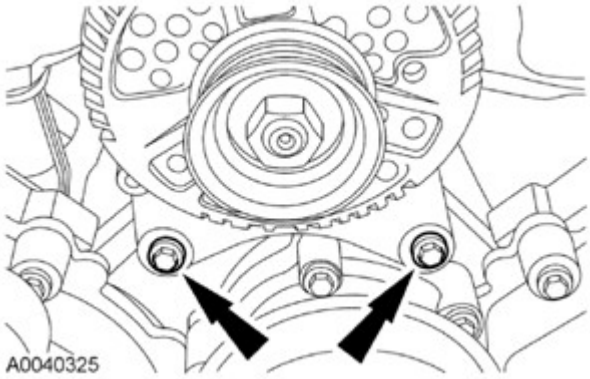

Fig. 140: Locating Generator Lower Mounting Bolts
Courtesy of FORD MOTOR CO.

6. Remove the retainers and the shield.

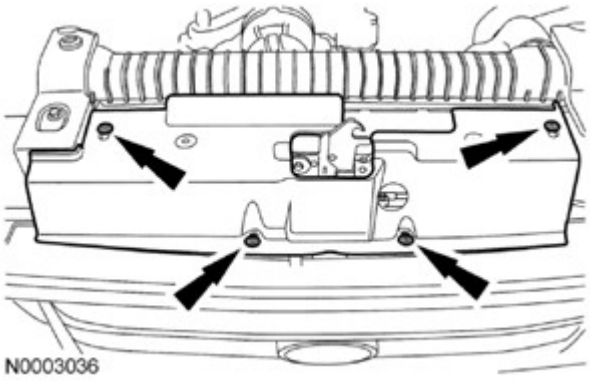

Fig. 141: Locating Retainers And Shield
Courtesy of FORD MOTOR CO.

7. Disconnect the Knock Sensor (KS) electrical connector and engine wiring harness retainers.

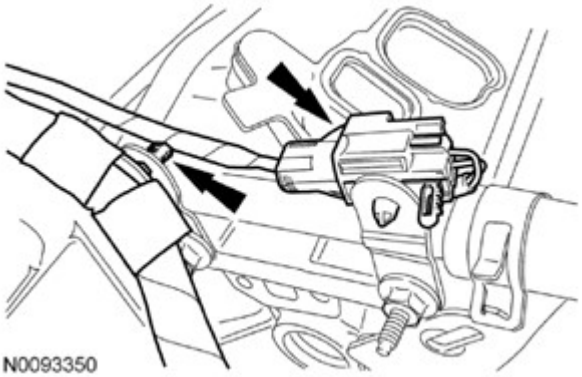

Fig. 142: Locating Knock Sensor (KS) Electrical Connector And Engine Wiring Harness Retainers
Courtesy of FORD MOTOR CO.

8. Disconnect the heater coolant hose from the heater outlet tube.

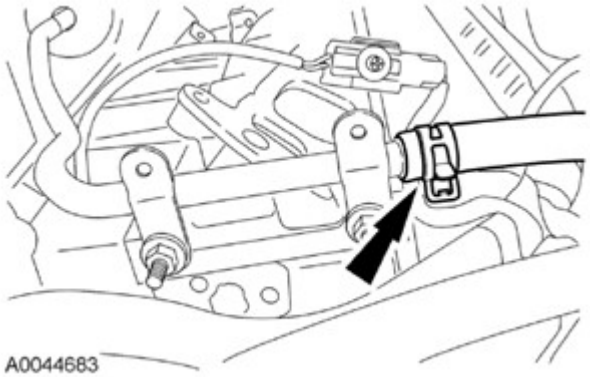

Fig. 143: Locating Heater Coolant Hose
Courtesy of FORD MOTOR CO.

9. Remove the 2 heater outlet tube studs.

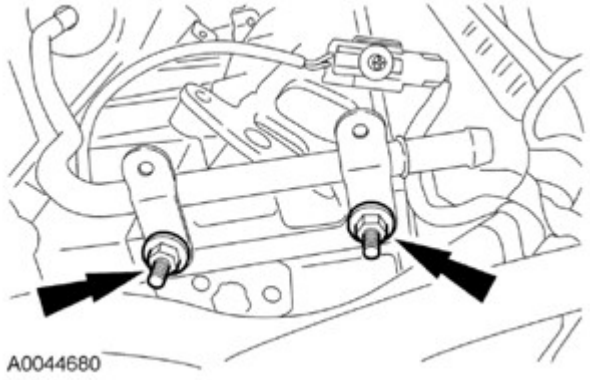

Fig. 144: Locating Heater Outlet Tube Studs
Courtesy of FORD MOTOR CO.

10. Remove the heater outlet tube.
    - Discard the O-ring seals.

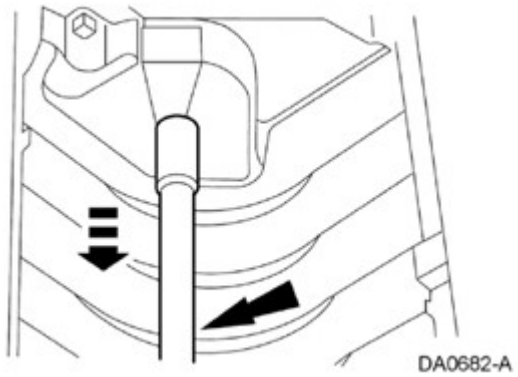

Fig. 145: Removing Heater Outlet Tube
Courtesy of FORD MOTOR CO.

11. Remove the 2 upper transmission-to-engine bolts.

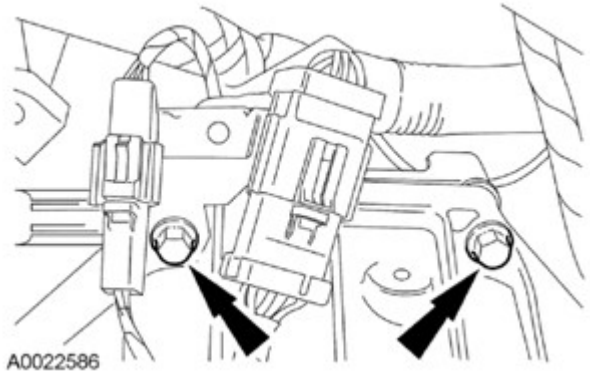

Fig. 146: Locating Upper Transmission-To-Engine Bolts
Courtesy of FORD MOTOR CO.

12. Assemble the Engine Lifting Bracket and the Modular Engine Lift Bar Adapter.

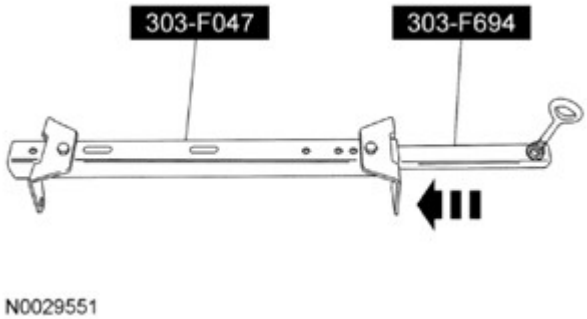

Fig. 147: Assembling Engine Lifting Bracket And Modular Engine Lift Bar Adapter
Courtesy of FORD MOTOR CO.

13. Install the Engine Lifting Bracket and the Modular Engine Lift Bar Adapter.

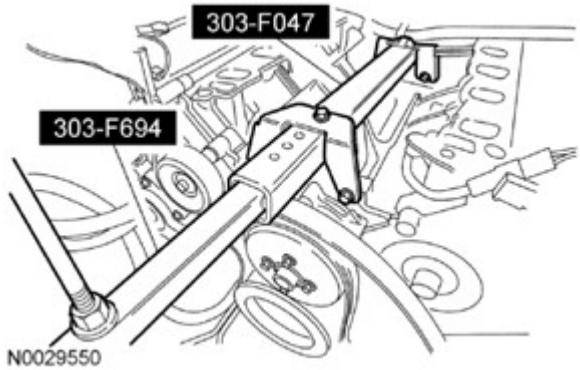

Fig. 148: Installing Engine Lifting Bracket And Modular Engine Lift Bar Adapter
Courtesy of FORD MOTOR CO.

14. Install the Engine Support Bar and support the engine.

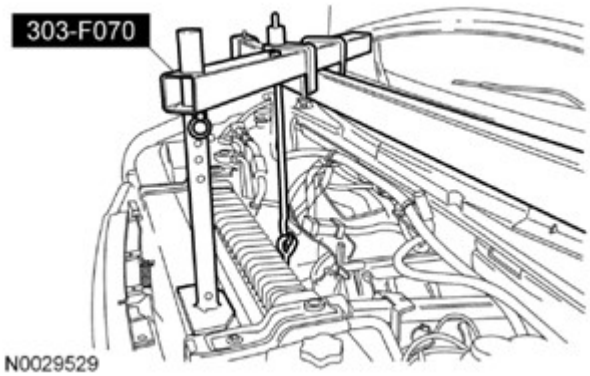

Fig. 149: Installing Engine Support Bar
Courtesy of FORD MOTOR CO.

15. Drain the engine oil, remove and discard the oil filter.
16. Remove the nut and position aside the transmission cooler tube support bracket and the starter wiring harness support bracket.

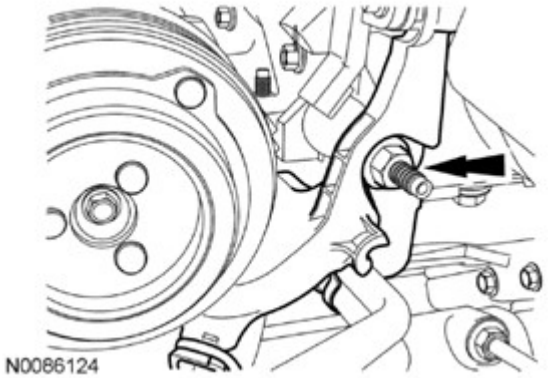

Fig. 150: Locating Transmission Cooler Tube Support Bracket Nut
Courtesy of FORD MOTOR CO.

17. **NOTE: RH shown in illustration, LH similar.**

Remove the 4 engine support insulator-to-crossmember nuts.

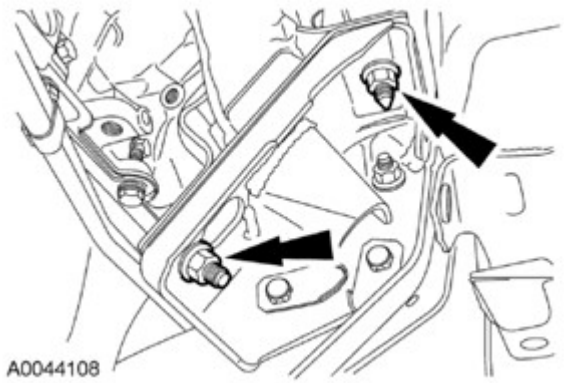

Fig. 151: Locating Engine Support Insulator-To-Crossmember Nuts
Courtesy of FORD MOTOR CO.

18. Remove the 2 bolts and the flexplate inspection plate.

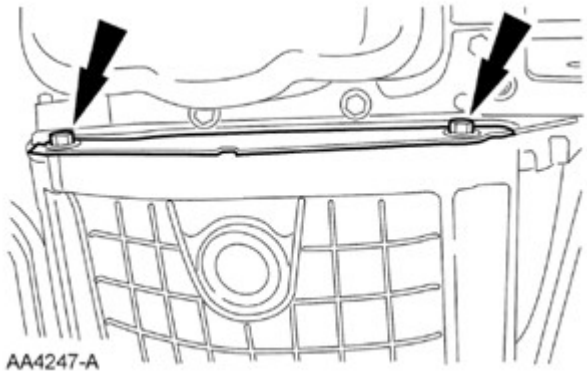

Fig. 152: Locating Flexplate Inspection Cover Bolts
Courtesy of FORD MOTOR CO.

19. Using the Engine Support Bar, raise the engine 260.35 mm (10.25 in) from the crankshaft pulley to the lower edge of the No. 1 crossmember.

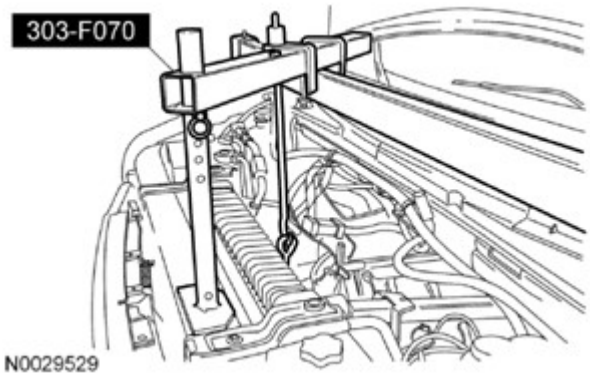

Fig. 153: Installing Engine Support Bar
Courtesy of FORD MOTOR CO.

20. Remove the 16 oil pan bolts and partially lower the oil pan.
21. Remove the 3 bolts retaining the oil pump screen and pickup tube. Position the bolts and the oil pump screen and pickup tube in the oil pan.
22. Remove the oil pan from the rear of the engine. Discard the oil pan gasket.

NOTE: **Do not use metal scrapers, wire brushes, power abrasive discs or other abrasive means to clean the sealing surfaces. These may cause scratches and gouges resulting in leak paths. Use a plastic scraper to clean the sealing surfaces.**

23.

Clean the sealing surfaces with silicone gasket remover and metal surface prep. Follow the directions on the packaging. Inspect the mating surfaces.

Installation

1. Position the oil pump screen and pickup tube and the 3 bolts into the oil pan and position the oil pan and

new oil pan gasket onto the crossmember.

2. Position the oil pump screen and pickup tube and install the 3 bolts.
   - Tighten the 2 oil pump screen and pickup tube-to-oil pump bolts to 10 Nm (89 lb-in).
   - Tighten the oil pump screen and pickup tube-to-spacer bolt to 25 Nm (18 lb-ft).

NOTE: If the oil pan is not secured within 4 minutes, the sealant must be removed and the sealing area cleaned with silicone gasket remover and metal surface prep. Follow the directions on the packaging. Allow to dry until there is no sign of wetness, or 4 minutes, whichever is longer. Failure to follow this procedure can cause future oil leakage.

3. Apply the silicone gasket and sealant at the engine front cover-to-cylinder block mating surface.

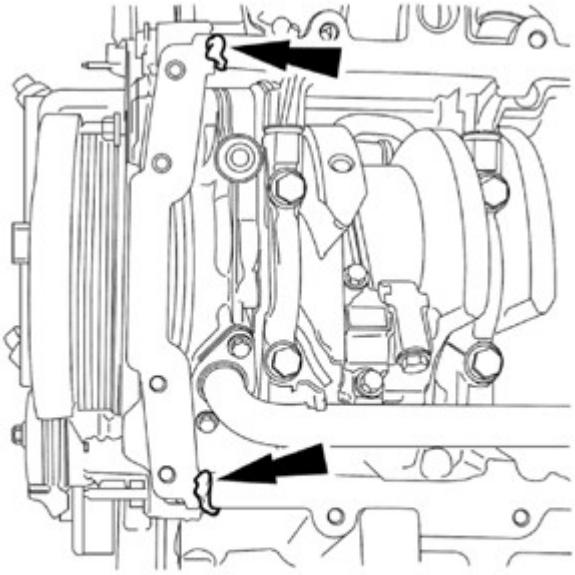

N0032191

Fig. 154: Locating Silicone Gasket And Sealant Application Points
Courtesy of FORD MOTOR CO.

NOTE: If the oil pan is not secured within 4 minutes, the sealant must be removed and the sealing area cleaned with silicone gasket remover and metal surface prep. Follow the directions on the packaging. Allow to dry until there is no sign of wetness, or 4 minutes, whichever is longer. Failure to follow this procedure can cause future oil leakage.

4. Apply silicone gasket and sealant in the locations shown in illustration.

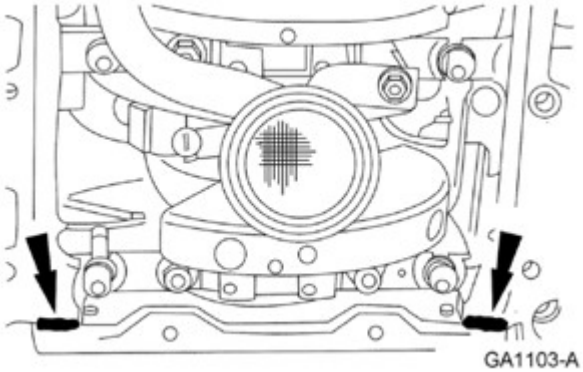

Fig. 155: Locating Bead Of Silicone Gasket And Sealant Applying Area
Courtesy of FORD MOTOR CO.

5. Position the new oil pan gasket and the oil pan and loosely install the 16 bolts.

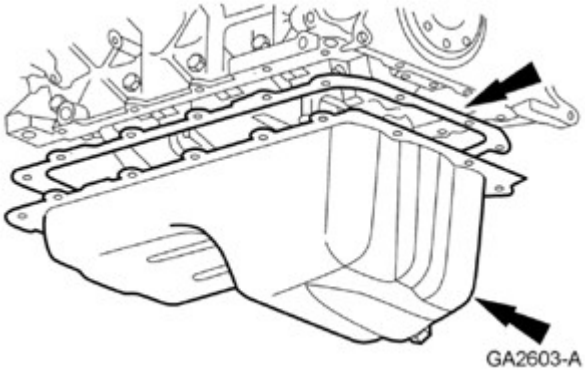

Fig. 156: Locating Oil Pan Gasket And Oil Pan
Courtesy of FORD MOTOR CO.

6. Tighten the bolts in 3 stages in the sequence shown illustration.
   - Stage 1: Tighten to 2 Nm (18 lb-in).
   - Stage 2: Tighten to 20 Nm (177 lb-in).

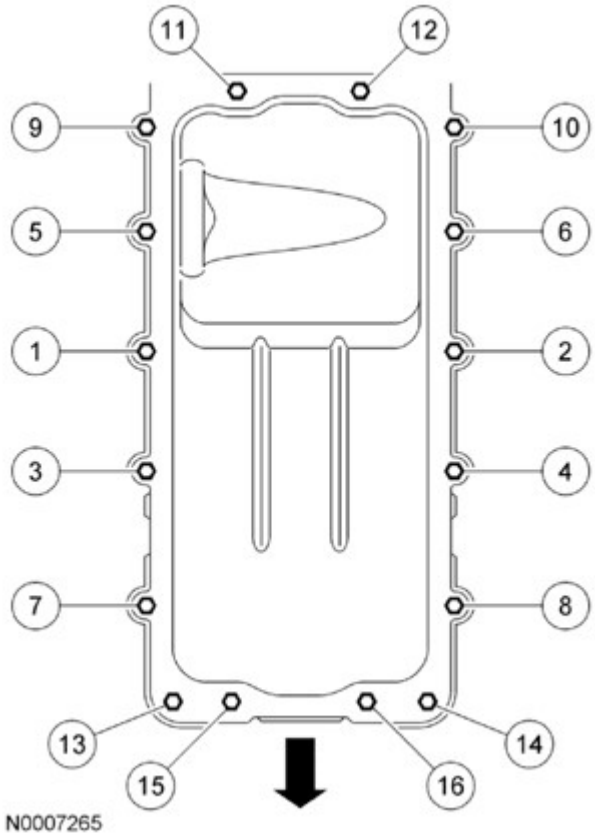

Fig. 157: Identifying Oil Pan Bolt Tightening Sequence
Courtesy of FORD MOTOR CO.

- Stage 3: Tighten an additional 60 degrees.

7. Install a new oil filter.
8. Lower the engine and remove the Engine Support Bar, Engine Lifting Bracket and the Modular Engine Lift Bar Adapter.
9. **NOTE: RH shown in illustration, LH similar.**

   Install the 4 engine support insulator-to-crossmember nuts.

   - Tighten to 90 Nm (66 lb-ft).

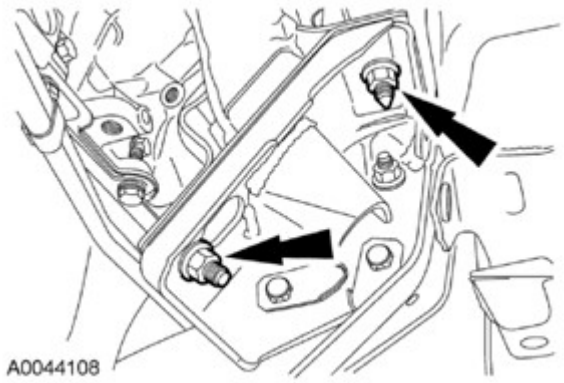

Fig. 158: Locating Engine Support Insulator-To-Crossmember Nuts
Courtesy of FORD MOTOR CO.

10. Position the flexplate inspection cover and install the 2 bolts.
    - Tighten to 34 Nm (25 lb-ft).

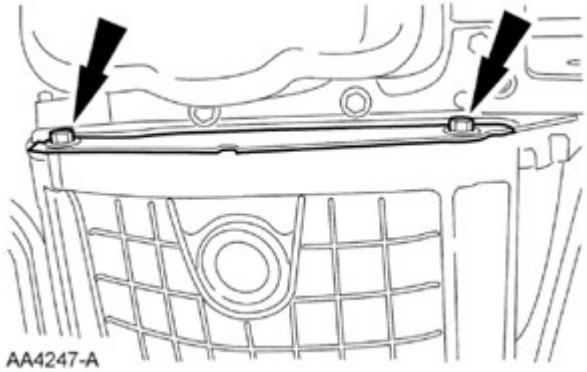

Fig. 159: Locating Flexplate Inspection Cover Bolts
Courtesy of FORD MOTOR CO.

11. Position the transmission fluid cooler tubes and support bracket and install the nut.
    - Tighten to 28 Nm (21 lb-ft).

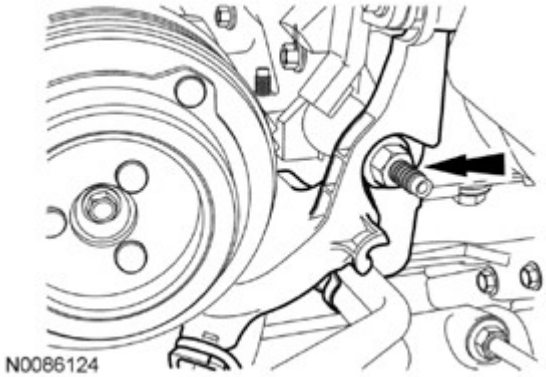

Fig. 160: Locating Transmission Cooler Tube Support Bracket Nut
Courtesy of FORD MOTOR CO.

12. Install the 2 upper transmission-to-engine bolts.
    - Tighten to 60 Nm (44 lb-ft).

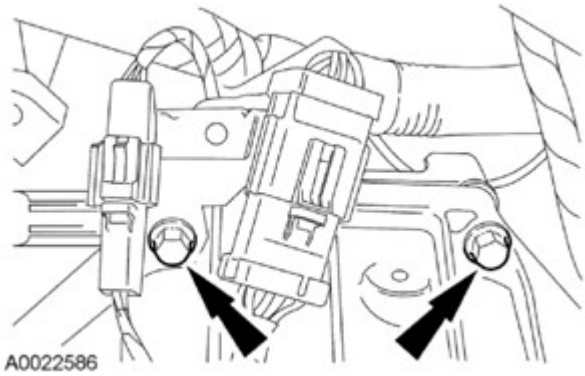

Fig. 161: Locating Upper Transmission-To-Engine Bolts
Courtesy of FORD MOTOR CO.

NOTE: Lubricate the new O-ring seals with clean engine coolant prior to installation.

13. Install the heater outlet tube.

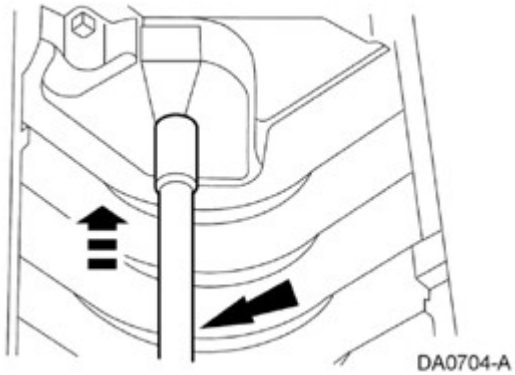

Fig. 162: Installing Heater Outlet Tube
Courtesy of FORD MOTOR CO.

14. Install the 2 heater outlet tube studs.
    - Tighten to 40 Nm (30 lb-ft).

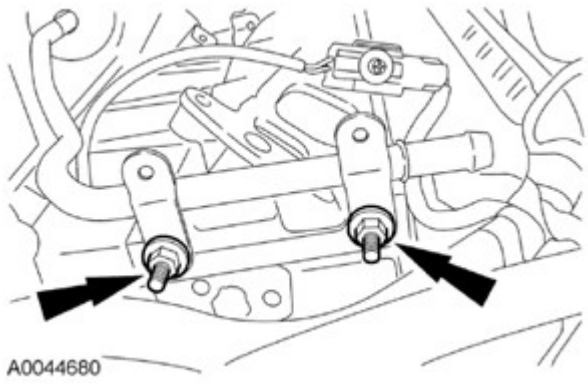

Fig. 163: Locating Heater Outlet Tube Studs
Courtesy of FORD MOTOR CO.

15. Connect the coolant hose to the heater outlet tube.

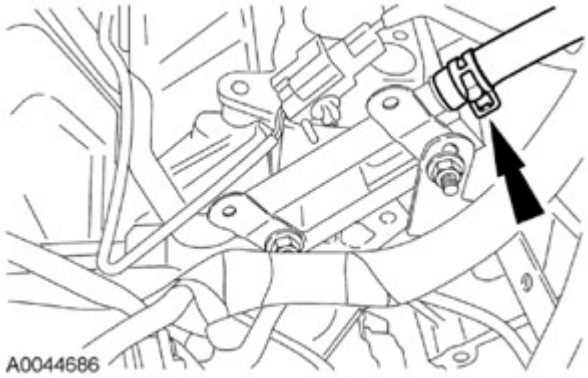

Fig. 164: Locating Heater Outlet Tube
Courtesy of FORD MOTOR CO.

16. Connect the KS electrical connector and engine wiring harness retainers.

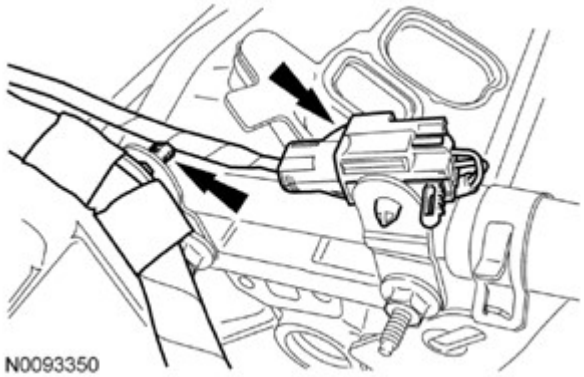

Fig. 165: Locating Knock Sensor (KS) Electrical Connector And Engine Wiring Harness Retainers
Courtesy of FORD MOTOR CO.

17. Install the retainers and the shield.

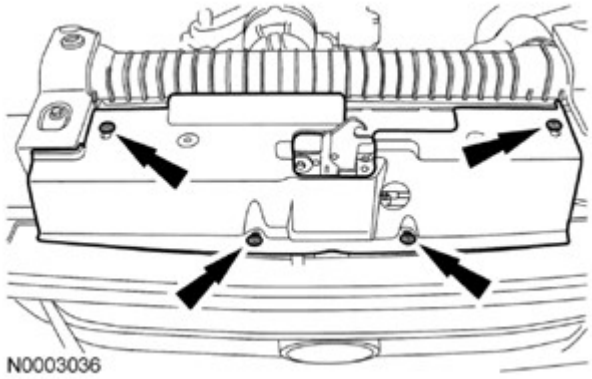

Fig. 166: Locating Retainers And Shield
Courtesy of FORD MOTOR CO.

18. Position the generator and install the 2 bolts.
    - Tighten to 25 Nm (18 lb-ft).

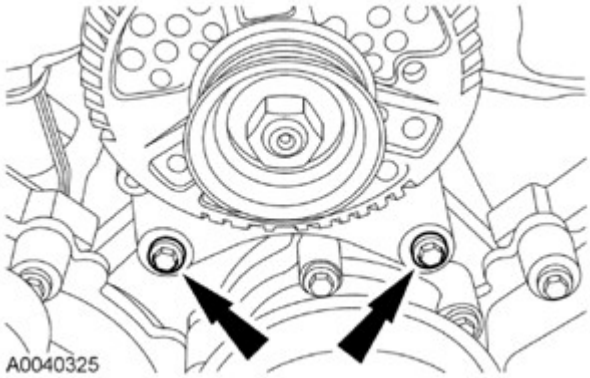

Fig. 167: Removing Generator Lower Mounting Bolts
Courtesy of FORD MOTOR CO.

19. Connect the generator electrical connections.
    1. Tighten the B+ terminal nut to 8 Nm (71 lb-in).
    2. Connect the S electrical connector.
    3. Connect the ASI electrical connector.

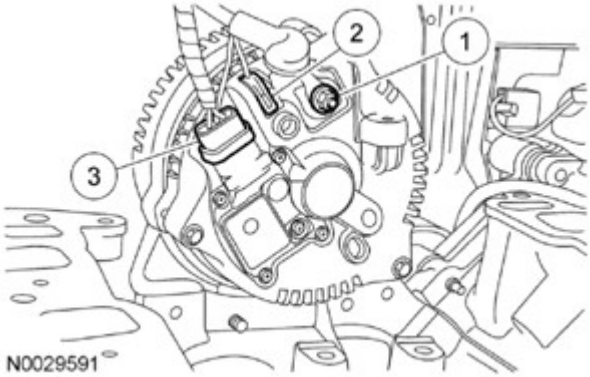

Fig. 168: Identifying ASI Electrical Connector And S Electrical Connector
Courtesy of FORD MOTOR CO.

20. Install the fan shroud and the engine cooling fan. For additional information, refer to **ENGINE COOLING** .
21. Install the intake manifold. For additional information, refer to **INTAKE MANIFOLD**.
22. Fill the engine with clean engine oil.
23. Start the engine and check for leaks.

OIL PUMP

MATERIAL SPECIFICATIONS

Item	Specification
Motorcraft® SAE 5W-20 Premium Synthetic Blend Motor Oil (US); Motorcraft® SAE 5W-20 Super Premium Motor Oil (Canada) XO-5W20-QSP (US); CXO-5W20-LSP12 (Canada)	WSS-M2C945-A

Removal

1. Remove the oil pan. For additional information, refer to **OIL PAN**.
2. Remove the crankshaft sprocket. For additional information, refer to **TIMING DRIVE COMPONENTS**.
3. Remove the 3 bolts and the oil pump.

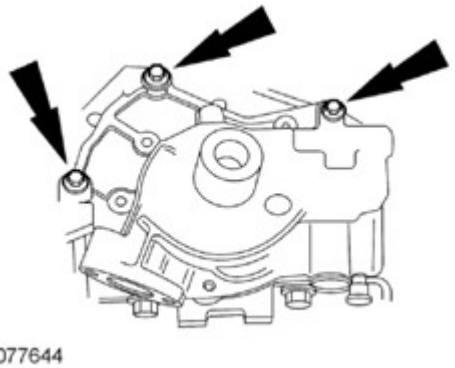

Fig. 169: Locating Oil Pump Bolts
Courtesy of FORD MOTOR CO.

Installation

1. **NOTE: Lubricate the new O-ring seal with clean engine oil.**

   Clean and inspect the mating surfaces and install a new O-ring seal.

2. Install the oil pump and loosely install the 3 bolts.
   - Tighten the bolts in the sequence shown in illustration.
   - Tighten to 10 Nm (89 lb-in).

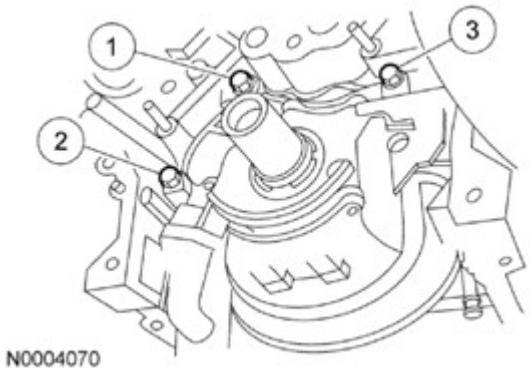

Fig. 170: Identifying Tightening Sequence Of Oil Pump Bolts
Courtesy of FORD MOTOR CO.

3. Install the crankshaft sprocket. For additional information, refer to **TIMING DRIVE COMPONENTS**.
4. Install the oil pan. For additional information, refer to **OIL PAN**.

OIL PUMP SCREEN AND PICKUP TUBE

1. The oil pump screen and pickup tube are removed with the oil pan. For additional information, refer to **OIL PAN**.

ENGINE OIL PRESSURE (EOP) SWITCH

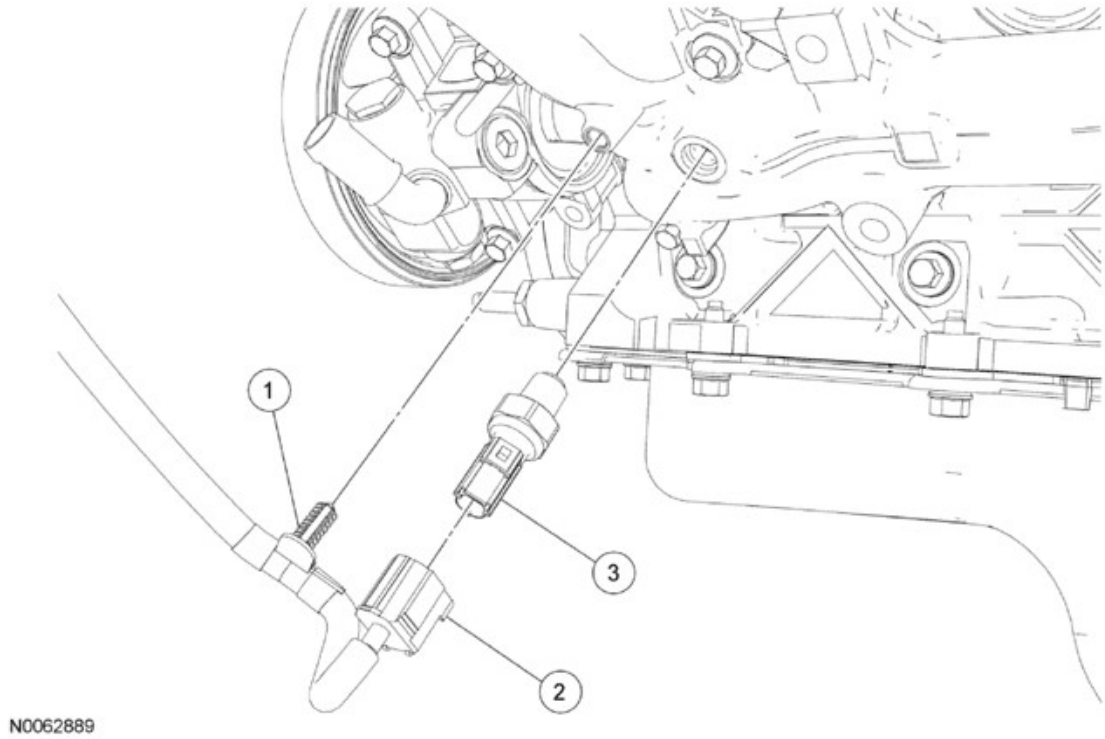

Fig. 171: Identifying Engine Oil Pressure Switch Wiring Harness Retainer, Electrical Connector And Switch
Courtesy of FORD MOTOR CO.

Item	Part Number	Description
1	-	Engine Oil Pressure (EOP) switch wiring harness retainer (part of 12C508)
2	-	EOP switch electrical connector (part of 12C508)
3	9278	EOP switch

Removal and Installation

1. With the vehicle in NEUTRAL, position it on a hoist. For additional information, refer to **JACKING & LIFTING** .
2. Disconnect the Engine Oil Pressure (EOP) switch wiring harness retainer and electrical connector.
3. Remove the EOP switch.
   - To install, tighten in 2 stages.
     - Stage 1: Tighten to 14 Nm (124 lb-in).
     - Stage 2: Tighten an additional 180 degrees.
4. To install, reverse the removal procedure.

OIL FILTER ADAPTER

MATERIAL SPECIFICATIONS

Item	Specification
Motorcraft® Metal Surface Prep ZC-31-A	-
Motorcraft® SAE 5W-20 Premium Synthetic Blend Motor Oil (US); Motorcraft® SAE 5W-20 Super Premium Motor Oil (Canada) XO-5W20-QSP (US); CXO-5W20-LSP12 (Canada)	WSS-M2C945-A
Motorcraft® Silicone Gasket Remover ZC-30	-

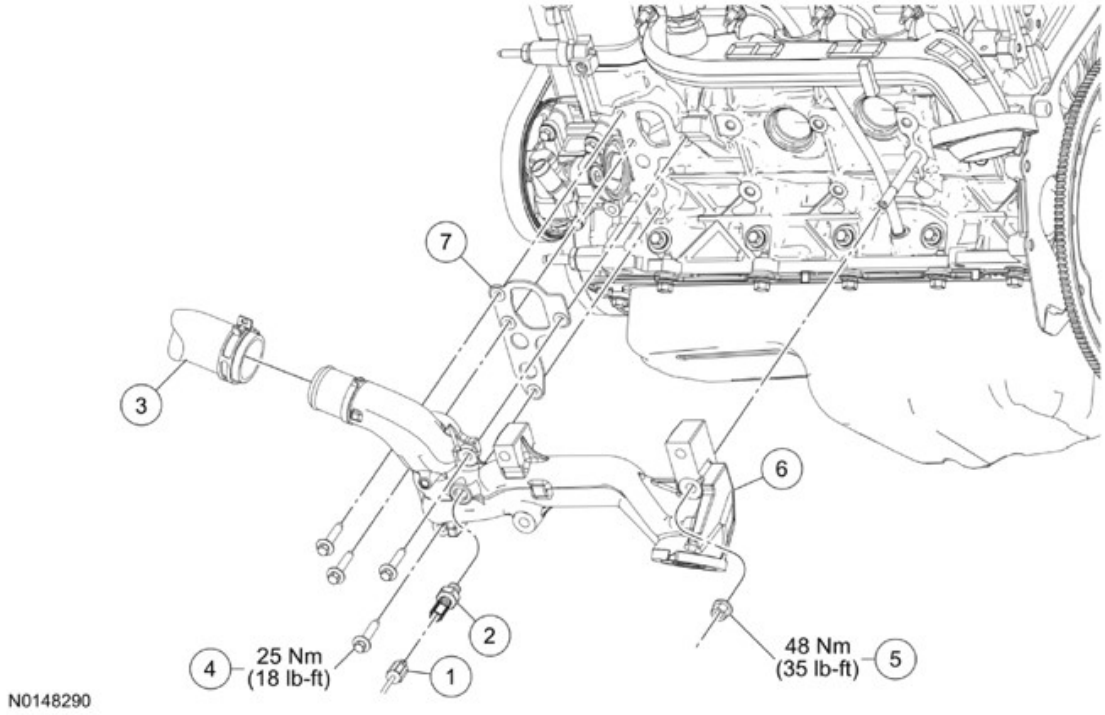

Fig. 172: Identifying Oil Filter Adapter Components With Torque Specifications
Courtesy of FORD MOTOR CO.

Item	Part Number	Description
1	-	Engine Oil Pressure (EOP) switch electrical connector (part of 12B637)
2	9278	EOP switch
3	8286	Lower radiator hose assembly
4	N806156	Oil filter adapter bolt (4 required)
5	N620482	Oil filter adapter nut
6	6884	Oil filter adapter

7	6A636	Oil filter adapter gasket

Removal

1. With the vehicle in NEUTRAL, position it on a hoist. For additional information, refer to **JACKING & LIFTING** .
2. Drain the engine cooling system. For additional information, refer to **ENGINE COOLING** .
3. Remove the oil cooler. For additional information, refer to **OIL COOLER**.
4. Remove the LH engine support insulator. For additional information, refer to **ENGINE SUPPORT INSULATORS**.
5. Drain the engine oil.

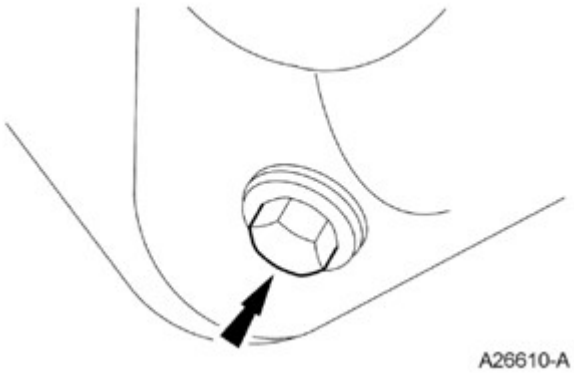

Fig. 173: Locating Oil Drain Plug
Courtesy of FORD MOTOR CO.

6. Disconnect the Engine Oil Pressure (EOP) switch electrical connector.
7. Remove the EOP switch.
8. Release the lower radiator hose clamp and position the lower radiator hose aside.
9. Remove the nut, 4 bolts, oil filter adapter and gasket.
   - Discard the gasket.

NOTE: **Do not use metal scrapers, wire brushes, power abrasive discs or other abrasive means to clean the sealing surfaces. These may cause scratches and gouges resulting in leak paths. Use a plastic scraper to clean the sealing surfaces.**

10. Clean the sealing surfaces with silicone gasket remover and metal surface prep. Follow the directions on the packaging. Inspect the mating surfaces.

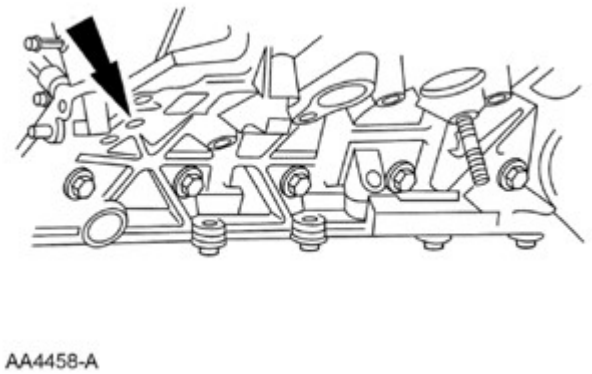

Fig. 174: Locating Gasket Surface On Cylinder Block
Courtesy of FORD MOTOR CO.

Installation

1. Position the oil filter adapter gasket and the oil filter adapter. Install the nut and 4 bolts.
   - Tighten the 4 bolts to 25 Nm (18 lb-ft).
   - Tighten the rear nut to 48 Nm (35 lb-ft).
2. Connect the lower radiator hose.
3. Install the EOP switch in 2 stages.
   - Stage 1: Tighten to 14 Nm (124 lb-in).
   - Stage 2: Tighten an additional 180 degrees.
4. Connect the EOP switch electrical connector.
5. Install the drain plug.
   - Tighten to 23 Nm (17 lb-ft).

Fig. 175: Locating Oil Drain Plug
Courtesy of FORD MOTOR CO.

6. Install the LH engine support insulator. For additional information, refer to **ENGINE SUPPORT INSULATORS**.
7. Install the oil cooler. For additional information, refer to **OIL COOLER**.

8. Fill the engine with clean engine oil.
9. Fill and bleed the engine cooling system. For additional information, refer to **ENGINE COOLING** .

OIL LEVEL INDICATOR AND TUBE

MATERIAL SPECIFICATIONS

Item	Specification
Motorcraft® SAE 5W-20 Premium Synthetic Blend Motor Oil (US); Motorcraft® SAE 5W-20 Super Premium Motor Oil (Canada) XO-5W20-QSP (US); CXO-5W20-LSP12 (Canada)	WSS-M2C945-A

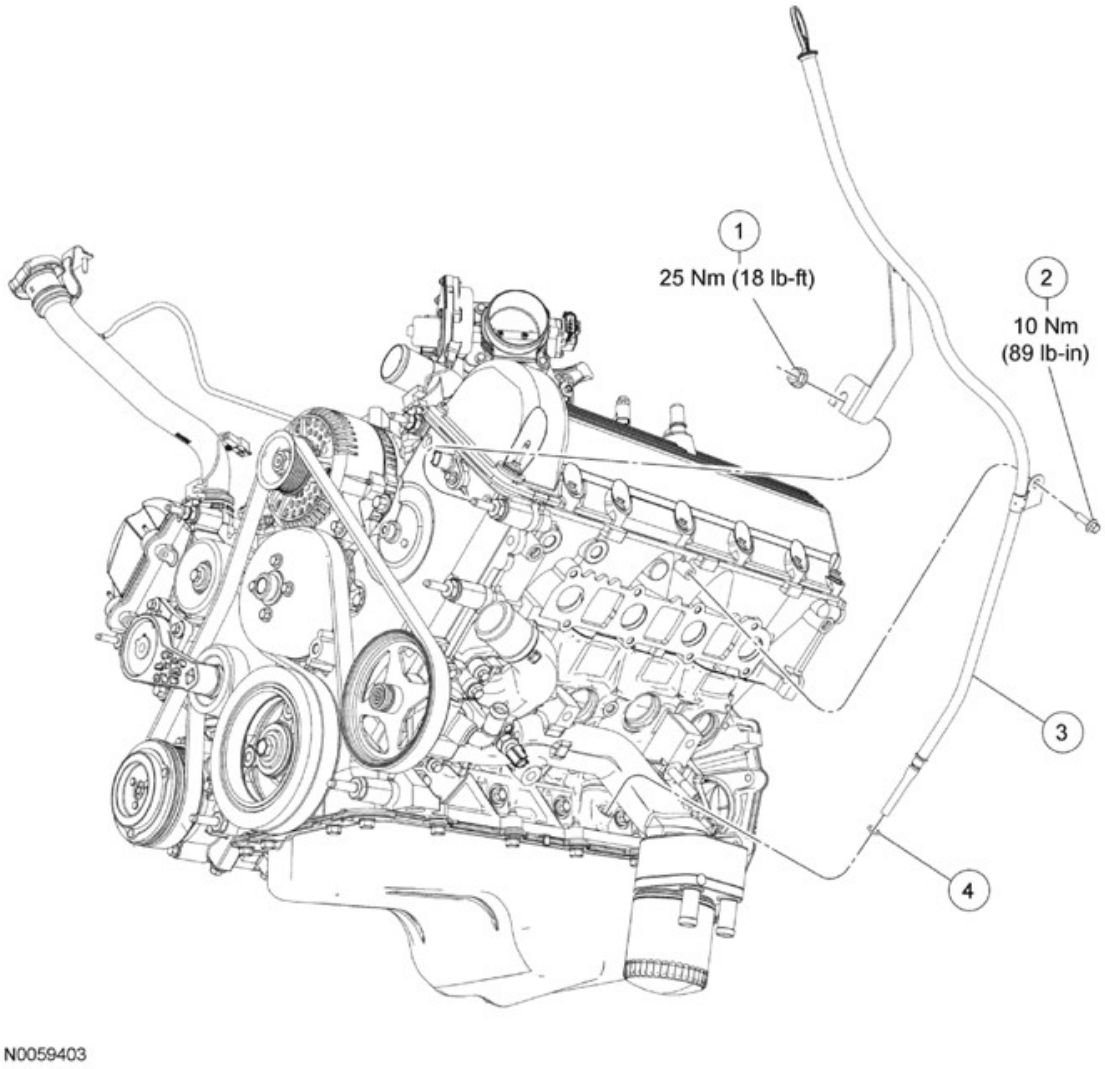

Fig. 176: Identifying Oil Level Indicator And Tube With Torque Specifications
Courtesy of FORD MOTOR CO.

Item	Part Number	Description

1	N804758	Oil level indicator tube support bracket nut
2	N605892	Oil level indicator tube support bracket bolt
3	6K873	Oil level indicator and tube
4	-	Oil level indicator tube O-ring seal

Removal

1. Remove the Air Cleaner (ACL) and the ACL outlet pipe. For additional information, refer to **INTAKE AIR DISTRIBUTION & FILTERING** .
2. Remove the LH exhaust manifold. For additional information, refer to **EXHAUST MANIFOLD - LH**.
3. Remove the nut, the bolt and the oil level indicator and tube.
   - Discard the O-ring seal.
4. Inspect the oil level indicator tube for damage.

Installation

1. **NOTE: Lubricate the O-ring seal with clean engine oil prior to installation.**

   Using a new O-ring seal, position the oil level indicator and install the bolt.

   - Tighten to 10 Nm (89 lb-in).
2. Install the front oil level indicator and tube support bracket nut.
   - Tighten to 25 Nm (18 lb-ft).
3. Install the LH exhaust manifold. For additional information, refer to **EXHAUST MANIFOLD - LH**.
4. Install the ACL outlet pipe and the ACL. For additional information, refer to **INTAKE AIR DISTRIBUTION & FILTERING** .

OIL COOLER

MATERIAL SPECIFICATIONS

Item	Specification
Motorcraft® SAE 5W-20 Premium Synthetic Blend Motor Oil (US); Motorcraft® SAE 5W-20 Super Premium Motor Oil (Canada) XO-5W20-QSP (US); CXO-5W20-LSP12 (Canada)	WSS-M2C945-A

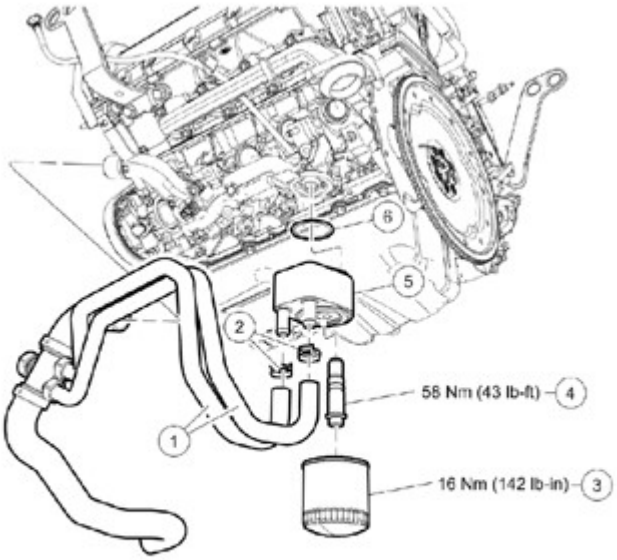

N0148292

Fig. 177: Identifying Oil Cooler Components With Torque Specifications
Courtesy of FORD MOTOR CO.

Item	Part Number	Description
1	8286	Lower radiator hose assembly
2	-	Coolant hose clamps (2 required)
3	6714	Oil filter
4	6L626	Oil cooler insert
5	6A642	Oil cooler
6	-	Oil cooler seal (part of 6714)
7	-	Oil cooler seal (part of 6A642)

Removal

1. With the vehicle in NEUTRAL, position it on a hoist. For additional information, refer to **JACKING & LIFTING** .
2. Drain the engine cooling system. For additional information, refer to **ENGINE COOLING** .
3. Drain the engine oil.

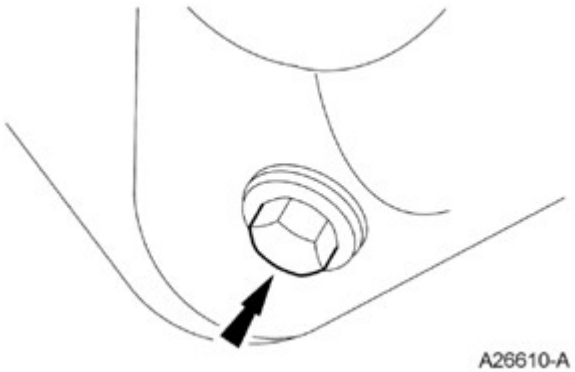

Fig. 178: Locating Oil Drain Plug
Courtesy of FORD MOTOR CO.

4. Disconnect the 2 coolant hoses from the oil cooler.
5. Remove and discard the oil filter.

NOTE: **If metal or aluminum foreign material is present in the oil cooler, mechanical concerns exist. To diagnose mechanical concerns, refer to ENGINE SYSTEM - GENERAL INFORMATION . Failure to follow this instruction may result in engine damage.**

6. Remove the threaded insert and discard the oil cooler.

Installation

NOTE: **Make sure the tab on the oil filter adapter nests into the notch in the oil cooler.**

1. Position a new oil cooler on the oil filter adapter and install the threaded insert.
   - Tighten to 58 Nm (43 lb-ft).
2. Install a new oil filter.
   - Tighten to 16 Nm (142 lb-in).
3. Connect the 2 coolant hoses to the oil cooler.
4. Install the oil drain plug.
   - Tighten to 23 Nm (17 lb-ft).

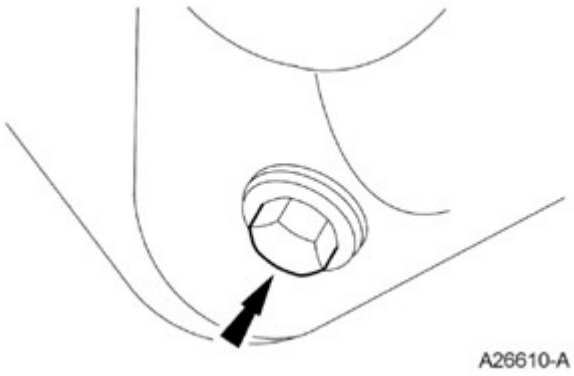

Fig. 179: Locating Oil Drain Plug
Courtesy of FORD MOTOR CO.

5. Fill the engine with clean engine oil.
6. Fill and bleed the engine cooling system. For additional information, refer to **ENGINE COOLING** .

FLEXPLATE OR FLYWHEEL AND CRANKSHAFT REAR SEAL - EXPLODED VIEW

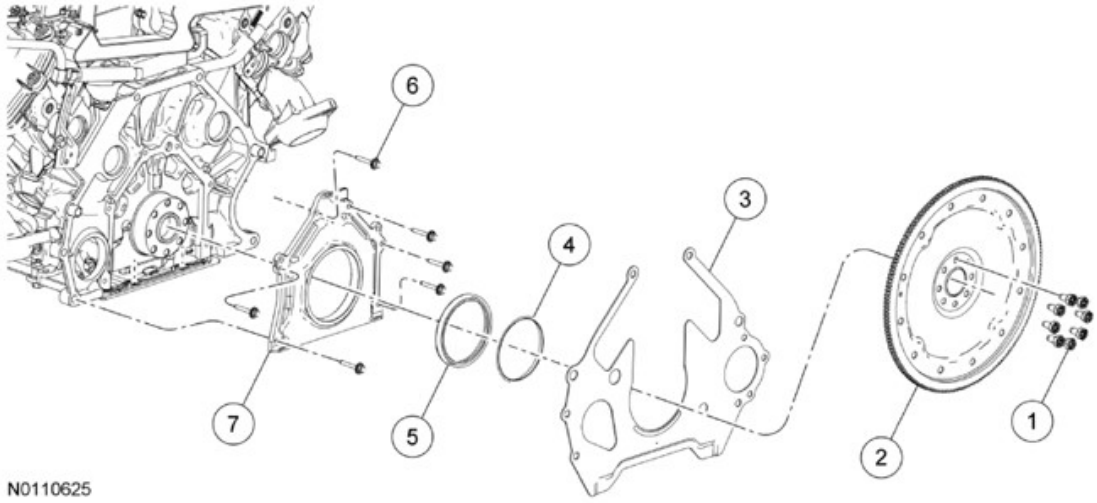

Fig. 180: Exploded View Of Flexplate Or Flywheel And Crankshaft Rear Seal
Courtesy of FORD MOTOR CO.

Item	Part Number	Description
1	N806168	Flexplate bolt (8 required)
2	6375	Flexplate
3	6A373	Rear cover plate
4	6310	Crankshaft oil slinger
5	6701	Crankshaft rear seal
6	N806155	Crankshaft rear seal retainer plate bolt (6 required)

7	6K318	Crankshaft rear seal retainer plate

1. For additional information, refer to the appropriate procedures.

FLEXPLATE

Removal

1. Remove the transmission. For additional information, refer to **AUTOMATIC TRANSAXLE/TRANSMISSION - 4R70E/4R75E** or **AUTOMATIC TRANSAXLE/TRANSMISSION - TORQSHIFT** .
2. Remove the 8 bolts and the flexplate.

Installation

1. Install the flexplate and the 8 bolts. Tighten the bolts in 2 stages in the sequence shown in illustration.
   - Stage 1: Tighten to 20 Nm (177 lb-in).
   - Stage 2: Tighten to 80 Nm (59 lb-ft).

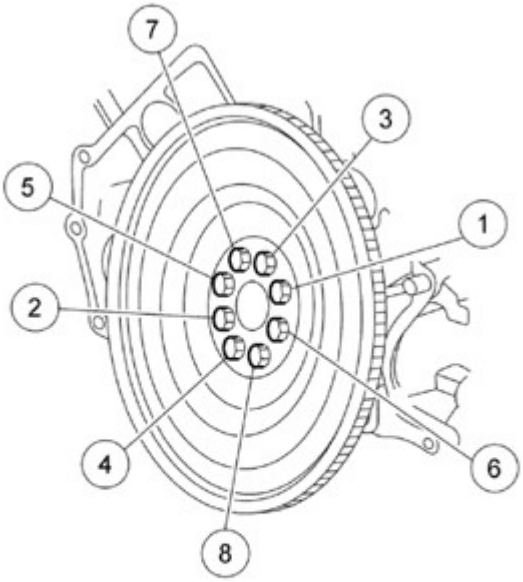

N0010329

Fig. 181: Identifying Flexplate Bolt Tightening Sequence
Courtesy of FORD MOTOR CO.

2. Install the transmission. For additional information, refer to **AUTOMATIC TRANSAXLE/TRANSMISSION - 4R70E/4R75E** or **AUTOMATIC**

TRANSAXLE/TRANSMISSION - TORQSHIFT .

CRANKSHAFT REAR SEAL

SPECIAL TOOLS

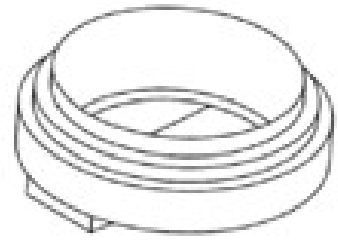 ST1479-A	Installer, Crankshaft Rear Oil Seal 303-516 (T95P-6701-BH)
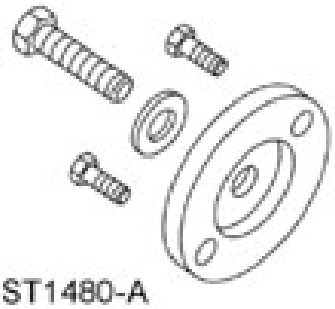 ST1480-A	Installer, Crankshaft Rear Oil Seal 303-518 (T95P-6701-DH)
 ST1482-A	Installer, Crankshaft Rear Oil Slinger 303-517 (T95P-6701-CH)
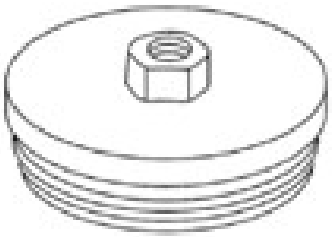 ST1382-A	Remover, Crankshaft Rear Oil Seal 303-519 (T95P-6701-EH)
	Remover, Crankshaft Rear Oil Slinger

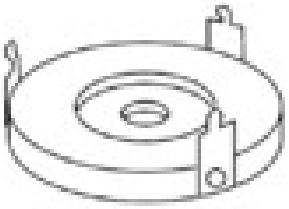 ST1481-A	303-514 (T95P-6701-AH)
 ST1185-A	Slide Hammer 100-001 (T50T-100-A)

MATERIAL SPECIFICATIONS

Item	Specification
Motorcraft® SAE 5W-20 Premium Synthetic Blend Motor Oil (US); Motorcraft® SAE 5W-20 Super Premium Motor Oil (Canada) XO-5W20-QSP (US); CXO-5W20-LSP12 (Canada)	WSS-M2C945-A

Removal

1. Remove the flexplate. For additional information, refer to **FLEXPLATE**.
2. Remove the engine rear cover plate.
3. Using the Slide Hammer and Crankshaft Rear Oil Slinger Remover, remove the crankshaft oil slinger.
   - Discard the crankshaft oil slinger.

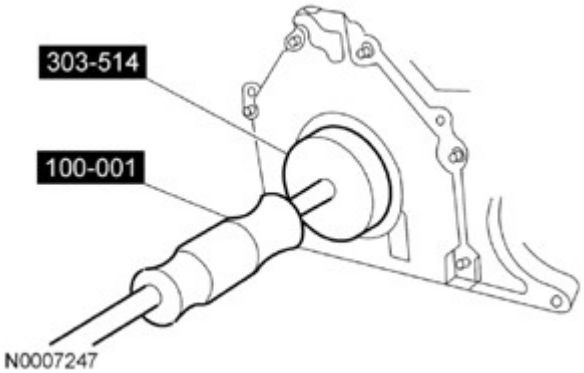

Fig. 182: Removing Crankshaft Rear Oil Seal Slinger Using Special Tools
Courtesy of FORD MOTOR CO.

4. Using the Slide Hammer and Crankshaft Rear Oil Seal Remover, remove the crankshaft rear seal.
   - Discard the crankshaft rear seal.

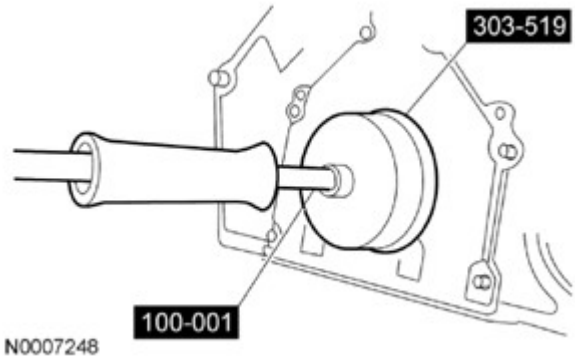

Fig. 183: Removing Crankshaft Rear Seal Using Special Tools
Courtesy of FORD MOTOR CO.

Installation

1. **NOTE: Lubricate the inner lip of the crankshaft rear seal with clean engine oil.**

   Using the Crankshaft Rear Oil Seal Installers, install a new crankshaft rear seal.

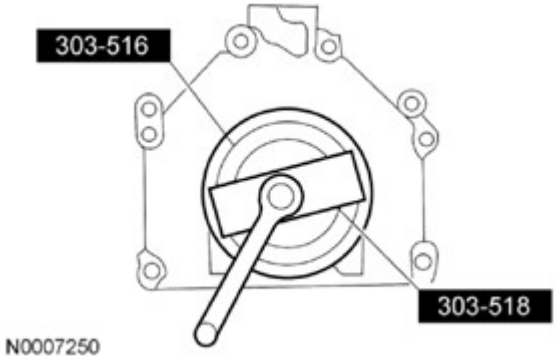

Fig. 184: Installing Crankshaft Rear Oil Seal Using Special Tools
Courtesy of FORD MOTOR CO.

2. Using the Crankshaft Rear Oil Seal Installers and Crankshaft Rear Oil Slinger Installer, install a new crankshaft rear oil slinger.

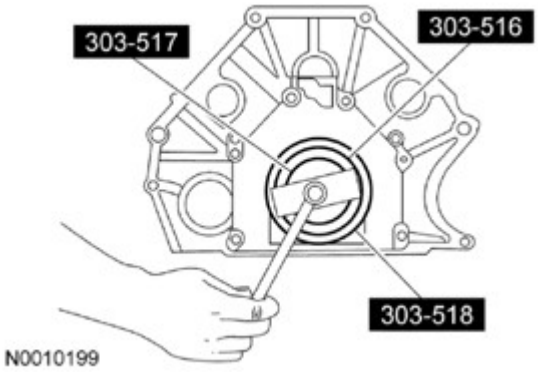

Fig. 185: Installing Crankshaft Rear Oil Slinger Using Special Tools
Courtesy of FORD MOTOR CO.

3. Install the engine rear cover plate.
4. Install the flexplate. For additional information, refer to **FLEXPLATE**.

CRANKSHAFT REAR SEAL WITH RETAINER PLATE

SPECIAL TOOLS

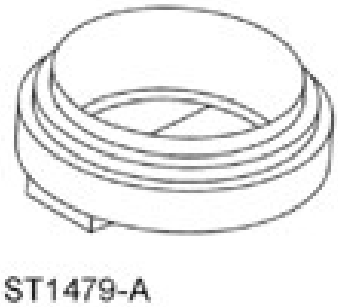 ST1479-A	Installer, Crankshaft Rear Oil Seal 303-516 (T95P-6701-BH)
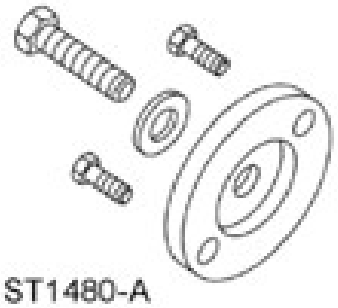 ST1480-A	Installer, Crankshaft Rear Oil Seal 303-518 (T95P-6701-DH)
	Installer, Crankshaft Rear Oil Slinger 303-517 (T95P-6701-CH)

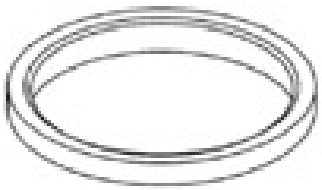 ST1482-A	
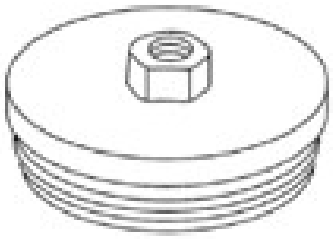 ST1382-A	Remover, Crankshaft Rear Oil Seal 303-519 (T95P-6701-EH)
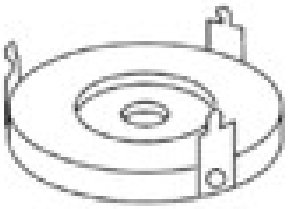 ST1481-A	Remover, Crankshaft Rear Oil Slinger 303-514 (T95P-6701-AH)
 ST1185-A	Slide Hammer 100-001 (T50T-100-A)
	Support Bar, Engine 303-F070

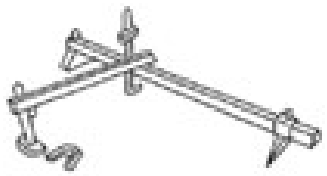 ST2176-B	

MATERIAL SPECIFICATIONS

Item	Specification
Motorcraft® Gasket Maker TA-16	WSK-M2G348-A5
Motorcraft® Metal Surface Prep ZC-31-A	-
Motorcraft® SAE 5W-20 Premium Synthetic Blend Motor Oil (US); Motorcraft® SAE 5W-20 Super Premium Motor Oil (Canada) XO-5W20-QSP (US); CXO-5W20-LSP12 (Canada)	WSS-M2C945-A
Motorcraft® Silicone Gasket Remover ZC-30	-

Removal

1. Remove the oil pan. For additional information, refer to **OIL PAN**.
2. Using the Engine Support Bar, lower the engine.

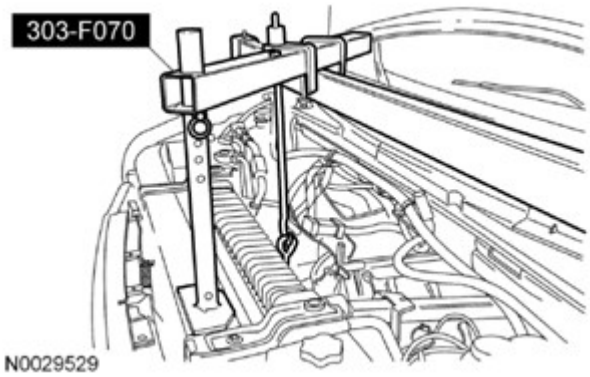

Fig. 186: Installing Engine Support Bar
Courtesy of FORD MOTOR CO.

3. **NOTE: RH shown in illustration, LH similar.**

   Install the 4 engine support insulator-to-support insulator bracket nuts.

- Tighten to 90 Nm (66 lb-ft).

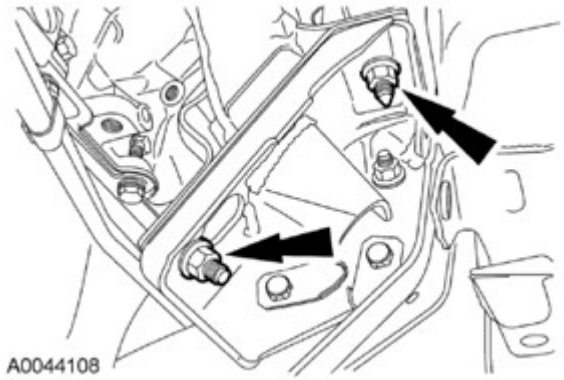

Fig. 187: Locating Engine Support Insulator-To-Support Insulator Bracket Nuts
Courtesy of FORD MOTOR CO.

4. Remove the flexplate. For additional information, refer to **FLEXPLATE**.
5. Remove the engine rear cover plate.
6. Using the Slide Hammer and Crankshaft Rear Oil Slinger Remover, remove and discard the crankshaft oil slinger.

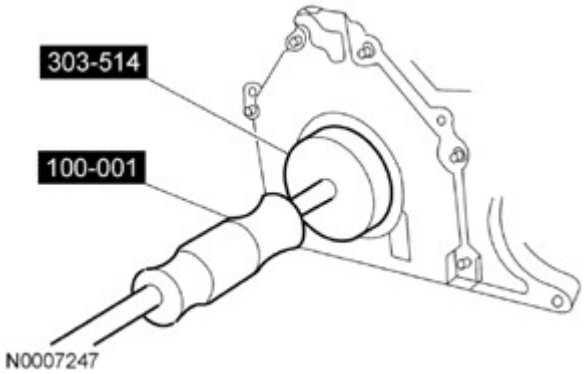

Fig. 188: Removing Crankshaft Rear Oil Seal Slinger Using Special Tools
Courtesy of FORD MOTOR CO.

7. Using the Slide Hammer and Crankshaft Rear Oil Seal Remover, remove and discard the crankshaft rear seal.

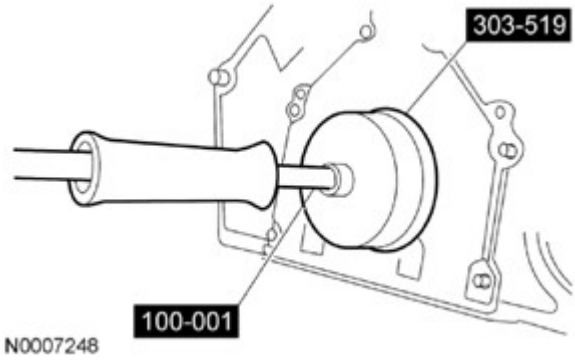

Fig. 189: Removing Crankshaft Rear Seal Using Special Tools
Courtesy of FORD MOTOR CO.

8. Remove the 6 bolts and the crankshaft rear seal retainer plate.

9.

NOTE: **Do not use metal scrapers, wire brushes, power abrasive discs or other abrasive means to clean the sealing surfaces. These tools cause scratches and gouges which make leak paths. Use a plastic scraping tool to remove all traces of old sealant.**

NOTE: **Clean the sealing surfaces with silicone gasket remover and metal surface prep. Follow the directions on the packaging. Failure to follow this procedure can cause future oil leakage.**

Clean and inspect the mating surface.

Installation

1.

NOTE: **The rear crankshaft seal retainer plate does not have a sealant groove. Gasket maker must be applied to the rear crankshaft seal retainer plate mating surface on the engine block.**

Apply a bead of gasket maker to the rear crankshaft seal retainer plate mating surface on the engine block.

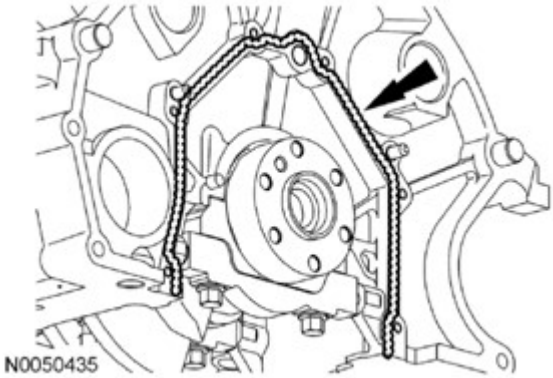

Fig. 190: Locating Bead Of Gasket Applying Area On Crankshaft Rear Seal Retainer Plate Mating Surface
Courtesy of FORD MOTOR CO.

2. Tighten the 6 bolts in the sequence shown in illustration.
   - Tighten to 10 Nm (89 lb-in).

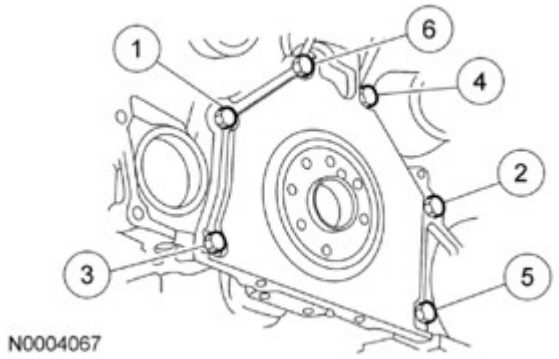

Fig. 191: Identifying Rear Crankshaft Seal Retainer Plate Tightening Sequence
Courtesy of FORD MOTOR CO.

3. **NOTE: Lubricate the crankshaft rear seal with clean engine oil prior to installation.**

Using the Crankshaft Rear Oil Seal Installers, install a new crankshaft rear seal.

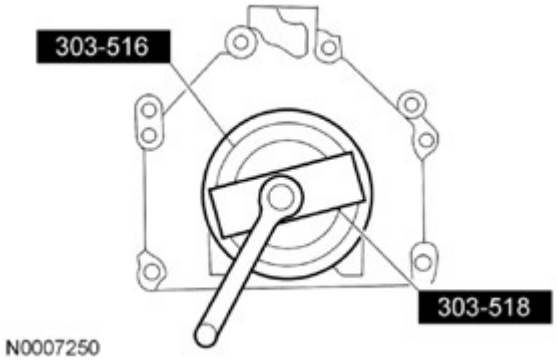

Fig. 192: Installing Crankshaft Rear Oil Seal Using Special Tools
Courtesy of FORD MOTOR CO.

4. **NOTE: Lubricate the crankshaft oil slinger with clean engine oil prior to installation.**

Using the Crankshaft Rear Oil Seal Installers and Crankshaft Rear Oil Slinger Installer, install a new crankshaft oil slinger.

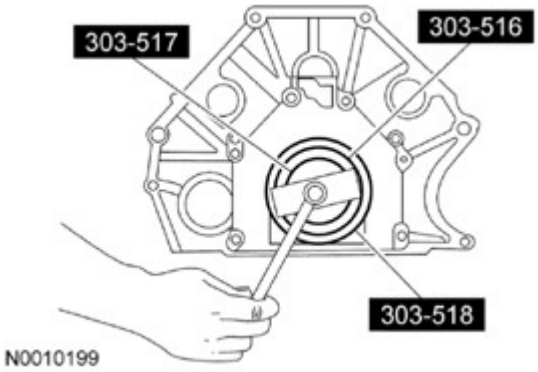

Fig. 193: Installing Crankshaft Rear Oil Slinger Using Special Tools
Courtesy of FORD MOTOR CO.

5. Install the engine rear cover plate.
6. Install the flexplate. For additional information, refer to **FLEXPLATE**.
7. **NOTE: RH shown in illustration, LH similar.**

   Remove the 4 engine support insulator-to-support insulator bracket nuts.

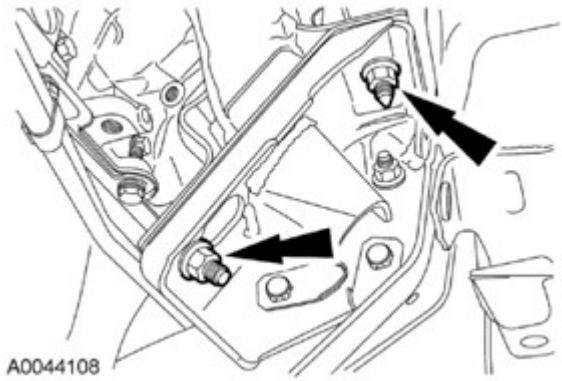

Fig. 194: Locating Engine Support Insulator-To-Support Insulator Bracket Nuts
Courtesy of FORD MOTOR CO.

8. Using the Engine Support Bar, raise the engine 260.35 mm (10.25 in) from the crankshaft pulley to the lower edge of the No. 1 crossmember.

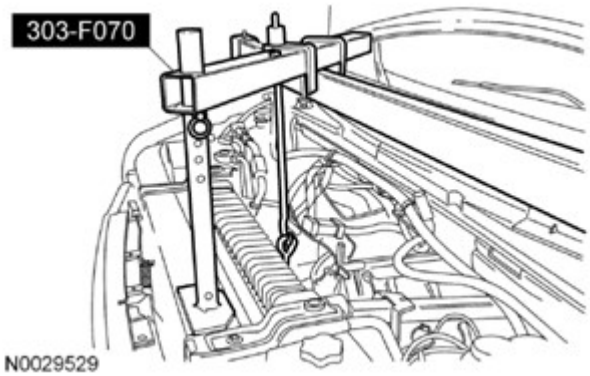

Fig. 195: Installing Engine Support Bar
Courtesy of FORD MOTOR CO.

9. Install the oil pan. For additional information, refer to **OIL PAN**.

ENGINE SUPPORT INSULATORS

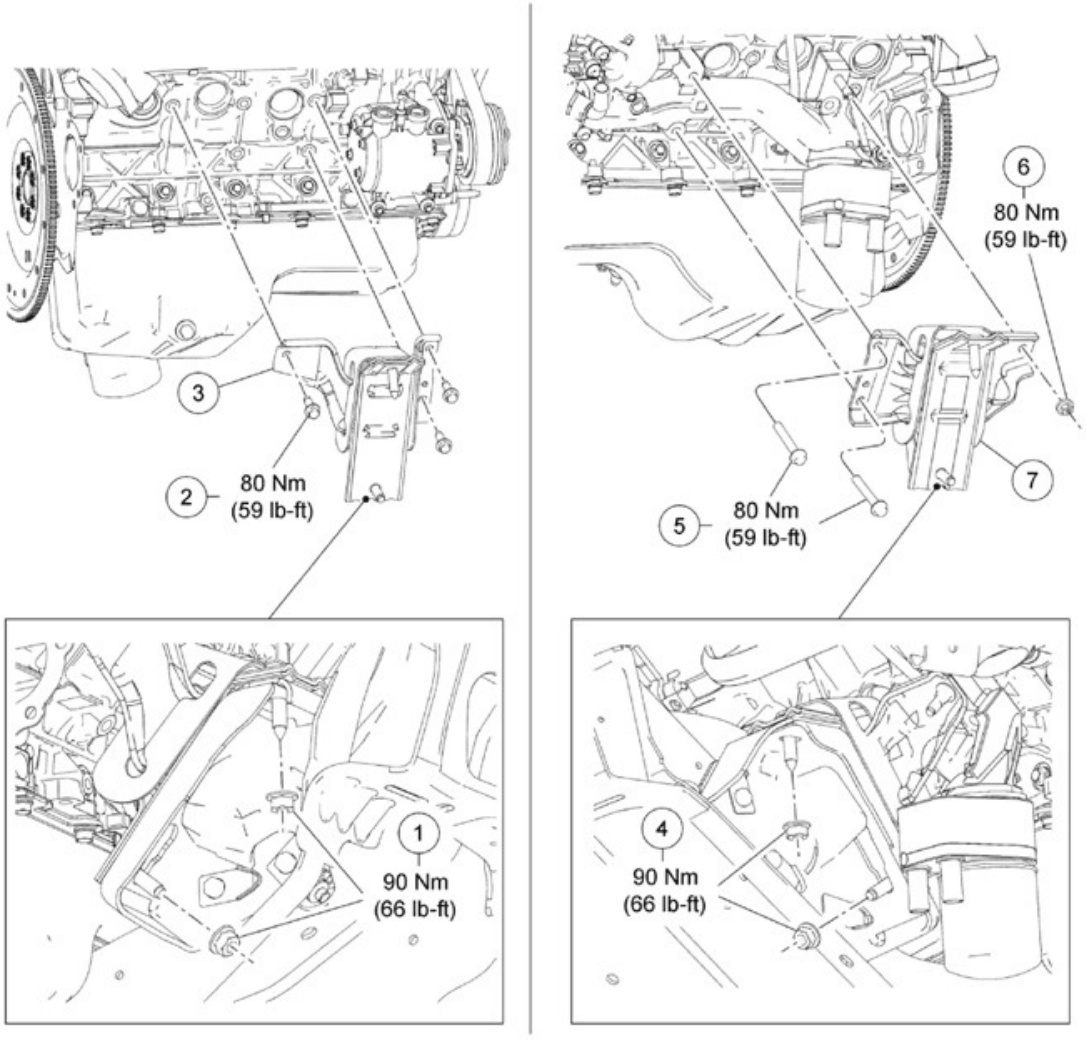

N0030471

Fig. 196: Identifying Engine Support Insulators With Torque Specifications
Courtesy of FORD MOTOR CO.

Item	Part Number	Description
1	W707251	RH engine support insulator-to-engine support insulator bracket nuts (2 required)
2	N808859	RH engine support insulator-to-cylinder block bolt (3 required)
3	6B038	RH engine support insulator
4	N808859	LH engine support insulator-to-engine support insulator bracket nuts (2 required)
5	W806253	LH engine support insulator-to-cylinder block bolts (2 required)
6	N808859	LH engine support insulator-to-

		cylinder block nut
7	6B032	LH engine support insulator

Removal

All engine support insulators

1. With the vehicle in NEUTRAL, position it on a hoist. For additional information, refer to **JACKING & LIFTING** .
2. If servicing the RH engine support insulator, remove the starter motor. For additional information, refer to **STARTING SYSTEM** .
3. Remove the 2 bolts and position the cooling fan shroud onto the cooling fan.

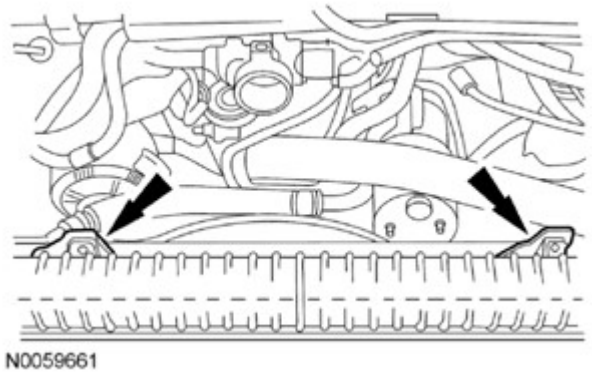

Fig. 197: Locating Cooling Fan Shroud Bolts
Courtesy of FORD MOTOR CO.

4. Remove the 4 exhaust Y-pipe flange nuts.
   - Discard the flange nuts.

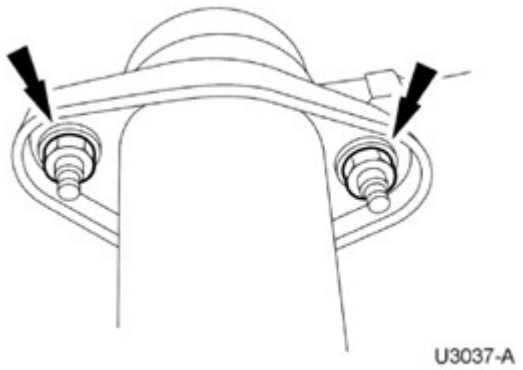

Fig. 198: Identifying Exhaust Manifold Flange Nuts
Courtesy of FORD MOTOR CO.

5. Remove the 4 engine support insulator-to-support insulator bracket nuts.

RH engine support insulator

6. Using a jack positioned on the RH rear of the cylinder block, raise the engine 25.4 mm (1 in).

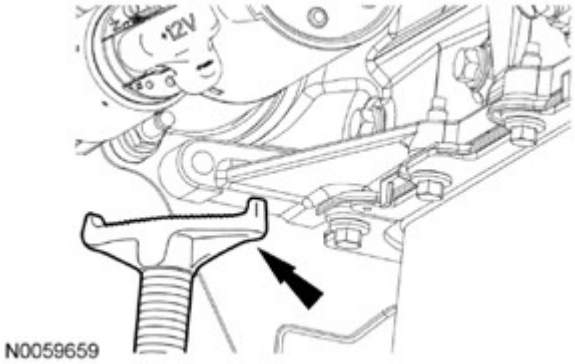

Fig. 199: Raising Engine Using Jack
Courtesy of FORD MOTOR CO.

7. Remove the engine support insulator-to-crossmember bracket nut.

Fig. 200: Locating Engine Support Insulator-To-Crossmember Bracket Nut
Courtesy of FORD MOTOR CO.

8. Remove the 2 nuts and the engine support insulator-to-crossmember bracket.

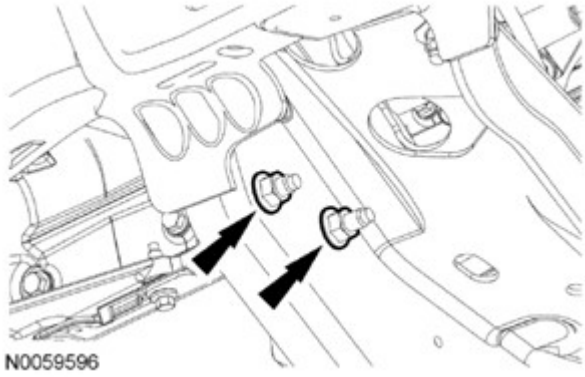

Fig. 201: Locating Engine Support Insulator-To-Crossmember Bracket Nuts
Courtesy of FORD MOTOR CO.

9. Remove the 3 bolts and the RH engine support insulator.

LH engine support insulator

10. Using a jack positioned on the LH rear of the cylinder block, raise the engine 25.4 mm (1 in).

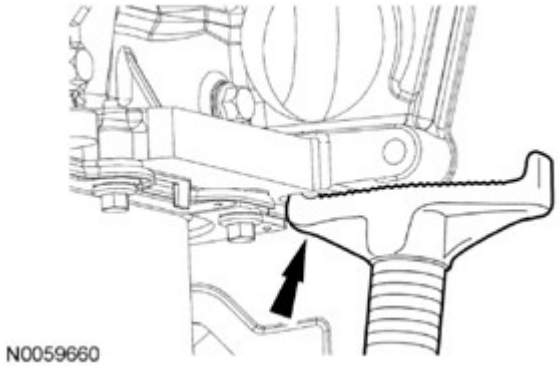

Fig. 202: Raising Engine Using Jack
Courtesy of FORD MOTOR CO.

11. Remove the 3 nuts and the engine support insulator-to-crossmember bracket.

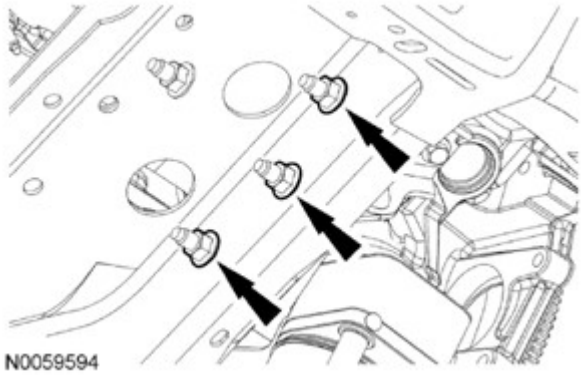

Fig. 203: Locating Engine Support Insulator-To-Crossmember Bracket And Nuts
Courtesy of FORD MOTOR CO.

12. Remove the 2 bolts, the nut and the LH engine support insulator.

Installation

RH engine support insulator

1. **NOTE: Clean the engine support insulator-to-cylinder block mating surface of any dirt or foreign material prior to installation.**

   Position the RH engine support insulator and install the 3 bolts.

   - Tighten to 80 Nm (59 lb-ft).
2. Position the RH engine support insulator bracket and install the 2 nuts.
   - Tighten to 90 Nm (66 lb-ft).

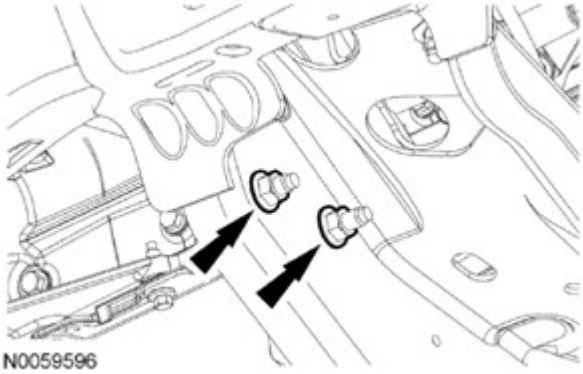

Fig. 204: Locating Engine Support Insulator-To-Crossmember Bracket And Nuts
Courtesy of FORD MOTOR CO.

3. Install the engine support insulator bracket-to-crossmember nut.
   - Tighten to 90 Nm (66 lb-ft).

Fig. 205: Locating Engine Support Insulator-To-Crossmember Bracket Nut
Courtesy of FORD MOTOR CO.

4. Using the jack positioned on the RH rear of the cylinder block, lower the engine.

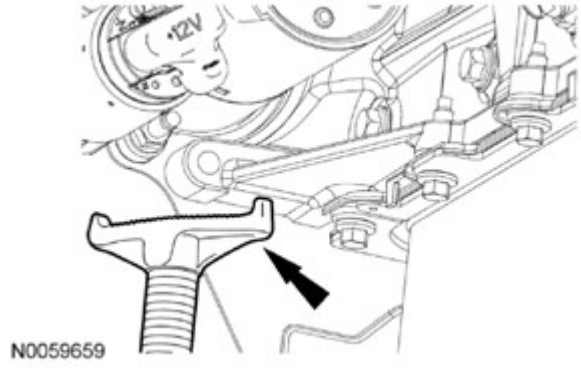

Fig. 206: Raising Engine Using Jack
Courtesy of FORD MOTOR CO.

LH engine support insulator

5. **NOTE: Clean the engine support insulator-to-cylinder block mating surface of any dirt or foreign material prior to installation.**

Position the LH engine support insulator and install the 2 bolts and the nut.

- Tighten to 80 Nm (59 lb-ft).

6. Position the LH engine support insulator bracket and install the 3 nuts.
   - Tighten to 90 Nm (66 lb-ft).

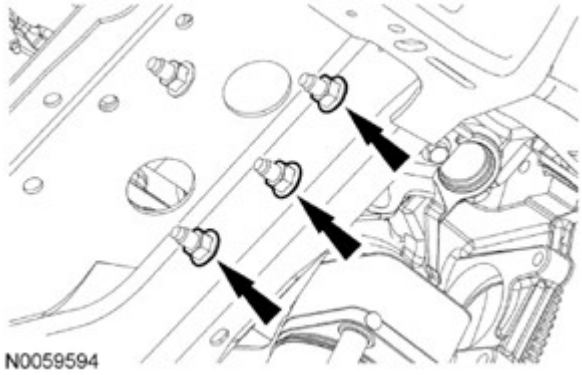

Fig. 207: Locating Engine Support Insulator-To-Crossmember Bracket Nuts
Courtesy of FORD MOTOR CO.

7. Using the jack positioned on the LH rear of the cylinder block, lower the engine.

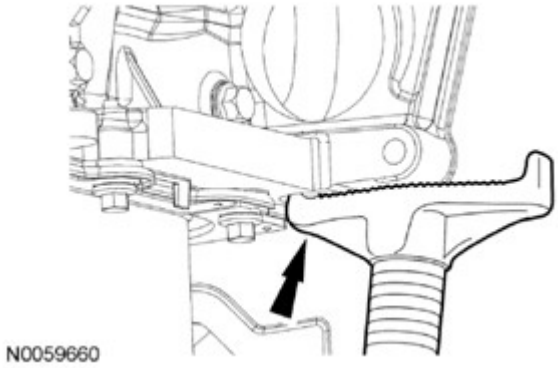

Fig. 208: Raising Engine Using Jack
Courtesy of FORD MOTOR CO.

All engine support insulators

8. Install the new 4 exhaust Y-pipe flange nuts.
   - Tighten to 40 Nm (30 lb-ft).

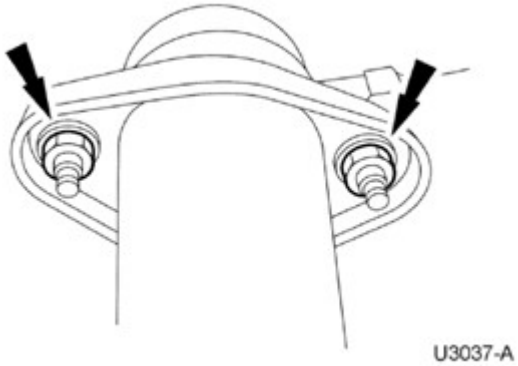

Fig. 209: Locating Exhaust Manifold Flange Nuts
Courtesy of FORD MOTOR CO.

9. Install the 4 engine support insulator-to-support insulator bracket nuts.
   - Tighten to 90 Nm (66 lb-ft).
10. If servicing the RH engine support insulator, install the starter motor. For additional information, refer to **STARTING SYSTEM** .
11. Position the cooling fan shroud and install the 2 bolts.
   - Tighten to 6 Nm (53 lb-in).

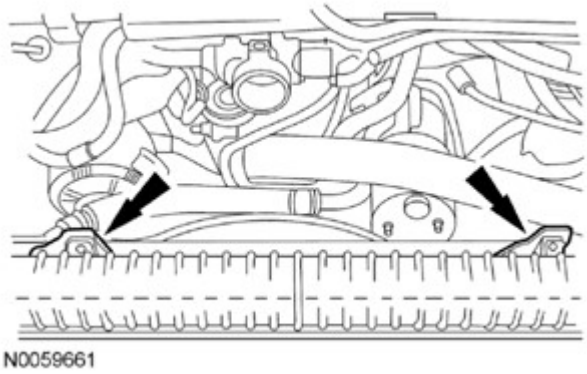

Fig. 210: Locating Cooling Fan Shroud Bolts
Courtesy of FORD MOTOR CO.

REMOVAL

ENGINE

SPECIAL TOOLS

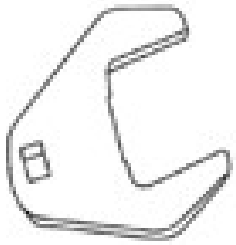 ST1499-A	Holding Wrench, Fan Pulley 303-239 (T84T-6312-C)
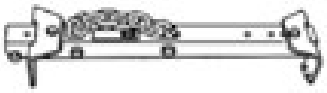 ST1377-A	Lifting Bracket, Engine 303-F047 (014-00073)
	Wrench, Fan Clutch Nut 303-240 (T84T-6312-D)

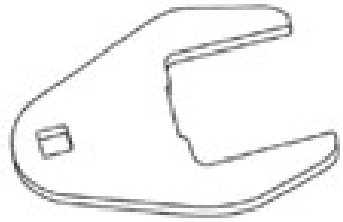 ST1828-A	

Removal

1. With the vehicle in NEUTRAL, position it on a hoist. For additional information, refer to **JACKING & LIFTING** .
2. If equipped, recover the A/C system. For additional information, refer to **CLIMATE CONTROL SYSTEM - GENERAL INFORMATION AND DIAGNOSTICS** .
3. Remove the intake manifold. For additional information, refer to **INTAKE MANIFOLD**.
4. Remove the accessory drive belt.
5. Remove the starter. For additional information, refer to **STARTING SYSTEM** .
6. Remove the front bumper. For additional information, refer to **BUMPERS** .
7. Disconnect the lower radiator hose from the radiator.
   - Disconnect the hose hanger.
   - Disconnect the hose.

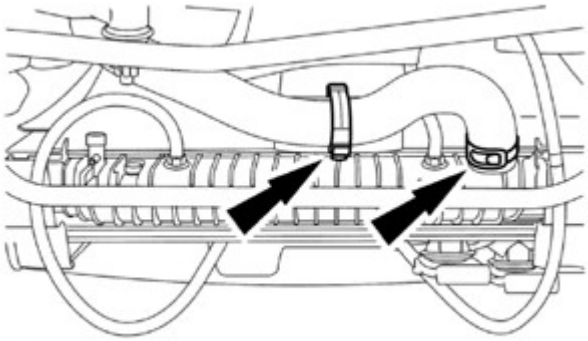

Fig. 211: Locating Radiator Hose Hanger
Courtesy of FORD MOTOR CO.

8. Disconnect the transmission cooler hoses and drain the fluid into a suitable container.

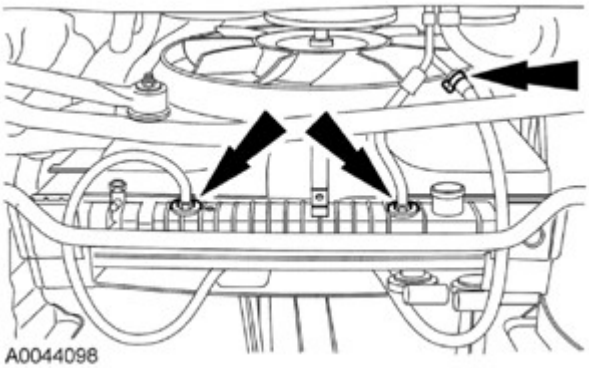

Fig. 212: Locating Transmission Cooler Hoses
Courtesy of FORD MOTOR CO.

9. Remove the 4 exhaust Y-pipe flange nuts.

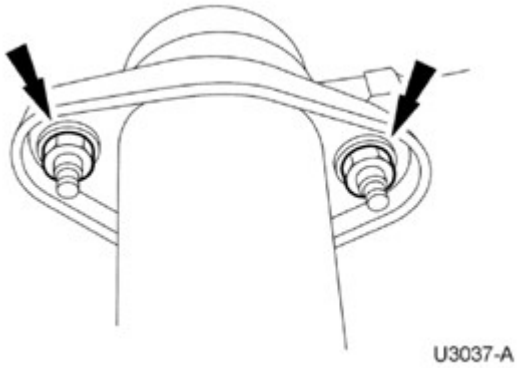

Fig. 213: Locating Exhaust Manifold Flange Nuts
Courtesy of FORD MOTOR CO.

10. Remove the oil drain plug and drain the engine oil. Install the drain plug when finished.
    - Tighten to 23 Nm (17 lb-ft).

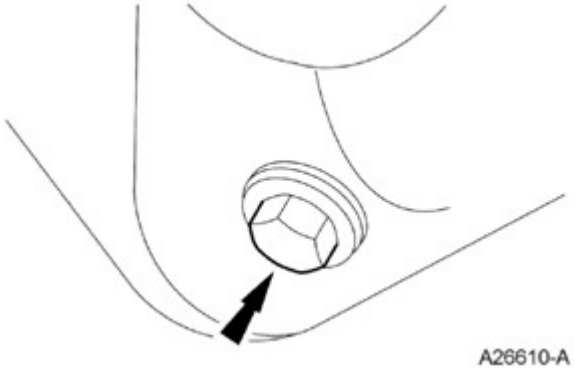

Fig. 214: Locating Oil Drain Plug
Courtesy of FORD MOTOR CO.

11. Disconnect the oil cooler coolant hoses and position aside.

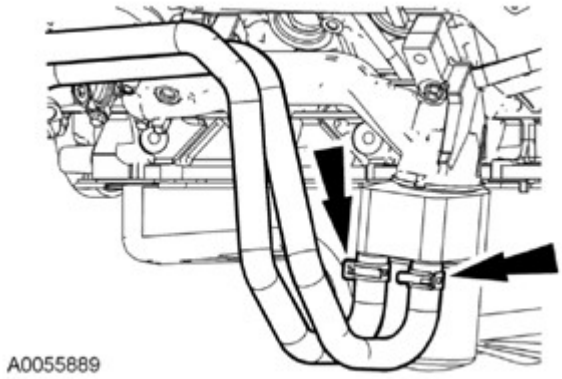

Fig. 215: Locating Oil Cooler Coolant Hoses Clamps
Courtesy of FORD MOTOR CO.

12. Remove and discard the oil filter.

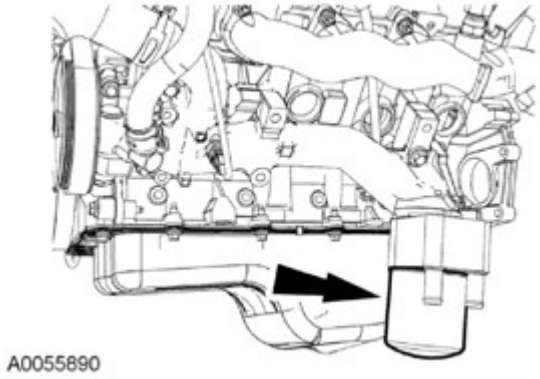

Fig. 216: Locating Oil Filter
Courtesy of FORD MOTOR CO.

13. **NOTE: A new oil cooler must be installed or severe damage to the engine can occur.**

NOTE: If metal or aluminum foreign material is present in the oil cooler, mechanical concerns exist. To diagnose mechanical concerns, refer to ENGINE SYSTEM - GENERAL INFORMATION . Failure to follow this instruction may result in engine damage.

Loosen the threaded insert and remove and discard the oil cooler.

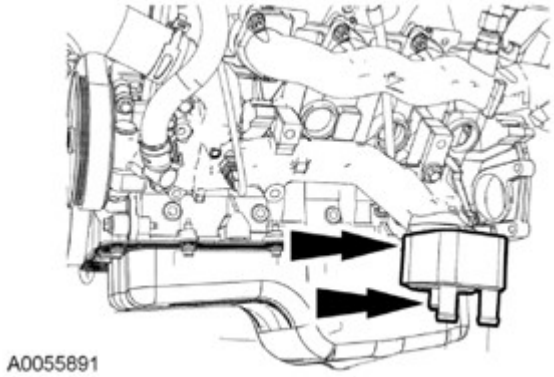

Fig. 217: Locating Oil Cooler
Courtesy of FORD MOTOR CO.

14. If equipped, disconnect the block heater electrical connector and 2 wiring harness retainers.

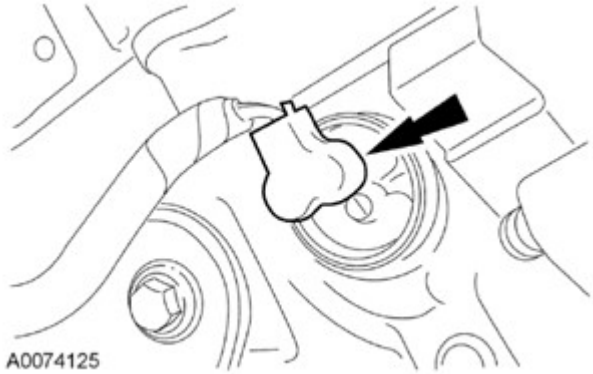

Fig. 218: Locating Block Heater Electrical Connector
Courtesy of FORD MOTOR CO.

15. Remove the 2 bolts and the flexplate inspection cover.

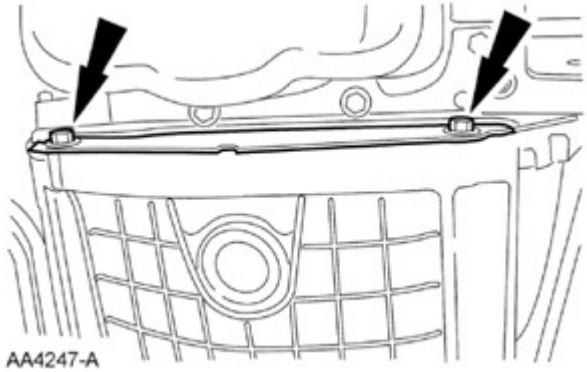

Fig. 219: Locating Flexplate Inspection Cover Bolts
Courtesy of FORD MOTOR CO.

16. Remove the cylinder block opening cover.

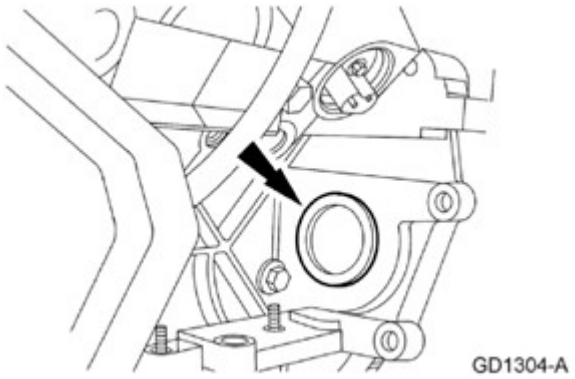

Fig. 220: Locating Cylinder Block Opening Cover
Courtesy of FORD MOTOR CO.

17. Remove the 4 nuts retaining the torque converter to the flexplate.
    - Rotate the crankshaft to access all of the torque converter nuts.
    - Discard the torque converter nuts.

Fig. 221: Locating Torque Converter-To-Flexplate Nuts
Courtesy of FORD MOTOR CO.

18. Disconnect the shift cable and the mounting bracket.
    1. Disconnect the clip.
    2. Remove the 2 bolts.

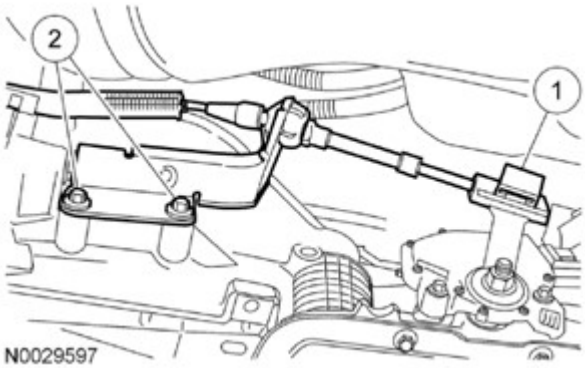

Fig. 222: Identifying Shift Cable And Mounting Bracket Bolts
Courtesy of FORD MOTOR CO.

19. Remove the 2 transmission-to-engine bolts and position the shifter cable support bracket, mounting bracket and cable aside.

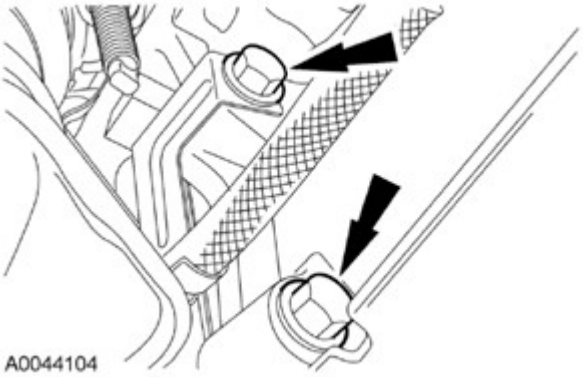

Fig. 223: Locating Transmission-To-Engine Bolts
Courtesy of FORD MOTOR CO.

20. Remove the RH lower transmission-to-engine bolt.

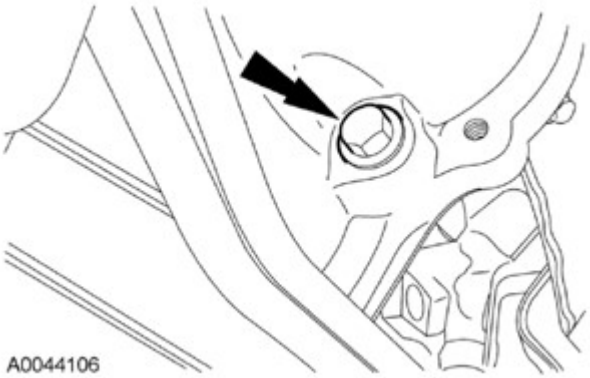

Fig. 224: Locating RH Lower Transmission-To-Engine Bolt
Courtesy of FORD MOTOR CO.

21. **NOTE: RH shown in illustration, LH similar.**

Remove the 4 engine support insulator-to-crossmember nuts.

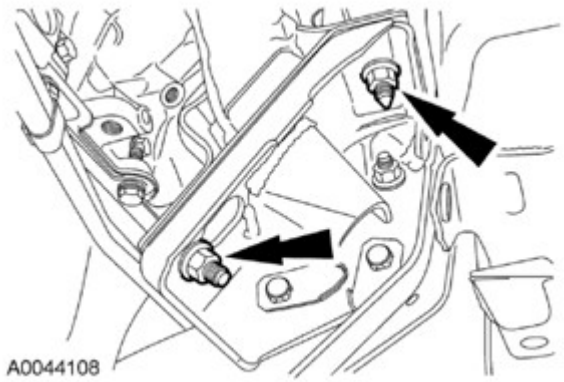

Fig. 225: Locating Engine Support Insulator-To-Crossmember Nuts
Courtesy of FORD MOTOR CO.

22. Disconnect the power steering reservoir hose and the power steering pressure tube at the power steering pump.
    - Allow the fluid to drain into a drain pan.

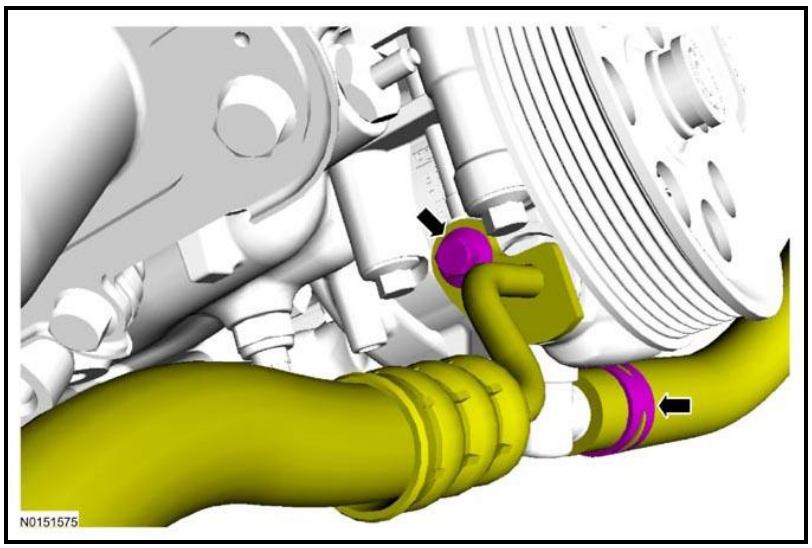

23. Remove the nut and position aside the transmission cooler tube support bracket and the starter wiring harness support bracket.

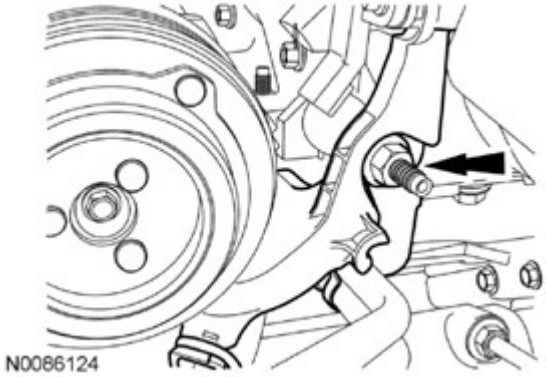

Fig. 226: Locating Transmission Cooler Tube Support Bracket Nut
Courtesy of FORD MOTOR CO.

24. Disconnect the A/C compressor electrical connector and the wiring harness retainer.

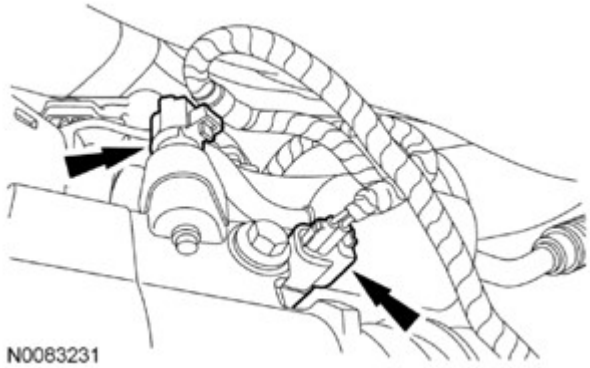

Fig. 227: Locating A/C Compressor Electrical Connector And Wiring Harness Retainer
Courtesy of FORD MOTOR CO.

25. Disconnect the Crankshaft Position (CKP) sensor electrical connector.

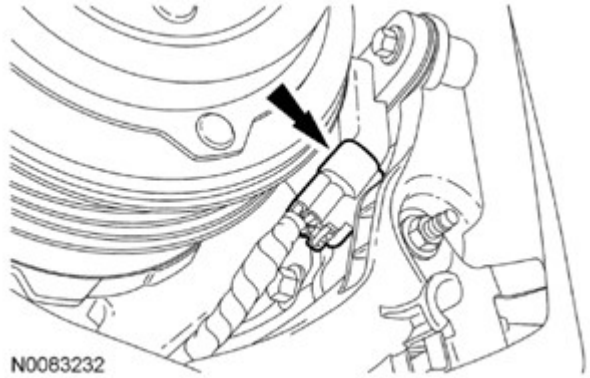

Fig. 228: Locating Crankshaft Position (CKP) Sensor Electrical Connector
Courtesy of FORD MOTOR CO.

26. If equipped, remove the 3 bolts and position the A/C compressor aside.

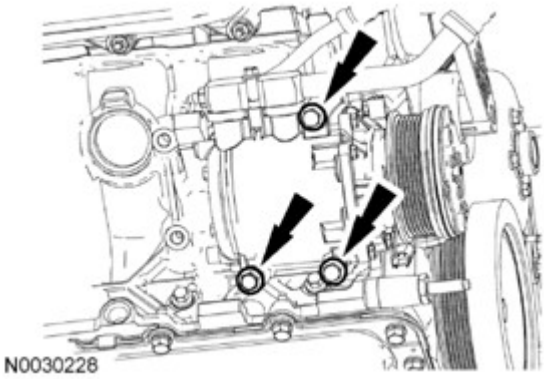

Fig. 229: Locating A/C Compressor Aside And Bolts
Courtesy of FORD MOTOR CO.

27. Remove the radiator grille support. For additional information, refer to **FRONT END BODY PANELS** .
28. Disconnect the upper radiator and the degas bottle coolant hoses from the radiator.

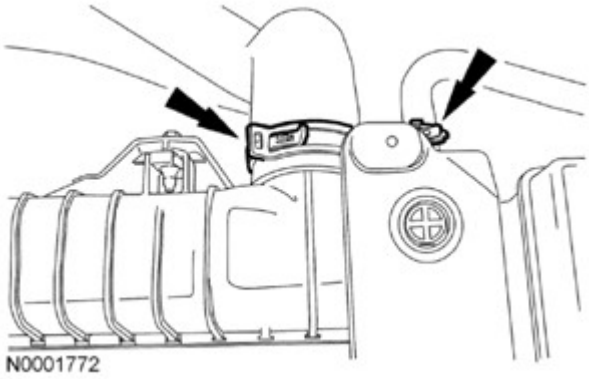

Fig. 230: Locating Upper Radiator And Degas Bottle Coolant Hoses Clamps
Courtesy of FORD MOTOR CO.

NOTE: Do not side load the cooling fan clutch coil or the cooling fan clutch may be damaged.

29. Using the Fan Pulley Holding Wrench and the Fan Clutch Nut Wrench, remove the cooling fan assembly.

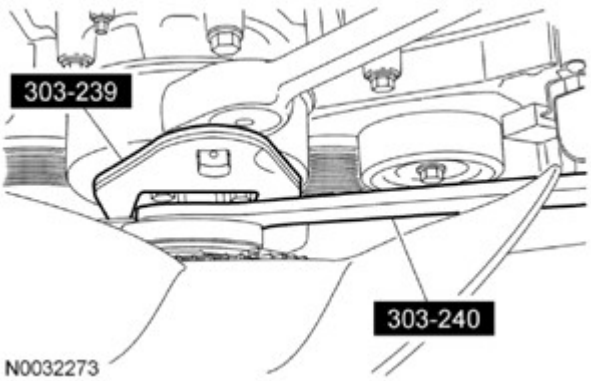

Fig. 231: Removing Cooling Fan And Clutch Assembly
Courtesy of FORD MOTOR CO.

30. Disconnect the degas bottle hose and power steering hose retainers from the fan shroud.

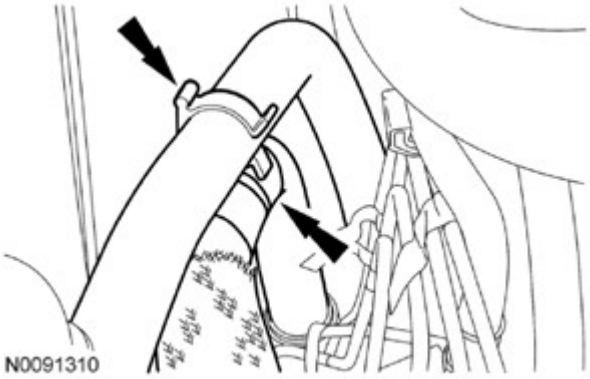

Fig. 232: Locating Degas Bottle Hose And Power Steering Hose Retainers
Courtesy of FORD MOTOR CO.

31. Remove the fan shroud, fan and fan clutch.
    1. Remove the 2 bolts.
    2. Lift the fan shroud, fan and fan clutch from the vehicle.

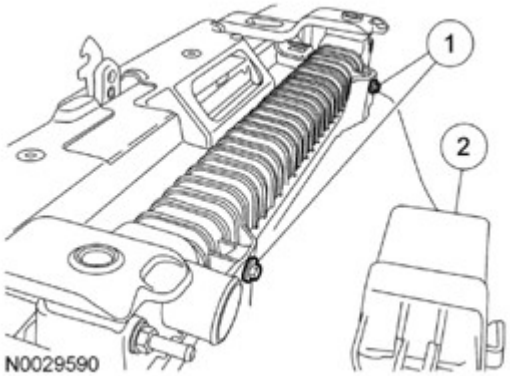

Fig. 233: Identifying Fan Shroud And Bolts
Courtesy of FORD MOTOR CO.

32. **NOTE: LH shown in illustration, RH similar.**

Remove the 4 bolts and the radiator support brackets.

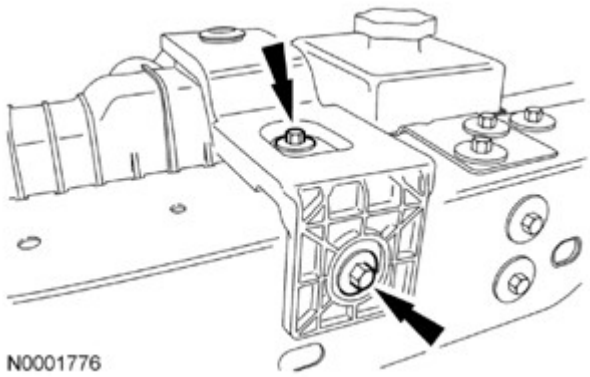

Fig. 234: Locating Radiator Support Brackets Bolts
Courtesy of FORD MOTOR CO.

33. Remove the radiator from the vehicle.

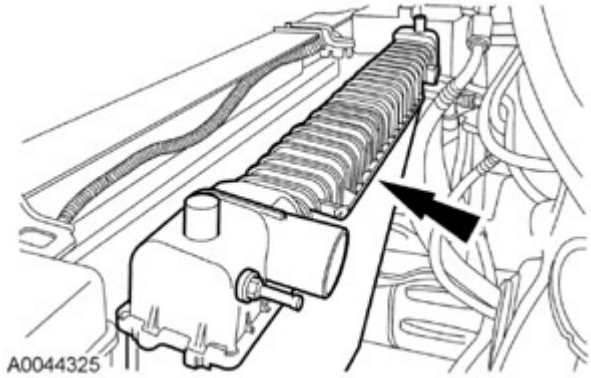

Fig. 235: Locating Radiator
Courtesy of FORD MOTOR CO.

34. If equipped, disconnect the A/C pressure cutoff switch electrical connector.

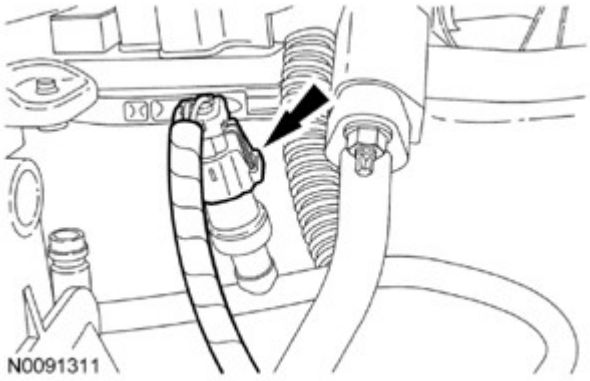

Fig. 236: Locating A/C Pressure Cutoff Switch Electrical Connector
Courtesy of FORD MOTOR CO.

35. If equipped, remove the nut and disconnect the compressor suction tube.

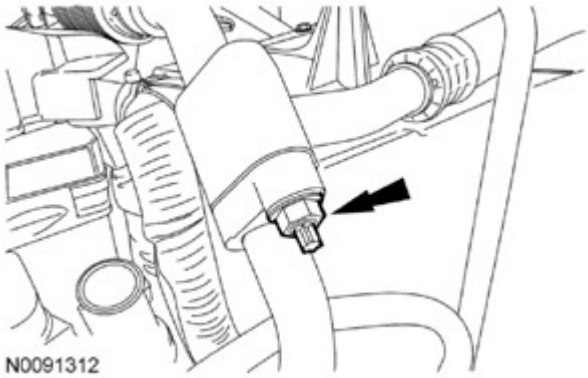

Fig. 237: Locating Compressor Suction Tube Nut
Courtesy of FORD MOTOR CO.

36. If equipped, remove the nuts and disconnect the compressor discharge tube and the condenser-to-evaporator tube from the A/C condenser core.

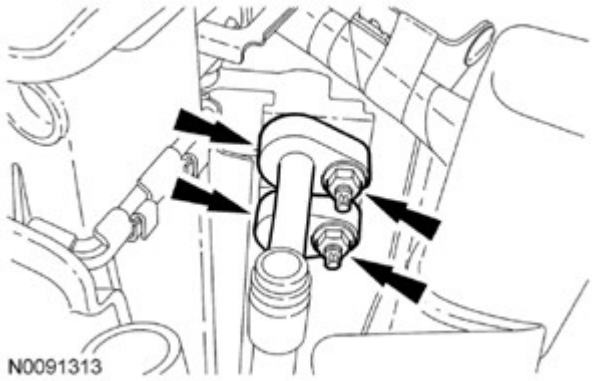

Fig. 238: Locating A/C Condenser Core And Nuts
Courtesy of FORD MOTOR CO.

37. **NOTE: RH shown in illustration, LH similar.**

Remove the A/C condenser core.

1. Remove the 2 bolts.
2. Remove the 2 A/C condenser brackets.
3. Remove the A/C condenser core.

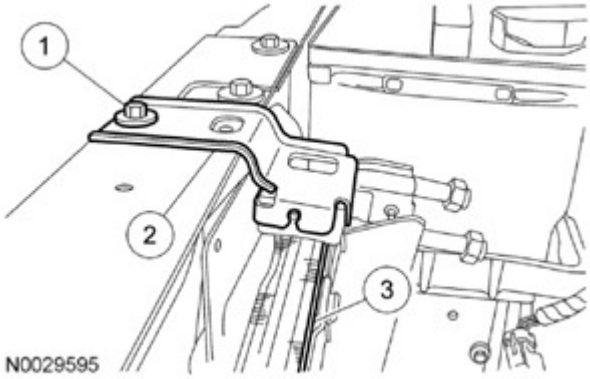

Fig. 239: Identifying A/C Condenser Brackets, A/C Condenser Core And Bolts
Courtesy of FORD MOTOR CO.

38. Set the hood latch aside.
    1. Remove the 2 hood latch bolts.
    2. Disengage the cable routing clip.

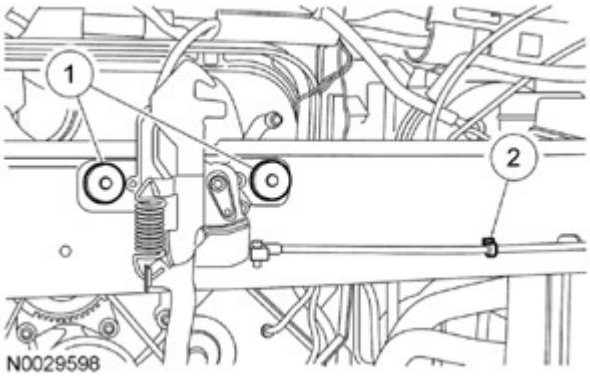

Fig. 240: Identifying Cable Routing Clip And Hood Latch Bolts
Courtesy of FORD MOTOR CO.

39. Remove the 3 bolts and position the power steering reservoir aside.

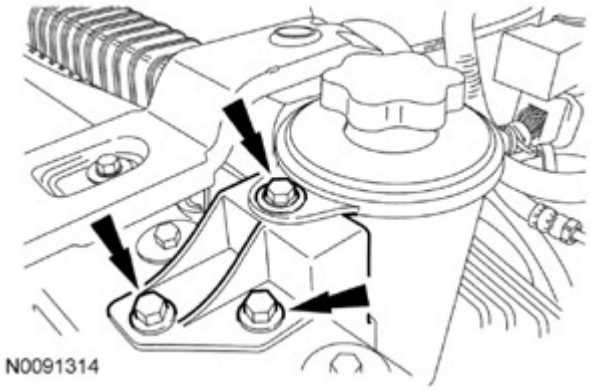

Fig. 241: Locating Power Steering Reservoir Aside Bolts
Courtesy of FORD MOTOR CO.

40. **NOTE: Cover removed from art for clarity.**

Remove the nut and the battery feed cable at the Power Distribution Box (PDB).

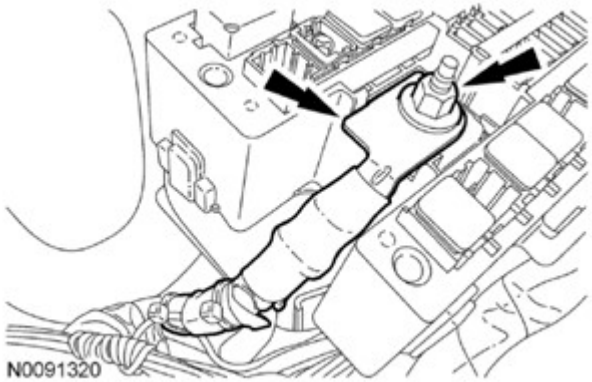

Fig. 242: Locating Battery Feed Cable And Nut On Power Distribution Box
Courtesy of FORD MOTOR CO.

41. Disengage the harness routing clips and position aside the battery feed wiring harness.

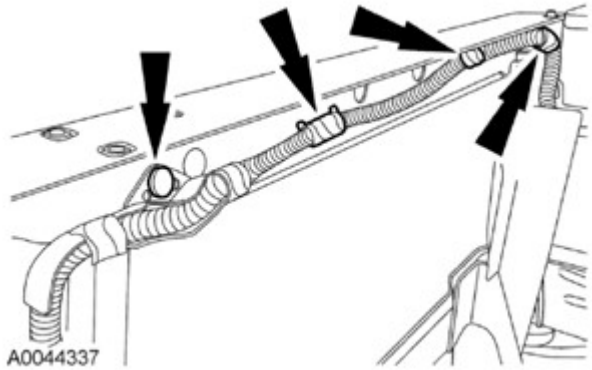

Fig. 243: Locating Harness Routing Clips And Battery Feed Wiring Harness
Courtesy of FORD MOTOR CO.

42. If equipped, disconnect the air temperature sensor electrical connector.

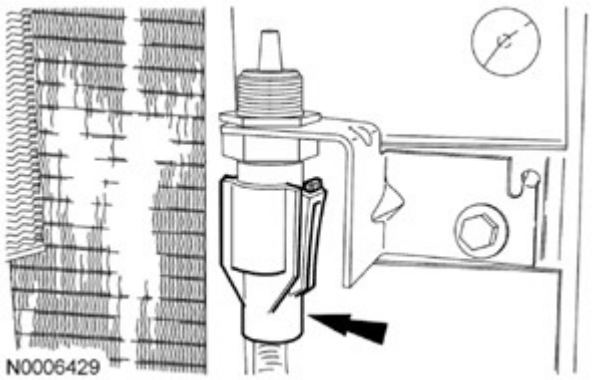

Fig. 244: Locating Air Temperature Sensor Electrical Connector
Courtesy of FORD MOTOR CO.

43. Disconnect the front impact severity sensor electrical connector.

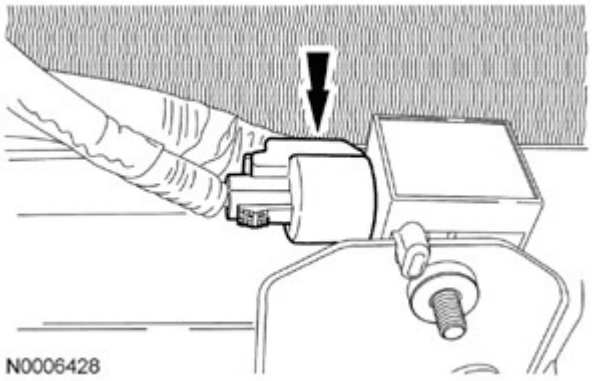

Fig. 245: Locating Front Impact Severity Sensor Electrical Connector
Courtesy of FORD MOTOR CO.

44. Disconnect the horn electrical connector.

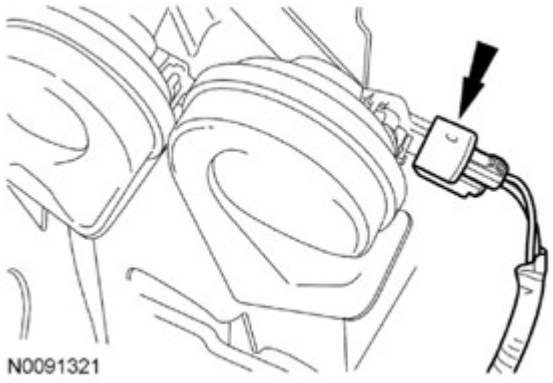

Fig. 246: Locating Horn Electrical Connector
Courtesy of FORD MOTOR CO.

45. Disconnect the transmission fluid cooler hose retainers.

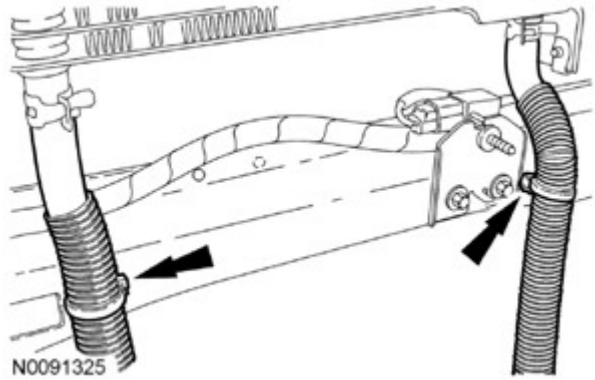

Fig. 247: Locating Transmission Fluid Cooler Hose Retainers
Courtesy of FORD MOTOR CO.

46. Remove the bolt and position the transmission fluid cooler aside.

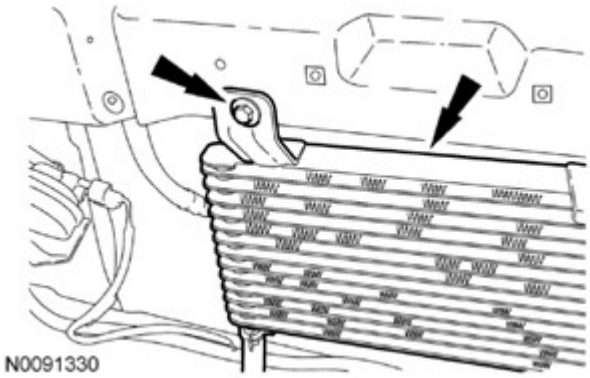

Fig. 248: Locating Transmission Fluid Cooler Aside And Bolt
Courtesy of FORD MOTOR CO.

47. **NOTE: RH shown in illustration, LH similar.**

Remove the pin-type retainers and the RH and LH air deflectors.

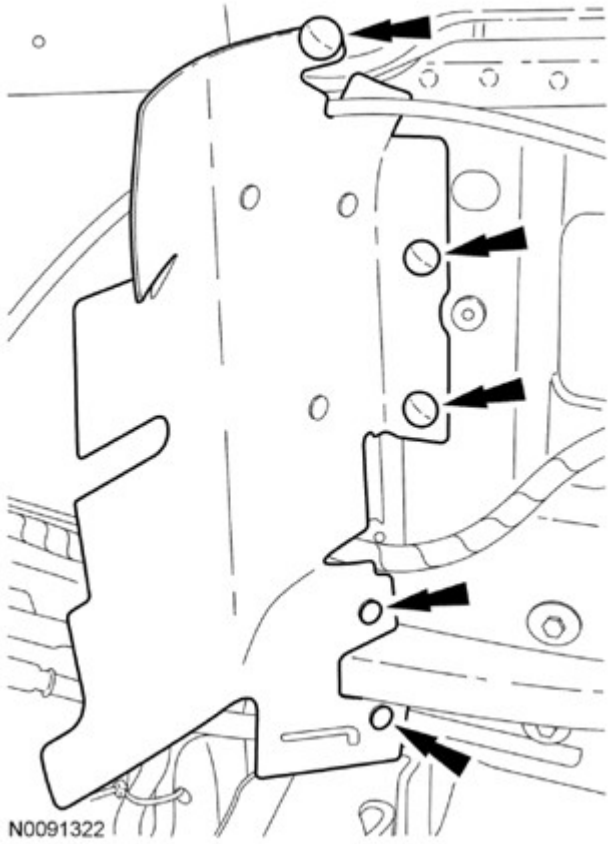

Fig. 249: Locating Pin-Type Retainers And Air Deflectors
Courtesy of FORD MOTOR CO.

48. **NOTE: RH shown in illustration, LH similar.**

Remove the 4 bolts and the 2 upper radiator support plates.

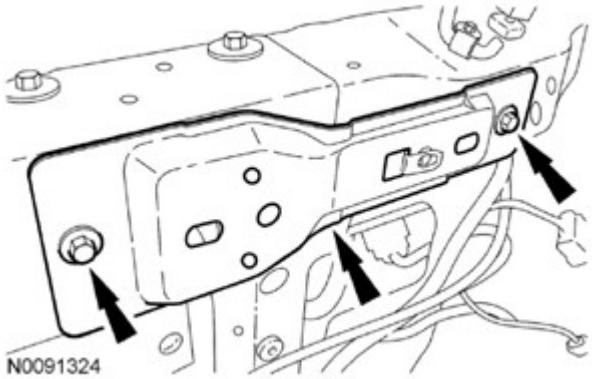

Fig. 250: Locating Upper Radiator Support Plates And Bolts
Courtesy of FORD MOTOR CO.

49. **NOTE: RH shown in illustration, LH similar.**

Remove the 8 bolts and the upper radiator support.

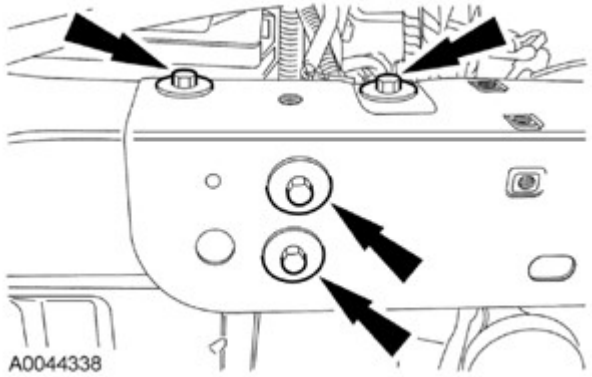

Fig. 251: Locating Upper Radiator Support Bolts
Courtesy of FORD MOTOR CO.

50. Remove the bolt and disconnect the 2 headlamp wiring harness retainers.

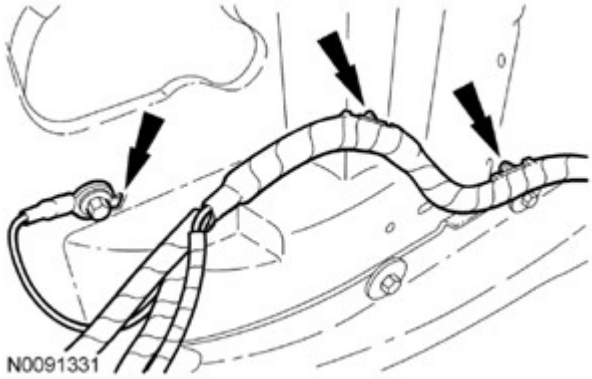

Fig. 252: Locating Headlamp Wiring Harness Retainers And Bolts
Courtesy of FORD MOTOR CO.

51. Disconnect the 4 wiring harness retainers and position the wiring harness aside.

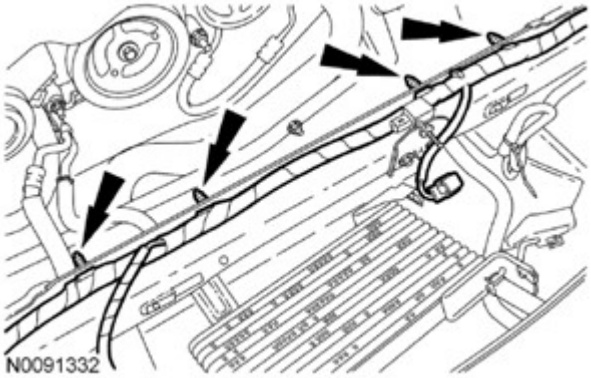

Fig. 253: Locating Wiring Harness Retainers And Wiring Harness Aside
Courtesy of FORD MOTOR CO.

52. **NOTE: LH shown in illustration, RH similar.**

Remove the 12 bolts and the lower radiator support.

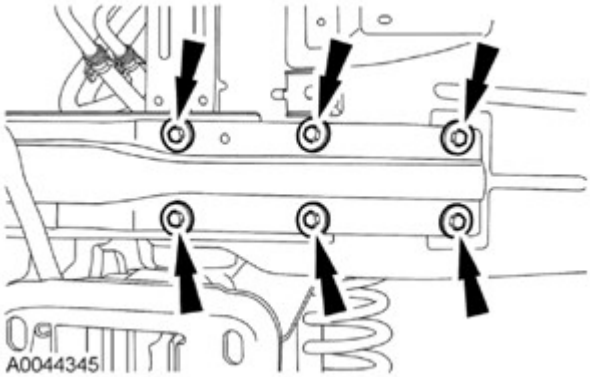

Fig. 254: Locating Lower Radiator Support Bolts
Courtesy of FORD MOTOR CO.

53. Disconnect the lower radiator coolant hose and position aside.

Fig. 255: Locating Lower Radiator Coolant Hose Clamp
Courtesy of FORD MOTOR CO.

54. Disconnect the generator electrical connections.
    1. Remove the B+ terminal nut and disconnect the terminal.
    2. Disconnect the S electrical connector.
    3. Disconnect the ASI electrical connector.

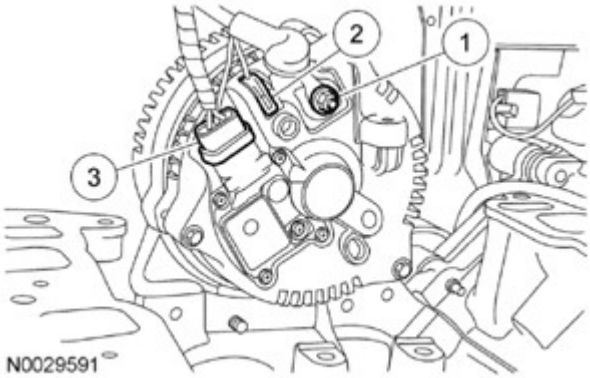

Fig. 256: Identifying ASI Electrical Connector And S Electrical Connector
Courtesy of FORD MOTOR CO.

55. Remove the 2 bolts and the generator.

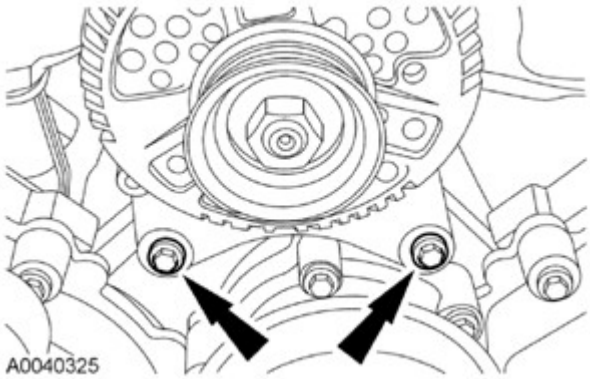

Fig. 257: Locating Generator Lower Mounting Bolts
Courtesy of FORD MOTOR CO.

56. Disconnect the quick connect coupling and remove the crankcase ventilation tube. For additional information, refer to **FUEL SYSTEM - GENERAL INFORMATION** .

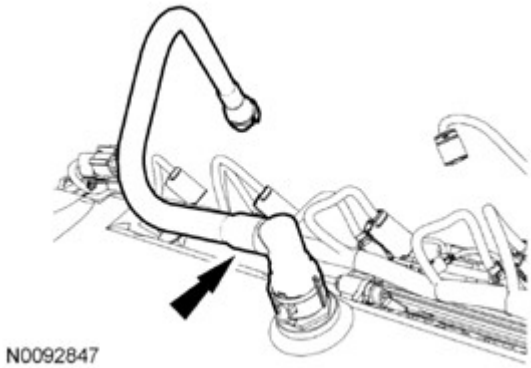

Fig. 258: Locating Crankcase Ventilation Tube
Courtesy of FORD MOTOR CO.

57. Disconnect the electrical connector.

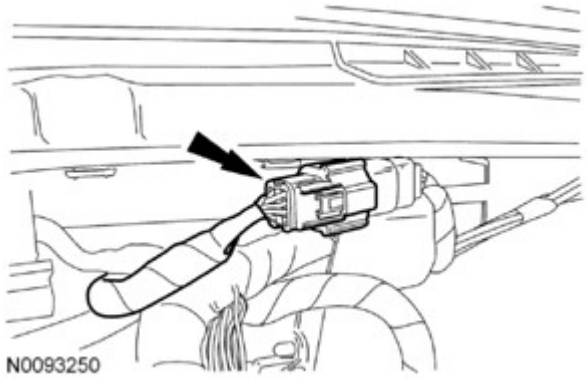

Fig. 259: Locating Electrical Connector
Courtesy of FORD MOTOR CO.

58. Disconnect the engine wiring harness retainer and the 2 PCM electrical connectors.

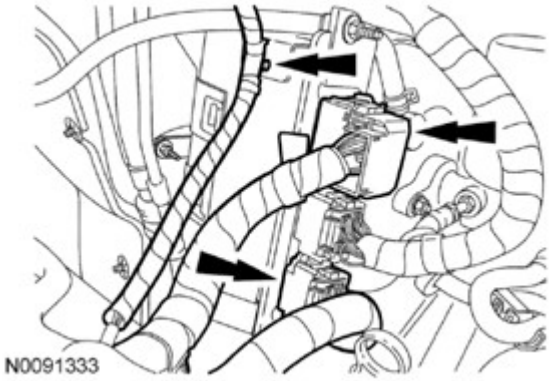

Fig. 260: Locating Engine Wiring Harness Retainer And PCM Electrical Connectors
Courtesy of FORD MOTOR CO.

59. Disconnect the 2 generator wiring harness retainers and position the wiring harness aside.

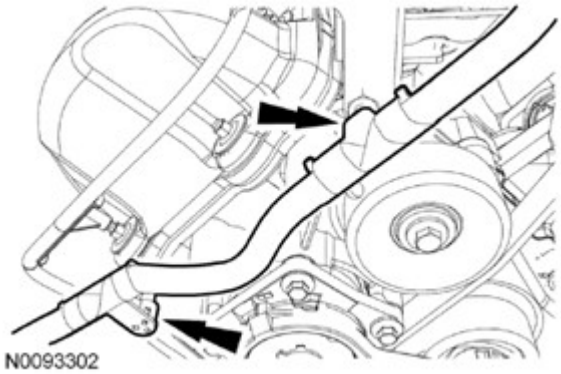

Fig. 261: Locating Generator Wiring Harness Retainers
Courtesy of FORD MOTOR CO.

60. Disconnect the electrical connector, electrical connector retainer and remove the nut, ground strap and mounting bracket.

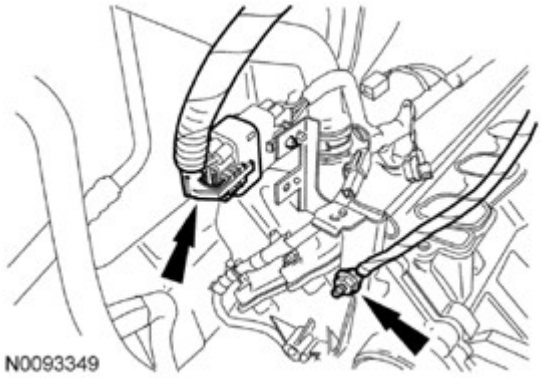

Fig. 262: Locating Electrical Connector, Ground Strap And Nut
Courtesy of FORD MOTOR CO.

61. Remove the engine oil filler tube support strap bolt.

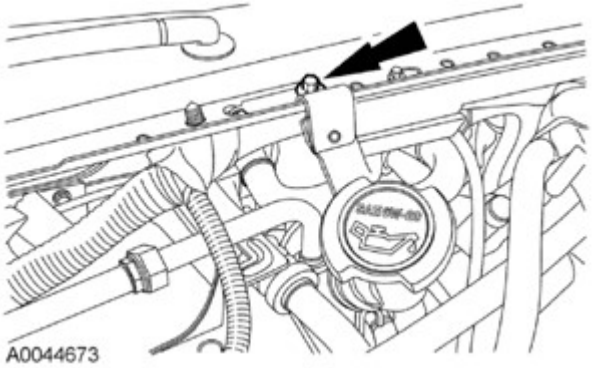

Fig. 263: Locating Oil Fill Tube Support Bracket Bolt
Courtesy of FORD MOTOR CO.

62. Remove the fluid level indicator and disconnect the attachments at the transmission fluid filler tube.
    1. Remove the fluid level indicator.
    2. Disconnect the rear heater hose hanger.

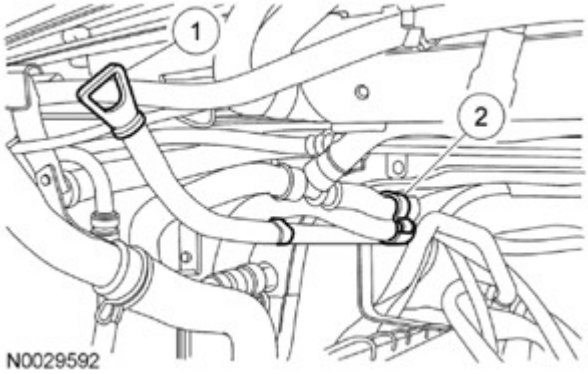

Fig. 264: Identifying Fluid Level Indicator And Rear Heater Hose Hanger
Courtesy of FORD MOTOR CO.

63. Disconnect the RH HO2S and remove the transmission filler tube.

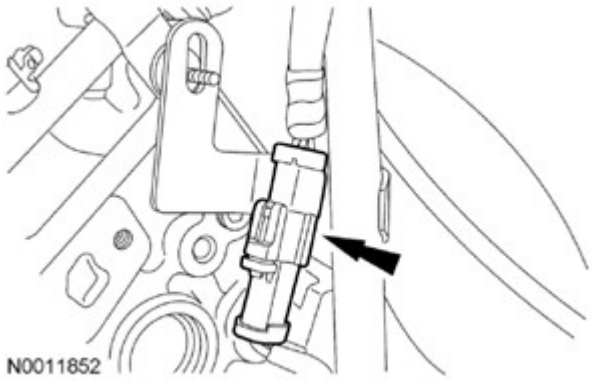

Fig. 265: Locating HO2S Electrical Connector
Courtesy of FORD MOTOR CO.

64. Disconnect the oil fill tube from the RH valve cover.

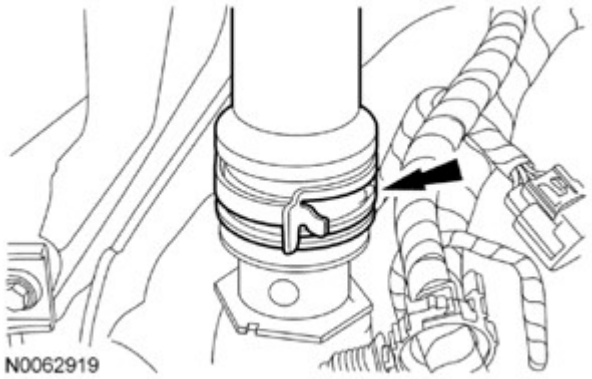

Fig. 266: Locating Oil Fill Tube Clamp
Courtesy of FORD MOTOR CO.

65. Disconnect the Knock Sensor (KS) electrical connector and engine wiring harness retainers.

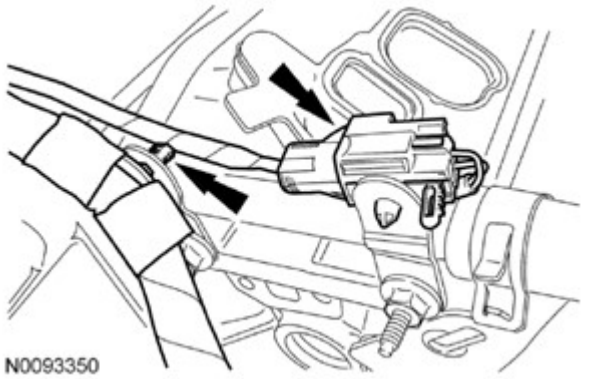

Fig. 267: Locating Knock Sensor (KS) Electrical Connector And Engine Wiring Harness Retainers
Courtesy of FORD MOTOR CO.

66. Disconnect the coolant hose from the heater outlet tube.

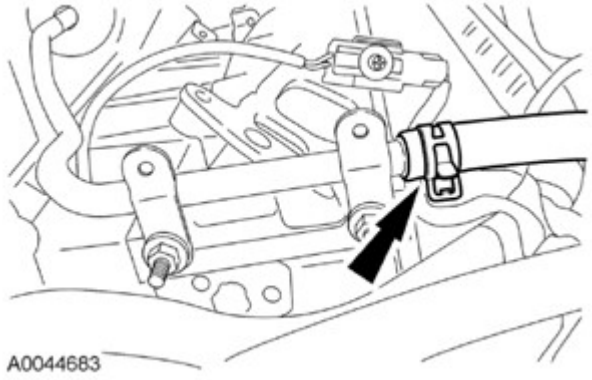

Fig. 268: Locating Heater Coolant Hose Clamp
Courtesy of FORD MOTOR CO.

67. Remove the 2 heater outlet tube studs.

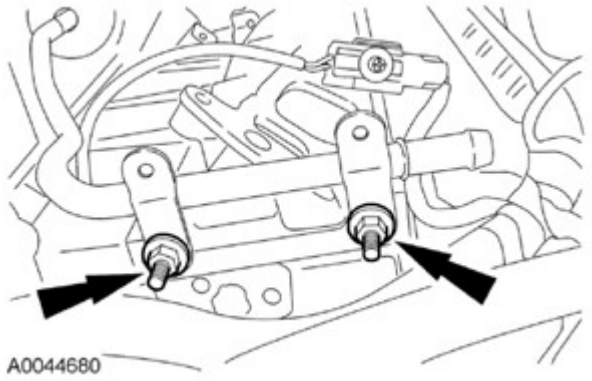

Fig. 269: Locating Heater Outlet Tube Studs
Courtesy of FORD MOTOR CO.

68. Remove the heater outlet tube.
    - Discard the O-ring seals.

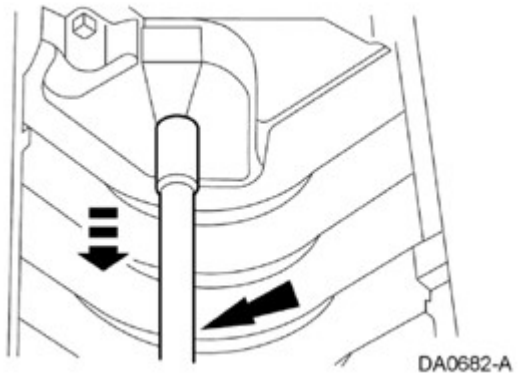

Fig. 270: Removing Heater Outlet Tube
Courtesy of FORD MOTOR CO.

69. Remove the bolt and the ground strap and disconnect the RH HO2S electrical connector and retainer.

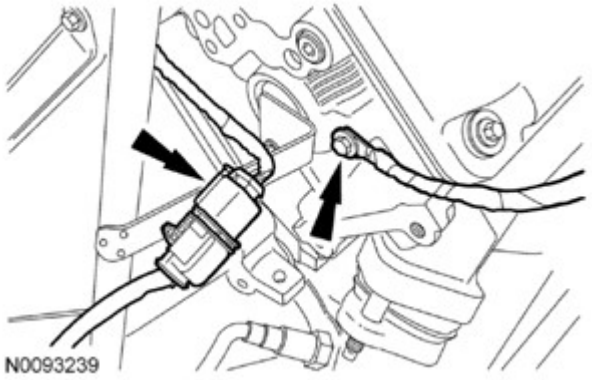

Fig. 271: Locating Ground Strap And Bolt
Courtesy of FORD MOTOR CO.

70. Disconnect the transmission wiring harness retainers from the engine wiring harness.

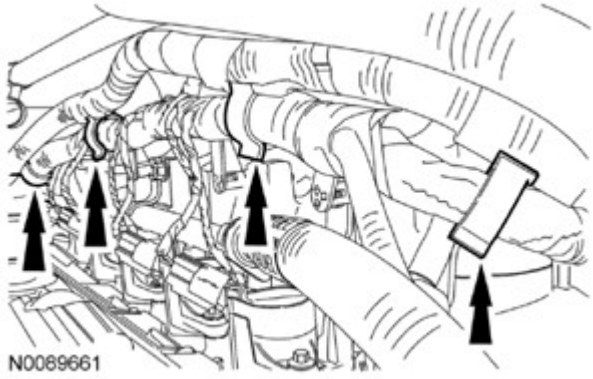

Fig. 272: Locating Transmission Wiring Harness Retainers
Courtesy of FORD MOTOR CO.

71. Disconnect the LH HO2S sensor electrical wiring harness retainer from the rear of the LH cylinder head.

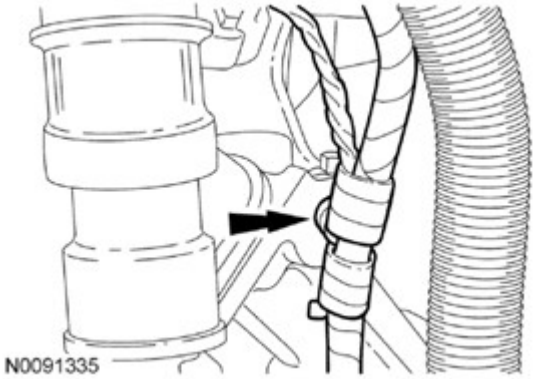

Fig. 273: Locating HO2S Sensor Electrical Wiring Harness Retainer
Courtesy of FORD MOTOR CO.

72. Disconnect the transmission wiring harness retainer and position the transmission wiring harness aside.

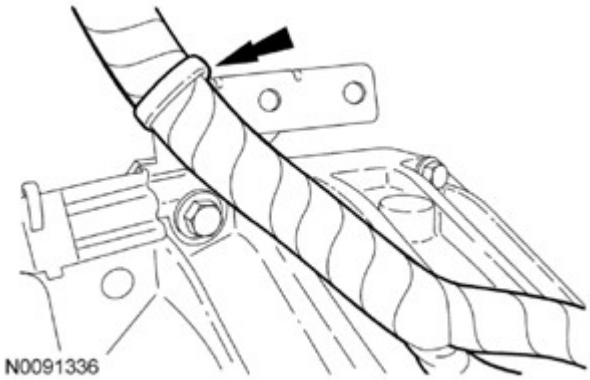

Fig. 274: Locating Transmission Wiring Harness Retainer
Courtesy of FORD MOTOR CO.

73. Disconnect the LH HO2S sensor electrical connector and retainer.

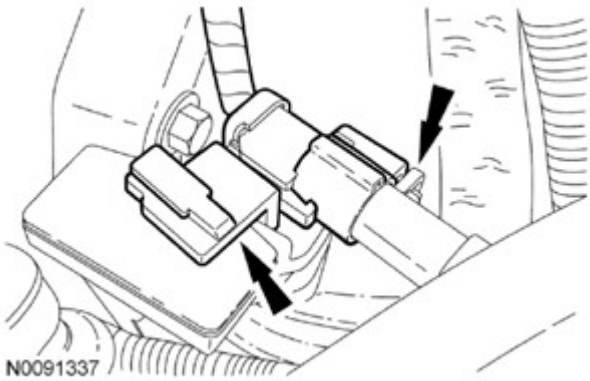

Fig. 275: Locating HO2S Sensor Electrical Connector And Retainer
Courtesy of FORD MOTOR CO.

74. Remove the 4 upper transmission-to-engine bolts and position the fuel tube support bracket aside.

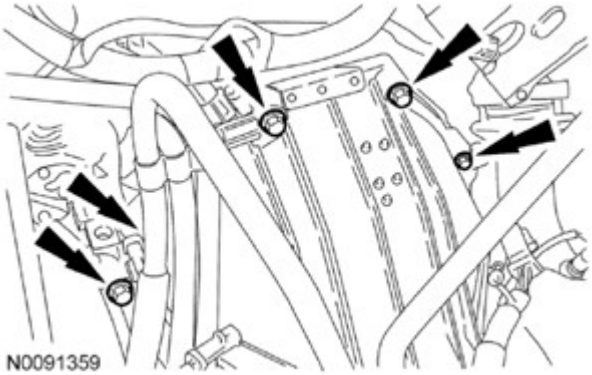

Fig. 276: Locating Upper Transmission-To-Engine Bolts
Courtesy of FORD MOTOR CO.

75. Install the Engine Lifting Bracket.

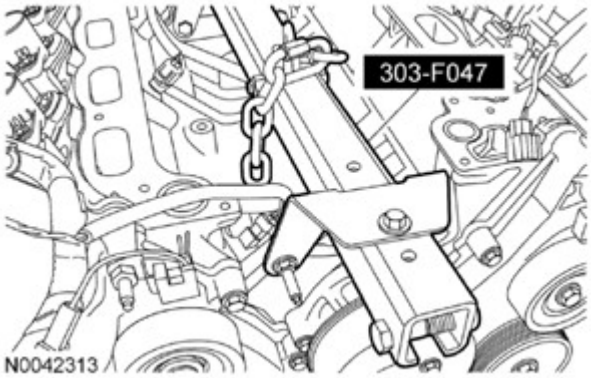

Fig. 277: Installing/Removing Engine Lifting Bracket Using Engine Lift Bracket (303-F047)
Courtesy of FORD MOTOR CO.

76. Support the transmission with a jack.
77. Using a floor crane, remove the engine assembly from the vehicle.

CYLINDER HEAD

SPECIAL TOOLS

	3-Jaw Puller 303-D121 or equivalent

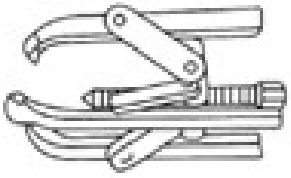 ST1184-A	
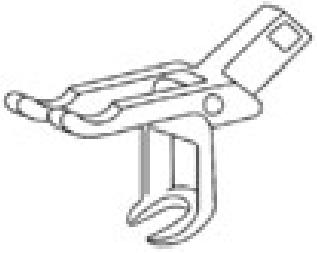 ST1330-A	Compressor, Valve Spring 303-567 (T97P-6565-AH)
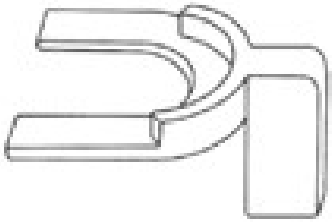 ST1331-A	Compressor Spacer, Valve Spring 303-382 (T91P-6565-AH)
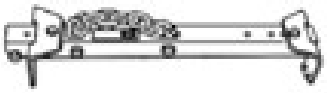 ST1377-A	Lifting Bracket, Engine 303-F047 (014-00073) or equivalent
	Lifting Bracket Set, Engine 303-DS086 (D93P-6001-A) or equivalent

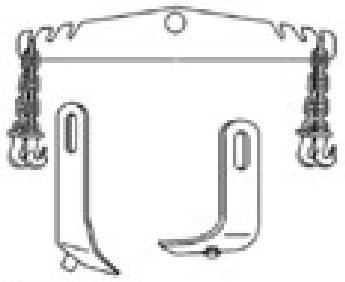 ST2443-A	
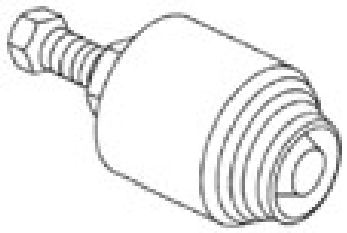 ST1730-A	Remover, Crankshaft Front Oil Seal 303-107 (T74P-6700-A)
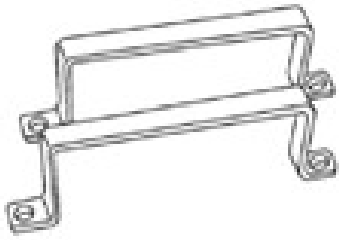 ST1668-A	Remover/Installer, Cylinder Head 303-572 (T97T-6000-A)

MATERIAL SPECIFICATIONS

Item	Specification
Motorcraft® Metal Surface Prep ZC-31-A	-
Motorcraft® Silicone Gasket Remover ZC-30	-

Removal

All cylinder heads

1. Remove the engine. For additional information, refer to **ENGINE**.
2. **NOTE: To prevent damage to the oil pan, use care when lowering the engine.**

Lower the engine onto wooden blocks.

3. Remove the Engine Lifting Bracket.

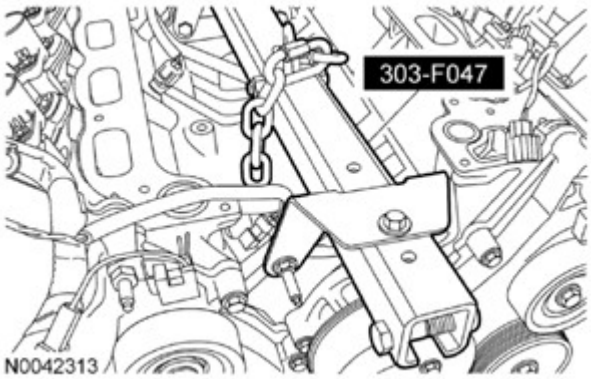

Fig. 278: Installing/Removing Engine Lifting Bracket Using Engine Lift Bracket (303-F047)
Courtesy of FORD MOTOR CO.

4. Install the Engine Lifting Bracket Set.

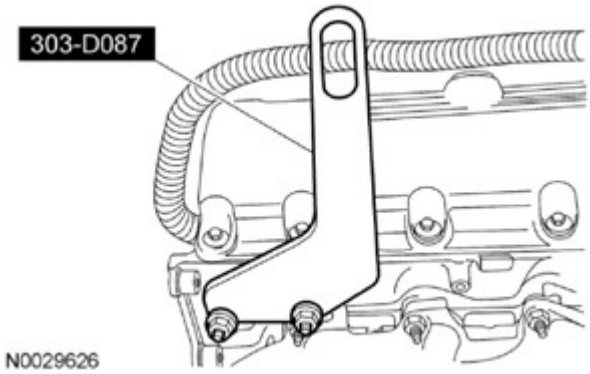

Fig. 279: Installing Engine Lifting Bracket Set
Courtesy of FORD MOTOR CO.

5. Install the Engine Lifting Bracket Set.

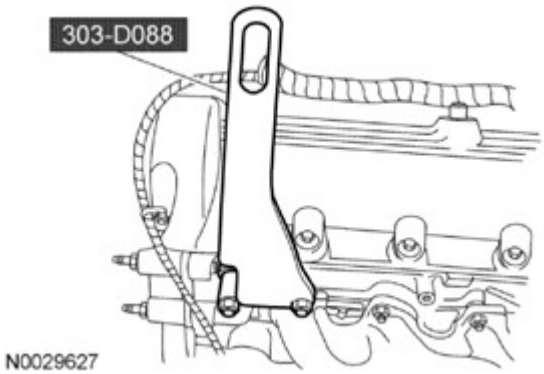

Fig. 280: Installing Engine Lifting Bracket Set
Courtesy of FORD MOTOR CO.

6. Mount the engine on a suitable work stand.
7. If equipped with cylinder block drain plugs, remove the 3 bolts and the RH engine support insulator.

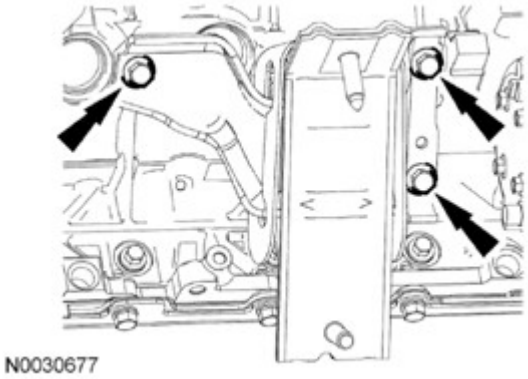

Fig. 281: Locating RH Engine Support Insulator Bolts
Courtesy of FORD MOTOR CO.

8. **NOTE: LH shown in illustration, RH similar.**

   If equipped, remove the cylinder block drain plugs and drain the coolant in a suitable container.

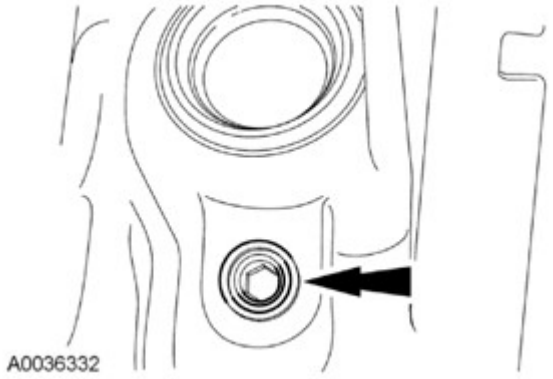

Fig. 282: Locating Cylinder Block Drain Plug
Courtesy of FORD MOTOR CO.

9. Disconnect the LH radio frequency interference capacitor and Cylinder Head Temperature (CHT) sensor electrical connectors.

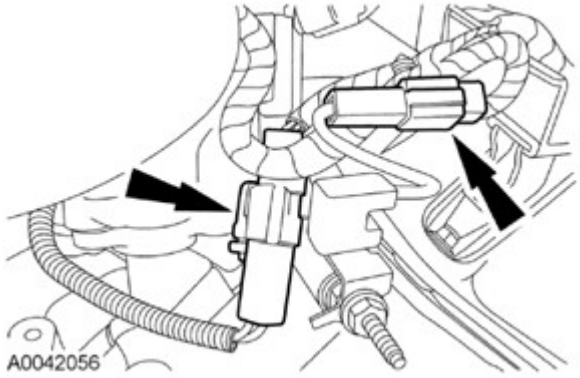

Fig. 283: Locating Cylinder Head Temperature Sensor Electrical Connectors
Courtesy of FORD MOTOR CO.

10. Disconnect the Camshaft Position (CMP) sensor electrical connector.

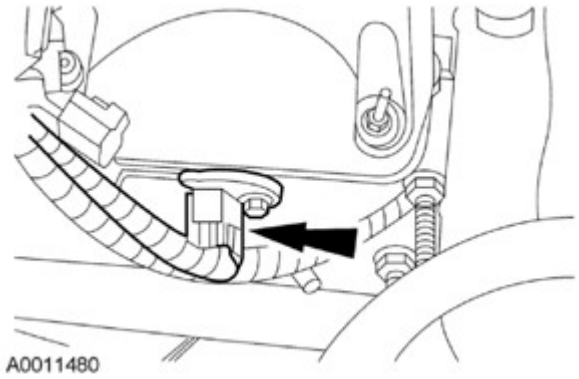

Fig. 284: Locating Camshaft Position Sensor Electrical Connector
Courtesy of FORD MOTOR CO.

11. Disconnect the RH radio frequency interference capacitor electrical connector.

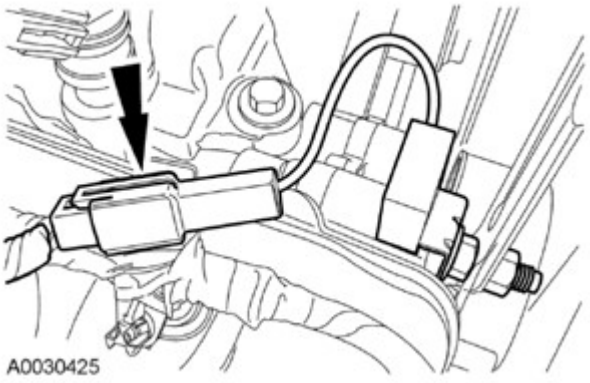

Fig. 285: Locating Radio Frequency Interference Capacitor Electrical Connector
Courtesy of FORD MOTOR CO.

12. Disconnect the Knock Sensor (KS) electrical connector.

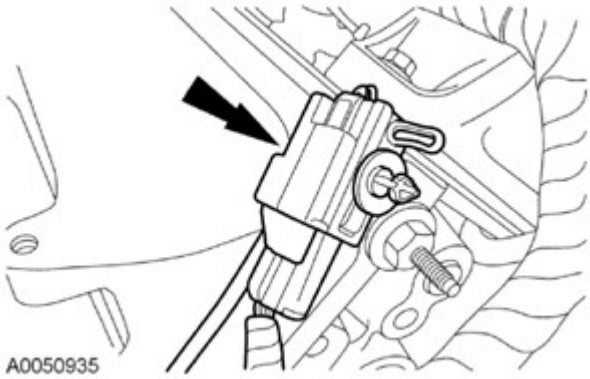

Fig. 286: Locating Knock Sensor Electrical Connector
Courtesy of FORD MOTOR CO.

13. Disconnect the Engine Oil Pressure (EOP) switch electrical connector and wiring harness retainer.

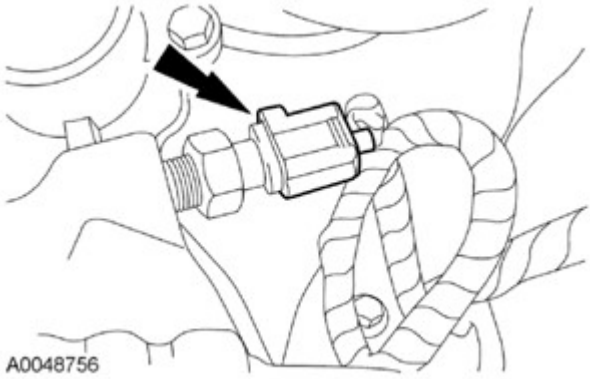

Fig. 287: Locating Oil Pressure Switch Electrical Connector
Courtesy of FORD MOTOR CO.

14. Disconnect all of the harness routing clips and connector retainers. Remove the engine control sensor wiring harness.
15. **NOTE: RH shown in illustration, LH similar.**

    Remove the 2 nuts and the 2 radio interference capacitors.

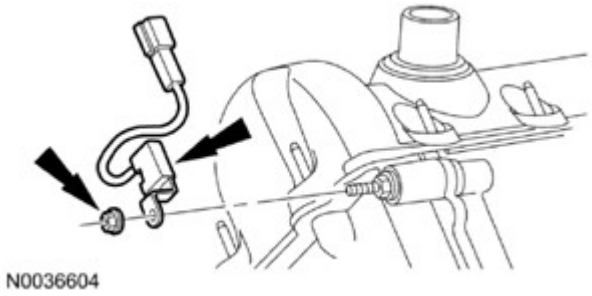

Fig. 288: Locating Radio Interference Capacitors And Nuts
Courtesy of FORD MOTOR CO.

16. Remove the bolt and the oil level indicator tube.
    - Discard the O-ring seal.

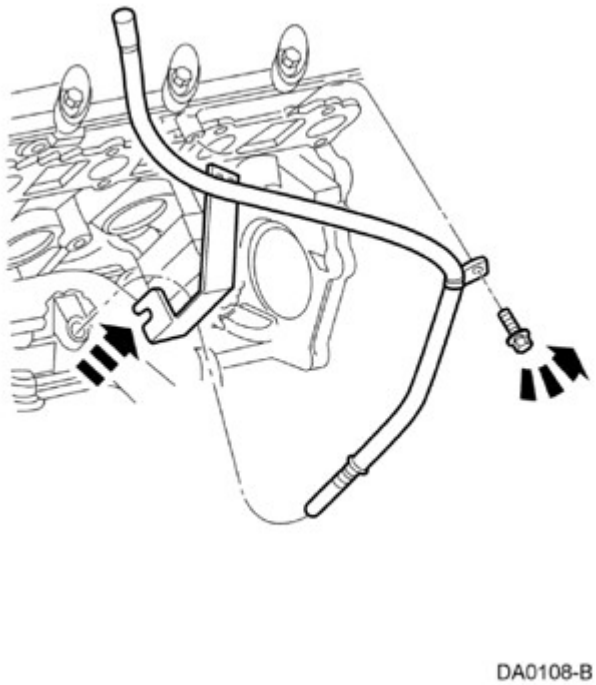

Fig. 289: Removing Bolt And Oil Level Indicator Tube
Courtesy of FORD MOTOR CO.

17.

NOTE: Do not use metal scrapers, wire brushes, power abrasive discs or other abrasive means to clean the sealing surfaces. These tools cause scratches and gouges which make leak paths. Use a plastic scraping tool to remove all traces of old sealant.

NOTE: The fasteners are part of the valve cover and should not be removed.

Remove the LH valve cover.

- Fully loosen the 14 fasteners and remove the valve cover.
- Clean the valve cover mating surface of the cylinder head with silicone gasket remover and metal surface prep. Follow the directions on the packaging.
- Inspect the valve cover gasket. If the gasket is damaged, remove and discard the gasket. Clean the valve cover gasket groove with soap and water or a suitable solvent.

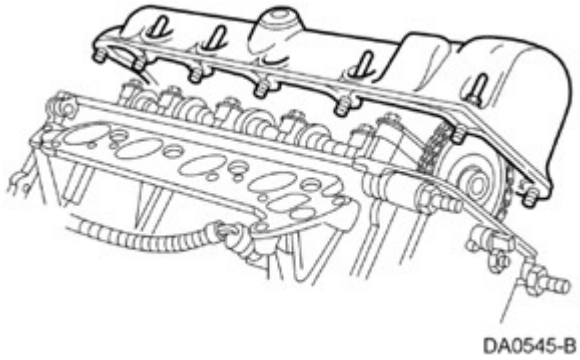

Fig. 290: Identifying Valve Cover
Courtesy of FORD MOTOR CO.

18.

NOTE: Do not use metal scrapers, wire brushes, power abrasive discs or other abrasive means to clean the sealing surfaces. These tools cause scratches and gouges which make leak paths. Use a plastic scraping tool to remove all traces of old sealant.

NOTE: The fasteners are part of the valve cover and should not be removed.

Remove the RH valve cover.

- Fully loosen the 14 fasteners and remove the valve cover.
- Clean the valve cover mating surface of the cylinder head with silicone gasket remover and metal surface prep. Follow the directions on the packaging.
- Inspect the valve cover gasket. If the gasket is damaged, remove and discard the gasket. Clean the valve cover gasket groove with soap and water or a suitable solvent.

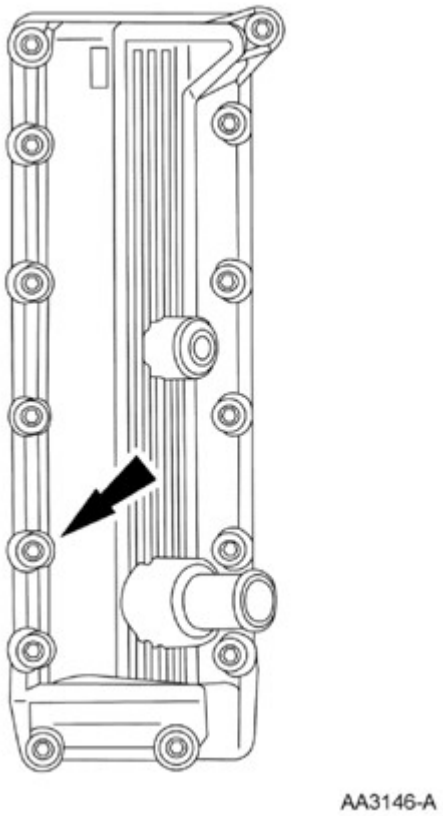

Fig. 291: Locating Valve Cover Fasteners
Courtesy of FORD MOTOR CO.

19. Remove the bolt and the accessory drive belt idler pulley.

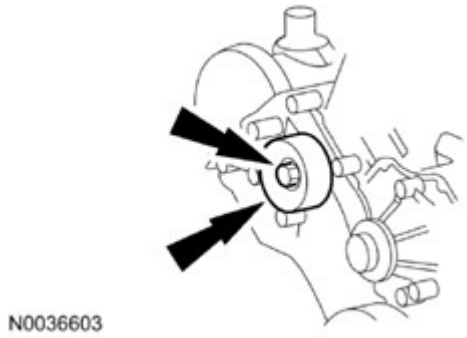

Fig. 292: Locating Accessory Drive Belt Idler Pulley And Bolt
Courtesy of FORD MOTOR CO.

20. Remove the 4 bolts and the coolant pump pulley.

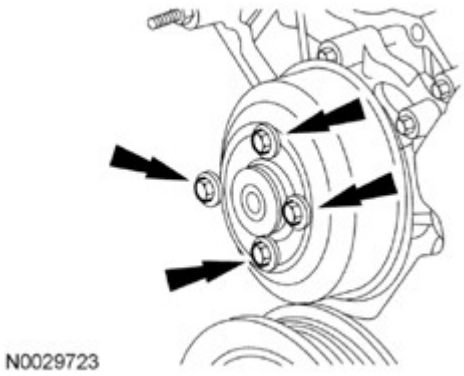

Fig. 293: Locating Coolant Pump Pulley Bolts
Courtesy of FORD MOTOR CO.

21. Remove the crankshaft pulley bolt and washer.
    - Discard the crankshaft pulley bolt.
22. Using the 3 Jaw Puller, remove the crankshaft pulley.

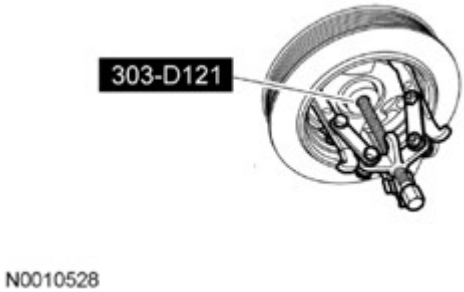

Fig. 294: Removing Crankshaft Pulley Using Jaw Puller
Courtesy of FORD MOTOR CO.

23. Using the Crankshaft Front Oil Seal Remover, remove and discard the crankshaft front seal.

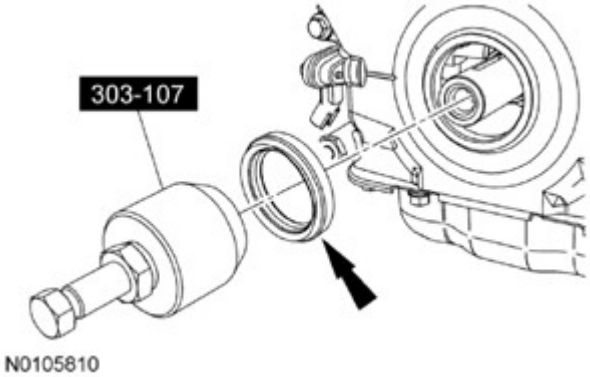

Fig. 295: Removing Crankshaft Front Seal Using Crankshaft Front Oil Seal Remover
Courtesy of FORD MOTOR CO.

24. Remove the 4 front oil pan bolts.

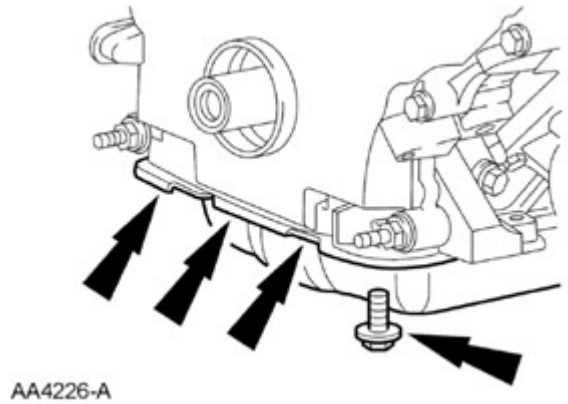

Fig. 296: Locating Front Oil Pan Bolts
Courtesy of FORD MOTOR CO.

NOTE: Correct fastener location is essential for assembly procedure. Record fastener location.

25. Remove the 15 fasteners.

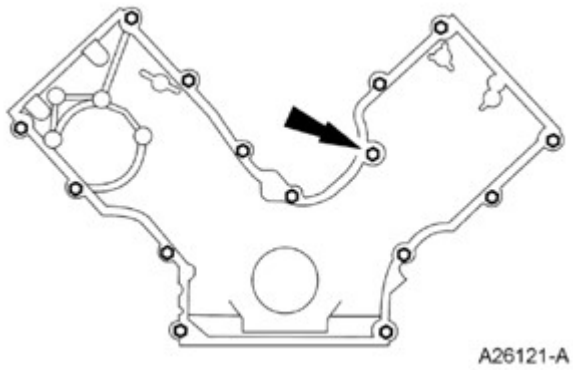

Fig. 297: Locating Front Cover Fasteners
Courtesy of FORD MOTOR CO.

26. Remove the engine front cover from the cylinder block.

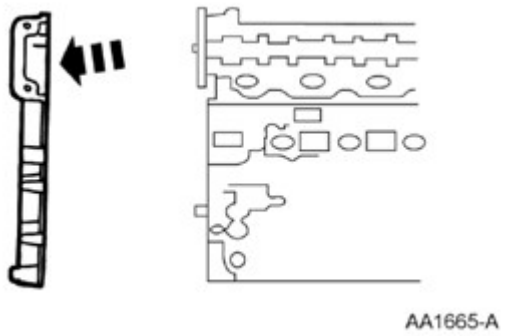

Fig. 298: Removing Engine Front Cover From Cylinder Block
Courtesy of FORD MOTOR CO.

27. Remove the crankshaft sensor ring from the crankshaft.

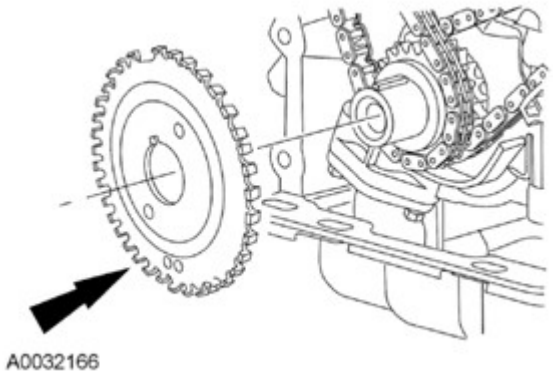

Fig. 299: Locating Crankshaft Sensor Ring
Courtesy of FORD MOTOR CO.

28. Remove the 8 spark plugs. For additional information, refer to **ENGINE IGNITION - 5.4L (2V)** .
29. **NOTE: Camshaft roller follower removed for clarity.**

    Install the Valve Spring Compressor Spacer between the valve spring coils to prevent valve stem seal damage.

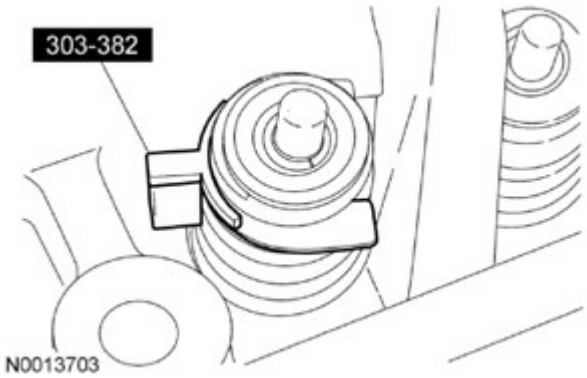

Fig. 300: Installing/Removing Valve Spring Compressor Spacer
Courtesy of FORD MOTOR CO.

30. **NOTE: The camshaft roller followers must be reinstalled in their original locations. Record the camshaft roller follower locations. Failure to follow these instructions may result in engine damage.**

NOTE: Position the cam lobe away from the camshaft roller follower prior to removing each camshaft roller follower.

Use the Valve Spring Compressor to compress the valve springs and remove all of the camshaft roller followers.

Fig. 301: Compressing Valve Spring Using Valve Spring Compressor
Courtesy of FORD MOTOR CO.

31. Position the crankshaft with the keyway at the 12 o'clock position.

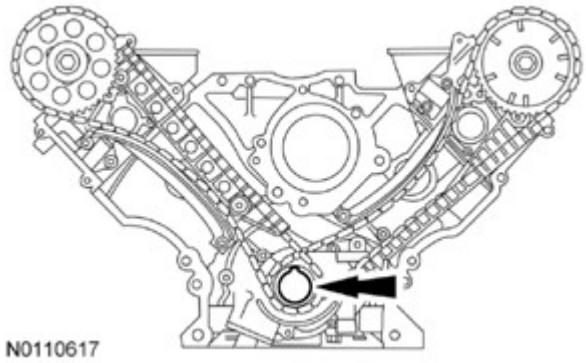

Fig. 302: Locating Crankshaft Keyway At 12 O'Clock Position
Courtesy of FORD MOTOR CO.

32. **NOTE: If one or both of the tensioner mounting bolts are loosened or removed, the tensioner-sealing bead must be inspected for seal integrity. If cracks,**

32. **tears, separation from the tensioner body or permanent compression of the seal bead is observed, install a new tensioner or engine damage may occur.**

Remove the timing chain tensioning system from both timing chains.

1. Remove the 4 bolts.
2. Remove the 2 timing chain tensioners.
3. Remove the timing chain tensioner arms.

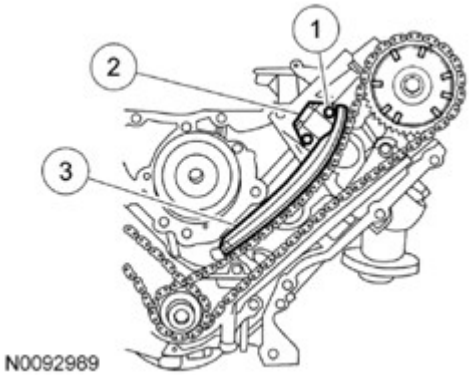

Fig. 303: Identifying Timing Chain Tensioner Arms, Timing Chain Tensioners And Bolts
Courtesy of FORD MOTOR CO.

33. Remove the timing chains and crankshaft sprocket.

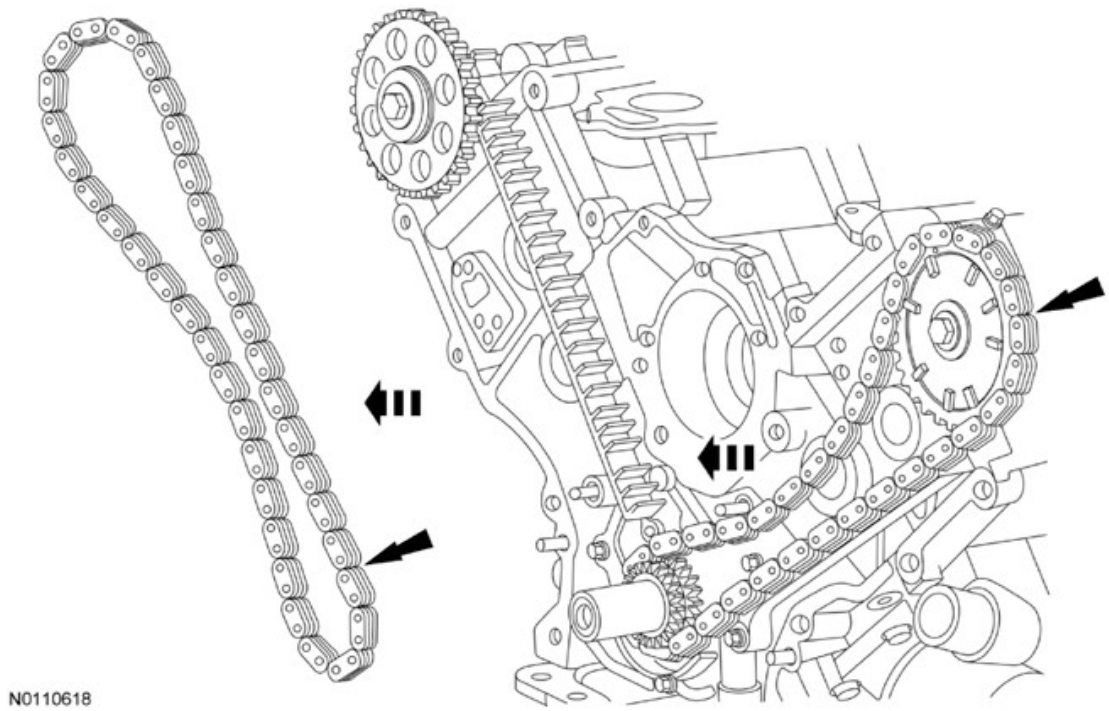

Fig. 304: Removing Timing Chains And Crankshaft Sprocket
Courtesy of FORD MOTOR CO.

34. Remove the timing chain guides.
    1. Remove the 2 bolts.
    2. Remove the LH timing chain guide.
    3. Remove the 2 bolts.
    4. Remove the RH timing chain guide.

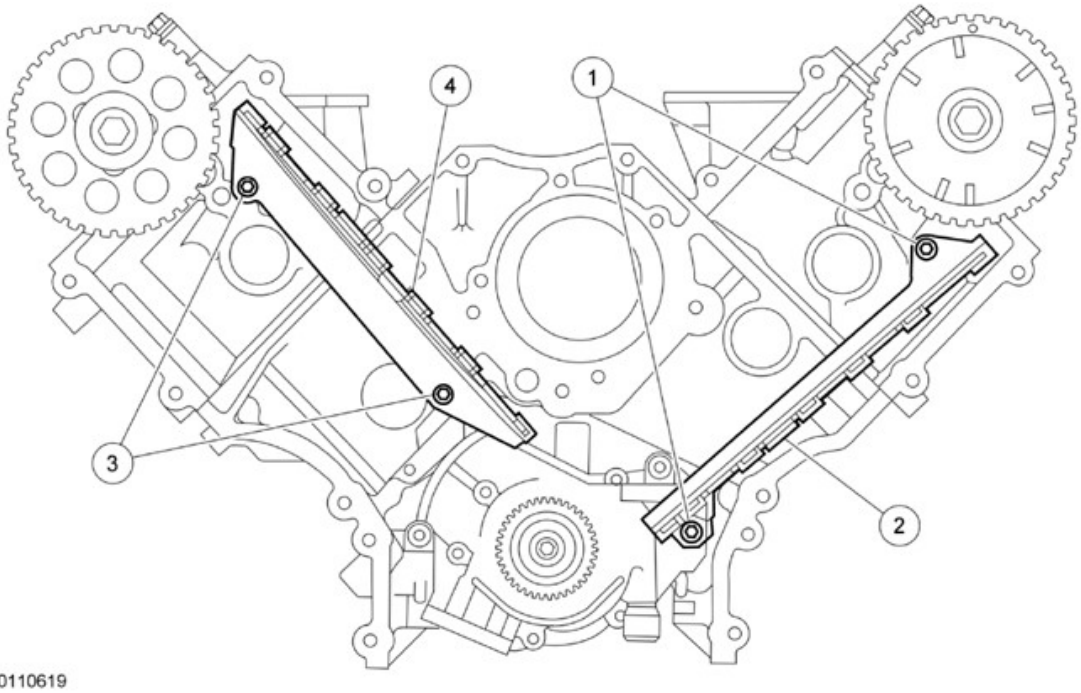

Fig. 305: Identifying Timing Chain Guides Bolts Removing Sequence
Courtesy of FORD MOTOR CO.

RH cylinder head

35. Remove the RH exhaust manifold.
    1. Remove and discard the 8 nuts.
    2. Remove the RH exhaust manifold.
    3. Remove and discard the 2 RH exhaust manifold gaskets.

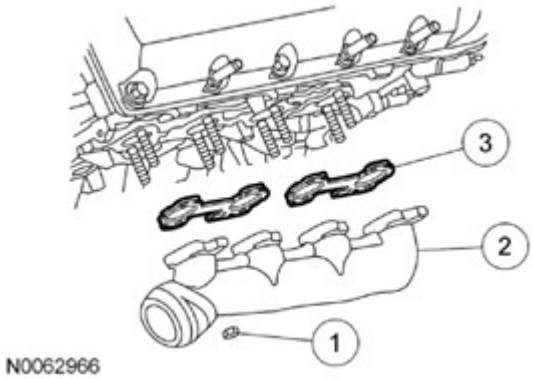

Fig. 306: Identifying RH Exhaust Manifold, RH Exhaust Manifold Gaskets And Nut
Courtesy of FORD MOTOR CO.

36. Remove and discard the 8 exhaust manifold-to-cylinder head studs.
37. Clean and inspect the exhaust manifold. For additional information, refer to **ENGINE SYSTEM -**

GENERAL INFORMATION .

LH cylinder head

38. Remove the LH exhaust manifold.
    1. Remove and discard the 8 nuts.
    2. Remove the LH exhaust manifold.
    3. Remove and discard the 2 LH exhaust manifold gaskets.

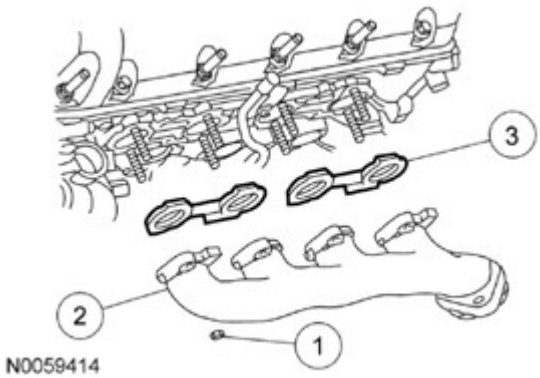

Fig. 307: Identifying Exhaust Manifold And Nuts
Courtesy of FORD MOTOR CO.

39. Remove and discard the 8 exhaust manifold-to-cylinder head studs.
40. Clean and inspect the exhaust manifold. For additional information, refer to **ENGINE SYSTEM - GENERAL INFORMATION** .

All cylinder heads

41. Install the Cylinder Head Remover/Installer on both ends of the cylinder head.

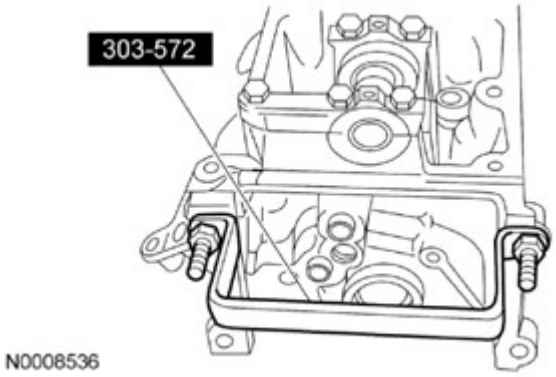

Fig. 308: Installing Special Tools On Ends Of Cylinder Head
Courtesy of FORD MOTOR CO.

42.

42. **NOTE: The hydraulic lash adjusters must be reinstalled in their original locations. Record the hydraulic lash adjuster locations. Failure to follow these instructions may result in engine damage.**

Remove the 16 hydraulic lash adjusters.

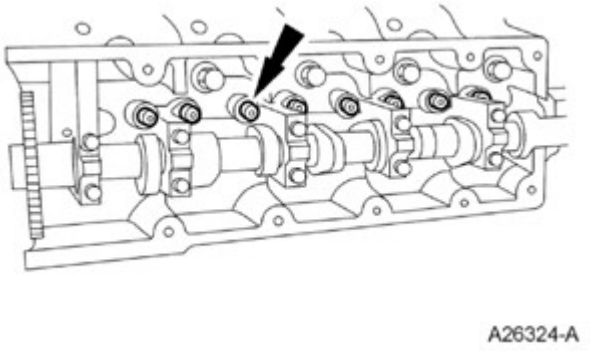

Fig. 309: Locating Hydraulic Lash Adjuster
Courtesy of FORD MOTOR CO.

All cylinder heads

43. **NOTE: The cylinder head must be cool before removing it from the engine. Cylinder head warpage can result if a warm or hot cylinder head is removed.**

NOTE: Place clean shop towels over exposed engine cavities. Carefully remove the towels so foreign material is not dropped into the engine. Failure to follow these instructions may result in engine damage.

NOTE: The cylinder head bolts must be discarded and new bolts must be installed. They are a tighten-to-yield design and cannot be reused. Failure to follow these instructions may result in engine damage.

NOTE: Do not use metal scrapers, wire brushes, power abrasive discs or other abrasive means to clean the sealing surfaces. These tools cause scratches and gouges that make leak paths. Use a plastic scraping tool to remove all traces of the head gasket.

NOTE: Aluminum surfaces are soft and can be scratched easily. Never place the cylinder head gasket surface, unprotected, on a bench surface. Failure to follow these instructions may result in engine damage.

NOTE: LH shown in illustration, RH similar.

Remove the 20 bolts and the cylinder head.

- Discard the cylinder head gasket.
- Discard the cylinder head bolts.

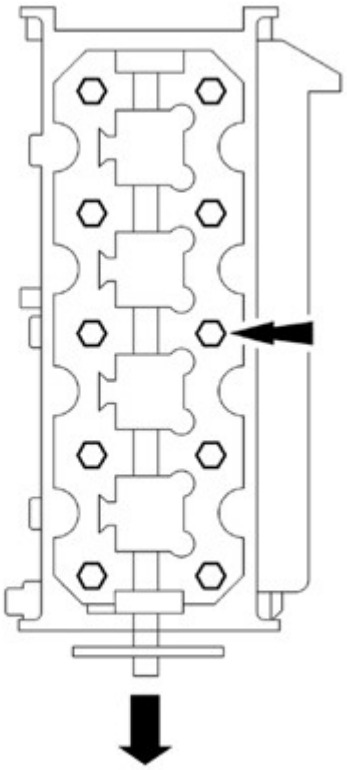

Fig. 310: Locating Cylinder Head Bolts
Courtesy of FORD MOTOR CO.

44.

NOTE: **Do not use metal scrapers, wire brushes, power abrasive discs or other abrasive means to clean the sealing surfaces. These tools cause scratches and gouges that make leak paths. Use a plastic scraping tool to remove all traces of the head gasket.**

NOTE: **Observe all warnings or cautions and follow all application directions contained on the packaging of the silicone gasket remover and the metal surface prep. Failure to follow these instructions may result in engine damage.**

NOTE: **If there is no residual gasket material present, metal surface prep can be used to clean and prepare the surfaces.**

Clean the cylinder head-to-cylinder block mating surfaces of both the cylinder head and the cylinder

block in the following sequence.

1. Remove any large deposits of silicone or gasket material with a plastic scraper.
2. Apply silicone gasket remover, following package directions, and allow to set for several minutes.
3. Remove the silicone gasket remover with a plastic scraper. A second application of silicone gasket remover may be required if residual traces of silicone or gasket material remain.
4. Apply metal surface prep, following package directions, to remove any remaining traces of oil or coolant and to prepare the surfaces to bond with the new gasket. Do not attempt to make the metal shiny. Some staining of the metal surfaces is normal.

45. **NOTE: LH shown in illustration, RH similar.**

Support the cylinder heads on a bench with the head gasket side up. Check the cylinder head distortion and the cylinder block distortion, paying particular attention to the oil pressure feed area. For additional information, refer to **ENGINE SYSTEM - GENERAL INFORMATION** .

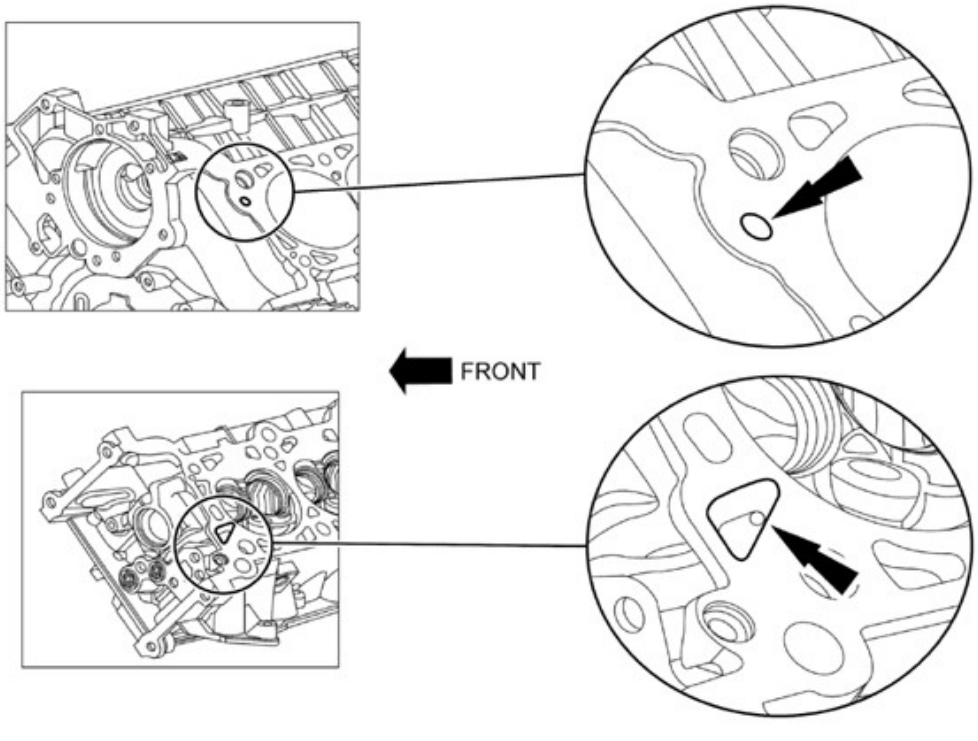

Fig. 311: Identifying Oil Pressure Feed Area
Courtesy of FORD MOTOR CO.

VALVE SEALS

SPECIAL TOOLS

	Compressor, Valve Spring 303-567 (T97P-6565-AH)

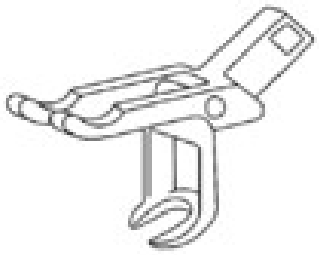 ST1330-A	
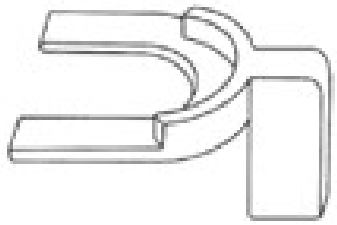 ST1331-A	Compressor Spacer, Valve Spring 303-382 (T91P-6565-AH)

MATERIAL SPECIFICATIONS

Item	Specification
Motorcraft® SAE 5W-20 Premium Synthetic Blend Motor Oil (US); Motorcraft® SAE 5W-20 Super Premium Motor Oil (Canada) XO-5W20-QSP (US); CXO-5W20-LSP12 (Canada)	WSS-M2C945-A

All vehicles

1. Remove the engine. Refer to **ENGINE**.

   LH Valve Cover

   NOTE: Only the steps not required during removal of the engine are needed to remove the valve cover.

2. Remove the oil level indicator and tube support bracket nut.

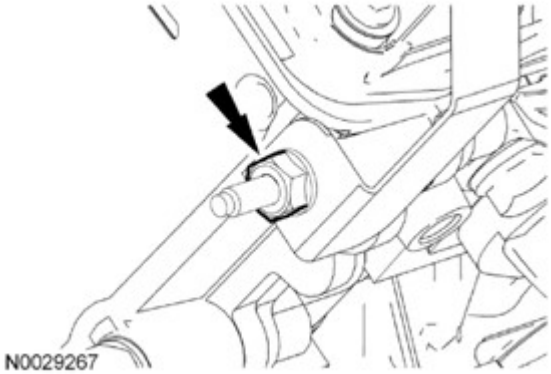

Fig. 312: Locating Oil Level Indicator Tube Support Bracket Nut
Courtesy of FORD MOTOR CO.

3. Remove the bolt and position the oil level indicator and tube aside.

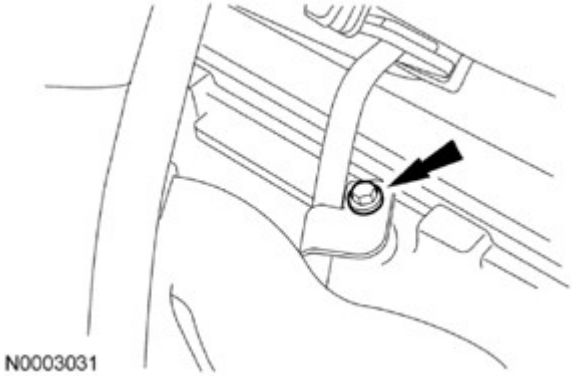

Fig. 313: Locating Oil Level Indicator Tube Bracket Bolt
Courtesy of FORD MOTOR CO.

4. **NOTE: The fasteners are part of the valve cover and should not be removed.**

   Remove the LH valve cover.

   - Fully loosen the 13 fasteners and remove the valve cover.

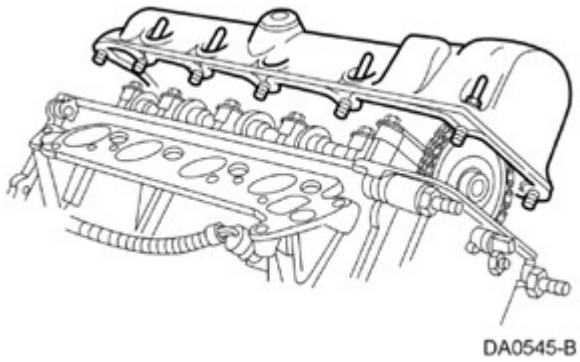

Fig. 314: Identifying Valve Cover
Courtesy of FORD MOTOR CO.

RH Valve Cover

NOTE: **Only the steps not required during removal of the engine are needed to remove the valve cover.**

5. **NOTE:** **The fasteners are part of the valve cover and should not be removed.**

Remove the RH valve cover.

- Fully loosen the 14 fasteners and remove the valve cover.

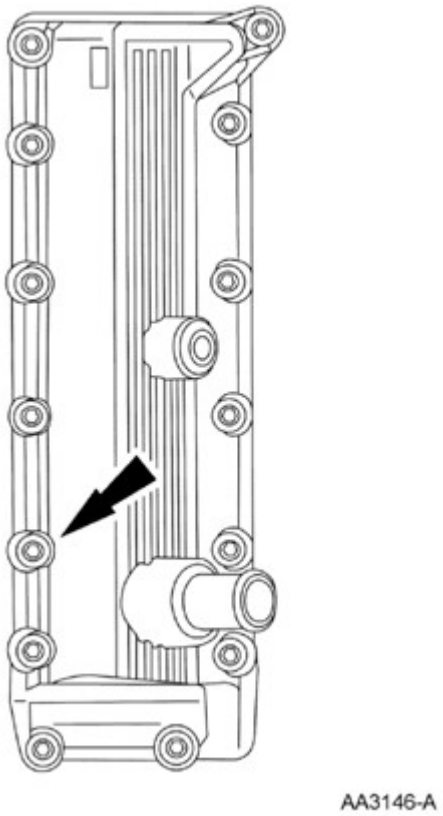

Fig. 315: Locating Valve Cover Fasteners
Courtesy of FORD MOTOR CO.

All Vehicles

6. **NOTE: Only use hand tools when removing or installing the spark plugs or damage can occur to the cylinder head or spark plug.**

Remove the 8 spark plugs.

7. Position the piston of the cylinder being serviced at the bottom of the stroke.

8. **NOTE: Camshaft roller follower removed for clarity.**

Install the Valve Spring Compressor Spacer between the valve spring coils to protect the valve seal from damage.

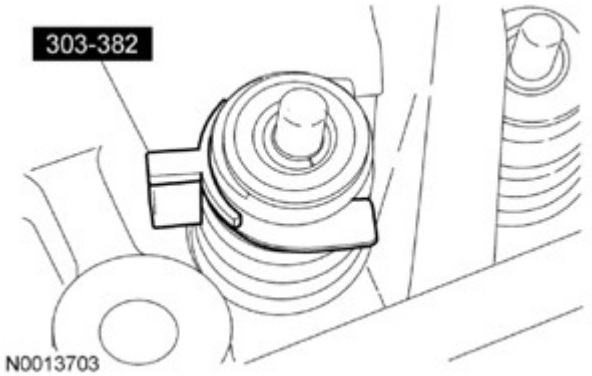

Fig. 316: Installing/Removing Valve Spring Compressor Spacer
Courtesy of FORD MOTOR CO.

9.

NOTE: **The camshaft roller followers must be reinstalled in their original locations. Record the camshaft roller follower locations. Failure to follow these instructions may result in engine damage.**

NOTE: **Position the cam lobe away from the camshaft roller follower prior to removing each camshaft roller follower.**

NOTE: **It may be necessary to push the valve down while compressing the spring.**

Use the Valve Spring Compressor to compress the valve spring and remove all of the camshaft roller followers.

Fig. 317: Compressing Valve Spring Using Valve Spring Compressor
Courtesy of FORD MOTOR CO.

10.

NOTE: **If a valve drops into the cylinder, the cylinder head must be removed. For additional information, refer to CYLINDER HEAD.**

Use compressed air in the cylinder to hold both valves in position.

11. **NOTE: Keep the valves and valve spring retainer keys in order so they can be reinstalled in their original locations. Failure to follow these instructions may result in engine damage.**

Using the Valve Spring Compressor, compress the valve spring and remove the valve spring retainer keys.

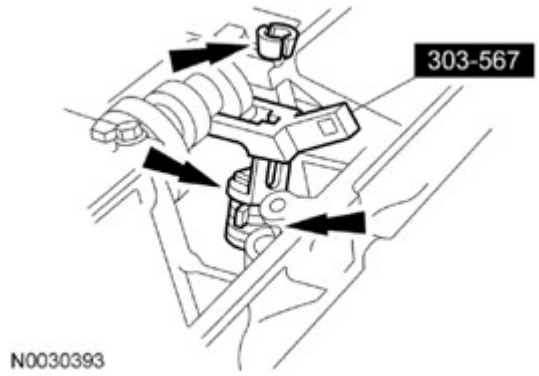

Fig. 318: Removing/Installing Valve Spring Retainer Keys
Courtesy of FORD MOTOR CO.

12. **NOTE: Valve shown in illustration removed for clarity.**

Remove the valve seal.

- Remove the valve spring retainer.
- Remove the valve spring.
- Remove and discard the valve seal.

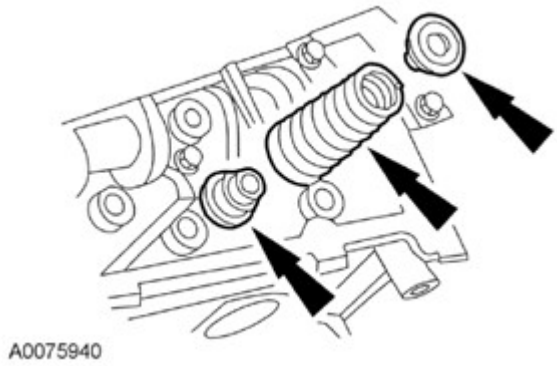

Fig. 319: Locating Valve Spring Retainer, Valve Spring, Valve Stem Seal And Valve
Courtesy of FORD MOTOR CO.

DISASSEMBLY

ENGINE

SPECIAL TOOLS

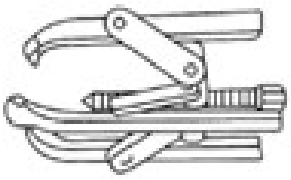 ST1184-A	3-Jaw Puller 303-D121 or equivalent
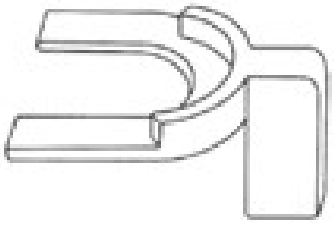 ST1331-A	Compressor Spacer, Valve Spring 303-382 (T91P-6565-AH)
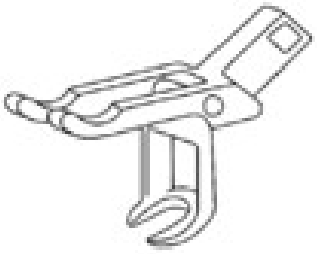 ST1330-A	Compressor, Valve Spring 303-567 (T97P-6565-AH)
	Installer, Connecting Rod 303-442 (T93P-6136-A)

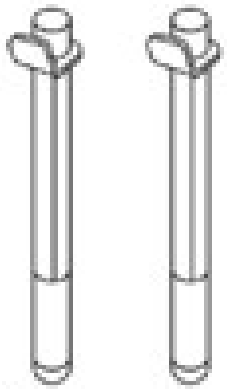 ST1337-A	
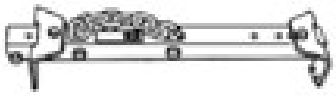 ST1377-A	Lifting Bracket, Engine 303-F047 (014-00073) or equivalent
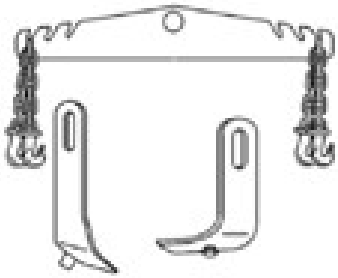 ST2443-A	Lifting Bracket Set, Engine 303-DS086 (D93P-6001-A) or equivalent
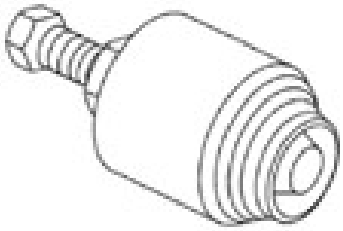 ST1730-A	Remover, Crankshaft Front Oil Seal 303-107 (T74P-6700-A)
	Remover, Crankshaft Rear Oil Seal 303-519 (T95P-6701-EH)

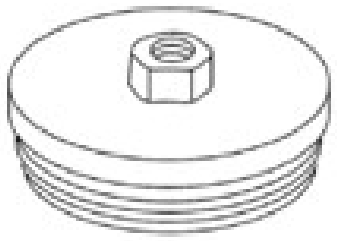 ST1382-A	
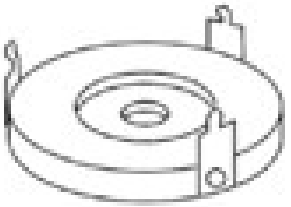 ST1481-A	Remover, Crankshaft Rear Oil Slinger 303-514 (T95P-6701-AH)
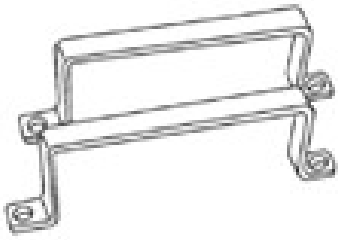 ST1668-A	Remover/Installer, Cylinder Head 303-572 (T97T-6000-A)
 ST1185-A	Slide Hammer 100-001 (T50T-100-A)

MATERIAL SPECIFICATIONS

Item	Specification
Motorcraft® Metal Surface Prep ZC-31-A	-
Motorcraft® Silicone Gasket Remover	-

ZC-30	

NOTE: **Remove the cylinder heads before removing the crankshaft. Failure to do so may result in engine damage.**

NOTE: **During engine repair procedures, cleanliness is extremely important. Any foreign material, including any material created while cleaning gasket surfaces that enters the oil passages, coolant passages or the oil pan, may cause engine failure.**

NOTE: **The flexplate, the spacer plate, the crankshaft rear seal, the crankshaft rear oil slinger and the rear seal retainer plate must be removed before mounting the engine on the engine stand.**

NOTE: **For additional information, refer to the exploded view under the ASSEMBLY procedure.**

1. Remove the engine. For additional information, refer to **ENGINE**.
2. Remove the 8 bolts and the flexplate.
3. Using the Crankshaft Rear Oil Slinger Remover and the Slide Hammer, remove the crankshaft rear oil slinger.

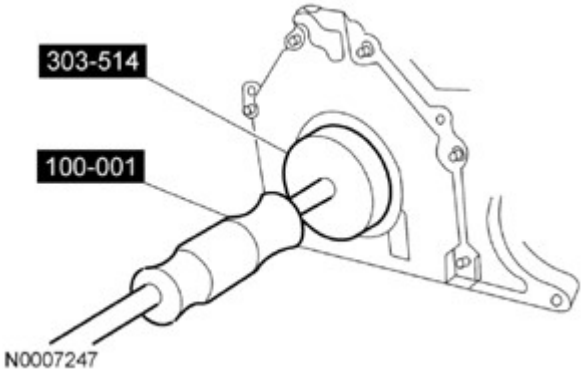

Fig. 320: Removing Crankshaft Rear Oil Seal Slinger Using Special Tools
Courtesy of FORD MOTOR CO.

4. Using the Crankshaft Rear Oil Seal Remover and the Slide Hammer, remove the crankshaft rear seal.

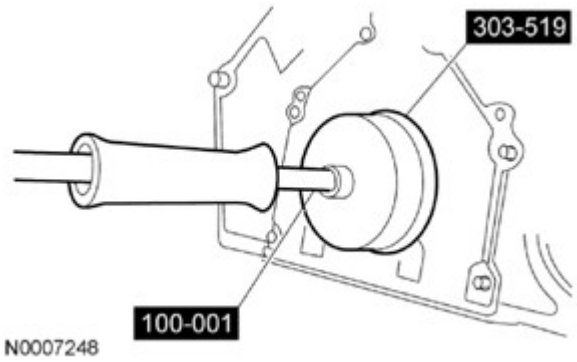

Fig. 321: Removing Crankshaft Rear Seal Using Special Tools
Courtesy of FORD MOTOR CO.

5. Remove the 2 rear oil pan bolts, the 6 crankshaft rear seal retainer plate bolts and the crankshaft rear seal retainer plate.

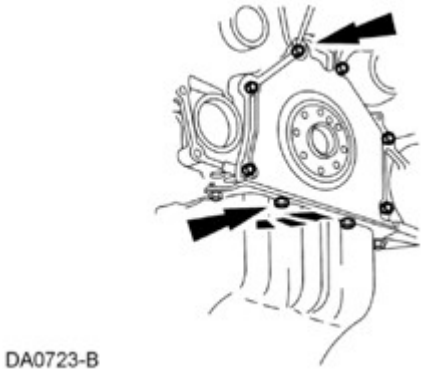

Fig. 322: Locating Bolts And Crankshaft Rear Seal Retainer Plate
Courtesy of FORD MOTOR CO.

6. **NOTE: Use care when lowering the engine, to prevent damage to the oil pan.**

   Lower the engine onto wooden blocks.

7. Remove the Engine Lifting Bracket.

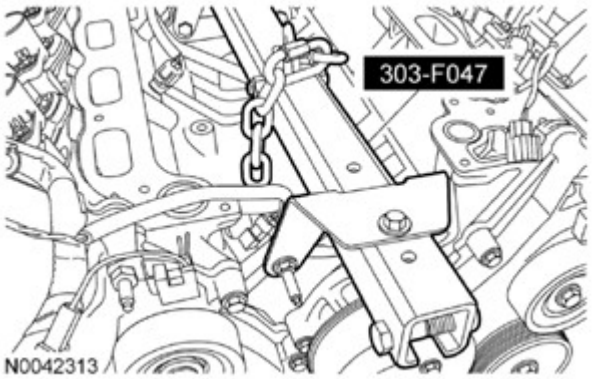

Fig. 323: Installing/Removing Engine Lifting Bracket Using Engine Lift Bracket (303-F047)
Courtesy of FORD MOTOR CO.

8. Install the Engine Lifting Bracket Set.

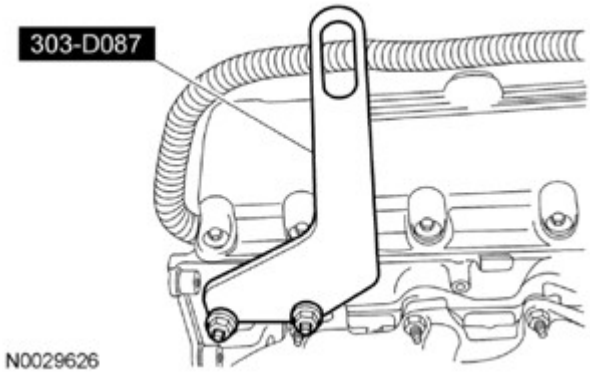

Fig. 324: Installing Engine Lifting Bracket Set
Courtesy of FORD MOTOR CO.

9. Install the Engine Lifting Bracket Set.

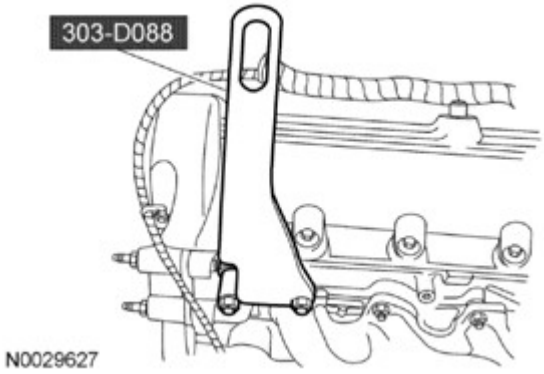

Fig. 325: Installing Engine Lifting Bracket Set
Courtesy of FORD MOTOR CO.

10. Mount the engine on a suitable work stand.
11. **NOTE: RH shown in illustration, LH similar.**

    Remove the 6 bolts and the RH and LH engine support insulators.

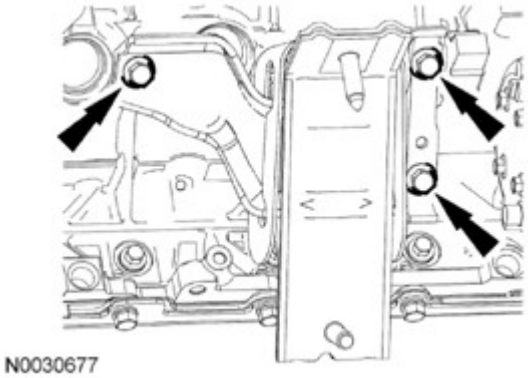

Fig. 326: Locating RH Engine Support Insulator Bolts
Courtesy of FORD MOTOR CO.

12. **NOTE: LH shown in illustration, RH similar.**

    If equipped, remove the cylinder block drain plugs and drain the coolant in a suitable container.

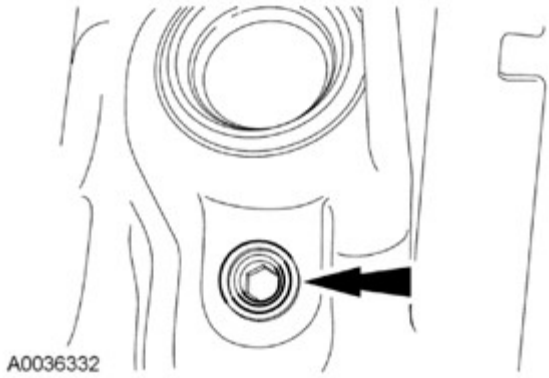

Fig. 327: Locating Cylinder Block Drain Plugs
Courtesy of FORD MOTOR CO.

13. Disconnect the LH radio frequency interference capacitor and Cylinder Head Temperature (CHT) sensor electrical connectors.

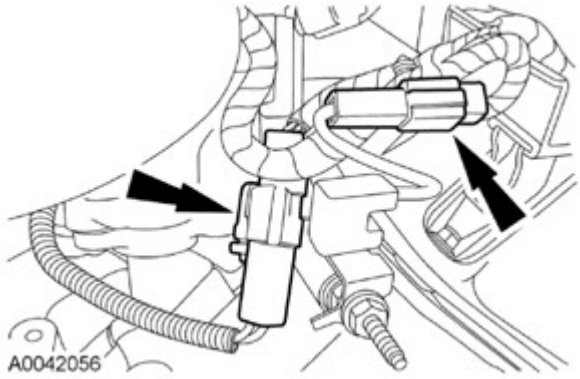

Fig. 328: Locating Cylinder Head Temperature Sensor Electrical Connectors
Courtesy of FORD MOTOR CO.

14. Disconnect the Camshaft Position (CMP) sensor electrical connector.

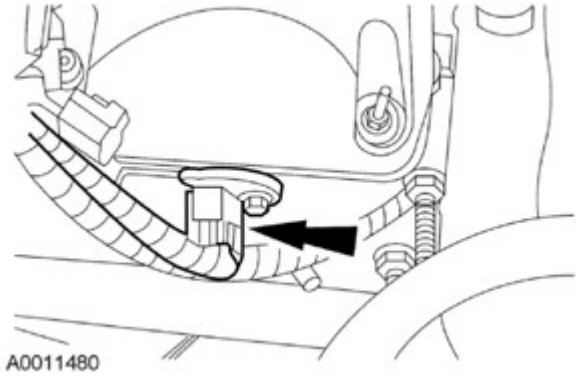

Fig. 329: Locating Camshaft Position (CMP) Sensor Electrical Connector
Courtesy of FORD MOTOR CO.

15. Disconnect the RH radio frequency interference capacitor electrical connector.

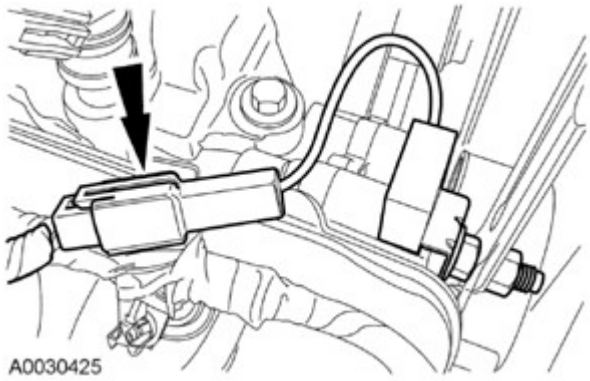

Fig. 330: Locating Radio Frequency Interference Capacitor Electrical Connector
Courtesy of FORD MOTOR CO.

16. Disconnect the Knock Sensor (KS) electrical connector.

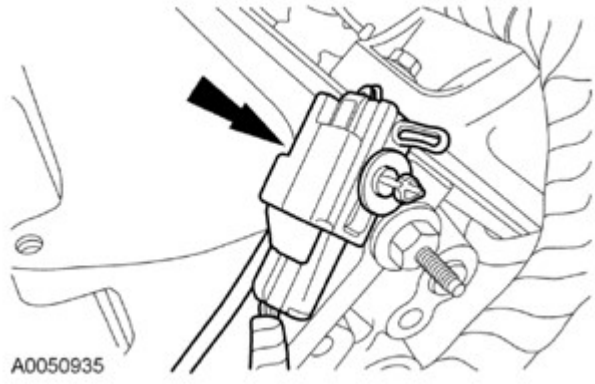

Fig. 331: Locating Knock Sensor Electrical Connector
Courtesy of FORD MOTOR CO.

17. Disconnect the Engine Oil Pressure (EOP) switch electrical connector and wiring harness retainer.

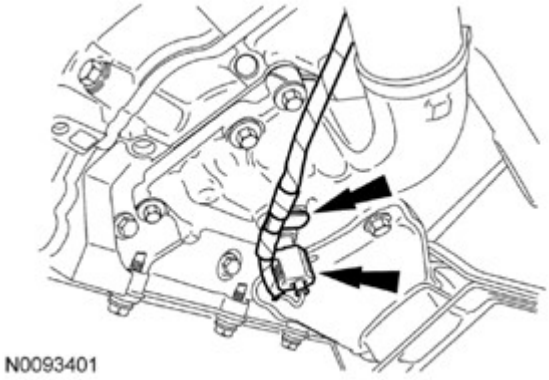

Fig. 332: Locating Engine Oil Pressure Switch Electrical Connector And Wiring Harness Retainer
Courtesy of FORD MOTOR CO.

18. Disconnect all of the harness routing clips and connector retainers. Remove the engine control sensor wiring harness.
19. **NOTE: RH shown in illustration, LH similar.**

    Remove the 2 nuts and the 2 radio interference capacitors.

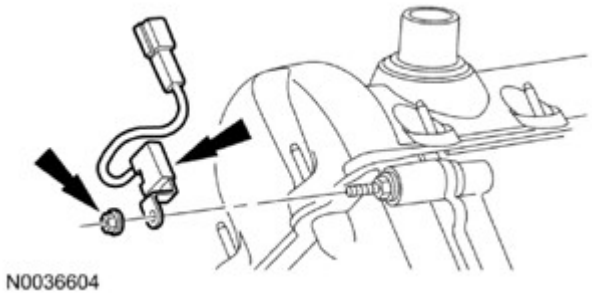

Fig. 333: Locating Radio Interference Capacitors And Nuts
Courtesy of FORD MOTOR CO.

20. Remove the nut, bolt and the oil level indicator tube.
    - Discard the O-ring seal.

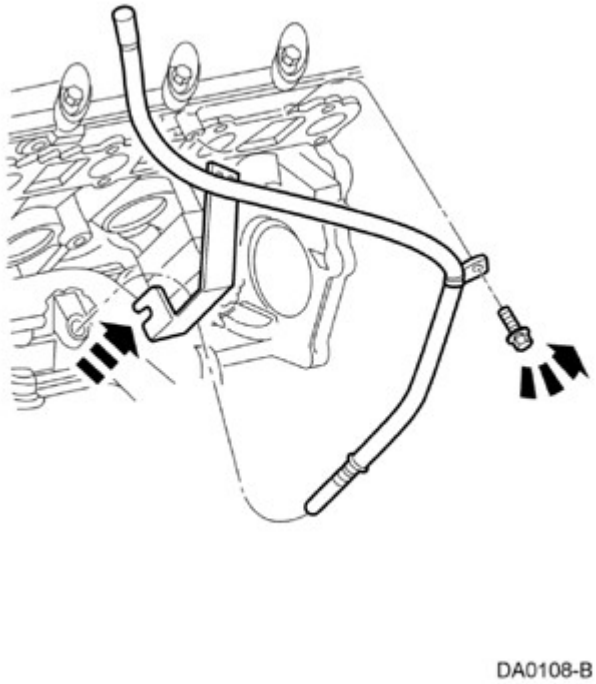

Fig. 334: Removing Bolt And Oil Level Indicator Tube
Courtesy of FORD MOTOR CO.

NOTE: **Do not use metal scrapers, wire brushes, power abrasive discs or other abrasive means to clean the sealing surfaces. These tools cause scratches and gouges which make leak paths. Use a plastic scraping tool to remove all traces of old sealant.**

21.

NOTE: **The fasteners are part of the valve cover and should not be removed.**

NOTE: **LH shown in illustration, RH similar.**

Remove the LH and RH valve covers.

- Fully loosen the 28 fasteners and remove the valve covers.
- Clean the valve cover mating surface of the cylinder head with silicone gasket remover and metal surface prep. Follow the directions on the packaging.
- Inspect the valve cover gasket. If the gasket is damaged, remove and discard the gasket. Clean the valve cover gasket groove with soap and water or a suitable solvent.

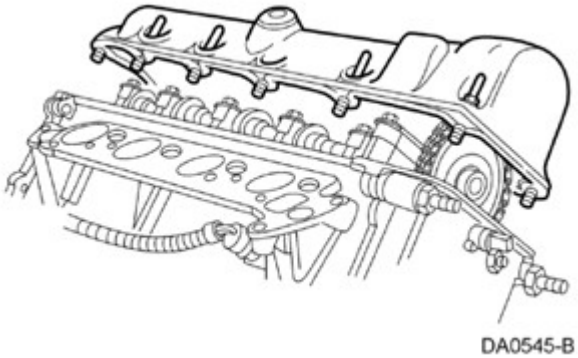

Fig. 335: Identifying Valve Cover
Courtesy of FORD MOTOR CO.

22. Remove the bolt and the accessory drive belt idler pulley.

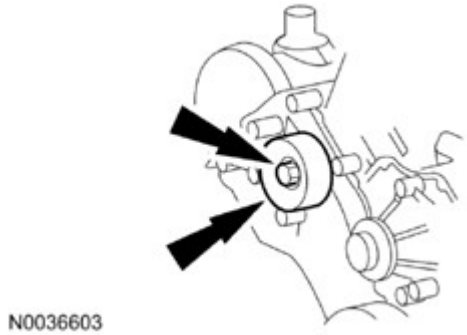

Fig. 336: Locating Accessory Drive Belt Idler Pulley And Bolt
Courtesy of FORD MOTOR CO.

23. Remove the 4 bolts and the coolant pump pulley.

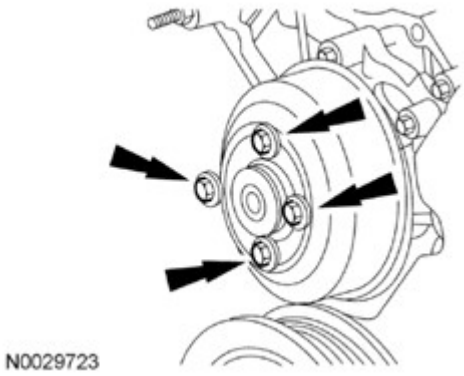

Fig. 337: Locating Coolant Pump Pulley Bolts
Courtesy of FORD MOTOR CO.

24. Remove the crankshaft pulley bolt and washer.
    - Discard the crankshaft pulley bolt.
25. Using the 3 Jaw Puller, remove the crankshaft pulley.

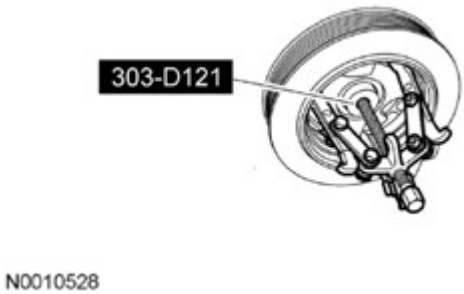

Fig. 338: Removing Crankshaft Pulley Using Jaw Puller
Courtesy of FORD MOTOR CO.

26. Using the Crankshaft Front Oil Seal Remover, remove and discard the crankshaft front seal.

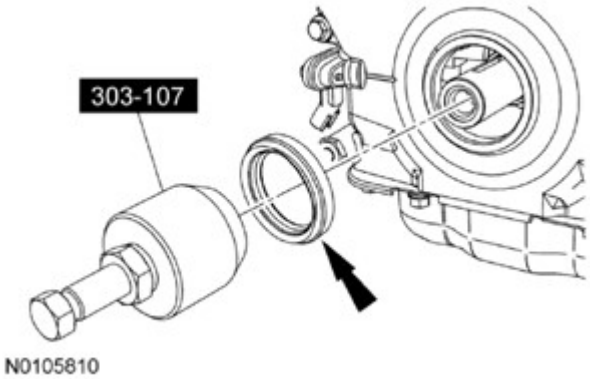

Fig. 339: Removing Crankshaft Front Seal Using Crankshaft Front Oil Seal Remover
Courtesy of FORD MOTOR CO.

27. Remove the 4 front oil pan bolts.

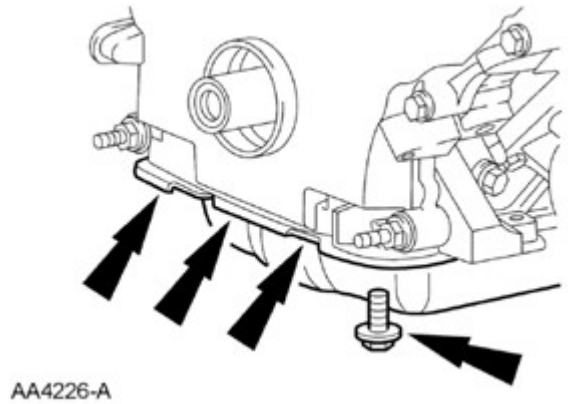

Fig. 340: Locating Front Oil Pan Bolts
Courtesy of FORD MOTOR CO.

NOTE: Correct fastener location is essential for assembly procedure. Record fastener location.

28. Remove the 15 fasteners.

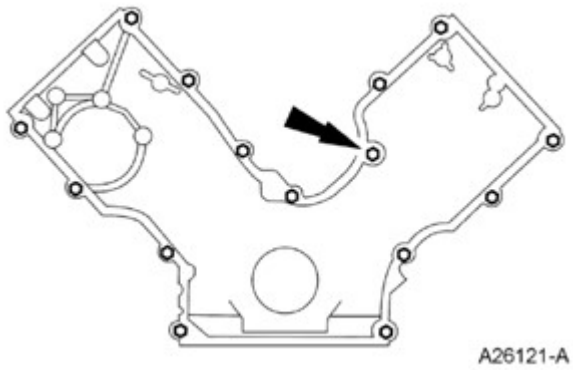

Fig. 341: Locating Front Cover Fasteners
Courtesy of FORD MOTOR CO.

29. Remove the engine front cover from the cylinder block.

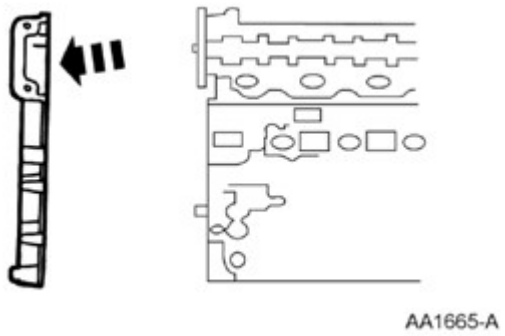

Fig. 342: Removing Engine Front Cover From Cylinder Block
Courtesy of FORD MOTOR CO.

30. Remove the crankshaft sensor ring from the crankshaft.

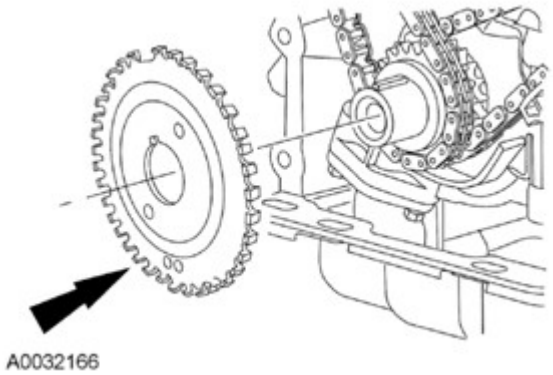

Fig. 343: Locating Crankshaft Sensor Ring
Courtesy of FORD MOTOR CO.

31. Remove the 8 spark plugs. For additional information, refer to **ENGINE IGNITION - 5.4L (2V)** .
32. **NOTE: Camshaft roller follower removed for clarity.**

    Install the Valve Spring Compressor Spacer between the valve spring coils to prevent valve stem seal damage.

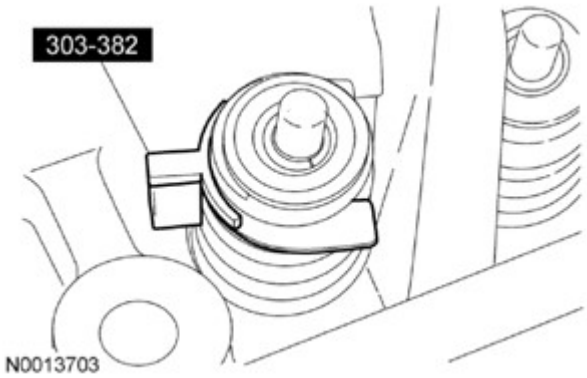

Fig. 344: Installing/Removing Valve Spring Compressor Spacer
Courtesy of FORD MOTOR CO.

33. **NOTE: The camshaft roller followers must be reinstalled in their original locations. Record the camshaft roller follower locations. Failure to follow these instructions may result in engine damage.**

NOTE: Position the cam lobe away from the camshaft roller follower prior to removing each camshaft roller follower.

Use the Valve Spring Compressor to compress the valve springs and remove all of the camshaft roller followers.

Fig. 345: Compressing Valve Spring Using Valve Spring Compressor
Courtesy of FORD MOTOR CO.

34. Position the crankshaft with the keyway at the 12 o'clock position.

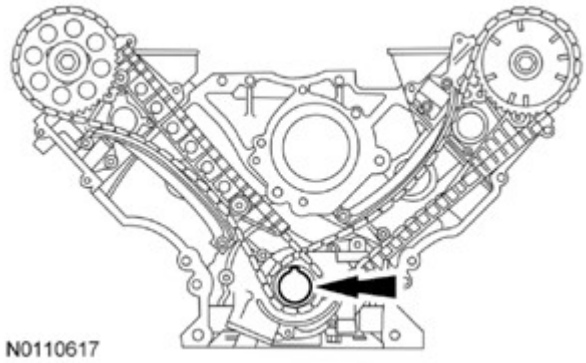

Fig. 346: Locating Crankshaft Keyway At 12 O'Clock Position
Courtesy of FORD MOTOR CO.

35. **NOTE: If one or both of the tensioner mounting bolts are loosened or removed, the tensioner-sealing bead must be inspected for seal integrity. If cracks,**

35. **tears, separation from the tensioner body or permanent compression of the seal bead is observed, install a new tensioner or engine damage may occur.**

Remove the timing chain tensioning system from both timing chains.

1. Remove the 4 bolts.
2. Remove the 2 timing chain tensioners.
3. Remove the 2 timing chain tensioner arms.

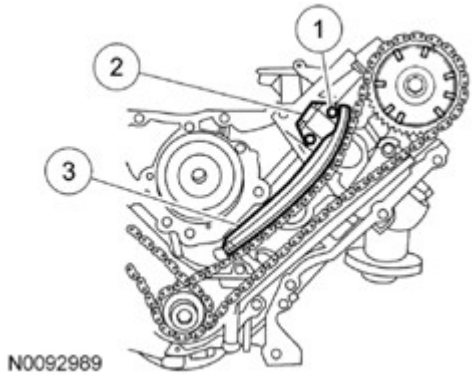

Fig. 347: Identifying Timing Chain Tensioner Arms, Timing Chain Tensioners And Bolts
Courtesy of FORD MOTOR CO.

36. Remove the 2 timing chains and crankshaft sprocket.

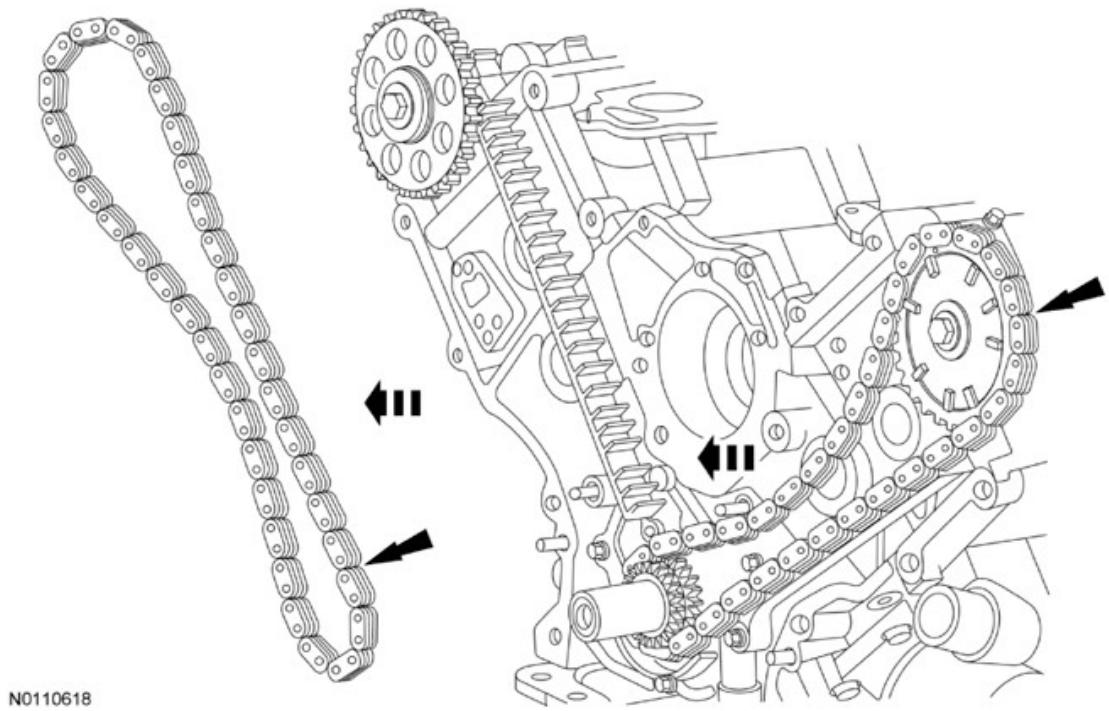

Fig. 348: Removing Timing Chains And Crankshaft Sprocket
Courtesy of FORD MOTOR CO.

37. Remove the timing chain guides.
    1. Remove the 2 bolts.
    2. Remove the LH timing chain guide.
    3. Remove the 2 bolts.
    4. Remove the RH timing chain guide.

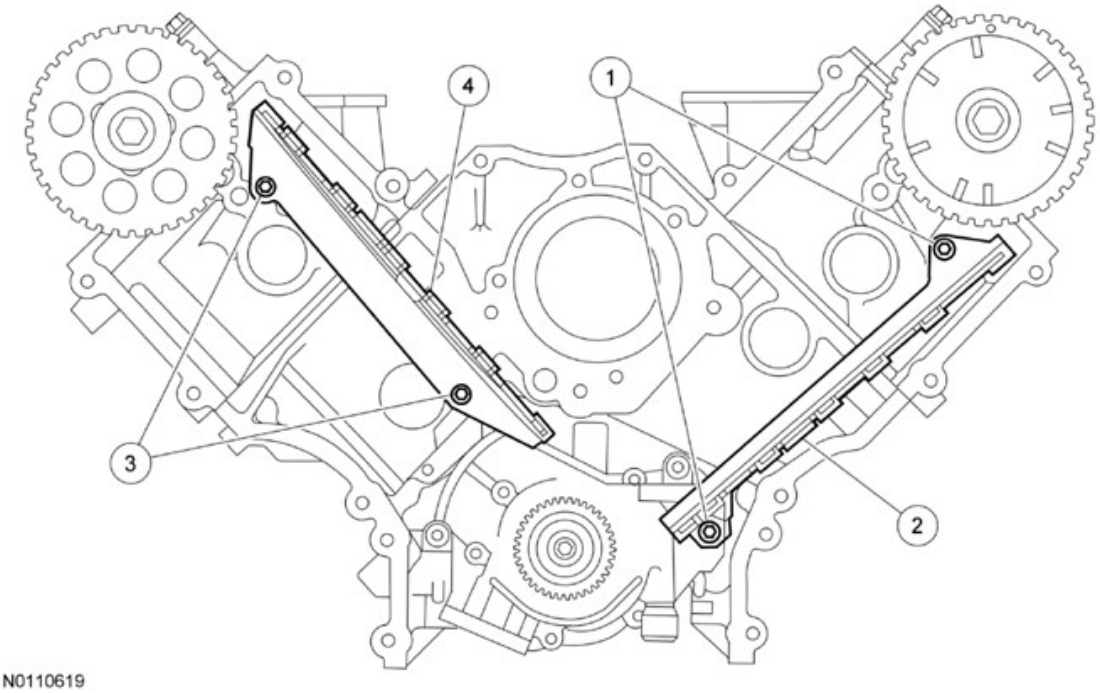

Fig. 349: Identifying Timing Chain Guides And Bolts Removing Sequence
Courtesy of FORD MOTOR CO.

38. Remove the RH exhaust manifold.
    1. Remove and discard the 8 nuts.
    2. Remove the RH exhaust manifold.
    3. Remove and discard the 2 RH exhaust manifold gaskets.

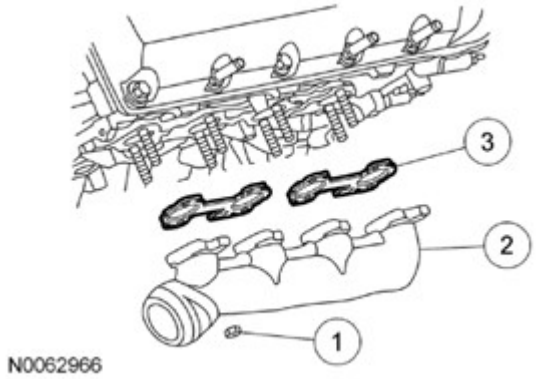

Fig. 350: Identifying RH Exhaust Manifold, RH Exhaust Manifold Gaskets And Nut
Courtesy of FORD MOTOR CO.

39. Remove the LH exhaust manifold.
    1. Remove and discard the 8 nuts.
    2. Remove the LH exhaust manifold.

3. Remove and discard the 2 LH exhaust manifold gaskets.

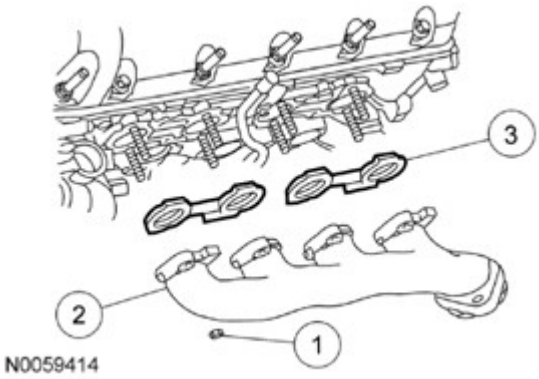

Fig. 351: Identifying Exhaust Manifold And Nuts
Courtesy of FORD MOTOR CO.

40. Remove and discard the 16 exhaust manifold-to-cylinder head studs.
41. Clean and inspect the exhaust manifolds. For additional information, refer to **ENGINE SYSTEM - GENERAL INFORMATION** .
42. Install the Cylinder Head Remover/Installer on both ends of the cylinder head.

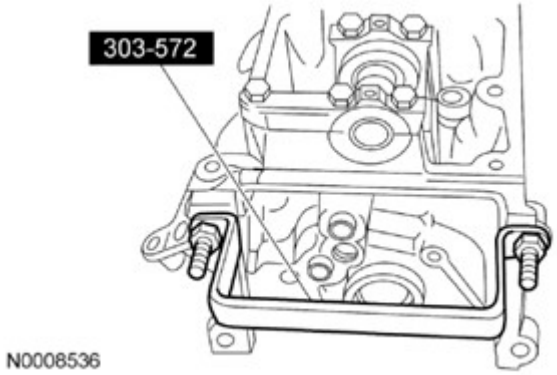

Fig. 352: Installing Special Tools On Ends Of Cylinder Head
Courtesy of FORD MOTOR CO.

NOTE: The hydraulic lash adjusters must be reinstalled in their original locations. Record the hydraulic lash adjuster locations.

43. Remove the 16 hydraulic lash adjusters.

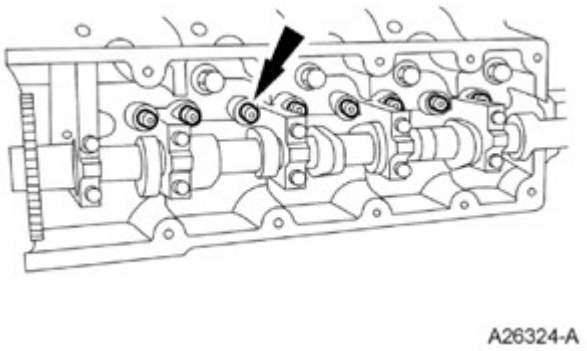

Fig. 353: Locating Hydraulic Lash Adjuster
Courtesy of FORD MOTOR CO.

44.

NOTE: **The cylinder head must be cool before removing it from the engine. Cylinder head warpage can result if a warm or hot cylinder head is removed.**

NOTE: **Place clean shop towels over exposed engine cavities. Carefully remove the towels so foreign material is not dropped into the engine. Failure to follow these instructions may result in engine damage.**

NOTE: **The cylinder head bolts must be discarded and new bolts must be installed. They are a torque-to-yield design and cannot be reused. Failure to follow these instructions may result in engine damage.**

NOTE: **Do not use metal scrapers, wire brushes, power abrasive discs or other abrasive means to clean the sealing surfaces. These tools cause scratches and gouges that make leak paths. Use a plastic scraping tool to remove all traces of the head gasket.**

NOTE: **Aluminum surfaces are soft and can be scratched easily. Never place the cylinder head gasket surface, unprotected, on a bench surface. Failure to follow these instructions may result in engine damage.**

NOTE: **LH shown in illustration, RH similar.**

Remove the 20 bolts and the cylinder head.

- Discard the cylinder head gasket.
- Discard the cylinder head bolts.

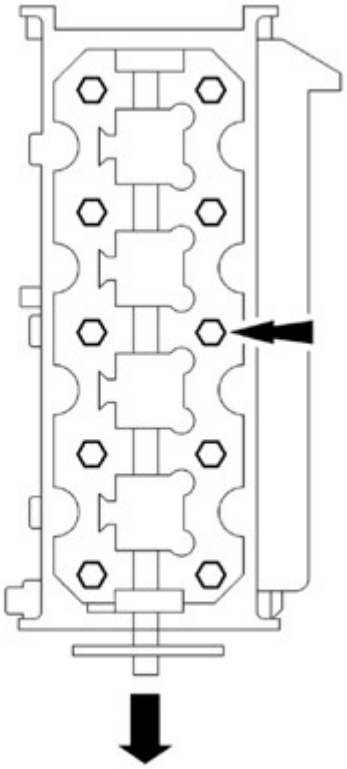

N0067889

Fig. 354: Locating Cylinder Head Bolts
Courtesy of FORD MOTOR CO.

NOTE: Do not use metal scrapers, wire brushes, power abrasive discs or other abrasive means to clean the sealing surfaces. These tools cause scratches and gouges that make leak paths. Use a plastic scraping tool to remove all traces of the head gasket.

45.

NOTE: Observe all warnings or cautions and follow all application directions contained on the packaging of the silicone gasket remover and the metal surface prep. Failure to follow these instructions may result in engine damage.

NOTE: If there is no residual gasket material present, metal surface prep can be used to clean and prepare the surfaces.

Clean the cylinder head-to-cylinder block mating surfaces of both the cylinder head and the cylinder block in the following sequence.

1. Remove any large deposits of silicone or gasket material with a plastic scraper.
2. Apply silicone gasket remover, following package directions, and allow to set for several minutes.
3. Remove the silicone gasket remover with a plastic scraper. A second application of silicone gasket

remover may be required if residual traces of silicone or gasket material remain.

4. Apply metal surface prep, following package directions, to remove any remaining traces of oil or coolant and to prepare the surfaces to bond with the new gasket. Do not attempt to make the metal shiny. Some staining of the metal surfaces is normal.

46. **NOTE: LH shown in illustration, RH similar.**

Support the cylinder heads on a bench with the head gasket side up. Check the cylinder head distortion and the cylinder block distortion, paying particular attention to the oil pressure feed area. For additional information, refer to **ENGINE SYSTEM - GENERAL INFORMATION** .

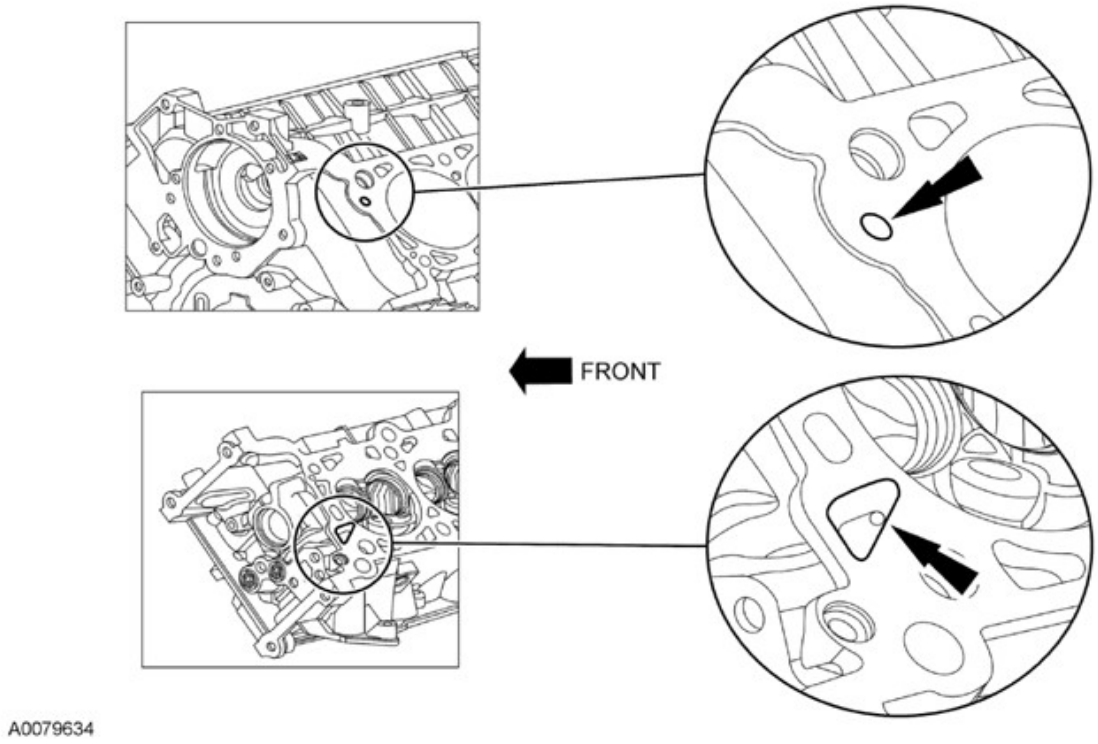

Fig. 355: Identifying Oil Pressure Feed Area
Courtesy of FORD MOTOR CO.

47. Remove the 5 fasteners, the oil filter adapter and discard the oil filter adapter gasket.

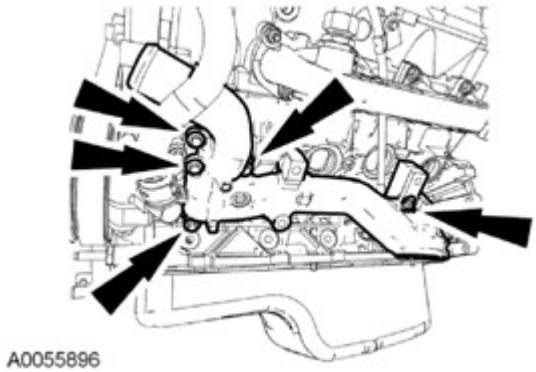

Fig. 356: Locating Oil Filter Adapter Fasteners
Courtesy of FORD MOTOR CO.

48. Clean the oil filter adapter gasket surface at the cylinder block.

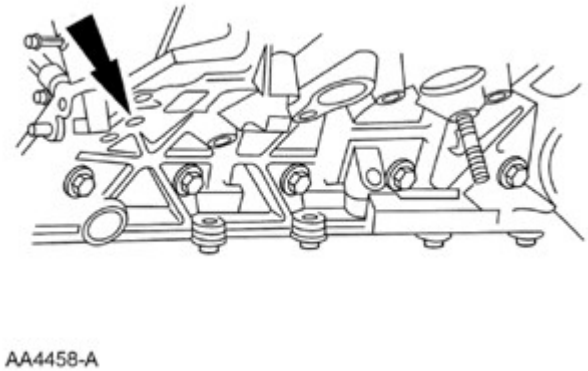

Fig. 357: Locating Gasket Surface On Cylinder Block
Courtesy of FORD MOTOR CO.

49. Remove the 4 coolant pump bolts.
    - Discard the O-ring seal.

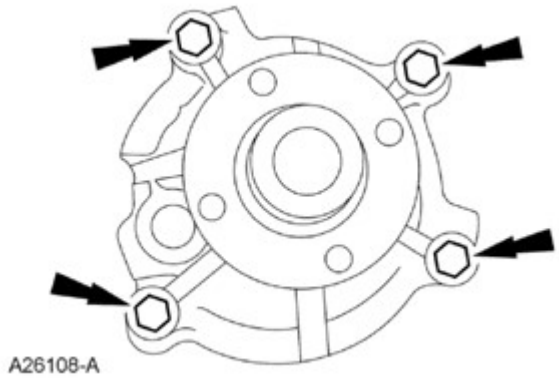

Fig. 358: Locating Coolant Pump Bolts
Courtesy of FORD MOTOR CO.

50. Remove the coolant pump from the cylinder block.

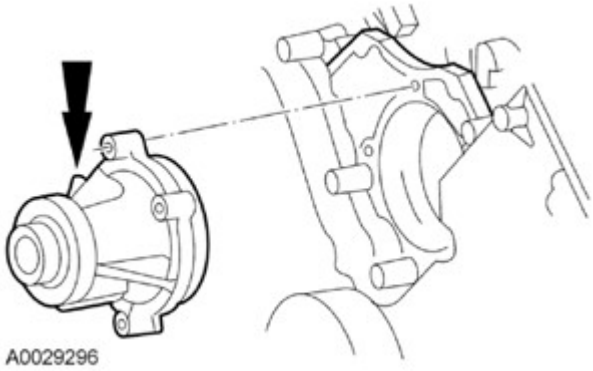

Fig. 359: Locating Coolant Pump
Courtesy of FORD MOTOR CO.

51. Before removing the pistons, inspect the top of the cylinder bores. If necessary, remove the ridge or carbon deposits from each cylinder using an abrasive pad or equivalent following the manufacturer's instructions.
52. Remove the 14 bolts, the oil pan and the oil pan gasket.
    - Clean and inspect the sealing surfaces.

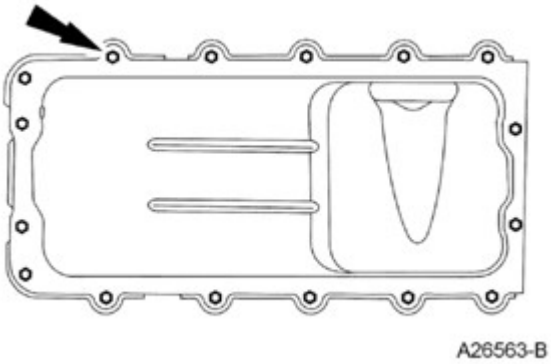

Fig. 360: Locating Oil Pan Bolts
Courtesy of FORD MOTOR CO.

53. Remove the 3 bolts and the oil pump screen and pickup tube.

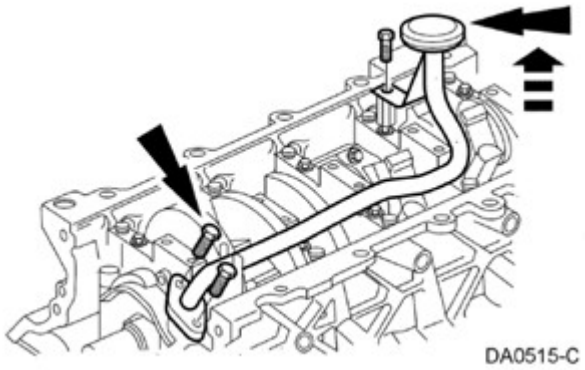

Fig. 361: Removing Oil Pump Screen And Pickup Tube
Courtesy of FORD MOTOR CO.

54. Remove the oil pump screen and pickup tube spacer.

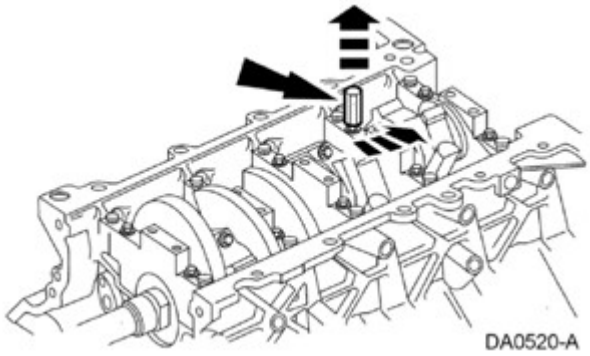

Fig. 362: Removing Oil Pump Screen And Pickup Tube Spacer
Courtesy of FORD MOTOR CO.

55. Remove the 3 bolts and the oil pump.

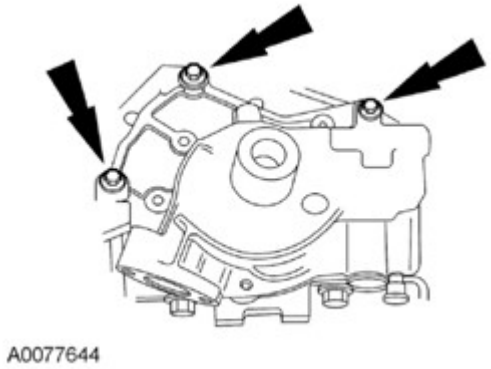

Fig. 363: Locating Oil Pump Bolts
Courtesy of FORD MOTOR CO.

56. **NOTE: Make sure connecting rods and rod caps are numbered to keep them in**

56. **the correct orientation. Failure to follow these instructions may result in engine damage.**

Remove the 16 bolts and the 8 connecting rod caps.

- Rotate the crankshaft so that the connecting rod is at Bottom Dead Center (BDC).
- Remove and discard the bolts.

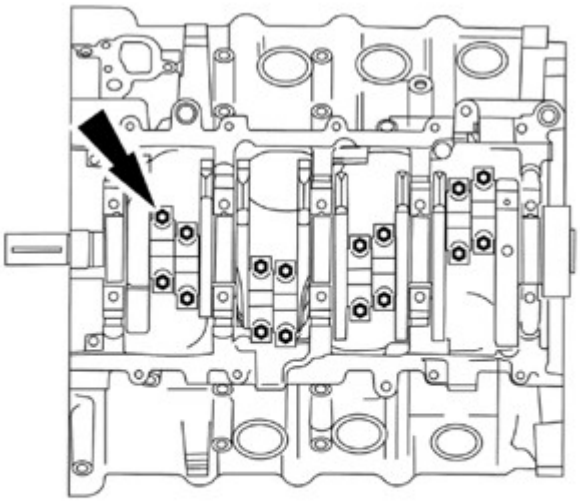

DA0578-A

Fig. 364: Locating Connecting Rod Caps Bolts
Courtesy of FORD MOTOR CO.

57. **NOTE: Remove the piston and connecting rod assemblies carefully, or the cylinder walls or crankshaft journals may be damaged.**

Use the Connecting Rod Installer to push the piston through the top of the cylinder block.

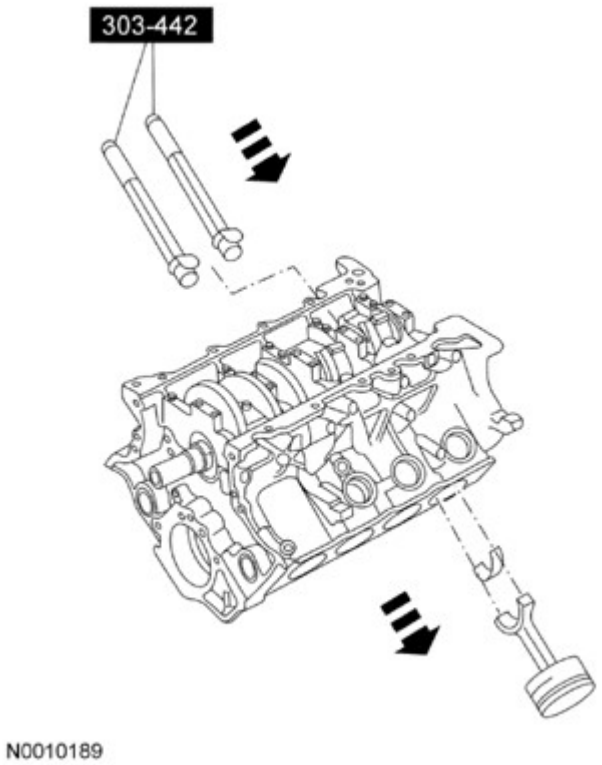

Fig. 365: Pushing Piston Through Top Of Cylinder Block
Courtesy of FORD MOTOR CO.

58. Disassemble the 8 pistons. For additional information, refer to **PISTON**.

59. **NOTE: Servicing the bottom end of the engine (crankshaft, bearings) requires that cylinder heads be removed. Failure to do so can result in engine damage.**

Remove the fasteners.

1. Remove and discard the 10 cross-mounted main cap bolts.
2. Remove the 10 dowels.
3. Remove and discard the 10 main bearing cap bolts.

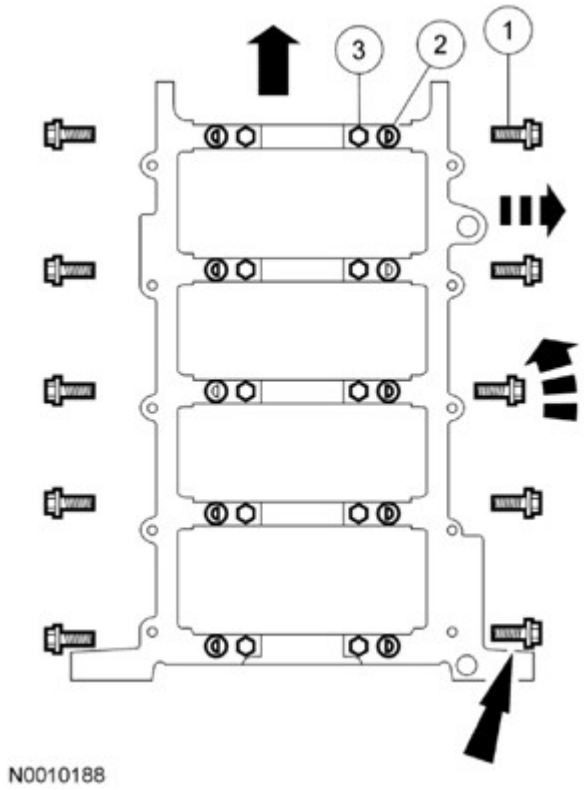

Fig. 366: Removing Main Bearing Cap Fasteners
Courtesy of FORD MOTOR CO.

60. Remove the 5 main bearing caps and the lower crankshaft main bearings.

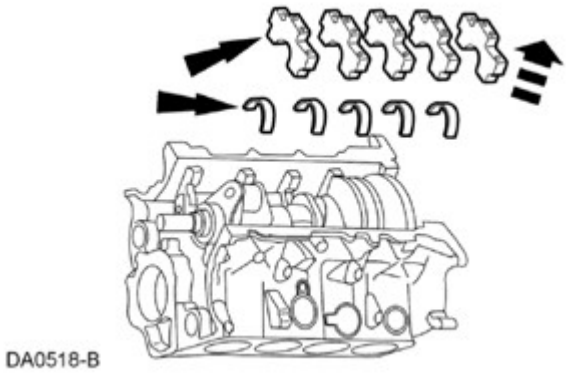

Fig. 367: Removing Main Bearing Caps
Courtesy of FORD MOTOR CO.

61. Remove the crankshaft and the upper crankshaft main bearings from the cylinder block.

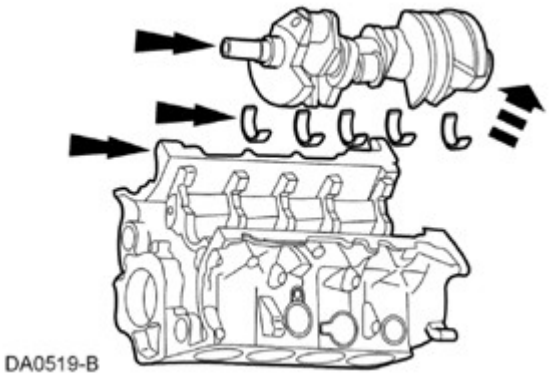

Fig. 368: Locating Crankshaft, Upper Crankshaft Main Bearings And Upper Thrust Washers
Courtesy of FORD MOTOR CO.

DISASSEMBLY AND ASSEMBLY OF SUBASSEMBLIES

CYLINDER HEAD

SPECIAL TOOLS

	Compressor, Valve Spring 303-567 (T97P-6565-AH)
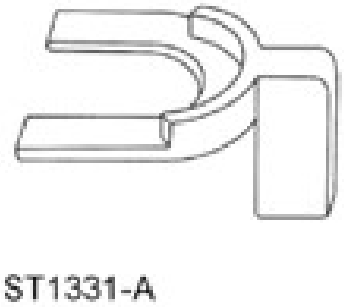	Compressor Spacer, Valve Spring 303-382 (T91P-6565-AH)
	Installer, Valve Stem Oil Seal 303-383 (T91P-6571-A)

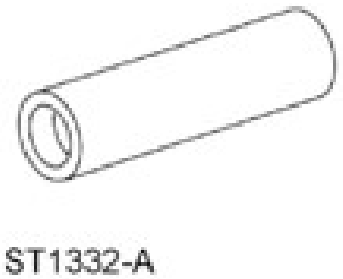 ST1332-A	

MATERIAL SPECIFICATIONS

Item	Specification
Motorcraft® Metal Surface Prep ZC-31-A	-
Motorcraft® SAE 5W-20 Premium Synthetic Blend Motor Oil (US); Motorcraft® SAE 5W-20 Super Premium Motor Oil (Canada) XO-5W20-QSP (US); CXO-5W20-LSP12 (Canada)	WSS-M2C945-A
Motorcraft® Silicone Gasket Remover ZC-30	-

NOTE: LH shown in illustration, RH similar.

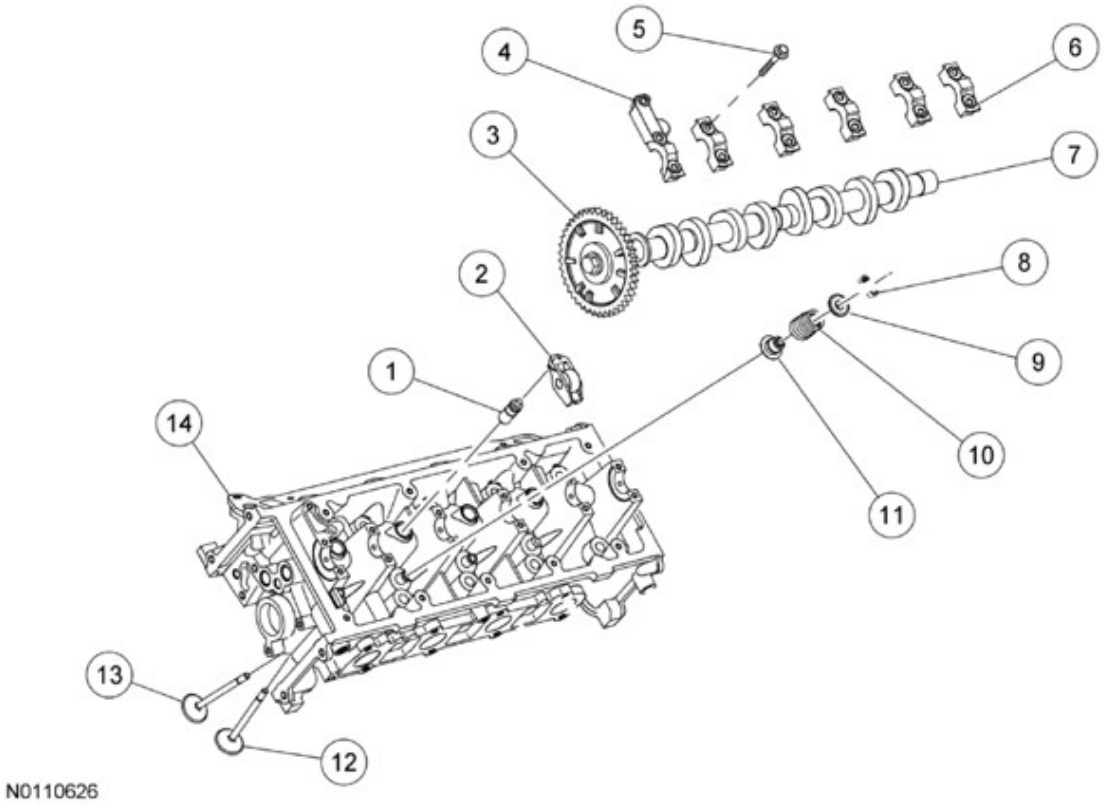

Fig. 369: Identifying Cylinder Head Components
Courtesy of FORD MOTOR CO.

Item	Part Number	Description
1	6C501	Hydraulic lash adjuster (8 required)
2	6529	Roller follower (8 required)
3	6256	Camshaft sprocket
4	6B284	Camshaft bearing cap
5	N807834	Camshaft bearing cap assembly bolt (13 required)
6	6B280	Camshaft bearing cap (5 required)
7	6A274	Camshaft (LH)
7	6250	Camshaft (RH)
8	6518	Valve spring retainer key (16 required)
9	6514	Valve spring retainer (8 required)
10	6513	Valve spring (8 required)
11	6A517	Valve stem seal (8 required)
12	6507	Intake valve (4 required)
13	6505	Exhaust valve (4 required)
14	6049	Cylinder head

Disassembly

NOTE: Place the cylinder head on a cardboard or wood surface to prevent damage to the joint face.

1. Install the Valve Spring Compressor Spacer tool between the valve spring coils to protect the valve stem seal from damage.

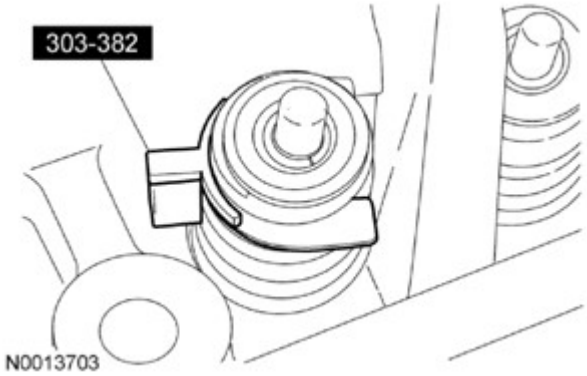

Fig. 370: Installing/Removing Valve Spring Compressor Spacer
Courtesy of FORD MOTOR CO.

2. Using the Valve Spring Compressor, compress the valve spring and remove the valve spring retainer keys.

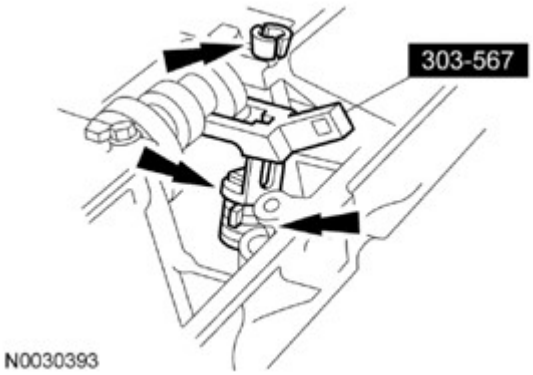

Fig. 371: Removing/Installing Valve Spring Retainer Keys
Courtesy of FORD MOTOR CO.

NOTE: Keep the valves and valve spring retainer keys in order so they can be reinstalled in their original locations. Failure to follow these instructions may result in engine damage.

3. Remove the valve spring retainers, valve springs and discard the valve seal.

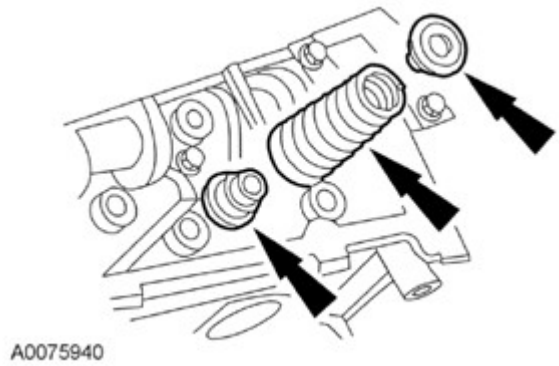

Fig. 372: Locating Valve Spring Retainer, Valve Spring And Valve Stem Seal
Courtesy of FORD MOTOR CO.

NOTE: The camshaft bearing caps must be reinstalled in their original locations. Record the camshaft bearing cap locations. Failure to follow these instructions may result in engine damage.

4. Remove the 13 bolts, 6 bearing caps and camshaft.

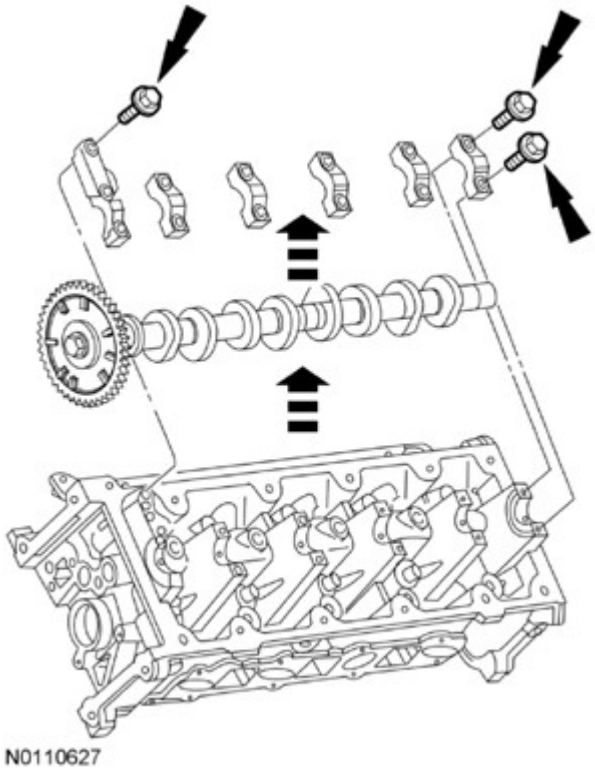

Fig. 373: Removing/Installing Bearing Caps And Camshaft
Courtesy of FORD MOTOR CO.

5. Clean and inspect the camshaft bearing caps.
   - One of the bearing caps contains an oil flow restriction groove. Make sure the groove is free of foreign material.

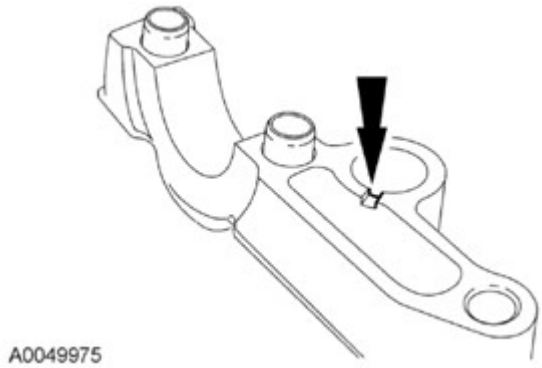

Fig. 374: Locating Oil Flow Restriction Groove
Courtesy of FORD MOTOR CO.

NOTE: **Do not use metal scrapers, wire brushes, power abrasive discs or other abrasive means to clean the sealing surfaces. These tools cause scratches and gouges that make leak paths. Use a plastic scraping tool to clean**

6.

6. **sealing surfaces.**

NOTE: If there is no residual gasket material present, metal surface prep can be used to clean and prepare the surfaces.

Clean the cylinder head sealing surfaces.

1. Remove any large deposits of silicone or gasket material with a plastic scraper.
2. Apply silicone gasket remover, following package directions, and allow to set for several minutes.
3. Remove the silicone gasket remover with a plastic scraper. A second application of silicone gasket remover may be required if residual traces of silicone or gasket material remain.
4. Apply metal surface prep, following package directions, to remove any remaining traces of oil or coolant, and to prepare the surfaces to bond with the new gasket. Do not attempt to make the metal shiny. Some staining of the metal surfaces is normal.

7. Inspect the cylinder head for distortion. For additional information, refer to **ENGINE SYSTEM - GENERAL INFORMATION** .

Assembly

1. Lubricate the camshaft journals with clean engine oil.

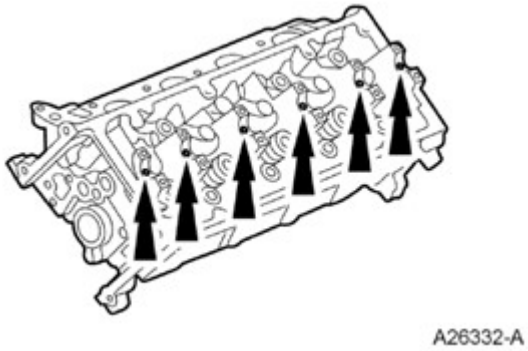

Fig. 375: Locating Camshaft Journals
Courtesy of FORD MOTOR CO.

2. Install the camshaft and the 6 camshaft bearing caps in their original locations.
   - Lubricate the camshaft bearing caps with clean engine oil.
   - Position the camshaft bearing caps.
   - Install the 13 bolts loosely.

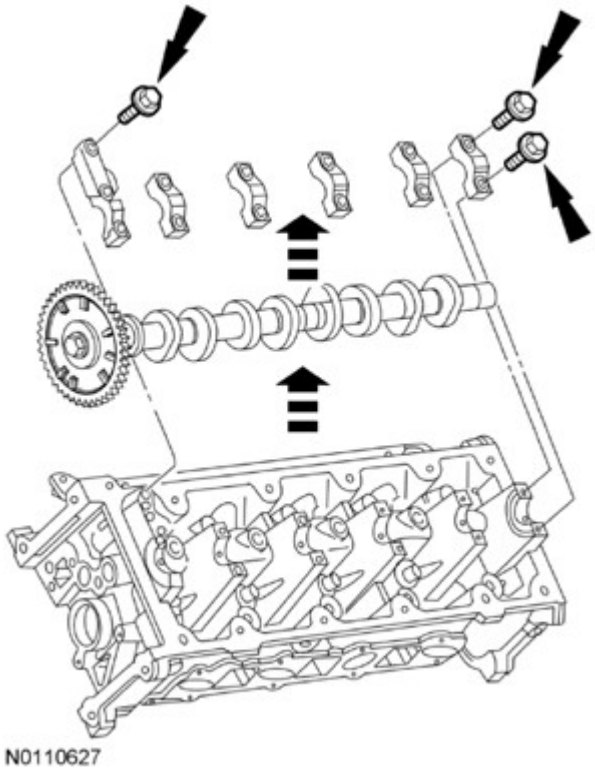

Fig. 376: Removing/Installing Bearing Caps And Camshaft
Courtesy of FORD MOTOR CO.

3. **NOTE: LH shown in illustration, RH similar.**

Tighten the 13 bolts in the sequence shown in illustration.

- Tighten to 10 Nm (89 lb-in).

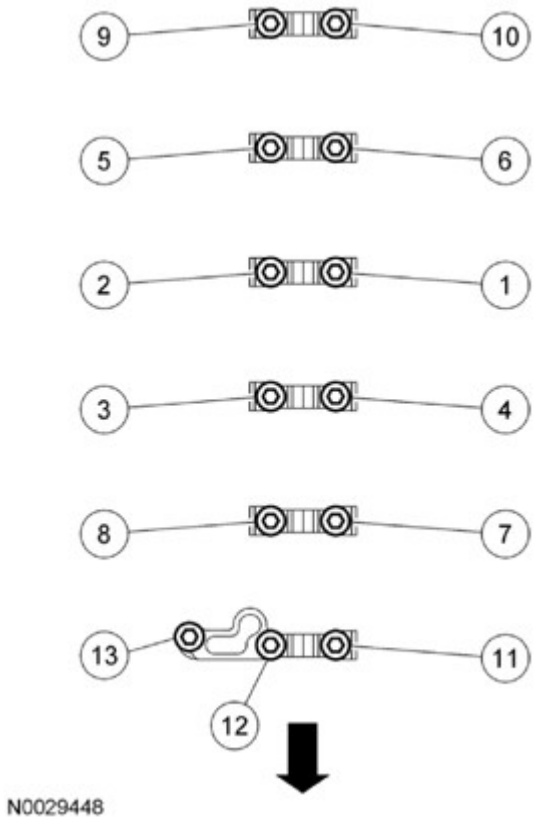

Fig. 377: Identifying Camshaft Bearing Caps Bolts Tightening Sequence
Courtesy of FORD MOTOR CO.

4. **NOTE: Lubricate the valve stems using clean engine oil.**

Install the valves in the valve guides located in the cylinder head.

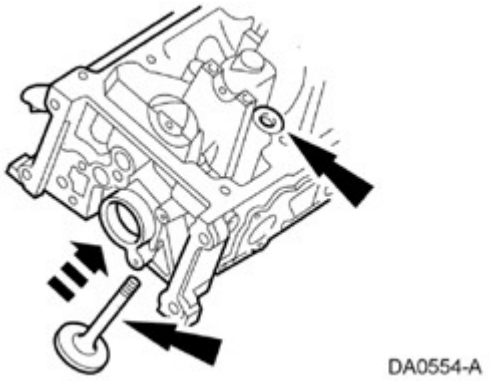

Fig. 378: Installing Valves In Valve Guides
Courtesy of FORD MOTOR CO.

5. **NOTE: Lubricate the valve seals with clean engine oil prior to installation.**

Using the Valve Spring Compressor and Valve Stem Oil Seal Installer, install the new valve stem seal.

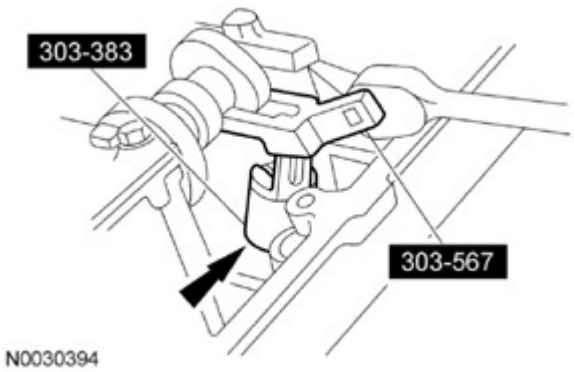

Fig. 379: Installing Valve Stem Seal
Courtesy of FORD MOTOR CO.

6. Install the valve springs and the valve spring retainers onto the valves.

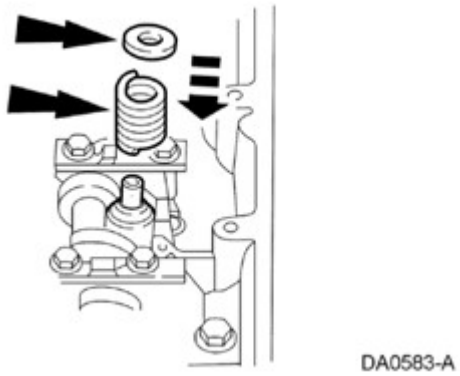

Fig. 380: Installing Valve Springs And Valve Spring Retainers Onto Valves
Courtesy of FORD MOTOR CO.

7. Install the Valve Spring Compressor Spacer between the valve spring coils to prevent valve stem seal damage.

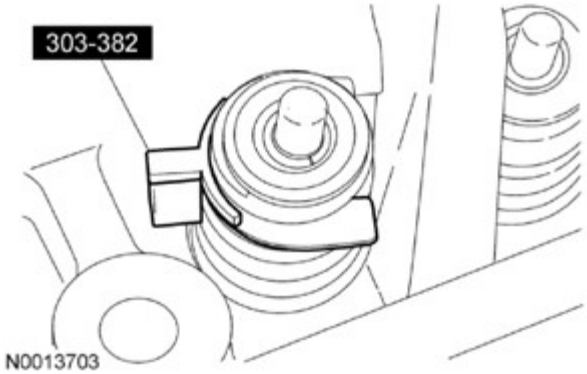

Fig. 381: Installing/Removing Valve Spring Compressor Spacer
Courtesy of FORD MOTOR CO.

8. Using the Valve Spring Compressor, compress the valve springs. Install the valve spring retainer keys.

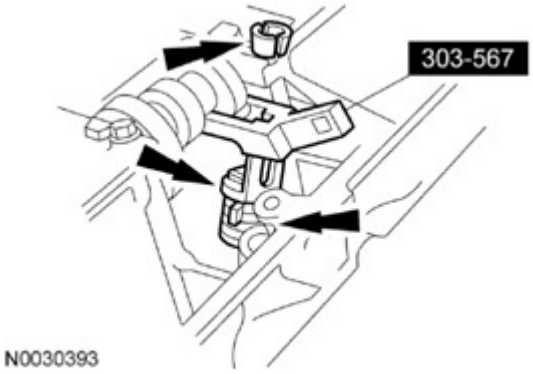

Fig. 382: Removing/Installing Valve Spring Retainer Keys
Courtesy of FORD MOTOR CO.

9. **NOTE: Lubricate the hydraulic lash adjusters using clean engine oil.**

Install the hydraulic lash adjusters in their original locations.

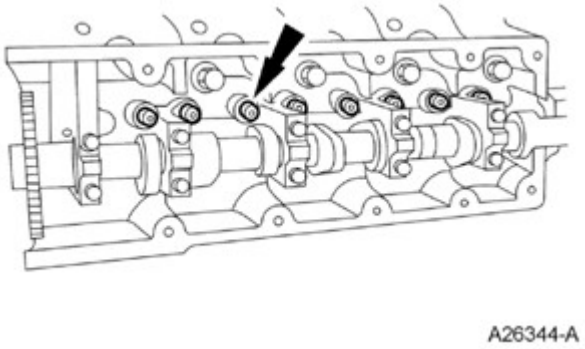

Fig. 383: Installing Hydraulic Lash Adjusters
Courtesy of FORD MOTOR CO.

10. Remove the Valve Spring Compressor Spacer.

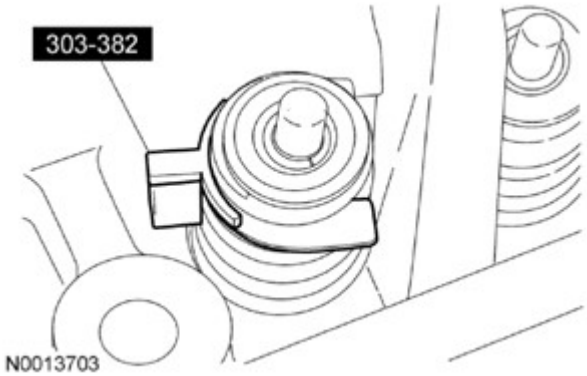

Fig. 384: Installing/Removing Valve Spring Compressor Spacer
Courtesy of FORD MOTOR CO.

PISTON

MATERIAL SPECIFICATIONS

Item	Specification
Motorcraft® SAE 5W-20 Premium Synthetic Blend Motor Oil (US); Motorcraft® SAE 5W-20 Super Premium Motor Oil (Canada) XO-5W20-QSP (US); CXO-5W20-LSP12 (Canada)	WSS-M2C945-A

Disassembly

1. Remove the clips.

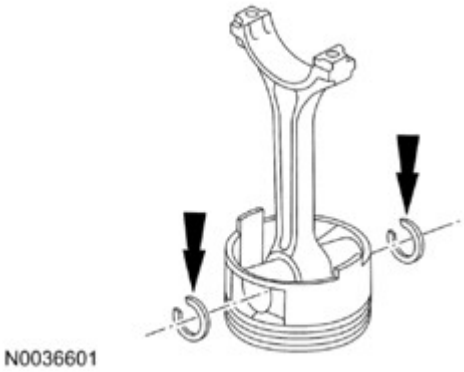

Fig. 385: Locating Piston Pin Clips
Courtesy of FORD MOTOR CO.

2. Remove the piston pin from the piston and connecting rod assembly.

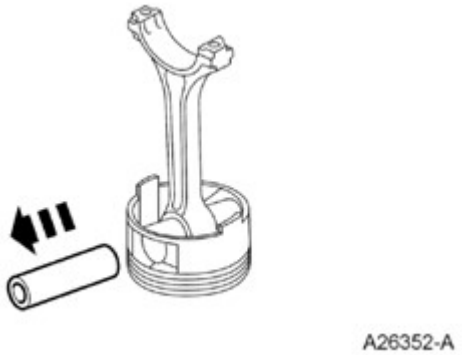

Fig. 386: Removing Piston Pin
Courtesy of FORD MOTOR CO.

3. Remove the connecting rod from the piston.

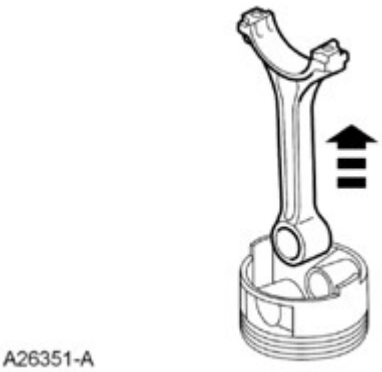

Fig. 387: Removing Connecting Rod From Piston
Courtesy of FORD MOTOR CO.

4. Clean and inspect the piston and connecting rod. For additional information, refer to **ENGINE SYSTEM - GENERAL INFORMATION** .

Assembly

1. **NOTE: Connecting rod must be installed into piston with identification markings toward front.**

   Position the connecting rod in the piston.

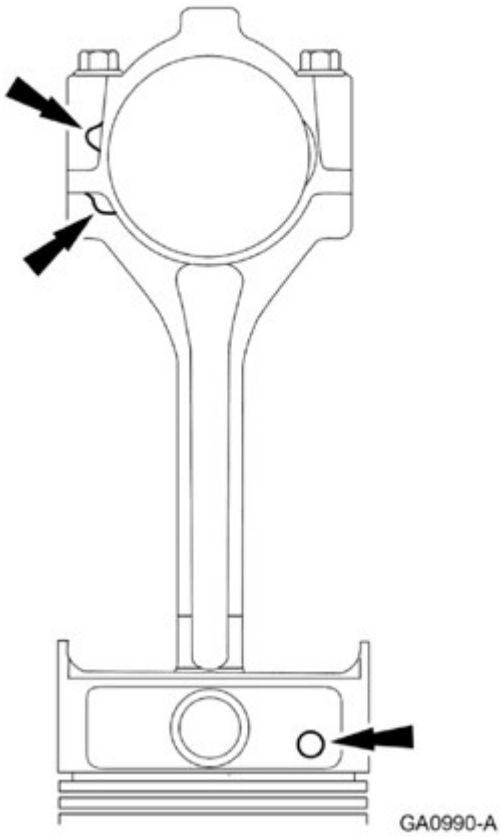

Fig. 388: Locating Connecting Rod & Piston Identification Marks
Courtesy of FORD MOTOR CO.

2. Lubricate the piston pin and pin bore with clean engine oil.

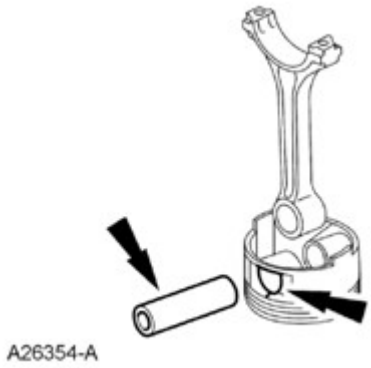

Fig. 389: Locating Piston Pin And Pin Bore
Courtesy of FORD MOTOR CO.

3. Install the piston pin in the piston and connecting rod assembly.

Fig. 390: Installing Piston Pin Into Piston And Connecting Rod Assembly
Courtesy of FORD MOTOR CO.

4. Install the piston pin retaining clips in the piston.

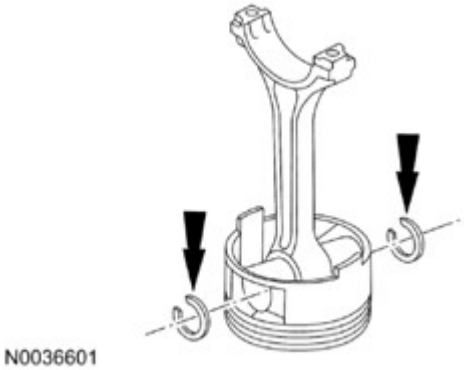

Fig. 391: Locating Piston Pin Clips
Courtesy of FORD MOTOR CO.

INTAKE MANIFOLD ASSEMBLY

MATERIAL SPECIFICATIONS

Item	Specification
Motorcraft® SAE 5W-20 Premium Synthetic Blend Motor Oil (US); Motorcraft® SAE 5W-20 Super Premium Motor Oil (Canada) XO-5W20-QSP (US); CXO-5W20-LSP12 (Canada)	WSS-M2C945-A

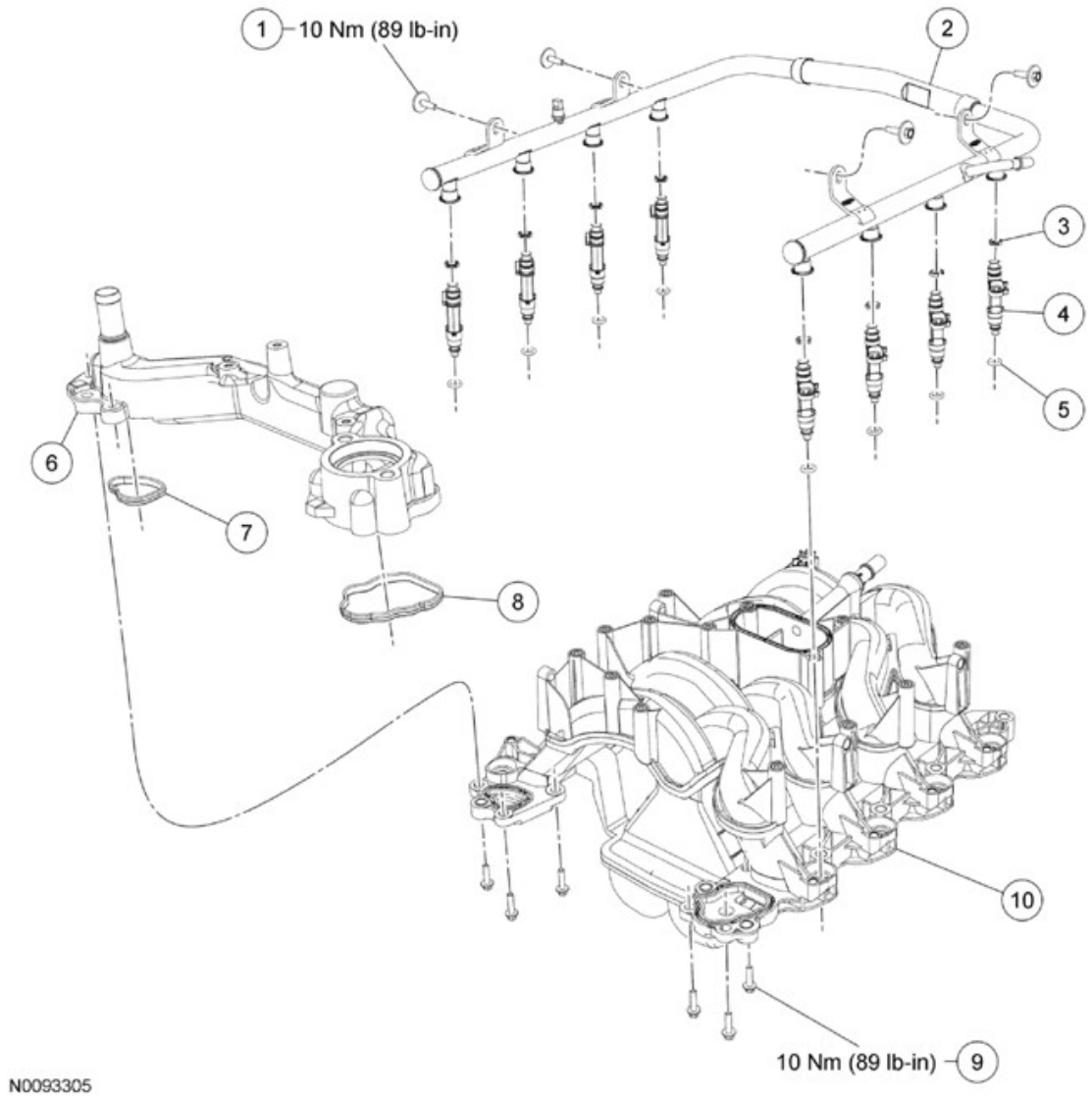

Fig. 392: Identifying Intake Manifold Assembly Components With Torque Specifications
Courtesy of FORD MOTOR CO.

Item	Part Number	Description
1	W710700	Fuel rail bolt (4 required)
2	9F792	Fuel rail
3	-	Fuel injector-to-fuel rail O-ring seal (8 required)
4	9F593	Fuel injector (8 required)
5	-	Fuel injector-to-intake manifold O-ring seal (8 required)
6	8C369	Engine coolant crossover assembly
7	8C387	Engine coolant crossover

		assembly RH gasket
8	8C388	Engine coolant crossover assembly LH gasket
9	W500015	Engine coolant crossover assembly bolt (6 required)
10	9424	Intake manifold

Disassembly

WARNING: Do not smoke, carry lighted tobacco or have an open flame of any type when working on or near any fuel-related component. Highly flammable mixtures are always present and may be ignited. Failure to follow these instructions may result in serious personal injury.

1. **NOTE: When removing the fuel rail, leave the fuel injectors in the intake manifold. This will make removal of the fuel rail easier.**

   Remove the 4 fuel rail bolts.

2. Separate the fuel rail from the 8 fuel injectors and remove the fuel rail.
3. Remove the 8 fuel injectors from the intake manifold.
   - Remove and discard the fuel injector O-ring seals.
4. Remove the 6 engine coolant crossover assembly bolts.
5. Remove the engine coolant crossover assembly.
   - Discard the gaskets.

Assembly

1. **NOTE: If the engine is repaired or replaced because of upper engine failure, typically including valve or piston damage, check the intake manifold for metal debris. If metal debris is found, install a new intake manifold. Failure to follow these instructions can result in engine damage.**

   Position new engine coolant crossover assembly gaskets, the engine coolant crossover assembly and install the 6 bolts.

   - Tighten to 10 Nm (89 lb-in).

2. **NOTE: Install new fuel injector O-ring seals on the fuel injectors.**

   NOTE: Lubricate the new fuel injector O-ring seals with clean engine oil prior to installation.

   Using new O-ring seals, install the fuel injectors into the intake manifold.

3. Install the fuel rail and the 4 fuel rail bolts.
    - Tighten to 10 Nm (89 lb-in).

ASSEMBLY

ENGINE

SPECIAL TOOLS

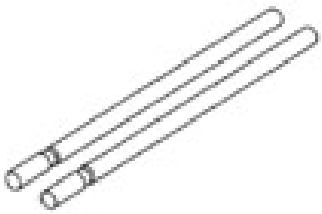 ST2806-A	Alignment Pins, Cylinder Head 303-1040 (SR-015486)
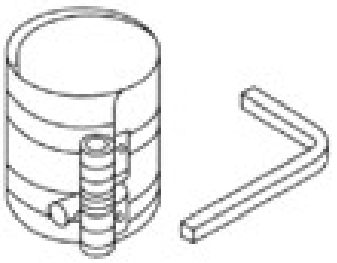 ST1376-A	Compressor, Piston Ring 303-D032 (D81L-6002-C) or equivalent
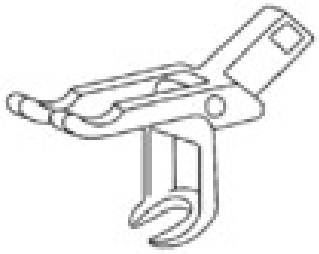 ST1330-A	Compressor, Valve Spring 303-567 (T97P-6565-AH)
	Compressor Spacer, Valve Spring 303-382 (T91P-6565-AH)

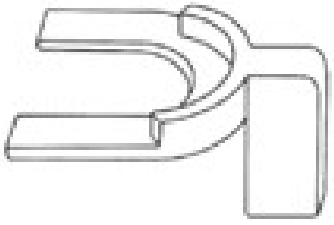 ST1331-A	
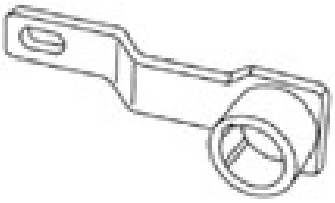 ST1335-A	Holding Tool, Crankshaft 303-448 (T93P-6303-A)
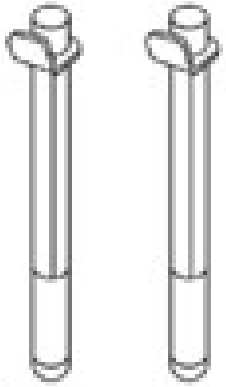 ST1337-A	Installer, Connecting Rod 303-442 (T93P-6136-A)
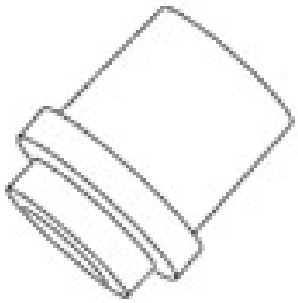 ST2197-A	Installer, Crankshaft Front Oil Seal 303-635
	Installer, Crankshaft Rear Oil Seal

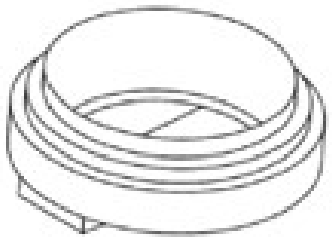 ST1479-A	303-516 (T95P-6701-BH)
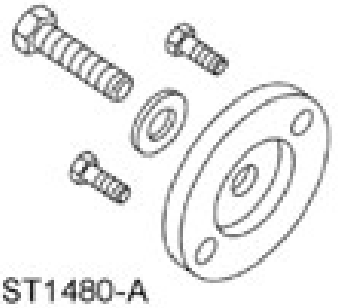 ST1480-A	Installer, Crankshaft Rear Oil Seal 303-518 (T95P-6701-DH)
 ST1482-A	Installer, Crankshaft Rear Oil Slinger 303-517 (T95P-6701-CH)
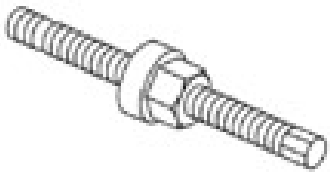 ST1287-A	Installer, Crankshaft Vibration Damper 303-102 (T74P-6316-B)
	Installer, Front Cover Oil Seal 303-335 (T88T-6701-A)

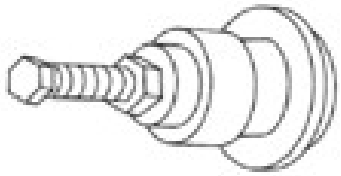 ST1328-A	
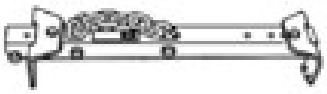 ST1377-A	Lifting Bracket, Engine 303-F047 (014-00073) or equivalent
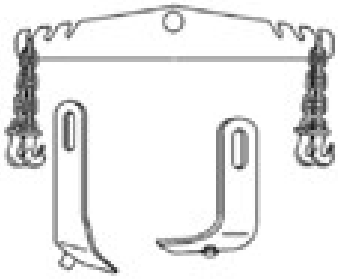 ST2443-A	Lifting Bracket Set, Engine 303-DS086 (D93P-6001-A) or equivalent
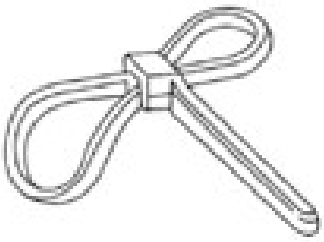 ST1438-A	Strap Wrench 303-D055 (D85L-6000-A) or equivalent

GENERAL EQUIPMENT

Hydraulic Chain Tensioner Retaining Clip 1L3Z-6P250-AA

MATERIAL SPECIFICATIONS

Item	Specification

Motorcraft® Gasket Maker TA-16	WSK-M2G348-A5
Motorcraft® Instant Gel Adhesive TA-19	WSK-M2G402-A4
Motorcraft® Metal Surface Prep ZC-31-A	-
Motorcraft® Gold Antifreeze/Coolant Concentrated VC-7-B (US); CVC-7-B2 (Canada)	WSS-M97B51-A1
Motorcraft® SAE 5W-20 Premium Synthetic Blend Motor Oil (US); Motorcraft® SAE 5W-20 Super Premium Motor Oil (Canada) XO-5W20-QSP (US); CXO-5W20-LSP12 (Canada)	WSS-M2C945-A
Motorcraft® Silicone Gasket and Sealant TA-30	WSE-M4G323-A4
Motorcraft® Silicone Gasket Remover ZC-30	-

5.4L (2V) Engine Induction System

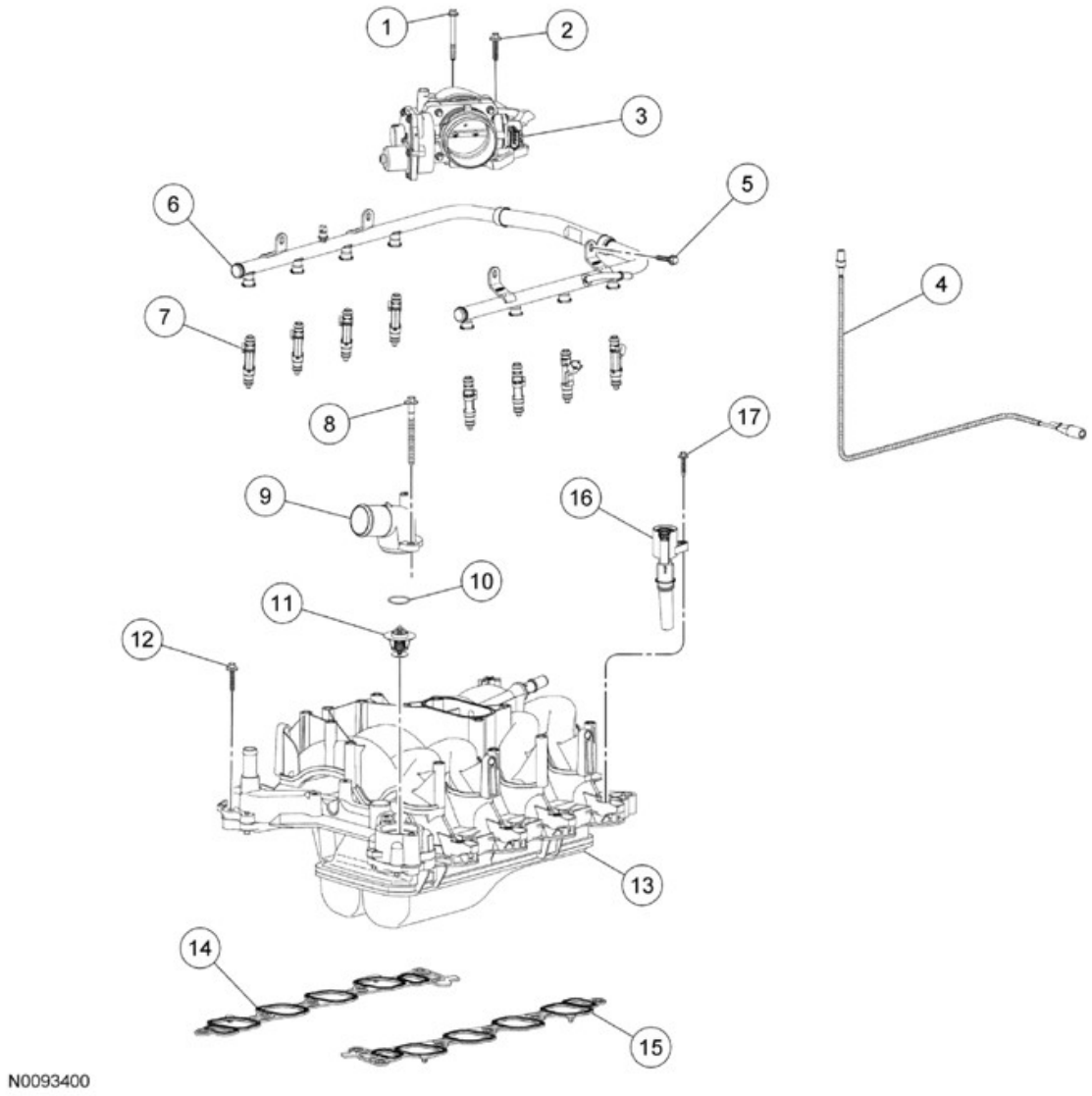

Fig. 393: Identifying Engine Induction System Components
Courtesy of FORD MOTOR CO.

Item	Part Number	Description
1	N808598	Throttle Body (TB) bolt
2	N808429	TB bolt (3 required)
3	9E822	TB and spacer assembly
4	9E498	Vacuum harness
5	W710700	Bolt (4 required)
6	9F792	Fuel rail
7	9F593	Fuel injector (8 required)
8	N806178	Thermostat housing bolt (2 required)
9	8594	Thermostat housing

10	N806807	O-ring seal
11	8575	Thermostat
12	W503300	Intake manifold bolt (9 required)
13	9424	Intake manifold
14	9439	Intake manifold RH gasket
15	9441	Intake manifold LH gasket
16	12A366	Ignition coil (8 required)
17	W711062	Ignition coil bolt (8 required)

5.4L (2V) Engine - Upper End

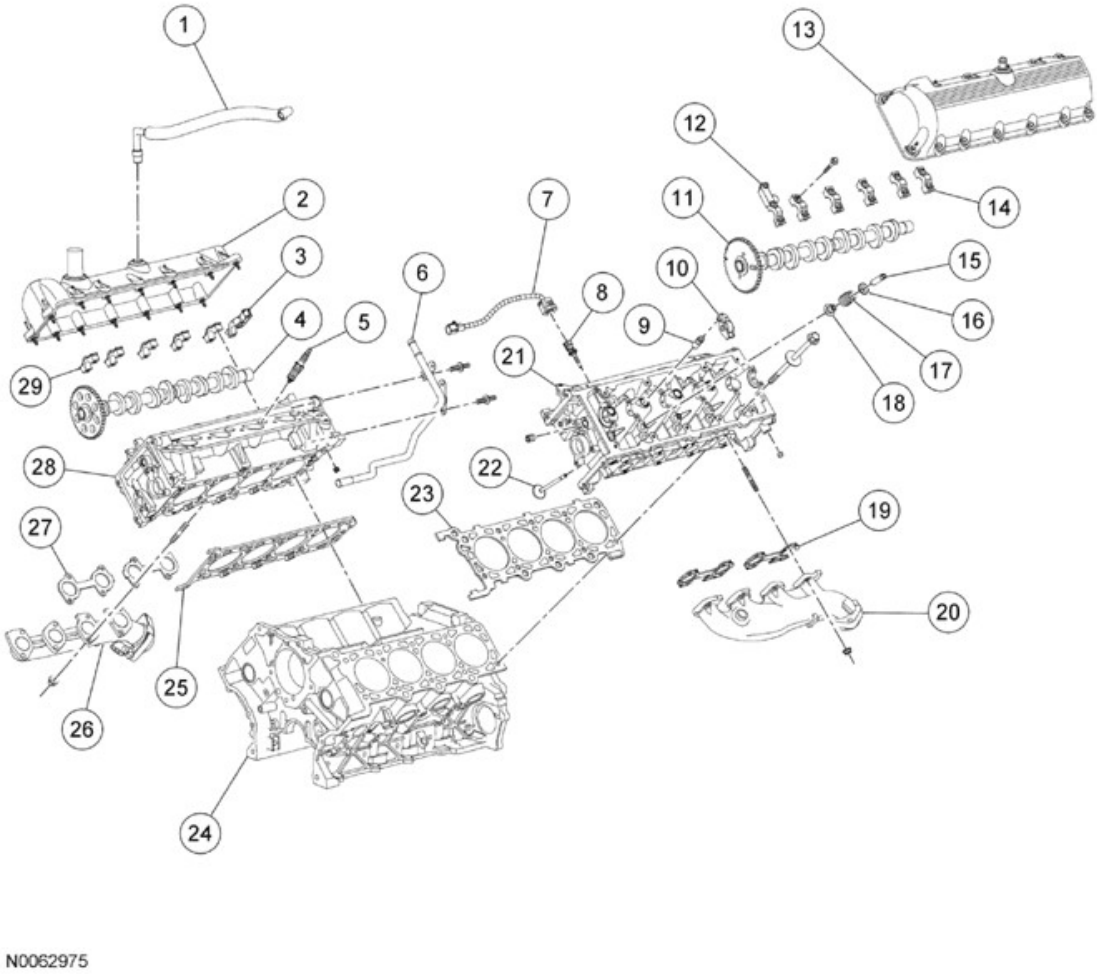

Fig. 394: Exploded View Of Engine - Upper End
Courtesy of FORD MOTOR CO.

Item	Part Number	Description
1	6K817	Crankcase ventilation hose
2	6582	Valve cover - RH
3	6B284	Camshaft bearing cap

4	6250	Camshaft - RH
5	12405	Spark plug (8 required)
6	18663	Heater outlet tube
7	14B485	Cylinder Head Temperature (CHT) sensor jumper harness
8	6G004	CHT sensor
9	6C501	Hydraulic lash adjuster (16 required)
10	6529	Roller follower (16 required)
11	6A274	Camshaft - LH
12	6B284	Camshaft bearing cap
13	6A505	Valve cover - LH
14	6B280	Camshaft bearing cap (5 required)
15	6518	Valve spring retainer key (32 required)
16	6514	Valve spring retainer (16 required)
17	6513	Valve spring (16 required)
18	6A517	Valve stem seal (16 required)
19	9Y431	Exhaust manifold gasket - LH (2 required)
20	9431	Exhaust manifold - LH
21	6049	Cylinder head - LH
22	6505	Exhaust valve (8 required)
22	6507	Intake valve (8 required)
23	6083	Cylinder head gasket - LH
24	6010	Cylinder block
25	6051	Cylinder head gasket - RH (2 required)
26	9430	Exhaust manifold - RH
27	9Y431	Exhaust manifold gasket - RH (2 required)
28	6049	Cylinder head - RH
29	6B280	Camshaft bearing cap (5 required)

5.4L (2V) Engine - Lower End

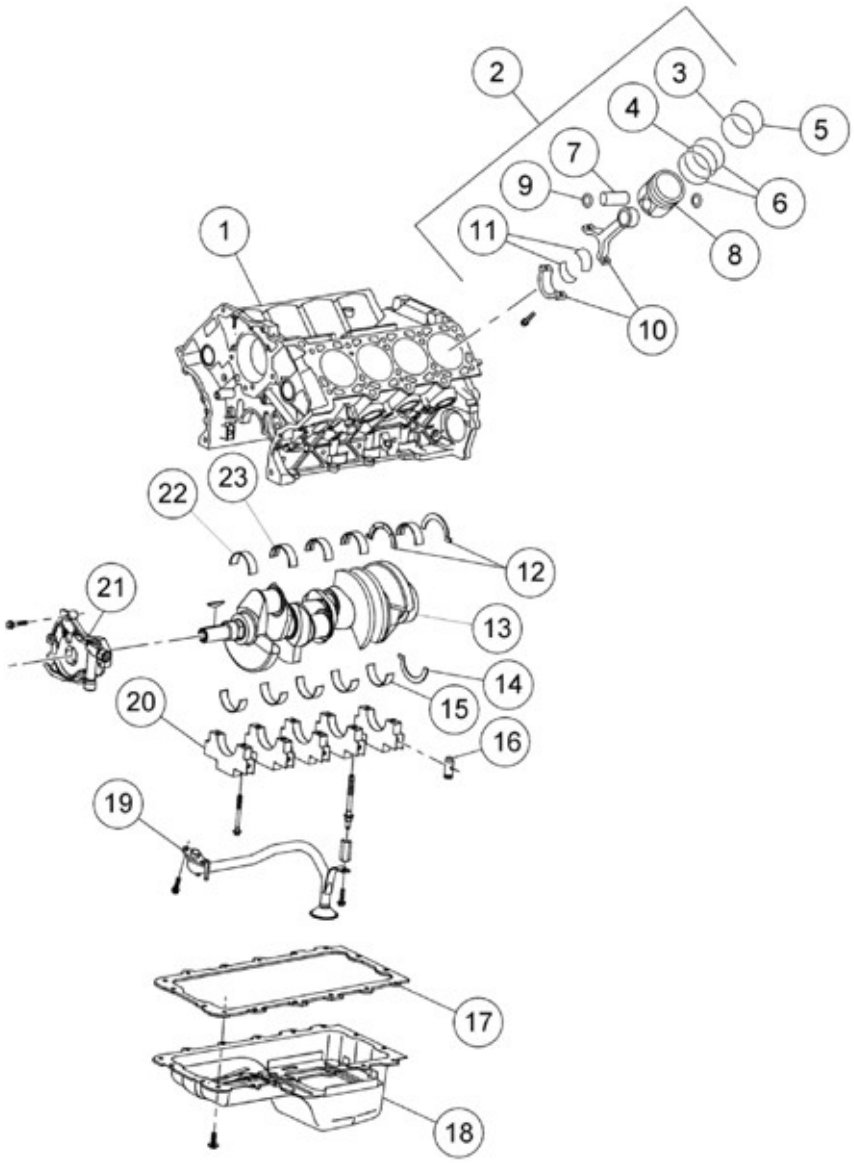

A0043129

Fig. 395: Exploded View Of Engine - Lower End
Courtesy of FORD MOTOR CO.

Item	Part Number	Description
1	6010	Cylinder block
2	6100	Piston and rod assembly (8 required)
3	6152	Lower compression ring (8 required)
4	6161	Inner oil control ring (8 required)
5	6150	Upper compression ring (8

		required)
6	6159	Outer oil control ring (16 required)
7	6135	Piston pin (8 required)
8	6110	Piston (8 required)
9	6140	Piston pin retainer (16 required)
10	6200	Connecting rod assembly (8 required)
11	6211	Connecting rod bearings (16 required)
12	6A341	Crankshaft thrust washers - upper (2 required)
13	6303	Crankshaft
14	6K302	Crankshaft thrust washer - lower
15	6A338	Crankshaft bearing - lower (5 required)
16	6A346	Dowel (10 required)
17	6710	Oil pan gasket
18	6675	Oil pan
19	6622	Oil pump screen and pickup tube
20	6325	Crankshaft main bearing cap (5 required)
21	6621	Oil pump
22	6W337	Front crankshaft bearing - upper
23	6333	Crankshaft bearing - upper (4 required)

5.4L (2V) Engine - Front End

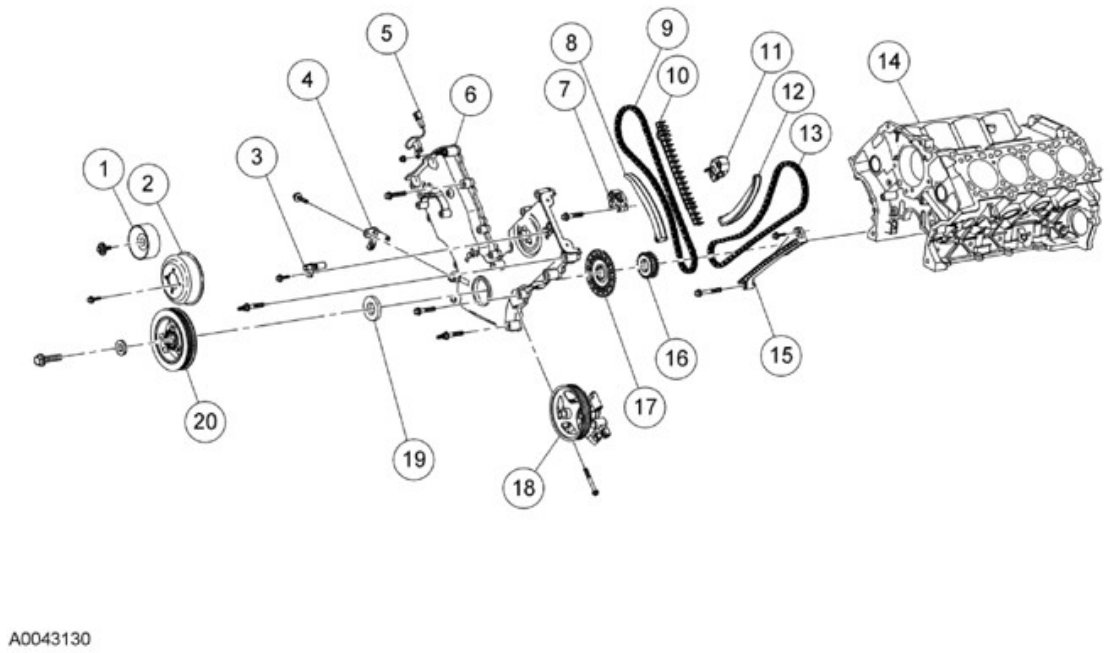

Fig. 396: Exploded View Of Engine - Front End
Courtesy of FORD MOTOR CO.

Item	Part Number	Description
1	19A216	Idler pulley
2	8A528	Coolant pump pulley
3	6B288	Camshaft Position (CMP) sensor
4	6C315	Crankshaft Position (CKP) sensor
5	18801	Radio ignition interference capacitor (2 required)
6	6C086	Engine front cover
7	6L266	Timing chain tensioner - RH
8	6K255	Timing chain tensioner arm - RH
9	6268	Timing chain - RH
10	6M256	Timing chain guide - RH
11	6M269	Timing chain tensioner - LH
12	6M274	Timing chain tensioner arm - LH
13	6268	Timing chain - LH
14	6010	Cylinder block
15	6B274	Timing chain guide - LH
16	6306	Crankshaft sprocket
17	12A227	Ignition pulse wheel
18	3A696	Power steering pump
19	6700	Front crankshaft oil seal
20	6316	Crankshaft pulley

5.4L (2V) Engine - Exterior Components

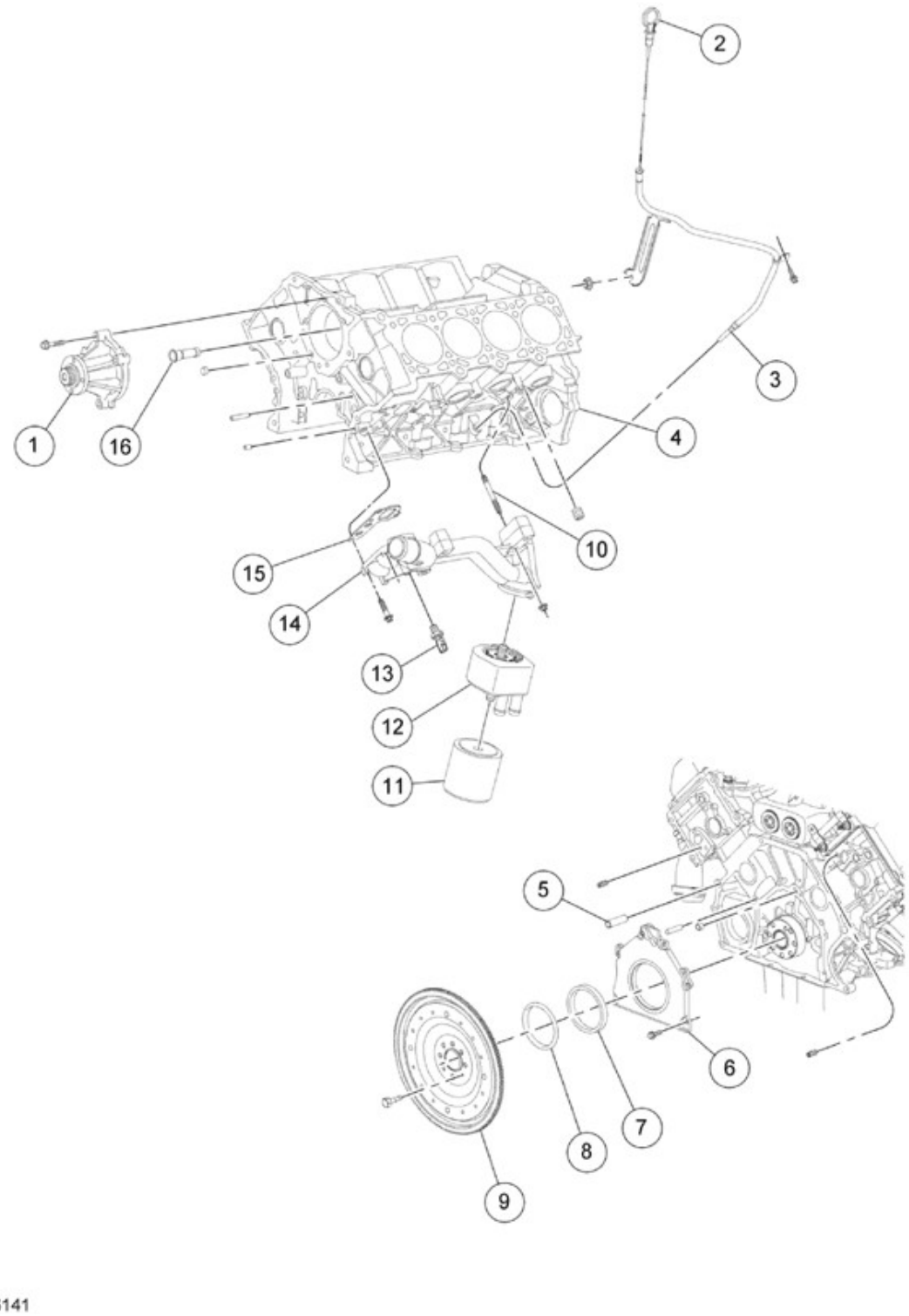

Fig. 397: Exploded View Of Engine - Exterior Components
Courtesy of FORD MOTOR CO.

Item	Part Number	Description
1	8501	Coolant pump
2	6750	Oil level indicator
3	6K873	Oil level indicator tube
4	6010	Cylinder block
5	N807198	Dowel (2 required)
6	6K318	Crankshaft rear seal retainer plate
7	6701	Crankshaft rear seal
8	6310	Crankshaft rear oil seal slinger
9	6375	Flexplate
10	W712913	Stud
11	6714	Oil filter
12	6A642	Oil cooler
13	9278	Engine Oil Pressure (EOP) switch
14	6884	Oil filter adapter
15	6A636	Oil filter adapter gasket
16	18B402	Coolant pump outlet

1. Record the main bearing code found on the front of the engine block.

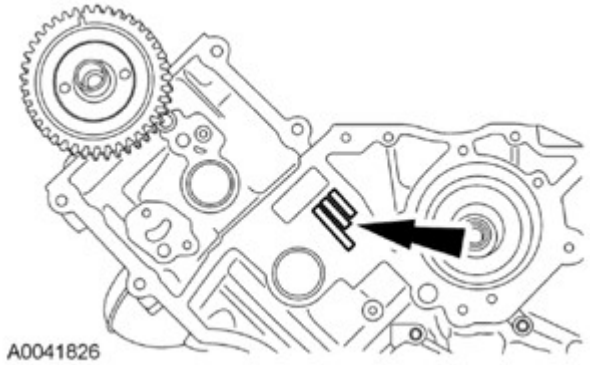

Fig. 398: Main Bearing Code Label Location (Engine Block)
Courtesy of FORD MOTOR CO.

2. Record the main bearing code found on the back of the crankshaft.

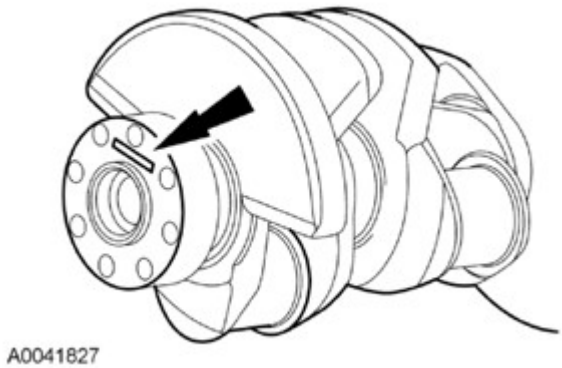

Fig. 399: Main Bearing Code Location
Courtesy of FORD MOTOR CO.

3. Using the data recorded earlier and the Bearing Select Fit Chart, Standard Bearings, determine the required bearing grade for each main bearing.
   - Read the first letter of the engine block main bearing code and the first letter of the crankshaft main bearing code.
   - Read down the column below the engine block main bearing code letter, and across the row next to the crankshaft main bearing code letter, until the 2 intersect. This is the required bearing grade for the No. 1 crankshaft main bearing.
   - As an example, if the engine block code letter is "F" and the crankshaft code letter is "D", the correct bearing grade for this main bearing is a "2".
   - Repeat this process for the remaining 4 main bearings.

MINIMUM BLOCK DIA

MAXIMUM CRANKSHAFT DIA		A .401	B .402	C .403	D .404	E .405	F .406	G .407	H .408	I .409	J .410	K .411	L .412	M .413	N .414	O .415	P .416	Q .417	R .418	S .419	T .420	U .421	V .422	W .423	X .424
	72.400																								
X	67.504	1	1	1	1	1	1	1	1	1	1	1	1	1	1	1	1	1	2	2	2	2	2	2	2
W	67.503	1	1	1	1	1	1	1	1	1	1	1	1	1	1	1	1	2	2	2	2	2	2	2	2
V	67.502	1	1	1	1	1	1	1	1	1	1	1	1	1	1	1	2	2	2	2	2	2	2	2	2
U	67.501	1	1	1	1	1	1	1	1	1	1	1	1	1	1	2	2	2	2	2	2	2	2	2	2
T	67.500	1	1	1	1	1	1	1	1	1	1	1	1	1	2	2	2	2	2	2	2	2	2	2	2
S	67.499	1	1	1	1	1	1	1	1	1	1	1	1	2	2	2	2	2	2	2	2	2	2	2	2
R	67.498	1	1	1	1	1	1	1	1	1	1	1	2	2	2	2	2	2	2	2	2	2	2	2	2
Q	67.497	1	1	1	1	1	1	1	1	1	1	2	2	2	2	2	2	2	2	2	2	2	2	2	3
P	67.496	1	1	1	1	1	1	1	1	1	2	2	2	2	2	2	2	2	2	2	2	2	2	3	3
O	67.495	1	1	1	1	1	1	1	1	2	2	2	2	2	2	2	2	2	2	2	2	2	3	3	3
N	67.494	1	1	1	1	1	1	1	2	2	2	2	2	2	2	2	2	2	2	2	2	3	3	3	3
M	67.493	1	1	1	1	1	1	2	2	2	2	2	2	2	2	2	2	2	2	2	3	3	3	3	3
L	67.492	1	1	1	1	1	2	2	2	2	2	2	2	2	2	2	2	2	2	3	3	3	3	3	3
K	67.491	1	1	1	1	2	2	2	2	2	2	2	2	2	2	2	2	2	3	3	3	3	3	3	3
J	67.490	1	1	1	2	2	2	2	2	2	2	2	2	2	2	2	2	3	3	3	3	3	3	3	3
I	67.489	1	1	2	2	2	2	2	2	2	2	2	2	2	2	2	3	3	3	3	3	3	3	3	3
H	67.488	1	2	2	2	2	2	2	2	2	2	2	2	2	2	3	3	3	3	3	3	3	3	3	3
G	67.487	2	2	2	2	2	2	2	2	2	2	2	2	2	3	3	3	3	3	3	3	3	3	3	3
F	67.486	2	2	2	2	2	2	2	2	2	2	2	2	3	3	3	3	3	3	3	3	3	3	3	3
E	67.485	2	2	2	2	2	2	2	2	2	2	2	3	3	3	3	3	3	3	3	3	3	3	3	3
D	67.484	2	2	2	2	2	2	2	2	2	2	3	3	3	3	3	3	3	3	3	3	3	3	3	3
C	67.483	2	2	2	2	2	2	2	2	2	3	3	3	3	3	3	3	3	3	3	3	3	3	3	3
B	67.482	2	2	2	2	2	2	2	2	3	3	3	3	3	3	3	3	3	3	3	3	3	3	3	3
A	67.481	2	2	2	2	2	2	2	3	3	3	3	3	3	3	3	3	3	3	3	3	3	3	3	3

A0031544

Fig. 400: Bearing Select Fit Chart (Standard Bearings)
Courtesy of FORD MOTOR CO.

4. If oversize bearings are being used, use the procedure in the previous step and the Bearing Select Fit Chart, Oversize Bearings to determine the required bearing grade for each main bearing.

MINIMUM BLOCK DIA

MAXIMUM CRANKSHAFT DIA		A .401	B .402	C .403	D .404	E .405	F .406	G .407	H .408	I .409	J .410	K .411	L .412	M .413	N .414	O .415	P .416	Q .417	R .418	S .419	T .420	U .421	V .422	W .423	X .424
	72.400																								
X	67.254	1	1	1	1	1	1	1	1	1	1	1	1	1	1	1	1	1	2	2	2	2	2	2	2
W	67.253	1	1	1	1	1	1	1	1	1	1	1	1	1	1	1	1	2	2	2	2	2	2	2	2
V	67.252	1	1	1	1	1	1	1	1	1	1	1	1	1	1	1	2	2	2	2	2	2	2	2	2
U	67.251	1	1	1	1	1	1	1	1	1	1	1	1	1	1	2	2	2	2	2	2	2	2	2	2
T	67.250	1	1	1	1	1	1	1	1	1	1	1	1	1	2	2	2	2	2	2	2	2	2	2	2
S	67.249	1	1	1	1	1	1	1	1	1	1	1	1	2	2	2	2	2	2	2	2	2	2	2	2
R	67.248	1	1	1	1	1	1	1	1	1	1	1	2	2	2	2	2	2	2	2	2	2	2	2	2
Q	67.247	1	1	1	1	1	1	1	1	1	1	2	2	2	2	2	2	2	2	2	2	2	2	2	3
P	67.246	1	1	1	1	1	1	1	1	1	2	2	2	2	2	2	2	2	2	2	2	2	2	3	3
O	67.245	1	1	1	1	1	1	1	1	2	2	2	2	2	2	2	2	2	2	2	2	2	3	3	3
N	67.244	1	1	1	1	1	1	1	2	2	2	2	2	2	2	2	2	2	2	2	2	3	3	3	3
M	67.243	1	1	1	1	1	1	2	2	2	2	2	2	2	2	2	2	2	2	2	3	3	3	3	3
L	67.242	1	1	1	1	1	2	2	2	2	2	2	2	2	2	2	2	2	2	3	3	3	3	3	3
K	67.241	1	1	1	1	2	2	2	2	2	2	2	2	2	2	2	2	2	3	3	3	3	3	3	3
J	67.240	1	1	1	2	2	2	2	2	2	2	2	2	2	2	2	2	3	3	3	3	3	3	3	3
I	67.239	1	1	2	2	2	2	2	2	2	2	2	2	2	2	2	3	3	3	3	3	3	3	3	3
H	67.238	1	2	2	2	2	2	2	2	2	2	2	2	2	2	3	3	3	3	3	3	3	3	3	3
G	67.237	2	2	2	2	2	2	2	2	2	2	2	2	2	3	3	3	3	3	3	3	3	3	3	3
F	67.236	2	2	2	2	2	2	2	2	2	2	2	2	3	3	3	3	3	3	3	3	3	3	3	3
E	67.235	2	2	2	2	2	2	2	2	2	2	2	3	3	3	3	3	3	3	3	3	3	3	3	3
D	67.234	2	2	2	2	2	2	2	2	2	2	3	3	3	3	3	3	3	3	3	3	3	3	3	3
C	67.233	2	2	2	2	2	2	2	2	2	3	3	3	3	3	3	3	3	3	3	3	3	3	3	3
B	67.232	2	2	2	2	2	2	2	2	3	3	3	3	3	3	3	3	3	3	3	3	3	3	3	3
A	67.231	2	2	2	2	2	2	2	3	3	3	3	3	3	3	3	3	3	3	3	3	3	3	3	3

A0041840

Fig. 401: Bearing Select Fit Chart (Oversize Bearings)
Courtesy of FORD MOTOR CO.

NOTE: **Before assembling the cylinder block, all sealing surfaces must be free of chips, dirt, paint and foreign material. Also, make sure the coolant and oil passages are clear.**

5. Install the crankshaft upper main bearings into the cylinder block and lubricate them with clean engine oil.

NOTE: **The upper thrust washers are shown in illustration for location purposes only. Do not install the upper thrust washers until the crankshaft is installed. Refer to the following 2 steps.**

6. Install the crankshaft onto the upper crankshaft main bearings.

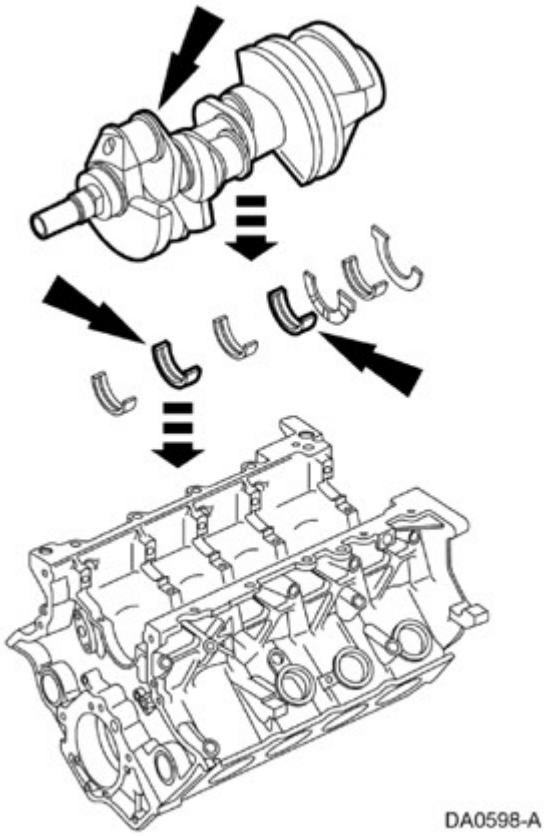

Fig. 402: Installing Crankshaft Onto Upper Crankshaft Main Bearings
Courtesy of FORD MOTOR CO.

NOTE: If equipped, the oil groove on the thrust washer must face toward the front of the engine (against the crankshaft thrust surface).

7. Push the crankshaft rearward and install the rear crankshaft upper thrust washer at the back of the No. 5 main boss.

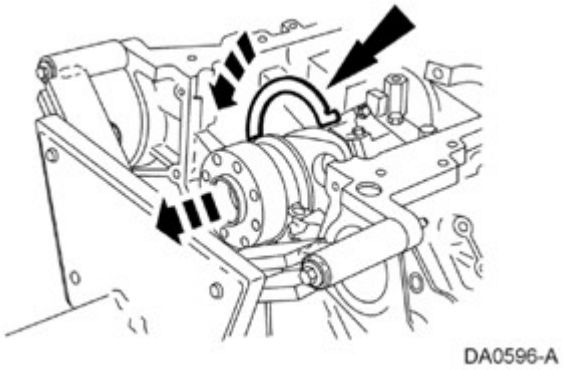

Fig. 403: Installing Rear Crankshaft Upper Thrust Washer
Courtesy of FORD MOTOR CO.

8. **NOTE: If equipped, the oil groove on the thrust washer must face toward the front of the engine (against the crankshaft surface).**

Push the crankshaft forward and install the front crankshaft upper thrust washer at the front of the No. 5 main boss.

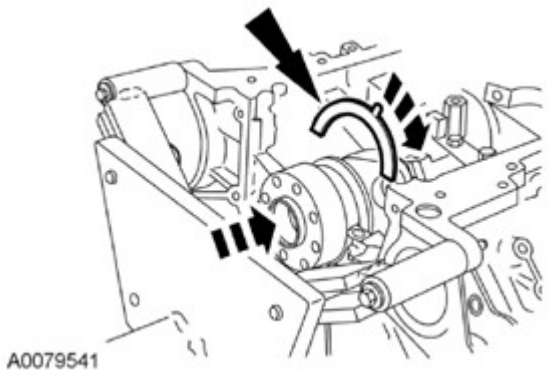

Fig. 404: Installing Front Upper Crankshaft Thrust Washer
Courtesy of FORD MOTOR CO.

9. **NOTE: To aid in assembly, apply petroleum jelly to the back of the crankshaft thrust washer.**

NOTE: If equipped, the oil groove on the thrust washer must face toward the rear of the engine (crankshaft surface).

Install the lower crankshaft thrust washer to the back side of the No. 5 main bearing cap, with oil grooves facing the crankshaft surface.

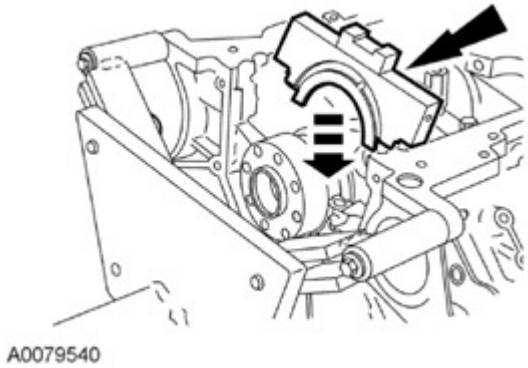

Fig. 405: Installing Lower Crankshaft Thrust Washer
Courtesy of FORD MOTOR CO.

10. Install the crankshaft lower main bearings into the main bearing caps and lubricate them with clean engine oil. Locate the main bearing cap on the cylinder block and keeping the cap as square as possible,

alternately draw the cap down evenly using the cap fasteners.

11. Install the 10 dowel pins so the flat sides face the crankshaft.

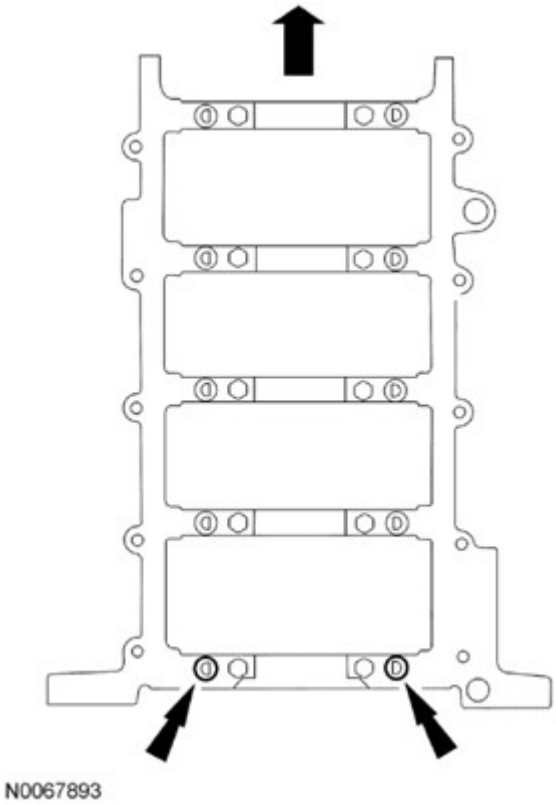

Fig. 406: Locating Crankshaft Flat Sides Face Dowel Pins
Courtesy of FORD MOTOR CO.

12. Tighten the 10 vertical main bearing cap fasteners in the sequence shown in illustration, in 2 stages:
    - Stage 1: Tighten to 40 Nm (30 lb-ft).
    - Stage 2: Tighten an additional 90 degrees.

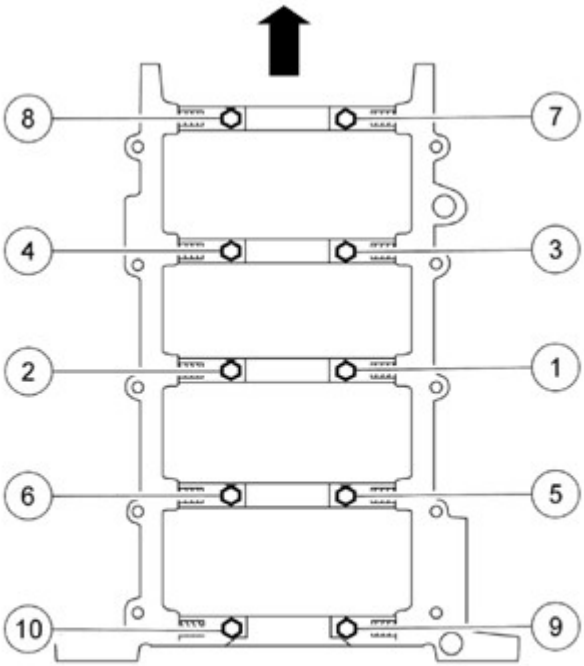

N0013765

Fig. 407: Identifying Main Bearing Cap Bolts Tightening Sequence
Courtesy of FORD MOTOR CO.

13. Install the 10 side bolts and tighten them in 2 stages, in the sequence shown in illustration.
    - Stage 1: Tighten to 30 Nm (22 lb-ft).
    - Stage 2: Tighten an additional 90 degrees.

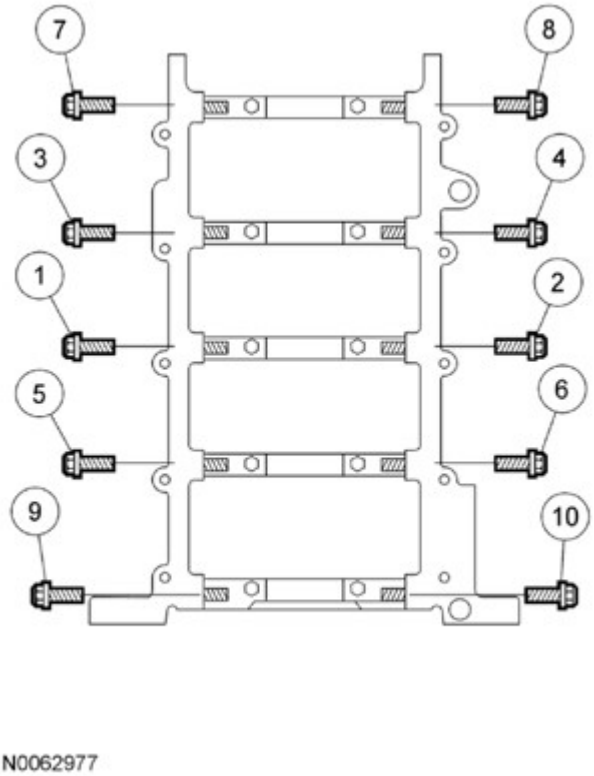

Fig. 408: Identifying Main Bearing Cap Side Bolts Tightening Sequence
Courtesy of FORD MOTOR CO.

14. Check the crankshaft end play. For additional information, refer to **ENGINE SYSTEM - GENERAL INFORMATION** .
15. Check that crankshaft torque-to-turn does not exceed 6 Nm (53 lb-in).
16. Assemble the 8 pistons. For additional information, refer to **PISTON**.
17. Make sure the ring gaps (oil spacer-A, oil ring-B and compression ring-C) are correctly spaced around the circumference of the piston.

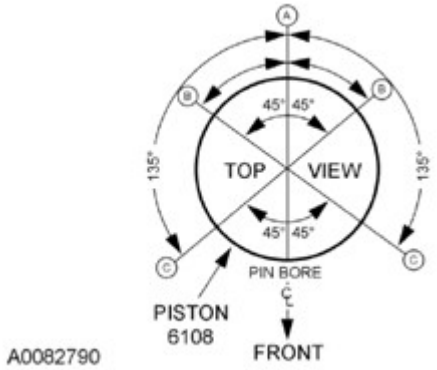

Fig. 409: Identifying Piston Ring Gap
Courtesy of FORD MOTOR CO.

18. Make sure the dimple in the piston faces the front of the engine.

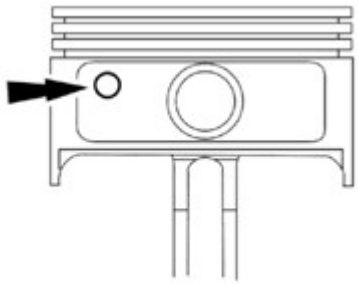

Fig. 410: Locating Dimple In Piston Faces
Courtesy of FORD MOTOR CO.

19. **NOTE: Install the piston and connecting rod assemblies carefully, or the cylinder walls or crankshaft journals may be damaged.**

NOTE: The following piston installation steps are for all 8 connecting rods, rod bearings and pistons. Only one connecting rod, rod bearing and piston shown in illustration.

Use the Connecting Rod Installers and the Piston Ring Compressor to install the connecting rod with the upper connecting rod bearing in place.

- Lubricate the piston and ring with clean engine oil.
- Lubricate the rod bearings with clean engine oil.

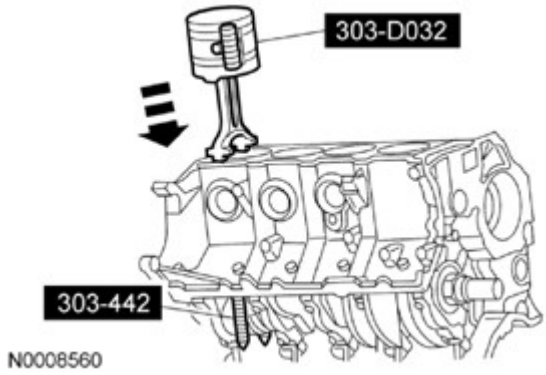

Fig. 411: Installing Connecting Rod With Upper Connecting Rod Bearing
Courtesy of FORD MOTOR CO.

20. **NOTE: Remove the Connecting Rod Installers carefully, or the crankshaft journals may be damaged.**

Once the connecting rod is seated on the crankshaft journal, remove the Connecting Rod Installers.

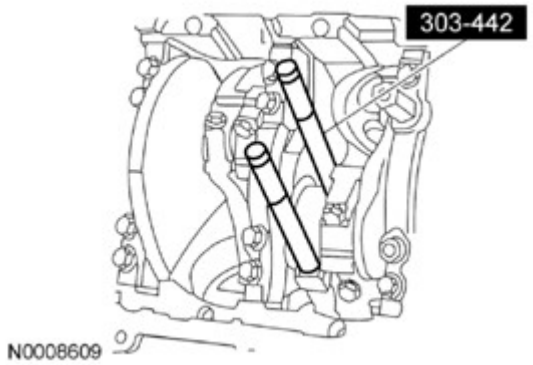

Fig. 412: Removing Connecting Rod Installer
Courtesy of FORD MOTOR CO.

21. **NOTE: The rod cap installation must keep the same orientation as marked during disassembly. Failure to follow these instructions may result in engine damage.**

NOTE: The connecting rod caps are of the "cracked" design and must mate with the connecting rod ends. Excessive bearing clearance will result if not mated correctly.

Position the lower bearing and connecting rod, and install the new bolts loosely.

22. Check the piston-to-cylinder block and piston ring clearances. For additional information, refer to **ENGINE SYSTEM - GENERAL INFORMATION** .

23. **NOTE: Main bearing caps are removed for clarity.**

Tighten the 16 connecting rod bearing cap bolts in 2 stages, using the sequence shown in illustration.

- Stage 1: Tighten to 43 Nm (32 lb-ft).
- Stage 2: Tighten an additional 105 degrees.

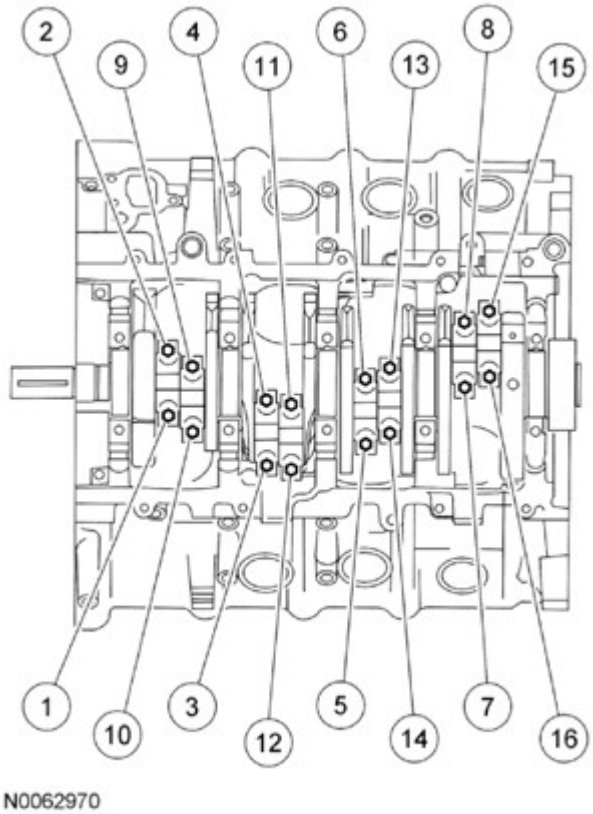

Fig. 413: Identifying Connecting Rod Bearing Cap Bolts Tightening Sequence
Courtesy of FORD MOTOR CO.

24. Install the oil pump and loosely install the 3 bolts.
    - Tighten the bolts in the sequence shown in illustration.
    - Tighten to 10 Nm (89 lb-in).

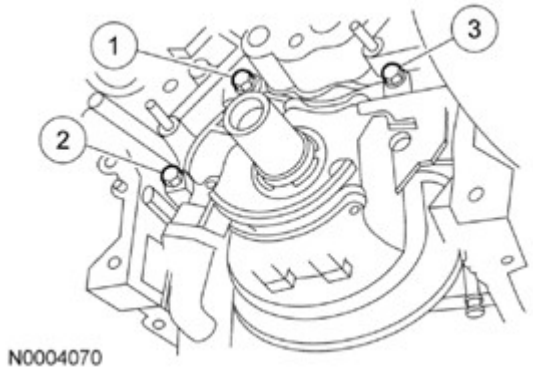

Fig. 414: Identifying Tightening Sequence Of Oil Pump Bolts
Courtesy of FORD MOTOR CO.

25. Install the pickup tube spacer.
    - Tighten to 25 Nm (18 lb-ft).

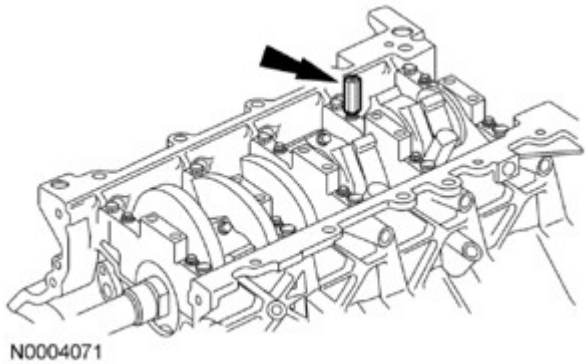

Fig. 415: Locating Pickup Tube Spacer
Courtesy of FORD MOTOR CO.

26.

NOTE: **Make sure the O-ring is in place and not damaged. A missing or damaged O-ring may cause foam in the lubrication system, low oil pressure and severe engine damage.**

NOTE: **Clean and inspect the mating surfaces and install a new O-ring. Lubricate the O-ring with clean engine oil.**

Position the oil pump screen and pickup tube and install the 3 bolts.

1. Tighten to 25 Nm (18 lb-ft).
2. Tighten to 10 Nm (89 lb-in).

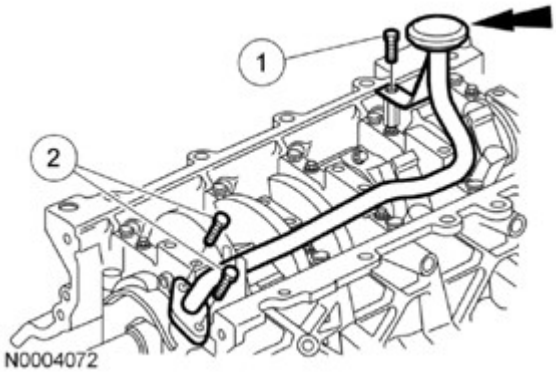

Fig. 416: Locating Oil Pump Screen
Courtesy of FORD MOTOR CO.

27.

NOTE: **Make sure all coolant residue and foreign material are cleaned from the block surface and cylinder bore, or the engine may be damaged.**

NOTE: **The use of sealing aids (aviation cement, copper spray and glue) is not permitted. The gasket must be installed dry.**

NOTE: The cylinder head bolts must be discarded and new bolts installed. They are a torque-to-yield design and cannot be reused.

NOTE: Do not turn the crankshaft until instructed to do so.

NOTE: LH shown in illustration, RH similar.

Using the Cylinder Head Alignment Pins, position the cylinder head gaskets and cylinder heads over the dowels and install the 20 new cylinder head bolts loosely.

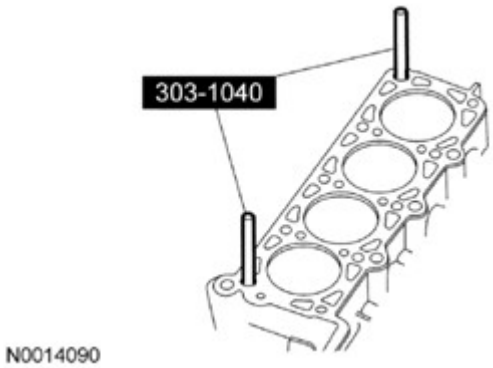

Fig. 417: Positioning Cylinder Head Gaskets And Cylinder Heads Over Dowels
Courtesy of FORD MOTOR CO.

28. **NOTE: LH shown in illustration, RH similar.**

Tighten the 20 bolts in 3 stages, in the sequence shown in illustration.

- Stage 1: Tighten to 40 Nm (30 lb-ft).
- Stage 2: Tighten an additional 90 degrees.
- Stage 3: Tighten an additional 90 degrees.

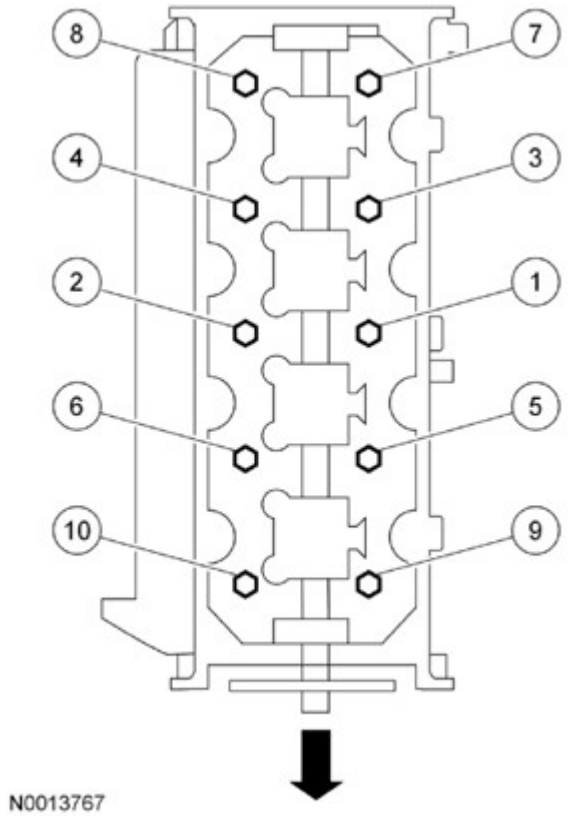

Fig. 418: Identifying Cylinder Head Bolts Tightening Sequence
Courtesy of FORD MOTOR CO.

NOTE: Lubricate the hydraulic lash adjusters with clean engine oil prior to installation.

29. Install the 16 hydraulic lash adjusters in their original locations.

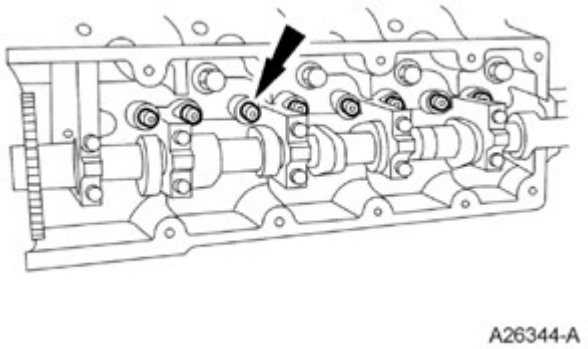

Fig. 419: Locating Hydraulic Lash Adjusters
Courtesy of FORD MOTOR CO.

30. Install 16 new exhaust maniflold-to-cylinder head studs.

- Tighten to 12 Nm (106 lb-in).

31. Position the 2 new gaskets and the RH exhaust manifold and tighten the 8 new nuts in the sequence shown in illustration.
    - Tighten to 25 Nm (18 lb-ft).

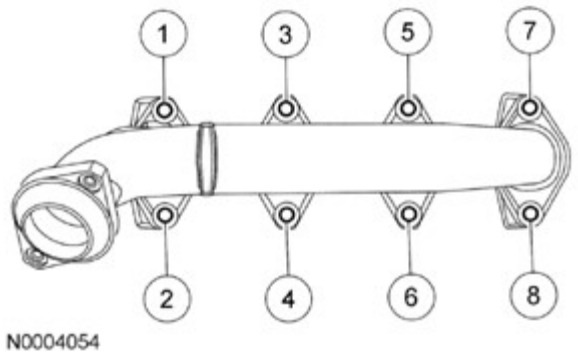

Fig. 420: Identifying Tightening Sequence Of RH Exhaust Manifold Bolts
Courtesy of FORD MOTOR CO.

32. Position the 2 new gaskets and the LH exhaust manifold and tighten the 8 new nuts in the sequence shown in illustration.
    - Tighten to 25 Nm (18 lb-ft).

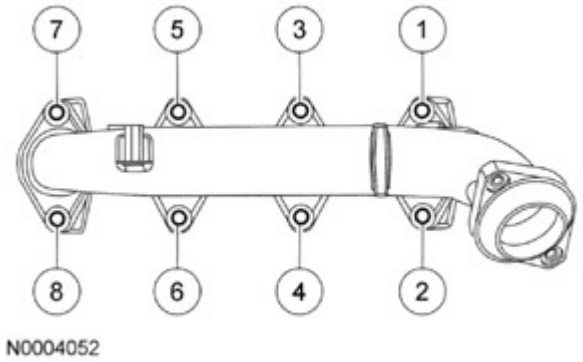

Fig. 421: Identifying Tightening Sequence Of LH Exhaust Manifold Bolts
Courtesy of FORD MOTOR CO.

33. **NOTE: Timing chain procedures must be followed exactly or damage to valves and pistons will result.**

NOTE: Prior to installation, inspect the tensioner-sealing bead for seal integrity. If cracks, tears, separation from the tensioner body or permanent compression of the seal bead is observed, install a new tensioner or engine damage may occur.

Compress the tensioner plunger, using a vise.

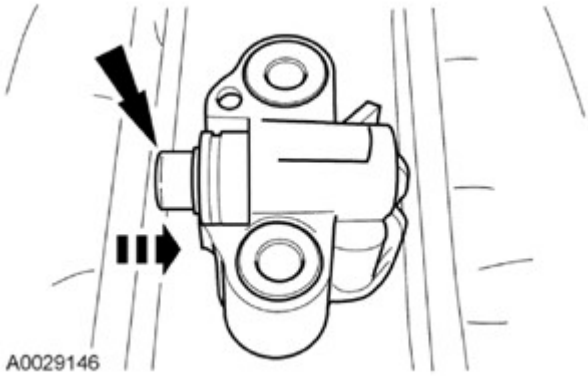

Fig. 422: Compressing Tensioner Plunger Using Vise
Courtesy of FORD MOTOR CO.

34. Install a retaining clip on the tensioner to hold the plunger in during installation.

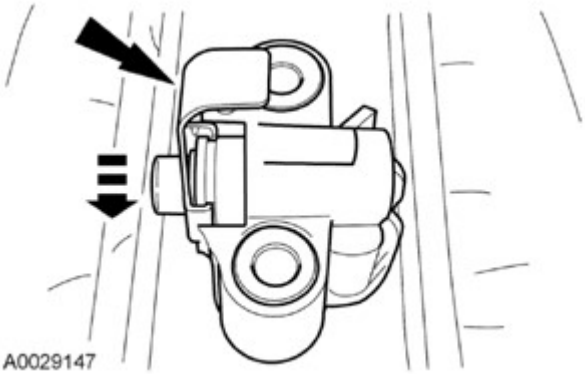

Fig. 423: Installing Retaining Clip On Tensioner
Courtesy of FORD MOTOR CO.

35. If the blue links are not visible, mark 2 links on one end and 1 link on the other end, and use as timing marks.

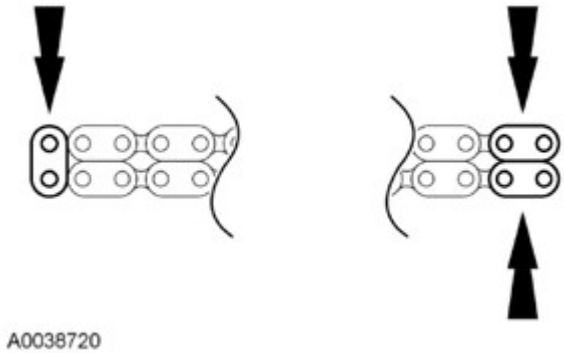

Fig. 424: Locating Copper Link Timing Marks
Courtesy of FORD MOTOR CO.

36. Install the timing chain guides.
    1. Position the LH timing chain guide.
    2. Install the 2 LH bolts.
        - Tighten to 10 Nm (89 lb-in).
    3. Position the RH timing chain guide.
    4. Install the 2 RH bolts.
        - Tighten to 10 Nm (89 lb-in).

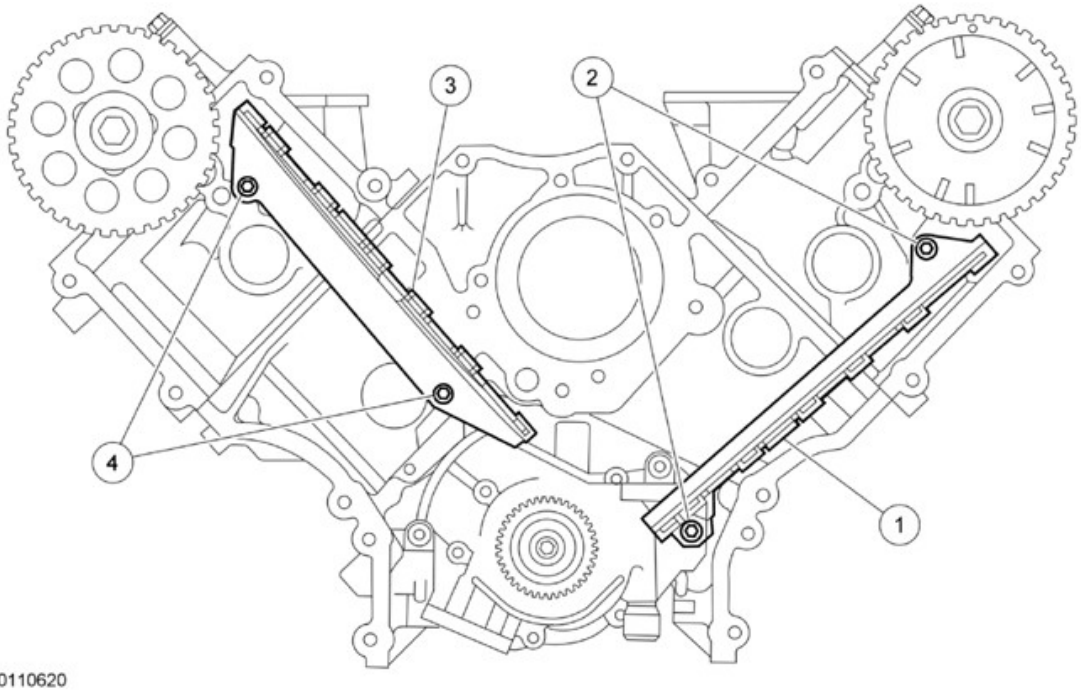

Fig. 425: Identifying Timing Chain Guides Bolts Tightening Sequence
Courtesy of FORD MOTOR CO.

37. Rotate the RH camshaft sprocket until the timing mark is approximately at the 11 o'clock position. Rotate the LH camshaft sprocket until the timing mark is approximately at the 12 o'clock position.

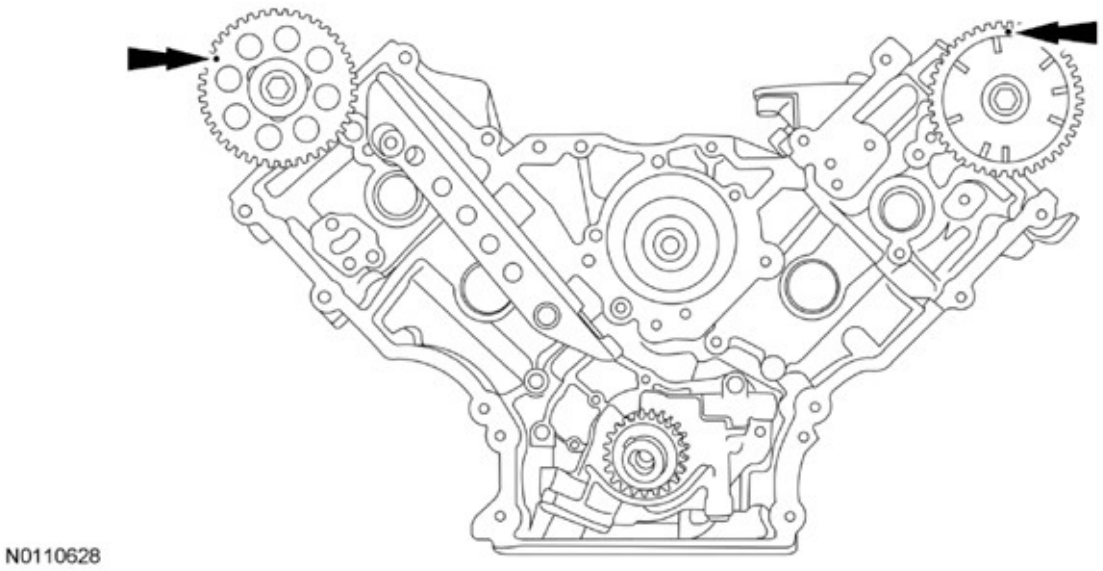

Fig. 426: Locating RH And LH Camshaft Sprocket Timing Mark
Courtesy of FORD MOTOR CO.

38.

NOTE: **Unless otherwise instructed, at no time when the timing chains are removed and the cylinder heads are installed is the crankshaft or camshaft to be rotated. Severe piston and valve damage will occur.**

NOTE: **Rotate the crankshaft counterclockwise only. Do not rotate past position shown in illustration or severe piston and valve damage can occur.**

NOTE: **The No. 1 cylinder is at Top Dead Center (TDC) when the stud on the engine block fits into the slot in the handle of the Crankshaft Holding Tool.**

Position the crankshaft so the No. 1 cylinder is at TDC with the Crankshaft Holding Tool.

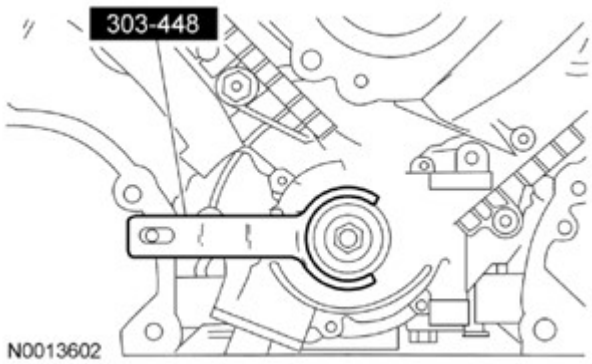

Fig. 427: Positioning Crankshaft Using Crankshaft Holding Tool
Courtesy of FORD MOTOR CO.

39. Install the crankshaft sprocket, making sure the flange faces forward.

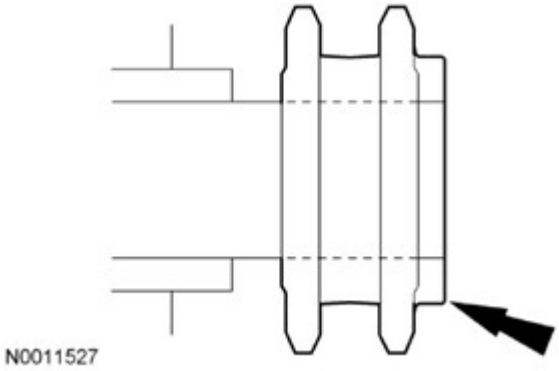

Fig. 428: Locating Crankshaft Sprocket Flange Faces Forward
Courtesy of FORD MOTOR CO.

40. Position the lower end of the LH (inner) timing chain on the crankshaft sprocket, aligning the timing mark on the outer flange of the crankshaft sprocket with the single blue (marked) link on the chain.

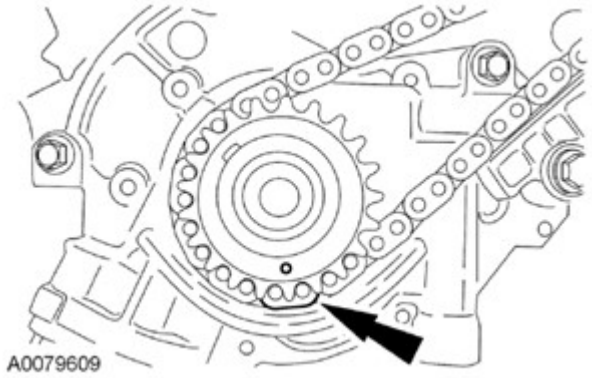

Fig. 429: Locating Timing Mark On Crankshaft Sprocket With Single Blue Link On Chain
Courtesy of FORD MOTOR CO.

41. **NOTE: Make sure the upper half of the timing chain is below the tensioner arm dowel.**

Position the timing chain on the camshaft sprocket with the camshaft sprocket timing mark positioned between the 2 blue (marked) chain links.

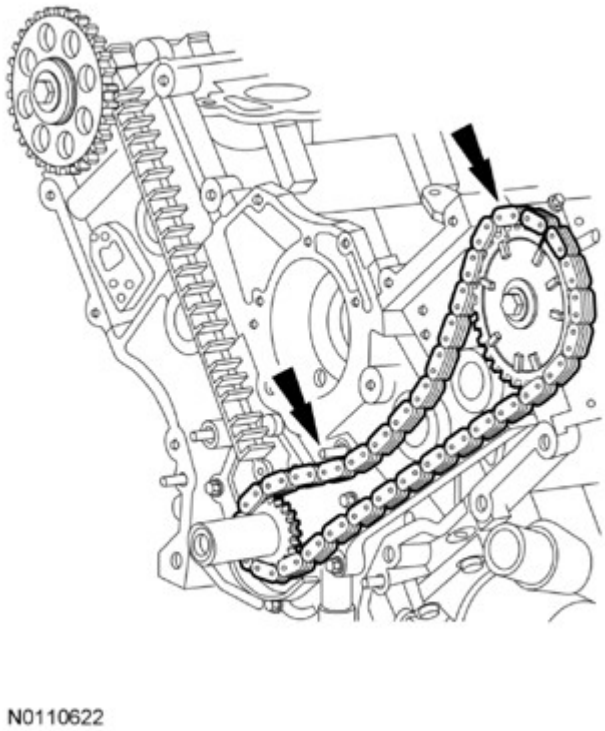

Fig. 430: Locating Camshaft Sprocket Timing Mark
Courtesy of FORD MOTOR CO.

NOTE: The LH timing chain tensioner arm has a bump near the dowel hole for identification.

42. Position the LH timing chain tensioner arm on the dowel pin and install the LH timing chain tensioner and the 2 bolts.

- Tighten to 25 Nm (18 lb-ft).

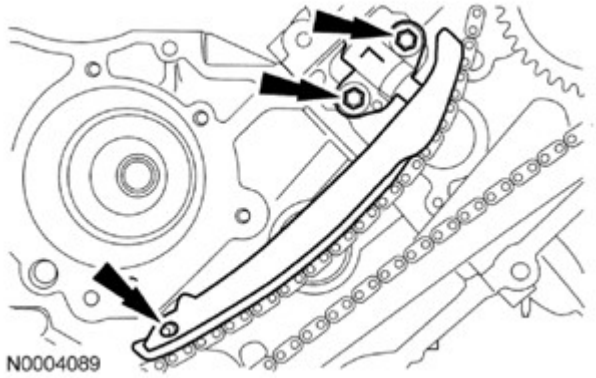

Fig. 431: Locating LH Timing Chain Tensioner And Tensioner Arm Bolts
Courtesy of FORD MOTOR CO.

43. Remove the retaining clip from the LH timing chain tensioner.

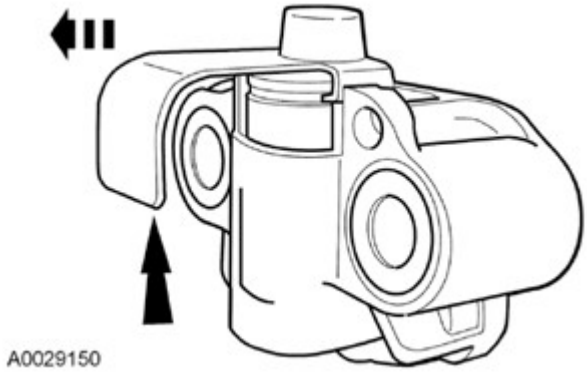

Fig. 432: Removing Retaining Clip From LH Timing Chain Tensioner
Courtesy of FORD MOTOR CO.

44. **NOTE: The lower half of the timing chain must be positioned above the tensioner arm dowel.**

Position the lower end of the RH (outer) timing chain on the crankshaft sprocket, aligning the timing mark on the sprocket with the single blue (marked) link on the timing chain.

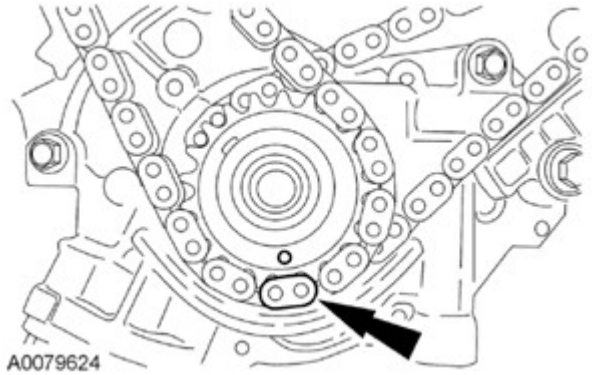

Fig. 433: Locating Timing Mark On Crankshaft Sprocket With Single Copper Chain Link
Courtesy of FORD MOTOR CO.

45. **NOTE: If necessary, use the Camshaft Alignment Set to adjust the camshaft sprocket slightly to obtain timing mark alignment.**

Position the RH timing chain on the camshaft sprocket. Make sure the camshaft sprocket timing mark is positioned between the 2 blue (marked) chain links.

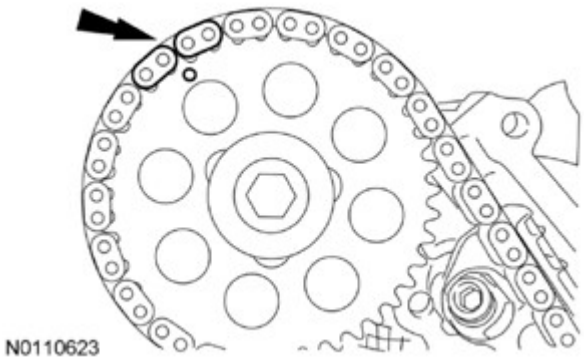

Fig. 434: Locating RH Camshaft Sprocket Timing Mark
Courtesy of FORD MOTOR CO.

46. Position the RH timing chain tensioner arm on the dowel pin and install the RH timing chain tensioner and the 2 bolts.
    - Tighten to 25 Nm (18 lb-ft).

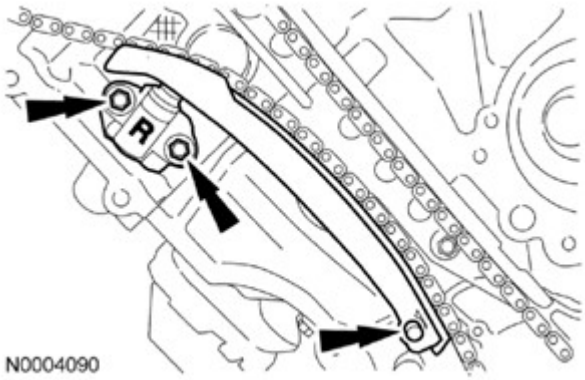

Fig. 435: Locating RH Timing Chain Tensioner And Tensioner Arm Bolts
Courtesy of FORD MOTOR CO.

47. Remove the retaining clip from the RH timing chain tensioner.

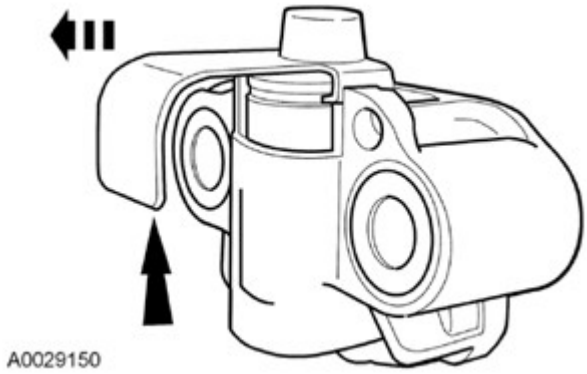

Fig. 436: Removing Retaining Clip From LH Timing Chain Tensioner

Courtesy of FORD MOTOR CO.

48. As a post-check, verify correct alignment of all timing marks.

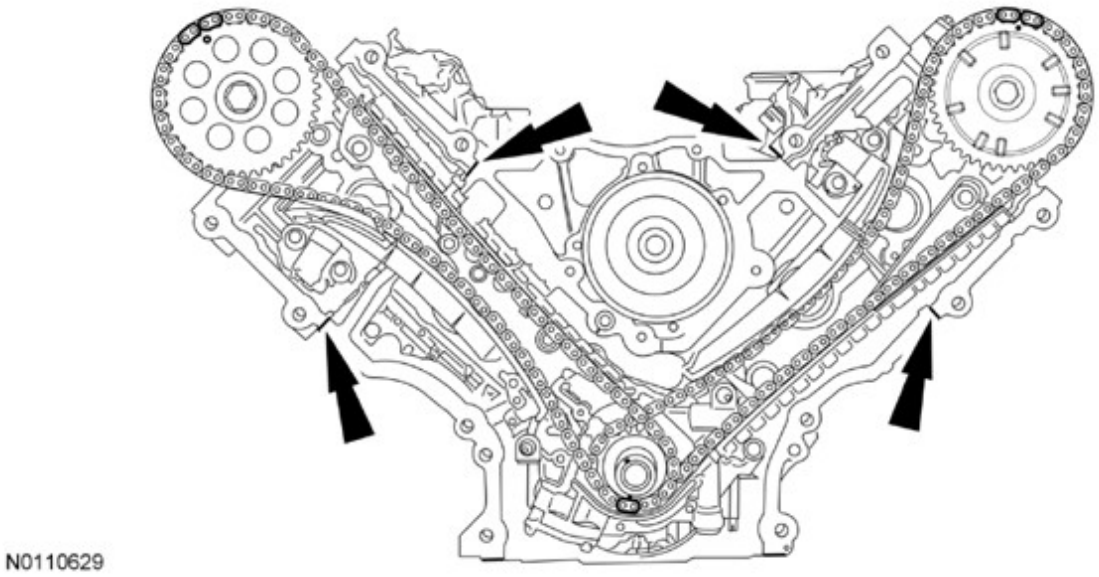

Fig. 437: Locating Alignment Marks
Courtesy of FORD MOTOR CO.

49. Position the crankshaft sensor ring on the crankshaft.

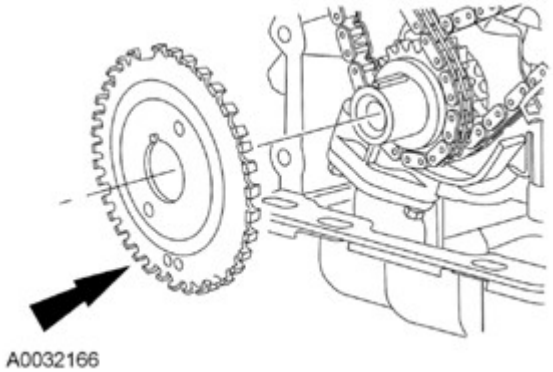

Fig. 438: Locating Crankshaft Sensor Ring
Courtesy of FORD MOTOR CO.

50. **NOTE: Camshaft roller follower is removed for clarity.**

Install the Valve Spring Compressor Spacer tool between the valve spring coils to prevent valve stem seal damage.

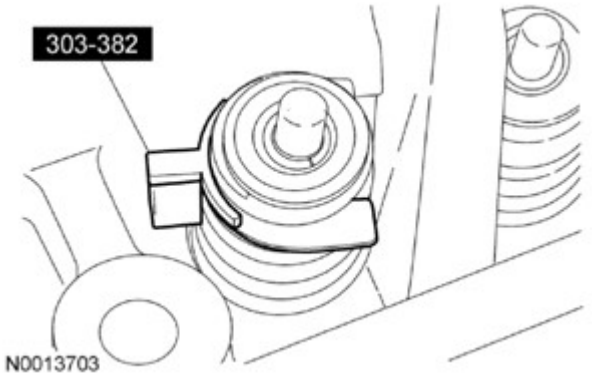

Fig. 439: Installing/Removing Valve Spring Compressor Spacer
Courtesy of FORD MOTOR CO.

51.

NOTE: **The camshaft roller followers must be installed in their original locations. Failure to follow these instructions may result in engine damage.**

NOTE: **Do not allow the valve keepers to fall off the valve or the valve may drop into the cylinder. If a valve drops into the cylinder, the cylinder head must be removed.**

NOTE: **It may be necessary to push the valve down while compressing the spring.**

NOTE: **Position the cam lobe away from the valve stem prior to installing each camshaft roller follower.**

Use the Valve Spring Compressor to compress the valve springs, and install the camshaft roller follower.

Fig. 440: Compressing Valve Spring Using Valve Spring Compressor
Courtesy of FORD MOTOR CO.

52. Repeat the previous 3 steps for each camshaft roller follower.
53. Install the 8 spark plugs. For additional information, refer to **ENGINE IGNITION - 5.4L (2V)** .
54.

54.

NOTE: **Do not use metal scrapers, wire brushes, power abrasive discs or other abrasive means to clean the sealing surfaces. These tools cause scratches and gouges which make leak paths. Use a plastic scraping tool to remove all traces of old sealant.**

NOTE: **If the engine front cover is not secured within 4 minutes, the sealant must be removed and the sealing area cleaned with silicone gasket remover and metal surface prep. Follow the directions on the packaging. Allow to dry until there is no sign of wetness, or 4 minutes, whichever is longer. Failure to follow this procedure can cause future oil leakage.**

NOTE: **Make sure that the engine front cover gasket is in place on the engine front cover before installation.**

Apply a bead of silicone gasket and sealant along the cylinder head-to-cylinder block surface at the locations shown in illustration.

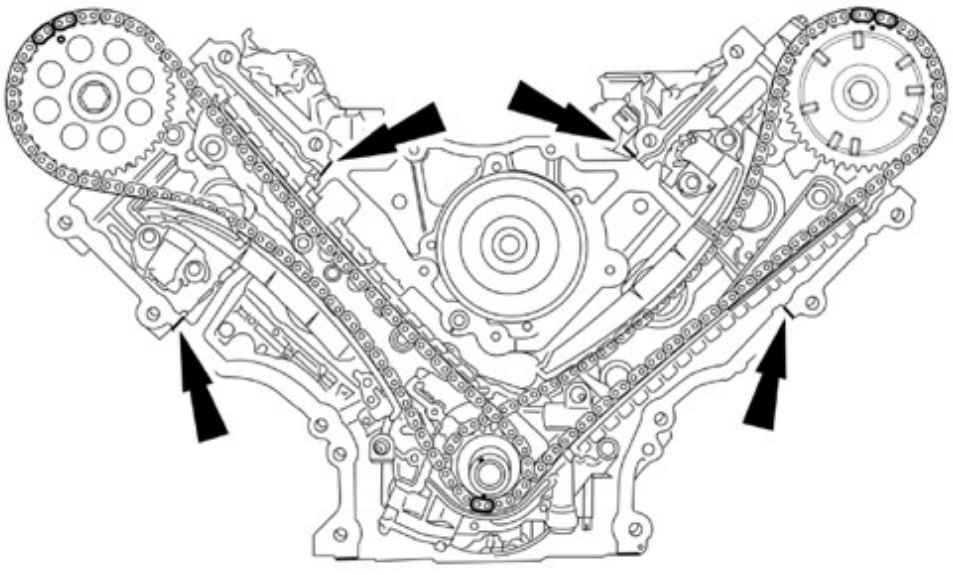

Fig. 441: Locating Alignment Marks
Courtesy of FORD MOTOR CO.

55. Install a new engine front cover gasket on the engine front cover. Position the engine front cover. Install the fasteners finger-tight.

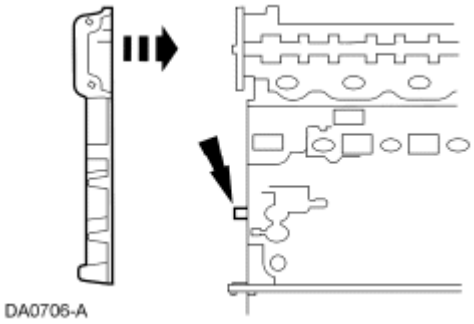

Fig. 442: Positioning Engine Front Cover
Courtesy of FORD MOTOR CO.

56. Tighten the 15 engine front cover fasteners in 3 stages, in the sequence shown in illustration.
    - Stage 1: Tighten fasteners 1 through 5 to 25 Nm (18 lb-ft).
    - Stage 2: Tighten fasteners 6 and 7 to 48 Nm (35 lb-ft).
    - Stage 3: Tighten fasteners 8 through 15 to 48 Nm (35 lb-ft).

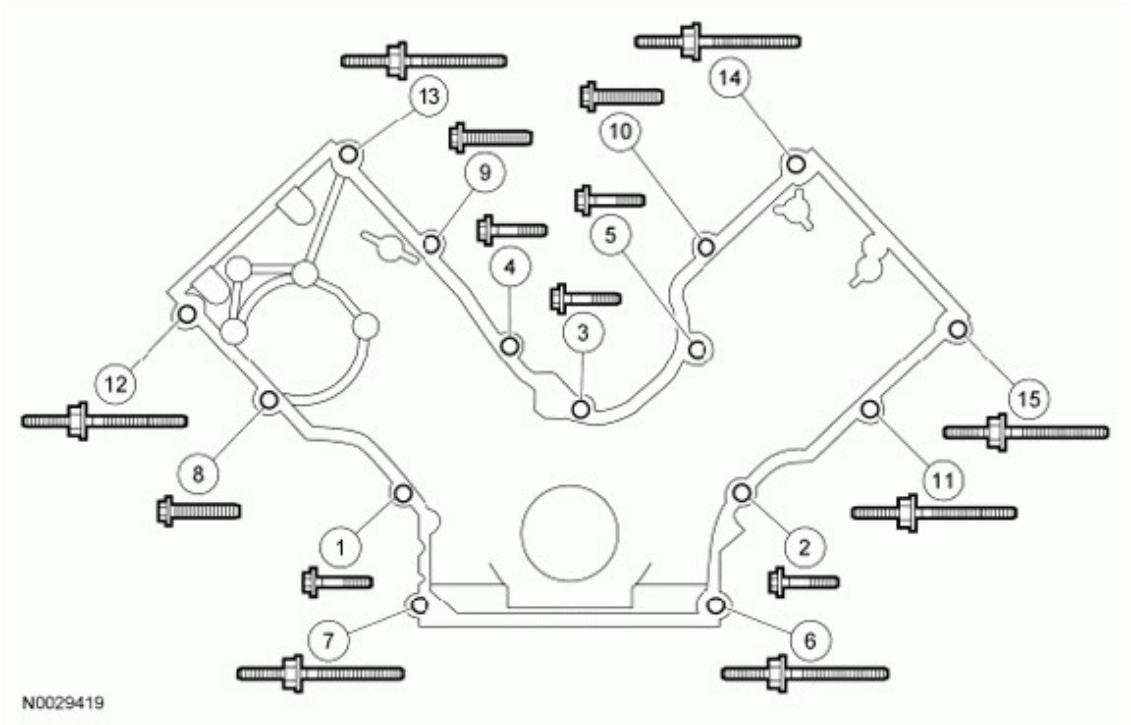

Fig. 443: Identifying Engine Front Cover Fasteners Tightening Sequence
Courtesy of FORD MOTOR CO.

Item	Part Number	Description
1	N806177	Bolt, Hex Flange Head Pilot, M8 x 1.25 x 53
2	N806177	Bolt, Hex Flange

		Head Pilot, M8 x 1.25 x 53
3	N806177	Bolt, Hex Flange Head Pilot, M8 x 1.25 x 53
4	N806177	Bolt, Hex Flange Head Pilot, M8 x 1.25 x 53
5	N806177	Bolt, Hex Flange Head Pilot, M8 x 1.25 x 53
6	N808529	Stud, Hex Head Pilot, M10 x 1.5 x 59 - M10 x 1.5 x 30
7	N808529	Stud, Hex Head Pilot, M10 x 1.5 x 59 - M10 x 1.5 x 30
8	N808142	Screw and Washer, Hex Pilot, M10 x 1.5 x 57.5
9	N808142	Screw and Washer, Hex Pilot, M10 x 1.5 x 57.5
10	N808142	Screw and Washer, Hex Pilot, M10 x 1.5 x 57.5
11	N808140	Stud and Washer, Hex Head Pilot, M10 x 1.5 x 68 - M8 x 1.25 x 27
12	N808140	Stud and Washer, Hex Head Pilot, M10 x 1.5 x 68 - M8 x 1.25 x 27
13	N808140	Stud and Washer, Hex Head Pilot, M10 x 1.5 x 68 - M8 x 1.25 x 27
14	N808140	Stud and Washer, Hex Head Pilot, M10 x 1.5 x 68 - M8 x 1.25 x 27
15	N808140	Stud and Washer, Hex Head Pilot, M10 x 1.5 x 68 - M8 x 1.25 x 27

57. Lubricate the engine front cover and the crankshaft front seal inner lip with clean engine oil.

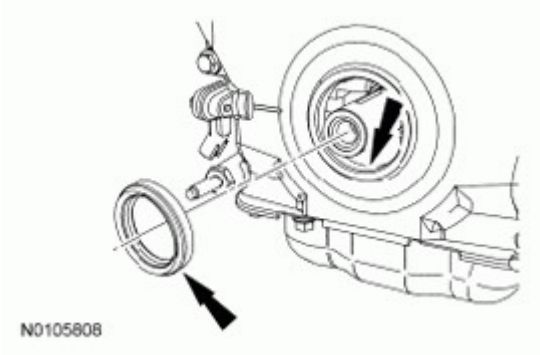

Fig. 444: Locating Crankshaft Front Seal Inner Lip
Courtesy of FORD MOTOR CO.

58. Using the Crankshaft Front Oil Seal Installer, the Front Cover Oil Seal Installer and the Crankshaft Vibration Damper Installer, install the crankshaft front seal into the engine front cover.

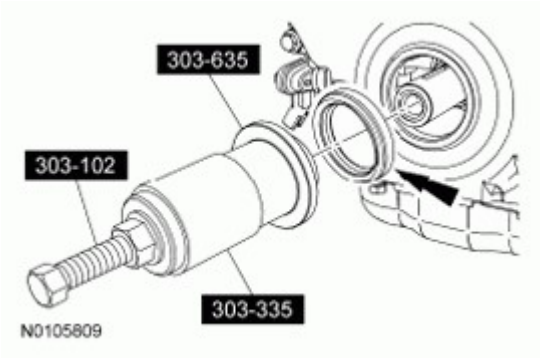

Fig. 445: Installing Crankshaft Front Seal Using Crankshaft Front Oil Seal Installer
Courtesy of FORD MOTOR CO.

NOTE: **If not secured within 4 minutes, the sealant must be removed and the sealing area cleaned with silicone gasket remover and metal surface prep. Follow the directions on the packaging. Allow to dry until there is no sign of wetness, or 4 minutes, whichever is longer. Failure to follow this procedure can cause future oil leakage.**

59. Apply silicone gasket and sealant to the Woodruff key slot on the crankshaft pulley.

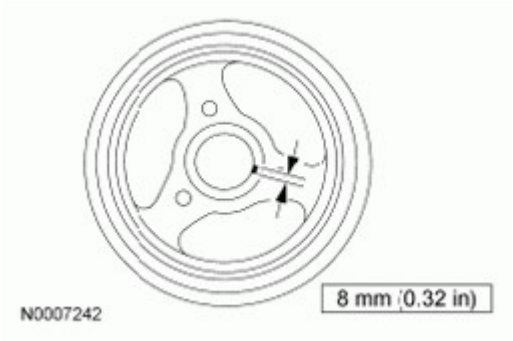

Fig. 446: Identifying Crankshaft Pulley Sealant Applying Area On Woodruff Key Slot
Courtesy of FORD MOTOR CO.

60. Using the Crankshaft Vibration Damper Installer, install the crankshaft pulley.

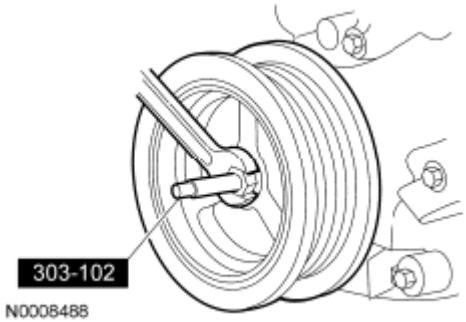

Fig. 447: Installing Crankshaft Pulley Using Crankshaft Vibration Damper Installer
Courtesy of FORD MOTOR CO.

61. **NOTE: Use a suitable Strap Wrench (such as 303-D055) to hold the pulley while tightening the bolt.**

Tighten the new crankshaft pulley bolt in 4 stages.

- Stage 1: Tighten to 120 Nm (89 lb-ft).
- Stage 2: Loosen one full turn.
- Stage 3: Tighten to 50 Nm (37 lb-ft).
- Stage 4: Tighten an additional 90 degrees.

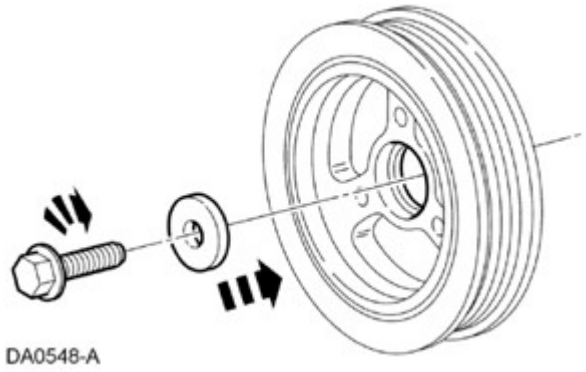

Fig. 448: Installing Crankshaft Pulley Bolt
Courtesy of FORD MOTOR CO.

NOTE: Do not use metal scrapers, wire brushes, power abrasive discs or other abrasive means to clean the sealing surfaces. These tools cause scratches and gouges which make leak paths. Use a plastic scraping tool to remove all traces of old sealant.

62. Inspect and clean the valve cover sealing surfaces with silicone gasket remover and metal surface prep. Follow the directions on the packaging.

63. Apply instant adhesive completely around the gasket groove in the LH valve cover. Install the new valve cover gasket.

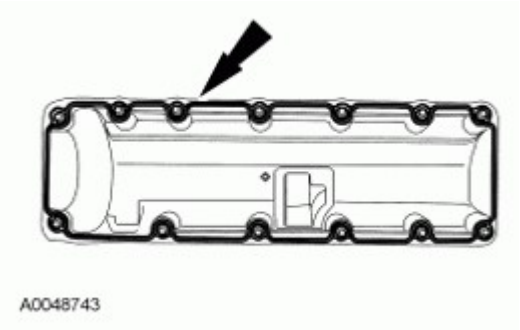

Fig. 449: Locating Adhesive Applying Area Around Gasket
Courtesy of FORD MOTOR CO.

NOTE: If not secured within 4 minutes, the sealant must be removed and the sealing area cleaned with silicone gasket remover and metal surface prep. Follow the directions on the packaging. Allow to dry until there is no sign of wetness, or 4 minutes, whichever is longer. Failure to follow this procedure can cause future oil leakage.

64. Apply silicone gasket and sealant in 2 places where the engine front cover meets the cylinder head.

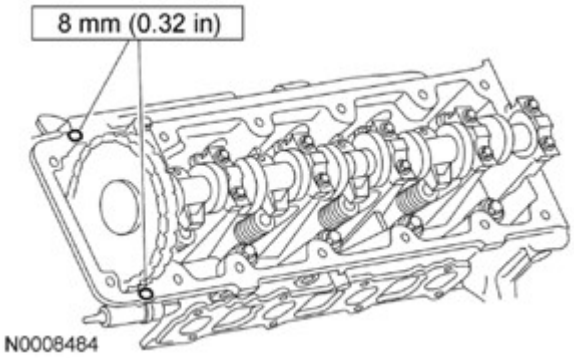

Fig. 450: Identifying Silicone Gasket And Sealant Applying Area On Valve Cover Gasket Surface
Courtesy of FORD MOTOR CO.

65. Position the LH valve cover and gasket on the cylinder head and install the fasteners loosely.

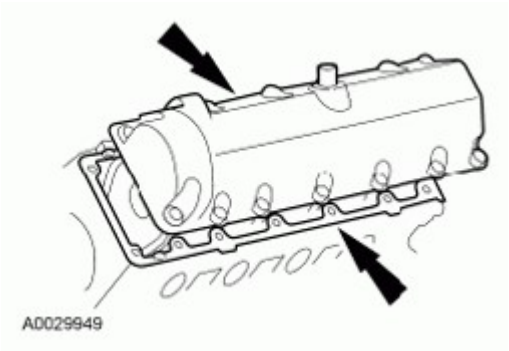

Fig. 451: Locating Valve Cover And Cylinder Head
Courtesy of FORD MOTOR CO.

66. Tighten the 13 bolts in the sequence shown in illustration.
    - Tighten to 10 Nm (89 lb-in).

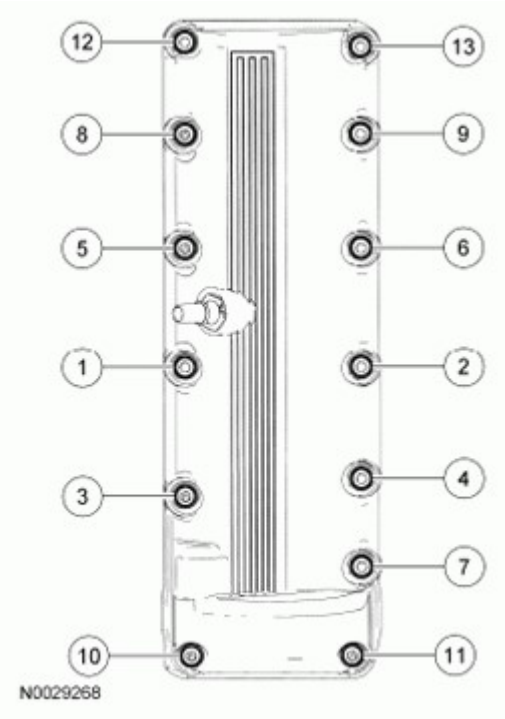

Fig. 452: Identifying Cylinder Head Bolts Tighten Sequence
Courtesy of FORD MOTOR CO.

67. Apply instant adhesive completely around the gasket groove in the RH valve cover. Install the new valve cover gasket.

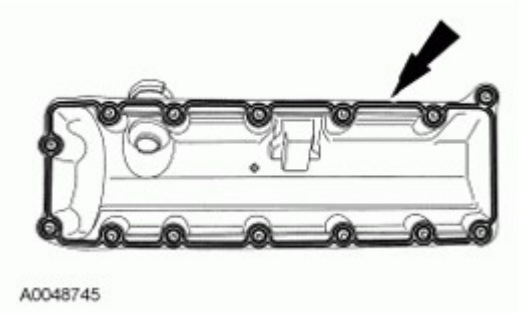

Fig. 453: Identifying Adhesive Applying Area Around Gasket
Courtesy of FORD MOTOR CO.

NOTE: **If not secured within 4 minutes, the sealant must be removed and the sealing area cleaned with silicone gasket remover and metal surface prep. Follow the directions on the packaging. Allow to dry until there is no sign of wetness, or 4 minutes, whichever is longer. Failure to follow this procedure can cause future oil leakage.**

68. Apply silicone gasket and sealant in 2 places where the engine front cover meets the cylinder head.

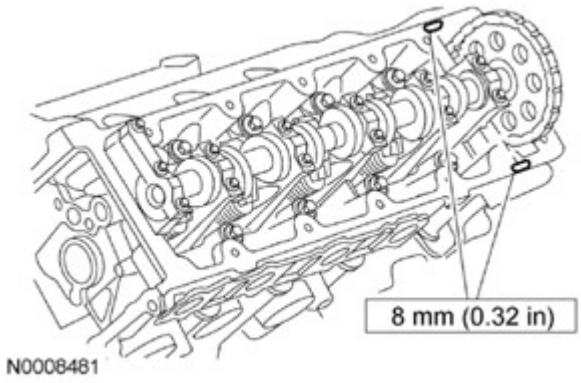

Fig. 454: Identifying Silicone Gasket And Sealant Applying Area On Gasket Surface
Courtesy of FORD MOTOR CO.

69. Position the RH valve cover and gasket on the cylinder head and install the fasteners loosely.

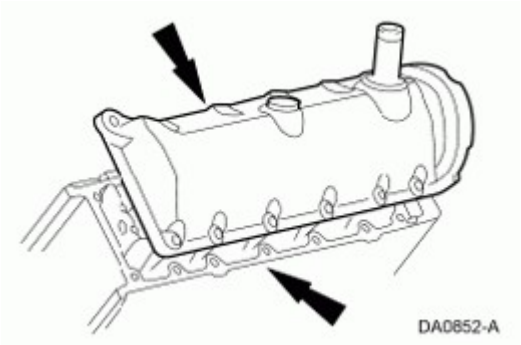

Fig. 455: Locating Valve Cover And Cylinder Head
Courtesy of FORD MOTOR CO.

70. Tighten the 14 bolts in the sequence shown in illustration.
    - Tighten to 10 Nm (89 lb-in).

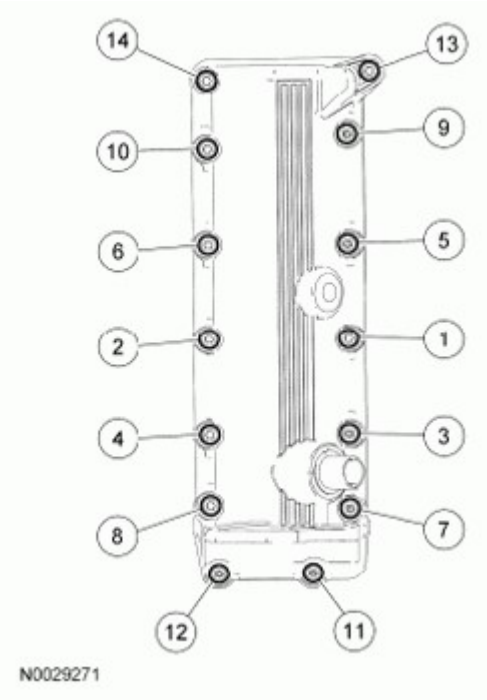

Fig. 456: Identifying Cylinder Head Bolt Tightening Sequence
Courtesy of FORD MOTOR CO.

71. **NOTE: Do not rotate the coolant pump housing once the coolant pump has been positioned in the cylinder block. Damage to the O-ring seal will occur.**

Install the coolant pump.

1. Lubricate the new O-ring seal using clean engine coolant and install the O-ring seal onto the coolant pump.
2. Position the coolant pump into the engine block.
3. Install the 4 bolts.
   - Tighten to 25 Nm (18 lb-ft).

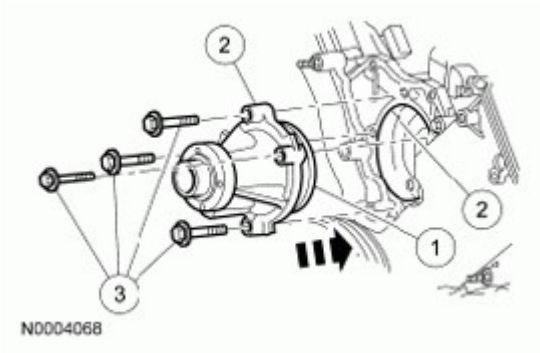

Fig. 457: Installing Coolant Pump
Courtesy of FORD MOTOR CO.

72. Position the accessory drive belt idler pulley and install the bolt.
    - Tighten to 25 Nm (18 lb-ft).

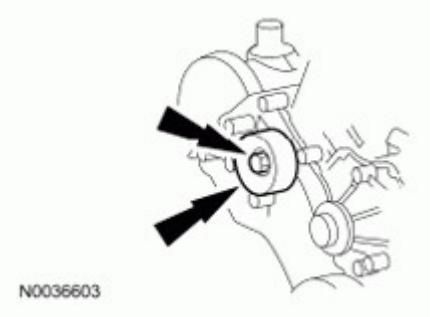

Fig. 458: Locating Accessory Drive Belt Idler Pulley And Bolt
Courtesy of FORD MOTOR CO.

73. **NOTE: Lubricate the O-ring seal with clean engine oil prior to installation.**

    Using a new O-ring seal, install the oil level indicator tube and the bolt.

    - Tighten to 10 Nm (89 lb-in).

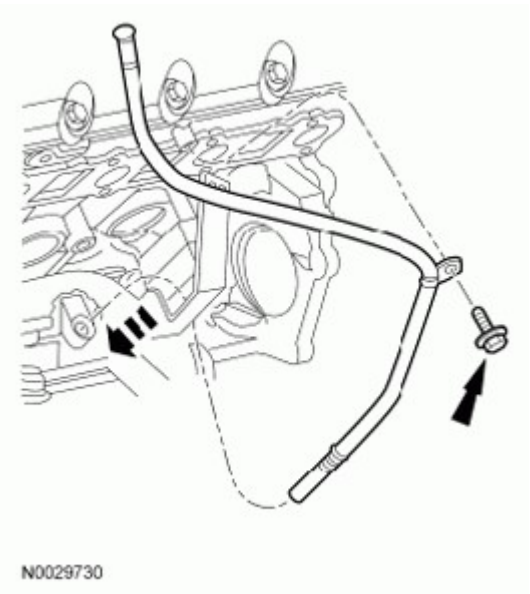

Fig. 459: Locating Oil Level Indicator Tube And Bolt
Courtesy of FORD MOTOR CO.

74. Install the oil level indicator and tube support bracket nut.
    - Tighten to 25 Nm (18 lb-ft).

Fig. 460: Locating Oil Level Indicator And Tube Support Bracket Nut
Courtesy of FORD MOTOR CO.

75. **NOTE: RH shown in illustration, LH similar.**

Install the radio frequency interference capacitors and the nuts.

- Tighten to 25 Nm (18 lb-ft).

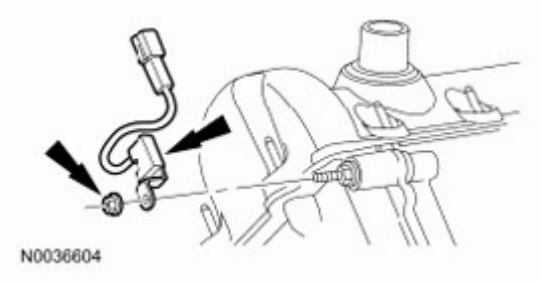

Fig. 461: Locating Radio Interference Capacitors And Nuts
Courtesy of FORD MOTOR CO.

76. Roughly position the engine control sensor wiring harness and mount it on the valve cover studs.
77. Connect the Engine Oil Pressure (EOP) switch electrical connector and harness retainer.

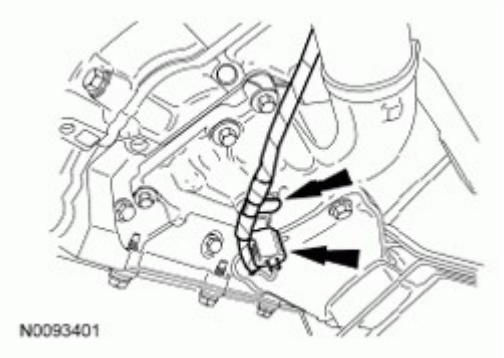

Fig. 462: Locating Engine Oil Pressure Switch Electrical Connector And Wiring Harness Retainer
Courtesy of FORD MOTOR CO.

78. Connect the KS electrical connector.

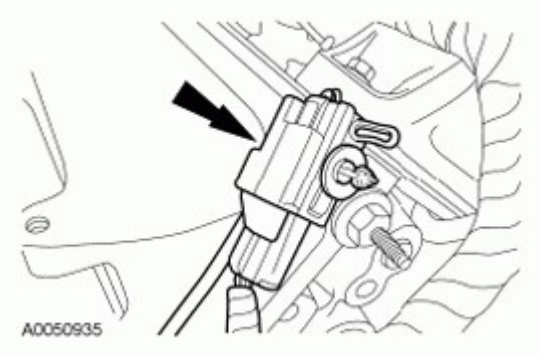

Fig. 463: Locating Knock Sensor Electrical Connector
Courtesy of FORD MOTOR CO.

79. Connect the RH radio frequency interference capacitor electrical connector.

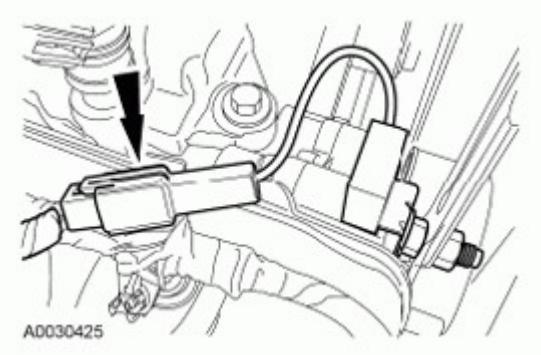

Fig. 464: Locating Radio Frequency Interference Capacitor Electrical Connector
Courtesy of FORD MOTOR CO.

80. Connect the CMP sensor electrical connector.

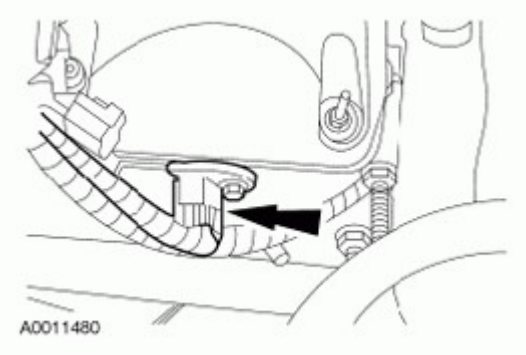

Fig. 465: Locating Camshaft Position Sensor Electrical Connector
Courtesy of FORD MOTOR CO.

81. Connect the LH radio frequency interference capacitor and Cylinder Head Temperature (CHT) sensor electrical connectors.

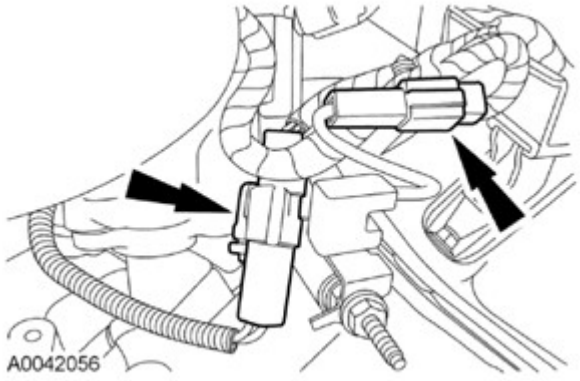

Fig. 466: Locating LH Radio Frequency Interference Capacitor And Cylinder Head Temperature Sensor Electrical Connectors
Courtesy of FORD MOTOR CO.

82. **NOTE: LH shown in illustration, RH similar.**

If equipped, install the cylinder block drain plugs.

- Tighten to 20 Nm (177 lb-in).

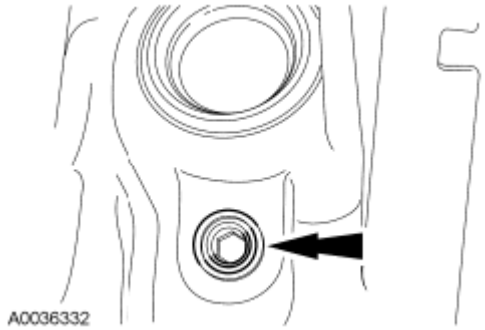

Fig. 467: Locating Cylinder Block Drain Plugs
Courtesy of FORD MOTOR CO.

83. Position the oil filter adapter gasket and the oil filter adapter. Install the nut and 4 bolts.
    - Tighten the 4 front bolts to 25 Nm (18 lb-ft).
    - Tighten the rear nut to 48 Nm (35 lb-ft).

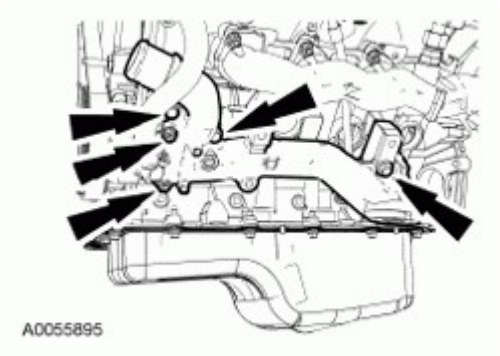

Fig. 468: Locating Oil Filter Adapter Nuts And Bolts (4.6L Engines)
Courtesy of FORD MOTOR CO.

84. **NOTE: RH shown in illustration, LH similar.**

Position the RH and LH engine support insulators and install the 6 bolts.

- Tighten to 80 Nm (59 lb-ft).

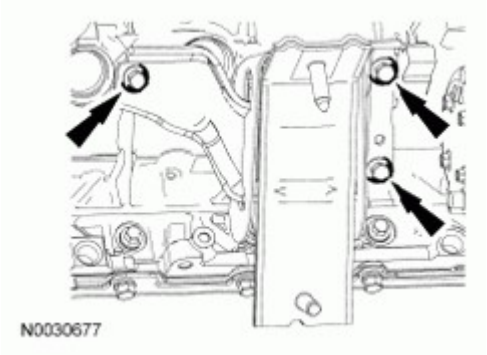

Fig. 469: Locating RH Engine Support Insulator Bolts
Courtesy of FORD MOTOR CO.

85. Position the coolant pump pulley on the coolant pump and install the 4 bolts.
    - Tighten to 25 Nm (18 lb-ft).

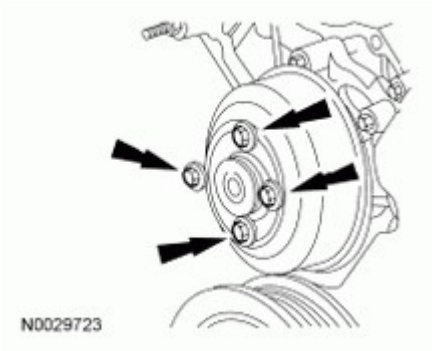

Fig. 470: Locating Coolant Pump Pulley Bolts

Courtesy of FORD MOTOR CO.

86. Install the Engine Lifting Bracket Set.

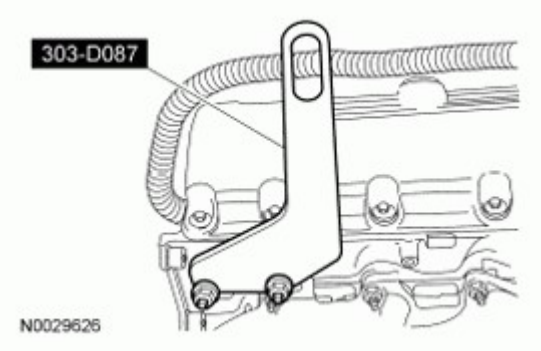

Fig. 471: Installing Engine Lifting Bracket Set
Courtesy of FORD MOTOR CO.

87. Install the Engine Lifting Bracket Set.

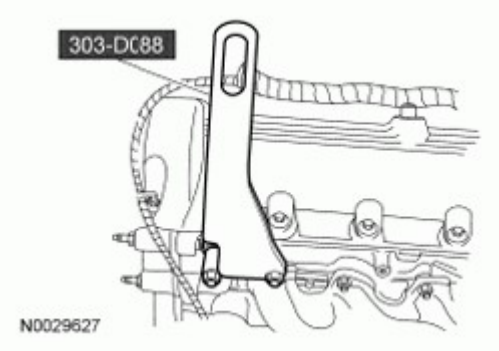

Fig. 472: Installing Engine Lifting Bracket Set
Courtesy of FORD MOTOR CO.

88. Install the Engine Lifting Bracket Set and remove the engine from the work stand.

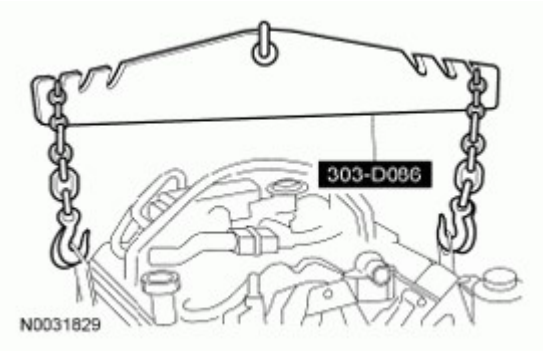

Fig. 473: Installing Engine Lifting Bracket
Courtesy of FORD MOTOR CO.

89. Lower the engine onto wooden blocks.
90. Install the Engine Lifting Bracket and raise the engine.

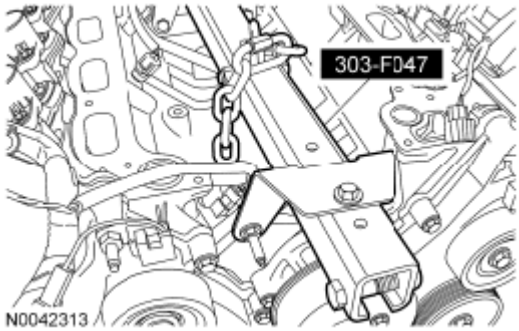

Fig. 474: Installing/Removing Engine Lifting Bracket Using Engine Lift Bracket (303-F047)
Courtesy of FORD MOTOR CO.

91. **NOTE: Do not use metal scrapers, wire brushes, power abrasive discs or other abrasive means to clean the aluminum retainer plate. These tools cause scratches and gouges, which make leak paths. Use a plastic scraping tool to remove all traces of old sealant.**

Inspect the crankshaft rear seal retainer plate. Clean the mating surface for the rear seal retainer plate with silicone gasket remover and metal surface prep. Follow the directions on the packaging.

92. **NOTE: The rear crankshaft seal retainer plate does not have a sealant groove. Gasket maker must be applied to the rear crankshaft seal retainer plate mating surface on the engine block.**

Apply a bead of gasket maker to the rear crankshaft seal retainer plate mating surface on the engine block.

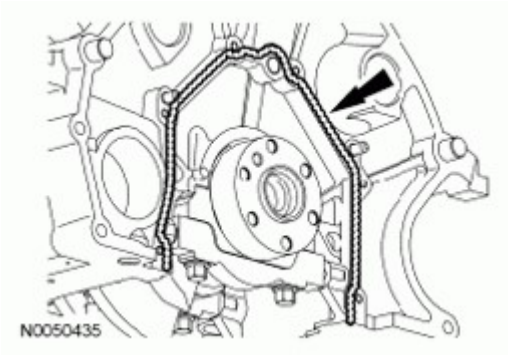

Fig. 475: Applying Bead Of Gasket Maker To Crankshaft Rear Seal Retainer Plate Mating Surface On Engine Block
Courtesy of FORD MOTOR CO.

93. Install the crankshaft rear seal retainer plate and loosely install the 6 bolts.

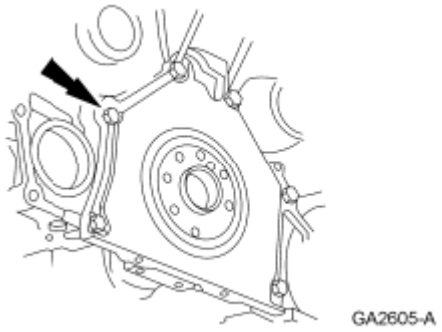

Fig. 476: Locating Crankshaft Rear Seal Retainer Plate Bolts
Courtesy of FORD MOTOR CO.

94. Tighten the bolts in the sequence shown in illustration.
    - Tighten to 10 Nm (89 lb-in).

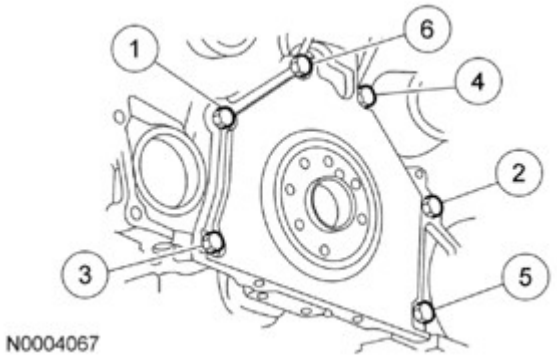

Fig. 477: Identifying Crankshaft Rear Seal Retainer Plate Bolts Tightening Sequence
Courtesy of FORD MOTOR CO.

NOTE: **Do not use metal scrapers, wire brushes, power abrasive discs or other abrasive means to clean the sealing surfaces. These tools cause scratches and gouges, which make leak paths. Use a plastic scraping tool to remove all traces of old sealant.**

95. Inspect the oil pan. Clean the mating surface for the oil pan with silicone gasket remover and metal surface prep. Follow the directions on the packaging.

NOTE: **If not secured within 4 minutes, the sealant must be removed and the sealing area cleaned with silicone gasket remover and metal surface prep. Follow the directions on the packaging. Allow to dry until there is no sign of wetness, or 4 minutes, whichever is longer. Failure to follow this procedure can cause future oil leakage.**

96. Apply silicone gasket and sealant at the crankshaft rear seal retainer plate-to-cylinder block sealing surface.

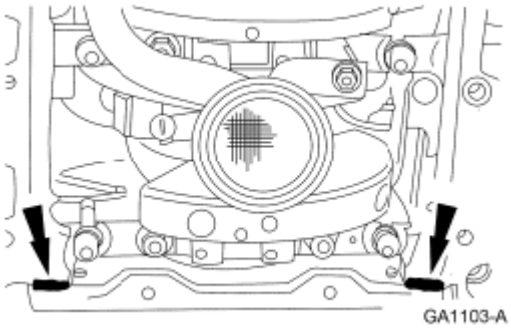

Fig. 478: Identifying Area For Applying Bead Of Silicone Gasket And Sealant
Courtesy of FORD MOTOR CO.

NOTE: **If not secured within 4 minutes, the sealant must be removed and the sealing area cleaned with silicone gasket remover and metal surface prep. Follow the directions on the packaging. Allow to dry until there is no sign of wetness, or 4 minutes, whichever is longer. Failure to follow this procedure can cause future oil leakage.**

97. Apply silicone gasket and sealant at the engine front cover-to-cylinder block sealing surface.

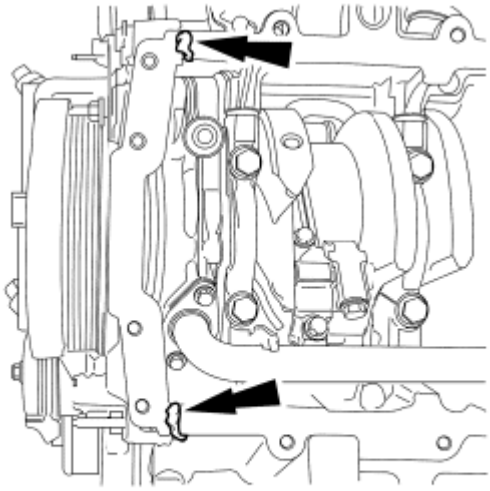

Fig. 479: Identifying Silicone Gasket And Sealant Application Points
Courtesy of FORD MOTOR CO.

98. Install the oil pan gasket and the oil pan and loosely install the 16 bolts.

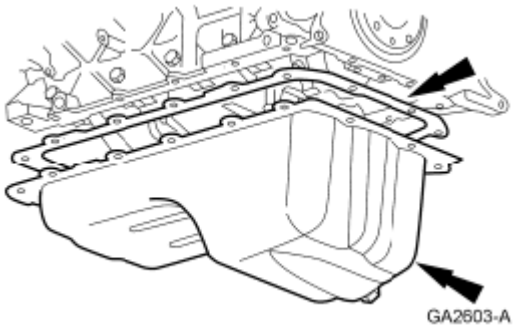

Fig. 480: Locating Oil Pan Gasket And Oil Pan
Courtesy of FORD MOTOR CO.

99. Tighten the 16 bolts in 3 stages, in the sequence shown in illustration.
    - Stage 1: Tighten to 2 Nm (18 lb-in).
    - Stage 2: Tighten to 20 Nm (177 lb-in).
    - Stage 3: Tighten an additional 60 degrees.

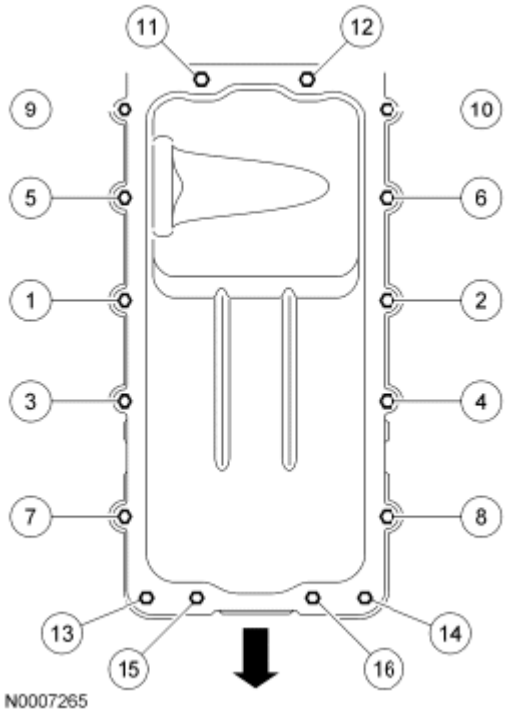

Fig. 481: Identifying Oil Pan Bolt Tightening Sequence
Courtesy of FORD MOTOR CO.

100. **NOTE: Lubricate the inner lip of the crankshaft rear seal with clean engine oil.**

Using the 2 Crankshaft Rear Oil Seal Installers, install a new crankshaft rear seal.

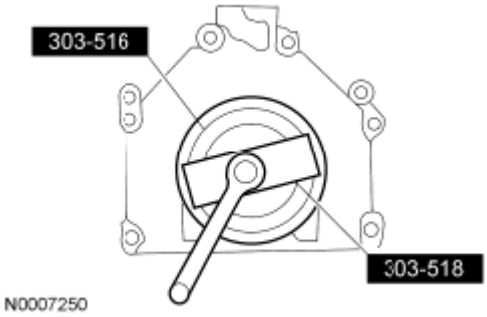

Fig. 482: Installing Crankshaft Rear Oil Seal Using Special Tools
Courtesy of FORD MOTOR CO.

101. Using the 2 Crankshaft Rear Oil Seal Installers and the Crankshaft Rear Oil Slinger Installer, install the crankshaft rear oil slinger.

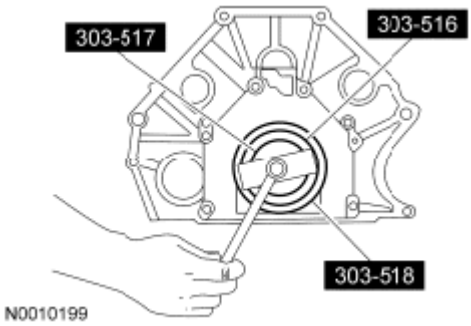

Fig. 483: Installing Crankshaft Rear Oil Slinger Using Special Tools
Courtesy of FORD MOTOR CO.

102. Install the flexplate and the 8 bolts. Tighten the bolts in 2 stages in the sequence shown in illustration.
    - Stage 1: Tighten to 20 Nm (177 lb-in).
    - Stage 2: Tighten to 80 Nm (59 lb-ft).

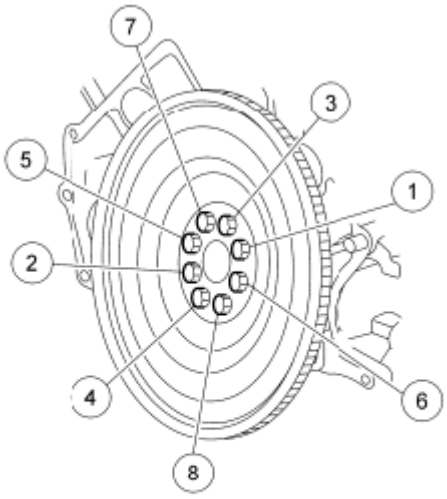

N0010329

Fig. 484: Identifying Flexplate Bolt Tightening Sequence
Courtesy of FORD MOTOR CO.

103. Install the engine. For additional information, refer to **ENGINE**.

INSTALLATION

CYLINDER HEAD

SPECIAL TOOLS

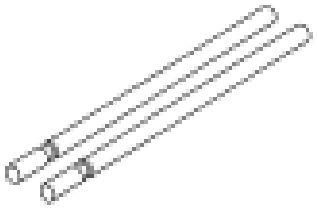 ST2606-A	Alignment Pins, Cylinder Head 303-1040 (SR-015486)
	Compressor, Valve Spring 303-567 (T97P-6565-AH)

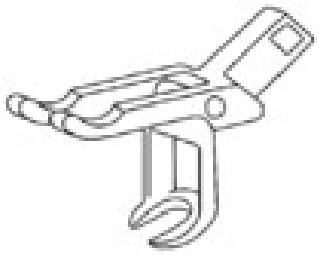 ST1330-A	
 ST1331-A	Compressor Spacer, Valve Spring 303-382 (T91P-6565-AH)
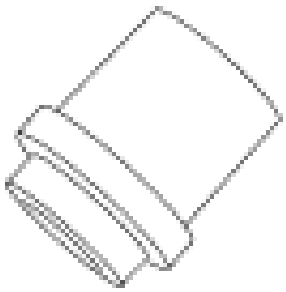 ST2197-A	Installer, Crankshaft Front Oil Seal 303-635
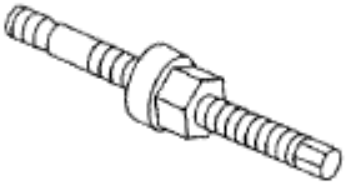 ST1287-A	Installer, Crankshaft Vibration Damper 303-102 (T74P-6316-B)
	Installer, Front Cover Oil Seal 303-335 (T88T-6701-A)

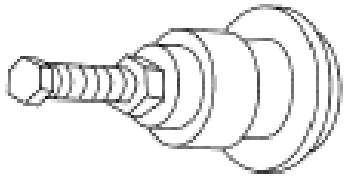 ST1328-A	
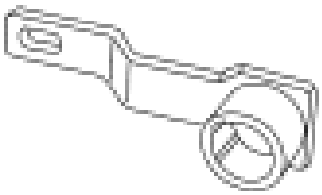 ST1335-A	Holding Tool, Crankshaft 303-448 (T93P-6303-A)
 ST1377-A	Lifting Bracket, Engine 303-F047 (014-00073) or equivalent
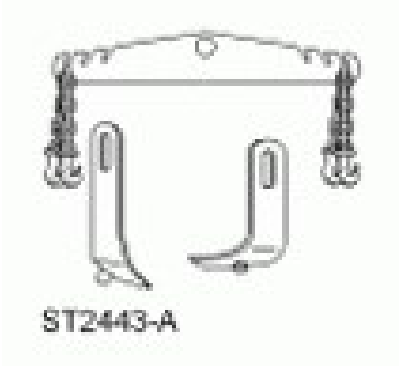 ST2443-A	Lifting Bracket Set, Engine 303-DS086 (D93P-6001-A) or equivalent
	Remover/Installer, Cylinder Head 303-572 (T97T-6000-A)

	
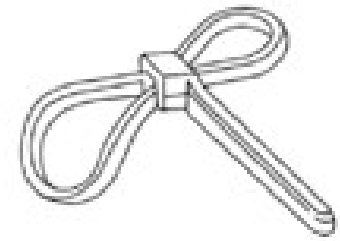	Strap Wrench 303-D055 (D85L-6000-A) or equivalent

GENERAL EQUIPMENT

Hydraulic Chain Tensioner Retaining Clip 1L3Z-6P250-AA

MATERIAL SPECIFICATIONS

Item	Specification
Motorcraft® Instant Gel Adhesive TA-19	WSK-M2G402-A4
Motorcraft® Metal Surface Prep ZC-31-A	-
Motorcraft® SAE 5W-20 Premium Synthetic Blend Motor Oil (US); Motorcraft® SAE 5W-20 Super Premium Motor Oil (Canada) XO-5W20-QSP (US); CXO-5W20-LSP12 (Canada)	WSS-M2C945-A
Motorcraft® Silicone Gasket and Sealant TA-30	WSE-M4G323-A4
Motorcraft® Silicone Gasket Remover ZC-30	-

Installation

All cylinder heads

NOTE: Make sure all coolant residue and foreign material are cleaned from the

1.

1. **block surface and cylinder bore. Failure to follow these instructions may result in engine damage.**

NOTE: **The use of sealing aids (aviation cement, copper spray and glue) is not permitted. The gasket must be installed dry. Failure to follow these instructions may result in engine damage.**

NOTE: **The cylinder head bolts must be discarded and new bolts installed. They are torque-to-yield designed and cannot be reused. Failure to follow these instructions may result in engine damage.**

NOTE: **Do not turn the crankshaft until instructed to do so.**

NOTE: **LH shown in illustration, RH similar.**

Using the Cylinder Head Alignment Pins, position the cylinder head gaskets and cylinder heads over the dowels and install the 20 cylinder head bolts loosely.

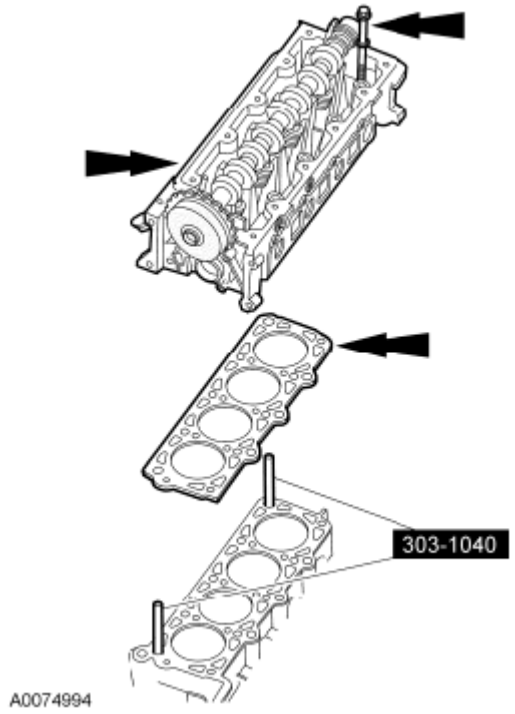

Fig. 485: Positioning Cylinder Head Gaskets And Cylinder Heads Over Dowels
Courtesy of FORD MOTOR CO.

2. **NOTE:** **RH shown in illustration, LH similar.**

Tighten the 20 bolts in 3 stages, in the sequence shown in illustration.

- Stage 1: Tighten to 40 Nm (30 lb-ft).
- Stage 2: Tighten an additional 90 degrees.
- Stage 3: Tighten an additional 90 degrees.

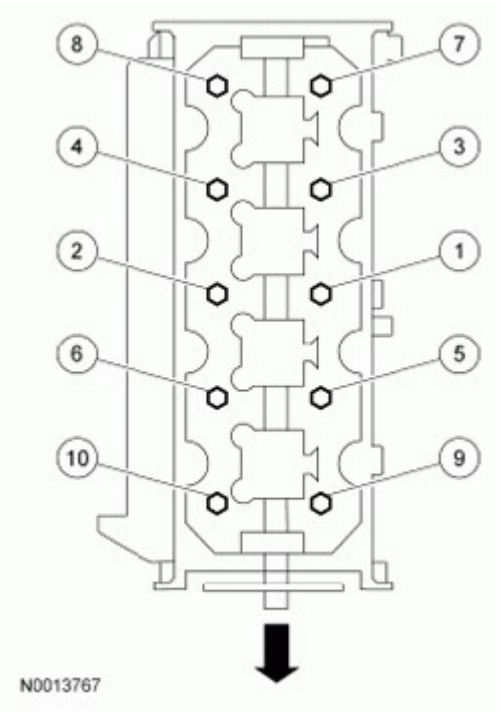

Fig. 486: Identifying Cylinder Head Bolts Tightening Sequence
Courtesy of FORD MOTOR CO.

3. Remove the Cylinder Head Remover/Installer from both ends of the cylinder head being serviced.

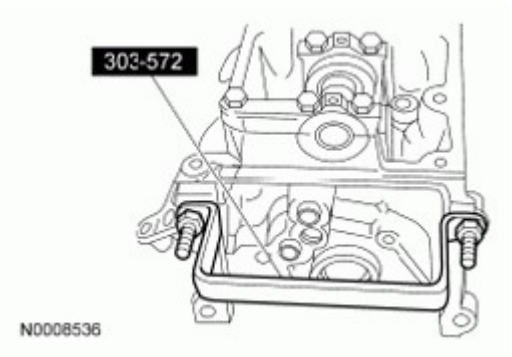

Fig. 487: Installing Special Tools On Ends Of Cylinder Head
Courtesy of FORD MOTOR CO.

NOTE: Lubricate the hydraulic lash adjusters with clean engine oil prior to installation.

4. Install the 16 hydraulic lash adjusters in their original locations.

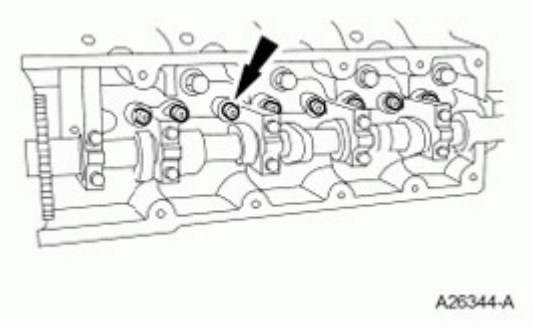

Fig. 488: Locating Hydraulic Lash Adjusters
Courtesy of FORD MOTOR CO.

RH cylinder head

5. Install 8 new exhaust manifold studs.
   - Tighten to 12 Nm (106 lb-in).
6. Position the 2 new gaskets and the exhaust manifold. Tighten the 8 nuts in the sequence shown in illustration.
   - Tighten to 25 Nm (18 lb-ft).

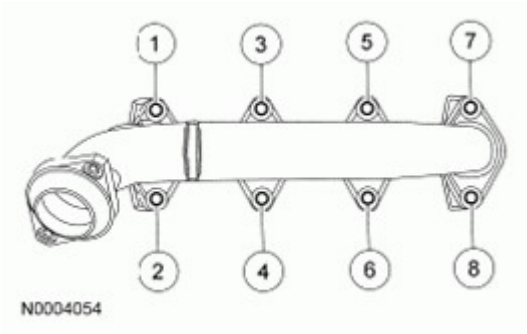

Fig. 489: Identifying Tightening Sequence Of RH Exhaust Manifold Bolts
Courtesy of FORD MOTOR CO.

LH cylinder head

7. Install 8 new exhaust manifold studs.
   - Tighten to 12 Nm (106 lb-in).
8. Position the 2 new gaskets and the LH exhaust manifold and tighten the 8 nuts in the sequence shown in illustration.
   - Tighten to 25 Nm (18 lb-ft).

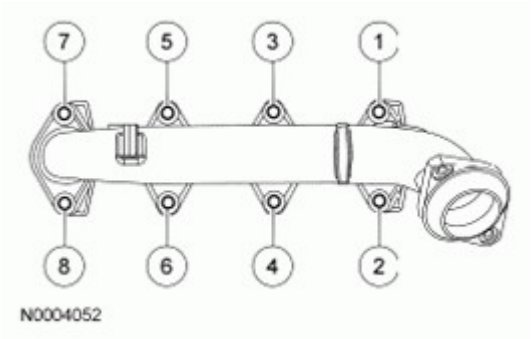

Fig. 490: Identifying Tightening Sequence Of LH Exhaust Manifold Bolts
Courtesy of FORD MOTOR CO.

All cylinder heads

9. **NOTE: Timing chain procedures must be followed exactly or damage to valves and pistons will result.**

NOTE: Prior to installation, inspect the tensioner-sealing bead for seal integrity. If cracks, tears, separation from the tensioner body or permanent compression of the seal bead is observed, install a new tensioner or engine damage may occur.

Using a vise, compress the tensioner plunger.

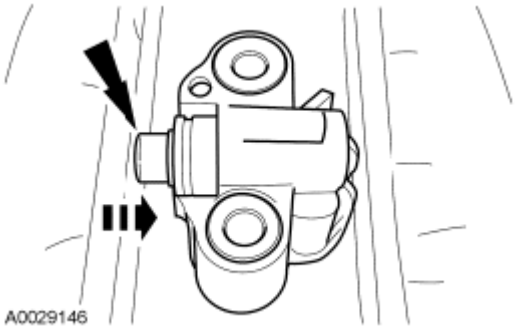

Fig. 491: Compressing Tensioner Plunger Using Vise
Courtesy of FORD MOTOR CO.

10. Install a retaining clip on the tensioner to hold the plunger in during installation.

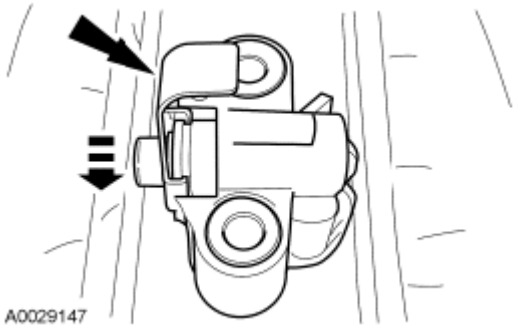

Fig. 492: Installing Retaining Clip On Tensioner
Courtesy of FORD MOTOR CO.

11. Remove the tensioner from the vise.
12. If the blue links are not visible, mark 2 links on one end and 1 link on the other end, and use as timing marks.

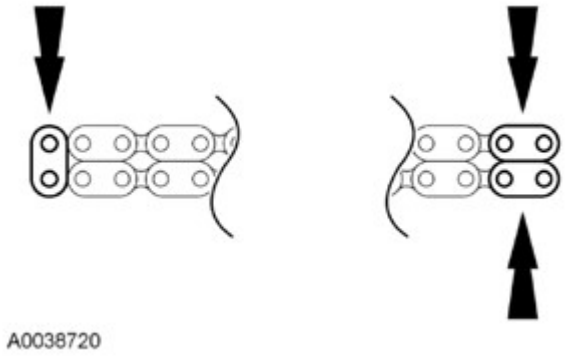

Fig. 493: Locating Timing Marks
Courtesy of FORD MOTOR CO.

13. Install the timing chain guides.
    1. Position the LH timing chain guide.
    2. Install and tighten the 2 LH bolts.
        - Tighten to 10 Nm (89 lb-in).
    3. Position the RH timing chain guide.
    4. Install and tighten the 2 RH bolts.
        - Tighten to 10 Nm (89 lb-in).

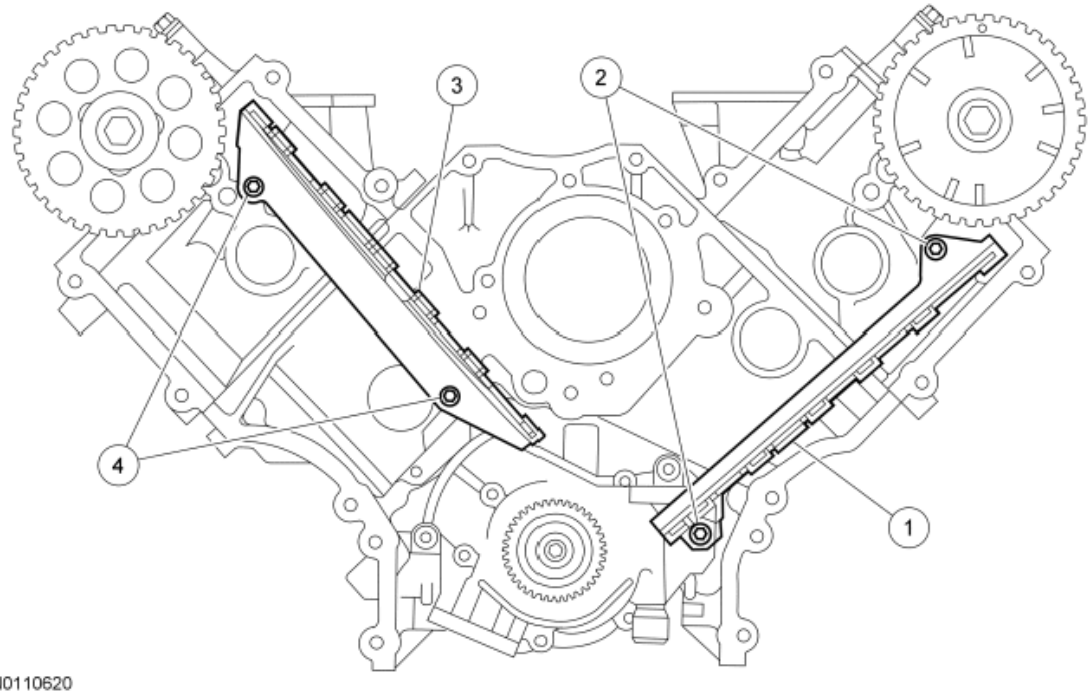

Fig. 494: Identifying Timing Chain Guides Bolts Installing Sequence
Courtesy of FORD MOTOR CO.

14. Rotate the RH camshaft sprocket until the timing mark is approximately at the 11 o'clock position. Rotate the LH camshaft sprocket until the timing mark is approximately at the 12 o'clock position.

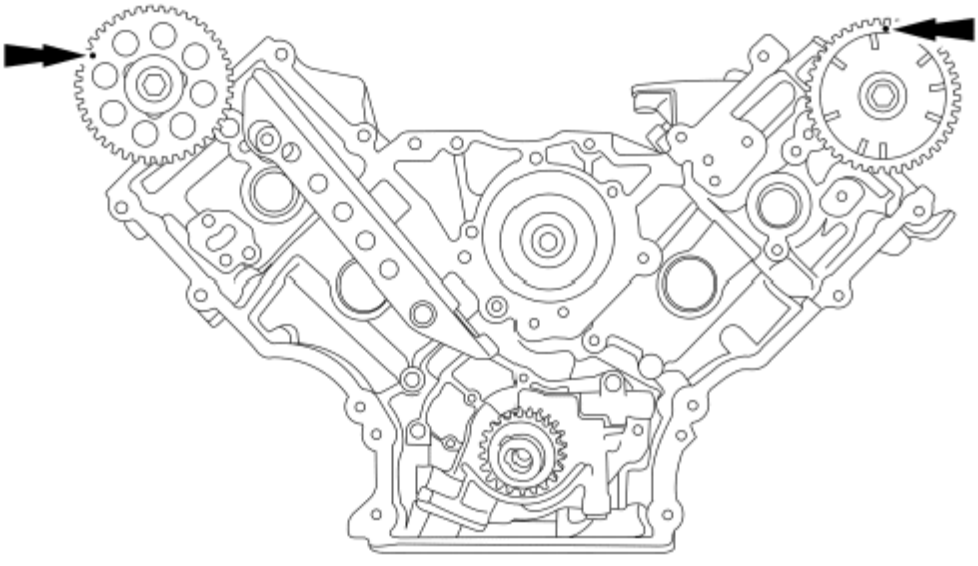

Fig. 495: Locating RH And LH Camshaft Sprocket Timing Mark
Courtesy of FORD MOTOR CO.

NOTE: The No. 1 cylinder is at TDC when the stud on the engine block fits into the

15.

15. **slot in the handle of the Crankshaft Holding Tool.**

Position the crankshaft so the No. 1 cylinder is at TDC with the Crankshaft Holding Tool.

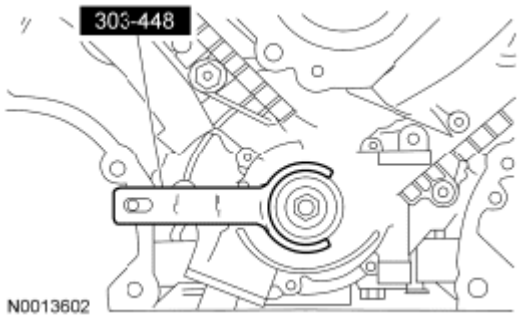

Fig. 496: Positioning Crankshaft Using Crankshaft Holding Tool
Courtesy of FORD MOTOR CO.

16. Install the crankshaft sprocket, making sure the flange faces forward.

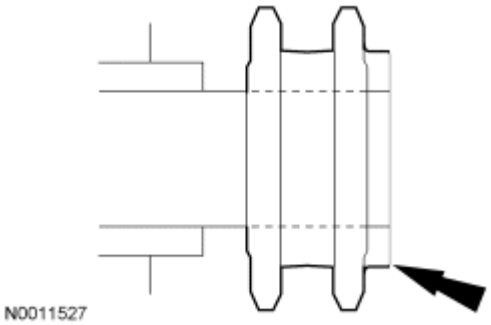

Fig. 497: Locating Crankshaft Sprocket Flange Faces Forward
Courtesy of FORD MOTOR CO.

17. Position the lower end of the LH (inner) timing chain on the crankshaft sprocket, aligning the timing mark on the outer flange of the crankshaft sprocket with the single blue (marked) link on the chain.

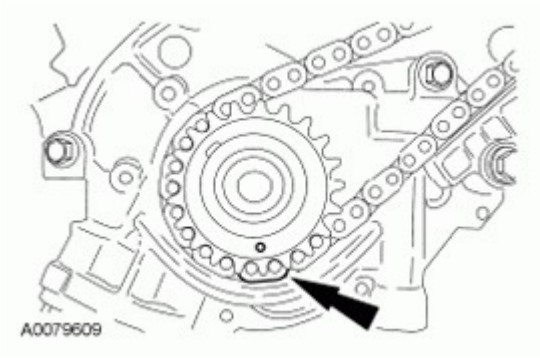

Fig. 498: Locating Timing Mark On Crankshaft Sprocket
Courtesy of FORD MOTOR CO.

18. **NOTE: Make sure the upper half of the timing chain is below the tensioner arm dowel.**

Position the timing chain on the camshaft sprocket with the camshaft sprocket timing mark positioned between the 2 blue (marked) chain links.

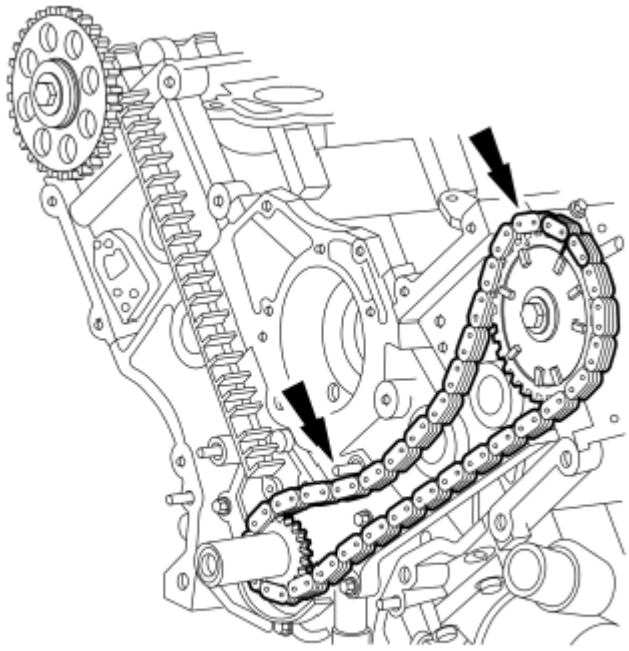

N0110622

Fig. 499: Locating Camshaft Sprocket Timing Mark
Courtesy of FORD MOTOR CO.

19. **NOTE: The LH timing chain tensioner arm has a bump near the dowel hole for identification.**

Position the LH timing chain tensioner arm on the dowel pin and install the LH timing chain tensioner and the 2 bolts.

- Tighten to 25 Nm (18 lb-ft).

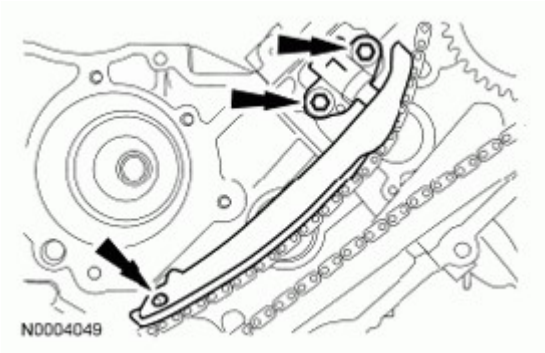

Fig. 500: Locating Timing Chain Tensioner And Tensioner Arm Bolts
Courtesy of FORD MOTOR CO.

20. Remove the retaining clip from the LH timing chain tensioner.

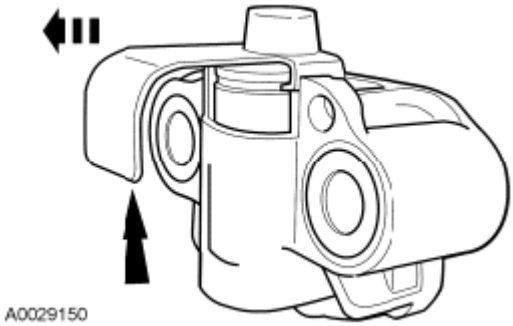

Fig. 501: Removing Retaining Clip From LH Timing Chain Tensioner
Courtesy of FORD MOTOR CO.

21. Position the lower end of the RH (outer) timing chain on the crankshaft sprocket, aligning the timing mark on the sprocket with the single blue (marked) chain link.

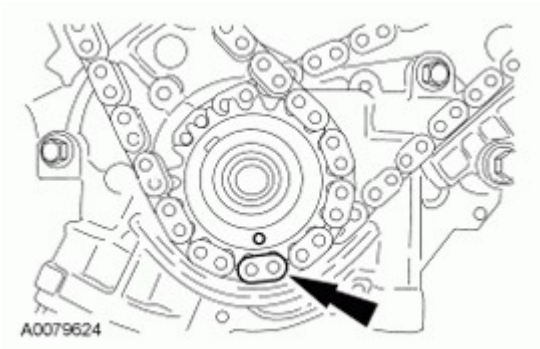

Fig. 502: Locating Timing Mark On Crankshaft Sprocket With Single Copper Chain Link
Courtesy of FORD MOTOR CO.

22. Install the RH timing chain on the camshaft sprocket. Make sure the camshaft sprocket timing mark is positioned between the 2 blue (marked) chain links.

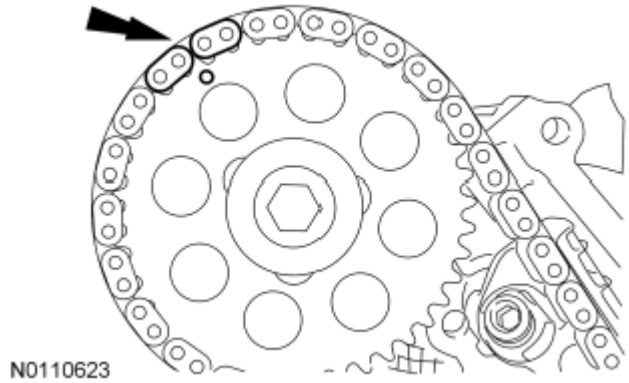

Fig. 503: Locating RH Camshaft Sprocket Timing Mark
Courtesy of FORD MOTOR CO.

23. Position the RH timing chain tensioner arm on the dowel pin and install the RH timing chain tensioner and the 2 bolts.
    - Tighten to 25 Nm (18 lb-ft).

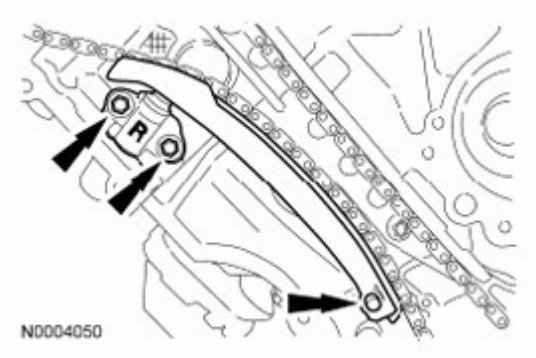

Fig. 504: Locating Timing Chain Tensioner And Tensioner Arm bolts
Courtesy of FORD MOTOR CO.

24. Remove the retaining clip from the RH timing chain tensioner.

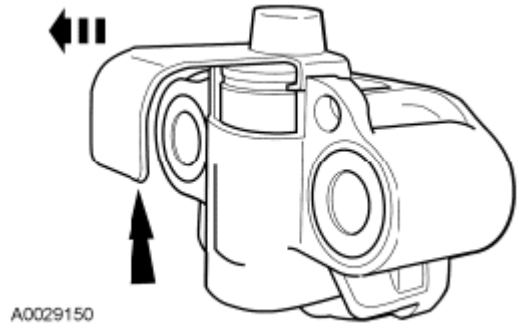

Fig. 505: Removing Retaining Clip From LH Timing Chain Tensioner
Courtesy of FORD MOTOR CO.

25. As a post-check, verify correct alignment of all timing marks.

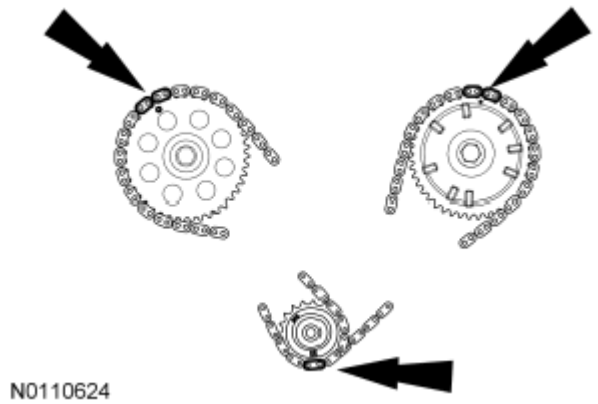

Fig. 506: Locating Timing Marks
Courtesy of FORD MOTOR CO.

26. Install the crankshaft sensor ring on the crankshaft.

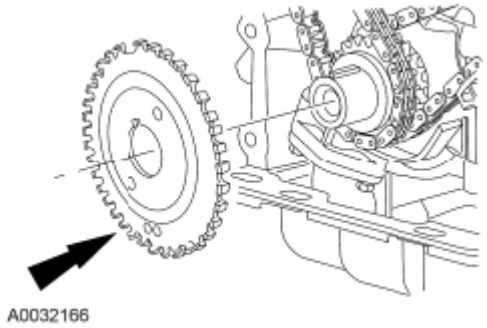

Fig. 507: Locating Crankshaft Sensor Ring
Courtesy of FORD MOTOR CO.

27. **NOTE: Camshaft roller follower is removed for clarity.**

Install the Valve Spring Compressor Spacer between the valve spring coils to prevent valve stem seal damage.

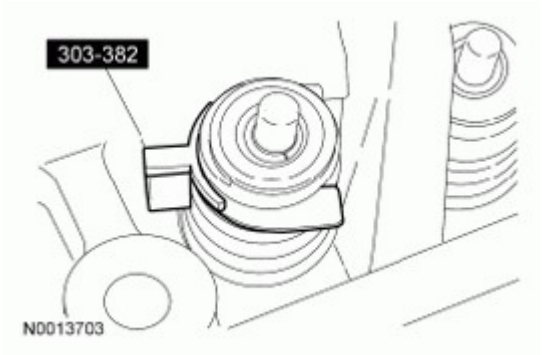

Fig. 508: Installing/Removing Valve Spring Compressor Spacer
Courtesy of FORD MOTOR CO.

28. **NOTE: The camshaft roller followers must be installed in their original locations. Failure to follow these instructions may result in engine damage.**

NOTE: Do not allow the valve keepers to fall off the valve or the valve may drop into the cylinder. If a valve drops into the cylinder, the cylinder head must be removed. For additional information, refer to ENGINE.

NOTE: It may be necessary to push the valve down while compressing the spring.

NOTE: Position the cam lobe away from the valve stem prior to installing each camshaft roller follower.

Use the Valve Spring Compressor to compress the valve springs, and install the camshaft roller follower.

Fig. 509: Compressing Valve Spring Using Valve Spring Compressor
Courtesy of FORD MOTOR CO.

29. **NOTE: The camshaft roller followers must be installed in their original locations.**

Repeat the previous 3 steps for each camshaft roller follower.

30. Install the 8 spark plugs. For additional information, refer to **ENGINE IGNITION - 5.4L (2V)** .

31. **NOTE: Do not use metal scrapers, wire brushes, power abrasive discs or other abrasive means to clean the sealing surfaces. These tools cause scratches and gouges which make leak paths. Use a plastic scraping tool to remove all traces of old sealant.**

NOTE: If the engine front cover is not secured within 4 minutes, the sealant must be removed and the sealing area cleaned with silicone gasket remover and metal surface prep. Follow the directions on the packaging. Allow to dry until there is no sign of wetness, or 4 minutes, whichever is longer. Failure

to follow this procedure can cause future oil leakage.

NOTE: Make sure that the engine front cover gasket is in place on the engine front cover before installation.

Apply a bead of silicone gasket and sealant along the cylinder head-to-cylinder block surface and the oil pan-to-cylinder block surface, at the locations shown in illustration.

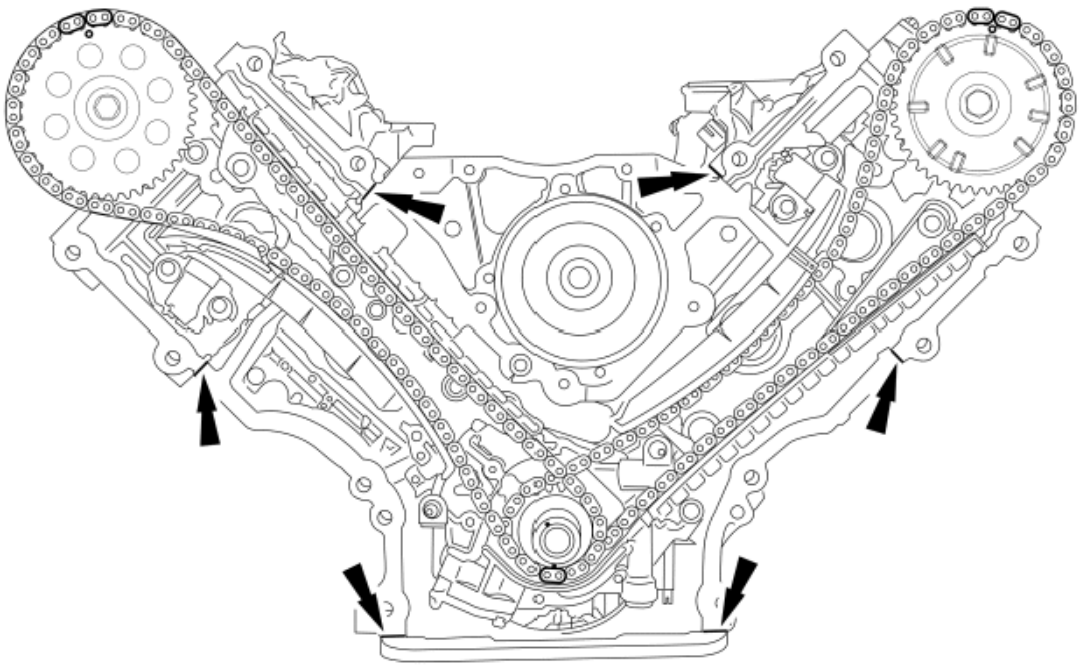

Fig. 510: Identifying Bead Of Silicone Gasket And Sealant Applying Area Along Cylinder Head-To-Cylinder Block Surface
Courtesy of FORD MOTOR CO.

32. Install a new engine front cover gasket on the engine front cover. Position the engine front cover. Install the fasteners finger-tight.

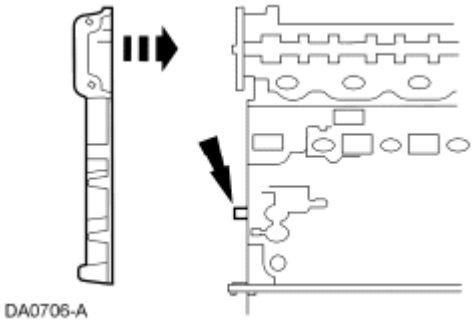

Fig. 511: Positioning Engine Front Cover
Courtesy of FORD MOTOR CO.

33. Tighten the 15 engine front cover fasteners in 3 stages, in the sequence shown in illustration.
    - Stage 1: Tighten fasteners 1 through 5 to 25 Nm (18 lb-ft).
    - Stage 2: Tighten fasteners 6 and 7 to 48 Nm (35 lb-ft).
    - Stage 3: Tighten fasteners 8 through 15 to 48 Nm (35 lb-ft).

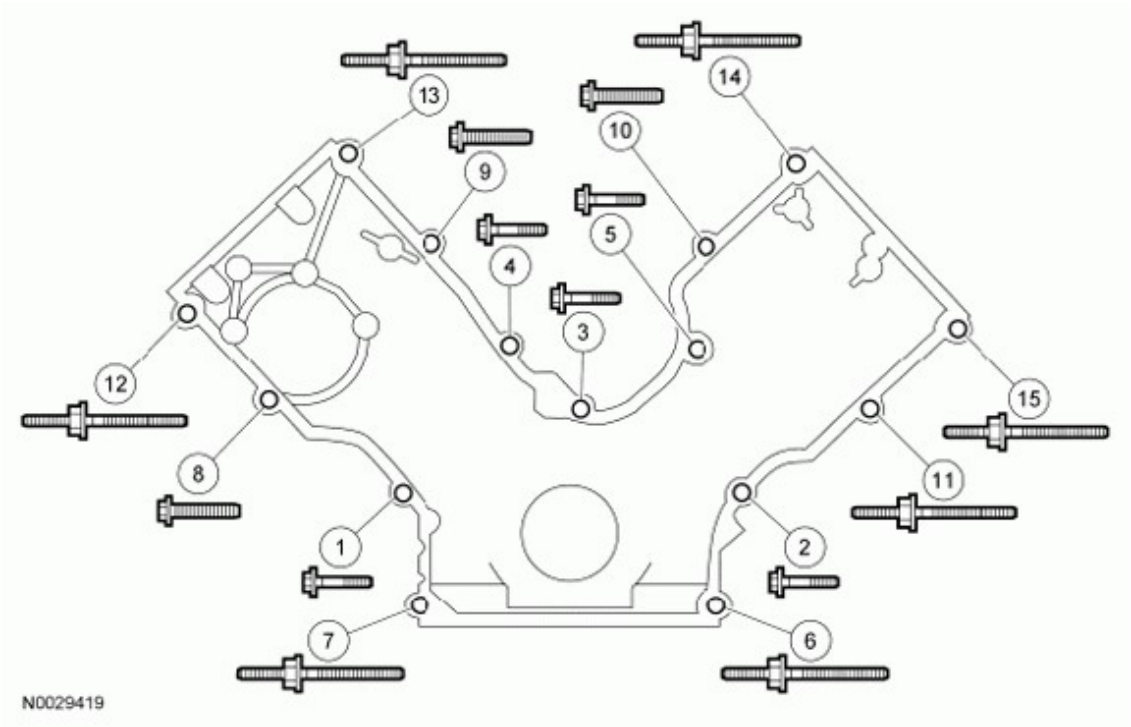

Fig. 512: Identifying Engine Front Cover Fasteners Tightening Sequence
Courtesy of FORD MOTOR CO.

Item	Part Number	Description
1	N806177	Bolt, Hex Flange Head Pilot, M8 x 1.25 x 53
2	N806177	Bolt, Hex Flange Head Pilot, M8 x 1.25 x 53
3	N806177	Bolt, Hex Flange Head Pilot, M8 x 1.25 x 53
4	N806177	Bolt, Hex Flange Head Pilot, M8 x 1.25 x 53
5	N806177	Bolt, Hex Flange Head Pilot, M8 x 1.25 x 53
6	N808529	Stud, Hex Head

		Pilot, M10 x 1.5 x 59 - M10 x 1.5 x 30
7	N808529	Stud, Hex Head Pilot, M10 x 1.5 x 59 - M10 x 1.5 x 30
8	N808142	Screw and Washer, Hex Pilot, M10 x 1.5 x 57.5
9	N808142	Screw and Washer, Hex Pilot, M10 x 1.5 x 57.5
10	N808142	Screw and Washer, Hex Pilot, M10 x 1.5 x 57.5
11	N808140	Stud and Washer, Hex Head Pilot, M10 x 1.5 x 68 - M8 x 1.25 x 27
12	N808140	Stud and Washer, Hex Head Pilot, M10 x 1.5 x 68 - M8 x 1.25 x 27
13	N808140	Stud and Washer, Hex Head Pilot, M10 x 1.5 x 68 - M8 x 1.25 x 27
14	N808140	Stud and Washer, Hex Head Pilot, M10 x 1.5 x 68 - M8 x 1.25 x 27
15	N808140	Stud and Washer, Hex Head Pilot, M10 x 1.5 x 68 - M8 x 1.25 x 27

34. Loosely install the 4 front oil pan bolts, and tighten the bolts in 2 stages, in the sequence shown in illustration.
    - Stage 1: Tighten to 20 Nm (177 lb-in).
    - Stage 2: Tighten an additional 60 degrees.

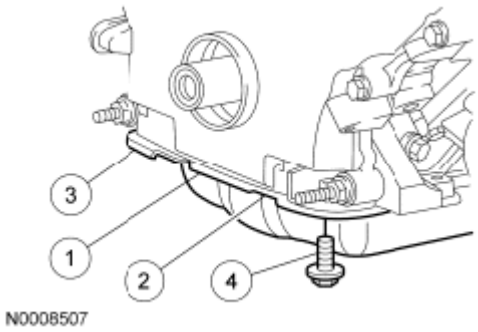

Fig. 513: Identifying Tightening Sequence Of Oil Pan Bolts
Courtesy of FORD MOTOR CO.

NOTE: Do not use metal scrapers, wire brushes, power abrasive discs or other abrasive means to clean sealing surfaces. These tools cause scratches and gouges which make leak paths.

35. Inspect and clean the valve cover sealing surfaces with silicone gasket remover and metal surface prep. Follow the directions on the packaging.

36. Apply instant adhesive completely around the gasket groove in the LH valve cover. Install the new valve cover gasket.

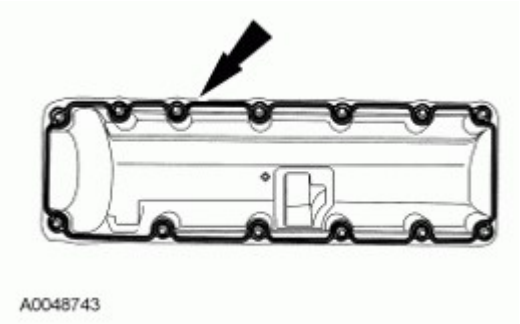

Fig. 514: Identifying Adhesive Applying Area Around Valve Cover Gasket
Courtesy of FORD MOTOR CO.

NOTE: If not secured within 4 minutes, the sealant must be removed and the sealing area cleaned with silicone gasket remover and metal surface prep. Follow the directions on the packaging. Allow to dry until there is no sign of wetness, or 4 minutes, whichever is longer. Failure to follow this procedure can cause future oil leakage.

37. Apply silicone gasket and sealant in 2 places where the engine front cover meets the cylinder head.

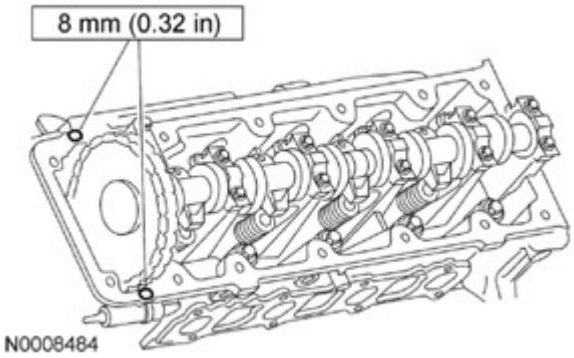

Fig. 515: Applying Silicone Gasket And Sealant To Valve Cover Gasket Surface
Courtesy of FORD MOTOR CO.

38. Position the LH valve cover and gasket on the cylinder head and install the 13 fasteners loosely.

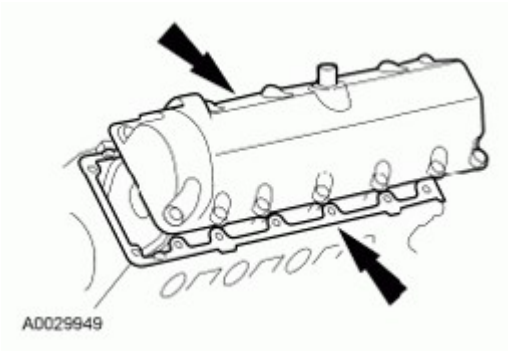

Fig. 516: Locating Valve Cover And Cylinder Head
Courtesy of FORD MOTOR CO.

39. Tighten the 13 fasteners in the sequence shown in illustration.
    - Tighten to 10 Nm (89 lb-in).

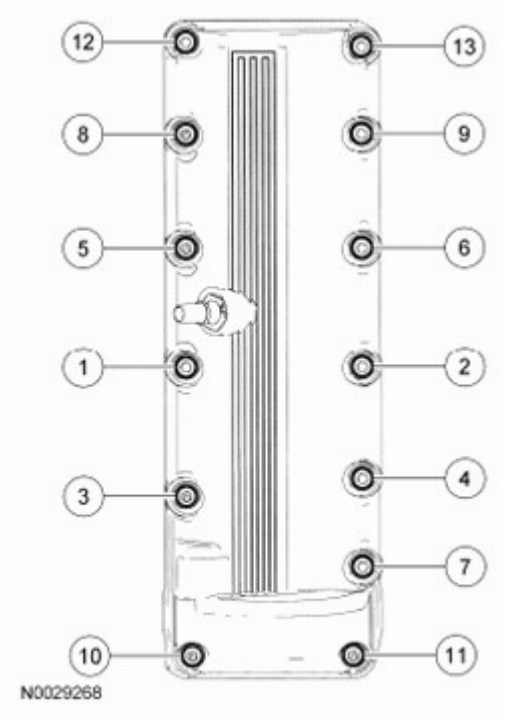

Fig. 517: Identifying Cylinder Head Bolts Tightening Sequence
Courtesy of FORD MOTOR CO.

40. Apply instant adhesive completely around the gasket groove in the RH valve cover. Install the new valve cover gasket.

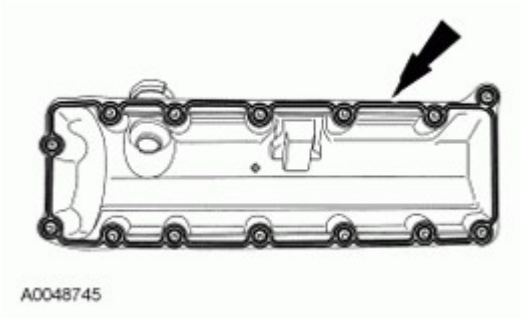

Fig. 518: Identifying Adhesive Applying Area Around Gasket
Courtesy of FORD MOTOR CO.

NOTE: **If not secured within 4 minutes, the sealant must be removed and the sealing area cleaned with silicone gasket remover and metal surface prep. Follow the directions on the packaging. Allow to dry until there is no sign of wetness, or 4 minutes, whichever is longer. Failure to follow this procedure can cause future oil leakage.**

41. Apply silicone gasket and sealant in 2 places where the engine front cover meets the cylinder head.

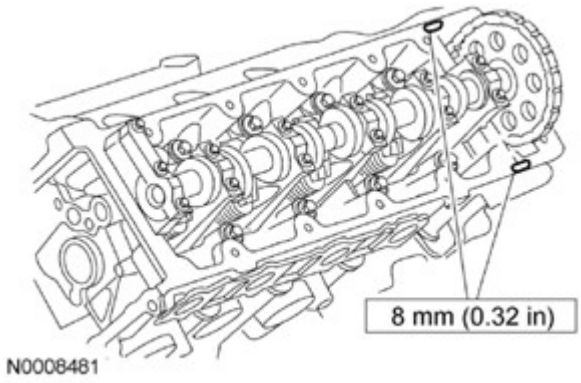

Fig. 519: Identifying Silicone Gasket And Sealant Applying Area On Gasket Surface
Courtesy of FORD MOTOR CO.

42. Position the RH valve cover and gasket on the cylinder head and install the 14 fasteners loosely.

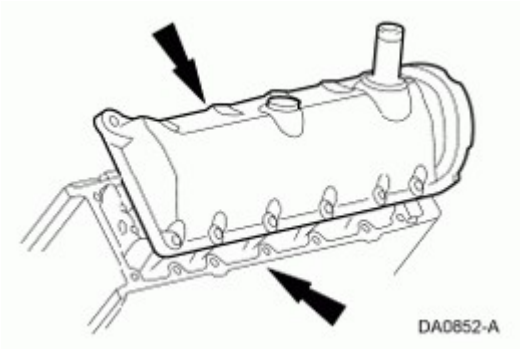

Fig. 520: Locating Valve Cover And Cylinder Head
Courtesy of FORD MOTOR CO.

43. Tighten the 14 fasteners in the sequence shown in illustration.
    - Tighten to 10 Nm (89 lb-in).

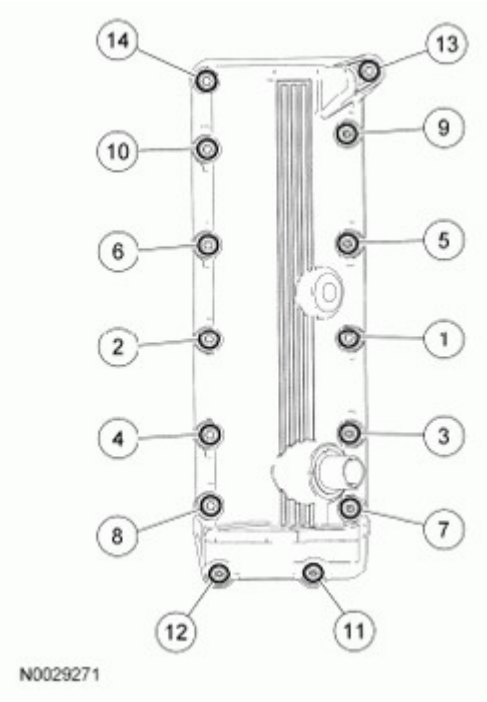

Fig. 521: Identifying Cylinder Head Bolt Tightening Sequence
Courtesy of FORD MOTOR CO.

44. Position the accessory drive belt idler pulley and install the bolt.
    - Tighten to 25 Nm (18 lb-ft).

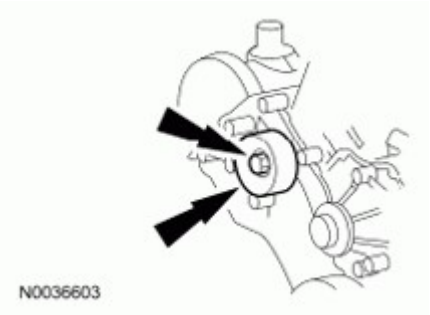

Fig. 522: Locating Accessory Drive Belt Idler Pulley And Bolt
Courtesy of FORD MOTOR CO.

45. Lubricate the engine front cover and the crankshaft front seal inner lip with clean engine oil.

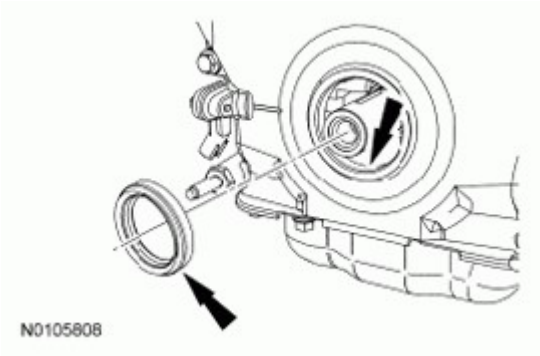

Fig. 523: Locating Crankshaft Front Seal Inner Lip
Courtesy of FORD MOTOR CO.

46. Using the Front Cover Oil Seal Installer, Crankshaft Front Oil Seal Installer and Crankshaft Vibration Damper Installer, install a new crankshaft front seal.

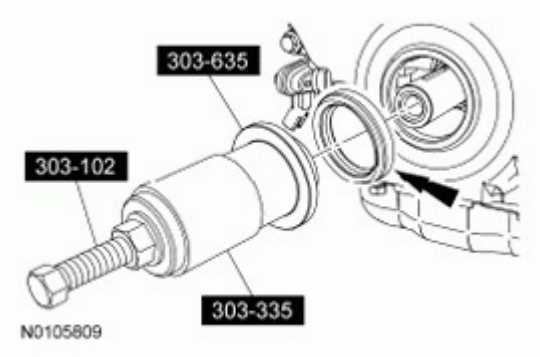

Fig. 524: Installing Crankshaft Front Seal Using Crankshaft Front Oil Seal Installer
Courtesy of FORD MOTOR CO.

NOTE: **If not secured within 4 minutes, the sealant must be removed and the sealing area cleaned with silicone gasket remover and metal surface prep. Follow the directions on the packaging. Allow to dry until there is no sign of wetness, or 4 minutes, whichever is longer. Failure to follow this procedure can cause future oil leakage.**

47. Apply silicone gasket and sealant to the Woodruff key slot on the crankshaft pulley.

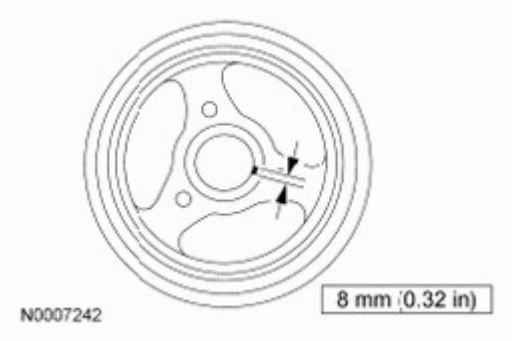

Fig. 525: Identifying Crankshaft Pulley Sealant Applying Area On Woodruff Key Slot
Courtesy of FORD MOTOR CO.

48. Using the Crankshaft Vibration Damper Installer, install the crankshaft pulley.

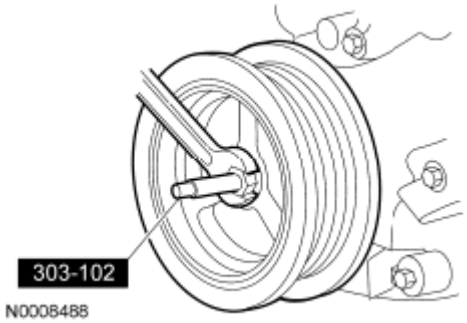

Fig. 526: Installing Crankshaft Pulley Using Crankshaft Vibration Damper Installer
Courtesy of FORD MOTOR CO.

49. **NOTE: Use a suitable Strap Wrench (such as 303-D055) to hold the pulley while tightening the bolt.**

Tighten the new crankshaft pulley bolt in 4 stages.

- Stage 1: Tighten to 90 Nm (66 lb-ft).
- Stage 2: Loosen one full turn.
- Stage 3: Tighten to 50 Nm (37 lb-ft).
- Stage 4: Tighten an additional 90 degrees.

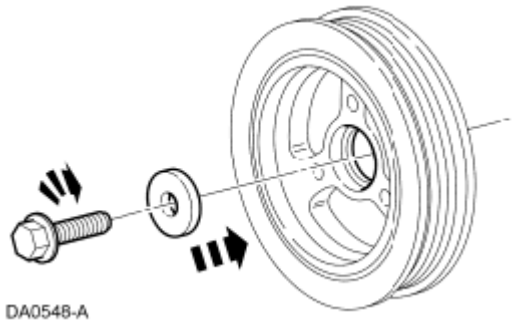

Fig. 527: Installing Crankshaft Pulley Bolt And Washer
Courtesy of FORD MOTOR CO.

50. Position the coolant pump pulley on the coolant pump and install the 4 bolts.
    - Tighten to 25 Nm (18 lb-ft).

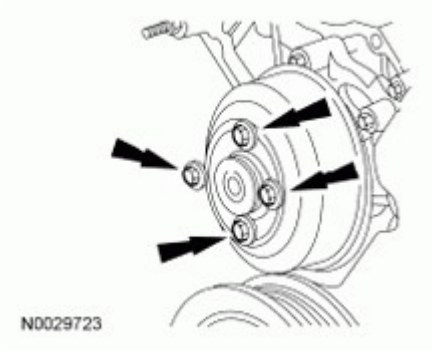

Fig. 528: Locating Coolant Pump Pulley Bolts
Courtesy of FORD MOTOR CO.

51. **NOTE: RH shown in illustration, LH similar.**

Install the radio frequency interference capacitors and the nuts.

- Tighten to 25 Nm (18 lb-ft).

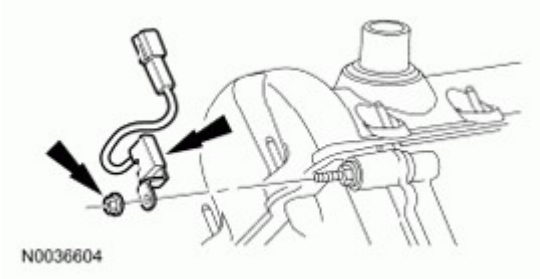

Fig. 529: Locating Radio Interference Capacitors And Nuts
Courtesy of FORD MOTOR CO.

52. **NOTE: Lubricate the O-ring seal with clean engine oil prior to installation.**

Using a new O-ring seal, install the oil level indicator tube and the bolt.

- Tighten to 10 Nm (89 lb-in).

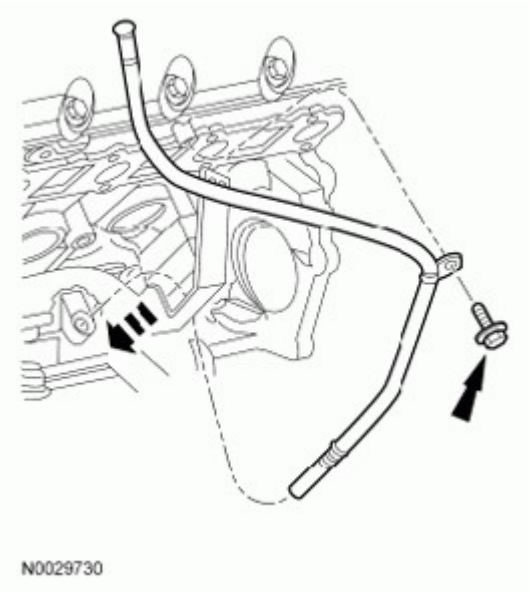

Fig. 530: Locating Oil Level Indicator Tube Bolt
Courtesy of FORD MOTOR CO.

53. Install the oil level indicator and tube support bracket nut.
    - Tighten to 25 Nm (18 lb-ft).

Fig. 531: Locating Oil Level Indicator And Tube Support Bracket Nut
Courtesy of FORD MOTOR CO.

54. Roughly position the engine control sensor wiring harness and mount it on the valve cover studs.
55. Connect the Engine Oil Pressure (EOP) switch electrical connector and harness retainer.

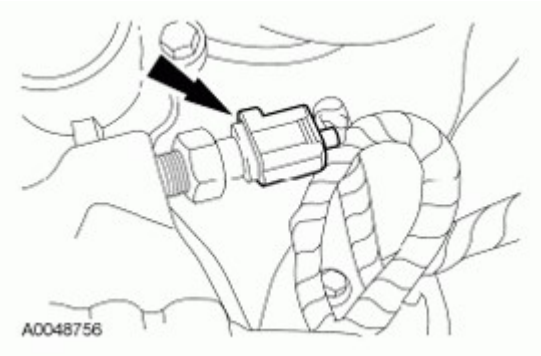

Fig. 532: Locating Oil Pressure Switch Electrical Connector
Courtesy of FORD MOTOR CO.

56. Connect the KS electrical connector.

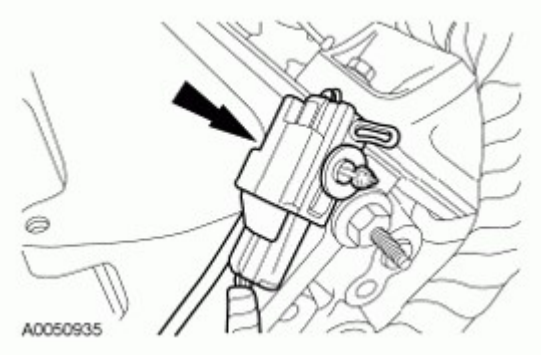

Fig. 533: Locating Knock Sensor Electrical Connector
Courtesy of FORD MOTOR CO.

57. Connect the RH radio frequency interference capacitor electrical connector.

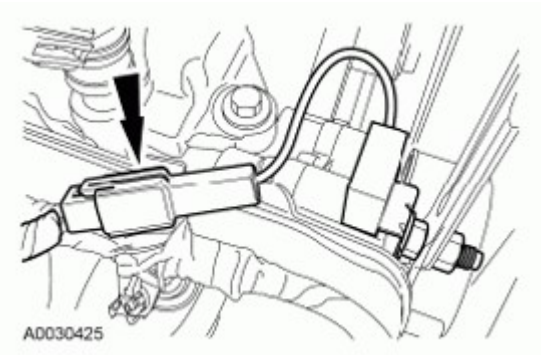

Fig. 534: Locating Radio Frequency Interference Capacitor Electrical Connector
Courtesy of FORD MOTOR CO.

58. Connect the CMP sensor electrical connector.

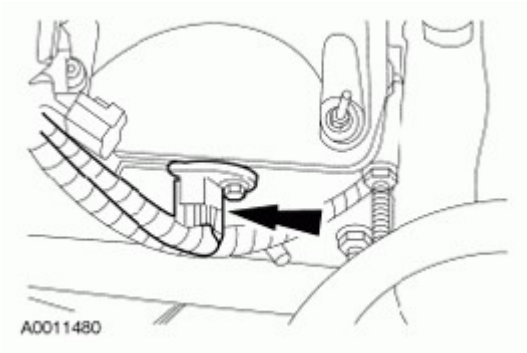

Fig. 535: Locating Camshaft Position (CMP) Sensor Electrical Connector
Courtesy of FORD MOTOR CO.

59. Connect the LH radio frequency interference capacitor and Cylinder Head Temperature (CHT) sensor electrical connectors.

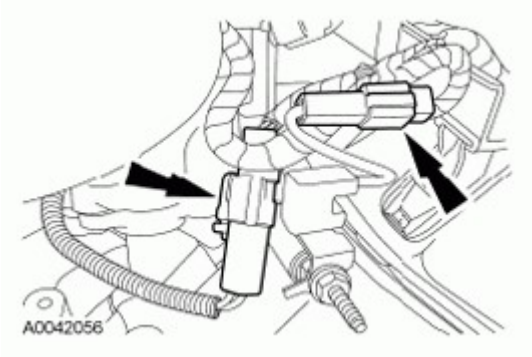

Fig. 536: Locating Cylinder Head Temperature Sensor Electrical Connectors
Courtesy of FORD MOTOR CO.

60. **NOTE: LH shown in illustration, RH similar.**

If equipped, install the cylinder block drain plugs.

- Tighten to 20 Nm (177 lb-in).

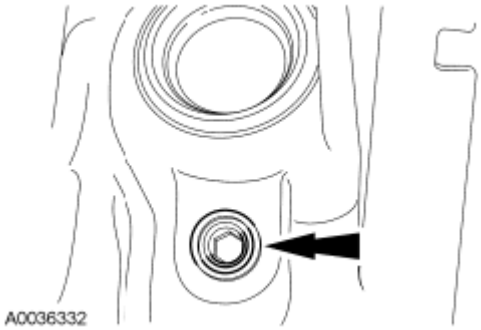

Fig. 537: Locating Cylinder Block Drain Plugs
Courtesy of FORD MOTOR CO.

61. If equipped with cylinder block drain plugs, position the RH engine support insulator and install the 3 bolts.
    - Tighten to 90 Nm (66 lb-ft).

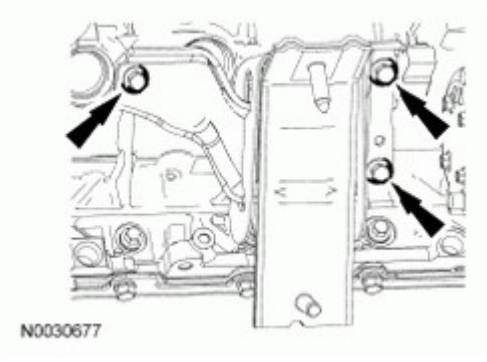

Fig. 538: Locating RH Engine Support Insulator Bolts
Courtesy of FORD MOTOR CO.

62. Install the Engine Lifting Bracket Set.

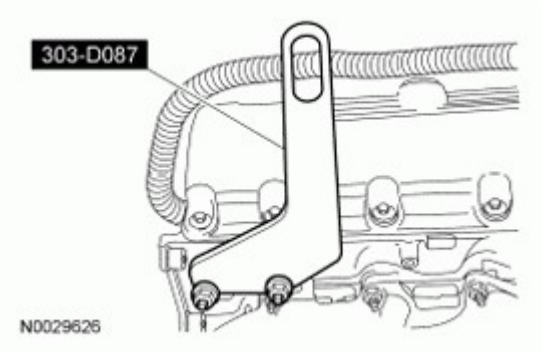

Fig. 539: Installing Engine Lifting Bracket Set
Courtesy of FORD MOTOR CO.

63. Install the Engine Lifting Bracket Set.

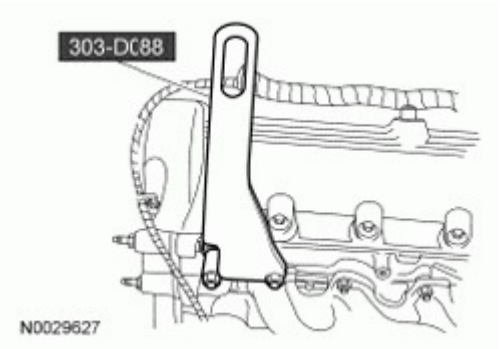

Fig. 540: Installing Engine Lifting Bracket Set
Courtesy of FORD MOTOR CO.

64. Install the Engine Lifting Bracket Set and remove the engine from the work stand.

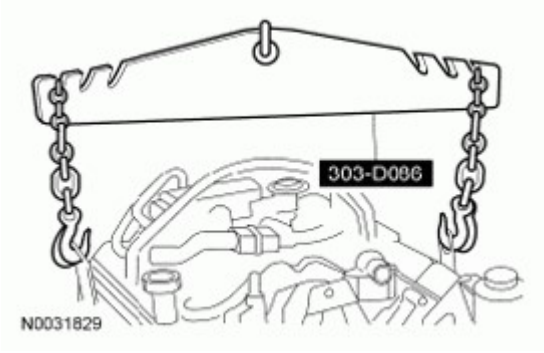

Fig. 541: Installing Engine Lifting Bracket
Courtesy of FORD MOTOR CO.

65. Lower the engine onto wooden blocks.
66. Install the Engine Lifting Bracket and raise the engine.

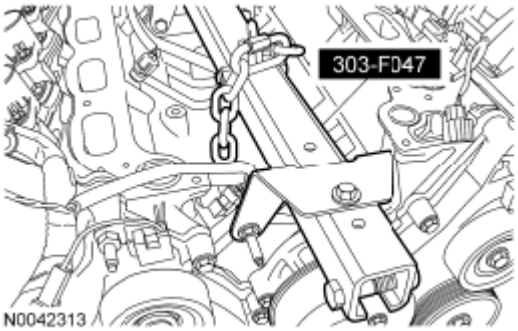

Fig. 542: Installing/Removing Engine Lifting Bracket Using Engine Lift Bracket (303-F047)
Courtesy of FORD MOTOR CO.

67. Install the flexplate and the 8 bolts. Tighten the bolts in 2 stages in the sequence shown in illustration.
    - Stage 1: Tighten to 20 Nm (177 lb-in).
    - Stage 2: Tighten to 80 Nm (59 lb-ft).

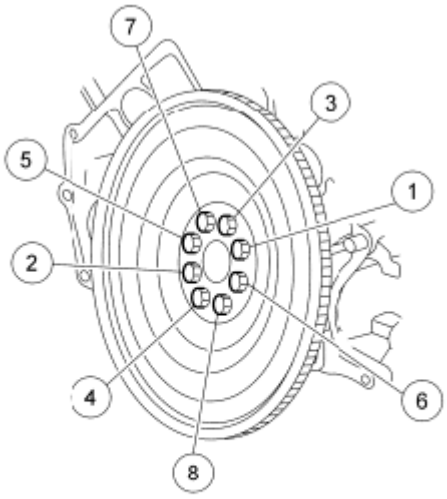

N0010329

Fig. 543: Identifying Flexplate Bolts Tightening Sequence
Courtesy of FORD MOTOR CO.

68. Install the engine. For additional information, refer to **ENGINE**.

ENGINE

SPECIAL TOOLS

 ST1499-A	Holding Wrench, Fan Pulley 303-239 (T84T-6312-C)
	Installer Set, Teflon Seal 211-D027 (D90P-3517-A) or equivalent

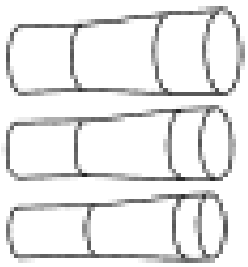 ST1444-A	
 ST1377-A	Lifting Bracket, Engine 303-F047 (014-00073) or equivalent
 ST1828-A	Wrench, Fan Clutch Nut 303-240 (T84T-6312-D)

MATERIAL SPECIFICATIONS

Item	Specification
Motorcraft® Gold Antifreeze/Coolant Concentrated VC-7-B (US); CVC-7-B2 (Canada)	WSS-M97B51-A1
Motorcraft® SAE 5W-20 Premium Synthetic Blend Motor Oil (US); Motorcraft® SAE 5W-20 Super Premium Motor Oil (Canada) XO-5W20-QSP (US); CXO-5W20-LSP12 (Canada)	WSS-M2C945-A

1. Position the engine in the vehicle.
2. Remove the floor crane, the Engine Lifting Bracket and the jack supporting the transmission.

NOTE: Align the engine-to-transmission dowels before installing the engine-to-transmission bolts.

3.

Position the shifter cable support bracket and install the 2 transmission-to-engine bolts.

- Tighten to 60 Nm (44 lb-ft).

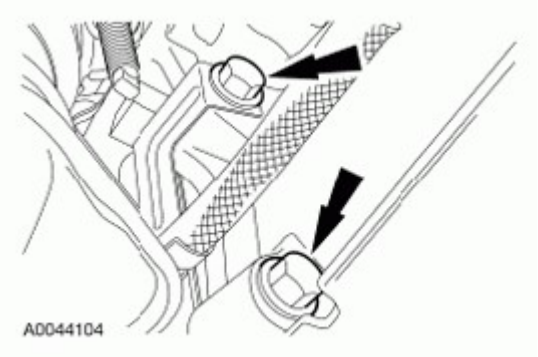

Fig. 544: Locating Transmission-To-Engine Bolts
Courtesy of FORD MOTOR CO.

4. Install the RH lower transmission-to-engine bolt.
   - Tighten to 60 Nm (44 lb-ft).

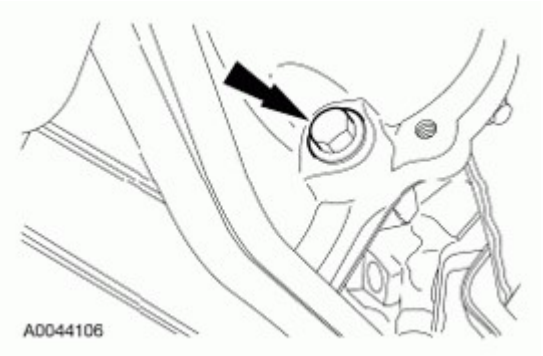

Fig. 545: Locating RH Lower Transmission-To-Engine Bolt
Courtesy of FORD MOTOR CO.

5. **NOTE: RH shown in illustration, LH similar.**

Install the 4 engine support insulator-to-support insulator bracket nuts.

- Tighten to 90 Nm (66 lb-ft).

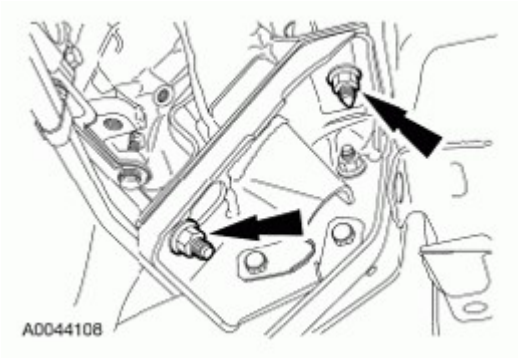

Fig. 546: Locating Engine Support Insulator-To-Support Insulator Bracket Nuts
Courtesy of FORD MOTOR CO.

6. Position the shift cable mounting bracket, install the 2 bolts and connect the shift cable.
   - Tighten to 25 Nm (18 lb-ft).

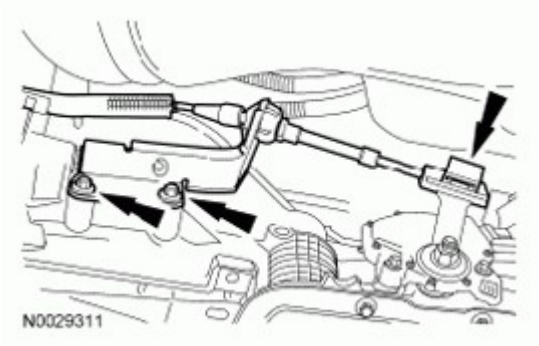

Fig. 547: Locating Shift Cable Mounting Bracket And Bolts
Courtesy of FORD MOTOR CO.

7. Install 4 new torque converter nuts.
   - Rotate the crankshaft to access all of the torque converter nuts.
   - Tighten to 35 Nm (26 lb-ft).

Fig. 548: Locating Torque Converter To Flexplate Nuts
Courtesy of FORD MOTOR CO.

8. Install the cylinder block opening cover.

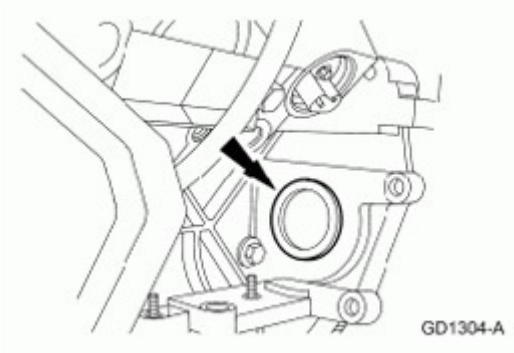

Fig. 549: Locating Cylinder Block Opening Cover
Courtesy of FORD MOTOR CO.

9. Position the flexplate inspection cover and install the 2 bolts.
   - Tighten to 34 Nm (25 lb-ft).

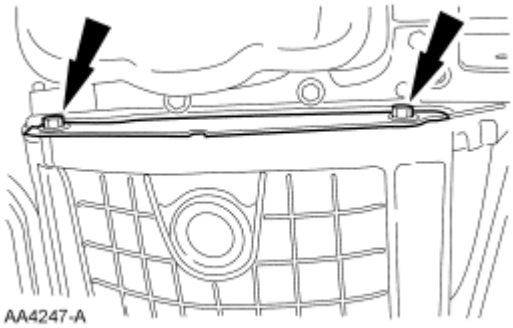

Fig. 550: Locating Flexplate Inspection Cover Bolts
Courtesy of FORD MOTOR CO.

10. If equipped, connect the block heater electrical connector and 2 wiring harness retainers.

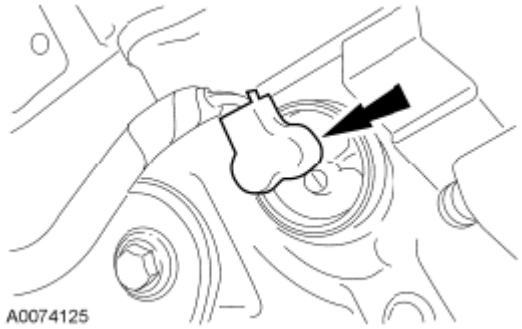

Fig. 551: Locating Block Heater Electrical Connector
Courtesy of FORD MOTOR CO.

11. If equipped, install the A/C compressor and the 3 bolts.
   - Tighten to 25 Nm (18 lb-ft).

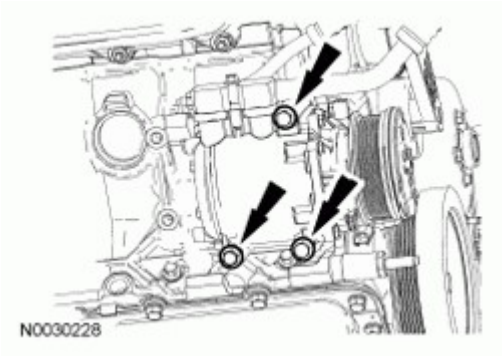

Fig. 552: Locating A/C Compressor Bolts
Courtesy of FORD MOTOR CO.

12. Connect the A/C compressor electrical connector and the wiring harness retainer.

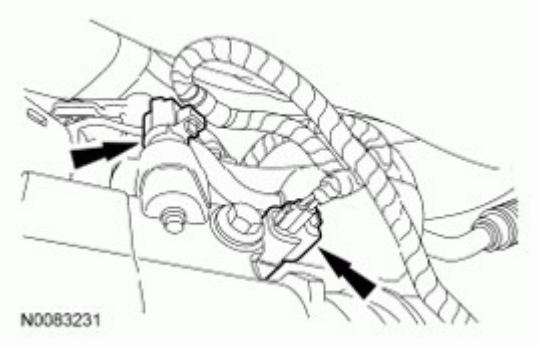

Fig. 553: Locating A/C Compressor Electrical Connector And Wiring Harness Retainer
Courtesy of FORD MOTOR CO.

13. Connect the Crankshaft Position (CKP) sensor electrical connector.

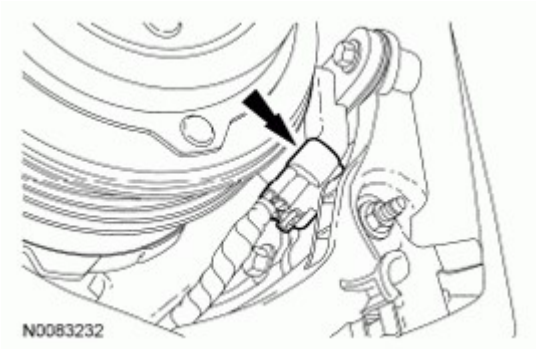

Fig. 554: Locating Crankshaft Position (CKP) Sensor Electrical Connector
Courtesy of FORD MOTOR CO.

14. Position the exhaust Y-pipe and install the 4 nuts.
    - Tighten to 40 Nm (30 lb-ft).

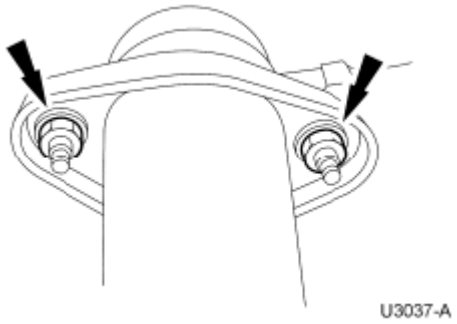

Fig. 555: Locating Exhaust Manifold Flange Nuts
Courtesy of FORD MOTOR CO.

15. **NOTE:** **The oil cooler must be replaced or severe damage to the engine can occur.**

    NOTE: **Make sure the tab on the oil filter adapter nests into the notch in the oil cooler.**

    Position a new oil cooler on the oil filter adapter and install the threaded insert.

    - Tighten to 58 Nm (43 lb-ft).

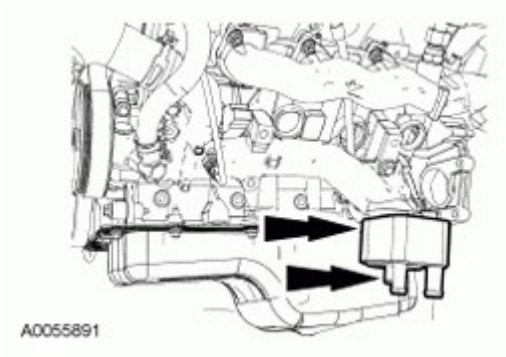

Fig. 556: Locating Oil Cooler
Courtesy of FORD MOTOR CO.

16. Install a new oil filter.
    - Tighten to 16 Nm (142 lb-in).

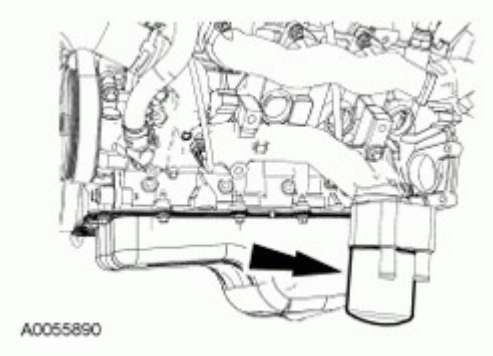

Fig. 557: Locating Oil Filter
Courtesy of FORD MOTOR CO.

17. Connect the 2 oil cooler coolant hoses.

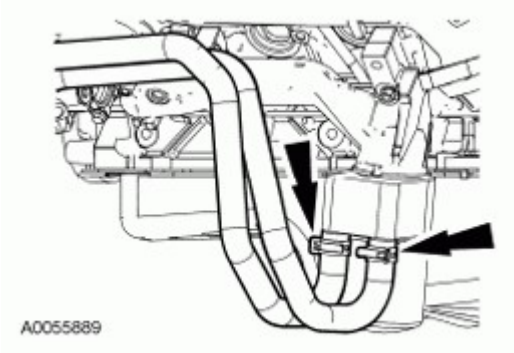

Fig. 558: Locating Oil Cooler Coolant Hoses Clamp
Courtesy of FORD MOTOR CO.

18. Connect the Power Steering Pressure (PSP) tube and the power steering reservoir hose to the power steering pump.
    - Tighten to 25 Nm (18 lb-ft).

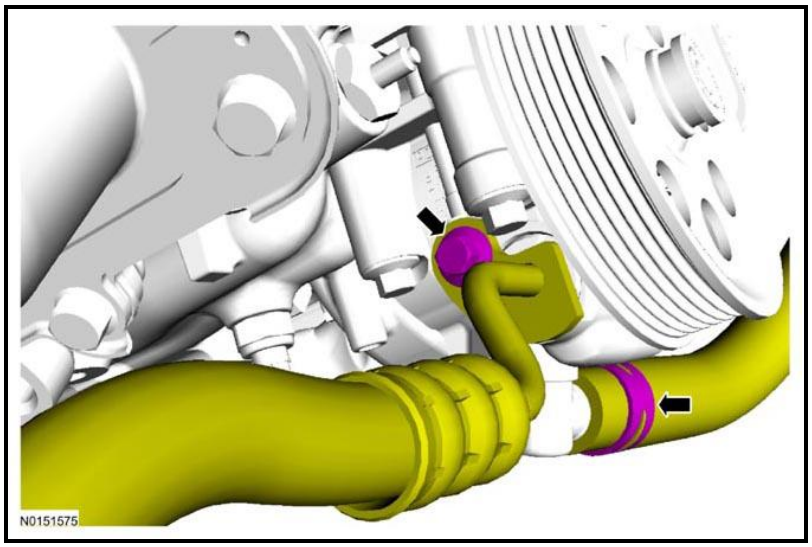

19. Connect the lower radiator coolant hose to the oil filter adapter coolant inlet.

Fig. 559: Locating Lower Radiator Coolant Hose Clamp
Courtesy of FORD MOTOR CO.

20. Position the fuel tube support bracket and install the 4 upper transmission-to-engine bolts.
    - Tighten to 60 Nm (44 lb-ft).

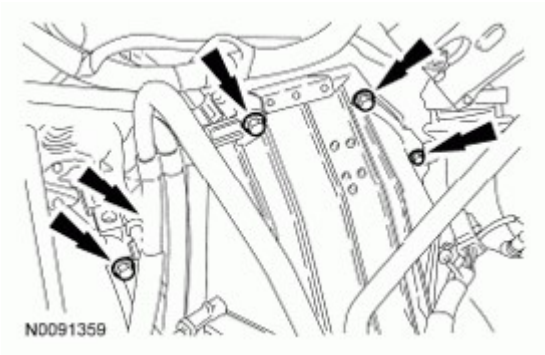

Fig. 560: Locating Upper Transmission-To-Engine Bolts
Courtesy of FORD MOTOR CO.

21. Position the ground strap, install the bolt and connect the RH HO2S electrical connector and retainer.
    - Tighten to 10 Nm (89 lb-in).

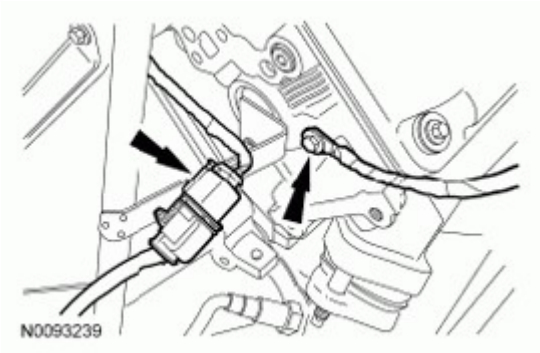

Fig. 561: Locating Ground Strap And Bolt
Courtesy of FORD MOTOR CO.

22. Connect the LH Heated Oxygen Sensor (HO2S) sensor electrical connector and retainer.

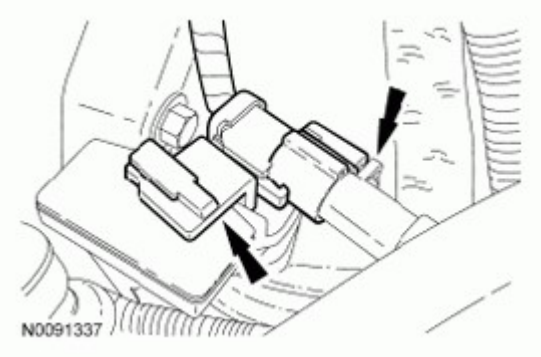

Fig. 562: Locating HO2S Sensor Electrical Connector And Retainer
Courtesy of FORD MOTOR CO.

23. Position the transmission wiring harness and connect the transmission wiring harness retainer.

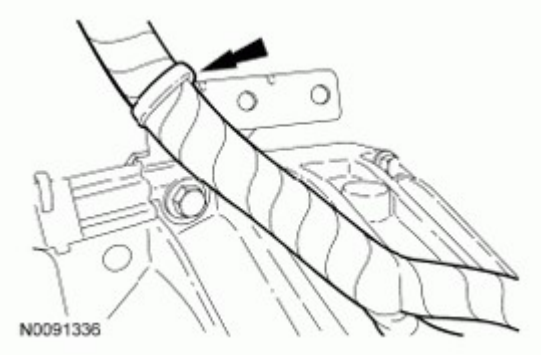

Fig. 563: Locating Transmission Wiring Harness Retainer
Courtesy of FORD MOTOR CO.

24. Connect the LH HO2S sensor electrical wiring harness retainer to the rear of the LH cylinder head.

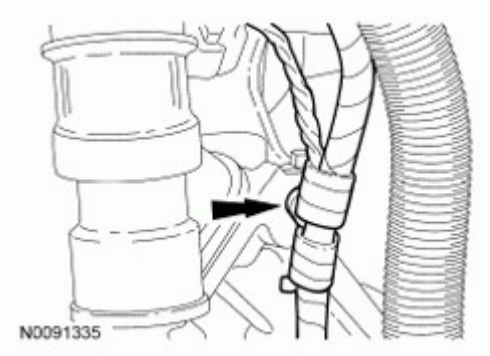

Fig. 564: Locating HO2S Sensor Electrical Wiring Harness Retainer
Courtesy of FORD MOTOR CO.

25. Connect the transmission wiring harness retainers to the engine wiring harness.

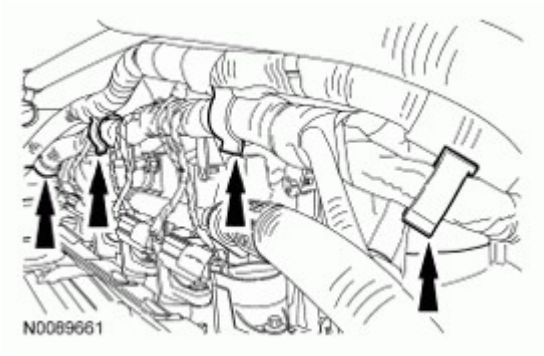

Fig. 565: Locating Transmission Wiring Harness Retainers
Courtesy of FORD MOTOR CO.

26. **NOTE: Do not reuse the O-ring seals. Lubricate the new O-ring seals with clean engine coolant before installing the heater outlet tube.**

Insert the heater outlet tube over the new seals.

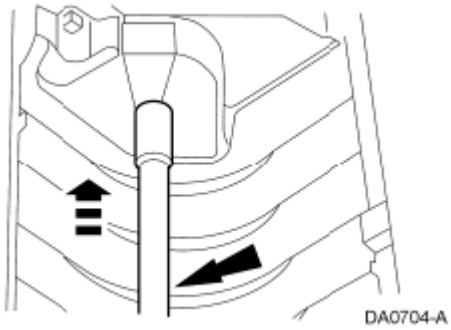

Fig. 566: Installing Heater Outlet Tube
Courtesy of FORD MOTOR CO.

27. Install the 2 heater outlet tube studs.
    - Tighten to 40 Nm (30 lb-ft).

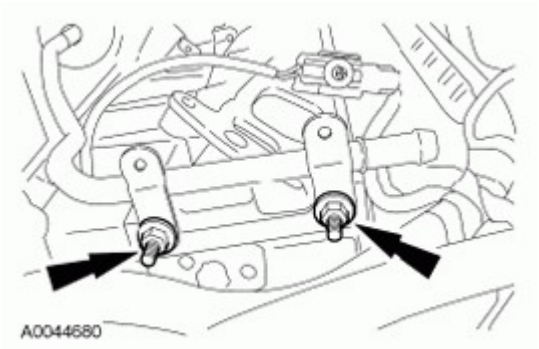

Fig. 567: Locating Heater Outlet Tube Studs
Courtesy of FORD MOTOR CO.

28. Connect the coolant hose to the heater outlet tube.

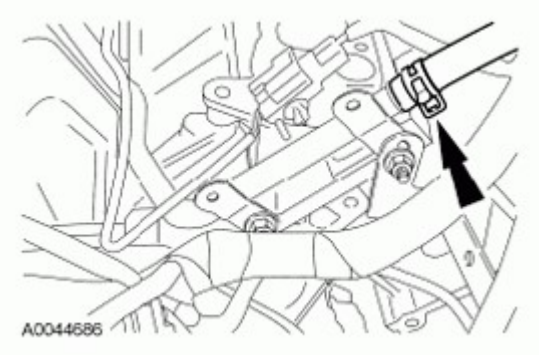

Fig. 568: Locating Coolant Hose To Heater Outlet Tube
Courtesy of FORD MOTOR CO.

29. Connect the KS electrical connector and engine wiring harness retainers.

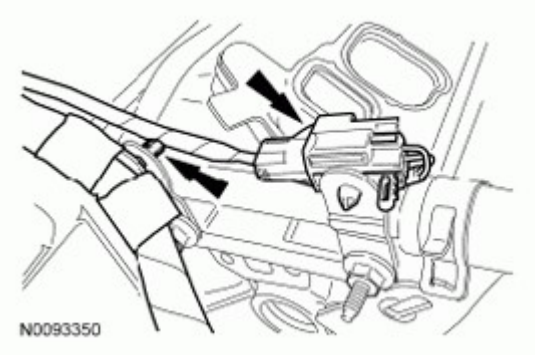

Fig. 569: Locating Knock Sensor (KS) Electrical Connector And Engine Wiring Harness Retainers
Courtesy of FORD MOTOR CO.

30. Position the transmission cooler tube support bracket and the starter wiring harness support bracket and install the nut.
    - Tighten to 28 Nm (21 lb-ft).

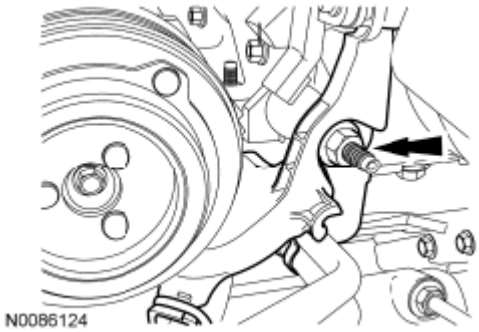

Fig. 570: Locating Transmission Cooler Tube Support Bracket Nut
Courtesy of FORD MOTOR CO.

31. Connect the oil fill tube to the RH valve cover.

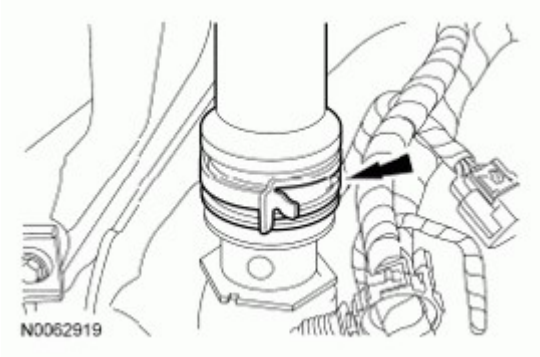

Fig. 571: Locating Oil Fill Tube And RH Valve Cover
Courtesy of FORD MOTOR CO.

32. Connect the RH HO2S and install the transmission filler tube.

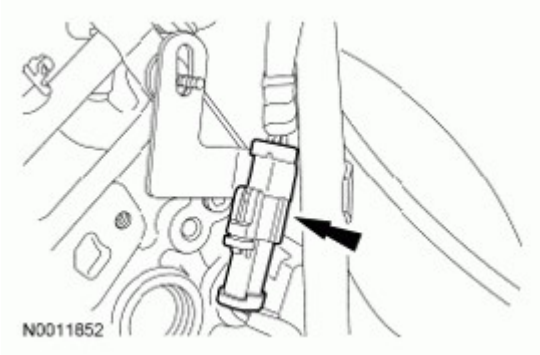

Fig. 572: Locating HO2S Electrical Connector
Courtesy of FORD MOTOR CO.

33. Connect the attachments at the transmission fluid filler tube and install the fluid level indicator.
    1. Install the fluid level indicator.
    2. Connect the rear heater hose hanger.

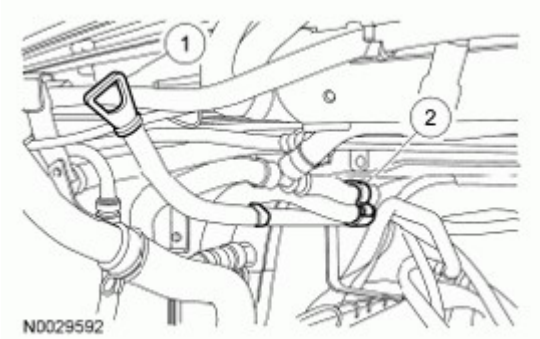

Fig. 573: Identifying Fluid Level Indicator And Rear Heater Hose Hanger
Courtesy of FORD MOTOR CO.

34. Install the engine oil filler tube support strap bolt.
    - Tighten to 9 Nm (80 lb-in).

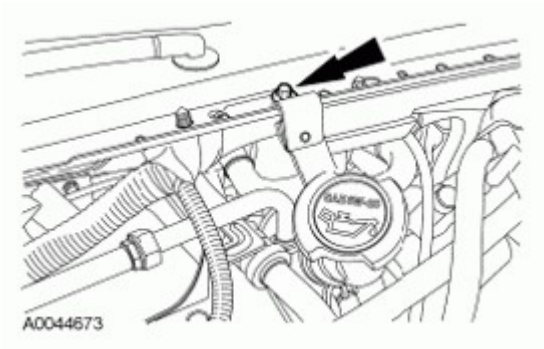

Fig. 574: Locating Oil Fill Tube Support Bracket Bolt
Courtesy of FORD MOTOR CO.

35. Position the engine wiring harness support bracket, install the ground strap and nut, and connect the electrical connector to the bracket.
    - Tighten to 10 Nm (89 lb-in).

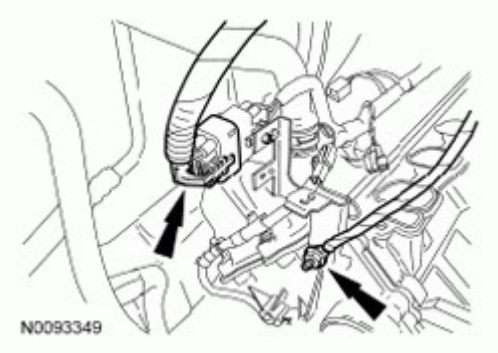

Fig. 575: Locating Electrical Connector And Ground Strap Nut
Courtesy of FORD MOTOR CO.

36. Position the generator wiring harness and connect the 2 generator wiring harness retainers.

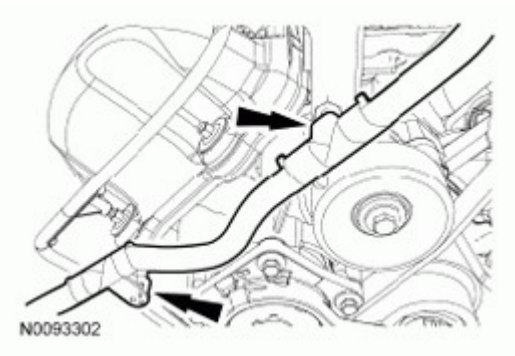

Fig. 576: Locating Generator Wiring Harness Retainers
Courtesy of FORD MOTOR CO.

37. Connect the engine wiring harness retainer and the 2 PCM electrical connectors.

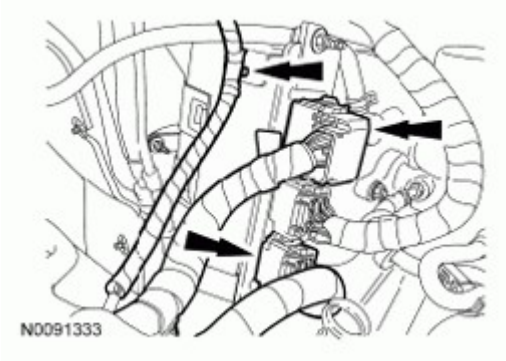

Fig. 577: Locating Engine Wiring Harness Retainer And PCM Electrical Connectors
Courtesy of FORD MOTOR CO.

38. Connect the electrical connector.

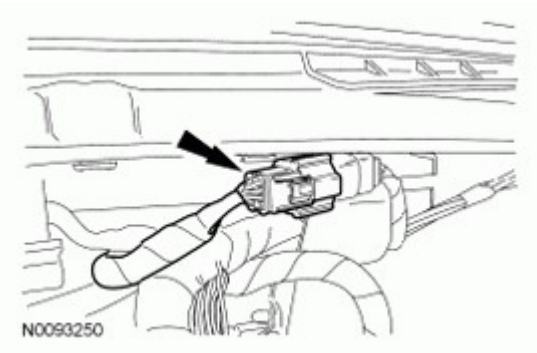

Fig. 578: Locating Electrical Connector
Courtesy of FORD MOTOR CO.

39. Position the crankcase ventilation tube and connect the quick connect coupling. For additional information, refer to **FUEL SYSTEM - GENERAL INFORMATION** .

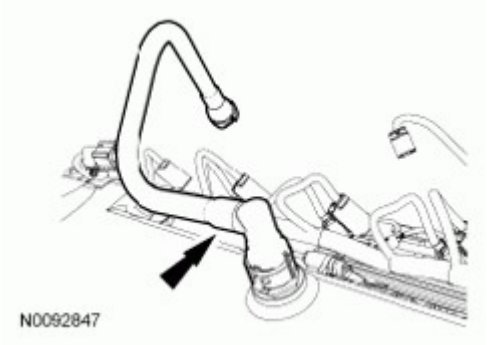

Fig. 579: Identifying Crankcase Ventilation Tube
Courtesy of FORD MOTOR CO.

40. Position the generator and install the bolts.

- Tighten to 25 Nm (18 lb-ft).

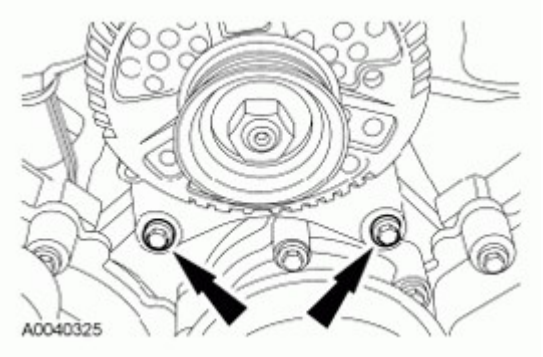

Fig. 580: Locating Generator Bolts
Courtesy of FORD MOTOR CO.

41. Connect the generator electrical connections.
    1. Tighten the B+ terminal nut to 8 Nm (71 lb-in).
    2. Connect the S electrical connector.
    3. Connect the ASI electrical connector.

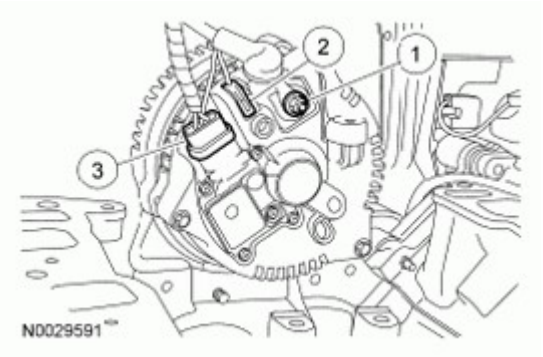

Fig. 581: Identifying ASI Electrical Connector And S Electrical Connector
Courtesy of FORD MOTOR CO.

42. **NOTE: LH shown in illustration, RH similar.**

Position the lower radiator support and install the 12 bolts.

- Tighten to 20 Nm (177 lb-in).

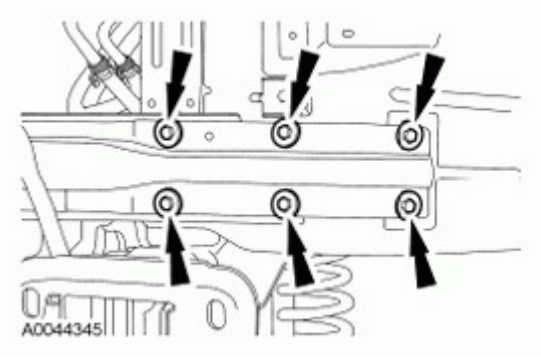

Fig. 582: Locating Lower Radiator Support Bolts
Courtesy of FORD MOTOR CO.

43. Position the wiring harness and connect the 4 wiring harness retainers.

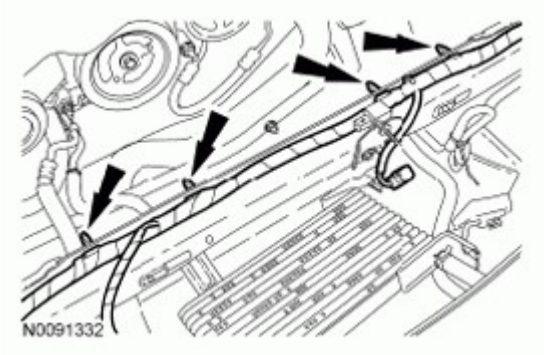

Fig. 583: Locating Wiring Harness Retainers And Wiring Harness Aside
Courtesy of FORD MOTOR CO.

44. Connect the 2 headlamp wiring harness retainers and position the ground wire and install the bolt.
    - Tighten to 10 Nm (89 lb-in).

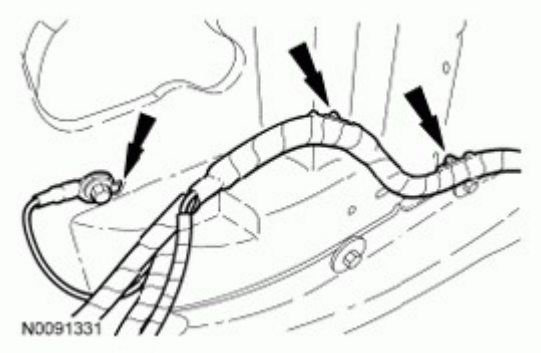

Fig. 584: Locating Headlamp Wiring Harness Retainers And Bolts
Courtesy of FORD MOTOR CO.

45. **NOTE: RH shown in illustration, LH similar.**

Position the upper radiator support and install the 8 bolts.

- Tighten to 20 Nm (177 lb-in).

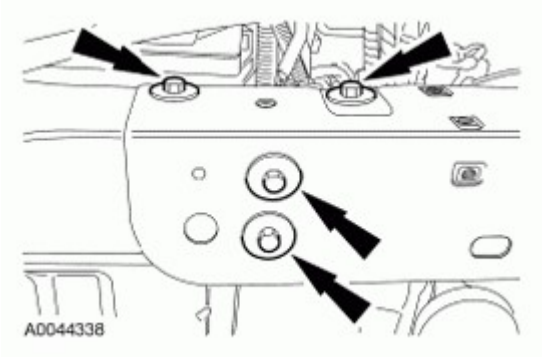

Fig. 585: Locating Upper Radiator Support Bolts
Courtesy of FORD MOTOR CO.

46. **NOTE: RH shown in illustration, LH similar.**

Position the 2 upper radiator support plates and install the 4 bolts.

- Tighten to 20 Nm (177 lb-in).

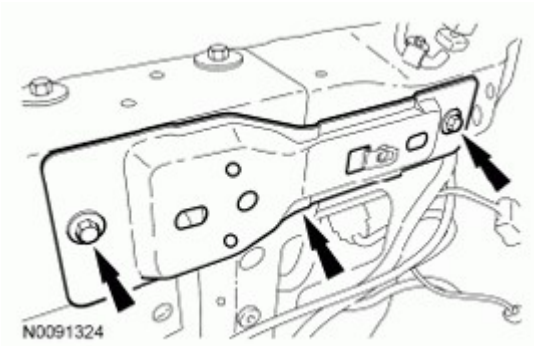

Fig. 586: Locating Upper Radiator Support Plates And Bolts
Courtesy of FORD MOTOR CO.

47. **NOTE: RH shown in illustration, LH similar.**

Position the RH and LH air deflectors and install the pin-type retainers.

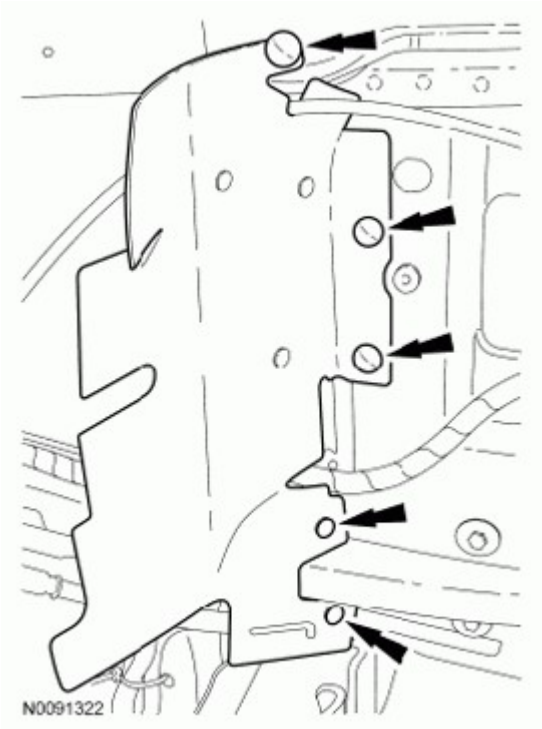

Fig. 587: Locating Pin-Type Retainers And Air Deflectors
Courtesy of FORD MOTOR CO.

48. Position the transmission fluid cooler and install the bolt.
    - Tighten to 10 Nm (89 lb-in).

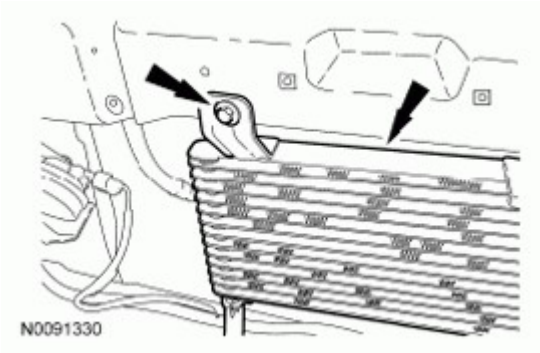

Fig. 588: Locating Transmission Fluid Cooler Aside And Bolt
Courtesy of FORD MOTOR CO.

49. Connect the transmission fluid cooler hose retainers.

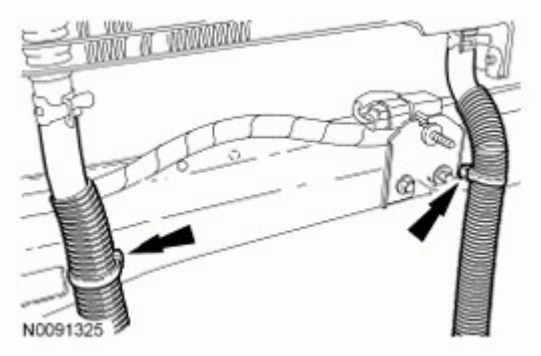

Fig. 589: Locating Transmission Fluid Cooler Hose Retainers
Courtesy of FORD MOTOR CO.

50. Connect the horn electrical connector.

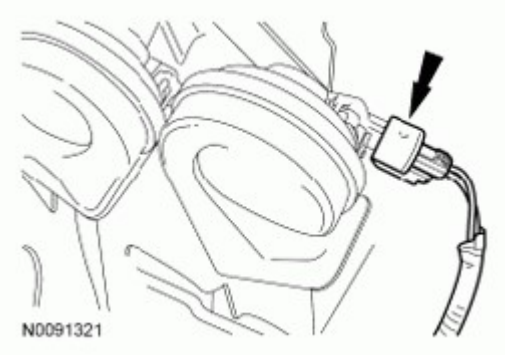

Fig. 590: Locating Horn Electrical Connector
Courtesy of FORD MOTOR CO.

51. Connect the front impact severity sensor electrical connector.

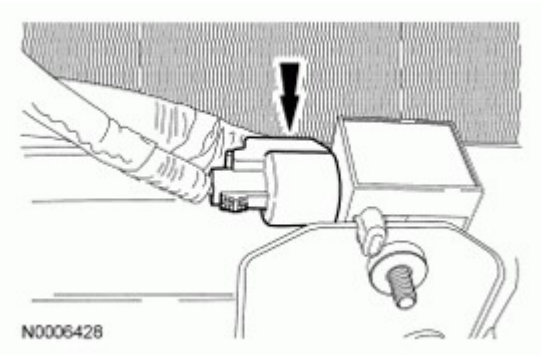

Fig. 591: Locating Front Impact Severity Sensor Electrical Connector
Courtesy of FORD MOTOR CO.

52. If equipped, connect the air temperature sensor electrical connector.

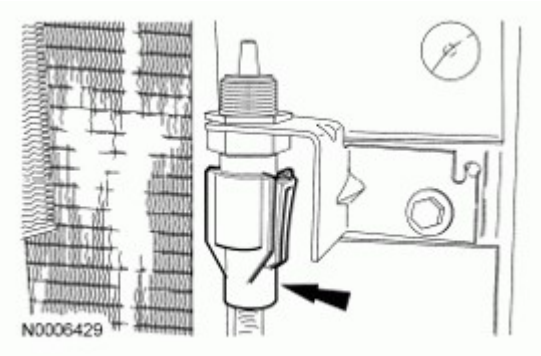

Fig. 592: Locating Air Temperature Sensor Electrical Connector
Courtesy of FORD MOTOR CO.

53. Route the battery feed wiring harness to the Power Distribution Box (PDB) and insert the routing clips.

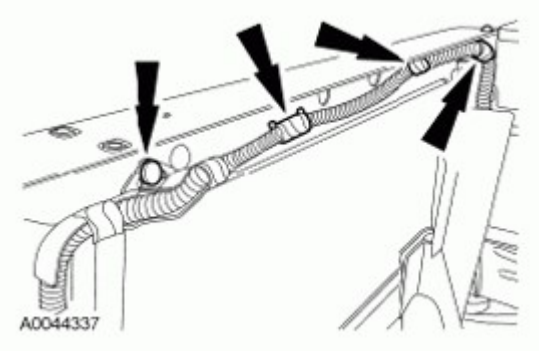

Fig. 593: Locating Harness Routing Clips And Battery Feed Wiring Harness
Courtesy of FORD MOTOR CO.

54. **NOTE: Cover removed from art for clarity.**

Install the battery feed cable to the PDB and the nuts.

- Tighten to 8 Nm (71 lb-in).

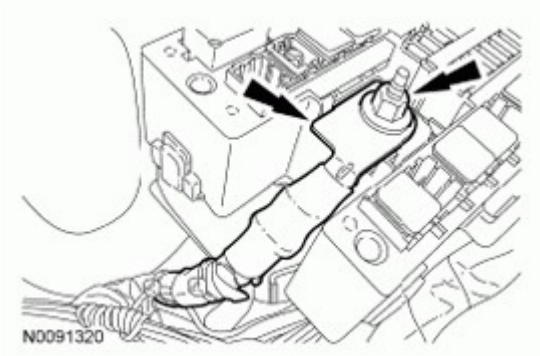

Fig. 594: Locating Power Distribution Box (PDB) And Nut
Courtesy of FORD MOTOR CO.

55. Position the power steering reservoir and install the 3 bolts.
    - Tighten to 20 Nm (177 lb-in).

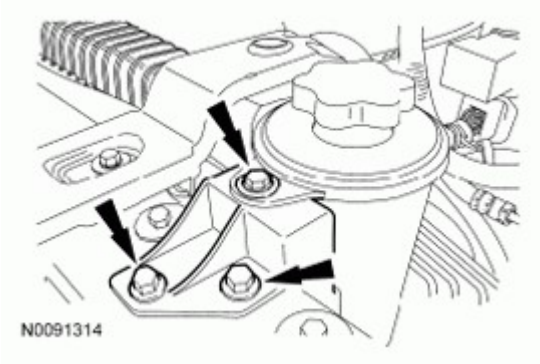

Fig. 595: Locating Power Steering Reservoir Aside And Bolts
Courtesy of FORD MOTOR CO.

56. Position the hood latch.
    1. Install the 2 bolts.
    2. Connect the cable position retainer.
        - Tighten to 12 Nm (106 lb-in).

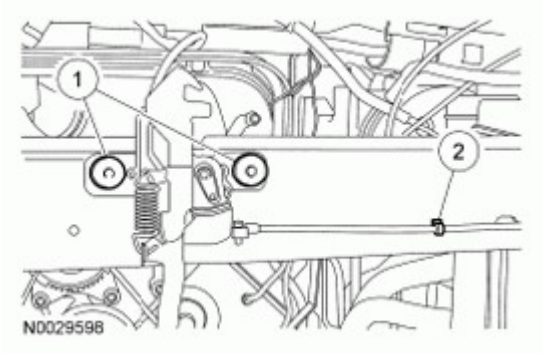

Fig. 596: Identifying Cable Routing Clip And Hood Latch Bolts
Courtesy of FORD MOTOR CO.

57. **NOTE: RH shown in illustration, LH similar.**

If equipped, position the A/C condenser core in the vehicle.

1. Install the 2 bolts.
2. Install A/C condenser bracket.
3. Position the A/C condenser core.
    - Tighten to 12 Nm (106 lb-in).

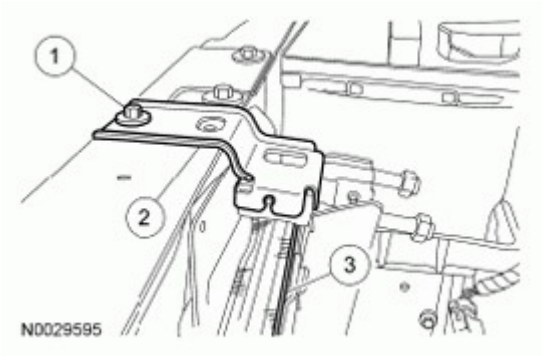

Fig. 597: Identifying A/C Condenser Brackets, A/C Condenser Core And Bolts
Courtesy of FORD MOTOR CO.

58. If equipped, connect the compressor discharge tube and the condenser-to-evaporator tube to the A/C condenser core and install the nuts.
    - Tighten to 15 Nm (133 lb-in).

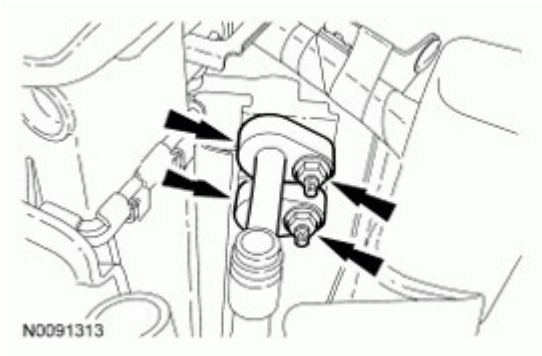

Fig. 598: Locating A/C Condenser Core And Nuts
Courtesy of FORD MOTOR CO.

59. If equipped, connect the compressor suction tube and install the nut.
    - Tighten to 15 Nm (133 lb-in).

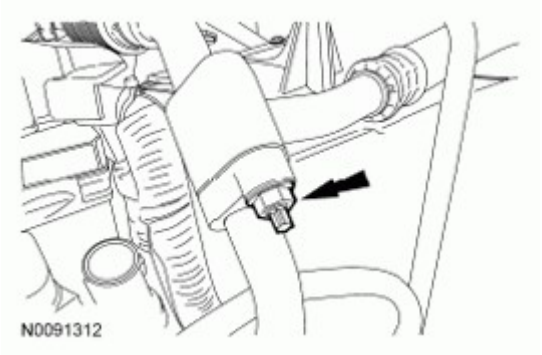

Fig. 599: Locating Compressor Suction Tube And Nut
Courtesy of FORD MOTOR CO.

60. If equipped, connect the A/C pressure cutoff switch electrical connector.

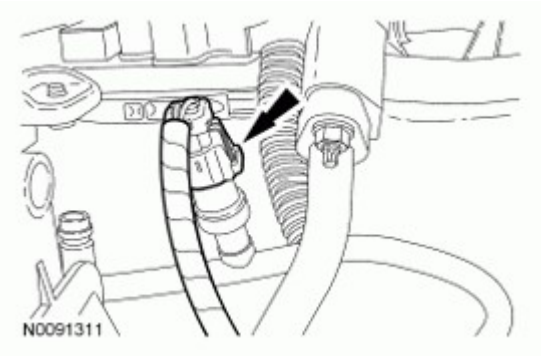

Fig. 600: Locating A/C Pressure Cutoff Switch Electrical Connector
Courtesy of FORD MOTOR CO.

61. Position the radiator in the vehicle.

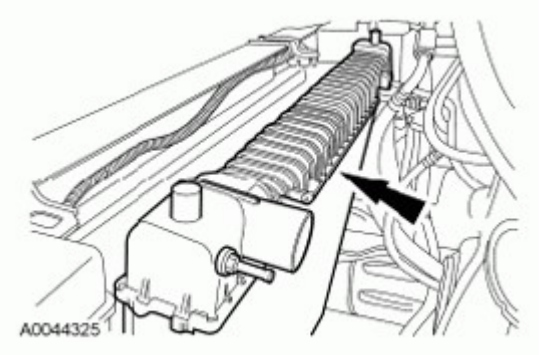

Fig. 601: Locating Radiator
Courtesy of FORD MOTOR CO.

62. **NOTE: LH shown in illustration, RH similar.**

Position the radiator support brackets and install the 4 bolts.

- Tighten to 20 Nm (177 lb-in).

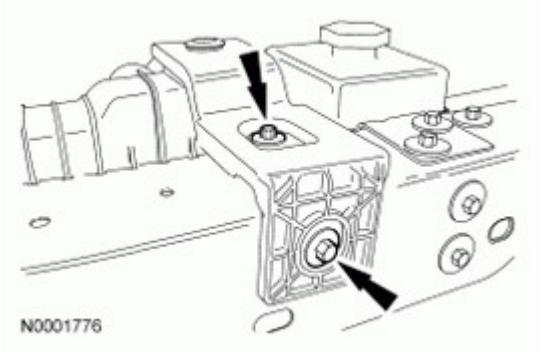

Fig. 602: Locating Radiator Support Brackets And Bolts
Courtesy of FORD MOTOR CO.

63. Position the fan shroud and the fan and fan clutch in the vehicle, and install the 2 bolts.
    - Tighten to 6 Nm (53 lb-in).

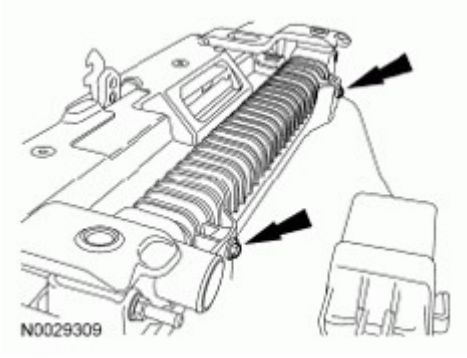

Fig. 603: Locating Fan Shroud Bolts
Courtesy of FORD MOTOR CO.

64. Connect the degas bottle hose and power steering hose retainers to the fan shroud.

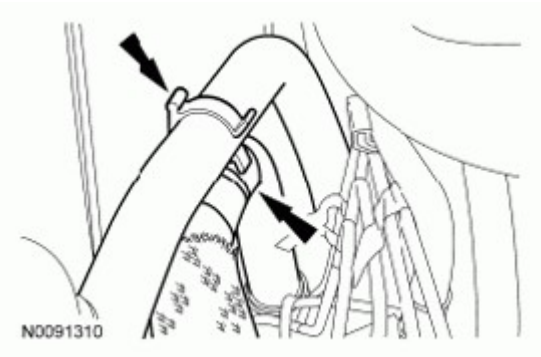

Fig. 604: Locating Degas Bottle Hose And Power Steering Hose Retainers
Courtesy of FORD MOTOR CO.

NOTE: The large clutch assembly nut has a RH thread and must be rotated clockwise to install it.

65. Using the Fan Pulley Holding Wrench and Fan Clutch Nut Wrench, install the fan blade and the fan clutch.

    - Calculate the correct torque wrench setting for the following torque. Refer to the Torque Wrench Adapter Formulas in the **Fig. 605**.

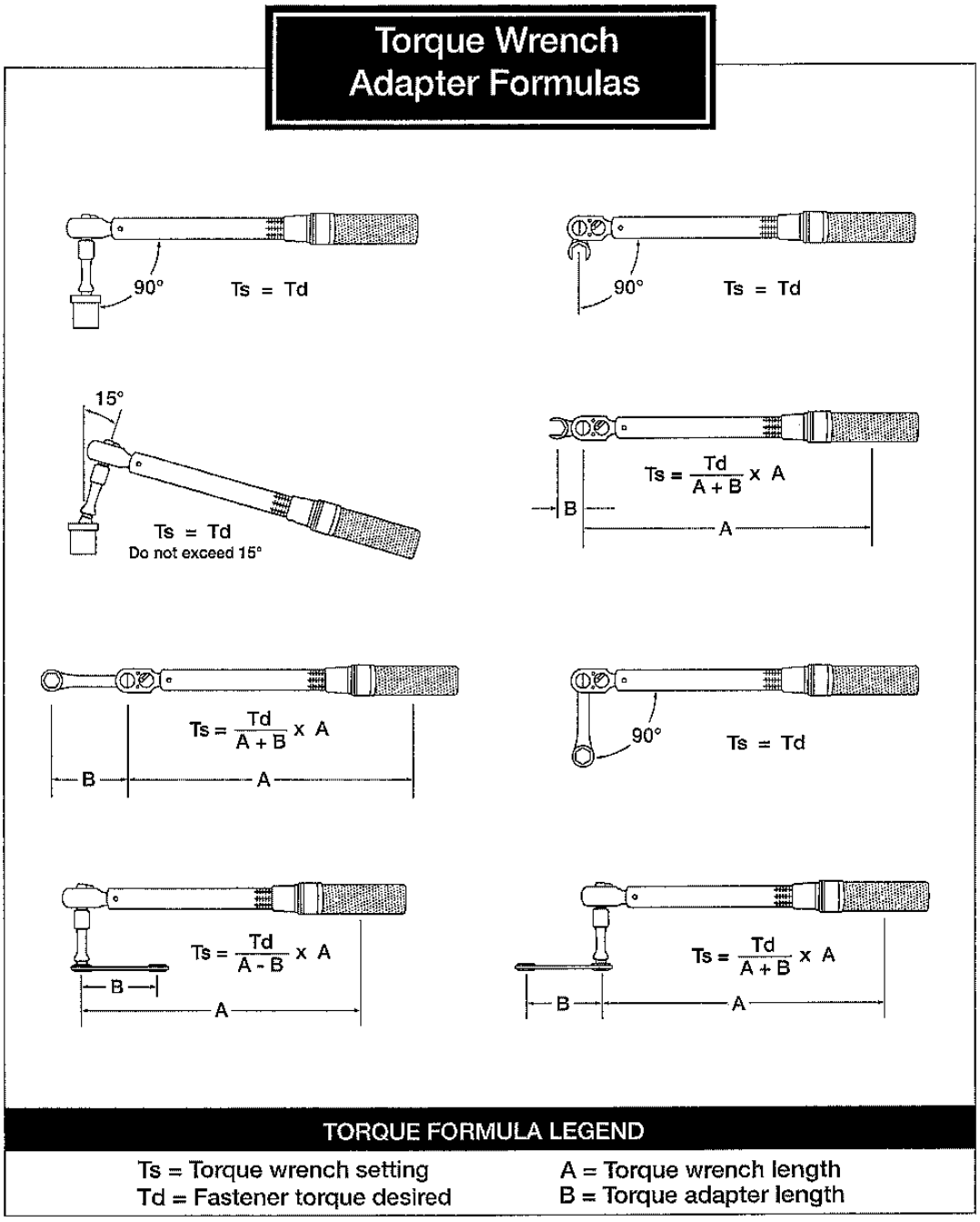

Fig. 605: Identifying Torque Wrench Adapter Formulas
Courtesy of FORD MOTOR CO.

- Tighten to 133 Nm (98 lb-ft).

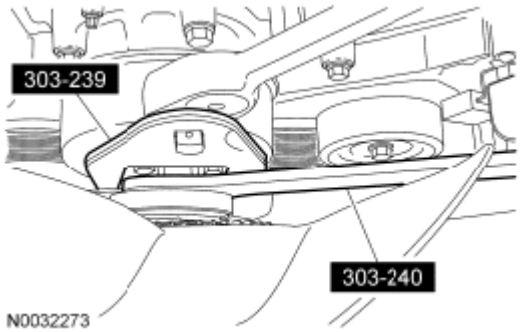

Fig. 606: Installing Cooling Fan And Clutch Assembly
Courtesy of FORD MOTOR CO.

66. Connect the upper radiator coolant hose and the degas bottle coolant hose to the radiator.

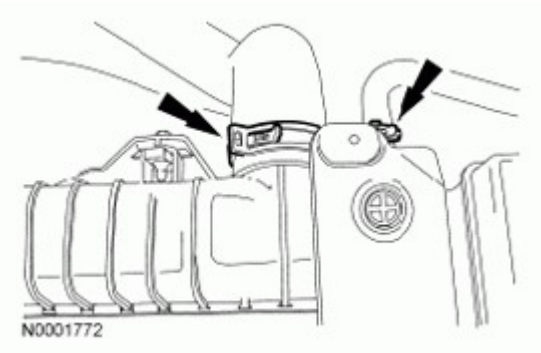

Fig. 607: Locating Upper Radiator And Degas Bottle Coolant Hoses Clamp
Courtesy of FORD MOTOR CO.

67. Install the radiator grille support. For additional information, refer to **FRONT END BODY PANELS** .
68. Connect the transmission cooler tubes.

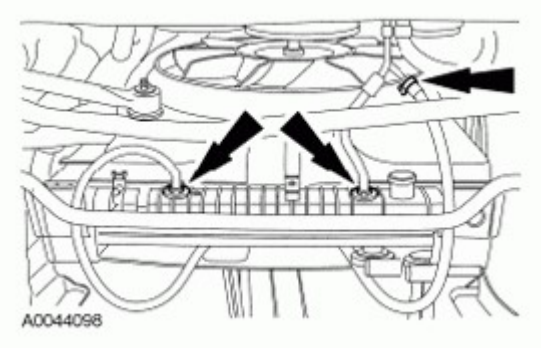

Fig. 608: Locating Transmission Cooler Hoses Clamp
Courtesy of FORD MOTOR CO.

69. Connect the lower radiator hose to the radiator.
    - Connect the hose.
    - Connect the hose hanger.

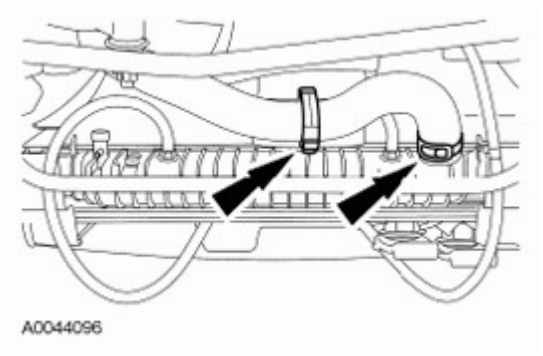

Fig. 609: Locating Radiator Hose Hanger
Courtesy of FORD MOTOR CO.

70. Install the front bumper. For additional information, refer to **BUMPERS** .
71. Install the starter. For additional information, refer to **STARTING SYSTEM** .
72. Fill the engine with clean engine oil.
73. Install the accessory drive belt. Refer to **ACCESSORY DRIVE** .
74. Install the intake manifold. For additional information, refer to **INTAKE MANIFOLD**.
75. Check the transmission fluid level and fill as necessary.
76. Fill and bleed the power steering system. For additional information, refer to **STEERING SYSTEM** .
77. Start the engine and check for leaks. Stop the engine and recheck the fluid levels.
78. If equipped, evacuate and recharge the air conditioning system. For additional information, refer to **CLIMATE CONTROL SYSTEM - GENERAL INFORMATION AND DIAGNOSTICS** .
79. After completing the repairs, perform the Misfire Monitor Neutral Profile Correction procedure.

VALVE SEALS

SPECIAL TOOLS

	Compressor, Valve Spring 303-567 (T97P-6565-AH)
	Compressor Spacer, Valve Spring 303-382 (T91P-6565-AH)

	
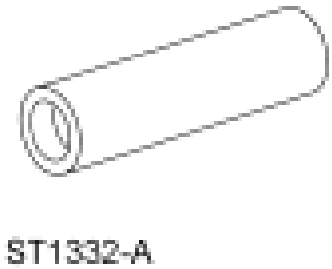	Installer, Valve Stem Oil Seal 303-383 (T91P-6571-A)

MATERIAL SPECIFICATIONS

Item	Specification
Motorcraft® SAE 5W-20 Premium Synthetic Blend Motor Oil (US); Motorcraft® SAE 5W-20 Super Premium Motor Oil (Canada) XO-5W20-QSP (US); CXO-5W20-LSP12 (Canada)	WSS-M2C945-A

All vehicles

1. **NOTE: Lubricate the valve seals with clean engine oil prior to installation.**

   Using the Valve Spring Compressor and Valve Stem Oil Seal Installer, install the new valve seal.

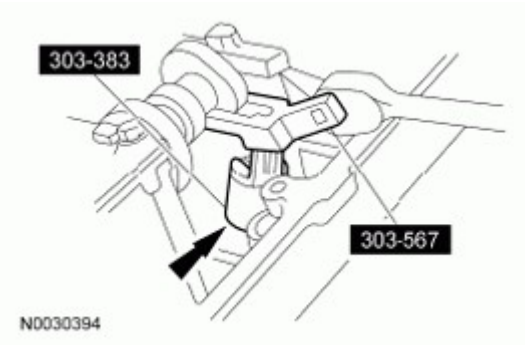

Fig. 610: Installing Valve Stem Seal
Courtesy of FORD MOTOR CO.

2. Install the valve spring and the valve spring retainer onto the valve.
3. Using the Valve Spring Compressor Spacer and Valve Spring Compressor, compress the valve spring. Install the valve spring retainer keys.

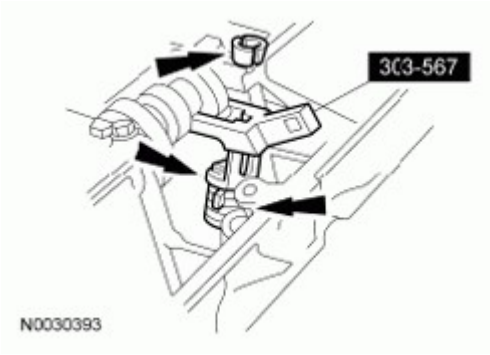

Fig. 611: Removing/Installing Valve Spring Retainer Keys
Courtesy of FORD MOTOR CO.

4. Install the Valve Spring Compressor Spacer between the valve spring coils to protect the valve seal from damage.

Fig. 612: Installing/Removing Valve Spring Compressor Spacer
Courtesy of FORD MOTOR CO.

5.

NOTE: The camshaft roller followers must be reinstallled in their original locations. Record the camshaft roller follower locations. Failure to follow these instructions may result in engine damage.

NOTE: Position the cam lobe away from the camshaft roller follower prior to removing each camshaft roller follower.

NOTE: It may be necessary to push the valve down while compressing the spring.

Use the Valve Spring Compressor to compress the valve spring and install the camshaft roller follower.

Fig. 613: Compressing Valve Spring Using Valve Spring Compressor
Courtesy of FORD MOTOR CO.

RH Valve Cover

NOTE: Do not use metal scrapers, wire brushes, power abrasive discs or other abrasive means to clean sealing surfaces. These tools cause scratches and gouges which make leak paths.

6. Apply instant gel adhesive completely around the gasket groove in the valve cover. Install the new valve cover gasket.

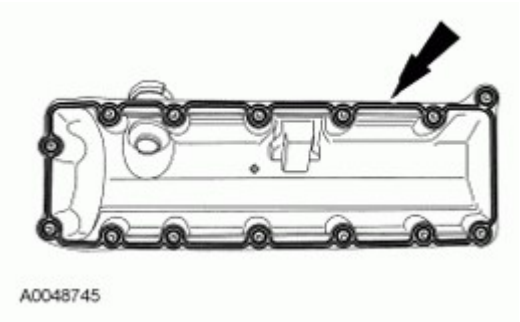

Fig. 614: Identifying Adhesive Applying Area Around Gasket
Courtesy of FORD MOTOR CO.

NOTE: If not secured within 4 minutes, the sealant must be removed and the sealing area cleaned with silicone gasket remover and metal surface prep. Follow the directions on the packaging. Allow to dry until there is no sign of wetness, or 4 minutes, whichever is longer. Failure to follow this procedure can cause future oil leakage.

7. Apply a bead of silicone gasket and sealant in 2 places where the engine front cover meets the cylinder head.

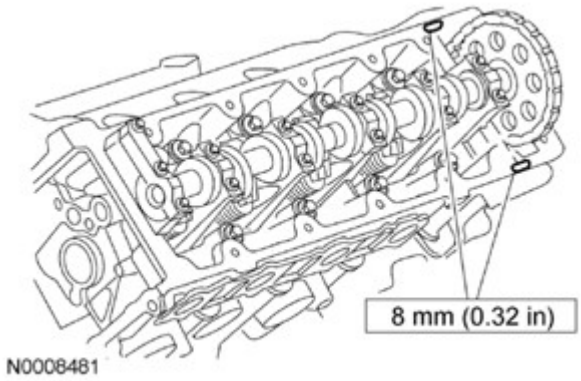

Fig. 615: Identifying Silicone Gasket And Sealant Applying Area On Gasket Surface
Courtesy of FORD MOTOR CO.

8. Position the RH valve cover on the cylinder head and loosely install the 14 fasteners.
9. Tighten the 14 fasteners in the sequence shown in illustration.
   - Tighten to 10 Nm (89 lb-in).

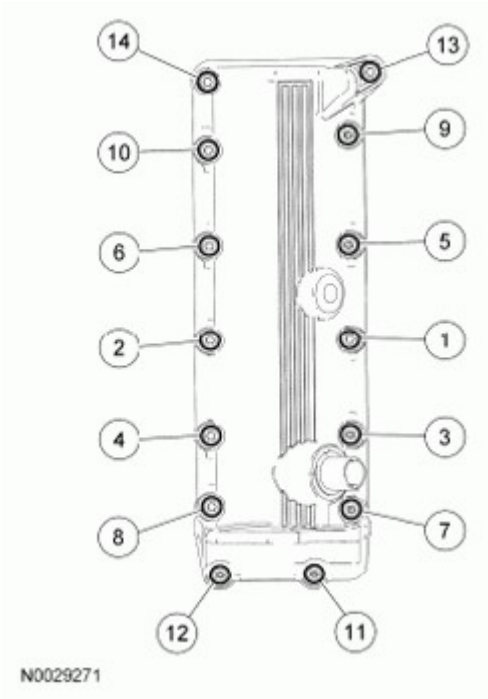

Fig. 616: Identifying Cylinder Head Bolt Tightening Sequence
Courtesy of FORD MOTOR CO.

LH Valve Cover

NOTE: **Do not use metal scrapers, wire brushes, power abrasive discs or other abrasive means to clean sealing surfaces. These tools cause scratches and gouges which make leak paths.**

10.

NOTE: **If not secured within 4 minutes, the sealant must be removed and the sealing area cleaned with silicone gasket remover and metal surface prep. Follow the directions on the packaging. Allow to dry until there is no sign of wetness, or 4 minutes, whichever is longer. Failure to follow this procedure can cause future oil leakage.**

11. Apply a bead of silicone gasket and sealant in 2 places where the engine front cover meets the cylinder head.

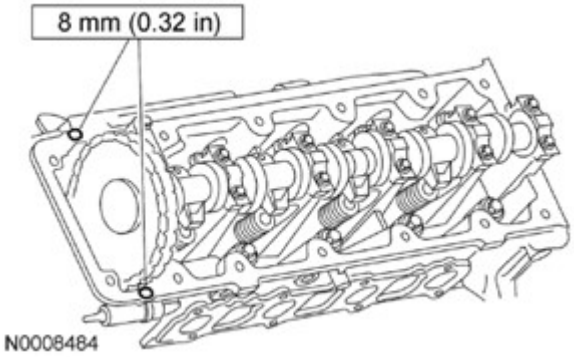

Fig. 617: Identifying Silicone Gasket And Sealant Applying Area On Valve Cover Gasket Surface
Courtesy of FORD MOTOR CO.

12. Position the LH valve cover on the cylinder head and loosely install the 13 fasteners.
13. Tighten the 13 fasteners in the sequence shown in illustration.
    - Tighten to 10 Nm (89 lb-in).

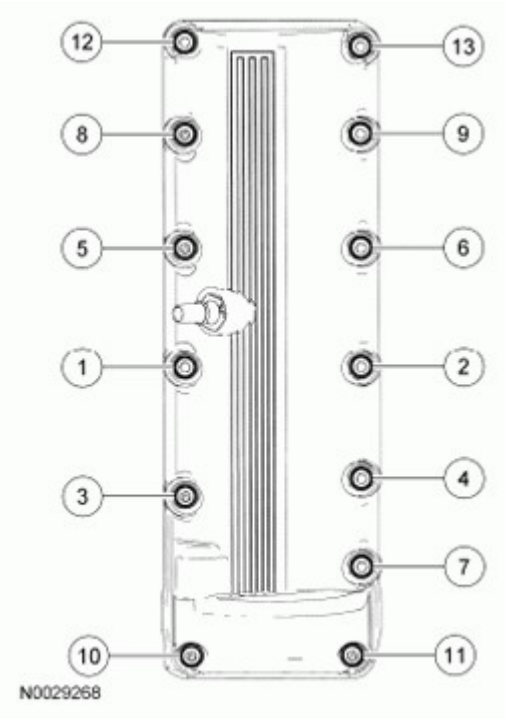

Fig. 618: Identifying Cylinder Head Bolts Tightening Sequence
Courtesy of FORD MOTOR CO.

14. Position the oil level indicator and tube and install the bolt.
    - Tighten to 10 Nm (89 lb-in).

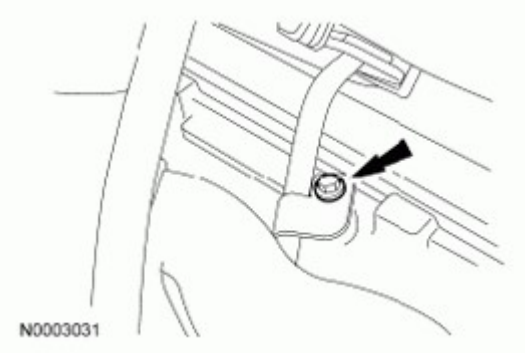

Fig. 619: Locating Oil Level Indicator Tube Bracket Bolt
Courtesy of FORD MOTOR CO.

15. Install the oil level indicator and tube support bracket nut.
    - Tighten to 25 Nm (18 lb-ft).

Fig. 620: Locating Oil Level Indicator And Tube Support Bracket Nut
Courtesy of FORD MOTOR CO.

16. Install the spark plugs.
    - Tighten to 18 Nm (159 lb-in).

All Vehicles

17. Install the engine. Refer to **ENGINE**.

