KX250F

Motorcycle

OWNER'S MANUAL

⚠ **Read this manual carefully. It contains safety information.**

Kawasaki

Quick Reference Guide

This Quick Reference Guide will assist you in finding the information you’re looking for.

A Table of Contents is included after the Foreword.

GENERAL INFORMATION

MAINTENANCE AND ADJUSTMENT

TROUBLESHOOTING GUIDE

TUNING

STORAGE

IMPORTANT INFORMATION
● This vehicle is designed for the operator only, no passengers. ● This vehicle is a competition model only and was not manufactured for use on public streets, roads or highways. ● The use of this vehicle should be limited to participation in sanctioned competition events upon a closed course. ● This vehicle should not be used for general off-road recreational riding. ● Read owner's manual.

Whenever you see the symbols shown below, heed their instructions! Always follow safe operating and maintenance practices.

⚠ DANGER

DANGER indicates a hazardous situation which, if not avoided, will result in death or serious injury.

⚠ WARNING

WARNING indicates a hazardous situation which, if not avoided, could result in death or serious injury.

NOTICE

NOTICE is used to address practices not related to personal injury.

NOTE

○ *NOTE indicates information that may help or guide you in the operation or service of the vehicle.*

IMPORTANT NOTICE

THIS VEHICLE IS A COMPETITION MODEL ONLY AND WAS NOT MANUFACTURED FOR, NOR SHOULD IT BE USED ON, PUBLIC STREETS, ROADS, OR HIGHWAYS. THE USE OF THIS VEHICLE SHOULD BE LIMITED TO PARTICIPATION IN SANCTIONED COMPETITION EVENTS UPON A CLOSED COURSE. THIS VEHICLE SHOULD NOT BE USED FOR GENERAL OFF-ROAD RECREATIONAL RIDING. READ OWNER'S MANUAL.

⚠ WARNING

THIS VEHICLE SHOULD NOT BE USED FOR GENERAL OFF-ROAD RECREATIONAL RIDING.

DISCLAIMER OF WARRANTY

This motorcycle is sold AS IS, with all faults, obvious or concealed and there are NO WARRANTIES, expressed or implied. Including warranties of MERCHANTABILITY or FITNESS FOR PURPOSE.

The purchaser accepts all responsibilities concerning quality, performance, cost of service and/or necessary repairs.

Motorcycle Noise Emission Control Information

This motorcycle is designed for closed course competition use only. It does not conform to U.S. EPA motorcycle noise standards.

NOTICE

Off-road motorcycling is a wonderful sport, and we hope you will enjoy it to the fullest. However, if improperly conducted, this sport has the potential to cause environmental problems as well as conflicts with other people. Responsible use of your off-road motorcycle will ensure that these problems and conflicts do not occur. TO PROTECT THE FUTURE OF YOUR SPORT, MAKE SURE YOU USE YOUR MOTORCYCLE LEGALLY, SHOW CONCERN FOR THE ENVIRONMENT, AND RESPECT THE RIGHTS OF OTHER PEOPLE.

⚠ WARNING

The engine exhaust from this product contains chemicals known to the State of California to cause cancer, birth defects or other reproductive harm.

FOREWORD

Congratulations on your choosing this Kawasaki motorcycle. Your new motorcycle is the product of Kawasaki's advanced engineering, exhaustive testing, and continuous striving for a superior lightweight, high-performance machine with superb handling and stability for racing and sporting use.

Your new KX is a highly tuned competition machine for participation in racing events. As with any mechanical device, proper care and maintenance are important for trouble-free operation and top performance. This manual is written to enable you to keep your KX properly tuned and adjusted.

Due to improvements in design and performance made during production, in some cases there may be minor discrepancies between the actual vehicle and the illustrations and text in this manual.

KAWASAKI HEAVY INDUSTRIES, LTD.
Motorcycle & Engine Company

© 2014 Kawasaki Heavy Industries, Ltd.

Feb. 14, 2014. (2)

TABLE OF CONTENTS

SPECIFICATIONS 8
GENERAL INFORMATION 11
Location of Labels 11
Location of Parts 16
Side Stand 19
Fuel 20
Fuel Requirement: 21
Kick Pedal 23
Starting the Engine 23
Launch Control Mode 25
DFI Setting Data Selection 26
Shifting Gears 27
Stopping the Motorcycle 28
Stopping the Engine 28
Break-In 29
Daily Pre-Ride Checks 30
After-Race Checks 32
MAINTENANCE AND ADJUSTMENT 33
Periodic Maintenance Chart 33
Engine Oil 38
Cooling System 43
Spark Plug 47
Air Cleaner 54
Throttle Cable 60
Throttle Body Assy 61
Clutch 72
Valve Clearance 79
Exhaust System 84
Rear Axle Nut 88
Drive Chain 89
Adjustable Ergonomics 94
Footpeg 96
Brakes 98
Steering 101
Front Suspension 104
Rear Suspension (UNI-TRAK®) 154
Wheels 160
Hoses Inspection 162
Tightening Torques of Nuts and Bolts 163
Cleaning Your Motorcycle 167
Lubrication 169
DFI Self-Diagnosis 172
TROUBLESHOOTING GUIDE 179
TUNING 186
Suspension 186
Gearing 192
Special Care According to Track Conditions 193
OPTIONAL PARTS 194
PRE-RACE CHECKS AND AFTER-RACE MAINTENANCE 195
STORAGE 197
Before Storage 197
After Storage 198
ENVIRONMENTAL PROTECTION 199
WIRING DIAGRAM 200

SPECIFICATIONS

DIMENSIONS	
Overall Length	2 170 mm (85.43 in.)
Overall Width	820 mm (32.3 in.)
Overall Height	1 270 mm (50.00 in.)
Wheelbase	1 475 mm (58.07 in.)
Road Clearance	330 mm (13.0 in.)
Curb Mass	106.0 kg (233.7 lb)
Fuel Tank Capacity	6.1 L (1.6 US gal)
ENGINE	
Type	4-stroke, DOHC, single-cylinder, liquid-cooled
Bore × Stroke	77.0 × 53.6 mm (3.03 × 2.11 in.)
Displacement	249 cm^3 (15.2 cu in.)
Compression Ratio	13.8:1
Fuel System	FI (Fuel Injection)
Starting System	Primary kick
Ignition System	Digital DC-CDI
Ignition Timing	4° BTDC @2 000 r/min (rpm)
Lubrication System	Forced lubrication (semi-dry sump)
Spark Plug	NGK CPR8EB-9
Spark Plug Terminal	Solid-post

TRANSMISSION	
Transmission Type	5-speed, constant mesh, return shift
Clutch Type	Wet, multi disc
Driving System	Chain drive
Gear Ratio:	
1st	2.142 (30/14)
2nd	1.750 (28/16)
3rd	1.444 (26/18)
4th	1.235 (21/17)
5th	1.045 (23/22)
Primary Reduction Ratio	3.350 (67/20)
Final Reduction Ratio	3.846 (50/13)
Overall Drive Ratio	13.470 at Top gear
Engine Oil:	
Type	API SG, SH, SJ, SL or SM with JASO MA, MA1 or MA2
Viscosity	SAE 10W-40
Capacity	1.0 L (1.1 US qt)
FRAME	
Type	Tubular, semi-double cradle
Steering Angle	42° to either side
Caster	28.7°
Trail	126.4 mm (4.98 in.)

Tire Size/Type:	
Front	80/100-21 51M/DUNLOP MX51FA
Rear	100/90-19 57M/DUNLOP MX51
Rim Size:	
Front	21 × 1.60
Rear	19 × 1.85
Suspension:	
Front	Telescopic fork (upside-down)
Rear	New Uni-trak® swingarm
Front Suspension Travel	315 mm (12.4 in.)
Rear Wheel Travel	310 mm (12.2 in.)
Front Fork Oil:	
Type	Kawasaki Fork Oil SS19
Amount (Left Front Fork):	
Cylinder Unit	330 mL (11.2 US oz.)
Outer Tube	300 mL (10.1 US oz.)
Amount (Right Front Fork)	223 mL (7.54 US oz.)

BRAKES

Type:	
Front	Single disc
Rear	Single disc

Specifications are subject to change without notice.

GENERAL INFORMATION

Location of Labels

All warning labels which are on your vehicle are repeated here. Read labels on your vehicle and understand them thoroughly. They contain information which is important for your safety and the safety of anyone else who may operate your vehicle. Therefore, it is very important that all warning labels be on your vehicle in the locations shown. If any label is missing, damaged, or worn, get a replacement from your Kawasaki dealer and install it in the correct position.

NOTE

○ *The sample warning labels in this section have part numbers to help you and your dealer obtain the correct replacement.*

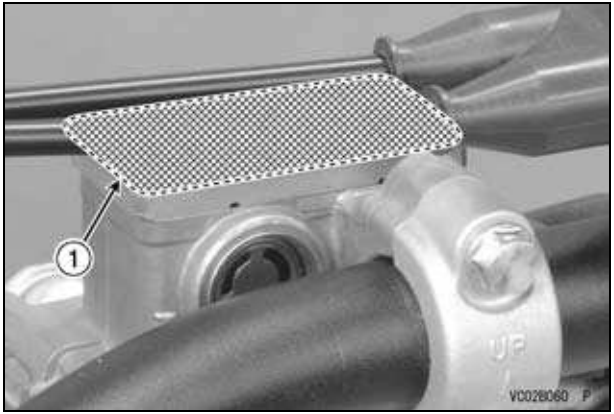

1. Brake Fluid (Front)

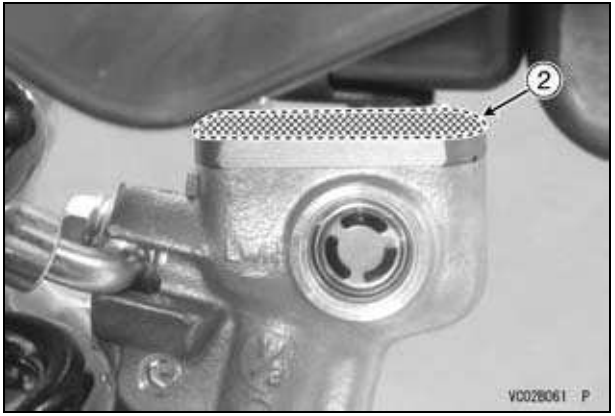

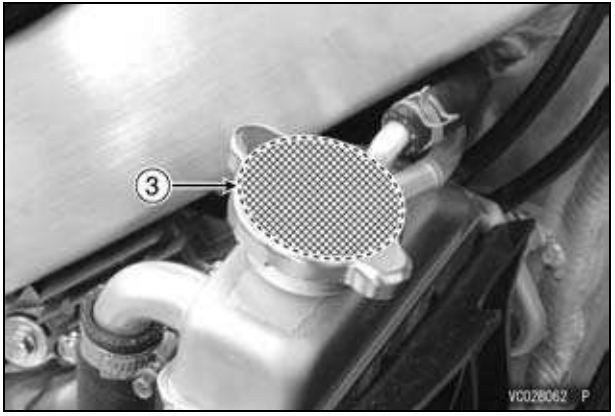

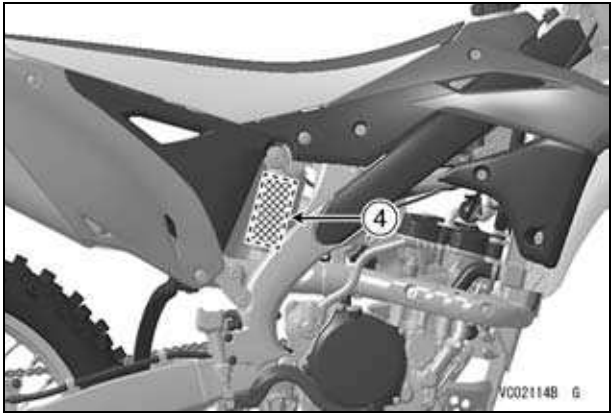

2. Brake Fluid (Rear)
3. Radiator Cap Danger
4. Rear Shock Absorber Warning

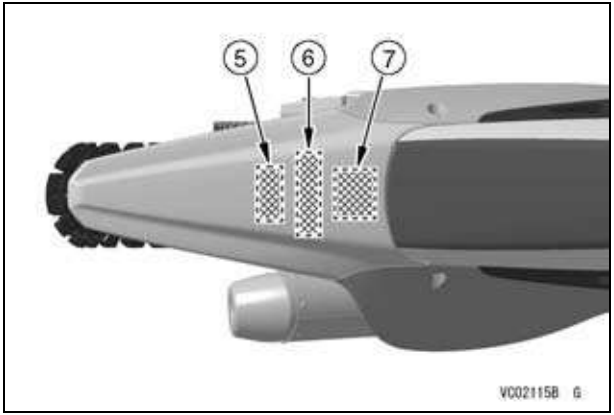

5. Noise Emission Control Information
6. Important Information
7. Disclaimer of Warranty

1)

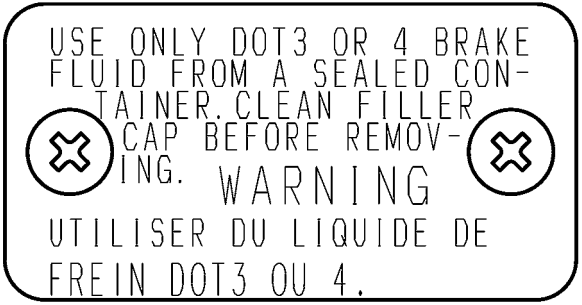

VC02074B S

2)

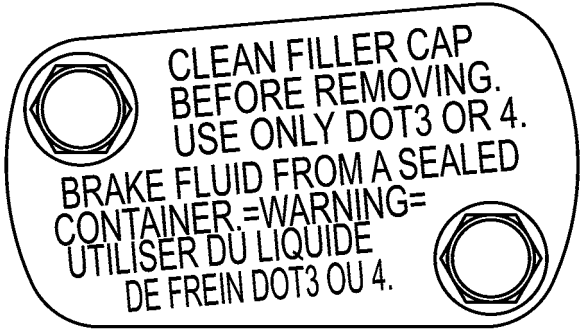

VC02096B S

3)

BD03299C S

4)

WARNING

This unit contains high pressure nitrogen gas.
Mishandling can cause explosion.
● Do not incinerate, puncture or open.

AVERTISSEMENT

Cette unité contient de l'azote à haute pression.
Une mauvaise manipulation peut entraîner d'explosion.
● Ne pas brûler ni perforer ni ouvrir.

警告

高圧窒素ガス入りです。
取り扱いを誤ると爆発する恐れがあります。
● 火中への投入、穴あけ、分解はしないでください。

BD03238CM2 C

5)

Motorcycle Noise Emission Control Information

This motorcycle is designed for closed course competition use only. It does not conform to U.S. EPA motorcycle noise standards.

56030-1231

VC02094B S

6)

IMPORTANT INFORMATION

- This vehicle is designed for the operator only, no passengers.
- This vehicle is a competition model only and was not manufactured for use on public streets, roads or highways.
- The use of this vehicle should be limited to participation in sanctioned competition events upon a closed course.
- This vehicle should not be used for general off-road recreational riding.
- Read owner's manual.

56071-0028

VC02076B S

7)

DISCLAIMER OF WARRANTY

This motorcycle is sold AS IS, with all faults, obvious or concealed and there are NO WARRANTIES expressed or implied. Including warranties of MERCHANTABILITY or FITNESS FOR PURPOSE.

The purchaser accepts all responsibilities concerning quality, performance, cost of service and/or necessary repairs.

56030-1229

VC02092B S

Location of Parts

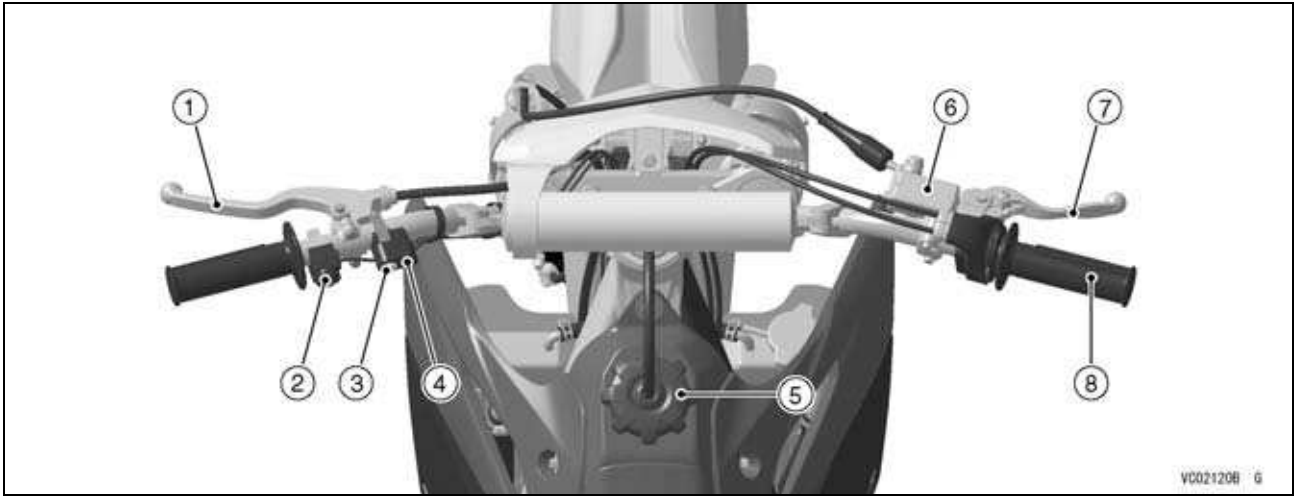

1. Clutch Lever
2. Engine Stop Button
3. Launch Control Mode Button
4. Orange Launch Control Mode/FI Warning Indicator Light
5. Fuel Tank Cap
6. Front Brake Fluid Reservoir
7. Front Brake Lever
8. Throttle Grip

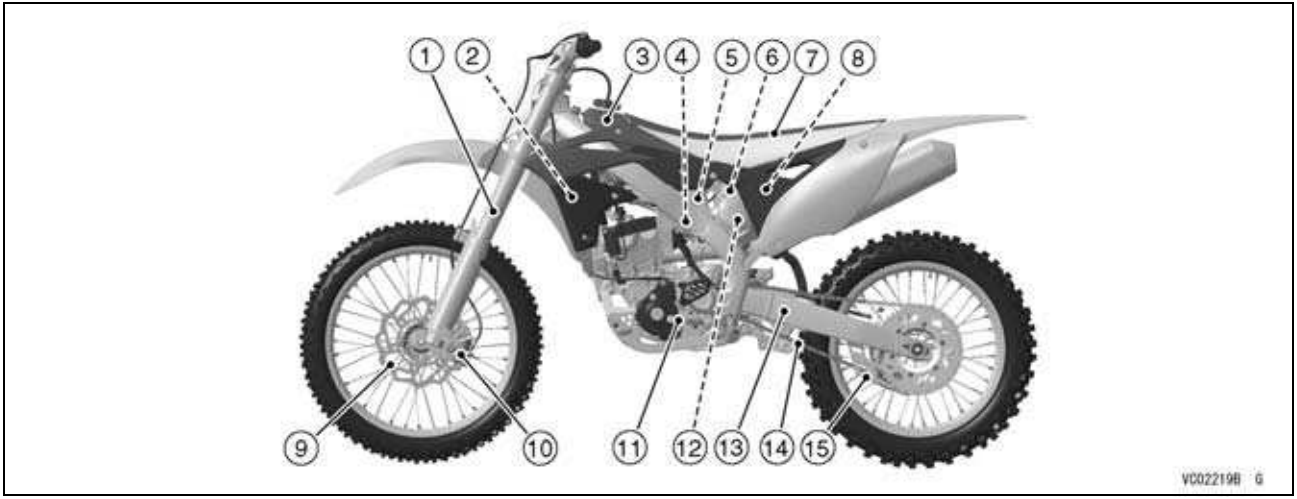

1. Front Fork
2. Radiator
3. Fuel Tank
4. Throttle Body Assy
5. Downstream Injector
6. Upstream Injector
7. Seat
8. Air Cleaner Element
9. Brake Disc
10. Brake Caliper
11. Shift Pedal
12. Rear Shock Absorber
13. Swingarm
14. Drive Chain
15. Chain Guide

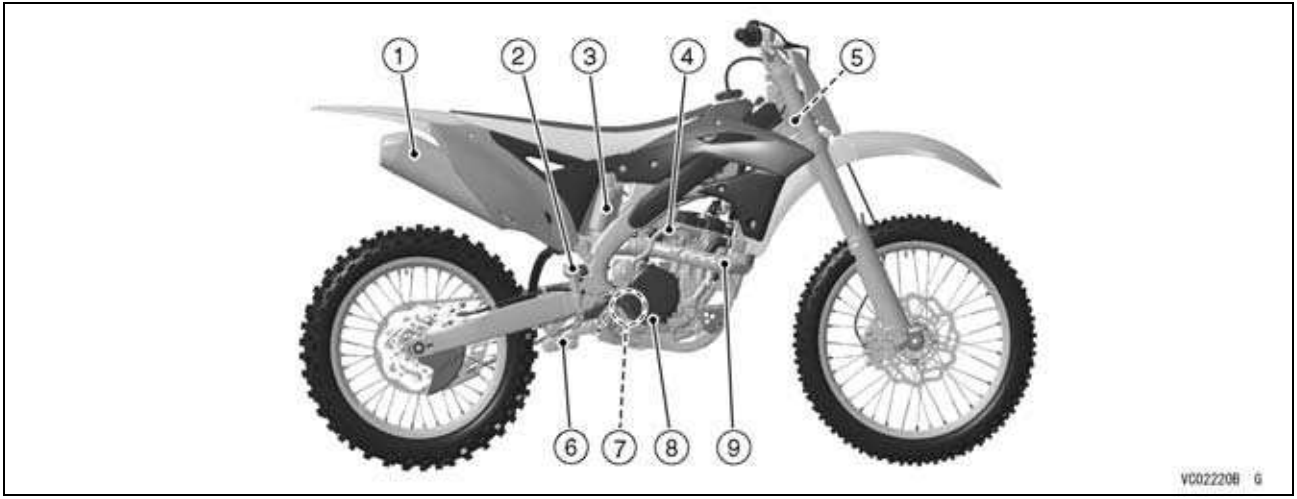

1. Muffler
2. Rear Brake Fluid Reservoir
3. Rear Shock Absorber Gas Reservoir
4. Kick Pedal
5. DFI Setting Data Selection Connector
6. Uni-Trak® Tie-Rod and Rocker Arm
7. Oil Level Inspection Window
8. Rear Brake Pedal
9. Exhaust Pipe

Side Stand

To install the side stand, insert its flat end into the rear axle as shown in the figure.

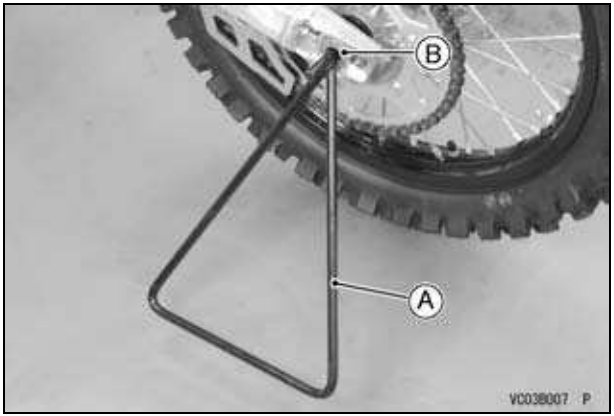

A. Side Stand
B. Rear Axle

⚠ WARNING

Riding with the side stand can cause a crash resulting in injury. Do not start the engine or attempt to ride the motorcycle when the side stand is installed.

NOTE

○ *Support the motorcycle with a suitable stand to perform maintenance or adjustment procedures.*

Fuel

This Kawasaki KX has a 4-stroke engine that requires a gasoline.

The capacity of the fuel tank is 6.1 L (1.6 US gal). To open the fuel tank cap, disconnect the breather hose from the hole in the steering stem, and turn the tank cap counterclockwise.

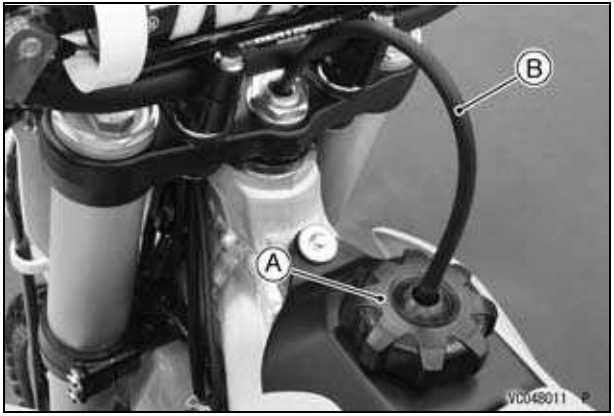

A. Fuel Tank Cap
B. Breather Hose

Avoid filling the tank in the rain or where heavy dust is blowing so that the fuel does not get contaminated.

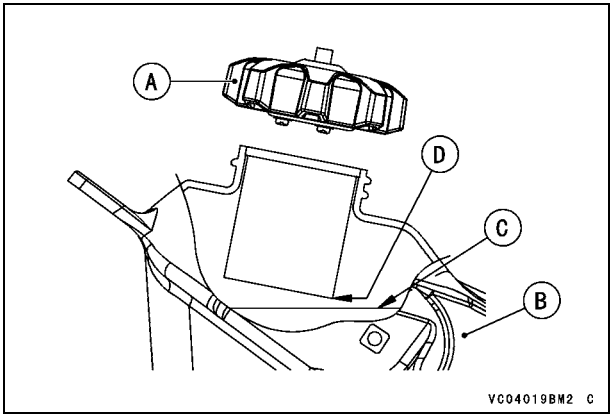

A. Tank Cap
B. Fuel Tank
C. Top Level
D. Filler Neck

⚠ WARNING

Gasoline is extremely flammable and can be explosive under certain conditions. Always stop the engine and do not smoke. Make sure the area is well-ventilated and free from any source of flame or sparks; this includes any appliance with a pilot light. Never fill the tank so the fuel level rises into the filler neck. If the tank is overfilled, heat may cause the fuel to expand and overflow through the vents in the tank cap. After refueling, make sure the fuel tank cap is closed securely. If gasoline is spilled on the fuel tank, wipe it off immediately.

Fuel Requirement:

Fuel Type

Use clean, fresh unleaded gasoline with a minimum Antiknock Index of 90. The Antiknock Index is posted on service station pumps in the U.S.A. The octane rating of a gasoline is a measure of its resistance to detonation or “knocking”. The Antiknock Index is an average of the Research Octane Number (RON) and the Motor Octane Number (MON) as shown in the table below.

Octane Rating Method		Minimum Rating
Antiknock Index	$\frac{(RON + MON)}{2}$	90

NOTICE

If engine “knocking” or “pinging” occurs, use a different brand of gasoline of a higher octane rating.
If this condition is allowed to continue it can lead to severe engine damage.
Gasoline quality is important. Fuels of low quality or not meeting standard industry specifications may result in unsatisfactory performance. Operating problems that result from the use of poor quality or nonrecommended fuel may not be covered under your warranty.

Fuels Containing Oxygenates

Gasoline frequently contains oxygenates (alcohols and ethers) especially in areas of the U.S. and Canada which are required to sell such reformulated fuels as part of a strategy to reduce exhaust emissions.

The types and volume of fuel oxygenates approved for use in unleaded gasoline by the U.S. Environmental Protection Agency include a broad range of alcohols and ethers, but only two components have seen any significant level of commercial use.

Gasoline/Alcohol Blends - Gasoline containing up to 10% ethanol (alcohol produced from agricultural products such as corn), also known as “gasohol” is approved for use.

NOTICE

Avoid using blends of unleaded gasoline and methanol (wood alcohol) whenever possible, and never use "gasohol" containing more than 5% methanol. Fuel system damage and performance problems may result.

Gasoline/Ether Blends - The most common ether is methyl tertiary butyl ether (MTBE). You may use gasoline containing up to 15% MTBE.

NOTE

○ *Other oxygenates approved for use in unleaded gasoline include TAME (up to 16.7%) and ETBE (up to 17.2%). Fuel containing these oxygenates can also be used in your Kawasaki.*

NOTICE

Never use gasoline with an octane rating lower than the minimum specified by Kawasaki.
Never use "gasohol" with more than 10% ethanol, or more than 5% methanol. Gasoline containing methanol must also be blended with cosolvents and corrosion inhibitors.
Certain ingredients of gasoline may cause paint fading or damage. Be extra careful not to spill gasoline or gasoline oxygenate blends during refueling.
When not operating your Kawasaki for 30 to 60 days, mix a fuel stabilizer (such as STA-BIL) with the gasoline in the fuel tank. Fuel stabilizer additives inhibit oxidation of the fuel which minimizes gummy deposits.
Never store this product with "gasohol" in the fuel system. Before storage it is recommended that you drain all fuel from the fuel system. See the Storage section in this manual.

Kick Pedal

This motorcycle is equipped with a primary kick starting system. When the clutch lever is pulled, the motorcycle can be started with the transmission in any gear.

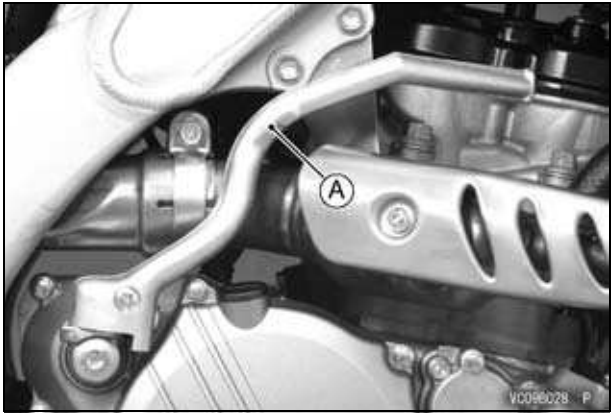

A. Kick Pedal

Starting the Engine

- Shift the transmission into neutral.

⚠ WARNING

Riding with the side stand can cause a crash resulting in injury. Do not start the engine or attempt to ride the motorcycle when the side stand is installed.

NOTICE

This motorcycle is designed for competition use only. Therefore, the radiator does not incorporate a coolant reserve tank or cooling fan. Prolonged idling of the engine with no airflow through the radiator can cause coolant loss and engine overheating resulting in possible engine damage. Any riding conditions that increase engine temperature will further reduce idling time before coolant loss occurs. These conditions include high ambient temperature, sandy or muddy terrain, or other conditions causing high engine loads at low speeds. Furthermore, warming the engine up excessively before operation, or leaving idling with the hot engine temperature after operation results in the engine overheating, too.

When engine is cold -

- Pull out the idle adjusting screw/choke knob.

A. Idle Adjusting Screw/Choke Knob

- Find the kick pedal position around the top so that the resistance to depress the kick pedal is fully felt by pushing down the kick pedal slowly.
- Kick the engine over, leaving the throttle closed.

NOTE

○ *When the clutch lever is pulled, the motorcycle can be started with the transmission in any gear.*

- Even after the engine has started, do not push back immediately the idle adjusting screw/choke knob until the engine is thoroughly warmed up.

When engine is already warm or restarts -

- Kick the engine over, leaving the throttle closed without using the idle adjusting screw/choke knob.

NOTE

○ *If the engine fails starting, open the throttle fully and depress the kick pedal slowly about 4 ~ 5 times to clear too rich fuel mixtures in the engine. Then, kick the engine over, leaving the throttle closed.*

Launch Control Mode

The launch control mode can be used to adjust ignition timing to help riders get better starts on slippery terrain.

The system's effectiveness is dependent on rider skill, technique and terrain conditions.

Launch Control Mode Setting

- The launch control mode can be set when the engine is running and in neutral, 1st or 2nd gear. When activated, it only functions in 1st and 2nd gear.
- When pushing the launch control mode button for over two seconds, the orange launch control mode indicator light will blink to indicate the system is operating.
- When shifting into 3rd, the system is deactivated automatically.

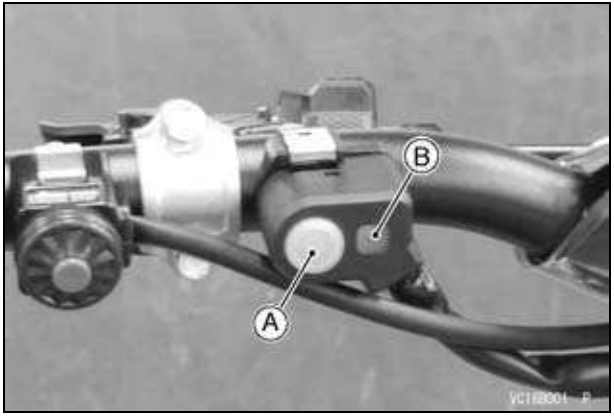

A. Launch Control Mode Button
B. Orange Launch Control Mode/FI Warning Indicator Light

DFI Setting Data Selection

Three DFI settings are available to suit various track conditions. They are easily activated by changing the wiring connector on the side of the frame when the engine is stopped.

Track Condition	Connector Color
Soft	White
Standard	Green
Hard	Black

- Change the connector on the right front of the frame to suit the track condition with the engine stopped.

A. Connector

NOTE

- *If the connector is changed while the engine is running, the DFI setting does not change.*
- *The ECU is set to the standard track condition when operated without a connector. However, always have one of the three connectors attached when riding to prevent dust and mud from accumulating in the connector harness.*
- *The KX FI calibration kit (Part No. 99999-0394) can be used for changing the DFI setting.*

Shifting Gears

This motorcycle is equipped with a 5-speed “return shift” transmission. The neutral is located halfway between 1st and 2nd gear. “Return shift” means that when shifting up or down, each gear must be engaged before the next higher or lower gear may be selected.

- To engage first gear from the neutral position, pull in the clutch lever and push down on the shift pedal, gently release the clutch lever, then release the shift pedal.
- To shift up to the next gear, pull in the clutch lever, lift the shift pedal with your toes, gently release the clutch lever, and then release the shift pedal.
- To shift down to the next gear, pull in the clutch lever, push the shift pedal down as far as it will go, gently release the clutch lever, then release the shift pedal.

NOTICE
When changing gears, press firmly on the shift pedal to ensure proper shifting. Careless, incomplete shifting can cause the transmission to jump out of gear and lead to engine damage.

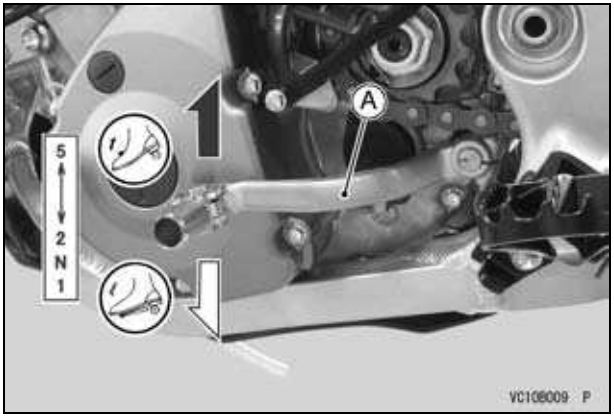

A. Shift Pedal

Stopping the Motorcycle

For maximum deceleration, close the throttle and apply both front and rear brakes. Pull in the clutch lever as the motorcycle comes to a stop. Independent use of the front or rear brake may be advantageous in certain circumstances. Shift down progressively to ensure good engine response at all speeds.

Stopping the Engine

- Shift the transmission into the neutral position.
- Close the throttle completely and push the engine stop button.

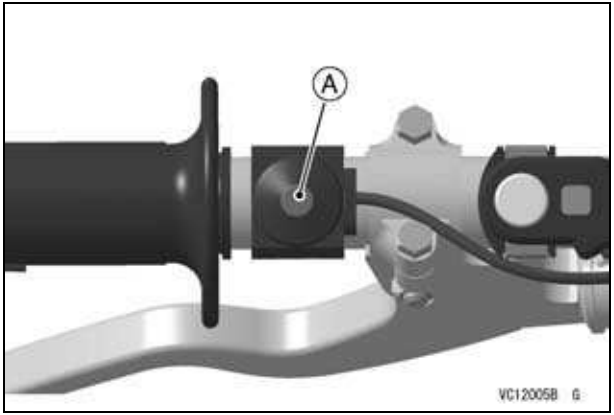

A. Engine Stop Button

Break-In

A brief break-in procedure must be carried out to obtain the proper operating clearances in the engine and transmission, which are necessary for performance and reliability.

NOTICE

For the first hour or 20 km (12 mile) of operation, run the engine at low and moderate engine speeds. See details below.

Break in the engine as follows.

1. Start the engine and let it idle until it is thoroughly warmed up.
2. Ride the motorcycle for about 20 minutes within 1/2 throttle opening.
3. Stop and let the engine cool completely. Be sure to check the tightness of nuts and bolts, oil leakage, coolant leakage and any irregularities.
4. Start the engine and ride the motorcycle for about 40 minutes within 3/4 throttle opening.
5. Stop and let the engine cool completely. Be sure to fully check the tightness of nuts and bolts, oil leakage, and any irregularities, especially, each cable elongation, brake play, chain slack and spoke tightness.
6. Change the engine oil, oil filter and front fork/rear shock absorber oil to the new one.
7. After the break-in procedure has been properly carried out, the motorcycle is ready for regular operation. Using the proper riding skills and techniques and avoiding recklessly high engine speeds will keep the engine trouble-free.

NOTICE

When any following parts have been replaced, the same break-in procedure as the new motorcycle must be carried out for one hour or 20 km (12 mile):
Cylinder, Piston, Piston pin, Piston ring, Valve, Valve lifter, Camshaft, Crankshaft, Mission gear, etc.

Daily Pre-Ride Checks

Check the following items each day before you ride. The time required is minimal, and habitual performance of these checks will help ensure a safe, reliable ride.

If any irregularities are found during these checks, refer to the appropriate section and take the action required to return the motorcycle to a safe operating condition.

⚠ WARNING

Failure to perform these checks before operation may result in serious damage or an accident. Always perform daily checks before operation.

⚠ DANGER

Exhaust gas contains carbon monoxide, a colorless, odorless poisonous gas. Inhaling carbon monoxide can cause serious brain injury or death. DO NOT run the engine in enclosed areas. Operate only in a well-ventilated area.

Engine

Engine Oil	No leakage
	Level correct
Coolant	No leakage
	Level correct (engine cold)
Radiator Cap	Properly installed
Spark Plug	Correctly torqued
Cylinder Head Cover	Correctly torqued
Clutch	Functions properly
Air Cleaner	Clean
	Apply oil to air cleaner element
	Properly installed
Muffler	No damage

	Properly installed
Engine Sprocket	No wear or damage

Frame

Tires	Overall condition good
	No wear or damage
	Pressure correct
	Air valve cap installed
Spokes	No looseness
Drive Chain	Overall condition good
	Chain slack correct
	Oil if necessary
Front and Rear Brakes	Function properly
	Lever and pedal play correct
	No fluid leakage
Throttle	Functions properly
	Throttle grip returns smoothly
Steering	Smooth but not loose from lock to lock
	No binding due to control cables
Front Fork	Functions properly
	No oil leakage
Rear Shock Absorber	Functions properly
	No oil leakage
Fuel Tank	Mounted securely
	No fuel leakage
Rear Sprocket	No wear or damage
Engine Stop Button	Functions properly
Launch Control Mode Button	Functions properly
Nuts, Bolts, Fasteners	Properly tightened

After-Race Checks

After racing, first clean the motorcycle, then inspect the entire motorcycle with special attention to the air cleaner, brakes, etc.

Carry out the general lubrication and make necessary adjustments.

MAINTENANCE AND ADJUSTMENT

Periodic Maintenance Chart

The maintenance and adjustments outlined in this chapter are easily carried out and must be done in accordance with the Periodic Maintenance Chart to keep the motorcycle in good running condition.

†: Replace, add, adjust, clean or torque if necessary.
K: Should be serviced by referring to the Service Manual or an authorized Kawasaki dealer.

1. Periodic Inspection (Engine Related Item)

FREQUENCY / OPERATION	After each race (or 2.5 hours)	Every 3 races (or 7.5 hours)	Every 6 races (or 15 hours)	Every 12 races (or 30 hours)	As required	See Page
Throttle cable - inspect and adjust	●					60
Valve clearance - inspect †			●			79
Clutch plates - inspect †	●					75
Spark plug - clean and inspect †	●					47
Clutch - inspect	●					72
Air cleaner element - clean †	●					57
Throttle body assy - inspect and adjust	●					61
K Cylinder head, cylinder - inspect			●			–
K Crankshaft - inspect			●			–
Muffler - clean and inspect †	●					84

FREQUENCY OPERATION	After each race (or 2.5 hours)	Every 3 races (or 7.5 hours)	Every 6 races (or 15 hours)	Every 12 races (or 30 hours)	As required	See Page
Kick pedal and shift pedal - clean	●					–
Engine sprocket - inspect †	●					93
Coolant level - inspect	●					43
Breather hose - inspect	●					–
Water hoses and connections - inspect †	●					43

2. Periodic Inspection (Chassis Related Item)

FREQUENCY / OPERATION	After each race (or 2.5 hours)	Every 3 races (or 7.5 hours)	Every 6 races (or 15 hours)	Every 12 races (or 30 hours)	As required	See Page
Brake - adjust †	●					98
Brake pad wear - inspect †	●					100
Brake fluid level - inspect †	●					99
Spoke tightness and rim runout - inspect †	●					160, 161
Rear axle nut - inspect †	●					88
Drive chain - inspect and adjust	●					89
Drive chain - lubricate	●					93
Drive chain wear - inspect †	●					91
Front fork - clean and inspect	●					104
Nuts, bolts, fasteners - inspect †	●					163
K Fuel system - clean		●				–
Fuel hose, connections - inspect †	●					162
Brake hoses, connections - inspect †	●					162
Steering play - inspect †	●					101
K Steering stem bearing - lubricate			●			–
Rear sprocket - inspect †	●					93
General lubrication - perform	●					169

FREQUENCY OPERATION	After each race (or 2.5 hours)	Every 3 races (or 7.5 hours)	Every 6 races (or 15 hours)	Every 12 races (or 30 hours)	As required	See Page
K Wheel bearing - inspect †	●					–
K Swingarm and UNI-TRAK linkage pivots - inspect †		●				–
K Swingarm and UNI-TRAK linkage pivots - lubricate		●				–
Frame - inspect	●					–
Wheels/tires - inspect	●					160
Rear shock absorber - inspect	●					154
Cable - inspect	●					–

3. Periodic Replacement (Engine and Chassis Related Item)

FREQUENCY / OPERATION	After each race (or 2.5 hours)	Every 3 races (or 7.5 hours)	Every 6 races (or 15 hours)	Every 12 races (or 30 hours)	See Page
Engine oil - change			●		39
Oil filter - replace			●		39
K Piston and piston ring - replace			●		–
K Piston pin - replace				●	–
Silencer wool - replace		●			84
Spark plug - replace		●			47
K Brake fluid - change	Every 2 years				–
K Brake master cylinder cup and dust cover - replace	Every 2 years				–
K Brake caliper fluid seal and dust seal - replace	Every 2 years				–
K Brake hoses - replace	Every 4 years				–
Front fork oil - change			●		110
K Fuel hose - replace	Every 5 years				–
K Rear shock absorber oil - change			●		–

Engine Oil

In order for the engine, transmission and clutch to function properly, maintain the engine oil at the proper level, and change the oil and oil filter periodically.

Not only do dirt and metal particles collect in the oil, but the oil itself loses its lubricative quality if used too long.

⚠ WARNING

Motorcycle operation with insufficient, deteriorated, or contaminated engine oil will cause accelerated wear and may result in engine or transmission seizure, accident, and injury. Check the oil level before each ride and change the oil according to the periodic maintenance chart in the Owner's Manual.

Because of the semi-dry sump lubrication system, the engine oil level indicated on the oil level inspection window will fluctuate depending on the motorcycle's position and engine speed when the engine's shut off. To ensure a proper reading of the engine oil level, follow the Oil Level Inspection procedures closely.

NOTICE

Racing the engine before the oil reaches every part can cause engine seizure.

Oil Level Inspection

- If the oil has just been changed, let the motorcycle sit a few minutes allowing the oil to settle.
- Start the engine and run it for several minutes **at idle speed. Do not run the engine at high engine speed.**
- Stop the engine and wait several minutes for the oil to settle.
- Check the engine oil level with the motorcycle vertical through the oil level inspection window on the lower right side of the engine. The oil level should come up between the high and low level lines next to the inspection window.

NOTE

○ *If the oil level is too high, remove the excess oil using a syringe or other suitable device.*

○ *If the oil level is too low, add the correct amount of oil through the oil filler opening. Use oil of the same type and brand as those of the one that is already in the engine.*

NOTE

○ *If no oil appears in the oil level inspection window, tip the motorcycle slightly to the right until oil is visible then return to an upright position. If no oil appears even when tipped at an extreme angle, remove the drain bolt to empty any oil that may be in the transmission and crankcase, reinstall the drain bolt and refill with the specified amount of oil.*

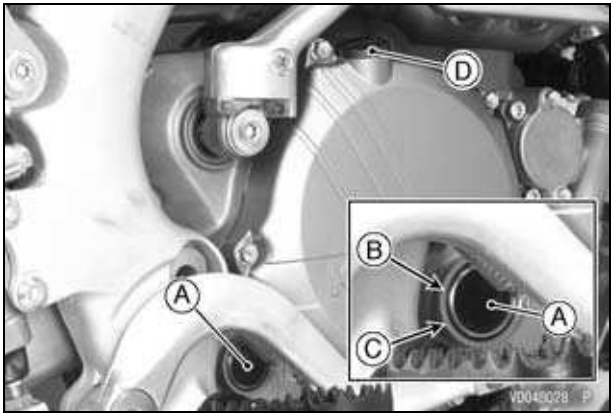

A. Oil Level Inspection Window
B. High Level Line
C. Low Level Line
D. Oil Filler Plug

Oil and/or Oil Filter Change

The engine oil and/or oil filter should be changed periodically to ensure long engine life.

- Warm up the engine thoroughly so that the oil will pick up any sediment and drain easily.
- Stop the engine, and place a container beneath it.
- Remove the oil filler plug.
- Remove the oil drain bolt and position the vehicle perpendicular to the ground to allow all the oil to drain.

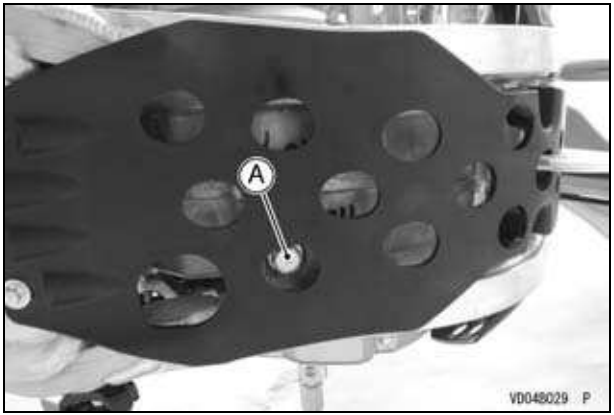

A. Drain Bolt

⚠ WARNING

Engine oil is a toxic substance. Dispose of used oil properly. Contact your local authorities for approved disposal methods or possible recycling.

- When the oil filter is replaced, remove the oil filter cap bolts and take off the cap with O-ring and spring.

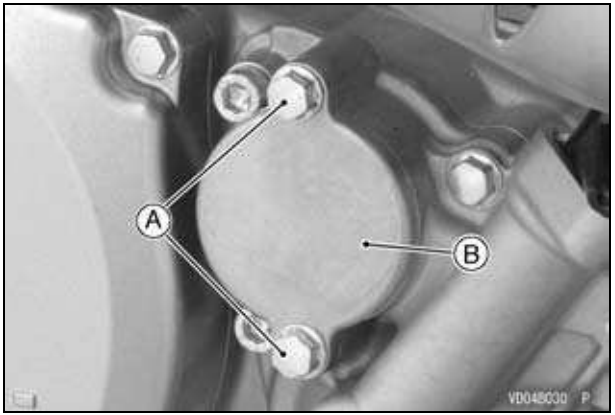

A. Oil Filter Cap Bolts
B. Oil Filter Cap

- Replace the oil filter element with a new one.
- Apply grease to the grommet.
- Install the oil filter element with the grommet toward the engine.

NOTICE
Inside-out installation stop oil flow, causing engine seizure.

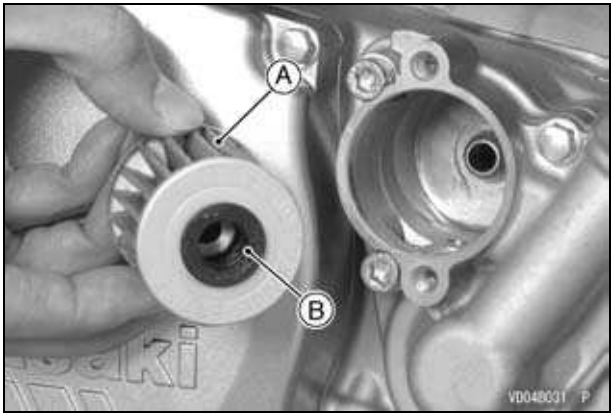

A. Oil Filter Element
B. Grommet

- Install the spring to the oil filter cap.
- Install the oil filter cap with the grease applied to a new O-ring and tighten its bolts to the specified torque.

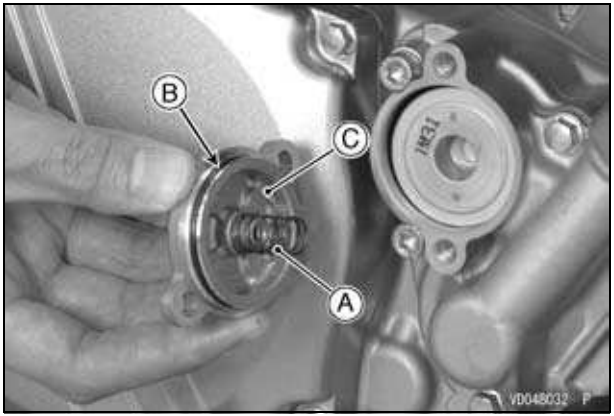

A. Spring
B. O-ring
C. Oil Filter Cap

Tightening Torque

Oil Filter Cap Bolts: 9.8 N·m (1.0 kgf·m, 87 in·lb)

- After the oil has completely drained out, install the drain bolt with its new gasket. Proper torque for it is shown in the table.

Tightening Torque

Engine Oil Drain Bolt: 20 N·m (2.0 kgf·m, 15 ft·lb)

NOTE

○ *Replace the gasket and O-ring with a new one.*

- Fill the engine up to the high level line with good quality engine oil specified in the table.

Recommended Engine Oil

Castrol “Power1 Racing 4T” 5W-40 or “Kawasaki Performance 4-Stroke Full Synthetic Oil*” 10W-40 or “Kawasaki Performance 4-Stroke Semi-Synthetic Oil*” 10W-40 or “Kawasaki Performance 4-Stroke Motorcycle Oil*” 10W-40

*Kawasaki Performance Oils and Lubricants have been specifically engineered for your vehicle. Consistent use of these products meets or exceeds service requirements and can help to extend the life of your Kawasaki.

Engine Oil Capacity

Capacity: 0.75 L (0.79 US qt) (When filter is not removed) 0.80 L (0.85 US qt) (When filter is removed) 1.0 L (1.1 US qt) (When engine is completely dry)

NOTE

○ *If unavailable, use equivalent engine oil in accordance with the following table.*

Type: API SG, SH, SJ, SL or SM with JASO MA, MA1 or MA2 Viscosity: SAE 10W-30, 10W-40, 10W-50

NOTE

○ *Do not add any chemical additive to the oil. Oils fulfilling the above requirements are fully formulated and provide adequate lubrication for both the engine and the clutch.*

The oil viscosity may need to be changed to accommodate atmospheric conditions in your riding area.

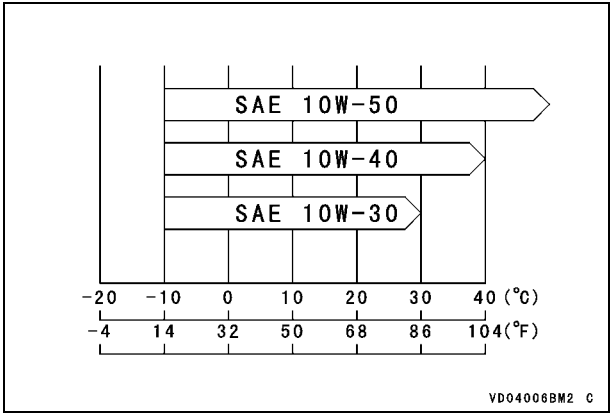

● Tighten the oil filler plug.

Tightening Torque

Oil Filler Plug: 3.5 N·m (0.36 kgf·m, 31 in·lb)

● Start the engine.
● Check the oil level and oil leakage.

Cooling System

Water Hoses

Check the water hoses for cracks or deterioration, and the connections for looseness in accordance with the Periodic Maintenance Chart.

Radiator

Check the radiator fins for obstruction by insects or mud. Clean off any obstructions with a low-pressure stream of water.

NOTICE

Using high-pressure water, as from a car wash facility, could damage the radiator fins and impair the radiator's effectiveness.
Do not obstruct or deflect airflow by installing unauthorized accessories in front of the radiator.
Interference with the cooling airflow can lead to overheating and consequent engine damage.

Coolant

Coolant absorbs excessive heat from the engine and transfers it to the air through the radiator. If the coolant level becomes low, the engine overheats and may suffer severe damage. Check the coolant level each day before riding the motorcycle, and replenish coolant if the level is low.

⚠ WARNING

The cooling system can get extremely hot during normal operation and cause serious burns. Do not touch the radiator when it is hot, nor open the radiator cap. Hot coolant inside will cause severe burns.

NOTE

○ *The coolant originally filled into the cooling system contains 50% of a permanent, ethylene-glycol -based antifreeze, has a freezing point of –35°C (–31°F) and a green appearance.*

Coolant Level Inspection

● Remove the bolts and right radiator shroud.

A. Bolts
B. Right Radiator Shroud

- Situate the motorcycle perpendicular to the ground until the radiator cap is level to the ground, so that the radiator cap is located uppermost in order to exhaust the air accumulated in the radiator.
- Remove the radiator cap in two steps.
- First, turn the cap counterclockwise to the first stop and wait there for a few seconds.
- Then, push and turn the cap further in the same direction and remove it.

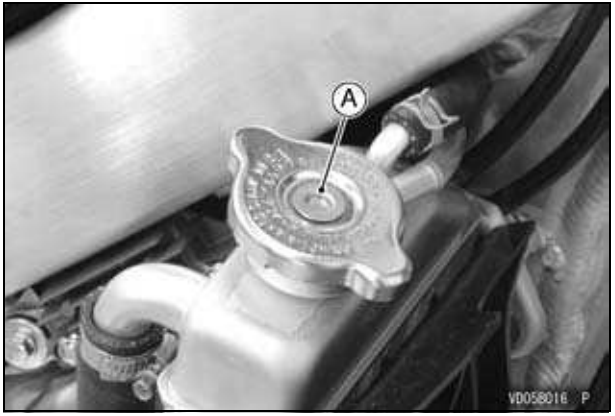

A. Radiator Cap

- Check the coolant level in the radiator. The coolant should come up to the bottom of the radiator filler neck.

NOTE

○ *Check the coolant level when the engine is cold (room or ambient temperature).*

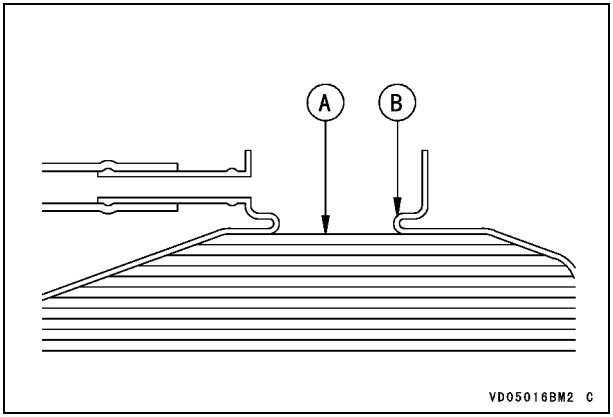

A. Coolant Level
B. Filler Neck

- If the coolant level is low, add coolant through the radiator filler opening to the bottom of the filler neck.

Water and Antifreeze Mixing Ratio

1:1 (water:antifreeze)

Recommended Antifreeze

Permanent type of antifreeze (ethylene glycol plus corrosion and rust inhibitor chemicals for aluminum engines and radiators)

Coolant Total Amount

1.2 L (1.3 US qt)

- Install the radiator cap.
- Temporarily tighten the radiator shroud bolts following the tightening sequence.

- Tighten the radiator shroud bolts securely.

Coolant Change

The coolant should be changed to ensure long engine life, if necessary.

- Wait for the engine to cool completely.
- Situate the motorcycle perpendicular to the ground until the radiator cap is level to the ground.
- Remove the radiator cap in two steps.
- Drain the coolant from the engine and radiator in the following way.
- Place a container under the coolant drain bolt on the water pump cover and remove the drain bolt.

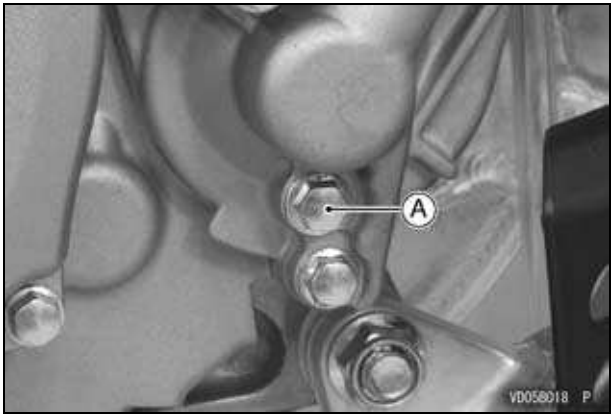

A. Coolant Drain Bolt

NOTICE

Immediately wash away any coolant that spills on the frame, engine, or wheel.

⚠ WARNING

Coolant on tires will make them slippery and can cause loss of traction resulting in an accident and injury. Thoroughly clean any coolant that might have splashed on the tires.

- Visually inspect the old coolant.
- If whitish cotton-like wafts are observed, aluminum parts in the cooling system are corroded and the system must be flushed.

- If the coolant is brown, iron or steel parts are rusting and the system must be flushed.
- Check the cooling system for damage, loose connections, and leaks.
- Install the coolant drain bolt with its new gasket at the water pump cover and apply the specified torque.

NOTE

○ *Always replace a gasket with a new one.*

Tightening Torque

Coolant Drain Bolt: 7.0 N·m (0.71 kgf·m, 62 in·lb)

- Fill the radiator up to the bottom of the radiator filler neck with coolant.
- Lean the motorcycle slightly until the radiator filler neck is level to the ground so that the filler neck is located uppermost in order to exhaust the air accumulated in the radiator.

NOTICE

Use coolant containing corrosion inhibitors made specifically for aluminum engines and radiators in accordance with the instruction of the manufacture. Soft or distilled water must be used with the antifreeze in the cooling system. If hard water is used in the system, it causes scale accumulation in the water passages, and considerably reduces the efficiency of the cooling system.

NOTE

○ *Pour in the coolant slowly so that it can expel the air from the engine and radiator.*

- Install the radiator cap.
- Check the cooling system for leaks.
- Start the engine and warm up thoroughly, then stop it.
- Check the coolant level after the engine has cooled down. The coolant should come up to the bottom of the radiator filler neck.
- If the coolant level is low, add coolant up to the bottom of the radiator filler neck.
- Install the radiator cap.
- Check the cooling system for leaks.

Spark Plug

The spark plug should be taken out periodically for inspection and regapping. Measure the gap with a wire-type thickness gauge. If incorrect, adjust the gap to the specified value by bending the outer electrode.

Spark Plug Gap

CPR8EB-9 CPR9EB-9	0.8 ~ 0.9 mm (0.031 ~ 0.035 in.)

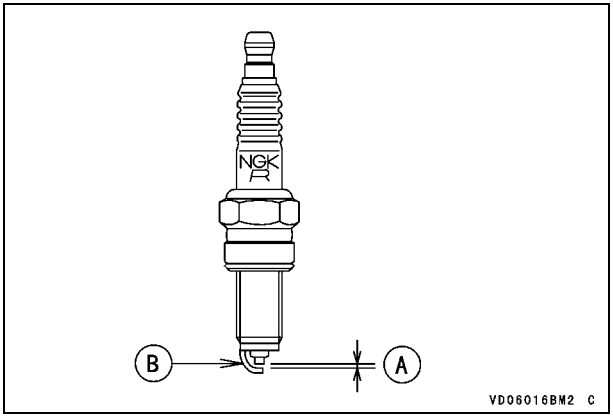

A. Gap
B. Outer Electrode

If the plug is oily or has carbon built up on it, clean it. The plug may also be cleaned using a high flash -point solvent and a nonmetal brush (nylon etc.). If the spark plug electrodes are corroded, or damaged, or if the insulator is cracked, replace the plug. The standard spark plug is shown in the table below.

Standard Spark Plug

NGK CPR8EB-9

To find out whether the plug's heat range is correct, remove the plug and examine the ceramic insulator around the center electrode. If the ceramic is light brown, the spark plug correctly matches the engine temperature.

If the ceramic is burned white, the plug should be replaced with a colder plug.

Optional Spark Plug

Colder	NGK CPR9EB-9

NOTE

○ *If the engine performance drops, try replacing the spark plug to regain performance.*

Spark Plug Removal and Installation

- Remove the seat (see Air Cleaner section).
- Remove the bolts and take off the radiator shroud on both sides.

A. Bolts
B. Radiator Shroud

● Remove the fuel tank mounting bolt and band.

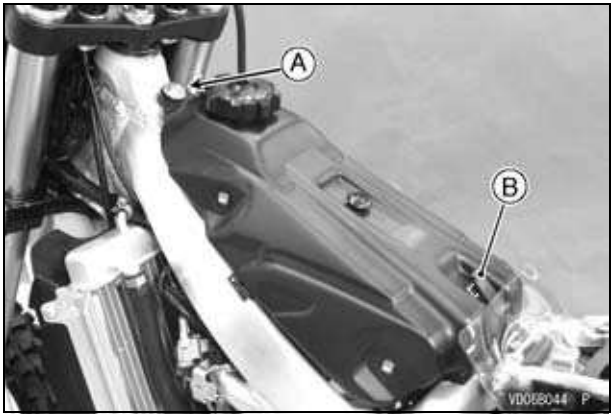

A. Fuel Tank Mounting Bolt
B. Band

- Be sure to place a piece of cloth around the fuel hose joint.
- Wipe off the dirt of the surface around the connection using a cloth or a soft brush.
- Insert a thin blade screwdriver into the slit on the joint lock.

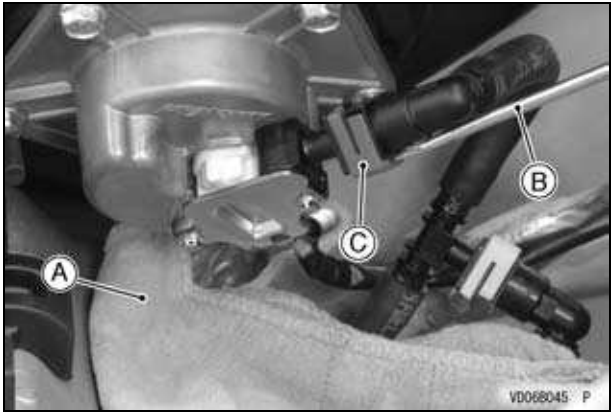

A. Cloth
B. Thin Blade Screwdriver
C. Joint Lock

⚠ WARNING

Fuel is flammable and explosive under certain conditions and can cause severe burns. Be prepared for fuel spillage; any spilled fuel must be completely wiped up immediately. When the fuel hose is disconnected, fuel spills out from the hose and the pipe because of residual pressure. Cover the hose connection with a piece of clean cloth to prevent fuel spillage.

- Turn the driver to disconnect the joint lock.
- Disconnect the fuel hose joint from the outlet pipe.

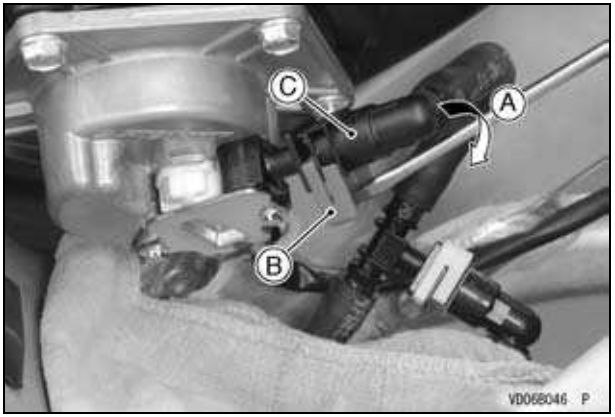

A. Turn
B. Joint Lock
C. Fuel Hose Joint

- Cover the pipe and the fuel hose joint with the vinyl bags to keep them clean.

- Disconnect the fuel pump lead connector.
- Remove the fuel tank.

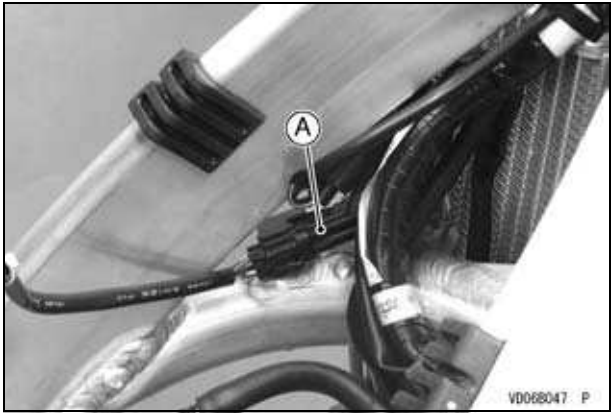

A. Fuel Pump Lead Connector

⚠ WARNING

Gasoline is extremely flammable and can be explosive under certain conditions.
Always stop the engine and do not smoke. Make sure the area is well-ventilated and free from any source of flame or sparks; this includes any appliance with a pilot light.

- Clean the cylinder head cover around the spark plug cap hole before removing the spark plug.
- Pull the spark plug cap off the plug before removing the spark plug.

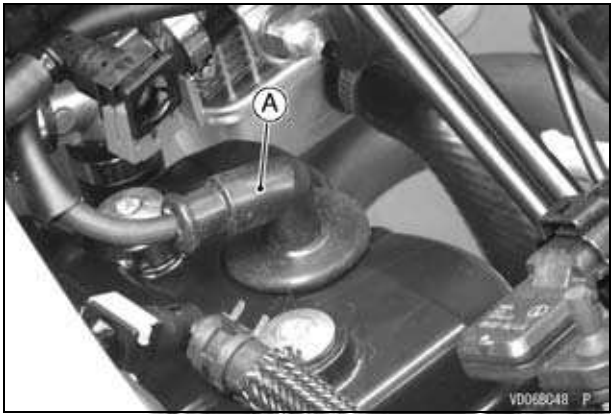

A. Spark Plug Cap

- Loosen and remove the spark plug with a suitable wrench (16 mm, 0.63 in.).
- When reinstalling the spark plug, torque it to specification.

Tightening Torque

Spark Plug:
13 N·m (1.3 kgf·m, 115 in·lb)

- Install the spark plug cap.
- Pull up the plug cap lightly to make sure of the installation of the spark plug cap.

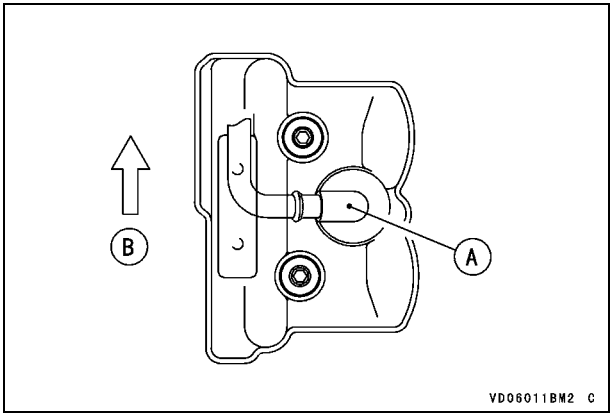

A. Spark Plug Cap
B. Front

- Make sure that the dampers are in place on the frame and are not damaged. If the dampers are not fixed completely, reattach them with an adhesive. If the dampers are damaged, replace them with new ones.

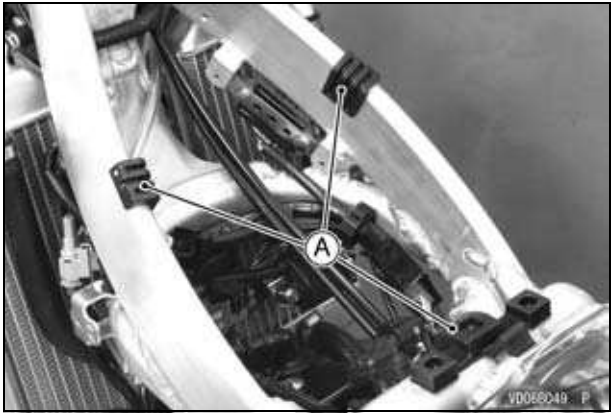

A. Dampers

- Check the joint lock for deformation and wear.
- If the joint lock is deformed, replace the fuel hose with a new one.
- Apply engine oil to the fuel outlet pipe lightly.
- Insert the fuel hose joint straight onto the fuel outlet pipe until the hose joint clicks.
- Push the joint lock until the hose joint clicks.

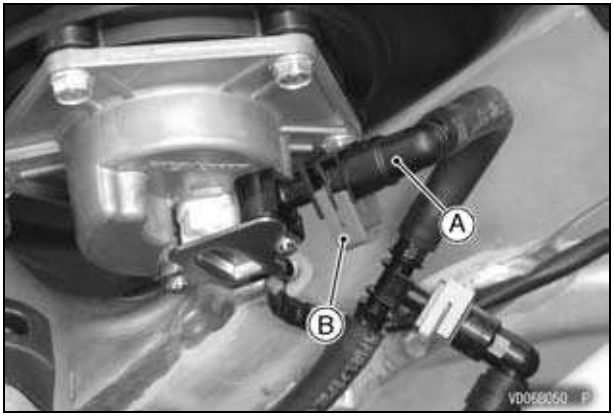

A. Fuel Hose Joint
B. Joint Lock

NOTICE

When installing the fuel hose joint, do not apply strong force to the outlet pipe on the fuel pump. The pipe made from resin could be damaged.

- Push and pull the fuel hose joint back and forth more than two times, and make sure it is locked and does not come off.

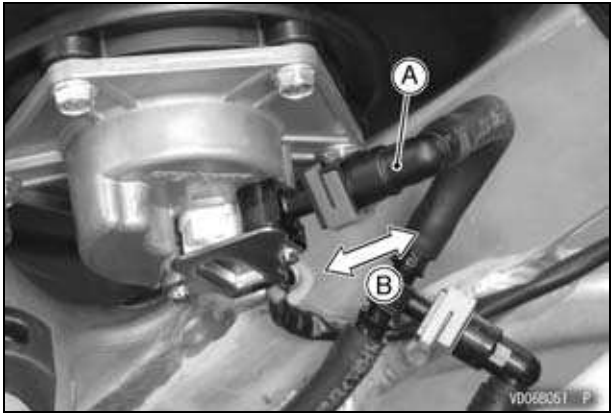

A. Fuel Hose Joint
B. Push and Pull

⚠ WARNING

Leaking fuel can cause a fire or explosion resulting in serious burns. Make sure the hose joint is installed correctly on the delivery pipe by sliding the joint.

NOTE

○ *If it comes off, reinstall the fuel hose joint.*

- Hook the band to the fuel tank.
- Tighten the fuel tank mounting bolt.
- After installing the fuel tank, make sure that both throttle cables (outer) move slightly by pulling them back and forth in the upper space of the right side of the fuel tank. Check that both throttle cables run under the frame (right side).

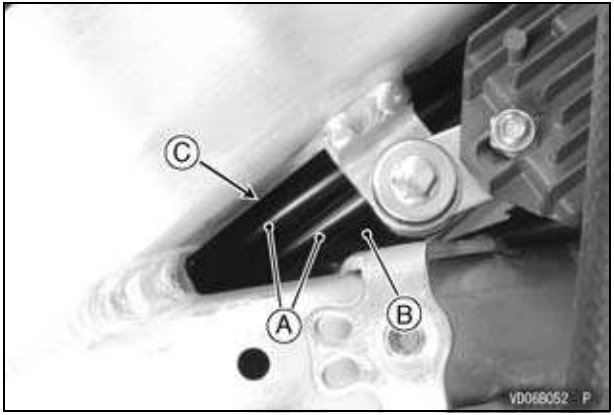

A. Throttle Cables
B. Fuel Tank
C. Bottom of the Frame (Right Side)

- Temporarily tighten the radiator shroud bolts following the tightening sequence.

- Tighten the radiator shroud bolts securely.
- Install the removed parts.

NOTE

○ *Insert the fuel tank breather hose outlet end into the steering stem hole.*

Air Cleaner

A clogged air cleaner restricts the air intake, increases fuel consumption, reduces engine power, and can cause spark plug fouling. Inspect the air intake system, which includes the air filter and air duct to the throttle body assy, and the duct clamps and throttle body assy, before each race or practice session.

⚠ WARNING

If dirt or dust is allowed to pass through into the throttle body assembly, the throttle may become stuck, possibly causing accident. Be sure to keep the dust from entering during cleaning.

NOTICE

A clogged air cleaner will affect fuel mixture to the engine and reduce engine power and cause spark plug fouling.

NOTE

○ *In dusty areas, the element should be cleaned more frequently than recommended interval.*

○ *After riding through rain or on muddy roads, the element should be cleaned immediately.*

Element Removal and Inspection

- Remove the bolt on the right and left sides.

A. Bolt

- Open the both side covers slightly outward and slide the seat rearward.

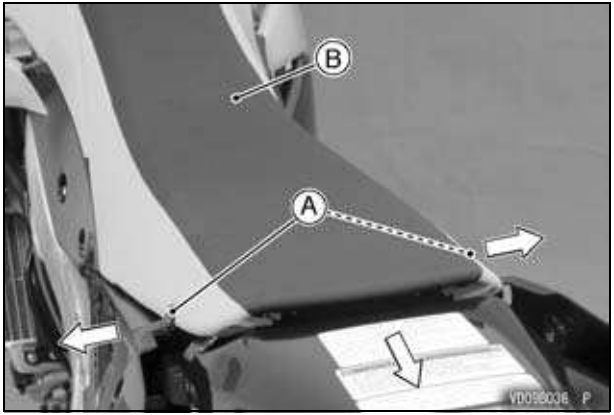

A. Side Covers
B. Seat

- Remove the wing bolt, and take out the air cleaner element.

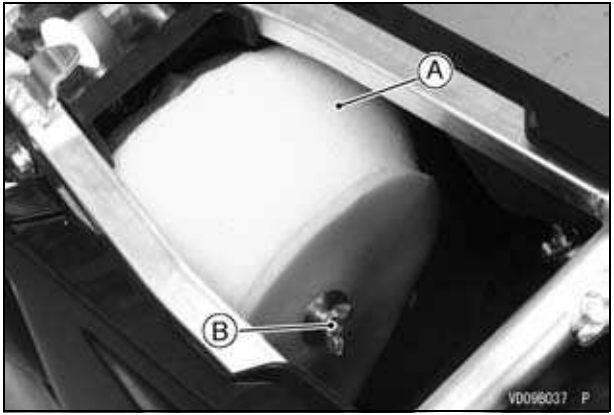

A. Air Cleaner Element
B. Wing Bolt

- Check inside of the intake tract and throttle body assy for dirt. If dirty, clean the intake tract and throttle body assy thoroughly.
- Stuff a clean, lint-free towel into the throttle body assy to keep dirt from entering the throttle body assy.
- Wipe out the inside of the air cleaner housing with a clean, damp towel.
- Take the element off its frame.

NOTICE

Do not twist or wring the element, as it gets easily torn or damaged.

- Inspect the element. If it is dirty, clean it. Also check if the element is in good condition (no tears, hardening or shrinkage). If damaged, replace the element or it will allow dirt into the throttle body assy.

⚠ WARNING

A clogged air cleaner may allow dirt and dust to enter the throttle body assembly and the throttle may stick resulting in a hazardous operating condition. Clean the air cleaner according to the periodic maintenance chart; more often if the motorcycle is used in extremely dusty conditions.

NOTICE

A clogged air cleaner may allow dirt and dust to enter the engine, causing it to wear excessively or to become damaged.

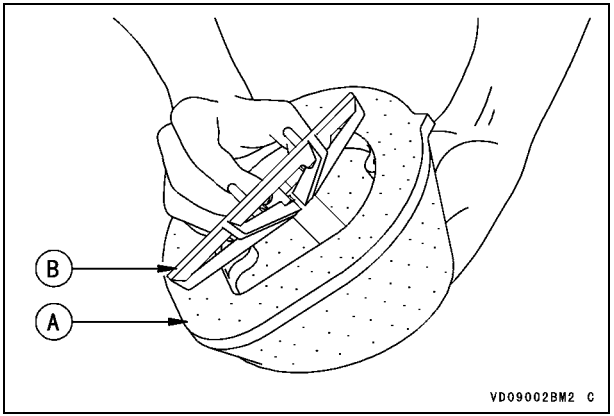

A. Air Cleaner Element
B. Element Frame

Element Cleaning and Installation

- Clean the element in a bath of a high flash-point solvent or hot soapy water. Rinse the element with clear water to remove all traces of the cleaning solution.
- Squeeze the element dry in a clean towel.

NOTICE
Do not twist, wring or blow the element dry to avoid damaging it.

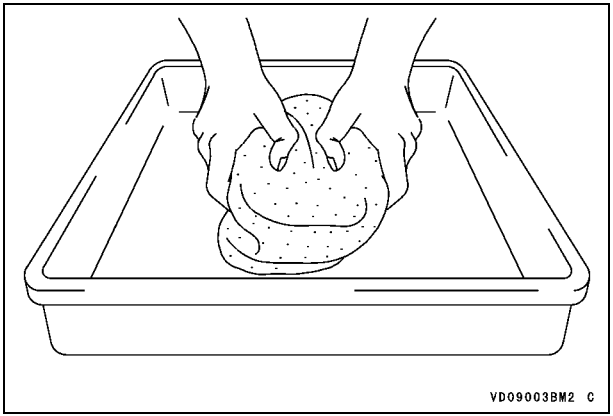

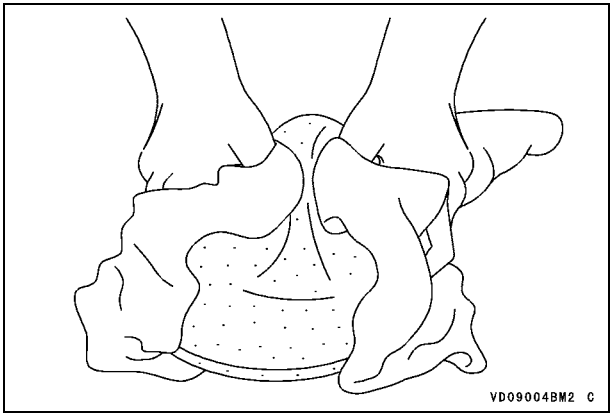

⚠ WARNING

Gasoline and low flash-point solvents can be flammable and/or explosive and cause severe burns. Clean the element in a well-ventilated area, and take care that there is no spark or flame anywhere near the working areas. Do not use gasoline or low flash-point solvents to clean the element.

- After cleaning, let the filter dry completely. Saturate the element with a high-quality foam air filter oil and make sure that the oil is evenly applied throughout the element. Squeeze out the excess oil, but do not wring the element as this could cause tearing. In this case, too much oil is better than too little. Finally pat the inside of the element with a paper towel to remove any excess oil.
- Before installation, check the element for damage such as tears, hardening, or shrinkage. If damaged, replace the element.
- Apply grease to all mating surfaces and to the screw hole in the air cleaner housing and intake tract.
- Remove the towel from the throttle body assy.
- Install the element onto its frame, and coat the element lip and lip seat with a thick layer of all -purpose grease to assure a complete seal.

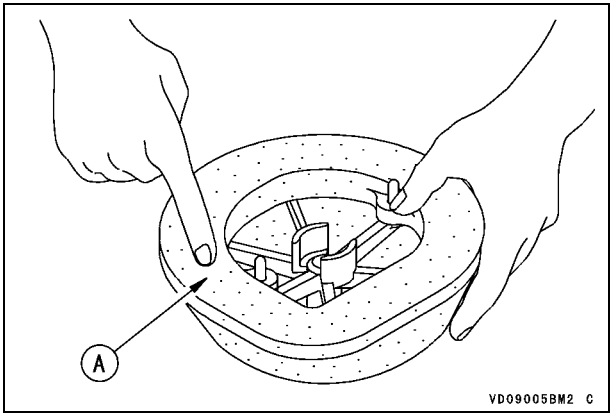

A. Apply grease.

- Install the air cleaner element so that its tab faces upward and its projections align with the holes in the housing.

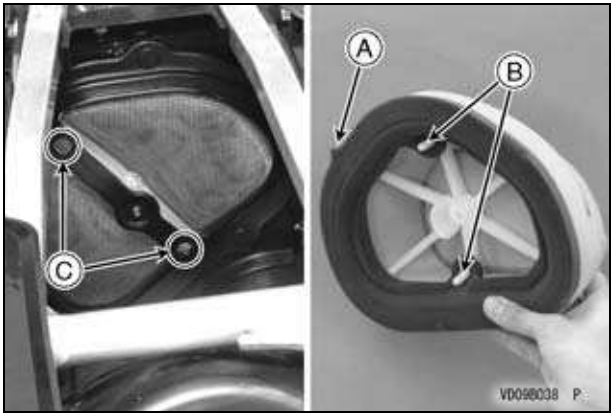

A. Tab
B. Projections
C. Holes

- Tighten the wing bolt.

- Insert the hooks of the seat under the flange collar and brackets.

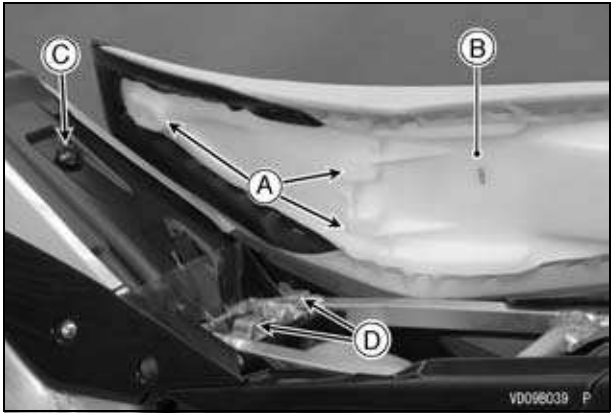

A. Hooks
B. Seat
C. Flange Collar
D. Brackets

- Install the tabs of the side covers into the inside of the seat, and tighten the bolts.

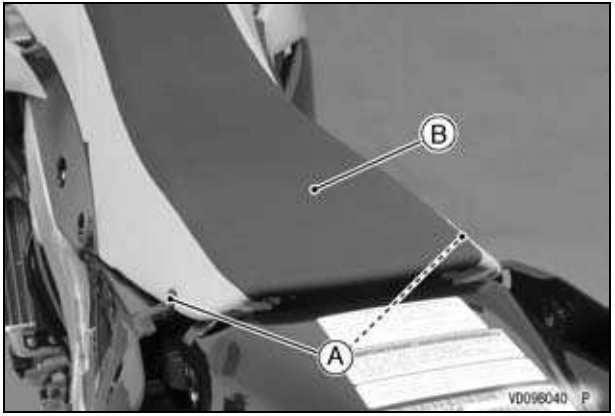

A. Tabs
B. Seat

- Pull up the rear end of the seat to make sure it is securely installed.

Throttle Cable

Throttle Cable Adjustment

Inspect the throttle grip for smooth operation in all steering positions. Check and adjust the throttle cable in accordance with the Periodic Maintenance Chart.

- Check that the throttle grip has 2 ~ 3 mm (0.08 ~ 0.12 in.) of play and turns smoothly.

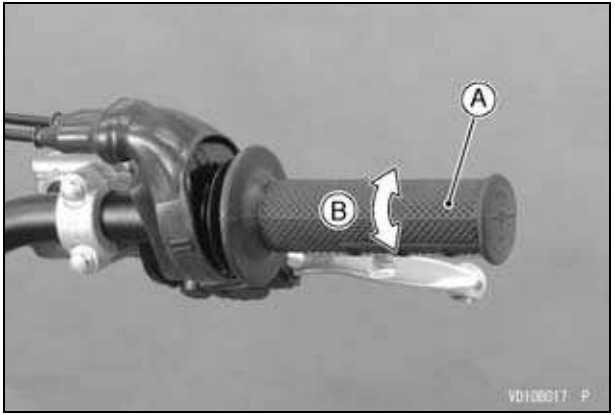

A. Throttle Grip
B. 2 ~ 3 mm (0.08 ~ 0.12 in.)

- If the play is incorrect, loosen the locknut on the upper end of the accelerator cable and turn the adjuster to obtain the specified play. Then, tighten the locknut toward the adjuster.

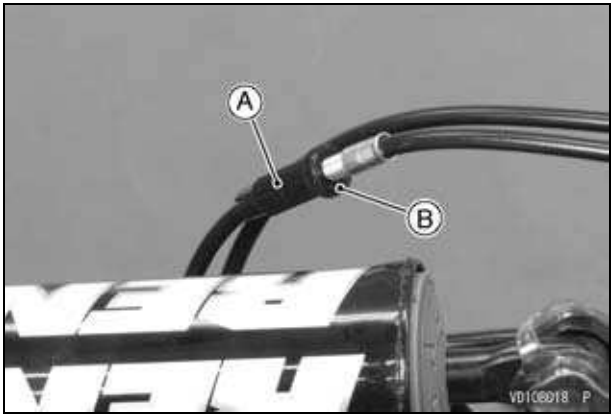

A. Adjuster
B. Locknut

- With the engine idling, turn the handlebars both ways and check if handlebars movement changes the idle speed. If so, the throttle cable may be improperly adjusted or incorrectly routed, or damaged. Be sure to correct any of these conditions before riding.

⚠ WARNING

Operation with improperly adjusted, incorrectly routed, or damaged cables could result in an unsafe riding condition. Be sure the control cables are adjusted and routed correctly, and are free from damage.

Throttle Body Assy

Idle Speed Adjustment

- Thoroughly warm up the engine.
- Turn the idle adjusting screw/choke knob to adjust the idle speed 2 000 ~ 2 100 r/min (rpm) by using the engine revolution tester (The tester should be followed by the method described by the manufacture.).

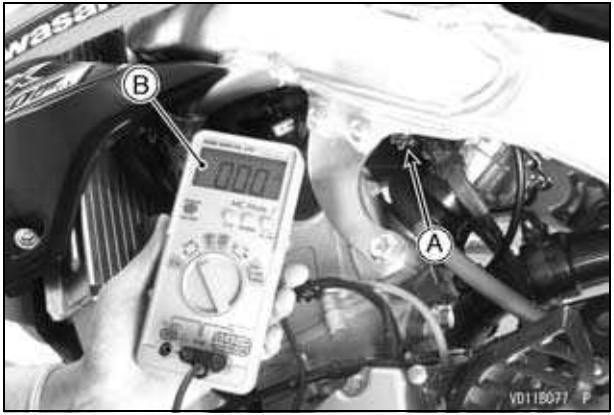

A. Idle Adjusting Screw/Choke Knob
B. Tester

- Open and close the throttle a few times to make sure the idle speed does not change, and readjust if necessary.
- With the engine idling, turn the handlebars both ways and check if handlebars movement changes

the idle speed. If so, the throttle cable may be improperly adjusted, incorrectly routed, or damaged. Be sure to correct any of these conditions before riding.

⚠ WARNING

Operation with damaged cables could result in an unsafe riding condition. Replace damaged control cables before operation.

NOTICE

This motorcycle's radiator does not incorporate cooling fan. Prolonged idling of the engine with no airflow through the radiator can cause coolant loss and engine overheating resulting in possible engine damage. Any riding conditions that increase engine temperature will further reduce idling time before coolant loss occurs. These conditions include high ambient temperature, sandy or muddy terrain, or other conditions causing high engine loads at low speeds. Furthermore, warming the engine up excessively before operation, or leaving idling with the hot engine temperature after operation results in the engine overheating, too.

Cleaning the Throttle Body Assy

- Remove the seat (see Air Cleaner section).
- Remove the fuel tank (see Spark Plug section).
- Remove the bolt and take off the side cover on both sides.

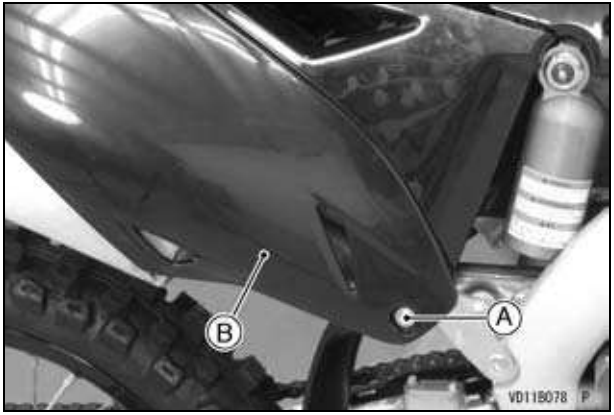

A. Bolt
B. Side Cover

- Loosen the muffler clamp bolt.
- Remove the muffler mounting bolts, and pull out the muffler body rearward.

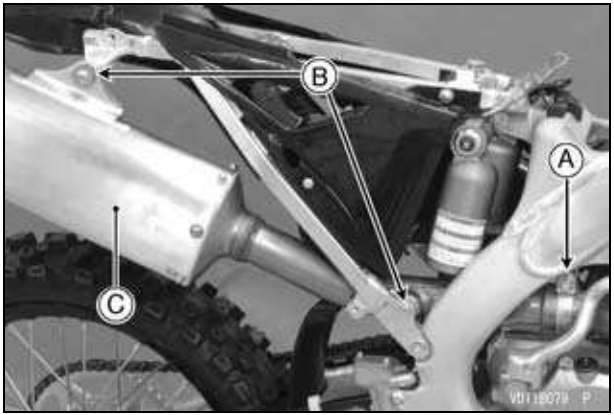

A. Muffler Clamp Bolt
B. Muffler Mounting Bolts
C. Muffler Body

- Loosen the air cleaner duct clamp bolt.
- Disconnect the intake air temperature sensor connector.

A. Air Cleaner Duct Clamp Bolt
B. Intake Air Temperature Sensor Connector

- Disconnect the intake air pressure sensor connector, downstream injector connector and throttle sensor connector.

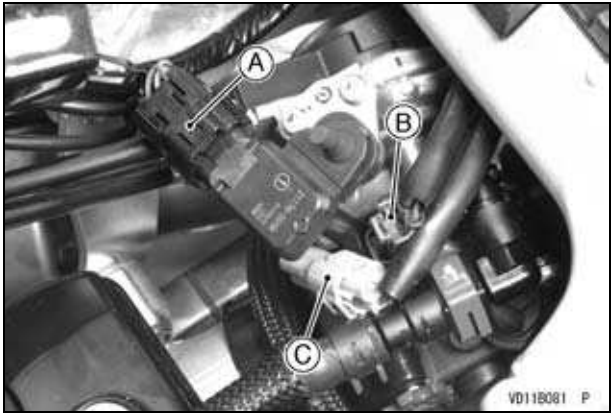

A. Intake Air Pressure Sensor Connector
B. Downstream Injector Connector
C. Throttle Sensor Connector

- Be sure to place a piece of cloth around the fuel hose joint.
- Wipe off the dirt of the surface around the connection using a cloth or a soft brush.
- Insert a thin blade screwdriver into the slit on the joint lock.

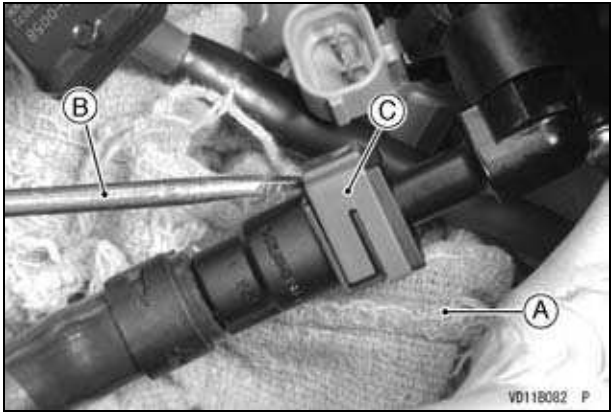

A. Cloth
B. Thin Blade Screwdriver
C. Joint Lock

- Turn the driver to disconnect the joint lock.
- Disconnect the fuel hose joint from the outlet pipe.

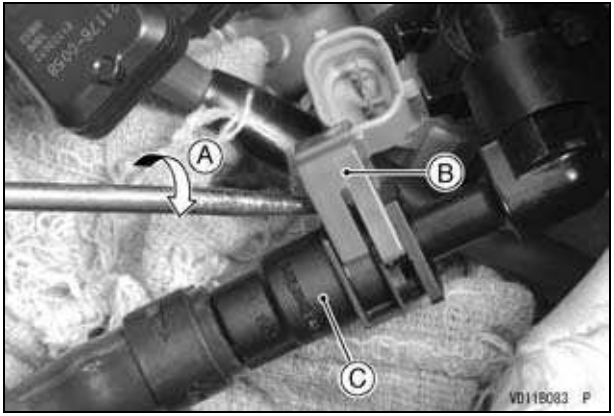

A. Turn
B. Joint Lock
C. Fuel Hose Joint

- Cover the pipe and the fuel hose joint with the vinyl bags to keep them clean.

- Disconnect the upstream injector connector.
- Be sure to place a piece of cloth around the fuel hose joint.
- Wipe off the dirt of the surface around the connection using a cloth or a soft brush.
- Remove the fuel hose joint according to the above same procedure.

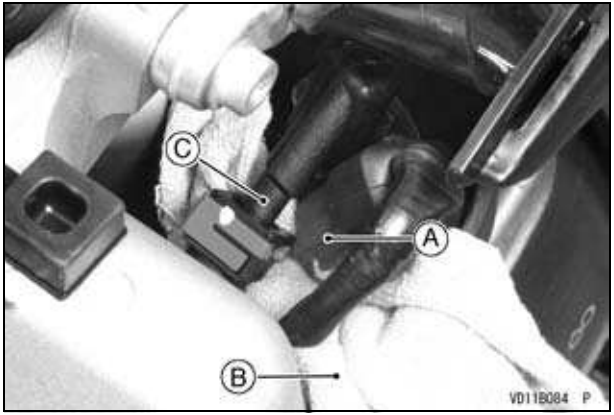

A. Upstream Injector Connector
B. Cloth
C. Fuel Hose Joint

- Remove the rear frame mounting bolts on the left and right sides.
- Pull the rear frame rearward with the air cleaner housing.

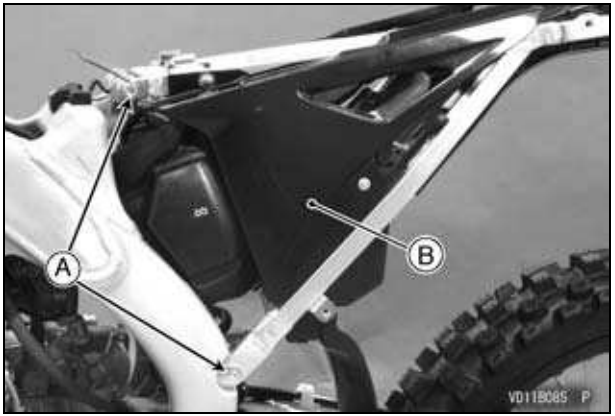

A. Rear Frame Mounting Bolts
B. Air Cleaner Housing

- Loosen the throttle body assy holder clamp screw.
- Pull the throttle body assy from the holder.

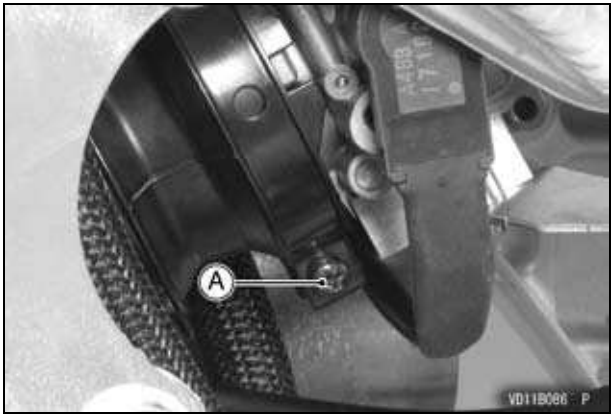

A. Throttle Body Assy Holder Clamp Screw

- Remove the bolts, and take off the throttle pulley cover.

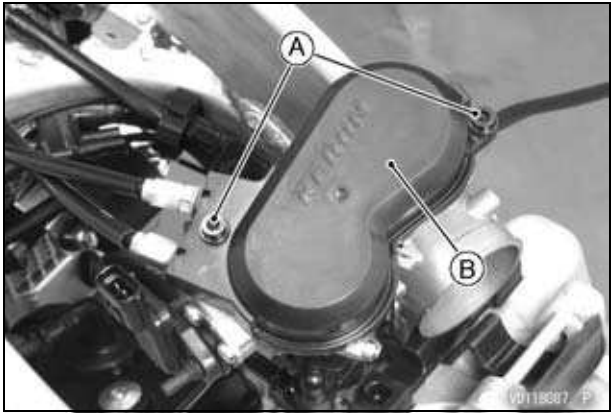

A. Throttle Pulley Cover Bolts
B. Throttle Pulley Cover

- Loosen the decelerator cable bolt locknut, and free the tip of cable lower end.
- Loosen the accelerator cable bolt, and free the tip of cable lower end.

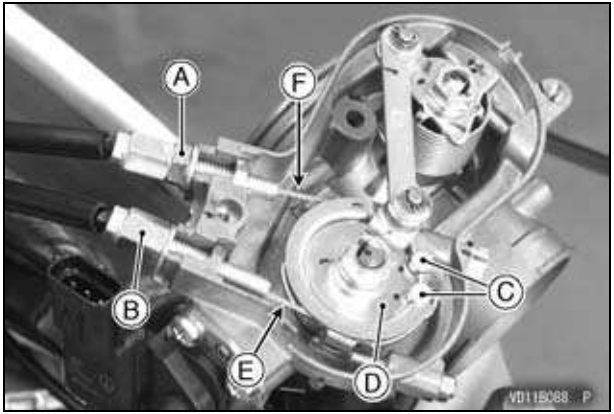

A. Decelerator Cable Bolt Locknut
B. Accelerator Cable Bolt
C. Tips of Throttle Cable Lower End
D. Throttle Pulley
E. Accelerator Cable
F. Decelerator Cable

NOTICE

Never drop the throttle body assy especially on a hard surface. Such a shock to the body assy can damage it.

- After removing the throttle body assy, cover the throttle body assy holder and air cleaner duct with a clean cloth to protect them from dirt.
- Clean the throttle body assy.
- Check the throttle bore at the throttle valve for carbon deposits by opening the throttle valve.
- If any carbon accumulates, wipe the carbon off the throttle bore and the throttle valve, using a lint-free cloth penetrated with a high flash-point solvent.

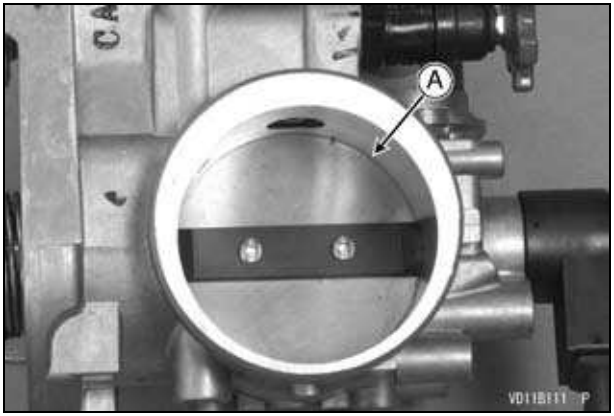

A. Throttle Bore

NOTICE

If dirt gets through into the engine, excessive engine wear and possibly engine damage will occur.

⚠ WARNING

Operation with improperly adjusted, incorrectly routed, or damaged cables could result in an unsafe riding condition. Be sure the control cables are adjusted and routed correctly, and are free from damage.

- Lubricate the lower ends of the throttle cables.
- Install the tip of accelerator cable lower end to the throttle pulley.
- Install the accelerator cable so that the position the claw on the washer.
- Install the tip of decelerator cable lower end to the throttle pulley.
- While holding the decelerator cable bolt, tighten the cable bolt locknut.

Tightening Torque

Throttle Cable Bolts:
3.0 N·m (0.31 kgf·m, 27 in·lb)
Throttle Pulley Cover Bolts:
3.4 N·m (0.35 kgf·m, 30 in·lb)

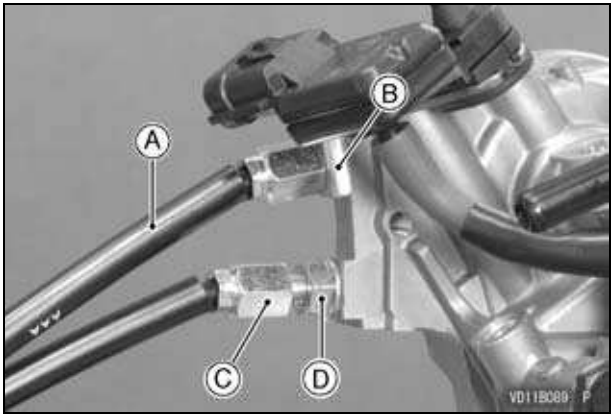

A. Accelerator Cable
B. Claw
C. Decelerator Cable Bolt
D. Decelerator Cable Bolt Locknut

- Install the throttle body assy to the throttle body assy holder. Align the projection with the groove.
- Check the throttle body assy is installed securely.

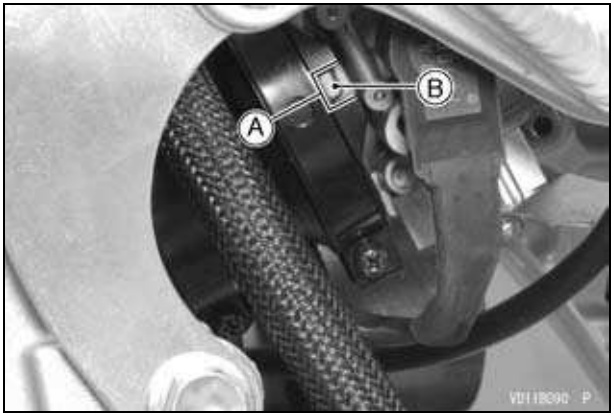

A. Groove
B. Projection

- Position the claw on the air cleaner duct clamp between the projections.

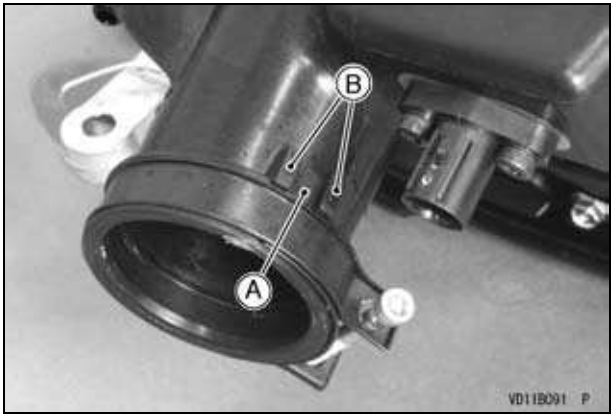

A. Claw
B. Projections

- Connect the intake air pressure sensor connector, downstream injector connector and throttle sensor connector.
- Install the rear frame with the air cleaner housing to the throttle body assy.
- Check the air cleaner duct is installed securely.
- Tighten the air cleaner duct clamp screw securely.
- Tighten the throttle body assy holder clamp bolt to the specified torque.

Tightening Torque

Throttle Body Assy Holder Clamp Screw: 2.0 N·m (0.20 kgf·m, 18 in·lb)

- Tighten the rear frame mounting bolts to the specified torque.

Tightening Torque

Rear Frame Mounting Bolts: 34 N·m (3.5 kgf·m, 25 ft·lb)

- Check the joint lock for deformation and wear.
- If the joint lock is deformed, replace the fuel hose with a new one.
- Apply engine oil to the fuel outlet pipe lightly.
- Connect the upstream injector connector and intake air temperature sensor connector.
- Insert the fuel hose joints straight onto the delivery pipes.
- Push the joint locks until the hose joints clicks.

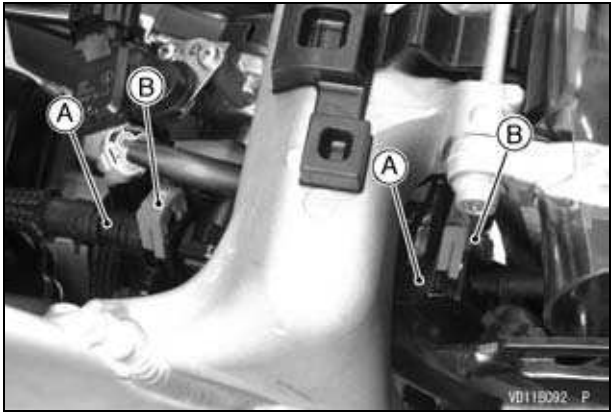

A. Fuel Hose Joints
B. Joint Locks

NOTICE

When installing the fuel hose joint, do not apply strong force to the delivery pipe. The pipe made from resin could be damaged.

- Push and pull the fuel hose joints back and forth more than two times, and make sure they are locked and do not come off.

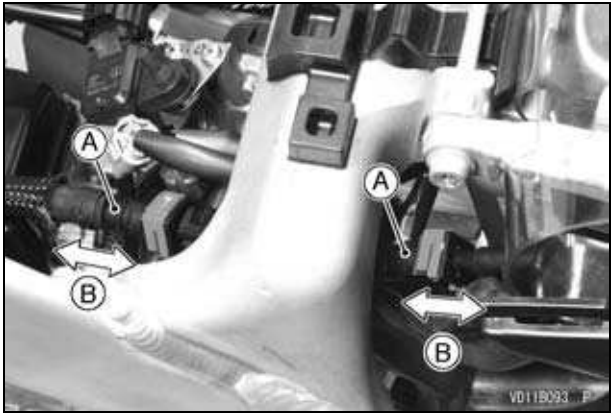

A. Fuel Hose Joints
B. Push and Pull

⚠ WARNING

Leaking fuel can cause a fire or explosion resulting in serious burns. Make sure the hose joint is installed correctly on the delivery pipe by sliding the joint.

NOTE

○ *If it comes off, reinstall the fuel hose joint.*

- Fit the projection on the muffler body and hole on the muffler clamp.

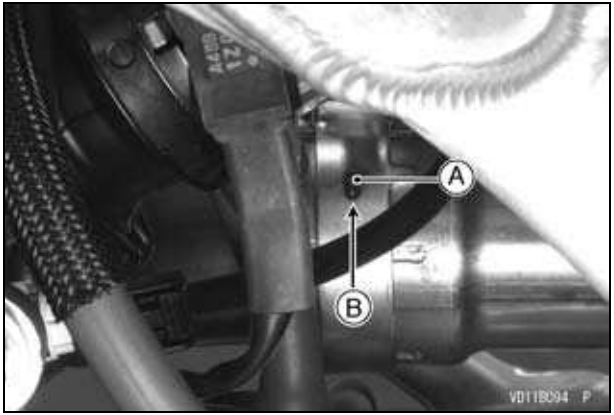

A. Projection
B. Hole

- Install the muffler (see Exhaust System section).
- Install the fuel tank (see Spark Plug section).
- Install the removed parts.
- Open and close the throttle a few times to make sure the grip operates correctly.
- Check the throttle cable play and idle speed adjustment.

Clutch

Clutch Lever Adjustment

Proper clutch lever free play is 8 ~ 13 mm (0.3 ~ 0.5 in.). Lever play increases with cable stretch and friction plate wear, requiring periodic adjustment.

When the clutch lever free play is out of specification, first try adjusting it at the clutch lever as follows.

- Turn the adjuster to obtain the proper amount of clutch lever free play.

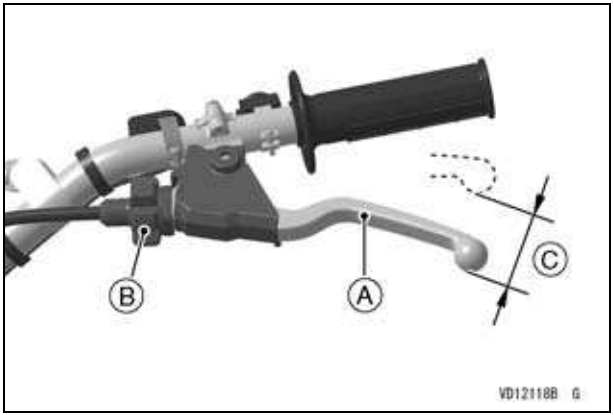

A. Clutch Lever
B. Adjuster
C. 8 ~ 13 mm (0.3 ~ 0.5 in.)

If the clutch lever free play cannot be adjusted at the clutch lever, make the adjustment further down the cable as follows.

- Turn the adjuster in all the way.
- Slide the dust cover back.
- Loosen the locknut in the middle of the clutch cable, and turn the adjusting nut so that the clutch lever free play is 8 ~ 13 mm (0.3 ~ 0.5 in.).

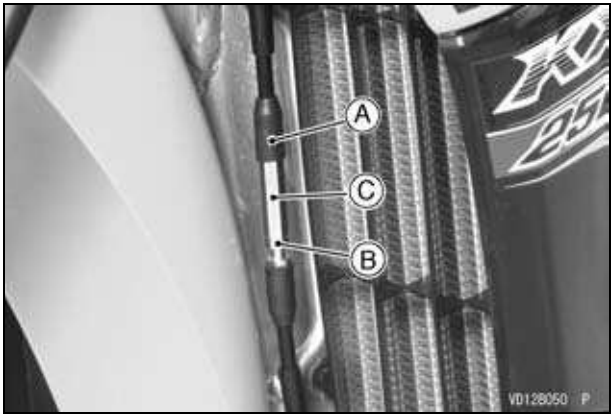

A. Dust Cover
B. Locknut
C. Adjusting Nut

- Tighten the locknut.

⚠ WARNING

Too much cable play can prevent clutch disengagement and cause an accident resulting in serious injury or death. When adjusting the clutch or replacing the cable, be sure the upper end of the clutch outer cable is fully seated in its fitting, or it could slip into place later, creating enough cable play to prevent clutch disengagement.

NOTE

○ *After the adjustment is made, start the engine and check that the clutch does not slip and that it releases properly.*

Friction and Steel Plates Removal

- Drain the engine oil (see Engine Oil section).
- Remove the brake pedal bolt and the rear brake pedal return spring.

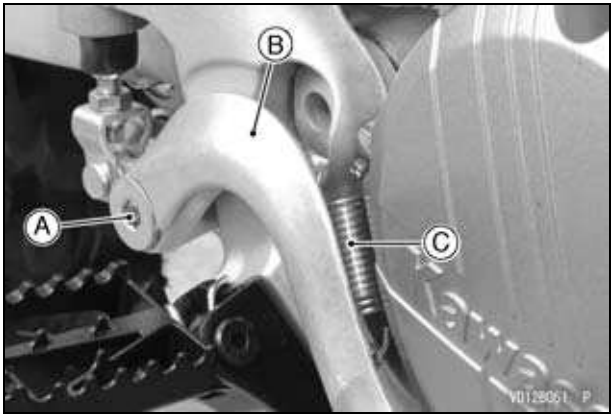

A. Brake Pedal Bolt
B. Brake Pedal
C. Return Spring

- Remove the clutch cover bolts.

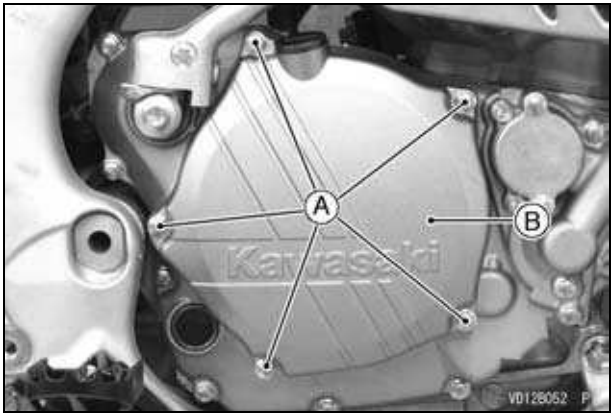

A. Bolts
B. Clutch Cover

- Remove the clutch cover and gasket.
- Remove the clutch spring bolts, clutch pressure plate and springs.

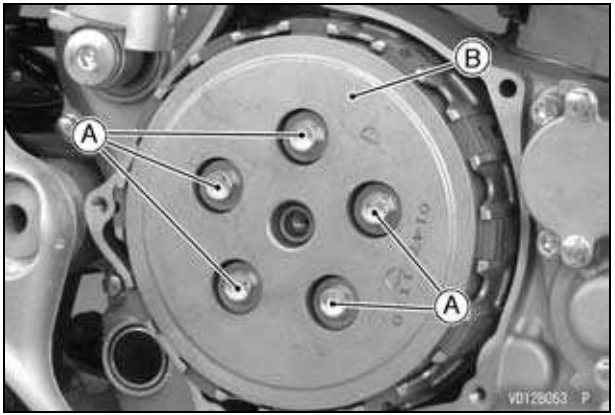

A. Clutch Spring Bolts
B. Clutch Pressure Plate

- Remove the friction and steel plates.

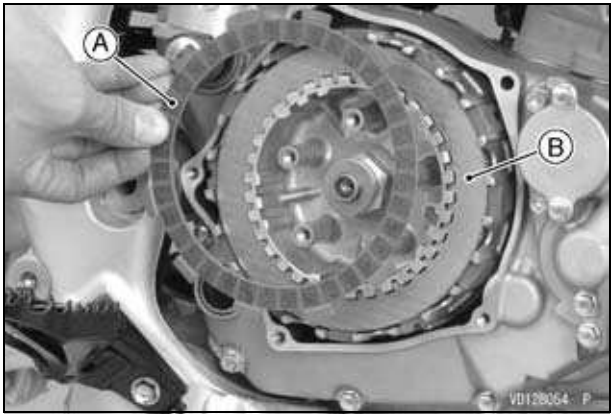

A. Friction Plate
B. Steel Plate

Friction and Steel Plates Wear/Damage Inspection

- Visually inspect the friction and steel plates to see if they show any signs of seizure, or uneven wear.
- If any plates show signs of damage, replace all friction plates and steel plates as a set.
- Measure the thickness of the friction and steel plates with vernier calipers.
- If they have worn past the service limit, replace them with new ones.

Friction Plate Thickness Measurement

Standard	2.72 ~ 2.88 mm (0.107 ~ 0.113 in.)
Service Limit	2.5 mm (0.10 in.)

Steel Plate Thickness Measurement

Standard	1.5 ~ 1.7 mm (0.059 ~ 0.067 in.)
Service Limit	1.4 mm (0.055 in.)

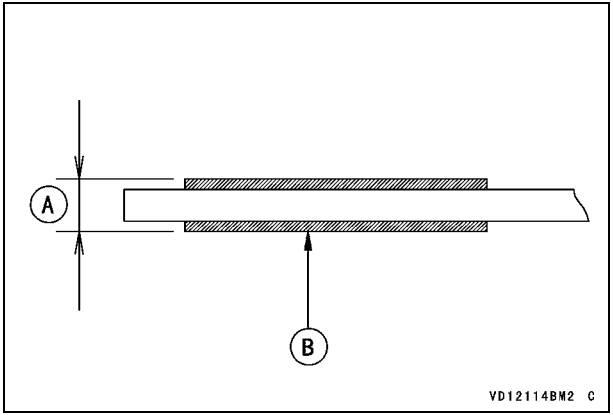

A. Thickness
B. Friction Plate

Friction and Steel Plate Warp Inspection

- Place each friction plate and steel plate on a surface plate, and measure the amount of friction plate and steel plate warp with a thickness gauge (i.e., the gap between the surface plate and each friction plate or steel plate).
- If any plate is warped over the service limit, replace it with a new one.

Friction and Steel Plate Warp

Friction Plate	Standard	0.15 mm (0.0059 in.) or less
	Service Limit	0.3 mm (0.012 in.)
Steel Plate	Standard	0.15 mm (0.0059 in.) or less
	Service Limit	0.3 mm (0.012 in.)

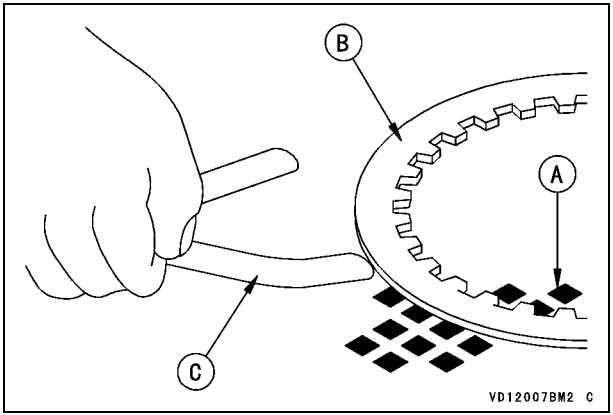

A. Surface Plate
B. Friction or Steel Plate
C. Thickness Gauge

Friction and Steel Plate Installation

- Install all parts in the reverse order of removal.
- Install the friction plates and steel plates, alternating between the two; be sure to start and finish with a friction plate.

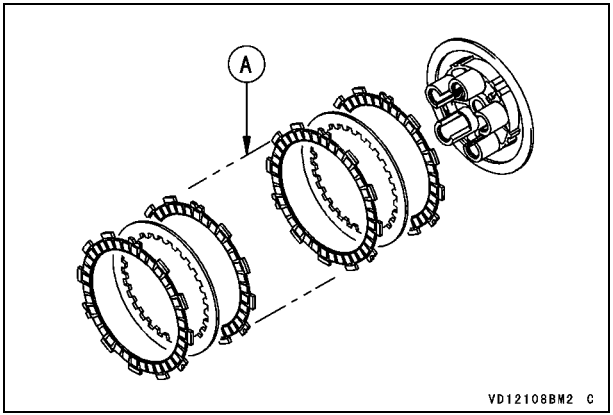

A. Friction and Steel Plates

NOTICE

If dry steel plates and friction plates are installed, apply engine oil to the surfaces of each plate to avoid clutch plate seizure.

- Apply molybdenum disulfide grease to the steel ball and the contact area of the push rod holder.
- Install the steel ball and the push rod holder.

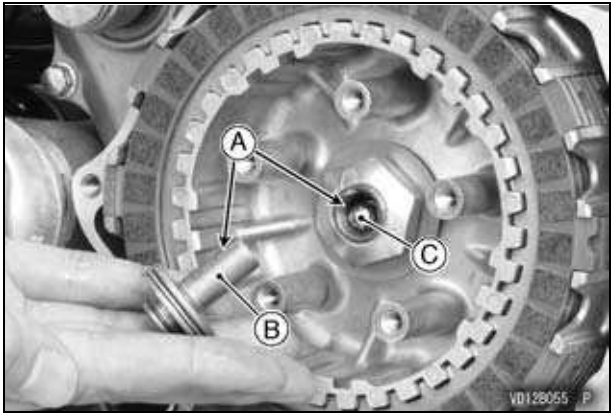

A. Apply molybdenum disulfide grease.
B. Push Rod Holder
C. Steel Ball

- Install the clutch pressure plate and springs.
- Tighten the clutch spring bolts to the specified torque.

Tightening Torque

Clutch Spring Bolts: 9.0 N·m (0.92 kgf·m, 80 in·lb)

- Check the release shaft lever position by measuring the position distance between the lever and the cable bracket while pushing the release shaft lever lightly forward.

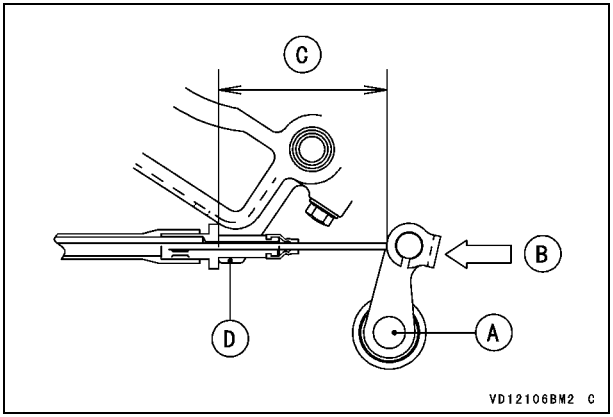

A. Release Shaft Lever
B. Push forward.
C. Position Distance
D. Cable Bracket

Position Distance

Standard	49.2 ~ 56.5 mm (1.94 ~ 2.22 in.)

- If the lever position is not within the standard, select the correct thickness of adjusting washer according to the following table.
- Remove the push rod holder as necessary and reinstall the clutch.

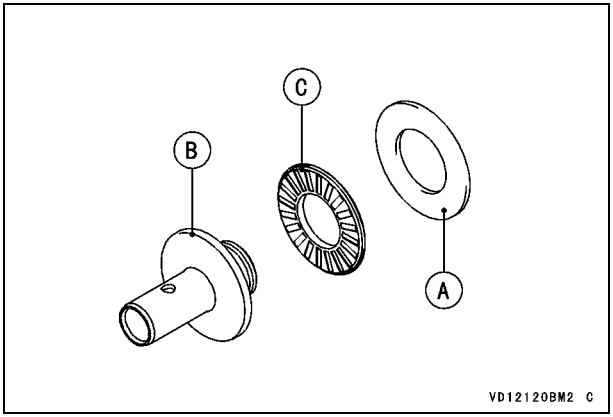

A. Adjusting Washer
B. Push Rod Holder
C. Needle Bearing

Adjusting Washer

Thickness	Part Number
1.5 mm (0.06 in.)	92200-1548
1.0 mm (0.04 in.)	92200-0045

Release Shaft Lever Position and Adjusting Washer Selection

Position Distance	Judg-ment	Washers Thickness	Quan-tity
49.2 ~ 56.5 mm (1.94 ~ 2.22 in.)	Standard	1.5 mm (0.06 in.)	1
More than 56.5 mm (2.22 in.)	Too big	1.0 mm (0.04 in.)	1
Less than 49.2 mm (1.94 in.)	Too small	1.0 mm (0.04 in.)	2

- Place a new clutch cover gasket in position with a thin layer of grease and tighten the bolts.

Tightening Torque

Clutch Cover Bolts:
9.8 N·m (1.0 kgf·m, 87 in·lb)

- When installing the brake pedal, apply the grease to the contact area of the brake pedal pivot.
- Install the removed parts.
- Check the engine oil level.

Valve Clearance

Valve and valve seat wear decreases valve clearance, upsetting valve timing.

NOTICE

If valve clearance is left unadjusted, wear will eventually cause the valves to remain partly open, which lowers performances, burns the valves and valve seats, and may cause serious engine damage.

Valve clearance for each valve should be checked and adjusted in accordance with the Periodic Maintenance Chart.

NOTE

○ *If the engine is hot, wait until the engine cools. Valve clearance must be checked when the engine is cold (room temperature).*

Valve Clearance Inspection

- Remove the spark plug cap (see Spark Plug section).
- Remove the fuel hose joint of the downstream injector outlet pipe (see Throttle Body Assy section).
- Remove the cylinder head cover bolts and cylinder head cover.

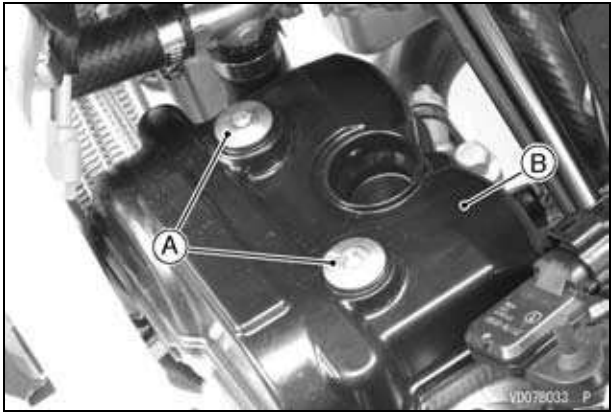

A. Cylinder Head Cover Bolts and Washers
B. Cylinder Head Cover

- Remove the head cover gasket and spark plug hole gasket.

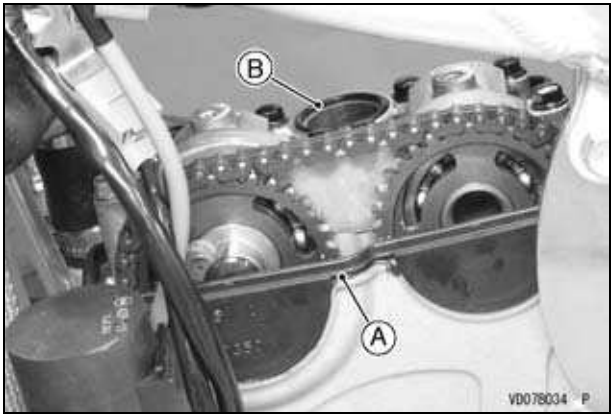

A. Head Cover Gasket
B. Spark Plug Hole Gasket

- Remove the two caps from the magneto cover.

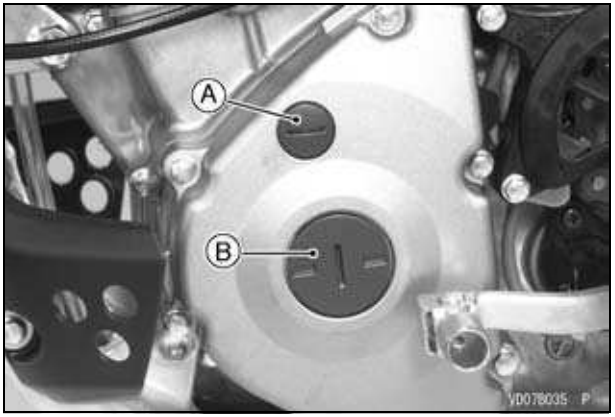

A. Timing Inspection Cap
B. Flywheel Nut Cap

- Bring the piston to the Top Dead Center (TDC) of its compression stroke to inspect the valve clearance (the position at the end of the compression stroke) by aligning the top mark with the groove on the magneto cover while turning the crankshaft counterclockwise.

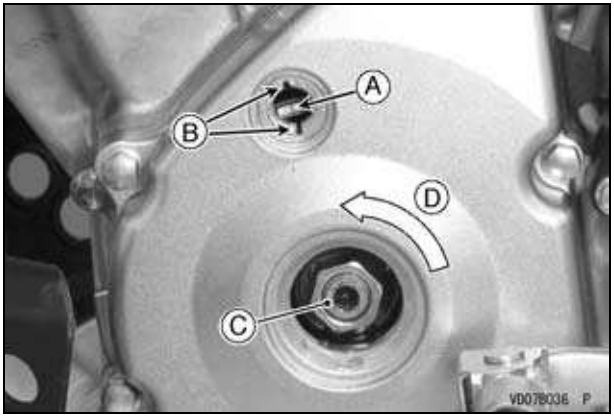

A. Top Mark
B. Groove on Magneto Cover
C. Crankshaft
D. Crankshaft Rotation Direction

- At this point, the timing marks on the camshaft sprockets must be almost aligned with the cylinder head upper surface.

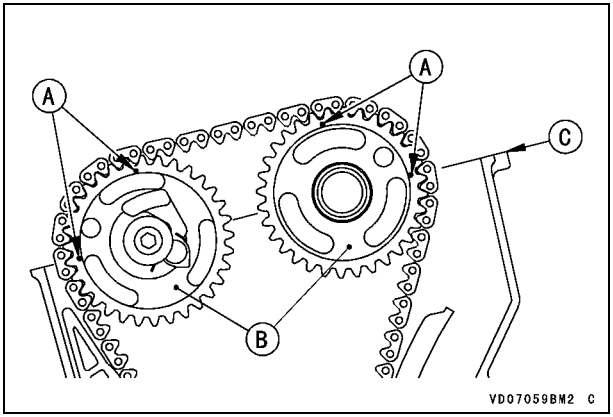

A. Timing Marks
B. Camshaft Sprockets
C. Cylinder Head Upper Surface

- Using the thickness gauge, measuring the clearance between each cam lobe and valve lifter, for all four valves.

NOTE

○ *Record the measured valves clearance.*

A. Thickness Gauge

Standard Valve Clearance

Exhaust	0.17 ~ 0.22 mm (0.0067 ~ 0.0087 in.)
Intake	0.10 ~ 0.15 mm (0.0039 ~ 0.0059 in.)

- If the valve clearance is not within the specified range, adjust by an authorized Kawasaki dealer or a competent mechanic following the instructions in the Service Manual.
- Using a high flash-point solvent, clean off any oil or dirt that may be on the silicone sealant coating area. Dry them with a clean cloth.
- Apply silicone sealant to the cylinder head.

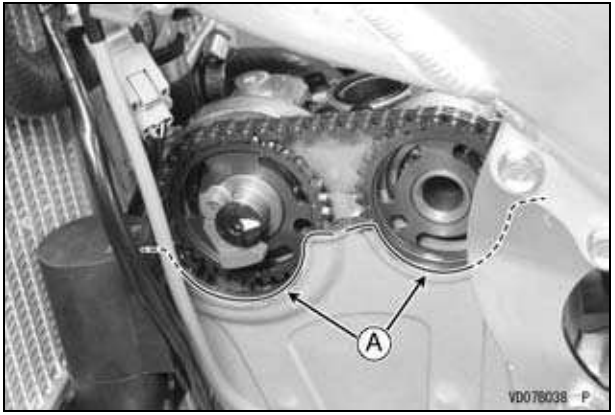

A. Silicone Sealant

- Replace the spark plug hole gasket with a new one, and apply grease to it.
- Install the new gasket.

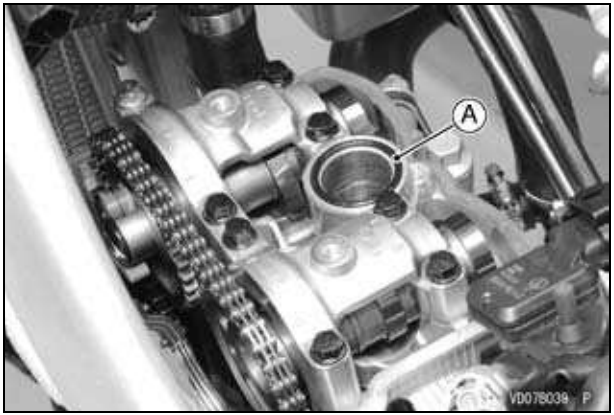

A. Spark Plug Hole Gasket

- Make sure that the upper chain guide is bottomed to the cylinder head cover.
- Replace the head cover gasket with a new one.
- Install the head cover gasket on the cylinder head cover.

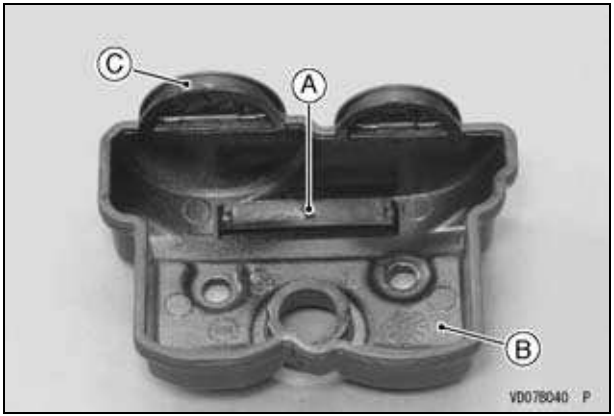

A. Upper Chain Guide
B. Cylinder Head Cover
C. Head Cover Gasket

NOTICE
Unless the upper chain guide is bottomed, the camshaft chain could push the cylinder head cover upward, leading to an oil leak.

- Install the cylinder head cover.
- Install the washer with the metal side upwards to the cylinder head cover, and tighten the bolts to the specified torque.

Tightening Torque

Cylinder Head Cover Bolts: 9.8 N·m (1.0 kgf·m, 87 in·lb)

● Install the two caps to the magneto cover.

Tightening Torque

Timing Inspection Cap: 3.5 N·m (0.36 kgf·m, 31 in·lb) Flywheel Nut Cap: 3.5 N·m (0.36 kgf·m, 31 in·lb)

● Install the removed parts.

Exhaust System

The exhaust system, in particular the muffler body, is designed to reduce exhaust noise and conduct the exhaust gases away from the rider while minimizing power loss. If carbon has built up inside the muffler body, exhaust efficiency is reduced, causing engine performance to drop.

If the muffler body is badly damaged, dented, cracked or rusted, replace it. Replace the silencer wool if the exhaust noise becomes too loud or engine performance drops.

Silencer Wool Replacement

● Remove the bolts and right side cover.

A. Bolts
B. Right Side Cover

- Remove the muffler cover bolts.
- Remove the muffler mounting bolt (rear).

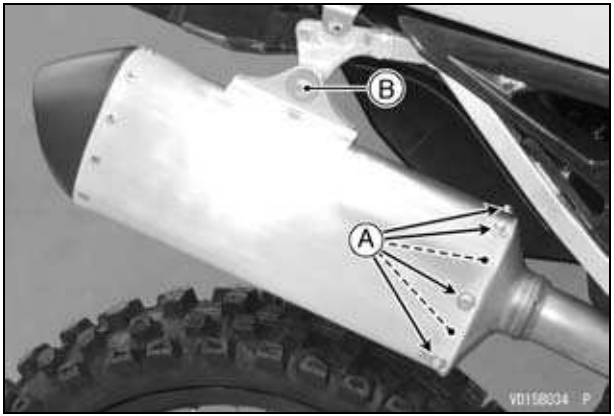

A. Muffler Cover Bolts
B. Muffler Mounting Bolt (Rear)

- Remove the muffler cover with the plastic mallet.

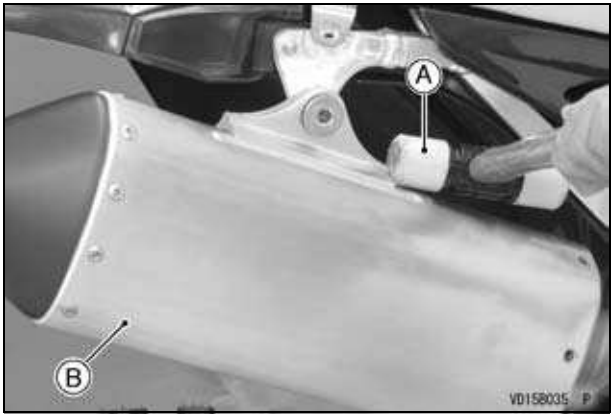

A. Plastic Mallet
B. Muffler Cover

- Replace the silencer wool with a new one.
- Remove the silicone sealant attaching on the muffler cover and muffler body.
- Arrange the shape of the silencer wool and install the muffler cover to the muffler body.

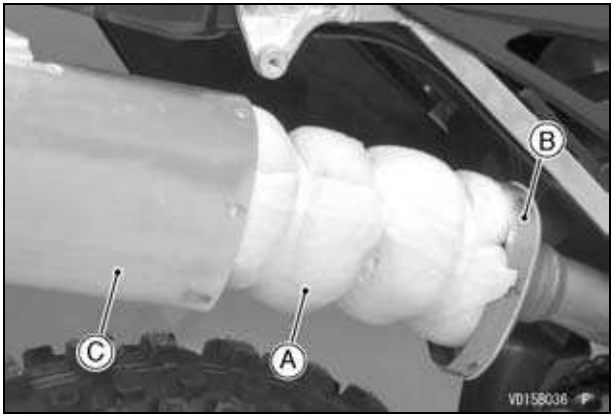

A. Silencer Wool
B. Muffler Body
C. Muffler Cover

- Check that the exhaust port of the muffler cover align with the muffler pipe.

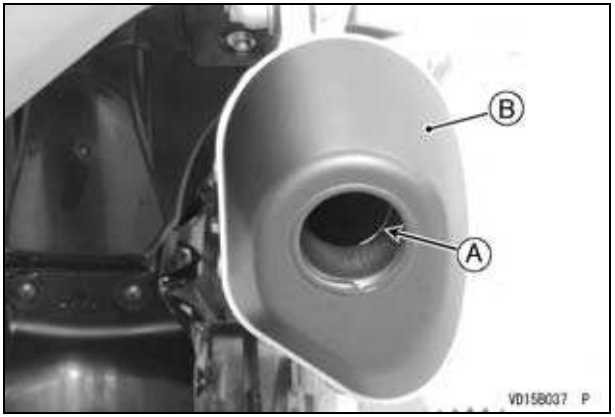

A. Muffler Pipe End
B. Baffle

- Apply a non-permanent locking agent to the muffler cover bolts.
- Tighten the muffler cover bolts and apply the silicone sealant to the joint part of the muffler cover and muffler body.

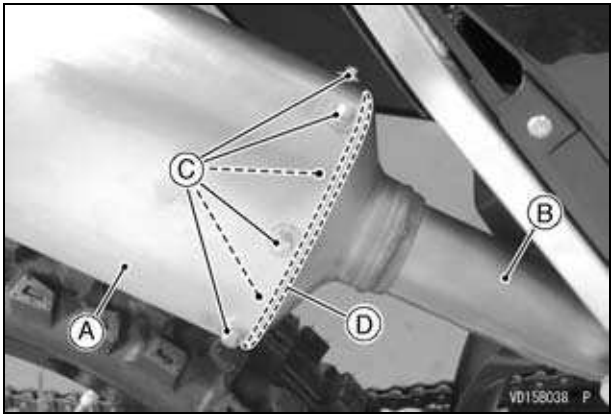

A. Muffler Cover
B. Muffler Body
C. Muffler Cover Bolts
D. Silicone Sealant

NOTE

○ *If the threaded holes of the muffler cover and muffler body do not align, remove the muffler clamp bolt and muffler mounting bolts.*

- Firstly, tighten the muffler mounting bolt (front).
- Secondly, tighten the muffler mounting bolt (rear).
- Thirdly, tighten the muffler clamp bolt.

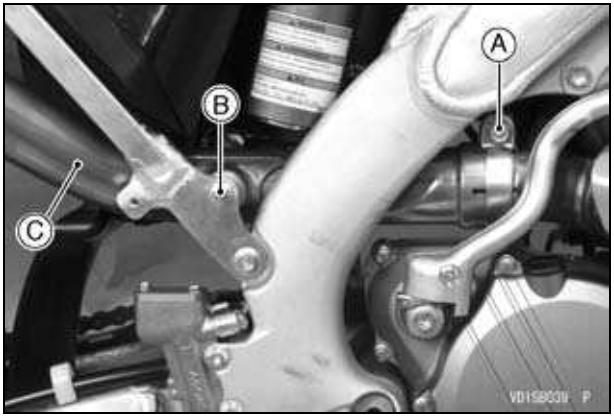

A. Muffler Clamp Bolt
B. Muffler Mounting Bolt (Front)
C. Muffler Body

- Insert the tabs of the side cover into the slots of the air cleaner housing, and tighten the bolts.

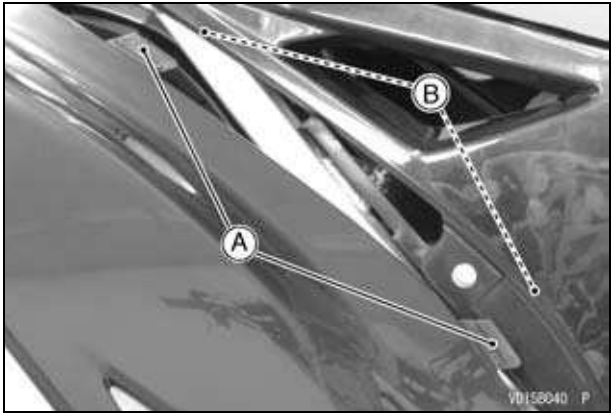

A. Tabs
B. Slots

Rear Axle Nut

- Visually inspect the rear axle nut for deformation or damage at the friction ring and caulking. If it is deformed or damaged, replace the axle nut with a new one.

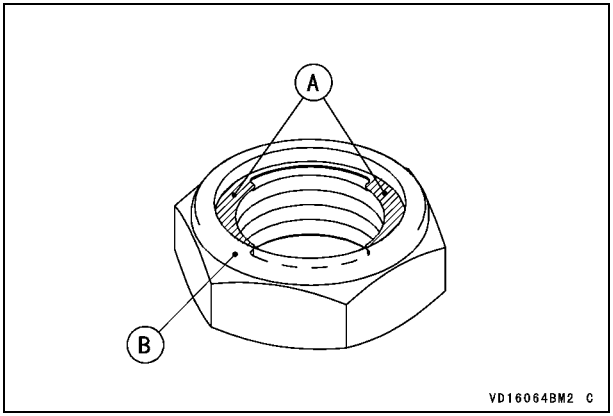

A. Friction Ring
B. Caulking

Drive Chain

For safety and to prevent excessive wear, the drive chain must be checked, adjusted, and lubricated before riding. If the chain becomes badly worn or maladjusted - either too loose or too tight - it could jump off the sprockets or break.

⚠ WARNING

A chain that breaks or jumps off the sprockets could snag on the engine sprocket or lock the rear wheel, severely damaging the motorcycle and causing it to go out of control. Inspect the chain for damage and proper adjustment before each ride.

Chain Slack Inspection

- Raise the rear wheel off the ground, then rotate the rear wheel to find the place where the chain is tightest (because it wears unevenly).
- Push up the drive chain in the middle of the upper chain run to measure the chain slack. The distance between the bottom-line of the chain and the swingarm (at the end of the chain slipper) should be within the standard value.

Drive Chain Slack

Standard	52 ~ 58 mm (2.0 ~ 2.3 in.)

- Adjust the drive chain if its slack is out of specification.

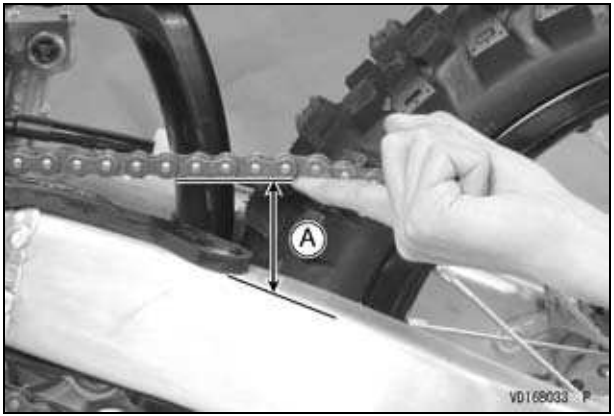

A. Chain Slack

- In addition to checking the slack, rotate the rear wheel to inspect the drive chain for damaged rollers, loose pins and links and the sprockets for unevenly or excessively worn and damaged teeth.
- If there are any such defects, replace the drive chain and/or the sprockets.

Chain Slack Adjustment

- Loosen the rear axle nut and both chain adjuster locknuts.
- Turn both chain adjusting bolts evenly until the drive chain slack (measured between the chain and the swingarm) is within the standard value. For the rear wheel to be properly aligned, the notch of the left chain adjuster should align with the same swingarm mark that the notch of the right chain adjuster aligns with.

Drive Chain Slack

52 ~ 58 mm (2.0 ~ 2.3 in.)

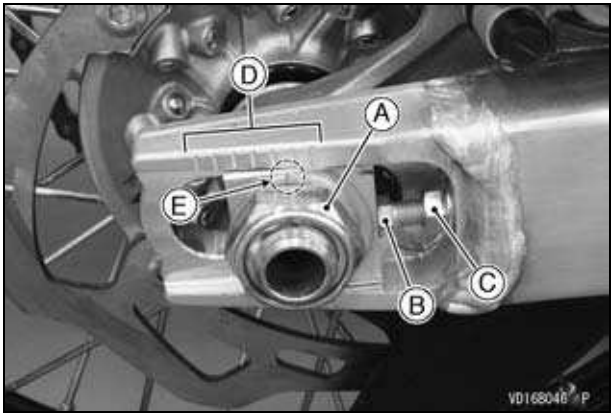

A. Rear Axle Nut
B. Adjusting Bolt
C. Locknut
D. Marks
E. Notch

NOTE

○ *Wheel alignment can also be checked using the straightedge or string method.*

⚠ WARNING

Misalignment of the wheel will result in abnormal wear, and may result in an unsafe riding condition. Align the rear wheel using the marks on the swingarm or measuring the distance between the center of the axle and swingarm pivot.

- Inspect the rear axle nut (see Rear Axle Nut section).
- Tighten both chain adjuster locknuts.
- Tighten the axle nut to the specified torque.

Tightening Torque

Rear Axle Nut: 108 N·m (11.0 kgf·m, 79.7 ft·lb)

- Rotate the wheel, measure the chain slack again at the tightest position, and readjust it if necessary.

⚠ WARNING

A loose axle nut can lead to an accident resulting in serious injury or death. Tighten the axle nut to the proper torque.

- Check the rear brake effectiveness.

NOTE

○ *When riding in wet and muddy conditions, mud sticks to the chain and sprockets, resulting in an overly tight chain, which can cause it to break. To prevent this, adjust the chain slack (measured*

between the chain and the swingarm) to 62 ~ 68 mm (2.4 ~ 2.7 in.).

Chain Wear Inspection

When the chain has reached its wear limit (i.e., when it has stretched by 1.7% of its original length), it is no longer safe for use and should be replaced. Since it is impractical to measure the entire length of the chain, determine the degree of wear by measuring a 20-link section of the chain.

- Tighten the chain either by using the chain adjusters or by hanging a 10 kg (22 lb) weight on the chain.
- Measure the 20-link length on a straight part of the chain from the center of the 1st pin to the center of the 21st pin. If the length exceeds the service limit, the chain should be replaced. Since overworn sprockets will cause a new chain to wear faster, inspect both the engine and rear sprockets whenever the chain is replaced, and replace them if necessary.

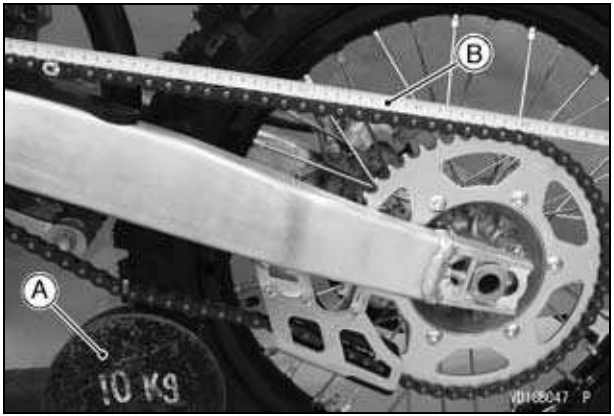

A. Weight
B. Tape Measure

Drive Chain 20-Link Length

Standard	317.5 ~ 318.2 mm (12.50 ~ 12.53 in.)
Service Limit	323 mm (12.7 in.)

NOTE

○ *The drive system was designed for use with a DAIDO DID 520DMA4 114-links chain. For maximum stretch resistance and safety, a genuine part must be used for replacement.*

○ *To minimize any chance of the master link coming apart, the master link clip must be installed with the closed end of the "U" pointing in the direction of chain rotation.*

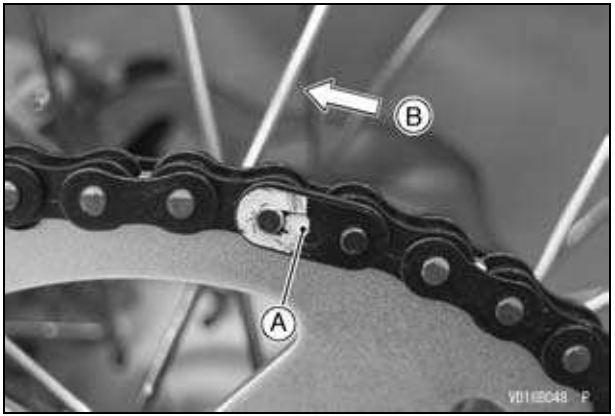

A. Master Link Clip
B. Direction of Chain Rotation

Chain Guide Wear Inspection

- Visually inspect the drive chain guide and replace it if excessively worn or damaged.

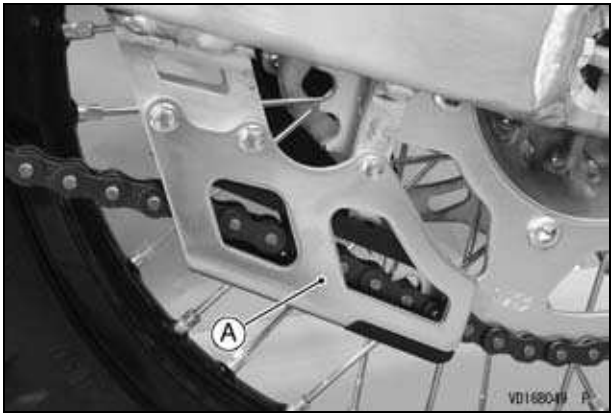

A. Chain Guide

Chain Slipper Wear Inspection

- Visually inspect the upper and lower of the chain slipper on the swingarm and replace them if worn or damaged.

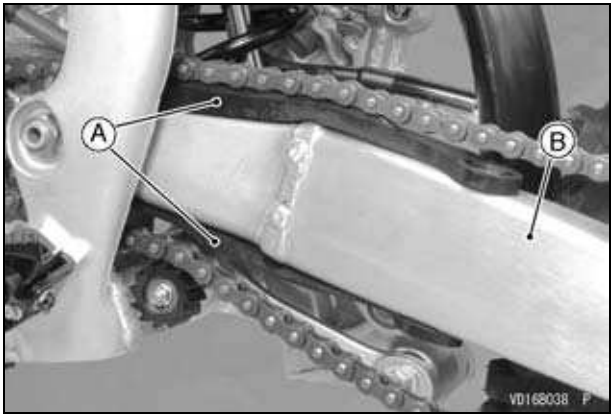

A. Upper and Lower of the Chain Slipper
B. Swingarm

Sprocket Wear Inspection

- Visually inspect the sprocket teeth and replace the sprocket if its teeth are worn or damaged.

Sprocket Teeth Wear

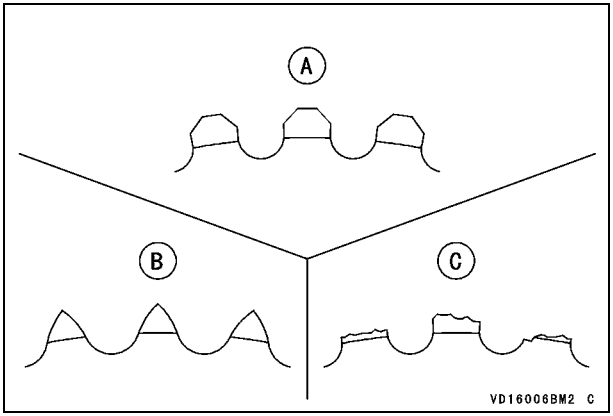

A. Good Teeth
B. Worn Teeth
C. Damaged Teeth

NOTE

○ *Sprocket wear is exaggerated in the illustration.*

Chain Lubrication

Lubrication is necessary after riding through rain or on wet roads, or any time that the chain appears dry.

Use a lubricant for drive chains. If the chain is especially dirty, clean it using a cleaner for drive chains following the instructions supplied by the chain cleaner manufacturer.

- Apply lubricant to the sides of the rollers so that it will penetrate to the rollers and bushings. Wipe off any excess lubricant.

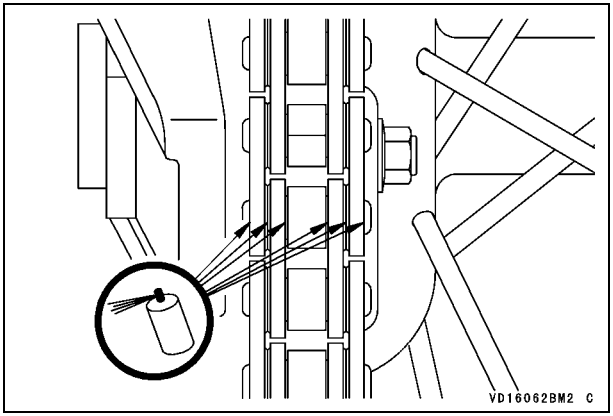

- Wipe off any lubricant that gets on the tire surface.

Adjustable Ergonomics

To suit various riding positions, the handlebar holder position can be changed and the handlebar can be adjusted by turning the handlebar holders around (180°).

The footpeg position can also be changed to suit the rider's preference.

Handlebar Position Adjustment

- Remove the handlebar pad.
- Check the handlebar for damage or cracks.
- Remove the handlebar clamp bolts, the clamps and the handlebar.

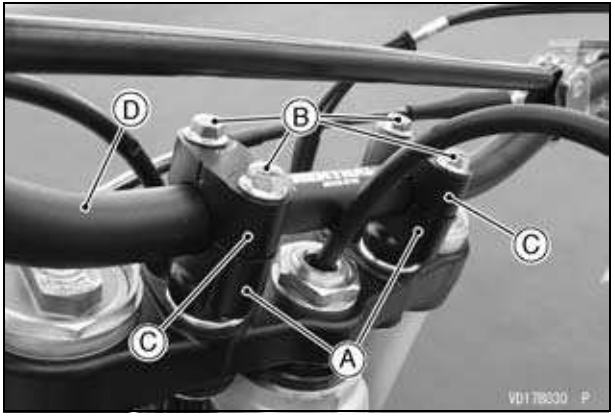

A. Handlebar Holder
B. Handlebar Clamp Bolts
C. Handlebar Clamps
D. Handlebar

- Remove the handlebar holder nuts, washers and handlebar holders.

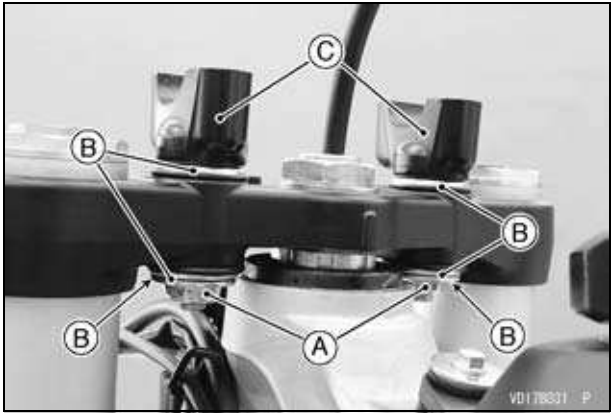

A. Handlebar Holder Nuts
B. Washers
C. Handlebar Holder

- Select the handlebar position and install the dampers into the holes of the steering stem head so that the flat surface of dampers fit the surface of the steering stem head holes.
- Replace the handlebar holder nuts with new ones.
- Install the handlebar holder in the suitable direction.
- Put the handlebar on the handlebar holder.
- Temporarily install the handlebar clamps.
- Hand tighten the handlebar clamp bolts.
- Tighten the handlebar holder nuts.

Tightening Torque

Handlebar Holder Nuts:
34 N·m (3.5 kgf·m, 25 ft·lb)

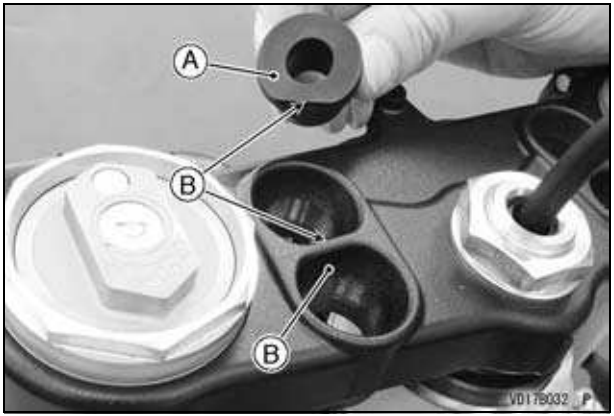

A. Dampers
B. Flat Surfaces

- Position the handlebar and use the gauge marks to check its alignment in the clamps. There should be equal marks showing on each side of the clamps.
- Tighten the front and rear handlebar clamp bolts equally. If the handlebar clamps are correctly installed, there will be even gaps on the front and rear sides of the clamp after the bolts are torqued.

Tightening Torque

Handlebar Clamp Bolts:
25 N·m (2.5 kgf·m, 18 ft·lb)

NOTE

○ *Tighten the two clamp bolts alternately two times to ensure even tightening torque.*

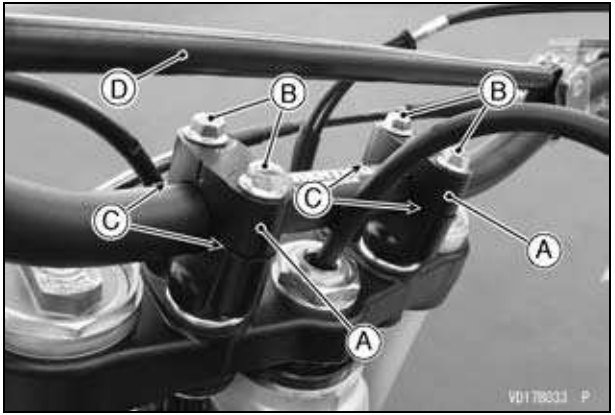

A. Handlebar Clamps
B. Clamp Bolts
C. Gap
D. Supporting Bar

- Do not disassemble the supporting bar on the handlebar.
- Check the front brake for the proper brake effect, or no brake drag.

Footpeg

The right and left footpegs can be mounted in one of two positions.

- Remove the cotter pin, pivot pin, washer, spring and footpeg.

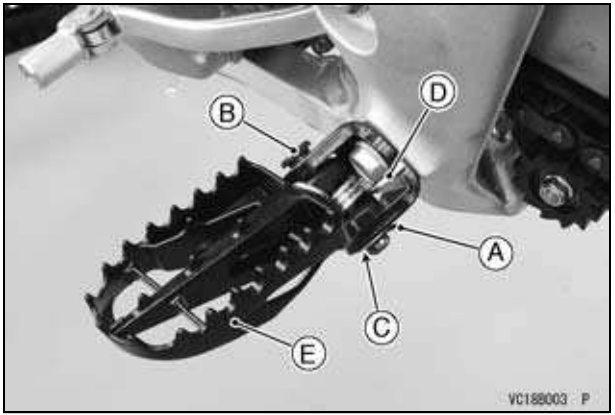

A. Cotter Pin
B. Pivot Pin
C. Washer
D. Spring
E. Footpeg

- Remove the footpeg bracket bolts and bracket. (This position is standard.)

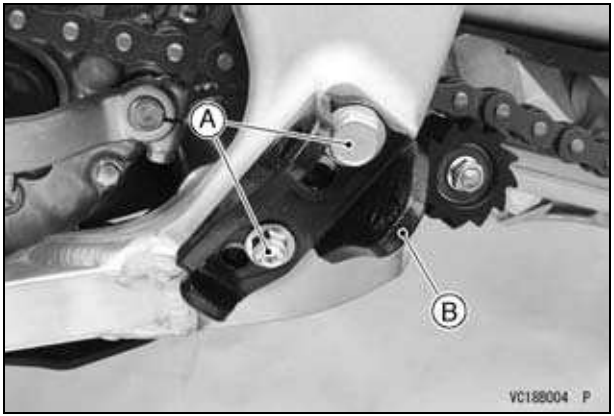

A. Footpeg Bracket Bolts
B. Footpeg Bracket

- Apply a non-permanent locking agent to the bracket bolts.
- Select either footpeg position and tighten the bracket with the two bolts.

Tightening Torque

Footpeg Bracket Bolts (Upper): 34 N·m (3.5 kgf·m, 25 ft·lb) Footpeg Bracket Bolts (Lower): 16.5 N·m (1.68 kgf·m, 12.2 ft·lb)

- Apply grease to the pivot pin.
- Install the footpeg, spring and pivot pin. Insert the pivot pin from the front.
- Position the spring ends as shown in the figure.
- Install the washer and new cotter pin.
- Bend the longer end of the cotter pin.

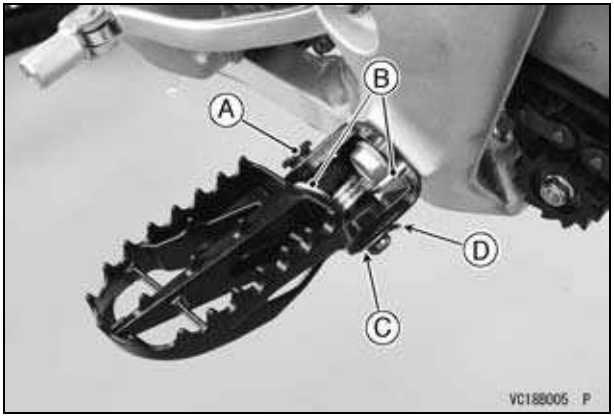

A. Pivot Pin
B. Spring Ends
C. Washer
D. Cotter Pin

NOTE

○ *Install the footpegs with same height on both sides. Do not ride the motorcycle with footpegs installed unevenly.*
○ *Adjust the positions of the shift pedal and the brake pedal to suit the rider's preference.*
○ *Installing the footpegs in the lower position will reduce the amount of ground clearance and lean angle.*

Brakes

Disc and disc pad wear is automatically compensated for and has no effect on the brake lever or pedal action. There are no parts on the brakes that require adjustment except brake lever position.

Brake Lever Position

The brake lever position can be adjusted to suit the rider's preference.

- To adjust the brake lever position, slide the front brake lever dust cover back, and loosen the locknut, and turn the adjuster to either side with a wrench.
- After adjustment, tighten the locknut securely.

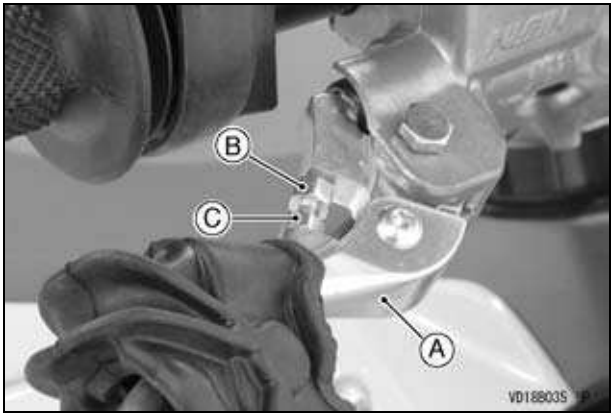

A. Brake Lever
B. Adjuster
C. Locknut

- Test the braking power and check that there is no brake drag.

⚠ WARNING

Air in the brake lines diminish braking performance and can cause an accident resulting in injury or death. If the brake lever or pedal feels mushy when it is applied, there might be air in the brake lines or the brake may be defective. Have the brake checked immediately by an authorized Kawasaki dealer.

Disc Brake Fluid

Inspect the brake fluid level in the front and rear brake reservoirs and change the brake fluid in accordance with the Periodic Maintenance Chart. The brake fluid should also be changed when contaminated with dirt or water.
Use only heavy-duty brake fluid as follows.

Front/Rear Brake Fluid : DOT3 or DOT4

NOTE

○ *The motorcycle is shipped with brake fluid DOT4 in the brake system.*

NOTICE

Do not spill brake fluid onto any painted surface.
Do not use fluid from a container that has been left open or that has been unsealed for a long time.
Check for fluid leakage around the brake system fittings.
Check for brake hose damage.

Brake Fluid Level Inspection (Front and Rear Brake Reservoirs)

With the front or rear brake reservoir positioned horizontally, the brake fluid must always be above the lower level line.

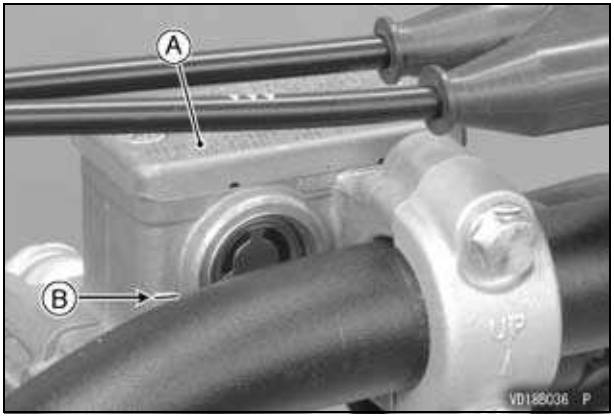

A. Front Brake Reservoir
B. Lower Level Line

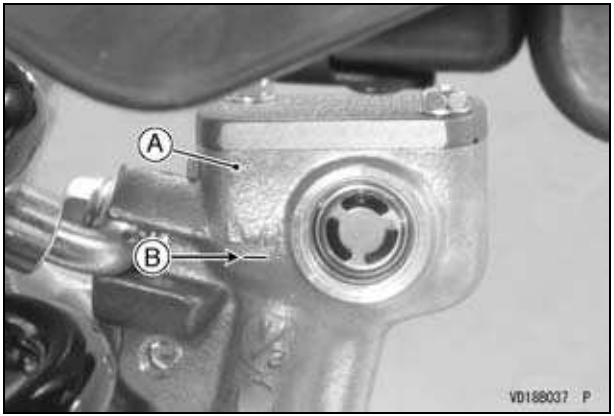

A. Rear Brake Reservoir
B. Lower Level Line

- If the brake fluid in the front or rear brake reservoir is below the lower level line, check for fluid leaks in the brake line and fill the reservoir to the upper level line (The step inside the front and rear brake reservoirs indicate the upper level.).

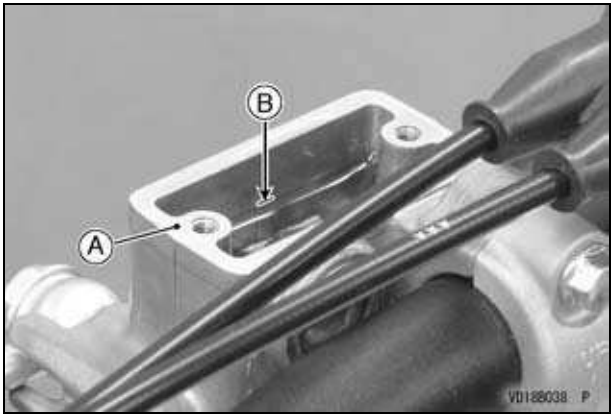

A. Front Brake Reservoir
B. Upper Level Line

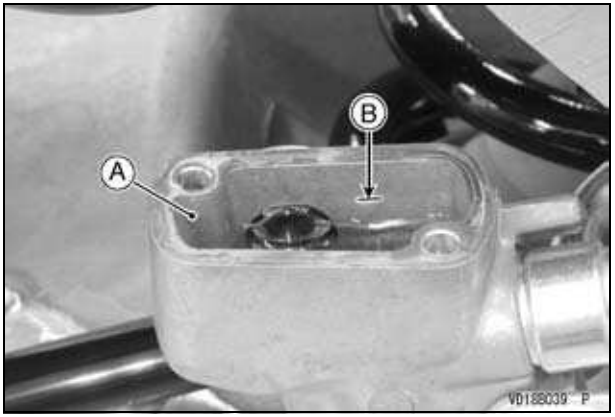

A. Rear Brake Reservoir
B. Upper Level Line

⚠ WARNING

Mixing brands and types of brake fluid can reduce the brake system's effectiveness and cause an accident resulting in injury or death. Do not mix two brands of brake fluid. Change the brake fluid in the brake line completely if the brake fluid must be refilled but the type and brand of the brake fluid that is already in the reservoir are unidentified.

Brake Pad Wear Inspection

Inspect the brake pads for wear in accordance with the Periodic Maintenance Chart. If the thickness of any pad in any (front or rear) brake caliper is less than 1 mm (0.04 in.), have both pads in the caliper replaced as a set. Pad replacement should be done by an authorized Kawasaki dealer.

Usable Brake Pad Range

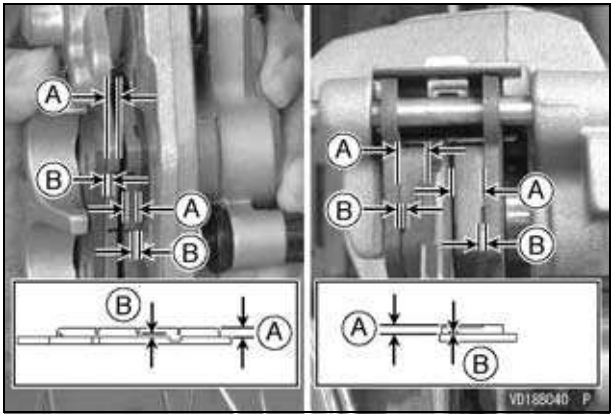

A. Lining Thickness
B. 1 mm (0.04 in.)

Steering

The steering should always be kept adjusted so that the handlebars will turn freely but not have excessive play.

Steering Inspection

- To check the steering adjustment, raise the front wheel off the ground using a jack (special tool: 57001-1238) and attachment (special tool: 57001 -1608).
- Push the handlebars lightly to either side. If the handlebars continues moving under its own momentum, the steering is not too tight.
- Squatting in front of the motorcycle, grasp the lower ends of the front fork at the axle, and push and rock the front fork back and forth. If play is felt, the steering is too loose and needs to be adjusted.

A. Push and Rock

Steering Adjustment

- Raise the front wheel off the ground using a jack (special tool: 57001-1238) and attachment (special tool: 57001-1608).
- Unlock the clamp of the number plate.
- Remove the bolt.
- Clear the projections and remove the number plate.

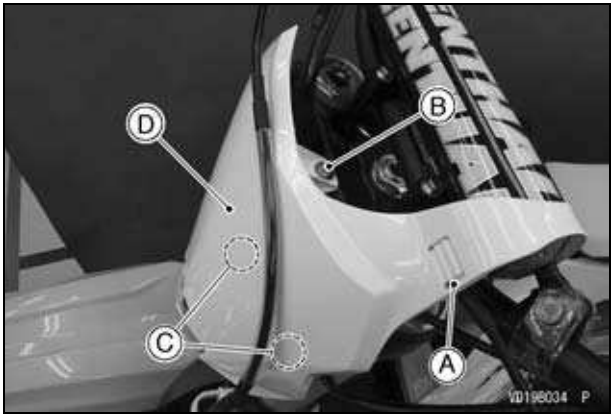

A. Clamp
B. Bolt
C. Projections
D. Number Plate

- Remove the handlebars (see Handlebars section).
- Loosen the left and right front fork clamp bolts (upper).
- Remove the steering stem head nut, and raise the steering stem head.

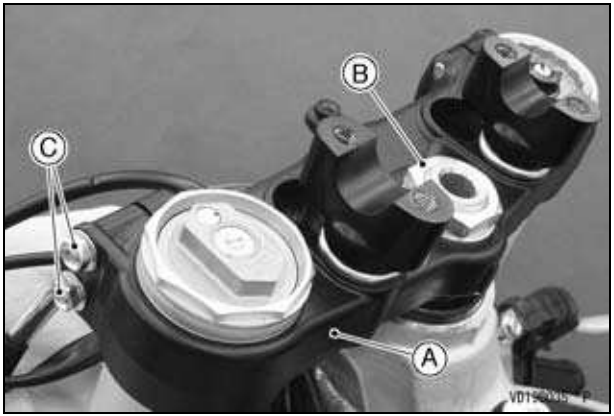

A. Steering Stem Head
B. Steering Stem Head Nut
C. Front Fork Clamp Bolts (Upper)

- Turn the steering stem locknut with a stem nut wrench (special tool: 57001-1100) to obtain the proper adjustment.

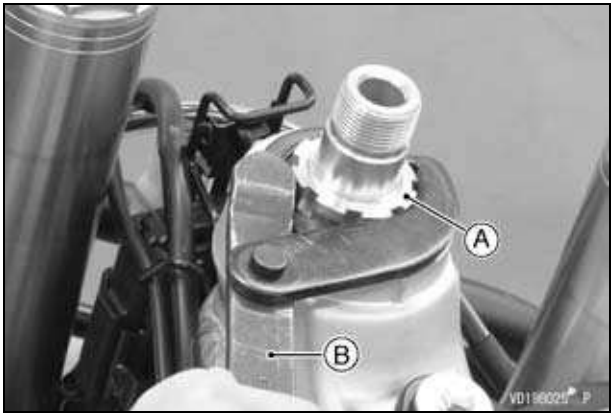

A. Steering Stem Locknut
B. Stem Nut Wrench (Special Tool: 57001-1100)

- Install the steering stem head to the original position.
- Apply a non-permanent locking agent to the front fork clamp bolts (upper).
- Apply the specified torques to the steering stem head nut and front fork clamp bolts (upper).

Tightening Torque

Steering Stem Head Nut: 98 N·m (10 kgf·m, 72 ft·lb) Front Fork Clamp Bolts (Upper): 20 N·m (2.0 kgf·m, 15 ft·lb)

NOTE

○ *Tighten the two clamp bolts alternately two times to ensure even tightening torque.*

- Install the handlebars (see Handlebars section), and check the steering again and readjust it if necessary.
- Check the front brake for the proper brake effect, or no brake drag.
- Install the removed parts.

Front Suspension

Front Fork Inspection

NOTICE

Sticking muds or dusts on the sliding surface of the front fork could damage to the oil seal, leading to an oil leak. Clean the sliding surface after each ride.

- Holding the brake lever, pump the front fork back and forth manually to check for smooth operation.
- Visually inspect the front fork for oil leakage, scoring or scratches on the outer surface of the inner tube.
- If necessary, repair or replace by an authorized Kawasaki dealer.

A. Inner Tubes

NOTICE

If the inner tube is badly bent or creased, replace it. Excessive bending, followed by subsequent straitening, can weaken the inner tube.

Front Fork Adjustment

Any of the following front fork adjustments should be made to tune the front suspension to the rider's weight and the condition of the track.

Basically, there are seven adjustments you can make to the front fork.

- Air Pressure

Air pressure acts as a progressive spring over the entire fork travel range. Since the air pressure in the fork legs increases with normal use, the fork action on your KX will get stiffer as the race progresses. Therefore, it is not recommended to increase the air pressure for additional springing. The KX forks are designed to function without added air.

- Rebound Damping Adjustment (Left Fork only)

This adjustment affects how quickly the fork rebounds. Depending on the model, the fork rebound damping adjuster has at least 20 positions. The fully seated position (adjuster turned fully clockwise) is the hardest setting. Turning the adjuster 10 clicks counterclockwise from the fully seated position is the standard setting, turning it counterclockwise 20 or more clicks (depending on the model) is the softest setting.

- Compression Damping Adjustment (Left Fork only)

This adjustment affects how quickly the fork compresses. Depending on the model, the fork compression damping adjuster has at least 22 positions. The fully seated position (adjuster turned fully clockwise) is the hardest setting. Turning the adjuster 8 clicks counterclockwise from the fully seated position is the standard setting, turning it counterclockwise 22 or more clicks (depending on the model) is the softest setting.

- Spring Preload Adjustment (Right Fork only)

This adjustment affects the driving position. Depending on the model, the fork spring preload adjuster has at least 40 positions. The fully seated position (adjuster turned fully counterclockwise) is the softest setting. Turning the adjuster 15 clicks clockwise from the fully seated position is the standard

setting, turning it clockwise 40 or more clicks (depending on the model) is the hardest setting.

- Fork Oil Amount Adjustment

The fork oil amount affects only the final 100 mm (4 in.) of fork travel. A higher oil amount will make the fork rebound more quickly. A lower oil amount will make the fork rebound more slowly.

- Fork Springs

Optional springs, softer and stiffer than standard, are available.

- Fork Height

Steering is greatly affected by the fork height (how much the outer fork tubes protrude above the steering stem head). The less the fork tube protrudes, the lighter the front end becomes and the greater the tendency for understeering and washout due to weight biasing. Increasing the amount of fork tube protrusion has opposite effects. Be sure that the front tire does not touch the fender when the fork is fully compressed. Make this adjustment in 10 mm (0.39 in.) steps.

NOTICE

The right and left fork tubes must be adjusted evenly.

Air Pressure Adjustment

The standard air pressure in the front fork legs is atmospheric (0 kPa, 0 kgf/cm², 0 psi). Air pressure in the fork legs increase with normal use, so the fork action stiffens during operation. Release air pressure from the fork legs prior to each race through the air pressure relief screw located in left front fork base valve assembly and right front fork top plug. Make sure the front forks are fully extended with the front wheel off the ground when releasing the pressure.

- Raise the front wheel off the ground using a jack (special tool: 57001-1238) and attachment (special tool: 57001-1608).
- Remove the screw on each front fork top plug to let the air pressure equalize. Then, tighten the screws.

Tightening Torque

Air Pressure Relief Screws:
1.3 N·m (0.13 kgf·m, 12 in·lb)

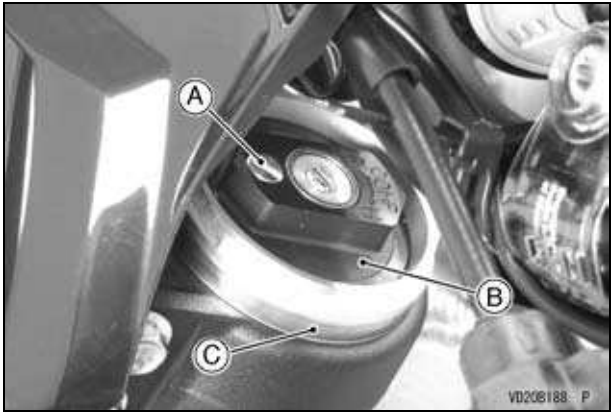

A. Screw
B. Left Front Fork Base Valve Assembly
C. Front Fork (Left Side)

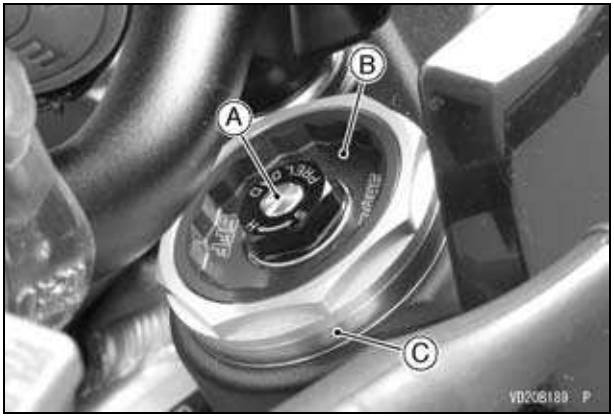

A. Screw
B. Front Fork Top Plug
C. Front Fork (Right Side)

Rebound Damping Adjustment (Left Fork only)

- Clean the bottom of the left fork tube.
- To adjust the rebound damping, turn the adjuster on the left front fork cylinder valve with a standard tip screwdriver. Adjust the rebound damping to suit your preference under certain conditions.

NOTICE

Do not force the rebound damping adjuster beyond the fully seated position, or the adjusting mechanism may be damaged.

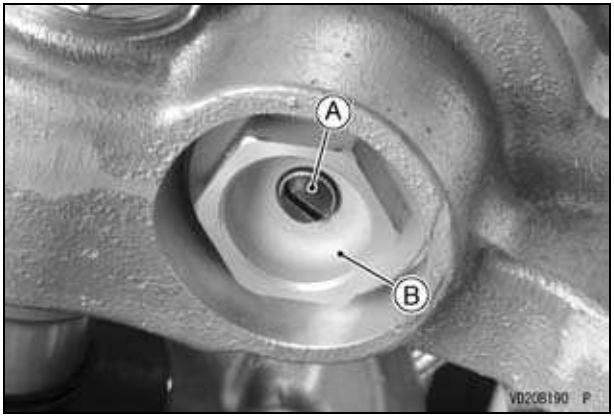

A. Rebound Damping Adjuster
B. Left Front Fork Cylinder Valve

Rebound Damping Adjuster Settings

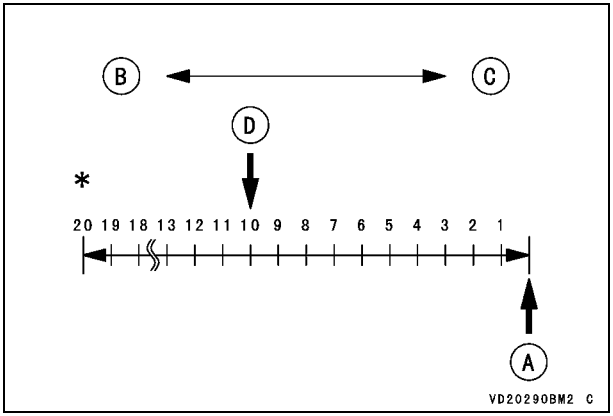

A. Seated Position (Adjuster Turned Fully Clockwise)
B. Softer (Counterclockwise)
C. Harder (Clockwise)
D. Standard Setting

*: Number of turns counterclockwise usable range 20 clicks or more.

Standard Rebound Damping Adjuster Setting

10 clicks*

*: Counterclockwise from the fully seated position

Compression Damping Adjustment (Left Fork only)

- To adjust the compression damping, turn the adjuster on the left front fork base valve assembly with a standard tip screwdriver. Adjust the compression damping to suit your preference under certain conditions.

NOTICE
Do not force the compression damping adjuster beyond the fully seated position, or the adjusting mechanism may be damaged.

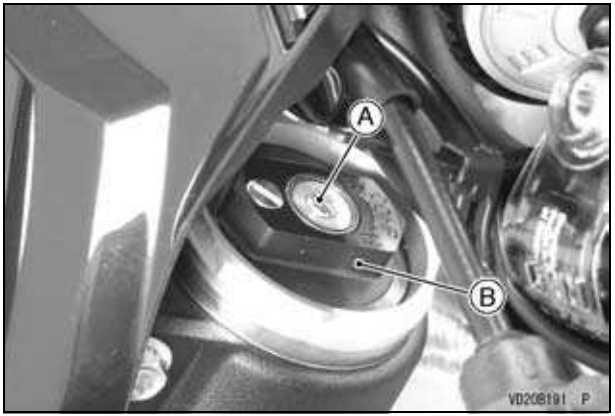

A. Compression Damping Adjuster
B. Left Front Fork Base Valve Assembly

Compression Damping Adjuster Settings

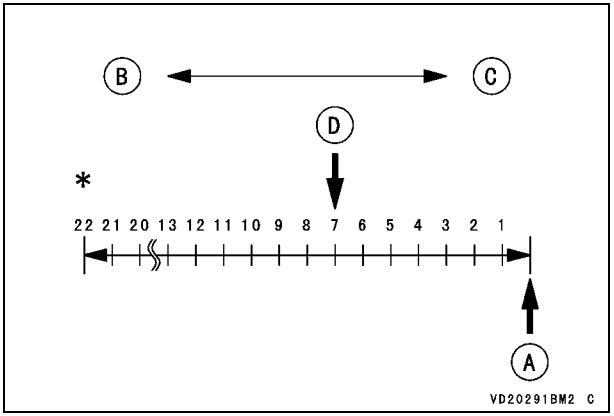

A. Seated Position (Adjuster Turned Fully Clockwise)
B. Softer (Counterclockwise)
C. Harder (Clockwise)
D. Standard Setting

*: Number of turns counterclockwise usable range 22 clicks or more.

Standard Compression Damping Adjuster Setting

7 clicks*

*: Counterclockwise from the fully seated position

Spring Preload Adjustment (Right Fork only)

- To adjust the spring preload, turn the adjuster on the right front fork top plug with a wrench. Adjust the spring preload to suit your preference under certain conditions.

NOTICE
Do not force the spring preload adjuster beyond the fully seated position, or the adjusting mechanism may be damaged.

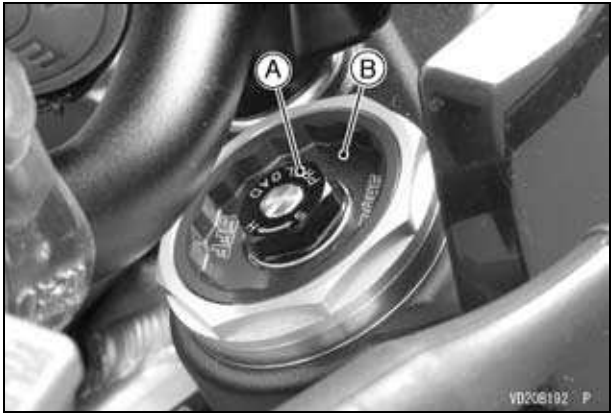

A. Spring Preload Adjuster
B. Right Front Fork Top Plug

Spring Preload Adjuster Settings

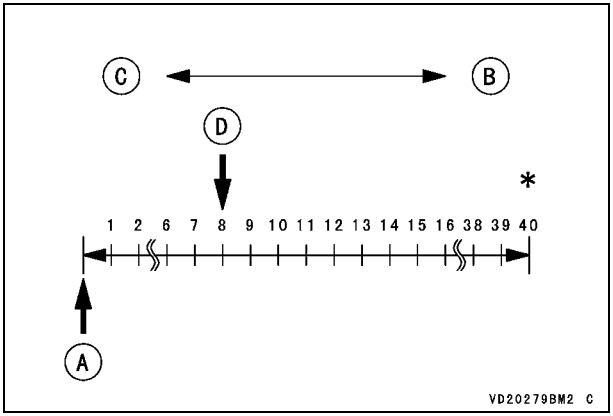

A. Seated Position (Adjuster Turned Fully Counterclockwise)
B. Harder (Clockwise)
C. Softer (Counterclockwise)
D. Standard Setting

*: Number of turns clockwise usable range 40 clicks or more.

Standard Spring Preload Adjuster Setting

8 clicks*

*: Clockwise from the fully seated position

Front Fork Oil Change

- Thoroughly clean the forks before disassembly.

NOTICE

Be careful not to scratch the inner tube and not to damage the dust seal.
Avoid scratching or damaging the inner tube or the dust seal. Use a mild detergent and sponge out dirt with plenty of water.

NOTE

○ *Record the rebound, compression and spring preload setting before disassembling.*
○ *Set the rebound and compression damping to the softest settings before disassembly to prevent the needle of adjusters from damping.*

- Remove the number plate (see Steering section).
- Loosen the front fork clamp bolts (upper).
- Loosen the front fork top plug with the top plug wrench (special tool: 57001-1645).

NOTE

○ *Do not take off the base valve assembly (left fork only).*

A. Front Fork Clamp Bolts (Upper)
B. Top Plug Wrench (Special Tool: 57001-1645)

- Support the motorcycle using a jack (special tool: 57001-1238) and attachment (special tool: 57001 -1608).
- Unscrew the front axle nut, and then loosen the left front axle clamp bolts.
- Remove the brake caliper from the fork leg to be removed, and rest the caliper on some kind of stand so that it does not dangle.
- Insert the wood wedge between the disc brake pads. This prevents them from being moved out of their proper position, if the brake lever is squeezed accidentally.
- Remove the brake hose clamps and fork protector.

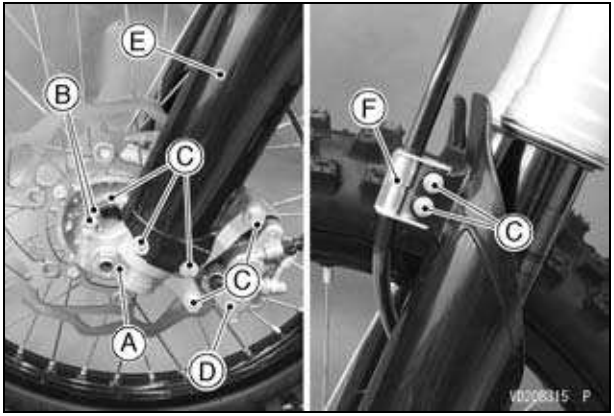

A. Front Axle Nut
B. Left Front Axle Clamp Bolts (Loosen)
C. Bolts
D. Front Brake Caliper
E. Front Fork Protector
F. Brake Hose Clamps

- Loosen the right front axle clamp bolts.
- Place a suitable stand under the engine to raise the front wheel off the ground.
- Remove the front axle, and pull out the front wheel. Take off the collar from each side of the front hub.

NOTICE

Do not lay the wheel on the ground with the disc facing down. This can damage or warp the disc. Place blocks under the wheel so the disc does not touch the ground.

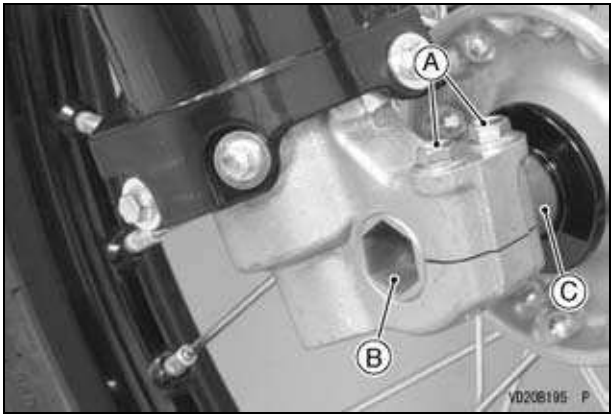

A. Right Front Axle Clamp Bolts (Loosen)
B. Front Axle
C. Collar

- Loosen the front fork clamp bolts (lower).
- Remove the front fork tubes by pulling down while twisting it.

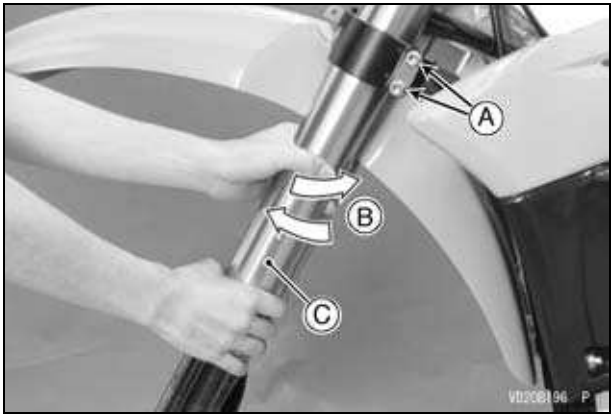

A. Front Fork Clamp Bolts (Lower)
B. Pull down by twisting.
C. Front Fork Tube

- Measure each length between the axle holder and outer tube and record it before disassembling the fork.

Standard Length	312 ~ 316 mm (12.3 ~ 12.4 in.)

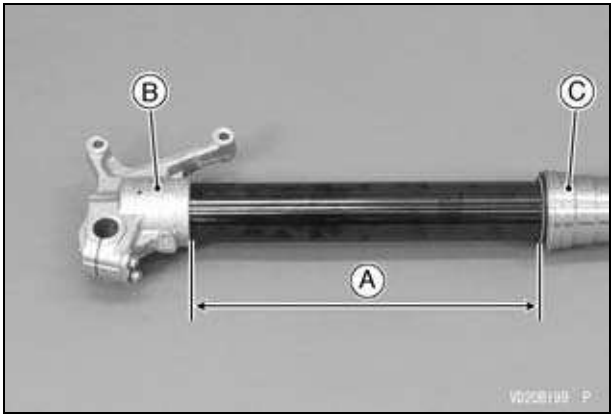

A. Length
B. Axle Holder
C. Front Fork Outer Tube

Left Front Fork

- Using the top plug wrench (special tool: 57001 -1645), remove the left front fork cylinder unit from the outer tube and slowly slide down the outer tube.

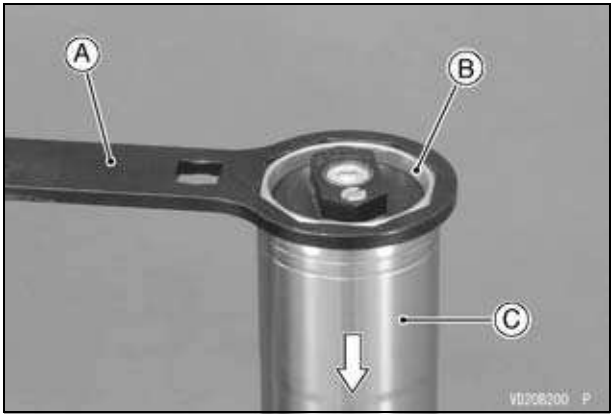

A. Top Plug Wrench (Special Tool: 57001-1645)
B. Left Front Fork Cylinder Unit
C. Left Front Fork Outer Tube

- Place a drain pan under the front fork and drain fork oil.

NOTE

○ *Pump the outer tube several times to discharge the fork oil.*

A. Fork Oil

- Temporarily install the left front fork cylinder unit to the outer tube using the top plug wrench (special tool: 57001-1645).

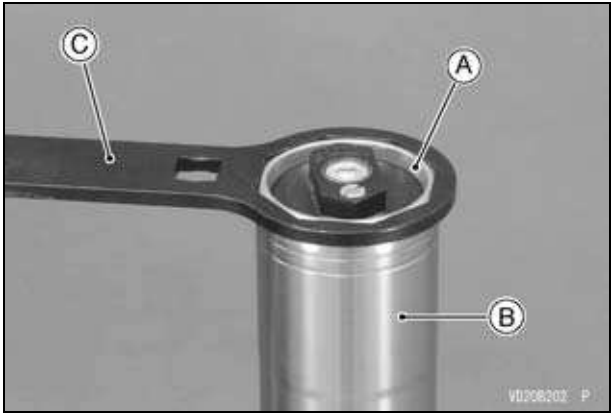

A. Left Front Fork Cylinder Unit
B. Left Front Fork Outer Tube
C. Top Plug Wrench (Special Tool: 57001-1645)

- Hold the axle holder with a vise.

⚠ WARNING

If the axle holder is not securely clamped, the front fork assembly may come out of the vise when compressed, which could cause an accident resulting in injury. However, clamping the axle holder too tightly can damage it which will affect riding stability. Use protective aluminum covers on the jaws of the vise and do not tighten the vise excessively.

NOTE

○ *Protect the axle holder with a soft jaw or heavy cloth when using a vise.*

- Loosen the adjuster assembly completely.
- Compress the outer tube by hands and remove the adjuster assembly from the axle holder part so that the locknut appear about 20 ~ 30 mm (0.79 ~ 1.2 in.).

NOTE

○ *When removing the adjuster assembly, do not force to loosen it at once using an impact wrench.*

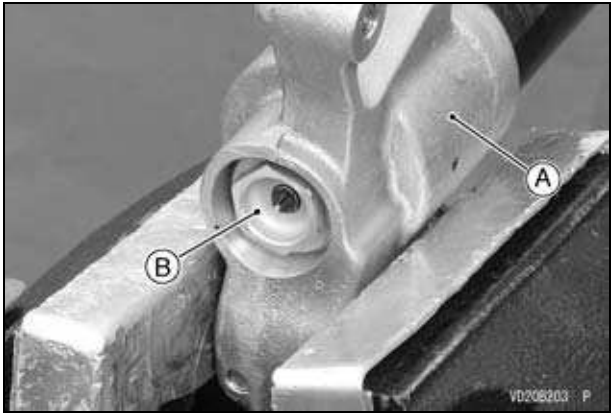

A. Axle Holder Part
B. Left Front Fork Adjuster Assembly

- Hold the locknut with a wrench and remove the left front fork adjuster assembly.

NOTICE

When loosening the locknut, the threads of the axle holder do not touch the push rod. If the push rod is scratched, it is possible to the damage in the cylinder unit.

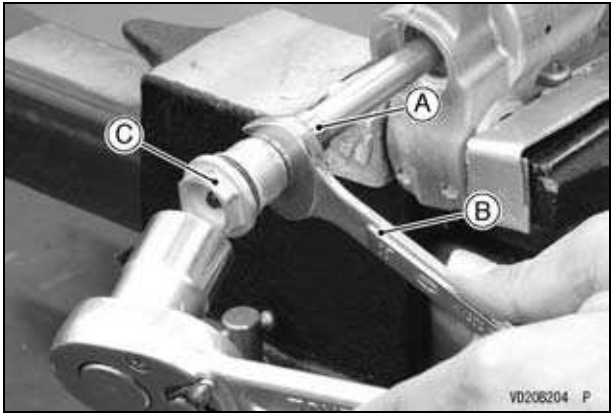

A. Locknut
B. Wrench
C. Left Front Fork Adjuster Assembly

NOTICE

Removing the locknut and pushing the piston rod thread into the left front fork cylinder unit will damage the oil seal. Do not remove the locknut from the piston rod.

- Remove the push rod.

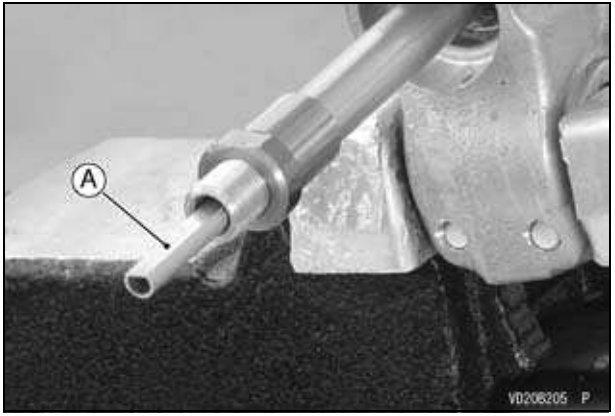

A. Push Rod

- Remove the fork leg from the vise.
- Unscrew the left front fork cylinder unit with the top plug wrench (special tool: 57001-1645).

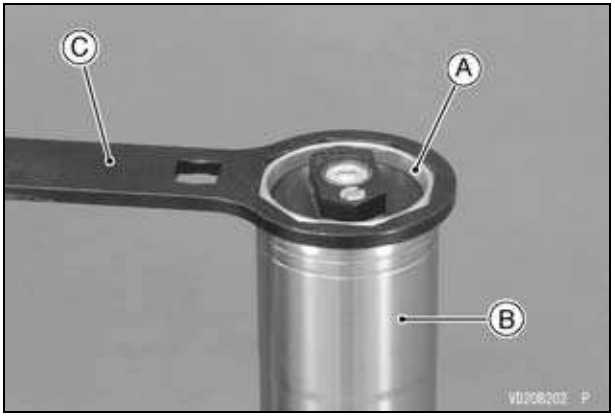

A. Left Front Fork Cylinder Unit
B. Left Front Fork Outer Tube
C. Top Plug Wrench (Special Tool: 57001-1645)

- Remove the left front fork cylinder unit from the outer tube.

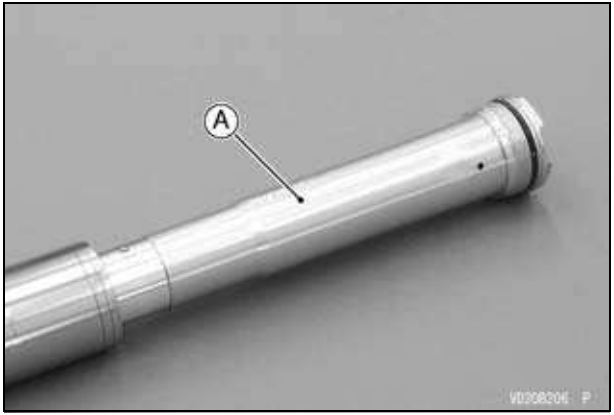

A. Left Front Fork Cylinder Unit

- Hold the front fork at the inverted position for more than 20 minutes to allow the fork oil to fully drain.

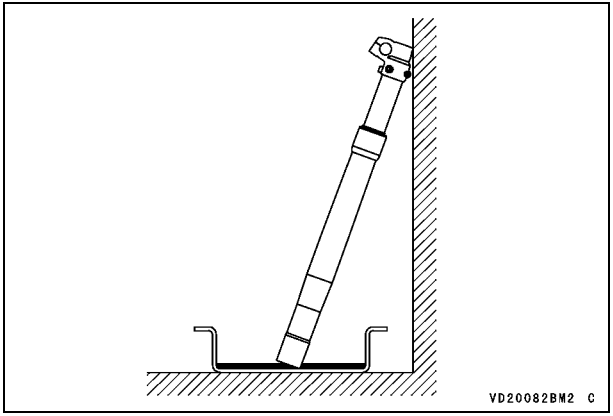

- Holding the top plug wrench (special tool: 57001 -1645) with a vise, loosen the left front fork base valve assembly on the fork cylinder unit with a box wrench.

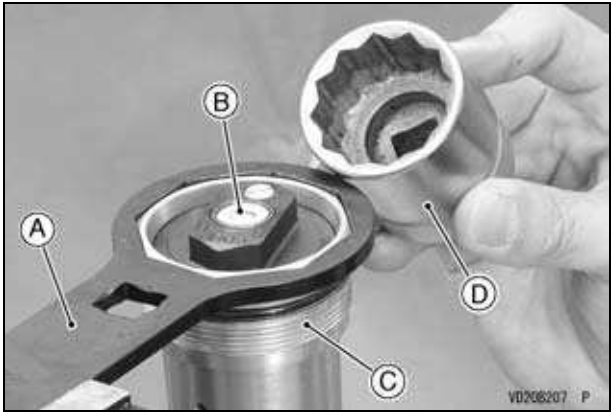

A. Top Plug Wrench (Special Tool: 57001-1645)
B. Left Front Fork Base Valve Assembly
C. Left Front Fork Cylinder Unit
D. Box Wrench

- Remove the left front fork base valve assembly from the fork cylinder unit.

NOTICE

Be careful not to damage the bushing of the left front fork base valve assembly.

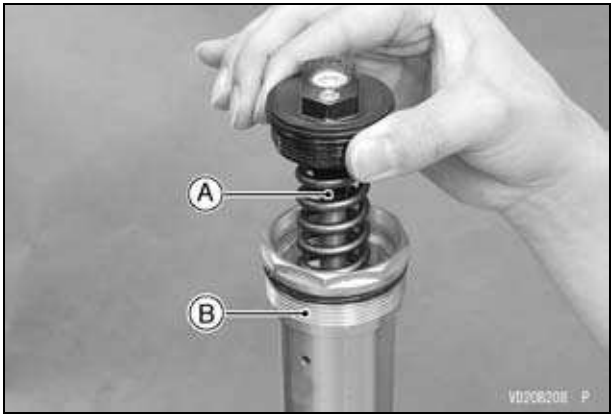

A. Left Front Fork Base Valve Assembly
B. Left Front Fork Cylinder Unit

NOTE

○ *Slowly compress the piston rod until it stops so that the left front fork base valve assembly can be removed easily.*

NOTICE

Disassembling the left front fork base valve assembly can lead to trouble. Do not disassemble the left front fork base valve assembly.

- Drain the fork oil from the left front fork cylinder unit by pumping the piston rod several times.

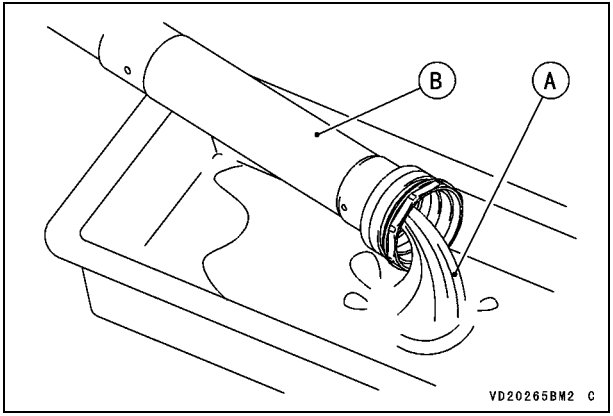

A. Fork Oil
B. Left Front Fork Cylinder Unit

- Clean the threads of the left front fork cylinder unit and left front fork base valve assembly.

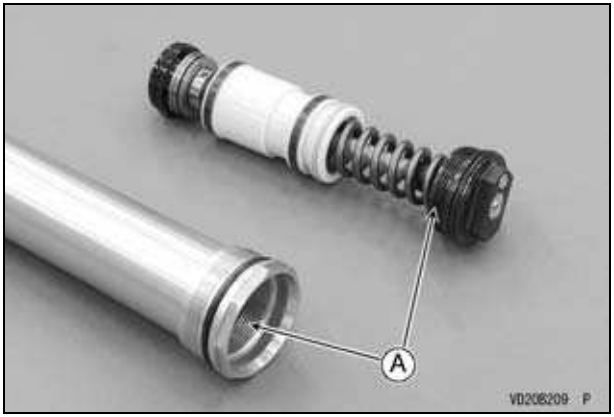

A. Threads

- With the piston rod fully stretched, pour 330 mL (11.2 US oz.) of fork oil.

NOTE

○ *Plug the oil hole on the left front fork cylinder unit with finger.*

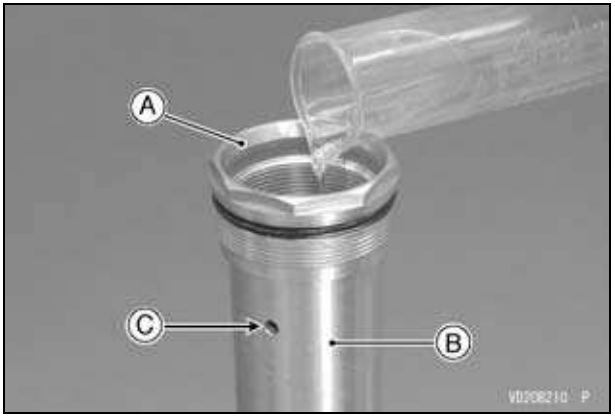

A. Fork Oil
B. Left Front Fork Cylinder Unit
C. Oil Hole

Suspension Oil

SS-19 (1 L): P/No. 44091-0009

- Pump the piston rod slowly several times to expel air with plugged the oil hole by finger.

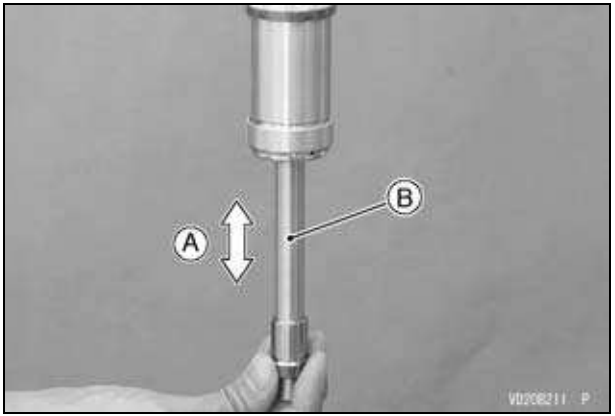

A. Pump
B. Piston Rod

- With the piston rod fully stretched, check the oil level in the left front fork cylinder unit.

Oil Level

115 ~ 123 mm (4.53 ~ 4.84 in.)

NOTE

○ *Measure the oil level from the top surface in the left front fork cylinder unit using a gauge.*

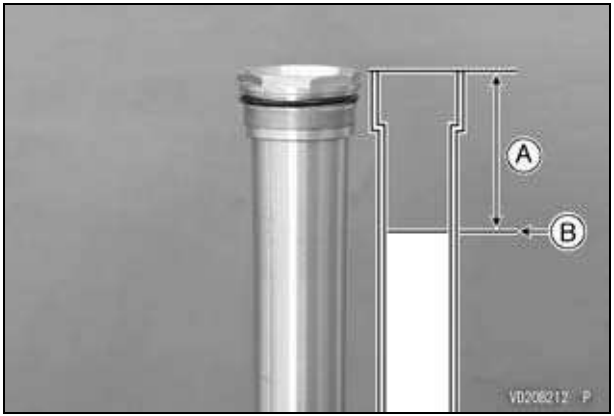

A. 115 ~ 123 mm (4.53 ~ 4.84 in.)
B. Oil Level

- Replace the O-rings on the left front fork base valve assembly with new ones.
- Apply specified fork oil to the O-rings and bushings on the left front fork base valve assembly.

NOTICE
Do not damage the bushings when assembling the left front fork base valve.

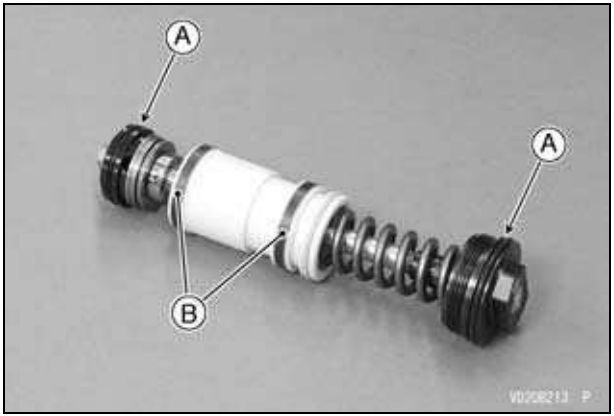

A. O-rings
B. Bushings

- With the piston rod appear about 20 mm (0.79 in.) from fully compressed, gently install the left front fork base valve assembly slowly to the left front fork cylinder unit.

NOTE

- *Plug the oil hole on the left fork cylinder unit with finger.*
- *While pulling the piston rod, install the base valve assembly slowly and pushing down it fully.*
- *If there is difficulty in assembling the base valve, it may be because the oil level is too high. Check the oil level in the left front fork cylinder unit.*

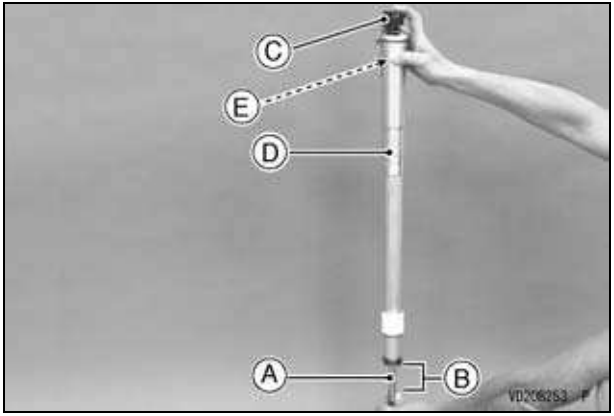

A. Piston Rod
B. About 20 mm (0.79 in.)
C. Left Front Fork Base Valve Assembly
D. Left Front Fork Cylinder Unit
E. Oil Hole

- Hold the top plug wrench (special tool: 57001 -1645) with a vise.
- Holding the left front fork cylinder unit with the top plug wrench (special tool: 57001-1645), torque the left front fork base valve assembly.

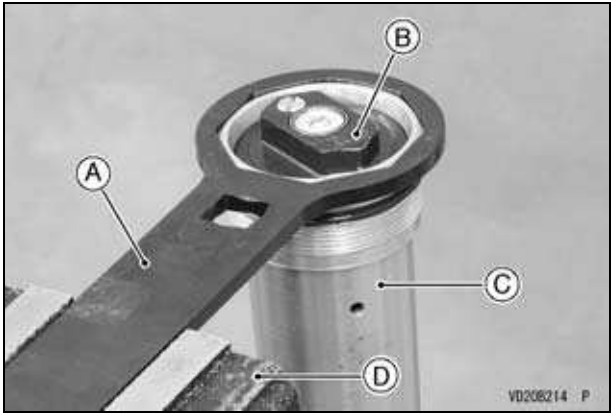

A. Top Plug Wrench (Special Tool: 57001-1645)
B. Left Front Fork Base Valve Assembly
C. Left Front Fork Cylinder Unit
D. Vise

Tightening Torque

Left Front Fork Base Valve Assembly: 30 N·m (3.1 kgf·m, 22 ft·lb)

NOTE

○ *Check if the locknut is completely screwed onto the piston rod.*

- Protect the piston rod end with a heavy cloth to prevent piston rod thread damage.
- Hold the left front fork cylinder unit at the upright position and slowly pump the piston rod several times about 100 mm (3.94 in.).

- Discharge the extra oil off the left front fork cylinder unit by pumping the piston rod to full stroke.

NOTICE

Be careful not to bend or damage the piston rod when the piston rod is stroked. Service carefully because oil flies out from the oil holes of the left front fork cylinder unit.

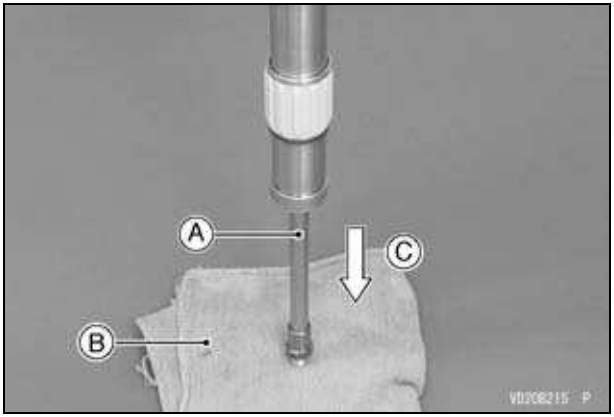

A. Piston Rod
B. Heavy Cloth
C. Pump the piston.

NOTE

○ *Set the compression damping force setting to the softest. Check the piston rod sliding surface for damage. Apply specified fork oil to the piston rod sliding surface.*

- Drain the extra oil from the left front fork cylinder unit oil hole.
- Blow out the extra oil from the oil hole of the left front fork cylinder unit with the compressed air blow to the oil hole.
- Wipe the oil off completely from the fork cylinder unit.
- If you cannot use compressed air, remove the air pressure relief screw of the left front fork base valve assembly. Up side down the fork damper for more than 10 minutes and drain the oil from the left front fork cylinder unit. Reinstall and tighten the air pressure relief screw.

Tightening Torque

Air Pressure Relief Screw:
1.3 N·m (0.13 kgf·m, 12 in·lb)

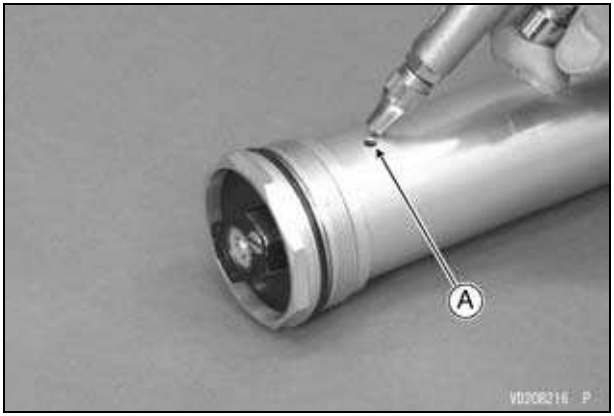

A. Oil Hole

- Protect the piston rod end with a heavy cloth to prevent damage.
- Pump the piston rod to full stroke by pushing down the left front fork cylinder unit.
- Check the piston rod for smooth operation.
- If the piston rod operation is not smooth, check the piston rod for bend or damage.
- Hold the fork cylinder unit on level ground while piston rod is full stroked by your hand.
- Release the piston rod then check the piston rod extend to maximum.
- If the piston rod does not extend to maximum, bleed the air in the left front fork cylinder unit again.

NOTICE
Be careful not to bend or damage the piston rod when the piston rod is stroked.

- Wipe the oil off completely from the left front fork cylinder unit.
- Compress the piston rod to 200 ~ 250 mm (7.87 ~ 9.84 in.) and hold the left front fork cylinder unit upright position for 10 minutes.

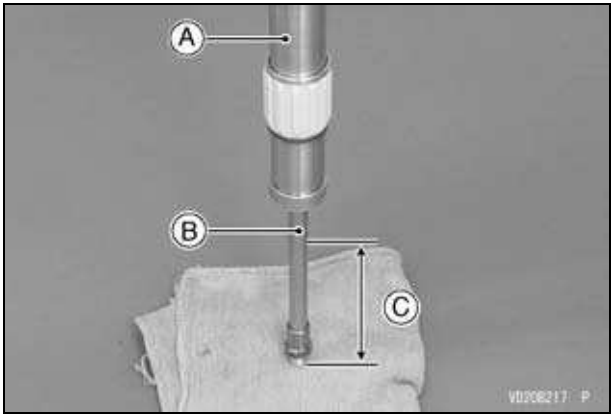

A. Left Front Fork Cylinder Unit
B. Piston Rod
C. 200 ~ 250 mm (7.87 ~ 9.84 in.)

- There should be no oil leak from the left front fork cylinder unit.
- If oil leaks from the cylinder unit, replace the left front fork cylinder unit assembly.
- Hold the left front fork cylinder unit on level ground and release the piston rod then check the piston rod extend to maximum.

- Tighten the locknut fully and measure 10 ~ 12 mm (0.39 ~ 0.47 in.).

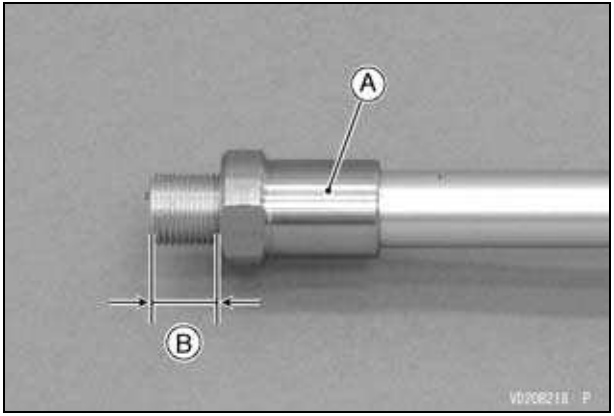

A. Locknut
B. 10 ~ 12 mm (0.39 ~ 0.47 in.)

- Completely wipe off the fork oil from the left front fork cylinder unit.
- Insert the cylinder unit into the fork.

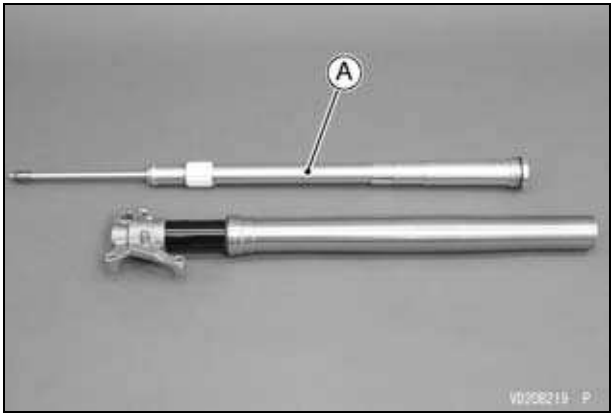

A. Left Front Fork Cylinder Unit

- Temporarily tighten the left front fork cylinder unit fully with the top plug wrench (special tool: 57001 -1645).

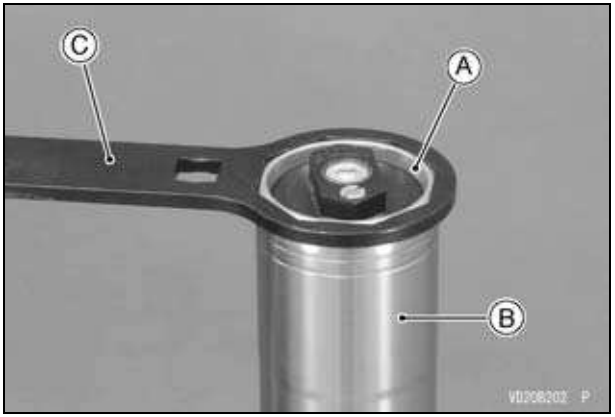

A. Left Front Fork Cylinder Unit
B. Left Front Fork Outer Tube
C. Top Plug Wrench (Special Tool: 57001-1645)

- Hold the axle holder with a vise.

NOTE

○ *Protect the axle holder with a soft jaw or heavy cloth when using a vise.*

⚠ WARNING

If the axle holder is not securely clamped, the front fork assembly may come out of the vise when compressed, which could cause an accident resulting in injury. However, clamping the axle holder too tightly can damage it which will affect riding stability. Use protective aluminum covers on the jaws of the vise and do not tighten the vise excessively.

- Insert the push rod into the piston rod.
- Replace the O-ring on the left front fork adjuster assembly with a new one and apply specified fork oil to the O-ring.
- Install the left front fork adjuster assembly to the push rod.

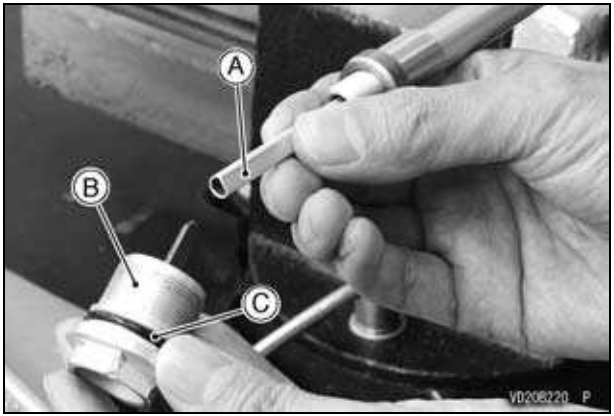

A. Push Rod
B. Left Front Fork Adjuster Assembly
C. O-ring

- Slowly turn the left front fork adjuster assembly clockwise until resistance is felt and check the clearance between the locknut and left front fork adjuster assembly for more than 1 mm (0.04 in.).

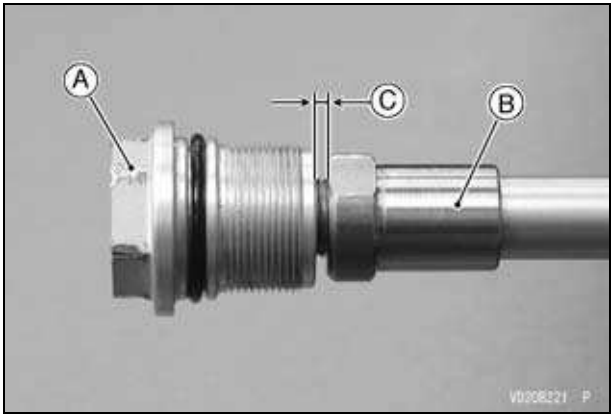

A. Left Front Fork Adjuster Assembly
B. Locknut
C. More Than 1 mm (0.04 in.)

- Turn the locknut counterclockwise until it contacts with the left front fork adjuster assembly.
- With the locknut held immovable using a wrench, tighten the left front fork adjuster assembly to the specified torque.

Tightening Torque

Left Front Fork Adjuster Assembly Locknut: 22 N·m (2.2 kgf·m, 16 ft·lb)

NOTICE

When tightening the locknut, the threads of the axle holder do not touch the push rod. If the push rod is scratched, it is possible to the damage in the cylinder unit.

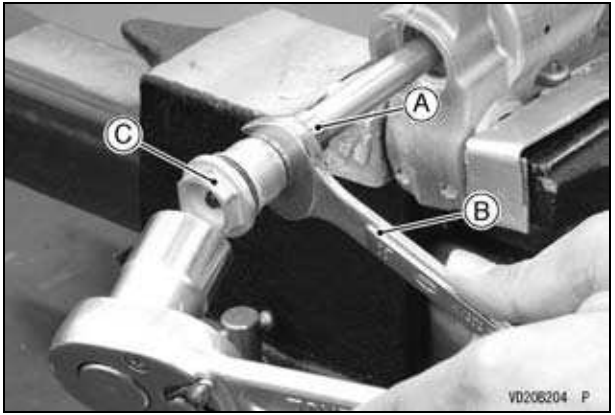

A. Locknut
B. Wrench
C. Left Front Fork Adjuster Assembly

- Apply a non-permanent locking agent to the threads of the adjuster assembly and tighten the left front fork adjuster assembly into the front fork.

Tightening Torque

Left Front Fork Adjuster Assembly:
69 N·m (7.0 kgf·m, 51 ft·lb)

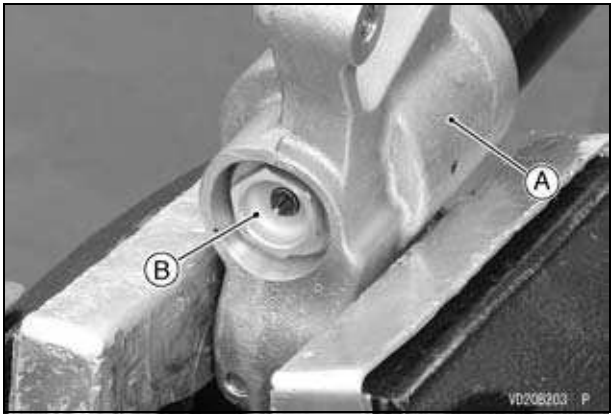

A. Axle Holder Part
B. Left Front Fork Adjuster Assembly

- Using the top plug wrench (special tool: 57001 -1645), remove the left front fork cylinder unit from the outer tube and slowly slide down the outer tube.

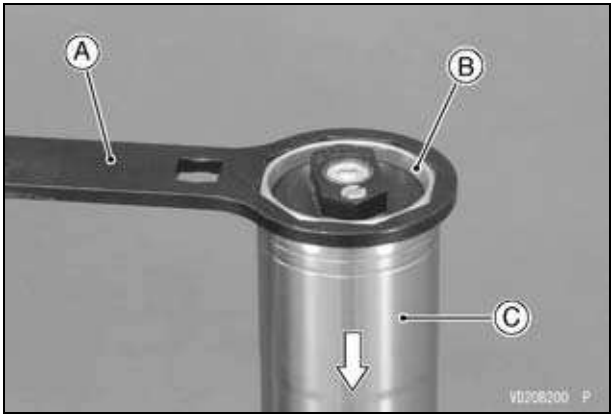

A. Top Plug Wrench (Special Tool: 57001-1645)
B. Left Front Fork Cylinder Unit
C. Left Front Fork Outer Tube

- Pour the specified amount of fork oil into the left front fork outer tube.

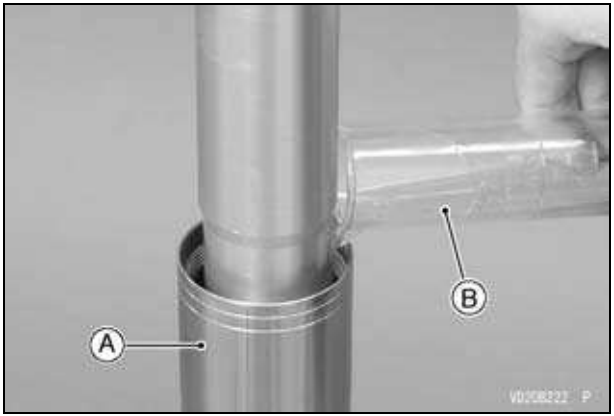

A. Left Front Fork Outer Tube
B. Fork Oil

Suspension Oil

SS-19 (1 L): P/No. 44091-0009

Standard Left Fork Oil Amount

Left Fork Oil Amount	300 mL (10.1 US oz.)
Adjustable Range	300 ~ 340 mL (10.1 ~ 11.5 US oz.)

- Replace the O-ring on the left front fork cylinder unit with a new one and apply specified fork oil to the O-ring.
- Raise the left front fork outer tube and temporarily install the left front fork cylinder unit to the outer tube using the top plug wrench (special tool: 57001-1645).

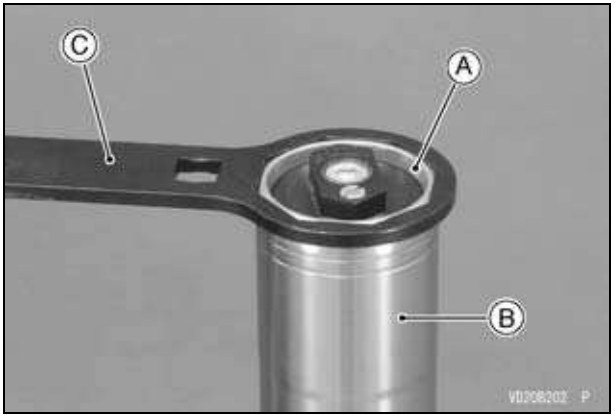

A. Left Front Fork Cylinder Unit
B. Left Front Fork Outer Tube
C. Top Plug Wrench (Special Tool: 57001-1645)

- Compare the length between the axle holder and outer tube at assembly and at disassembly. There should be same length.
- If the length at assembly is longer than at disassembly, check the left front fork adjuster assembly and locknut installation.

Standard Length	312 ~ 316 mm (12.3 ~ 12.4 in.)

Right Front Fork

- Using the top plug wrench (special tool: 57001 -1645), remove the right front fork spring adjuster unit from the right front fork outer tube and slowly slide down the outer tube.

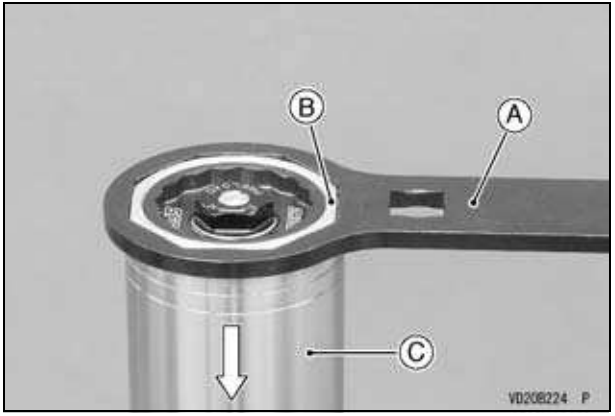

A. Top Plug Wrench (Special Tool: 57001-1645)
B. Right Front Fork Spring Adjuster Unit
C. Right Front Fork Outer Tube

- Place a drain pan under the front fork and drain fork oil.

NOTE

○ *Pump the outer tube several times to discharge the fork oil.*

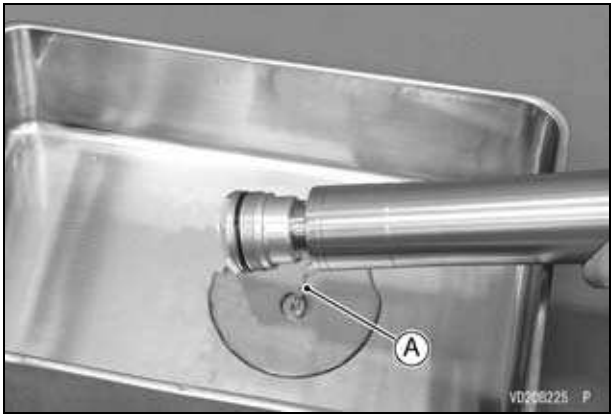

A. Fork Oil

- Temporarily install the right front fork spring adjuster unit to the outer tube using the top plug wrench (special tool: 57001-1645).

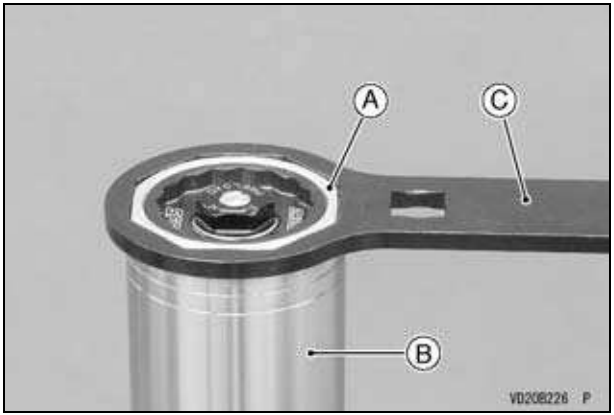

A. Right Front Fork Spring Adjuster Unit
B. Right Front Fork Outer Tube
C. Top Plug Wrench (Special Tool: 57001-1645)

- Turn the right front fork spring preload adjuster clockwise to the hardest position.

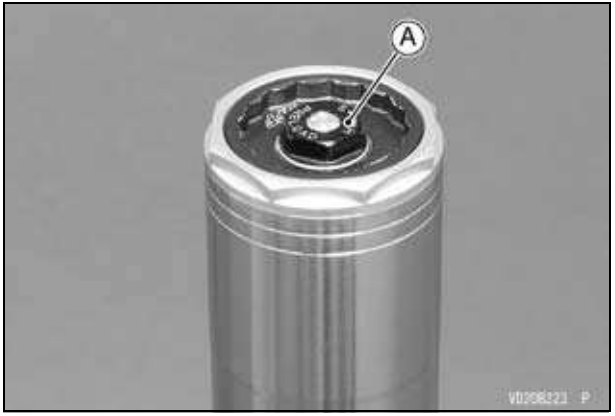

A. Right Front Fork Spring Preload Adjuster

- Holding the top plug wrench (special tool: 57001-1645) with a vise, remove the right front fork spring preload adjuster on the fork spring adjuster unit with a top plug wrench (special tool: 57001-1705).

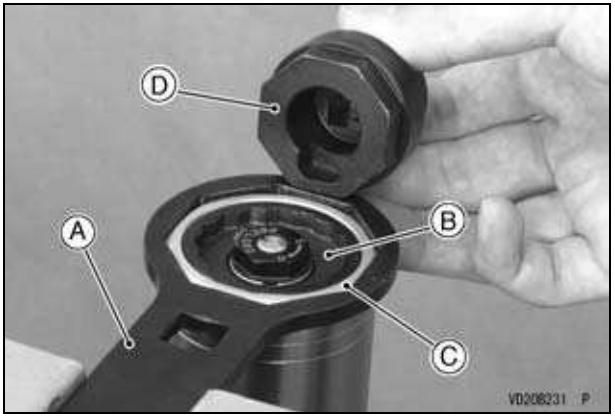

A. Top Plug Wrench (Special Tool: 57001-1645)
B. Right Front Fork Spring Preload Adjuster
C. Right Front Fork Spring Adjuster Unit
D. Top Plug Wrench (Special Tool: 57001-1705)

- Hold the right front fork at the inverted position to allow the fork oil to drain.
- Hold the axle holder with a vise.

NOTE

○ *Protect the axle holder with a soft jaw or heavy cloth when using a vise.*

⚠ WARNING

If the axle holder is not securely clamped, the front fork assembly may come out of the vise when compressed, which could cause an accident resulting in injury. However, clamping the axle holder too tightly can damage it which will affect riding stability. Use protective aluminum covers on the jaws of the vise and do not tighten the vise excessively.

- Loosen the right front fork bottom plug completely.

NOTE

○ *When removing the right front fork bottom plug , do not force to loosen it at once using an impact wrench.*

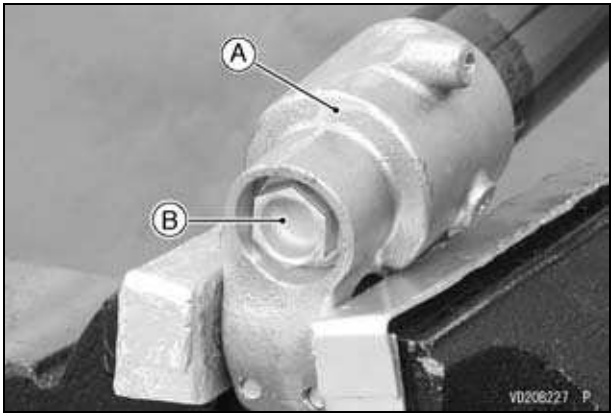

A. Axle Holder Part
B. Right Front Fork Bottom Plug

When not using the Fork Spring Compressor (Special Tool: 57001-1771):

- Compress the outer tube by hands and install the top plug wrench (special tool: 57001-1645) between the axle holder bottom and locknut.

⚠ WARNING

The fork spring applies pressure to the adjuster assembly and can eject the special tool with substantial force if the tool is not properly and securely placed. Be sure the tool is fully in place as shown in the photo, and keep fingers away to avoid getting them pinched between the tool, adjuster assembly and axle holder.

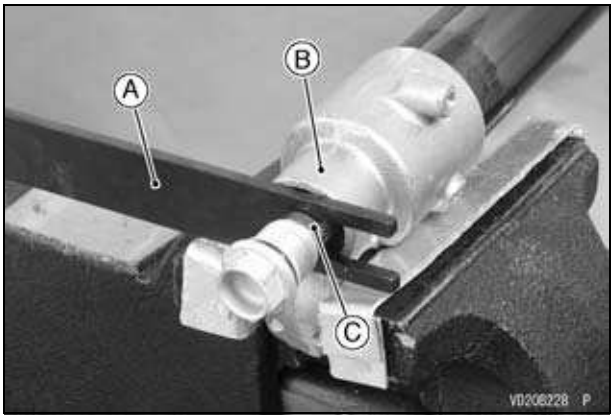

A. Top Plug Wrench (Special Tool: 57001-1645)
B. Axle Holder Bottom
C. Locknut

- Hold the locknut with a wrench and remove the right front fork bottom plug.

NOTICE

When loosening the locknut, the threads of the axle holder do not touch the push rod. If the push rod is scratched, it is possible to the damage in the cylinder unit.

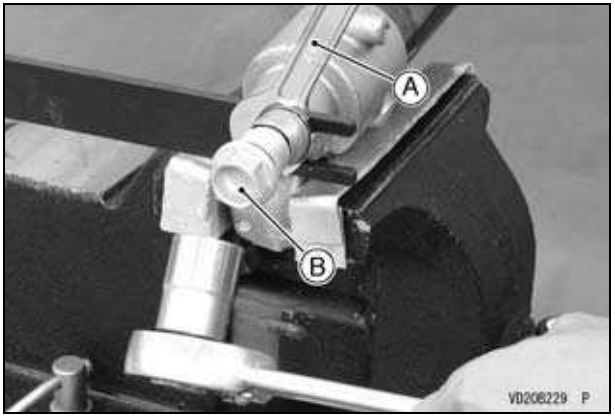

A. Wrench
B. Right Front Fork Bottom Plug

- Compress the outer tube by hands and remove the top plug wrench (special tool: 57001-1645).

When using the Fork Spring Compressor (Special Tool: 57001-1771):

- Set the fork spring compressor (special tool: 57001-1771) and a suitable jack as shown in the figure.

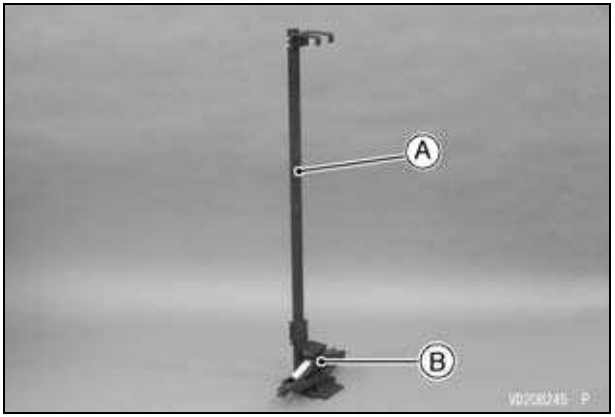

A. Fork Spring Compressor (Special Tool: 57001-1771)
B. Suitable Jack

- Put the heavy cloth on the fork spring compressor (special tool: 57001-1771).
- Set the front fork, with its upper side facing downward, on the fork spring compressor (special tool: 57001-1771).

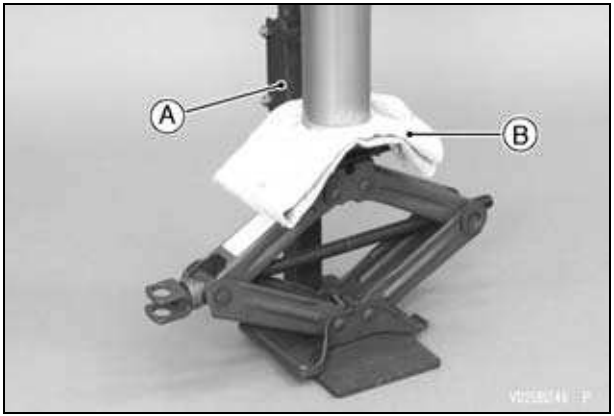

A. Fork Spring Compressor (Special Tool: 57001-1771)
B. Heavy Cloth

- Insert the holder bar of the fork spring compressor (special tool: 57001-1587) to the axle hole and secure it with the holder of the fork spring compressor (special tool: 57001-1771).

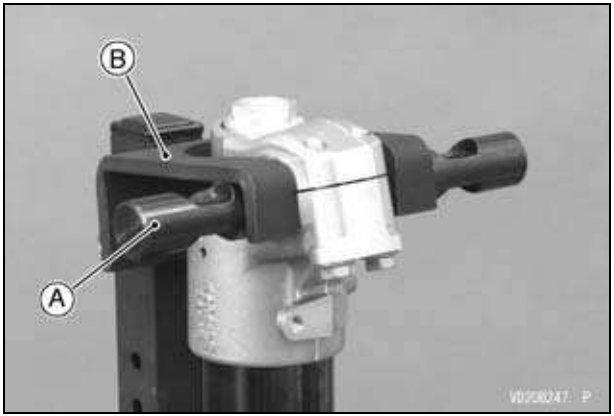

A. Holder Bar of Fork Spring Compressor (Special Tool: 57001-1587)
B. Holder of Fork Spring Compressor (Special Tool: 57001-1771)

- Compress the outer tube with a suitable jack while keeping the front fork upright, and install the top plug wrench (special tool: 57001-1645) between the axle holder bottom and locknut.

⚠ WARNING

The fork spring applies pressure to the adjuster assembly and can eject the special tool with substantial force if the tool is not properly and securely placed. Be sure the tool is fully in place as shown in the photo, and keep fingers away to avoid getting them pinched between the tool, adjuster assembly and axle holder.

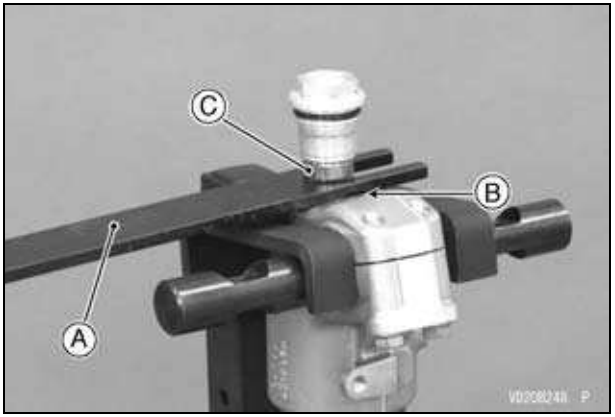

A. Top Plug Wrench (Special Tool: 57001-1645)
B. Axle Holder Bottom
C. Locknut

- Remove the front fork from the fork spring compressor (special tool: 57001-1771) with care not to drop the top plug wrench (special tool: 57001 -1645), and hold the axle holder with a vise.

NOTE

○ *Protect the axle holder with a soft jaw or heavy cloth when using a vise.*

⚠ WARNING

If the axle holder is not securely clamped, the front fork assembly may come out of the vise when compressed, which could cause an accident resulting in injury. However, clamping the axle holder too tightly can damage it which will affect riding stability. Use protective aluminum covers on the jaws of the vise and do not tighten the vise excessively.

- Remove the right front fork bottom plug while holding the locknut with a wrench.

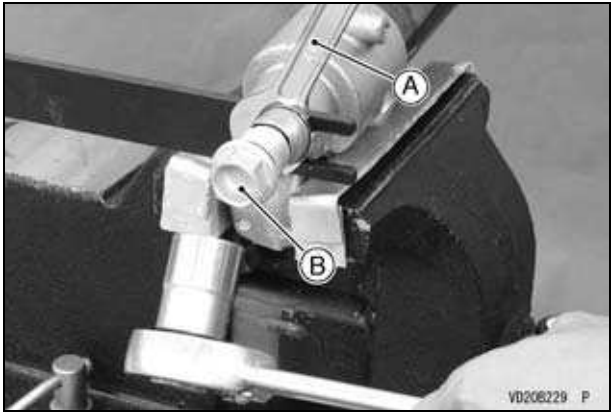

A. Wrench
B. Right Front Fork Bottom Plug

- Reset the front fork on the fork spring compressor (special tool: 57001-1771) with care not to drop the top plug wrench (special tool: 57001-1645).

- Compress the outer tube with a suitable jack while keeping the front fork upright, and remove the top plug wrench (special tool: 57001-1645).
- Remove the front fork from the fork spring compressor (special tool: 57001-1771).
- Using the top plug wrench (special tool: 57001 -1645), remove the right front fork spring adjuster unit from the outer tube and slowly slide down the outer tube.

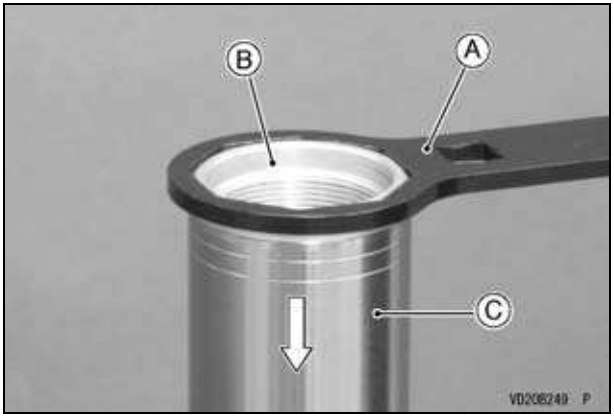

A. Top Plug Wrench (Special Tool: 57001-1645)
B. Right Front Fork Spring Adjuster Unit
C. Right Front Fork Outer Tube

- Remove the right front fork spring adjuster unit, collar, spring seat and fork spring.

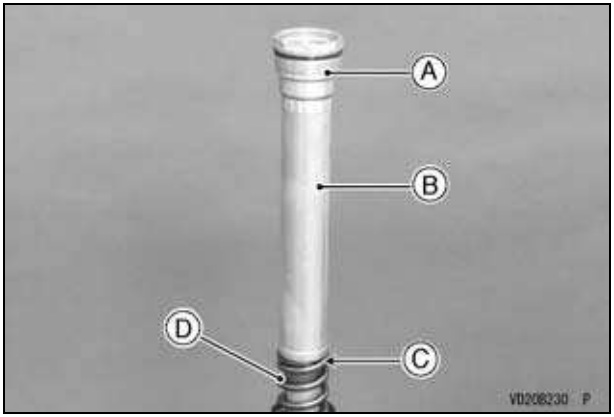

A. Right Front Fork Spring Adjuster Unit
B. Collar
C. Spring Seat
D. Fork Spring

- Hold the right front fork at the inverted position for more than 20 minutes to allow the fork oil to fully drain.

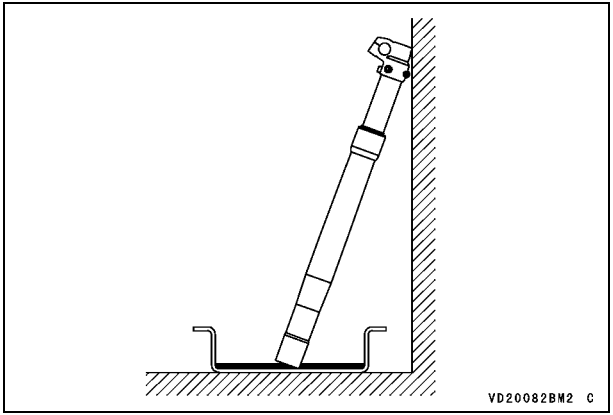

- Tighten the locknut fully.

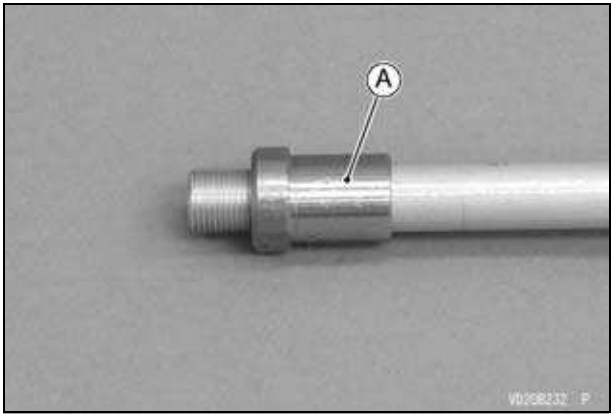

A. Locknut

- Install the fork piston rod puller adapter (special tool: 57001-1791) to the threads on the fork piston rod puller (special tool: 57001-1289).

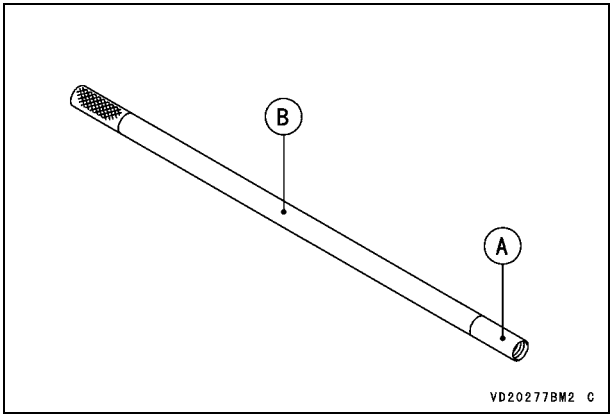

A. Fork Piston Rod Puller Adapter (Special Tool: 57001-1791)
B. Fork Piston Rod Puller (Special Tool: 57001-1289)

- Install the piston rod puller to the threads on the piston rod end.

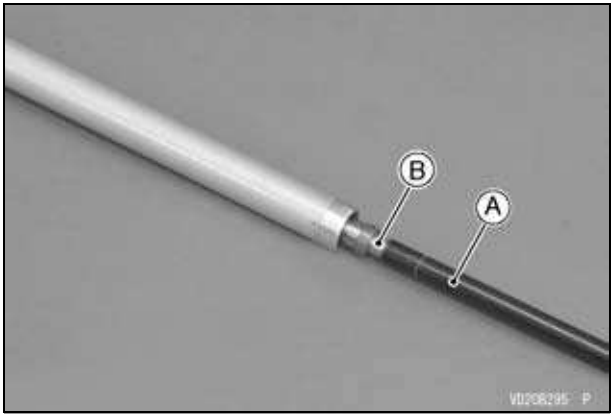

A. Piston Rod Puller
B. Piston Rod

- Install the fork spring, spring seat, collar and spring adjuster unit to the outer tube.

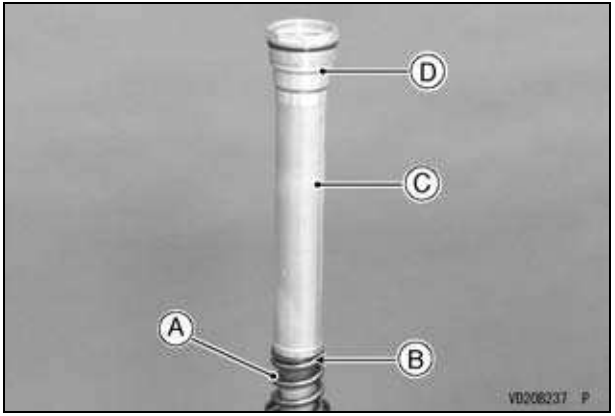

A. Fork Spring
B. Spring Seat
C. Collar
D. Right Front Fork Spring Adjuster Unit

- Temporarily install the right front fork spring adjuster unit to the outer tube using the top plug wrench (special tool: 57001-1645).

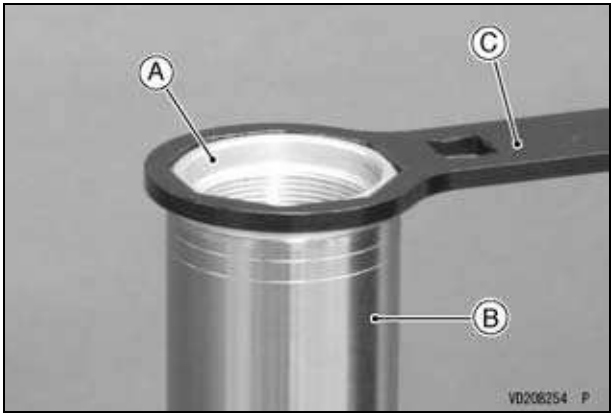

A. Right Front Fork Spring Adjuster Unit
B. Right Front Fork Outer Tube
C. Top Plug Wrench (Special Tool: 57001-1645)

When not using the Fork Spring Compressor (Special Tool: 57001-1771):

- Hold the axle holder with a vise.

NOTE

○ *Protect the axle holder with a soft jaw or heavy cloth when using a vise.*

⚠ WARNING

If the axle holder is not securely clamped, the front fork assembly may come out of the vise when compressed, which could cause an accident resulting in injury. However, clamping the axle holder too tightly can damage it which will affect riding stability. Use protective aluminum covers on the jaws of the vise and do not tighten the vise excessively.

- Compress the outer tube by hands and install the top plug wrench (special tool: 57001-1645) between the axle holder bottom and locknut.

⚠ WARNING

The fork spring applies pressure to the adjuster assembly and can eject the special tool with substantial force if the tool is not properly and securely placed. Be sure the tool is fully in place as shown in the photo, and keep fingers away to avoid getting them pinched between the tool, adjuster assembly and axle holder.

When using the Fork Spring Compressor (Special Tool: 57001-1771):

- Set the fork spring compressor (special tool: 57001-1771) and a suitable jack as shown in the figure.

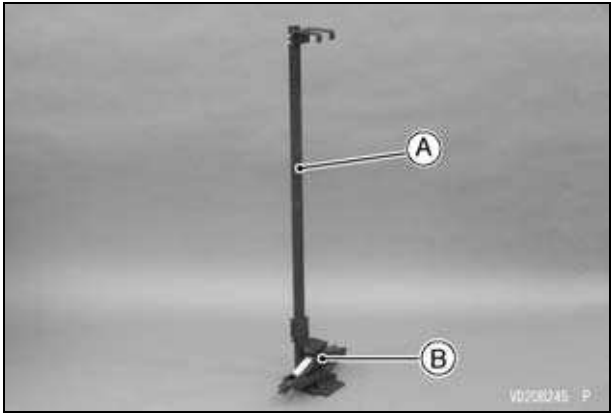

A. Fork Spring Compressor (Special Tool: 57001-1771)
B. Suitable Jack

- Put the heavy cloth on the fork spring compressor (special tool: 57001-1771).
- Set the front fork, with its upper side facing downward, on the fork spring compressor (special tool: 57001-1771).

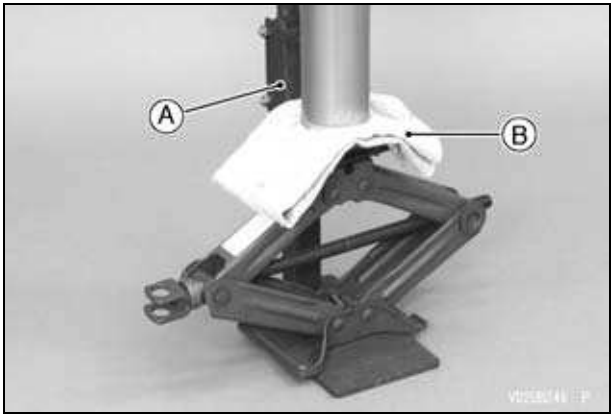

A. Fork Spring Compressor (Special Tool: 57001-1771)
B. Heavy Cloth

- Insert the holder bar of the fork spring compressor (special tool: 57001-1587) to the axle hole and secure it with the holder of the fork spring compressor (special tool: 57001-1771).

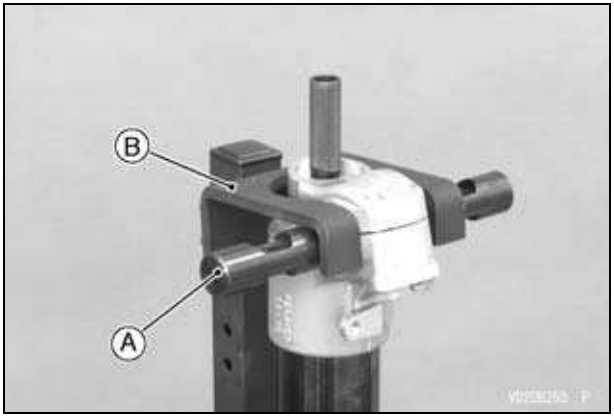

A. Holder Bar of Fork Spring Compressor (Special Tool: 57001-1587)
B. Holder of Fork Spring Compressor (Special Tool: 57001-1771)

- Compress the outer tube with a suitable jack while keeping the front fork upright, and install the top plug wrench (special tool: 57001-1645) between the axle holder bottom and locknut.

⚠ WARNING

The fork spring applies pressure to the adjuster assembly and can eject the special tool with substantial force if the tool is not properly and securely placed. Be sure the tool is fully in place as shown in the photo, and keep fingers away to avoid getting them pinched between the tool, adjuster assembly and axle holder.

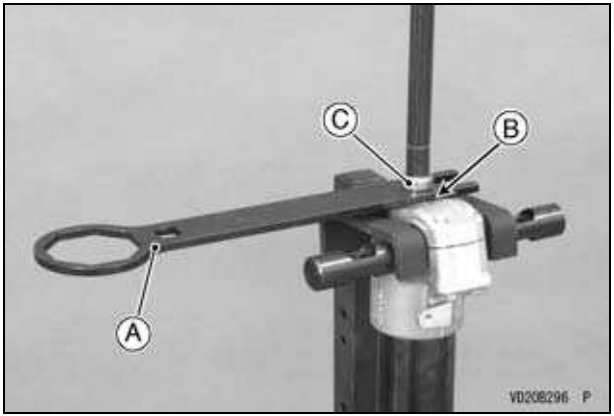

A. Top Plug Wrench (Special Tool: 57001-1645)
B. Axle Holder Bottom
C. Locknut

- Remove the front fork from the fork spring compressor (special tool: 57001-1771) with care not to drop the top plug wrench (special tool: 57001 -1645), and hold the axle holder with a vise.

NOTE

○ *Protect the axle holder with a soft jaw or heavy cloth when using a vise.*

⚠ WARNING

If the axle holder is not securely clamped, the front fork assembly may come out of the vise when compressed, which could cause an accident resulting in injury. However, clamping the axle holder too tightly can damage it which will affect riding stability. Use protective aluminum covers on the jaws of the vise and do not tighten the vise excessively.

- Remove the piston rod puller.

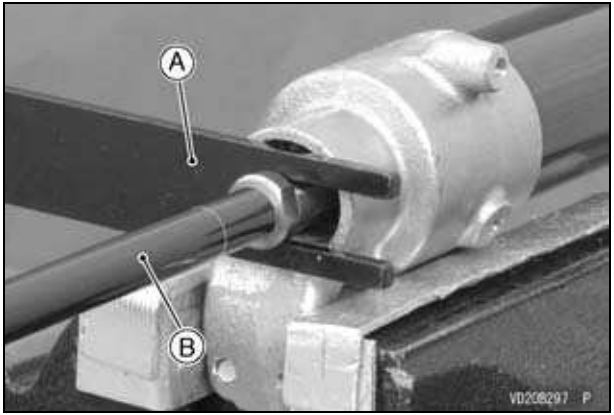

A. Top Plug Wrench (Special Tool: 57001-1645)
B. Piston Rod Puller

- Replace the O-ring on the right front fork bottom plug with a new one and apply specified fork oil to the O-ring.

- Slowly turn the bottom plug clockwise until resistance is felt and check the clearance between the locknut and bottom plug for more than 1 mm (0.04 in.).
- Turn the locknut counterclockwise until it contacts with the bottom plug.
- With the bottom plug held immovable using a wrench, tighten the locknut to the specified torque.

Tightening Torque

Right Front Fork Bottom Plug Locknut: 22 N·m (2.2 kgf·m, 16 ft·lb)

NOTICE
When tightening the locknut, the threads of the axle holder do not touch the push rod. If the push rod is scratched, it is possible to the damage in the cylinder unit.

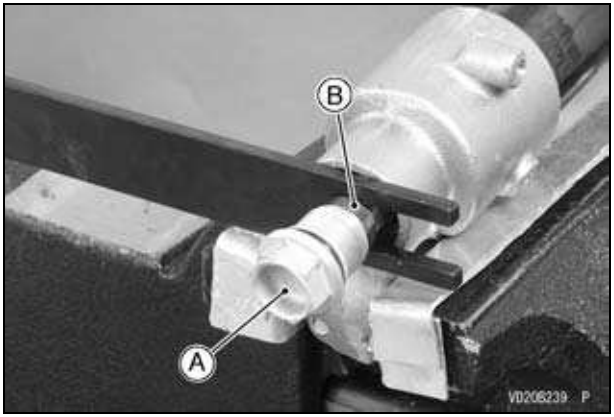

A. Right Front Fork Bottom Plug
B. Right Front Fork Bottom Plug Locknut

When not using the Fork Spring Compressor (Special Tool: 57001-1771):

- Apply a non-permanent locking agent to the threads of the bottom plug.
- Compress the outer tube by hands and remove the top plug wrench (special tool: 57001-1645).

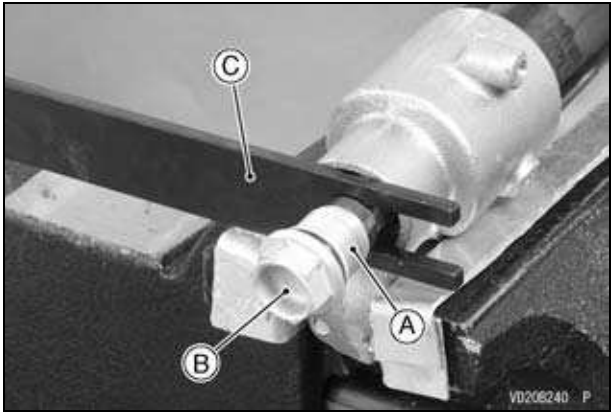

A. Threads
B. Right Front Fork Bottom Plug
C. Top Plug Wrench (Special Tool: 57001-1645)

When using the Fork Spring Compressor (Special Tool: 57001-1771):

- Reset the front fork on the fork spring compressor (special tool: 57001-1771) with care not to drop the top plug wrench (special tool: 57001-1645).
- Apply a non-permanent locking agent to the threads of the bottom plug.
- Compress the outer tube with a suitable jack while keeping the front fork upright, and remove the top plug wrench (special tool: 57001-1645).
- Remove the front fork from the fork spring compressor (special tool: 57001-1771).

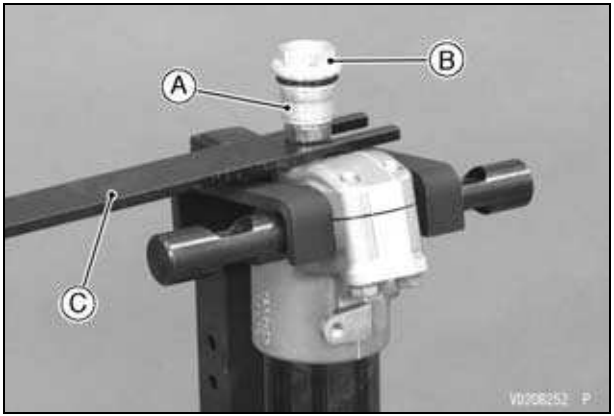

A. Threads
B. Right Front Fork Bottom Plug
C. Top Plug Wrench (Special Tool: 57001-1645)

- Hold the axle holder with a vise.

NOTE

○ *Protect the axle holder with a soft jaw or heavy cloth when using a vise.*

⚠ WARNING

If the axle holder is not securely clamped, the front fork assembly may come out of the vise when compressed, which could cause an accident resulting in injury. However, clamping the axle holder too tightly can damage it which will affect riding stability. Use protective aluminum covers on the jaws of the vise and do not tighten the vise excessively.

- Tighten the bottom plug to the specified torque.

Tightening Torque

Right Front Fork Bottom Plug:
69 N·m (7.0 kgf·m, 51 ft·lb)

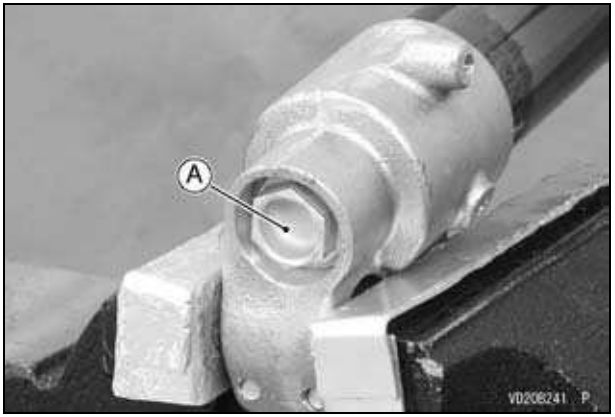

A. Right Front Fork Bottom Plug

- Using the top plug wrench (special tool: 57001 -1645), remove the right front fork spring adjuster unit from the outer tube and slowly slide down the outer tube.

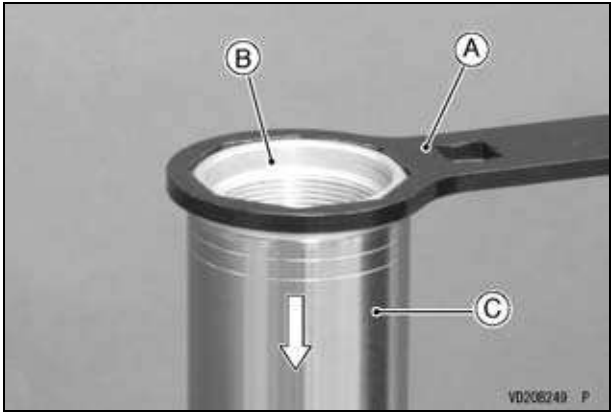

A. Top Plug Wrench (Special Tool: 57001-1645)
B. Right Front Fork Spring Adjuster Unit
C. Right Front Fork Outer Tube

- Clean the threads of the right front fork spring adjuster unit and right front fork spring preload adjuster.
- Replace the O-ring on the preload adjuster with a new one.
- Turn the right front fork spring preload adjuster counterclockwise to the softest position.
- Apply specified fork oil to the O-ring.

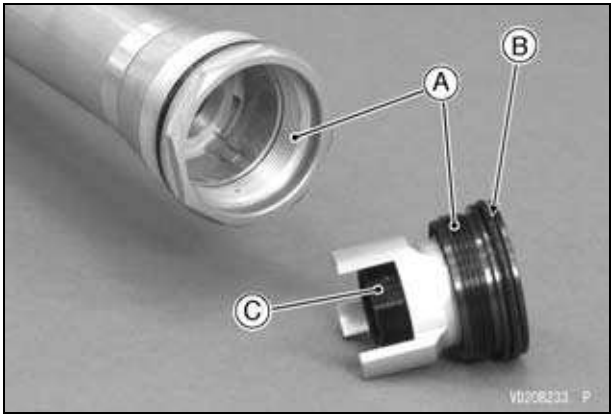

A. Threads
B. O-ring
C. Right Front Fork Spring Preload Adjuster

- Install the right front fork spring preload adjuster so that the projections align to the holes on the fork spring adjuster unit.

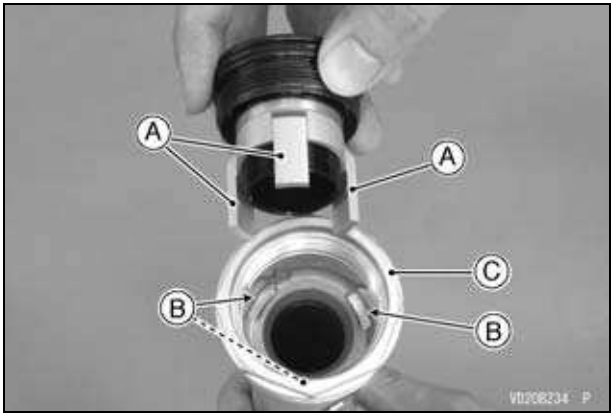

A. Projections
B. Holes
C. Right Front Fork Spring Adjuster Unit

- Holding the top plug wrench (special tool: 57001 -1645) with a vise, tighten the right front fork spring preload adjuster on the fork spring adjuster unit with a top plug wrench (special tool: 57001-1705).

Tightening Torque

Right Front Fork Spring Preload Adjuster: 30 N·m (3.1 kgf·m, 22 ft·lb)

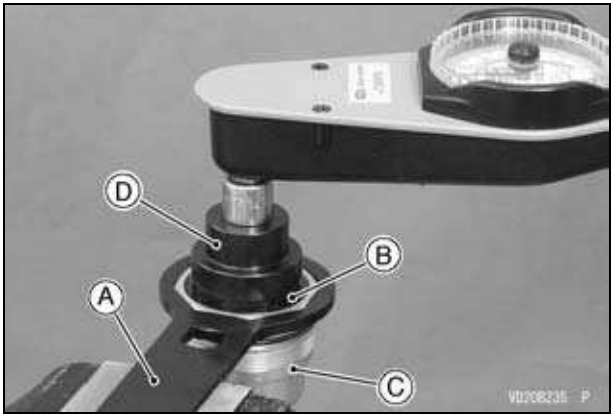

A. Top Plug Wrench (Special Tool: 57001-1645)
B. Right Front Fork Spring Preload Adjuster
C. Right Front Fork Spring Adjuster Unit
D. Top Plug Wrench (Special Tool: 57001-1705)

- Pour the specified amount of fork oil into the right front fork outer tube.

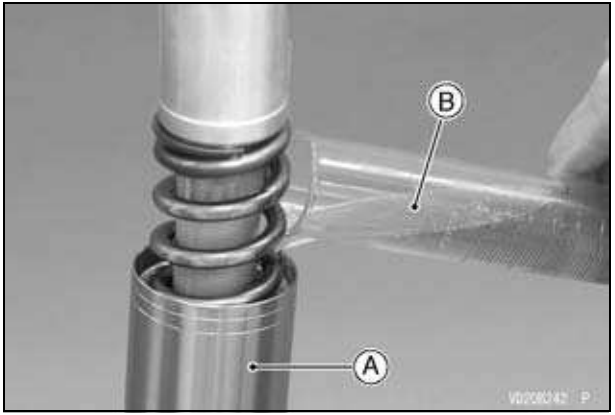

A. Right Front Fork Outer Tube
B. Fork Oil

Suspension Oil

SS-19 (1 L): P/No. 44091-0009

Standard Right Fork Oil Amount

Right Fork Spring	9.6 N/mm (0.98 kgf/mm)
Right Fork Oil Amount	223 mL (7.54 US oz.)
Adjustable Range	218 ~ 366 mL (7.37 ~ 12.4 US oz.)

- When changing the fork spring, the oil amount is in the table.

SOFT (K = 9.2 N/mm)	Standard Oil Amount	232 mL (7.84 US oz.)
	Adjustable Range	227 ~ 375 mL (7.67 ~ 12.7 US oz.)
HARD (K = 10.0 N/mm)	Standard Oil Amount	214 mL (7.24 US oz.)
	Adjustable Range	209 ~ 357 mL (7.07 ~ 12.1 US oz.)

- Replace the O-ring on the spring adjuster unit with a new one.
- Apply specified fork oil to the O-ring.
- Raise the right front fork outer tube and temporarily install the right front fork spring adjuster unit to the outer tube using the top plug wrench (special tool: 57001-1645).

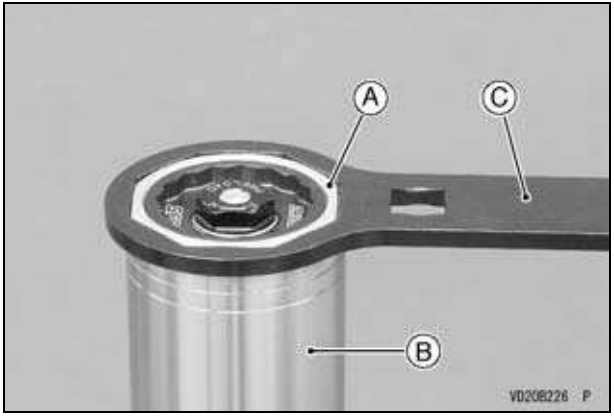

A. Right Front Fork Spring Adjuster Unit
B. Right Front Fork Outer Tube
C. Top Plug Wrench (Special Tool: 57001-1645)

- Compare the length between the axle holder and outer tube at assembly and at disassembly. There should be same length.
- If the length at assembly is longer than at disassembly, check the right front fork bottom plug and locknut installation.

Standard Length	312 ~ 316 mm (12.3 ~ 12.4 in.)

- Install the front fork tubes to the motorcycle.
- Tighten the front fork clamp bolts (lower) to the specified torque.

Tightening Torque

Front Fork Clamp Bolts (Lower): 22 N·m (2.2 kgf·m, 16 ft·lb)

- Tighten the left front fork cylinder unit and right front fork top plug using the top plug wrench (special tool: 57001-1645) to the specified torque.

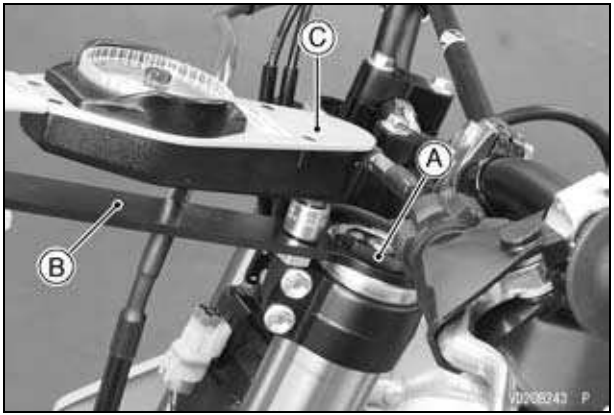

A. Left Front Fork Cylinder Unit
B. Top Plug Wrench (Special Tool: 57001-1645)
C. Torque Wrench

Tightening Torque

Left Front Fork Cylinder Unit: 34 N·m (3.5 kgf·m, 25 ft·lb) Right Front Fork Spring Adjuster Unit: 34 N·m (3.5 kgf·m, 25 ft·lb)

NOTE

○ *The torque of left front fork cylinder unit and right front fork top plug are specified to 34 N·m (3.5 kgf·m, 25 ft·lb) however, when you use the top plug wrench (special tool: 57001-1645), reduce the torque to 90% of the specified value (31 N·m (3.1 kgf·m, 23 ft·lb)) due to the distance between the center of the square hole, where the torque wrench is fitted, and that of the octagonal hole of the wrench.*

○ *This torque value (31 N·m (3.1 kgf·m, 23 ft·lb)) is applicable when you use a torque wrench whose length gives leverage of approximately 310 mm (12.2 in.) between the grip point to the center of the coupling square.*

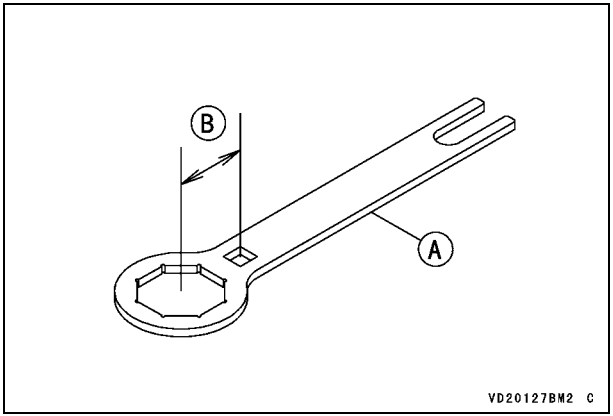

A. Top Plug Wrench (Special Tool: 57001-1645)
B. Distance

- Apply a non-permanent locking agent to the front fork clamp bolts (upper).
- Tighten the front fork clamp bolts (upper) to the specified torque.

Tightening Torque

Front Fork Clamp Bolts (Upper): 20 N·m (2.0 kgf·m, 15 ft·lb)

- Install the front brake caliper to the fork leg, and tighten the front caliper mounting bolts to the specified torque.

Tightening Torque

Front Caliper Mounting Bolts: 25 N·m (2.5 kgf·m, 18 ft·lb)

- Take out wood wedge between the disc brake pads.
- Apply high-temperature grease to the grease seals of the wheel.
- Install the collars on the left and right side of the hub.
- Put the front wheel assembly between the fork legs, and insert the front brake disc into the front brake pads.
- Insert the front axle from the right side of the motorcycle.
- Tighten the right front axle clamp bolts temporary.
- Tighten the front axle nut to the specified torque.

Tightening Torque

Front Axle Nut: 78 N·m (8.0 kgf·m, 58 ft·lb)

- Tighten the left front axle clamp bolts to the specified torque.

Tightening Torque

Left Front Axle Clamp Bolts: 23 N·m (2.3 kgf·m, 17 ft·lb)

NOTE

○ *Tighten the two clamp bolts alternately two times to ensure even tightening torque.*

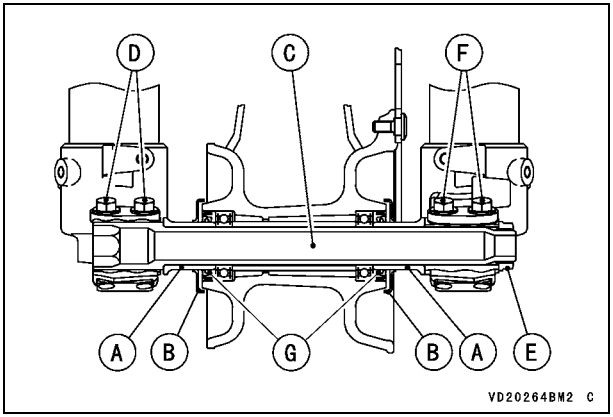

A. Collars
B. Caps
C. Front Axle
D. Right Front Axle Clamp Bolts
E. Front Axle Nut
F. Left Front Axle Clamp Bolts
G. Grease Seals

- Remove the jack and stand supporting the motorcycle.
- Before tightening the clamp bolts on the right fork leg, loosen the right front axle clamp bolts, and pump the forks up and down 4 or 5 times to allow the right fork leg to find a neutral position on the front axle.

NOTE

○ *Do not apply the front brake during this process to stop the motorcycle from rolling forward. Put a block in front of the wheel to stop it from moving.*

A. Pump the forks up and down.
B. Block

- Tighten the right front axle clamp bolts to the specified torque.

Tightening Torque

Right Front Axle Clamp Bolts: 23 N·m (2.3 kgf·m, 17 ft·lb)

NOTE

○ *Tighten the two clamp bolts alternately two times to ensure even tightening torque.*

⚠ WARNING

After servicing, it takes several applications of the brake lever before the brake pads contact the disc, which could result in increased stopping distance and cause an accident resulting in injury or death. Do not attempt to ride the motorcycle until a firm brake lever is obtained by pumping the lever until the pads are against the disc.

- Set the left fork damping adjuster and right fork spring preload to the position recorded before removing the front forks.
- Install the removed parts.

Optional Fork Springs

Various fork springs are available to achieve suitable front fork action in accordance with the rider's weight and track condition.

Harder springs stiffen the fork action and accelerate the rebound damping.

Softer springs soften the fork action and slow down the rebound damping.

Fork Height Adjustment

Steering is greatly affected by the fork height (how much the outer fork tubes protrude above the steering stem head). Install the fork tubes to the standard fork position.

NOTICE

The right and left fork tubes must be adjusted evenly.

A. Standard Fork Height

Standard Fork Height

5 mm (0.2 in.)*

*: between the top end of the outer tube and upper surface of the steering stem head

NOTE

○ *Tighten the two clamp bolts alternately two times to ensure even tightening torque.*

Rear Suspension (UNI-TRAK®)

This motorcycle's rear suspension system is called "UNI-TRAK®" and consists of a rear shock absorber unit, a swingarm, two lever rods and a lever.

The operating characteristics of the UNI-TRAK® suspension are similar to those of the front fork. However, a linkage system is used to achieve progressive springing characteristics.

Rear Shock Absorber Inspection

NOTICE

Sticking muds or dusts on the sliding surface of the rear shock absorber could damage to the oil seal, leading to an oil leak. Clean the sliding surface after each ride.

- Pump the seat down and up by 4 or 5 times, and inspect the smooth stroke.
- If it does not smoothly or noise is found, inspect the oil leak and rear shock absorber mounting.
- Visually inspect the rear shock absorber for oil leakage.
- If necessary, repair or replace by an authorized Kawasaki dealer.

Rear Shock Absorber Adjustment

The spring preload of the shock absorber can be adjusted or the spring can be replaced with an optional one to suit various riding conditions. In addition, the damping force can be adjusted easily, making it unnecessary to change the oil viscosity.

Rebound Damping Adjustment

To adjust the rear shock absorber rebound damping, turn the rebound damping adjuster at the bottom of the rear shock absorber with a standard tip screwdriver.

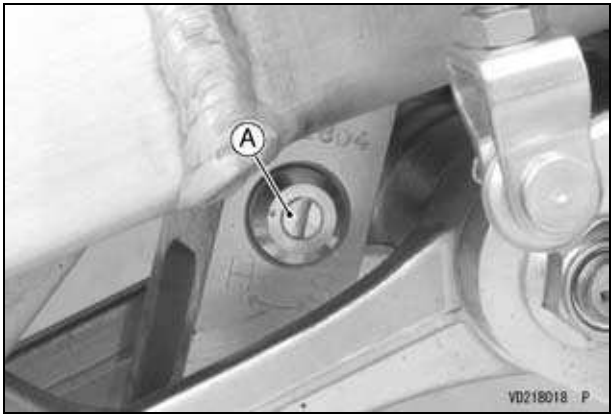

A. Rebound Damping Adjuster

If the damping feels too soft or too stiff, adjust it in accordance with the following table.

Rebound Damping Adjuster Settings

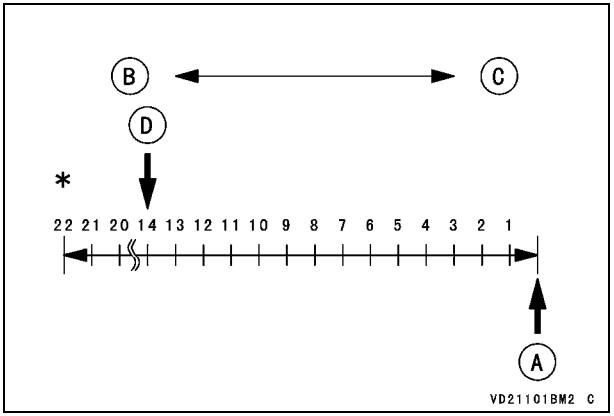

A. Seated Position (Adjuster Turned Fully Clockwise)
B. Softer (Counterclockwise)
C. Harder (Clockwise)
D. Standard Setting

*: Number of turns counterclockwise usable range 22 clicks or more.

Standard Rebound Damping Adjuster Setting

14 clicks*

*: Counterclockwise from the fully seated position

NOTICE

Do not force the rebound damping force adjuster beyond the fully seated position, or the adjusting mechanism may be damaged.

NOTE

○ *Adjustment of the rebound damping adjuster for the rear suspension will slightly affect the compression damping force. Always make any damping adjustments in small steps and test their effects before using them in competition.*

Compression Damping Adjustment (Gas Reservoir)

There are two adjustments you can make to the rear shock absorber gas reservoir.

To adjust the high speed compression damping, turn the high speed compression damping adjuster.

To adjust the low speed compression damping, turn the low speed compression damping adjuster with a standard tip screwdriver.

If the damping feels too soft or too stiff, adjust it in accordance with the following table.

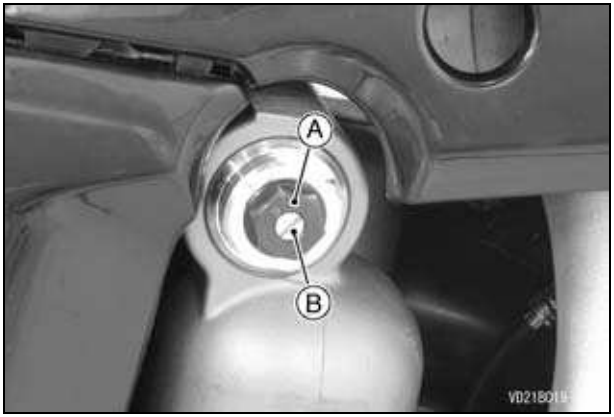

A. Compression Damping Adjuster for High Speed
B. Compression Damping Adjuster for Low Speed

If the damping feels too soft or too stiff, adjust it in accordance with the following table.

High Speed Compression Damping Adjuster Settings

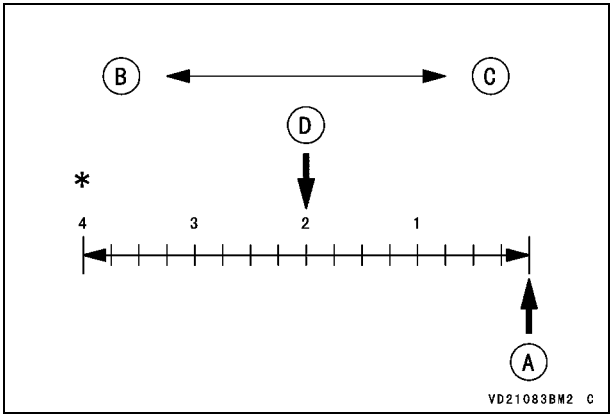

A. Seated Position (Adjuster Turned Fully Clockwise)
B. Softer (Counterclockwise)
C. Harder (Clockwise)
D. Standard Setting

*: Number of turns counterclockwise usable range 4 turns or more.

Standard High Speed Compression Damping Adjuster Setting

2 turns out*

*: Counterclockwise from the fully seated position

Low Speed Compression Damping Adjuster Settings

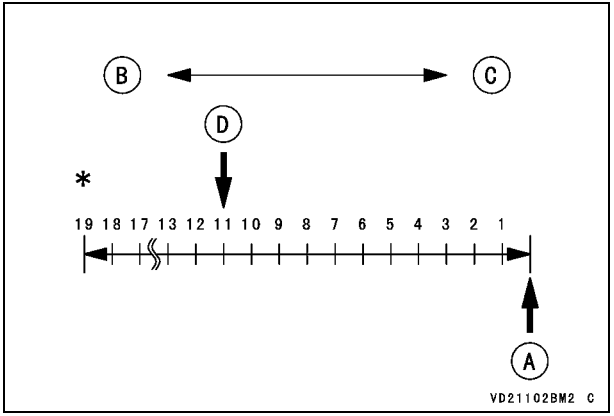

A. Seated Position (Adjuster Turned Fully Clockwise)
B. Softer (Counterclockwise)
C. Harder (Clockwise)
D. Standard Setting

*: Number of turns counterclockwise usable range 19 clicks or more.

Standard Low Speed Compression Damping Adjuster Setting

11 clicks*

*: Counterclockwise from the fully seated position

NOTICE

Do not force the compression damping force adjuster beyond the fully seated position, or the adjusting mechanism may be damaged.

NOTE

○ *Adjustment of the compression damping adjuster for the rear suspension will slightly affect the rebound damping force. Always make any damping adjustments in small steps and test their effects before using them in competition.*

Spring Preload Adjustment

- Remove the rear frame with air cleaner housing (see Throttle Body Assy section).

NOTICE

If the clamp is not removed from the air cleaner housing, the rear shock absorber spring may be damaged.

- Raise the rear wheel off the ground using a jack (special tool: 57001-1238) and attachment (special tool: 57001-1608).
- Using the hook wrenches (special tools: 57001-1101, 1539), loosen the locknut on the rear shock absorber.

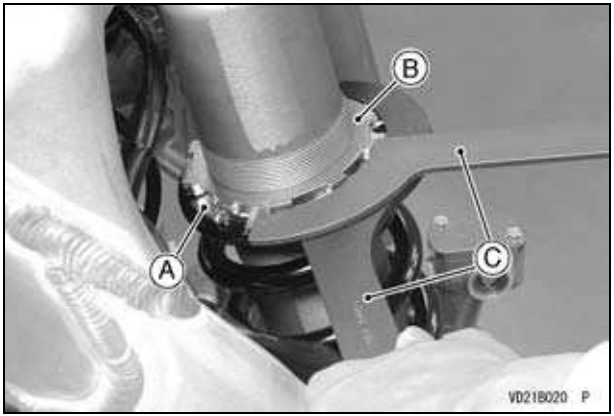

A. Spring Preload Adjusting Nut
B. Locknut
C. Hook Wrenches (Special Tools: 57001-1101, 1539)

- Using the hook wrench (special tool: 57001 -1539), turn the spring preload adjusting nut as required. Turning the adjusting nut down increases the spring preload.

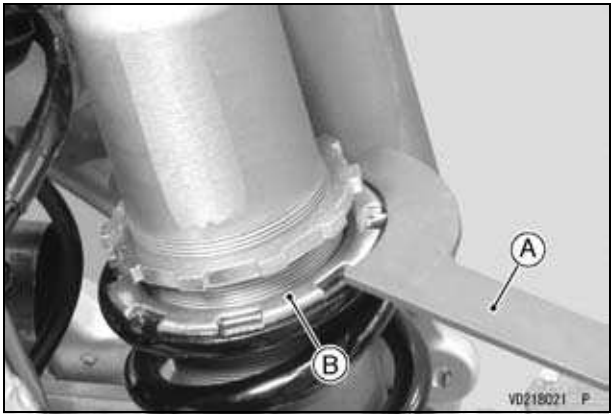

A. Hook Wrench (Special Tool: 57001-1539)
B. Spring Preload Adjusting Nut

- The standard adjusting nut position from the center of the upper rear shock absorber pivot point is 127.2 mm (5.008 in.).
- The adjustable range is in the table below.

Rear Shock Absorber Spring	Adjustable Range
K = 49 N/mm (K = 5.0 kgf/mm)	125.8 ~ 135.8 mm (4.95 ~ 5.35 in.)
K = 51 N/mm (K = 5.2 kgf/mm)	125.8 ~ 133.8 mm (4.95 ~ 5.27 in.)

K = 53 N/mm* (K = 5.4 kgf/mm)	125.8 ~ 139.5 mm (4.95 ~ 5.49 in.)
K = 55 N/mm (K = 5.6 kgf/mm)	125.8 ~ 139.6 mm (4.95 ~ 5.50 in.)

*: Standard

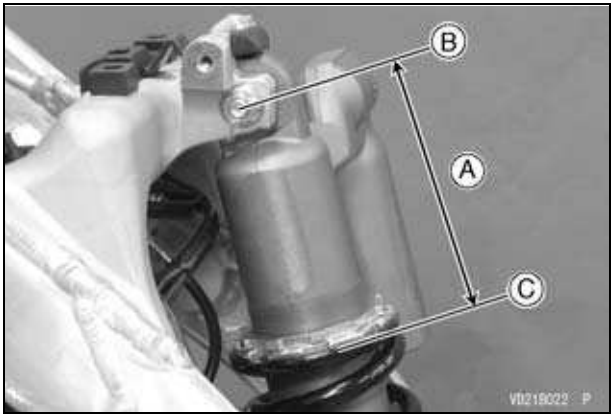

A. Adjusting Nut Position
B. Center of Upper Rear Shock Absorber Pivot
C. Spring End

- Tighten the locknut securely.

Tightening Torque

Rear Shock Absorber Spring Locknut: 45 N·m (4.6 kgf·m, 33 ft·lb)

- After making the adjustment, move the spring up and down to make sure that it is properly seated.
- Install the rear frame with air cleaner housing (see Throttle Body Assy section).
- Install the removed parts.

Optional Rear Shock Absorber Springs

Various rear shock absorber springs are available to achieve suitable rear shock absorber action in accordance with the rider's weight and track condition.

A harder spring stiffens the shock absorber action and accelerates the rebound damping.

A softer spring softens the shock absorber action and slows down the rebound damping.

⚠ WARNING

Improper removal or installation of the rear shock absorber spring may cause the spring and/or related parts to be ejected at high velocity. Always wear eye and face protection when working on the rear shock absorber. Removal and installation of the rear shock absorber spring should be performed by an authorized Kawasaki dealer.

Wheels

Tire Air Pressure

Tire air pressure affects traction, handling, and tire life. Adjust the tire air pressure to suit track conditions and rider preference, but keep it close within the recommended range.

- To check the tire air pressure, remove the air valve cap, and make sure to tighten the cap securely after checking the tire pressure.
- Reduce the tire air pressure to increase the tire tread surface on the ground when riding on a wet, muddy, sandy or slippery track.
- Increase the tire air pressure to prevent damage or punctures (though the tires will skid more easily) when riding on a pebbly or hard track.

Tire Air Pressure Adjustable Range

80 ~ 100 kPa (0.8 ~ 1.0 kgf/cm², 12 ~ 14 psi)

NOTE

○ *Tire air pressure should be checked when the tires are cold, before you ride the motorcycle.*

Spokes and Rims

The spokes on both wheels must all be securely and evenly tightened and not be allowed to loosen. Unevenly tightened or loose spokes will cause the rim to warp, the nipples and spokes to fatigue more quickly, and the spokes to break.

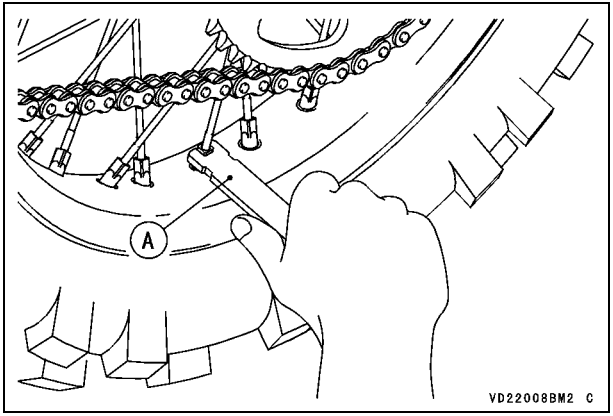

A. Spoke Wrench

Bead Protector

There is a bead protector nut on the both wheels. The bead protector nut prevents the tire and tube from slipping on the rim and damaging the valve stem. Valve stem damage may cause the tube to leak, necessitating tube replacement. In order to keep the tire and tube in position on the rim, inspect the bead protector nut before riding and tighten it if necessary. Tighten the valve stem nut finger tight only.

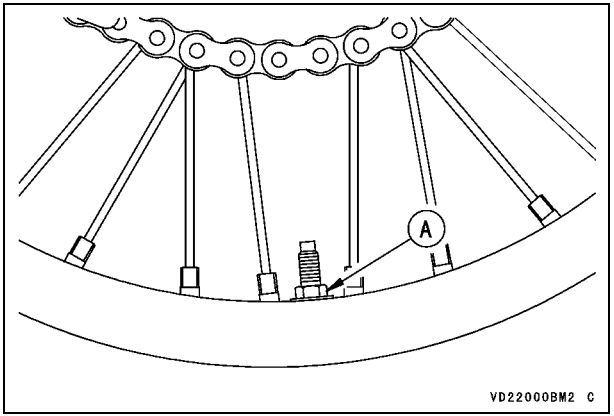

A. Bead Protector Nut

Rim Runout

Set up a dial gauge on the side of the rim and rotate the wheel to measure its axial runout. The difference between the highest and lowest readings is the amount of runout.

- Set up the dial gauge on the inner circumference of the rim and rotate the wheel to measure its radial runout. The difference between the highest and lowest readings is the amount of runout.
- A certain amount of rim warpage (runout) can be corrected by recentering the rim, that is, by loosening some spokes and tightening other to change the position of certain portions of the rim. If the rim is badly bent, however, it should be replaced.

NOTE

○ *The welding spot of the rim may show excessive runout. Disregard this when measuring rim runout.*

Rim Runout

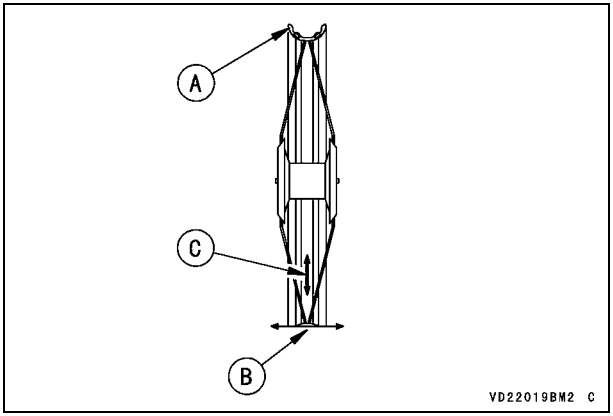

A. Rim
B. Axial Runout
C. Radial Runout

Rim Runout Maximum Limit

Axial	*TIR 2.0 mm (0.08 in.)
Radial	

*: Total Indicator Reading

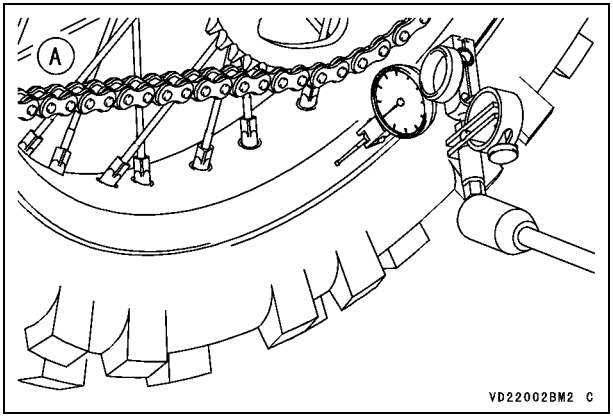

A. Axial Rim Runout Measurement

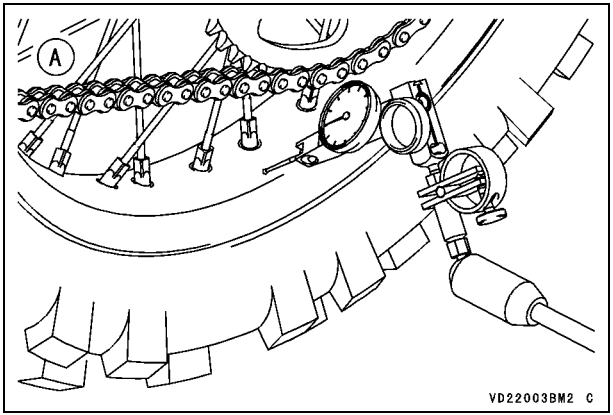

A. Radial Rim Runout Measurement

Hoses Inspection

Check the brake and fuel hoses for cracks or deterioration, and the connections for looseness in accordance with the Periodic Maintenance Chart.

- Inspect the brake hose and fittings for deterioration, cracks and signs of leakage by bending or twisting the hoses.
- If damaged, replace the hoses.

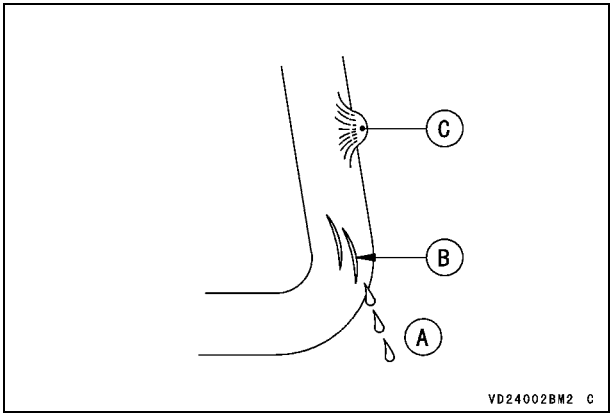

A. Leak
B. Cracks
C. Bulges

- Check that the hose are securely connected and bolts are tightened correctly.

Tightening Torques of Nuts and Bolts

Location of nuts and bolts

Before the first ride of each day of operation, check the tightness of the nuts and bolts shown below. Check also that all cotter pins are in place and in good condition.

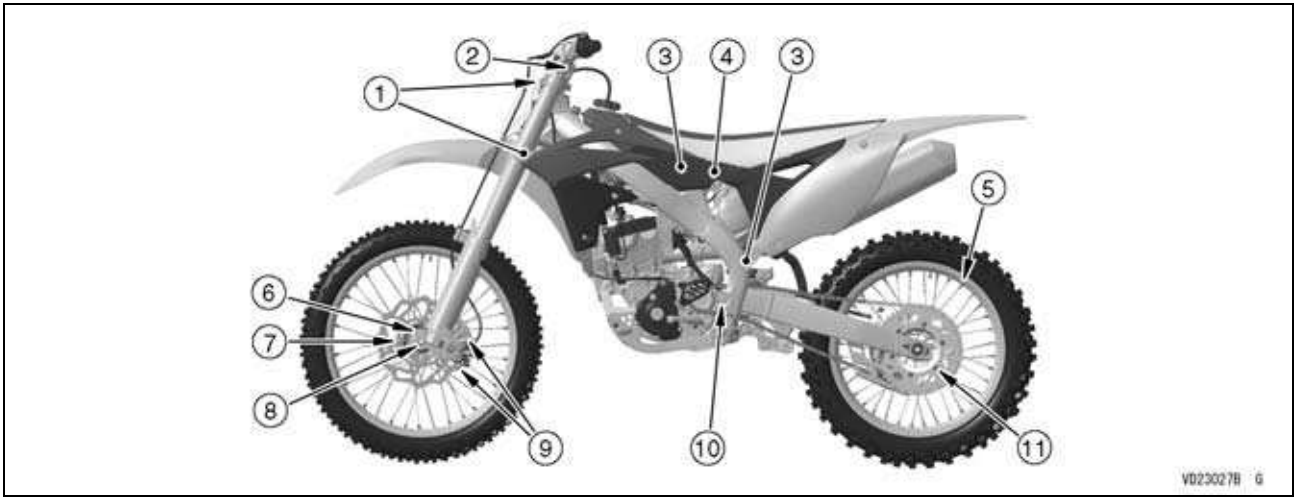

1. Front Fork Clamp Bolts
2. Handlebar Clamp Bolts
3. Rear Frame Mounting Bolts
4. Rear Shock Absorber Nut
5. Spoke Nipples
6. Front Axle Clamp Bolts
7. Front Brake Disc Mounting Bolts
8. Front Axle Nut
9. Front Caliper Mounting Bolts
10. Swingarm Pivot Shaft Nut
11. Rear Sprocket Nuts

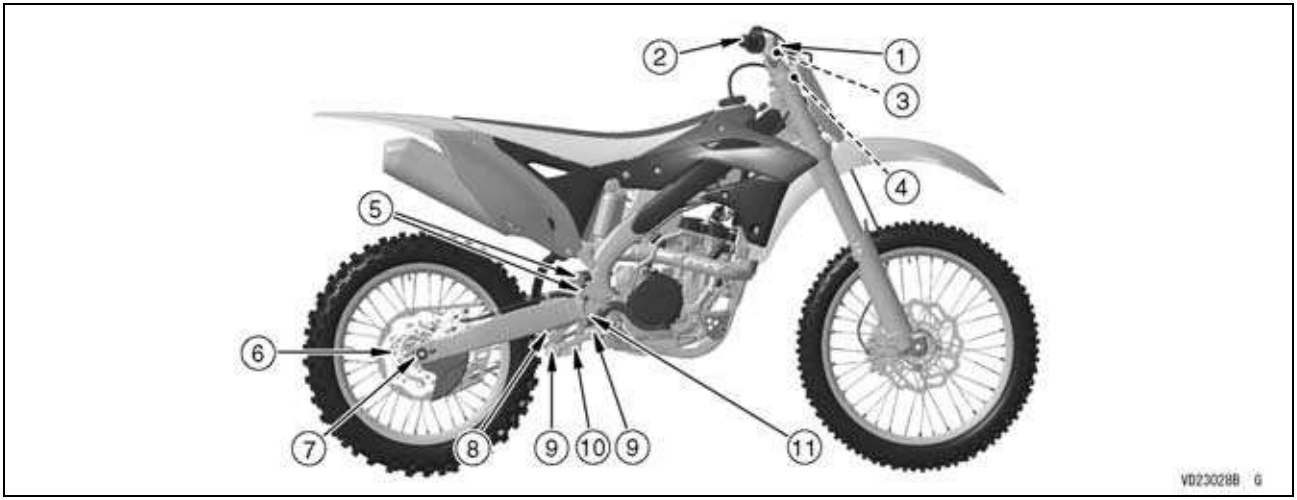

1. Steering Stem Head Nut
2. Front Master Cylinder Clamp Bolts
3. Steering Stem Nut
4. Handlebar Holder Nuts
5. Rear Master Cylinder Mounting Bolts
6. Rear Brake Disc Mounting Bolts
7. Rear Axle Nut
8. Rocker Arm Pivot Nut
9. Tie-Rod Mounting Nuts
10. Rear Shock Absorber Nut
11. Brake Pedal Bolt

Torque table

Tighten all nuts and bolts to the proper torque using an accurate torque wrench. An insufficiently tightened nut or bolt may become damaged or fall out, possibly resulting in damage to the motorcycle and injury to the rider. An overtightened nut or bolt may become damaged, broken, or fall out.

Fastener	N·m	kgf·m	ft·lb	Remarks
Front Axle Clamp Bolts	23	2.3	17	AL
Front Axle Nut	78	8.0	58	
Rear Axle Nut	108	11.0	79.7	
Spoke Nipples	2.2	0.22	19 in·lb	
Rear Sprocket Nuts	34	3.5	25	R
Brake Pedal Bolt	25	2.5	18	G, L
Front Brake Disc Mounting Bolts	9.8	1.0	87 in·lb	L
Front Caliper Mounting Bolts	25	2.5	18	
Front Master Cylinder Clamp Bolts	8.8	0.90	78 in·lb	S
Rear Brake Disc Mounting Bolts	23	2.3	17	L
Rear Master Cylinder Mounting Bolts	9.8	1.0	87 in·lb	
Front Fork Clamp Bolts (Lower)	22	2.2	16	AL
Front Fork Clamp Bolts (Upper)	20	2.0	15	AL, L
Rear Shock Absorber Nut (Lower)	34	3.5	25	R
Rear Shock Absorber Nut (Upper)	39	4.0	29	R
Rocker Arm Pivot Nut	59	6.0	44	R
Swingarm Pivot Shaft Nut	98	10	72	R
Tie-Rod Mounting Nuts	59	6.0	44	R
Handlebar Clamp Bolts	25	2.5	18	AL

Fastener	N·m	kgf·m	ft·lb	Remarks
Handlebar Holder Nuts	34	3.5	25	R
Steering Stem Head Nut	98	10	72	
Steering Stem Nut	4.9	0.50	43 in·lb	
Rear Frame Mounting Bolts	34	3.5	25	

AL: Tighten the two clamp bolts alternately two times to ensure even tightening torque.
G: Apply grease.
L: Apply a non-permanent locking agent.
R: Replacement Parts
S: Tighten the upper clamp bolt first, and then the lower clamp bolt.

Cleaning Your Motorcycle

General Precautions

Frequent and proper care of your Kawasaki motorcycle will enhance its appearance, optimize overall performance, and extend its useful life. Covering your motorcycle with a high quality, breathable motorcycle cover will help protect its finish from harmful UV rays, pollutants, and reduce the amount of dust reaching its surfaces.

⚠ WARNING

Build-up of debris or flammable material in and around the vehicle chassis, engine, and exhaust can cause mechanical problems and increase the risk of fire.
When operating the vehicle in conditions that allow debris or flammable material to collect in and around the vehicle, inspect the engine, electrical component and exhaust areas frequently. If debris or flammable materials have collected, park the vehicle outside and stop the engine. Allow the engine to cool, then remove any collected debris. Do not park or store the vehicle in an enclosed space prior to inspecting for build-up of debris or flammable materials.

- Be sure the engine and exhaust are cool before washing.
- Avoid applying degreaser to seals, brake pads, and tires.
- Avoid all harsh chemicals, solvents, detergents, and household cleaning products such as ammonia-based window cleaners.
- Gasoline, brake fluid, and coolant will damage the finish of painted and plastic surfaces: wash them off immediately.
- Avoid wire brushes, steel wool, and all other abrasive pads or brushes.
- Use care when washing the plastic parts as they can easily be scratched.
- Avoid using pressure washers; water can penetrate seals and electrical components and damage your motorcycle.
- Avoid spraying water in delicate areas such as in air intakes, throttle body assy, brake components, electrical components, muffler outlets, and fuel tank openings.

Washing Your Motorcycle

- Rinse your bike with cold water from a garden hose to remove any loose dirt.
- Mix a mild neutral detergent (designed for motorcycles or automobiles) and water in a bucket. Use a soft cloth or sponge to wash your motorcycle. If needed, use a mild degreaser to remove any oil or grease which build up.
- After washing, rinse your motorcycle thoroughly with clean water to remove any residue (residue from the detergent can damage parts of your motorcycle).

- Use a soft cloth to dry your motorcycle. As you dry, inspect your motorcycle for chips and scratches. Do not let the water air dry as this can damage the painted surfaces.
- Start the engine and let it idle for several minutes. The heat from the engine will help dry moist areas.
- Carefully ride your motorcycle at a slow speed and apply the brakes several times. This helps the brakes dry and restores its normal operating performance.
- Lubricate the drive chain to prevent rusting.

NOTE

○ *After riding in an area where the roads are salted or near the ocean, immediately wash your motorcycle with cold water. Do not use warm water as it accelerates the chemical reaction of the salt. After drying, apply a corrosion protection spray on all metal and chrome surfaces to prevent corrosion.*

Semi-gloss Finish

To clean the semi-gloss finish:

- When washing the motorcycle, always use a mild neutral detergent and water.
- The semi-gloss finish effect may be lost when it is excessively rubbed.
- If any doubt, consult an authorized Kawasaki dealer.

Painted Surfaces

After washing your motorcycle, coat painted surfaces, both metal and plastic, with a commercially available motorcycle/automotive wax. Wax should be applied once every three months or as conditions require. Avoid surfaces with “satin” or “flat” finishes. Always use non-abrasive products and apply them according to the instructions on the container.

Plastic Parts

After washing use a soft cloth to gently dry plastic parts. When dry, treat the non-painted plastic parts with an approved plastic cleaner/polisher product.

NOTICE

Plastic parts may deteriorate and break if they come in contact with chemical substances or household cleaning products such as gasoline, brake fluid, window cleaners, thread-locking agents, or other harsh chemicals. If a plastic part comes in contact with any harsh chemical substance, wash it off immediately with water and a mild neutral detergent, and then inspect for damage. Avoid using abrasive pads or brushes to clean plastic parts, as they will damage the part’s finish.

Chrome and Aluminum

Chrome and uncoated aluminum parts can be treated with a chrome/aluminum polish. Coated aluminum should be washed with a mild neutral detergent and finished with a spray polish. Aluminum wheels, both painted and unpainted can be cleaned with special non-acid based wheel spray cleaners.

Leather, Vinyl, and Rubber

If your motorcycle has leather accessories, special care must be taken. Use a leather cleaner/treatment to clean and care for leather accessories. Washing leather parts with detergent and water will damage them, shortening their life.

Vinyl parts should be washed with the rest of the motorcycle, then treated with a vinyl treatment.

The sidewalls of tires and other rubber components should be treated with a rubber protectant to help prolong their useful life.

⚠ WARNING

Rubber protectants can be slippery and, if used on the tread area, cause loss of traction resulting in accident causing injury or death. Do not apply rubber protectant to any tread area.

Lubrication

Lubricate the areas shown in the illustrations of this section with either motor oil or regular grease, after each race and whenever the vehicle has been operated under wet or rainy conditions, especially after using a high-pressure spray washer. Before lubricating a part, clean off any rust with rust remover and wipe off any grease, oil, dirt, or grime.

General Lubrication

Apply motor oil to the following pivots:

- Clutch Lever
- Front Brake Lever

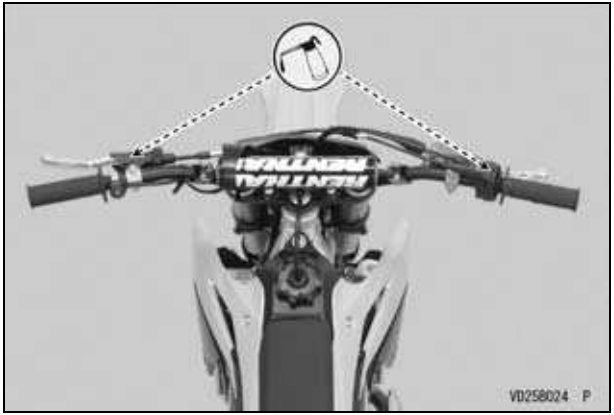

- Rear Brake Pedal
- Rear Master Cylinder Joint Pin
- Kick Pedal
- Footpeg

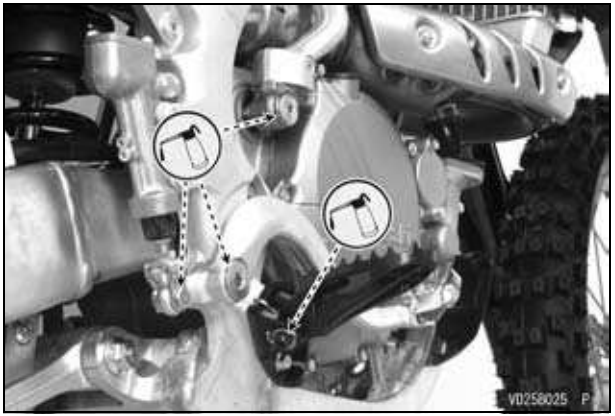

- Shift Pedal

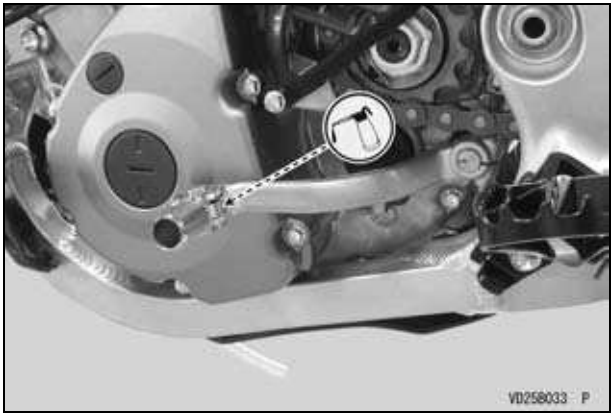

Apply an aerosol cable lubricant with a pressure lubricator on all cables:

- Clutch Cable
- Throttle Cable

Cable Lubrication

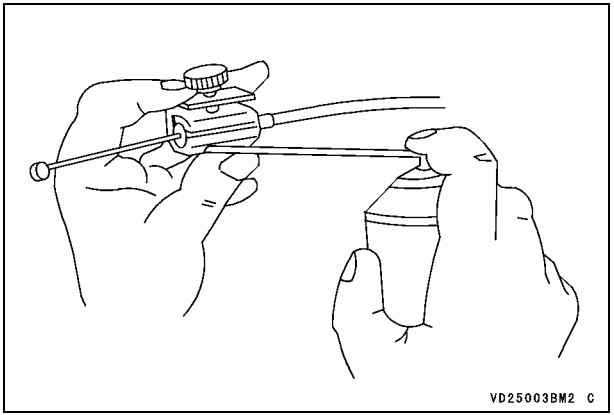

Apply grease to the following points:
- Clutch Inner Cable Upper End
- Throttle Inner Cable Upper End

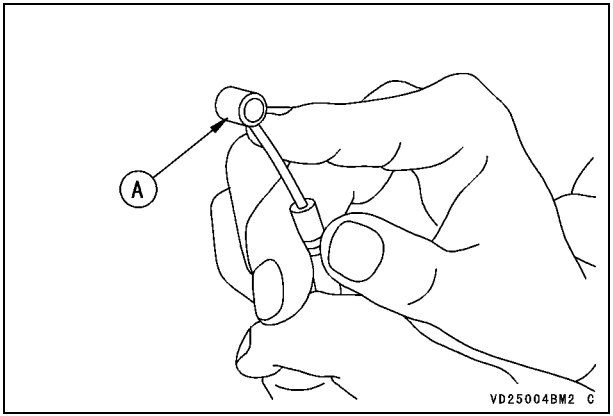

A. Upper End

Drive Chain Lubrication

Lubrication is necessary after riding through rain or on wet roads, or any time that the chain appears dry.

Use a lubricant for drive chains. If the chain is especially dirty, clean it using a cleaner for drive chains following the instructions supplied by the chain cleaner manufacturer.

- Apply lubricant to the sides of the rollers so that it will penetrate to the rollers and bushings. Wipe off any excess lubricant.

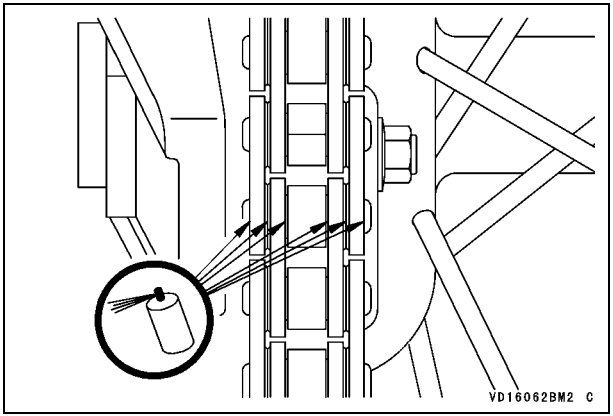

● Wipe off any lubricant that gets on the tire surface.

DFI Self-Diagnosis

This motorcycle equips the DFI trouble self -diagnosis system. Trouble diagnosis can be conducted with the optional parts sold separately as the following procedures.

Self-diagnosis Outline

The self-diagnosis has two modes and can be switched to another mode by grounding the self-diagnosis terminal.

User Mode -

The ECU connected orange FI warning indicator light goes on when DFI system and ignition system and ignition system parts are faulty. In case of serious troubles, the ECU stops the injection/ignition operation.

Dealer Mode -

The orange FI warning indicator light emits service code(s) to show the problem(s) which the DFI system, and ignition system has at the moment of diagnosis.

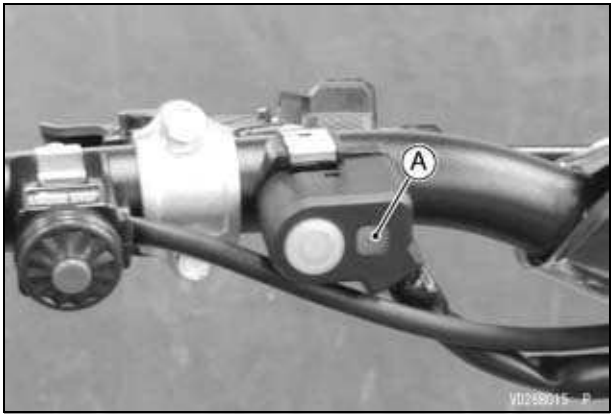

A. Orange Launch Control Mode/FI Warning Indicator Light

Self-diagnosis Procedures

- Disconnect the capacitor lead connector.

A. Capacitor Lead Connector

- Connect the power supply harness (optional part: 26011-0246) to the capacitor lead connector of the main harness.
- Connect the power supply harness (optional part: 26011-0246) to the 12 V battery.
- Connect the O/Y lead (red cap) to the positive (+) terminal first.

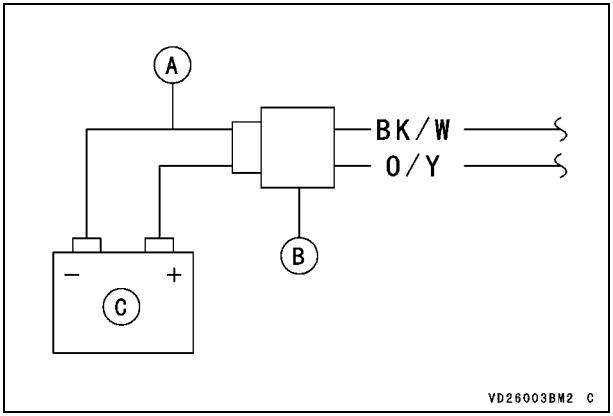

A. Power Supply Harness (Optional Part: 26011-0246)
B. Capacitor Lead Connector
C. 12 V Battery

NOTE

○ *Use a fully charged battery when conducting self -diagnosis. Otherwise, the light blinks very slowly or doesn't blink.*
○ *Keep the self-diagnosis terminal grounded during self-diagnosis.*

- Disconnect the self-diagnosis connector (Y lead).

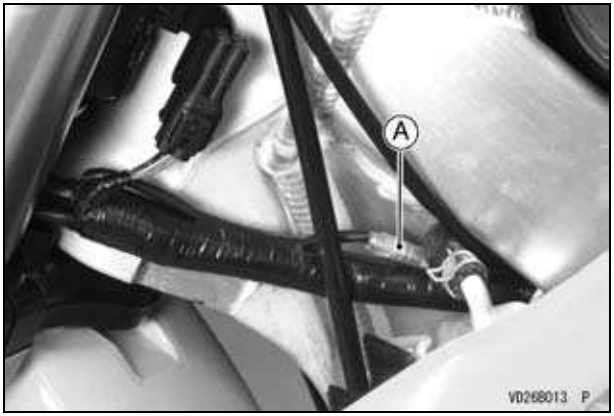

A. Self-diagnosis Connector (Y Lead)

- To enter the self-diagnosis dealer mode, ground the self-diagnosis terminal for more than 2 seconds, and then keep it grounded continuously.
- Count the blinks of the orange light to read the service code. Keep the lead ground until you finish reading the service code.

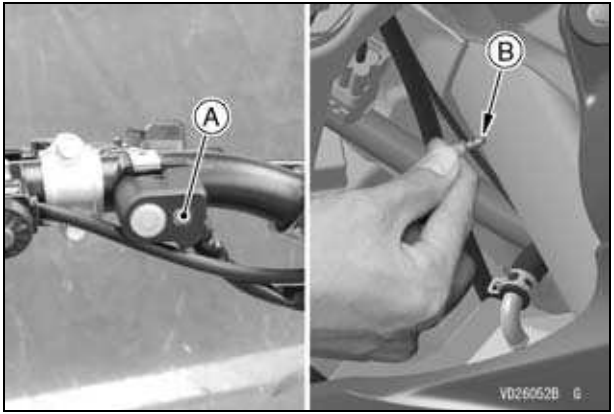

A. Orange Launch Control Mode/FI Warning Indicator Light
B. Self-diagnosis Terminal

How to Read Service Codes

- Service codes are shown by a series of long and short blinks of the orange FI warning indicator light as shown below.
- Read 10th digit and unit digit as the orange FI warning indicator light blinks.
- When there are a number of problems, all the service codes can be stored and the display will begin starting from the lowest number service codes in the numerical order. Then after completing all codes, the display is repeated until the self-diagnosis terminal is open.
- If there is no problem, no code and unlight.
- For example, if two problems occurred in the order of 21, 12, the service codes are displayed from the lowest number in the order listed.

(12 → 21) → (12 → 21) → ··· (repeated)

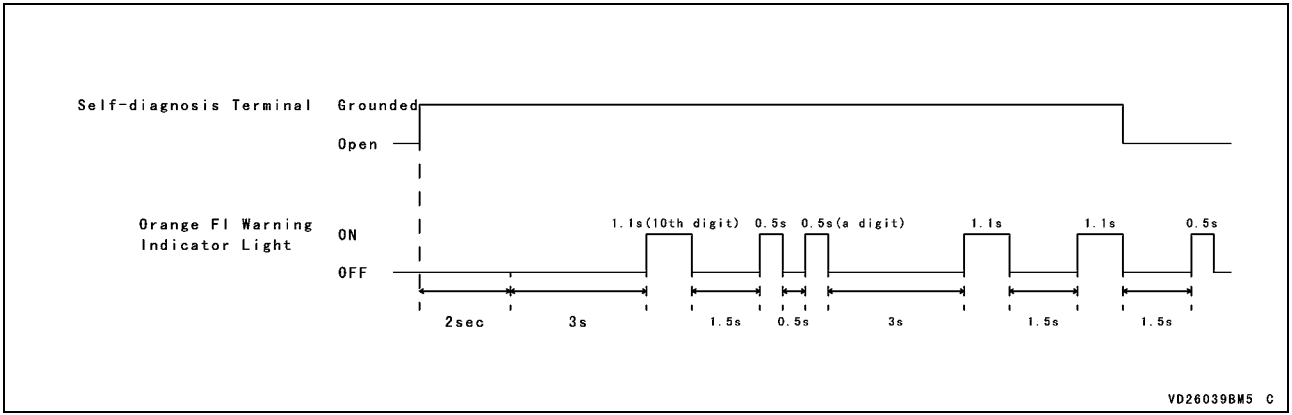

- If the problem is with the following parts, the ECU cannot memorize these problems, the orange FI warning indicator light doesn't go on, and no service codes can be displayed.

ECU Power Source Wiring and Ground Wiring (see Service Manual)

NOTE

○ *Even if the battery or the ECU is disconnected, or the problem is solved, all service codes remain in the ECU.*

Service Code Table

Service Code	Orange FI Warning Indicator Light	Problems
11	ON OFF	Throttle sensor malfunction, wiring open or short
12		Intake air pressure sensor malfunction, wiring open or short
13		Intake air temperature sensor malfunction, wiring open or short
14		Water temperature sensor malfunction, wiring open or short
21		Crankshaft sensor malfunction, wiring open or short
25		Gear position switch malfunction, wiring open or short
31		Vehicle-down sensor malfunction, wiring open or short
41		Downstream injector malfunction, wiring open or short
42		Upstream injector malfunction, wiring open or short

Service Code	Orange FI Warning Indicator Light	Problems
46		Fuel pump malfunction, wiring open or short
51		Ignition coil malfunction, wiring open or short

NOTE

- *The ECU may be involved in these problems. If all the parts and circuits checked out good, be sure to check the ECU for ground and power supply. If the ground and power supply are checked good, replace the ECU (see Service Manual).*
- *When no service code is displayed, the electrical parts of the DFI system has no fault, and the mechanical parts of the DFI system and the engine are suspect.*

TROUBLESHOOTING GUIDE

NOTE

○ *This troubleshooting guide is not exhaustive and does not give every possible cause for each problem listed. It is meant simply as a quick guide to assist you in troubleshooting for some of the more common difficulties.*

Starting failure or difficulties -

Engine does not turn over:
- Valve seized
- Valve lifter seized
- Cylinder or piston seized
- Crankshaft seized
- Connecting rod small end seized
- Connecting rod big end seized
- Camshaft seized
- Transmission gear or bearing seized
- Kick shaft return spring broken
- Kick ratchet gear not engaging
- Improper installation of vehicle-down sensor

Fuel does not flow:
- No fuel in tank
- Fuel tank cap air vent obstructed
- Fuel line clogged
- Break down of a fuel pump
- Break down of a upstream injector and/or downstream injector

Spark missing or weak:
- Spark plug dirty, broken, or gap improperly adjusted
- Spark plug cap or high-tension wiring defective
- Spark plug cap not contacting properly
- Spark plug type incorrect
- Crankshaft sensor defective
- ECU defective
- Ignition coil defective
- Engine stop button wiring defective
- Flywheel magneto damaged
- Wiring shorted or interrupted

Fuel/air mixture incorrect:
- Air cleaner element clogged, poorly sealed, or not installed

Compression low:
- Spark plug loose
- Cylinder head insufficiently tightened
- Cylinder bolt loose
- Cylinder or piston worn
- No valve clearance
- Crankshaft oil seal leak
- Valve spring broken or weak
- Valve not seating properly (valve bent, worn, or carbon accumulation on the seating surface)
- Piston ring worn, weak, broken, or sticking
- Piston ring side clearance excessive
- Cylinder head gasket damaged

- Cylinder head warped
- Cylinder gasket damaged
- Decompression trouble

Poor low-speed performance -

Spark weak:
- Spark plug dirty, broken, or gap improperly adjusted
- Spark plug cap or high-tension wiring defective
- Spark plug cap shorted or not contacting properly
- Spark plug type incorrect
- Crankshaft sensor defective
- ECU defective
- Ignition coil defective
- Flywheel magneto defective
- Wiring connector not in good contact

Fuel/air mixture incorrect:
- Air cleaner element clogged, poorly sealed, or not installed
- Fuel tank cap air vent obstructed
- Throttle body assy holder loose
- Air cleaner duct loose
- Fuel pump defective

Compression low:
- Spark plug loose
- Cylinder head insufficiently tightened
- Cylinder bolt loose
- Cylinder or piston worn
- No valve clearance
- Valve spring broken or weak
- Valve not seating properly (valve bent, worn, or carbon accumulation on the seating surface)
- Piston ring worn, weak, broken, or sticking
- Piston ring side clearance excessive
- Cylinder head gasket damaged
- Cylinder head warped
- Cylinder gasket damaged
- Decompression trouble

Other:
- ECU defective
- Brake dragging
- Clutch slipping
- Engine overheating
- Engine oil level too high
- Engine oil viscosity too high
- Drive chain trouble

Poor or no high-speed performance -

Firing incorrect:
- Spark plug dirty, broken, or gap improperly adjusted
- Spark plug cap or high-tension wiring defective
- Spark plug cap shorted or not contacting properly
- Spark plug type incorrect
- ECU defective
- Ignition coil defective
- Crankshaft sensor defective
- Flywheel magneto defective
- Wiring connector not in good contact

Fuel/air mixture incorrect:
- Air cleaner element clogged, poorly sealed, or not installed
- Fuel contaminated with water or foreign matter
- Fuel tank cap air vent obstructed
- Throttle body assy holder loose
- Air cleaner duct loose
- Fuel line clogged
- Fuel pump defective

Compression low:
- Spark plug loose
- Cylinder head insufficiently tightened
- Cylinder bolt loose
- Cylinder or piston worn
- No valve clearance
- Valve spring broken or weak
- Valve not seating properly (valve bent, worn, or carbon accumulation on the seating surface)
- Piston ring worn, weak, broken, or sticking
- Piston ring side clearance excessive
- Cylinder head gasket damaged
- Cylinder head warped
- Cylinder gasket damaged
- Decompression trouble

Improper acceleration:
- Throttle valve does not fully open
- Air cleaner element clogged
- Fuel contaminated with water or foreign matter
- Brake dragging
- Clutch slipping
- Engine overheating
- Engine oil level too high
- Engine oil viscosity too high
- Crankshaft bearing worn or damaged
- Drive chain trouble

Knocking:
- Carbon built up in combustion chamber
- Fuel quality poor or type incorrect
- Spark plug type incorrect
- ECU defective

Engine overheating -

Firing incorrect:
- Spark plug dirty, broken, or gap improperly adjusted
- Spark plug type incorrect
- ECU defective

Fuel/air mixture incorrect:
- Throttle body assy holder loose
- Air cleaner element clogged, poorly sealed, or not installed
- Air cleaner duct poorly sealed

Compression high:
- Carbon built up in combustion chamber

Engine overloaded:
- Brake dragging
- Clutch slipping
- Engine oil level too high
- Engine oil viscosity too high
- Drive chain trouble

Lubrication inadequate:
- Engine oil level too low
- Engine oil quality poor or type incorrect

Coolant inadequate:
- Coolant level too low
- Coolant deteriorated

Cooling system component defective:
- Radiator clogged
- Radiator cap defective
- Water pump not rotating

Clutch operation faulty -

Clutch slipping:
- No clutch lever play
- Clutch cable improperly adjusted
- Clutch cable defective
- Clutch plate worn or warped
- Clutch spring broken or weak
- Clutch release mechanism defective
- Clutch hub or housing unevenly worn

Clutch not disengaging properly:
- Clutch lever play excessive
- Clutch spring tension uneven
- Engine oil deteriorated
- Engine oil viscosity too high
- Engine oil level too high
- Clutch housing frozen on drive shaft
- Clutch release mechanism defective
- Clutch hub nut loose
- Clutch plate warped or rough
- Clutch hub spline damaged

Gear shifting faulty -

Transmission does not go into gear; shift pedal does not return:
- Clutch not disengaging
- Shift fork bent or seized
- Gear stuck on the shaft
- Shift lever broken
- Pawl guide plate broken
- Shift return spring broken or weak
- Shift return spring pin loose
- Shift pawl broken
- Shift pawl spring weak
- Shift drum broken
- Gear positioning lever operation defective

Transmission jumps out of gear:
- Shift fork worn
- Gear groove worn
- Gear dogs and/or dog grooves worn
- Shift drum groove worn
- Gear positioning lever spring broken or weak
- Shift fork guide pin worn
- Drive shaft, output shaft, and/or gear splines worn

Transmission skips gears:
- Gear positioning lever spring broken or weak
- Pawl guide plate worn

Engine noise abnormal -

Knocking:
- Carbon built up in combustion chamber
- Fuel quality poor or type incorrect
- Spark plug type incorrect
- Engine overheating
- ECU defective

Piston slap:
- Piston clearance excessive
- Cylinder or piston worn
- Connecting rod bent
- Piston pin or piston pin holes worn

Valve noise:
- Valve clearance incorrect
- Valve spring broken or weak
- Camshaft bearing or cam face worn
- Valve lifter worn

Other noise:
- Connecting rod small end clearance excessive
- Connecting rod big end clearance excessive
- Piston ring worn, broken or stuck
- Piston seized or damaged
- Cylinder head gasket leaking
- Exhaust pipe leaking at cylinder head
- Crankshaft runout excessive
- Engine mounts loose
- Crankshaft bearing worn
- Primary gear worn or chipped
- Camshaft chain tensioner defective
- Camshaft chain, sprocket, chain guide worn
- Decompression spring broken
- Flywheel magneto loose

Abnormal drive train noise -

Clutch noise:
- Clutch housing/friction plate clearance excessive
- Clutch housing gear excessive
- Metal chip jammed in clutch housing gear teeth

Transmission noise:
- Crankcase bearing worn or damaged
- Transmission gear worn or chipped
- Metal chip jammed in gear teeth
- Engine oil level or viscosity too low
- Kick ratchet gear not properly disengaging from kick gear
- Kick shaft idle gear worn or chipped

Drive chain noise:
- Drive chain slack improperly adjusted
- Drive chain worn
- Rear and/or engine sprocket(s) worn
- Drive chain inefficiently lubricated
- Rear wheel misaligned

Frame noise abnormal -

Front fork noise:
- Oil level or viscosity too low
- Spring broken or weak
- Front fork air pressure high

Rear shock absorber noise:
- Shock absorber damaged

Disc brake noise:
- Pad installed incorrectly
- Pad surface glazed
- Brake disc warped
- Brake caliper defective
- Brake cylinder damaged

Other noise:
- Bracket, nut, bolt, etc. improperly mounted or tightened

Exhaust smoke -

Excessively white:
- Piston oil ring worn
- Cylinder worn
- Valve oil seal damaged
- Valve guide worn
- Engine oil level too high

Black smoke:
- Air cleaner element clogged

Brownish:
- Air cleaner duct loose
- Air cleaner poorly sealed or missing

Poor handling and/or stability -

Handlebars hard to turn:
- Cable, hose, wiring incorrectly routed
- Steering stem nut too tight
- Steering stem bearing damaged
- Steering stem bearing inadequately lubricated
- Steering stem bent
- Tire air pressure too low

Handlebars shakes or vibrates excessively:
- Tire worn
- Swingarm sleeve or needle bearing damaged
- Rim warped or out of balance
- Front and/or rear axle runout excessive
- Wheel bearing worn
- Handlebar clamp loose
- Steering stem head nut loose
- Spoke loose

Handlebars pulls to one side:
- Frame bent
- Rear wheel misaligned
- Swingarm bent or twisted
- Swingarm pivot shaft runout excessive
- Steering maladjusted
- Steering stem bent
- Front fork bent

Shock absorption unsatisfactory (suspension too hard):
- Front fork oil excessive
- Front fork oil viscosity too high
- Front fork bent
- Front fork air pressure too high
- Tire air pressure too high
- Rear shock absorber improperly adjusted

Shock absorption unsatisfactory (suspension too soft):

- Front fork oil level insufficient and/or front fork leaking oil
- Front fork oil viscosity too low
- Front fork and/or rear shock absorber spring weak
- Rear shock absorber leaking oil or gas
- Rear shock absorber improperly adjusted
- Tire air pressure too low

Poor braking performance -

- Air in the brake line
- Brake pad or disc worn
- Brake fluid leaking
- Brake disc warped
- Brake pads contaminated
- Brake fluid deteriorated
- Primary and/or secondary master cylinder cup(s) damaged
- Master cylinder scratched
- Brake maladjusted (lever or pedal play excessive)

TUNING

Suspension

Introduction

No area of machine adjustment is more critical than proper suspension tuning. An improperly tuned suspension will keep even the best rider from attaining the full benefit of his machine's ability. Match the suspension to the rider and the course conditions.

WHILE TUNING THE SUSPENSION, KEEP THE FOLLOWING IMPORTANT POINTS IN MIND:

- If the machine is new, "break-in" the suspension with at least one hour of riding before making any setting evaluations or changes.
- The three major factors which must be considered in suspension tuning are RIDER WEIGHT, RIDER ABILITY, and TRACK CONDITIONS. Additional influences include the RIDER'S STYLE and POSITIONING on the machine.
- Before changing the suspension settings, test changing your riding posture or position to check whether it is the cause of the problem or not.
- It is a wise practice to adjust the suspension to suit the rider's strong points. If you are fast in the corners, adjust the suspension to allow fast cornering.
- Make setting changes in small increments. A little bit goes a long way, and a setting is easily over adjusted.
- The front and rear suspension should always be balanced; when the one is changed, the other one might need to be changed similarly.
- When evaluating suspension performance, the rider must make every effort to ride consistently and to recognize the effects of his input. Such things as changes in rider position and increasing fatigue may lead to incorrect judgments about necessary adjustments.
- When the proper settings have been determined for a particular track, they should be written down for reference when returning to the same track.
- Lubricate the bearings in the swingarm and UNI-TRAK® linkage after break-in and after every 3 races to prevent friction from affecting suspension performance.

Front Fork

Front Fork Oil Amount -

The fork oil amount in the fork tube is adjustable. A change in the fork oil level will not affect the spring force much at the top of fork travel, but it will have a great effect at the bottom of it.

- When the oil amount is raised, the air spring becomes more progressive, and the front fork action feels "harder" in the later stage of fork travel, near the bottom.
- When the oil amount is lowered, the air spring becomes less progressive, and the front fork action

does not feel as “hard” in the later stage of fork travel.

Fork Oil Amount Effect on Fork Stroke

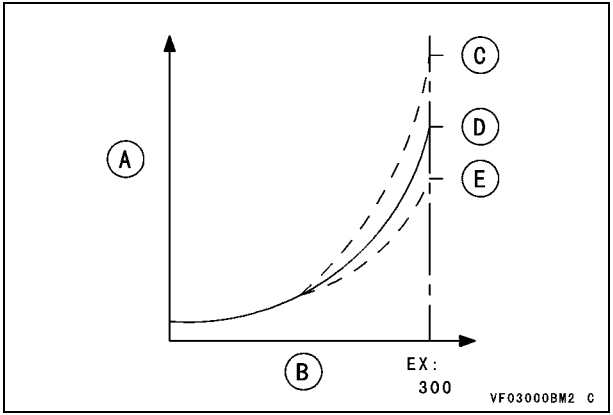

A. Weight
B. Fork Stroke
C. Increase Amount
D. Standard Oil Amount
E. Decrease Amount

Changing the fork oil amount works effectively at the end of fork travel. If fork bottoming is experienced, raise the fork oil amount. This will change the secondary spring rate.

Front Fork Oil Amount Adjustment -

- Adjust the front fork oil amount (see Front Suspension section).

Troubleshooting Improper Settings

Listed below are some symptoms of improper suspension settings and the most likely means of correcting them. The proper settings can be achieved by applying the information given in this chapter in a scientific, methodical manner. This does not mean, however, that you must be a scientist or trained technician to succeed. Simply take time to think about the changes you believe are necessary, check them against the symptoms and cures described here, make the changes in small increments, and take note of the changes and their effects.

Front Fork Improper Adjustment Symptoms - *Too Hard*

Spring too stiff:

- Rebound or compression damping improperly adjusted.
- Spring too hard
- Fork oil amount too high

Suspension stiffens at the end of the fork stroke:

- Fork oil amount too high
- Fork air pressure high

Spring OK, but suspension too hard:

- Fork oil deteriorated
- Fork air pressure high
- Spring preload too hard

Too Soft

The front fork dives excessively during braking and deceleration:

- Fork oil amount too low

- Springs too soft
- Fork oil deteriorated
- Rebound and/or compression damping improperly adjusted.
- Spring preload too soft

Rear shock absorber improper adjustment symptoms -

Too Hard

Suspension too stiff:

- Compression damping too high
- Spring too hard

Spring OK but suspension too hard:

- Unbalance between the spring and the rebound damping (rebound damping too hard)
- Spring preload too hard

Too Soft

Bottoming occurs on landing after a high jump (otherwise OK):

- Spring preload too soft or compression damping too soft
- Spring too soft
- Shock absorber oil deteriorated

Determining the Proper Settings

Standard Settings

From the factory, the machine is set up for a medium-weight rider with intermediate riding ability. Hence, if the actual rider weighs considerably more or less, or if his riding experience and ability are much above or below the intermediate level, it is likely that a few basic suspension adjustments will be necessary.

Basic Readjustment of the Suspension

Suspension Tuning According to Ground Surface

Smooth Terrain	Softer spring
Rough Terrain	Harder spring

Suspension Tuning According to Riding Experience

Beginner	Softer spring with greater rebound damping
Experienced Rider	Harder spring

Suspension Tuning According to Rider Weight

Heavy Rider	Harder spring
Light Rider	Softer spring

Suspension Tuning According the Type of Course

Many Corners	Lower the front end slightly (Increase the amount of fork tube protrusion above the steering stem head by 5 mm (0.20 in.).). This accelerates steering and enhances turning ability.
Fast Course	Raise the front end slightly (Decrease the amount of fork tube protrusion above the steering stem head by 5 mm (0.20 in.).). This slows down steering and enhances stability at high speed.
Deep Dips or Sandy Ground	Raise the front end slightly to gain stability.

Begin the actual on-track testing and evaluation after making these preliminary adjustments.

Bear in mind the following points when readjusting the suspension.

- Always make changes in small steps.
- The rider must be consistent in evaluating suspension performance.
- A change in the front suspension might require one in the rear suspension, and vise versa.

Front and Rear Suspension Compatibility Inspection

Use this procedure to determine if the suspension is balanced reasonably well.

- Hold the motorcycle upright (remove the side stand.).
- While standing next to the machine, lightly pull the brake lever, place one foot on the footpeg closest to you, and push down hard. If the motorcycle stays level as the suspension is compressed, the spring rates are well balanced.
- Sit astride the motorcycle, take a riding posture and check that the machine is in a horizontal position. If one end drops noticeably more than the other, the front and rear are not compatible and must be readjusted to achieve a better balance.

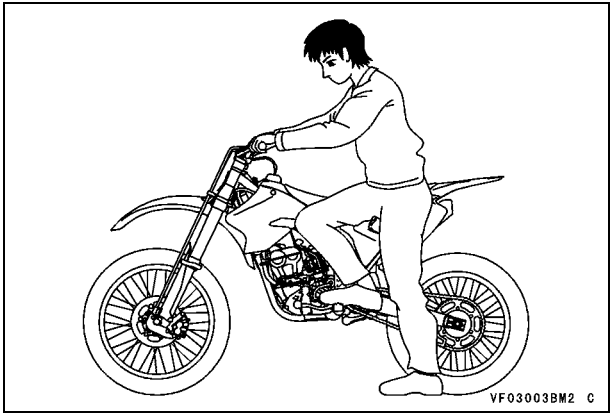

Although this is one of the most effective adjustment procedures, suspension settings may vary depending on the conditions at the track and the rider's preferences.

Front and Rear Suspension Troubleshooting

Front End Surges Downhill or During Acceleration Out of Corner -

The front suspension is too soft.

- Increase the compression damping or rebound damping.
- Increase the fork oil amount.
- Use an optional harder spring, or increase the spring preload.

Front End "Knifes" or Oversteers in Turns (Tends to Turn Inward) -

The front suspension is too soft.

- Increase the compression damping or rebound damping.
- Increase the fork oil amount.

NOTE

○ *Heavier or expert riders may need a harder spring, or increase the spring preload.*

Front End Pushes or "Washes Out" in Turns (Front Wheel Tends to Push Outward Rather than "Bite" in a Turn) -

The front suspension is too stiff.

- Decrease the compression damping or rebound damping.
- Release some air from the fork tubes.
- Decrease the fork oil amount.
- Use a softer spring, or decrease the spring preload.

NOTE

○ *Lighter or less experienced riders may need a softer spring, or decrease the spring preload.*

Front End Does Not Respond to Small Bumps in Sweeping Turns -

The front suspension is too hard.

- Decrease the compression damping or rebound damping.
- Decrease the fork oil amount.
- Use a softer spring, or decrease the spring preload.

Rear End "Kicks" When Braking on Bumps -

The rear shock absorber rebound damping may be too low.

- Increase the rebound damping.

Rear Tire Does Not "Hook Up" Out of Corners (Lack of Traction Coming Out of Turns) -

The rear shock absorber may be too stiff.

- Decrease the rear shock absorber spring preload.
- Decrease the high speed/low speed compression damping.
- Use a softer spring (lightweight rider only).

Fork Bottoms Off After a High-speed Jump (may be due to improper riding posture) -

The rebound damping is too soft or the spring is too hard.

- Increase the rebound damping.
- Decrease the rear shock absorber spring preload.
- Decrease the compression damping.

Front and Rear Ends Bottom Off After a High-speed Jump (harsh bottoming occurs once or twice per lap) -

The front suspension is too soft.

- Increase the fork oil amount.
- Increase the front fork spring preload or use a harder spring.

The rear suspension is too soft.

- Increase the rear shock absorber spring preload or use a harder spring.
- Increase the rear shock absorber high speed compression damping or use a harder spring.

NOTE

○ *Check the front and rear suspension compatibility after making any adjustment.*

Rear End Feels Soft at Small Jump -

- Increase the spring preload up to maximum.
- Increase the rear shock absorber low speed compression damping.

Rear End Feels Soft at Large Jump -

- Increase the spring preload up to maximum.
- Increase the rear shock absorber high speed compression damping.

Rear End Bottoms After 3 or 4 Successive Jumps -

- Decrease the rebound damping.

NOTE

○ *The rear shock absorber behavior on this machine may mislead some riders.*

○ *The rear shock absorber bottoms (due to full stroke) when the spring and damping are overcome by the total weight of the machine and rider.*

○ *A bottoming sensation (even though the machine is actually not bottoming) may be caused by machine weight and the inability of the rider to overcome an overly stiff spring or excessive damping.*

○ *Observe the rear end jumps and try lowering the spring preload and damping if it does not approach bottoming.*

Gearing

Selection of the Secondary Reduction Ratio (Rear Sprocket)

Rear Sprocket Selection According to Course Conditions

Fast Course	Small sprocket
Many Curves or Hills	Large sprocket
Sandy or Soft Ground	

- If the course has long straight portions, the secondary reduction ratio should be reduced so that the machine speed can be increased.
- If then the course has many corners or uphills or is wet, the secondary reduction ratio should be increased so that gear shifting and acceleration are smooth.
- Since the speed must be changed depending on the ground condition on the day of the race, be sure to run through the circuit prior to a race and tune the machine accordingly.
- If there is a long straight portion of the course on which the machine can be run at maximum speed, the machine should be set so that the maximum speed is developed toward the end of the straight course, but care should be taken not to over-rev the engine.
- Since it is difficult to set the machine so it is best suited for all portions of the circuit, determine which circuit portions will have the greatest effect on lap time, and tune the machine to these portions. Confirm your settings by recording lap times after each change. In this way the machine will deliver best performance for the entire circuit.

Special Care According to Track Conditions

- In dry, dusty conditions (such a volcanic ash or fine powdery dust), special care must be given to keeping the air cleaner element clean.
- When riding on wet, heavy clay, mud adheres to the tires and other parts of the vehicle. The mud can add significantly to the weight of the vehicle and therefore reduce performance. Take care to remove built-up mud from the tires and chassis after each ride, before drying occurs.
- The engine works hardest in muddy conditions and the radiator can become clogged with mud. Take care not to overheat the engine in these conditions. The engine also works very hard when riding in deep sand.
- In muddy or sandy conditions, increase chain slack as the chain and sprockets will be packed with mud or sand, which reduces chain slack.
- Check chain and sprocket wear frequently when riding in mud or sand, since wear is increased in these conditions.
- Sticking muds or dusts on the front fork inner tube and rear shock absorber rod could damage to the oil seal, leading to an oil leak. Clean the sticking muds or dusts from the front fork inner tube and rear shock absorber rod after each ride.

OPTIONAL PARTS

Engine Sprocket	
	12T 13T (Standard)
Rear Sprocket	
Aluminum	48T 49T 50T (Standard) 51T 52T
Steel	48T 49T 50T 51T 52T

Handlebar Holder and Clamp		
Clamp (Upper)	Size	ϕ28.6
Holder (Lower)	Size	ϕ28.6 ϕ22.2

Suspension Spring (N/mm)	
Front	K = 9.2 K = 9.6 (Standard) K = 10.0
Rear	K = 49 K = 51 K = 53 (Standard) K = 55
Aluminum Nipple Wheel (Without Tire)	
Front	21 × 1.60
Rear	19 × 1.85
Spoke Nipple	
Front and Rear	Steel

KX FI Calibration Kit

The KX FI Calibration Kit can change the ECU data setting, and save and analyze the engine operation data in a personal computer (PC).

KX FI Calibration Kit: Part No. – 99999-0394

For details, refer to the KX FI Calibration Kit manual.

PRE-RACE CHECKS AND AFTER-RACE MAINTENANCE

Pre-Race Checks -
- Front axle nut, or axle clamp bolt torque
- Front fork clamp bolt torque
- Handlebar clamp bolt torque
- Throttle grip screw tightness
- Throttle grip operation
- Front and rear brake hose installation
- Front and rear brake fluid level
- Front and rear brake disc and caliper installation
- Front and rear brake function
- Fuel tank installation
- All control cable routings
- Engine mounting bolt torque
- Engine sprocket installation
- Shift pedal bolt torque
- Engine oil level
- UNI-TRAK® lever rod nut torque
- UNI-TRAK® lever nut torque
- Rear shock absorber nut torque
- Swingarm pivot shaft nut torque
- Rear axle nut torque
- Rear sprocket nut torque
- Rear brake pedal operation
- Seat installation
- Front and rear wheel spoke torque
- Front and rear tire air pressure
- Front fork air pressure
- Drive chain slack
- Coolant level
- Oil applied to air cleaner element

Maintenance After the First Race -
- Clean the air cleaner element.
- Adjust the drive chain slack.
- Torque the rear sprocket nuts.
- Torque the spokes.
- Check the front and rear tire air pressure.
- Torque the front and rear axle nuts.
- Torque the swingarm pivot shaft nut.
- Torque the muffler and exhaust pipe bolts and nuts.
- Tighten the front and rear fender bolts.
- Tighten the fuel tank and seat bolts.
- Check the front and rear brake function.
- Check the steering play.
- Fill the fuel tank with fuel.
- Check the coolant level.

Maintenance After Riding on a Dusty Course -
- If dirt or dust gets into the engine, cylinder, piston and crankshaft bearings will be damaged. After riding, inspect the crankshaft big end. If the crankshaft big end is worn past the service limit, replace the crankshaft with a new one.
- Clean the sliding surface of the front fork and rear shock absorber.

Maintenance After Riding in the Rain or on a Muddy Course -
- Clean the sliding surface of the front fork and rear shock absorber.

- Apply grease to swingarm and rear suspension pivots.
- Inspect the drive chain and rear sprocket for wear.
- Clean the air cleaner element.
- Check the cylinder and crankshaft big end.
- Grease the throttle grip and control cables.

Suggested Spare Parts -

- Front and rear wheels
- Shift pedal and brake pedal
- Brake lever, clutch lever, and holders
- Throttle and clutch cables
- Handlebars
- Front and rear fenders, side covers, and number plate
- Radiator, radiator shroud, and water hoses
- Throttle grip assembly
- Air cleaner element
- Muffler, and related parts
- Chain case
- Front fork springs (for suspension adjustment)
- Rear shock absorber springs (for suspension adjustment)
- Rear and engine sprockets with bolts/nuts and circlips
- Electrical parts
- Spark plugs
- Clutch assembly and friction plates
- Gaskets
- Front and rear tires (various compounds and tread patterns for different conditions)
- Front fork assembly
- Piston and piston rings
- Tire wraps, bolts, nuts, screws, O-rings, washers, snap rings, wire, adhesive tape, vinyl tape (or duct tape), and #400 to #600 emery cloth

STORAGE

Before Storage

When the motorcycle is to be stored for any length of time, it should be prepared for storage as follows.

- Clean the entire vehicle thoroughly.
- Run the engine for about five minutes to warm the oil, then stop it and drain the engine oil.

⚠ WARNING

Engine oil is a toxic substance. Dispose of used oil properly. Contact your local authorities for approved disposal methods or possible recycling.

- Install the oil drain bolt and fill in fresh engine oil.
- Empty the fuel from the fuel tank by the pump or siphon.
- Empty the fuel system by running the engine at idle speed until the engine stalls (If left in for a long time, the fuel will break down and could clog the fuel system).

⚠ WARNING

Gasoline is extremely flammable and can be explosive under certain conditions, creating the potential for serious burns. Always stop the engine and never smoke while handling fuel. Make sure the area is well-ventilated and free from any source of flame or sparks; this includes any appliance with a pilot light. Make sure the engine is cold before working. Wipe any fuel off the engine before starting it. Gasoline is a toxic substance. Dispose of gasoline properly. Contact your local authorities for approved disposal methods.

- Remove the spark plug and spray fogging oil directly into the cylinder. Kick the engine over slowly a few times to coat the cylinder wall. Install the spark plug.
- Lubricate the drive chain and all the cables.
- Spray oil on all unpainted metal surfaces to prevent rusting. Avoid getting oil on rubber parts and on the brakes.
- Lift the motorcycle on a box or stand so that both wheels are raised off the ground (If this cannot be done, put boards under the front and rear wheels to keep dampness away from the tire rubber.).
- Tie a plastic bag over the muffler to prevent moisture from entering.
- Cover the motorcycle to keep dust and dirt away from it.

After Storage

- Remove the plastic bag from the muffler.
- Make sure the spark plug is tight.

NOTE

○ *Fit the plug cap securely onto the spark plug, and pull the cap lightly to make sure that it is properly installed.*

- Fill the fuel tank with fuel.
- Check all the points listed in the Daily Pre-Ride Checks section.
- Perform a lubrication procedure in the Lubrication section.

ENVIRONMENTAL PROTECTION

Kawasaki subscribes to the guidelines of Tread Lightly! a program dedicated to protecting the great outdoors through education and fostering responsible enjoyment of public lands. When using your Kawasaki motorcycle, please follow these Tread Lightly! guidelines:

Tread Lightly!

Travel responsibly on designated roads and trails or in permitted areas.

Respect the rights of others including private property owners and all recreational trail users, campers and others to allow them to enjoy their recreational activities undisturbed.

Educate yourself by obtaining travel maps and regulations from public agencies, planning for your trip, taking recreation skills classes, and knowing how to use and operate your equipment safely.

Avoid sensitive areas such as meadows, lakeshores, wetlands and streams, unless on designated routes. This protects wildlife habitat and sensitive soils from damage.

Do your part by leaving the area better than you found it, properly disposing of waste, minimizing the use of fire, avoiding the spread of invasive species, restoring degraded areas, and joining a local enthusiast organization.

Properly discard used tires, engine oil, other vehicle components, or the entire vehicle that you might dispose of in the future. Consult your authorized Kawasaki dealer or local environmental waste agency for their proper disposal procedure.

WIRING DIAGRAM

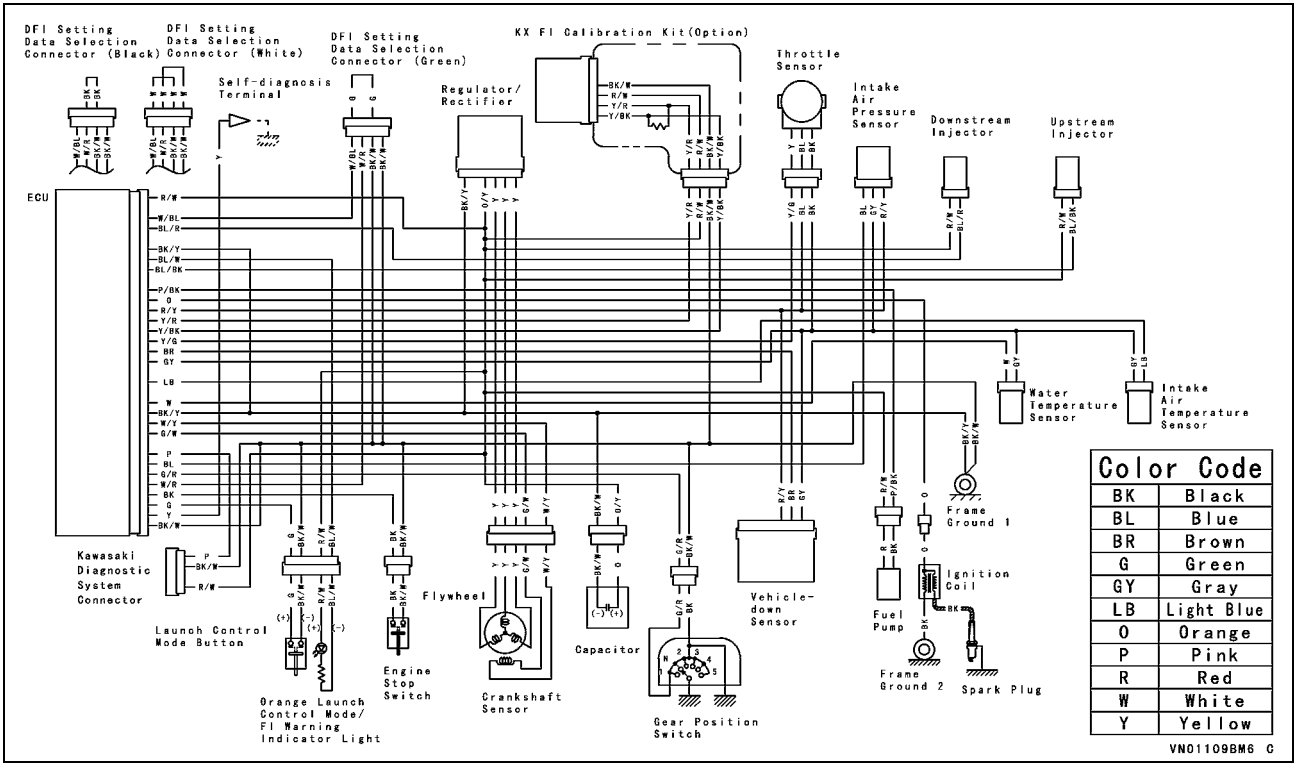

KX250ZF

99987-1838

Kawasaki Heavy Industries, Ltd. Motorcycle & Engine Company

Printed in Japan GB