IMPORTANT

WARNING/CAUTION/NOTE

Please read this manual and follow its instructions carefully. To emphasize special information, the words **WARNING**, **CAUTION** and **NOTE** have special meanings. Pay special attention to the messages highlighted by these signal words.

WARNING:
Indicates a potential hazard that could result in death or injury.

CAUTION:
Indicates a potential hazard that could result in vehicle damage.

NOTE:
Indicates special information to make maintenance easier or instructions clearer.

WARNING:
This service manual is intended for authorized Maruti dealers and qualified service mechanics only. Inexperienced mechanics or mechanics without the proper tools and equipment may not be able to properly perform the services described in this manual. Improper repair may result in injury to the mechanic and may render the vehicle unsafe for the driver and passengers.

FOREWORD

This manual contains procedures for diagnosis, maintenance, adjustments, minor service operations, replacement of components (Service) and for disassembly and assembly of major components (Unit Repair-Overhaul).

Applicable model: MB308

The contents are classified into sections each of which is given a section number as indicated in the Table of Contents on next page. And on the first page of each individual section is an index of that section.
This manual should be kept in a handy place for ready reference of the service work.
Strict observance of the so specified items will enable one to obtain the full performance of the vehicle.

When replacing parts or servicing by disassembling, it is recommended to use MARUTI genuine parts, tools and service materials (lubricant, sealants, etc.) as specified in each description.

All information, illustrations and specifications contained in this literature are based on the latest product information available at the time of publication approval. And used as the main subject of description is the vehicle of standard specifications among others. Therefore, note that illustrations may differ from the vehicle being actually serviced.

The right is reserved to make changes at any time without notice.

Related Manual

Manual Name	Manual No.
MB308 WIRING DIAGRAM MANUAL	99512M84400-74E

MARUTI UDYOG LIMITED
SERVICE DEPARTMENT

	SECTION
GENERAL INFORMATION	
General Information	**0A**
Maintenance and Lubrication	**0B**
HEATING AND AIR CONDITIONING	
Heater and Ventilation	**1A**
Air Conditioning (If Equipped)	**1B**
STEERING, SUSPENSION, WHEELS AND TIRES	
Steering, Suspension, Wheels and Tires	**3**
Front End Alignment	**3A**
Manual Rack and Pinion	**3B**
Steering Wheel and Column	**3C**
Front Suspension	**3D**
Rear Suspension (Leaf Spring Type)	**3E**
Rear Suspension (Coil Spring Type)	**3E1**
Wheels and Tires	**3F**
DRIVE SHAFT AND PROPELLER SHAFT	
Front Drive Shaft	**4**
BRAKE SYSTEM	
Brakes	**5**

TABLE OF CONTENTS	SECTION
ENGINE	
Engine Diagnosis	**6**
Engine Mechanical (F8B Engine)	**6A**
Engine Mechanical (F8D Engine)	**6A1**
Engine Cooling	**6B**
Engine Fuel	**6C**
Engine and Emission Control System	**6E1**
Ignition System	**6F**
Cranking System	**6G**
Charging System	**6H**
Exhaust System	**6K**
TRANSMISSION, CLUTCH AND DIFFERENTIAL	
Manual Transmission (4-speed)	**7A**
Manual Transmission (5-speed)	**7A1**
Clutch	**7C**
ELECTRICAL SYSTEM	
Electrical System	**8**
Wiring Diagram	**8A**
BODY SERVICE	**9**
RESTRAINT SYSTEM	
Restraint System	**10**

NOTE:
The screen toned Section 8A WIRING DIAGRAM is not contained in this manual.
The Section 8A is contained in WIRING DIAGRAM MANUAL mentioned in FOREWORD of this manual.

SECTION 0A

GENERAL INFORMATION

CONTENTS

HOW TO USE THIS MANUAL 0A- 2

PRECAUTIONS 0A- 3
- General Precautions 0A- 3
- Precautions for Catalytic Converter 0A- 5
- Precautions for Electrical Circuit Service 0A- 6
- Electrical Circuit Inspection Procedure 0A- 7
- Intermittent and Poor Connection 0A-10
- Precaution for Installing Mobile Communication Equipment 0A-11

IDENTIFICATION INFORMATION 0A-11
- Vehicle Identification Number 0A-11
- Engine Identification Number 0A-11
- Transmission Identification Number 0A-11

VEHICLE LIFTING POINTS 0A-12

ABBREVIATIONS MAY BE USED IN THIS MANUAL 0A-14

METRIC INFORMATION 0A-16
- Metric Fasteners 0A-16
- Fasteners Strength Identification 0A-16
- Standard Tightening Torque 0A-16

HOW TO USE THIS MANUAL

1) There is a TABLE OF CONTENTS FOR THE WHOLE MANUAL on the third page of this manual, whereby you can easily find the section that offers the information you need. Also, there is a CONTENTS on the first page of EACH SECTION, where the main items in that section are listed.
2) Each section of this manual has its own pagination. It is indicated at the top of each page along with the Section name.
3) The SPECIAL TOOL usage and TORQUE SPECIFICATION are given as shown in figure below.

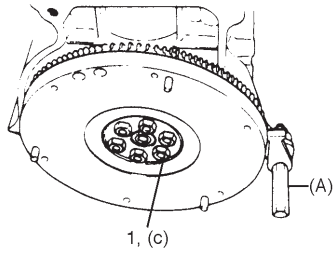

1. Flywheel bolts or drive plate bolts for A/T vehicle

6) Install oil pump. Refer to “Oil pump”.
7) Install flywheel (for M/T vehicle) or drive plate (for A/T vehicle). Using special tool, lock flywheel or drive plate, and tighten flywheel or drive plate bolts to specified torque.

Special Tool
(A): 09924-17810
Tightening Torque
(c): 78 N·m (7.8 kg-m, 56.0 lb-ft)

4) A number of abbreviations are used in the text.
For their full explanations, refer to **“ABBREVIATIONS MAY BE USED IN THIS MANUAL”** of this section.
5) The SI, metric and foot-pound systems are used as units in this manual.
6) DIAGNOSIS are included in each section as necessary.
7) At the end of each section, there are descriptions of SPECIAL TOOLS, REQUIRED SERVICE MATERIALS and TIGHTENING TORQUE SPECIFICATIONS that should be used for the servicing work described in that section.

PRECAUTIONS

GENERAL PRECAUTIONS

The WARNING and CAUTION below describe some general precautions that you should observe when servicing a vehicle. These general precautions apply to many of the service procedures described in this manual, and they will not necessarily be repeated with each procedure to which they apply.

WARNING:

- **Whenever raising a vehicle for service, be sure to follow the instructions under "VEHICLE LIFTING POINTS" on SECTION 0A.**
- **When it is necessary to do service work with the engine running, make sure that the parking brake is set fully and the transmission is in Neutral (for manual transmission vehicles) or Park (for automatic transmission vehicles), Keep hands, hair, clothing, tools, etc. away from the fan and belts when the engine is running.**
- **When it is necessary to run the engine indoors, make sure that the exhaust gas is forced outdoors.**
- **Do not perform service work in areas where combustible materials can come in contact with a hot exhaust system. When working with toxic or flammable materials (such as gasoline and refrigerant), make sure that the area you work in is well-ventilated.**
- **To avoid getting burned, keep away from hot metal parts such as the radiator, exhaust manifold, tailpipe, muffler, etc.**
- **New and used engine oil can be hazardous. Children and pets may be harmed by swallowing new or used oil. Keep new and used oil and used engine oil filters away from children and pets. Continuous contact with used engine oil has been found to cause [skin] cancer in laboratory animals. Brief contact with used oil may irritate skin. To minimize your exposure to used engine oil, wear a long-sleeve shirt and moisture-proof gloves (such as dish washing gloves) when changing engine oil. If engine oil contacts your skin, wash thoroughly with soap and water. Launder any clothing or rags if wet with oil, recycle or properly dispose of used oil and filters.**
- **Make sure the bonnet is fully closed and latched before driving. If it is not, it can fly up unexpectedly during driving, obstructing your view and resulting in an accident.**

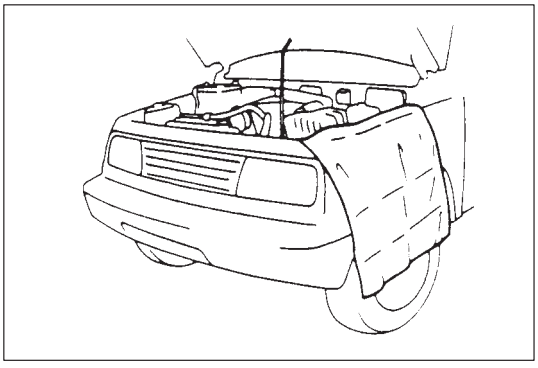

CAUTION:

- **Before starting any service work, cover fenders, seats and any other parts that are likely to get scratched or stained during servicing. Also, be aware that what you wear (e.g, buttons) may cause damage to the vehicle's finish.**

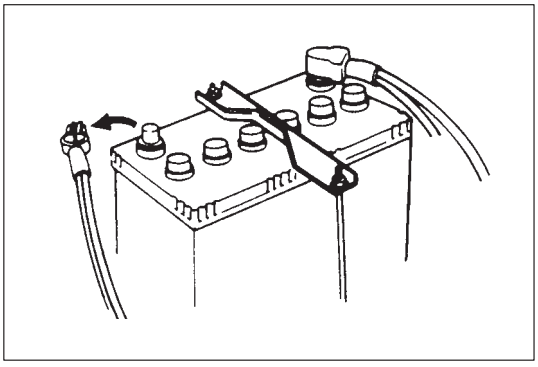

- **When performing service to electrical parts that does not require use of battery power, disconnect the negative cable of the battery.**

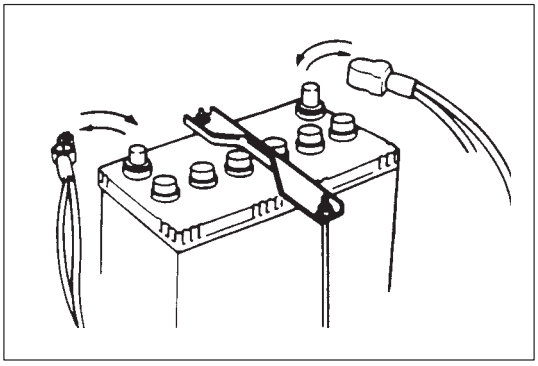

- **When removing the battery, be sure to disconnect the negative cable first and then the positive cable. When reconnecting the battery, connect the positive cable first and then the negative cable, and replace the terminal cover.**

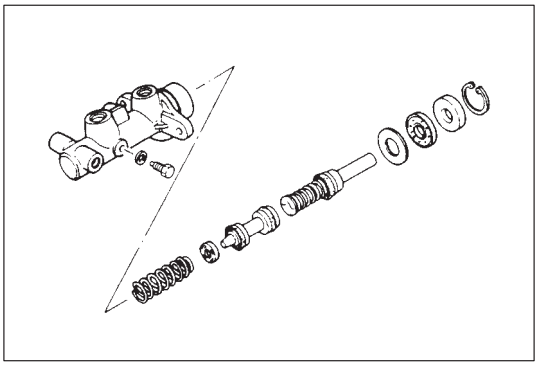

- **When removing parts that are to be reused, be sure to keep them arranged in an orderly manner so that they may be reinstalled in the proper order and position.**

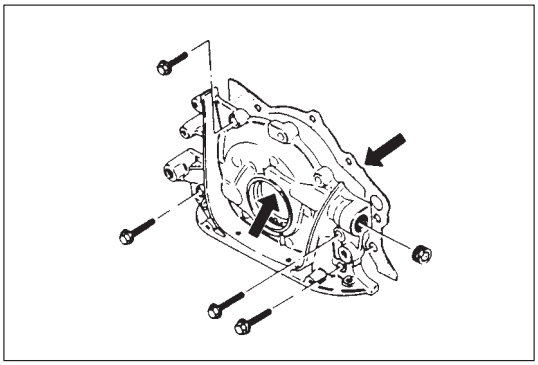

- **Whenever you use oil seals, gaskets, packing, O-rings, locking washers, split pins, self-locking nuts, and certain other parts as specified, be sure to use new ones. Also, before installing new gaskets, packing, etc., be sure to remove any residual material from the mating surfaces.**

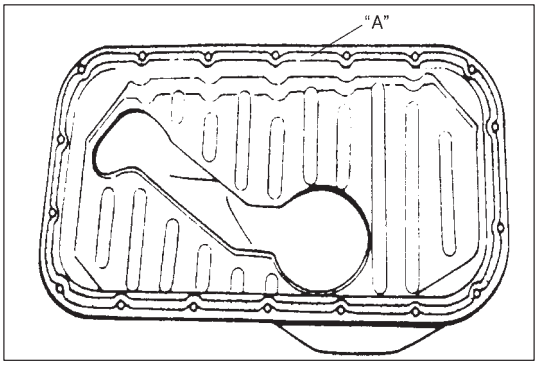

- **Make sure that all parts used in reassembly are perfectly clean.**
- **When use of a certain type of lubricant, bond or sealant is specified, be sure to use the specified type.**

  "A": Sealant 99000-31150

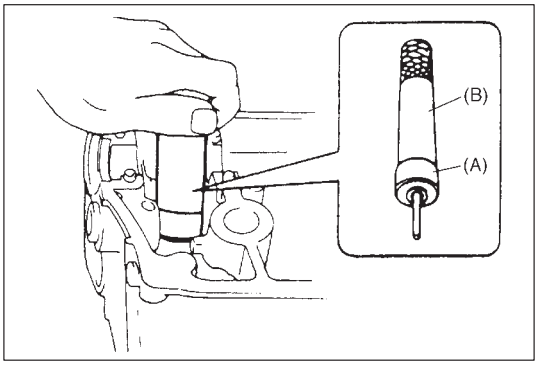

- **Be sure to use special tools when instructed.**

  Special Tool
  (A): 09917-98221
  (B): 09916-58210

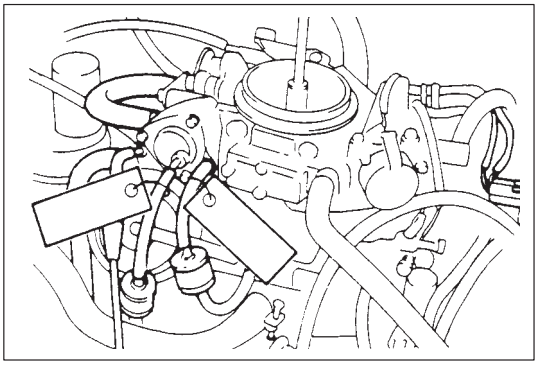

- **When disconnecting vacuum hoses, attach a tag describing the correct installation positions so that the hoses can be reinstalled correctly.**

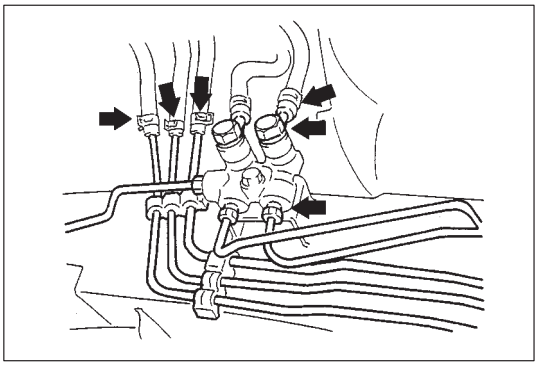

- **After servicing fuel, oil, coolant, vacuum, exhaust or brake systems, check all lines related to the system for leaks.**

- **For vehicles equipped with fuel injection systems, never disconnect the fuel line between the fuel pump and injector without first releasing the fuel pressure, or fuel can be sprayed out under pressure.**

PRECAUTIONS FOR CATALYTIC CONVERTER

For vehicles equipped with a catalytic converter, use only unleaded gasoline and be careful not to let a large amount of unburned gasoline enter the converter or it can be damaged.

- **Conduct a spark jump test only when necessary, make it as short as possible, and do not open the throttle.**
- **Conduct engine compression checks within the shortest possible time.**
- **Avoid situations which can result in engine misfire (e.g. starting the engine when the fuel tank is nearly empty.)**

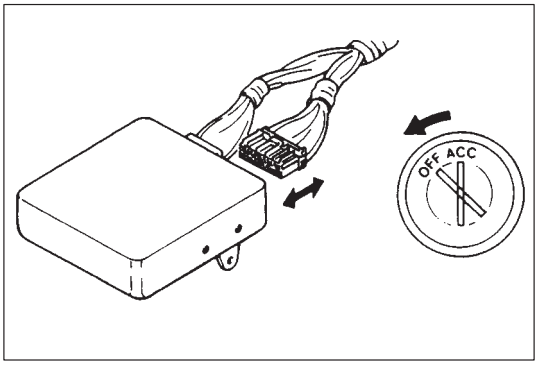

PRECAUTIONS FOR ELECTRICAL CIRCUIT SERVICE

- **When disconnecting and connecting coupler, make sure to turn ignition switch OFF, or electronic parts may get damaged.**

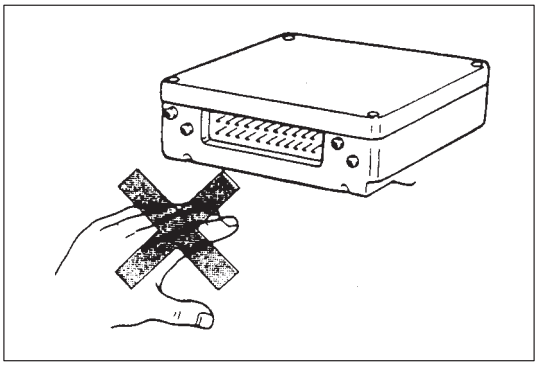

- **Be careful not to touch the electrical terminals of parts which use microcomputers (e.g. electronic control unit like as ECM, PCM, P/S controller, etc.). The static electricity from your body can damage these parts.**

- **Never connect any tester (voltmeter, ohmmeter, or whatever) to electronic control unit when its coupler is disconnected. Attempt to do it may cause damage to it.**
- **Never connect an ohmmeter to electronic control unit with its coupler connected to it. Attempt to do it may cause damage to electronic control unit and sensors.**
- **Be sure to use a specified voltmeter/ohmmeter. Otherwise, accurate measurements may not be obtained or personal injury may result. If not specified, use a voltmeter with high-impedance (MΩ/V minimum) or a digital type voltmeter.**

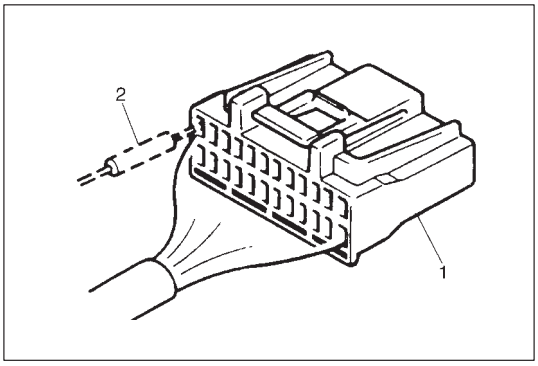

- **When taking measurements at electrical connectors using a tester probe (2), be sure to insert the probe from the wire harness side (backside) of the connector (1).**

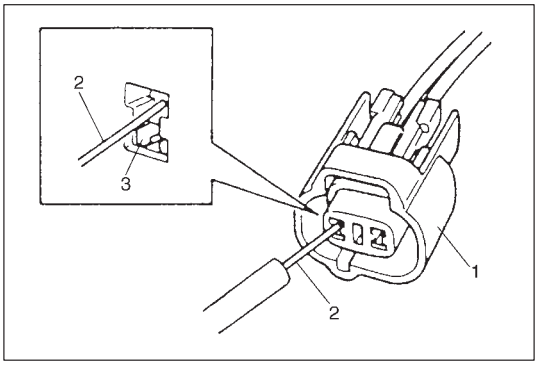

- **When connecting meter probe (2) from terminal side of coupler (1) because it can't be connected from harness side, use extra care not to bend male terminal of coupler of force its female terminal open for connection.**
  In case of such coupler as shown connect probe as shown to avoid opening female terminal.
  Never connect probe where (3) male terminal is supposed to fit.

- **When checking connection of terminals, check its male half for bend and female half for excessive opening and both for locking (looseness), corrosion, dust, etc.**

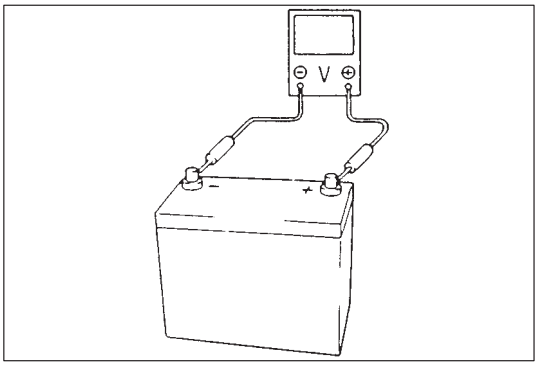

- **Before measuring voltage to check for electrical system, check to make sure that battery voltage is 11V or higher. Such terminal voltage check at low battery voltage will lead to erroneous diagnosis.**

ELECTRICAL CIRCUIT INSPECTION PROCEDURE

While there are various electrical circuit inspection methods, described here is a general method to check its open and short circuit by using an ohmmeter and a voltmeter.

OPEN CIRCUIT CHECK

Possible causes for the open circuit are as follows. As the cause is in the connector or terminal in many cases, they need to be checked particularly carefully.

- Loose connection of connector
- Poor contact of terminal (due to dirt, corrosion or rust on it, poor contact tension, entry of foreign object etc.)
- Wire harness being open

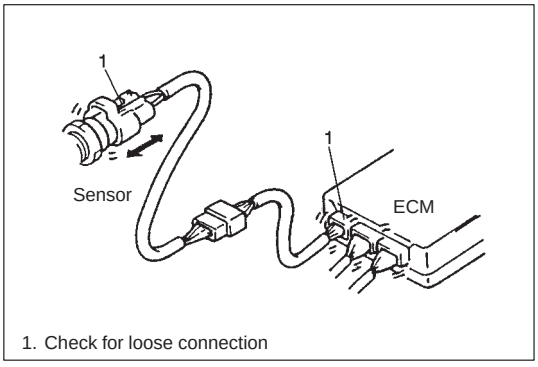

1. Check for loose connection

When checking system circuits including an electronic control unit such as ECM, TCM, ABS control module, etc., it is important to perform careful check, starting with items which are easier to check.

1) Disconnect negative cable from battery.
2) Check each connector at both ends of the circuit being checked for loose connection. Also check lock condition of connector if equipped with connector lock.

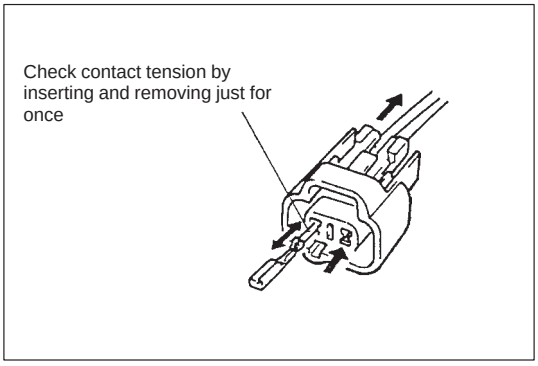

3) Using a test male terminal, check both terminals of the circuit being checked for contact tension of its female terminal.
   Check each terminal visually for poor contact (possibly caused by dirt, corrosion, rust, entry of foreign object, etc.).
   At the same time, check to make sure that each terminal is locked in the connector fully.

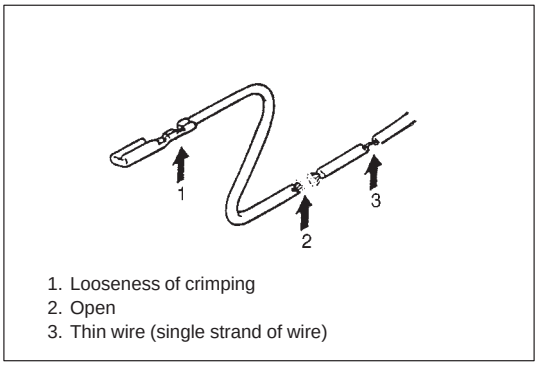

4) Using continuity check or voltage check procedure described in the following page, check the wire harness for open circuit and poor connection with its terminals. Locate abnormality, if any.

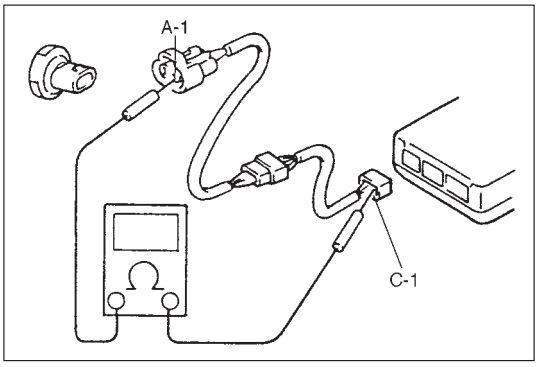

Continuity check

1) Measure resistance between connector terminals at both ends of the circuit being checked (between A-1 and C-1 in the figure).
   If no continuity is indicated (infinity or over limit), that means that the circuit is open between terminals A-1 and C-1.

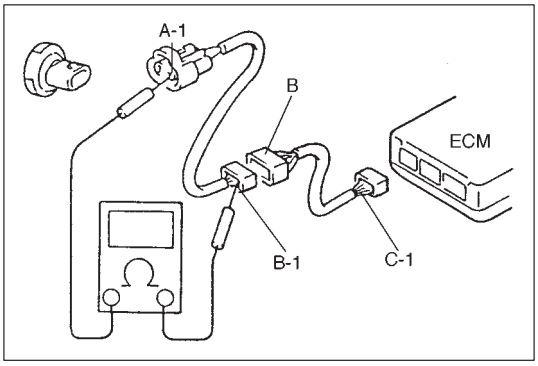

2) Disconnect the connector included in the circuit (connector-B in the figure) and measure resistance between terminals A-1 and B-1.
   If no continuity is indicated, that means that the circuit is open between terminals A-1 and B-1. If continuity is indicated, there is an open circuit between terminals B-1 and C-1 or an abnormality in connector-B.

Voltage check

If voltage is supplied to the circuit being checked, voltage check can be used as circuit check.

1) With all connectors connected and voltage applied to the circuit being checked, measure voltage between each terminal and body ground.

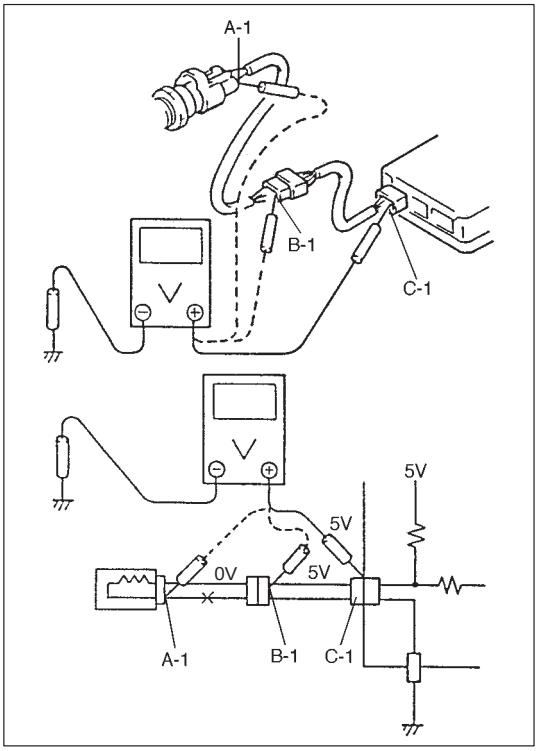

If measurements were taken as shown in the figure at the left and results were as listed below, it means that the circuit is open between terminals B-1 and A-1.

Voltage Between:
C-1 and body ground: Approx. 5V
B-1 and body ground: Approx. 5V
A-1 and body ground: 0V

Also, if measured values were as listed below, it means that there is a resistance (abnormality) of such level that corresponds to the voltage drop in the circuit between terminals A-1 and B-1.

Voltage Between:
C-1 and body ground: Approx. 5V
B-1 and body ground: Approx. 5V
A-1 and body ground: Approx. 3V
2V voltage drop

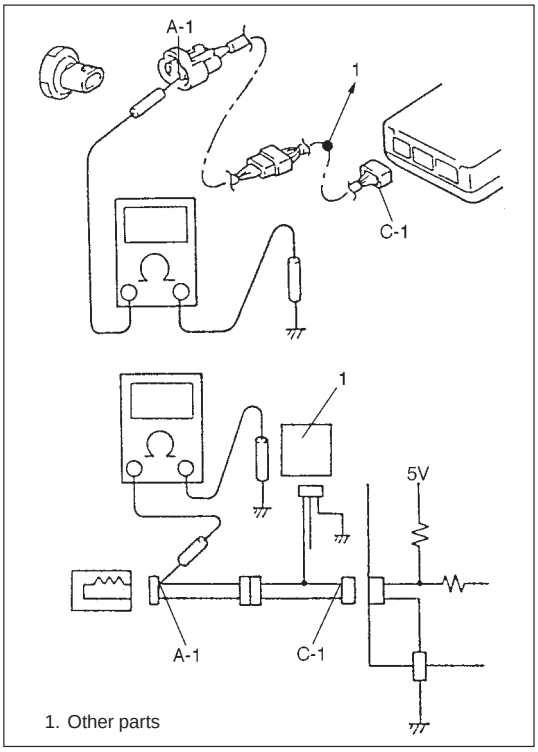

SHORT CIRCUIT CHECK (wire harness to ground)

1) Disconnect negative cable from battery.
2) Disconnect connectors at both ends of the circuit to be checked.

   NOTE:
   If the circuit to be checked is connected to other parts, disconnect all connectors of those parts.
   Otherwise, diagnosis will be misled.

3) Measure resistance between terminal at one end of circuit (A-1 terminal in figure) and body ground. If continuity is indicated, it means that there is a short to ground between terminals A-1 and C-1 of the circuit.

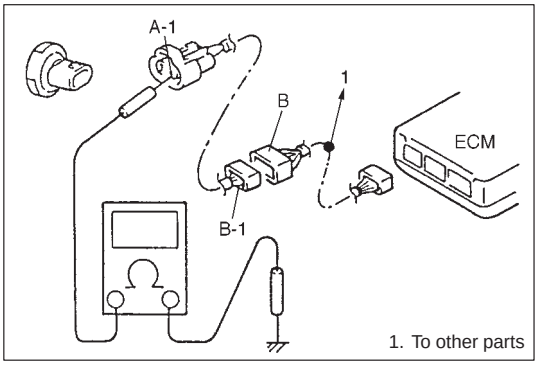

4) Disconnect the connector included in circuit (connector B) and measure resistance between A-1 and body ground.
   If continuity is indicated, it means that the circuit is shorted to the ground between terminals A-1 and B-1.

INTERMITTENT AND POOR CONNECTION

Most intermittent are caused by faulty electrical connections or wiring, although a sticking relay or solenoid can occasionally be at fault. When checking it for proper connection, perform careful check of suspect circuits for:

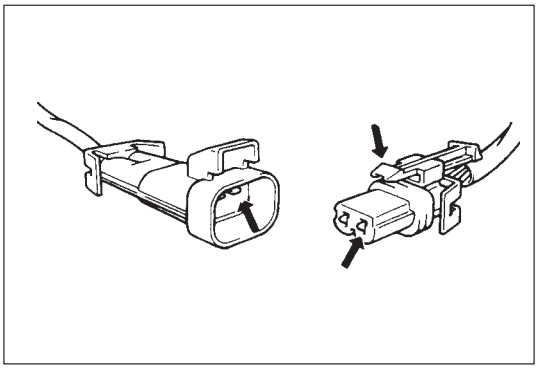

- Poor mating of connector halves, or terminals not fully seated in the connector body (backed out).
- Dirt or corrosion on the terminals. The terminals must be clean and free of any foreign material which could impede proper terminal contact. However, cleaning the terminal with a sand paper or the like is prohibited.
- Damaged connector body, exposing the terminals to moisture and dirt, as well as not maintaining proper terminal orientation with the component or mating connector.

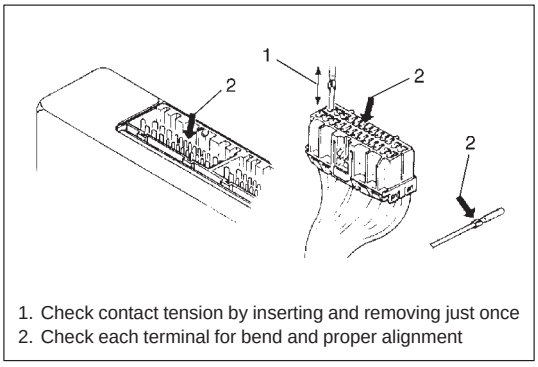

1. Check contact tension by inserting and removing just once
2. Check each terminal for bend and proper alignment

- Improperly formed or damaged terminals.
  Check each connector terminal in problem circuits carefully to ensure good contact tension by using the corresponding mating terminal.
  If contact tension is not enough, reform it to increase contact tension or replace.

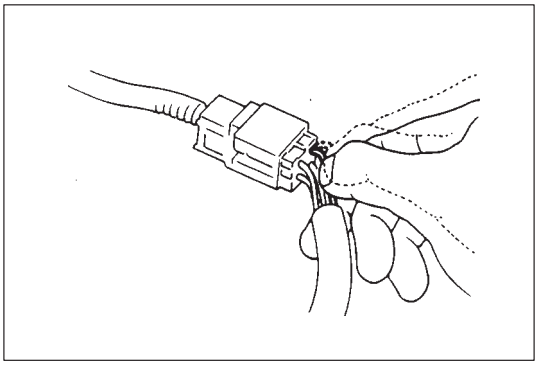

- Poor terminal-to-wire connection.
  Check each wire harness in problem circuits for poor connection by shaking it by hand lightly. If any abnormal condition is found, repair or replace.

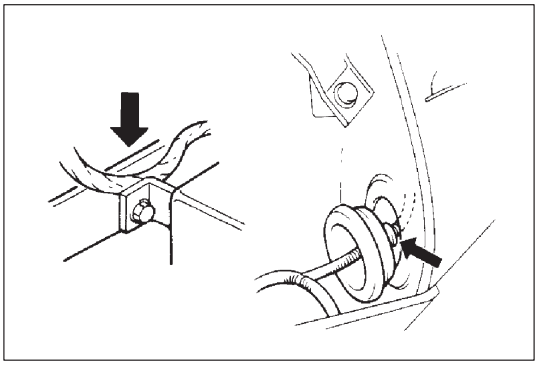

- Wire insulation which is rubbed through, causing an intermittent short as the bare area touches other wiring or parts of the vehicle.
- Wiring broken inside the insulation. This condition could cause continuity check to show a good circuit, but if only 1 or 2 strands of a multi-strand-type wire are intact, resistance could be far too high.
  If any abnormality is found, repair or replace.

PRECAUTION FOR INSTALLING MOBILE COMMUNICATION EQUIPMENT

When installing mobile communication equipment such as CB (Citizens-Band)-radio or cellular-telephone, be sure to observe the following precautions.
Failure to follow cautions may adversely affect electronic control system.

- Keep the antenna as far away as possible from the vehicle's electronic control unit.
- Keep the antenna feeder more than 20 cm (7.9 in) away from electronic control unit and its wire harnesses.
- Do not run the antenna feeder parallel with other wire harnesses.
- Confirm that the antenna and feeder are correctly adjusted.

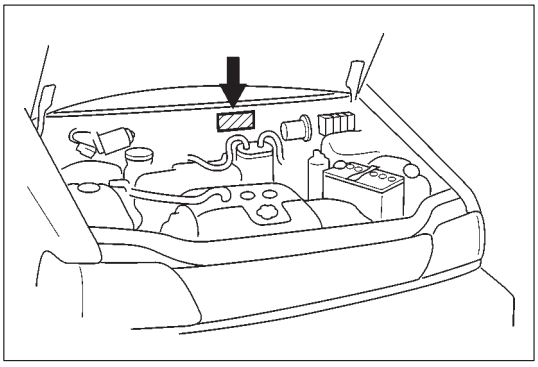

IDENTIFICATION INFORMATION

VEHICLE IDENTIFICATION NUMBER

The number is punched on the front dash panel in the engine room.

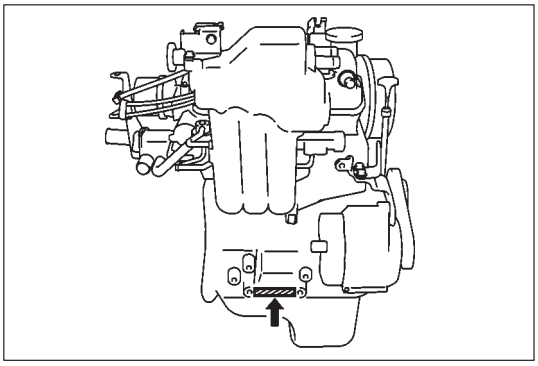

ENGINE IDENTIFICATION NUMBER

The number is punched on the cylinder block.

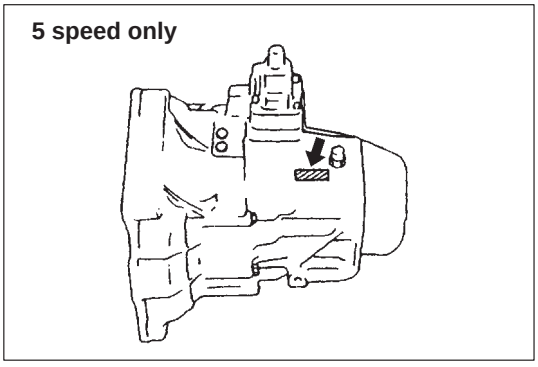

TRANSMISSION IDENTIFICATION NUMBER

The identification number of the 5 speed transmission is located on the transmission case.
The identification number of the 4 speed transmission is not available.

VEHICLE LIFTING POINTS

WARNING:

- **Before applying hoist to underbody, always take vehicle balance throughout service into consideration. Vehicle balance on hoist may change depending of what part to be removed.**
- **Before lifting up the vehicle, check to be sure that end of hoist arm is not in contact with brake pipe, fuel pipe, bracket or any other part.**
- **When using frame contact hoist, apply hoist as shown (right and left at the same position). Lift up the vehicle till 4 tires are a little off the ground and make sure that the vehicle will not fall off by trying to move vehicle body in both ways. Work can be started only after this confirmation.**
- **Make absolutely sure to lock hoist after vehicle is hoisted up.**

When using frame contact hoist:

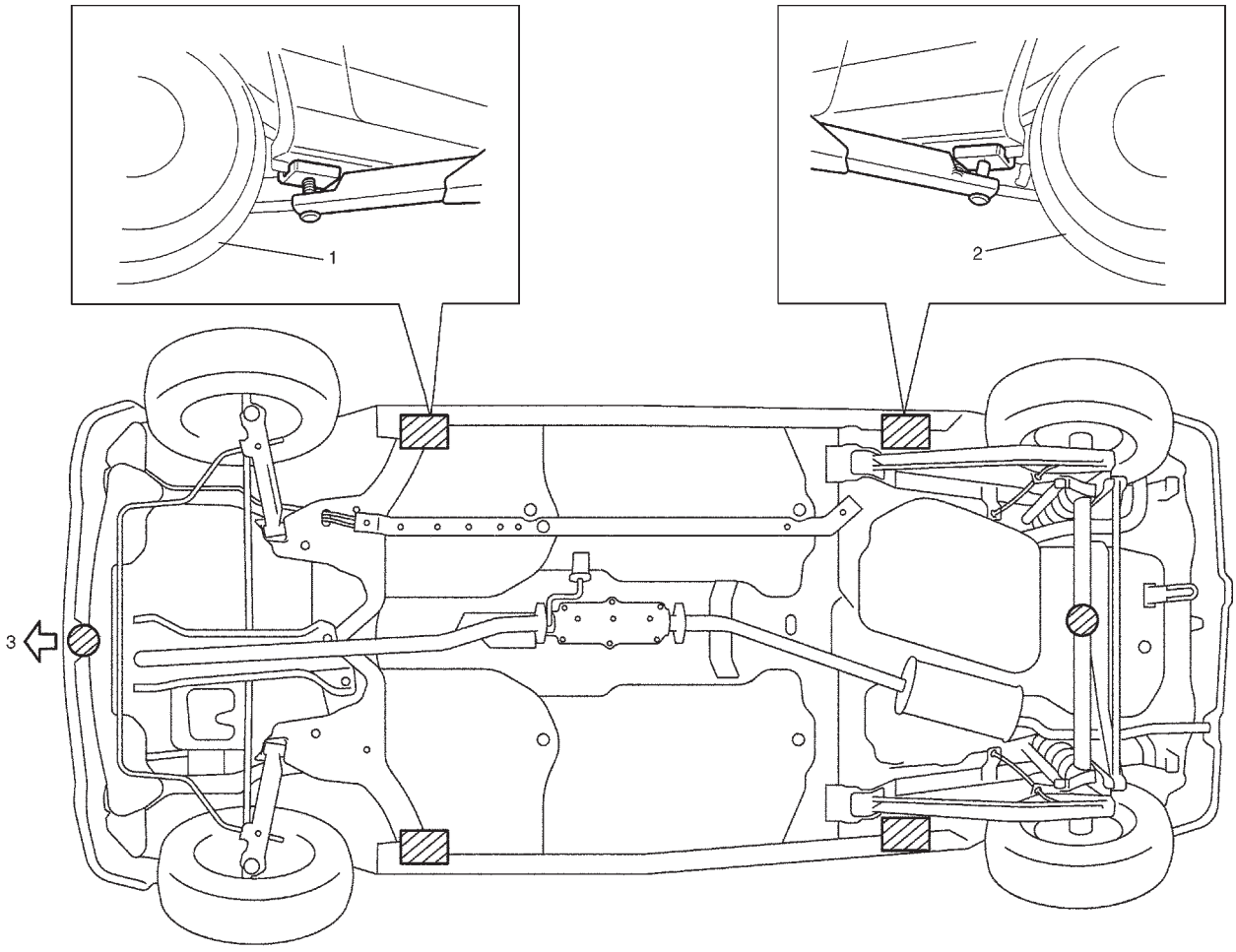

1. Front left tire
2. Rear left tire
3. Front

: Support position for frame contact hoist and safety stand.

: Floor jack position

When using floor jack:

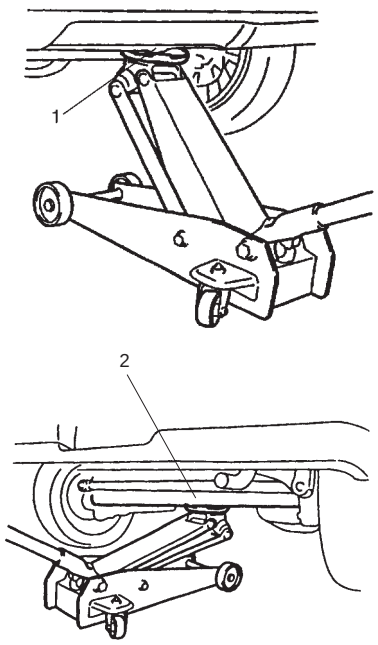

In raising front or rear vehicle end off the floor by jacking, be sure to put the jack against the center portion of front cross member (1) or rear axle (2).

WARNING:

- **Never apply jack against suspension parts (i.e., stabilizer, etc.) or vehicle floor, or it may get deformed.**
- **If the vehicle to be jacked up only at the front or rear end, be sure to block the wheels on ground in order to ensure safety.**
  After the vehicle is jacked up, be sure to support it on stands. It is extremely dangerous to do any work on the vehicle raised on jack alone.

Front

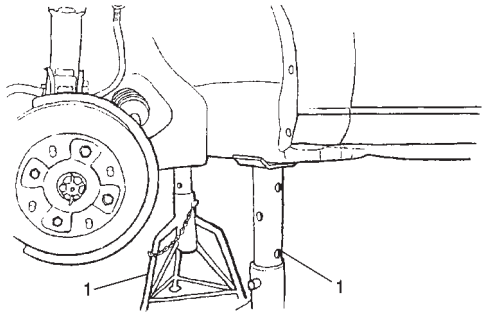

Rear

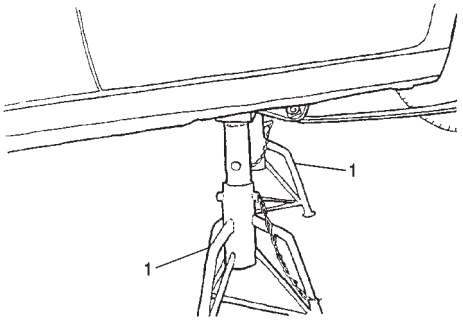

To perform service with either front or rear vehicle end jacked up, be sure to place safety stands (1) under body so that body is securely supported. And then check to ensure that body does not slide on safety stands and the vehicle is held stable for safety's sake.

ABBREVIATIONS MAY BE USED IN THIS MANUAL

A

ABS	:	Anti-lock Brake System
ATDC	:	After Top Dead Center
API	:	American Petroleum Institute
ATF	:	Automatic Transmission Fluid
ALR	:	Automatic Locking Retractor
AC	:	Alternating Current
A/T	:	Automatic Transmission
A/C	:	Air Conditioning
ABDC	:	After Bottom Dead Center
A/F	:	Air Fuel Mixture Ratio
A-ELR	:	Automatic-Emergency Locking Retractor

B

B+	:	Battery Positive Voltage
BTDC	:	Before Top Dead Center
BBDC	:	Before Bottom Dead Center

C

CKT	:	Circuit
CMP Sensor	:	Camshaft Position Sensor (Crank Angle Sensor, CAS)
CO	:	Carbon Monoxide
CPP Switch	:	Clutch Pedal Position Switch (Clutch Switch, Clutch Start Switch)
CPU	:	Central Processing Unit
CRS	:	Child Restraint System

D

DC	:	Direct Current
DLC	:	Data Link Connector (Assembly Line Diag. Link, ALDL, Serial Data Link, SDL)
DOHC	:	Double Over Head Camshaft
DOJ	:	Double Offset Joint
DRL	:	Daytime Running Light
DTC	:	Diagnostic Trouble Code (Diagnostic Code)

E

EBCM	:	Electronic Brake Control Module, ABS Control Module
ECM	:	Engine Control Module
ECT Sensor	:	Engine Coolant Temperature Sensor (Water Temp. Sensor, WTS)
EGR	:	Exhaust Gas Recirculation
EGRT Sensor	:	EGR Temperature Sensor (Recirculated Exhaust Gas Temp. Sensor, REGTS)
EFE Heater	:	Early Fuel Evaporation Heater (Positive Temperature Coefficient, PTC Heater)
ELR	:	Emergency Locking Retractor
EPS	:	Electronic Power Steering
EVAP	:	Evaporative Emission
EVAP Canister	:	Evaporative Emission Canister (Charcoal Canister)

F

4WD	:	4 Wheel Drive

G

GEN	:	Generator
GND	:	Ground

H

HC	:	Hydrocarbons
HO2S	:	Heated Oxygen Sensor

I

IAC Valve	:	Idle Air Control Valve (Idle Speed Control Solenoid Valve, ISC Solenoid Valve)
IAT Sensor	:	Intake Air Temperature Sensor (Air temperature Sensor, ATS)
ICM	:	Immobilizer Control Module
IG	:	Ignition
ISC Actuator	:	Idle Speed Control Actuator (Motor)

L

LH	:	Left Hand
LSPV	:	Load Sensing Proportioning Valve

M

MAF Sensor	:	Mass Air Flow Sensor (Air Flow Sensor, AFS, Air Flow Meter, AFM)
MAP Sensor	:	Manifold Absolute Pressure Sensor (Pressure Sensor, PS)
Max	:	Maximum
MFI	:	Multiport Fuel Injection (Multipoint Fuel Injection)
Min	:	Minimum
MIL	:	Malfunction Indicator Lamp
M/T	:	Manual Transmission

N

NOx	:	Nitrogen Oxides

O

OBD	:	On-Board Diagnostic System (Self-Diagnosis Function)
O/D	:	Overdrive
OHC	:	Over Head Camshaft

P

PNP	:	Park/Neutral Position
P/S	:	Power Steering
PSP Switch	:	Power Steering Pressure Switch (P/S Pressure Switch)
PCM	:	Powertrain Control Module
PCV	:	Positive Crankcase Ventilation

R

RH	:	Right Hand

S

SAE	:	Society of Automotive Engineers
SDM	:	Sensing and Diagnostic Module (Air bag controller, Air bag control module)
SFI	:	Sequential Multiport Fuel Injection
SOHC	:	Single Over Head Camshaft

T

TBI	:	Throttle Body Fuel Injection (Single-Point Fuel Injection, SPI)
TCC	:	Torque Converter Clutch
TCM	:	Transmission Control Module (A/T Controller, A/T Control Module)
TP Sensor	:	Throttle Position Sensor
TVV	:	Thermal Vacuum Valve (Thermal Vacuum Switching Valve, TVSV, Bimetal Vacuum Switching Valve, BVSV)
TWC	:	Three Way Catalytic Converter (Three Way Catalyst)
2WD	:	2 Wheel Drive

V

VIN	:	Vehicle Identification Number
VSS	:	Vehicle Speed Sensor

W

WU-OC	:	Warm Up Oxidation Catalytic Converter
WU-TWC	:	Warm Up Three Way Catalytic Converter

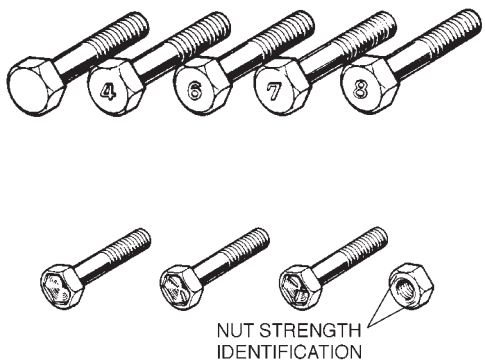

METRIC BOLTS-IDENTIFICATION CLASS NUMBERS OR MARKS CORRESPOND TO BOLT STRENGTH-INCREASING NUMBERS REPRESENT INCREASING STRENGTH.

METRIC INFORMATION

METRIC FASTENERS

Most of the fasteners used for this vehicle are metric. When replacing any fasteners, it is most important that replacement fasteners be the correct diameter, thread pitch and strength.

FASTENER STRENGTH IDENTIFICATION

Most commonly used metric fastener strength property classes are 4T, 7T and radial line with the class identification embossed on the head of each bolt. Some metric nuts will be marked with punch mark strength identification on the nut face. Figure shows the different strength markings.

When replacing metric fasteners, be careful to use bolts and nuts of the same strength or greater than the original fasteners (the same number marking or higher). It is likewise important to select replacement fasteners of the correct size. Correct replacement bolts and nuts are available through the parts division.

STANDARD TIGHTENING TORQUE

Each fastener should be tightened to the torque specified in each section of this manual. If no description or specification is provided, refer to the following tightening torque chart for the applicable torque for each fastener. When a fastener of greater strength than the original one is used, however, use the torque specified for the original fastener.

NOTE:

- **For the flanged bolt and nut, add 10% to the tightening torque given in the chart below.**
- **The chart below is applicable only where the fastened parts are made of steel or light alloy.**

STRENGTH / THREAD DIAMETER (mm)	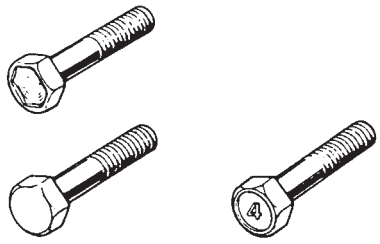 Conventional bolt / “4T” bolt			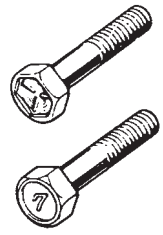 “7T” bolt		
	N·m	kg-m	lb-ft	N·m	kg-m	lb-ft
4	1.5	0.15	1.0	2.3	0.23	2.0
5	3.0	0.30	2.5	4.5	0.45	3.5
6	5.5	0.55	4.0	10	1.0	7.5
8	13	1.3	9.5	23	2.3	17.0
10	29	2.9	21.0	50	5.0	36.5
12	45	4.5	32.5	85	8.5	61.5
14	65	6.5	47.0	135	13.5	98.0
16	105	10.5	76.0	210	21	152.0
18	160	16	116.0	240	24	174.0

SECTION 0B

MAINTENANCE AND LUBRICATION

CONTENTS

PERIODIC MAINTENANCE SCHEDULE 0B- 2

MAINTENANCE SERVICE 0B- 5
Engine 0B- 5
Ignition System 0B-10
Fuel System 0B-11
Emission Control System 0B-12
Brake 0B-13
Chassis and Body 0B-14
Final Inspection 0B-19

RECOMMENDED FLUIDS AND LUBRICANTS 0B-20

PERIODIC MAINTENANCE SCHEDULE

Interval: This interval should be judged by odometer reading or months, whichever comes first.	This table includes services as scheduled up to 80,000 km mileage. Beyond 80,000 km, carry out the same services at the same intervals respectively.										
	Km (x 1,000)	1	5	10	20	30	40	50	60	70	80
	Months	1	6	12	24	36	48	60	72	84	96
ENGINE											
1. Water pump drive belt (tension, wear)		A	I	I	I	I	I	I	R	A	I
2. Engine coolant (level, leakage)		I	I	I	R	I	R	I	R	I	R
3. Engine oil (API GRADE SF, SG, SH) & Oil filter		R	I	R	R	R	R	R	R	R	R
4. Cooling system hoses and connections (leakage, damage)		I	I	I	I	I	I	I	I	I	I
5. Engine bolts (All cylinder head and manifold fixings)		—	—	T	—	T	—	T	—	T	—
6. Engine mounting (loose, damage)		—	—	T	—	T	—	T	—	T	—
7. Valve clearance		—	A	—	A	—	A	—	A	—	A
8. Camshaft timing belt (damage, wear)		—	—	—	I	—	I	—	I	—	I
		Replace every 1,00,000 km									
9. Exhaust system (noise, leakage or otherwise defective)		—	I	—	I	—	I	—	I	—	I
10. Positive crankcase ventilation System (Hoses, connections and valve)		—	I	—	I	—	I	—	I	—	I
IGNITION											
1. Ignition wiring, (damage, deterioration)		—	—	—	I	—	I	—	I	—	I
2. Distributor cap and rotor (wear, deterioration)		—	—	—	I	—	I	—	I	—	I
3. Spark plugs (clean and adjust the gap)		—	—	I	R	I	R	I	R	I	R
FUEL											
1. Air cleaner	Paved-road	Clean every 5,000 km. Replace every 40,000 km.									
	Dusty condition	Clean every 2,500 km. or as required. Replace every 40,000 km. More frequent replacement if dust condition is severe.									
2. Accelerator cable and Throttle shafts		—	I&L	I&L	I&L	I&L	I&L	I&L	I&L	I&L	I&L
3. Fuel tank cap, fuel lines & connections (leakage, damage)		—	I	—	—	—	I	—	—	—	I
4. Fuel filter (leakage)		I	I	I	I	I	R	I	I	I	R
CLUTCH AND TRANSMISSION											
1. Clutch pedal (play)		I	I	I	I	I	I	I	I	I	I
2. Clutch slipping (dragging or excessive damage)		I	I	I	I	I	I	I	I	I	I
3. Manual Transmission/Transfer and Differential oil (level, leakage)		I	I	I	R	I	R	I	R	I	R

Notes:

"A" : Adjust.
"I" : Inspect and correct or replace if necessary
"T" : Tighten to specified torque.
"C" : Clean.
"R" : Replace or change.
"O" : Rotate.
"L" : Lubricate.

Interval: This interval should be judged by odometer reading or months, whichever comes first.	This table includes services as scheduled up to 80,000 km mileage. Beyond 80,000 km, carry out the same services at the same intervals respectively.										
	Km (x 1,000)	1	5	10	20	30	40	50	60	70	80
	Months	1	6	12	24	36	48	60	72	84	96
DRIVE SHAFTS											
1. Drive shaft boots (Bent of boot damage)		I	I	I	I	R	I	I	R	I	I
BRAKE											
1. Brake fluid (level, leakage)		I	I	I	R	I	R	I	R	I	R
2. Brake pedal (pedal-to-wall clearance)		I	I	I	I	I	I	I	I	I	I
3. Parking brake lever and cable (play, damage)		I	I	I	I	I	I	I	I	I	I
4. Brake discs & pads (wear)		—	I	I	I	I	I	I	I	I	I
5. Brake drums & shoes		—	—	I	I	I	I	I	I	I	I
6. Master cylinder and wheel cylinder (oil leakage, boot kit)		I	I	I	I	I	R	I	I	I	R
7. Brake hoses and pipes (leakage, damage)		I	I	I	I	I	I	I	I	I	I
WHEEL											
1. Tyres (air pressure, abnormal wear, crack, ROTATION)		Rotate and inspect every 5,000 km									
2. Wheels (damage)		I	I	I	I	I	I	I	I	I	I
3. Front wheel bearings (loose, damage)		—	I	I	I	I	I	I	I	I	I
4. Rear wheel bearings (loose, damage)		—	I	I	I	I	I	I	I	I	I
FRONT AND REAR SUSPENSION											
1. Suspension strut (oil leakage, damage)		I	I	I	I	I	I	I	I	I	I
2. Suspension arms and knuckle supports (loose,damage)		—	I	I	I	I	I	I	I	I	I
3. Rear spring (damage)		—	I	I	I	I	I	I	I	I	I
4. Shock absorbers (oil leakage, damage)		I	I	I	I	I	I	I	I	I	I
5. All bolts and nuts (loose)		—	T	T	T	T	T	T	T	T	T
6. Suspension arms and Tension rods		—	I	I	I	I	I	I	I	I	I

Notes:

"A" : Adjust.
"I" : Inspect and correct or replace if necessary
"T" : Tighten to specified torque.
"C" : Clean.
"R" : Replace or change.
"O" : Rotate.
"L" : Lubricate.

Interval: This interval should be judged by odometer reading or months, whichever comes first.	This table includes services as scheduled up to 80,000 km mileage. Beyond 80,000 km, carry out the same services at the same intervals respectively.										
	Km (x 1,000)	1	5	10	20	30	40	50	60	70	80
	Months	1	6	12	24	36	48	60	72	84	96
STEERING											
1. Steering wheel (play, loose)		I	I	I	I	I	I	I	I	I	I
2. Power Steering fluid (level, leakage)/Connections		I	I	I	I	I	I	I	I	I	I
3. All rods and arms (loose, damage, wear)		I	I	I	I	I	I	I	I	I	I
ELECTRICAL											
1. Battery electrolyte (level, leakage)		I	I	I	I	I	I	I	I	I	I
2. Wiring harness connection (looseness, damage)		—	I	I	I	I	I	I	I	I	I
3. Lighting system (operation, stains, damage)		I	I	I	I	I	I	I	I	I	I
4. Horn (operation)		I	I	I	I	I	I	I	I	I	I
5. System voltage		—	I	I	I	I	I	I	I	I	I
BODY											
1. All chassis bolts and nuts (tighten)		—	I	T	T	T	T	T	T	T	T
2. All Latches, Hinges & Locks (function)		I	I&L	I&L	I&L	I&L	I&L	I&L	I&L	I&L	I&L
ROAD TEST											
1. Operation of Brakes, Gear shifting & speedometer		I	I	I	I	I	I	I	I	I	I
2. Body and Chassis noise		I	I	I	I	I	I	I	I	I	I
AIR CONDITIONER (if equipped)											
1. Check belt tension		I	I	I	I	I	I	I	I	I	I
2. Check receiver drier bubbles		I	I	I	I	I	I	I	I	I	I
3. Tighten compressor mounting bolts		—	T	T	T	T	T	T	T	T	T
4. Check all hose joints, tighten if necessary		I	I	I	I	I	I	I	I	I	I
5. Check functioning of Recir flap		I	I	I	I	I	I	I	I	I	I
6. Clean condenser with low pressure water		I	C	C	C	C	C	C	C	C	C
7. Check belt for frayed edges, change if necessary		—	I	I	I	I	I	I	I	I	I
8. Check all mounting bolts		—	I	I	I	I	I	I	I	I	I

Notes:

"A" : Adjust.
"I" : Inspect and correct or replace if necessary
"T" : Tighten to specified torque.
"C" : Clean.
"R" : Replace or change.
"O" : Rotate.
"L" : Lubricate.

MAINTENANCE SERVICE

ENGINE

Drive Belt Inspection and Replacement

WARNING:
Disconnect negative cable at battery before checking and replacing belt tension.

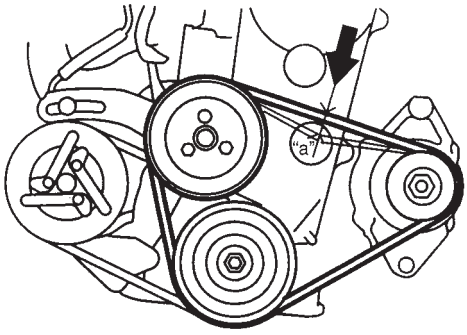

Water pump/generator belt inspection

1) Disconnect negative cable from battery.
2) Inspect belt for cracks, cuts, deformation, wear and cleanliness. Replace if any defect exists.
3) Check pump belt for tension and adjust if it is out of specification.

   Water pump/generator belt tension "a":
   6 – 7 mm (0.24 – 0.27 in.) deflection under 100N, 10 kg or 22 lb pressure

   NOTE:
   When replacing belt with a new one, adjust belt tension to 5 – 6 mm (0.20 – 0.23 in.).

4) Connect negative cable to battery.

Water pump belt replacement

Replace belt with new one referring to "Water Pump Belt Removal and Installation" in Section 6B.

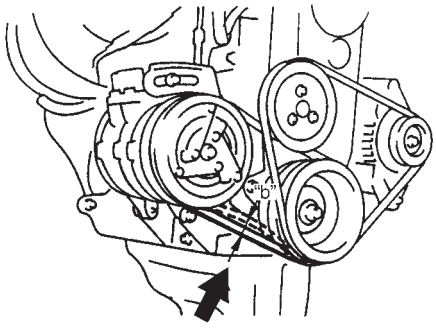

A/C compressor drive belt inspection (If equipped)

1) Disconnect negative cable from battery.
2) Inspect belt for cracks, cuts, wear and deterioration. Replace if any defect exists.
3) Check belt for tension.

   A/C compressor drive belt tension "b":
   7 – 9 mm (0.28 – 0.35 in.) deflection under 100N, 10 kg or 22 lb pressure

3) If belt tension is out of above specification, adjust it.
4) Connect negative cable to battery.

A/C compressor drive belt replacement

1) Disconnect negative cable from battery.
2) Remove water pump/generator belt.
3) Loosen belt tension and replace belt with new one.
4) Adjust belt tension to specification.
5) Install water pump/generator belt.
6) Connect negative cable to battery.

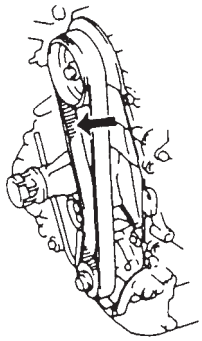

Camshaft Timing Belt Replacement

Replace belt with new one. Refer to SECTION 6A or 6A1 for replacement procedure.

CAUTION:
- **Do not bent or twist timing belt.**
- **Do not allow timing belt to come into contact with oil, water, etc.**

F8D Engine

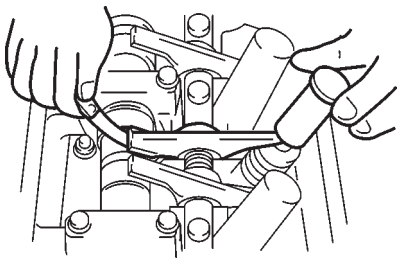

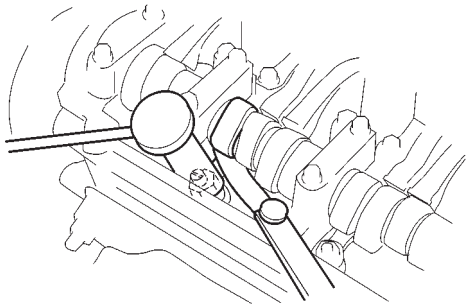

Valve Lash Inspection

1) Remove cylinder head cover.
2) Inspect intake and exhaust valve lash and adjust as necessary. Refer to Section 6A or 6A1 for valve lash inspection and adjustment procedure.

F8D Engine

		When cold (Coolant temp. is 15 – 25 °C or 59 – 77 °F)	When hot (Coolant temp. is 60 – 68 °C or 140 – 154 °F)
Valve lash (clearance) specification	Intake	0.13 – 0.17 mm (0.005 – 0.007 in.)	0.15 – 0.19 mm (0.006 – 0.007 in.)
	Exhaust		0.14 – 0.18 mm (0.006 – 0.007 in.)

F8B Engine

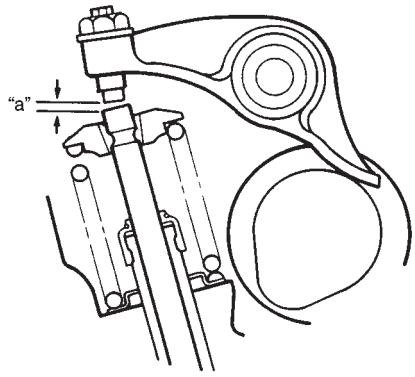

F8B Engine

		When cold (Coolant temp. is 15 – 25 °C or 59 – 77 °F)	When hot (Coolant temp. is 60 – 68 °C or 140 – 154 °F)
Valve lash (gap "a") specification	Intake	0.13 – 0.17 mm (0.005 – 0.007 in.)	0.15 – 0.19 mm (0.006 – 0.007 in.)
	Exhaust	0.15 – 0.19 mm (0.006 – 0.007 in.)	0.16 – 0.20 mm (0.006 – 0.008 in.)

3) Install cylinder head cover and tighten bolts to specification.

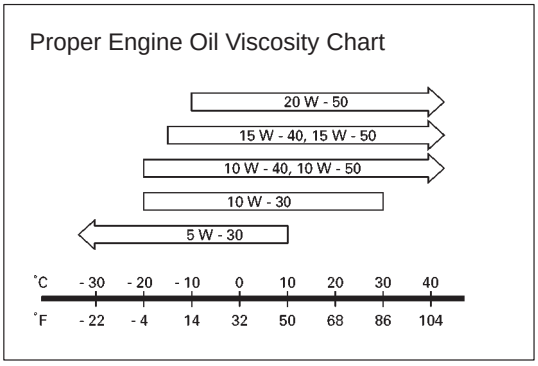

Engine Oil and Filter Change

WARNING:
New and used engine oil can be hazardous.
Be sure to read "WARNING" in General Precaution in Section 0A and observe what in written there.

Use engine oil of SE, SF, SG, SH or SJ grade.
Select the appropriate oil viscosity according to the left chart.

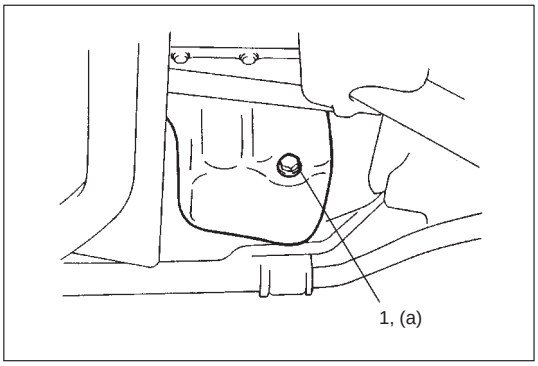

Before draining engine oil, check engine for oil leakage. If any evidence of leakage is found, make sure to correct defective part before proceeding to the following work.

1) Drain engine oil by removing drain plug (1).
2) After draining oil, wipe drain plug clean. Reinstall drain plug, and tighten it securely as specified below.

Tightening Torque
(a): 50 N·m (5.0 kg-m, 36.0 lb-ft)

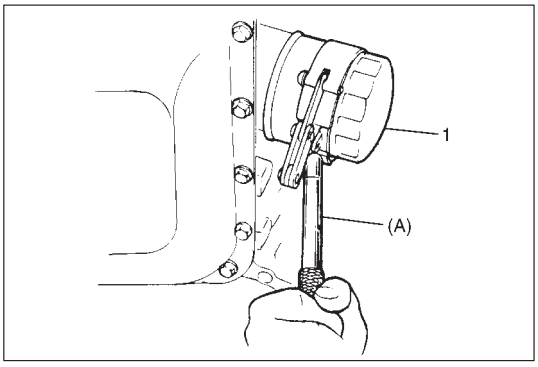

3) Loosen oil filter (1) by using oil filter wrench (Special tool).

Special Tool
(A): 09915-47310

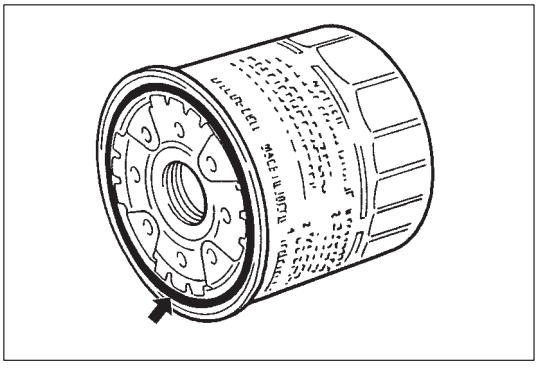

4) Apply engine oil to new oil filter "O" ring.
5) Screw new filter on oil filter stand by hand until filter "O" ring contacts mounting surface.

CAUTION:
To tighten oil filter properly, it is important to accurately identify the position at which filter "O" ring first contacts mounting surface.

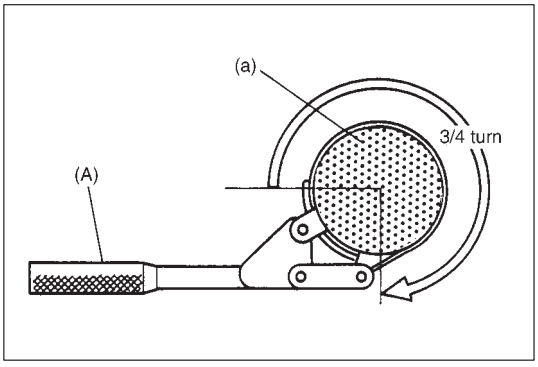

6) Tighten filter 3/4 turn from the point of contact with mounting surface using an oil filter wrench.

Special Tool
(A): 09915-47310

Tightening Torque (Reference)
(a): 14 N·m (1.4 kg-m, 10.5 lb-ft)

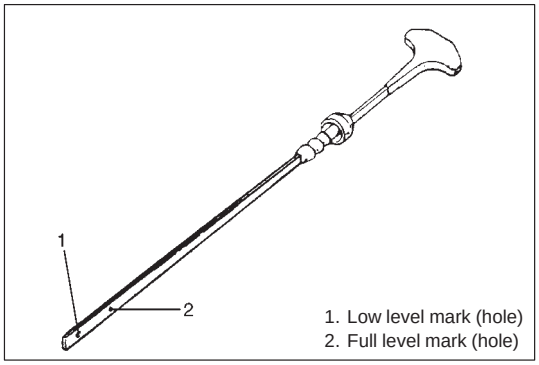

7) Replenish oil until oil level is brought to FULL level mark on dipstick (oil pan and oil filter capacity). Filler inlet is at the top of cylinder head cover.
8) Start engine and run it for three minutes. Stop it and wait another 5 minutes before checking oil level. Add oil, as necessary, to bring oil level to FULL level mark on dipstick.

Engine oil capacity

Oil pan capacity	about 2.5 liters (5.3/4.4 US/Imp pt.)
Oil filter capacity	about 0.2 liter (0.4/0.3 US/Imp pt.)
Others	about 0.3 liter (0.6/0.5 US/Imp pt.)
Total	about 3.0 liters (6.3/5.3 US/Imp pt.)

NOTE:
Engine oil capacity is specified as left table.
However, note that amount of oil required when actually changing oil may somewhat differ from data in left table depending on various conditions (temperature, viscosity, etc.).

9) Check oil filter and drain plug for oil leakage.

Engine Coolant Change

WARNING:
To help avoid danger of being burned, do not remove radiator cap while engine and radiator are still hot. Scalding fluid and steam can be blown out under pressure if cap is taken off too soon.

CAUTION:
When changing engine coolant, use mixture of 50% water and 50% ethylene-glycol base coolant (Anti-Freeze/Anti-corrosion coolant) for the market where ambient temperature falls lower than –16°C (3°F) in winter and mixture of 70% water and 30% ethylene-glycol base coolant for the market where ambient temperature doesn't fall lower than –16°C (3°F).
Even in a market where no freezing temperature is anticipated, mixture of 70% water and 30% ethylene-glycol base coolant should be used for the purpose of corrosion protection and lubrication.

Refer to Section 6B of this manual for coolant capacity.

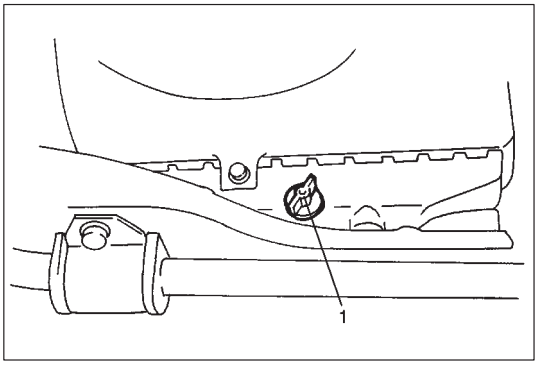

1) Remove radiator cap when engine is cool.
2) Loosen radiator drain plug (1) to drain coolant if radiator is equipped with drain plug. If radiator is not equipped with drain plug, disconnect outlet hose from radiator to drain coolant.
3) Remove reservoir and drain.
4) Tighten drain plug securely or connect outlet hose to radiator. Also install reservoir.

5) Slowly pour specified amount of coolant to the base of radiator filler neck, and run engine, with radiator cap removed, until radiator upper hose is hot. This drives out any air which may still be trapped within cooling system. Add coolant as necessary until coolant level reaches filler throat of radiator. Reinstall radiator cap.

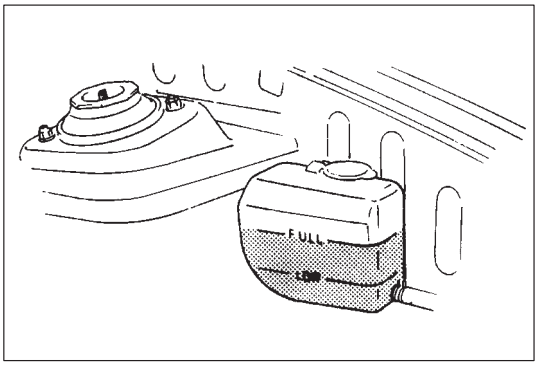

6) Add coolant to reservoir so that its level aligns with FULL level line.

Exhaust System Inspection

WARNING:
To avoid danger of being burned, do not touch exhaust system when it is still hot.
Any service on exhaust system should be performed when it is cool.

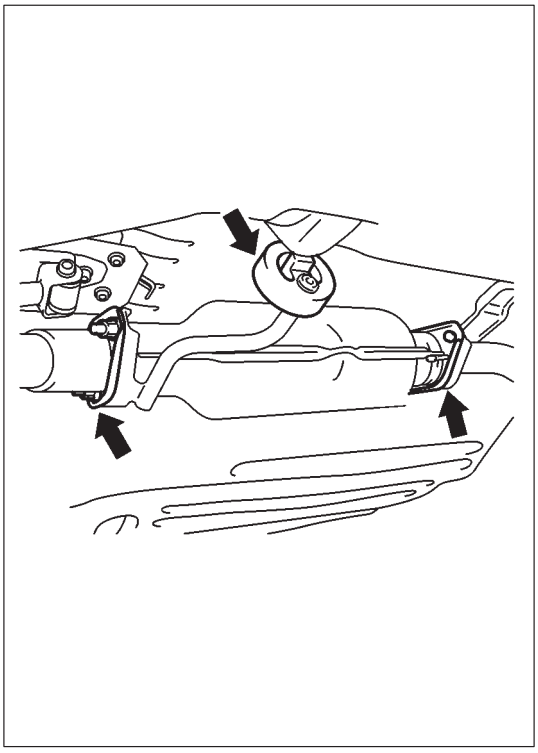

When carrying out periodic maintenance or vehicle is raised for other service, check exhaust system as follows:

- Check rubber mountings for damage and deterioration.
- Check exhaust system for leakage, loose connections, dents and damages.
  If bolts or nuts are loose, tighten them to specification.
  Refer to Section 6K for torque specification of bolts and nuts.
- Check nearby body areas for damaged, missing or mispositioned parts, open seams, holes, loose connections or other defects which could permit exhaust fumes to seep into vehicle.
- Make sure that exhaust system components have enough clearance from underbody to avoid overheating and possible damage to floor carpet.
- Any defects should be fixed at once.

IGNITION SYSTEM

Spark Plugs Replacement

Replace spark plugs with new ones referring to Section 6F.

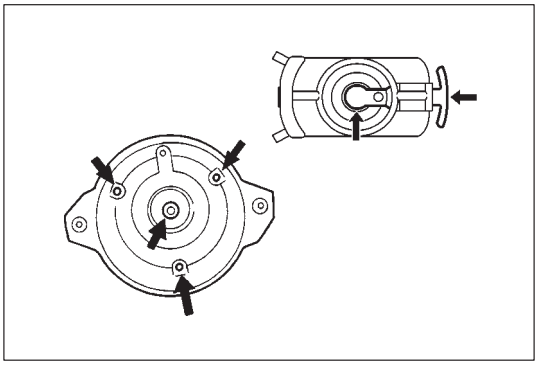

Distributor Cap and Rotor Inspection

- Check distributor cap and rubber caps for cracks.
- Clean dusty and stained parts using a dry, soft cloth.
- Check center electrode and terminals for wear.
- Check rotor for cracks and its electrode for wear.

Repair or replace any component which is found to be in malcondition.

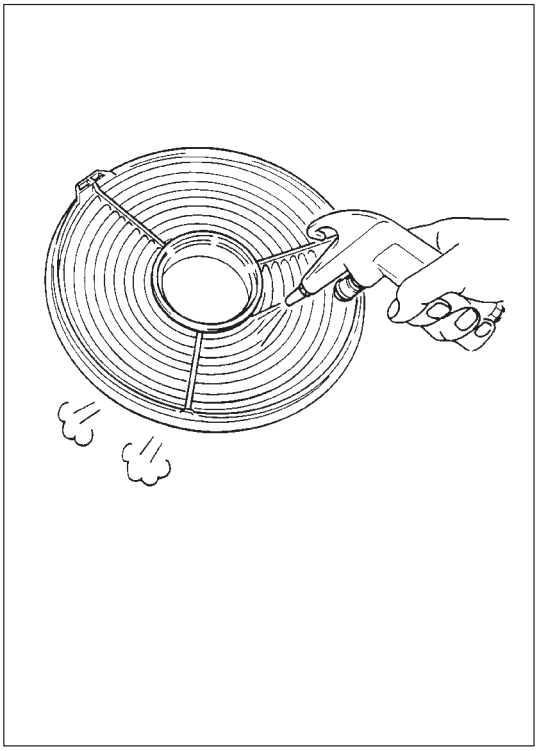

FUEL SYSTEM

Air Cleaner Filter Inspection

1) Remove air cleaner case bracket bolts and unclamp case clamps.
2) Take cleaner filter out of air cleaner case.
3) Visually check that air cleaner filter is not excessively dirty, damaged or oily.
4) Clean filter with compressed air from air outlet side of filter.
5) Install air cleaner filter into case.
6) Clamp case securely and install case to bracket.

Air Cleaner Filter Replacement

Replace air cleaner filter with new one according to procedure described in Section 6A or 6A1.

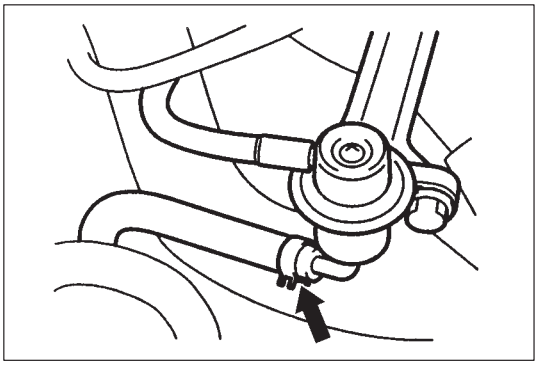

Fuel Lines Inspection

Check fuel lines for loose connection, deterioration or damage which could cause leakage. Make sure all clamps are secure.
Replace any damaged or deteriorated parts.
There should be no sign of fuel leakage or moisture at any fuel connection.

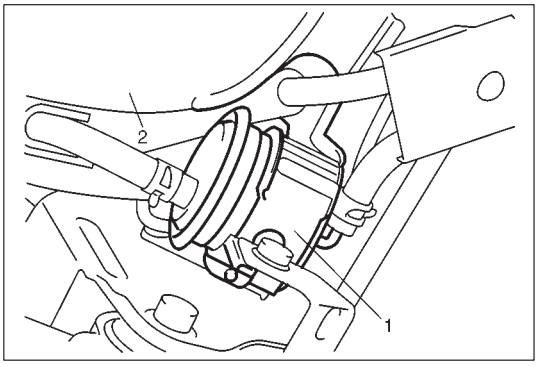

Fuel Filter Replacement

WARNING:
This work must be performed in a well ventilated area and away from any open flames (such as gas hot water heaters).

Fuel filter (1) is installed in front of fuel tank (2) inside the left side of vehicle body.
Replace fuel filter with new one, referring to Section 6C for removal and installation.

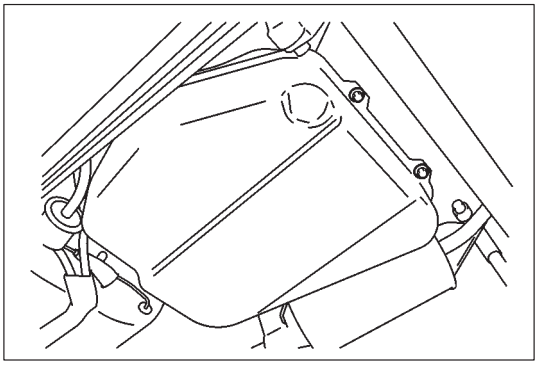

Fuel Tank Inspection

Check fuel tank for damage, cracks, fuel leakage, corrosion and tank bolts looseness.
If a problem is found, repair or replace.

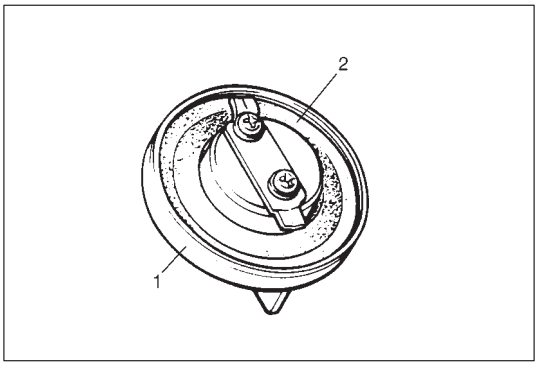

Fuel Tank Cap Inspection

Check fuel filler cap (1) for malfunction and damage, gasket (2) for even filler neck imprint, deterioration and damage. Replace if faulty.

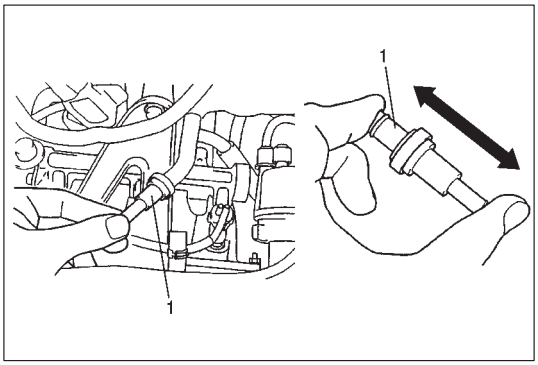

EMISSION CONTROL SYSTEM

PCV (Positive Crankcase Ventilation) Valve Inspection

Check crankcase ventilation hoses and PCV hoses for leaks, cracks or clog, and PCV valve (1) for stick or clog. Refer to Section 6E1 for PCV valve checking procedure.

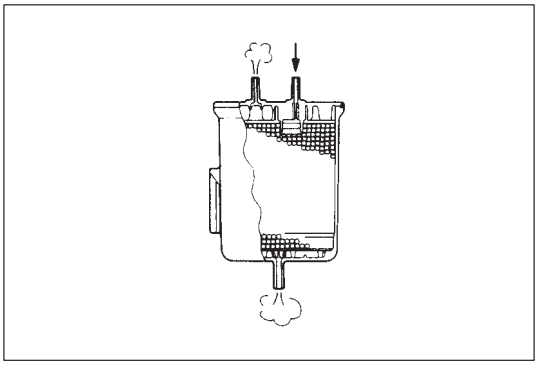

Fuel Evaporative Emission Control System (if equipped)

Check EVAP (Evaporative Emission) canister for damage, clog and operation referring to Section 6E1.

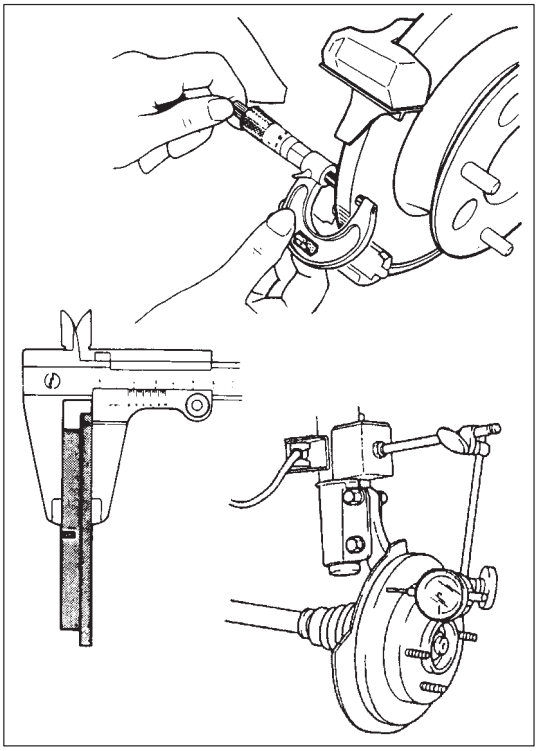

BRAKE

Brake Discs, Pads, Drums and Shoes Inspection

Brake discs and pads

1) Remove wheel and caliper but don't disconnect brake hose from caliper.
2) Check front disc brake pads and discs for excessive wear, damage and deflection. Replace parts as necessary. For the details, refer to Section 5.
3) Install caliper and wheel.

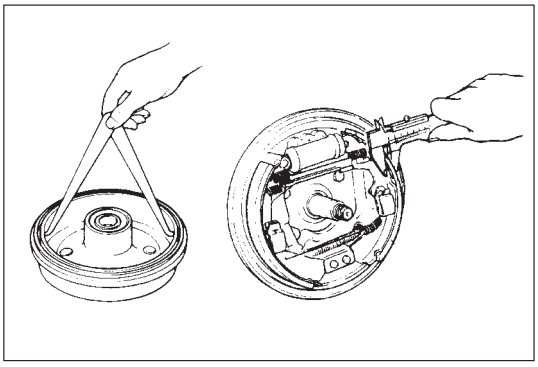

Brake drums and shoes

1) Remove wheel and brake drum.
2) Check rear brake drums and brake linings for excessive wear and damage.
   At the same time, check wheel cylinders for leakage.
   Replace as necessary.
   For the details, refer to Section 5.
3) Install brake drum and wheel.

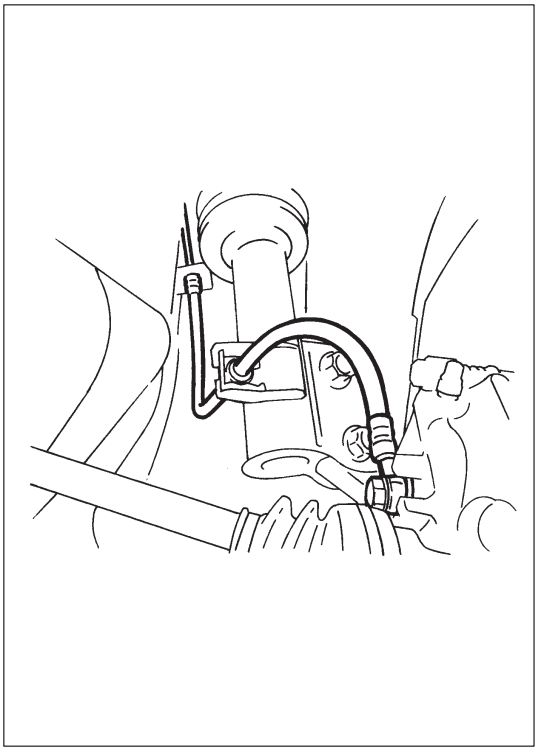

Brake Hoses and Pipes Inspection

Perform this inspection where there is enough light and use a mirror as necessary.

- Check brake hoses and pipes for proper hook-up, leaks, cracks, chafing, wear, corrosion, bends, twists and other damage. Replace any of these parts as necessary.
- Check all clamps for tightness and connections for leakage.
- Check that hoses and pipes are clear of sharp edges, moving parts.

CAUTION:
After replacing any brake pipe or hose, be sure to carry out air purge operation.

Brake Fluid Change

CAUTION:
Since brake system of this vehicle is factory-filled with brake fluid indicated on reservoir tank cap, do not use or mix different type of fluid when refilling; otherwise serious damage will occur.
Do not use old or used brake fluid, or any fluid from a unsealed container.

Change brake fluid as follows.
Drain existing fluid from brake system completely, fill system with specified fluid and carry out air purge operation.
For air purging procedure, refer to Section 5.

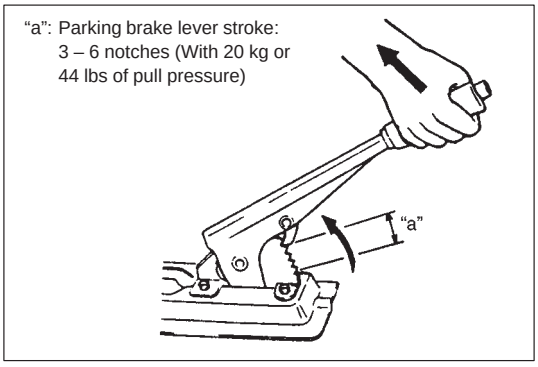

Brake Lever and Cable Inspection

Parking brake lever

- Check tooth tip of each notch for damage or wear. If any damage or wear is found, replace parking lever.
- Check parking brake lever for proper operation and stroke, and adjust it if necessary.
  For checking and adjusting procedures, refer to Section 5.

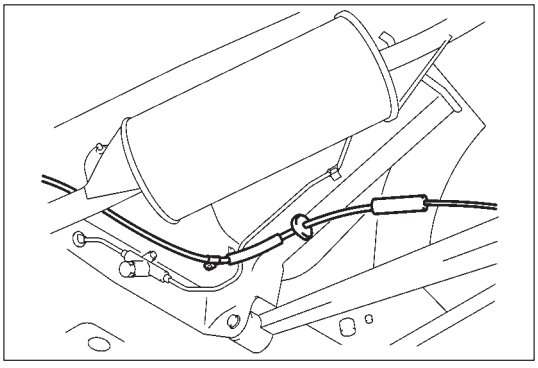

Parking brake cable

Inspect brake cable for damage and smooth movement.
Replace cable if it is in deteriorated condition.

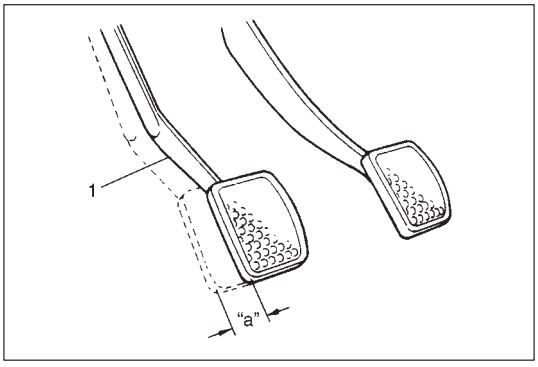

CHASSIS AND BODY

Clutch Pedal Free Travel Inspection

Check clutch pedal (1) for height and free travel "a" referring to Section 7C.
Adjust or correct if necessary.

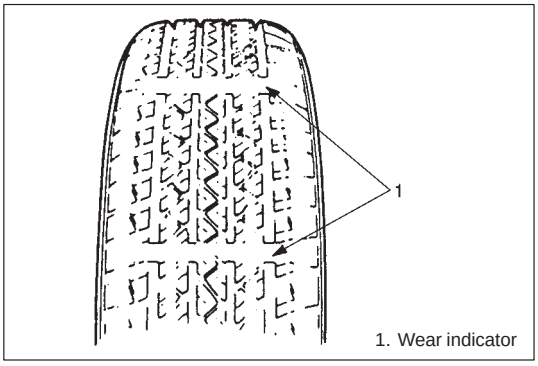

1. Wear indicator

Tire and Wheel Disc Inspection

[Tire inspection]

1) Check tire for uneven or excessive wear, or damage. If defective, replace.

2) Check inflating pressure of each tire and adjust pressure to specification as necessary.

NOTE:

- **Tire inflation pressure should be checked when tires are cool.**
- **Specified tire inflation pressure should be found on tire placard or in owner's manual which came with vehicle.**

[Wheel disc inspection]

Inspect each wheel disc for dents, distortion and cracks. A disc in badly damaged condition must be replaced.

[Tire rotation]

Rotate tires referring to Section 3F.

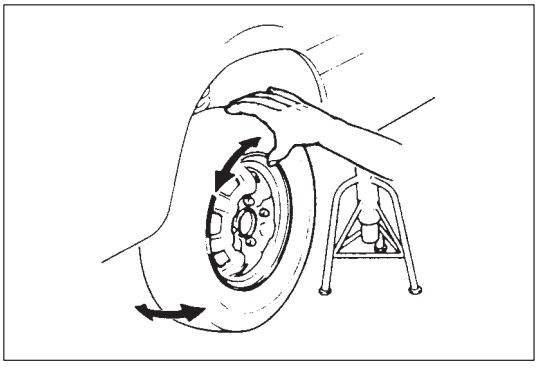

Wheel Bearing Inspection

1) Check front wheel bearing for wear, damage, abnormal noise or rattles. For details, refer to Section 3D.
2) Check rear wheel bearing for wear, damage abnormal noise or rattle. For details, refer to Section 3E.

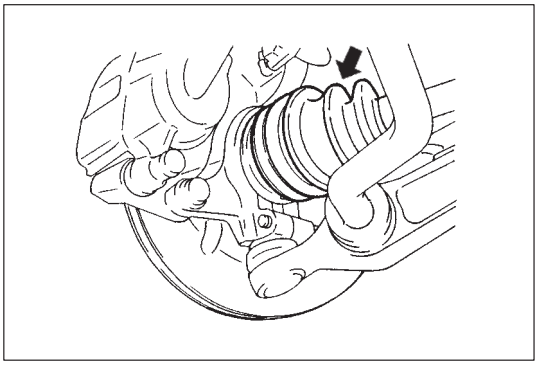

Drive Shaft (Axle) Boot Inspection

Check drive shaft boots (wheel side and differential side) for leakage, detachment, tear or any other damage.

Replace boot as necessary.

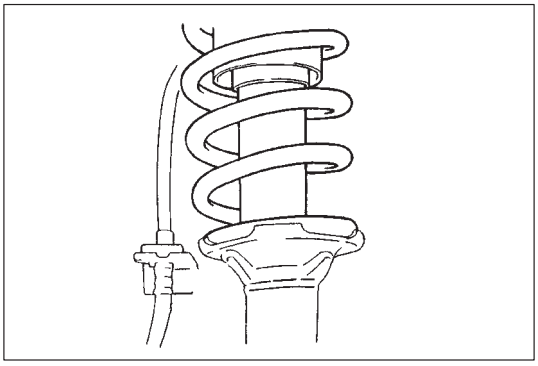

Suspension System Inspection

- Inspect front strut and rear shock absorber for evidence of oil leakage, dents or any other damage on sleeves; and inspect anchor ends for deterioration.
  Replace defective parts, if any.

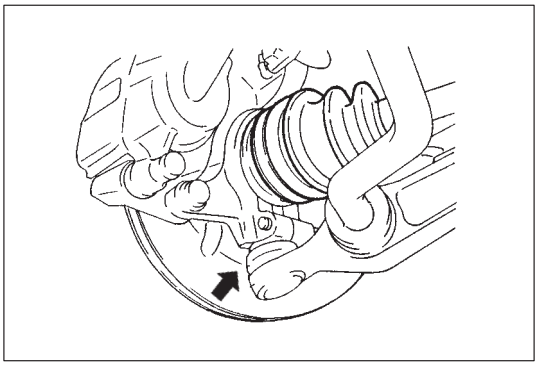

- Check front and rear suspension systems for damaged, loose or missing parts; also for parts showing signs of wear or lack of lubrication.
  Repair or replace defective parts, if any.
- Check front suspension arm ball joint stud dust seals (boots) for leakage, detachment, tear or any other damage.
  Replace defective boot, if any.

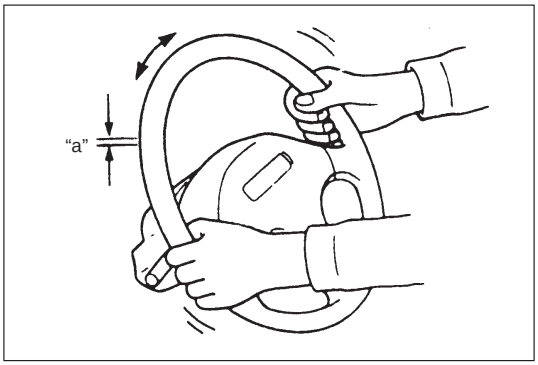

Steering System Inspection

1) Check steering wheel for play and rattle, holding vehicle straight on ground.

   Steering wheel play "a": 0 – 30 mm (0 – 1.1 in.)

2) Check bolts and nuts for tightness and retighten them as necessary. Repair or replace defective parts, if any.

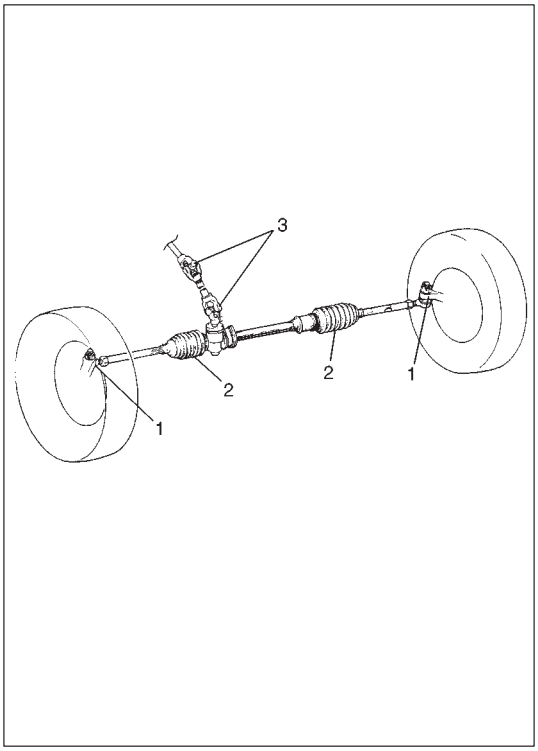

3) Check steering linkage for looseness and damage. Repair or replace defective parts, if any.
4) Check boots (1) and (2) of steering linkage and steering gear case for damage (leaks, detachment, tear, etc.). If damage is found, replace it with new one.
5) Check universal joints (3) of steering shaft for rattle and damage. If rattle or damage is found, replace it with a new one.
6) Check that steering wheel can be turned fully to the right and left. Repair or replace defective parts, if any.
7) If equipped with power steering system, check also, in addition to above check items, that steering wheel can be turned fully to the right and left more lightly when engine is running at idle speed than when it is stopped. Repair, if found faulty.
8) Check wheel alignment. For the details of wheel alignment, refer to Section 3A.

5-Speed M/T

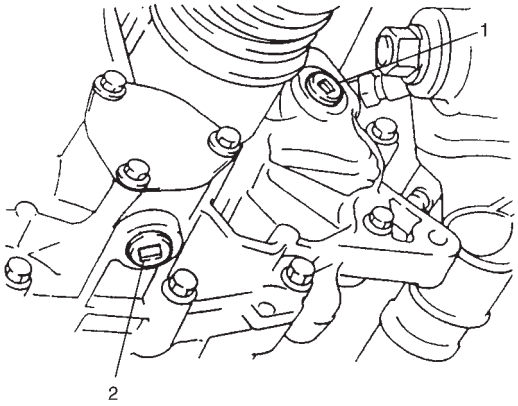

Manual Transmission Oil Inspection and Change

Oil Inspection for 5-speed M/T

1) Inspect transmission case for evidence of oil leakage. Repair leaky point if any.
2) Make sure that vehicle is placed level for oil level check.
3) Remove oil filler/level plug (1) of transmission.
4) Check oil level.
   Oil level can be checked roughly by means of filler/level plug hole. That is, if oil flows out of level plug hole or if oil level is found up to hole when level plug is removed, oil is properly filled.
   If oil is found insufficient, pour specified oil up to level hole.
   For specified oil, refer to description of oil change under On-Vehicle Service in Section 7A1.
5) Apply sealant to filler/level plug and tighten it to specified torque.

Oil change for 5-speed M/T

1) Place vehicle level and drain oil by removing drain plug (2).
2) Apply sealant to drain plug after cleaning it and tighten drain plug to specified torque.
3) Pour specified oil up to level hole.
4) Tighten filler plug to specified torque.
   For recommended oil, its amount and tightening torque data, refer to On-Vehicle Service of Section 7A1.

4-Speed M/T

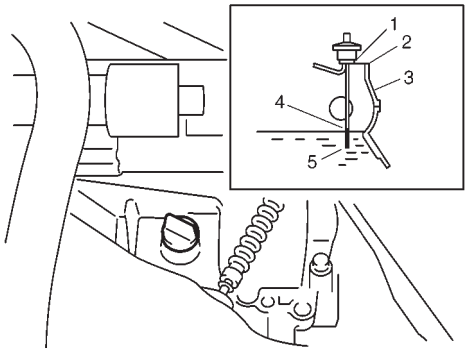

Oil inspection for 4-speed M/T

1) Inspect transmission case for evidence of oil leakage. Repair leaky point if any.
2) Make sure that vehicle is placed level for oil level check.
3) Take out oil level gauge from transmission case and wipe off oil.
4) Bring face (1) of the oil level gauge to contact face (2) of the transmission case (3) and check oil level indicated by the oil on the gauge.

Oil level must be somewhere between FULL level line (4) and LOW level line (5) on the gauge.

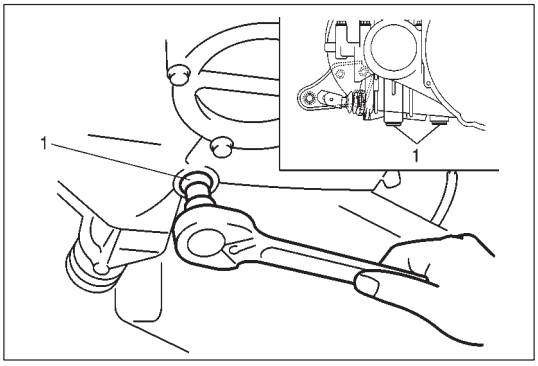

Oil change for 4-speed M/T

1) Place vehicle level and drain by removing two drain plugs (1).
2) Apply sealant to drain plug after cleaning it and tighten drain plug to specified torque.
3) Pour specified oil up to specified level.
   For specified oil, its amount and tightening torque, refer to On-Vehicle Service of Section 7A.
4) Install oil level gauge securely.

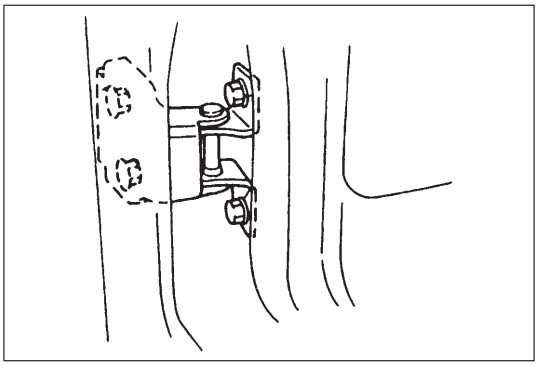

All Latches, Hinges and Locks Inspection

Doors

Check that each door of front, rear and back doors opens and closes smoothly and locks securely when closed.
If any malfunction is found, lubricate hinge and latch or repair door lock system.

Engine hood

Check that secondary latch operates properly (check that secondary latch keeps hood from opening all the way even when pulling hood release handle inside vehicle.) Also check that hood opens and closes smoothly and properly and hood locks securely when closed.
If any malfunction is found, lubricate hinge and latch, or repair hood lock system.

FINAL INSPECTION

WARNING:
When carrying out road tests, select a safe place where no man or no running vehicle is seen so as to prevent any accident.

Seats

Check that seat slides smoothly and locks securely at any position. Also check that reclining mechanism of front seat back allows it to be locked at any angle.

Seat Belt

Inspect belt system including webbing, buckles, latch plates, retractors and anchors for damage or wear. Check that seat belt is securely locked.

Battery Electrolyte Level Check

Check that the electrolyte level of all battery cells is between the upper and lower level lines on the case. If battery is equipped with built-in indicator, check battery condition by the indicator.

Accelerator Pedal Operation

Check that pedal operates smoothly without getting caught or interfered by and other part.

Engine Start

Check engine start for readiness.

WARNING:
Before performing the following check, be sure to have enough room around the vehicle. Then, firmly apply both the parking brake and the regular brakes. Do not use the accelerator pedal. If the engine starts, be ready to turn off the ignition promptly. Take these precautions because the vehicle could move without warning and possibly cause personal injury or property damage.

On manual transmission vehicles, place the shift lever in “Neutral,” depress clutch pedal fully and try to start.

Exhaust System Check

Check for leakage, cracks or loose supports.

Clutch (For Manual transmission)

Check for the following.

- Clutch is completely released when depressing clutch pedal,
- No slipping clutch occurs when releasing pedal and accelerating,
- Clutch itself is free from any abnormal condition.

Gearshift or Select Lever (Transmission)

Check gear shift or select lever for smooth shifting to all positions and for good performance of transmission in any position.

Brake

[Foot brake]
Check the following;

- that brake pedal has proper travel,
- that brake works properly,
- that it is free from noise,
- that vehicle does not pull to one side when brake is applied,
- and that brake do not drag.

[Parking brake]
Check that parking brake lever has proper travel.

WARNING:
With vehicle parked on a fairly steep slope, make sure nothing is in the way downhill to avoid any personal injury or property damage. Be prepared to apply regular brake quickly even if vehicle should start to move.

Check to ensure that parking brake is fully effective when the vehicle is stopped on the safe slope and brake lever is pulled all the way.

Steering

- Check to ensure that steering wheel is free from instability, or abnormally heavy feeling.
- Check that the vehicle does not wander or pull to one side.

Engine

- Check that engine responds readily at all speeds.
- Check that engine is free from abnormal noise and abnormal vibration.

Body, Wheels and Power Transmitting System

Check that body, wheels and power transmitting system are free from abnormal noise and abnormal vibration or any other abnormal condition.

Meters and Gauge

Check that speedometer, odometer, fuel meter, temperature gauge, etc. are operating accurately.

Lights

Check that all lights operate properly.

Windshield Defroster

Periodically check that air comes out from defroster outlet when operating heater or air conditioning.
Set fan switch lever to “HI” position for this check.

RECOMMENDED FLUIDS AND LUBRICANTS

Engine oil	SE, SF, SG, SH or SJ (Refer to engine oil viscosity chart in item 1-4.)
Engine coolant (Ethylene glycol base coolant)	“Antifreeze/Anticorrosion coolant”
Brake fluid	DOT3 or SAE J1703
Manual transmission oil	API GL-4, SAE75W-90 (Refer to Section 7A or 7A1 for detail)
Door hinges	Engine oil or water resistance chassis grease
Hood latch assembly	
Key lock cylinder	Spray lubricant

SECTION 1A

HEATER (OPTIONAL) AND VENTILATION

NOTE:
The link mechanism of the heater varies depending on the specifications.

CONTENTS

GENERAL DESCRIPTION 1A- 2
DIAGNOSIS 1A- 3
Diagnosis Table 1A- 3
Wiring Circuit 1A- 4
ON VEHICLE SERVICE 1A- 5
Heater Unit 1A- 5
Blower Fan Motor 1A- 7
Blower Fan Motor Resistor 1A- 8
Heater Control Lever Assembly 1A- 9
Blower Fan Motor Switch 1A-11
Air Inlet Box 1A-12

GENERAL DESCRIPTION

The heater and ventilation consist of the following parts.

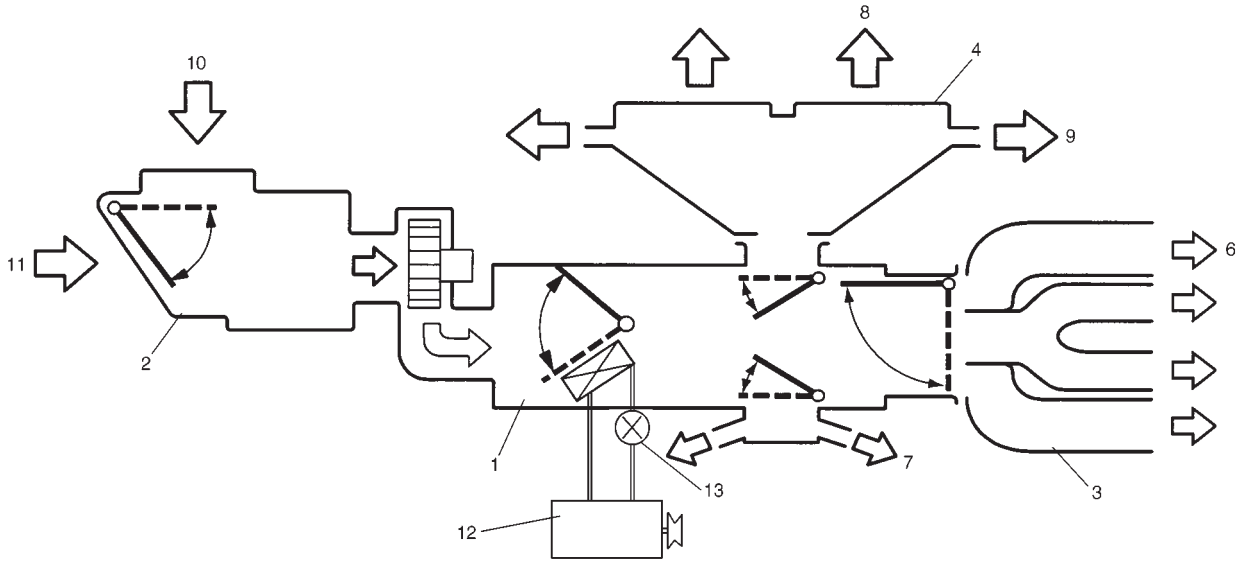

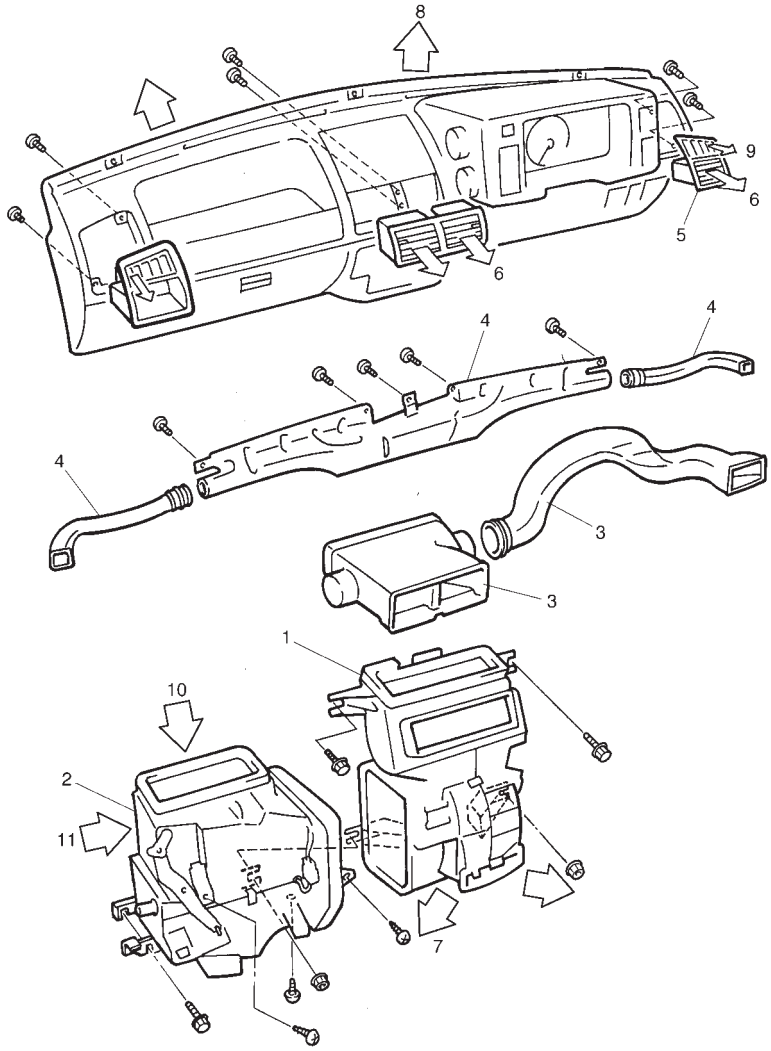

1. Heater unit
2. Air inlet box or cooling unit
3. Ventilator duct
4. Defroster nozzle
5. Ventilation louver
6. Ventilation air
7. Foot air
8. Defroster air
9. Demister air
10. Fresh air
11. Recirculation air
12. Engine
13. Water valve

DIAGNOSIS

DIAGNOSIS TABLE

Trouble	Possible Cause	Remedy
Heater blower fan motor won't work even when its switch is operating position.	Fuse blown	Check "HTR" fuse, and check for short circuit to ground.
	Blower fan motor resistor faulty	Check resistor.
	Blower fan motor switch faulty	Check blower fan switch.
	Blower fan motor faulty	Replace motor.
	Wiring or grounding faulty	Repair as necessary.
Incorrect temperature output.	Control cables broken or binding	Check cables.
	Temperature control lever faulty	Check control lever.
	Position of control cable clamp is faulty	Check and adjust clamp position.
	Air damper broken	Repair damper.
	Air ducts clogged	Repair air ducts.
	Water valve faulty	Replace water valve.
	Heater core leaking or clogged	Replace core.
	Heater hoses leaking or clogged	Replace hoses.
	Thermostat faulty	Check thermostat.
When mode control lever is changed, air outlet port is not changed or lever position disagree with air outlet port.	Control cables broken or binding	Check cable.
	Mode control lever faulty	Check control lever.
	Position of control cable clamp is faulty	Check and adjust clamp position.
	Air damper broken	Repair damper.
	Air ducts leaking or clogged	Repair air ducts.

WIRING CIRCUIT

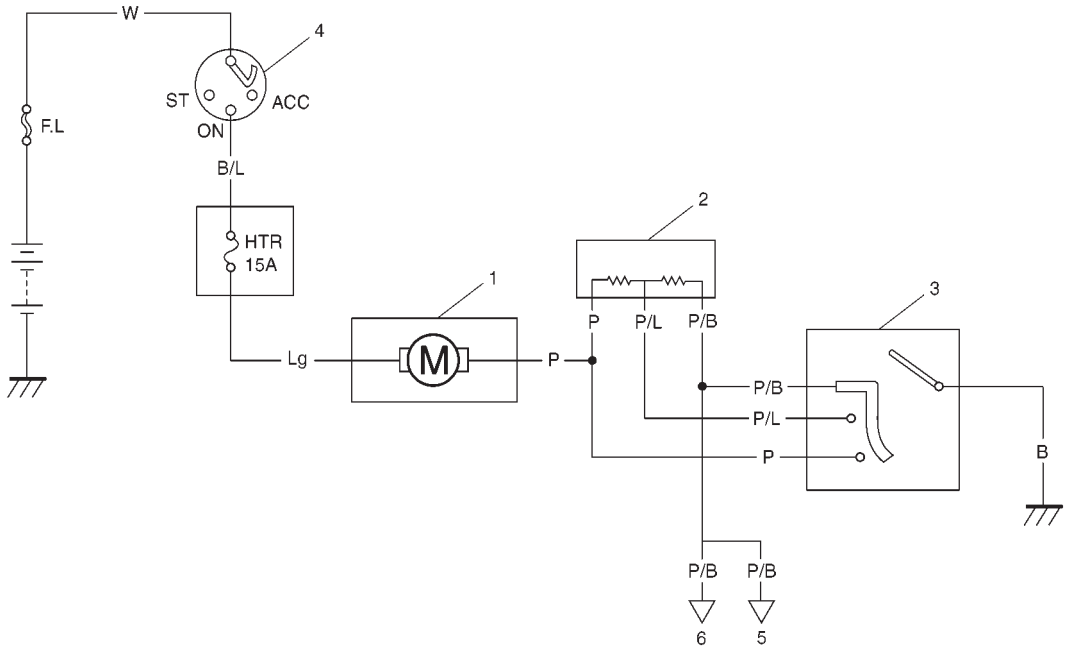

1. Blower fan motor
2. Blower fan motor resistor
3. Blower fan motor switch
4. Ignition switch
5. To A/C switch (if equipped)
6. To ECM (Idle up signal)

ON VEHICLE SERVICE

HEATER UNIT

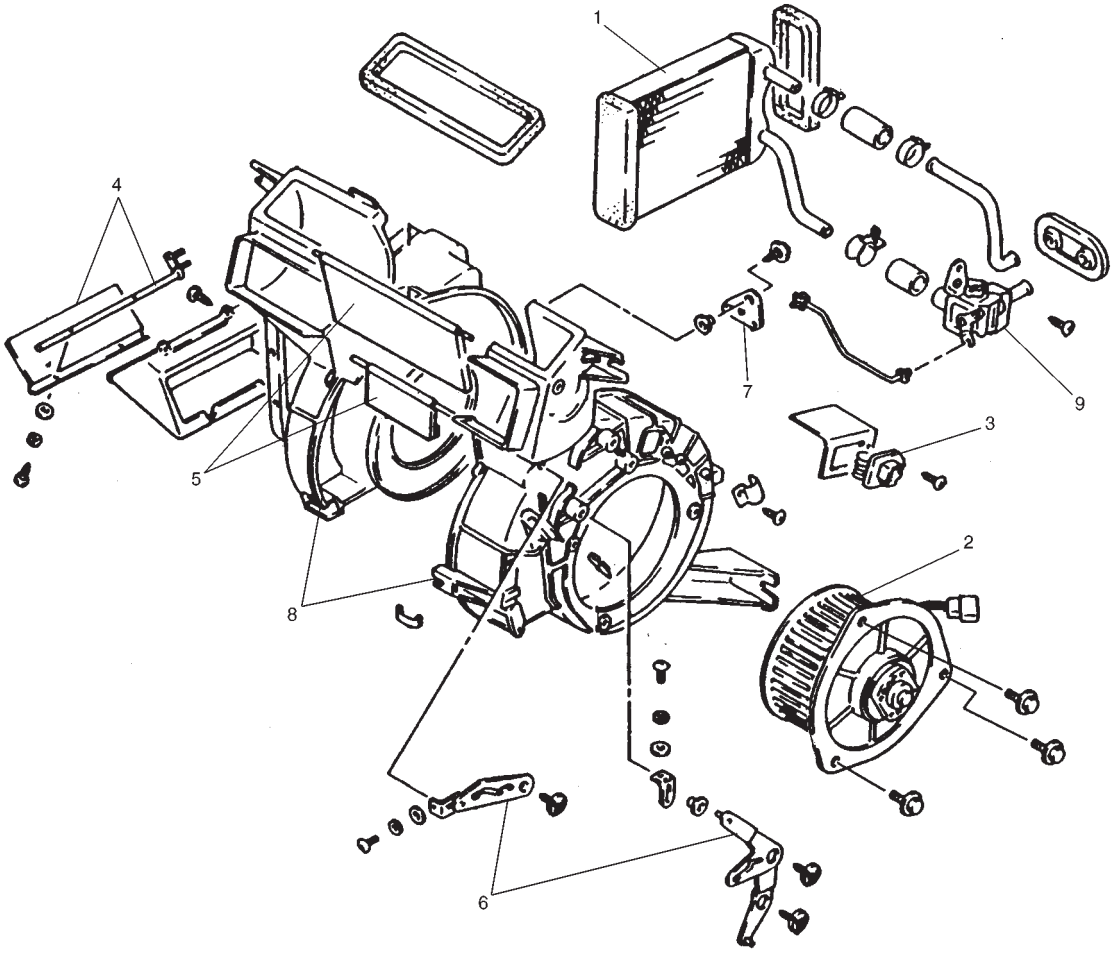

1. Heater core
2. Blower fan motor assembly
3. Blower fan motor resistor
4. Temperature door assembly
5. Air outlet control door assembly
6. Air outlet control lever
7. Temperature control lever
8. Heater case
9. Water valve

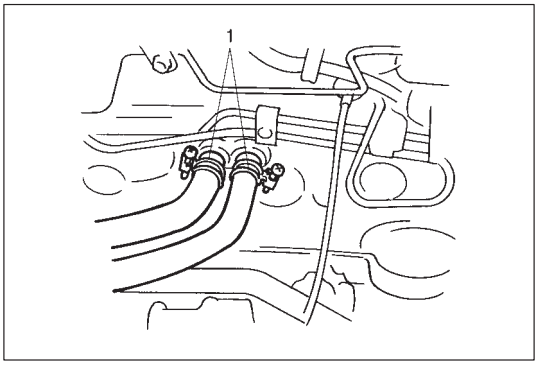

REMOVAL

1) Disconnect negative (–) cable at battery.
2) Drain engine coolant and disconnect heater hoses (1) from heater unit.
3) Remove instrument panel.

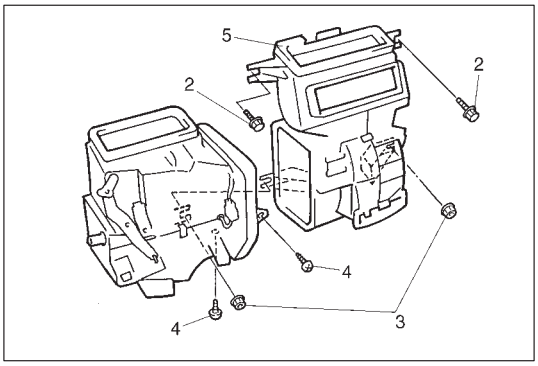

4) Disconnect each couplers (blower motor, resistor) from heater unit.
5) Remove bolts (2), nuts (3) and screws (4) (if vehicle equipped with A/C) as shown.
6) Remove heater unit (5) from vehicle.

INSTALLATION

Install heater unit by reversing removal procedure, noting the following items.

- When installing each part, be careful not to catch any cable or wiring harness.
- Adjust heater control cable (refer to heater control lever assembly in this section).
- Fill engine coolant to radiator, refer to ENGINE COOLANT CHARGE in Section 0B.

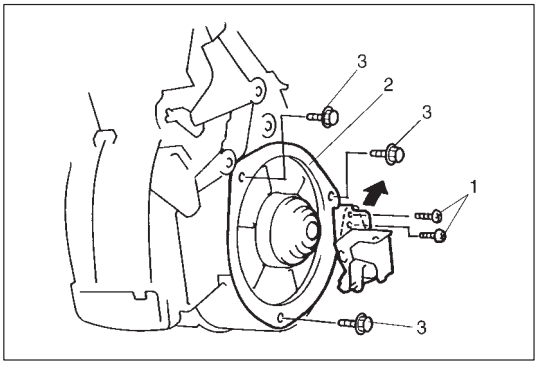

BLOWER FAN MOTOR

REMOVAL

1) Disconnect negative (–) cable at battery.
2) Disconnect blower motor coupler.
3) Loosen water valve by removing its attaching screws (1).
4) Remove blower fan motor (2) by removing it attaching screws (3).

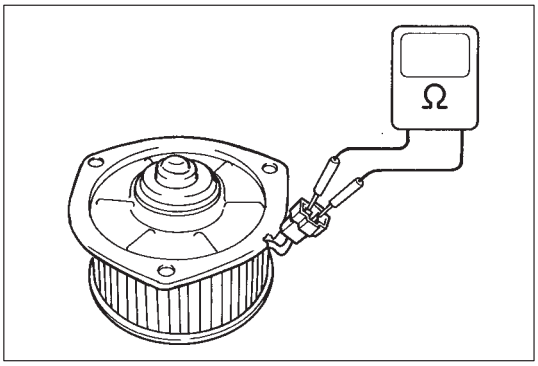

INSPECTION

Check continuity between two terminal as shown in figure.

If check results are continuity, proceed to next operation check, if not replace.

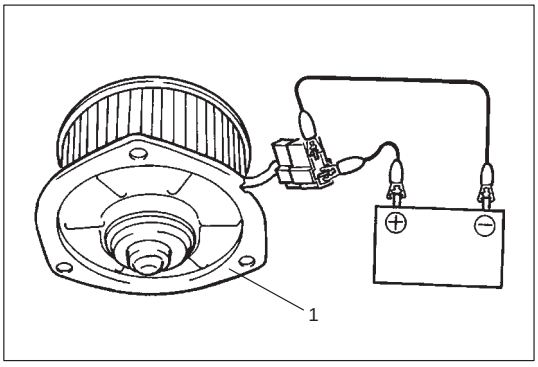

Connect battery to blower fan motor as shown, then check that the blower motor (1) operates smoothly.

INSTALLATION

Reverse removal procedure for installation.

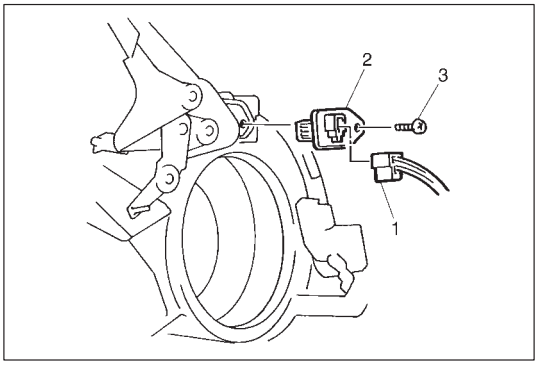

BLOWER FAN MOTOR RESISTOR

REMOVAL

1) Disconnect negative (–) cable at battery.
2) Disconnect resistor coupler (1).
3) Remove blower motor resistor (2) by removing its mounting screw (3).

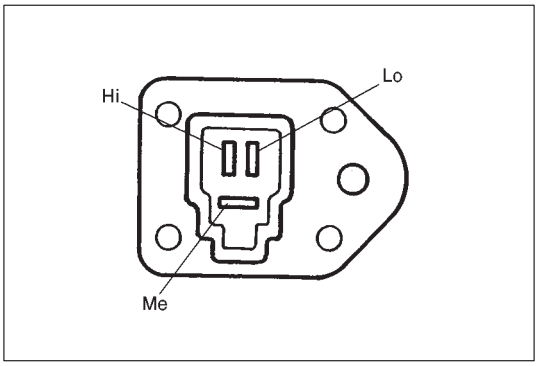

INSPECTION

Measure each terminal-to-terminal resistance on resistor

Resistance **Me – Lo: 1.5 – 3.0 Ω at 25°C (77°F)**
Me – Hi : 0.5 – 1.5 Ω at 25°C (77°F)

If measured resistance is incorrect, replace blower motor resistor.

INSTALLATION

Reverse removal procedure for installation.

HEATER CONTROL LEVER ASSEMBLY

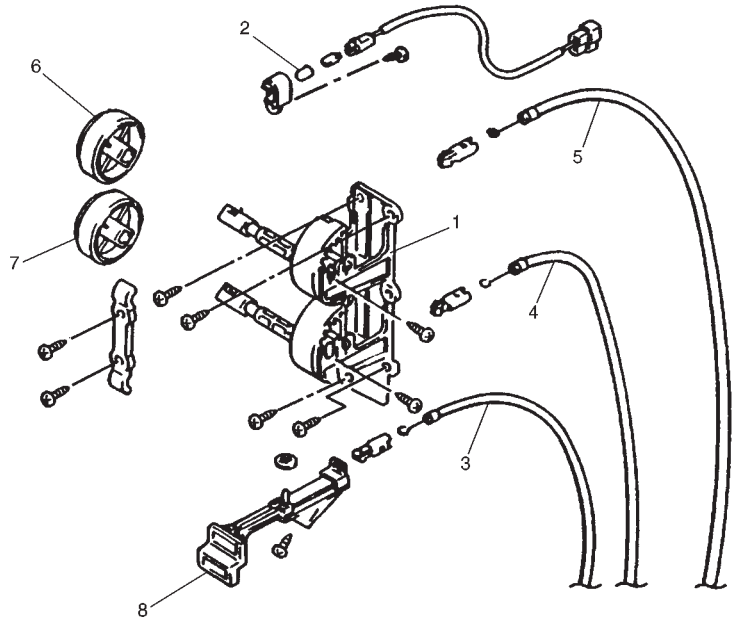

1. Heater control lever assembly
2. Bulb
3. Fresh air control cable
4. Air outlet control cable
5. Temperature control cable
6. Temperature control knob
7. Air outlet control knob
8. Fresh air control knob

REMOVAL

1) Disconnect negative (–) cable at battery.

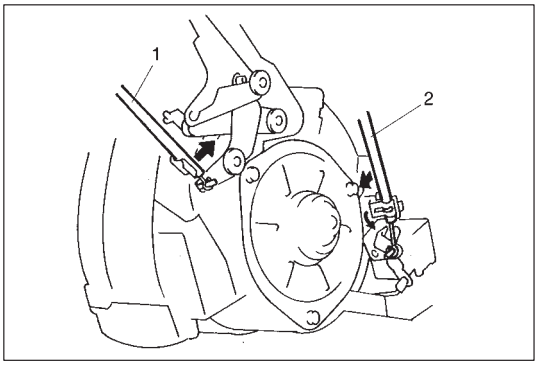

2) Disconnect each heater control cables (air outlet control (1), temperature control (2) and fresh air control) from heater unit and air inlet box or cooling unit (if equipped with A/C).
3) Disconnect heater control panel illumination coupler and A/C switch coupler (if equipped).
4) Loosen steering column assembly, refer to “STEERING COLUMN” in section 3C.

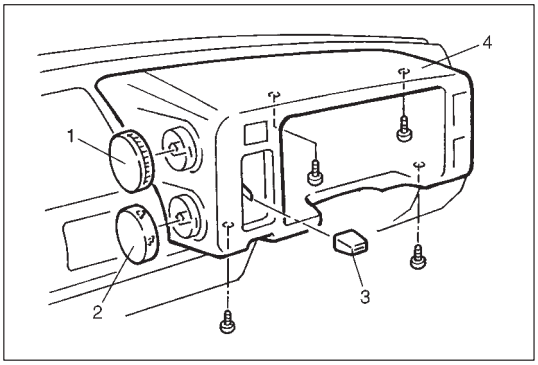

5) Remove temperature control knob (1), air outlet control knob (2) and blower fan motor switch knob (3).
6) Remove meter cluster (4) by removing its mounting screws.

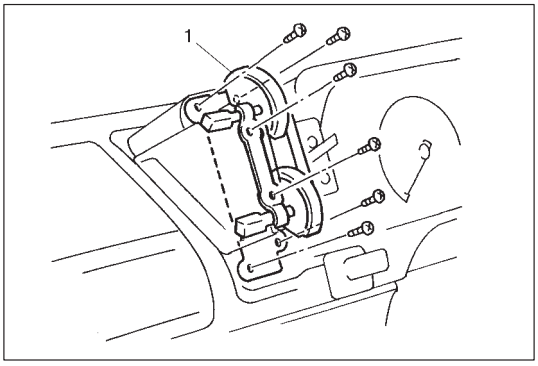

7) Remove heater control lever assembly (1) by removing mounting screws.

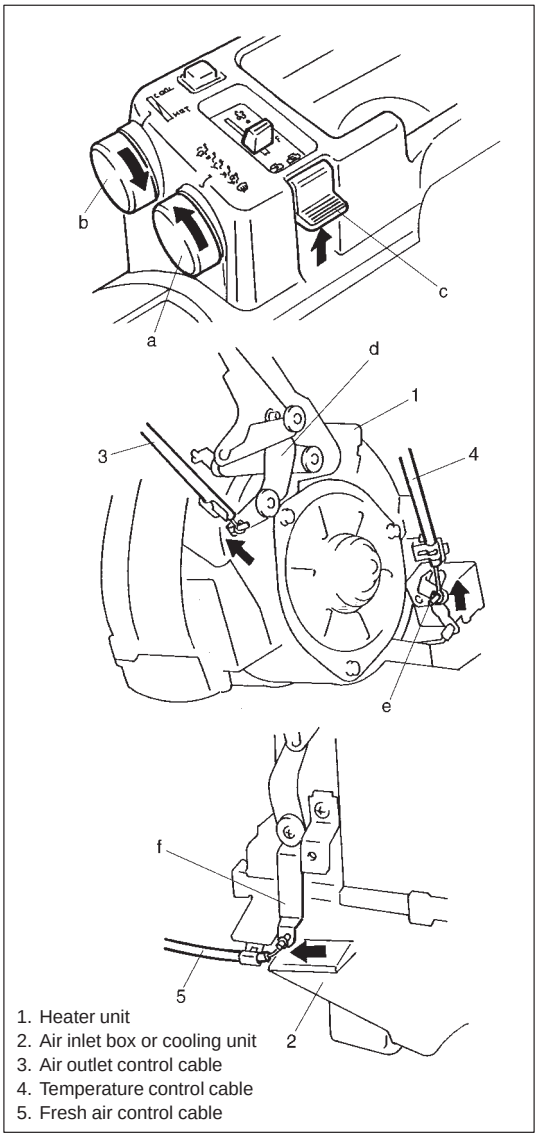

INSTALLATION

1) Reverse removal procedure for installation.
2) Adjust the following items.
   i) Move air outlet control knob (a), temperature control knob (b) and fresh air control knob (c) fully in arrow direction as shown in figure.
   ii) Push air outlet lever (d), temperature lever (e) and door link (f) fully in arrow direction and fix cable with clamp in position as shown in figure.

NOTE :
After installing control cables, be sure that control levers move smoothly and stop at proper position.

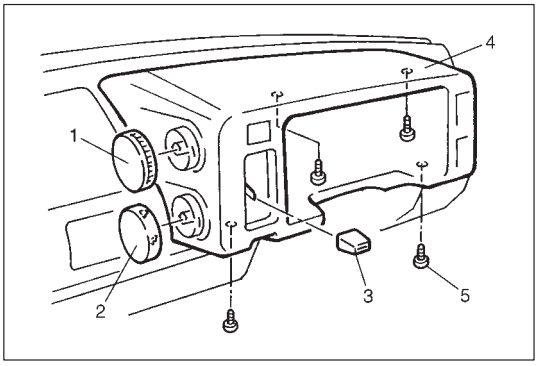

BLOWER FAN MOTOR SWITCH

REMOVAL

1) Disconnect negative (–) cable at battery.
2) Disconnect heater control panel illumination coupler and A/C switch coupler (if equipped).
3) Loosen steering column assembly, refer to STEERING COLUMN in section 3C.
4) Remove temperature control knob (1), air outlet control knob (2) and blower fan motor switch knob (3).
5) Remove meter cluster (4) by removing its mounting screws (5).

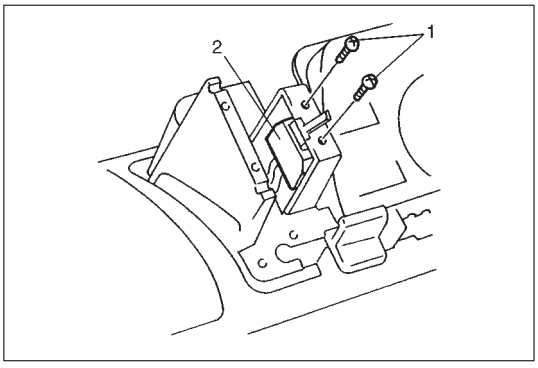

6) Disconnect blower fan switch coupler.
7) Loosen blower fan switch screw (1) and then remove blower fan motor switch (2) from instrument panel.

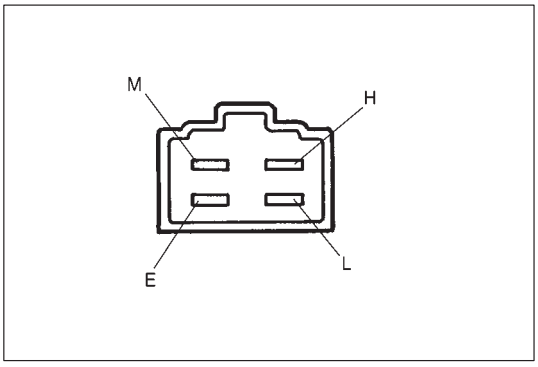

INSPECTION

Check blower fan switch for each terminal-to-terminal continuity. For the detail refer to “WIRING CIRCUIT” earlier in this section.

TERMINAL / POSITION	E	L	M	H
OFF	○			
Lo	○	○		
M	○	○	○	
Hi	○	○		○

INSTALLATION

Reverse removal sequence to install blower fan switch.

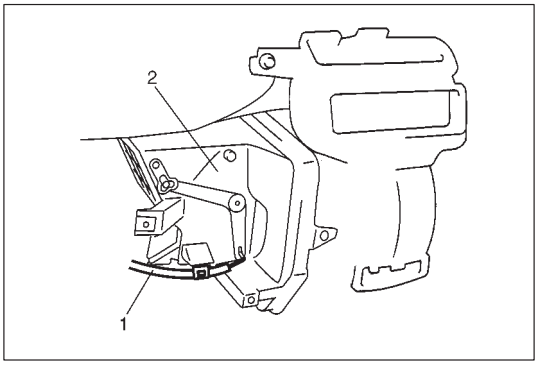

AIR INLET BOX

REMOVAL

NOTE:
If vehicle is equipped with air conditioning, refer to COOLING UNIT in Section 1B.

1) Remove fresh air control cable (1) from air inlet box (2).

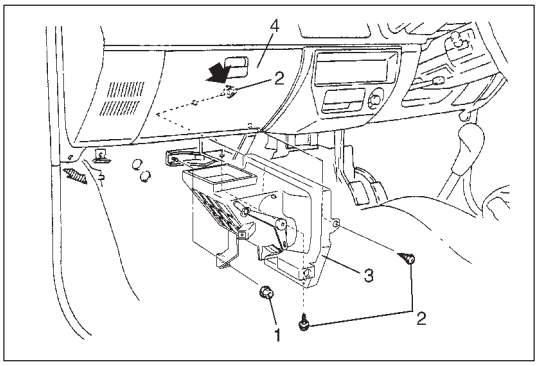

2) Open glove box lid (4).
3) Loosen air inlet box mounting nut (1) and screws (2).
4) Remove air inlet box (3).

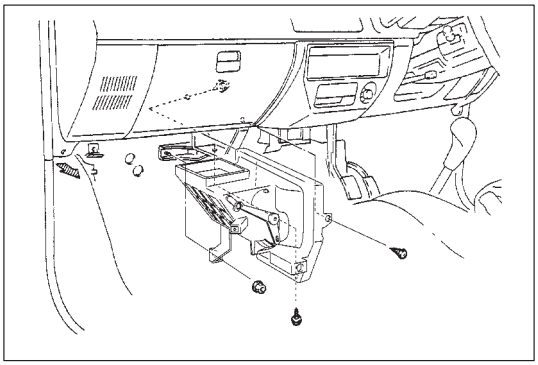

INSTALLATION

NOTE:
If vehicle is equipped with air conditioning, refer to COOLING UNIT in Section 1B.

Reverse removal sequence to install air inlet box, noting the following point.

- Adjust fresh air control cable, refer to HEATER CONTROL LEVER ASSEMBLY in this section.

SECTION 1B

AIR CONDITIONING (OPTIONAL)

CAUTION:
The air conditioning system of this vehicle uses refrigerant CFC-12 (R-12).
None of refrigerant, compressor oil and component parts is interchangeable between two types of A/C: one using refrigerant CFC-12 (R-12) and the other using refrigerant HFC-134a (R-134a).
Be sure to check which refrigerant is used before any service work including inspection and maintenance. For identification between these two types, refer to the description in page 1B-2.
When replenishing or changing refrigerant and compressor oil and when replacing parts, make sure that the material or the part to be used is appropriate to the A/C installed in the vehicle being serviced. Use of incorrect one will result in leakage of refrigerant, damage in parts or other faulty condition.

For basic servicing method of the air conditioning system that is not described in this section, refer to AIR CONDITIONING BASIC MANUAL (99520-02130).

CONTENTS

GENERAL DESCRIPTION 1B- 2
Refrigerant Flow of Air Conditioning System 1B- 2
Major Components and Location 1B- 3

DIAGNOSIS 1B- 4
General Diagnosis Table 1B- 4
Quickly Checking of Refrigerant Charge . . . 1B- 6
Diagnosis Test 1B- 7
Wiring Circuit 1B-11
A/C System Inspection of ECM and Its Circuits 1B-12
A/C Compressor Drive Belt Inspection 1B-14

RECOVERY, EVACUATION AND CHARGING 1B-15
Refrigerant Recovery 1B-15
Evacuating and Charging 1B-15

ON-VEHICLE SERVICE 1B-16
A/C Condenser Assembly 1B-16
Receiver/Dryer 1B-17
Radiator (and Condenser) Cooling Fan Motor 1B-18
Cooling Unit 1B-19
A/C Evaporator Thermistor 1B-20
Expansion Valve 1B-21
Dual Pressure Switch 1B-21
A/C Switch 1B-21
Radiator (and Condenser) Cooling Fan Relay and Compressor Relay 1B-22
Compressor 1B-22
Magnet Clutch 1B-25
Disassembly of Compressor 1B-27
Checking Components 1B-31
Assembly of Compressor 1B-32
Assembly of Magnetic Clutch 1B-36

REQUIRED SERVICE MATERIALS 1B-37

SPECIAL TOOLS 1B-37

GENERAL DESCRIPTION

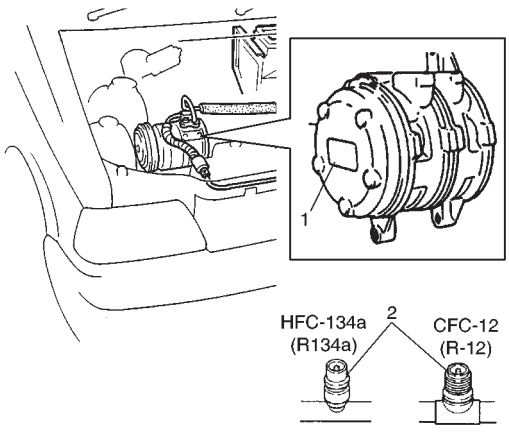

1. Compressor label
2. Service valve

Whether the A/C in the vehicle being serviced uses HFC-134a (R-134a) or CFC-12 (R-12) is indicated on LABEL on the compressor. Also, it can be checked by the shape of the service (charge) valve.

REFRIGERANT FLOW OF AIR CONDITIONING SYSTEM

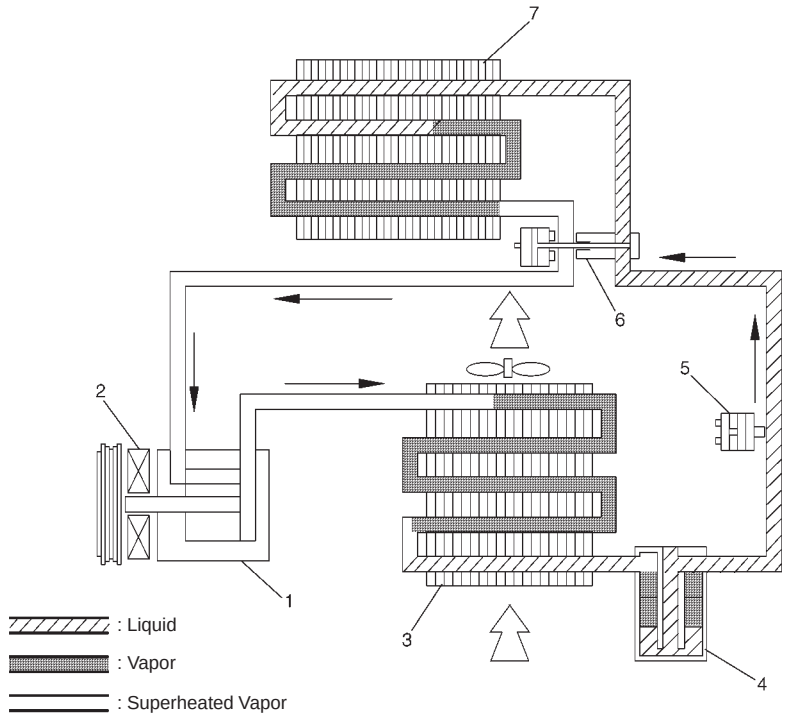

1. Compressor
2. Magnet clutch
3. Condenser assembly
4. Receiver/dryer
5. Dual pressure switch
6. Expansion valve
7. Evaporator

MAJOR COMPONENTS AND LOCATION

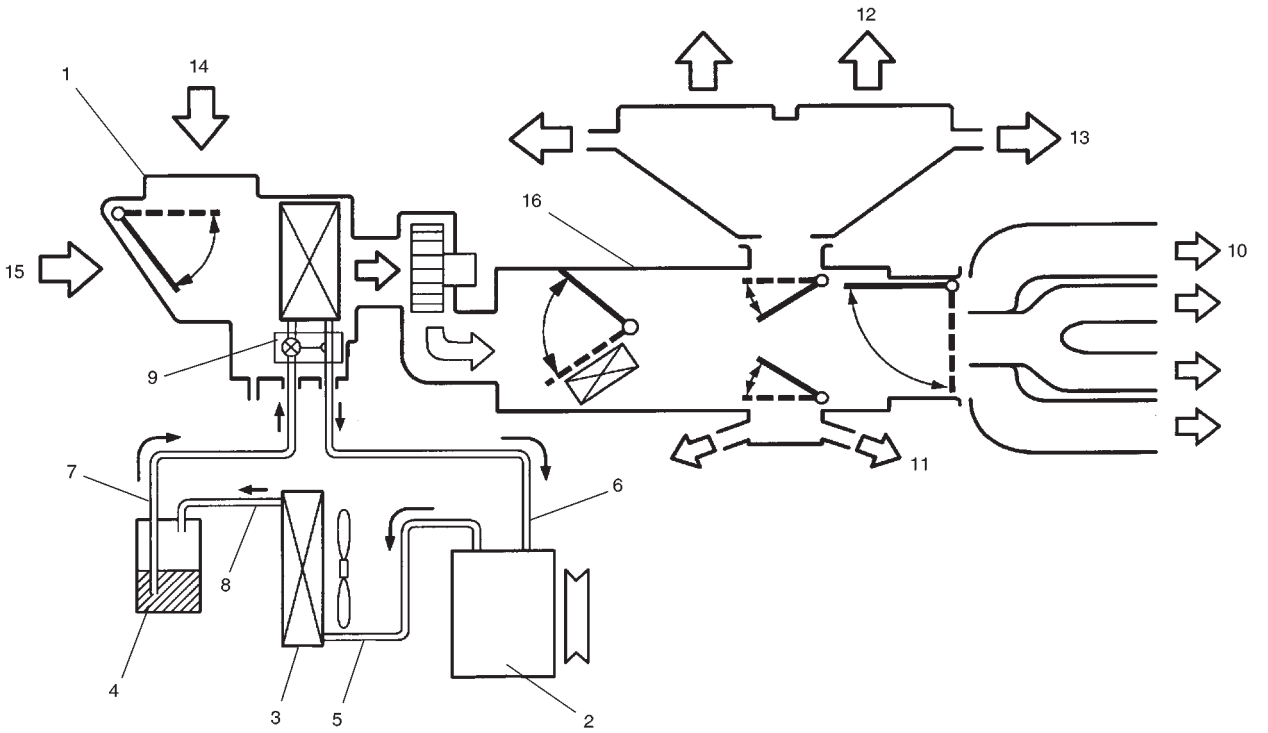

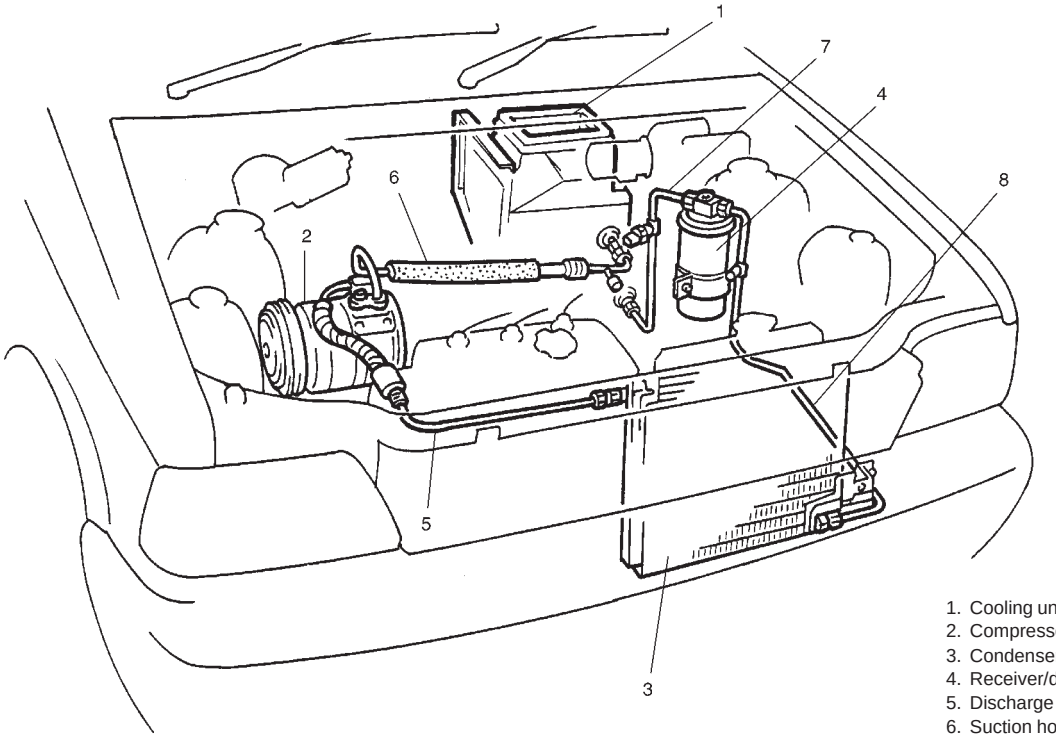

1. Cooling unit
2. Compressor
3. Condenser assembly
4. Receiver/dryer
5. Discharge hose
6. Suction hose
7. Receiver/dryer outlet pipe
8. Condenser outlet pipe
9. Expansion valve
10. Ventilation air
11. Foot air
12. Defroster air
13. Demister air
14. Fresh air
15. Recirculation air
16. Heater unit

DIAGNOSIS

GENERAL DIAGNOSIS TABLE

Condition	Possible Cause	Correction
Cool air won't come out (A/C system won't operative)	● No refrigerant ● Fuse blown ● A/C switch faulty ● Blower fan switch faulty ● A/C thermistor faulty ● Dual pressure switch faulty ● Wiring or grounding faulty ● ECT sensor faulty ● ECM and its circuit faulty	Recover, evacuation and charging. Check "HEATER" fuse and check short circuit to ground. Check A/C switch. Check blower fan switch. Check A/C thermistor. Check dual pressure switch. Repair as necessary. Check ECT sensor. Check ECM and its circuit.
Cool air won't come out (Compressor won't operative (won't rotative))	● Fuse blown ● Compressor relay faulty ● ECM faulty ● Magnet clutch faulty ● Drive belt loosen or broken ● Compressor faulty	Check "A/C" fuse and check short circuit to ground. Check compressor relay. Check magnet clutch. Adjust or replace drive belt. Check compressor.
Cool air won't come out (Radiator (and condenser) cooling fan motor won't operative)	● "RDTR" fuse blown ● Radiator (and condenser) cooling fan relay faulty ● Wiring or grounding faulty ● Radiator fan relay signal faulty ● Radiator (and condenser) cooling fan motor faulty	Replace fuse and check short circuit to ground. Check radiator cooling fan relay. Repair as necessary. Check radiator fan relay signal. Check radiator cooling fan motor.
Cool air won't come out (Blower motor won't operative)	● Fuse blown ● Blower resistor faulty ● Blower fan switch faulty ● Wiring or grounding faulty ● Blower motor faulty	Check "HEATER" fuse main heater fuse and check short circuit to ground. Check blower resistor. Check blower fan switch. Repair as necessary. Check blower motor.

Condition	Possible Cause	Correction
Cool air won't come out or insufficient cooling (A/C system normal operative)	● Insufficient or excessive charge of refrigerant ● Condenser clogged ● Evaporator clogged or frosted ● A/C thermistor faulty ● Expansion valve faulty ● Receiver/dryer clogged ● Drive belt slipping ● Magnetic clutch faulty ● Compressor faulty ● Air in A/C system ● Air leaking from cooling unit or air duct ● Heater and ventilation system faulty ● Blower motor faulty ● Excessive compressor oil existing in A/C system	Check charge of refrigerant. Check system for leaks. Check condenser. Check evaporator and A/C thermistor. Check A/C thermistor. Check expansion valve. Check receiver/dryer. Check or replace drive belt. Check magnetic clutch. Check compressor. Replace receiver/dryer, and evacuation and charging. Repair as necessary. Check air inlet box. Check heater control lever assembly. Check heater unit. Check blower motor. Pull out compressor oil in A/C system circuit, and replace compressor.
Cool air won't come out only intermittently	● Wiring connection faulty ● Expansion valve faulty ● Excessive moisture in A/C system ● Magnetic clutch faulty ● Excessive charge of refrigerant	Repair as necessary. Check expansion valve. Replace receiver/dryer, and evacuation and charging. Check magnetic clutch. Check charge of refrigerant.
Cool air comes out only at high speeds	● Condenser clogged ● Insufficient charge of refrigerant ● Air in A/C system ● Drive belt slipping ● Compressor faulty	Check condenser. Check charge of refrigerant. Replace receiver/dryer, and evacuation and charging. Check or replace drive belt. Check compressor.
Cool air won't come out only at high speeds	● Excessive charge of refrigerant ● Evaporator frosted	Check charge refrigerant. Check evaporator. Check A/C thermistor.
Insufficient velocity of cooled air	● Evaporator clogged or frosted ● Air leaking from cooling unit or air duct ● Blower motor faulty ● Wiring or grounding faulty	Check evaporator. Check A/C thermistor. Repair as necessary. Check blower motor. Repair as necessary.

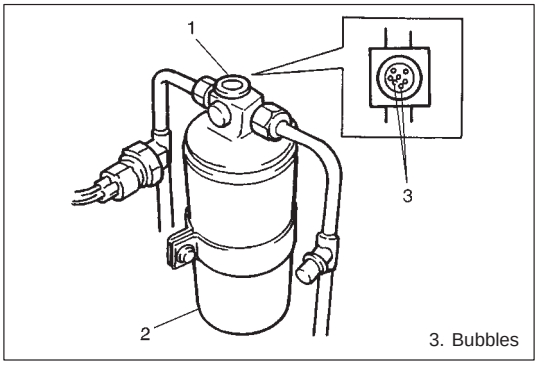

QUICKLY CHECKING OF REFRIGERANT CHARGE

CHARGE OF REFRIGERANT

The following procedure can be used for quickly checking whether the A/C system has a proper charge of refrigerant or not.
Run engine at fast idle, and operate A/C at its max. cooling capacity for a few minutes. Then, look at the sight glass (1) on receiver/dryer (2) and compare what is observed with the symptoms listed in “CHECKING REFRIGERANT CHARGE” table given below.

CHECKING REFRIGERANT CHARGE

Item No.	Symptom	Charge of refrigerant	Correction
1	Bubbles observed in sight glass	Insufficient charge of refrigerant in system	Check system for leaks with a leak tester.
2	No bubbles observed in sight glass	No or insufficient charge of refrigerant in system	Refer to the items 3 and 4.
3	No temperature difference between compressor inlet and outlet	Empty or nearly empty system	Evacuate and charge system and then check it for leaks with a leak tester.
4	Noticeable temperature difference between compressor inlet and outlet	Proper or too much charge of refrigerant in system	Refer to the items 5 and 6.
5	When A/C is turned OFF, refrigerant in sight glass clears immediately and remains clear	Too much charge of refrigerant in system	Discharge excess charge of refrigerant to adjust it to a specified charge.
6	When A/C is turned OFF, refrigerant in sight glass once produces bubbles and then clears	Proper charge of refrigerant in system	NO CORRECTION NEEDED BECAUSE CHARGE OF REFRIGERANT IS NORMAL.

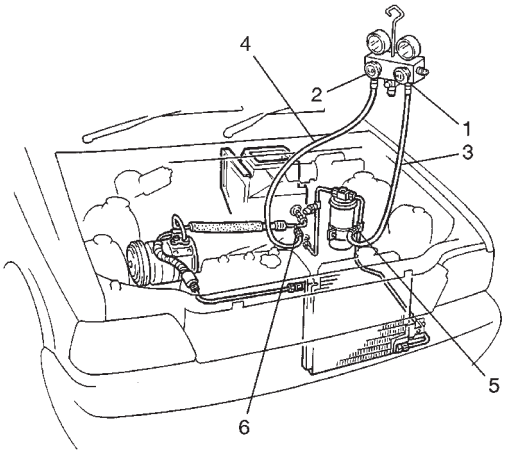

DIAGNOSIS TEST

1) Confirm that vehicle and environmental conditions are as follows.
   – Vehicle is not exposed to direct sun.
   – Ambient temperature is within 15 °C – 35 °C (59 °F – 95 °F).
2) Make sure that high pressure valve (1) and low pressure valve (2) of manifold gauge are firmly closed.
3) Connect high pressure charging hose (3) to high pressure service valve (5) on vehicle, and connect low pressure charging hose (4) to low pressure service valve (6) on vehicle.
4) Bleed the air in charging hoses (3), (4) by loosening their respective nuts on manifold gauge, utilizing the refrigerant pressure. When a hiss is heard, immediately tighten nut.

> **CAUTION:**
> **Do not interchange high and low pressure charging hoses by mistake.**

5) Warm up engine to normal operating temperature (engine coolant temperature at 80 – 90°C, 176 – 194°F) and keep it at specified idle speed.
6) Turn A/C switch ON, and set blower switch at “HI” (3rd position), temperature knob at “COOL”, air outlet control knob at “FACE”, fresh/circulation control knob at “CIRCULATION”. (Confirm that A/C compressor and condenser fan are working.)
7) Keep all windows, doors and engine food open.

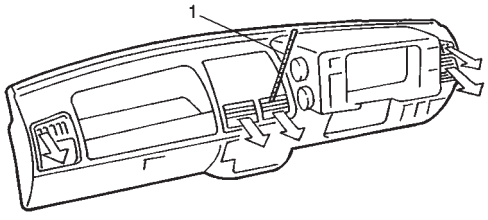

A/C inlet air temperature	15 – 35°C (59 – 95°F)
Engine rpm	Keep to 1,500 rpm.
Blower fan motor switch	Max. (3rd position)
Temperature control	Max. cool
Air outlet control	Face
Doors	All open
Air inlet damper position	Recirculation

8) With about 20 mm (0.8 in.) of dry bulb thermometer (1) inserted into center duct air outlet and another one set near evaporator air inlet, read temperature indicated on each thermometer.

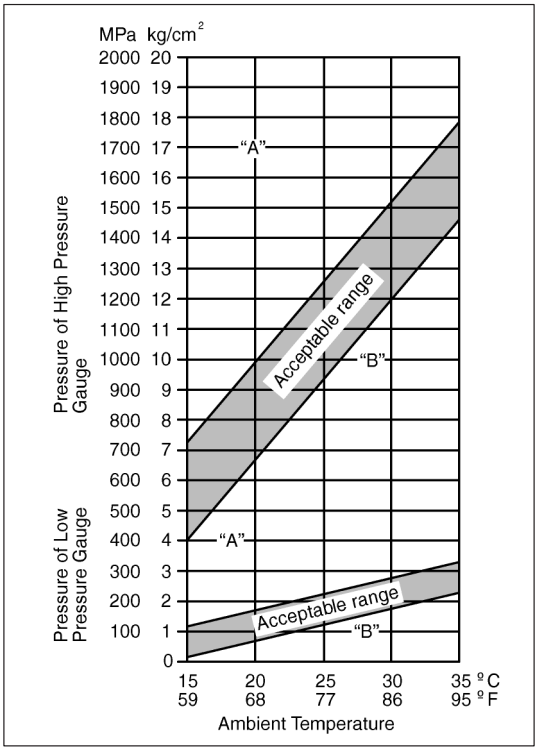

9) Check for each pressure of low side and high side if it is within shaded range of left graph.

NOTE:
Pressure registered on gauge varies with ambient temperature. Therefore, use left graphs when determining if pressures are normal or not.

Example:

Gauges should read as follows when ambient temperature is 30 °C.	
Pressure on high pressure gauge (HI):	**1.18 – 1.47 MPa** **12.0 – 15.0 kg/cm^2**
Pressure on high pressure gauge (LO):	**0.2 – 0.3 MPa** **2.0 – 3.0 kg/cm^2**

If each gauge reading is out of specified pressure, correct defective part referring to following Diagnosis Test table.

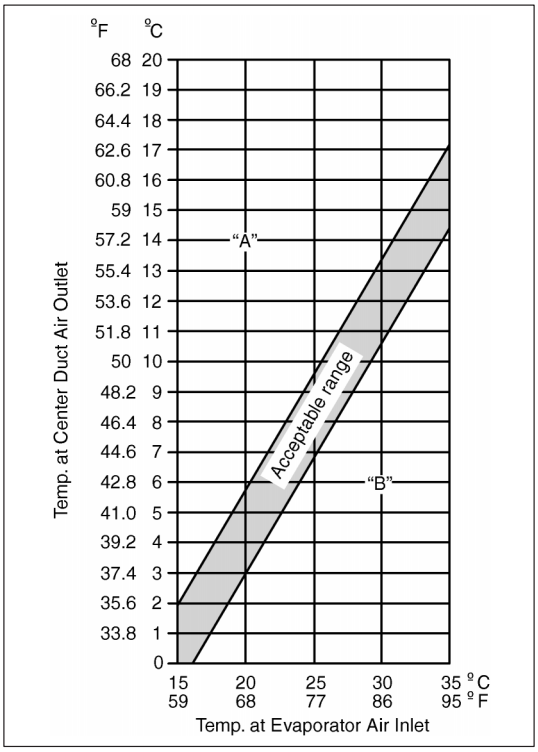

10) Check inlet port temperature-to-outlet port temperature relationship using graph at the left.
For example, if evaporator inlet port temperature is 25 °C (77 °F) and center duct air outlet temperature is 8 °C (46.4 °F), their crossing point is within acceptable range as shown in graph at the left.
11) If crossing point is out of acceptable range, diagnose trouble referring to following Diagnosis Test table.

DIAGNOSIS TEST TABLE

	TESTING RESULTS	POSSIBLE CAUSE	REMEDY
HIGH PRESSURE GAUGE	Pressure high (“A” area of high side graph)	● Refrigerant overcharged ● Expansion valve frozen or clogged ● Clogged refrigerant passage of high side ● Condenser fan malfunction — Insufficient cooling of condenser ● Dirty or bent condenser fins — Insufficient cooling of condenser ● Compressor malfunction (Insufficient oil etc.) ● Engine overheat	● Recharge ● Check expansion valve ● Clean or replace ● Check condenser fan ● Clean or repair ● Check compressor ● Check engine cooling system
	Pressure low (“B” area of high side graph)	● Insufficient refrigerant (Insufficient charge or leakage) ● Expansion valve malfunction (valve opens too wide) ● Compressor malfunction (Insufficient compression)	● Check for leakage, repair if necessary and recharge ● Check expansion valve ● Check compressor
LOW PRESSURE GAUGE	Pressure high (“A” area of low side graph)	● Expansion valve malfunction (valve opens too wide) ● Compressor malfunction (Insufficient compression)	● Check expansion valve ● Check compressor
	Pressure low (“B” area of low side graph)	● Insufficient refrigerant (Insufficient charge or leakage) ● Expansion valve malfunction (valve opens too narrow) ● Clogged refrigerant passage (crashed pipe)	● Check for leakage, repair if necessary and recharge ● Check expansion valve ● Repair or replace
THERMOMETER AT CENTER DUCT	Outlet air temperature at center duct is high (Crossing point is in area “A”)	● Insufficient or excessive charge of refrigerant ● Dirty or bent evaporator fins ● Air leakage from cooling (heater) unit or air duct ● Malfunctioning, switchover function of damper in cooling (heater) unit ● Compressor malfunction	● Check refrigerant pressure ● Clean or repair ● Repair or replace ● Repair or replace ● Check compressor
	Outlet air temperature at center duct is low (Crossing point is in area “B”)	● Insufficient air volume from center duct (Heater blower malfunction) ● Compressor malfunction	● Check blower motor and fan ● Check compressor

If ambient temperature is within 30 – 35 °C (86 – 95 °F), it is possible to do using next page table for detail diagnosis.

DETAIL DIAGNOSIS TABLE AT AMBIENT TEMPERATURE WITHIN 30 – 35 °C (85 – 95 °F)

MANIFOLD GAUGE (MPa / kg/cm² / psi)		CONDITION	CAUSE	CORRECTION
Lo	Hi			
0.2 – 0.3 (2.0 – 3.0 28.4 – 42.6)	1.18 – 1.47 (12.0 – 15.0 170 – 213)	Normal condition.	———	———
Negative pressure	0.5 – 0.6 (5 – 6 71.2 – 85.3)	● The low pressure side reads a negative pressure, and the high pressure side reads an extremely low pressure. ● Presence of frost around tubing to and from receiver/dryer and expansion valve.	● Dust particles or water droplets are either stuck or frozen inside expansion valve, preventing the refrigerant from flowing. ● Gas leak from heat-sensitizing tube is preventing refrigerant flow.	● Clean expansion valve. Replace it if it cannot be cleaned. ● Replace receiver/dryer. ● Evacuate the A/C system and recharge with fresh refrigerant. ● If heat-sensitizing tube is defective, replace expansion valve.
Normal: 0.2 – 0.3 (2.0 – 3.0 28.4 – 42.6) ↕ Abnormal: Negative pressure	Normal: 1.18 – 1.47 (12.0 – 15.0 170 – 213) ↕ Abnormal: 0.69 – 0.98 (7 – 10 99.4 – 142)	● During A/C operation, the low pressure side sometimes indicates negative pressure, and sometimes normal pressure. Also high pressure side reading fluctuates between the abnormal and normal pressure.	● Expansion valve is frozen due to moisture in the system, and temporarily shuts off the refrigeration cycle.	● Replace expansion valve. ● Replace receiver/dryer. ● Evacuate A/C system and recharge with fresh refrigerant.
0.05 – 0.1 (0.5 – 1.0 7.1 – 14.2)	0.69 – 0.98 (7 – 10 100 – 142)	● Both low and high pressure sides indicate low readings. ● Continuous air bubbles are visible through sight glass. ● Output air is slightly cold.	● Insufficient refrigerant in system. (Refrigerant leaking)	● Using a gas leak detector, check for leaks and repair as necessary. ● Recharge refrigerant to a specified amount. If the pressure reading is almost 0 when the manifold gauges are attached, check for any leaks, repair them, and evacuate the system.
0.4 – 0.6 (4 – 6 56.9 – 85.3)		● Pressure on low pressure side is high. ● Pressure on high pressure side is low. ● Both pressure becoming equal right after A/C is turned OFF.	● Internal leak in compressor.	● Inspect compressor and repair or replace as necessary.
0.25 – 0.3 (2.5 – 3.0 35.6 – 42.6)	1.96 – 2.45 (20 – 25 285 – 355)	● High pressure reading on both low and high pressure sides. ● Air bubbles are not visible even when engine rpm is lowered.	● Overcharged A/C system. ● Faulty condenser cooling operation. ● Faulty condenser fan operation.	● Adjust refrigerant to specified amount. ● Clean condenser. ● Inspect and repair condenser fan.
		● High pressure reading on both low and high pressure sides. ● Low pressure side tubing is not cold when touched. ● Air bubbles are visible through sight glass.	● Presence of air in A/C system. (Improperly evacuated)	● Replace receiver/dryer. ● Inspect quantity of compressor oil and presence of contaminants in oil. ● Evacuate system and recharge with fresh refrigerant.
0.3 – 0.4 (3.0 – 4.0 42.7 – 56.8)	1.86 – 1.96 (19 – 20 271 – 284)	● High pressure reading on both low and high pressure sides. ● Large amount of frost or dew on the low pressure side tubing.	● Faulty expansion valve or improper attachment of heat-sensitizing tube. ● Refrigerant flow is not regulated properly.	● Inspect if heat-sensitizing tube is properly attached. ● Replace expansion valve.

WIRING CIRCUIT

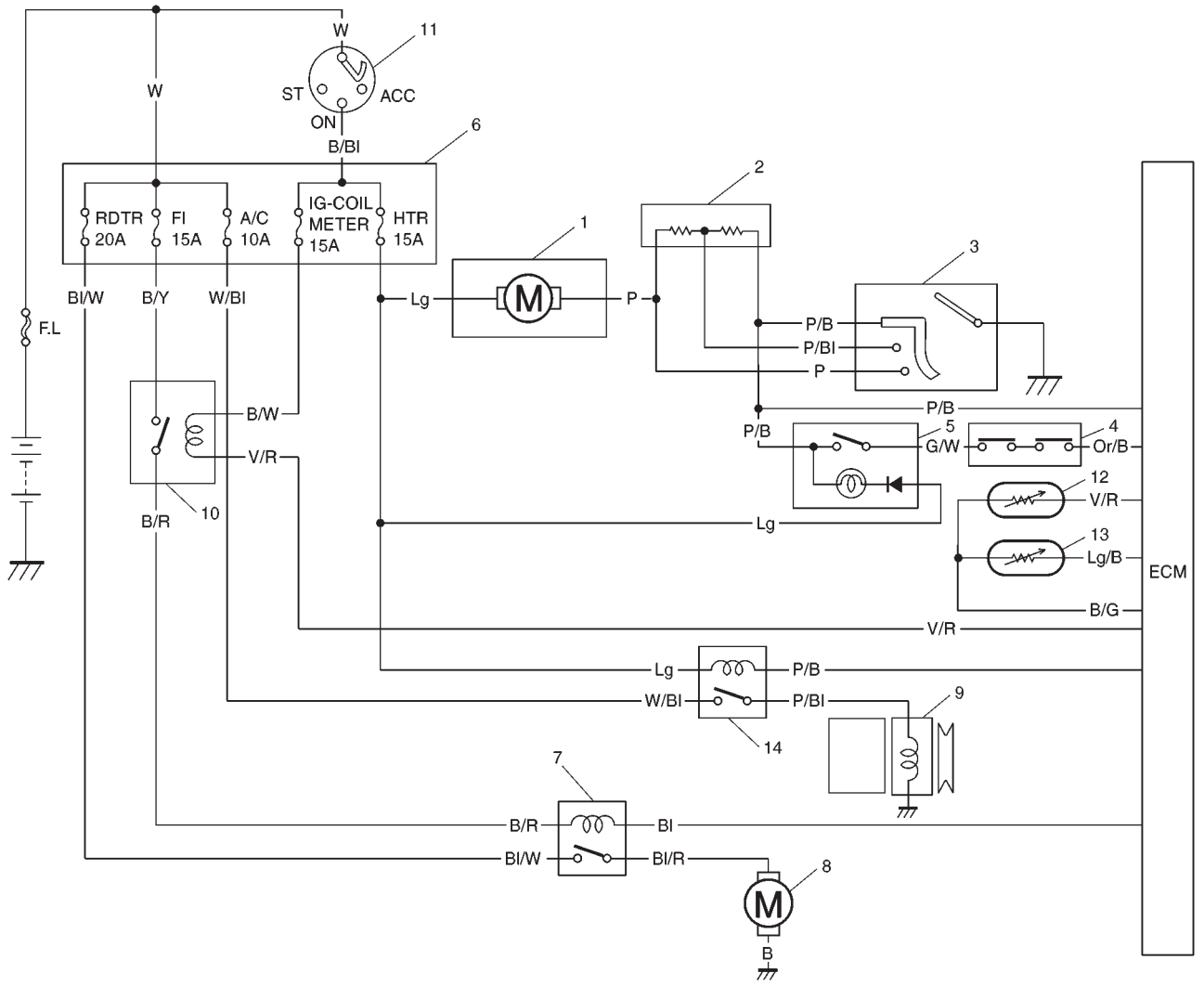

1. Blower fan motor
2. Blower fan motor resistor
3. Blower fan motor switch
4. Dual pressure switch
5. A/C Switch
6. Fuse box
7. Radiator (and condenser) cooling fan relay
8. Radiator (and condenser) cooling fan motor
9. Compressor
10. Main relay
11. Ignition switch
12. A/C evaporator thermistor
13. ECT sensor
14. Compressor relay

Fig. A

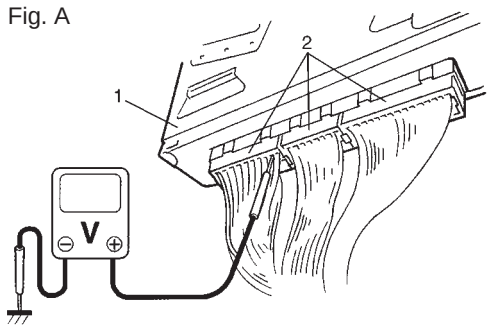

Fig. B

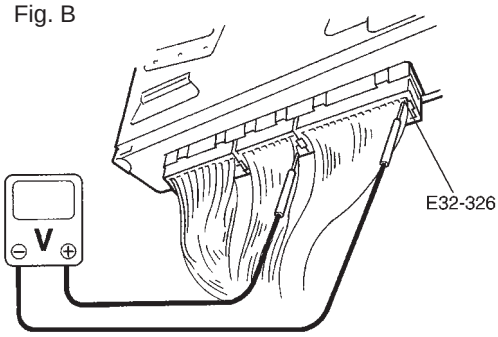

A/C SYSTEM INSPECTION OF ECM AND ITS CIRCUITS

ECM and its Circuits can be checked at ECM wiring couplers by measuring voltage.

CAUTION:
ECM cannot be checked by itself. It is strictly prohibited to connect voltmeter or ohmmeter to ECM with couplers disconnected from it.

Voltage Check

1) Remove ECM from vehicle.
2) Connect ECM couplers (2) to ECM (1).
3) Check voltage at each terminal of couplers connected.
   Refer to “Inspection of ECM and its circuit” in ENGINE AND EMISSION CONTROL SYSTEM section.

NOTE:
As each terminal voltage is affected by the battery voltage, confirm that it is 11V or more when ignition switch is ON.

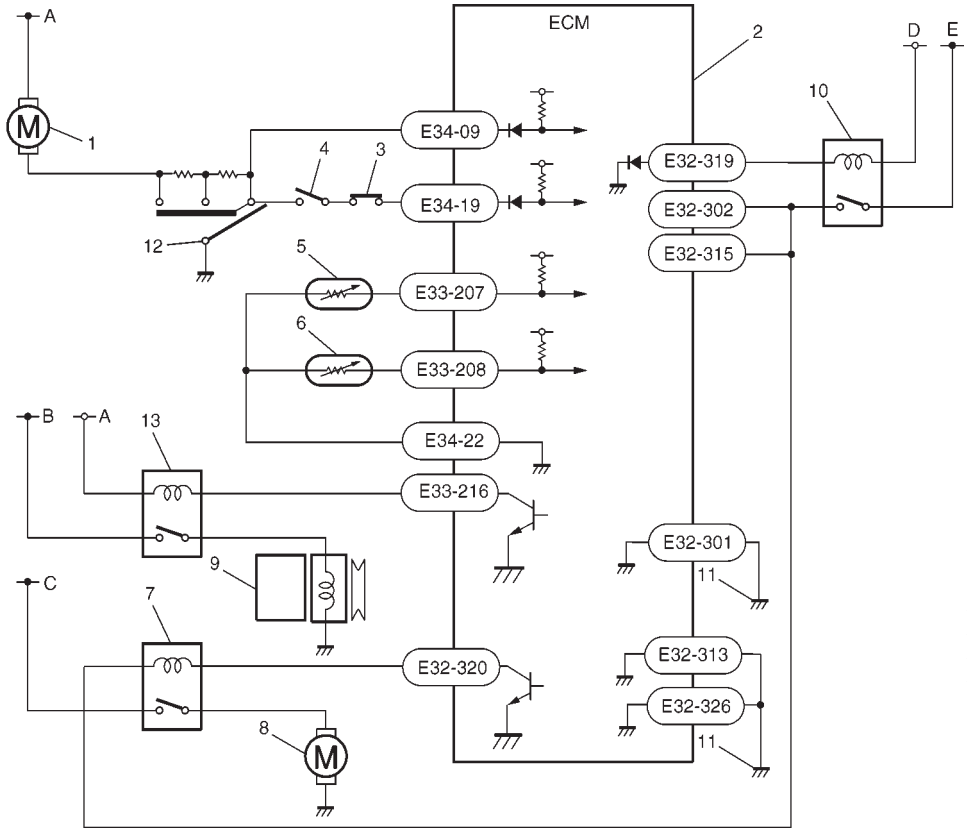

1. Blower fan motor
2. ECM
3. Dual pressure switch
4. A/C switch
5. A/C evaporator thermistor
6. ECT sensor
7. Radiator fan relay
8. Radiator fan
9. Compressor
10. Main relay
11. Engine earth
12. Blower fan motor switch
13. Compressor relay

A. To HTR fuse 15A
B. To A/C fuse 10A
C. To RDTR fuse 30A
D. To IG fuse 15A
E. To FI fuse 15A

TERMINAL ARRANGEMENT OF ECM COUPLER (VIEWED FROM HARNESS SIDE)

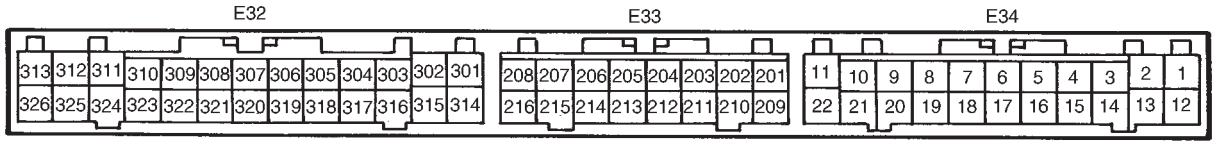

ECM VOLTAGE VALUES TABLE FOR RELATION OF A/C CONTROL

Terminal	Wire	Circuit	Measurement ground	Normal value	Condition
E32-301	B	ECM main ground	Ground to body (Fig A)	–0.4 – 0 volt	Engine running
E32-302	B/R	Main power supply for ECM	Ground to engine (Fig B)	10 – 14 volts	Ignition switch ON with engine stopped
E32-313	Bl/B	ECM ground for power circuit	Ground to body (Fig A)	–0.4 – 0 volt	Engine running
E32-315	B/R	Power supply for ECM power circuit	Ground to engine (Fig B)	10 – 14 volts	Ignition switch ON with engine stopped
E32-319	V/R	Main relay drive	Ground to engine (Fig B)	0.5 – 1.2 volt	Ignition switch ON with engine stopped
				0 volt	Ignition switch OFF
E32-320	Bl	Radiator (condenser) cooling fan relay output	Ground to engine (Fig B)	0 – 1 volt	Blower fan motor switch and A/C switch ON or engine coolant temp sensor more than 100 °C (212 °F) with engine running
				10 – 14 volts	Except the above-mentioned with engine running
E32-326	Bl/B	ECM ground for power circuit	Ground to body (Fig A)	–0.4 – 0 volt	Engine running
E34-09	P/B	Blower load for blower fan input	Ground to engine (Fig B)	0 – 1 volt	Blower fan motor switch ON with engine running
				10 – 14 volts	Blower fan motor switch OFF with engine running
E34-19	Or/B	A/C switch input	Ground to engine (Fig B)	0 – 1 volts	Blower fan motor switch and A/C switch ON with engine running
				10 – 14 volt	Blower fan motor switch or A/C switch OFF with engine running
E34-22	B/G	Sensor common ground	Ground to body (Fig A)	–0.4 – 0 volt	Engine running
E33-207	V/R	Evaporator thermistor temperature (EVAP temp sensor) input	Ground to engine (Fig B)	2.0 – 2.5 volts (2100 – 2580 Ω)	Evaporator thermistor temperature at approx. 15 °C (59 °F) with engine running
				3.1 – 3.3 volts (4600 – 5100 Ω)	Evaporator thermistor temperature at approx. 0 °C (32 °F) with engine running
E33-208	Lg/B	Engine coolant temperature sensor input	Ground to engine (Fig B)	0.71 – 0.76 volts (290 – 320 Ω)	Engine coolant temperature at approx. 80 °C (176 °F) with engine running
				0.35 – 0.37 volts (136 – 144 Ω)	Engine coolant temperature at approx. 110 °C (230 °F) with engine running
E33-216	P/B	Compressor magnet clutch relay output	Ground to engine (Fig B)	0 – 1 volt	Blower fan motor switch and A/C switch ON with engine running
				10 – 14 volts	Except the above-mentioned with engine running

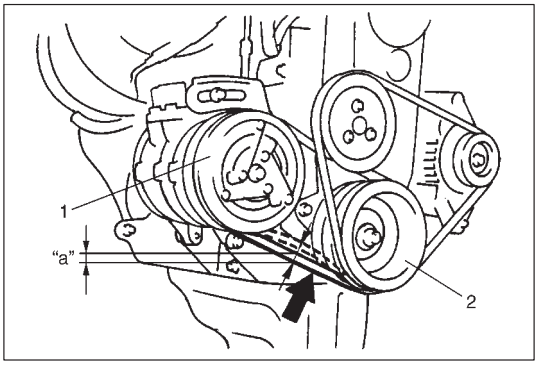

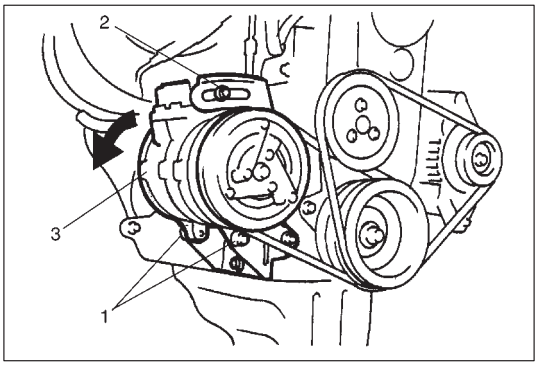

A/C COMPRESSOR DRIVE BELT INSPECTION

1) Check belt for wear and cracks, and replace as required.
2) Check belt tension by measuring how much it deflects when pushed at intermediate point between compressor pulley (1) and crankshaft pulley (2) with about 100 N (10 kg, 22 lbs) force.

"a" : 7 – 9 mm (0.27 – 0.35 in.) as deflection/100N (10 kg, 22 lbs)

If belt tension is without above specification, adjust belt tension by according to following items.

i) Loosen mounting bolts (1) and adjust bolt (2).
ii) Adjust belt tension rotated compressor (3) by using a wood bar.
iii) Tighten adjust bolt (2) and mounting bolt (1) as rotated compressor.
iv) Turn the crank pulley one revolution, then check belt tension.

RECOVERY, EVACUATION AND CHARGING

OPERATION PROCEDURE FOR CHARGING A/C WITH REFRIGERANT

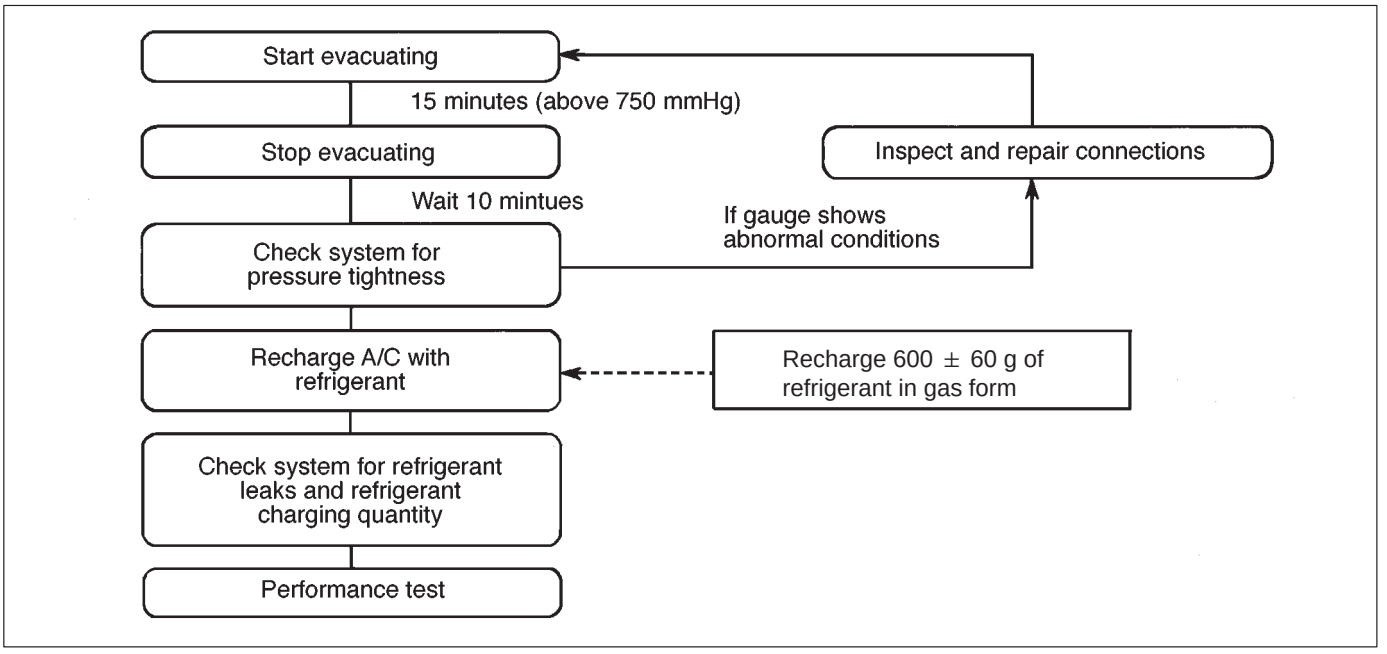

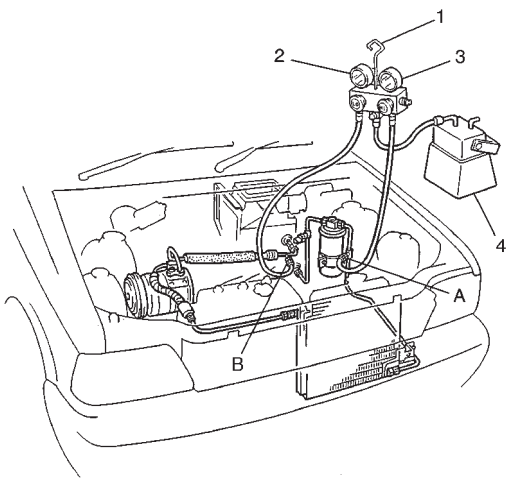

1. Manifold gauge set
2. Low pressure gauge
3. High pressure gauge
4. Recovery equipment

A: High pressure service valve
B: Low pressure service valve

REFRIGERANT RECOVERY

When discharging refrigerant out of A/C system, always recover it by using refrigerant recovery and recycling equipment. Discharging it into atmosphere would cause adverse effect to environments.

NOTE:
When handling recovery and recycling equipment, be sure to follow the instruction manual for the equipment.

EVACUATING AND CHARGING

Refer to AIR CONDITIONING BASIC MANUAL (99520-02130).

NOTE:
Specified amount of refrigerant: 600 ± 60g

ON-VEHICLE SERVICE

NOTE:

When refrigerant line must be disconnected and connected to remove and reinstall any component of A/C system, be sure to observe the following instructions.

- **When disconnecting any line from the system, install a blinding plug or cap to fitting of such line immediately.**
- **When connecting hoses and pipes to each other respectively, previously apply a few drops of compressor oil (refrigerating oil) to O-ring.**

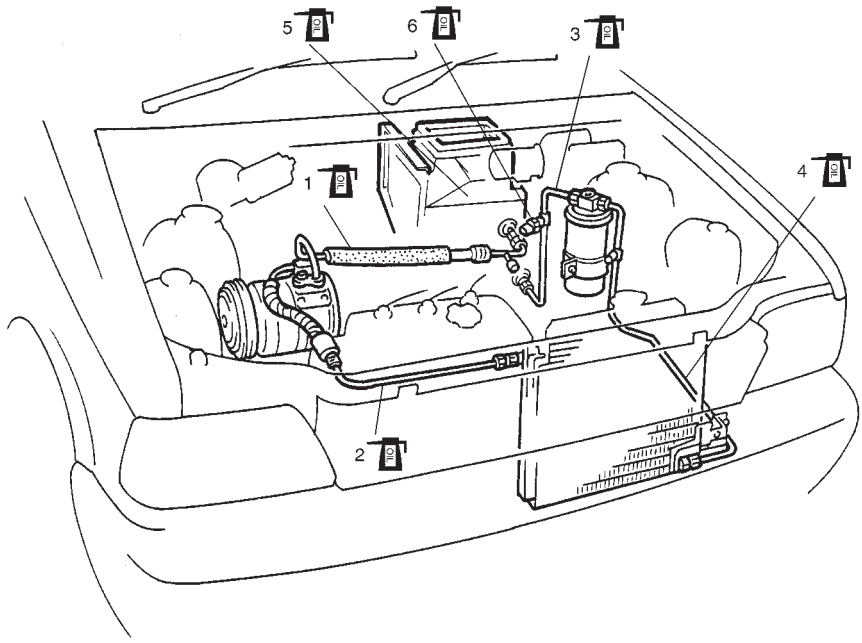

1. Suction hose:
   Apply compressor oil (refrigerant oil) to O-ring.
2. Discharge hose:
   Apply compressor oil (refrigerant oil) to O-ring.
3. Receiver/dryer outlet pipe:
   Apply compressor oil (refrigerant oil) to O-ring.
4. Condenser outlet pipe:
   Apply compressor oil (refrigerant oil) to O-ring.
5. Expansion valve:
   Apply compressor oil (refrigerant oil) to O-ring.
6. Dual pressure switch:
   Apply compressor oil (refrigerant oil) to O-ring.

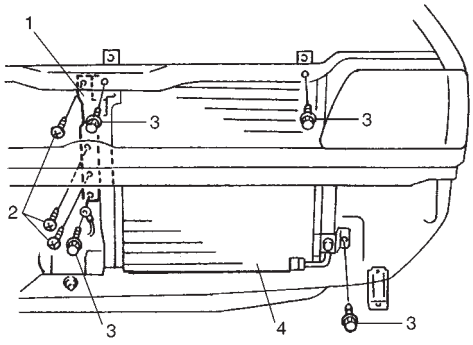

A/C CONDENSER ASSEMBLY

REMOVAL

1) Disconnect negative (–) cable at battery.
2) Recover refrigerant from refrigeration system by using recovery and recycling equipment.
3) Remove front bumper. Refer to FRONT BUMPER in BODY SERVICE Section.
4) Disconnect discharge hose from condenser.
5) Disconnect condenser outlet pipe from condenser.
6) Loosen radiator upper mounting bolt.
7) Remove front center member (1) by loosening its mounting screws (2).
8) Loosen condenser mounting bolt (3).
9) Remove condenser assembly (4).

INSTALLATION

Reverse removal sequence to install condenser, noting the following point.

- If condenser is replaced, pour 15 cc of refrigerating oil to compressor suction-side.
- Evacuate and charge system according to previously described procedure.

INSPECTION

Check the following.

- Condenser fins for leakage, blockage and damage
- Condenser fittings for leakage

Clogged condenser fins should be washed with water, and should be dried with compressed air.

NOTE:

Be careful not to damage condenser fins. If condenser fin is bent, straighten it by using a screwdriver or pair of pliers. If any leakage is found from fitting or tube, repair or replace condenser.

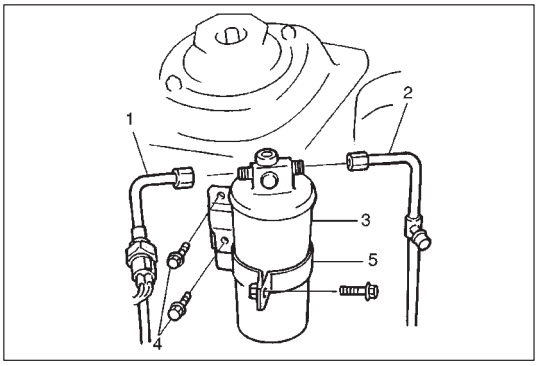

RECEIVER/DRYER

REMOVAL

1) Recover refrigerant from refrigeration system by using recovery and recycling equipment.
2) Disconnect receiver/dryer outlet pipe (1) and condenser outlet pipe (2) from receiver/dryer (3).
3) Loosen receiver/dryer bracket bolts (4).
4) Remove receiver/dryer with its bracket (5).

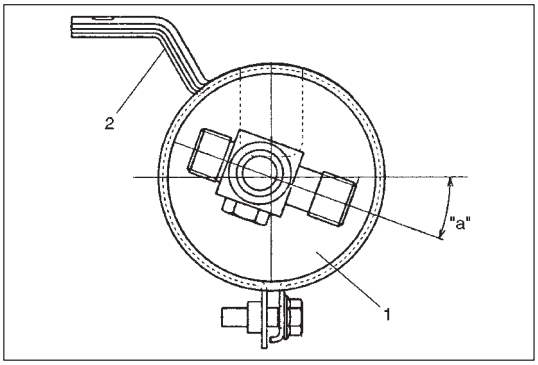

INSTALLATION

Reverse removal sequence to install receiver/dryer noting the following points.

- If receiver/dryer (1) is replaced, pour 20 cc of refrigerating oil to compressor suction-side.
- Evacuate and charge system according to previously described procedure.
- Install receiver/dryer (1) to its bracket (2) as shown in figure.
  “a” 20°

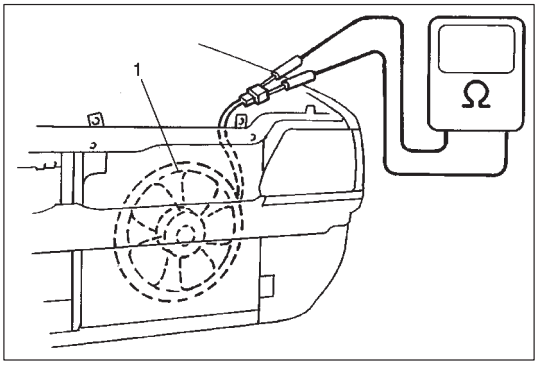

RADIATOR (AND CONDENSER) COOLING FAN MOTOR

INSPECTION

Check continuity between each two terminals about the radiator (and condenser) cooling fan motor (1).
If check results are continuity, proceed to next operation check.
If not, replace.

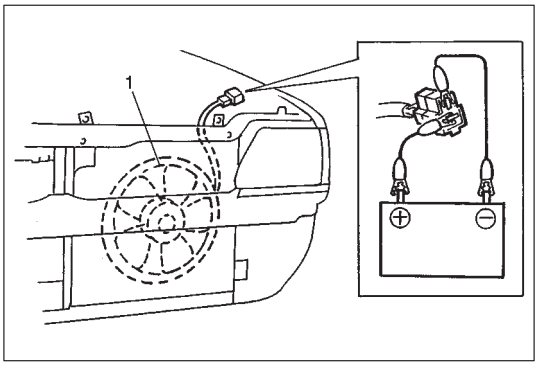

Connect battery to radiator (and condenser) cooling fan motor (1) as shown in figure, then check that the radiator (and condenser) cooling fan motor operates smoothly.

Reference current : approx. 8.5 – 11.5 A at 12 V

REMOVAL AND INSTALLATION

Refer to RADIATOR in ENGINE COOLING SYSTEM Section.

COOLING UNIT (EVAPORATOR)

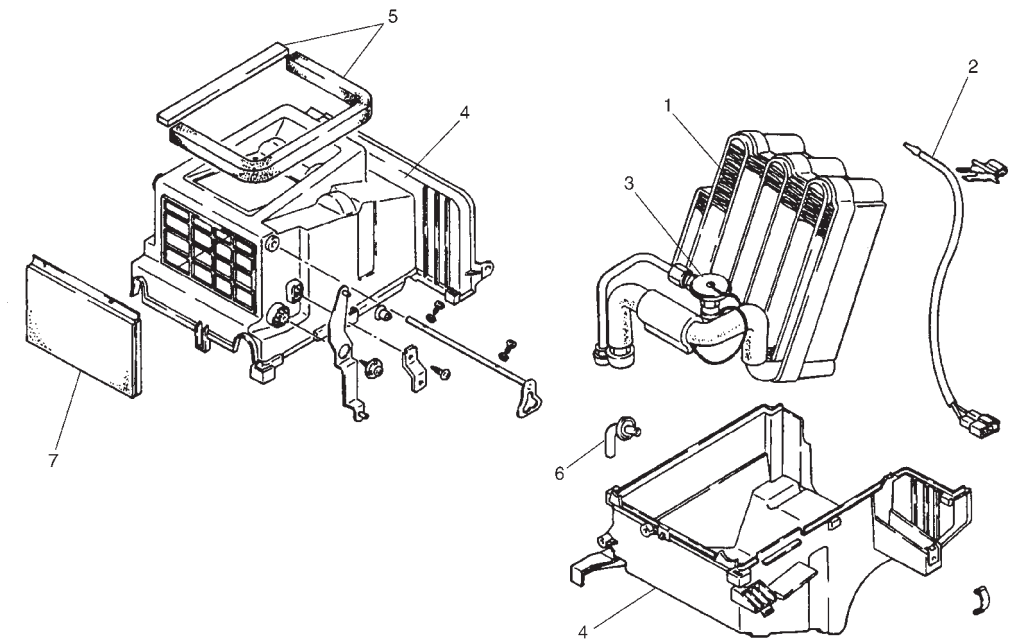

1. Evaporator
2. A/C Evaporator thermistor (Evaporator temperature sensor)
3. Expansion valve
4. Evaporator case
5. Packing
6. Drain hose
7. Air inlet door

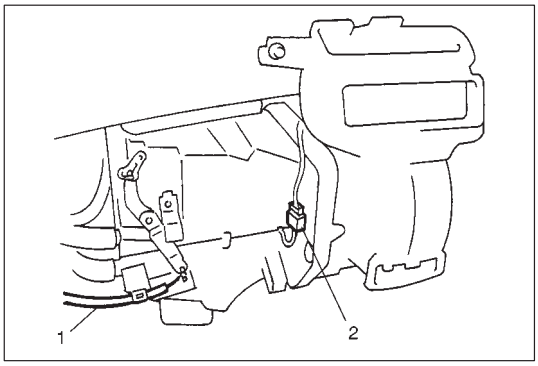

REMOVAL

1) Disconnect negative (–) cable at battery.
2) Recover refrigerant from refrigeration system by using recovery and recycling equipment.
3) Remove fresh air control cable (1) and disconnect evaporator thermistor coupler (2).

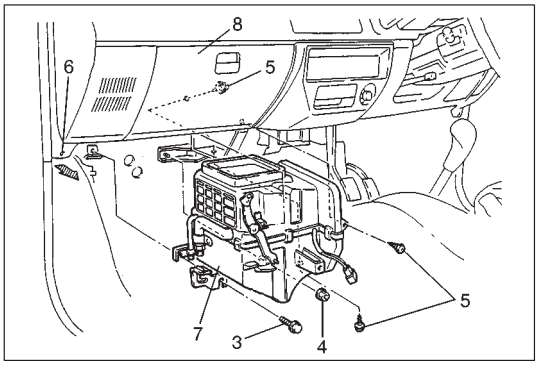

4) Loosen suction hose and receiver/dryer outlet hose.
5) Open glove box lid (8).
6) Loosen cooling unit mounting bolts (3), nut (4) and screws (5).
7) Loosen instrument panel mounting bolt (6).
8) Remove cooling unit (7).

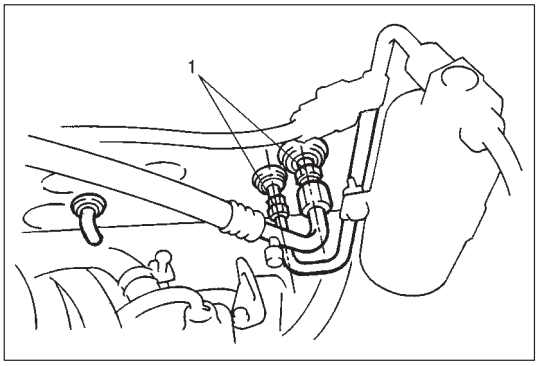

INSTALLATION

Reverse removal sequence to install cooling unit, noting the following points.

- If cooling unit or evaporator is replaced, pour 25 cc of refrigerating oil to compressor suction-side.
- Install uniformly the evaporator pipe (1) to grommet.

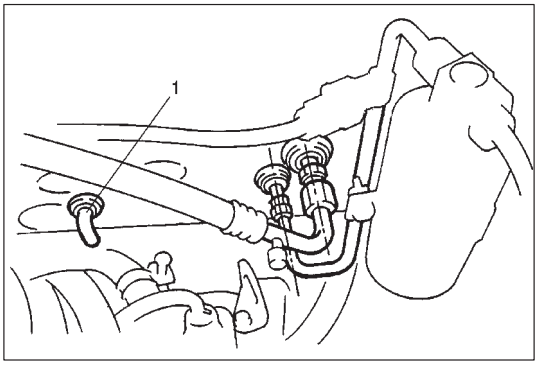

- Evacuate and charge system according to previously described procedure.
- Adjust fresh air control cable, refer to HEATER CONTROL LEVER ASSEMBLY in HEATER AND VENTILATION section.
- Install the cutting part of drain hose (1) downward as shown in figure.

INSPECTION

Check the following

- Evaporator fins for leakage, blockage and damage.
- Evaporator fittings for leakage.

Clogged evaporator fins should be washed with water, and should be dried with compressed air.

NOTE:

- **Be careful not to damage evaporator fins. If evaporator fin is bent, straighten it by using a screwdriver or pair of pliers, If any leakage is found from fitting or tube, repair or replace evaporator.**
- **When the thermistor removed, its should be reinstalled in original position.**

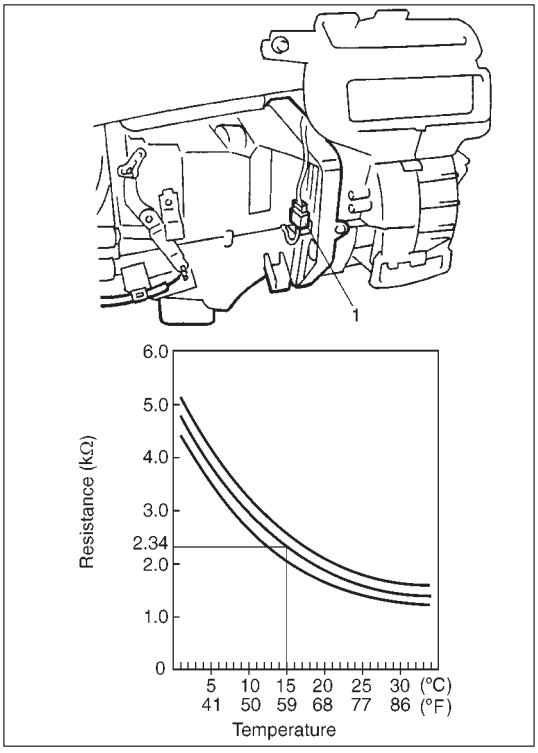

A/C EVAPORATOR THERMISTOR

Check resistance between evaporator thermistor (1) terminals.

Sensor Temperature (°C (°F))	Resistance (kΩ)
0 (32)	4.6 – 5.1
15 (59)	2.1 – 2.6

If check results are as not specified, replace thermistor.

NOTE:

When the thermistor removed, its should be reinstalled in original position.

EXPANSION VALVE

INSPECTION

Refer to “Troubleshooting Procedure Using Manifold Gauge Set” earlier in this Section.

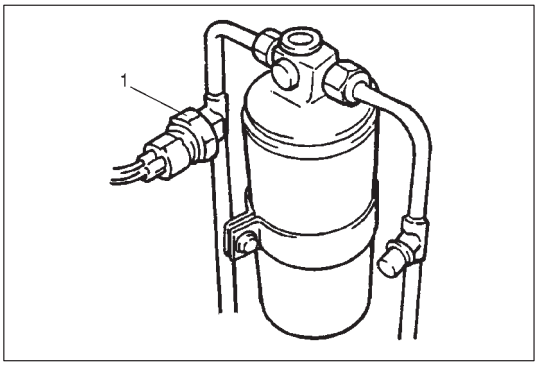

DUAL PRESSURE SWITCH

INSPECTION

1) Check dual pressure switch (1) for continuity at normal temperature (approx. 25°C (77°F)) when A/C system has a proper charge of refrigerant and when A/C system (compressor) is under operation. In each of these cases, switch should show proper continuity.

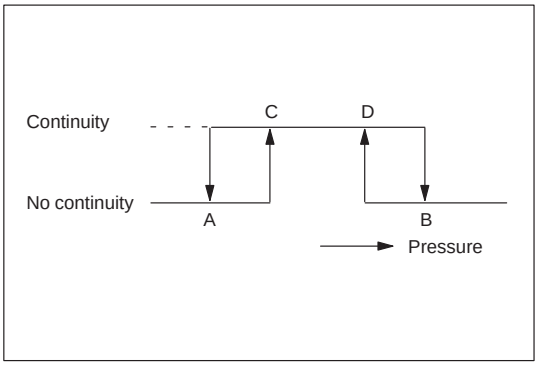

2) Check switch for continuity at specified pressure as shown.

A: Approx. 210 kPa (2.1 kg/cm^2)
B: Approx. 2650 kPa (26.5 kg/cm^2)
C: Approx. 230 kPa (2.3 kg/cm^2)
D: Approx. 2060 kPa (20.6 kg/cm^2)

Tightening torque for dual pressure switch
10 N·m (1.0 kg-m, 8.0 lb-ft)

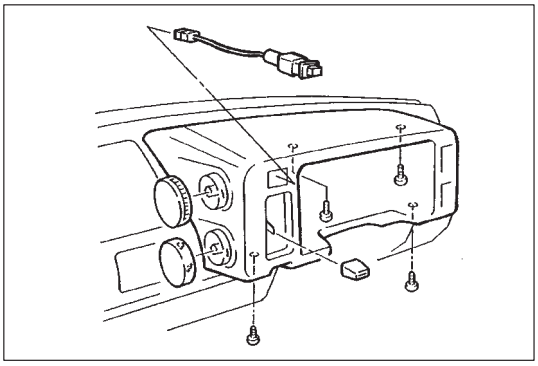

A/C SWITCH

REMOVAL

1) Disconnect A/C switch coupler from instrument panel harness.
2) Remove meter cluster, refer HEATER CONTROL LEVER in section 1A.
3) Pull out A/C switch by unlock the locking part.

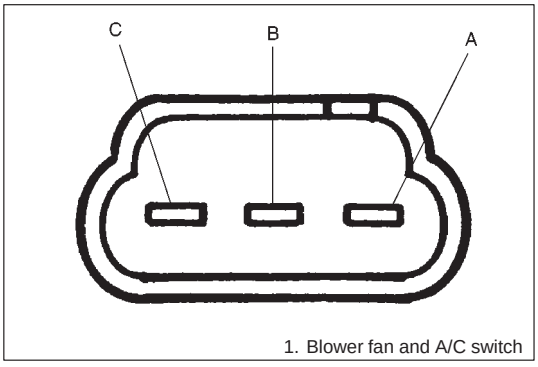

1. Blower fan and A/C switch

INSPECTION

- Press A/C Switch button and check if there is continuity between terminals “A” and “B”.
- With battery voltage (+) connected to terminal “C” and (–) to terminal “A”, press A/C Switch button and check if indicator lamp lights.

INSTALLATION

Reverse removal procedure for installation.

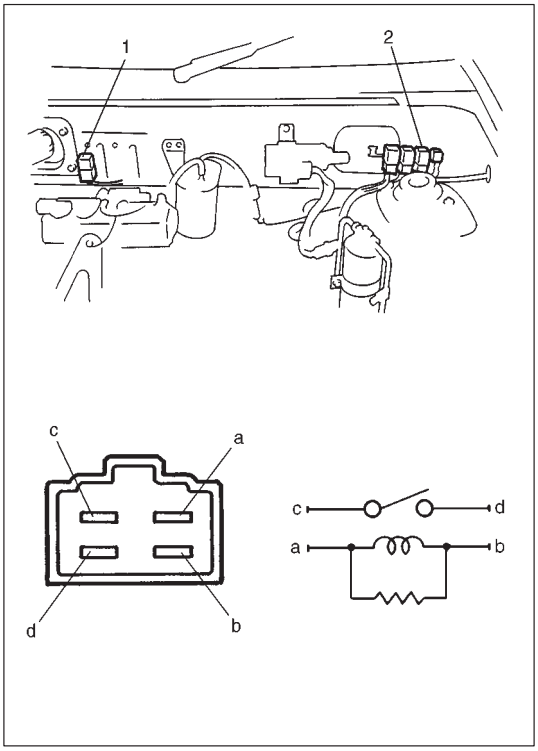

RADIATOR (AND CONDENSER) COOLING FAN RELAY AND COMPRESSOR RELAY

INSPECTION

1) Disconnect negative (–) cable at battery.
2) Remove radiator cooling fan relay (1) and compressor relay (2) from vehicle.
3) Check that there is no continuity between terminal “c” and “d”. If there is continuity, replace relay.
4) Connect battery positive (+) terminal to terminal “b” of relay. Connect battery negative (–) terminal “a” of relay. Check continuity between terminal “c” and “d”. If there is no continuity when relay is connected to the battery, replace relay.

COMPRESSOR

REMOVAL

1) RUN engine at idle speed with air conditioning ON for 10 minutes. After that stop the engine.
2) Disconnect negative (–) cable at battery.
3) Recover refrigerant from refrigeration system by using recovery and recycling equipment.

4) Remove air cleaner and its hose.
5) Disconnect magnet clutch lead wire coupler.

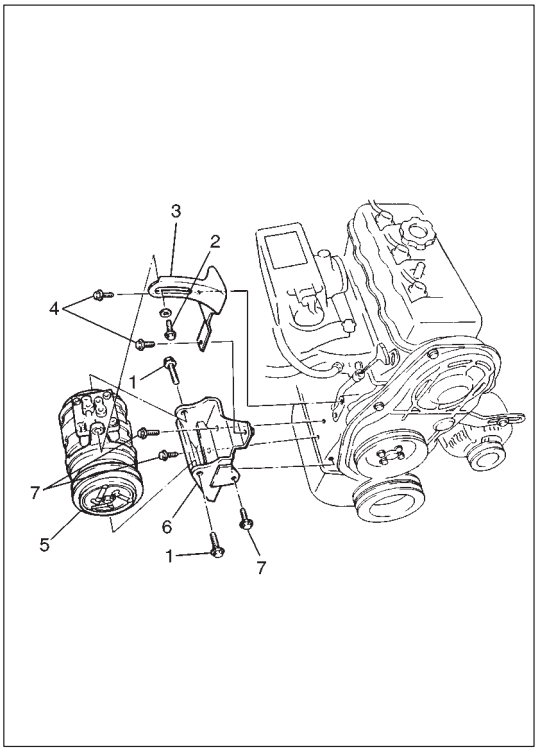

6) Disconnect suction and discharge hoses from compressor.

   NOTE:
   Cap open fittings immediately to keep moisture out of system.

7) Remove compressor mounting bolts (1) and adjusting bolt (2) as keep compressor in that position.
8) Remove compressor upper bracket (3) by loosening it mounting bolt (4).
9) Remove compressor with magnet clutch assembly (5).
10) If compressor is replaced.
    Drain oil from compressor, and measure its amount.
11) Remove compressor lower bracket (6) by loosening mount bolts (7).

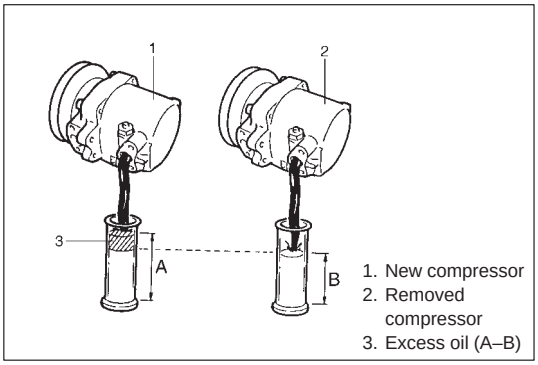

INSTALLATION

Reverse removal procedure noting the following points.

- If compressor is replaced, pour new compressor oil with the same amount as that drained from compressor in REMOVAL. Refer to “REPLENISHING COMPRESSOR OIL” in this section.
- Evacuate and charge system according to previously described procedure.

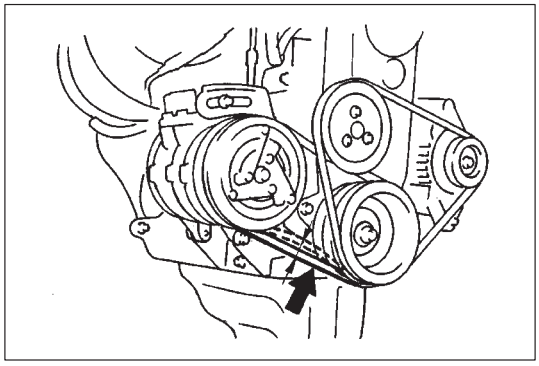

- Adjust drive belt tension. Refer to “DRIVE BELT INSPECTION” in this Section.

CAUTION:
Be sure to use CFC-12 (R-12) compressor oil.

NOTE:
Compressor assembly supplied from factory is filled up with the following amount of oil.
Oil amount in compressor: 60 – 100 cm^3
(60 – 100 cc, 3.7 – 6.1 in^3)

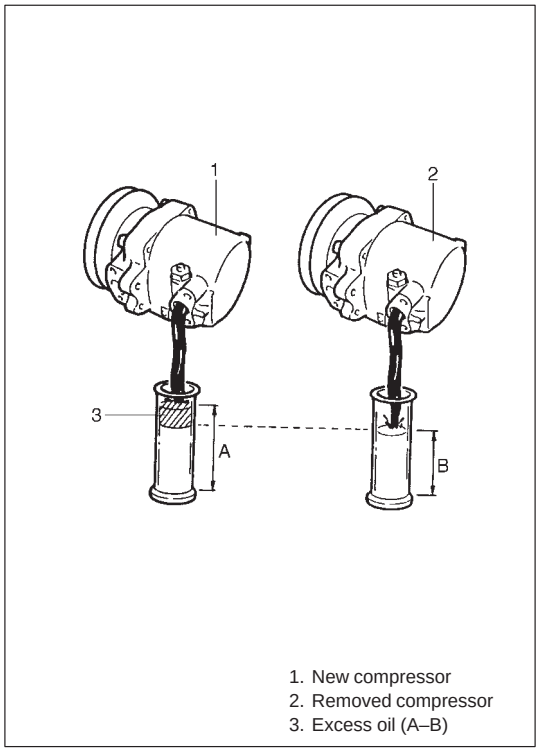

1. New compressor
2. Removed compressor
3. Excess oil (A–B)

REPLENISHING COMPRESSOR OIL

When replacing air conditioning parts with new ones, it is necessary to replenish oil by the amount supposedly remaining in each part.

When changing gas only

When it is unavoidable to change gas without replacing any component part for engine removal and installation or for some other reason, replenish 50cc oil. When replenishing gas only, oil replenishment is not necessary.

When replacing compressor

Compressor oil is sealed in each new compressor by the amount required for air conditioner cycle. Therefore, when using a new compressor for replacement, drain oil from it by the amount calculated as follows.

“C” = “A” – “B”
“C”: Amount of oil to be drained
“A”: Amount of oil sealed in a new compressor
“B”: Amount of oil remaining in removed compressor

When replacing other part

Part replaced	Amount of compressor oil to be replenished
Evaporator	25 cc
Condenser	15 cc
Receiver/dryer	20 cc
Hoses	10 cc each
Pipes	10 cc each

MAGNET CLUTCH

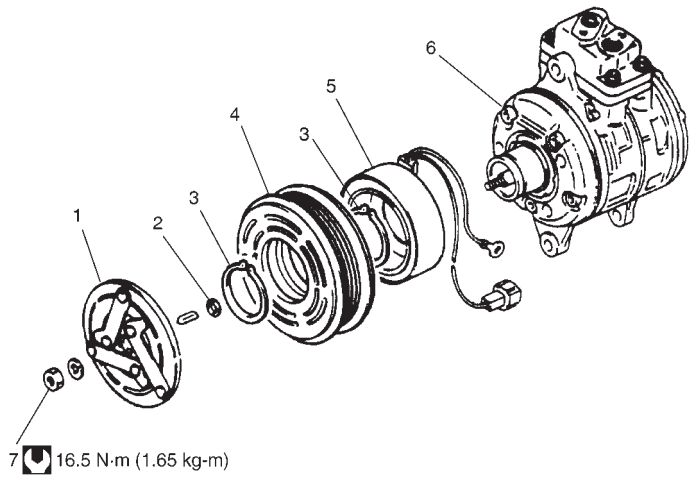

1. Pressure plate
2. Shim
3. Circlip
4. Drive clutch
5. Magnetic clutch coil
6. Compressor
7. Pressure plate nut

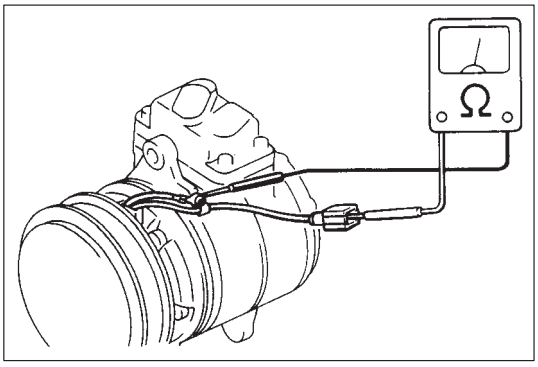

INSPECTION

a. Inspect clutch plate and clutch pulley for signs of oil.
b. Check clutch pulley bearings for noise and grease leakage.
c. Using ohmmeter, measure resistance of clutch coil between clutch lead wire and compressor body ground.

If measured resistance is not within tolerance, replace coil.

Standard resistance: 3.0 – 3.5 Ω at 20 °C, 68 °F

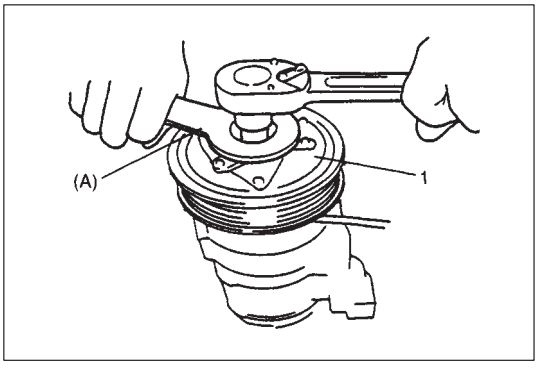

1) Fix Pressure plate with special tool (A) and then remove pressure plate nut and washer.

Special Tool
(A): 09991-06020

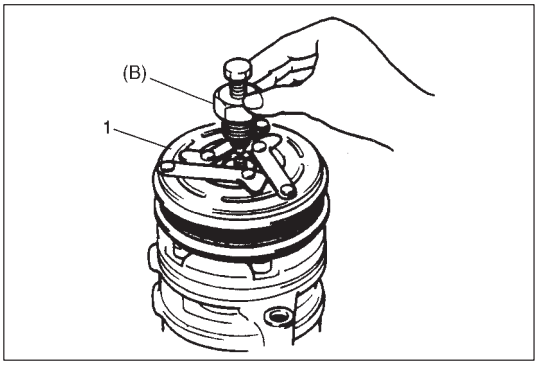

2) Remove pressure plate (1) by using a special tool (B).

Special Tool
(B): 09990-58210

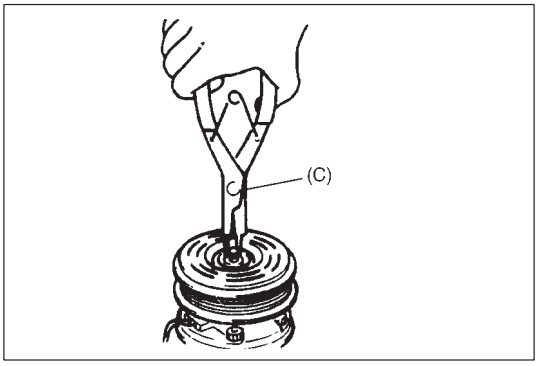

3) Remove shims from shaft.
4) Remove circlip by using special tool (C).

Special Tool
(C): 09900-06107

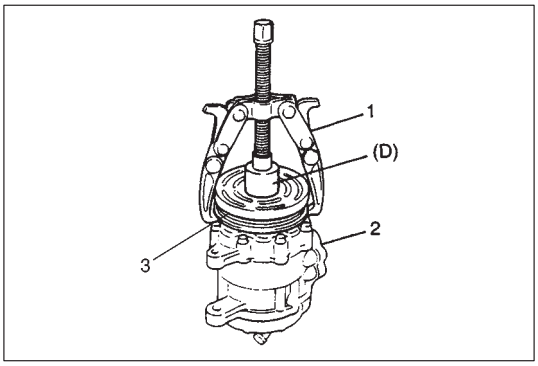

5) Whith special tool (D) in place, remove drive clutch (3) from compressor (2) with puller (1).

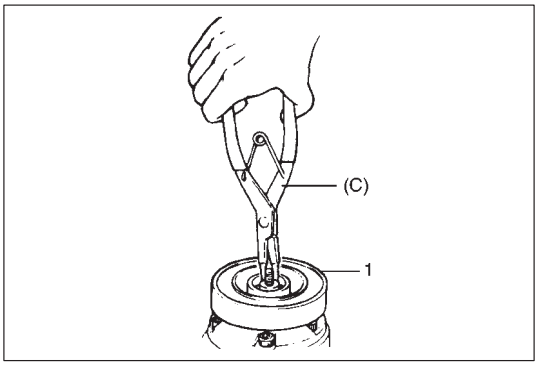

6) Disconnect coil lead wire from compressor housing.
7) Remove circlip by using special tool (C).
8) Remove clutch coil (1).

Special Tool
(C): 09900-06107

DISASSEMBLY OF COMPRESSOR

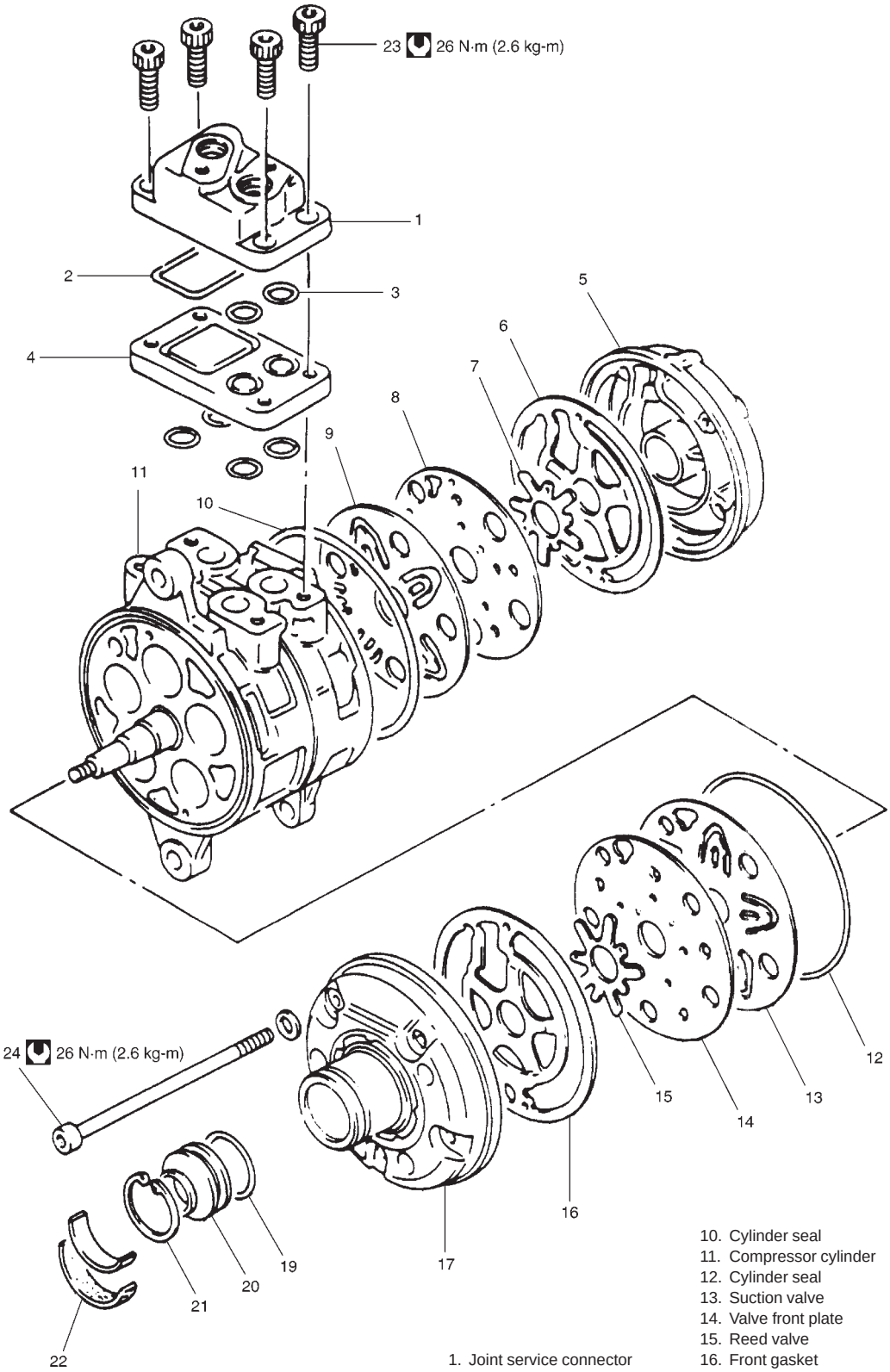

1. Joint service connector
2. Diffuser seal
3. “O” ring
4. Diffuser
5. Rear housing
6. Rear gasket
7. Reed valve
8. Valve rear plate
9. Suction valve
10. Cylinder seal
11. Compressor cylinder
12. Cylinder seal
13. Suction valve
14. Valve front plate
15. Reed valve
16. Front gasket
17. Cylinder front head
18. Blank
19. “O” ring
20. Seal plate
21. Circlip
22. Oil felt
23. Joint service connector bolt
24. Housing through bolt

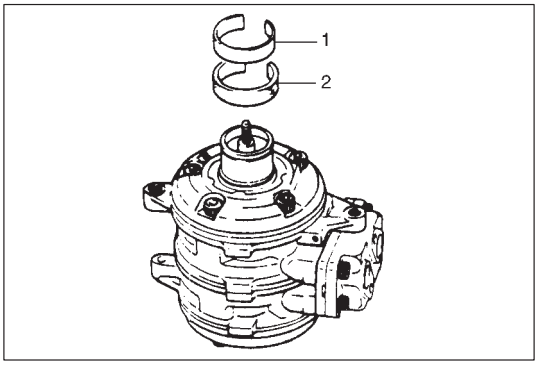

1) Pry out oil ring (1) by using like a screwdriver, and then remove oil felt (2).

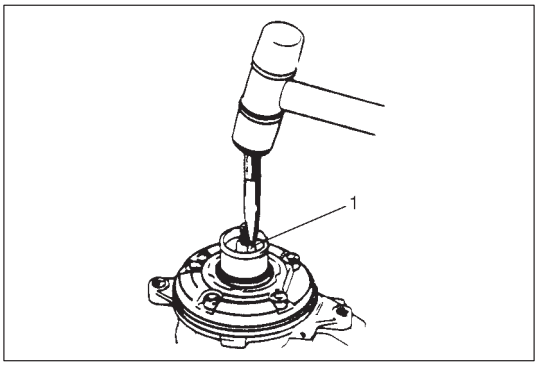

2) Remove key (1) from shaft by using a hammer and punch.

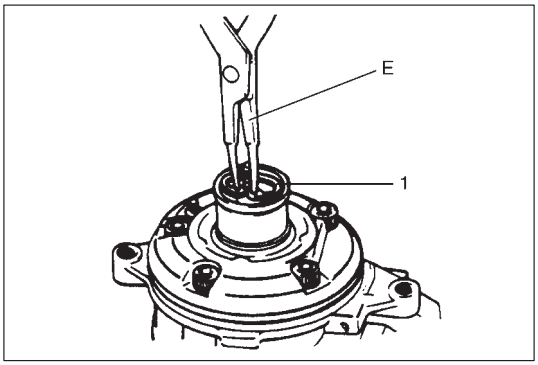

3) Remove circlip (1) by using special tool (E).

Special Tool
(E): 09900-06108

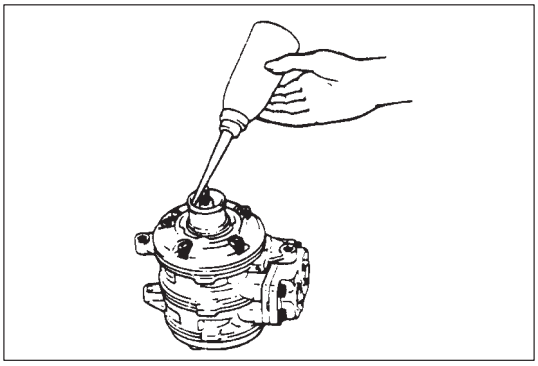

4) Apply compressor oil to inner bore.

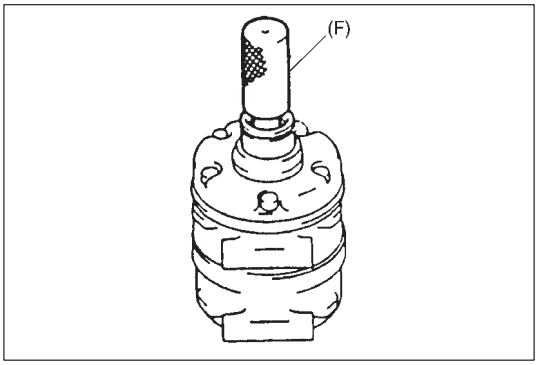

5) Remove lip seal by using special tool (F). The following explains this removal procedure.

a. Fit special tool (F) into the clutch installation boss.

Special Tool
(F): 09990-48220

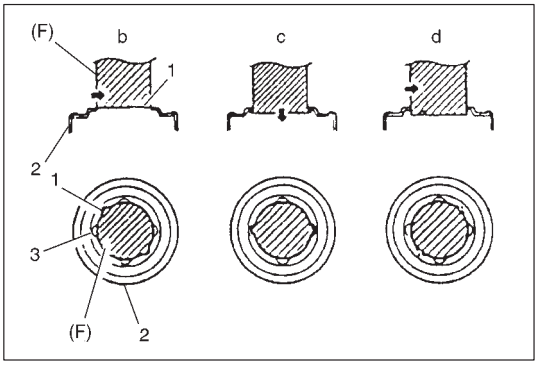

b. Turn special tool (F) unit its protrusion (1) engages with the groove (3) provided on lip seal (2).
c. Check that special tool (F) goes down slightly when the protrusion (1) and groove (3) are engaged.
d. Turn special tool (F) by 30° – 60°.

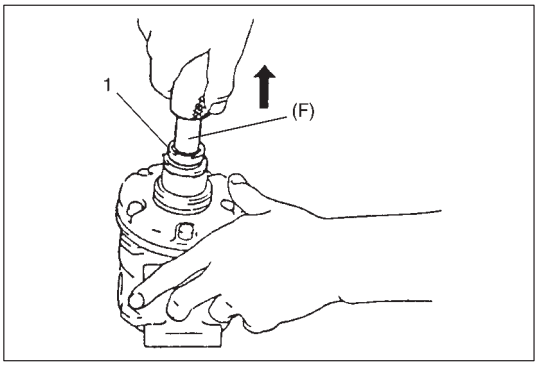

e. Pull up special tool (F) to remove lip seal (1).

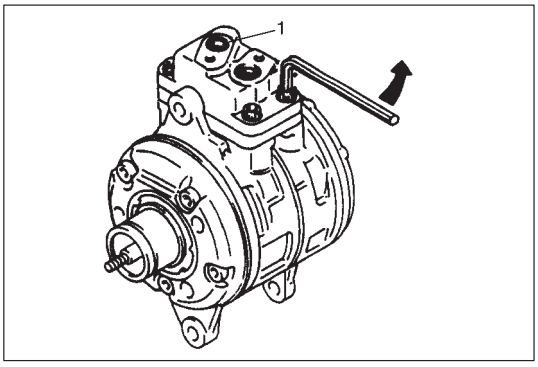

6) Remove joint service connector (1).

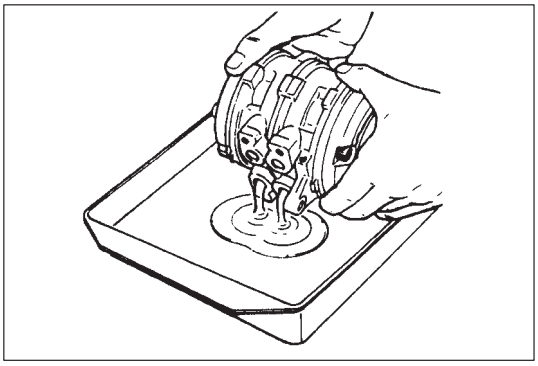

7) Remove “O” rings from service connector and discard them.
8) Drain oil into container.

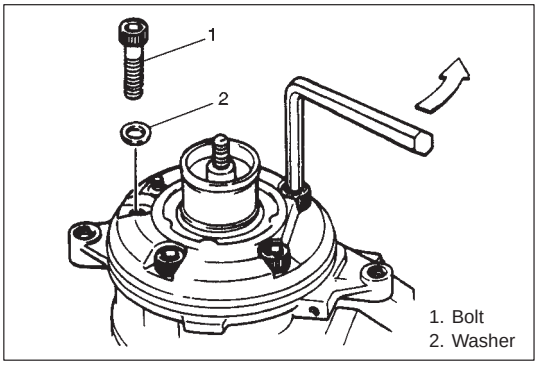

9) Remove front housing.

NOTE:
Do not reuse five washers.

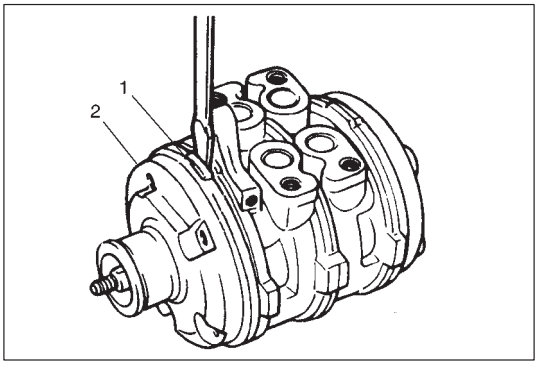

10) Remove front housing (2) by prying its protrusion (1).

NOTE:
Be careful not to scratch sealing surface of front housing.

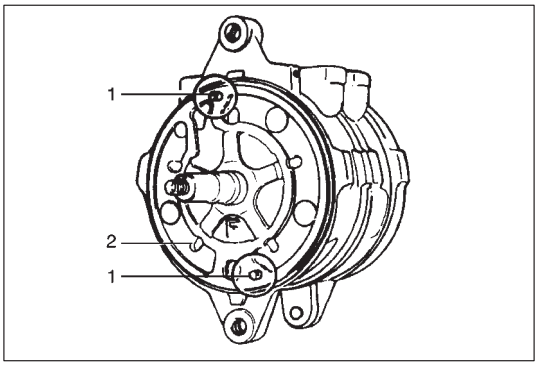

11) Remove front valve plate (2).
Remove two pins (1) from cylinder block.

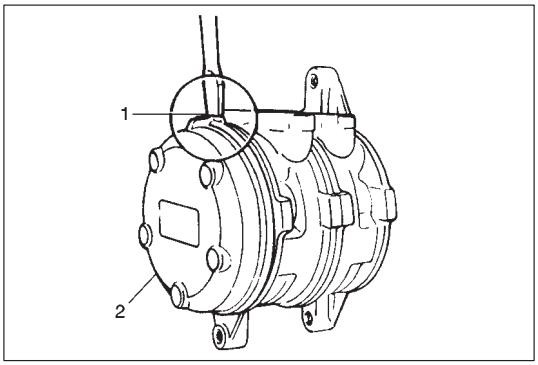

12) Remove the rear housing (2) by prying its protrusion (1).

NOTE:
Be careful not to scratch sealing surface of rear housing.

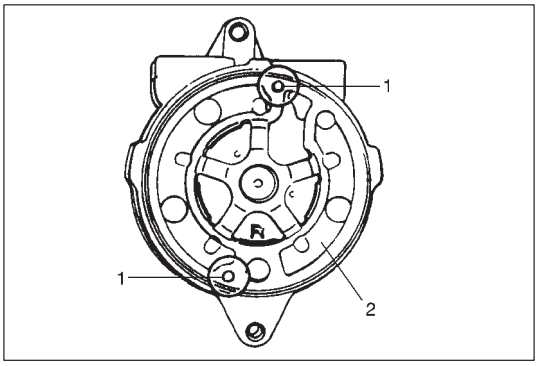

13) Remove rear valve plate (2).
Remove two pins (1) from rear housing.

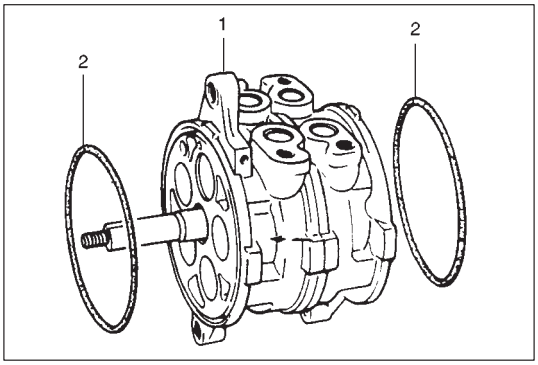

14) Remove front and rear “O” rings (2) from cylinder block (1) and discard them.

CHECKING COMPONENTS

Clean all parts with cleaning solvent and apply compressor oil to them.

PARTS NAME	CHECK POINT	REMEDY
Lip seal	1. Check sealing surface for scratches and corrosion.	Replace
Valve plate	1. Check both surfaces for scratches and corrosion.	Replace or polish with fine oil stone.
Red valve	1. Check reed for cracks, scratches, deformation and corrosion.	Replace
Front housing	1. Check sealing surface for cracks scratches and deformation.	Replace
Piston/Cylinder block 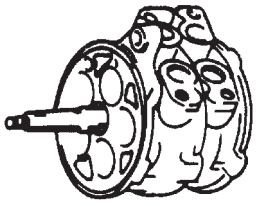	1. Check cylinder bore for scratches and corrosion. 2. Check radial bearings for poor contact, worn-out needle, scoring or pit. 3. Check shaft for excessive axial play. 4. Check piston for excessive axial play.	Replace Replace Replace Replace
Rear housing	1. Check sealing surface for cracks, scratches and deformation.	Replace

ASSEMBLY OF COMPRESSOR

NOTE:
- **Do not re-use gasket shaft seal, O-rings, or washers. Use overhaul gasket kit.**
- **Before starting assembly, make sure all parts and workbench are clean.**

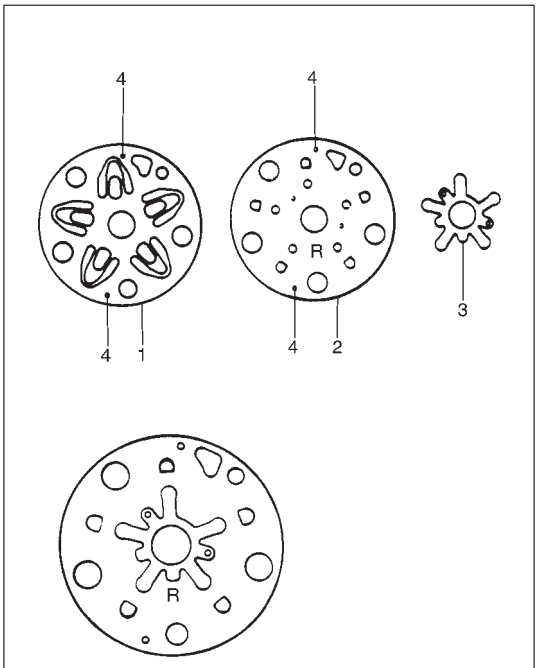

4. Pin holes

1) Install rear valve plate (2) on rear cylinder.
a. Install two pins in rear cylinder.
b. Lubricate new O-ring with compressor oil.
Install O-ring in rear cylinder.
c. Install suction reed valve (1), rear valve plate (2), and discharge reed valve (3) onto rear cylinder top.
For installing positions, refer to the figure.

NOTE:
- **Front and rear reed valves (suction and discharge) are the same.**
- **Rear valve plate is marked "R".**

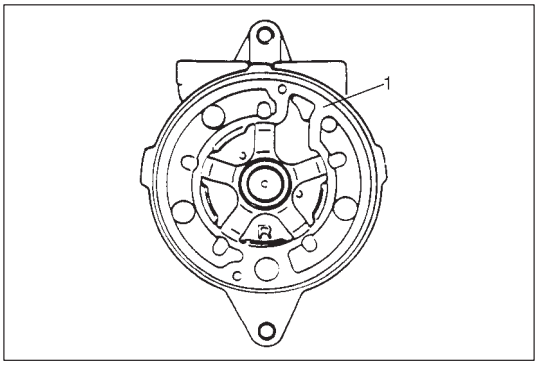

d. Lubricate gasket (1) with compressor oil. Install gasket (1) on valve plate.

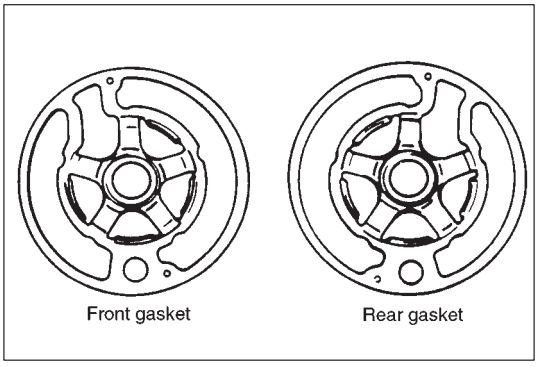

NOTE:
- **Front and rear gasket are different, so do not interchange them.**
- **Assemble gasket so that their protruded surfaces face upward.**

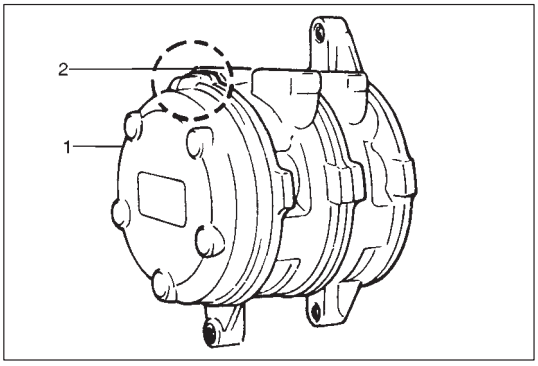

2) Install rear housing (2) on rear cylinder.
Housing protrusion (1) is positioned at the top.

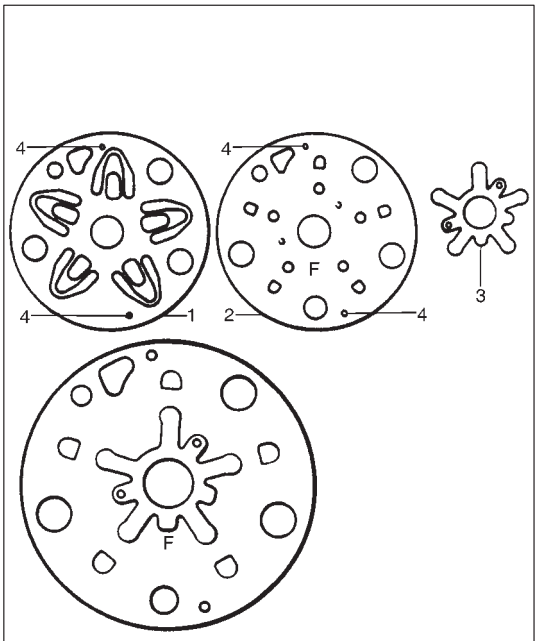

4. Pin holes

3) Install front valve plate (2) on front cylinder.
a. Install two pins in front cylinder.
b. Lubricate new O-ring with compressor oil.
Install O-ring in front cylinder.
c. Install suction reed valve (1), front valve plate (2), and discharge reed valve (3) onto front cylinder top.
For installing positions, refer to figure.

NOTE:
- **Front and rear reed valves (suction and discharge) are the same.**
- **Front valve plate is marked “F”.**

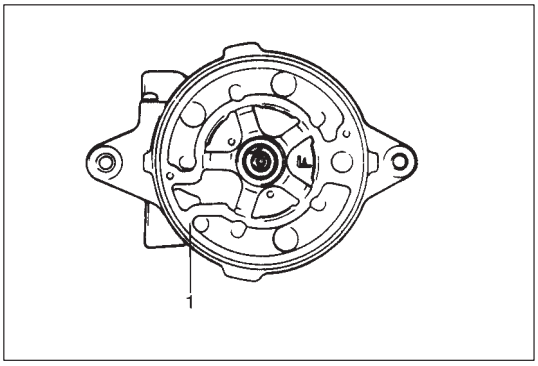

d. Lubricate gasket (1) with compressor oil. Install gasket (1) on valve plate.

NOTE:
- **Front and rear gaskets are different, so do not interchange them. (To differentiate them, refer to description on rear valve plate.)**
- **Assemble gaskets so that their protruded surfaces face upward.**

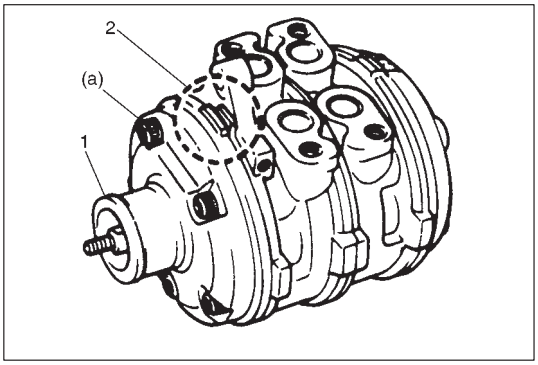

4) Install front housing (1) on front cylinder and tighten five through bolts.
a. Using a torque wrench and hexagon wrench, gradually tighten five through bolts.

NOTE:
Housing protrusion (2) is positioned at the top.

Tightening Torque
(a): 26 N·m (2.0 kg-m, 19 lb-ft)

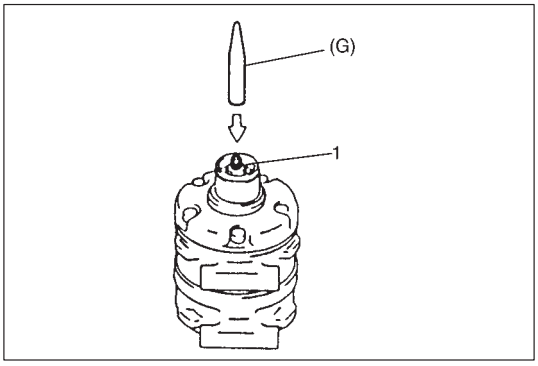

5) Install lip seal.

a. Coat special tool (G) surface with oil and install it to the shaft (1).

Special Tool
(G): 09990-58230

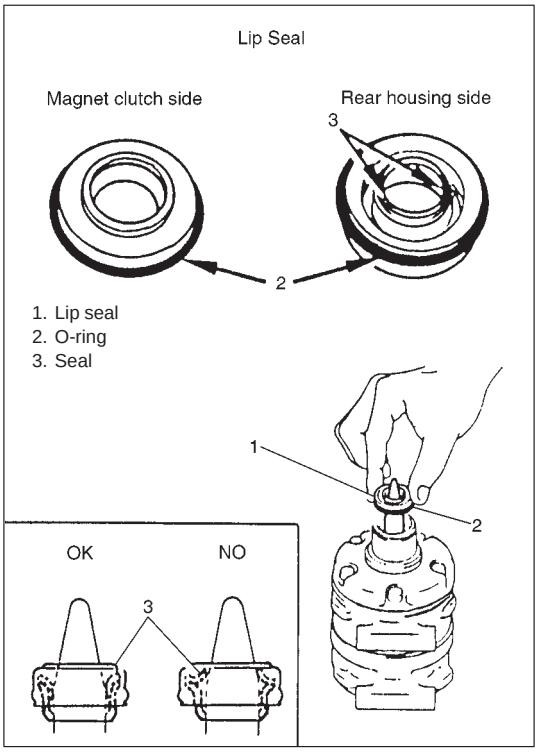

b. Apply oil lip seal O-ring and install it over special tool (E). When fitting lip seal over the special tool, care should be taken so as not to confuse its designated direction. The illustration left shows the designated direction.

> **CAUTION:**
> **Do not reuse lip seal once removed from compressor.**

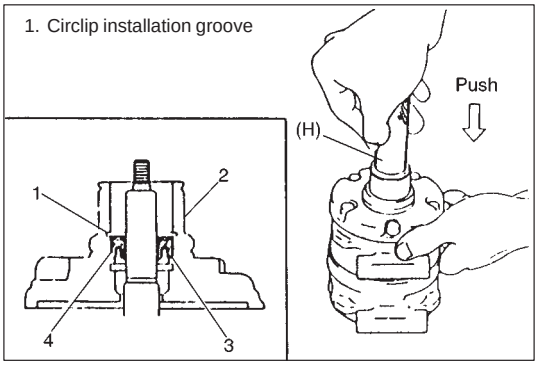

c. Press it slowly by hand until lip seal (4) contacts the stopper (3) of front housing (2) by using special tool (H).

Special Tool
(H): 09990-58220

NOTE:
With lip seal pressed in completely, its upper face must come to the position lower than the circlip fitting groove. Check this condition visually. Do not use a press machine, hammer, etc. when pressing.

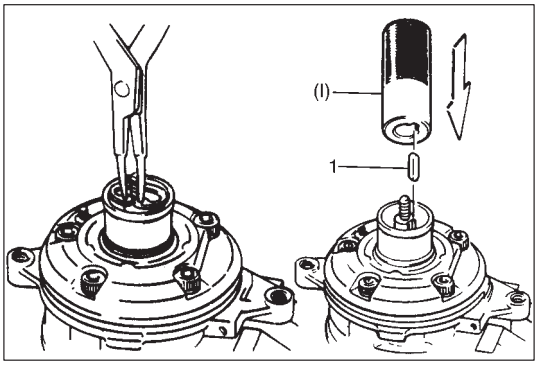

6) Install circlip.

7) Install key (1) in shaft groove.

a. Tap key lightly by using a plastic hammer and special tool (I).

Special Tool
(I): 09990-28210

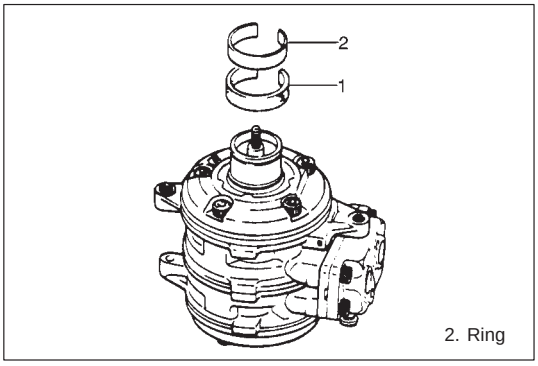

8) Install new oil felt (1) to inside the bore, and then install ring (2) to inside the bore.

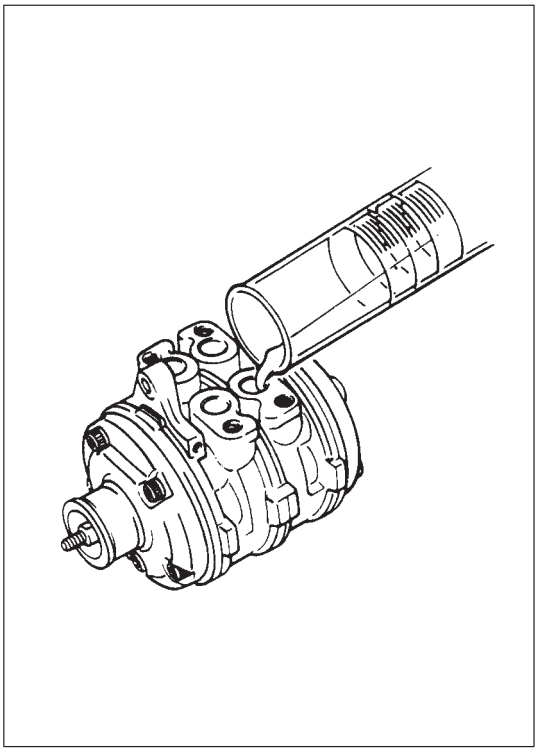

9) Pour compressor oil into compressor.

NOTE:
Compressor assembly supplied from factory is filled up with 60 – 100 cc oil. Therefore, when replacing compressor assembly with new one, drain 40 cc oil from it.
The rest 40 cc oil remain in parts except compressor.

Additional oil after
compressor overhauling: 40 cc (2.4 cu. in.)

Oil capacity in
air conditioner system: 60 – 100 cc (3.7 – 6.1 in^3.)

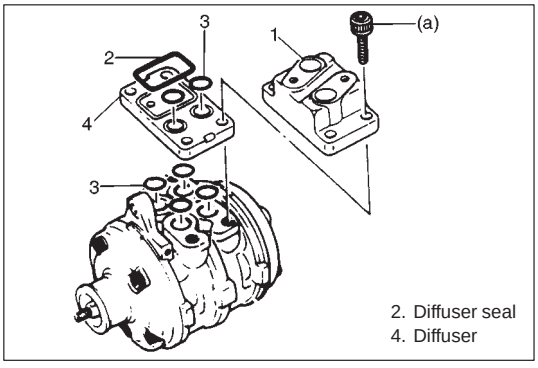

10) Install service connector.

a. Lubricate new O-rings (3) with compressor oil and install them in service connector (1).

b. Install service connector (1) to compressor.

NOTE:
Suction port has larger internal opening than discharge port.

Tightening Torque
(a): 26 N·m (2.6 kg-m, 19 lb-ft)

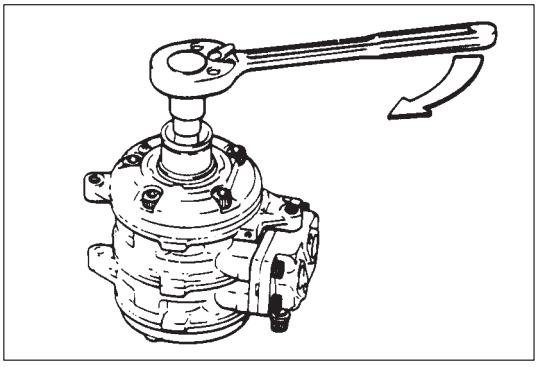

11) Check shaft rotating torque.

Rotating Torque
Less than 3.0 N·m (0.3 kg-m, 2.2 lb-ft)

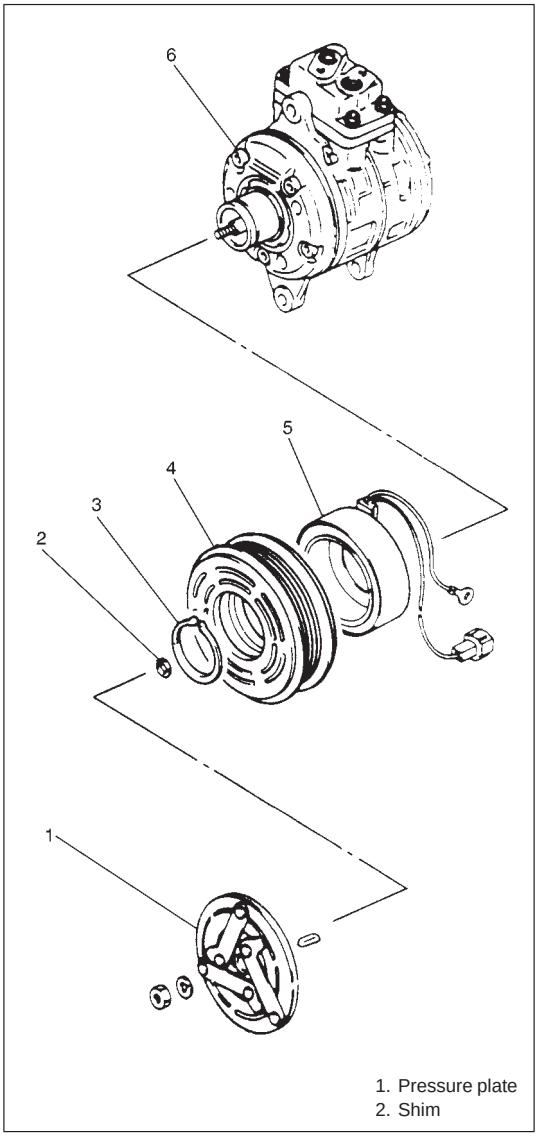

ASSEMBLY OF MAGNETIC CLUTCH

1) Install magnetic clutch coil (5).
2) Install drive clutch (4).
a. Install drive clutch (4) to compressor (6) shaft.
b. Using snap ring pliers, install snap ring (3).

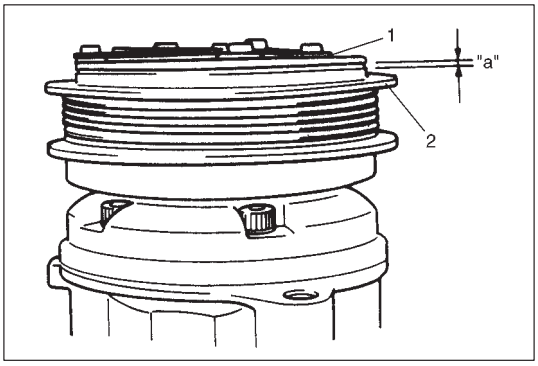

3) Install pressure plate.
a. Adjust clearance between pressure plate (1) and drive clutch (2) by putting shims on compressor shaft.

Standard clearance “a”: 0.4 – 0.7 mm (0.016 – 0.028 in.)

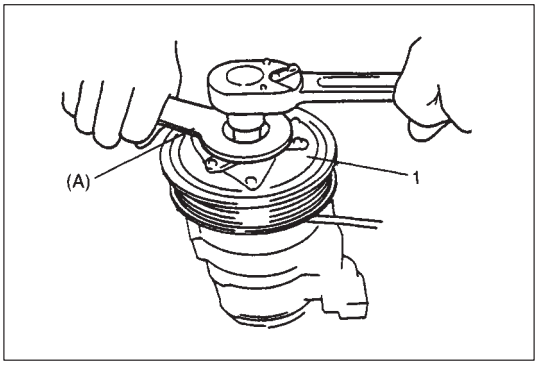

b. Fix pressure plate (1) with special tool (A) then tighten pressure plate fixing nut as specified below.

Special Tool
(A): 09991-06020

Tightening Torque:
16.5 N·m (16.5 kg-m, 12.0 lb-ft)

REQUIRED SERVICE MATERIALS

MATERIALS	RECOMMENDED SUZUKI PRODUCT	USE
Compressor oil (Refrigerant oil)	COMPRESSOR OIL DENSO : ND-OIL6	● O-ring ● Each component
Refrigerant	REFRIGERANT DRUM 95793-60D00-000	● Refrigerant charge

SPECIAL TOOLS

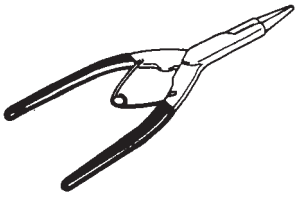 09900-06107 Snap ring pliers (Opening type)	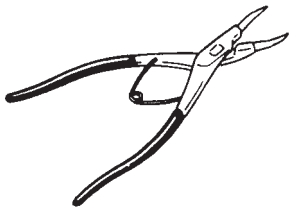 09900-06108 Snap ring pliers (Closing type)	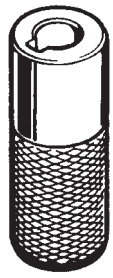 09990-28210 Key pressor	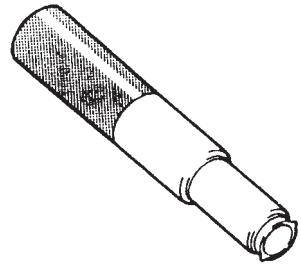 09990-48220 Lip seal remover
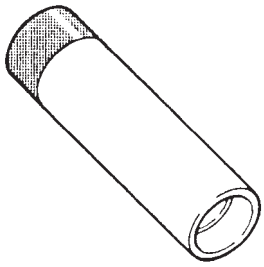 09990-58220 Lip seal pressor	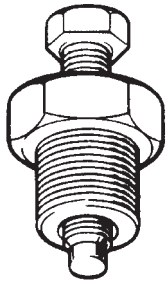 09990-58210 Pressure plate remover	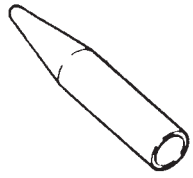 09990-58230 Lip seal protector	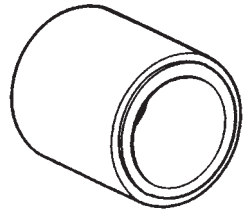 09951-65510 Shaft protector
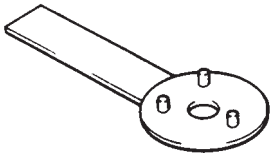 09991-06020 Armature plate spanner			

SECTION 3

STEERING, SUSPENSION, WHEELS AND TIRES

DIAGNOSIS 3-2
FRONT END ALIGNMENT . . . . . SECTION 3A
MANUAL RACK AND PINION . . . . . SECTION 3B
STEERING WHEEL AND COLUMN . . . . . SECTION 3C
FRONT SUSPENSION . . . . . SECTION 3D
REAR SUSPENSION (LEAF SPRING TYPE) . . . . . SECTION 3E
REAR SUSPENSION (COIL SPRING TYPE) . . . . . SECTION 3E1
WHEELS AND TIRES . . . . . SECTION 3F

CONTENTS

DIAGNOSIS
GENERAL DIAGNOSIS 3-2
DIAGNOSIS TABLE 3-2
TIRE DIAGNOSIS 3-6
Irregular and/or Premature Wear 3-6
Wear Indicators 3-6
Tire Waddle 3-6
Tire Lead 3-8
VIBRATION DIAGNOSIS 3-8

DIAGNOSIS

GENERAL DIAGNOSIS

Since the problems in steering, suspension, wheels and tires involve several systems, they must all be considered when diagnosing a complaint. To avoid using the wrong symptom, always road test the vehicle first. Proceed with the following preliminary inspection and correct any defects which are found.

1) Inspect tires for proper pressure and uneven wear.
2) Raise vehicle on a hoist and inspect front and rear suspension and steering system for loose or damaged parts.
3) Spin front wheels. Inspect for out-of-round tires, out-of-balance tires, bent rims, loosen and/or rough wheel bearings.

DIAGNOSIS TABLE

Condition	Possible Cause	Correction
Vehicle Pulls (Leads)	● Mismatched or uneven tires. ● Tires not adequately inflated. ● Broken or sagging springs. ● Radial tire lateral force. ● Disturbed front end alignment. ● Disturbed rear wheel alignment. ● Brake dragging in one road wheel. ● Loose, bent or broken front or rear suspension parts.	Replace tire. Adjust tire pressure. Replace spring. Replace tire. Check and adjust front end alignment. Check and adjust rear wheel alignment. Repair front brake. Tighten or replace suspension parts.
Abnormal or Excessive Tire Wear	● Sagging or broken spring. ● Tire out of balance. ● Disturbed front end alignment. ● Faulty strut (shock absorber). ● Hard driving. ● Overloaded vehicle. ● Not rotating tire. ● Worn or loose road wheel bearing. ● Wobbly wheel or tire. ● Tires not adequately inflated.	Replace spring. Adjust balance or replace tire. Check and adjust front end alignment. Replace strut. Replace tire. Replace tire. Replace or rotate tire. Replace wheel bearing. Replace wheel or tire. Adjust tire pressure.
Wheel Tramp	● Blister or bump on tire. ● Improper strut (shock absorber) action.	Replace tire. Replace strut.

Condition	Possible Cause	Correction
Shimmy, Shake or Vibration	● Tire or wheel out of balance.	Balance wheels or replace tire and/or wheel.
	● Loosen wheel bearings.	Replace wheel bearing.
	● Worn tie rod ends.	Replace tie rod end.
	● Worn lower ball joints.	Replace front suspension arm.
	● Excessive wheel runout.	Repair or replace wheel and/or tire.
	● Blister or bump on tire.	Replace tire.
	● Excessively loaded radial runout of tire/ wheel assembly.	Replace tire or wheel.
	● Disturbed front end alignment.	Check and adjust front end alignment.
	● Loose or worn steering linkage.	Tighten or replace steering linkage.
	● Loose steering gear case bolts.	Tighten case bolts.
Hard Steering	● Tire not adequately inflated.	Inflate tires to proper pressure.
	● Bind in tie rod end ball studs or lower ball joints.	Replace tie rod end or front suspension arm.
	● Disturbed front end alignment.	Check and adjust front end alignment.
	● Rack and pinion adjustment.	Check and adjust rack and pinion torque.
	● Bind in steering column.	Repair or replace.
Too Much Play in Steering	● Wheel bearings worn.	Replace.
	● Loose steering gear case bolts.	Tighten.
	● Rack and pinion adjustments.	Check and adjust rack and pinion torque.
	● Worn steering shaft joints.	Replace joint.
	● Worn tie rod ends or tie rod inside ball joints.	Replace tie rod end or tie rod.
	● Worn lower ball joints.	Replace front suspension control arm.
Poor Returnability	● Bind in tie rod end ball studs.	Replace tie rod end.
	● Bind in ball joints.	Replace.
	● Bind in steering column.	Repair or replace.
	● Poorly lubricated rack and pinion.	Check, repair or lubricate rack and pinion.
	● Disturbed front end alignment.	Check and adjust front end alignment.
	● Rack and pinion adjustment.	Check and adjust rack and pinion torque.
	● Tires not adequately inflated.	Adjust tire pressure.

Condition	Possible Cause	Correction
Rack and Pinion Noise (Rattle or Chuckle)	● Loose steering gear case bolts. ● Worn rack bush. ● Rack and pinion adjustment.	Tighten. Replace. Check and adjust rack and pinion torque.
Abnormal Noise, Front End	● Worn, sticky or loose tie rod ends, lower ball joints, tie rod inside ball joints or drive shaft joints. ● Damaged struts or mountings. ● Worn suspension arm bushings. ● Loose stabilizer bar. ● Loose wheel nuts. ● Loose suspension bolts or nuts. ● Broken or otherwise damaged wheel bearings. ● Broken suspension springs. ● Poorly lubricated or worn strut bearings.	Replace tie rod end, suspension arm, tie rod or drive shaft joint. Repair or replace. Replace. Tighten bolts or nuts, replace bushes. Tighten wheel nuts. Tighten suspension bolts or nuts. Replace. Replace. Replace strut bearing.
Wander or Poor Steering Stability	● Mismatched or uneven tires. ● Loosen ball joints and tie rod ends. ● Faulty struts or mountings. ● Loose stabilizer bar. ● Broken or sagging springs. ● Rack and pinion adjustment. ● Disturbed front end alignment.	Replace or inflate tires to proper pressure. Replace suspension arm or tie rod end. Replace strut or repair mounting. Tighten or replace stabilizer bar or bush. Replace spring. Check and adjust rack and pinion torque. Check and adjust front end alignment.
Erratic Steering When Braking	● Worn wheel bearings. ● Broken or sagging springs. ● Wheel tires are inflated unequally. ● Disturbed front end alignment. ● Brakes not working in unison. ● Leaking wheel cylinder or caliper. ● Warped discs. ● Badly worn brake linings. ● Drum is out of round in some brakes. ● Defective wheel cylinders.	Replace. Replace. Inflate tires to proper pressure. Check and adjust front end alignment. Refer to Section 5. Repair or replace wheel cylinder or caliper. Replace brake disc. Replace brake shoe linings. Replace brake drum. Replace or repair wheel cylinder.

Condition	Possible Cause	Correction
Low or Uneven Trim Height Right-to-left trim height "h" difference should be within 15 mm (0.6 in.) with curb weight. 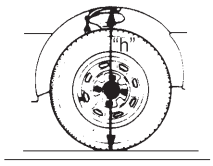 *Same with rear side.	● Broken or sagging springs. ● Overloaded. ● Incorrect springs.	Replace. Check loading. Replace.
Ride Too Soft	● Faulty struts (shock absorber).	Replace strut.
Suspension Bottoms	● Overloaded. ● Faulty struts (shock absorber). ● Incorrect, broken or sagging springs.	Check loading. Replace strut. Replace.
Body Leans or Sways in Corners	● Loose stabilizer bar. ● Faulty struts (shock absorbers) or mountings. ● Broken or sagging springs. ● Overloaded.	Tighten stabilizer bar bolts or nuts, or replace bushes. Replace strut or tighten mounting. Replace. Check loading.
Cupped Tires	● Front struts defective. ● Worn wheel bearings. ● Excessive tire or wheel run-out. ● Worn ball joints. ● Tire out of balance.	Replace. Replace. Replace tire or wheel disc. Replace front suspension arm. Adjust tire balance.

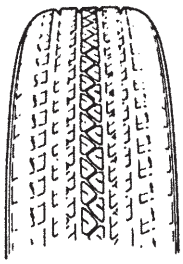

- Hard Cornering
- Under Inflation
- Lack of Tire Rotation

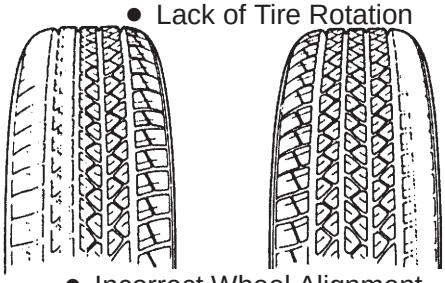

- Incorrect Wheel Alignment
- Tire Construction not Uniform
- Wheel Heavy Acceleration

TIRE DIAGNOSIS

IRREGULAR AND/OR PREMATURE WEAR

Irregular and premature wear has many causes. Some of them are: incorrect inflation pressures, lack of tire rotation, driving habits, improper alignment.

If the following conditions are noted, rotation is necessary:

1) Front tire wear is different from rear.
2) Uneven wear exists across the tread of any tire.
3) Front tire wear is unequal between the right and left.
4) Rear tire wear is unequal between the right and left.
5) There is cupping, flat spotting, etc.

A wheel alignment check is necessary if following conditions are noted:

1) Front tire wear is unequal between the right and left.
2) Wear is uneven across the tread of any front tire.
3) Front tire treads have scuffed appearance with “feather” edges on one side of tread ribs or blocks.

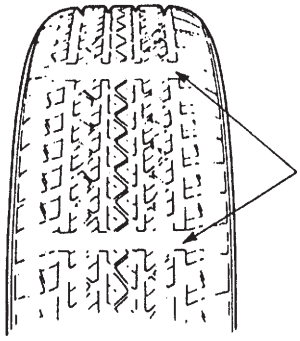

WEAR INDICATORS

Original equipment tires have built-in tread wear indicators to show when they need replacement.

These indicators will appear as 12 mm (0.47 in) wide bands when the tire tread depth becomes 1.6 mm (0.063 in).

When the indicators appear in 3 or more grooves at 6 locations, tire replacement is recommended.

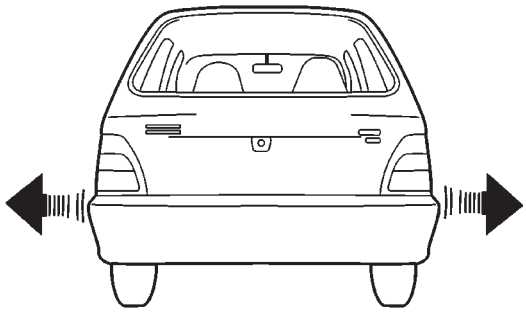

TIRE WADDLE

Waddle is side to side movement at the front and/or rear of the vehicle. It is caused by the steel belt not being straight within the tire. It is most noticeable at a low speed, 5 to 30 mph.

It is possible to locate the faulty tire by road testing the vehicle. If it is on the rear, the rear end of the vehicle shakes from side to side or “waddles”. To the driver in his seat, it feels as though someone is pushing on the side of vehicle.

If the faulty tire is on the front, waddling is more visual. The front sheet metal appears to be moving back and forth and the driver feels as though he is at the pivot point in vehicle.

Waddle can be quickly diagnosed by using Tire Problem Detector (TPD) and following the equipment manufacture’s recommendations.

If TPD is not available, an alternative method of substituting known good tire/wheel assemblies can be used as follows, although it takes a longer time.

1) Ride vehicle to determine whether the front or rear waddles.
2) Install tires and wheels that are known to be good (on similar vehicle) in place of those on waddling end of vehicle. If waddling end cannot be identified, substitute rear ones.
3) Road test again. If improvement is noted, reinstall originals one at a time till waddle causal tire is found. If no improvement is noted, install known good tires in place of all four. Then reinstall originals in the same manner as above.

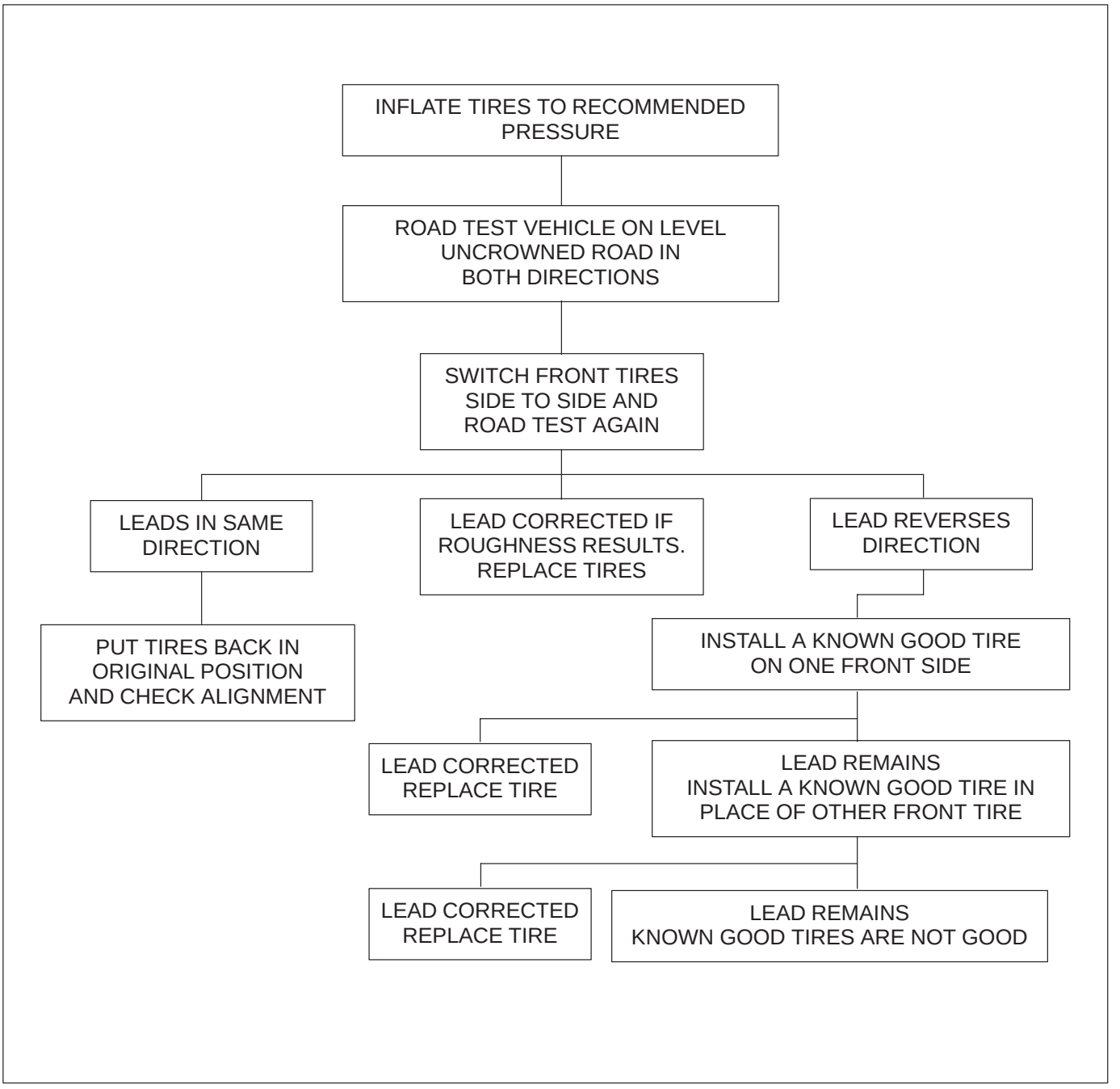

TIRE LEAD

“Lead” is the deviation of the vehicle from a straight path on a level road even with no pressure on the steering wheel.

Lead is usually caused by:

1) Incorrect alignment.
2) Uneven brake adjustment.
3) Tire construction.

The way in which a tire is built can produce lead in a vehicle. An example of this is placement of the belt. Off center belts on tires can cause the tire to develop a side force while rolling straight down the road. If one side of the tire has a little larger diameter than the other, the tire will tend to roll to one side. This will develop a side force which can produce vehicle lead.

The procedure on previous flow chart (Lead Diagnosis) should be used to make sure that front alignment is not mistaken for tire lead.

1) Part of the lead diagnosis procedure is different from the proper tire rotation pattern currently in the owner and service manuals. If a medium to high mileage tire is moved to the other side of the vehicle, be sure to check that ride roughness has not developed.
2) Rear tires will not cause lead.

VIBRATION DIAGNOSIS

Wheel unbalance causes most of the highway speed vibration problems. If a vibration remains after dynamic balancing, its possible causes are as follows.

1) Tire runout.
2) Wheel runout.
3) Tire stiffness variation.

Measuring tire and/or wheel free runout will uncover only part of the problem. All causes, known as loaded radial runout, must be checked by using a Tire Problem Detector (TPD). If TPD is not available, alternative method of substituting known good tire and wheel assemblies on the problem vehicle can be used, although it takes a longer time.

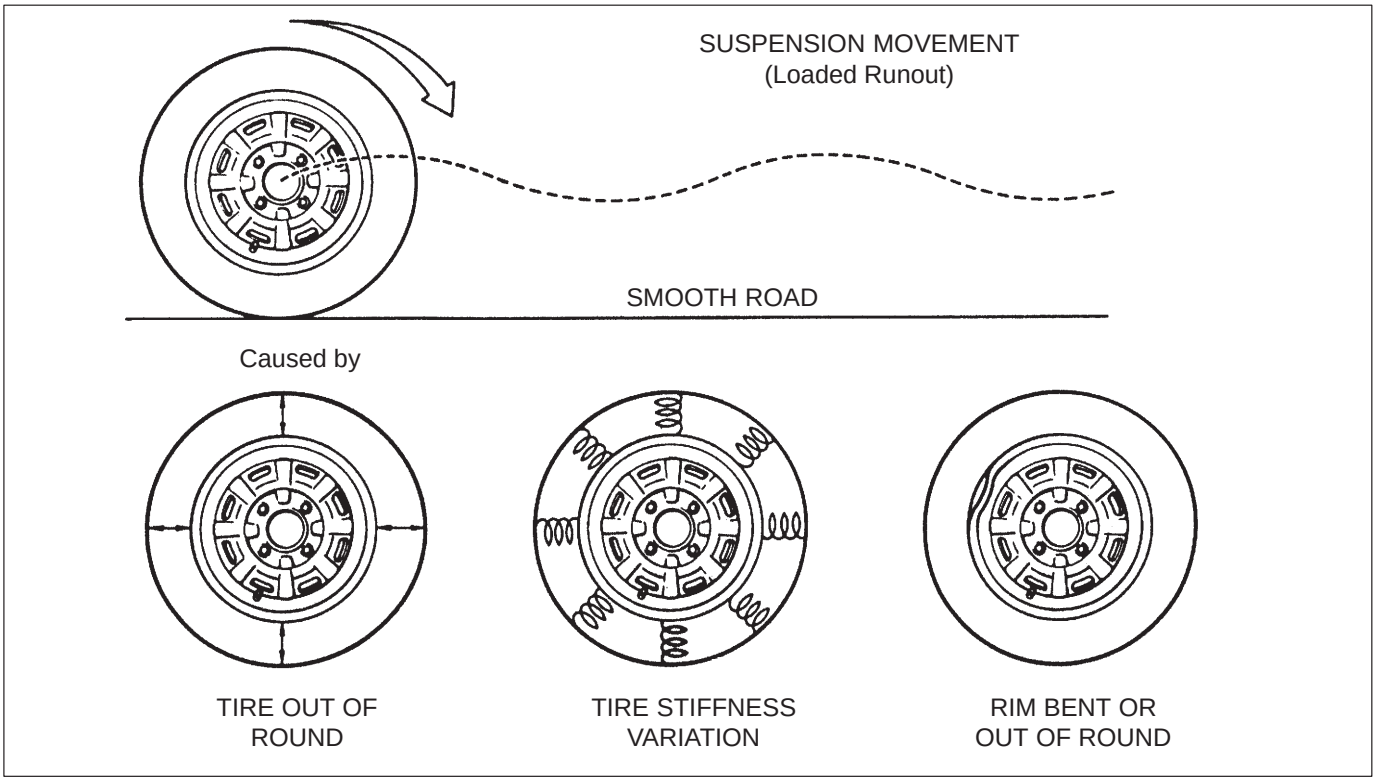

SECTION 3A

FRONT END ALIGNMENT

CONTENTS

DIAGNOSIS 3-2
GENERAL DESCRIPTION 3A-1
Toe Setting 3A-1
Camber 3A-1
Preliminary Checks Prior to Adjusting Front Alignment 3A-2
Toe Adjustment 3A-3
Camber and Caster Adjustment 3A-3
Steering Angle 3A-3

GENERAL DESCRIPTION

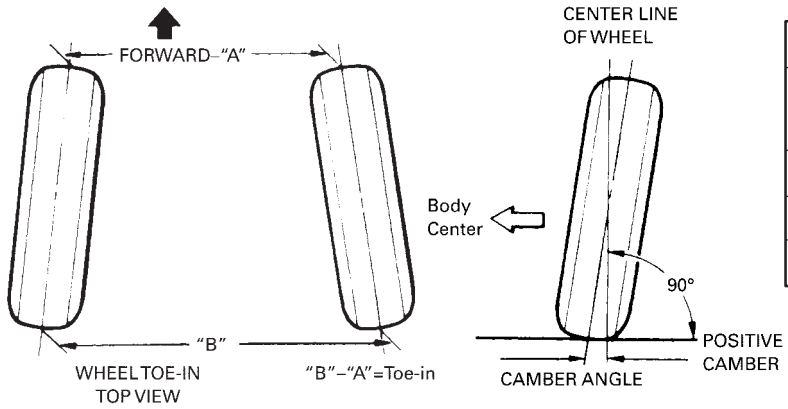

Alignment service data	
Toe-in	–1 ~ +3 mm (0.039+0.118 in.)
Camber	0° 30'±1°
Caster	3° 30'±1°
Kingpin inclination	12°20'±0.8

NOTE:
Toe-in value given above was measured by using a toe-in gauge.

Front alignment refers to the angular relationship between the front wheels, the front suspension attaching parts and the ground. Generally, the only adjustment required for front alignment is toe setting.
Camber and caster can't be adjusted. Therefore, should camber or caster be out of specification due to the damage caused by hazardous road conditions or collision, whether the damage is in body or in suspension should be determined and damaged body should be repaired or damaged suspension should be replaced.

TOE SETTING

Toe is the turning in or out of the front wheels. The purpose of a toe specification is to ensure parallel rolling of the front wheels (Excessive toe-in or toe-out may increase tire wear).
Amount of toe can be obtained by subtracting "A" from "B" as shown in previously figure and therefore is given in mm (in.).

CAMBER

Camber is the tilting of the front wheels from the vertical, as viewed from the front of the vehicle. When the wheels tilt outward at the top, the camber is positive. When the wheels tilt inward at the top, the camber is negative. The amount of tilt is measured in degrees.

PRELIMINARY CHECKS PRIOR TO ADJUSTING FRONT ALIGNMENT

Steering and vibration complaints are not always the result of improper alignment. An additional item to be checked is the possibility of tire lead due to worn or improperly manufactured tires. “Lead” is the deviation of the vehicle from a straight path on a level road without hand pressure on the steering wheel.

Before making any adjustment affecting toe setting, the following checks and inspections should be made to insure correctness of alignment readings and alignment adjustments:

1) Check all tires for proper inflation pressures and approximately the same tread wear.
2) Check for loose ball joints. Check tie rod ends; if excessive looseness is noted, it must be corrected before adjusting.
3) Check for run-out of wheels and tires.

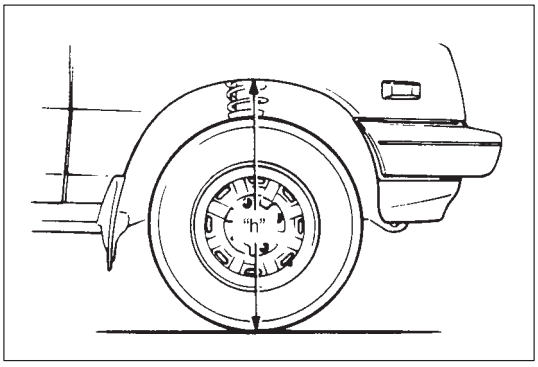

4) Check vehicle trim heights “h”; if out of limits and a correction is to be made, the correction must be made before adjusting toe.
5) Check for loose control arms.
6) Check for loose or missing stabilizer bar attachments.
7) Consideration must be given to excess loads, such as tool boxes. If this excess load is normally carried in the vehicle, it should remain in the vehicle during alignment checks.
8) Consider the condition of the equipment being used to check alignment and follow the manufacturer’s instructions.
9) Regardless of equipment used to check alignment, the vehicle must be on a level surface both fore and aft and transversely.

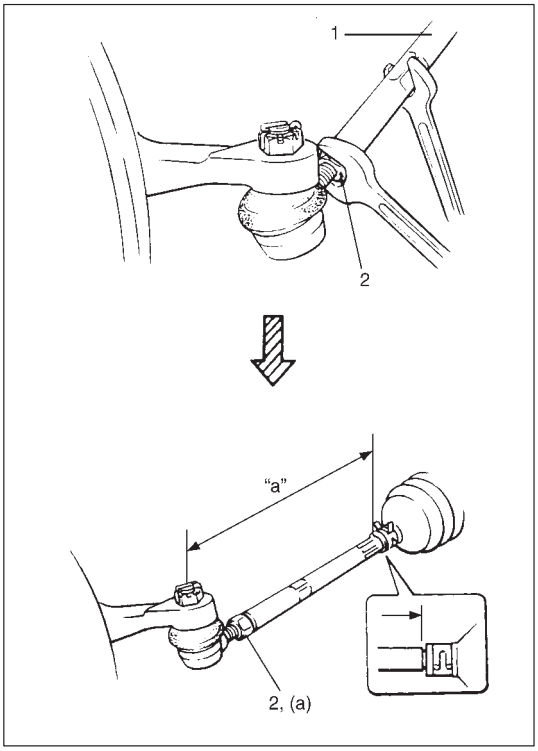

TOE ADJUSTMENT

Toe is adjusted by changing the tie rod (1) length. Loosen right and left tie rod end lock nuts (2) first and then rotate right and left tie rods by the same amount to align toe-in to specification. In this adjustment, right and left tie rods should become equal in length "a" in figure. Before rotating tie rods, apply grease between tie rods and rack boots so that boots won't be twisted.
After adjustment, tighten lock nuts to specified torque and make sure that rack boots are not twisted.

Tightening Torque
(a): 45 N·m (4.5 kg-m, 32.5 lb-ft)

CAMBER AND CASTER ADJUSTMENT

Should camber or caster be found out of specifications upon inspection, locate its cause first. If it is damaged, loose, bent, dented or worn suspension parts, they should be replaced. If it is in vehicle body, repair it so as to attain specifications.
To prevent possible incorrect reading of camber or caster, vehicle front end must be moved up and down a few times before inspection.

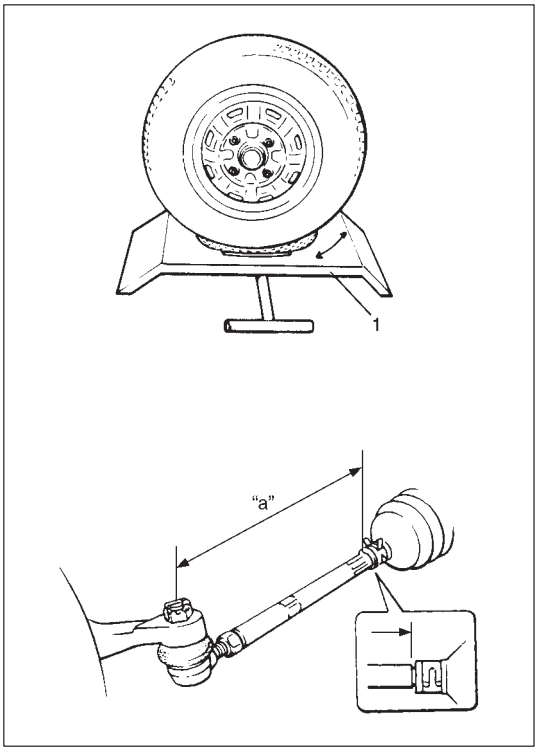

STEERING ANGLE

When tie rod or tie rod end was replaced, check toe and then also steering angle with turning radius gauge (1).
If steering angle is not correct, check if right and left tie rods are equal in length "a".

NOTE:
If tie rod lengths were changed to adjust steering angle, reinspect toe-in.

Steering angle	**inside**	**: 38° ± 3°**
	outside	**: 32° ± 3°**

Reference Information:

Side slip:

For inspecting front wheel side slip with side slip tester:

Side slip limit :	**Less than 3 mm/m** **(Less than 0.118 in./3.3 ft)**

If side slip exceeds above limit, toe-in or front wheel alignment may not be correct.

SECTION 3B

MANUAL RACK AND PINION

NOTE:
All steering gear fasteners are important attaching parts in that they could affect the performance of vital parts and systems, and/or could result in major repair expense. They must be replaced with one of the same part number or with an equivalent part if replacement becomes necessary. Do not use a replacement part of lesser quality or substitute design. Torque values must be used as specified during reassembly to assure proper retention of these parts.

CONTENTS

GENERAL DESCRIPTION 3B- 1
DIAGNOSIS 3B- 2
Diagnosis Table 3B- 2
Steering Wheel Check 3B- 2
Steering Rack Boot Check 3B- 2
Tie Rod End Boot Check 3B- 3
Steering Shaft Joint Check 3B- 3
Tie Rod End Check 3B- 3
ON-VEHICLE SERVICE 3B- 3
Lubrication 3B- 3
Manual Rack and Pinion Assembly 3B- 5
Removal 3B- 5
Disassembly 3B- 6
Inspection 3B- 9
Reassembly 3B-10
Installation 3B-13
REQUIRED SERVICE MATERIALS 3B-15
SPECIAL TOOL 3B-16

GENERAL DESCRIPTION

The rack and pinion steering system consists of two main components, the rack and the pinion. When the steering wheel is turned, the motion is transmitted to the steering shaft, lower shaft and then to the pinion.
Since the pinion teeth mesh with teeth on rack, the motion is further transferred to the rack and changed to linear motion. The force is then transmitted through the tie rods to the steering knuckles which turn wheels.

DIAGNOSIS

DIAGNOSIS TABLE

Refer to Section 3.

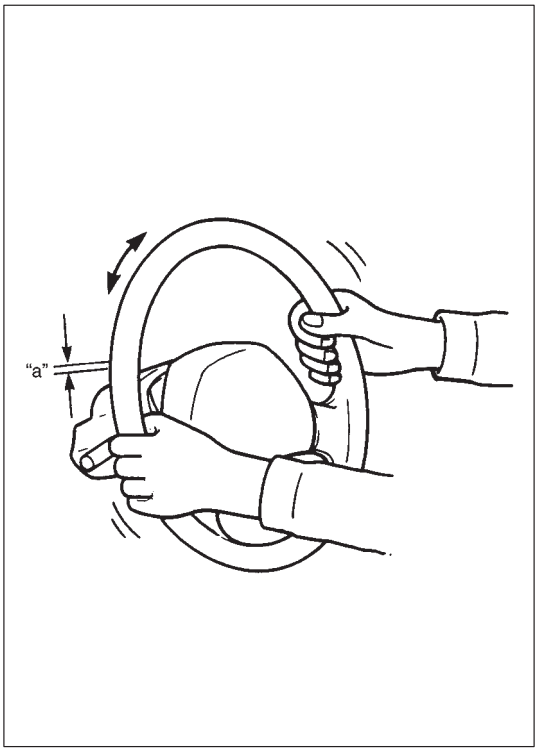

STEERING WHEEL CHECK

Check steering wheel for play and rattle, holding vehicle in straight forward condition on the ground.

Steering wheel play "a": 0 – 30 mm (0 – 1.18 in)

If steering wheel play is not within specification, inspect as follows and replace if found defective.

- Tie rod end ball stud for wear (ball stud should move when less than 3.4 N·m (0.34 kg-m) torque is applied.)
- Suspension control arm joint for wear
- Steering shaft joint for wear
- Steering pinion or rack gear for wear or breakage
- Each part for looseness

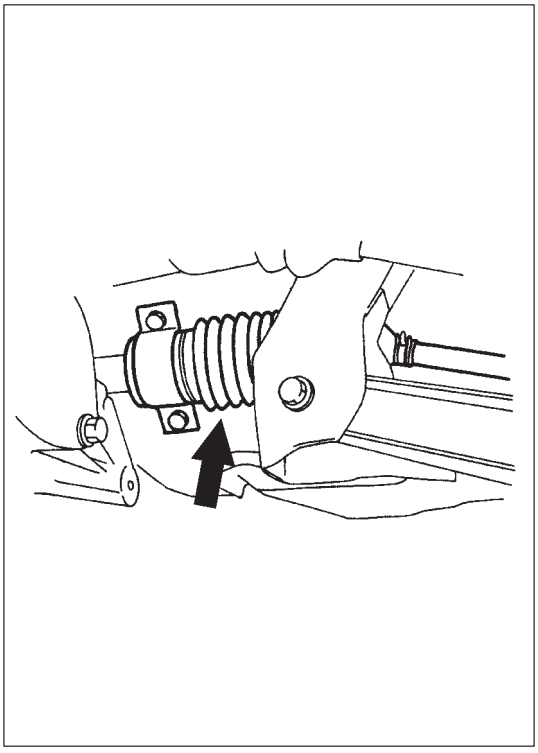

STEERING RACK BOOT CHECK

Hoist vehicle.

Inspect each boot for tear. A torn boot allows entry of dust and water which can cause wear to steering rack and pinion to produce noise as well as rust to result in malfunction of steering system. If even a small tear is noted, replace with new one.

Boots should be visually inspected for any damage and tear during every periodical inspection at specified intervals and whenever vehicle is hoisted for any other purpose.

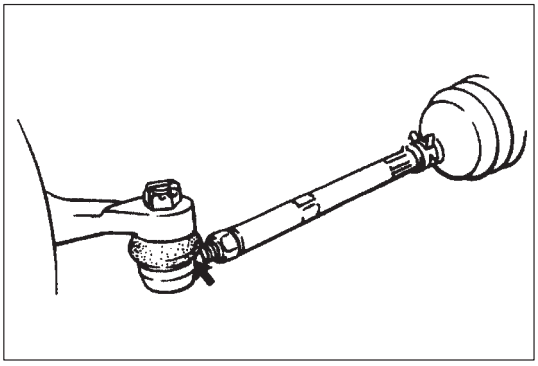

TIE ROD END BOOT CHECK

Inspect each boot for tear. If even a small tear is noted, replace with new one.

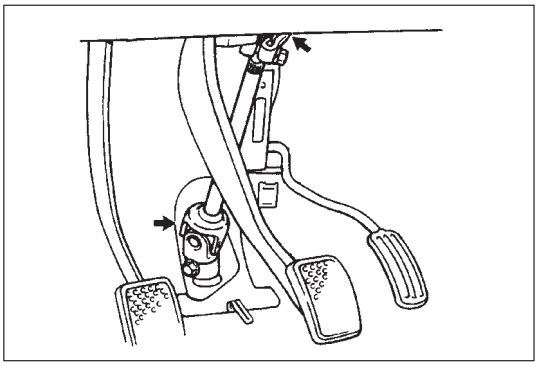

STEERING SHAFT JOINT CHECK

Check shaft joint for wear, breakage and other damage and replace if any defect exists.

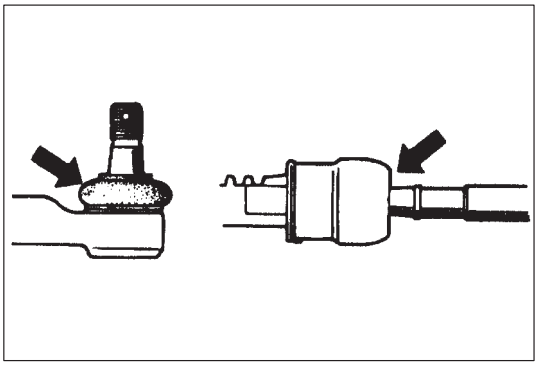

TIE ROD END CHECK

- Inspect for play in ball joint.
- Inspect for play in rack end ball joint.
  In either case, if found defective, replace.

ON-VEHICLE SERVICE

NOTE:
According to necessity, apply works to right and left parts.

LUBRICATION

When inner parts of the steering gear case were disassembled, they should be washed clean before reassembly. It is recommended to use the grease as given at the right where grease application is indicated in the text.

SUZUKI SUPER GREASE E (99000-25050) or Lithium grease (applicable for –40°C to 130°C (–40°F to 266°F))

1. Steering lower shaft
2. Steering lower shaft lower bolt
3. Steering gear case oil seal:
   Apply SUZUKI SUPER GREASE E 99000-25050 to oil seal lip.
4. Pinion bearing plug:
   Fill SUZUKI SUPER GREASE E 99000-25050 to inside of pinion bearing plug.
5. O-ring
6. Steering pinion:
   Apply SUZUKI SUPER GREASE E 99000-25050 to all around pinion teeth and mating surface of pinion bearing.
7. Pinion needle bearing:
   Apply SUZUKI SUPER GREASE Ex 99000-25050 to rollers of pinion needle bearing.
8. Steering rack plunger:
   Apply SUZUKI SUPER GREASE E 99000-25050 to sliding part of plunger.
9. Rack plunger spring
10. Rack damper screw:
    Note the installing procedure, and the detail refer to page 3B-12.
11. Packing
12. Cap
13. Cotter pin
14. Castle nut
15. Tie-rod end
16. Steering pinion side mount
17. Bracket (Pinion side)
18. Bracket bolt
19. Steering rack housing and gear case
20. Steering rack side mount
21. Steering rack:
    Apply SUZUKI SUPER GREASE E 99000-25050 to entire surface of rack.
22. Tie-rod lock washer
23. Steering tie-rod:
    Apply SUZUKI SUPER GREASE E 99000-25050 to rack end ball joint.
24. Wire
25. Boot:
    Apply SUZUKI SUPER GREASE E 99000-25050 to contacting part of tie-rod and boot.
26. Clamp
27. Tie-rod end lock nut
28. Bracket (rack side)
29. Steering rack bushing:
    Apply SUZUKI SUPER GREASE E 99000-25050 lightly to entire inner surface of bushing.
30. Snap ring

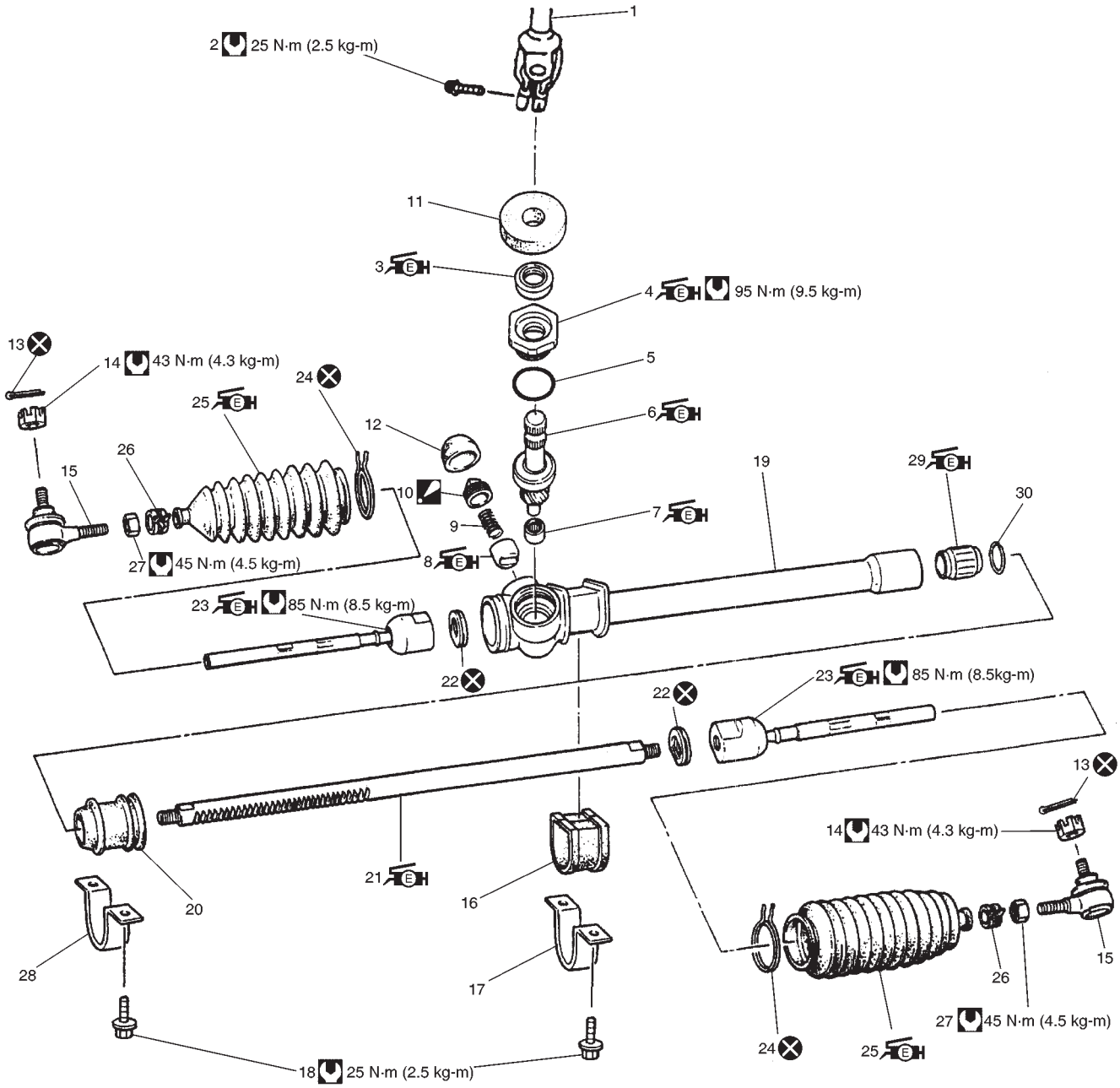

: Tightening Torque

: Do not reuse

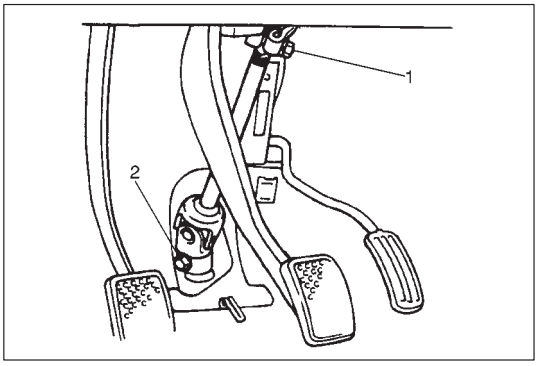

MANUAL RACK AND PINION ASSEMBLY

REMOVAL

1) Remove steering joint cover.
2) Loosen steering lower shaft upper bolt (1), but don't remove.
3) Remove steering lower shaft lower bolt (2) and disconnect steering lower shaft from steering pinion shaft.
4) Hoist vehicle and remove front wheels.

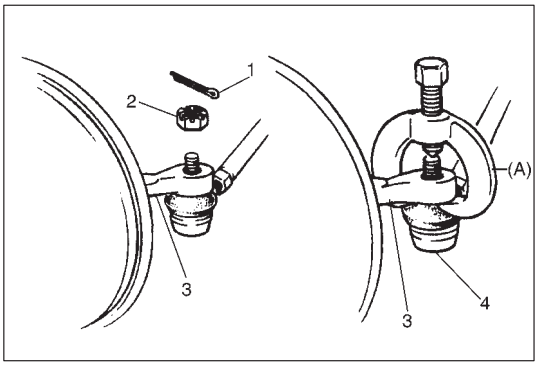

5) Remove cotter pins (1) and tie rod castle nuts (2) from both knuckles (3).
6) Disconnect tie rod ends (4) from knuckle using special tool.

Special Tool
(A): 09913-65210

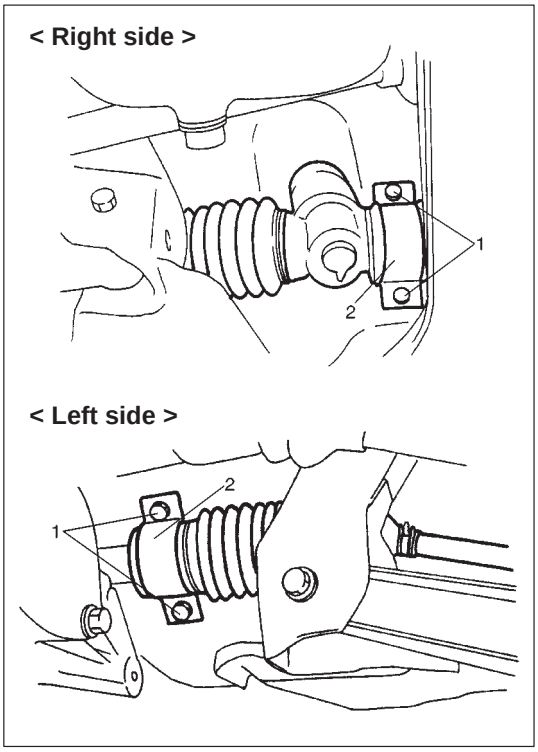

7) Remove steering gear case mount bolts (1), and then remove steering gear case mount brackets (2).

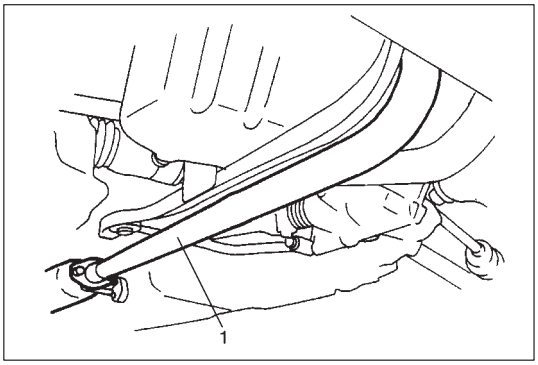

8) Remove exhaust pipe (1).

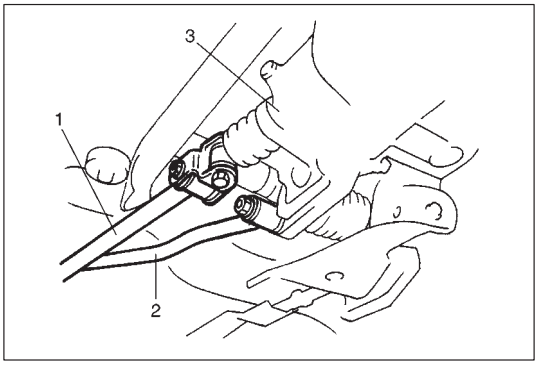

9) Disconnect gear shift control shaft (1) and extension rod (2) from transmission assembly (3).

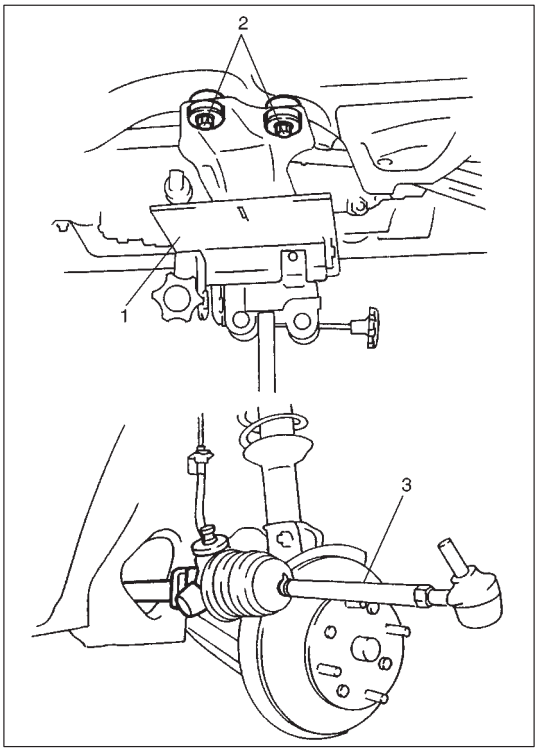

10) Support engine with transmission jack (1) as shown.
11) Remove engine member rear bolts (2).
12) Lower engine, and then remove manual rack and pinion assembly (3) as shown.

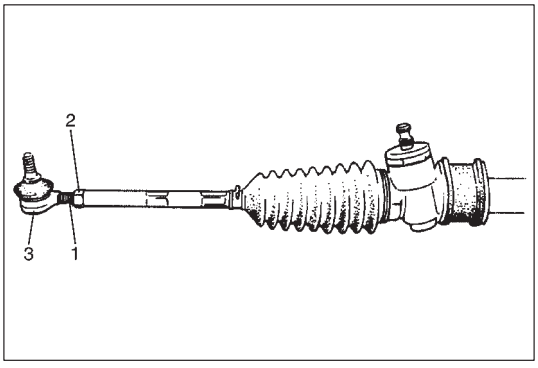

DISASSEMBLY

1) For ease of adjustment after installation, make marking (1) on tie rod end lock nut position of tie rod thread.
2) Loosen tie rod end lock nut (2) and remove tie rod end (3).

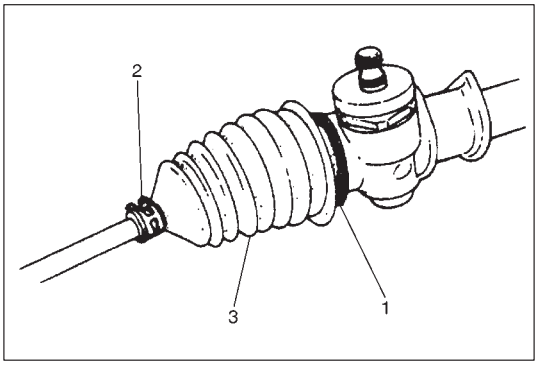

3) Remove boot wire (1) and clamp (2).
4) Remove boot (3) from tie rod.

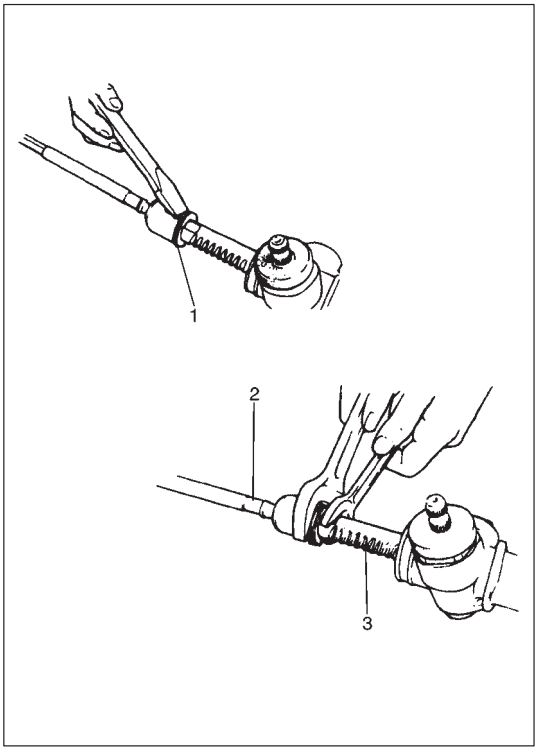

5) Unbend bent part of tie rod lock washer (1) and remove tie rod (2) from steering rack (3).

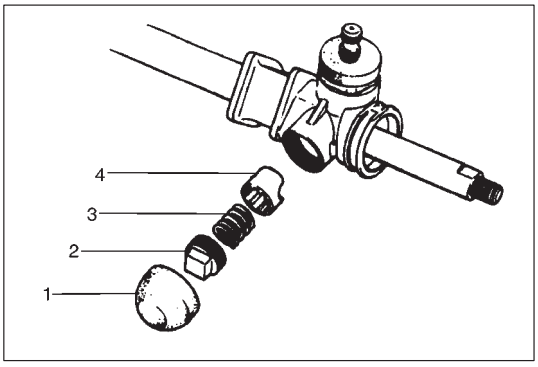

6) Remove rack damper screw cap (1), rack damper screw (2), rack plunger spring (3), and rack plunger (4).

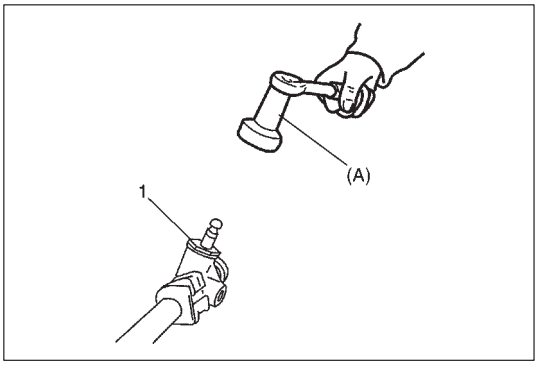

7) Remove pinion bearing plug (1) using special tool.

Special Tool
(A): 09944-26011 (43 mm socket)

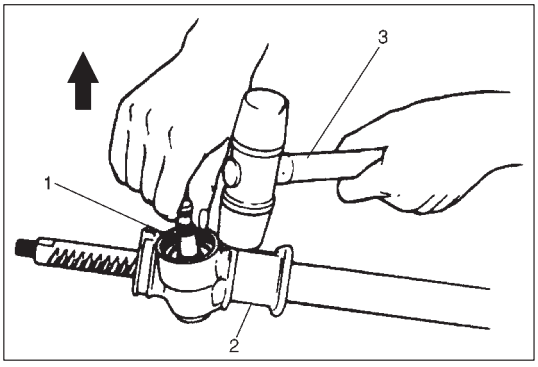

8) To remove pinion assembly (1) from rack housing (2), tap rack housing (2) using plastic hammer (3) as shown.

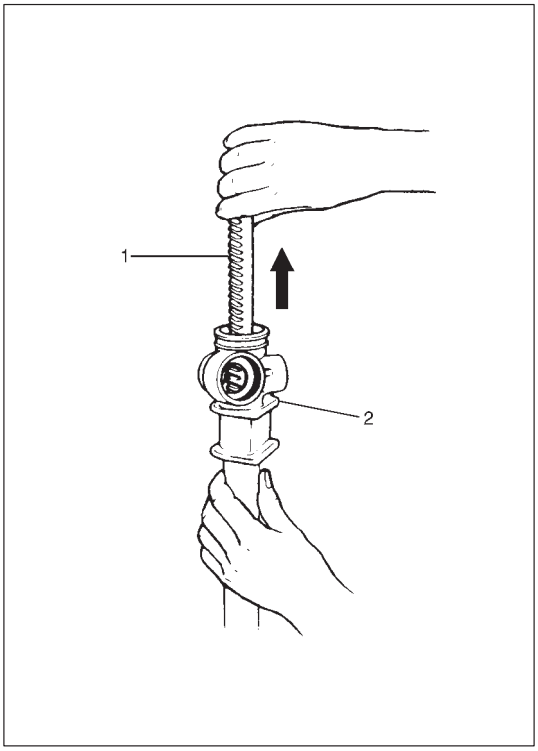

9) Remove rack (1) from gear case (2) as shown.

CAUTION:
- **Inside of steering rack bushing is coated with special coating. As it is damageable, be very careful not to cause damage to it when removing rack from steering gear case.**
- **Do not use a wire brush when cleaning.**

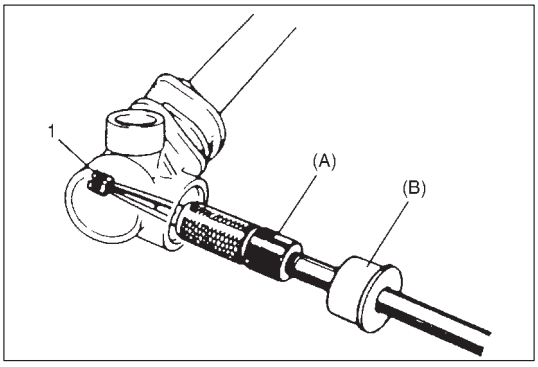

10) Pull out pinion needle bearing (1) from gear case using special tools.

Special Tool
(A): 09921-20200
(B): 09930-30104

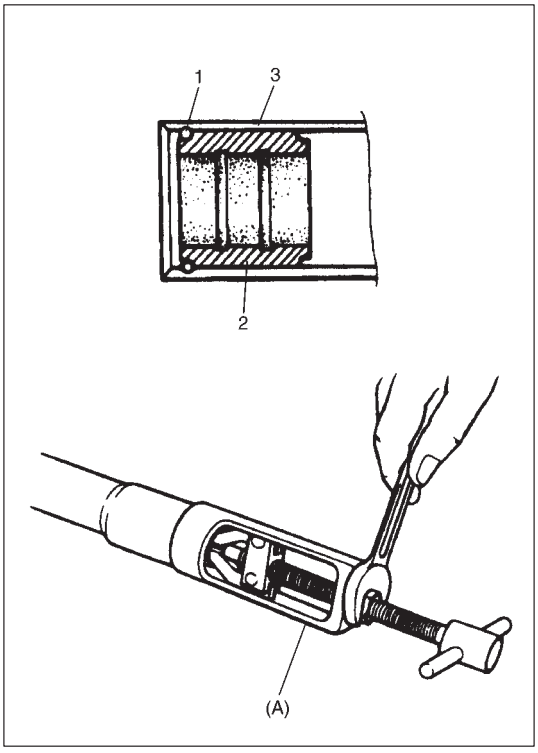

11) Remove snap ring (1).
12) Pull out rack bushing (2) from rack housing (3) using special tool.

Special Tool
(A): 09944-48210

CAUTION:
When removing the rack bushing, be careful not to pull out the bushing by holding the gear case in a vise. Or the housing (pipe) may come off the gear case.
For this work, be sure to use the specified special tool.

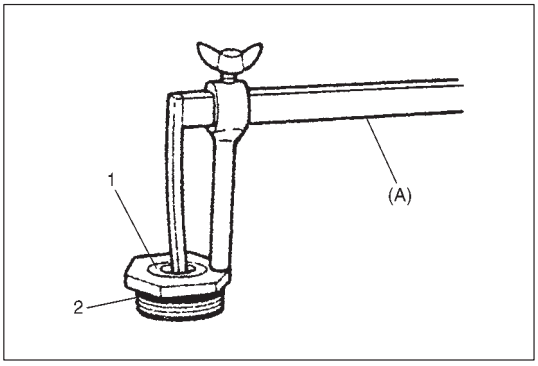

13) Remove gear case oil seal (1) using special tool.

Special Tool
(A): 09913-50121

14) Remove gear case O-ring (2).

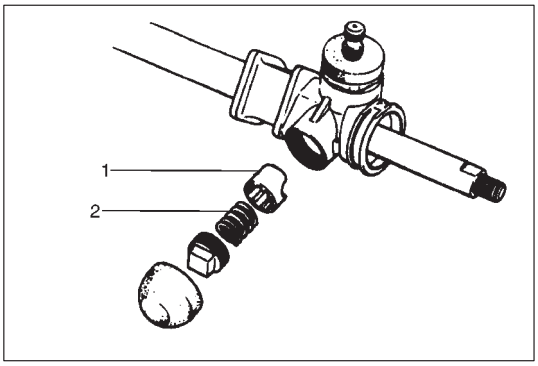

INSPECTION

Rack Plunger

- Inspect rack plunger (1) for wear or damage.
- Inspect rack plunger spring (2) for deterioration.

If found defective, replace.

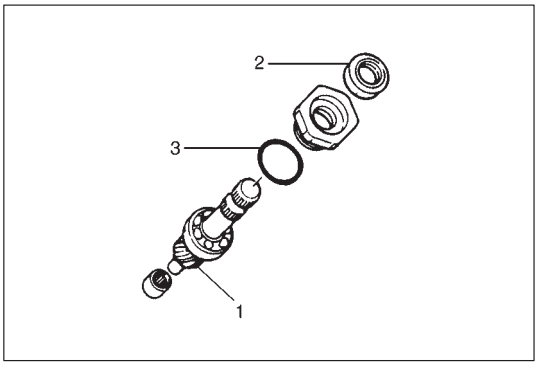

Steering Pinion

- Inspect teeth surface of steering pinion (1) for wear or damage.
- Inspect oil seal (2) for damage.
- Inspect gear case O-ring (3) for damage.

If found defective, replace.

Steering Pinion Bearing

Check rotation condition of bearing and inspect for wear.
If found defective, replace.

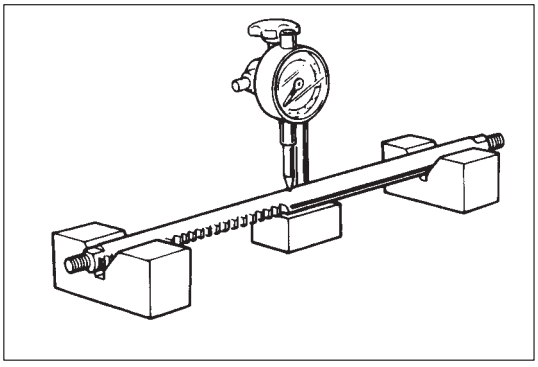

Steering Rack

Inspect for deflection, teeth wear damage, rack surface wear or damage.

Limit of rack deflection: 0.35 mm (0.014 in)

If deflection exceeds limit, replace rack.

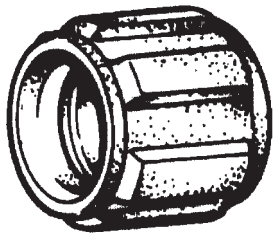

Steering Rack Bushing

Inspect rack bushing for wear or damage.
If found defective, replace.

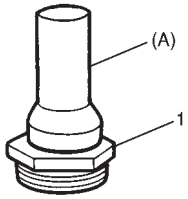

REASSEMBLY

Install in reverse order of disassembly, noting the following points.

- Install pinion bearing oil seal to pinion bearing plug (1) using special tool.

  Special Tool
  (A): 09925-98210

- Apply grease to oil seal lip.

  Grease: 99000-25050

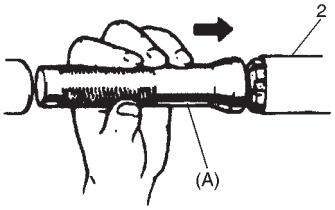

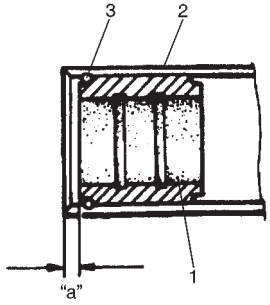

- Apply grease lightly to entire inner surface of bushing (1).

  Grease: 99000-25050

- Press-fit bushing as far into rack housing (2) as shown by using special tool.

  Special Tool
  (A): 09925-98210

  Distance "a": 2.0 – 3.0 mm (0.08 – 0.12 in.)

- Install snap ring (3).

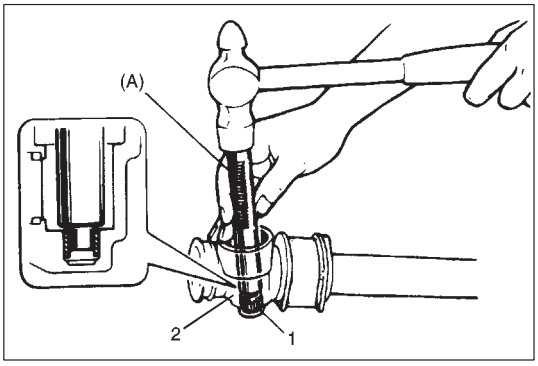

- Apply grease to rollers of pinion needle bearing (1).

  Grease: 99000-25050

- Press-fit pinion needle bearing (1) into gear case (2) using special tool.
  After press-fitting, make sure that bearing rollers are installed properly.

  Special Tool
  (A): 09943-88211

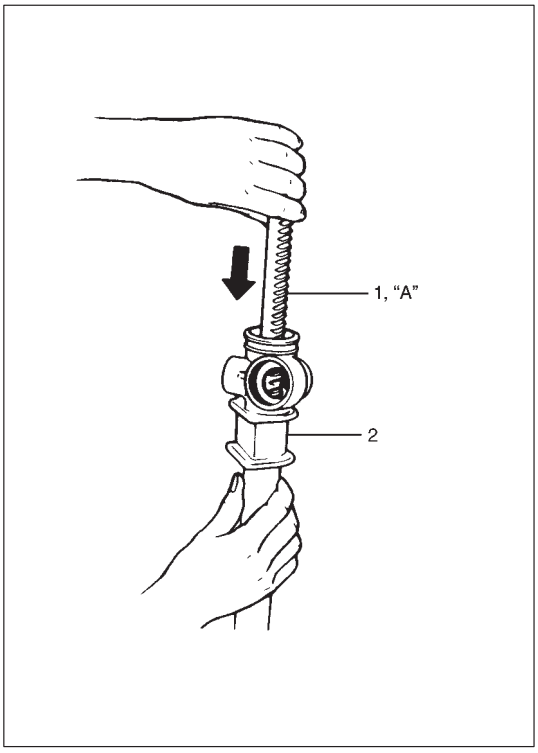

- Apply grease to entire teeth surface of steering rack (1) and its periphery.

  "A": Grease 99000-25050

- Slide steering rack (1) into steering gear case (2) in the direction as shown.

> **CAUTION:**
> - **Inside of steering rack bushing is coated with special coating. As it is damageable, be very careful not to cause damage to it when inserting rack into steering gear case.**
> - **Do not use a wire brush when cleaning.**

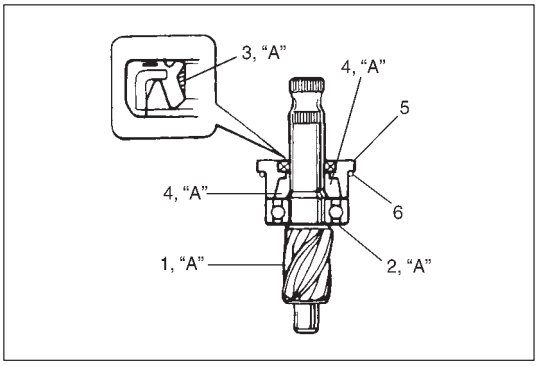

- Apply grease to all around pinion teeth (1), pinion bearing (2) and gear case oil seal lip (3) as shown.

  "A": Grease 99000-25050

- Fill inside (4) of pinion bearing plug (5) with grease.

  "A": Grease 99000-25050

- Fit gear case O-ring (6) in groove of pinion bearing plug.

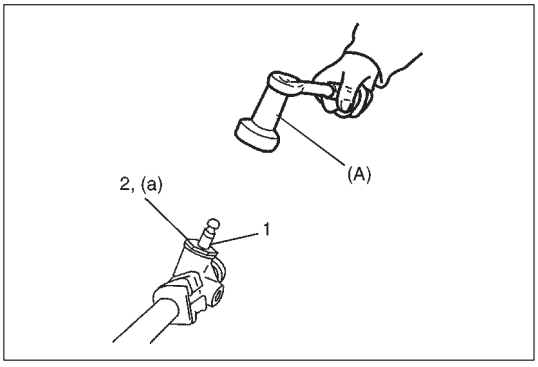

- Install pinion assembly (1) and tighten pinion bearing plug (2) to specified torque.

  Special Tool (43 mm socket)
  (A): 09944-26011

  Tightening Torque
  (a): 95 N·m (9.5 kg-m, 69.0 lb-ft)

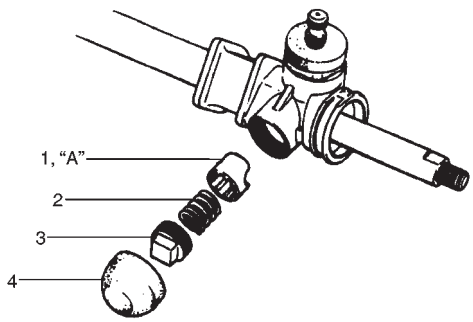

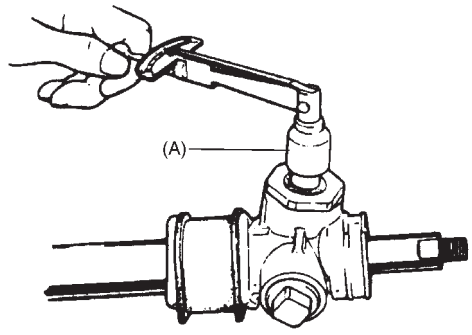

- Apply grease lightly to sliding part of plunger (1) against rack.

  “A”: Grease 99000-25050

- Install rack plunger (1), rack plunger spring (2) and rack damper screw (3) and adjust rotation torque of pinion as follows.
  i) After tightening rack damper screw (3) to the tightest point, turn it back by 0° – 90° and check for rotation torque of pinion. If it is not as specified below, adjust so that it will be within specified torque range.

     Special Tool
     (A): 09944-18211

     Rotation torque of pinion
     0.8 – 1.3 N·m (0.08 – 0.13 kg-m, 0.6 – 0.9 lb-ft)

     Also, check if rack as a whole moves smoothly.
  ii) After adjustment, put rack damper screw cap (4) as deeply as possible.

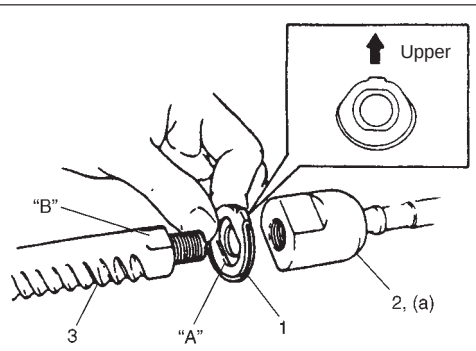

- Install new tie rod lock washer (1) as shown, and then install tie rod (2) to steering rack (3). Align straight part “A” of washer with flat part “B” of steering rack.
- Tighten tie rod to specified torque.

  Tightening Torque
  (a): 85 N·m (8.5 kg-m, 61.5 lb-ft)

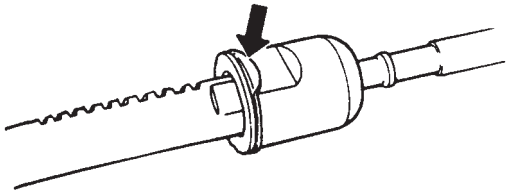

- Bend lock washer to tie rod side as shown.

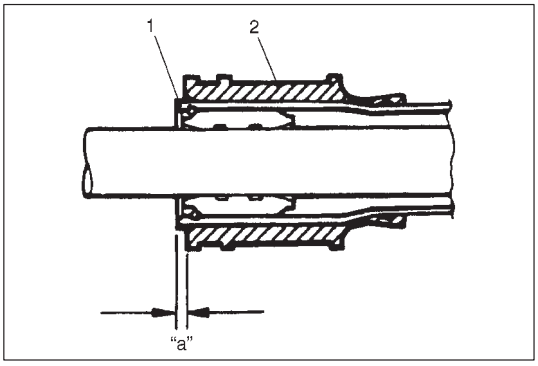

- Before installing boot to steering rack housing (1), make sure that rack side mount (2) is positioned as shown.

  Distance "a" 1.0 – 2.0 mm (0.04 – 0.08 in.)

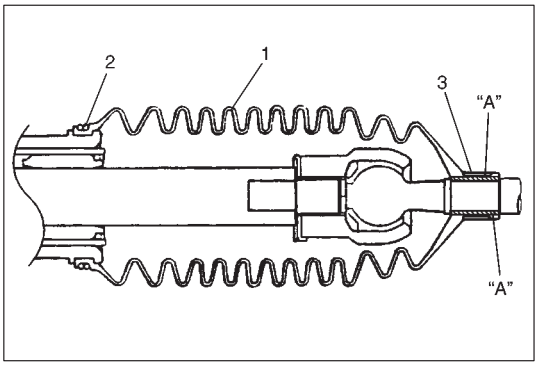

- Position boot (1) properly in grooves of gear case and tie rod, and then clamp it with wire (2) and clip (3).
  Wire should be new and should go around twice and be tightened with its both ends twisted together. The twisted ends should be bent in the circumferential direction. After this, check to ensure that boot is free from twist and bent.
  Apply grease to all around inner surface of hatched part.

  "A": Grease 99000-25050

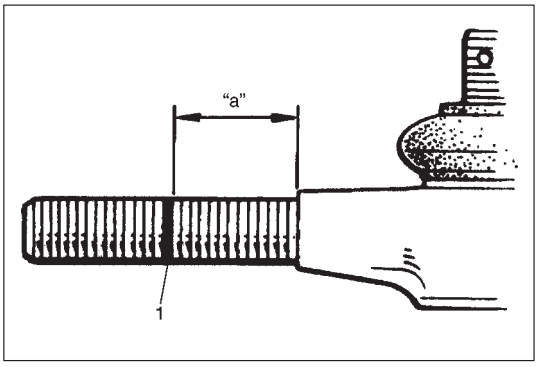

- Install tie rod end lock nut and tie rod end to tie rod. Position lock nut to marking (1) made in removal.

  NOTE:
  When tie rod was replaced, measure length "a" on removed tie rod end and use it on new replacement tie rod end so as to position lock nut properly.

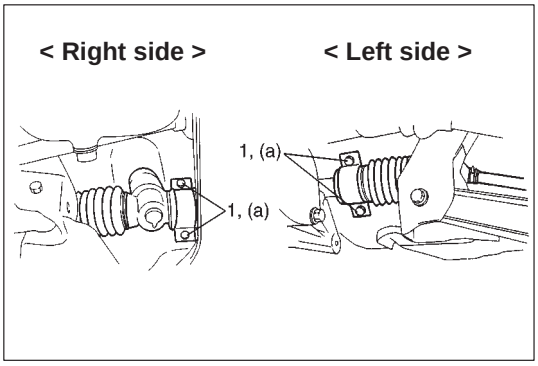

INSTALLATION

For installation, reverse removal procedure, note the following instructions.

- Tighten rack and pinion assembly mounting bolts (1) to specified torque.

  Tightening Torque
  (a): 25 N·m (2.5 kg-m, 18.0 lb-ft)

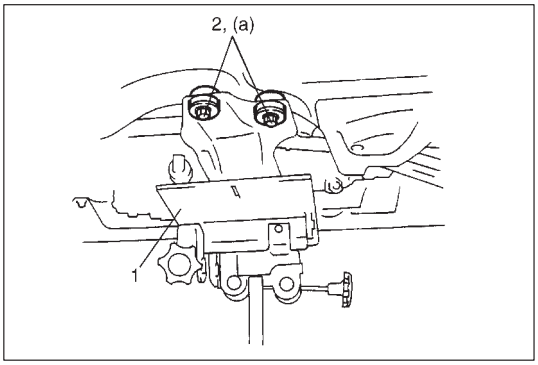

- Hoist engine with transmission jack (1), and then tighten engine member rear bolts (2) to specified torque.

  Tightening Torque
  (a): 40 N·m (4.0 kg-m, 30.0 lb-ft)

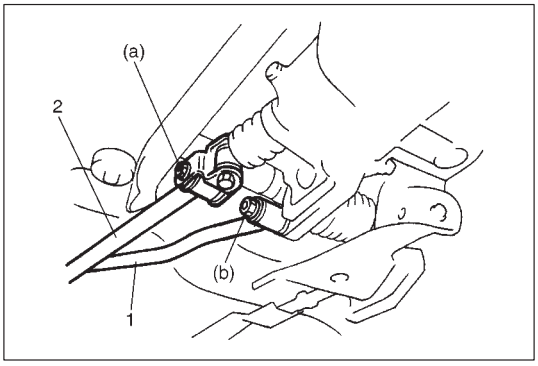

- Connect extension rod (1) and gear shift control shaft (2) to transmission assembly.

  Tightening Torque
  (a): 6 N·m (0.6 kg-m, 4.5 lb-ft)
  (b): 33 N·m (3.3 kg-m, 24.0 lb-ft)

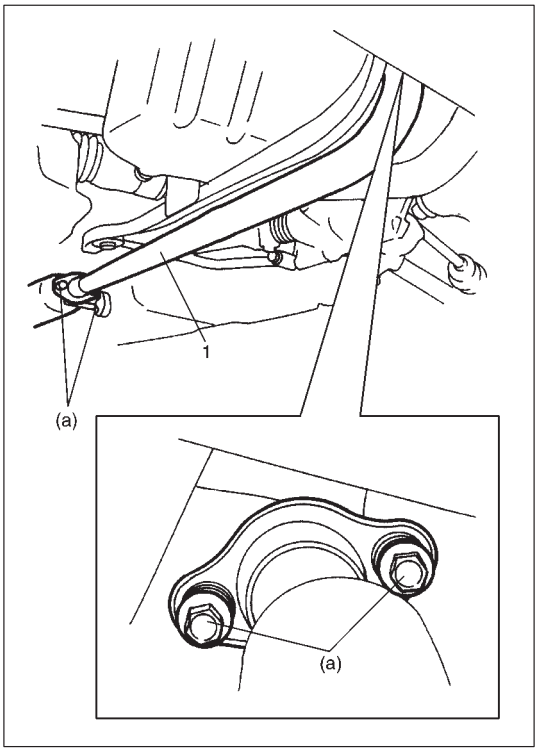

- Install new exhaust pipe gasket and exhaust pipe (1).

  Tightening Torque
  (a): 55 N·m (5.5 kg-m, 40.0 lb-ft)

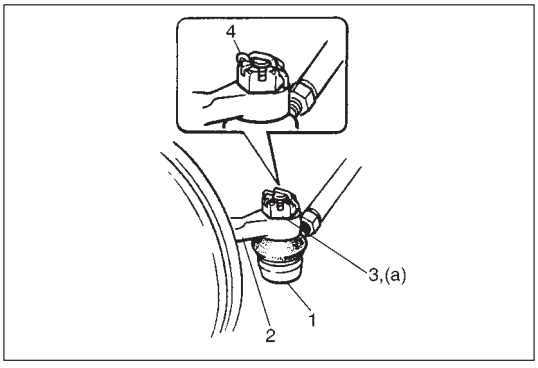

- Install tie rod ends (1) to knuckles (2). Tighten castle nuts (3) until holes for cotter pin (4) align but within specified torque and then bend new cotter pins (4) as shown.

  Tightening Torque
  (a): 43 N·m (4.3 kg-m, 31.5 lb-ft)

  NOTE:
  Removed cotter pin should be replaced with new one.

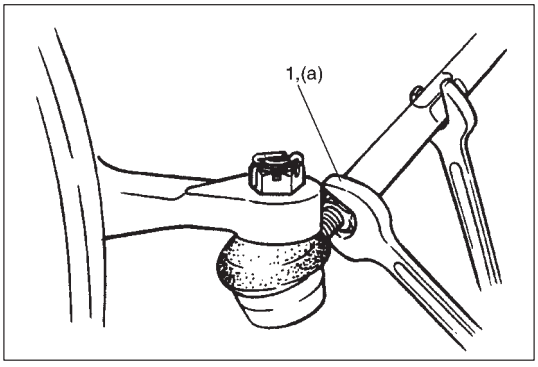

- Tighten tie rod end lock nuts (1) to specified torque.

  Tightening Torque
  (a): 45 N·m (4.5 kg-m, 32.5 lb-ft)

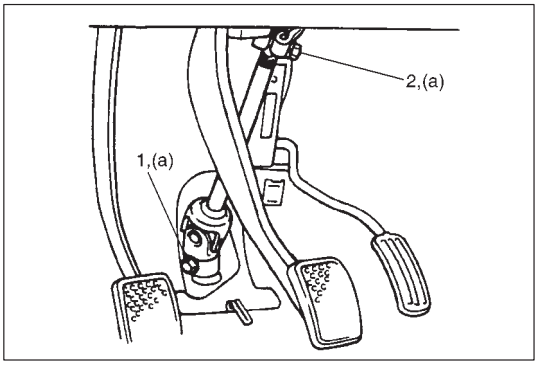

- Be sure that steering wheel and brake discs (right and left) are all straight ahead driving state and then insert steering lower shaft into steering pinion shaft.
- Tighten steering lower shaft bolts to specified torque (Lower bolt (1) first, and then upper bolt (2)).

  Tightening Torque
  (a): 25 N·m (2.5 kg-m, 18.0 lb-ft)

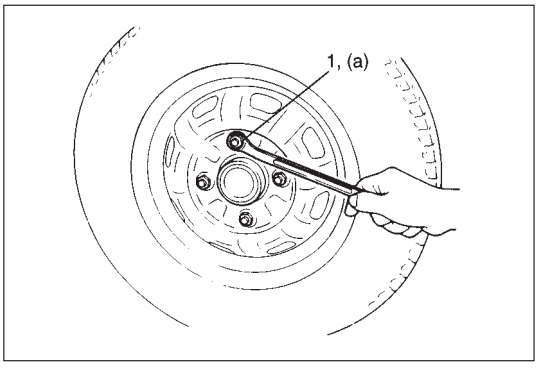

- Tighten wheel nuts (1) to specified torque.

  Tightening Torque
  (a): 85 N·m (8.5 kg-m, 61.5 lb-ft)

- After completion of installation, check wheel alignment and toe setting referring to FRONT END ALIGNMENT in section 3A.

REQUIRED SERVICE MATERIALS

MATERIAL	RECOMMENDED SUZUKI PRODUCT	USE
Lithium Grease (Should be applicable for –40°C~130°C)	SUZUKI SUPER GREASE E (99000-25050)	● Sliding part of rack against steering housing (All around rack plunger, rack bushing and rack) ● Sliding part against steering pinion (Oil seal lip, needle bearing) ● Steering rack and pinion gear teeth ● Filled into pinion bearing plug ● Contacting parts of tie rod and rack side boots ● Rack end ball joint

SPECIAL TOOL

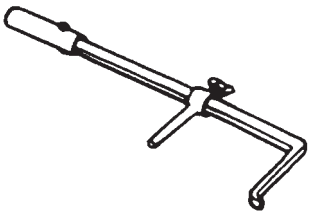 09913-50121 Oil seal remover	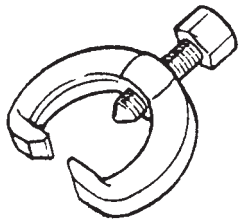 09913-65210 Tie-rod end remover	 09921-20200 Bearing remover	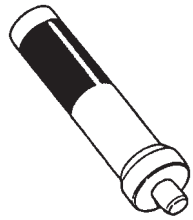 09925-98210 Bearing installer
 09930-30104 Sliding shaft	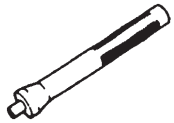 09943-88211 Bearing installer	 09944-18211 Pinion torque checking socket	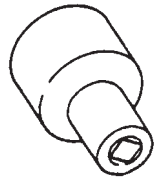 09944-26011 Pinion bearing plug socket (43 mm)
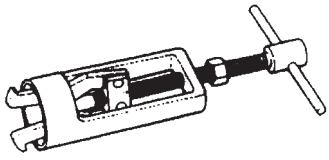 09944-48210 Rack bush remover			

SECTION 3C

STEERING WHEEL AND COLUMN

CAUTION:
When fasteners are removed, always reinstall them at the same location from which they were removed. If a fastener needs to be replaced, use the correct part number fastener for that application. If the correct part number fastener is not available, a fastener of equal size and strength (or stronger) may be used. Fasteners that are not reused, and those requiring thread-locking compound, will be called out. The correct torque value must be used when installing fasteners that require it. If the above procedures are not followed, parts or system damage could result.

CONTENTS

GENERAL DESCRIPTION 3C- 2
DIAGNOSIS 3C- 3
Inspection and Repair Required After Accident 3C- 3
ON-VEHICLE SERVICE 3C- 3
Steering Wheel 3C- 4
Combination Switch Assembly 3C- 5
Steering Column Assembly and Steering Lower Shaft 3C- 6
Steering Lock Assembly (Ignition Switch) 3C-10
CHECKING STEERING COLUMN ASSEMBLY AND LOWER SHAFT FOR ACCIDENT DAMAGE 3C-11
REQUIRED SERVICE MATERIAL 3C-12
SPECIAL TOOL 3C-12

GENERAL DESCRIPTION

These are two types of steering column for this vehicle. They are double tube type and single tube type.
These steering columns have the following important features in addition to the steering function:

- The ignition switch and lock are mounted conveniently on this column.
- With the column mounted lock, the ignition and steering operations can be locked to inhibit theft of the vehicle.

For double tube type steering column, note the following instruction.

- The column is energy absorbing, designed to compress in a front-end collision. To insure the energy absorbing action, it is important that only the specified screws, bolts, and nuts be used as designated and that they are tightened to the specified torque.
- When the column assembly is removed from the vehicle, special care must be taken in handling it. Use of a steering wheel puller other than the one recommended in this manual or a sharp blow on the end of the steering shaft, leaning on the assembly, or dropping the assembly could shear the plastic shear pins which maintain column length and position.

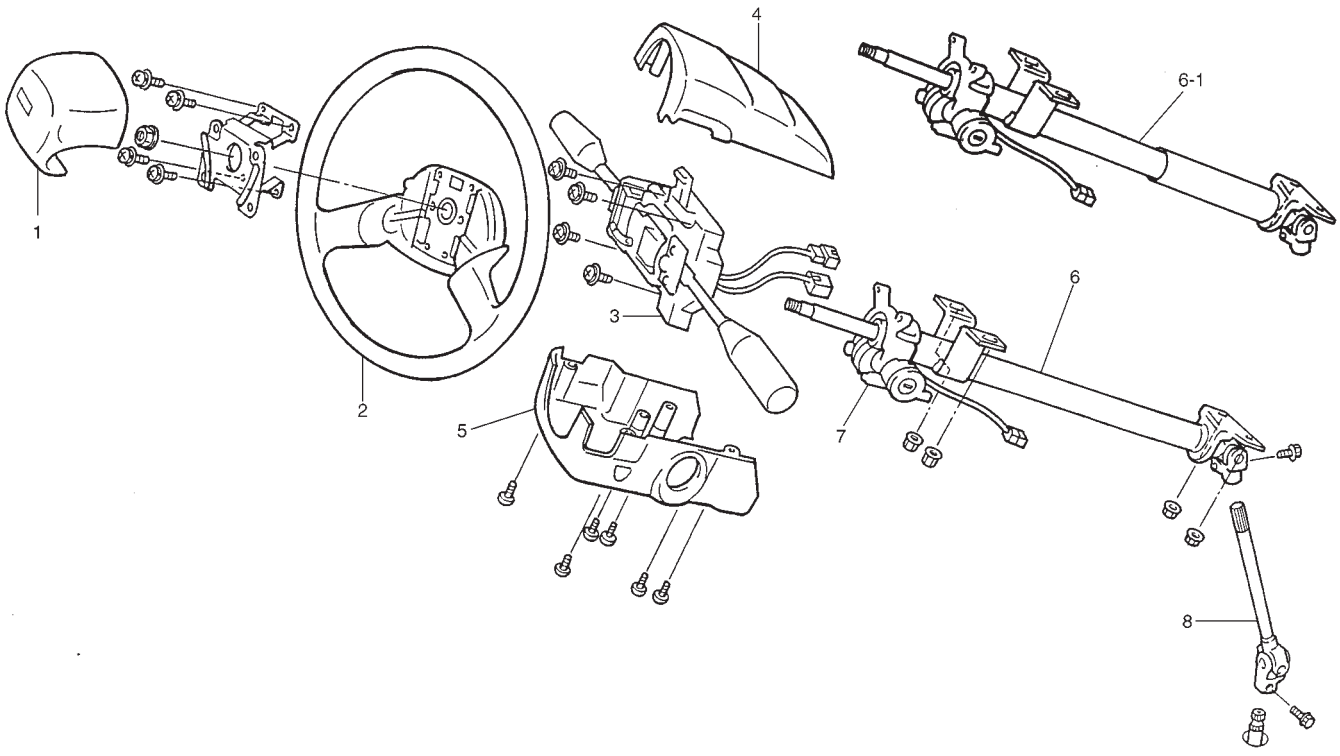

1. Steering wheel pad
2. Steering wheel
3. Combination switch assembly
4. Steering column upper cover
5. Steering column lower cover
6. Steering column assembly (single tube type)

6–1. Steering column assembly (double tube type)

7. Steering lock assembly (ignition switch)
8. Steering lower shaft

DIAGNOSIS

For maintenance service of the steering wheel and column, refer to SECTION 0B.
For diagnosis of the steering wheel and column, refer to SECTION 3.

INSPECTION AND REPAIR REQUIRED AFTER ACCIDENT

After an accident be sure to perform checks, inspections and repairs referring to CHECKING STEERING COLUMN ASSEMBLY AND LOWER SHAFT FOR ACCIDENT DAMAGE in this section.

ON-VEHICLE SERVICE

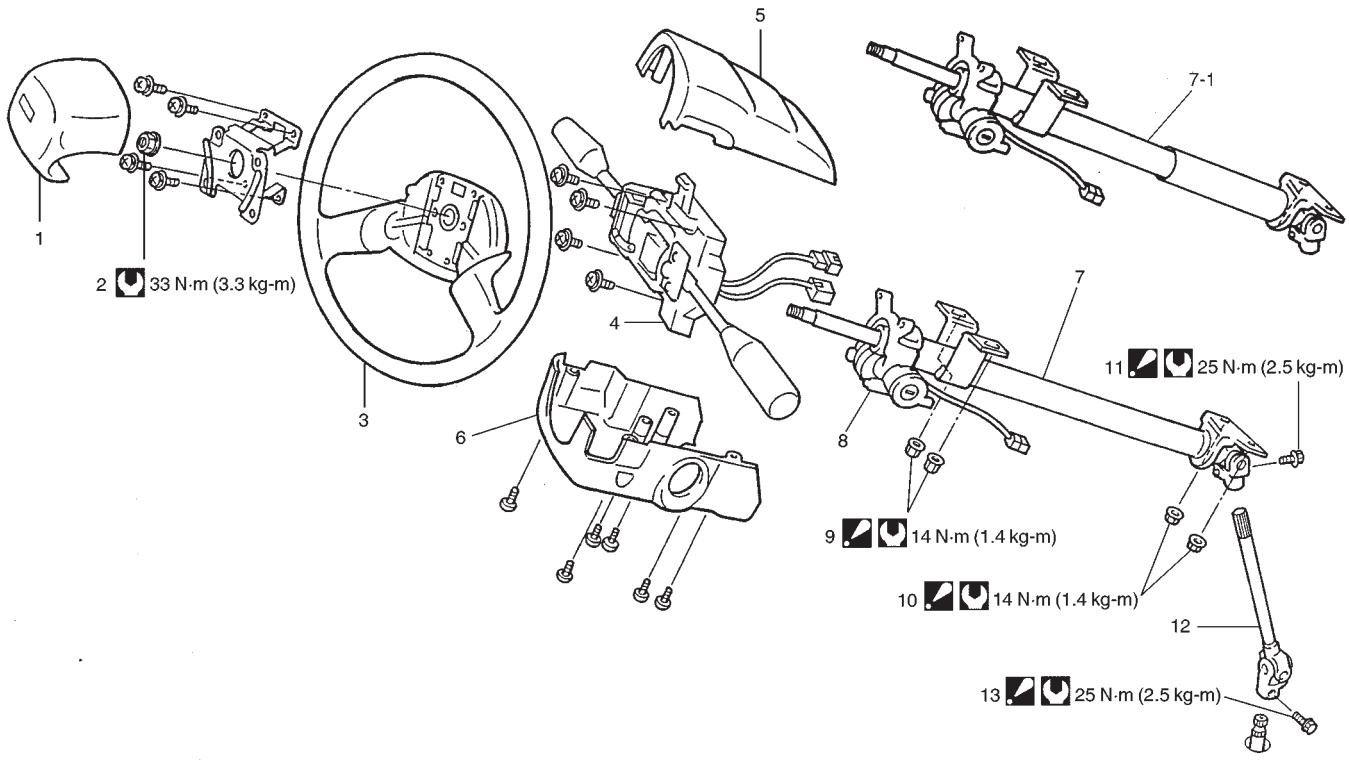

1. Steering wheel pad
2. Steering wheel nut
3. Steering wheel
4. Combination switch assembly
5. Steering column upper cover
6. Steering column lower cover
7. Steering column assembly (single tube type)

7–1. Steering column assembly (double tube type)

8. Steering lock assembly (ignition switch)
9. Steering column upper nut:
   For proper installing location and tightening procedure, refer to steering column assembly installation in this section.
10. Steering column lower nut:
    For proper installing location and tightening procedure, refer to steering column assembly installation in this section.
11. Steering joint shaft upper bolt:
    Note the tightening procedure, the detail referring steering column assembly installation in this section.
12. Steering lower shaft
13. Steering joint shaft lower bolt:
    Note the tightening procedure, the detail referring steering column assembly installation in this section.

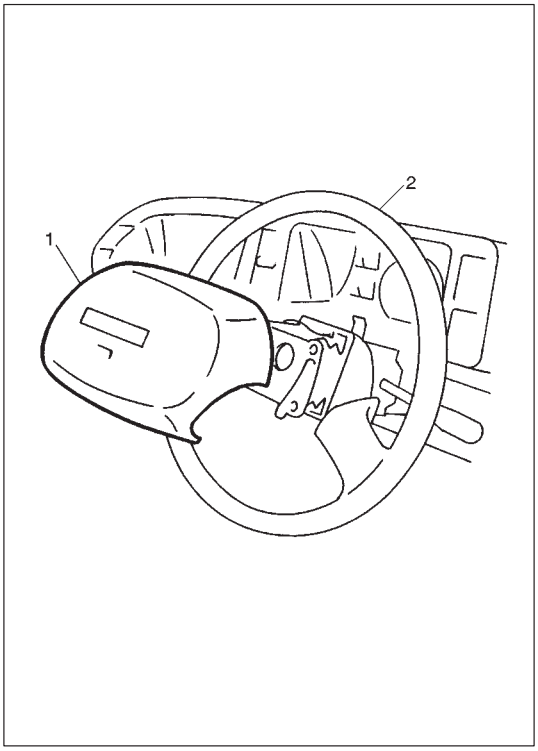

STEERING WHEEL

REMOVAL

1) Check that vehicle's front tires are at straight-ahead position.
2) Disconnect negative cable at battery.
3) Remove steering wheel pad (1) from steering wheel (2).

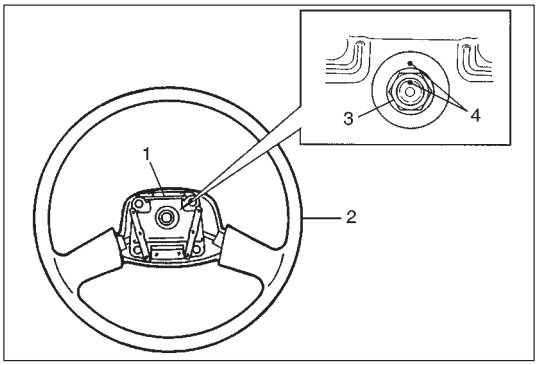

4) Remove horn switch assembly (1) from steering wheel (2).
5) Remove steering wheel nut (3).
6) Make alignment marks (4) on steering wheel and shaft.

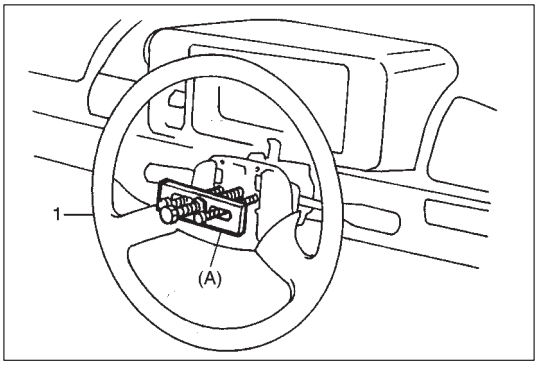

7) Remove steering wheel (1) using special tool.

Special Tool
(A): 09944-36011

> **CAUTION:**
> **Do not hammer the end of the shaft. Hammering it will loosen the plastic shear pins which maintain the column length and impair the collapsible design of the column.**

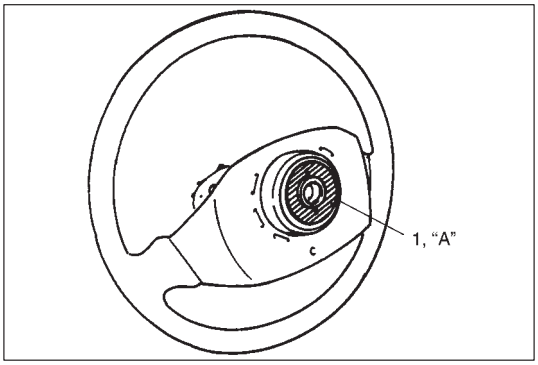

INSTALLATION

1) Check that vehicle's front tires are at straight-ahead position.
2) Apply grease to contact plate (1) of steering wheel.

"A": Grease 99000-25290

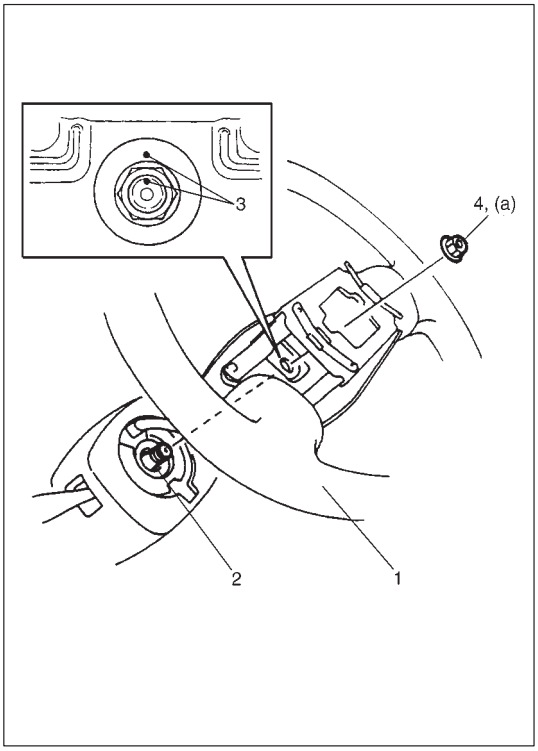

3) Install steering wheel (1) onto shaft (2), aligning them by match marks (3).
4) Tighten steering wheel nut (4) to specified torque.

   Tightening Torque
   (a): 33 N·m (3.3 kg-m, 24.0 lb-ft)

5) Install steering wheel pad.

COMBINATION SWITCH ASSEMBLY

REMOVAL

1) Remove steering wheel from steering column referring to STEERING WHEEL in this section.

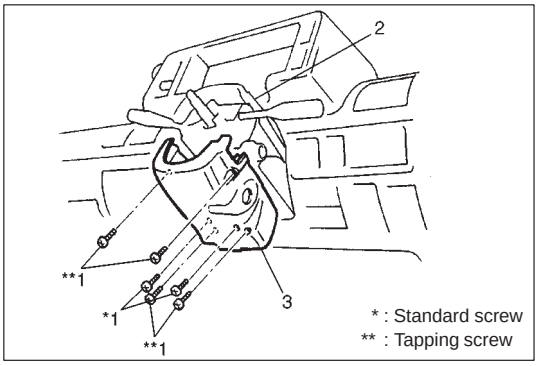

2) Remove steering column cover screws (1).
3) Separate upper cover (2) and lower cover (3), then remove them.
4) Disconnect lead wire of combination switch assembly at coupler.

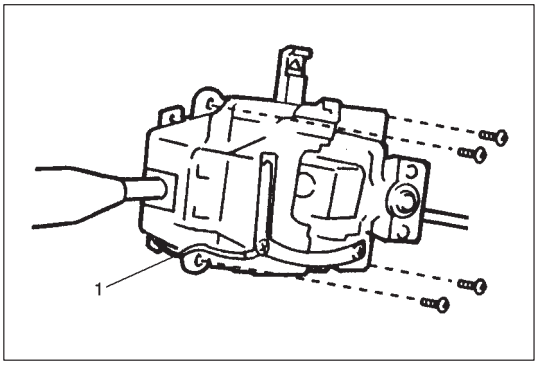

5) Remove combination switch (1) from steering column.

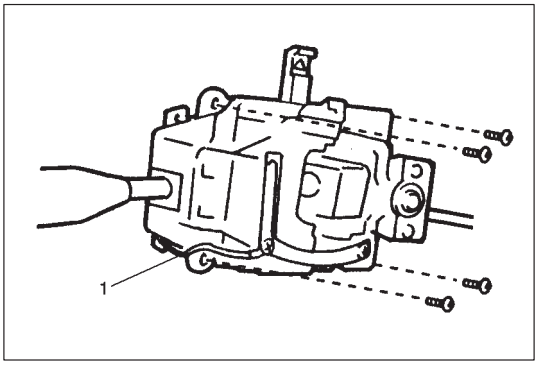

INSTALLATION

1) Check to make sure that vehicle's front tires are set at straight-ahead position and then ignition switch is at "LOCK" position.
2) Install combination switch assembly (1) to steering column.
3) Connect lead wire of combination assembly at coupler.
4) Clamp lead wire of combination switch assembly using clamp.

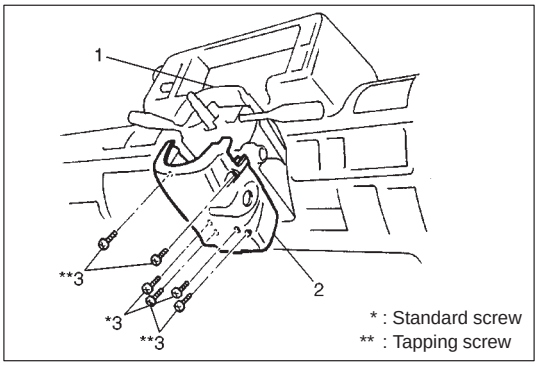

5) Install steering column upper cover (1) and lower cover (2), and then tighten steering column cover screws (3).

> **CAUTION:**
> **When installing upper cover (1) and lower cover (2), be careful so that combination switch lead wire is not caught between covers.**

6) Install steering wheel to steering column referring to STEERING WHEEL in this section.

STEERING COLUMN ASSEMBLY AND STEERING LOWER SHAFT

> **CAUTION:**
> **Once the double tube type steering column is removed from the vehicle, the column is extremely susceptible to damage.**
> - **Dropping the column assembly on its end could collapse the steering shaft or loosen the plastic shear pins which maintain column length.**
> - **Leaning on the column assembly could cause it to bend or deform.**
>
> **Any of the above damage could impair the column's collapsible design.**

NOTE:
When servicing steering column or any column-mounted component, remove steering wheel. But when removing steering column simply to gain access to instrument panel components, leave steering wheel installed on steering column.

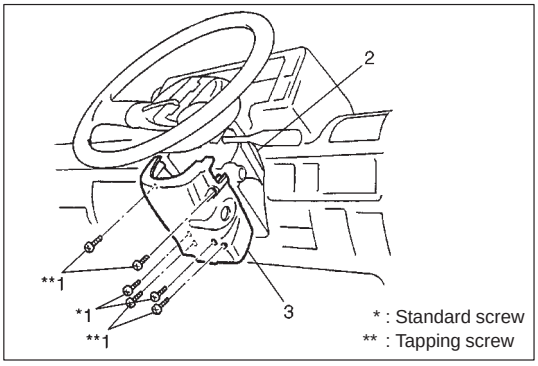

REMOVAL

1) Be sure that front wheels and steering wheel are in straight forward state.
2) Disconnect negative cable at battery.
3) Remove steering column cover screws (1).
4) Separate upper column cover (2) and lower column cover (3), then remove them.

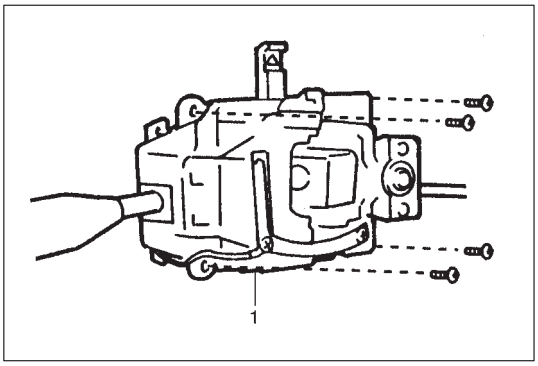

5) Remove steering wheel and combination switch assembly (1) referring to STEERING WHEEL AND COMBINATION SWITCH ASSEMBLY in this section, if it is necessary.
6) Disconnect the following connectors.
   - Ignition switch connector
   - Combination switch assembly connectors

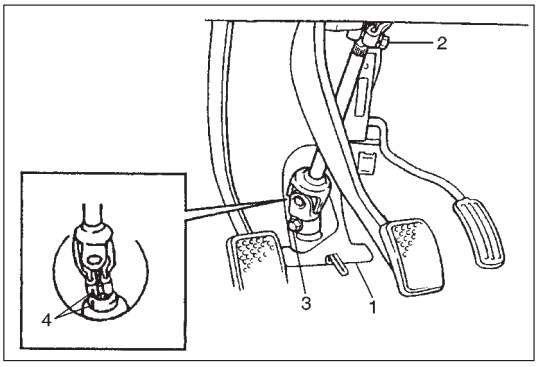

7) Remove steering joint cover (1).
8) Remove joint bolt (steering column side) (2) and joint bolt (pinion shaft side) (3).
9) Make alignment mark (4) on joint of steering lower shaft to pinion shaft for guide of reinstallation.

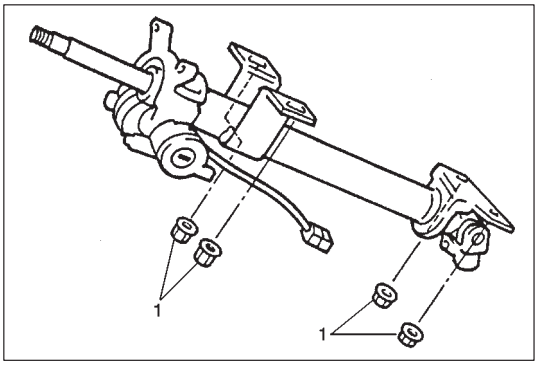

10) Remove steering column upper and lower nuts (1).
11) Remove steering column from vehicle.

> **CAUTION:**
> **Don't separate steering column assembly into steering column and shaft. If column or shaft is defective, replace as an assembly.**

12) Remove steering lower shaft.

INSPECTION

NOTE:
Vehicles involved in accidents resulting in body damage, where steering column has been impacted, may have a damaged or misaligned steering column.
For checking procedure of steering column assembly, refer to CHECKING STEERING COLUMN ASSEMBLY AND LOWER SHAFT FOR ACCIDENT DAMAGE in this section.

INSTALLATION

CAUTION:
After tightening steering column upper and lower nuts, steering lower shaft bolts should be tightened. Wrong tightening order above could cause a damage to steering lower shaft.

1) Be sure that front wheels and steering wheel are in straight forward state.

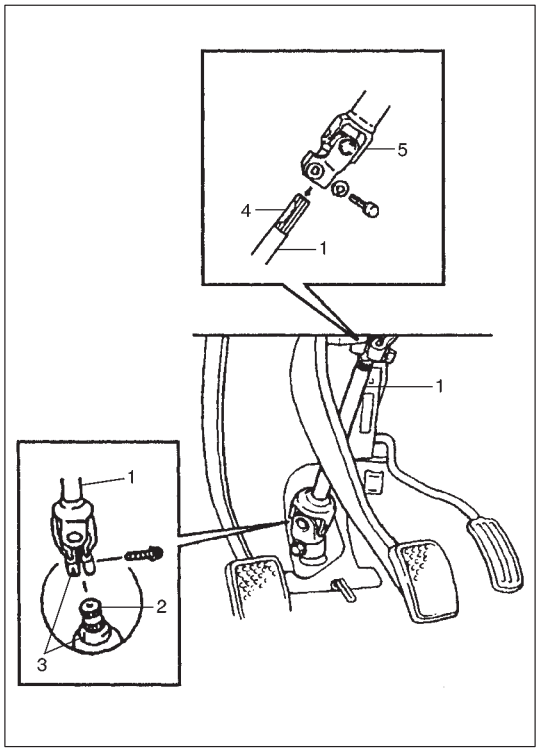

2) Insert lower shaft (1) into pinion shaft (2) with matching marks (3).
3) Align flat part (4) of steering lower shaft (1) with bolt hole of joint (5) of steering column as shown, and then insert steering column assembly into steering lower shaft.

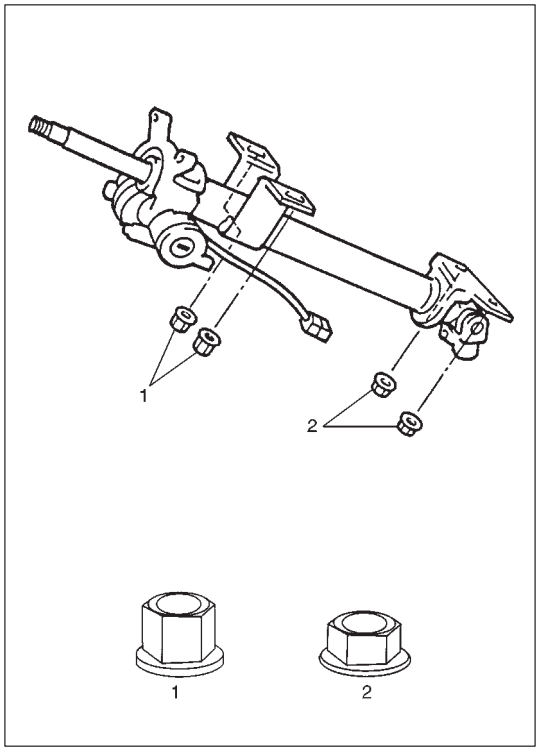

4) Install steering column and tighten steering column upper nuts (1) and steering column lower nuts (2) temporarily by hand.

   NOTE:
   For proper installing location of steering column upper and lower nuts, refer to figure.

5) Install combination switch assembly referring to COMBINATION SWITCH ASSEMBLY in this section, if combination switch assembly is removed.
6) Connect the following connectors.
   - Ignition switch connector
   - Combination switch assembly connectors

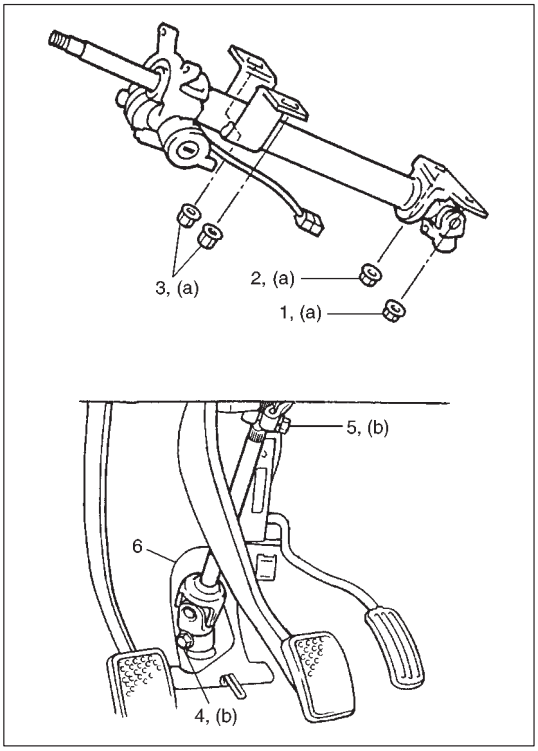

7) Tighten steering column upper and lower nuts (1, 2 and 3) to specified torque in the order (1) – (2) – (3) indicated in figure.

   Tightening Torque
   (a): 14 N·m (1.4 kg-m, 10.5 lb-ft)

8) Tighten joint bolt (pinion shaft side) (4) and joint bolt (steering column side) (5) to specified torque in the order (4) – (5) indicated in figure.

   Tightening Torque
   (b): 25 N·m (2.5 kg-m, 18.0 lb-ft)

9) Install steering joint cover (6).

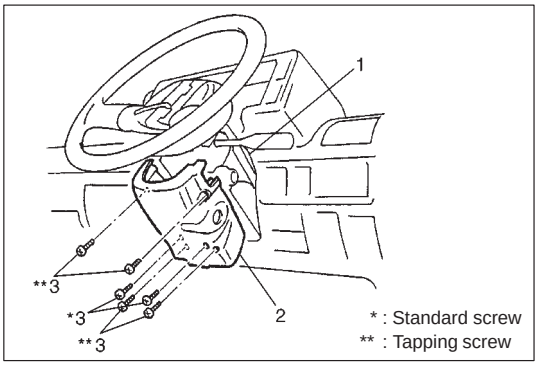

10) Install steering column upper cover (1) and lower cover (2), and then tighten steering column cover screws (3).

> **CAUTION:**
> **When installing upper cover (1) and lower cover (2), be careful so that combination switch lead wire is not caught between covers.**

11) Install steering wheel referring to STEERING WHEEL in this section, if steering wheel is removed.
12) Connect negative cable at battery.

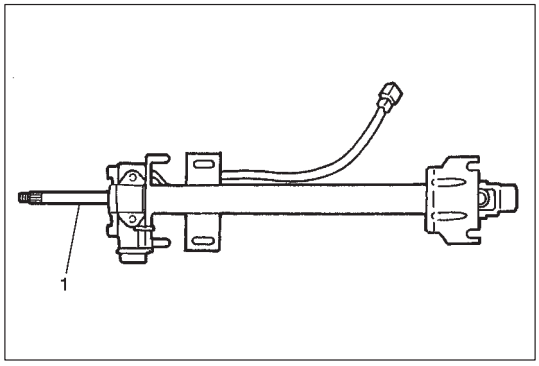

STEERING LOCK ASSEMBLY (IGNITION SWITCH)

REMOVAL

1) Remove steering column assembly (1) referring to REMOVAL of STEERING COLUMN ASSEMBLY AND STEERING LOWER SHAFT in this section.

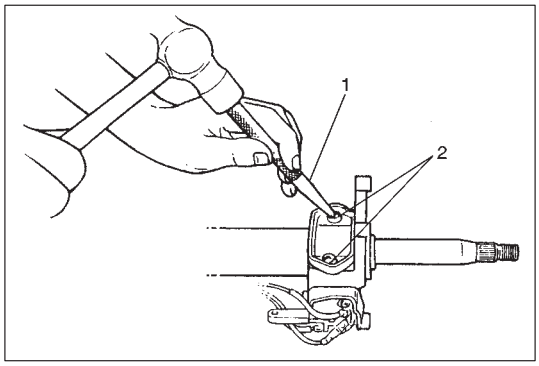

2) Using center punch (1), loosen and remove steering lock mounting bolts (2).

   NOTE:
   Use care not to damage aluminum part of steering lock body with center punch.

3) Turn ignition key to “ACC” or “ON” position and remove steering lock assembly from steering column.

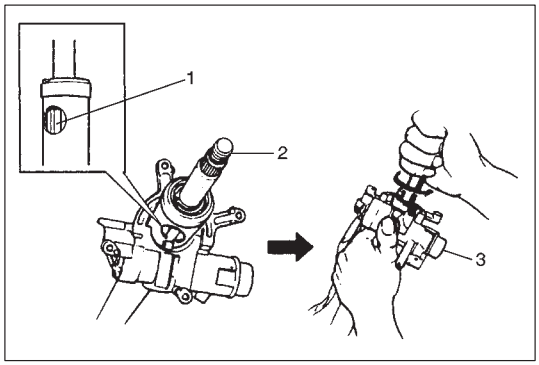

INSTALLATION

1) Position oblong hole (1) of steering shaft (2) in the center of hole in column.
2) Turn ignition key to “ACC” or “ON” position and install steering lock assembly (3) onto column.
3) Now turn ignition key to “LOCK” position and pull it out.
4) Align hub on lock with oblong hole (1) of steering shaft (2) and rotate shaft to assure that steering shaft (2) is locked.

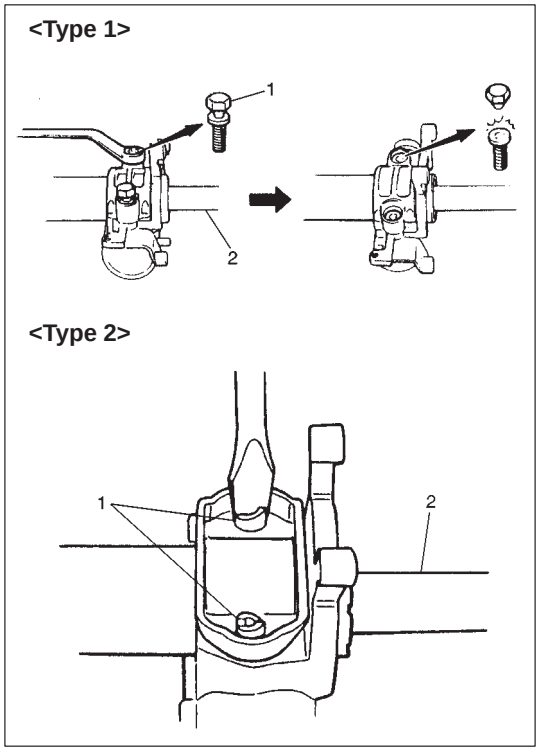

5) Tighten new bolts (1) until head of each bolt is broken.
6) Turn ignition key to “ACC” or “ON” position and check to be sure that steering shaft (2) rotates smoothly. Also check for lock operation.
7) Install steering column assembly referring to STEERING COLUMN ASSEMBLY AND STEERING LOWER SHAFT INSTALLATION in this section.

CHECKING STEERING COLUMN ASSEMBLY AND LOWER SHAFT FOR ACCIDENT DAMAGE

NOTE:
Vehicles involved in accidents resulting in body damage, where steering column has been impacted may have a damaged or misaligned steering column.

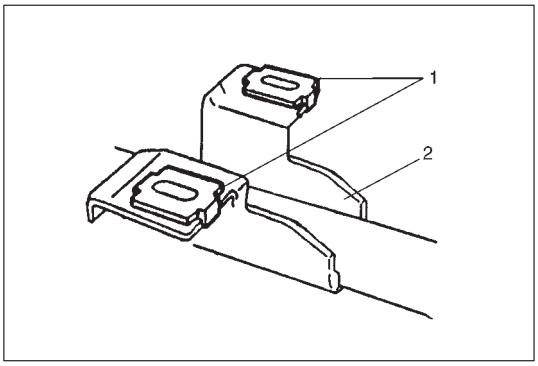

CHECKING PROCEDURE

1) Check that each capsule (1) is attached to steering column bracket (2) securely, if equipped.
   If capsules are loosen, replace steering column assembly.
2) Check two capsules for any damages such as crack or breakage, if equipped.
   If anything is found faulty, replace as steering column assembly.

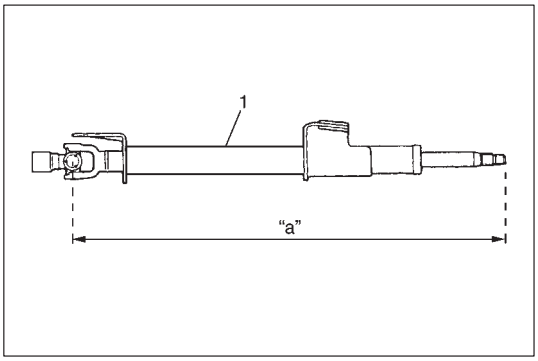

3) Take measurement "a" as shown.
   If it is shorter than specified length, replace column assembly (1) with new one.

   Length "a": 506.5 – 508.5 mm (19.9 – 20.0 in.)

4) Check steering shaft joints and shaft for any damages such as crack, breakage, malfunction or excessive play.
   If anything is found faulty, replace as lower shaft assembly or column assembly.
5) Check steering shaft for smooth rotation.
   If found defective, replace as column assembly.
6) Check steering shaft and column for bend, cracks or deformation.
   If found defective, replace.

REQUIRED SERVICE MATERIAL

MATERIAL	RECOMMENDED SUZUKI PRODUCT	USE
Grease	SUZUKI GREASE CE-T (99000-25290)	Contact plate.

SPECIAL TOOL

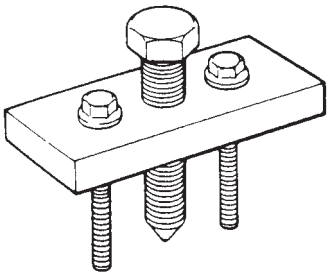

09944-36011
Steering wheel remover

SECTION 3D

FRONT SUSPENSION

NOTE:

- **All front suspension fasteners are an important attaching part in that it could affect the performance of vital parts and systems, and/or could result in major repair expense. They must be replaced with one of the same part number or with an equivalent part if replacement becomes necessary. Do not use a replacement part of lesser quality or substitute design. Torque values must be used as specified during reassembly to assure proper retention of this part.**
  There is to be no welding as it may result in extensive damage and weakening of the metal.
- **Never attempt to heat, quench or straighten any front suspension part, or damage to the part may result.**

CONTENTS

GENERAL DESCRIPTION 3D- 2
DIAGNOSIS 3D- 3
Diagnosis Table 3D- 3
Stabilizer Bar and/or Bushing Check 3D- 3
Strut Assembly Check 3D- 3
Suspension Control Arm and Bushing Check 3D- 4
Suspension Control Arm Joint Check 3D- 4
Wheel Disc, Nut and Bearing Check 3D- 4
ON-VEHICLE SERVICE 3D- 5
Strut Assembly 3D- 5
Stabilizer Bar and/or Bushings 3D-10
Wheel Hub, Wheel Stud and Wheel Bearing Outside Inner Race 3D-12
Suspension Control Arm/Bushing 3D-15
Knuckle and Bearing 3D-18
REQUIRED SERVICE MATERIAL 3D-21
SPECIAL TOOL 3D-21

GENERAL DESCRIPTION

Front suspension is Macpherson (strut) type independent suspension system, and consists of coil springs, front suspension struts, steering knuckles, stabilizer bar, and front suspension arms.

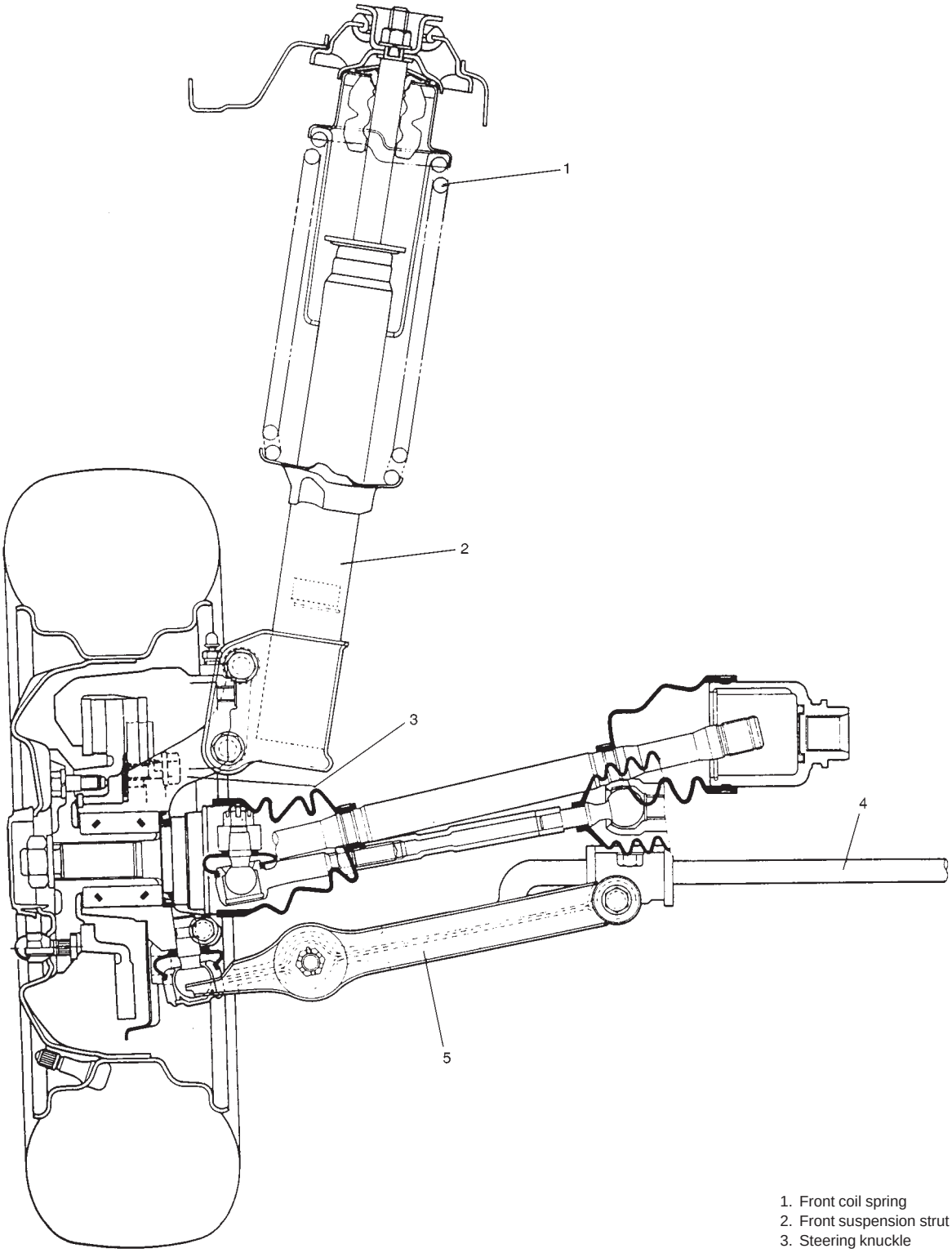

1. Front coil spring
2. Front suspension strut
3. Steering knuckle
4. Stabilizer bar
5. Front suspension control arm

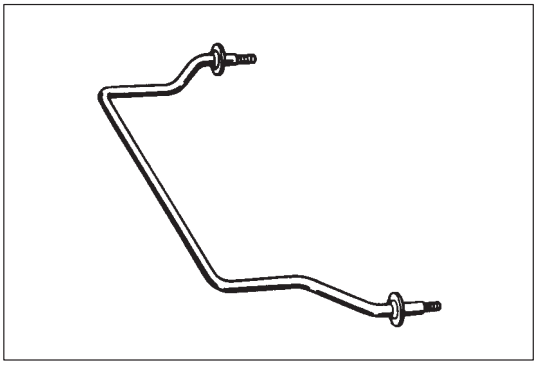

DIAGNOSIS

DIAGNOSIS TABLE

Refer to Section 3.

STABILIZER BAR AND/OR BUSHING CHECK

Bar

Inspect for damage or deformation. If defective, replace.

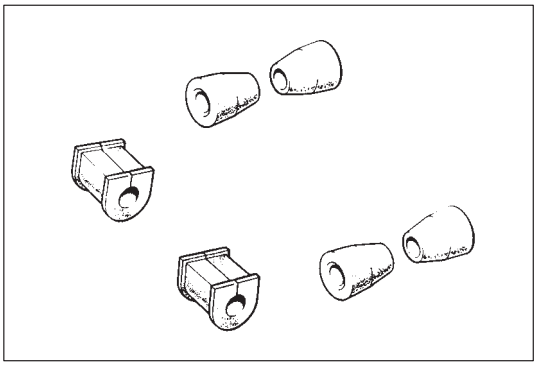

Bushing

Inspect for damage, wear or deterioration. If defective, replace.

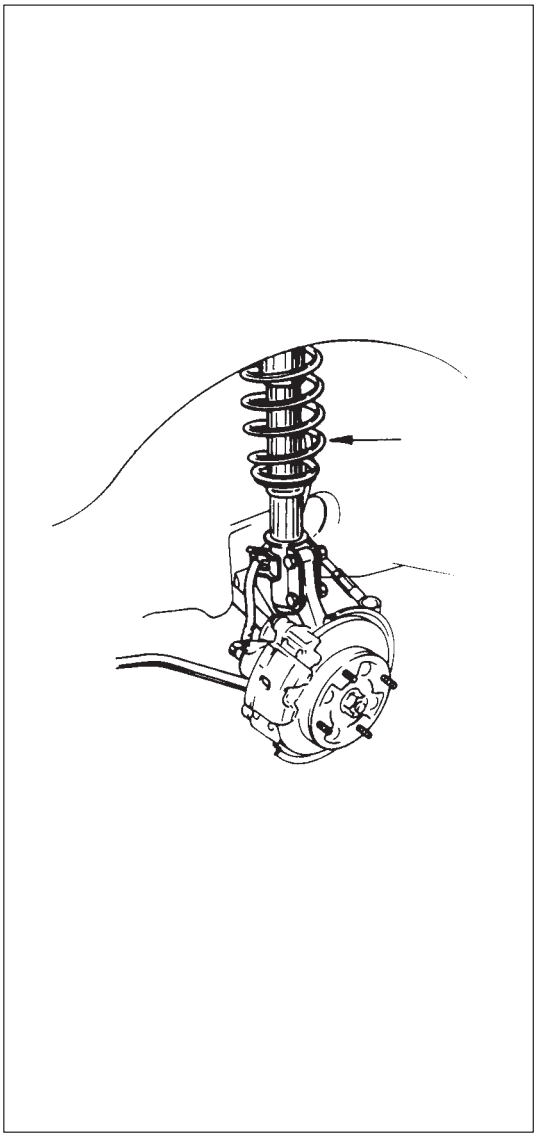

STRUT ASSEMBLY CHECK

- Inspect strut for oil leakage. If strut is found faulty, replace it as an assembly unit, because it can not be disassembled.
- Strut function check
  Check and adjust tire pressures as specified. Bounce vehicle body three or four times continuously by pushing front end on the side with strut to be checked. Apply the same amount of force at each push and note strut resistance both when pushed and rebounding.
  Also, note how many times vehicle body rebounds before coming to stop after hands are off. Do the same for strut on the other side.
  Compare strut resistance and number of rebound on the right with those on the left. And they must be equal in both. With proper strut, vehicle body should come to stop the moments hands are off or after only one or two small rebounds. If struts are suspected, compare them with known good vehicle or strut.

- Inspect for damage or deformation.
- Inspect bearing for wear, abnormal noise or gripping.
- Inspect spring seat for cracks or deformation.
- Inspect bump stopper for deterioration.
- Inspect rebound stopper and strut mount for wear, cracks or deformation.

Replace any parts found defective.

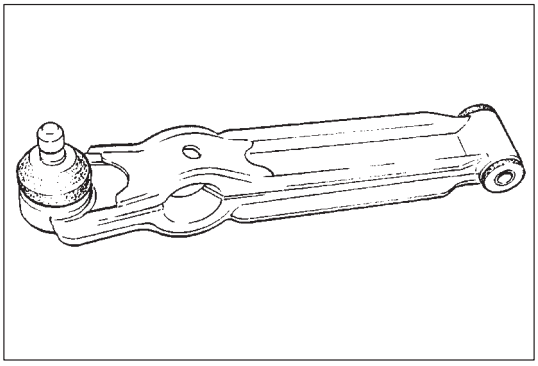

SUSPENSION CONTROL ARM AND BUSHING CHECK

Inspect for cracks, deformation or damage.

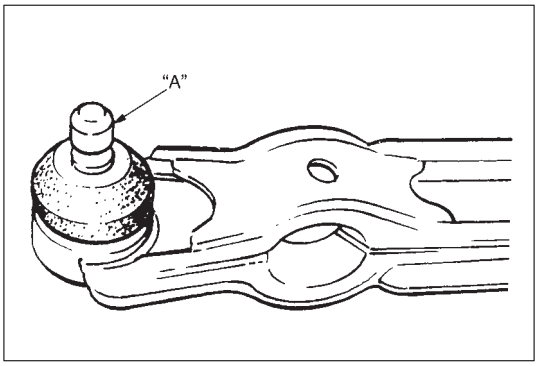

SUSPENSION CONTROL ARM JOINT CHECK

- Check for smooth rotation.
- Inspect ball stud for damage.
- Inspect dust cover for damage.

NOTE:
Suspension control arm and arm joint cannot be separated as shown "A" in figure.

If there is any damage to either, control arm assembly must be replaced as a complete unit.

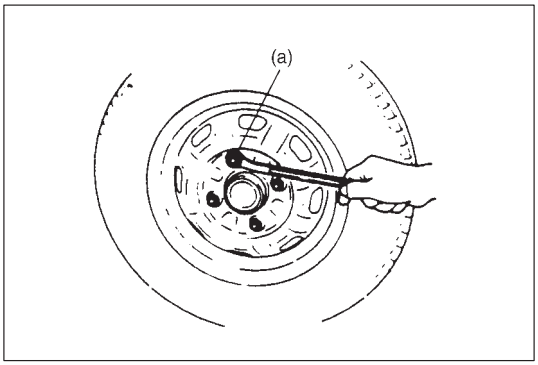

WHEEL DISC, NUT AND BEARING CHECK

- Inspect each wheel disc for dents, distortion and cracks.
  A disc in badly damaged condition must be replaced.
- Check wheel nuts for tightness and, as necessary, retighten them to specification.

Tightening Torque
(a): 55 N·m (5.5 kg-m, 39.5 lb-ft)

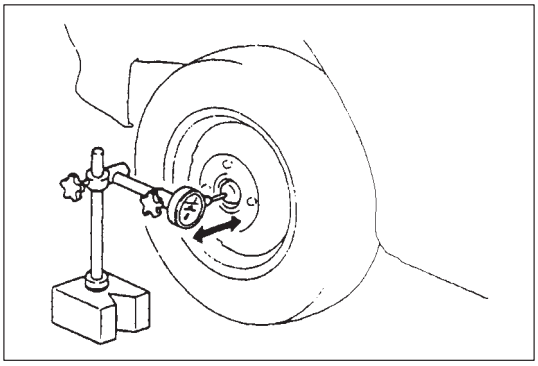

- Check wheel bearing for wear. When measuring thrust play, apply a dial gauge to wheel hub.

Thrust play limit: 0.0 mm (0.000 in.)

If measurement exceeds limit when shaft nut is tightened to specified torque, replace bearing.

Tightening torque for drive shaft nut
175 N·m (17.5 kg-m, 127.0 lb-ft)

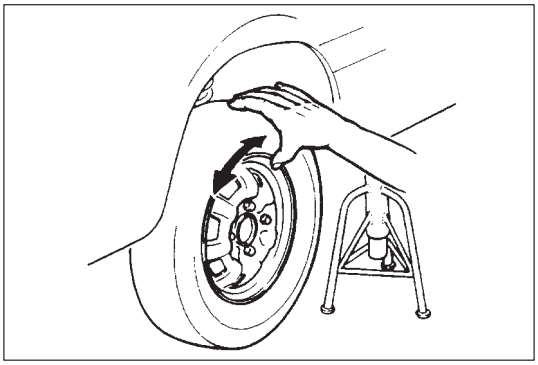

- By rotating wheel actually, check wheel bearing for noise and smooth rotation. If defective, replace bearing.

ON-VEHICLE SERVICE

STRUT ASSEMBLY

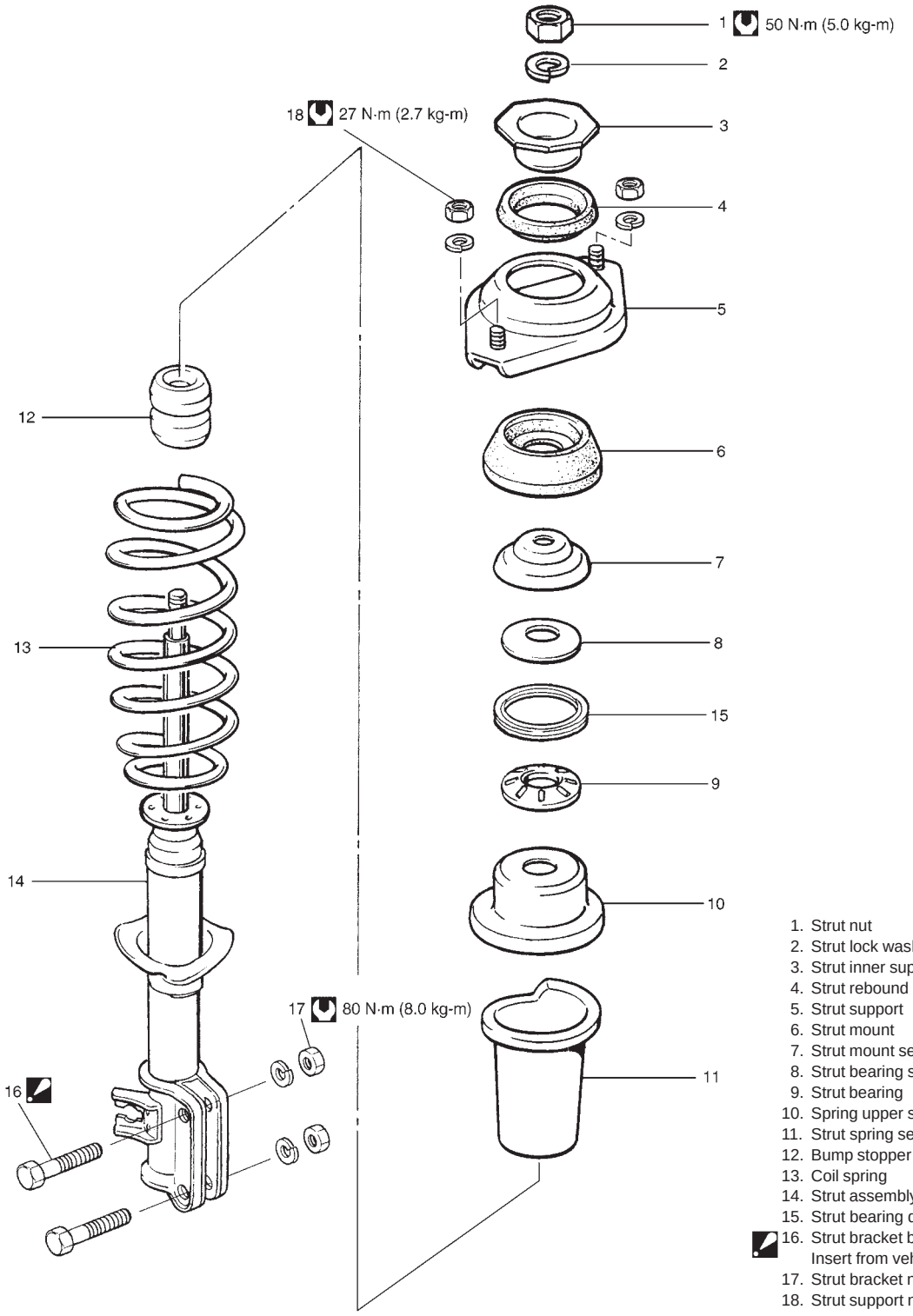

1. Strut nut
2. Strut lock washer
3. Strut inner support
4. Strut rebound stopper
5. Strut support
6. Strut mount
7. Strut mount seat
8. Strut bearing seat
9. Strut bearing
10. Spring upper seat
11. Strut spring seat
12. Bump stopper
13. Coil spring
14. Strut assembly
15. Strut bearing dust seal
16. Strut bracket bolt:
    Insert from vehicle front side.
17. Strut bracket nut
18. Strut support nut

: Tightening Torque

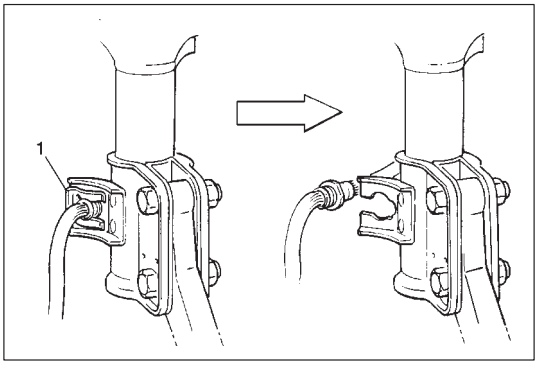

REMOVAL

1) Hoist vehicle, allowing front suspension to hang free.
2) Remove wheel.
3) Remove E ring (1) securing brake hose and take brake hose off strut bracket as shown.

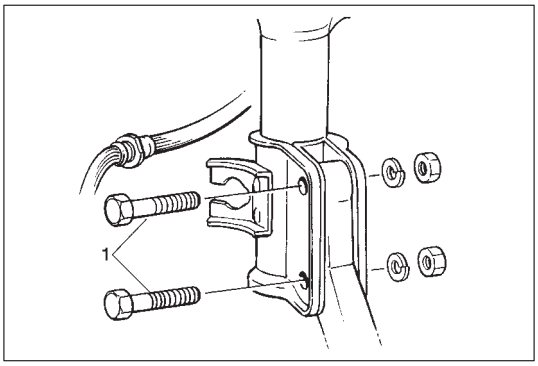

4) Remove strut bracket bolts (1).

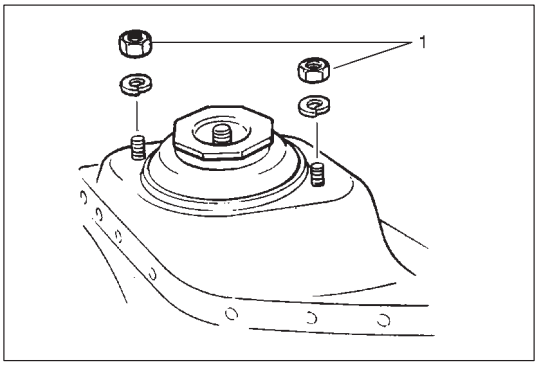

5) Remove strut support nuts (1).
   Hold strut by hand so that it will not fall off.

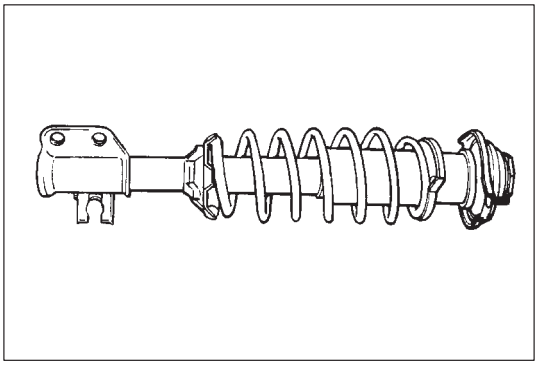

6) Remove strut.

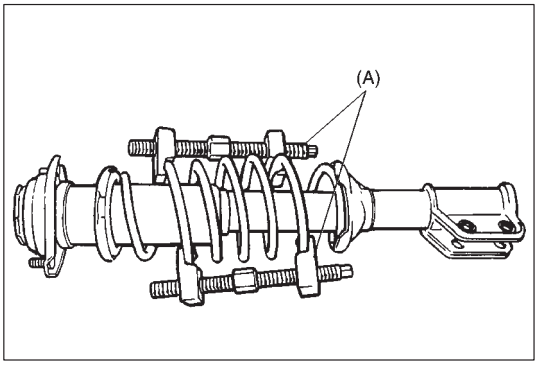

DISASSEMBLY

1) Placing special tool to spring as shown, turn special tool bolts alternately until spring tension is released. Whether it is released or not can be known by whether strut turns lightly while strut spring is held stationary.

   Special Tool
   (A): 09940-71430

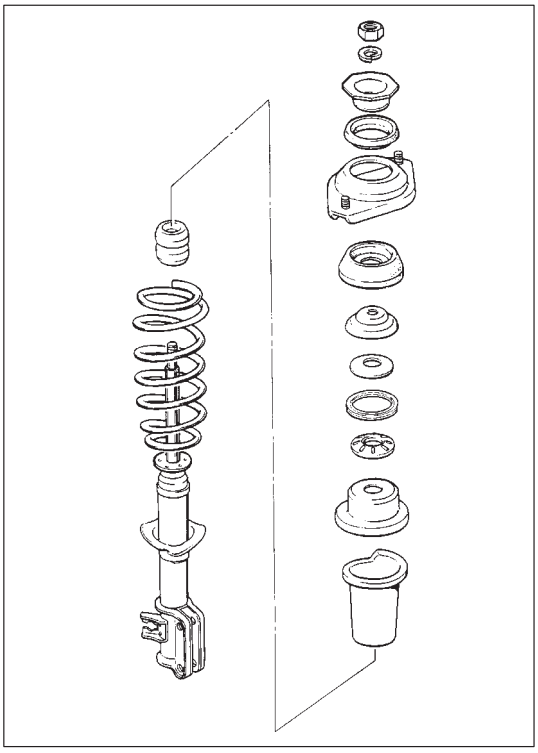

2) While keeping spring compressed with special tool as shown above, remove strut nut and then disassemble parts.

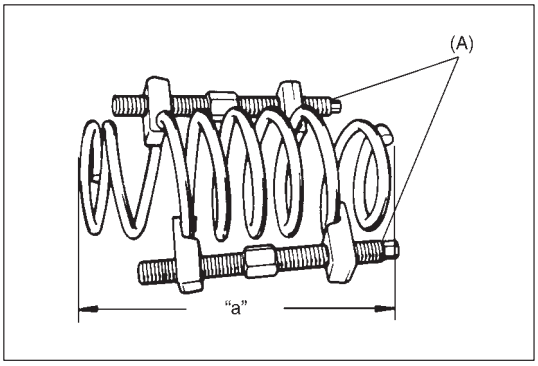

ASSEMBLY

1) Compress spring with special tool until total length becomes about 280 mm (11.0 in.) as shown.

   Special Tool
   (A): 09940-71430

   Length "a": 280 mm (11.0 in.)

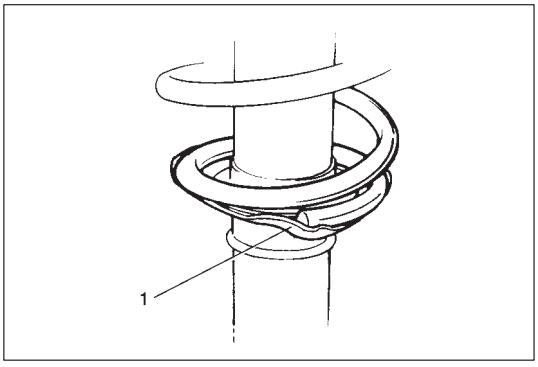

2) Mate spring end with stepped part of lower seat (1) as shown.

3) Install bump stopper onto strut rod. For installing direction, refer to the figure on previous page.
4) Pull strut rod as far up as possible and use care not to allow it to retract into strut.

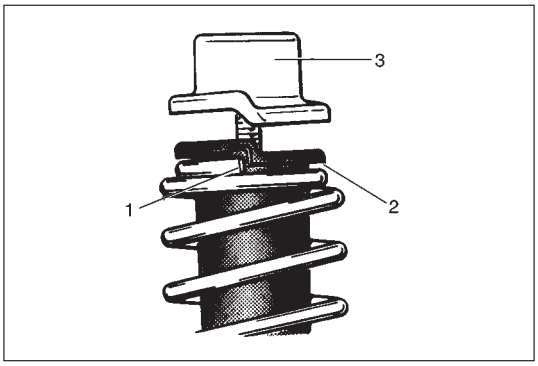

5) Install spring seat (2), mating stepped part of seat with spring upper end (1) as shown. And then similarly install spring upper seat (3) on seat.

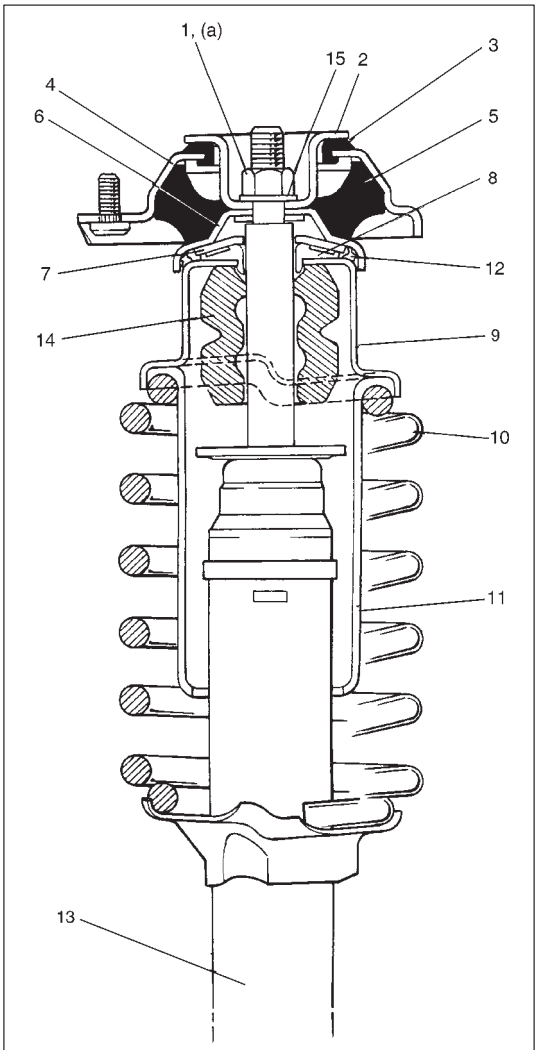

13. Strut assembly
14. Bump stopper
15. Lock washer

6) Wash strut bearing (8) and apply grease. Install it on spring upper seat (9). For installing direction, refer to the figure.
7) Wash bearing seat (7) and install it as shown.
8) On bearing seat and bearing dust seal (12), install mount seat comp (6), strut mount (5), support (4)-and-rebound stopper (3) and inner support (2) in this sequence. Be careful for installing direction. Tighten strut nut (1) to specified torque and then apply waterproof coating (paint or lacquer) all around nut and strut rod screw part.

   Tightening Torque
   (a): 50 N·m (5.0 kg-m, 36.0 lb-ft)

9) Loosen and remove special tool compressing coil spring (10). While loosening special tool, recheck that stepped part of spring seat (11) and spring end are in place to each other as described in foregoing steps 2) and 5).

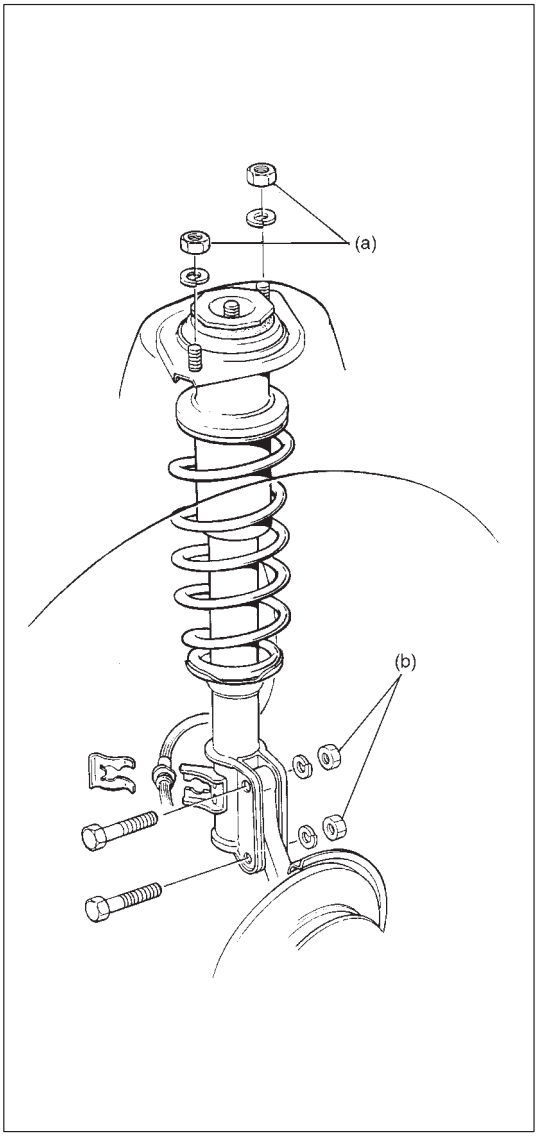

INSTALLATION

1) Install strut by reversing the REMOVAL steps 1) to 6). Insert bolts in such a direction as shown.
2) Tighten all fasteners to specified torque.

Tightening Torque
(a): 27 N·m (2.7 kg-m, 19.5 lb-ft)
(b): 80 N·m (8.0 kg-m, 58.0 lb-ft)

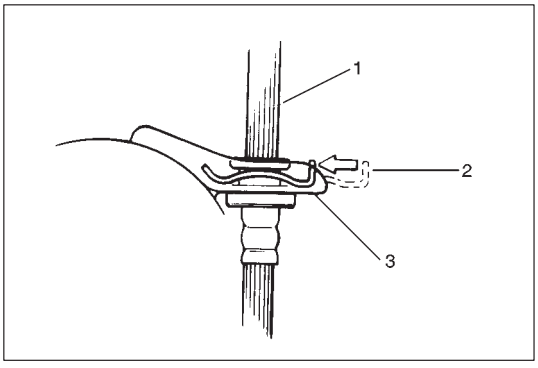

3) Install brake hose(1).
   Don't twist hose when installing it.
   Install E ring (2) as far as bracket end surface (3) as shown.

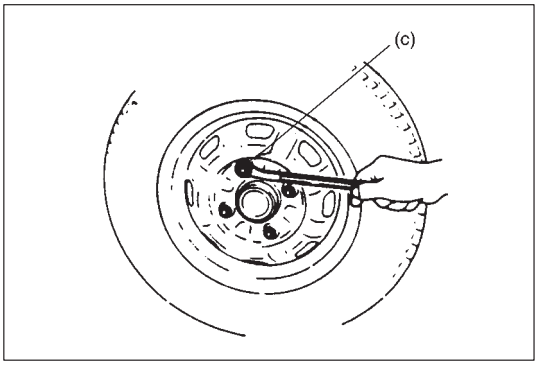

4) Tighten wheel nut to specified torque.

Tightening Torque
(c): 55 N·m (5.5 kg-m, 39.5 lb-ft)

5) Confirm front end alignment referring to Section 3A.

STABILIZER BAR AND/OR BUSHINGS

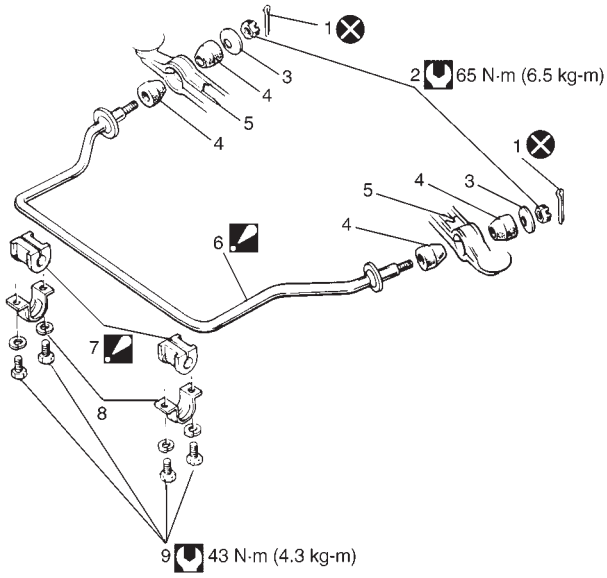

1. Split pin
2. Castle nut
3. Stabilizer bar washer
4. Stabilizer bar bush
5. Suspension control arm
6. Stabilizer bar:
   Be sure that color paint on stabilizer bar aligns with mount bush, both right and left.
7. Mount bush:
   Install painted side to suspension control arm on the right.
8. Mount bush bracket
9. Mount bracket bolt

: Tightening Torque

: Do not reuse.

REMOVAL

1) Hoist vehicle and allow the front lower control arms to hang free.
2) Remove front wheels.
3) Remove split pin and castle nut and then disconnect stabilizer bar from front suspension arms (right and left) as shown.
4) Remove stabilizer bar mount bush bracket bolts and stabilizer bar.

INSTALLATION

When installing stabilizer, loosely assemble all components while insuring that stabilizer centered, side-to-side.

Install parts reversing order of removal, observing following instructions.

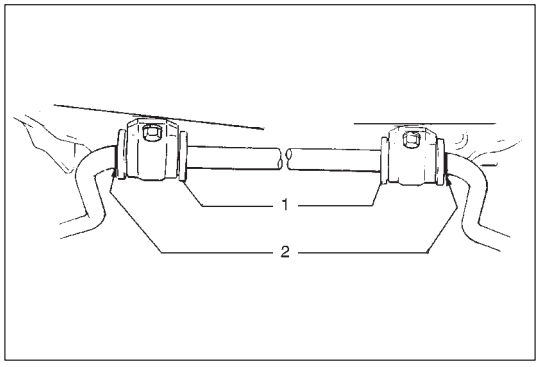

- For correct installation of stabilizer bar, side-to-side, be sure that color paint mark (2) on stabilizer bar aligns with mount bush (1), both right and left, as shown.

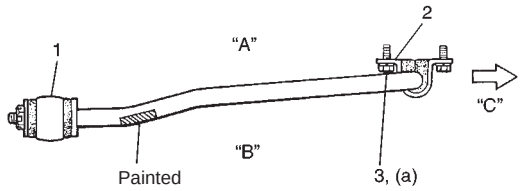

"A": Upper side
"B": Lower side
"C": Forward

- Install painted side to suspension control arm (1) on the right.
- Install mount bracket (2) so that its oblong hole drilled side of bracket to the rear.
- Tighten mount bracket bolt (3) to specified torque.

Tightening Torque
(a): 43 N·m (4.3 kg-m, 31.0 lb-ft)

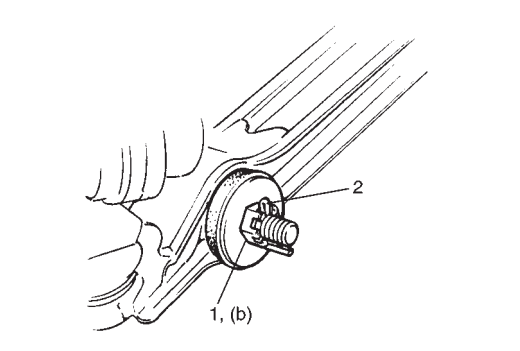

- After tightening castle nut (1) to specified torque, be sure to bend split pin (2) as shown.

Tightening Torque
(b): 65 N·m (6.5 kg-m, 47.0 lb-ft)

WHEEL HUB, WHEEL STUD AND WHEEL BEARING OUTSIDE INNER RACE

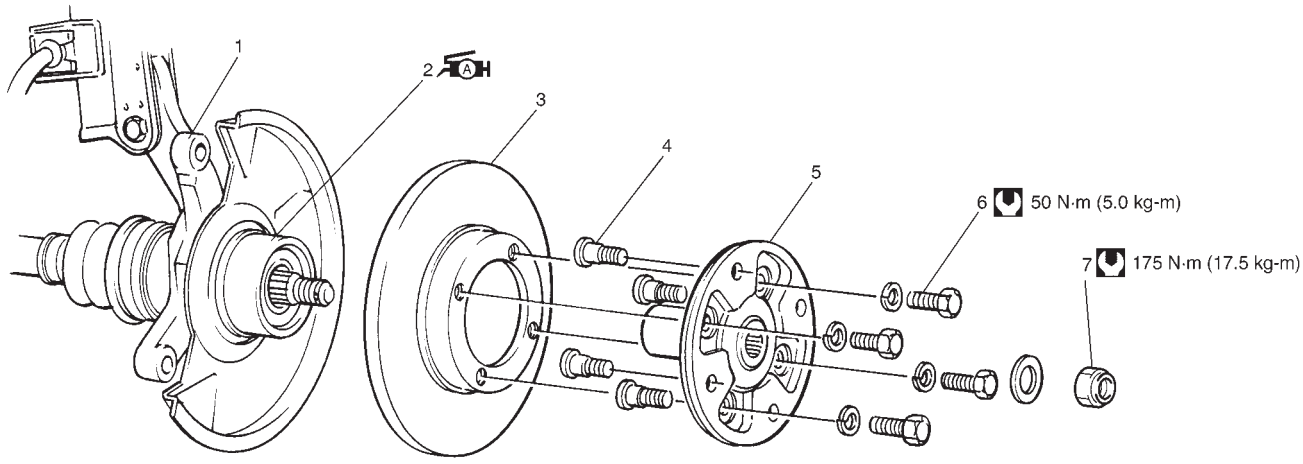

1. Steering knuckle
2. Wheel bearing:
   Apply lithic grease (SUZUKI SUPER GREASE A 99000-25010) to balls and oil seal lips.
3. Brake disc
4. Hub bolt
5. Wheel hub
6. Brake disc bolt
7. Drive shaft castle nut

: Tightening Torque

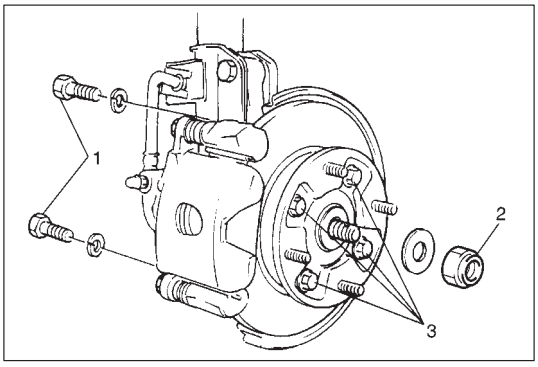

REMOVAL

1) Hoist vehicle and remove wheel.
2) Depress foot brake pedal and hold it there.
   Remove drive shaft nut (2) and then loosen brake disc bolts (3) but don't remove them.
3) Remove caliper carrier bolts (1).

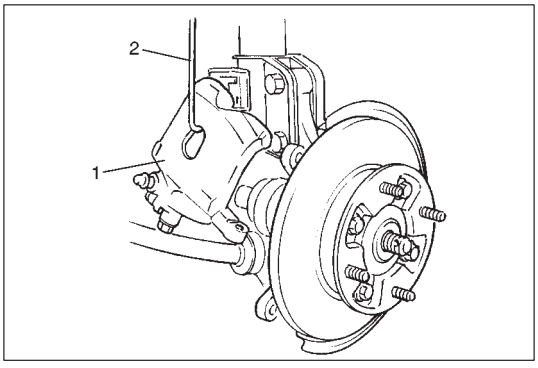

4) Remove caliper with carrier (1) from knuckle and suspend with a wire hook (2).

   NOTE:
   Hang removed caliper with a wire hook or the like so as to prevent brake hose from bending and twisting excessively or being pulled.
   Don't operate brake pedal with pads removed.

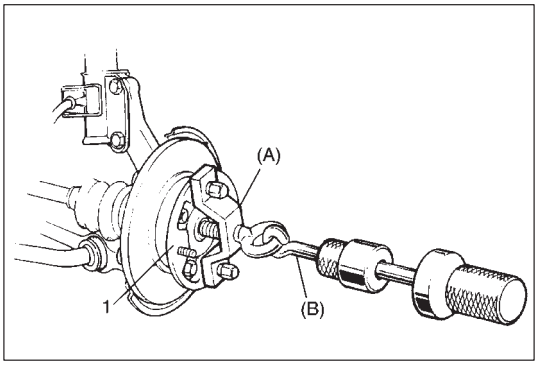

5) Pull out wheel hub (1) with special tools.

   Special Tool
   (A): 09943-17912
   (B): 09942-15510

6) Separate wheel hub and brake disc.

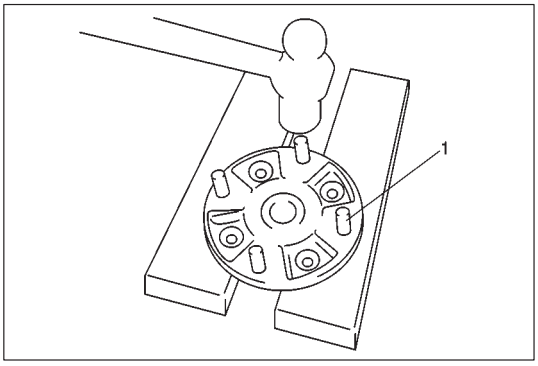

7) Remove hub bolts (1).

> **CAUTION:**
> **Never remove bolt unless replacement is necessary.**
> **Be sure to use a new bolt for replacement.**

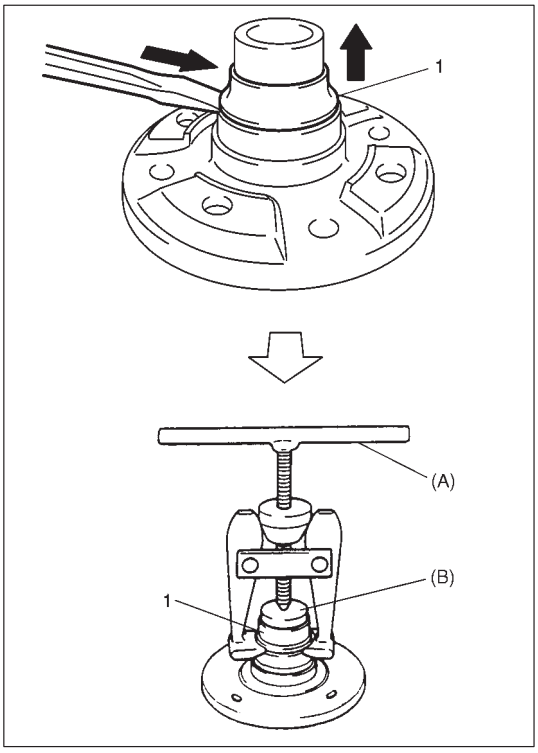

8) Remove wheel bearing inner race (1).

Special Tools
(A): 09913-61110
(B): 09925-88210

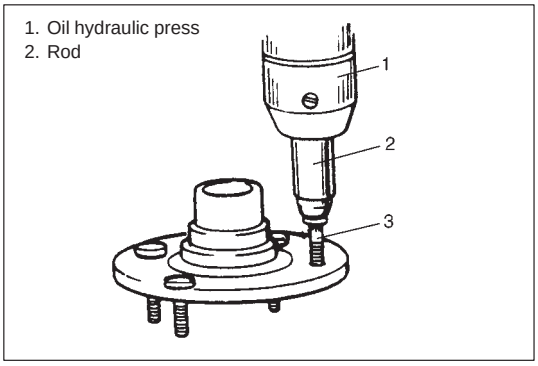

INSTALLATION

1) Insert new stud (3) in hub hole. Rotate stud slowly to assure the serrations are aligned with those made by original bolt.

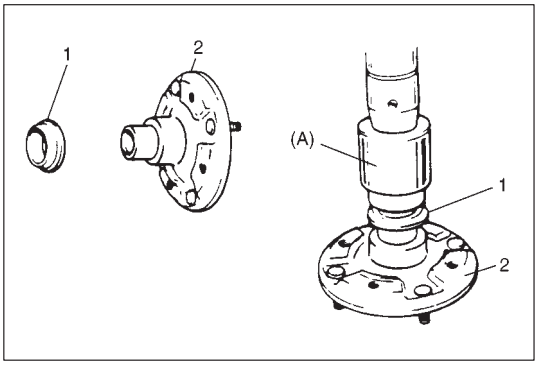

2) Install outside inner race (1) to wheel hub (2) using special tool. Installing direction is as shown.

Special Tool
(A): 09940-53111

NOTE:
When replacing bearing, inner race or outer race, be sure to replace them with new ones as a set.

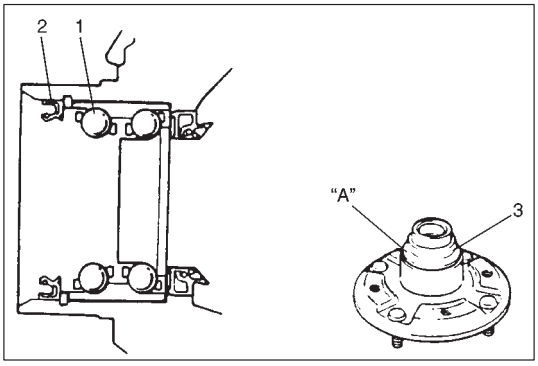

3) Apply grease to outside bearing (1), outside inner race (3) and oil seal lip (2).

"A": SUZUKI SUPER GREASE A 99000-25010

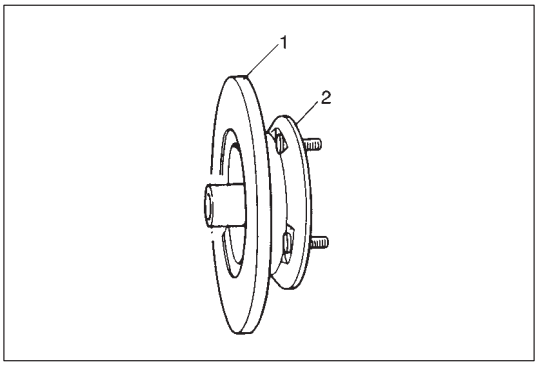

4) Install brake disc (1) to wheel hub (2). Tighten disc bolts only lightly.

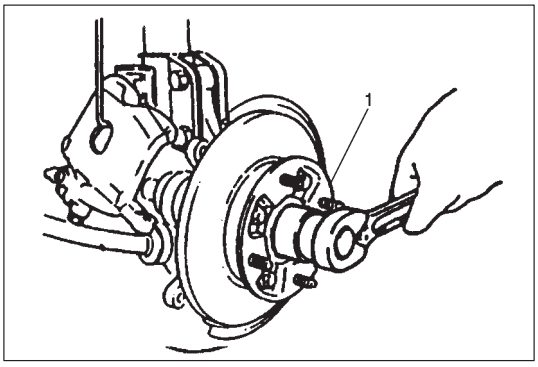

5) Install wheel hub (1) to knuckle by tightening new drive shaft nut. Do not tap wheel hub.

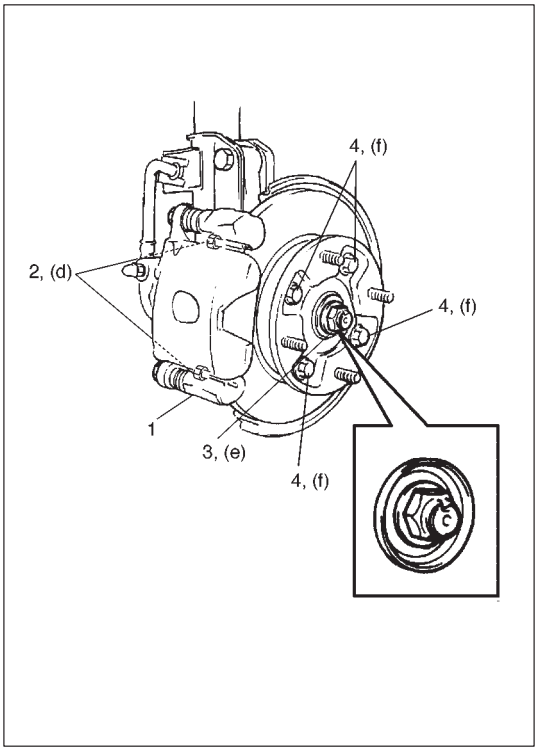

6) Install carrier and caliper (1).
7) Tighten caliper carrier bolts (2) to specified torque.

Tightening Torque
(d): 85 N·m (8.5 kg-m, 61.5 lb-ft)

8) Depress foot brake pedal and hold it there.
Tighten drive shaft nut (3) and brake disc bolts (4) to specified torque.

Tightening Torque
(e): 210 N·m (21.0 kg-m, 152.0 lb-ft)
(f): 50 N·m (5.0 kg-m, 36.0 lb-ft)

9) Install wheel and lower vehicle.

SUSPENSION CONTROL ARM/BUSHING

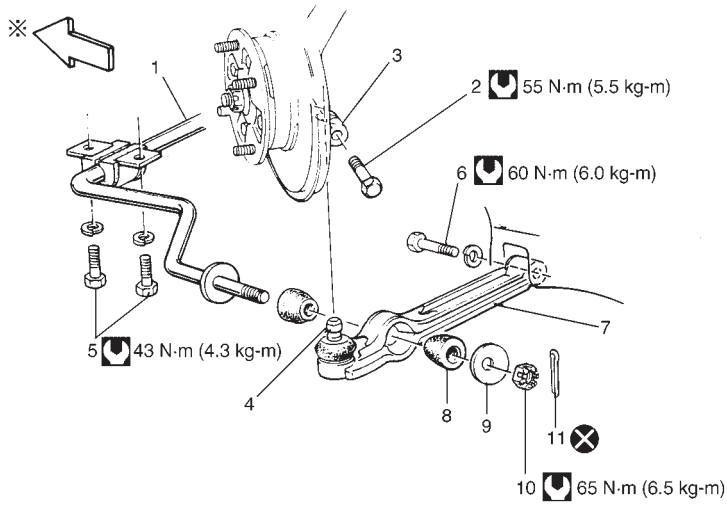

1. Stabilizer bar
2. Ball stud bolt
3. Knuckle
4. Ball stud
5. Stabilizer bar mount bracket bolt
6. Control arm bolt
7. Suspension control arm
8. Stabilizer bar bushing
9. Washer
10. Castle nut
11. Split pin

※ Forward

: Tightening Torque

: Do not reuse.

REMOVAL

1) Hoist vehicle and remove wheel.
2) Remove stabilizer bar split pin, castle nut, washer and bushing.
3) Remove stabilizer bar mount bracket (right and left) bolts and stabilizer bar.
4) Remove ball stud bolt.
5) Remove control arm bolt.
6) Remove control arm.

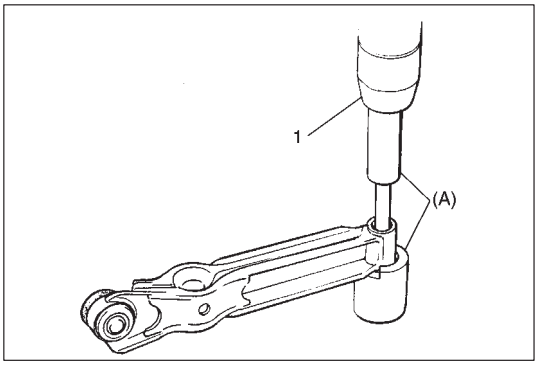

DISASSEMBLY

Remove bushing with special tool and hydraulic press (1) as shown.

Special Tool

(A): 09943-77910

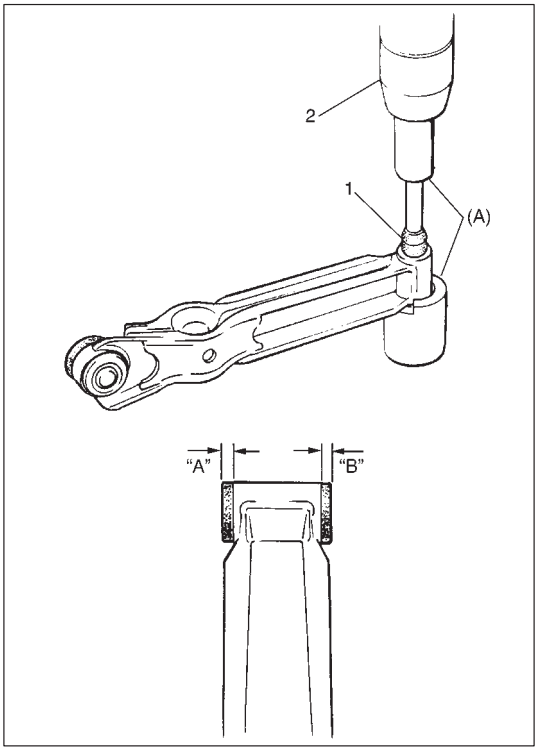

ASSEMBLY

Before installing bushing (1), apply soap water on its circumference to facilitate installation and then installing bushing with special tool and hydraulic press (2) as shown.

Special Tool
(A): 09943-77910

> **CAUTION:**
> **Be sure to use new bushing.**

NOTE:
When installed, bush should be equal dimensions "A" and "B" in figure.

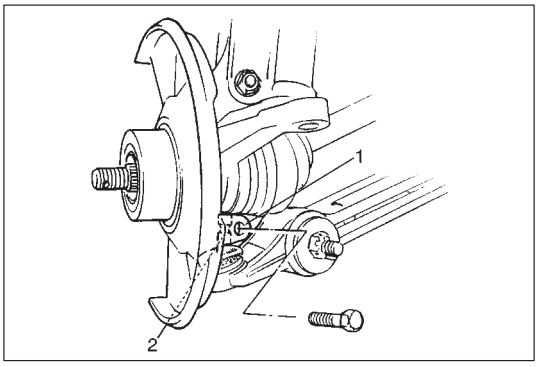

INSTALLATION

For installation, reverse removal procedure, observing following instructions.

1) Install ball stud (2) to knuckle (1). Align ball stud groove with knuckle bolt hole as shown. Then drive in ball stud bolt from the direction as shown.

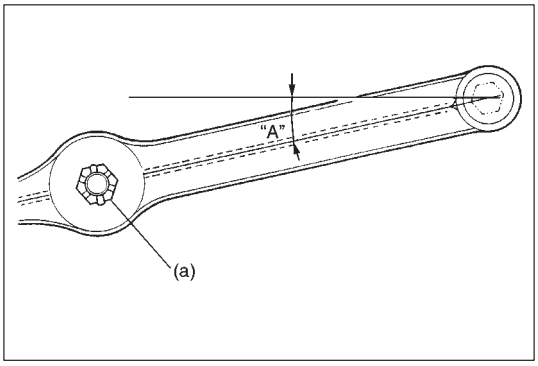

2) Install control arm to vehicle body and tighten control arm bolt to specified torque at the position where control arm is installed at angle "A" as shown.

   Tightening Torque
   (a): 65 N·m (6.5 kg-m, 47.0 lb-ft)

   Angle "A": 10° ± 5°

3) Install stabilizer bar to control arm and then bushing, washer and nut to stabilizer bar. Tighten nut to the extent to be turned by hand.
4) Tighten stabilizer bar mount bracket bolts to specified torque. Before tightening, check if stabilizer bar is properly centered, side-to-side, refer to STABILIZER BAR AND/OR BUSHINGS in this section.
5) Tighten all bolts and nuts, refer to illustration on previous page to each specified torque.
6) Install split pin, refer to STABILIZER BAR AND/OR BUSHINGS in this section.
7) Install wheel and lower vehicle.
8) Check toe seating, adjust as required referring to Section 3A.

KNUCKLE AND BEARING

REMOVAL

1) Hoist vehicle and remove wheel.
2) Remove wheel hub. Refer to step 2) – 5) of WHEEL HUB, WHEEL STUD AND WHEEL BEARING OUTSIDE INNER RACE REMOVAL in this section.

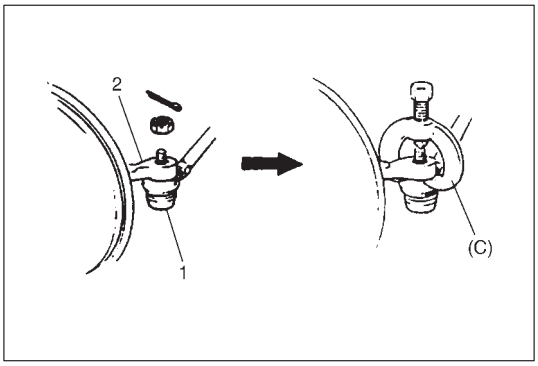

3) Disconnect tie rod end (1) from knuckle (2) with special tool.

   Special Tool
   (C): 09913-65210

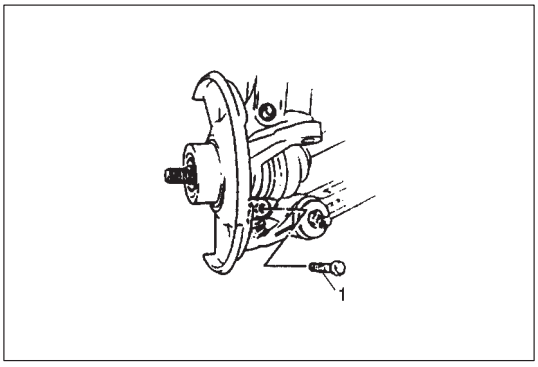

4) Remove ball stud bolt (1).

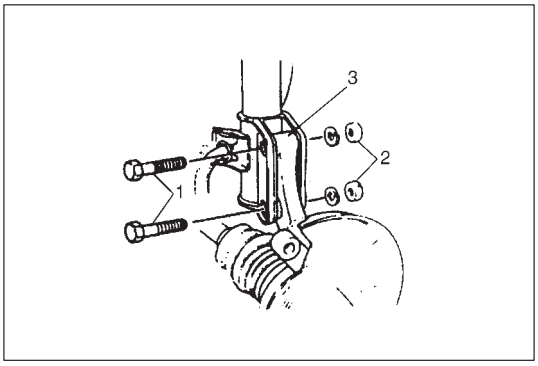

5) Remove strut bracket bolts (1), nuts (2) and steering knuckle (3).

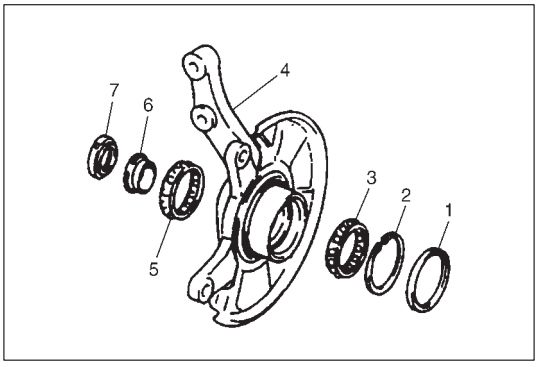

DISASSEMBLY

NOTE:
Once bearing outer race is removed, bearing set (outer race, bearings and inner races) should be replaced with new one.

1) Remove outside oil seal (1), snap ring (2), outside bearing (3), inside oil seal (7), inside inner race (6) and inside bearing (5) from knuckle (4) in that order.

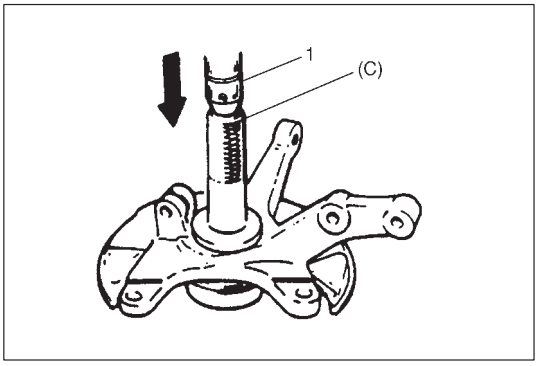

2) Remove bearing outer race using special tool and hydraulic press (1).

Special Tool
(C): 09913-75520

3) Remove wheel bearing inner race from wheel hub referring to step 8) of WHEEL HUB, WHEEL STUD AND WHEEL BEARING OUTSIDE INNER RACE REMOVAL in this section.

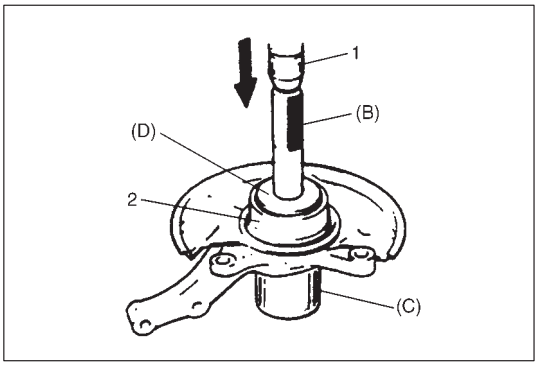

ASSEMBLY

1) Press-fit new bearing to knuckle (2) using special tools and hydraulic press (1).

Special Tools
(B): 09924-74510
(C): 09944-78210
(D): 09944-68210

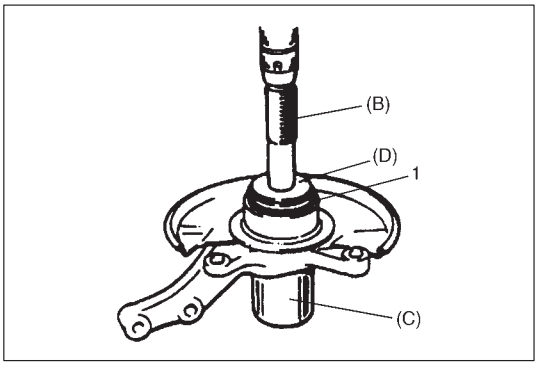

2) Install snap ring.
3) Drive in new outside oil seal (1) until its end contacts snap ring using special tools.

Special Tools
(B): 09924-74510
(C): 09944-78210
(D): 09944-68210

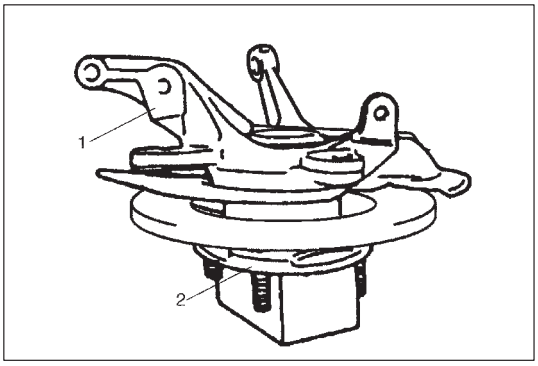

4) Set steering knuckle (1) to wheel hub (2) as shown and take out bearing inner race support from bearing.

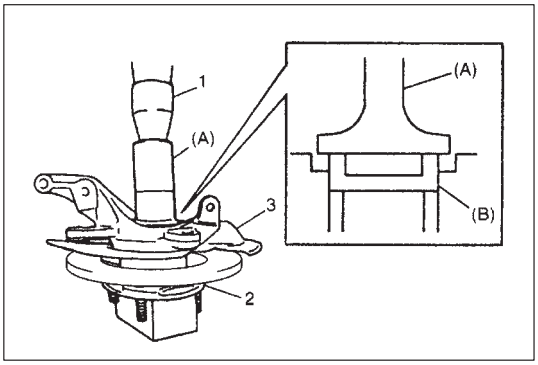

5) Using special tools and hydraulic press (1), drive wheel hub (2) into steering knuckle (3) as shown.

Special Tool
(A): 09913-75520
(B): 09944-66020

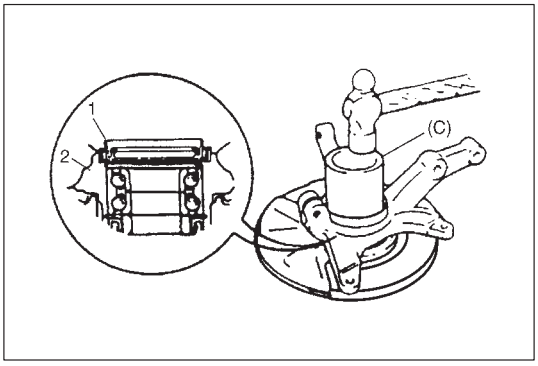

6) Drive in new inside oil seal (1) until seal is flush with stopped surface of knuckle (2) by using special tool.

NOTE:
When driving in oil seal, be careful not to deform or tilt it or not to cause damage to rubber part.

Special Tool
(C): 09944-78210

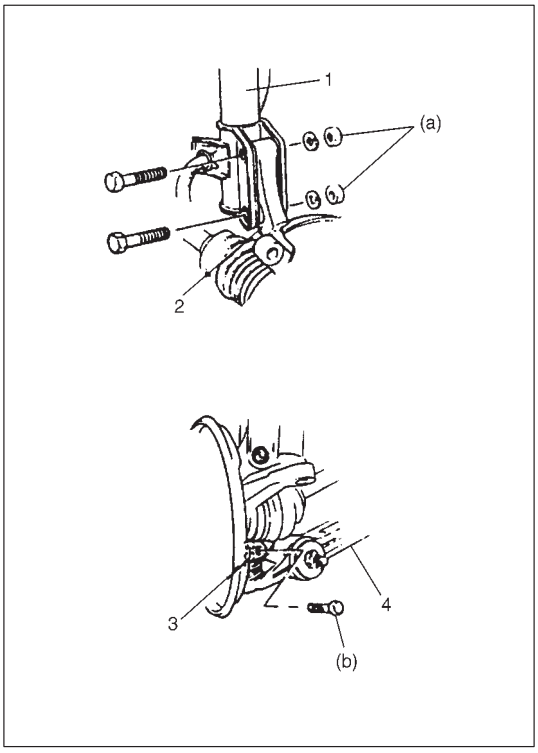

INSTALLATION

1) Install knuckle (2) with wheel hub to ball stud (3) on control arm (4) and strut (1) bracket. Installing direction of each bolt is as shown. Align knuckle bolt hole with ball stud groove as shown and install ball stud bolt.

Tightening Torque
(a): 80 N·m (8.0 kg-m, 58.0 lb-ft)
(b): 55 N·m (5.5 kg-m, 40.0 lb-ft)

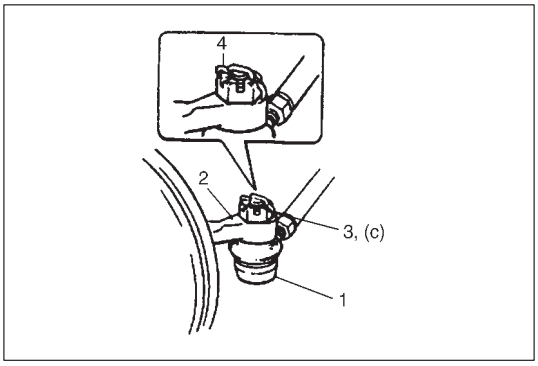

2) Connect tie rod end (1) to knuckle (2) and tighten tie rod end castle nut (3) to specified torque.
Install split pin (4).

Tightening Torque
(c): 43 N·m (4.3 kg-m, 31.0 lb-ft)

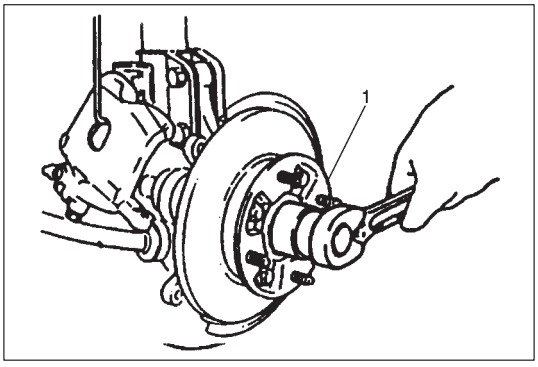

3) Tighten new drive shaft nut. Do not tap wheel hub.
4) For installation procedures following the above, refer to steps 6) – 9) of WHEEL HUB, WHEEL STUD AND WHEEL BEARING OUTSIDE INNER RACE INSTALLATION in this section.

REQUIRED SERVICE MATERIAL

MATERIAL	RECOMMENDED SUZUKI PRODUCT	USE
Lithic wheel bearing grease	SUZUKI SUPER GREASE A (99000-25010)	Wheel bearing

SPECIAL TOOL

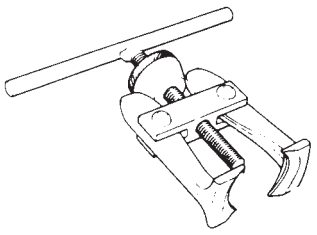 09913-61110 Bearing puller	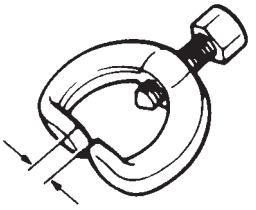 09913-65210 Tie rod end remover	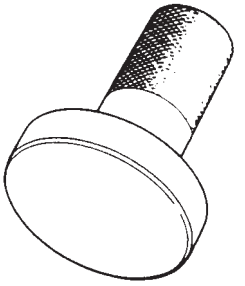 09913-75520 Bearing installer	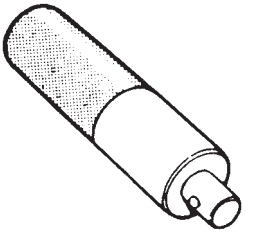 09924-74510 Bearing installer handle
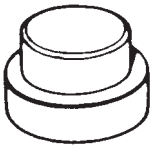 09925-88210 Bearing puller attachment	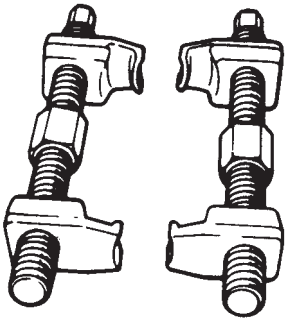 09940-71430 Spring compressor	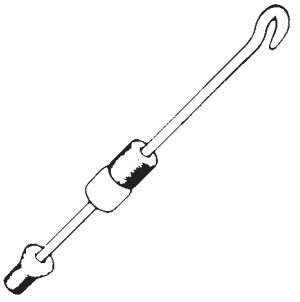 09942-15510 Sliding hammer	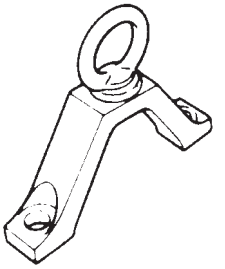 09943-17912 Front wheel hub remover
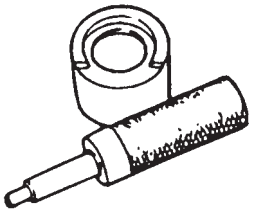 09943-77910 Bushing remover	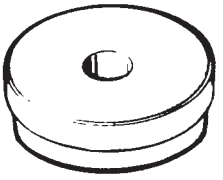 09944-68210 Bearing & oil seal installer	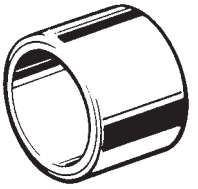 09944-78210 Bearing installer support	

SECTION 3E

REAR SUSPENSION
(LEAF SPRING TYPE)

NOTE:

- **All rear suspension fasteners are an important attaching part in that it could affect the performance of vital parts and systems, and/or could result in major repair expense. They must be replaced with one of the same part number or with an equivalent part if replacement becomes necessary. Do not use a replacement part of lesser quality or substitute design. Torque values must be used as specified during reassembly to assure proper retention of this part.**
  There is to be no welding as it may result in excessive damage and weakening of the metal.
- **Never attempt to heat, quench or straighten any suspension part. Replace it with a new part, or damage to the part may result.**

CONTENTS

GENERAL DESCRIPTION 3E- 2
DIAGNOSIS 3E- 3
Diagnosis Table 3E- 3
Rear Shock Absorber Check 3E- 3
Leaf Spring, Bump Stopper and Leaf Spring Bushes Check 3E- 3
Wheel Disk, Nut and Bearing Check 3E- 4
ON-VEHICLE SERVICE 3E- 5
Shock Absorber 3E- 5
Leaf Spring 3E- 6
Rear Axle 3E- 8
Wheel Bearing and Wheel Stud 3E-11
REQUIRED SERVICE MATERIALS 3E-15
SPECIAL TOOLS 3E-15

GENERAL DESCRIPTION

Rear suspension consists of leaf springs, bump stoppers, and shock absorbers.

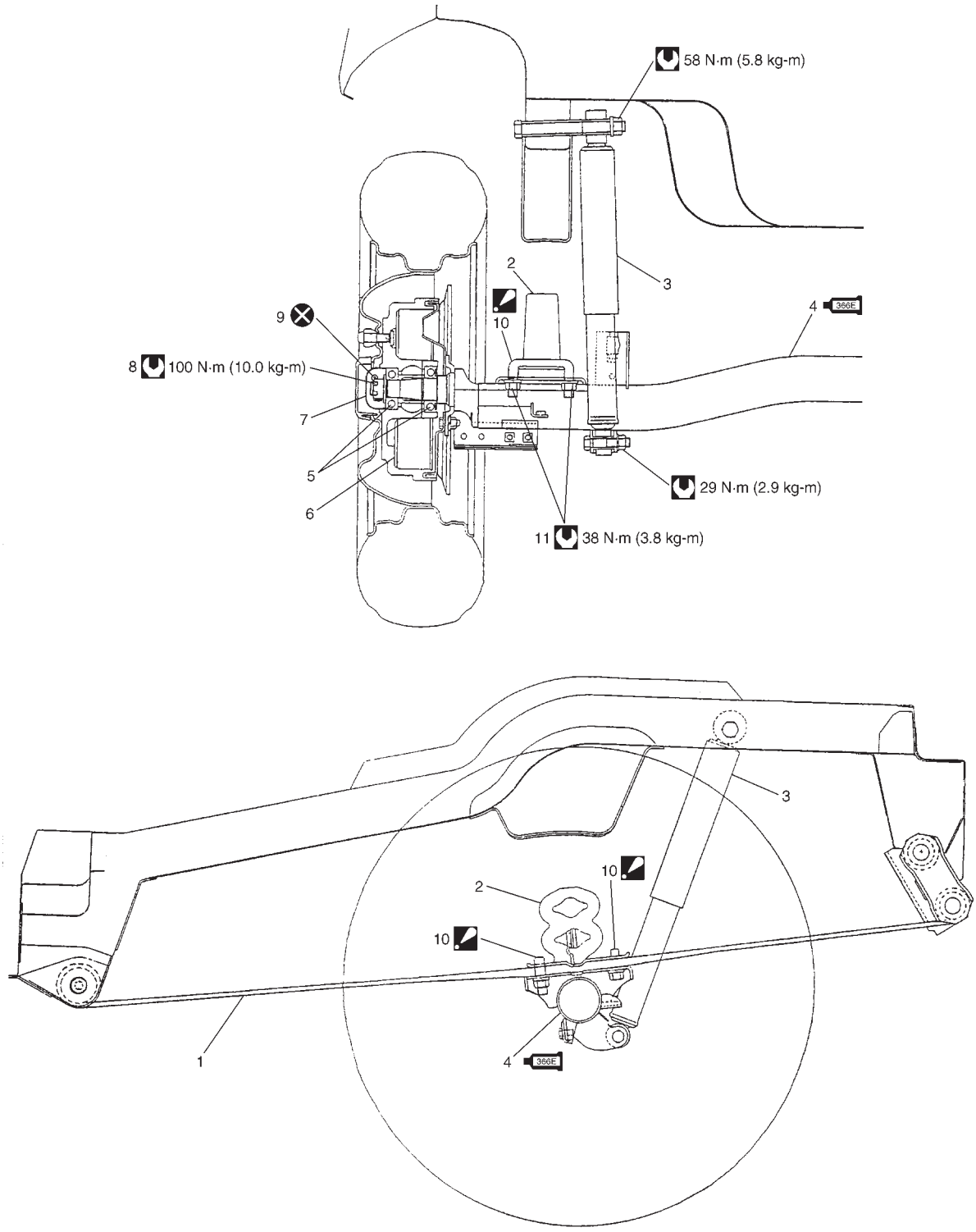

1. Leaf spring:
   Apply silicone grease 99000-25190 to shackle pin bushes.
2. Bump stopper
3. Shock absorber
4. Rear axle:
   Apply water tight sealant 366E 99000-31090 to joint seam of axle and brake back plate.
5. Wheel bearing
6. Brake drum
7. Spindle cap
8. Spindle nut
9. Split pin
10. U-bolt:
    Tighten both front and rear U-bolts protrusion becomes equal.
11. U-bolt nut

: Tightening Torque

: Do not reuse

DIAGNOSIS

DIAGNOSIS TABLE

Refer to Section 3.

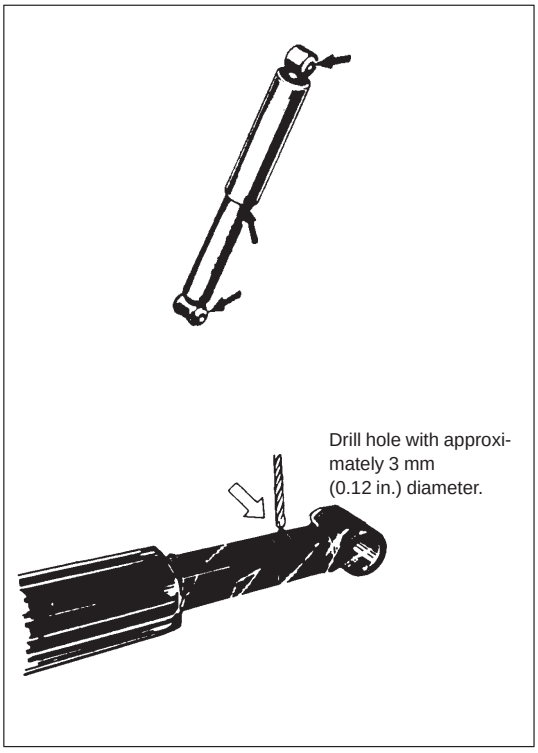

REAR SHOCK ABSORBER CHECK

- Inspect for deformation or damage.
- Inspect bushings for wear or damage.
- Inspect for evidence of oil leakage.

Replace any defective part.

WARNING:
When handling rear shock absorber in which high-pressure gas is sealed, make sure to observe the following precautions.
1) Don't disassemble it.
2) Don't put it into the fire.
3) Don't store it where it gets hot.
4) Before disposing it, be sure to drill a hole in it where shown by an arrow in figure and let gas and oil out. Lay it down sideways for this work.
5) The gas itself is harmless but it may issue out of the hole together with chips generated by the drill. Therefore, be sure to wear goggle.

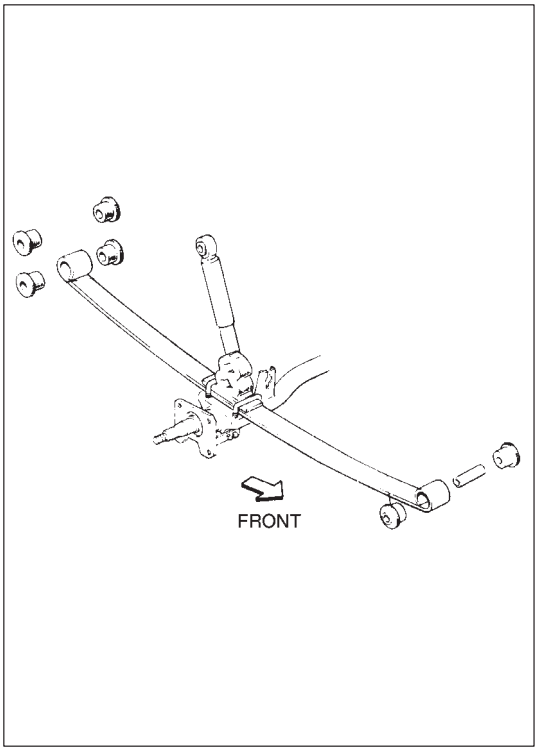

LEAF SPRING, BUMP STOPPER AND LEAF SPRING BUSHES CHECK

- Inspect for crack and damage. If found defective, replace. Also inspect if the bump stopper is seated properly. If it is off its seat, replace.
- Inspect for wear and breakage. If found defective, replace. When shackle pin bush is not worn and yet abnormal sound is noted while driving, remove bushes and apply silicone grease to its periphery.

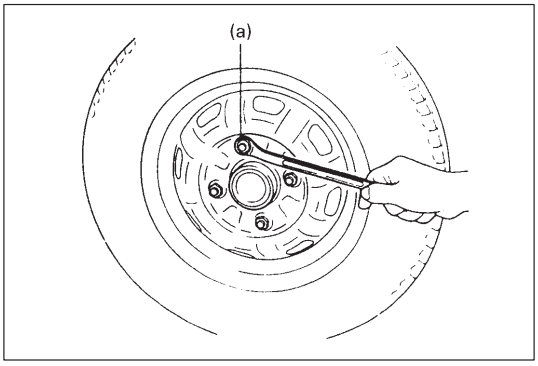

WHEEL DISC, NUT AND BEARING CHECK

- Inspect each wheel disc for dents, distortion and cracks.
  A disc in badly damaged condition must be replaced.
- Check wheel hub nuts for tightness and, as necessary, retighten to specification.

Tightening Torque
(a): 55 N·m (5.5 kg-m, 40.0 lb-ft)

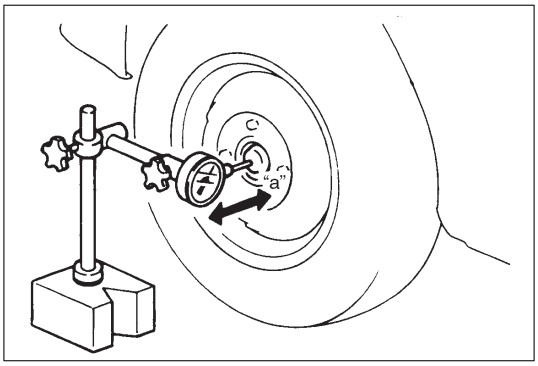

- Check wheel bearings for wear. When measuring thrust play, apply a dial gauge to the drum center after removing wheel center cap from wheel disc.

Thrust play limit "a": 0.3 mm (0.012 in.)

When measurement exceeds limit, replace bearing.

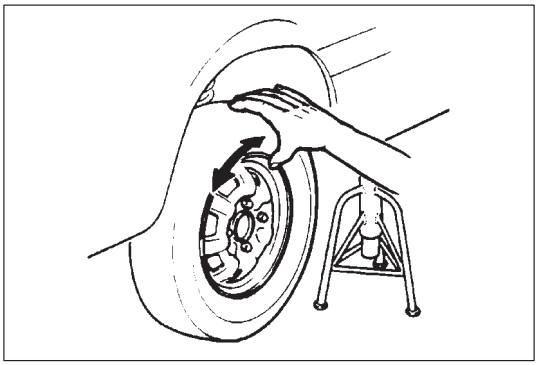

- By rotating wheel actually, check wheel bearing for noise and smooth rotation. If it is defective, replace bearing.

ON-VEHICLE SERVICE

SHOCK ABSORBER

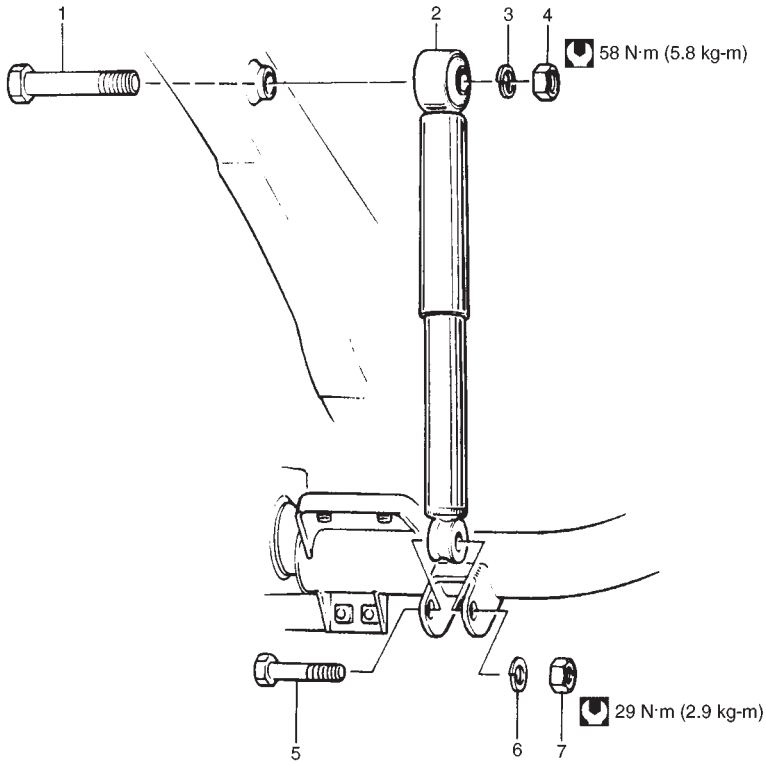

1. Shock absorber upper bolt
2. Shock absorber assembly
3. Upper lock washer
4. Upper nut
5. Lower bolt
6. Lower lock washer
7. Lower nut

: Tightening Torque

REMOVAL

1) Hoist vehicle.
2) Remove lower mounting bolt and nut.
3) Remove upper mounting bolt and nut. Then remove shock absorber.

INSTALLATION

1) Install shock absorber, referring to above figure.
2) Tighten nuts to specified torque.

   Tightening torque for upper nut:
   58 N·m (5.8 kg-m, 42.0 lb-ft)
   Tightening torque for lower nut:
   29 N·m (2.9 kg-m, 21.0 lb-ft)

3) Lower vehicle.

LEAF SPRING

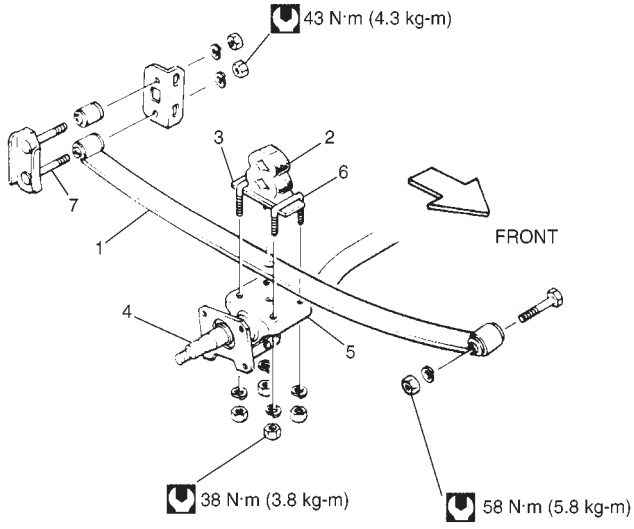

1. Leaf spring
2. Bump stopper
3. Bump stopper bracket
4. Rear axle
5. Rear axle spring seat
6. U-bolt
7. Shackle pin

: Tightening Torque

REMOVAL

1) Raise vehicle. In this operation, garage jack or hoist must not be positioned against rear suspension related parts. When garage jack is used, place safety stands under body to support raised body. Or, where possible, raise vehicle body with body contact type hoist until tires are off the floor.

   NOTE:
   Don't let rear axle hang on brake hose. If it occurs, hose may be damaged. To prevent it, always hold rear axle of raised vehicle with safety stands.

2) Remove rear wheel.
3) Remove U-bolt nuts.
4) Remove shackle nuts and leaf spring front nut.
5) Pull out leaf spring front bolt and remove leaf spring from shackle pin.

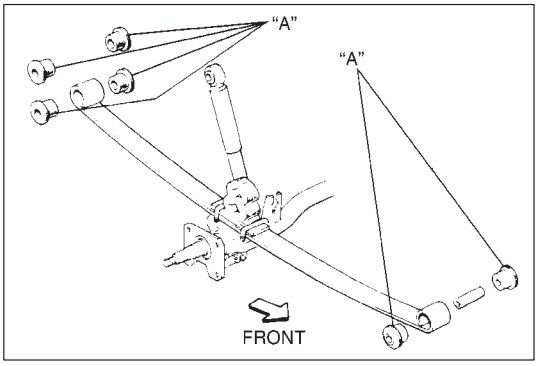

INSTALLATION

1) Before installing leaf spring, apply silicone grease by spreading it hard into thin coat over the entire area. (Be sure to use silicone grease that will not affect rubber.)

   "A" : Silicone grease 99000-25190

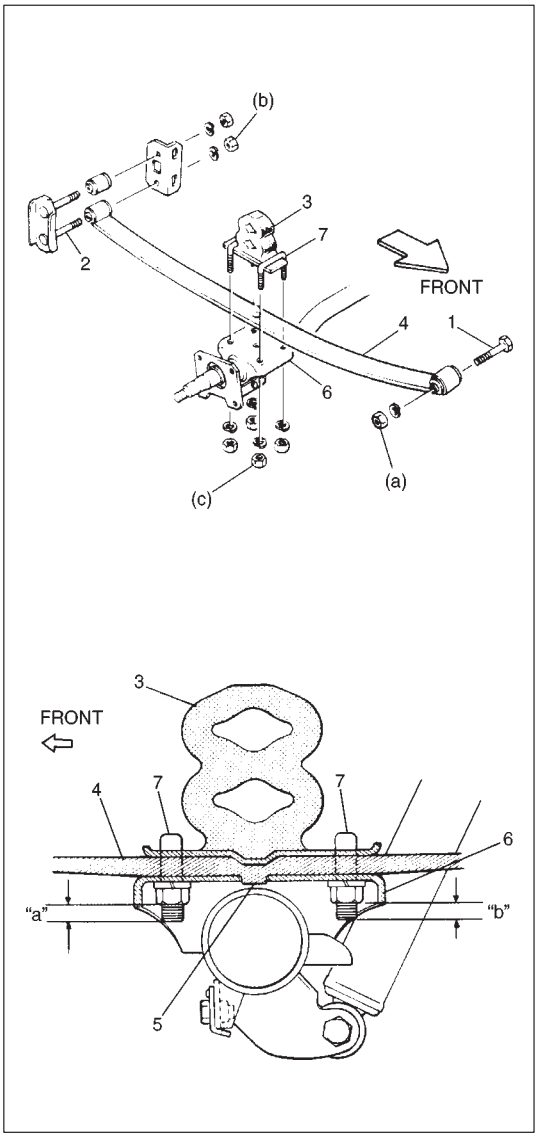

2) Install front bolt (1) and shackle pins (2) in the direction as shown. Tighten each nut to specified torque.

   Tightening Torque
   (a) : 58 N·m (5.8 kg-m, 42.0 lb-ft)
   (b) : 43 N·m (4.3 kg-m, 31.0 lb-ft)

3) Place bump stopper (3) on leaf spring (4), aligning projection of bump stopper to recess in spring.
   Fit pin (5) (projection) on under side of leaf spring into hole in spring seat (6) on rear axle.
   Put through U-bolts (7) from bump stopper side to spring seat side and tighten nuts to specified torque.

   Tightening Torque
   (c) : 38 N·m (3.8 kg-m, 27.5 lb-ft)

   NOTE:
   Tighten so that "a" and "b" becomes equal.

4) Install rear wheel and tighten nut to specified torque.

   Tightening torque for wheel nut :
   55 N·m (5.5 kg-m, 40.0 lb-ft)

5) Lower vehicle.

REAR AXLE

NOTE:
See NOTE at the beginning of this section.
In removing and installing rear axle, the same procedure is required on both the right and left sides. The procedure described here is a representative one. If it is used on one side, it must be used in symmetry on the other side.

REMOVAL

1) Hoist vehicle and remove rear wheels.
2) Pull brake drum. (Refer to WHEEL BEARING AND WHEEL STUD in this section.)
3) Remove brake shoe, refer to BRAKE SHOE in Section 5.

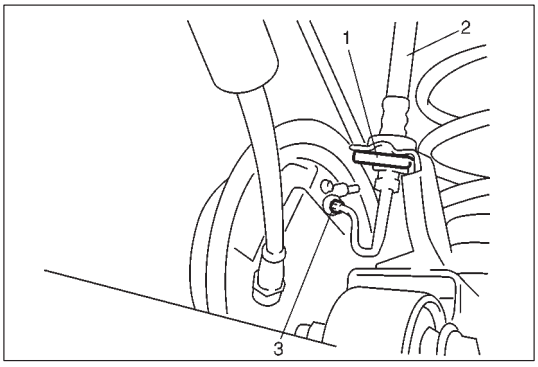

4) Remove E-ring (1) and brake hose/pipe (2) from bracket on axle.
5) Disconnect brake pipe flare nut (3) from wheel cylinder and put breeder plug cap onto brake pipe to prevent brake fluid outflow.
6) Remove brake hose/pipe from bracket on axle.
7) Remove parking brake cable securing clip and disconnect parking brake cable from brake back plate.

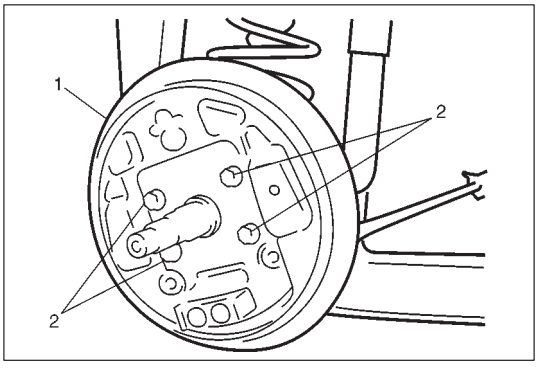

8) Remove brake back plate (1) by removing bolts (2).
9) Remove shock absorber lower mount bolt.

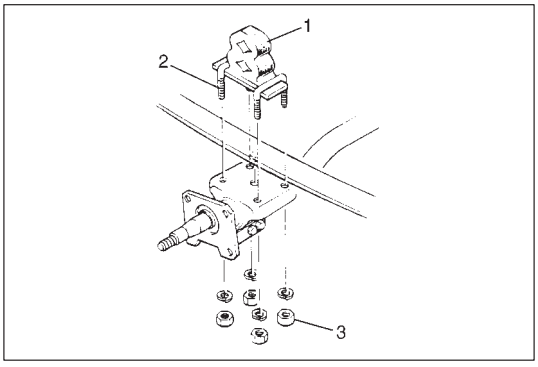

10) Remove U-bolt nuts (3), U-bolts (2) and bump stopper (1).
11) Remove rear axle.

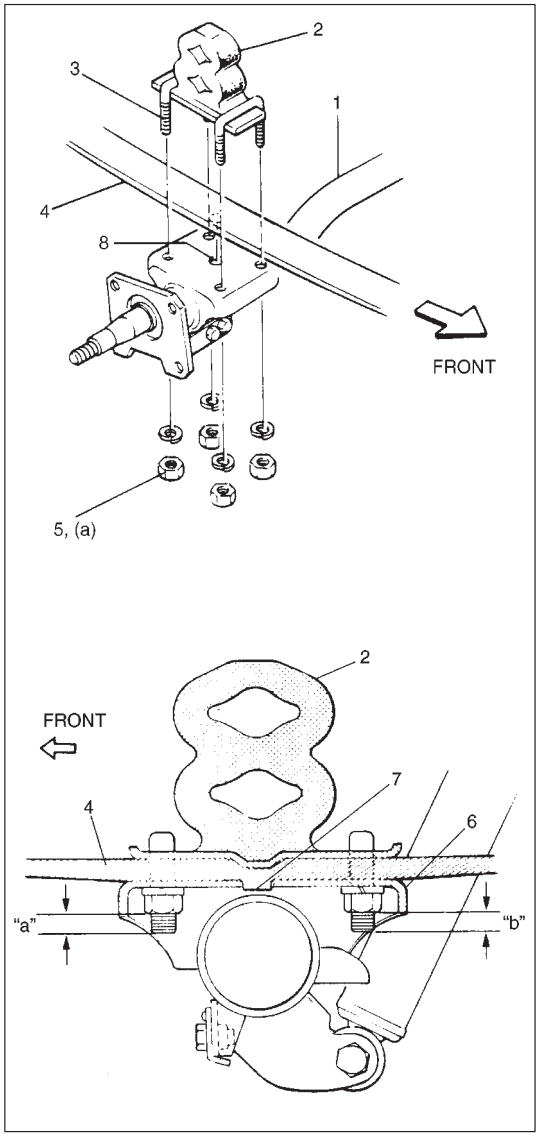

INSTALLATION

1) Place bump stopper (2) on leaf spring (4), aligning projection of bump stopper to recess in spring.
2) Fit pin (7) (projection) on under side of leaf spring into hole (8) in spring seat (6) of rear axle (1).
3) Tightening U-bolt nuts (5) to specified torque.

Tightening Torque
(a) : 38 N·m (3.8 kg-m, 27.5 lb-ft)

NOTE:
Tightening U-bolt (3) so that "a" and "b" becomes equal.

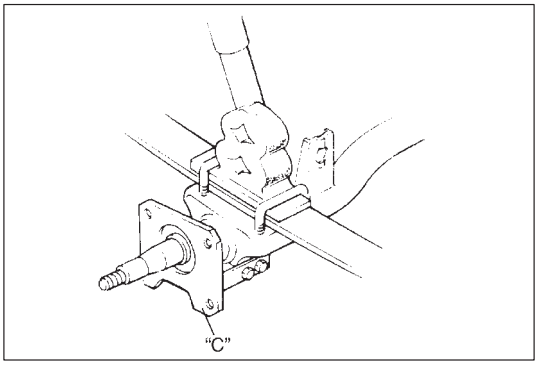

4) Apply water tight sealant to joint seam of axle and mating surfaces of brake back plate.

"C" : Sealant 366E, 99000-31090

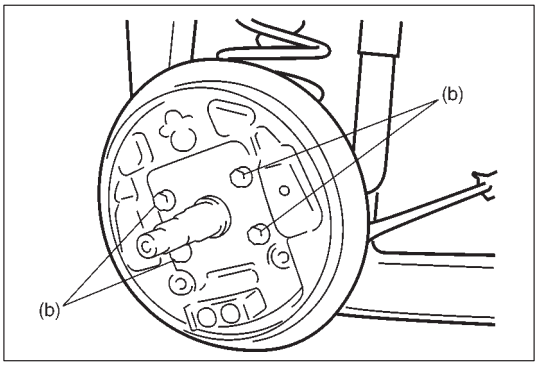

5) Install brake back plate to rear axle and tighten back plate bolts to specified torque.

Tightening Torque
(b) : 23 N·m (2.3 kg-m, 16.5 lb-ft)

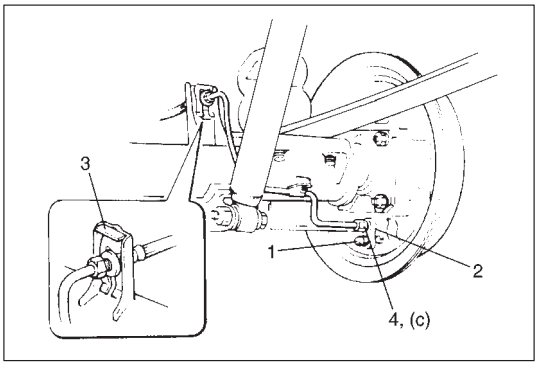

6) Put brake hose/pipe through hole in bracket on axle and secure it with E-ring (3) and remove breeder plug cap (1) from end of pipe. Then tighten pipe flare nut (4) to wheel cylinder (2) to specified torque.

Tightening Torque
(c): 16 N·m (1.6 kg-m, 11.5 lb-ft)

7) Apply water tight sealant where plate and cable contact, and run parking brake cable through back plate and secure it with clip, refer to BRAKE BACK PLATE in Section 5.
8) Install brake shoe, refer to BRAKE SHOE in Section 5.
9) Install brake drum. (Refer to WHEEL BEARING AND WHEEL STUD in this section.)
10) Fill reservoir with brake fluid and bleed brake system. (For bleeding operation, refer to BLEEDING BRAKES in Section 5.)
11) Upon completion of all jobs, depress brake pedal with about 30kg (66 lbs) load two to three times so as to obtain proper drum-to-shoe clearance.
12) Check to make sure that brake drum is free from dragging and brake works properly. Then lower vehicle from lift and perform brake test.

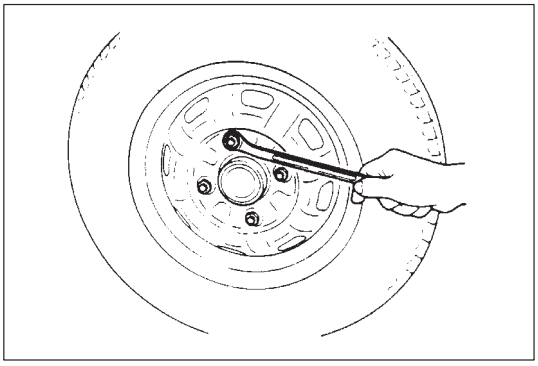

WHEEL BEARING AND WHEEL STUD

REMOVAL

1) Hoist vehicle and remover rear wheel.

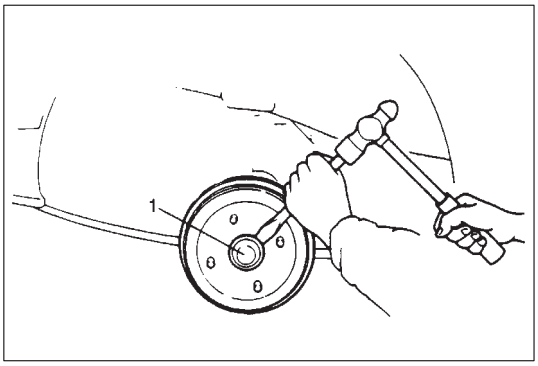

2) Remove spindle cap (1) as shown (by hammering lightly at 3 locations around it so as not to deform or cause damage to seating part of cap).

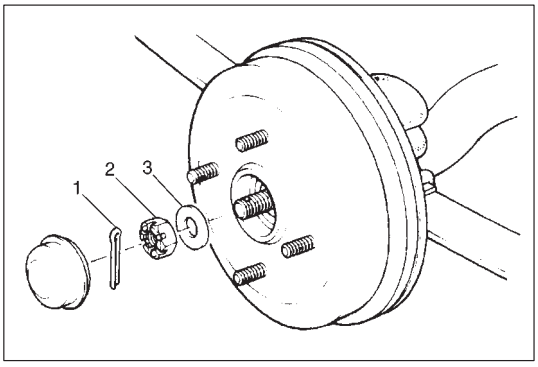

3) Remove split pin (1), castle nut (2) and washer (3).

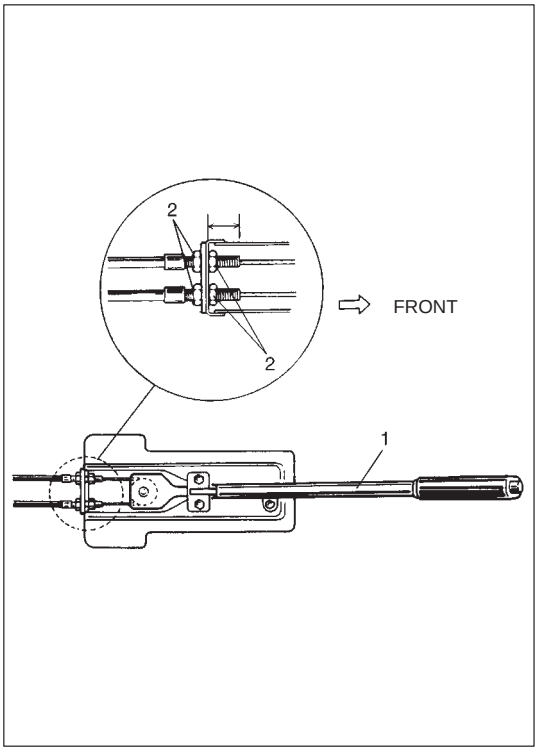

4) Release parking brake lever (1) to cancel rear brake.
5) Loosen parking brake cable lock nuts (2).

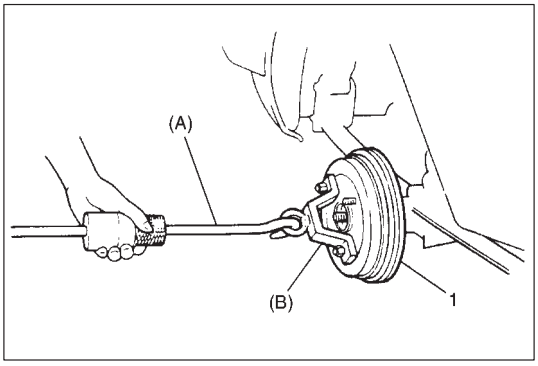

6) Pull brake drum (1) off by using special tools.

Special Tool
(A) : 09942-15510
(B) : 09943-17912

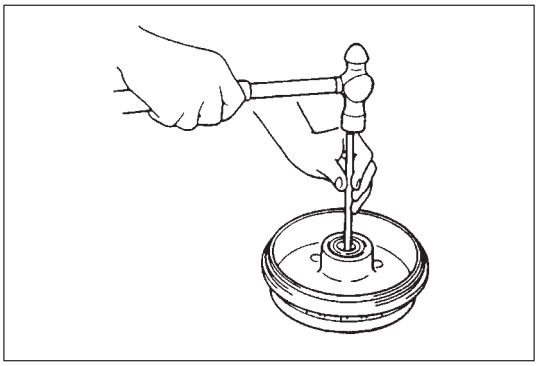

7) Remove wheel bearing.

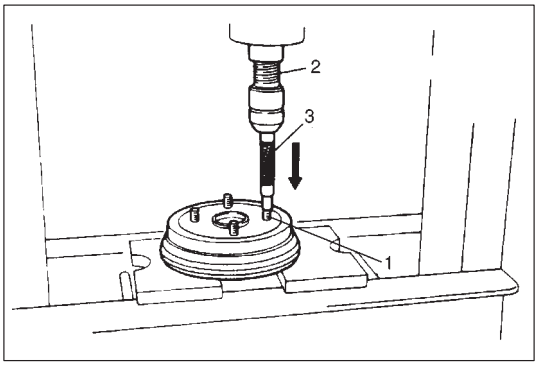

8) Remove wheel stud (1) by using hydraulic press (2) and general rod (3).

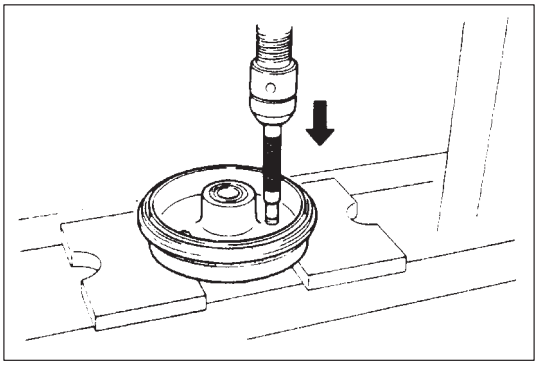

INSTALLATION

NOTE:
See NOTE at the beginning of this section.

1) Insert new stud in drum hole after rotate stud slowly to assure the serrations are aligned with those mode by replaced bolt.

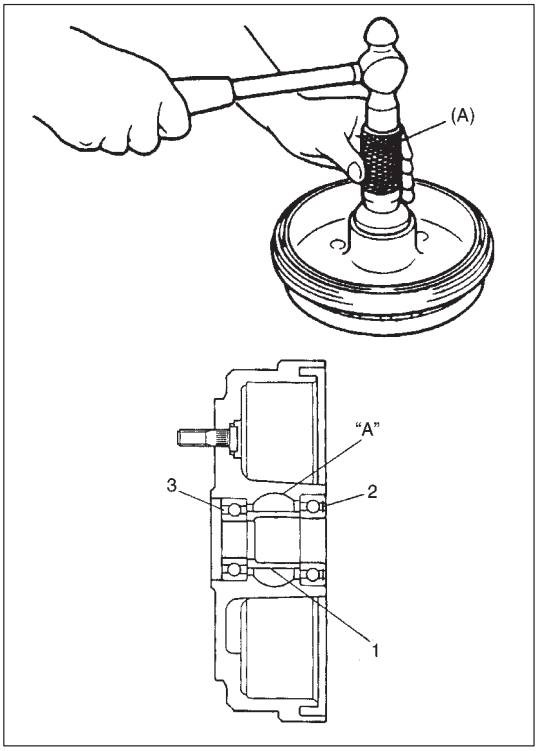

2) Install wheel bearing by using special tool.

Special Tool
(A) : 09913-76010

NOTE:
When installing bearings:
- **Direct stamped side of bearing towards outside.**
- **Refer to figure for installing direction of spacer (1).**
- **Direct inner bearing sealed side (2) outward.**
- **Fill the space indicated by "A" in figure with bearing grease as much as 40% of space capacity.**
- **Install outer bearing (3) so that resin side of its retainer faces toward the outside of vehicle body.**

3) Remove back plate plug attached to the back side of brake back plate so as to increase clearance between brake shoe and brake drum. Insert flat head rod or the like till its tip is in the gap between strut and adjust lever and turn it clockwise a little so that shoe adjust lever moves. Thus shoe-to drum clearance can be increased.

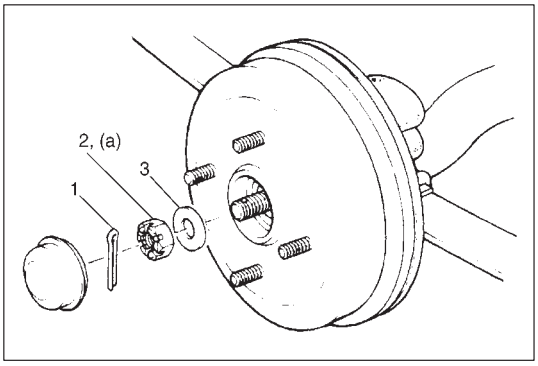

4) Install brake drum after making sure that inside of brake drum and brake drum and brake shoe are free from dirt and oil.
5) Install washer (3) and spindle nut (2).
6) Tighten spindle nut to specified torque.

Tightening Torque
(a) : 100 N·m (10.0 kg-m, 72.5 lb-ft)

7) Bend split pin (1) securely.

8) Install spindle cap.

NOTE:
- **When installing spindle cap, hammer lightly several locations on the collar of cap unit the collar comes closely into contact with brake drum.**
- **If fitting part of cap is deformed or damaged or if it is fitted loosely, replace with new one.**

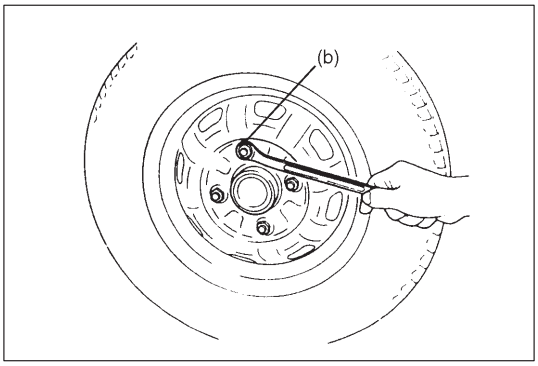

9) Tighten wheel nuts to specified torque.

Tightening Torque
(b) : 55 N·m (5.5 kg-m, 40.0 lb-ft)

10) Upon completion of all jobs, depress brake pedal with about 30 kg (66 lbs) load two to three times so as to obtain proper drum-to-shoe clearance.
11) Check to ensure that brake drum is free from dragging and proper braking is obtained. Then remove vehicle from hoist and perform brake test.

REQUIRED SERVICE MATERIALS

MATERIALS	RECOMMENDED SUZUKI PRODUCT	USE
Brake fluid	DOT3	Brake reservoir tank
Water tight sealant	SEALING COMPOUND 366E (99000-31090)	Joint seam of rear axle and brake back plate
–	SILICONE GREASE (99000-25190)	By spreading leaf spring hard into thin coat over the entire area.

SPECIAL TOOLS

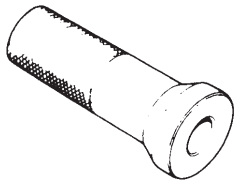 09913-76010 Rear wheel bearing installer	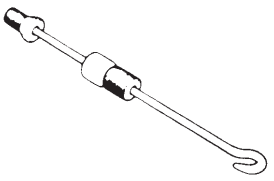 09942-15510 Sliding hammer	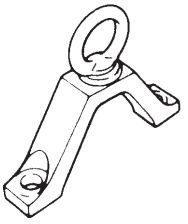 09943-17912 Brake drum remover

SECTION 3E1

REAR SUSPENSION
(COIL SPRING TYPE)

NOTE:

- **All rear suspension fasteners are an important attaching part in that it could affect the performance of vital parts and systems, and/or could result in major repair expense. They must be replaced with one of the same part number or with an equivalent part if replacement becomes necessary. Do not use a replacement part of lesser quality or substitute design. Torque values must be used as specified during reassembly to assure proper retention of this part.**
  There is to be no welding as it may result in excessive damage and weakening of the metal.
- **Never attempt to heat, quench or straighten any suspension part, or damage to the part may result.**

CONTENTS

GENERAL DESCRIPTION 3E1- 2
DIAGNOSIS 3E1- 4
Diagnosis Table 3E1- 4
Rear Shock Absorber Check 3E1- 4
Trailing Arm, Lateral Rod, Rear Axle and Coil Spring Check 3E1- 4
Bump Stopper/Spring Upper Seat Check 3E1- 5
Wheel Disc, Nut and Bearing Check 3E1- 5
ON-VEHICLE SERVICE 3E1- 6
Lateral Rod 3E1- 6
Rear Shock Absorber 3E1- 7
Trailing Arm and Bush 3E1- 7
Wheel Bearing and Wheel Stud 3E1- 9
Rear Axle 3E1-13
REQUIRED SERVICE MATERIALS 3E1-17
SPECIAL TOOLS 3E1-17

GENERAL DESCRIPTION

Rear suspension consists of coil springs, rear axle, shock absorbers, lateral rod and trailing arms.
The lateral rod is installed to the body and axle by using bushes so as to prevent axle movement in the lateral direction.
The trailing arms which are connected with the axle are installed to the body by using a bush so that axle moves up and down with the bush as its supporting point.
The shock absorber is installed between the body and axle to absorb up-and-down movement of the vehicle body.

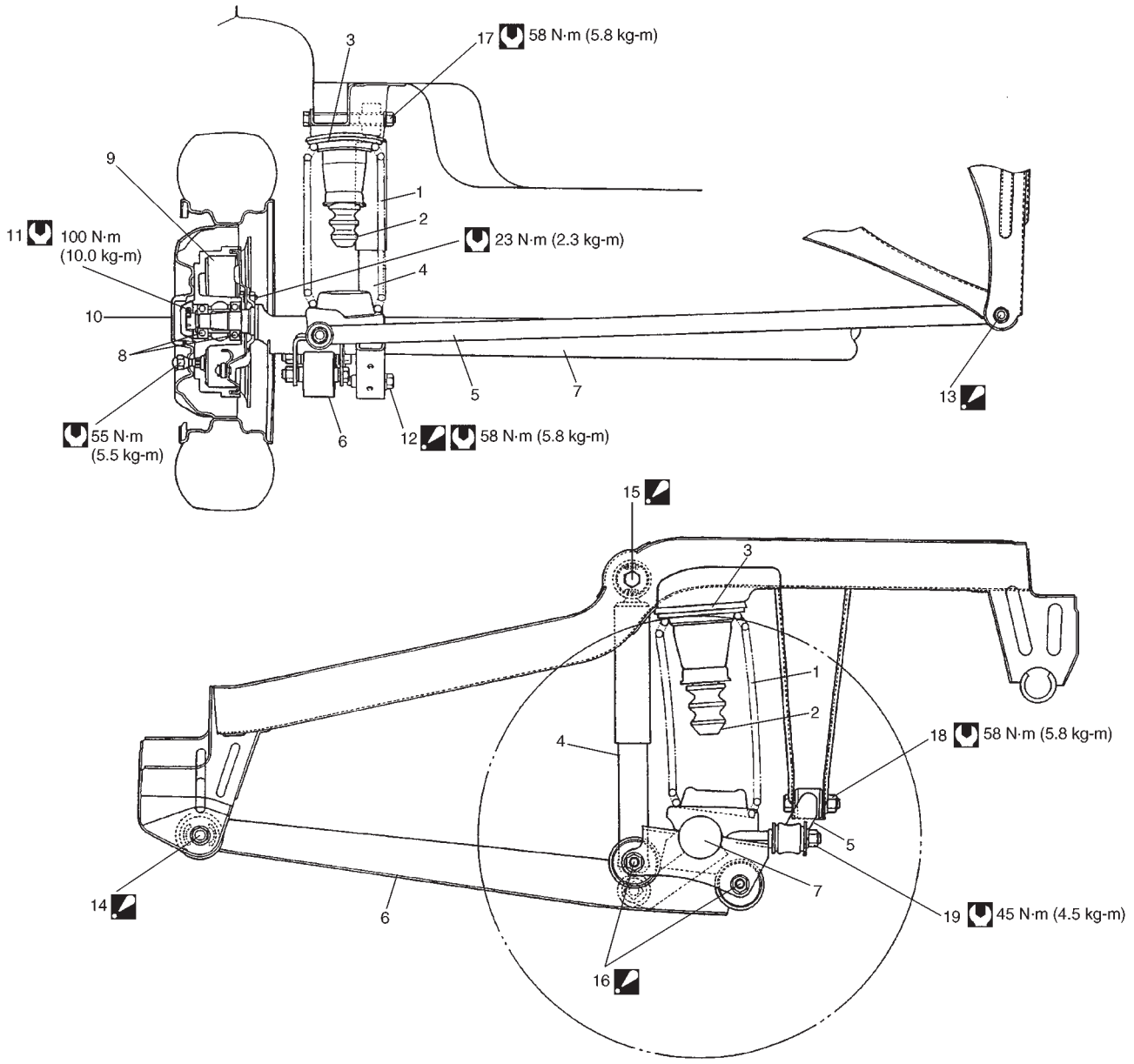

1. Rear coil spring
2. Rear bump stopper
3. Rear spring upper seat
4. Rear shock absorber
5. Lateral rod
6. Trailing arm
7. Rear axle
8. Wheel bearing
9. Brake drum
10. Spindle cap
11. Spindle nut
12. Shock absorber lower bolt: Install bolt from the center of the vehicle toward the outside.
13. Lateral rod bolt: Install bolt from the front side of the vehicle toward the rear side.
14. Trailing arm front bolt: Install bolt from the center of the vehicle toward the outside.
15. Shock absorber upper bolt: Install bolt from the outside of the vehicle toward the inside.
16. Trailing arm rear bolt: Install bolt from the center of the vehicle toward the outside.
17. Shock absorber upper nut
18. Lateral rod body side nut
19. Lateral rod axle side nut

: Tightening Torque

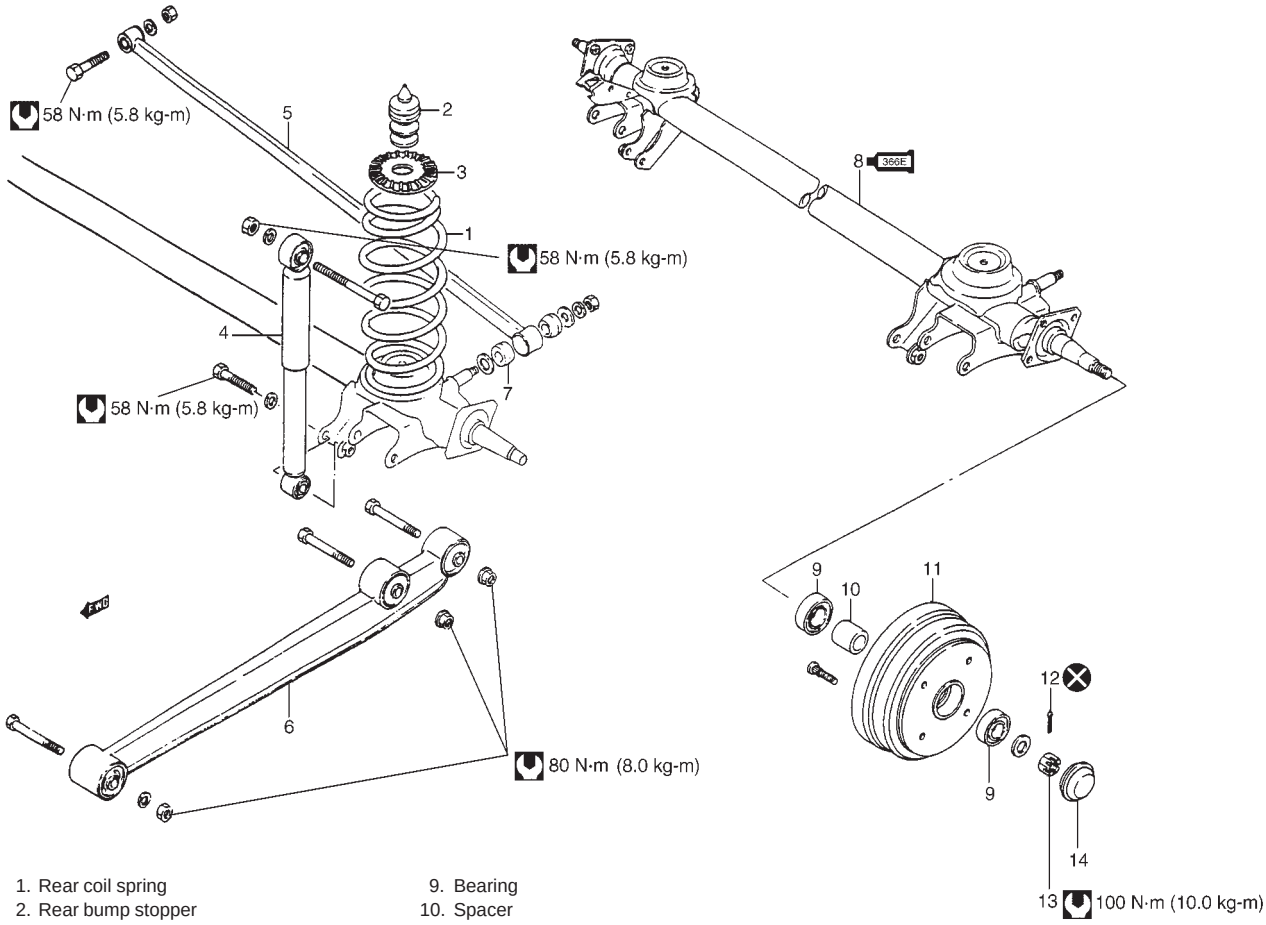

1. Rear coil spring
2. Rear bump stopper
3. Rear spring upper seat
4. Rear shock absorber
5. Lateral rod
6. Trailing arm
7. Bush
8. Rear axle: (366E)
   Apply water tight sealant 366E 99000-31090 to joint seam of axle and brake back plate.
9. Bearing
10. Spacer
11. Brake drum
12. Split pin
13. Castle nut
14. Spindle cap

: Tightening Torque

: Do not reuse

DIAGNOSIS

DIAGNOSIS TABLE

Refer to Section 3.

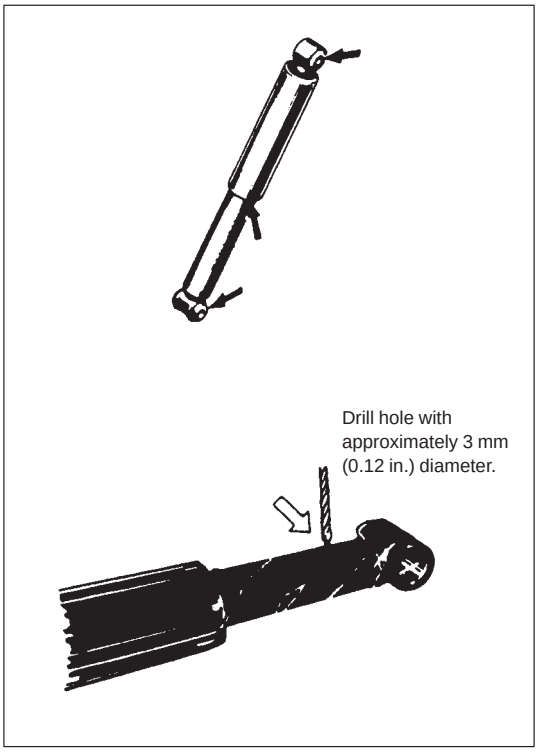

REAR SHOCK ABSORBER CHECK

- Inspect for deformation or damage.
- Inspect bushings for wear or damage.
- Inspect for evidence of oil leakage.

Replace any defective part.

WARNING:
When handling rear shock absorber in which high pressure gas is sealed, make sure to observe the following precautions.
1) Don't disassemble it.
2) Don't put it into the fire.
3) Don't store it where it gets hot.
4) Before disposing it, be sure to drill a hole in it where shown by an arrow in figure and let gas and oil out. Lay it down sideways for this work.
5) The gas itself is harmless but it may issue out of the hole together with chips generated by the drill. Therefore, be sure to wear goggle.

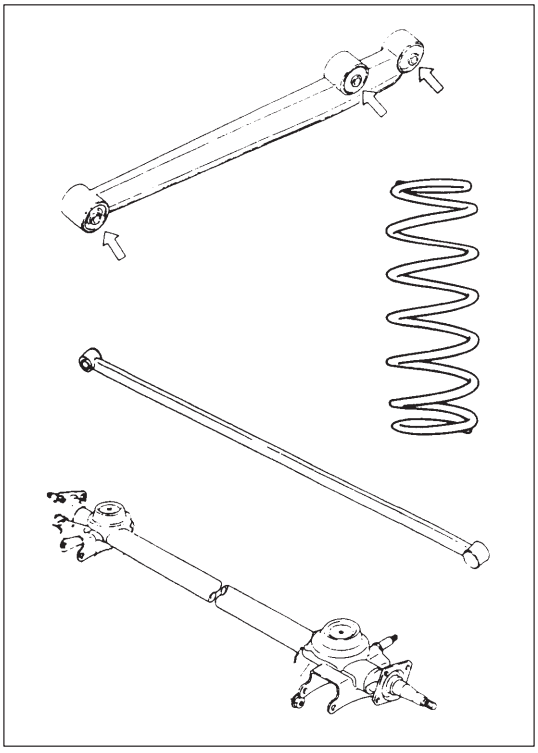

TRAILING ARM, LATERAL ROD, REAR AXLE AND COIL SPRING CHECK

- Inspect for cracks, deformation or damage.
- Inspect bushing for damage, wear or breakage.
  Replace any defective part.

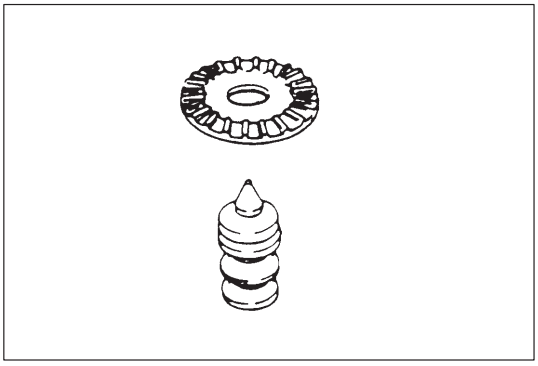

BUMP STOPPER/SPRING UPPER SEAT CHECK

- Inspect for cracks, deformation or damage.
  Replace any defective part.

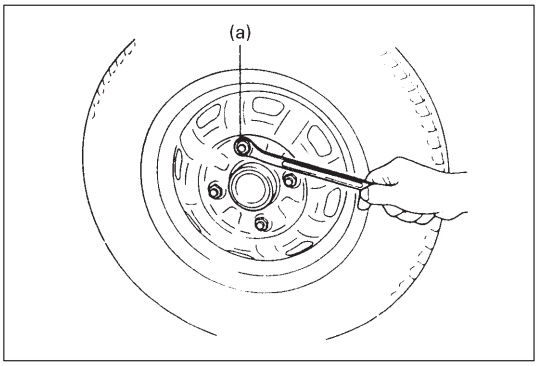

WHEEL DISC, NUT AND BEARING CHECK

- Inspect each wheel disc for dents, distortion and cracks. A disc in badly damaged condition must be replaced.
- Check wheel hub nuts for tightness and, as necessary, retighten to specification.

  Tightening Torque
  (a): 55 N·m (5.5 kg-m, 40.0 lb-ft)

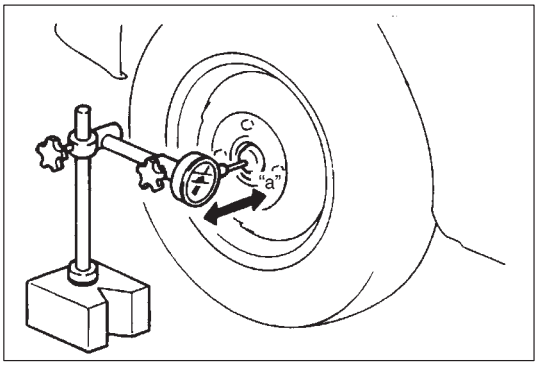

- Check wheel bearings for wear. When measuring thrust play, apply a dial gauge to drum center after removing wheel center cap from wheel disc.

  Thrust play limit "a": 0.3 mm (0.012 in.)

  When measurement exceeds limit, replace bearing.

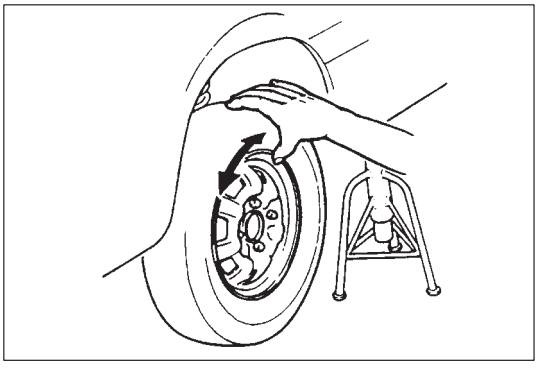

- By rotating wheel actually, check wheel bearing for noise and smooth rotation. If it is defective, replace bearing.

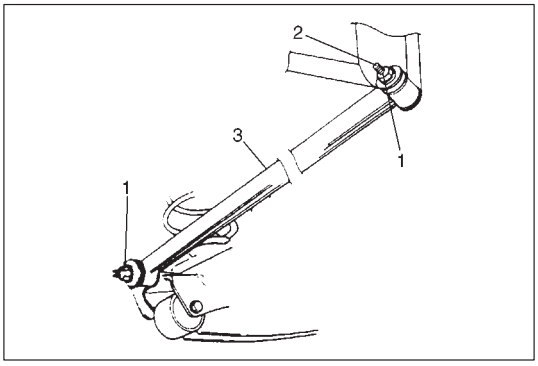

ON-VEHICLE SERVICE

LATERAL ROD

REMOVAL

1) Hoist vehicle.
2) Remove lateral rod nuts (1) and bolt (2).
3) Remove lateral rod (3).

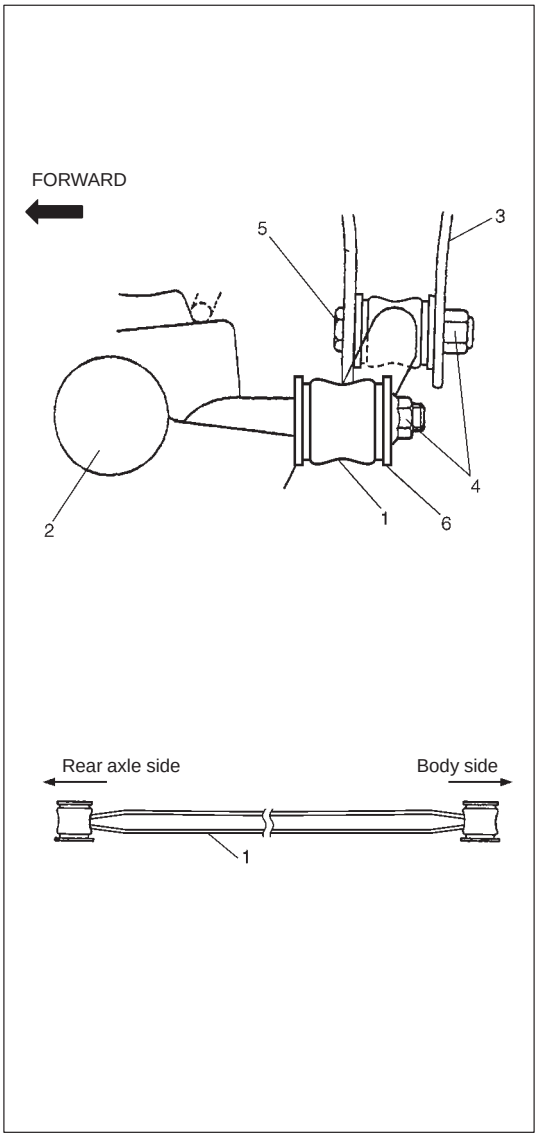

INSTALLATION

1) Install lateral rod (1) to rear axle (2) and vehicle body (3) referring to figure for proper installing direction of nuts (4), bolt (5) and washer (6).
   Tighten nuts temporarily at this step.

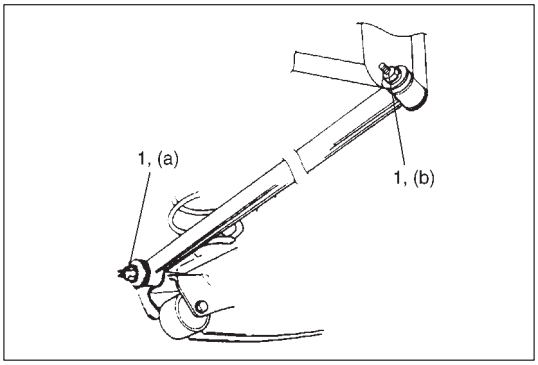

2) Lower hoist.
3) Tighten lateral rod nuts (1) to specified torque. It is the most desirable to have vehicle off hoist and in nonloaded condition when tightening them.

   Tightening Torque
   (a): 45 N·m (4.5 kg-m, 32.5 lb-ft)
   (b): 58 N·m (5.8 kg-m, 42.0 lb-ft)

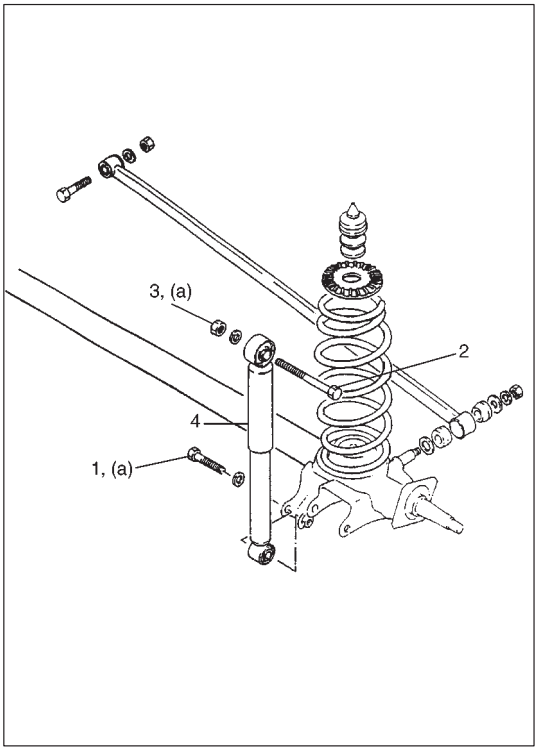

REAR SHOCK ABSORBER

REMOVAL

1) Hoist vehicle.
2) Support center of rear axle by using floor jack to prevent it from lowering.
3) Remove lower mounting bolt (1).
4) Remove upper mounting bolt (2) and nut (3). Then remove shock absorber (4).

INSTALLATION

1) Install shock absorber (4) referring to the figure.
2) Tighten bolts to specified torque.

   Tightening Torque
   (a): 58 N·m (5.8 kg-m, 42.0 lb-ft)

3) Lower vehicle.

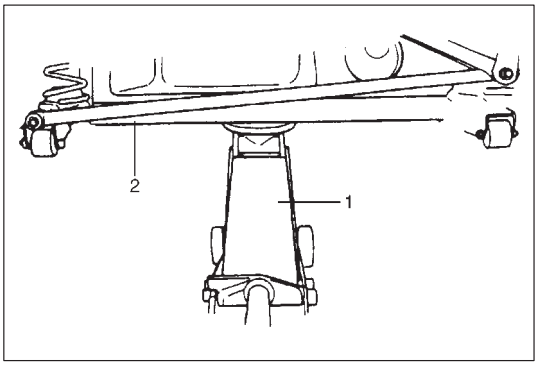

TRAILING ARM AND BUSH

REMOVAL

1) Hoist vehicle and remove rear wheel.
2) Support center of rear axle (2) by using floor jack (1) to prevent it from lowering.

> **CAUTION:**
> **Never apply floor jack against lateral rod as it may get deformed.**

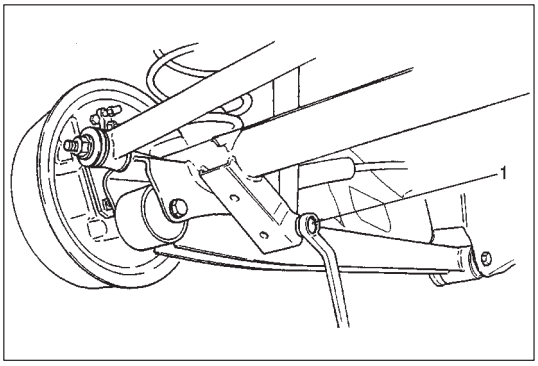

3) Remove rear shock absorber lower mounting bolt (1).

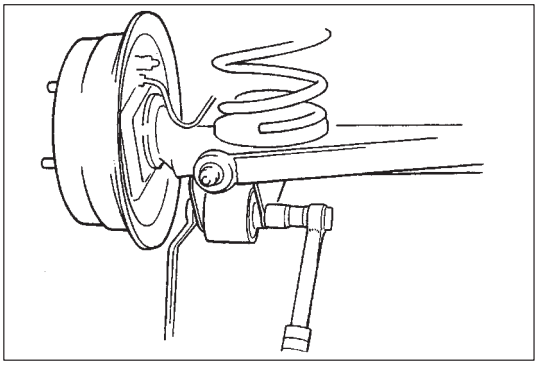

4) Remove trailing arm rear mounting bolts.

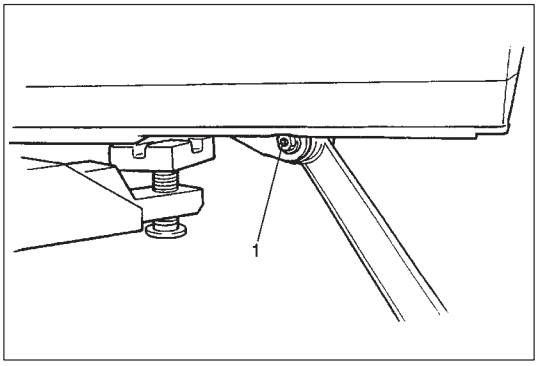

5) Loosen trailing arm front bolt (1) and remove trailing arm.

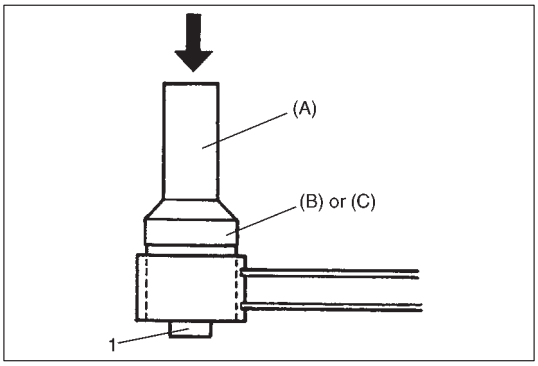

6) Remove trailing arm bushes (1) by using hydraulic press and special tools.

Special Tool

	(A): 09924-74510
Front side	**(B): 09951-16060**
Rear side	**(C): 09951-16030**

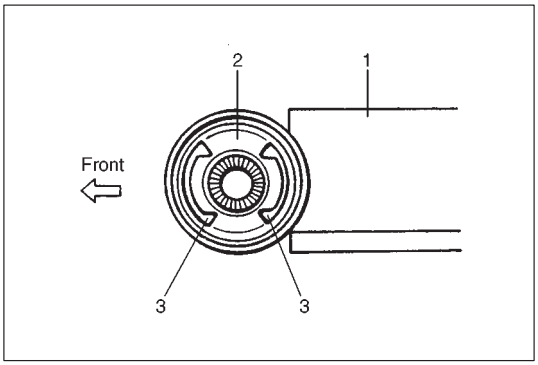

INSTALLATION

1) Press fit bushes by using hydraulic press and special tools.

Special Tool

	(A): 09924-74510
Front side	**(B): 09951-16060**
Rear side	**(C): 09951-16030**

NOTE:
When installing front side bush (2) into trailing arm (1), direct its slit (3) side toward front and rear.

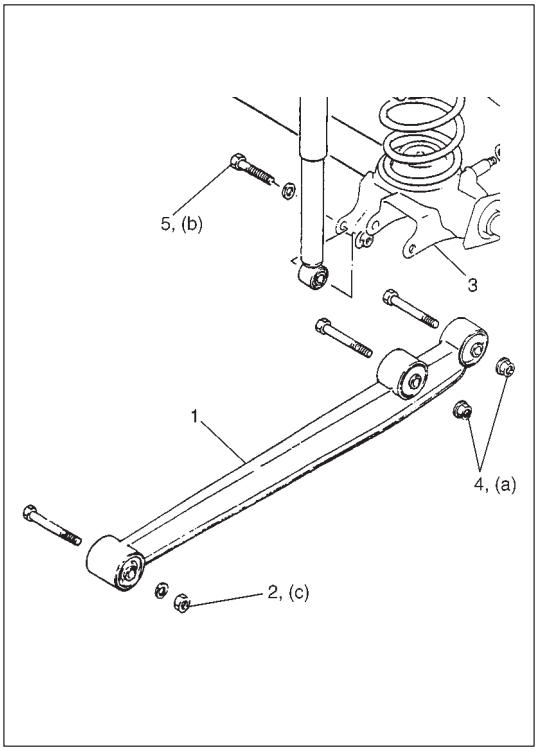

2) Install trailing arm (1) front side to body, and then insert bolt (2).
3) Install trailing arm rear side to rear axle (3) and tighten trailing arm rear nut (4) to specified torque.

Tightening Torque
(a): 80 N·m (8.0 kg-m, 58.0 lb-ft)

4) Tighten shock absorber lower mounting bolt (5) to specified torque.

Tightening Torque
(b): 58 N·m (5.8 kg-m, 42.0 lb-ft)

5) Tighten trailing arm front nut (2) to specified torque.

Tightening Torque
(c): 80 N·m (8.0 kg-m, 58.0 lb-ft)

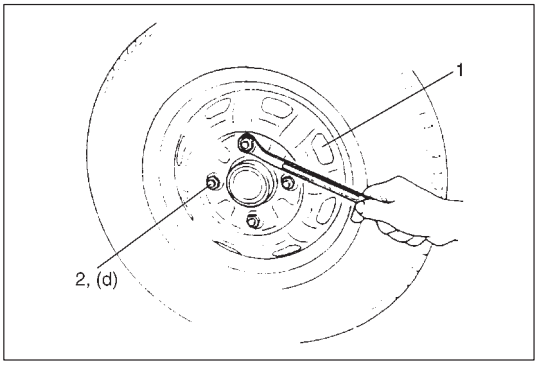

6) Install wheel (1) and tighten wheel nuts (2) to specified torque.

Tightening Torque
(d): 55 N·m (5.5 kg-m, 40.0 lb-ft)

7) Lower vehicle.

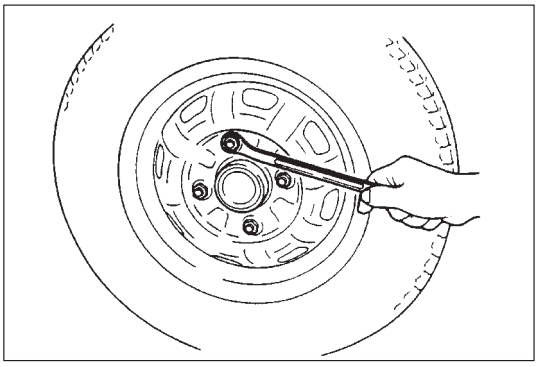

WHEEL BEARING AND WHEEL STUD

REMOVAL

1) Hoist vehicle and remove rear wheel.

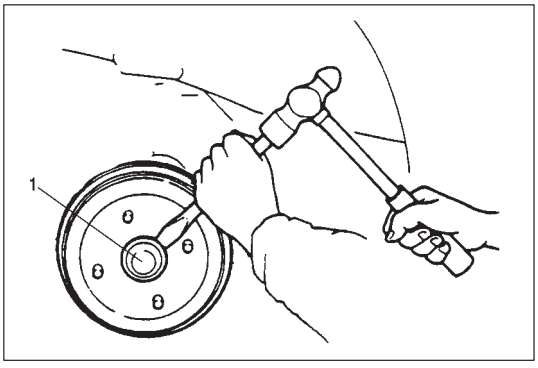

2) Remove spindle cap (1) as shown by hammering lightly at 3 locations around it so as not to deform or cause damage to seating part of cap.

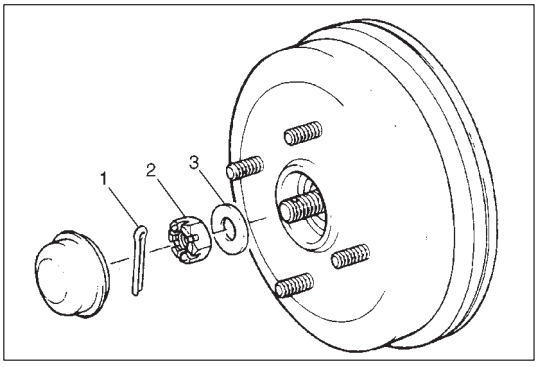

3) Remove split pin (1), castle nut (2) and washer (3).

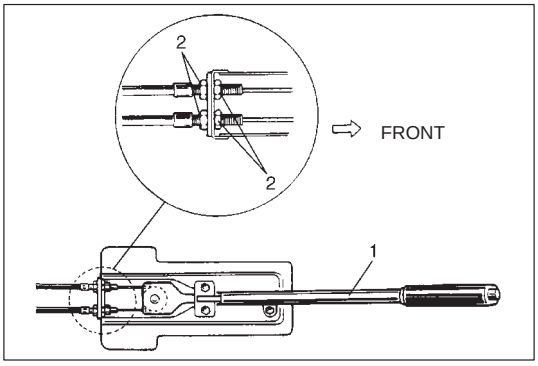

4) Release parking brake lever (1) to cancel rear brake.
5) Loosen parking brake cable lock nuts (2).

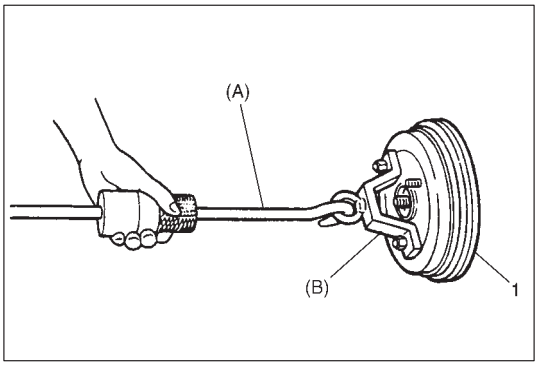

6) Pull brake drum (1) off by using special tools.

Special Tool
(A): 09942-15510
(B): 09943-17912

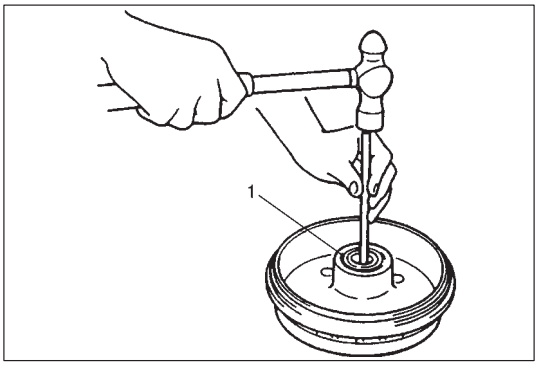

7) Remove wheel bearing (1).

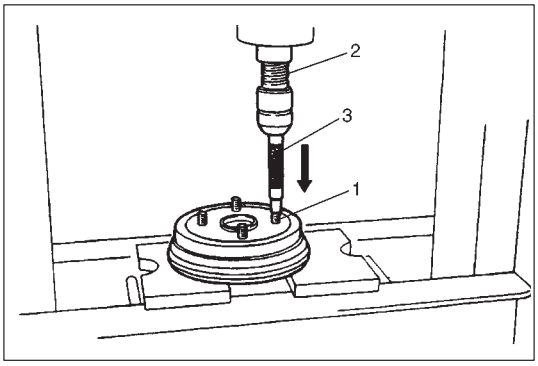

8) Remove wheel stud (1) by using hydraulic press (2) and general rod (3).

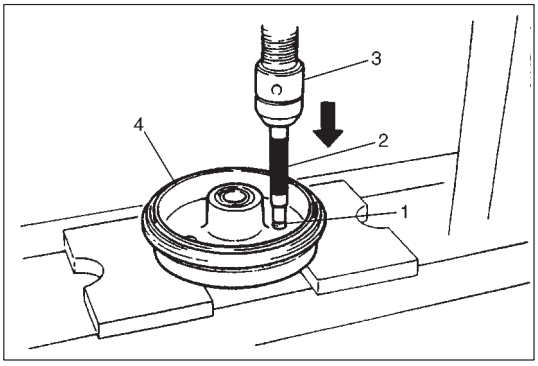

INSTALLATION

1) Insert new stud (1) in drum (4) hole after rotate stud slowly to assure the serrations are aligned with those mode by the original bolt by using hydraulic press (3) and general rod (2).

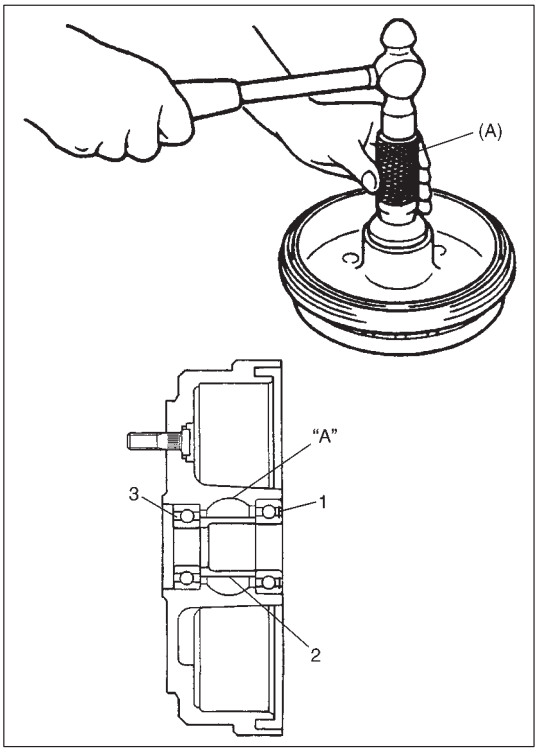

2) Install wheel bearing by using special tool.

Special Tool
(A): 09913-76010

NOTE:
When installing bearings:
- **Direct stamped side of bearing towards outside.**
- **Refer to figure for installing direction of spacer (2).**
- **Direct inner bearing sealed side (1) outward.**
- **Fill the space indicated by "A" in figure with bearing grease as much as 40% of space capacity.**
- **Install outer bearing (3) so that resin side of its retainer faces toward the outside of vehicle body.**

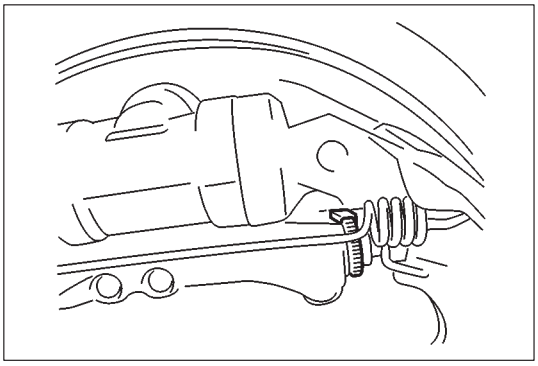

3) Before installing brake drum, to maximize clearance between shoe and drum, turn strut adjuster to the direction as shown in figure.

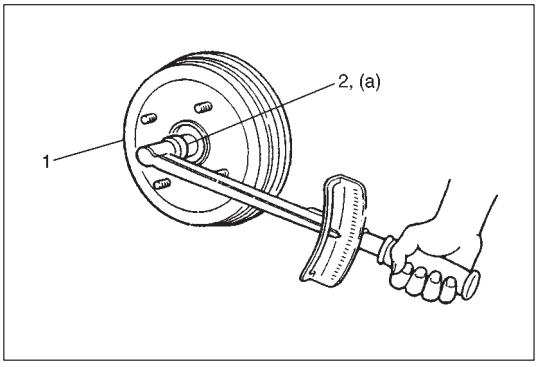

4) Install brake drum (1), washer and axle castle nut.
5) Tighten castle nut (2) to specified torque.

Tightening Torque
(a): 100 N·m (10.0 kg-m, 72.5 lb-ft)

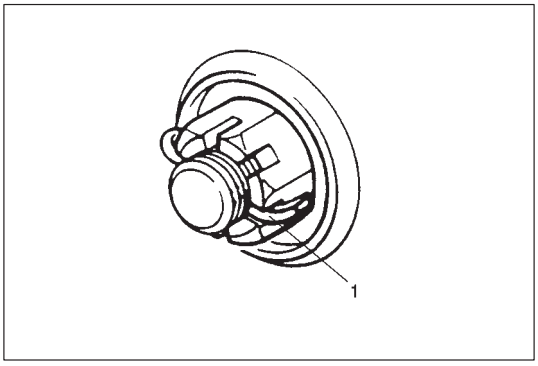

6) Install split pin (1) securely as shown.

7) Install spindle cap.

NOTE:

- **When installing spindle cap, hammer lightly several locations on the collar of cap until the collar comes closely into contact with brake drum.**
- **If fitting part of cap is deformed or damaged or if it is fitted loosely, replace with new one.**

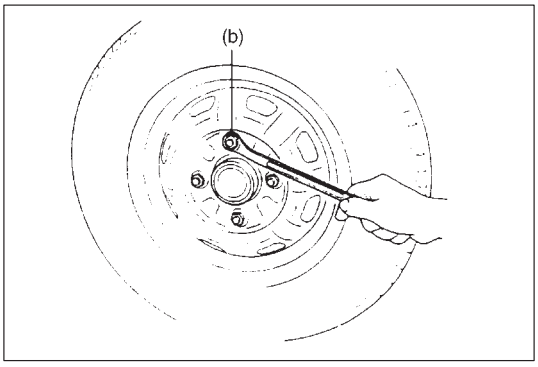

8) Tighten wheel nuts to specified torque.

Tightening Torque
(b): 55 N·m (5.5 kg-m, 40.0 lb-ft)

9) Upon completion of all jobs, depress brake pedal with about 30 kg (66 lbs) load two to three times so as to obtain proper drum-to-shoe clearance.
10) Check to make sure that brake drum is free from dragging and brake works properly. Then remove vehicle from lift and perform brake test.

REAR AXLE

NOTE:

In removing and installing the rear axle, the same procedure is required on both the right and left sides. The procedure described here is a representative one. If it is used on one side, it must be used in symmetry on the other side.

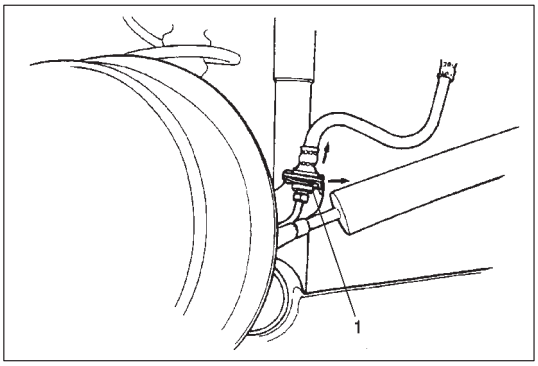

REMOVAL

1) Hoist vehicle and remove rear wheel.
2) Pull brake drum. (Refer to steps 2) to 6 on WHEEL BEARING AND WHEEL STUD in this section.)
3) From bracket on axle, remove E-ring (1).

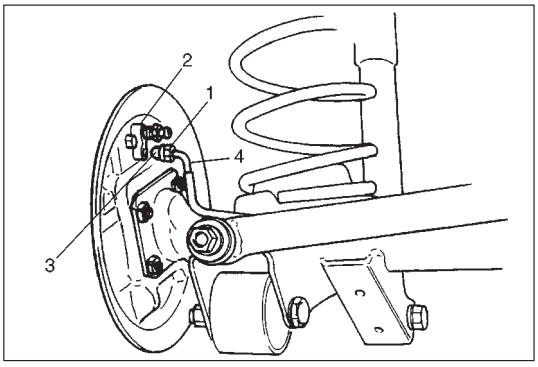

4) Disconnect brake pipe flare nut (1) from wheel cylinder (2).
5) Put breeder plug cap (3) on to brake pipe (4) to prevent brake fluid outflow.

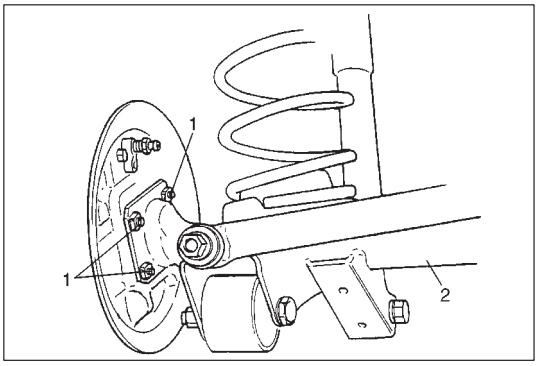

6) Remove brake hose/pipe from bracket on axle.
7) Remove rear brake back plate bolts (1) and remove back plate from axle (2).

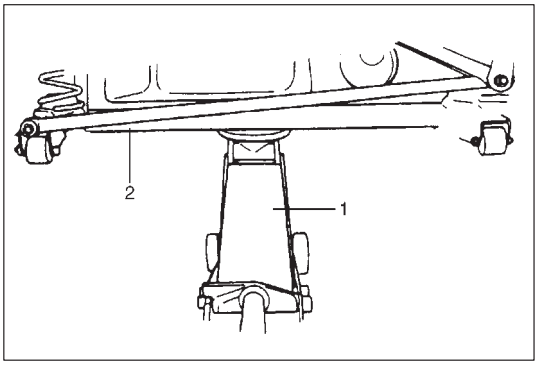

8) Support center of rear axle (2) by using floor jack (1).

9) Remove lateral rod.

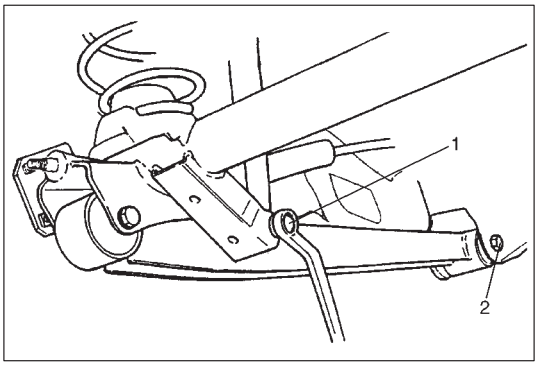

10) Remove shock absorber lower mount bolt (1).
11) Loosen trailing arm front nut (2).

12) Lower rear axle by releasing floor jack gradually till tension of suspension spring is relieved, and then remove spring.
13) Remove trailing arm front bolt and take down rear axle with trailing arm.
14) Remove trailing arm from rear axle.

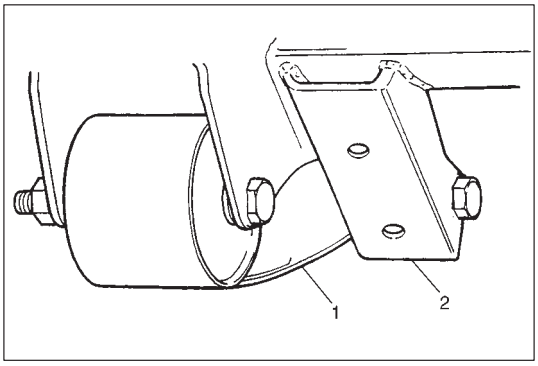

INSTALLATION

1) Install trailing arm (1) to rear axle (2).

2) Install trailing arm with its front side to body.

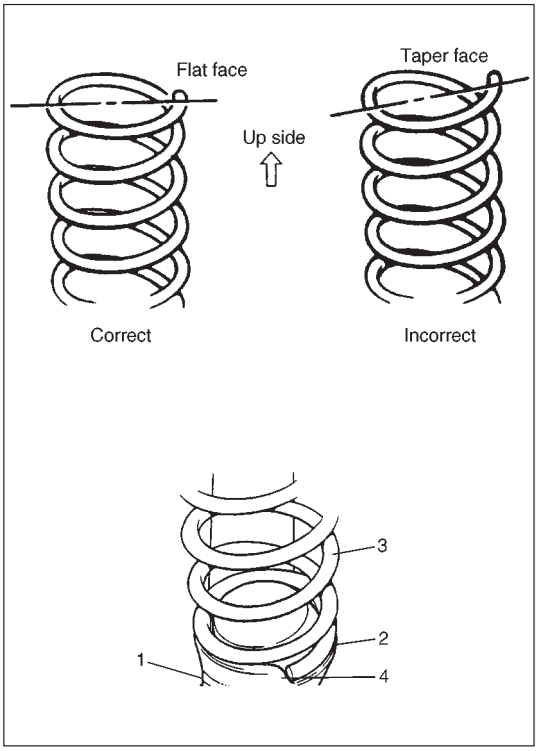

3) Support rear axle (1) by using floor jack.
4) Install coil spring (3) on rear axle spring seat (2).

NOTE:
- **When installing coil spring, insert it with its flat face side to top.**
- **When seating coil spring, mate spring end with stepped part (4) of rear axle seat as shown.**

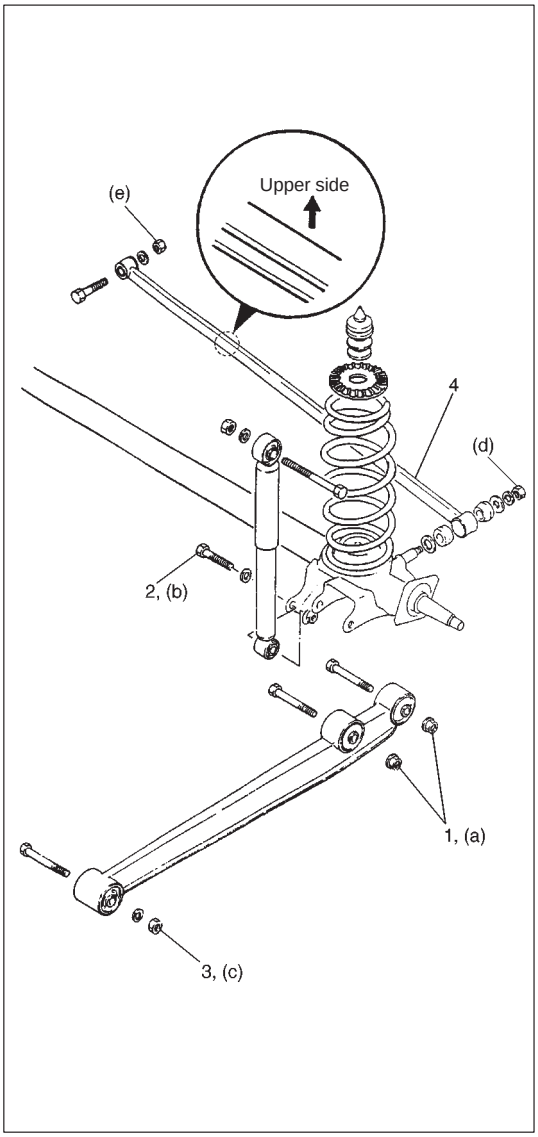

5) Tighten trailing arm rear nut (1) to specified torque.

Tightening Torque
(a): 80 N·m (8.0 kg-m, 58.0 lb-ft)

6) Install shock absorber lower mounting bolt (2) and tighten it to specified torque.

Tightening Torque
(b): 58 N·m (5.8 kg-m, 42.0 lb-ft)

7) Tighten trailing arm front nut (3) to specified torque.

Tightening Torque
(c): 80 N·m (8.0 kg-m, 58.0 lb-ft)

8) Install lateral rod (4) and tighten nuts to specified torque.

Tightening Torque
(d): 45 N·m (4.5 kg-m, 32.5 lb-ft)
(e): 58 N·m (5.8 kg-m, 42.0 lb-ft)

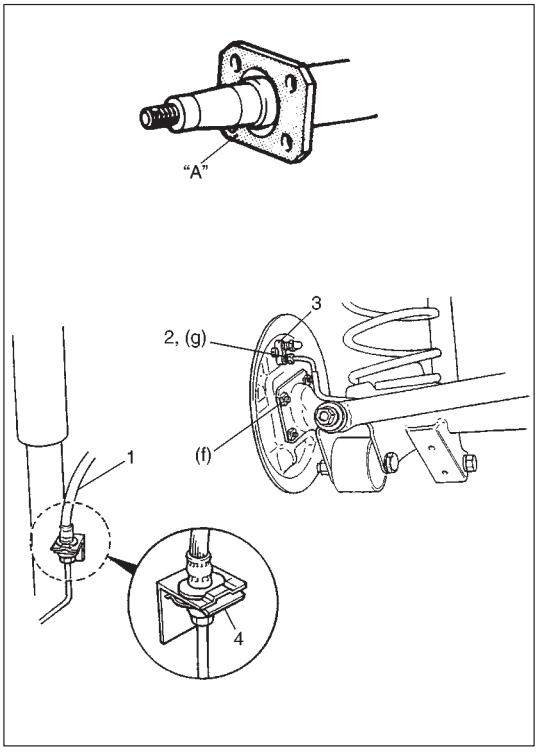

9) Apply water tight sealant to joint seam of axle and brake back plate and tighten bolts to specified torque.

   "A" : Sealant 366E, 99000-31090

   Tightening Torque
   (f): 23 N·m (2.3 kg-m, 16.5 lb-ft)

10) Put brake flexible hose (1) to bracket on axle and secure it with E-rings (4) and remove breather plug cap from end of pipe. Then tighten pipe flare nut (2) to wheel cylinder (3) to specification.

    Tightening Torque
    (g): 12 N·m (1.2 kg-m, 9.0 lb-ft)

11) Install brake drum. (Refer to steps 3) to 7) on WHEEL BEARING AND WHEEL STUD in this section.)
12) Fill reservoir with brake fluid and bleed brake system. (For bleeding operation, refer to BLEEDING BRAKES in Section 5.)
13) Upon completion of all jobs, depress brake pedal with about 30 kg (66 lbs) load two to three times so as to obtain proper drum-to-shoe clearance.
14) Check to make sure that brake drum is free from dragging and brake works properly.
    Then remove vehicle from lift and perform brake test.

REQUIRED SERVICE MATERIALS

MATERIALS	RECOMMENDED SUZUKI PRODUCT	USE
Brake fluid	DOT3	Brake reservoir tank
Water tight sealant	SEALING COMPOUND 366E (99000-31090)	Joint seam of rear axle and brake back plate

SPECIAL TOOLS

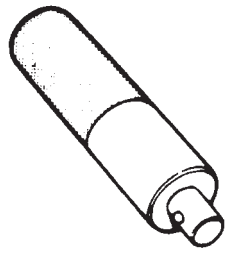

09924–74510
Bearing installer handle

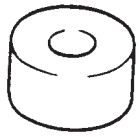

09951-16030
Bearing installer (ϕ51)

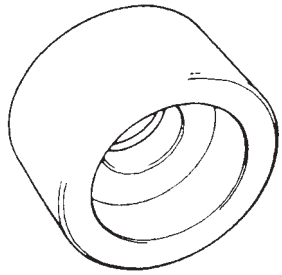

09951-16060
Bearing installer (ϕ45)

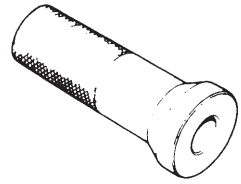

09913-76010
Rear wheel bearing installer

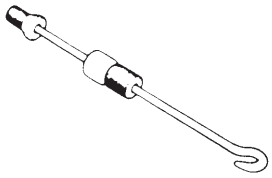

09942-15510
Sliding hammer

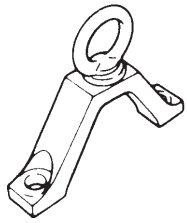

09943-17912
Brake drum remover

SECTION 3F

WHEELS AND TIRES

NOTE:
All wheel fasteners are important attaching parts in that they could affect the performance of vital parts and systems, and/or could result in major repair expense. They must be replaced with one of the same part number or with an equivalent part if replacement becomes necessary. Do not use a replacement part of lesser quality or substitute design. Torque values must be used as specified during reassembly to assure proper retention of all parts.
There is to be no welding as it may result in extensive damage and weakening of the metal.

CONTENTS

DIAGNOSIS 3-2
GENERAL DESCRIPTION 3F-1
Tires 3F-1
Wheels 3F-1
Replacement Tires 3F-1
Replacement Wheels 3F-2
How to measure wheel runout 3F-2
MAINTENANCE AND MINOR ADJUSTMENTS 3F-3
Wheel Maintenance 3F-3
Wheel attaching studs 3F-3
Matched tires and wheels 3F-3
Inflation of tires 3F-4
Tire placard 3F-4
Tire Rotation 3F-4
ON-VEHICLE SERVICE 3F-5
Service Operations 3F-5
Metric lug nuts and wheel studs 3F-5
Wheel removal 3F-5
Tire mounting and demounting 3F-5
Tire repair 3F-6
Balancing Wheels 3F-6
General Balance Procedures 3F-7
Off-vehicle balancing 3F-7
On-vehicle balancing 3F-7

GENERAL DESCRIPTION

TIRES

This vehicle is equipped with the following tire.
145/70 SR12 or 5.65-12-4PR
The tire is of tubeless type. The tire is designed to operate satisfactorily with loads up to the full rated load capacity when inflated to the recommended inflation pressures.
Correct tire pressures and driving habits have an important influence on tire life. Heavy cornering, excessively rapid acceleration, and unnecessary sharp braking increase tire wear.

WHEELS

Standard equipment wheels are the following steel wheel.
12 × 4 J

REPLACEMENT TIRES

When replacement is necessary, the original equipment type tire should be used. Refer to TIRE PLACARD. Replacement tires should be of the same size, load range and construction as those originally on the vehicle. Use of any other size or type tire may affect ride, handling, speedometer/odometer calibration, vehicle ground clearance and tire or snow chain clearance to the body and chassis.

kPa	kgf/cm^2	psi
160	1.6	23
180	1.8	26
200	2.0	29
220	2.2	32
240	2.4	35
260	2.6	38
280	2.8	41
300	3.0	44

WARNING:
Do not mix different types of tires on the same vehicle such as radial, bias and bias-belted tires except in emergencies, because handling may be seriously affected and may result in loss of control.

It is recommended that new tires be installed in pairs on the same axle. If necessary to replace only one tire, it should be paired with the tire having the most tread, to equalize braking traction.
The metric term for tire inflation pressure is the kilopascal (kPa). Tire pressures is usually printed in both kPa and psi on the tire placard.
Metric tire gauges are available from tool suppliers.
The chart, shown table, converts commonly used inflation pressures from kPa to psi.

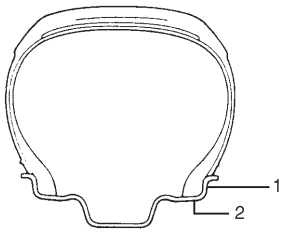

*** TOTAL INDICATOR READING IGNORE INDICATOR "JUMP" DUE TO WELD SEAMS, PAINT RUNS, SCRATCHES, ETC.**

REPLACEMENT WHEELS

Wheels must be replaced if they are bent, dented, have excessive lateral or radial runout, leak air through welds, have elongated bolt holes, if lug nuts won't stay tight, or if they are heavily rusted. Wheels with greater runout than shown in figure may cause objectional vibrations.
Replacement wheels must be equivalent to the original equipment wheels in load capacity, diameter, rim width, offset and mounting configuration. A wheel of improper size or type may affect wheel and bearing life, brake cooling, speedometer/odometer calibration, vehicle ground clearance and tire clearance to body and chassis.

HOW TO MEASURE WHEEL RUNOUT

To measure the wheel runout, it is necessary to use an accurate dial indicator. The tire may be on or off the wheel. The wheel should be installed to the wheel balancer of the like for proper measurement.
Take measurements of both lateral runout (1) and radial runout (2) at both inside and outside of the rim flange. With the dial indicator set in place securely, turn the wheel one full revolution slowly and record every reading of the indicator.
When the measured runout exceeds the specification and correction by the balancer adjustment is impossible, replace the wheel. If the reading is affected by welding, paint or scratch, it should be ignored.

	Radial runout limit	Lateral runout limit
Steel wheel	1.14 mm (0.045 in.)	1.40 mm (0.055 in.)

MAINTENANCE AND MINOR ADJUSTMENTS

WHEEL MAINTENANCE

Wheel repairs that use welding, heating, or peening are not approved. All damaged wheels should be replaced.

WHEEL ATTACHING STUDS

If a broken stud is found, refer to WHEEL BEARING AND WHEEL STUD in Section 3D (front) or 3E, 3E1 (rear) for replacement of it.

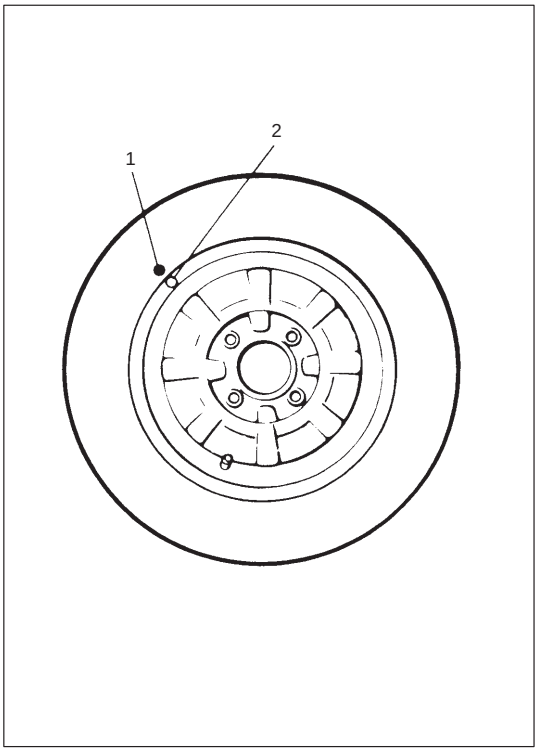

MATCHED TIRES AND WHEELS

Tires and wheels are matchmounted at the assembly plant.
This means that the radially stiffest part of the tire, or “high spot”, is matched to the smallest radius or “low spot” of the wheel.
This is done to provide the smoothest possible ride.
The “high spot” of the tire is originally marked by paint dot (1) on the outboard sidewall. This paint dot will eventually wash off the tire.
The “low spot” of the wheel is originally marked by paint dot (2) on the wheel rim-flange. Properly assembled, the wheel rim’s paint dot should be aligned with the tire’s paint dot as shown in figure.
Whenever a tire is dismounted from its wheel, it should be remounted so that the tire and wheel are matched. If the tire’s paint dot cannot be located, a line should be scribed on the tire and wheel before dismounting to assure that it is remounted in the same position.

INFLATION OF TIRES

The pressure recommended for any model is carefully calculated to give a satisfactory ride, stability, steering, tread wear, tire life and resistance to bruises.
Tire pressure, with tires cold, (after vehicle has set for three hours or more, or driven less than one mile) should be checked monthly or before any extended trip. Set to the specifications on the tire placard.
It is normal for tire pressure to increase 28 kPa (4psi) when the tires become hot during driving.
Do not bleed or reduce tire pressure after driving. Bleeding reduces the “Cold Inflation Pressure”.

Higher than recommended pressure can cause:
1. Hard ride
2. Tire bruising or carcass damage
3. Rapid tread wear at center of tire

Unequal pressure on same axle can cause:
1. Uneven braking
2. Steering lead
3. Reduced handling
4. Swerve on acceleration

Lower than recommended pressure can cause:
1. Tire squeal on turns
2. Hard Steering
3. Rapid and uneven wear on the edges of the tread
4. Tire rim bruises and rupture
5. Tire cord breakage
6. High tire temperature
7. Reduced handling
8. High fuel consumption

Valve caps should be on the valves to keep dust and water out.

TIRE PLACARD

The tire placard is located on the center pillar for driver’s side and should be referred to for tire information.
The placard lists the maximum load, tire size and cold tire pressure where applicable.

NOTE:
Whether rim size and/or maximum load are listed or not depends on regulations of each country.

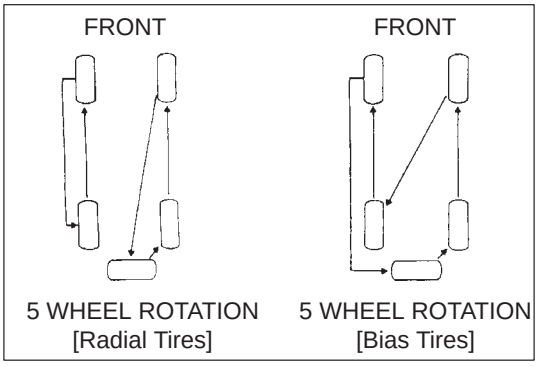

TIRE ROTATION

To equalize wear, rotate tires periodically as shown.

NOTE:
Due to their design, tires tend to wear faster in the shoulder area, particularly in front positions. This makes regular rotation especially necessary.

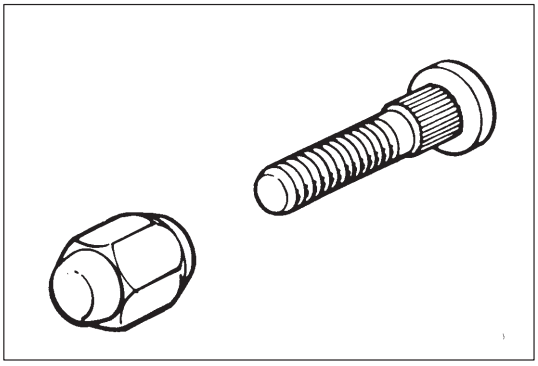

ON-VEHICLE SERVICE

SERVICE OPERATIONS

METRIC LUG NUTS AND WHEEL STUDS

All models use metric lug nuts and wheel studs (size: M12 × 1.25).

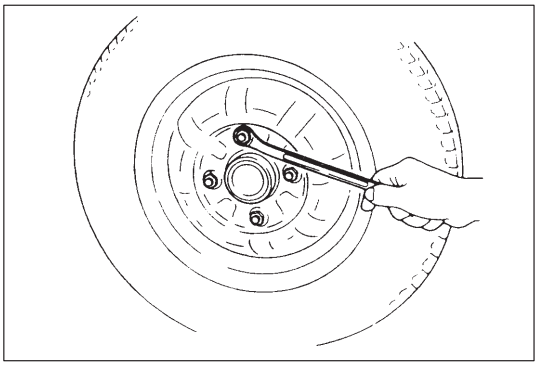

WHEEL REMOVAL

1) Loosen wheel nuts by approximately 180° (half a rotation).
2) Hoist vehicle.
3) Remove wheel.

> **CAUTION:**
> **Never use heat to loosen tight wheel because application of heat to wheel can shorten life of wheel and damage wheel bearings.**

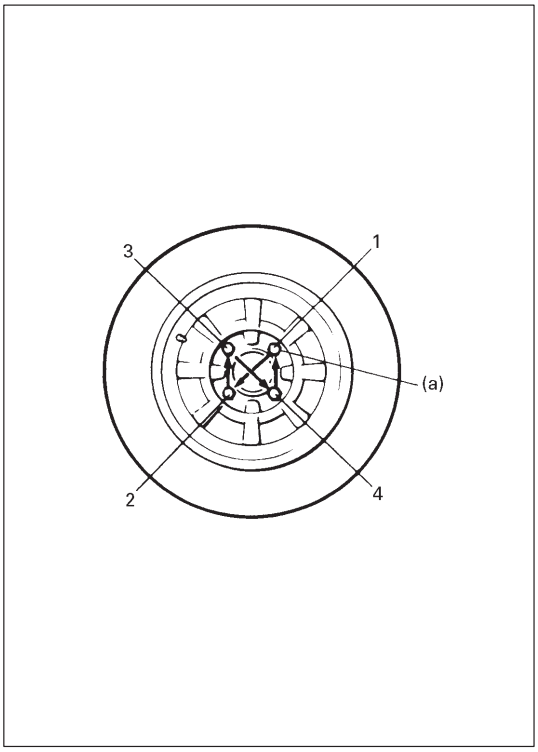

Wheel nuts must be tightened in sequence and to proper torque to avoid bending wheel or brake drum or disc.

NOTE:

Before installing wheels, remove any build-up of corrosion on wheel mounting surface and brake drum or disc mounting surface by scraping and wire brushing. Installing wheels without good metal-to-metal contact at mounting surfaces can cause wheel nuts to loosen, which can later allow a wheel to come off while vehicle is moving.

Tightening Torque

(a): 55 N·m (5.5 kg-m, 40.0 lb-ft)

TIRE MOUNTING AND DEMOUNTING

Use a tire changing machine to mount or demount tires. Follow equipment manufacturer's instructions. Do not use hand tools or tire irons alone to change tires as they may damage tire beads or wheel rim.

Rim bead seats should be cleaned with a wire brush or coarse steel wool to remove lubricants, old rubber and light rust. Before mounting or demounting a tire, bead area should be well lubricated with approved tire lubricant.

After mounting, inflate to specified pressure shown on tire placard so that beads are completely seated.

WARNING:
Do not stand over tire when inflating. Bead may break when bead snaps over rim's safety hump and cause serious personal injury.
Do not exceed specified pressure when inflating. If specified pressure will not seat beads, deflate, re-lubricate and reinflate.
Over inflation may cause bead to break and cause serious personal injury.

Install valve core and inflate to proper pressure.

TIRE REPAIR

There are many different materials and techniques on the market to repair tires. As not all of these work on all types of tires, tire manufacturers have published detailed instructions on how and when to repair tires. These instructions can be obtained from each tire manufacturer.

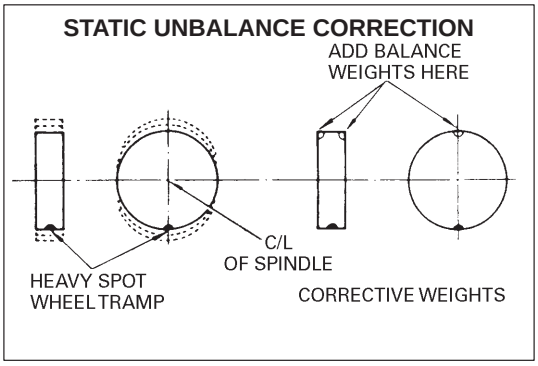

BALANCING WHEELS

There are two types of wheel and tire balance: static and dynamic. Static balance, is the equal distribution of weight around the wheel. Wheels that are statically unbalanced cause a bouncing action called tramp. This condition will eventually cause uneven tire wear.

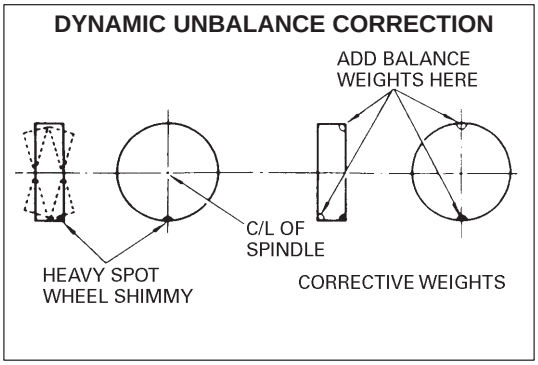

Dynamic balance is the equal distribution of weight on each side of the wheel centerline so that when the tire spins there is no tendency for the assembly to move from side to side. Wheels that are dynamically unbalanced may cause shimmy.

GENERAL BALANCE PROCEDURES

Deposits of mud, etc. must be cleaned from inside of rim.

WARNING:
Stones should be removed from the tread in order to avoid operator injury during spin balancing and to obtain good balance.

Each tire should be inspected for any damage, then balanced according to equipment manufacturer's recommendation.

OFF-VEHICLE BALANCING

Most electronic off-vehicle balancers are more accurate than the on-vehicle spin balancers. They are easy to use and give a dynamic (two plane) balance. Although they do not correct for drum or disc unbalance as does on-vehicle spin blancing, this is overcome by their accuracy, usually to within 1/8 ounce.

ON-VEHICLE BALANCING

On-vehicle balancing methods vary with equipment and tool manufacturers. Be sure to follow each manufacturer's instructions during balancing operation.

WARNING:
Wheel spin should be limited to 35 mph (55 km/h) as indicated on speedometer.
This limit is necessary because speedometer only indicates one-half of actual wheel speed when one drive wheel is spinning and the other drive wheel is stopped.
Unless care is taken in limiting drive wheel spin, spinning wheel can reach excessive speeds. This can result in possible tire disintegration or differential failure, which could cause serious personal injury or extensive vehicle damage.

SECTION 4

FRONT DRIVE SHAFT

CONTENTS

GENERAL DESCRIPTION 4-2
DIAGNOSIS 4-2
Diagnosis table 4-2
ON-VEHICLE SERVICE 4-3
Drive shaft assembly 4-3
REQUIRED SERVICE MATERIAL 4-8
SPECIAL TOOL 4-8

GENERAL DESCRIPTION

The drive shaft joint is a constant velocity joint (C.V joint) which slides in the axial direction. The joint is composed of an outer race, cage, inner race and balls. In the turning direction, the joint rotates in the same way as a ball bearing. The 6 balls lock rotation completely and transmit drive. In addition, this vehicle is also characterized by a function that the shaft can slide through the balls in the grooves of the outer race in the extention/contraction direction of the drive shaft.

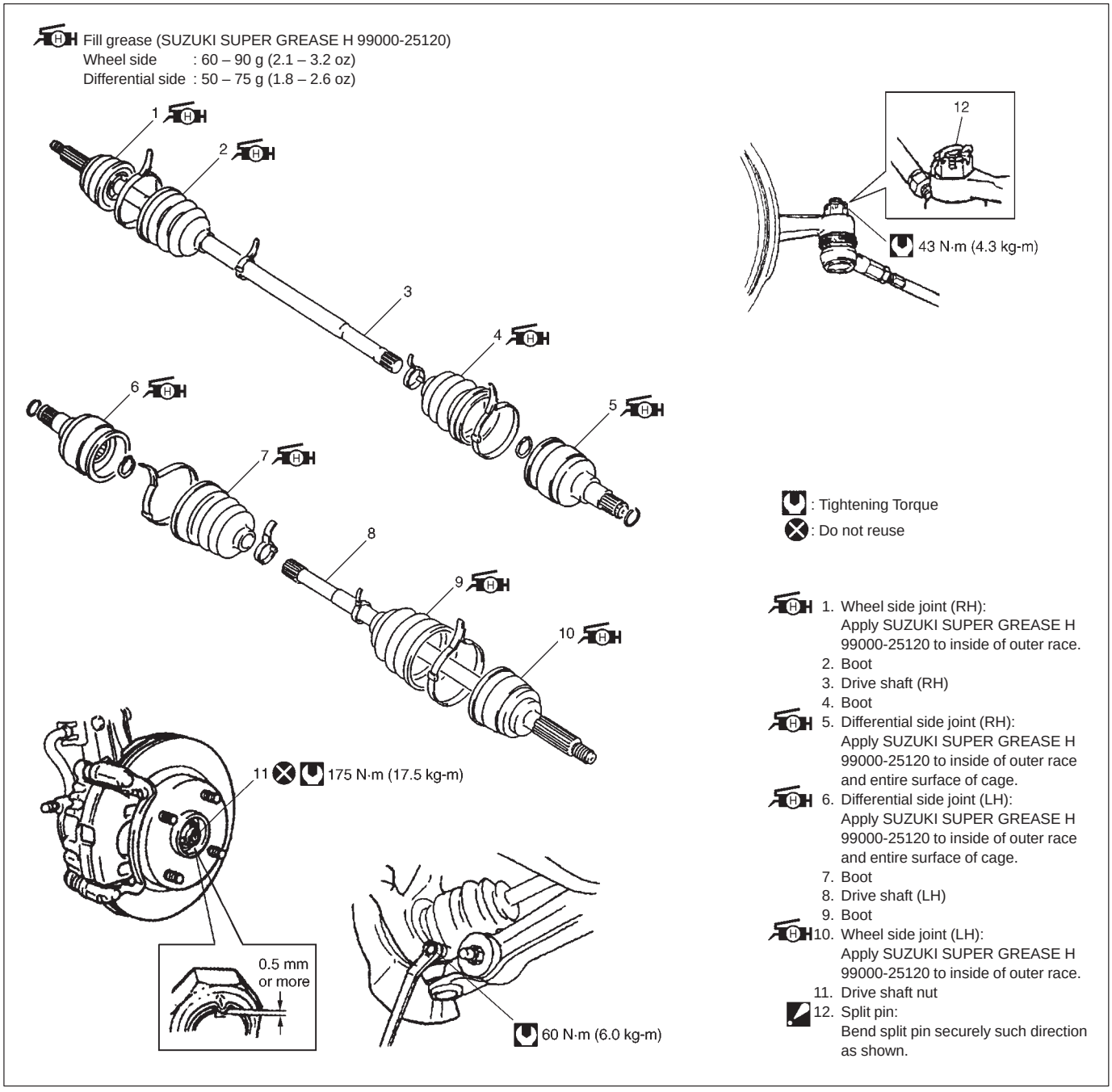

DIAGNOSIS

DIAGNOSIS TABLE

Condition	Possible Cause	Correction
Abnormal Noise	Worn or breakage drive shaft joint	Replace.

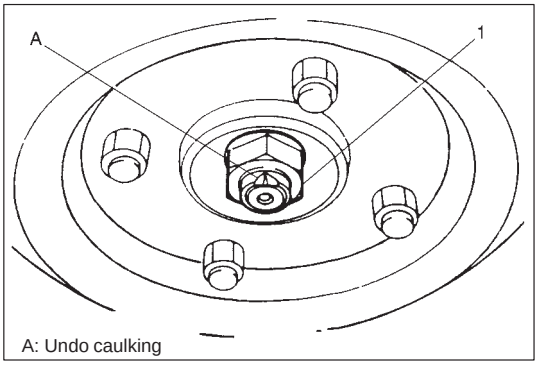

ON-VEHICLE SERVICE

DRIVE SHAFT ASSEMBLY

REMOVAL

1) Undo caulking and remove drive shaft nut (1) and washer.

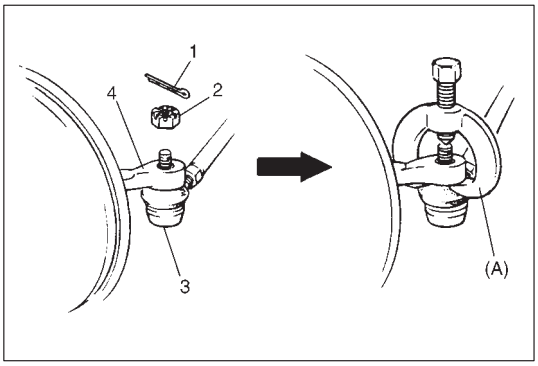

2) Hoist vehicle.
3) Remove wheel.
4) Remove tie-rod end split pin (1) and castle nut (2).
5) Disconnect tie-rod end (3) from steering knuckle (4) by using special tool.

   Special Tool
   (A): 09913-65210

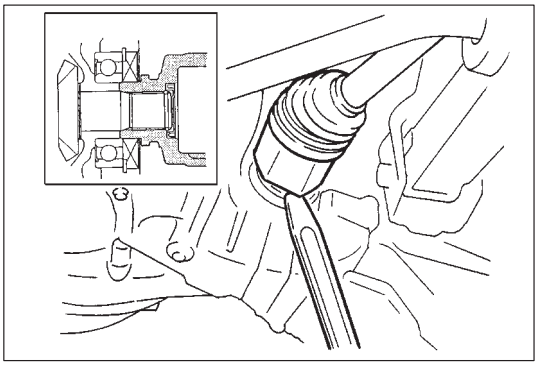

6) Drain transmission fluid.
7) Using large size lever (1), pull out drive shaft joint (2) so as to release snap ring fitting of joint spline at differential side.

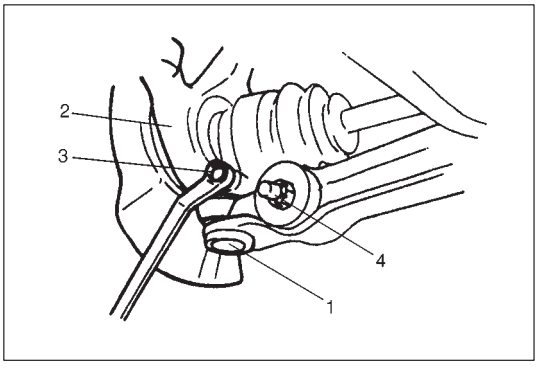

8) Disconnect front suspension control arm ball stud (1) from steering knuckle (2) by pushing down stabilizer bar (4) after removing stud bolt (3).

9) Remove drive shaft assembly.

> **CAUTION:**
> **To prevent breakage of boots, be careful not to bring them into contact with other parts, when removing drive shaft assembly.**

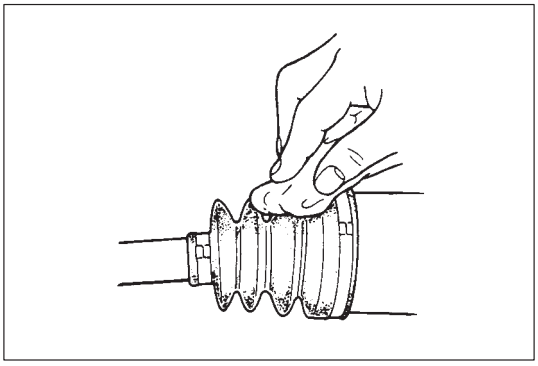

DISASSEMBLY

1) Wipe outer surface of drive shaft with a cloth and disassembly in the following manner.

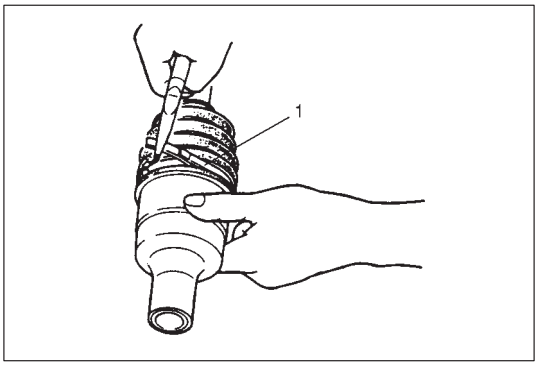

2) Remove boot band (1) of differential side joint.

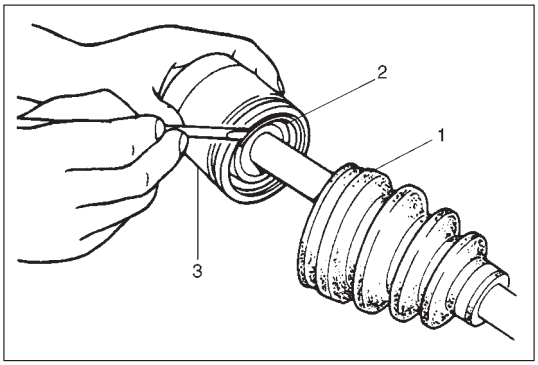

3) Slide boot (1) toward the center of shaft and remove snap ring (2) from outer race (3).

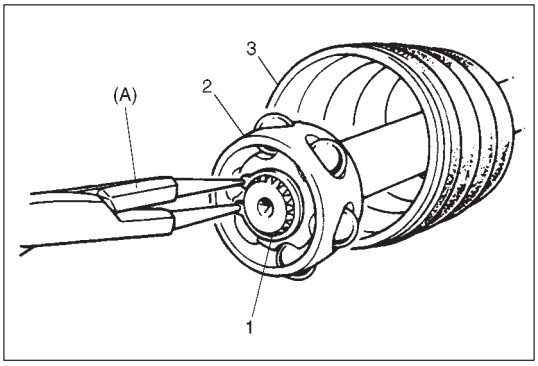

4) Wipe off grease and remove circlip (1) used to fix cage (2) by using special tool and then remove cage and boot (3) from shaft.

Special Tool
(A): 09900-06107

NOTE:
Do not disassemble wheel side joint (outboard joint). If any malcondition is found in any joint, replace it as assembly.

INSPECTION

- Inspect boots for breakage or deterioration.
  Replace them as necessary.
- Inspect circlip, snap ring and boot bands for breakage or deterioration. Replace as necessary.

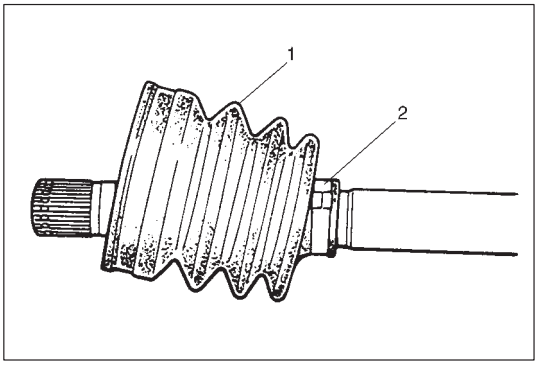

ASSEMBLY

CAUTION:
Wash all part before installation. Wipe out boot with a cloth.

1) Fit a boot (1) on drive shaft and, fitting small diameter side of the boot to shaft groove, fix with a boot band (2).

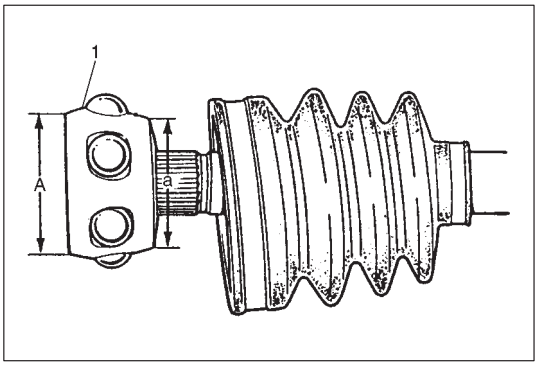

2) Install cage (1) on drive shaft.

CAUTION:
Install the cage directing the smaller outside diameter side to the shaft end.

Diameter : A > a

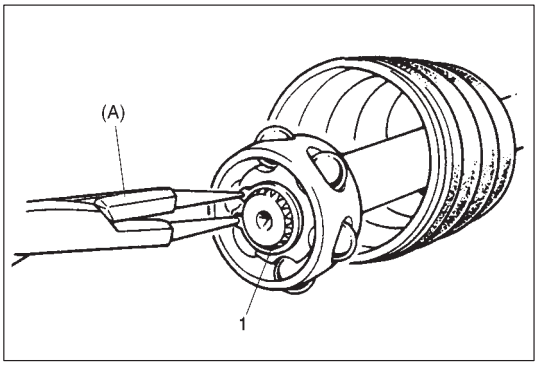

3) Install circlip (1) by using special tool.

Special Tool
(A): 09900-06107

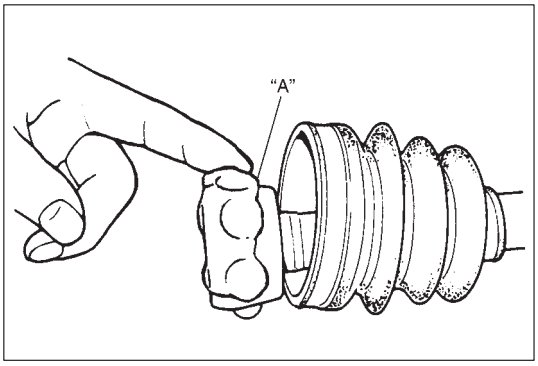

4) Apply grease to entire surface of cage.

"A" : SUZUKI SUPER GREASE H 99000-25120

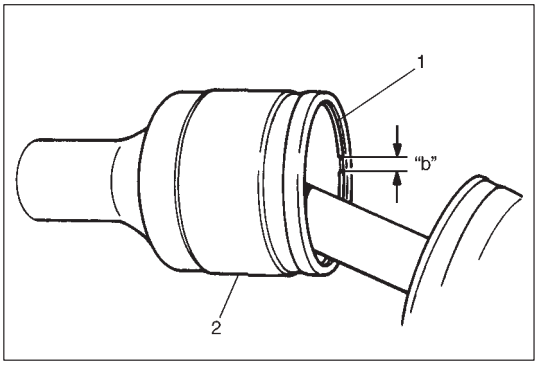

5) Insert cage into outer race (2) and fit a snap ring (1) in the groove of outer race.

CAUTION:
Locate the opening of the snap ring "b" so that the opening is not lined up with a ball.

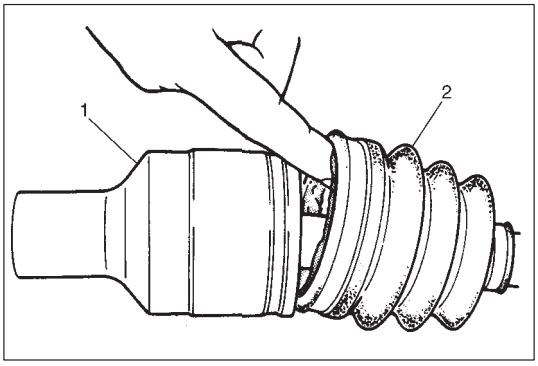

6) Apply grease to inside of outer race (1) and fit boot (2) to outer race. After fitting boot, insert screwdriver into boot on outer race side and allow air to enter boot so that air pressure in boot becomes the same as atmospheric pressure.

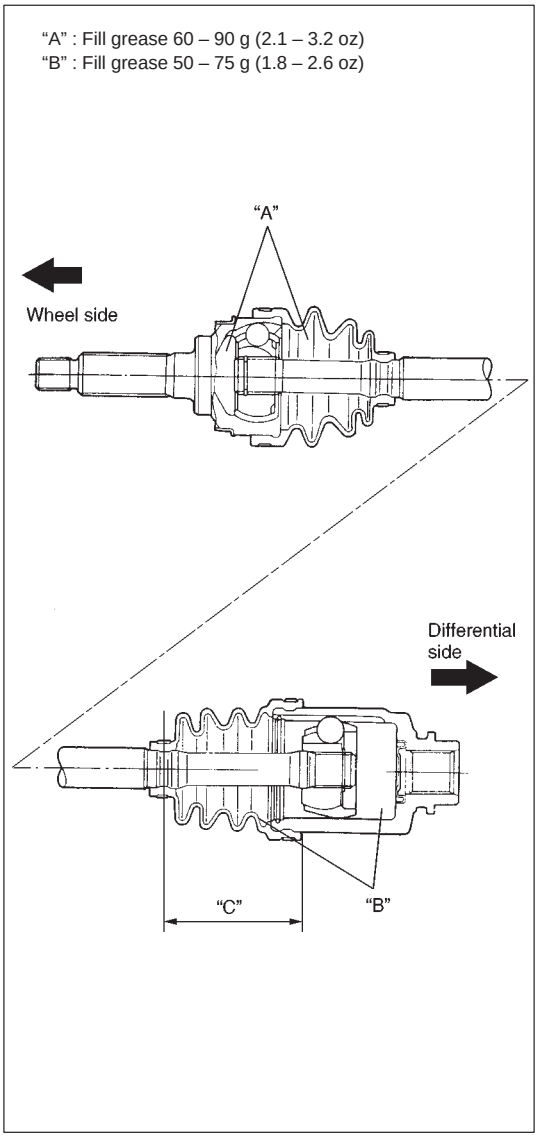

7) When fixing boot band, adjust so that measurements "C" become as specified.

Length "C" : 77 – 87 mm (3.03 – 3.43 in.) for right side joint
74 – 84 mm (2.91 – 3.31 in.) for left side joint

CAUTION:
- **To prevent any problem caused by washing solution, do not wash joint boots and tripod joint except its housing. Degreasing of those parts with cloth is allowed.**
- **To ensure full performance of joint as designed, be sure to distinguish between two types of grease in repair set and apply specified volume to respective joint. Refer to the previous page for identification of the grease.**
- **Bend each boot band against forward rotation.**
- **Do not squeeze or distort boot when fastening it with bands.**
  Distorted boot caused by squeezing air may reduce its durability.

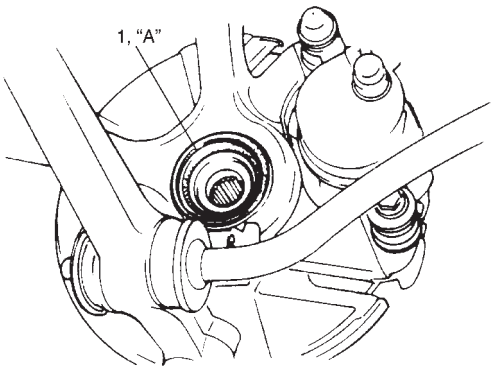

INSTALLATION

CAUTION:
- **To avoid excessive expansion of boot and consequential disconnection of joint in boot, do not pull differential side joint housing.**
- **Protect oil seals and boots from any damage, preventing them from unnecessary contact while installing drive shaft.**
- **Do not hit joint boot with hammer. Inserting joint only by hands is allowed.**
- **Make sure that differential side joint is inserted fully and its snap ring is seated as it was.**

Install drive shaft assembly by reversing removal procedure and noting following points.

- Clean front wheel bearing oil seal (1) and then apply grease. Replace it if required.

  “A”: SUZUKI SUPER GREASE A 99000-25010

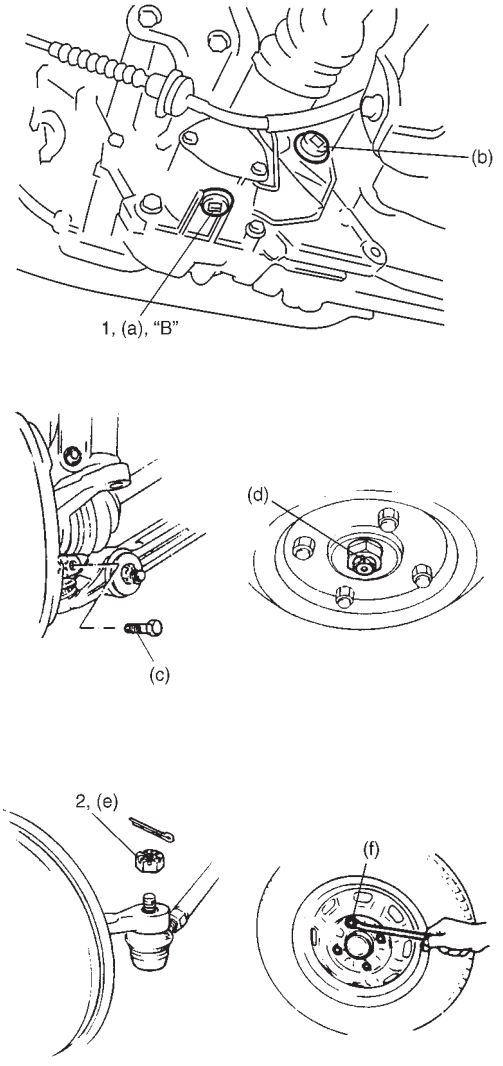

- Tighten each bolt and nut to the specified torque.

  Tightening Torque
  (a): 21 N·m (2.1 kg-m, 15.5 lb-ft) For 5-speed transmission
  28 N·m (2.8 kg-m, 20.5 lb-ft) For 4-speed transmission
  (b): 21 N·m (2.1 kg-m, 15.5 lb-ft) For 5-speed transmission only
  (c): 55 N·m (5.5 kg-m, 40.0 lb-ft)
  (d): 175 N·m (17.5 kg-m, 127.0 lb-ft)
  (e): 43 N·m (4.3 kg-m, 31.0 lb-ft)
  (f): 55 N·m (5.5 kg-m, 40.0 lb-ft)

- Apply sealant to drain plug (1) for manual transmission.

  “B”: Sealant 99000-31110

- Fill transmission with oil as specified. (Refer to Section 7A or 7B.)
- Install split pin to tie-rod end castle nut (2).

REQUIRED SERVICE MATERIAL

MATERIALS	RECOMMENDED SUZUKI PRODUCT	USE
Lithium grease	SUZUKI SUPER GREASE A (99000-25010)	Oil seal lips
	SUZUKI SUPER GREASE H (99000-25120)	Entire surface of the cage and the outer race on drive shaft assembly
Sealant	SUZUKI BOND NO. 1215 (99000-31110)	Oil drain plug for manual transmission

SPECIAL TOOL

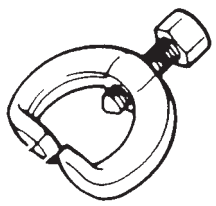 09913-65210 Tie-rod end remover	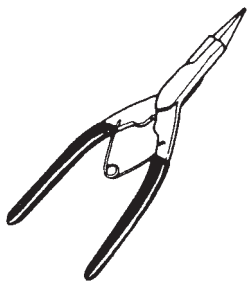 09900-06107 Snap ring plier (Open type)

SECTION 5

BRAKES

NOTE:
All brake fasteners are important attaching parts in that they could affect the performance of vital parts and systems, and/or could result in major repair expense. They must be replaced with one of same part number or with an equivalent part if replacement becomes necessary. Do not use a replacement part of lesser quality or substitute design. Torque values must be used as specified during reassembly to assure proper retention of all parts. There is to be no welding as it may result in extensive damage and weakening of the metal.

CONTENTS

GENERAL DESCRIPTION 5- 2
Front Disc Brake Caliper Assembly 5- 3
Rear Drum Brake Assembly 5- 3
Master Cylinder Assembly 5- 3
DIAGNOSIS 5- 4
Diagnosis Table 5- 5
ON-VEHICLE SERVICE 5- 7
Brake pedal Free Height Adjustment 5- 7
Brake Pedal Play Inspection 5- 7
Stop Light Switch Adjustment 5- 7
Excessive Pedal Travel Check 5- 7
Front Brake Pad Inspection 5- 8
Brake Disc Inspection 5- 8
Rear Drum Brake Shoe Adjustment 5- 8
Parking Brake Inspection and Adjustment 5- 9
Flushing Brake Hydraulic System 5- 9
Master Cylinder and Brake Fluid Level Inspection 5-10
Brake Hose and Pipe Inspection 5-10
Bleeding Brakes 5-11
Brake Hose/Pipe and Parking Brake Cable 5-13
FRONT DISC BRAKE 5-15
Brake Pad 5-16
Caliper Assembly 5-18
Brake Disc 5-22
REAR DRUM BRAKE 5-23
Brake Drum 5-24
Brake Shoe 5-27
Wheel Cylinder 5-28
Brake Back Plate 5-30
MASTER CYLINDER 5-32
Master Cylinder Reservoir 5-32
Master Cylinder Assembly 5-33
REQUIRED SERVICE MATERIALS 5-37
SPECIAL TOOLS 5-37

GENERAL DESCRIPTION

When the foot brake pedal is depressed, hydraulic pressure is developed in the master cylinder to actuate pistons (two in front and four in rear).
The master cylinder is a tandem master cylinder. Four brake pipes are connected to the master cylinder and they make two independent circuits. One connects the front right & rear left brakes and the other connects the front left & rear right brakes.
The proportioning valve (P valve) is included in these circuits between the master cylinder and rear wheels.
In this brake system, the disc brake type is used for the front wheel brake and a drum brake type (leading/trailing shoes) for the rear wheel brake.
The parking brake system is mechanical. It applies brake force to only rear wheels by means of the cable and mechanical linkage system. The same brake shoes are used for both parking and foot brakes.

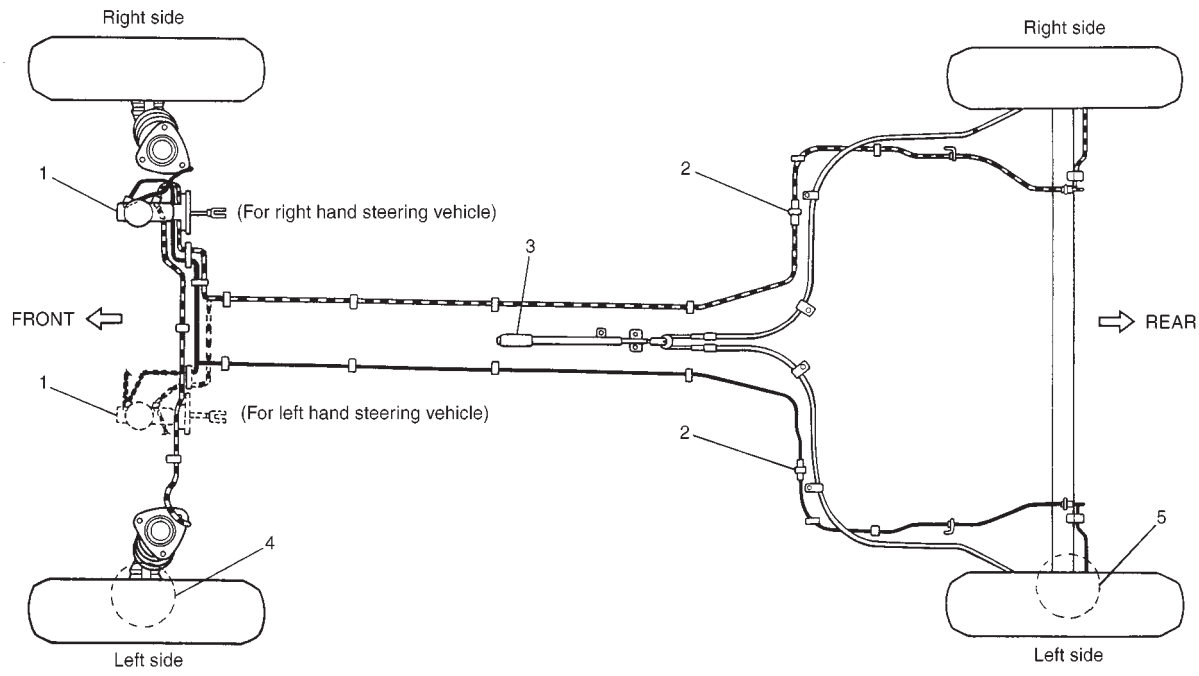

1. Master cylinder
2. Proportioning valve
3. Parking brake lever
4. Disc brake
5. Drum brake

FRONT DISC BRAKE CALIPER ASSEMBLY

This caliper has a single 51.1 mm (2.012 in.) bore and is mounted to the brake caliper holder with two mounting bolts. Hydraulic force, created by applying force to the brake pedal, is converted by the caliper to friction. The hydraulic force acts equally against the piston and the bottom of the caliper bore to move the piston outward and to move (slide) the caliper inward, resulting in a clamping action on the disc. This clamping action forces the pads (linings) against the disc, creating friction to stop the vehicle.

NOTE:
Lubricate parts as specified. Do not use lubricated shop air on brake parts as damage to rubber components may result. If any component is removed or line disconnected, bleed the brake system. Replace pads in axle sets only. The torque values specified are for dry, unlubricated fasteners.

REAR DRUM BRAKE ASSEMBLY

The drum brake assembly has a self shoe clearance adjusting system so that drum- to-shoe clearance is maintained appropriate at all times.

NOTE:
Replace all components included in repair kits used to service this drum brake. Lubricate parts as specified.

WARNING:
When servicing wheel brake parts, do not create dust by grinding or sanding brake linings or by cleaning wheel brake parts with a dry brush or with compressed air. (A water dampened cloth should be used.) Many wheel brake parts contain asbestos fibers which can become airborne if dust is created during servicing. Breathing dust containing asbestos fibers may cause serious bodily harm. If any hydraulic component is removed or brake line disconnected, bleed the brake system. The torque values specified are for dry, unlubricated fasteners.

MASTER CYLINDER ASSEMBLY

The tandem master cylinder is similar in construction to an ordinary master cylinder, the principal differences being that it has two pistons and that hydraulic pressure is developed in two chambers, one for front left & rear right brakes and the other for front right & rear left brakes.

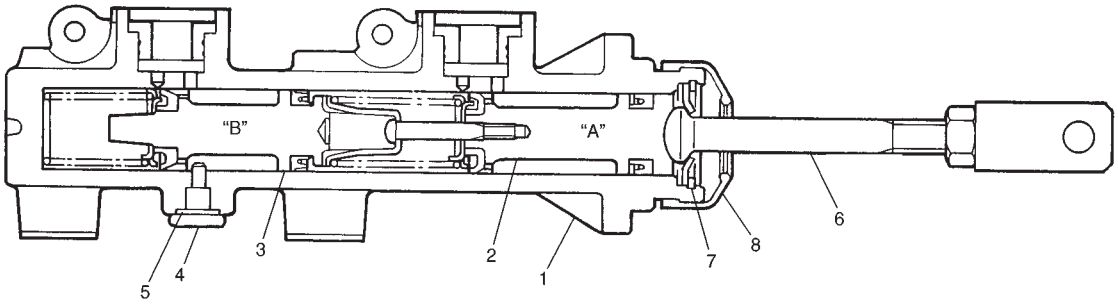

1. Master cylinder body
2. Master primary piston
3. Master secondary piston
4. Piston stopper bolt
5. Stopper bolt seal ring
6. Push rod
7. Piston stopper circlip
8. Master cylinder boot

"A" : Primary piston (For front left & rear right brakes)
"B" : Secondary piston (For front right & rear left brakes)

DIAGNOSIS

ROAD TESTING BRAKES

Brakes should be tested on dry, clean, smooth and reasonably level roadway which is not crowned. Road test brakes by making brake applications with both light and heavy pedal forces at various speeds to determine if the vehicle stops evenly and effectively.
Also drive vehicle to see if it leads to one side or the other without brake application. If it does, check the tire pressure, front end alignment and front suspension attachments for looseness. See diagnosis table for other causes.

BRAKE FLUID LEAKS

Check the master cylinder fluid levels. While a slight drop in reservoir level does result from normal lining wear, an abnormally low level indicates a leak in the system. In such a case, check the entire brake system for leakage. If even a slight evidence of leakage is noted, the cause should be corrected or defective parts should be replaced.

SUBSTANDARD OR CONTAMINATED BRAKE FLUID

Improper brake fluid, mineral oil or water in the fluid may cause brake fluid to boil or rubber components in the hydraulic system to deteriorate.

If primary piston cups are swollen, then rubber parts have deteriorated. This deterioration may also be evidenced by swollen wheel cylinder piston cups on the drum brake wheels.

If deterioration of rubber is evident, disassemble all hydraulic parts and wash with alcohol. Dry these parts with compressed air before assembly to keep alcohol out of the system. Replace all rubber parts in the system, including hoses. Also, when working on the brake mechanisms, check for fluid on the linings. If excessive fluid is found, replace the pads or linings.

If master cylinder piston seals are satisfactory, check for leakage or excessive heat conditions. If leakage is not found, drain fluid, flush with brake fluid, refill and bleed system.

The system must be flushed if there is any doubt as to the grade of fluid in the system or if fluid has been used which contained parts that have been subjected to contaminated fluid.

DIAGNOSIS TABLE

Condition	Possible Cause	Correction
Not enough braking force	● Brake oil leakage from brake lines.	Locate leaking point and repair.
	● Brake disc or pads stained with oil.	Clean or replace.
	● Overheated brakes.	Determine cause and repair.
	● Poor contact of shoes on brake drum.	Repair for proper contact.
	● Brake shoes linings stained with oil or wet with water.	Replace.
	● Badly worn brake pad linings.	Replace.
	● Defective wheel cylinders.	Repair or replace.
	● Malfunctioning caliper assembly.	Repair or replace.
	● Air in system.	Bleed system.
Brake pull (Brakes not working in unison)	● Pad linings and/or shoe linings are wet with water or stained with oil in some brakes.	Replace.
	● Drum-to-shoe clearance out of adjustment in some brakes. (Malfunctioning auto adjusting mechanism)	Check for inoperative auto adjusting mechanism.
	● Disc and/or drum is out of round in some brakes.	Replace.
	● Wheel tires are inflated unequally.	Inflate equally.
	● Malfunction in wheel cylinders.	Repair or replace.
	● Disturbed front end alignment.	Adjust as prescribed.
	● Unmatched tires on same axle.	Tires with approximately the same amount of tread should be used on the same axle.
	● Restricted brake pipes or hoses.	Check for soft hoses and damaged lines. Replace with new hoses and new brake piping.
	● Malfunctioning caliper assembly.	Check for stuck or sluggish pistons and proper lubrication of caliper slide bush. Caliper should slide.
	● Loose suspension parts.	Check all suspension mountings.
	● Loose calipers.	Check and torque bolts to specifications.
Noise (high pitched squeak without brake applied)	● Front lining worn out.	Replace linings.
Excessive pedal travel (Pedal stroke too large)	● Partial brake system failure.	Check brake systems and repair as necessary.
	● Insufficient fluid in master cylinder reservoirs.	Fill reservoirs with approved brake fluid. Check for leaks and air in brake system. Check warning light. Bleed system if required.
	● Air in system (soft/spongy pedal).	Bleed system.
	● Rear brake system not adjusted (malfunctioning auto adjusting mechanism).	Repair auto adjusting mechanism. Adjust rear brakes.
	● Bent brake shoes.	Replace brake shoes.
	● Worn rear brake shoes.	Replace brake shoes.

Condition	Possible Cause	Correction
Dragging brakes (A very light drag is present in all brakes immediately after pedal is released)	● Master cylinder pistons not returning correctly.	Repair master cylinder.
	● Restricted brake pipes or hoses.	Check for soft hoses or damaged pipes and replace with new hoses and/or new brake piping.
	● Incorrect parking brake adjustment on rear brakes.	Check and adjust to correct specifications.
	● Weakened or broken return springs in the brake.	Replace.
	● Sluggish parking brake cables or linkage.	Repair or replace.
	● Wheel cylinder or caliper piston sticking.	Repair as necessary.
	● Badly worn piston seal in caliper.	Replace piston seal.
Pedal pulsation (Pedal pulsates when depressed for braking)	● Damaged or loose wheel bearings.	Replace wheel bearings.
	● Distorted steering knuckle or rear wheel spindle.	Replace knuckle or rear wheel spindle.
	● Excessive disc lateral runout.	Check per instructions. If not within specifications, replace or machine disc.
	● Parallelism not within specifications.	Check per instructions. If not within specifications, replace or machine disc.
	● Rear drums out of round.	Check runout. Repair or replace drum as necessary.
Braking noise	● Glazed shoe linings, or foreign matters stuck to linings.	Repair or replace shoe linings.
	● Worn or distorted shoe linings.	Replace shoe linings (or pads).
	● Loose front wheel bearings.	Replace wheel bearing.
	● Distorted backing plates or loose mounting bolts.	Replace or retighten securing bolts.

ON-VEHICLE SERVICE

BRAKE PEDAL FREE HEIGHT ADJUSTMENT

Brake pedal height is normal if brake pedal is as high as clutch pedal.
When stop light switch has been removed, refer to the following STOP LIGHT SWITCH ADJUSTMENT for proper installation.

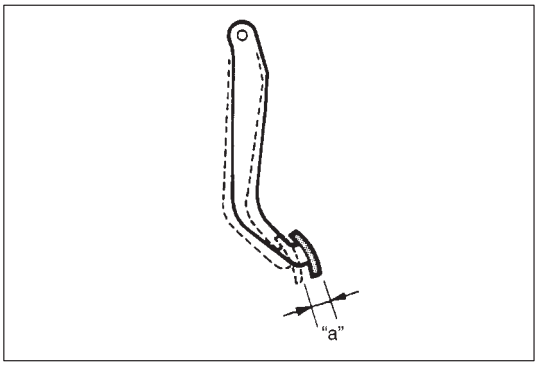

BRAKE PEDAL PLAY INSPECTION

Pedal play should be within below specification.
If out of specification, check stop light switch for proper installation position and adjust if necessary.
Also check pedal shaft bolt and master cylinder pin installation for looseness and replace if defective.

Pedal play "a": 1 – 8 mm (0.04 – 0.31 in.)

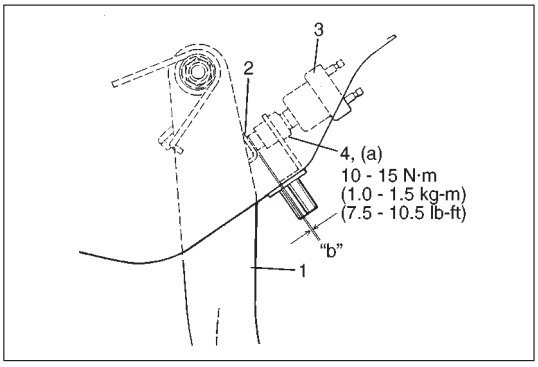

STOP LIGHT SWITCH ADJUSTMENT

Adjustment should be made as follows when installing switch (3). Pull up brake pedal (1) toward you and while holding it there, adjust switch position so that clearance between the end of thread and brake pedal contact plate (2) (shown as "b" in figure) is within 0.5 – 1.0 mm (0.02 – 0.04 in.). Then tighten lock nut (4) to specified torque.
Clearance "b": 0.5 – 1.0 mm (0.02 – 0.04 in.)
Tightening Torque
(a) : 13 N·m (1.3 kg-m, 9.5 lb-ft)

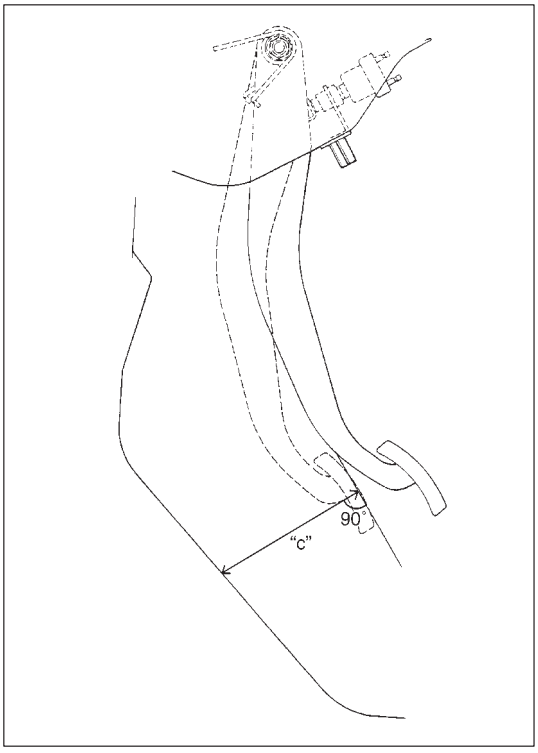

EXCESSIVE PEDAL TRAVEL CHECK

1) With brake pedal depressed with approximately 30 kg (66 lbs) load, measure pedal arm to wall clearance "c". It mustn't be less than 85 mm (3.35 in.).

   Clearance "c": Over 85 mm (3.35 in.)

2) If clearance "c" is less than 85 mm (3.35 in.), the most possible cause is either rear brake shoes are worn out beyond limit or air is in lines.
   Should clearance "c" remain less than 85 mm (3.35 in.) even after replacement of brake shoes and bleeding of system, other possible but infrequent cause is malfunction of rear brake shoe adjusters.
   - Bleed brake system. (Refer to BLEEDING BRAKES in this section.)
   - Remove brake drums for adjuster inspection. (Refer to BRAKE DRUM in this section.) If defective, correct or replace.

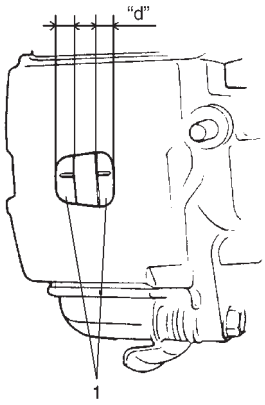

FRONT BRAKE PAD INSPECTION

Inspect pad linings (1) periodically according to maintenance schedule whenever wheels are removed (for tire rotation or other reason). Take a look through each end (or hole) of caliper and check lining thickness of outside and inside pads.
If lining is worn and its thickness ("d") in figure is less than limit, all pads must be replaced at the same time.

Pad thickness "d" (Lining thickness)
Standard : 10.0 mm (0.394 in.)
Limit : 1.0 mm (0.039 in.) for pad rim is painted black
3.0 mm (0.118 in.) for pad rim is painted brown

BRAKE DISC INSPECTION

Refer to BRAKE DISC of this section for inspection point and procedure.

REAR DRUM BRAKE SHOE ADJUSTMENT

Rear brake has self-adjusting mechanism but it does require adjustment for proper drum-to-shoe clearance when brake shoe has been replaced or brake drum has been removed for some other service.
Adjustment is automatically accomplished by depressing brake pedal 2 to 3 times with approximately 30 kg (66 lbs) load after all parts are installed.
Then check brake drum for dragging and brake system for proper performance. After lowering vehicle from lift, brake test should be performed.

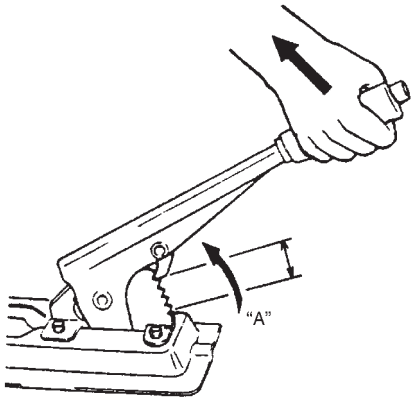

PARKING BRAKE INSPECTION AND ADJUSTMENT

INSPECTION

Hold center or parking brake lever grip and pull it up with 20 to 25 kg (44 to 55f lbs) force.
With parking brake lever pulled up as above, count ratchet notches in "A" as shown in figure.
There should be 3 to 6 notches.
Also, check if both right and left rear wheels are locked firmly.
To count number of notches easily, listen to click sounds that ratchet makes while pulling parking brake lever without pressing its button. One click sound corresponds to one notch.
If number of notches is out of specification, adjust cable by referring to adjustment procedure described on the following so as to obtain specified parking brake stroke.

NOTE:
Check tooth tip of each notch for damage or wear. If any damage or wear is found, replace parking brake lever.

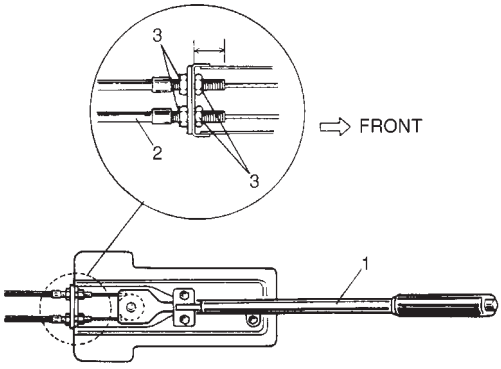

ADJUSTMENT

NOTE:
Make sure for following conditions before cable (2) adjustment.

- **No air is trapped in brake system.**
- **Brake pedal travel is proper.**
- **Brake pedal has been depressed a few times with about 30 kg (66 lbs) load.**
- **Parking brake lever has been pulled up a few times with about 20 kg force.**
- **Rear brake pads are not worn beyond limit.**

After confirming that above conditions are all satisfied, adjust parking brake lever (1) stroke by loosening or tightening adjusting nuts (3). Right and left outer cables should be adjusted equal.

NOTE:
Check brake drum for dragging after adjustment.

Parking brake stroke; when lever is pulled up at 20 kg (44 lbs)	Within 3 – 6 notches

FLUSHING BRAKE HYDRAULIC SYSTEM

It is recommended that entire hydraulic system be thoroughly flushed with clean brake fluid whenever new parts are installed in hydraulic system.
It is also recommended that brake fluid be changed every two years periodically.

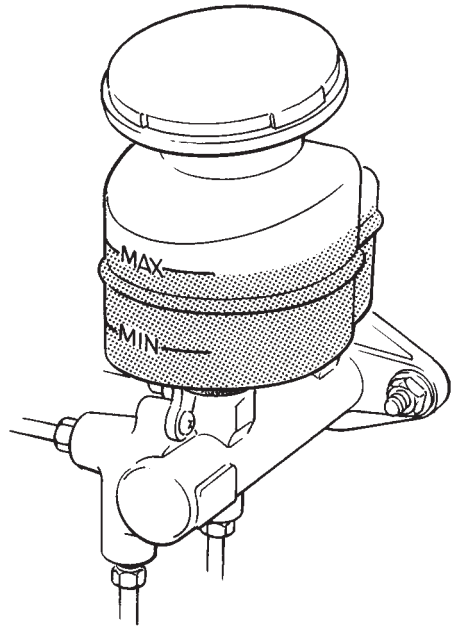

MASTER CYLINDER AND BRAKE FLUID LEVEL INSPECTION

1) Check master cylinder and reservoir tank for crack, damage and brake fluid leakage. If any faulty condition exists, correct or replace.
2) Check that brake fluid level is between MAX and MIN marks on reservoir tank.

NOTE:
Be sure to use particular brake fluid either as indicated on reservoir cap of that vehicle or recommended in owner's manual which comes along with that vehicle. Use of any other fluid is strictly prohibited.
Fluid level should be between MIN and MAX lines marked on reservoir.
When brake warning light lights sometimes during driving, replenish fluid to MAX level.
When fluid decreases quickly, inspect brake system for leakage. Correct leaky points and then refill to specified level.

CAUTION:
Do not use shock absorber fluid or any other fluid which contains mineral oil. Do not use a container which has been used for mineral oil or a container which is wet from water. Mineral oil will cause swelling and distortion of rubber parts in hydraulic brake system and water mixed into brake fluid will lower fluid boiling point. Keep all fluid containers capped to prevent contamination.

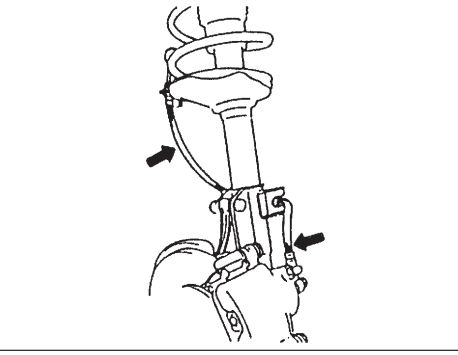

BRAKE HOSE AND PIPE INSPECTION

HOSE

The flexible hydraulic brake hose, which transmits hydraulic pressure from steel brake line on the body to rear cylinders and to front calipers, should be inspected at least twice a year. The brake hose assembly should be checked for road hazard damage, for cracks and chafing of outer cover, for leaks and blisters. A light and mirror may be needed for an adequate inspection. If any of the above conditions are observed on brake hose, it will be necessary to replace it.

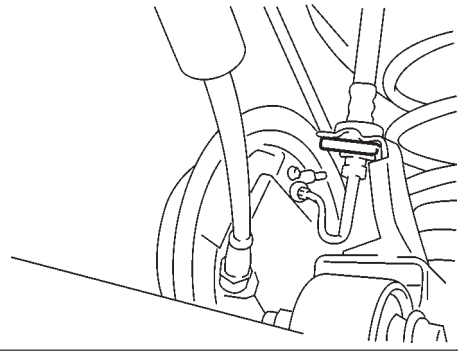

PIPE

Inspect the pipe for damage, cracks, dents and corrosion. If any defect is found, replace it.

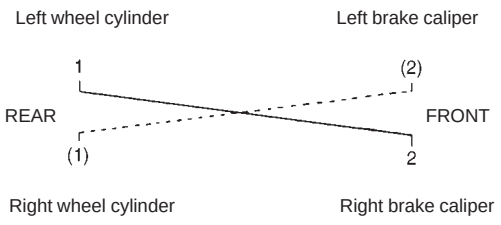

BLEEDING BRAKES

CAUTION:
Brake fluid is extremely damaging to paint. If fluid should accidentally touch painted surface, immediately wipe fluid from paint and clean painted surface.

A bleeding operation is necessary to remove air whenever it is introduced into the hydraulic brake system.
The hydraulic lines of this brake system are based on the diagonal split system. When a brake pipe or hose was disconnected at the wheel, bleeding operation must be performed at both ends of the line of the removed pipe or hose. When any joint part of the master cylinder of other joint part between the master cylinder and each brake (wheel) was removed, the hydraulic brake system must be bled at all 4 wheel brakes.

NOTE:
Perform bleeding operation starting with wheel cylinder farthest from master cylinder and then at front caliper of the same brake line. Do the same on the other brake line.

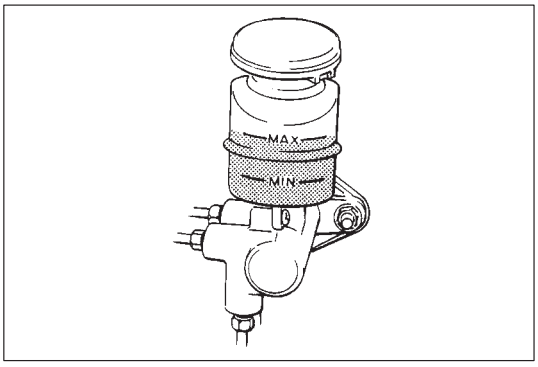

1) Fill master cylinder reservoir with brake fluid and keep at least one-half full of fluid during bleeding operation.

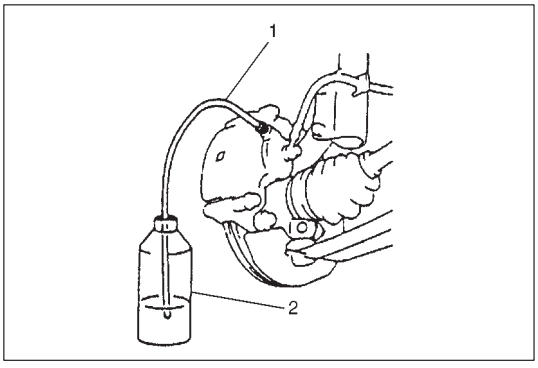

2) Remove bleeder plug cap.
   Attach a vinyl tube (1) to the bleeder plug of wheel cylinder, and insert the other end into a container (2).

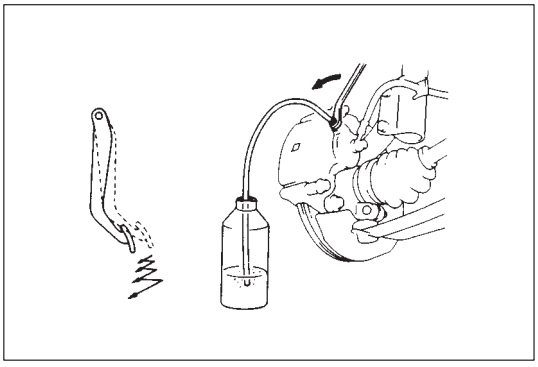

3) Depress brake pedal several times, and then while holding it depressed, loosen bleeder plug about one-third to one-half turn.

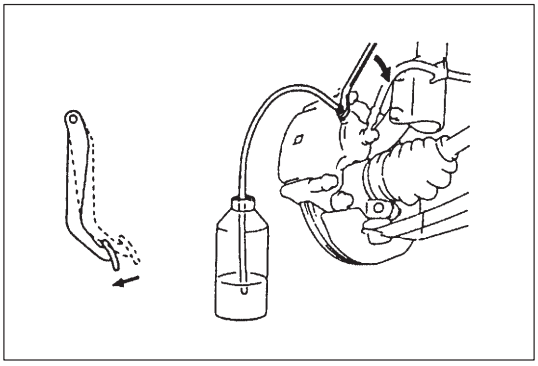

4) When the fluid pressure in the cylinder is almost depleted, re-tighten bleeder plug.
5) Repeat this operation until there are no more air bubbles in hydraulic line.
6) When bubbles stop, depress and hold brake pedal and tighten bleeder plug.

   Tightening torque for bleeder plug
   FRONT: 8.5 N·m (0.85 kg-m, 6.5 lb-ft)
   REAR: 8.5 N·m (0.85 kg-m, 6.5 lb-ft)
7) Then attach bleeder plug cap.

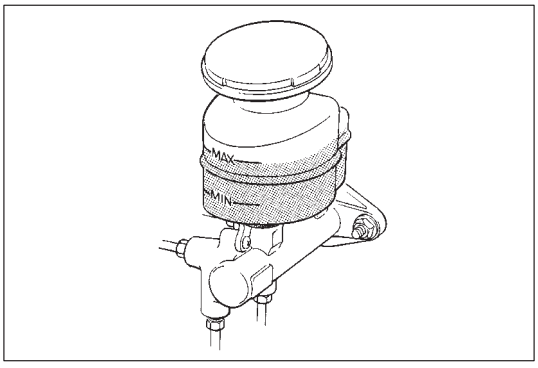

8) After completing bleeding operation, apply fluid pressure to pipe line and check for leakage.
9) Replenish fluid into reservoir up to specified level.
10) Check brake pedal for “sponginess”. If found spongy, repeat entire procedure of bleeding.

BRAKE HOSE/PIPE AND PARKING BRAKE CABLE

REMOVAL

1) Raise and support vehicle properly. Remove tire and wheel.
2) Clean dirt and foreign material from both flexible hose end and pipe end fittings. Remove brake flexible hose or pipe.
3) Remove parking brake cable.

INSTALLATION

1) Install it by reversing removal procedure, noting the following points.
   - Install clamps properly referring to figure below.
   - Tighten bolts and nuts to specified torque.
2) Upon completion if installation, adjust cable. (Refer to PARKING BRAKE INSPECTION AND ADJUSTMENT of this section.) Then check brake drum for dragging and brake system for proper performance. After removing vehicle from hoist, perform brake test and check each installed part for fluid leakage.

Rear suspension for I.T.L. type

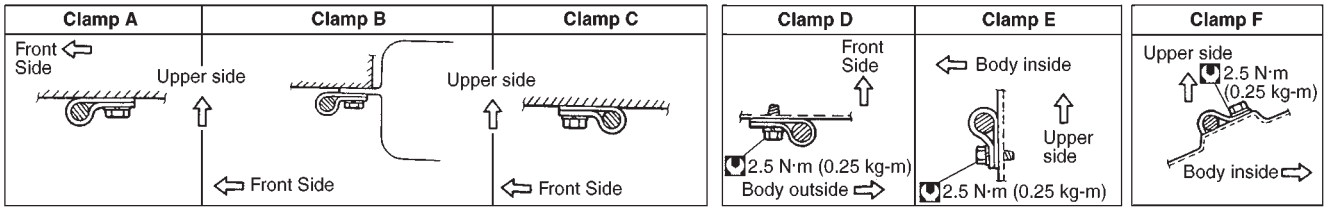

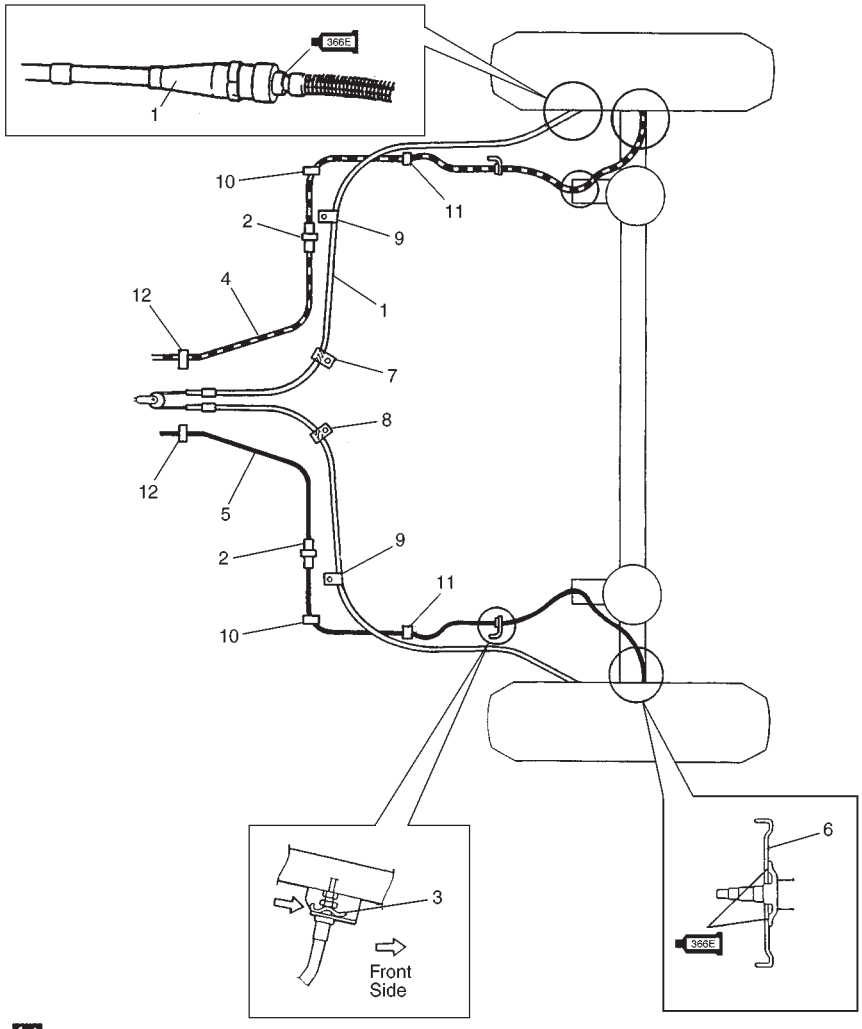

366E 1. Parking brake cable:
Apply water tight sealant 366E 99000-31090 where plate and cable contact.
2. Proportioning valve (P-valve)
3. E-ring
4. From master cylinder primary to P-valve.
5. From master cylinder secondary to P-valve.
366E 6. Brake back plate:
Apply water tight sealant 366E 99000-31090 to mating surfaces of brake back plate and rear axle.
7. Clamp A
8. Clamp B
9. Clamp C
10. Clamp D
11. Clamp E
12. Clamp F

: Tightening Torque

Rear suspension for DEAD AXLE type

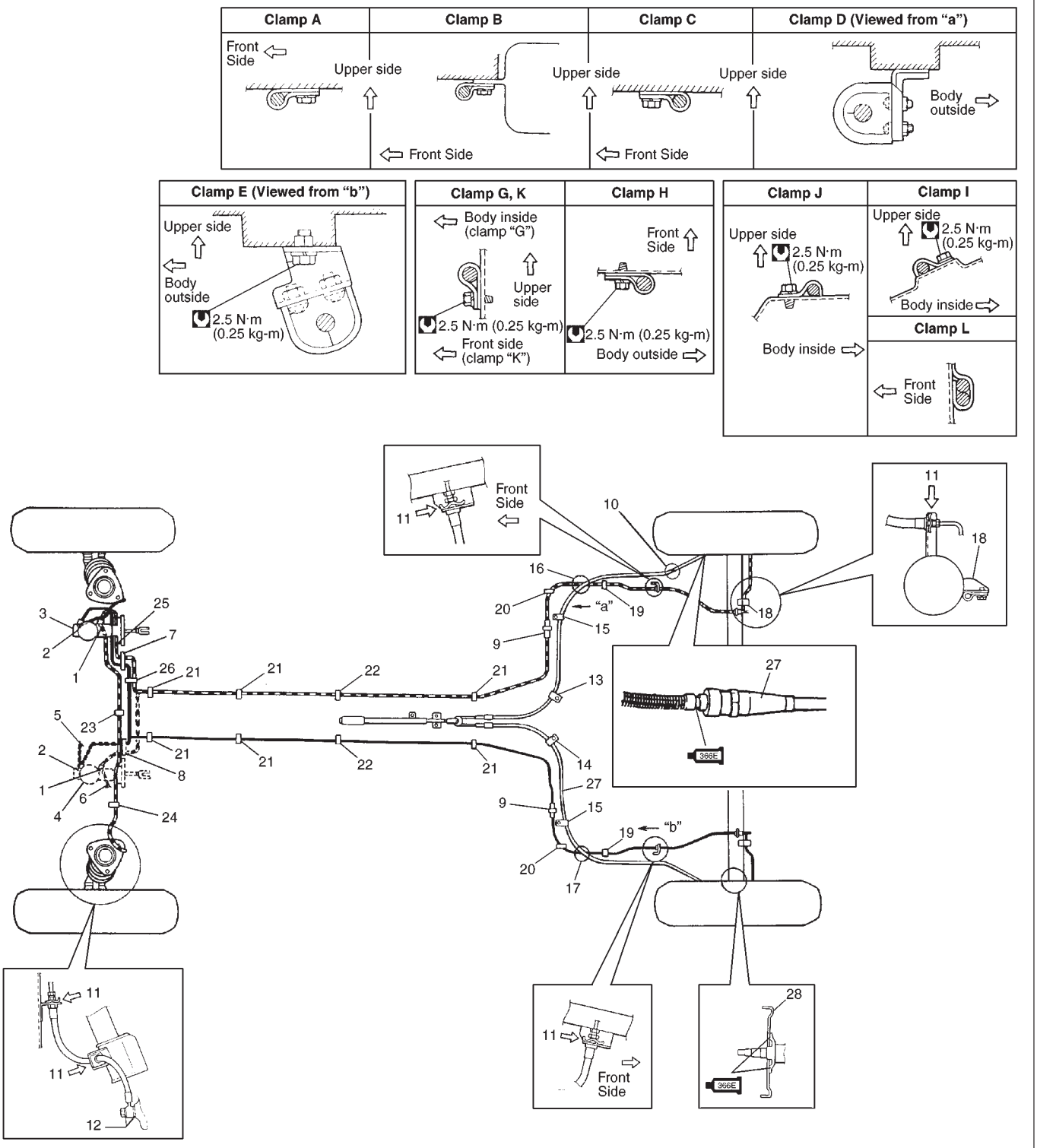

1. Primary side
2. Secondary side
3. For right hand steering vehicle
4. For left hand steering vehicle
5. To right front flexible hose
6. To left front flexible hose
7. 4-way joint (right hand steering vehicle only)
8. 4-way joint (left hand steering vehicle only)
9. proportioning valve (P-valve)
10. White mark
11. E-ring
12. Washer
13. Clamp A
14. Clamp B
15. Clamp C
16. Clamp D
17. Clamp E
18. Clamp F
19. Clamp G
20. Clamp H
21. Clamp I
22. Clamp J
23. Clamp K
24. Clamp K (right hand steering vehicle)
25. Clamp K (left hand steering vehicle)
26. Clamp L
27. 366E Parking brake cable:
    Apply water tight sealant 366E
    99000-31090 where plate and cable contact.
28. 366E Brake back plate:
    Apply water tight sealant 366E 99000-31090
    to mating surfaces of brake back and rear
    axle.

FRONT DISC BRAKE

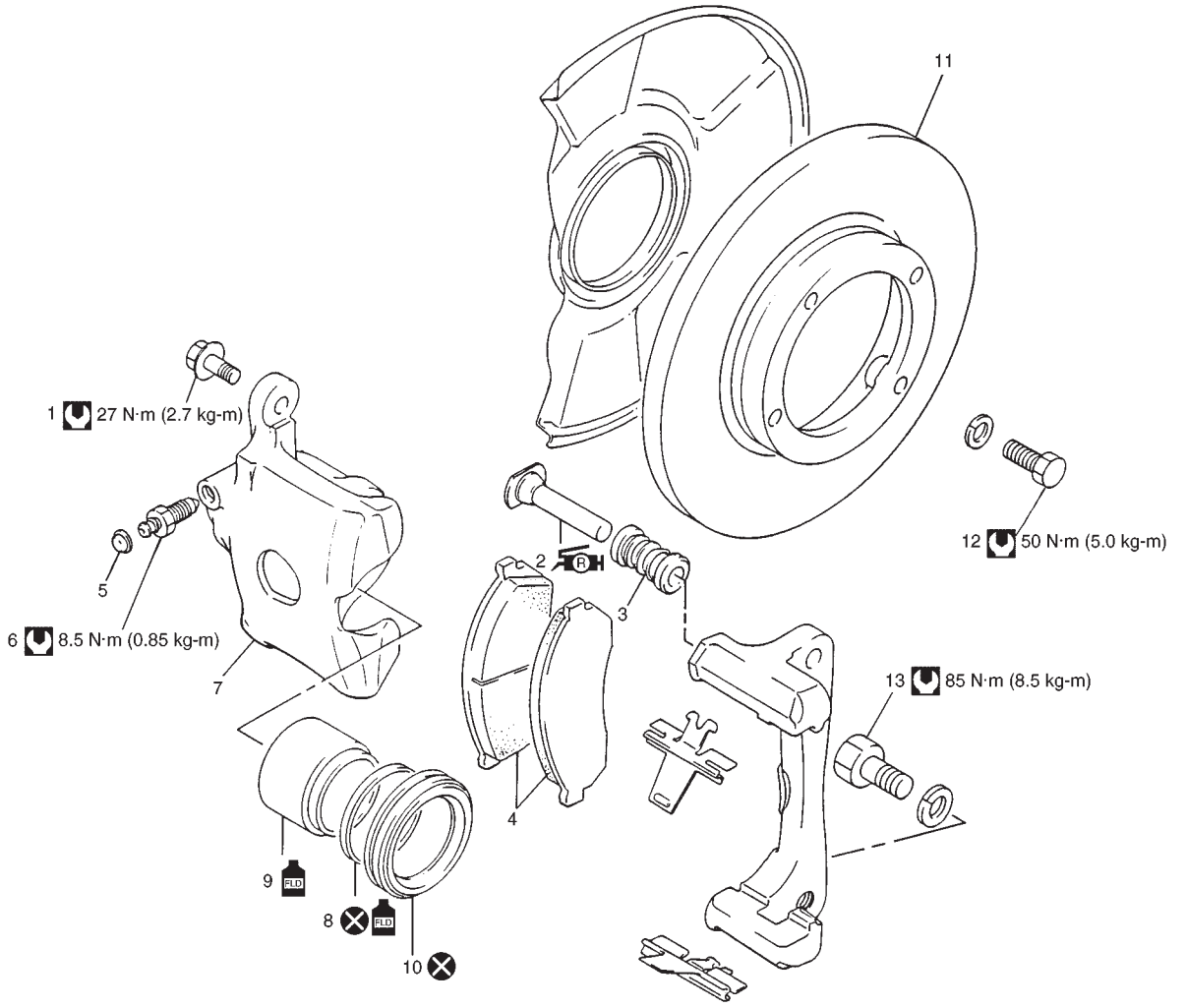

1. Caliper pin bolt
2. Caliper pin:
   Apply rubber grease
   to sliding surface of caliper pin.
3. Boot
4. Disc brake pad
5. Bleeder plug cap
6. Bleeder plug
7. Disc brake caliper (Disc brake cylinder)
8. Piston seal:
   Apply brake fluid.
9. Disc brake piston:
   Apply brake fluid.
10. Cylinder boot
11. Brake disc
12. Disc bolt
13. Caliper bolt

: Tightening Torque

: Do not reuse

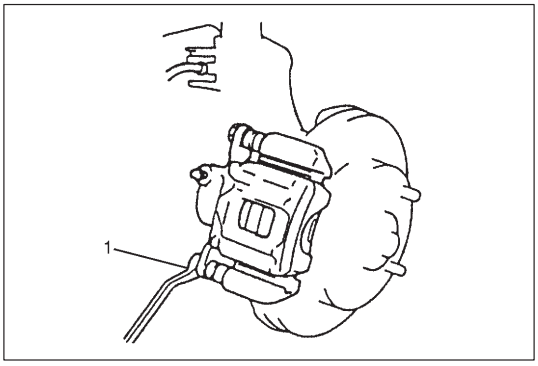

BRAKE PAD

REMOVAL

1) Loosen wheel nuts and with vehicle lifted up, remove wheels.
2) Remove caliper pin bolt (1).

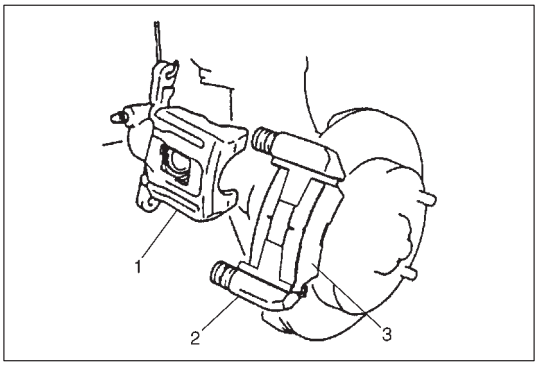

3) Remove caliper (1) from caliper carrier (2).

   NOTE:
   Hang removed caliper (1) with a wire hook or the like so as to prevent brake hose from bending and twisting excessively or being pulled.
   Don't operate brake pedal with brake pads removed.

4) Remove brake pads (3).

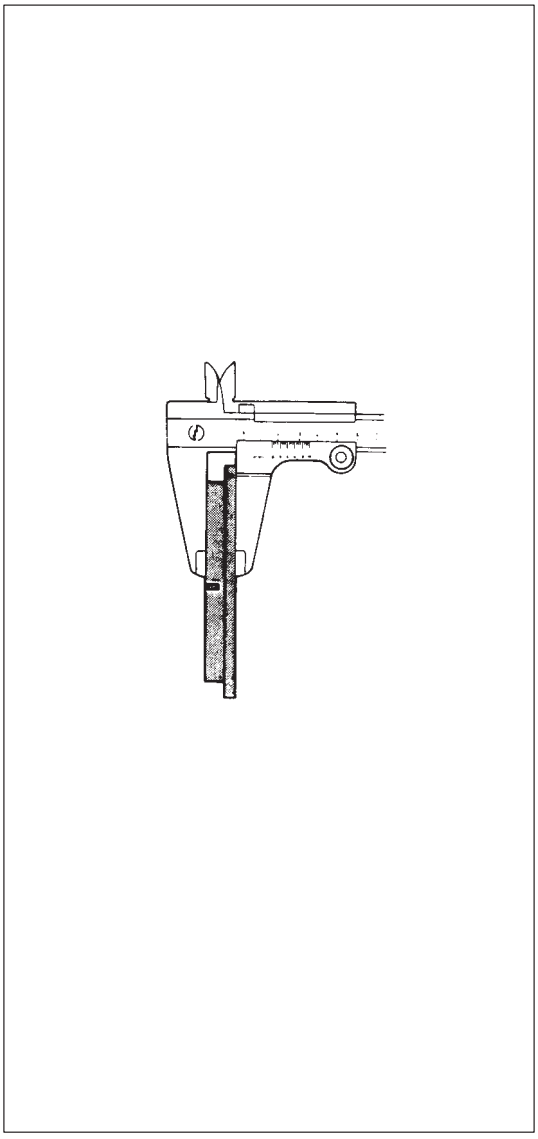

INSPECTION

Check the pad lining for wear. When the wear exceeds its limit, replace with a new one. Timing for pad replacement can be determined with the line of the groove which is provided on each pad lining. When it has disappeared, replace with a new one.

CAUTION:
Never polish pad lining with sandpaper. If lining is polished with sandpaper, hard particles of sandpaper will be deposited in lining and may damage disc. When pad lining requires correction, replace it with a new one.

	Standard	Limit	
Pad thickness (lining + pad rim)	15.5 mm (0.610 in.)	"A"	6.5 mm (0.256 in.)
		"B"	8.5 mm (0.335 in.)

Data marked with "B" is applicable to only European market.

Distinction
("A" marked brake pad rim is painted black.
"B" marked brake pad rim is painted brown.)

NOTE:
When pads are removed, visually inspect caliper for brake fluid leak. Correct leaky point, if any.

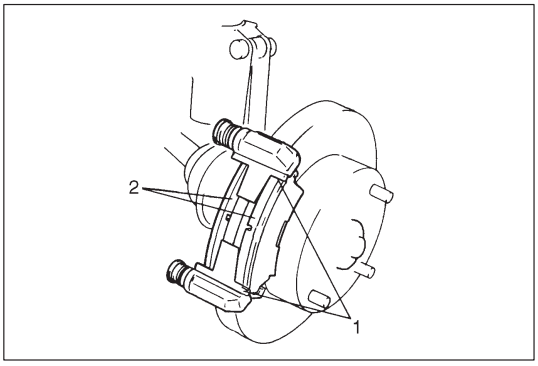

INSTALLATION

1) Set brake pad springs (1) and install brake pads (2).

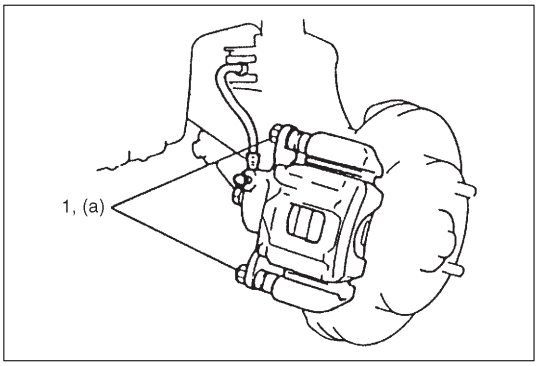

2) Install caliper and tighten caliper pin bolt (1) to specified torque.

Tightening Torque
(a): 27 N·m (2.7 kg-m, 19.5 lb-ft)

3) Tighten wheel temporarily and lower lift.

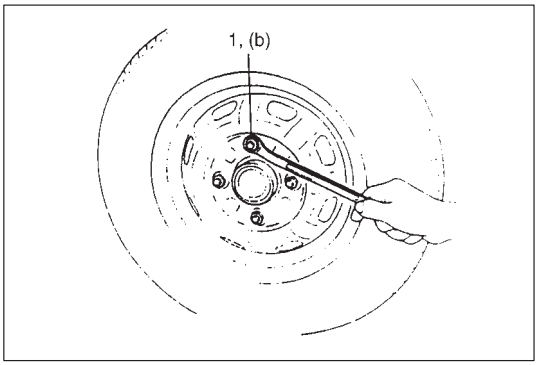

4) Tighten wheel nuts (1) to specified torque.

Tightening Torque
(b): 55 N·m (5.5 kg-m, 40.0 lb-ft)

5) After completion of installation, check for brake effectiveness.

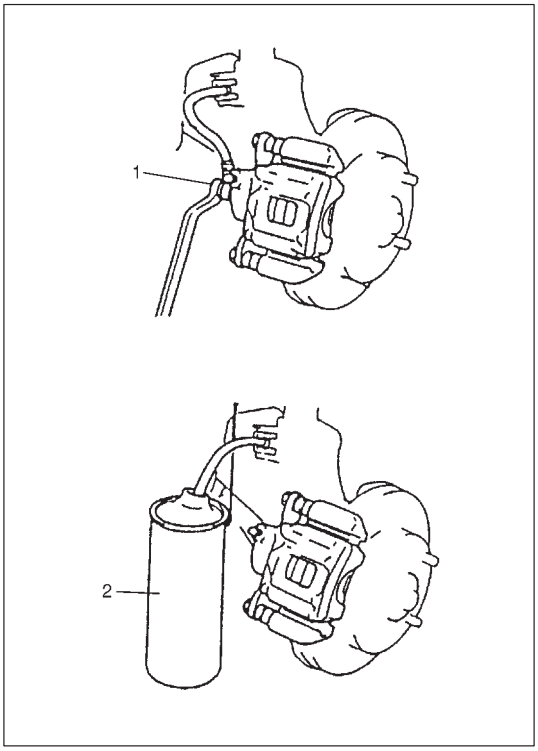

CALIPER ASSEMBLY

REMOVAL

1) Loosen wheel nuts and with vehicle lifted up, remove wheels.
2) Remove flexible hose bolt (1) and washer.

> **CAUTION:**
> **Keep end or disconnected hose in a container (2) so that brake fluid will not get on vehicle body or floor.**

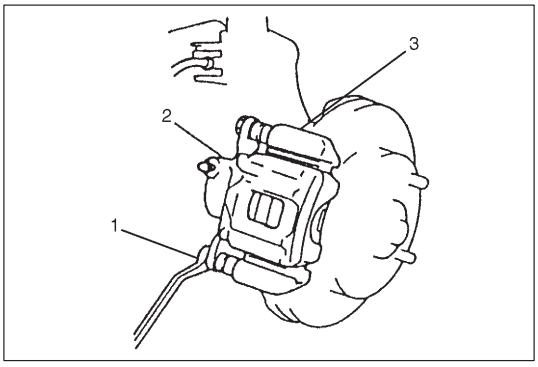

3) Remove caliper pin bolt (1) and remove caliper (2) from caliper carrier (3).

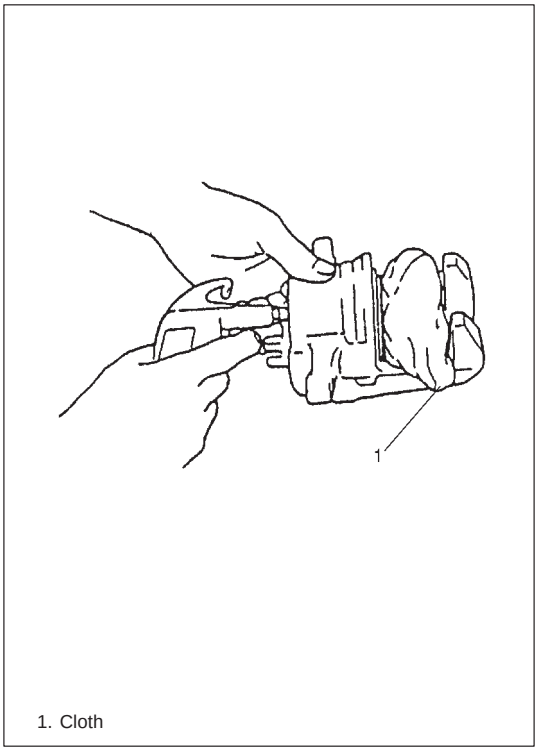

1. Cloth

DISASSEMBLY

> **CAUTION:**
> **Clean around caliper with brake fluid before disassembly.**

1) Remove piston with air blown into flexible hose bolt installation hole.

> **WARNING:**
> **Do not apply too highly compressed air which will cause piston to jump out of cylinder. It should be taken out gradually with moderately compressed air. Do not place your fingers in front of piston when using compressed air.**

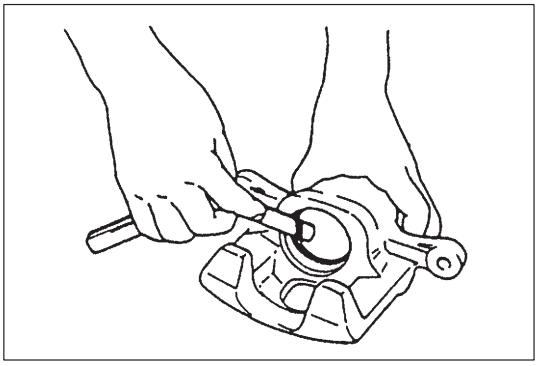

2) Remove piston seal using a thin blade like a thickness gauge, etc.

> **CAUTION:**
> **Be careful not to damage inside (bore side) of cylinder.**

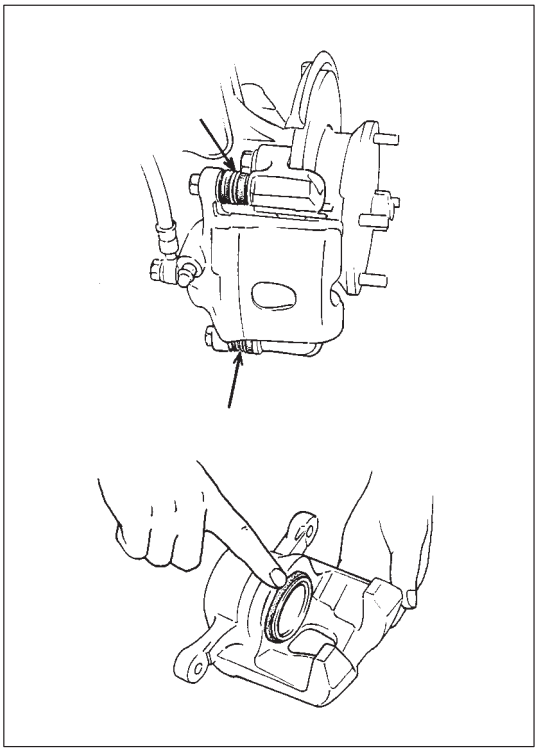

INSPECTION

Pin Boot and Cylinder Boot

Check boots for breakage, crack and damage. If defective, replace.

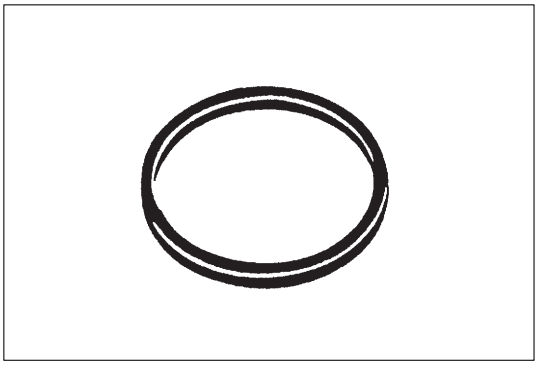

Piston Seal

Excessive or uneven wear of pad lining may indicate unsmooth return of piston. In such case, replace rubber seal.

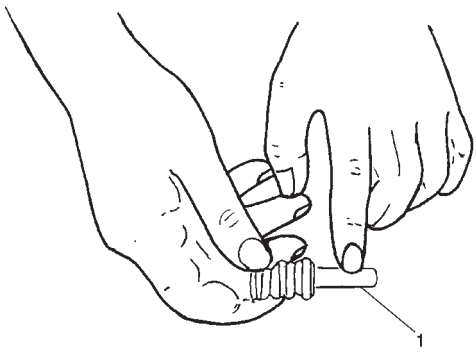

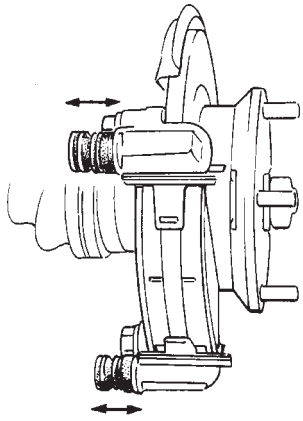

ASSEMBLY

Assemble parts in reverse order of disassembly, observing following instructions.

CAUTION:

- **Wash each part cleanly before installation in the same fluid as the one used in master cylinder reservoir.**
- **Never use other fluid or thinner.**
- **Before installing piston and piston seal to cylinder, apply fluid to them.**
- **After reassembling brake lines, bleed air from them.**
- **Install a new piston seal into groove in cylinder securely making sure that it is not twisted.**
- **Before installing caliper to carrier, install caliper pin (1) with rubber grease applied into caliper carrier hole and check for its smooth movement in thrust direction.**

NOTE:

Where temperature gets as low as –30°C in cold weather, use rubber grease whose viscosity varies very little event at –40°C (–40°F).

Piston Seal

Piston seal is used to seal piston and cylinder and to adjust clearance between pad and disc.

Replace with a new one at every overhaul. Fit piston seal into groove in cylinder taking care not to twist it.

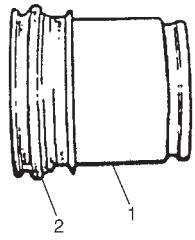

Piston and Boot

- Before inserting piston (1) into cylinder, install new boot (2) onto piston as shown.

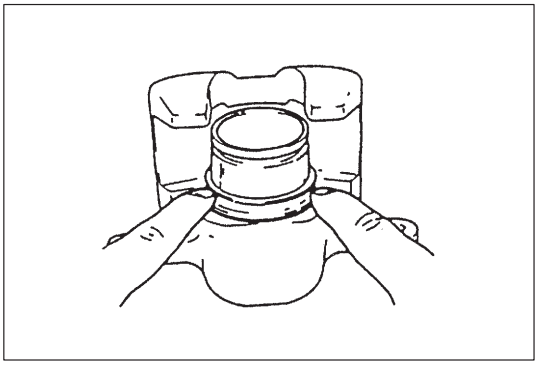

- Fit boot as it is in figure into boot groove in cylinder with fingers.
- Insert piston into cylinder by hand and fit boot in boot groove in piston.
- To confirm that boot is fitted in its groove in cylinder properly, pull piston out of cylinder a little but do not take it all out.
- Insert piston into cylinder by hand.

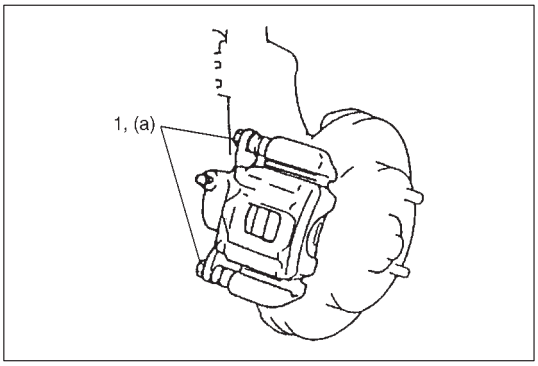

INSTALLATION

1) Install caliper to caliper carrier.
2) Tighten caliper pin bolt (1) to specified torque.

> **CAUTION:**
> **Check that pin boot is installed securely.**

Tightening Torque
(a): 27 N·m (2.7 kg-m, 19.5 lb-ft)

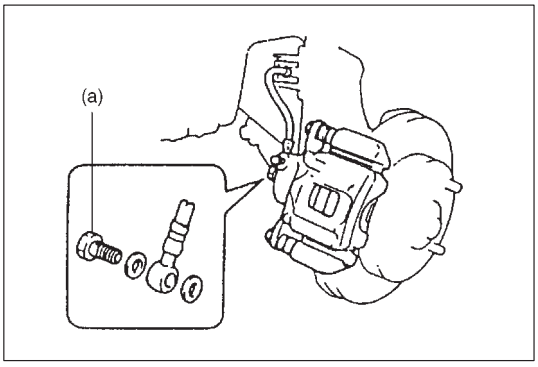

3) Connect flexible hose and tighten flexible hose bolt to specified torque.
Tightening Torque
(a): 23 N·m (2.3 kg-m, 17.0 lb-ft)

> **CAUTION:**
> - **Connect hose without twisting.**
> - **Use new washers.**
> - **After installation, perform air bleeding and check for brake effectiveness and fluid leakage.**

BRAKE DISC

REMOVAL

Refer to WHEEL HUB, KNUCKLE AND BEARING in Section 3D.

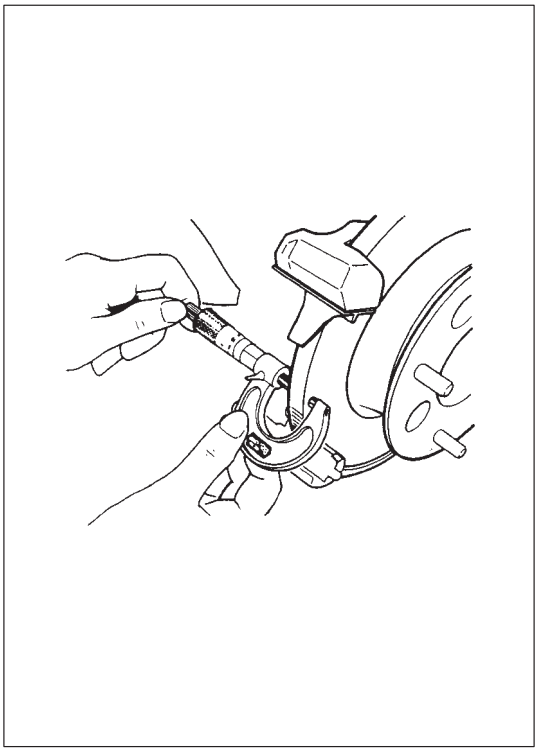

INSPECTION

Check disc surface for scratches in wearing parts. Scratches on disc surface noticed at the time of specified inspection or replacement are normal and the disc is not defective if these are not serious. But when there are deep scratches or scratches all over the surface, replace disc.
When only one side is scratched, polish and correct that side.

Brake disc thickness
Standard : 10.0 mm (0.394 in.)
Limit : 8.0 mm (0.315 in.)

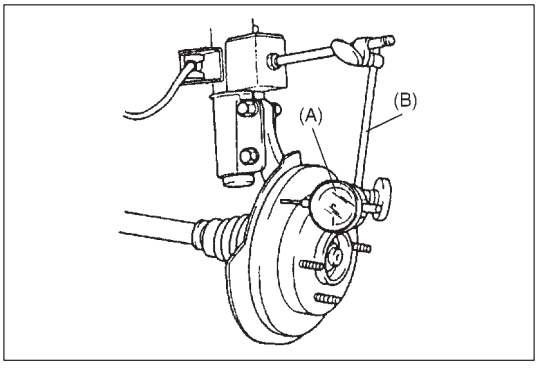

To check disc deflection, measure at 2 points on its periphery and center with a dial gauge, while rotating the disc.

Limit on disc deflection : 0.15 mm (0.006 in.)

Special Tool
(A) : 09900-20606
(B) : 09900-20701

INSTALLATION

Refer to WHEEL HUB, KNUCKLE AND BEARING in Section 3D.

REAR DRUM BRAKE

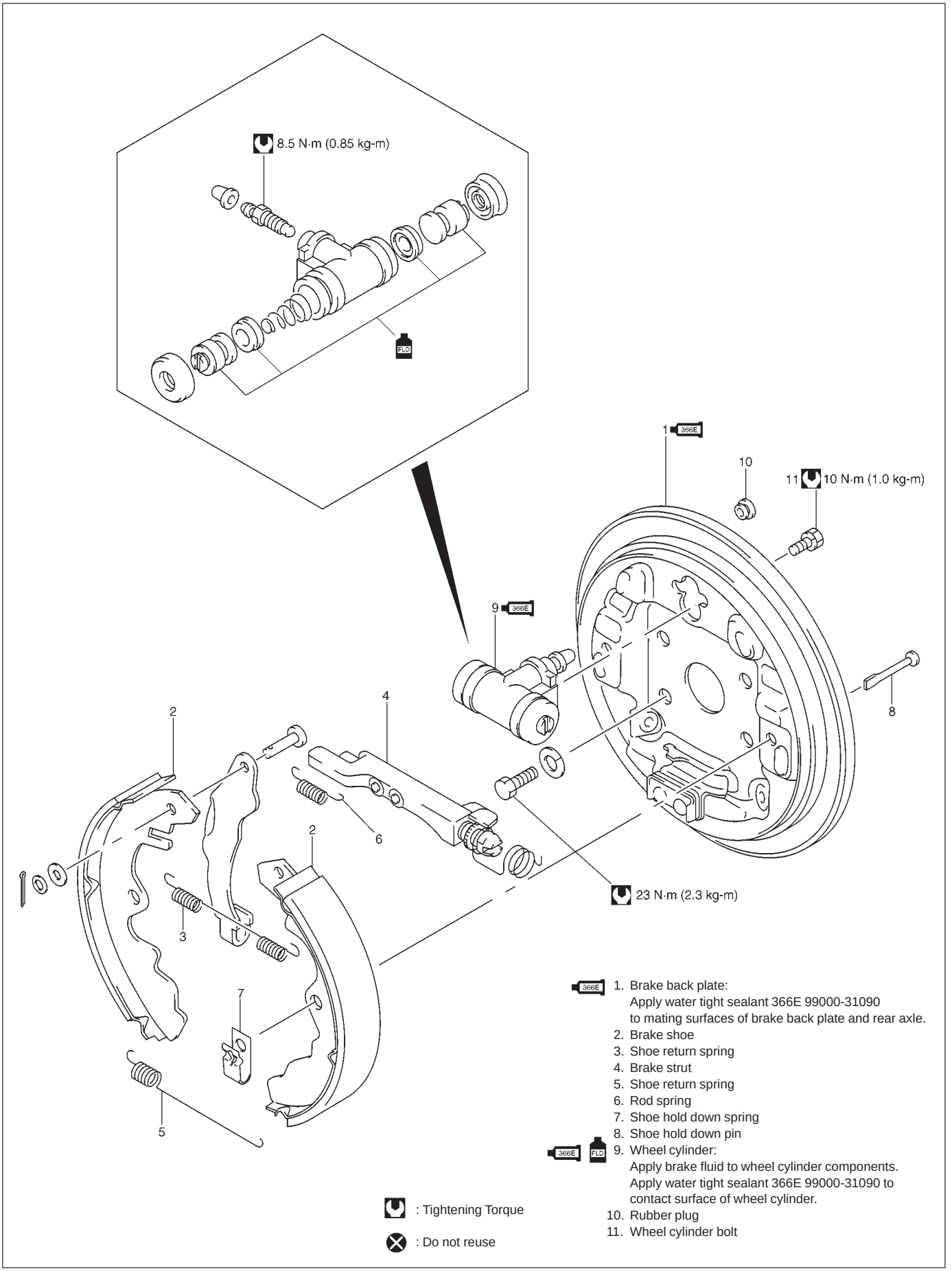

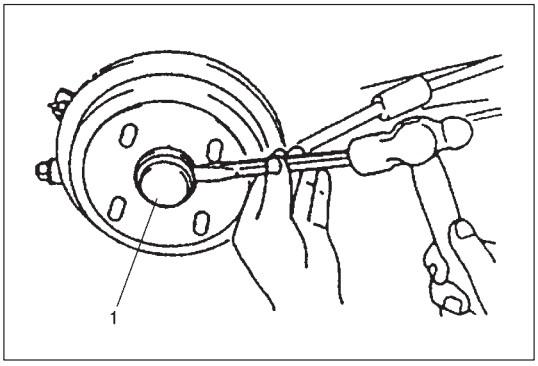

BRAKE DRUM

REMOVAL

1) With parking brake pulled up, hoist vehicle and remove wheels.
2) Remove spindle cap (1). When removing cap with a chisel, tap it lightly at about 3 locations using care not to damage seat face of cap.

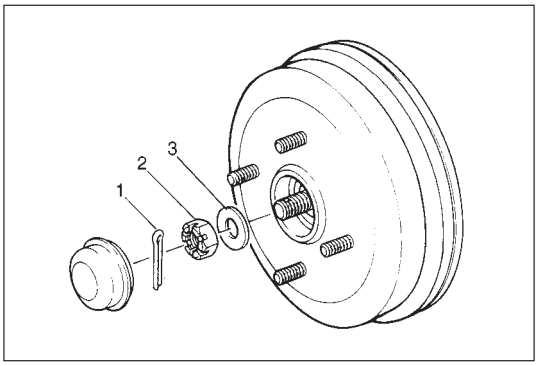

3) Remove split pin (1), castle nut (2) and washer (3).

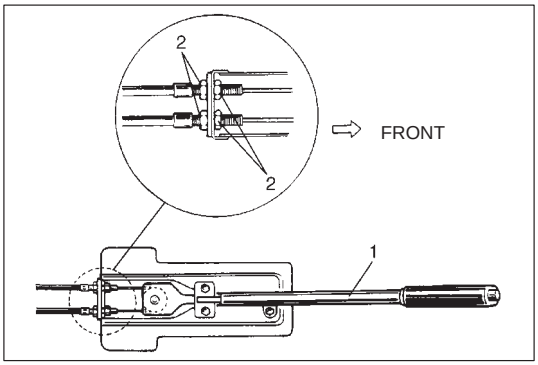

4) Release parking brake lever (1) to cancel rear brake.
5) Loosen parking brake cable lock nuts (2).

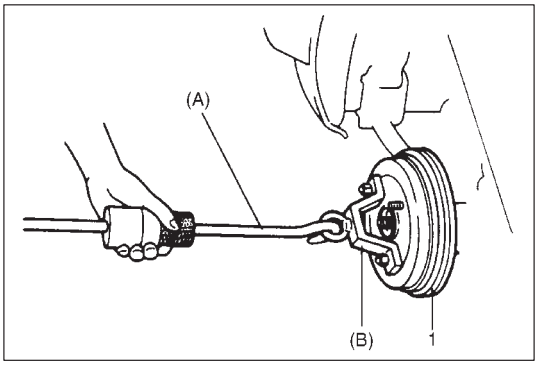

6) Pull brake drum (1) off by using special tools.

Special Tool
(A) : 09942-15510
(B) : 09943-17912

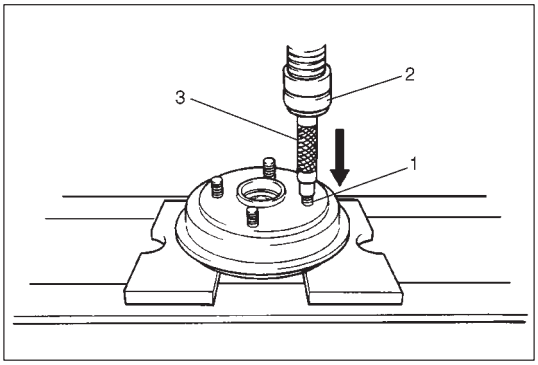

7) Remove wheel stud bolt (1) by using hydraulic press (2) and general rod (3).

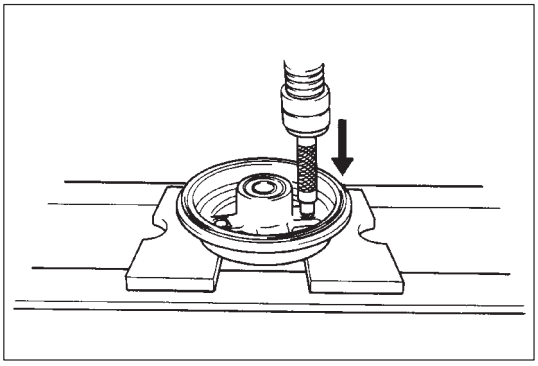

8) Insert new stud in drum hole and rotate it slowly to assure serrations are aligned with those made by replaced bolt.

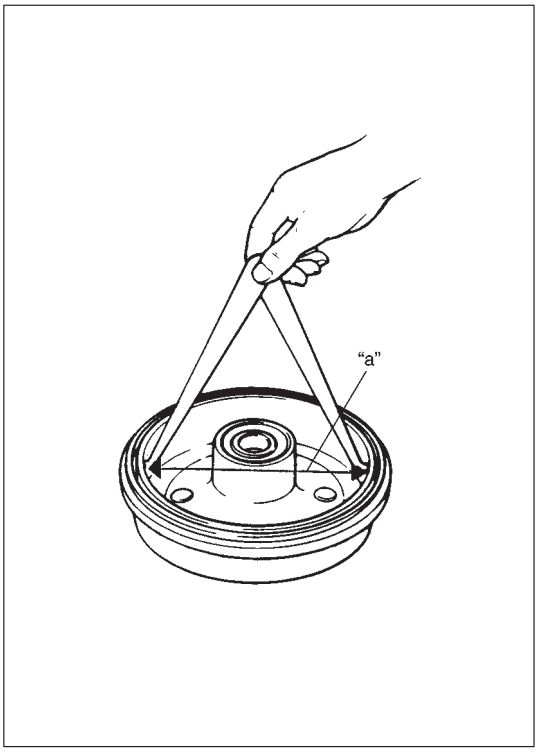

INSPECTION

Inspect drum for cleanliness. Check its braking surface for wear by measuring its inside diameter.

Drum inside diameter "a"
Standard : 180 mm (7.09 in.)
Limit : 182 mm (7.17 in.)

Whenever brake drums are removed, they should be thoroughly cleaned and inspected for cracks, scores, deep grooves.

Cracked, Scored, or Grooved Drum

A cracked drum is unsafe for further service and must be replaced. Do not attempt to weld a cracked drum. Smooth up any slight scores. Heavy or extensive scoring will cause excessive brake lining wear and it will probably be necessary to resurface drum braking surface.

If brake linings are slightly worn and drum is grooved, drum should be polished with fine emery cloth but should not be cut.

NOTE:

When drum is removed, visually inspect wheel cylinder for brake fluid leak. Correct leaky point, if any.

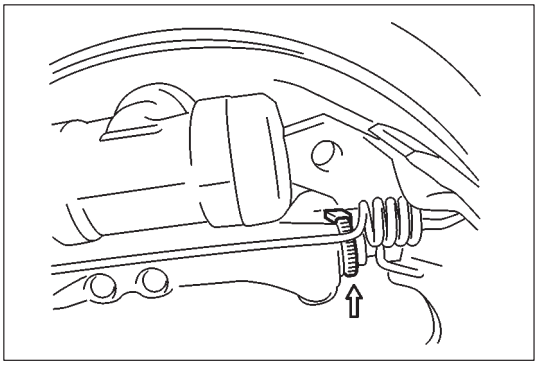

INSTALLATION

1) Before installing brake drum, check that outer diameter of brake shoes is shorter than 180 mm (7.08 in.). If it is not so, adjust it to shorter than 180 mm (7.08 in.) by turning adjuster.

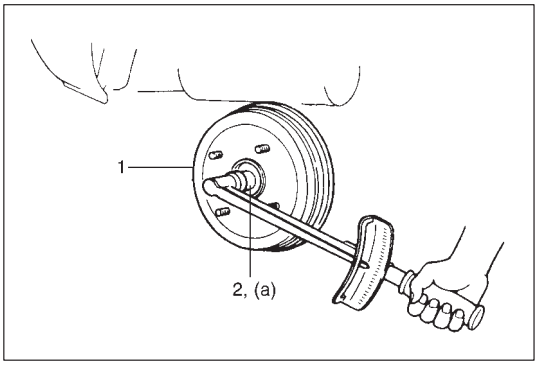

2) Install brake drum (1) after making sure that inside of brake drum and brake shoes are free from dirt and oil.
3) Install washer and axle castle nut.
4) Tighten castle nut (2) to specified torque.

Tightening Torque
(a) : 100 N·m (10.0 kg-m, 72.5 lb-ft)

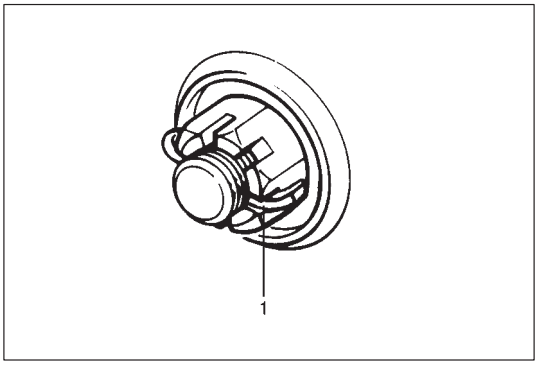

5) Bend split pin (1) securely as shown.

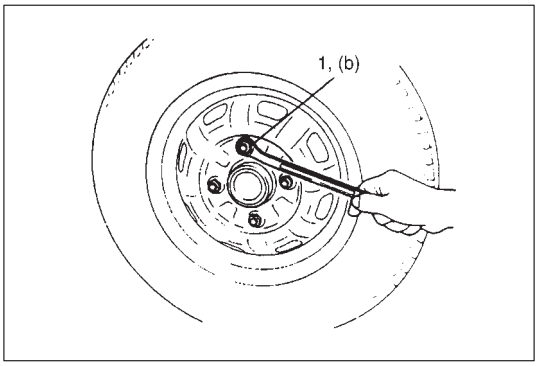

6) Install spindle cap (when installing spindle cap, hammer lightly several locations on the collar of cap until the collar comes closely into contact with brake drum) and tighten wheel nuts (1) to specified torque.

   Tightening Torque
   (b) : 55 N·m (5.5 kg-m, 40.0 lb-ft)

   NOTE:
   If fitting part of cap is deformed or damaged or if it is fitted loosely, replace with new one.

7) Upon completion of all jobs, depress brake pedal with about 30 kg (66 lbs) load several times so as to obtain proper drum-to-shoe clearance.
   Adjust parking brake cable (For adjustment, refer to PARKING BRAKE INSPECTION AND ADJUSTMENT in this section).
8) Check to ensure that brake drum is free from dragging and proper braking is obtained. Then remove vehicle from hoist and perform brake test.

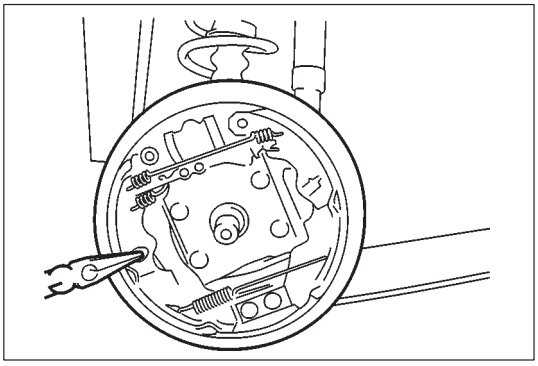

BRAKE SHOE

REMOVAL

1) Remove brake drum, refer to BRAKE DRUM in this section.
2) Remove shoe hold down springs by turning shoe hold down pins as shown.

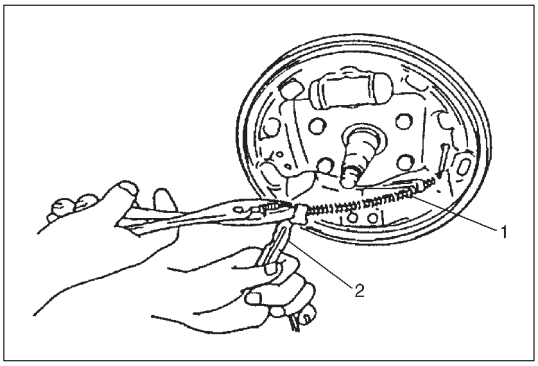

3) Disconnect parking brake cable (1) from parking brake shoe lever (2) and remove brake shoes.

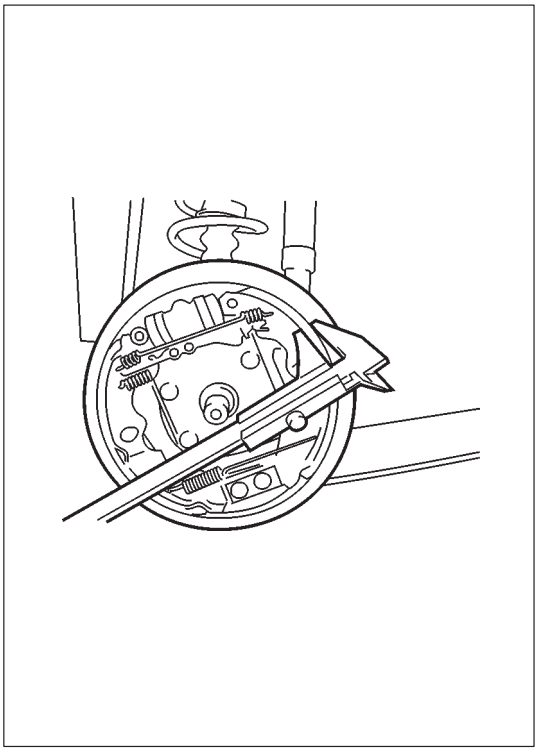

INSPECTION

Brake Shoe

If lining is worn out beyond service limit, replace shoe.

Brake shoe thickness

Standard : 6.0 mm (0.24 in.)
Limit : 2.6 mm (0.10 in.)

If one of brake linings is worn to or beyond service limit, all linings must be replaced at the same time.

> **CAUTION:**
> **Never polish lining with sandpaper. If lining is polished with sandpaper, hard particles of sandpaper will be deposited in lining and may damage drum. When it is required to correct lining, replace it with a new one.**

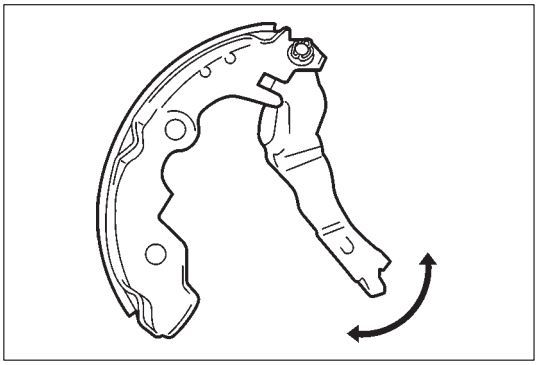

Parking Shoe Lever

Inspect brake shoe lever for smooth movement along shoe rim. If defective, correct or replace.

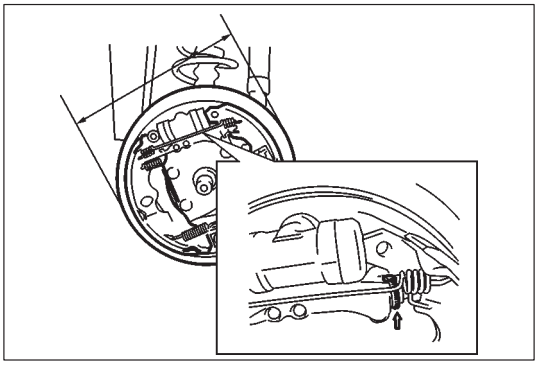

Springs

Inspect for damage, corrosion or weakening. Inspect each part with arrow for rust. If found defective, replace.

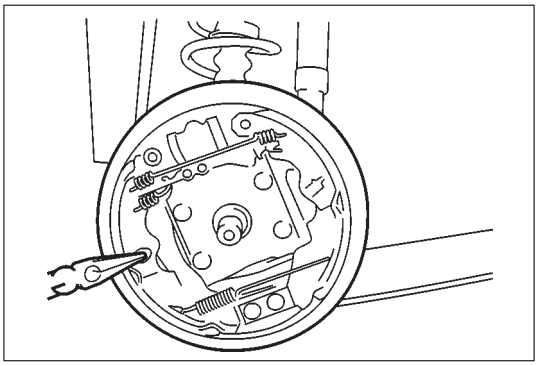

INSTALLATION

Install parts in reverse other of removal.

- Install shoe hold down springs by pushing down them in place and turning hold down pins.
- For procedure hereafter, refer to BRAKE DRUM in this section.

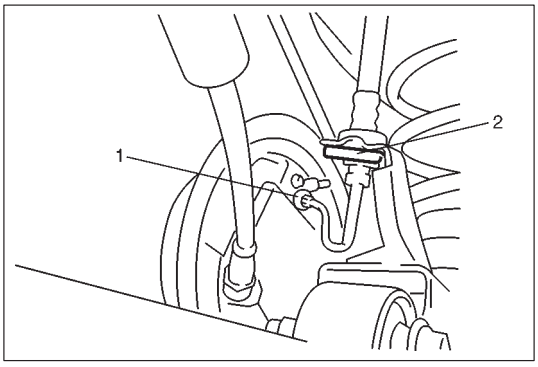

WHEEL CYLINDER

REMOVAL

1) Remove brake drum, refer to BRAKE DRUM in this section.
2) Remove brake shoe, refer to BRAKE SHOE in this section.
3) Take out fluid with a syringe or such and disconnect brake pipe flare nut (1) from wheel cylinder.
4) Remove E-ring (2).

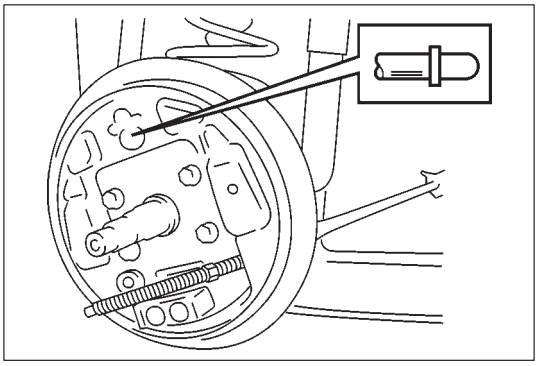

5) Remove wheel cylinder mounting bolts.
   And put wheel cylinder breeder plug cap onto pipe to prevent fluid from spilling.

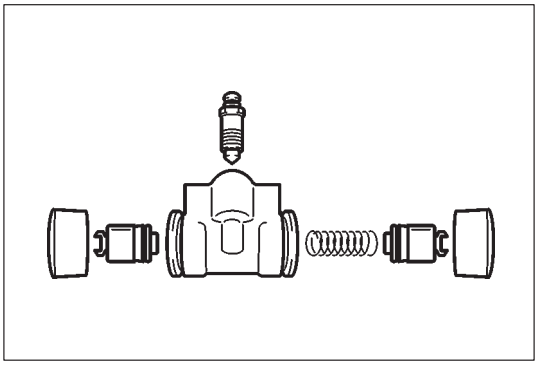

INSPECTION

When removing brake drum, check wheel cylinder for oil leakage. If any leakage is found, replace wheel cylinder inner parts.

Inspect wheel cylinder disassembled parts for wear, cracks, corrosion or damage.

NOTE:

Clean wheel cylinder components with brake fluid.

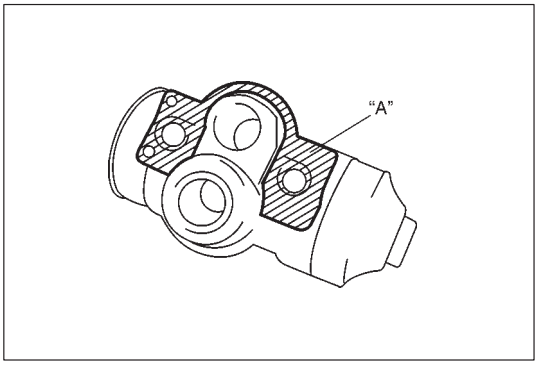

INSTALLATION

1) Before installing wheel cylinder to back plate, apply water tight sealant to contact surface of wheel cylinder.

   "A": Sealant 366E 99000-31090

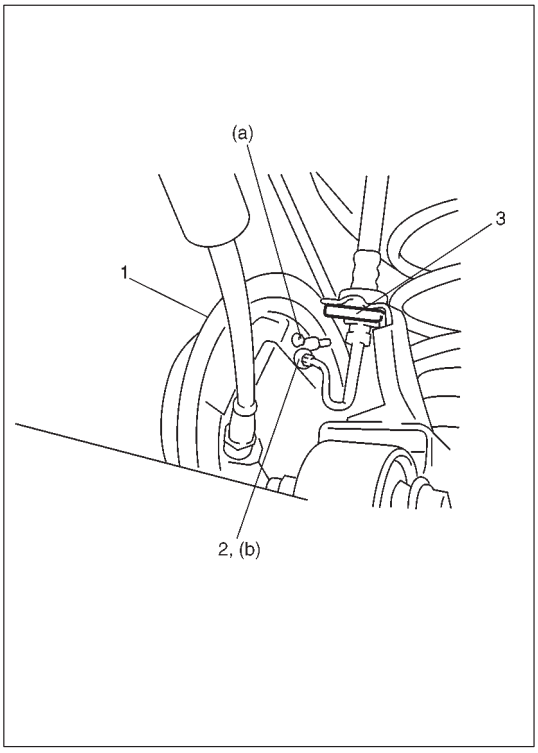

2) Take off breeder plug cap from brake pipe and connect pipe to wheel cylinder just enough to prevent fluid from leaking.
3) Tighten wheel cylinder to brake back plate (1) to specified torque.

   Tightening Torque
   (a) : 10 N·m (1.0 kg-m, 7.5 lb-ft)

4) Torque flare nut (2) of brake pipe which was connected in step 3) to specification.

   Tightening Torque
   (b) : 16 N·m (1.6 kg-m, 11.5 lb-ft)

5) Install breeder plug cap taken off pipe back to breather plug.
6) Install E-ring (3) to bracket securely.
7) Install brake shoes, refer to BRAKE SHOE in this section.
8) Install brake drum, refer to BRAKE DRUM in this section.
9) Fill reservoir with brake fluid and bleed brake system, refer to BLEEDING BRAKES in this section.
10) Upon completion of all jobs, depress brake pedal with about 30kg load two to three times so as to obtain proper drum-to-shoe clearance.
    Adjust parking brake cable, refer to PARKING BRAKE INSPECTION AND ADJUSTMENT in this section.
11) Install wheel and tighten wheel nuts to specified torque.

    Tightening torque for wheel nut
    55 N·m (5.5 kg-m, 42.0 lb-ft)

12) Check to ensure that brake drum is free from dragging and proper braking is obtained. Then remove vehicle from hoist and perform brake test (foot brake and parking brake).
13) Check each installed part for oil leakage.

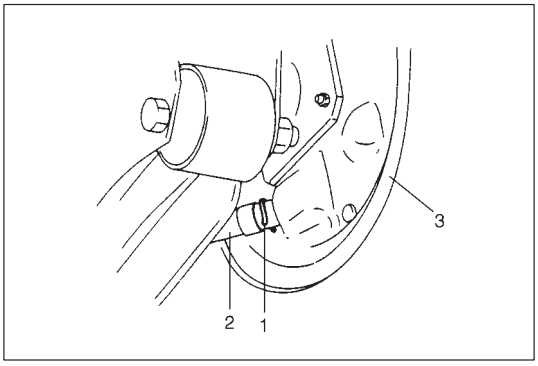

BRAKE BACK PLATE

REMOVAL

1) Remove brake drum, refer to BRAKE DRUM in this section.
2) Remove brake shoe, refer to BRAKE SHOE in this section.
3) Remove wheel cylinder, refer to WHEEL CYLINDER in this section.
4) Remove parking brake cable securing clip (1) and disconnect brake cable (2) from brake back plate (3).

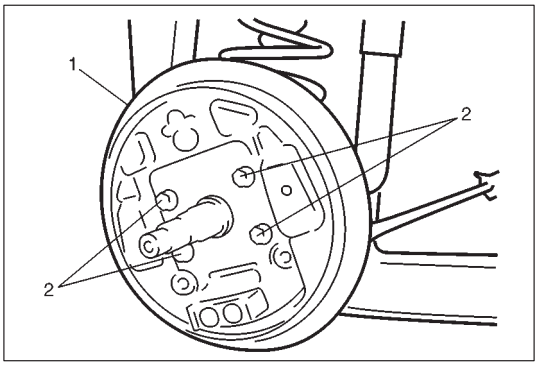

5) Remove brake back plate (1) by removing bolts (2).

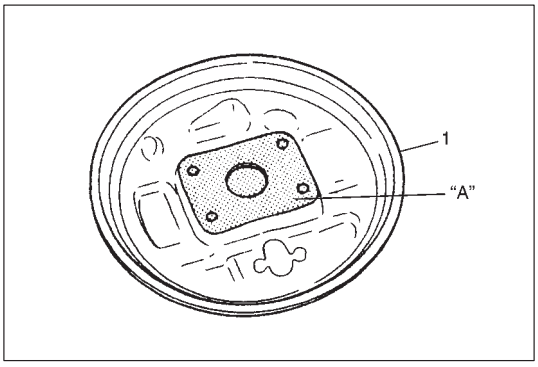

INSTALLATION

1) Apply water tight sealant to mating surfaces of brake back plate (1) and rear axle.

   "A": Sealant 366E 99000-31090

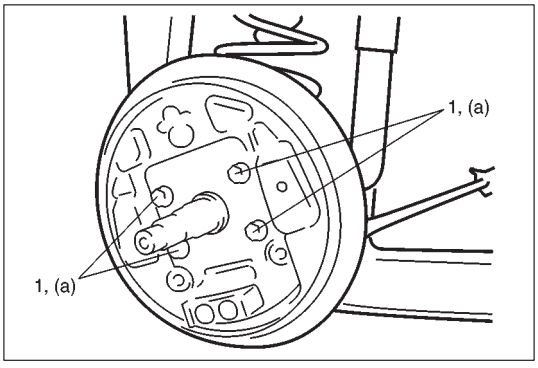

2) Install brake back plate to rear axle and tighten back plate bolts (1) to specified torque.

   Tightening Torque
   (a) : 23 N·m (2.3 kg-m, 17.0 lb-ft)

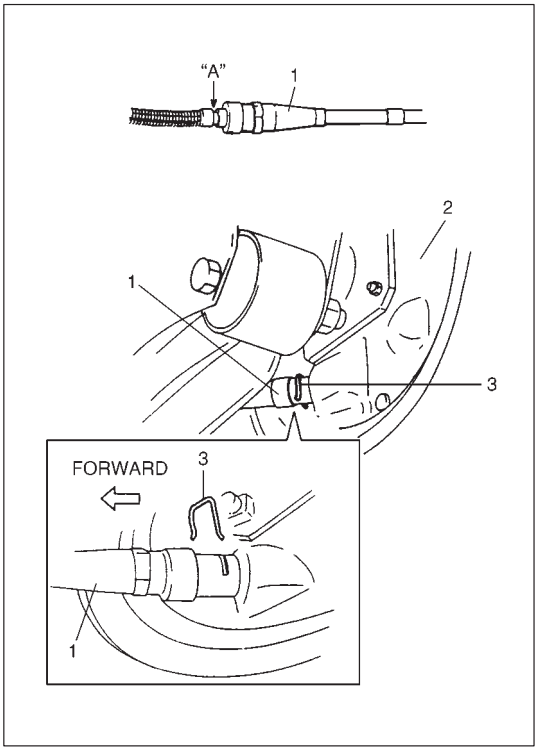

3) Apply water tight sealant where plate and cable contact, and run parking cable (1) through brake back plate (2) and secure it with clip (3).

   "A" : Sealant 366E 99000-31090

4) Install wheel cylinder, refer to WHEEL CYLINDER in this section.
5) For procedure hereafter, refer to WHEEL CYLINDER in this section.

MASTER CYLINDER

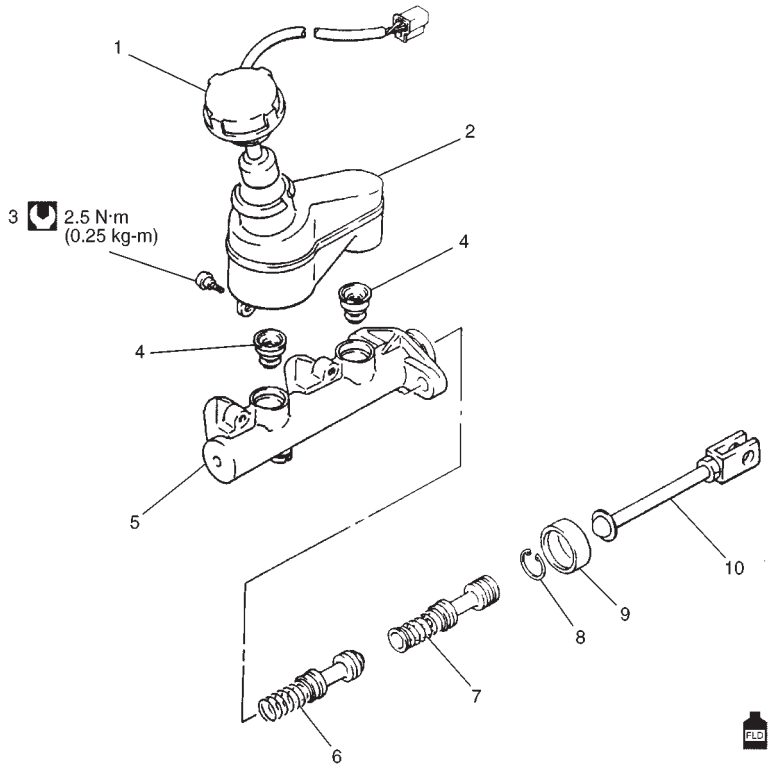

1. Reservoir cap
2. Master cylinder reservoir
3. Reservoir bolt
4. Grommet: Apply brake fluid.
5. Master cylinder body
6. Secondary piston assembly: Apply brake fluid.
7. Primary piston assembly: Apply brake fluid.
8. Piston stopper circlip
9. Master cylinder boot
10. Push rod

: Tightening Torque

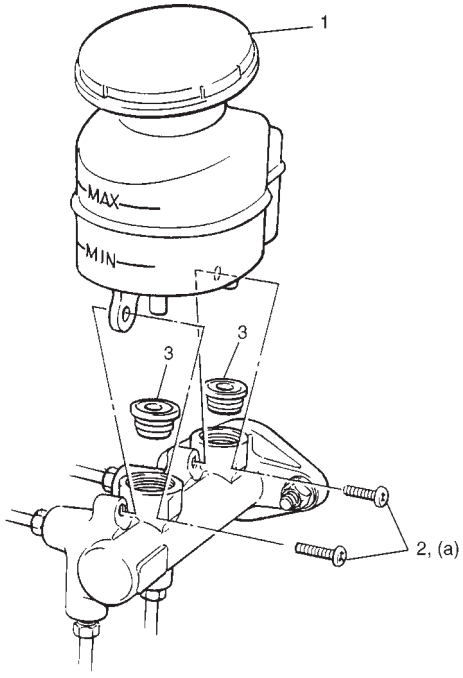

MASTER CYLINDER RESERVOIR

REMOVAL

1) Disconnect reservoir lead wire at coupler.
2) Clean outside of reservoir (1).
3) Take out fluid with a syringe or such.
4) Remove reservoir connector screw (2).
5) Remove reservoir.

INSTALLATION

1) When using new grommets (3), lubricate them with the same fluid as the one to fill reservoir (1) with. Then press-fit grommets to master cylinder.
2) Install reservoir and tighten screws (2) to specified torque.

   Tightening Torque
   (a) : 2.5 N·m (0.25 kg-m, 2.0 lb-ft)

3) Connect reservoir lead wire at coupler.
4) Fill reservoir with brake fluid.
5) Perform air bleeding, refer to BLEEDING BRAKES in this section.

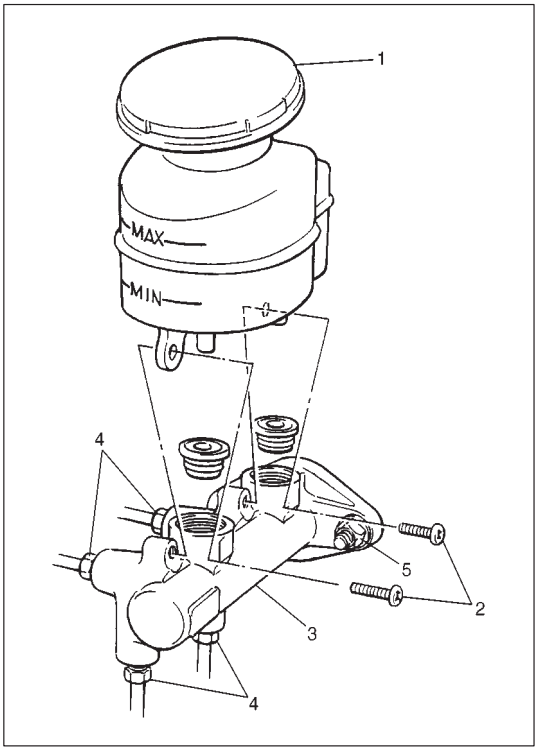

MASTER CYLINDER ASSEMBLY

REMOVAL

1) Disconnect reservoir lead wire at coupler.
2) Clean outside of reservoir (1).
3) Take out fluid with a syringe or such.
4) Remove reservoir connector screws (2).
5) Remove reservoir.
6) Disconnect brake pipes (4) from master cylinder (3).

CAUTION:
Do not allow brake fluid to get on painted surfaces.

7) Remove master cylinder push rod split pin and rod pin from brake pedal arm.
8) Remove attaching nuts (5) and washers.
9) Remove master cylinder.

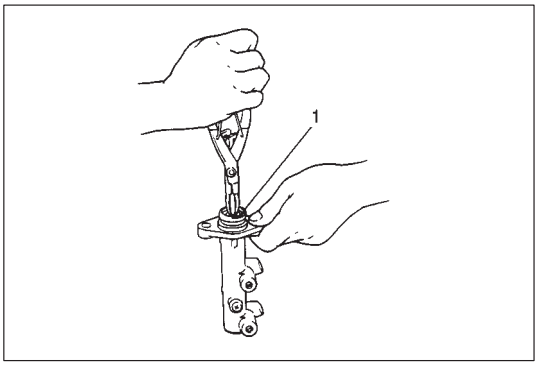

DISASSEMBLY

1) Remove circlip (1).

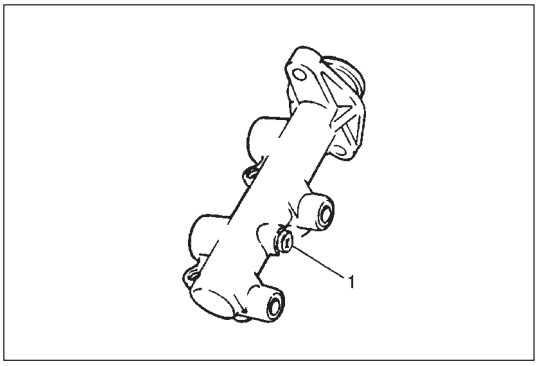

2) Remove primary piston by removing piston stopper bolt (1). Be cautions during removal as primary piston will jump out.

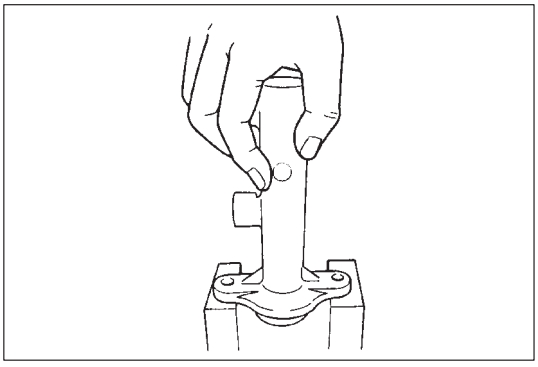

3) Pull out secondary piston by tapping flange with a piece of wood or something soft.

NOTE:
- **Do not drop piston.**
- **Do not cause any damage to inside of cylinder wall.**

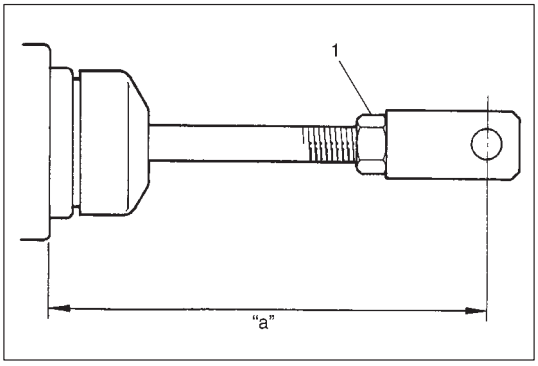

NOTE:
Do not loosen lock nut (1) of push rod. Should it be loosened, be sure to adjust and secure lock nut at the position within the measurement "a". Data in figure does not include gasket thickness.

Length "a": 102.0 – 103.0 mm (4.016 – 4.055 in.)

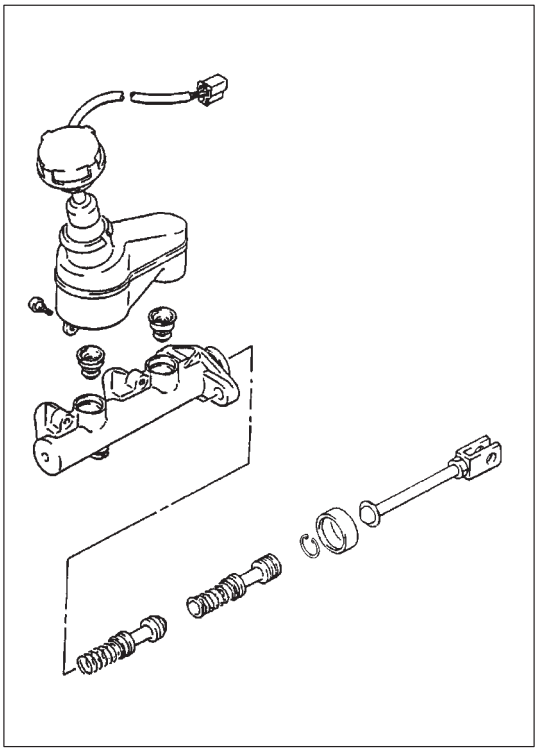

INSPECTION

Inspection all disassembled parts for wear or damage, and replace parts if necessary.

NOTE:
- **Wash disassembled parts with brake fluid.**
- **Do not reuse piston assembly.**

Inspect master cylinder bore for scoring or corrosion. It is best to replace corroded cylinder. Corrosion can be identified as pits or excessive roughness.

NOTE:
Polishing bore of master cylinder with cast aluminum body with anything abrasive is prohibited, as damage to cylinder bore may occur.

Rinse cylinder in clean brake fluid. Shake excess rinsing fluid from cylinder. Do not use a cloth to dry cylinder, as lint from cloth cannot be kept from cylinder bore surfaces.

ASSEMBLY

CAUTION:
- **Never use any mineral oil such as kerosene and gasoline when washing and assembling parts.**
- **Check inside of cylinder wall, pistons and cup seals are free from any foreign objects such as dust and dirt and use case not to cause any damage with a tool during assembly.**
- **Do not drop parts. Do not use any part which has been dropped.**

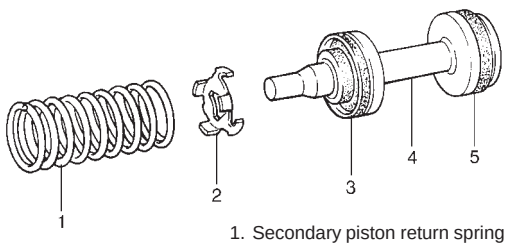

1. Secondary piston return spring
2. Return spring seat
3. Piston cup
4. Secondary piston
5. Piston pressure cap

1) Assemble secondary piston as shown in figure.

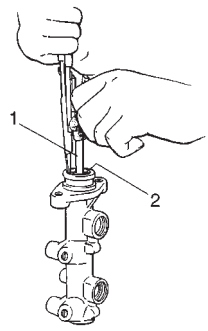

2) Install secondary piston assembly into cylinder.
3) Install primary piston in cylinder.
4) Depress using a rod (1), and install circlip (2).

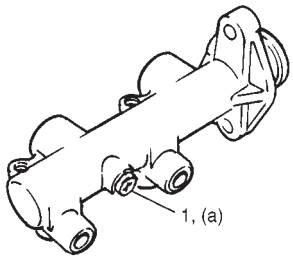

5) Install piston stopper bolt (1) with pistons pushed in all the way and tighten it to specified torque.

Tightening Torque
(a) : 3 N·m (0.3 kg-m, 2.5 lb-ft)

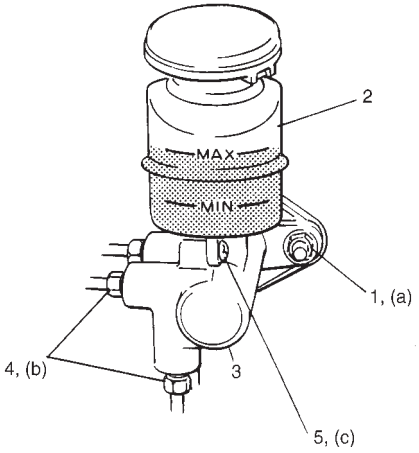

INSTALLATION

1) Install master cylinder (3) as shown and tighten attaching nuts (1) to specified torque.

   Tightening Torque
   (a) : 13 N·m (1.3 kg-m, 9.5 lb-ft)

2) Install master cylinder push rod to brake pedal and bend split pin securely.
3) Connect 4 hydraulic lines and tighten flare nuts (4) to specified torque.

   Tightening Torque
   (b) : 12 N·m (1.2 kg-m, 9.0 lb-ft)

4) When using new grommets, lubricate them with the same fluid as the one to fill reservoir (2) with. Then press-fit grommets to master cylinder.
5) Install reservoir and tighten screws (5) to specified torque.

   Tightening Torque
   (c) : 2.5 N·m (0.25 kg-m, 2.0 lb-ft)

6) Fill reservoir with specified fluid.
   After installing, check brake pedal height, bleed air from system (Refer to BRAKE PEDAL FREE HEIGHT ADJUSTMENT and BLEEDING BRAKES in this section.

CAUTION:
- **Never use any mineral oil such as kerosene and gasoline when washing and assembling parts.**
- **Check inside of cylinder wall, pistons and cup seals are free from any foreign objects such as dust and dirt and use case not to cause any damage with a tool during assembly.**
- **Do not drop parts. Do not use any part which has been dropped.**

Fluid to fill reservoir with is indicated on reservoir cap of the vehicle with embossed letters or in owner's manual supplied with the vehicle.
Add fluid up to MAX line.

REQUIRED SERVICE MATERIALS

MATERIALS	RECOMMENDED SUZUKI PRODUCT	USE
Brake fluid	DOT 3	● To fill master cylinder reservoir. ● To clean and apply to inner parts of master cylinder caliper and wheel cylinder when they are disassembled.
Water tight sealant	SEALING COMPOUND 366E (99000-31090)	● To apply to mating surfaces of brake back plate and rear axle. ● To apply to mating surfaces of brake back plate and parking brake cable. ● To apply to mating surface of wheel cylinder and brake back plate.
—	rubber grease	● To apply to sliding surfaces of caliper pin

SPECIAL TOOLS

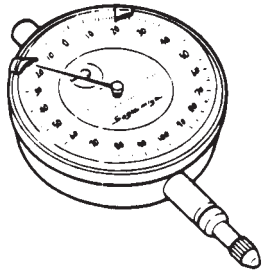	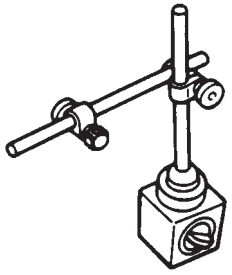	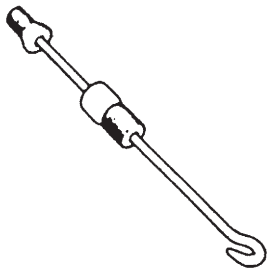	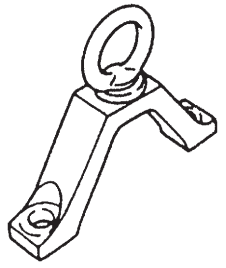
09900-20606 Dial gauge	09900-20701 Magnetic stand	09942-15510 Sliding hammer	09943-17912 Brake drum remover (Front wheel hub remover)

SECTION 6

ENGINE DIAGNOSIS

CONTENTS

GENERAL INFORMATION 6- 1
ENGINE DIAGNOSIS 6- 5
On-Board Diagnostic System 6- 5
Precaution in Diagnosing Troubles 6- 5
Engine Diagnostic Flow Table 6- 6
Engine Diagnosis Table 6-10

GENERAL INFORMATION

STATEMENT ON CLEANLINESS AND CARE

An automobile engine is a combination of many machined, honed, polished and lapped surfaces with tolerances that are measured in the thousands of an millimeter (ten thousands of inch). Accordingly, when any internal engine parts are serviced, care and cleanliness are important. Throughout this section, it should be understood that proper cleaning and protection of machined surfaces and friction areas is part of the repair procedure. This is considered standard shop practice even if not specifically stated.

- A liberal coating of engine oil should be applied to friction areas during assembly to protect and lubricate the surfaces on initial operation.
- Whenever valve train components, pistons, piston rings, connecting rods, rod bearings, and crankshaft journal bearings are removed for service, they should be retained in order. At the time of installation, they should be installed in the same locations and with the same mating surfaces as when removed.
- Battery cables should be disconnected before any major work is performed on the engine. Failure to disconnect cables may result in damage to wire harness or other electrical parts.

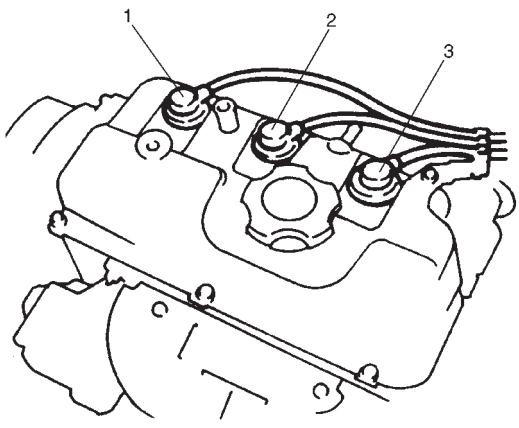

1. No.1 cylinder
2. No.2 cylinder
3. No.3 cylinder

- Throughout this manual, the four cylinders of the engine are identified by numbers: No.1, No.2, and No.3 as counted from crankshaft pulley side to flywheel side.

GENERAL INFORMATION ON ENGINE SERVICE

THE FOLLOWING INFORMATION ON ENGINE SERVICE SHOULD BE NOTED CAREFULLY, AS IT IS IMPORTANT IN PREVENTING DAMAGE, AND IN CONTRIBUTING TO RELIABLE ENGINE PERFORMANCE.

- When raising or supporting engine for any reason, do not use a jack under oil pan. Due to small clearance between oil pan and oil pump strainer, jacking against oil pan may cause it to be bent against strainer resulting in damaged oil pick-up unit.
- It should be kept in mind, while working on engine, that 12-volt electrical system is capable of violent and damaging short circuits.
  When performing any work where electrical terminals could possibly be grounded, ground cable of the battery should be disconnected at battery.
- Any time the air cleaner, air intake hose, throttle body or intake manifold is removed, the intake opening should be covered. This will protect against accidental entrance of foreign material which could follow intake passage into cylinder and cause extensive damage when engine is started.
- When disconnecting couplers, don't pull wire harness but make sure to hold coupler itself. With lock type coupler, be sure to unlock before disconnection. Attempt to disconnect coupler without unlocking may result in damage to coupler. When connecting lock type coupler, insert it till clicking sound is heard and connect it securely.

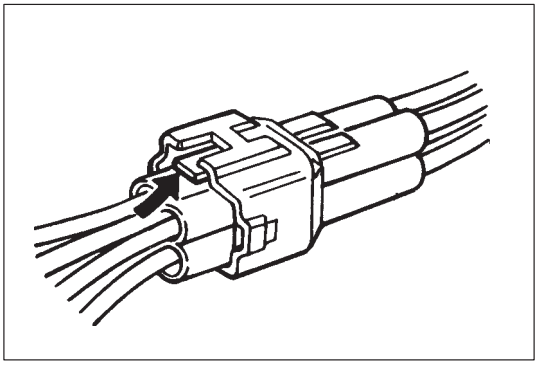

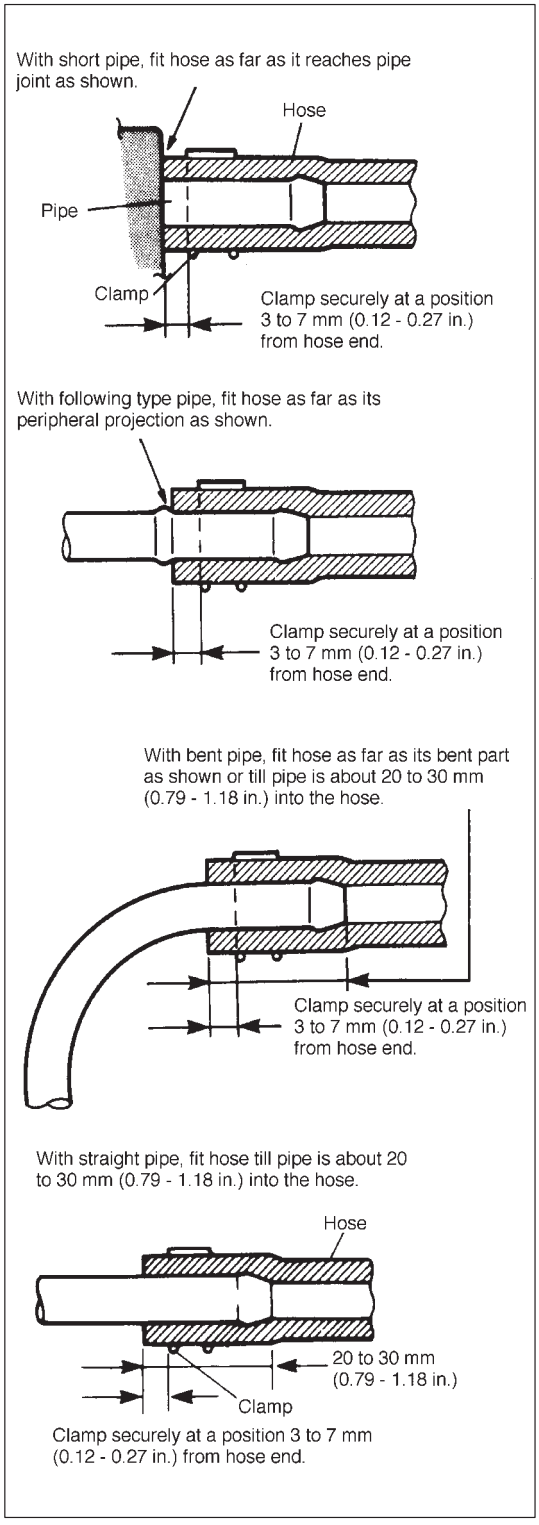

PRECAUTION ON FUEL SYSTEM SERVICE

- Work must be done with no smoking, in a well-ventilated area and away from any open flames.
- As fuel feed line (between fuel pump and fuel pressure regulator) is still under high fuel pressure even after engine was stopped, loosening or disconnecting fuel feed line directly may cause dangerous spout of fuel to occur where loosened or disconnected.
  Before loosening or disconnecting fuel feed line, make sure to release fuel pressure according to FUEL PRESSURE RELIEF PROCEDURE.
  A small amount of fuel may be released after the fuel line is disconnected.
  In order to reduce the chance of personal injury, cover the fitting to be disconnected with a shop cloth. Put that cloth in an approved container when disconnection is completed.
- Never run engine with fuel pump relay disconnected when engine and exhaust system are hot.
- Fuel or fuel vapor hose connection varies with each type of pipe. When reconnecting fuel or fuel vapor hose, be sure to connect and clamp each hose correctly referring to left figure.
  After connecting, make sure that the hose has no twist or kink.
- When installing fuel union bolt gasket, always use new gasket and tighten union bolt to specified torque. See Section 6C for specified torque.
- When installing injector, fuel feed pipe or fuel pressure regulator, lubricate its O-ring with gasoline.
- When connecting fuel pipe flare nut, first tighten flare nut by hand and then tighten it to specified torque.

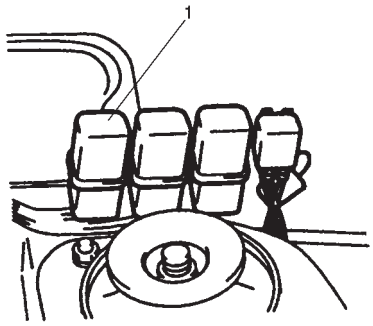

FUEL PRESSURE RELIEF PROCEDURE

CAUTION:
This work must not be done when engine is hot. If done so, it may cause adverse effect to catalyst.

After making sure that engine is cold, relief fuel pressure as follows.

1) Place transmission gear shift lever in “Neutral”, set parking brake, and block drive wheels.
2) Remove fuel pump relay (1) from connector.
3) Remove fuel filler cap to release fuel vapor pressure in fuel tank and then reinstall it.
4) Start engine and run it till it stops for lack of fuel. Repeat cranking engine 2 – 3 times of about 3 seconds each time to dissipate fuel pressure in lines. Fuel connections are now safe for servicing.
5) Upon completion of servicing, install fuel pump relay to relay box.

FUEL LEAKAGE CHECK PROCEDURE

After performing any service on fuel system, check to make sure that there are no fuel leakages as follows.

1) Turn the ignition switch ON position for 3 seconds (to operate fuel pump) and then turn it OFF position.
   Repeat this (ON and OFF) 3 or 4 times and apply fuel pressure to fuel line (till fuel pressure is felt by hand placed on fuel return hose).
2) In this state, check to see that there are no fuel leakages from any part of fuel system.

ENGINE DIAGNOSIS

This vehicle is equipped with an engine and emission control system, which controls the A/F mixture, ignition timing, emission, etc. suitably to engine conditions by ECM. ECM has an On-Board Diagnostic system which detects a malfunction in this system.
When diagnosing a trouble in the engine including this system, be sure to have understanding of the outline of “On-Board Diagnostic system” and each item in “Precaution in Diagnosing Trouble” and follow “ENGINE DIAGNOSTIC FLOW TABLE” given below to obtain correct result smoothly.

ON-BOARD DIAGNOSTIC SYSTEM

Refer to “On-Board Diagnostic System” in Section 6E1.

PRECAUTION IN DIAGNOSING TROUBLES

Be sure to read “Precaution in Diagnosing Troubles” in Section 6E1 and observe what is written there.

ENGINE DIAGNOSTIC FLOW TABLE

Refer to the following pages for the details of each step.

STEP	ACTION	YES	NO
1	Customer Complaint Analysis 1) Perform customer complaint analysis. Was customer complaint analysis performed?	Go to Step 2.	Perform customer complaint analysis.
2	Diagnostic Trouble Code (DTC) Check, Record and Clearance 1) Check for DTC referring to “DTC Check” in Section 6E1. Is there any malfunction DTC(s)?	1) Print DTC or write it down and clear it by referring to “DTC Clearance” in section 6E1. 2) Go to Step 3.	Go to Step 4.
3	Visual Inspection 1) Perform visual inspection referring to the “Visual Inspection” in this section. Is there any faulty condition?	1) Repair or replace malfunction part. 2) Go to Step 11.	Go to Step 5.
4	Visual Inspection 1) Perform visual inspection referring to the “Visual Inspection” in this section. Is there any faulty condition?		Go to Step 8.
5	Trouble Symptom Confirmation 1) Confirm trouble symptom referring to the “Trouble-Symptom Confirmation” in this section. Is trouble symptom identified?	Go to Step 6.	Go to Step 7.
6	Rechecking and Record of DTC 1) Recheck for DTC referring to “DTC Check” in Section 6E1. Is there any DTC(s)?	Go to Step 9.	Go to Step 8.
7	Rechecking and Record of DTC 1) Recheck for DTC referring to “DTC Check” in Section 6E1. Is there any malfunction DTC(s)?		Go to Step 10.
8	Engine Basic Inspection and Engine Diagnosis Table 1) Check and repair according to “Engine Basic Check” and “Engine Diagnosis Table” in this section. Are check and repair complete?	Go to Step 11.	1) Check and repair malfunction part(s). 2) Go to Step 11.
9	Trouble shooting for DTC 1) Check and repair according to applicable DTC diag. flow table in Section 6E1. Are check and repair complete?		
10	Check for Intermittent Problems 1) Check for intermittent problems referring to “Check for Intermittent Problem” in this section. Is there any faulty condition?	1) Repair or replace malfunction part(s). 2) Go to Step 11.	Go to Step 11.
11	Final Confirmation Test 1) Clear DTC if any. 2) Perform final confirmation test referring to “Final Confirmation Test” in this section. Is there any problem symptom, malfunction DTC or abnormal condition?	Go to Step 6.	End.

1. CUSTOMER COMPLAINT ANALYSIS

Record details of the problem (failure, complaint) and how it occurred as described by the customer. For this purpose, use of such an inspection form will facilitate collecting information to the point required for proper analysis and diagnosis.

CUSTOMER PROBLEM INSPECTION FORM (EXAMPLE)

User name:	Model:	VIN:	
Date of issue:	Date of Reg.:	Date of problem:	Mileage:

PROBLEM SYMPTOMS	
☐ **Difficult Starting** ☐ No cranking ☐ No initial combustion ☐ No combustion ☐ Poor starting at (☐ cold ☐ warm ☐ always) ☐ Other_____	☐ **Poor Driveability** ☐ Hesitation on acceleration ☐ Back fire/☐ After fire ☐ Lack of power ☐ Surging ☐ Abnormal knocking ☐ Other
☐ **Poor idling** ☐ Poor fast idle ☐ Abnormal idling speed (☐ High ☐ Low) (r/min.) ☐ Unstable ☐ Hunting (r/min. to r/min.) ☐ Other_____	☐ **Engine Stall when** ☐ Immediately after start ☐ Axal. pedal is depressed ☐ Accel. pedal is released ☐ Load is applied ☐ A/C ☐ Electric load ☐ P/S ☐ Other_____ ☐ Other_____
☐ OTHERS:	

VEHICLE/ENVIRONMENTAL CONDITION WHEN PROBLEM OCCURS	
Environmental Condition	
Weather	☐ Fair ☐ Cloudy ☐ Rain ☐ Snow ☐ Always ☐ Other_____
Temperature	☐ Hot ☐ Warm ☐ Cool ☐ Cold (°F/ °C) ☐ Always
Frequency	☐ Always ☐ Sometimes (times/ day, month) ☐ Only once ☐ Under certain condition
Road	☐ Urban ☐ Suburb ☐ Highway ☐ Mountainous (☐ Uphill ☐ Downhill) ☐ Tarmacadam ☐ Gravel ☐ Other_____
Vehicle Condition	
Engine Condition	☐ Cold ☐ Warming up phase ☐ Warmed up ☐ Always ☐ Other at starting ☐ Immediately after start ☐ Racing without load ☐ Engine speed (r/min)
Vehicle condition	☐ During driving: ☐ Constant speed ☐ Accelerating ☐ Decelerating ☐ Right hand corner ☐ left hand corner ☐ When shifting (Lever position) ☐ At stop ☐ Vehicle speed when problem occurs (km/h, Mile/h) ☐ Other

Malfunction indicator lamp condition	☐ Always ON ☐ Sometimes ON ☐ Always OFF ☐ Good condition	
Diagnostic trouble code	First check:	☐ No code ☐ Normal code ☐ Malfunction code ( )
	Second check:	☐ No code ☐ Normal code ☐ Malfunction code ( )

NOTE:

The above form is a standard sample. It should be modified according to conditions characteristic of each market.

2. DIAGNOSTIC TROUBLE CODE (DTC) CHECK, RECORD AND CLEARANCE

First, check DTC referring to “DTC Check” in Section 6E1. If DTC is indicated, print it or write it down and then clear it by referring to “DTC Clearance” in Section 6E1. DTC indicates malfunction that occurred in the system but does not indicate whether it exists now or it occurred in the past and the normal condition has been restored now. To check which case applies, check the symptom in question according to Step 5 and recheck DTC according to Step 6 or 7.

Attempt to diagnose a trouble based on DTC in this step only or failure to clear the DTC in this step will lead to incorrect diagnosis, trouble diagnosis of a normal circuit or difficulty in troubleshooting.

3. and 4. VISUAL INSPECTION

Be sure to perform visual check of the following items that support proper function of the engine.

INSPECTION ITEM	REFERRING SECTION
● Engine oil – – – – – level, leakage	Section 0B
● Engine coolant – – – – – level, leakage	Section 0B
● Fuel – – – – – level, leakage	Section 0B
● Air cleaner element – – – – – dirt, clogging	Section 0B
● Battery – – – – – fluid level, corrosion of terminal	
● Water pump belt and/or cooling fan belt – – – – – tension, damage	Section 0B
● Throttle cable – – – – – play, installation	Section 6E1
● Vacuum hoses of air intake system – – – – – disconnection, looseness, deterioration, bend	
● Connectors of electric wire harness – – – – – disconnection, friction	
● Fuses – – – – – burning	Section 8
● Parts – – – – – installation, bolt – – – – – looseness	
● Parts – – – – – deformation	
● Other parts that can be checked visually	
Also check following items at engine start, if possible	
● Malfunction indicator lamp (Operation)	Section 6E1
● Charge warning lamp (Operation)	Section 6H
● Engine oil pressure warning lamp (Operation)	Section 8
● Engine coolant temp. meter (Operation)	Section 8
● Fuel lever meter (Operation)	Section 8
● Abnormal air being inhaled from air intake system	
● Exhaust system – – – – – leakage of exhaust gas, noise	
● Other parts that can be checked visually	

5. TROUBLE SYMPTOM CONFIRMATION

Based on information obtained in Step 1 customer complaint analysis and Step 2 DTC check, confirm trouble symptoms. Also, reconfirm DTC according to “DTC Confirmation Procedure” in Section 6E1.

6. and 7. RECHECKING AND RECORD OF DTC

Refer to “DTC Check” in section 6E1 for checking procedure.

8. ENGINE BASIC INSPECTION AND ENGINE DIAGNOSIS TABLE

Perform basic engine check according to the “Engine Basic Inspection Flow Table” first. When the end of the flow table has been reached, check the parts of the system suspected as a possible cause referring to ENGINE DIAGNOSIS TABLE and based on symptoms appearing on the vehicle (symptoms obtained through steps of customer complaint analysis, trouble symptom confirmation and/or basic engine check) and repair or replace faulty parts, if any.

ENGINE BASIC INSPECTION FLOW TABLE

STEP	ACTION	YES	NO
1	Was “ENGINE DIAG. FLOW TABLE” performed?	Go to Step 2.	Go to “ENGINE DIAG. FLOW TABLE”.
2	Check battery voltage. Is it 11 V or more?	Go to Step 3.	Charge or replace battery.
3	Is engine cranked?	Go to Step 4.	Go to “DIAGNOSIS” in section 6G.
4	Does engine start?	Go to Step 5.	Go to Step 7.
5	Check engine idle speed/IAC duty referring to “Idle Speed/IAC Duty Inspection” in section 6E1. Is check result as specified?	Go to Step 6.	Go to “ENGINE DIAGNOSIS TABLE” in this section.
6	Check ignition timing referring to “Ignition Timing Inspection” in section 6F. Is check result as specified?	Go to “ENGINE DIAGNOSIS TABLE” in this section.	Adjust ignition timing.
7	Check fuel supply as follows: 1) Check to make sure that enough fuel is filled in fuel tank. 2) Turn the ignition switch ON position for 3 seconds and then turn it OFF position. Repeat this a few times. Is fuel return pressure (returning sounds) felt from fuel return hose when the ignition switch is turned ON position?	Go to Step 9.	Go to Step 8.
8	Check fuel pump for operating. 1) Was fuel pump operating sound heard from fuel filler for about 3 seconds after turning the ignition switch ON position and stop?	Go to “Diag. Flow Table B-3” in section 6E1.	Go to “Diag. Flow Table B-1” in section 6E1.
9	Check ignition spark referring to “Ignition Spark Test” in section 6F. Is it in good condition?	Go to Step 10.	Go to “DIAGNOSIS” in section 6F.
10	Check fuel injector referring to “Fuel Injector Inspection” in section 6E1. Is it in good condition?	Go to “ENGINE DIAGNOSIS TABLE” in this section.	Go to “Diag. Flow Table B-2 in section 6E1.

9. TROUBLESHOOTING FOR DTC

Based on the DTC indicated in Step 6 or 7 and referring to the applicable DTC diag. flow table in Section 6E1, locate the cause of the trouble, namely in a sensor, switch, wire harness, connector, actuator, ECM or other part and repair or replace faulty parts.

10. CHECK FOR INTERMITTENT PROBLEM

Check parts where an intermittent trouble is easy to occur (e.g., wire harness, connector, etc.), referring to “INTERMITTENT AND POOR CONNECTION” in Section 0A and related circuit of DTC recorded in step 2.

11. FINAL CONFIRMATION TEST

Confirm that the problem symptom has gone and the engine is free from any abnormal conditions. If what has been repaired is related to the DTC, clear the DTC once, perform DTC confirmation procedure and confirm that no malfunction DTC (a normal code) is indicated.

ENGINE DIAGNOSIS TABLE

Condition	Possible Cause	Reference Item
Hard starting (Engine cranks OK)	**Engine and emission control system out of order.**	
	● Faulty CMP sensing rotor	CMP sensing rotor inspection in section 6E1.
	● Faulty idle air control system	Diag. Flow Table B-4 in Section 6E1.
	● Faulty ECT sensor or MAP sensor	ECT sensor or MAP sensor in Section 6E1.
	● Faulty ECM	Inspection of ECM and its circuit in Section 6E1.
	Low compression.	Compression check in Section 6A or 6A1.
	● Compression leak from valve seat	Valves inspection in Section 6A or 6A1.
	● Sticky valve stem	Valves inspection in Section 6A or 6A1.
	● Weak or damaged valve springs	Valves spring inspection in Section 6A or 6A1.
	● Compression leak at cylinder head gasket	Cylinder head inspection in Section 6A or 6A1.
	● Sticking or damaged piston ring	Piston ring inspection in Section 6A or 6A1.
	● Worn piston, ring or cylinder	Cylinders, pistons and piston rings inspection in Section 6A or 6A1.
	Others	
	● Malfunctioning PCV valve	PCV system inspection in Section 6E1.

Condition	Possible Cause	Reference Item
Engine has no power	**Engine overheating.**	Refer to “Overheating” Section.
	Ignition system out of order.	
	● Defective spark plug	Spark plugs in Section 6F.
	● Faulty ignition coil	Ignition coil in Section 6F.
	Fuel system out of order.	
	● Fuel pressure out of specification	Diag. Flow Table B-3 in Section 6E1.
	– Dirty fuel filter	
	– Dirty or clogged fuel hose or pipe	
	– Malfunctioning fuel pressure regulator	
	– Malfunctioning fuel pump	
	Engine and emission control system out of order.	
	● Faulty injector	Fuel injector in Section 6E1.
	● Faulty TP sensor, ECT sensor or MAP sensor	TP sensor, ECT sensor or MAP sensor in Section 6E1.
	● Faulty ECM	Inspection of ECM and its circuit in Section 6E1.
	Low compression.	Previously outlined.
	Others	
	● Dragging brakes	Diagnosis in Section 5.
	● Slipping clutch	Diagnosis in Section 7C.
Improper engine idling or engine fails to idle	**Ignition system out of order.**	
	● Faulty spark plug	Spark plugs in Section 6F.
	● Faulty ignition coil	Ignition coil in Section 6F.
	Fuel system out of order.	
	● Fuel pressure out of specification	Diag. Flow Table B-3 in Section 6E1.
	– Malfunctioning fuel pressure regulator	
	Engine overheating.	Refer to “Overheating” Section.
	Engine and emission control system out of order.	
	● Faulty idle air control system	Diag. Flow Table B-4 in Section 6E1.
	● Faulty evaporative emission control system	Diag. Flow Table B-5 in Section 6E1.
	● Faulty injector	Fuel injector in Section 6E1.
	● Faulty ECT sensor, TP sensor or MAP sensor	ECT sensor, TP sensor or MAP sensor in Section 6E1.
	● Faulty ECM	Inspection of ECM and its circuit in Section 6E1.
	Low compression.	Previously outlined.
	Others	
	● Malfunctioning PCV valve	PCV system inspection in Section 6E1.

Condition	Possible Cause	Reference Item
Engine hesitates (Momentary lack of response as the accelerator is depressed. Can occur at all vehicle speeds. Usually most severe when first trying to make the vehicle move, as from a stop sign.)	**Ignition system out of order.** ● Spark plug faulty or plug gap as out of adjustment **Fuel system out of order.** ● Fuel pressure out of specification – Clogged fuel filter – Faulty fuel pressure regulator ● Clogged fuel filter, hose or pipe **Engine overheating** **Engine and emission control system out of order.** ● Faulty injector ● Faulty TP sensor, ECT sensor or MAP sensor ● Faulty ECM . **Low compression**	 Spark plugs in Section 6F. Diag. Flow Table B-3 in Section 6E1. Fuel pressure check in Section 6E1. Refer to “Overheating” Section. Fuel injector in Section 6E1. TP sensor, ECT sensor or MAP sensor in Section 6E1. Inspection of ECM and its circuit in Section 6E1. Previously outlined.
Surges (Engine power variation under steady throttle or cruise. Feels like the vehicle speeds up and down with no change in the accelerator pedal.)	**Ignition system out of order.** ● Defective spark plug (excess carbon deposits, improper gap, and burned electrodes, etc.) **Fuel system out of order.** ● Variable fuel pressure – Clogged fuel filter – Kinky or damaged fuel hose and line – Faulty fuel pressure regulator **Engine and emission control system out of order.** ● Faulty MAP sensor ● Faulty injector ● Faulty ECM	 Spark plugs in Section 6F. Diag. Flow Table B-3 in Section 6E1. MAP sensor in Section 6E1. Fuel injector in Section 6E1. Inspection of ECM and its circuit in Section 6E1.

Condition	Possible Cause	Reference Item
Excessive detonation (The engine makes sharp metallic knocks that change with throttle opening. Sounds like pop corn popping.)	**Engine overheating**	Refer to “Overheating” Section.
	Ignition system out of order.	
	● Faulty spark plug	Spark plugs in Section 6F.
	● Improper ignition timing	Ignition timing in Section 6F.
	Fuel system out of order.	
	● Clogged fuel filter and fuel lines	Fuel pressure check in Section 6E1.
	Engine and emission control system out of order.	
	● Faulty ECT sensor or MAP sensor	ECT sensor or MAP sensor in Section 6E1.
	● Faulty injector	Fuel injector in Section 6E1.
	● Faulty ECM	Inspection of ECM and its circuit in Section 6E1.
	Others	
	● Excessive combustion chamber deposits	Piston and cylinder head cleaning in Section 6A or 6A1.
Overheating	● Inoperative thermostat	Thermostat in Section 6B.
	● Poor water pump performance	Water pump in Section 6B.
	● Clogged or leaky radiator	Radiator in Section 6B.
	● Improper engine oil grade	Engine oil and oil filter change in Section 0B.
	● Clogged oil filter or oil strainer	Oil pressure check in Section 6A or 6A1.
	● Poor oil pump performance	Oil pressure check in Section 6A or 6A1.
	● Dragging brakes	Diagnosis in Section 5.
	● Slipping clutch	Diagnosis in Section 7C.
	● Blown cylinder head gasket	Cylinder head inspection in Section 6A or 6A1.
Poor gasoline mileage	**Ignition system out of order.**	
	● Faulty spark plug (improper gap, heavy deposits, and burned electrodes, etc.)	Spark plugs in Section 6F.
	Engine and emission control system out of order.	
	● Fuel pressure out of specification	Diag. Flow Table B-3 in Section 6E1.
	● Faulty TP sensor, ECT sensor or MAP sensor	TP sensor, ECT sensor or MAP sensor in Section 6E1.
	● Faulty injector	Fuel injector in Section 6E1.
	● Faulty ECM	Inspection of ECM and its circuit in Section 6E1.
	Low compression	Previously outlined.
	Others	
	● Poor valve seating	Valves inspection in Section 6A or 6A1.
	● Dragging brakes	Diagnosis in Section 5.
	● Slipping clutch	Diagnosis in Section 7C.
	● Thermostat out of order	Thermostat in Section 6B.
	● Improper tire pressure	

Condition	Possible Cause	Reference Item
Excessive engine oil consumption	**Oil entering combustion chamber**	
	● Sticky piston ring	Piston cleaning in Section 6A or 6A1.
	● Worn piston and cylinder	Cylinders, pistons and piston rings inspection in Section 6A or 6A1.
	● Worn piston ring groove and ring	Pistons and piston rings inspection in Section 6A or 6A1.
	● Improper location of piston ring gap	Pistons installation in Section 6A or 6A1.
	● Worn or damaged valve stem seal	Valves and cylinder head in Section 6A or 6A1.
	● Worn valve stem	Valves inspection in Section 6A or 6A1.
Low oil pressure	● Improper oil viscosity	Engine oil and oil filter change in Section 0B.
	● Malfunctioning oil pressure switch	Oil pressure switch inspection in Section 8.
	● Clogged oil strainer	Oil pan and oil pump strainer cleaning in Section 6A or 6A1.
	● Functional deterioration of oil pump	Oil pump in Section 6A or 6A1.
	● Worn oil pump relief valve	Oil pump in Section 6A or 6A1.
	● Excessive clearance in various sliding parts	
Engine noise	**Valve noise**	
Note: Before checking the mechanical noise, make sure that:	● Improper valve lash	Valve lash in Section 6A or 6A1.
	● Worn valve stem and guide	Valves inspection in Section 6A or 6A1.
	● Weak or broken valve spring	Valve springs inspection in Section 6A or 6A1.
● Ignition timing is properly adjusted.	● Warped or bent valve	Valves inspection in Section 6A or 6A1.
● Specified spark plug is used.	● Loose camshaft housing bolts	Camshafts in Section 6A or 6A1.
● Specified fuel is used.	**Piston, ring and cylinder noise**	
	● Worn piston, ring and cylinder bore	Pistons and cylinders inspection in Section 6A or 6A1.
	Connecting rod noise	
	● Worn crankpin bearing	Crankpin and connecting rod bearing inspection in Section 6A or 6A1.
	● Worn crankpin	Crankpin and connecting rod bearing inspection in Section 6A or 6A1.
	● Loose connecting rod nuts	Connecting rod installation in Section 6A or 6A1.
	● Low oil pressure	Previously outlined.
	Crankshaft noise	
	● Low oil pressure	Previously outlined.
	● Worn crankshaft journal bearing	Crankshaft and bearing inspection in Section 6A or 6A1.
	● Worn crankshaft journal	Crankshaft and bearing inspection in Section 6A or 6A1.
	● Loose lower crankcase (bearing cap) bolts	Crankshaft installation in Section 6A or 6A1.
	● Excessive crankshaft thrust play	Crankshaft inspection in Section 6A or 6A1.

Condition	Possible Cause	Referring Item
Excessive hydrocarbon (HC) emission or Excessive carbon monoxide (CO) emission	**Ignition system out of order** ● Defective spark plug **Fuel system out of order** ● Fuel pressure out of specification **Engine and Emission control system out of order.** ● Lead contamination of three way catalytic converter (if equipped) ● Malfunctioning PCV valve ● Faulty EVAP control system ● Closed loop system (A/F feed back compensation) fails – Faulty TP sensor – Faulty ECT sensor or MAP sensor – Faulty O_2 sensor ● Faulty injector ● Faulty ECM **Low compression**	 Fuel pressure check in Section 6E1. Check for absence of filler neck restrictor. PCV valve in Section 6E1. EVAP control system check in Section 6E1. Check oxygen sensor output voltage referring to DTC No.14 Diag. Flow Table in Section 6E1. Fuel injector in Section 6E1. Inspection of ECM and its circuit in Section 6E1. Previously outlined.
Excessive nitrogen oxides (NOx) emission	**Fuel system out of order** ● Fuel pressure out of specification **Engine and emission control system** ● Lead contamination of three way catalytic converter (if equipped) ● Closed loop system (A/F feed back compensation) fails (vehicle with O_2 sensor) – Faulty TP sensor – Faulty ECT sensor or MAP sensor – Faulty O_2 sensor ● Faulty injector ● Faulty ECM	 Fuel pressure check in Section 6E1. Check for absence of filler neck restrictor. Check oxygen sensor output voltage referring to DTC No.14 Diag. Flow Table in Section 6E1. Fuel injector Section 6E1. Inspection of ECM and its circuit in Section 6E1.

SECTION 6A

ENGINE MECHANICAL (F8B ENGINE)

CONTENTS

GENERAL DESCRIPTION 6A- 2
Engine 6A- 2
Engine Lubrication 6A- 3

ENGINE SERVICES NOT REQUIRING ENGINE REMOVAL 6A- 4

DISMOUNTING ENGINE 6A- 5

ENGINE DISASSEMBLY 6A- 8

INSPECTION OF ENGINE COMPONENTS 6A-18
Cylinder Head 6A-18
Rocker-Arm Shaft and Rocker Arms 6A-20
Valve Guides 6A-21
Valves 6A-21
Valve Seats 6A-22
Valve Springs 6A-24
Camshaft 6A-24
Cylinder Block 6A-25
Piston and Piston Rings 6A-26
Connecting Rods 6A-28
Connecting-Rod Big End Bearings 6A-28
Crankshaft 6A-30
Crankshaft Journal Bearings 6A-31
Flywheel 6A-32
Oil Seals 6A-32
Timing Belt and Timing Pulleys 6A-33
Oil Pump 6A-33

ENGINE REASSEMBLY 6A-34
Crankshaft 6A-34
Oil Seal Housing 6A-35
Oil Pump 6A-36
Piston and Piston Rings 6A-36
Connecting Rods 6A-38
Oil Pump Strainer 6A-38
Oil Pan 6A-38
Flywheel 6A-39
Cylinder Head 6A-39
Camshaft 6A-42
Rocker-Arm Shafts 6A-42
Timing Belt Inside Cover Stud Bolts 6A-43
Crankshaft Timing Belt Guide 6A-43
Camshaft and Crankshaft Timing Belt Pulleys 6A-43
Timing Belt 6A-43
Distributor Gear Case 6A-45
Fuel Pump 6A-45
Generator 6A-45
Clutch Disc and Cover 6A-45
Distributor 6A-45
Valve Lash (Clearance) Adjustment 6A-45

MOUNTING ENGINE 6A-46

MAINTENANCE SERVICES 6A-48
Water Pump Belt 6A-48
Ignition Timing 6A-48
Valve Clearance (Lash) 6A-48
Oil Pump Discharge Pressure Measurement 6A-50
Compression Pressure Measurement . . . 6A-51
Vacuum Measurement 6A-52
Engine Oil 6A-53
Engine Oil Filter 6A-53
Engine Coolant 6A-53
Exhaust Line and Muffler 6A-53
Oil Filter Cap 6A-53

REQUIRED SERVICE MATERIALS 6A-54

SPECIAL TOOLS 6A-54

GENERAL DESCRIPTION

Engine

The engine is a water-cooled, in-line 3 cylinders, 4-stroke cycle gasoline unit with its S.O.H.C. (single overhead camshaft) valve mechanism arranged for “V”-type valve configuration.

The single overhead camshaft (S.O.H.C.) is mounted over the cylinder head; it is driven from crankshaft through timing belt. Unlike conventional overhead valve (O.H.V.) engines, this engine has no pushrods. Thus, drive for valve is more direct and enables the valves to follow the crankshaft without any delay.

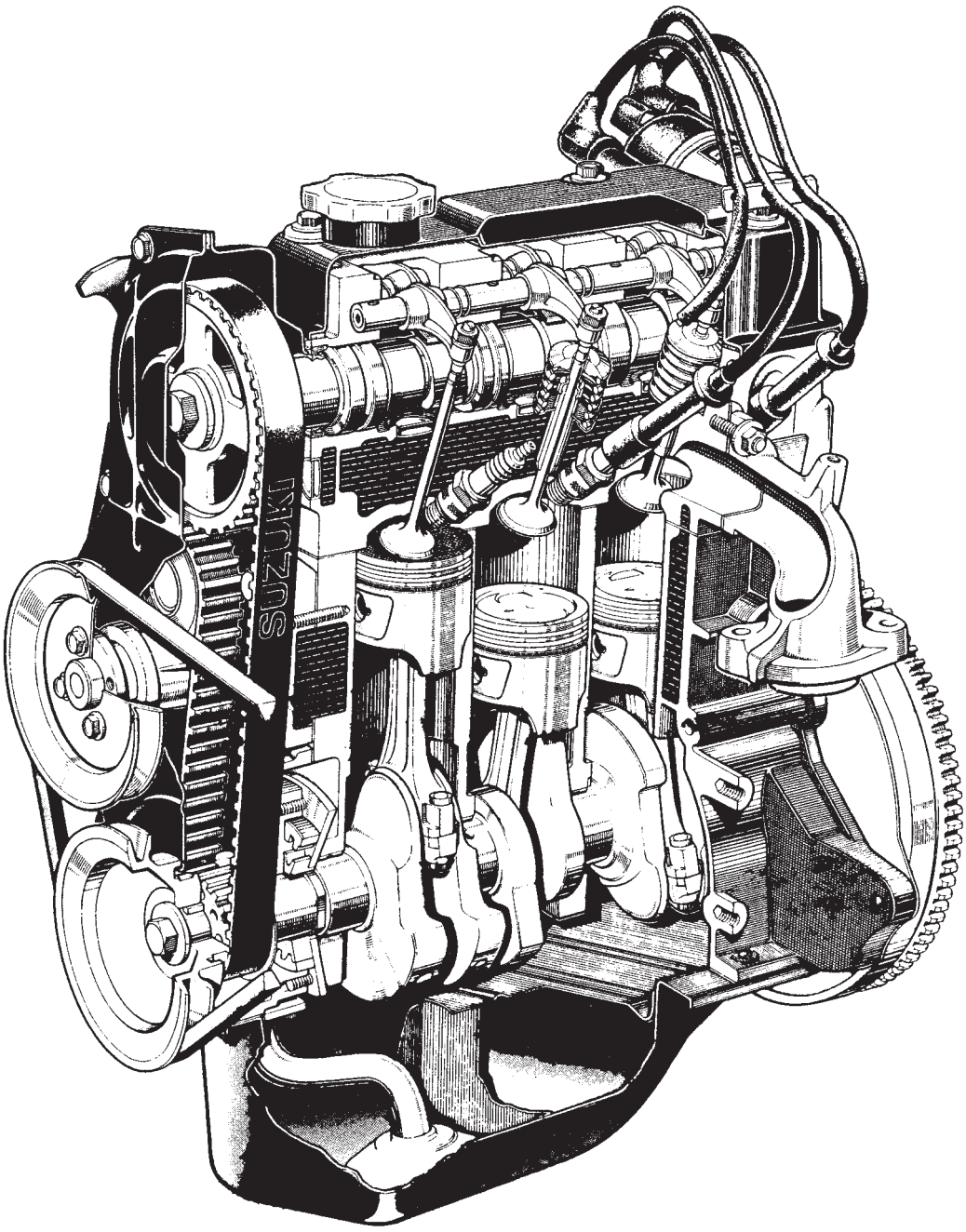

Engine Lubrication

The oil pump is of a internal gear type, and mounted on the crankshaft at the crankshaft pulley side.
Oil is drawn up through the oil pump strainer and passed through the pump to the oil filter.
The filtered oil flows into two paths in cylinder block.
In one path, oil reaches the crankshaft journal bearings.
Oil from the crankshaft journal bearings is supplied to the connecting rod bearings by means of intersecting passages drilled in the crankshaft, and then injected from a small hole provided on the big end of connecting rod to lubricate piston, rings, and cylinder wall.
In another path, oil goes up to the cylinder head and lubricates rocker arms, valves and camshaft, etc., after passing through the internal oilway of rocker arm shafts.

An oil relief valve is provided on the oil pump. This valve starts relieving oil pressure when the pressure comes over about 3.3 kg/cm^2 (46.9 psi, 330 kPa). Relieved oil drains back to the oil pan.

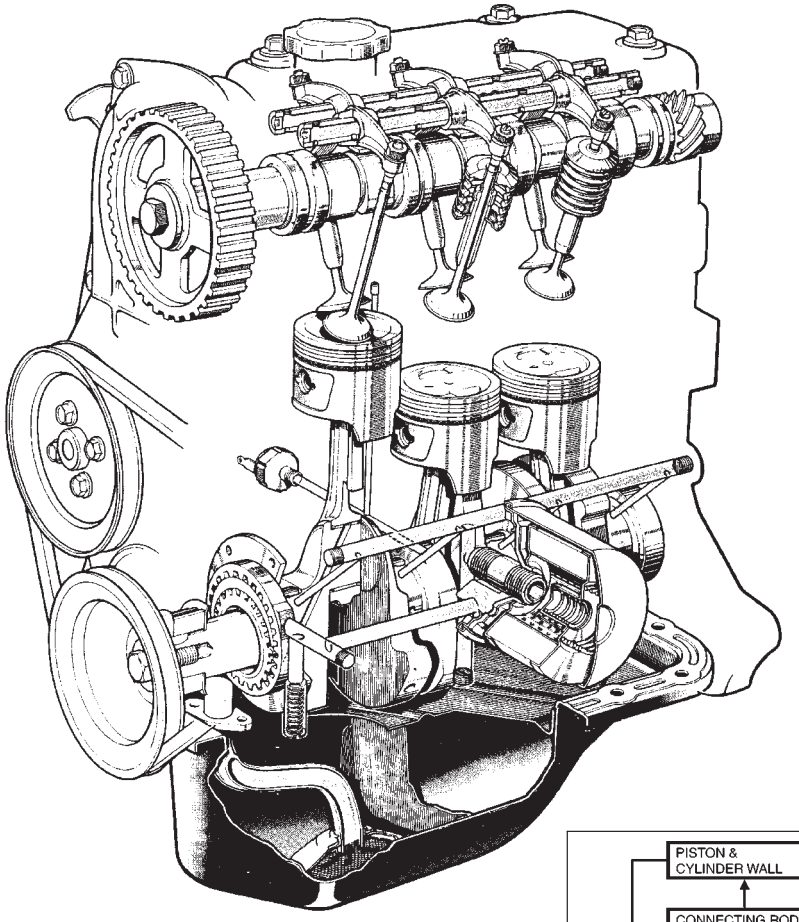

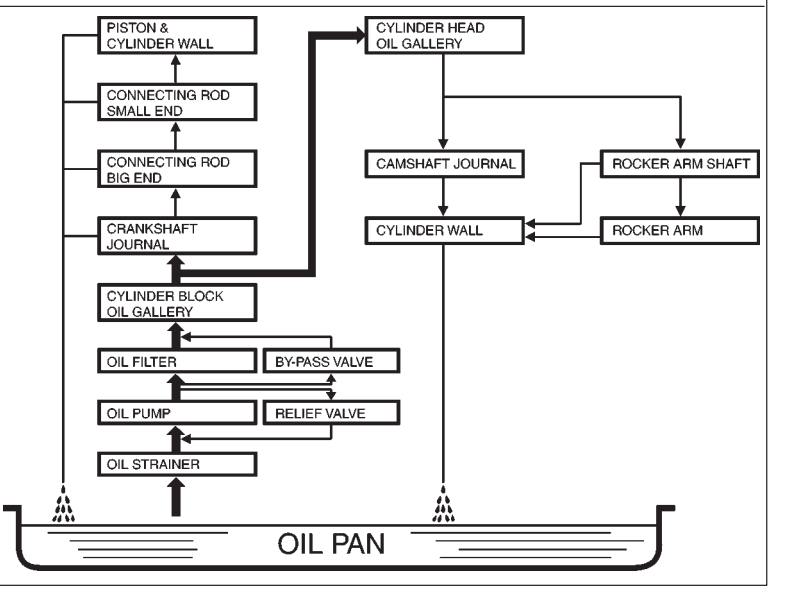

ENGINE SERVICES NOT REQUIRING ENGINE REMOVAL

The following parts or components do not require engine removal to receive services (replacement, inspection or adjustment):

Part or Component	Nature of Service
1. Spark plug	Replacement or inspection
2. Distributor	Replacement, inspection or adjustment
3. Exhaust manifold	Replacement or inspection
4. Oil filter	Replacement
5. Oil pressure unit	Replacement
6. Cylinder head cover	Replacement
7. Rocker shaft	Replacement or inspection
8. Rocker-arm	Replacement or inspection
9. Rocker-arm spring	Replacement or inspection
10. Cam shaft	Replacement or inspection
11. Cylinder head	Replacement or inspection
12. Radiator	Replacement or inspection
13. Distributor gear case	Replacement
14. Camshaft timing belt pulley	Replacement or inspection
15. Crankshaft timing belt pulley	Replacement or inspection
16. Timing belt	Replacement or inspection
17. Fuel pump	Replacement
18. Throttle body	Replacement, inspection
19. Intake manifold	Replacement
20. Generator	Replacement or inspection
21. Starter motor	Replacement or inspection
22. Water pump belt	Replacement, inspection or tension adjustment
23. Water pump	Replacement
24. Pulleys (crank, water pump)	Replacement
25. Timing belt cover	Replacement
26. Water hose	Replacement or inspection

DISMOUNTING ENGINE

1) Release fuel pressure in fuel feed line, refer to Section 6.
2) Disconnect negative cable at battery.
3) Remove engine hood after disconnecting windshield washer hose.
4) Remove front bumper, refer to Section 9.
5) Drain cooling system.

WARNING:
To help avoid danger of being burned, do not remove drain plug and radiator cap while engine and radiator are still hot. Scalding fluid and steam can be blown out under pressure if plug and cap are taken off too soon.

6) Remove radiator with cooling fan and reserve tank, refer to Section 6B.
7) Remove air cleaner assembly (1) with air cleaner hose (2) and breather hose (3).
8) Disconnect following cables.
   - Accelerator cable from throttle body
   - Clutch cable from clutch release lever
   - Speedometer cable from transmission case

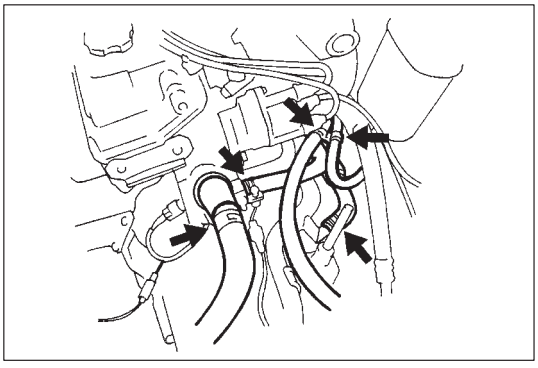

9) Disconnect following hoses.
   - Radiator outlet hose from outlet pipe
   - Radiator inlet hose from thermostat cap
   - Heater inlet and outlet hoses from heater unit (if equipped)
   - Fuel return and inlet hoses from pipes
   - Canister purge hose from canister purge control valve

10) Disconnect the following electric wires.
- Radiator fan
- Distributor (High-tension cord and terminal)
- Starter motor
- Generator
- Back-up light switch
- Oil pressure switch
- Oxygen sensor
- ECT sensor
- Right side of engine harness
- Ground wire from cylinder block
- Ground wire from transmission case
- A/C compressor (if equipped)

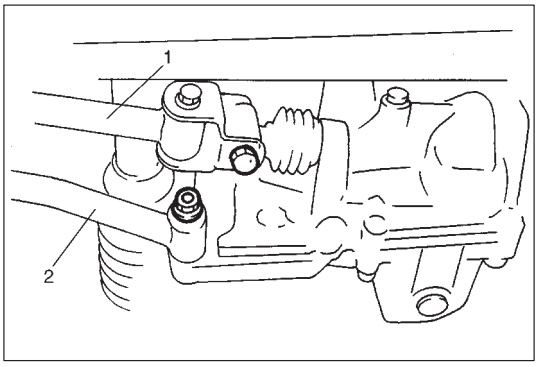

11) Remove exhaust center pipe.
12) Disconnect gear shift control shaft (1) and extension rod (2) from transmission case.
13) Drain engine and transmission oil.

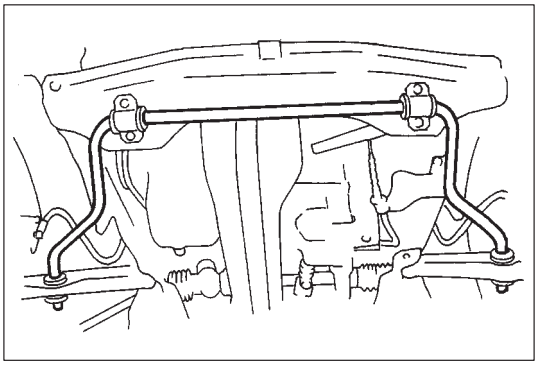

14) Remove stabilizer bar, refer to Section 3D.

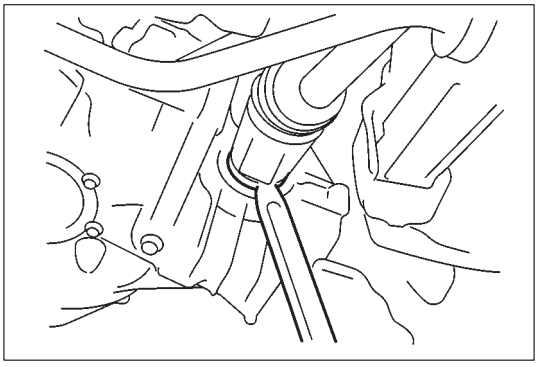

15) Disconnect right and left drive shaft joints from differential side gear snap rings.

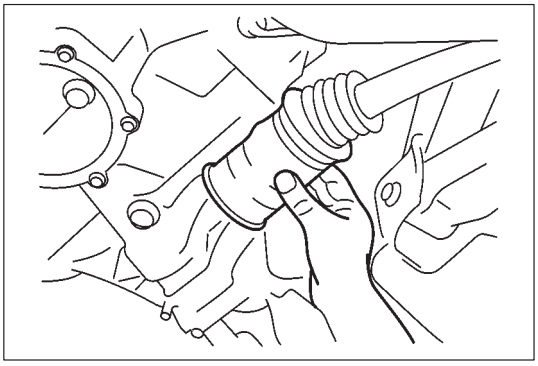

16) Draw right and left drive shafts out of differential side gears.

NOTE:
Be careful not to damage brake flexible hose.

17) Remove water pump and A/C compressor belts (if equipped). When removing A/C compressor belt, first remove water pump pulley.
18) Recover refrigerant from refrigeration system by using recovery and recycling equipment, refer to Section 1B (if equipped).
19) Disconnect suction and discharge hoses from compressor, refer to Section 1B (if equipped).

NOTE:
Cap open fittings immediately to keep moisture out of system.

20) Remove A/C compressor, upper and lower bracket (if equipped).
21) Check to ensure all hoses, electric wires and cables are disconnected from engine and transmission.
22) Set a piece of wire across the hook on intake manifold and transmission case so that engine can be lifted by using chain block.
23) Remove transmission left side mounting and mounting bracket.
24) Remove bolts securing engine member to make engine ready for removal.

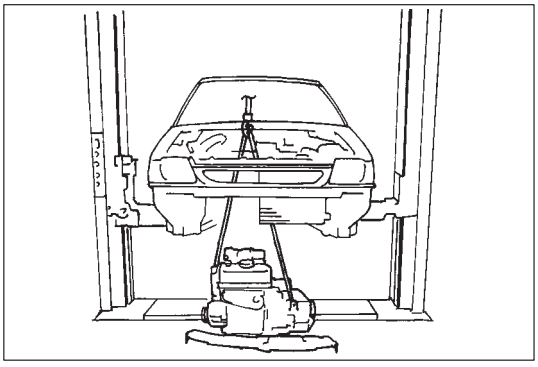

25) Lower engine assembly together with transmission and engine member out of vehicle slowly and carefully.

ENGINE DISASSEMBLY

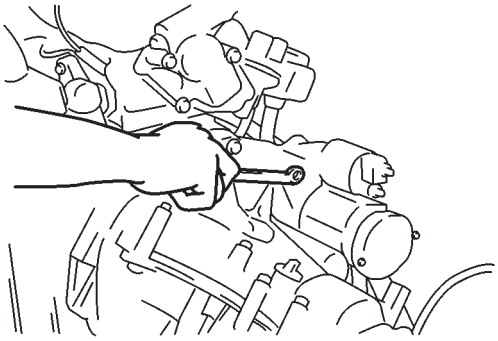

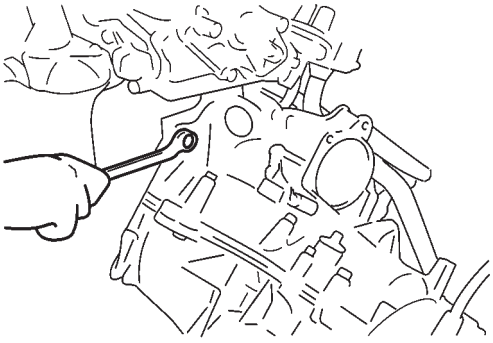

NOTE:

- **Observe critically before starting to remove a component or part by loosening bolts, nuts and the like. What you may find before and during disassembly is valuable information necessary for successful reassembly.**
- **Be careful in handling aluminum-alloy parts. They are softer than steel or cast-iron parts and their finished surfaces more easily take scratch marks.**
- **Have trays and pans ready for setting aside the disassembled parts in an orderly manner. Place the parts in the trays and pans in such a way that they can be readily identified. Put match marks or tags on them, as necessary, so that they will go back to where they came from.**

Carry out engine disassembly in the following sequence:

1) Remove starter motor, engine mounting with engine member and clutch housing lower plate, and loosen the transmission securing bolts after removing the radiator outlet pipe.

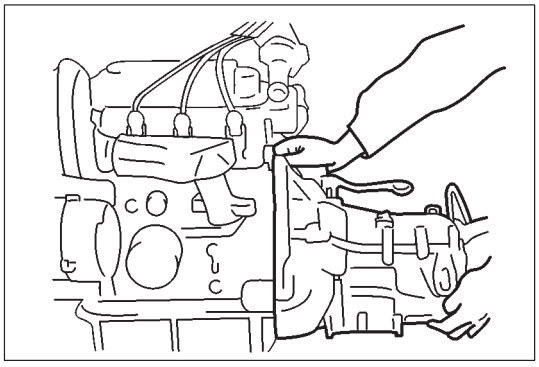

2) Take off transmission from cylinder block.

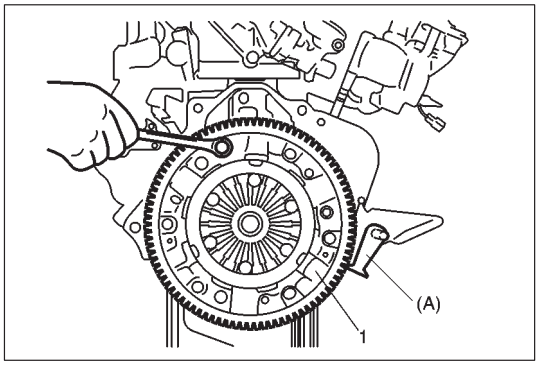

3) Remove clutch cover (1) and clutch disc by using special tool.

Special Tool
(A): 09924-17810

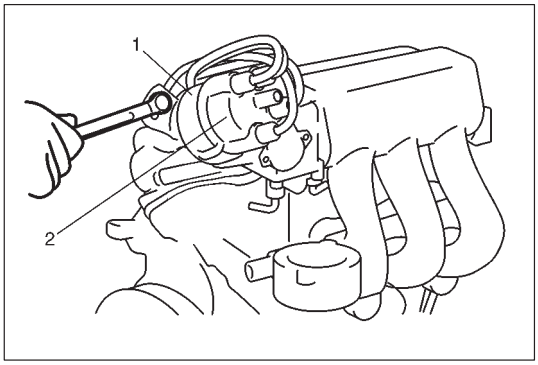

4) Remove distributor cap (2) and then remove distributor assembly (1).

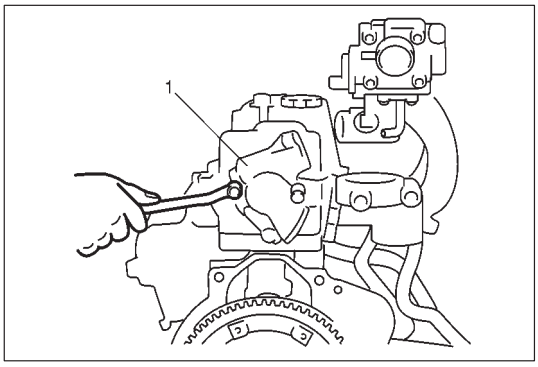

5) Remove distributor case (1).

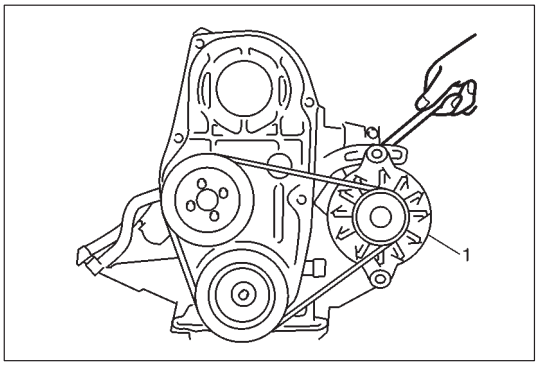

6) Remove generator (1), refer to Section 6H.

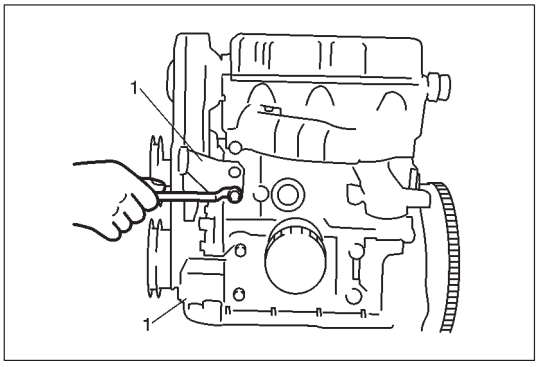

7) Remove generator brackets (1).

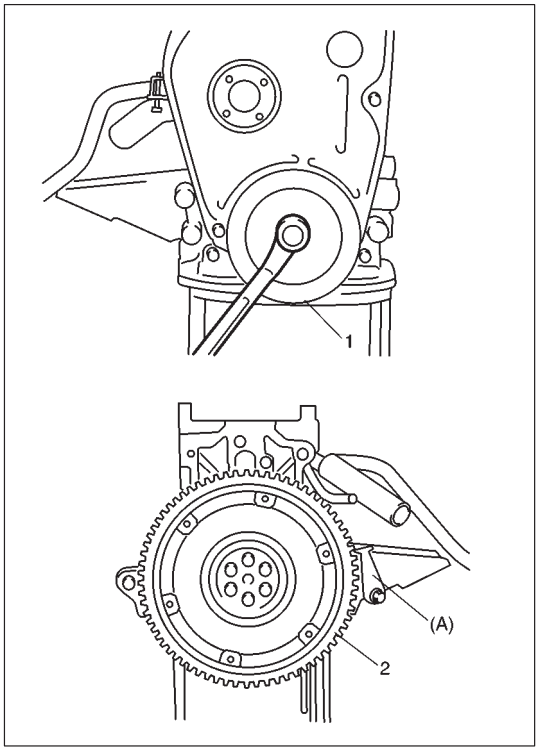

8) Remove crank pulley (1) similarly, by using special tool hitched to flywheel (2) so that crankshaft will not turn.

Special Tool
(A): 09924-17810

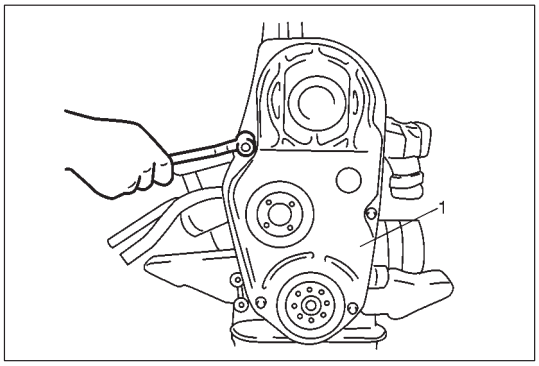

9) Remove water pump pulley and then remove timing belt cover (1).

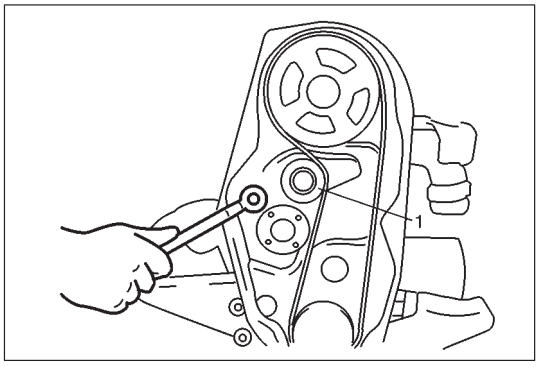

10) Remove timing belt tensioner (1) after removing a part of tensioner spring from water pump securing bolt.

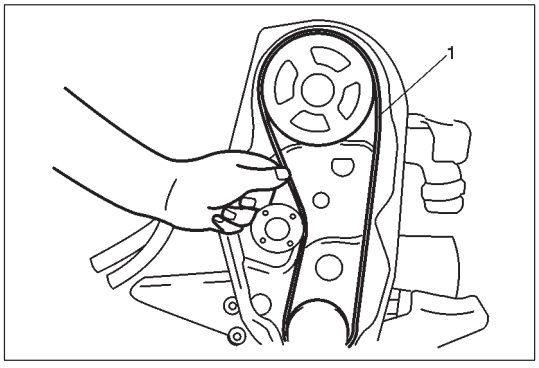

11) Remove timing belt (1).

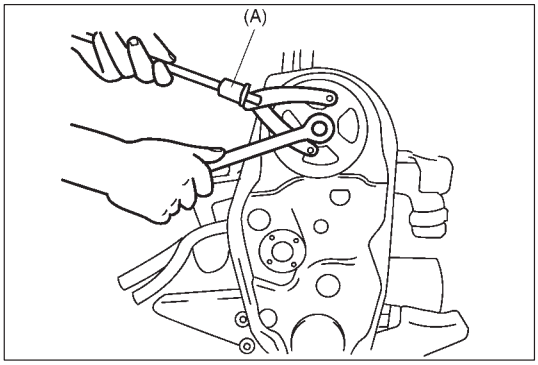

12) Remove camshaft timing belt pulley, by using special tool attached, as shown, to lock camshaft.

Special Tool
(A): 09930-40113

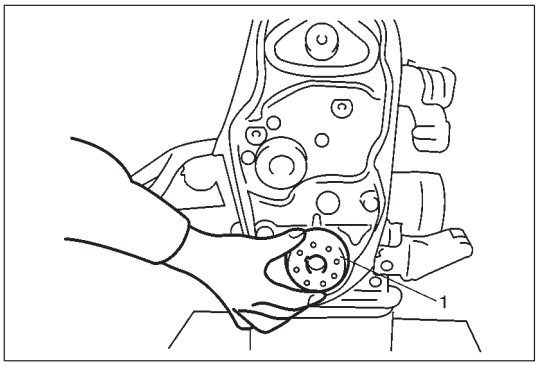

13) Similarly remove crankshaft timing belt pulley (1).

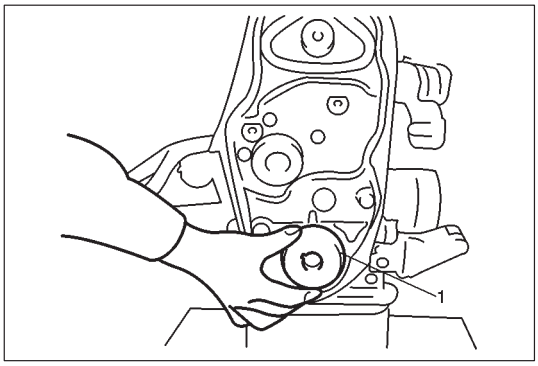

14) After removing pulley key, take out timing belt guide (1).

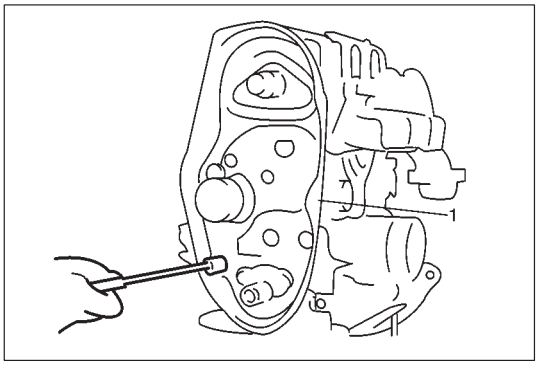

15) Remove timing belt inside cover (1).

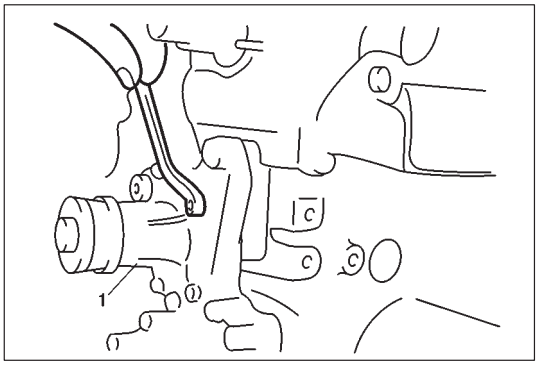

16) Remove water pump case (1).

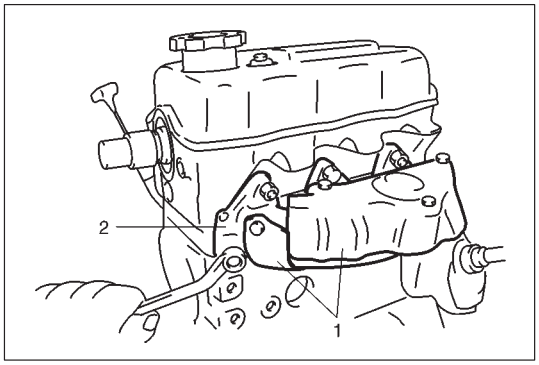

17) Remove exhaust manifold covers (1) and exhaust manifold (2).

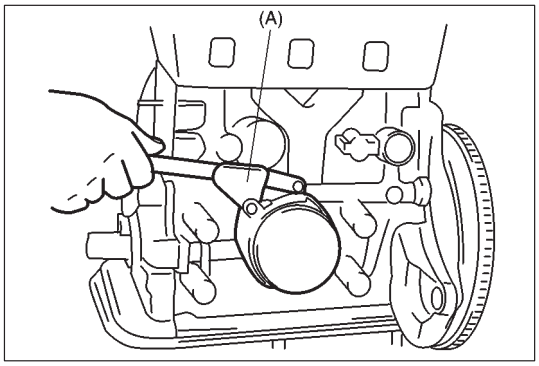

18) Remove oil filter by using special tool.

NOTE:
Be careful not to spill the oil when removing filter.

Special Tool
(A): 09915-47310

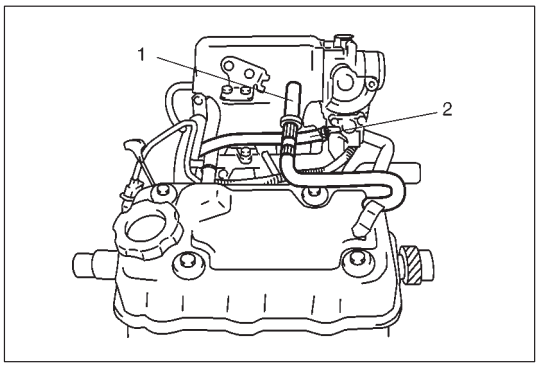

19) Disconnect PCV outlet hose (1) and bypass hose (2).

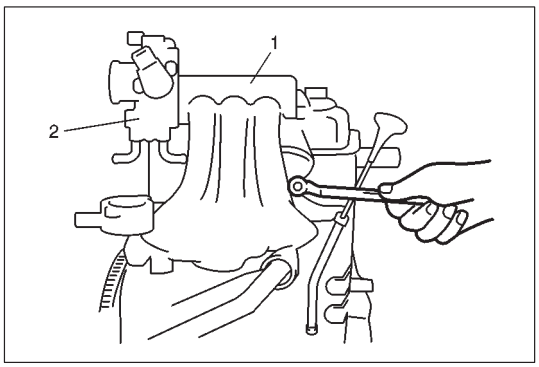

20) Remove intake manifold (1) with throttle body (2).

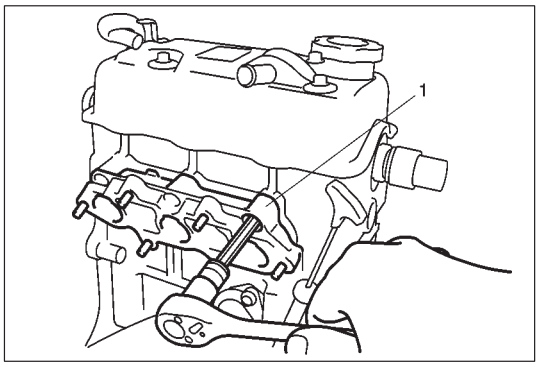

21) Remove intake manifold plate (1).

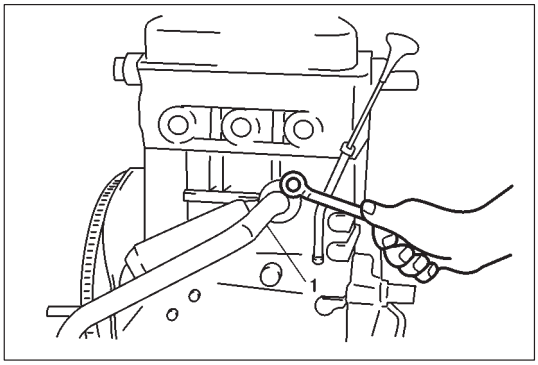

22) Remove water inlet pipe (1).

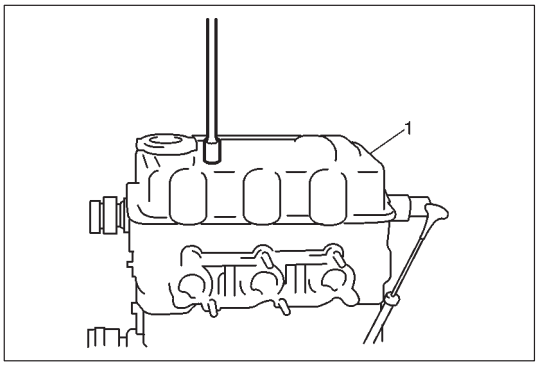

23) Remove cylinder head cover (1).

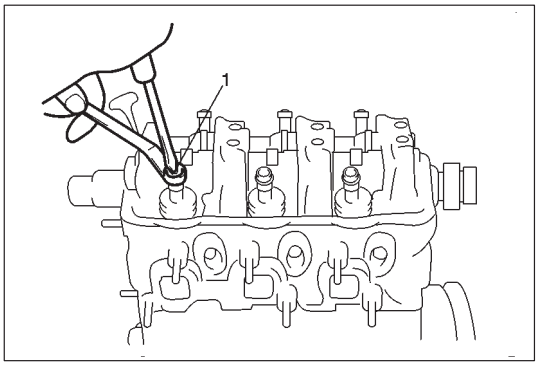

24) Loosen valve adjusting screws (1) fully.
Leave the screws in place.

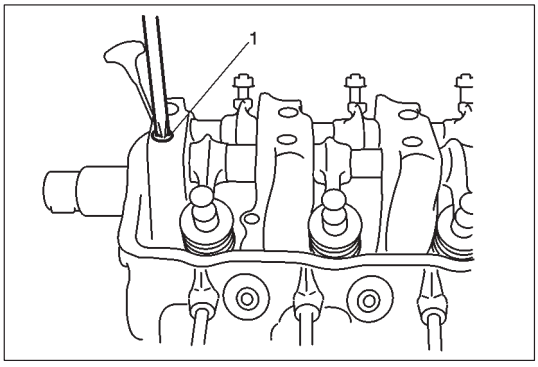

25) Loosen rocker arm shaft securing screws (1).

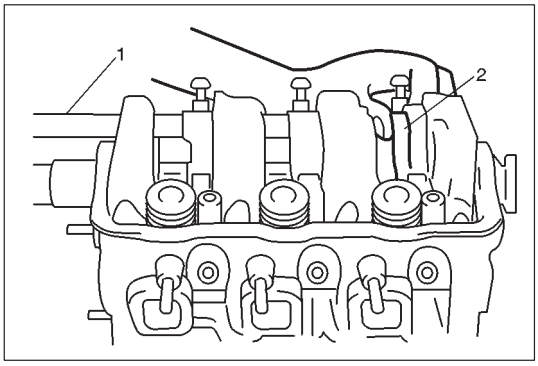

26) While drawing out rocker arm shaft (1), separate valve rocker arms (2) and rocker arm springs.

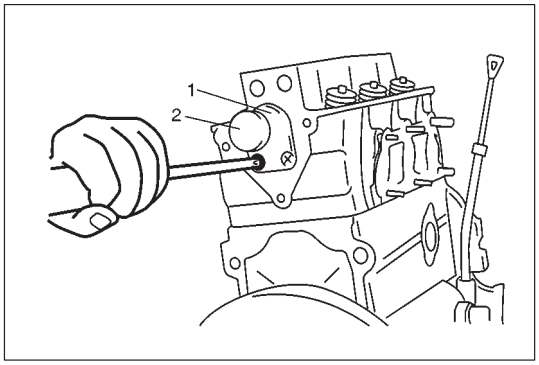

27) Remove camshaft thrust plate (1), and draw camshaft (2) out toward distributor gear case side.

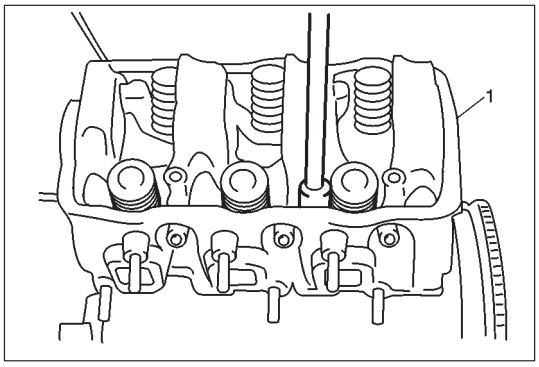

28) Remove cylinder head (1).

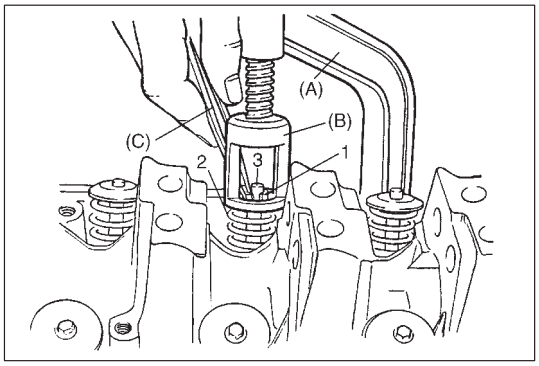

a) Using special tool (valve lifter) to compress valve spring and then remove valve cotters (1) by using special tool (Forceps). Release special tool, and remove valve spring (2) and valves (3).

Special Tool
(A): 09916-14510
(B): 09916-48210
(C): 09916-84511

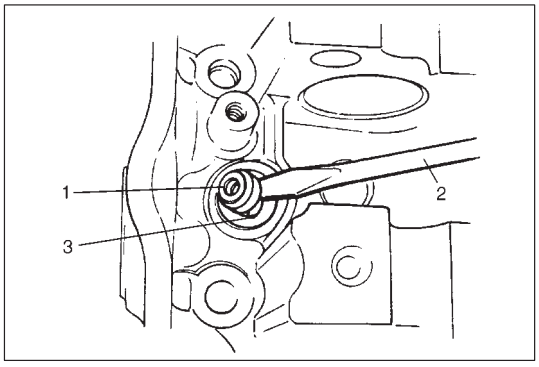

b) Remove valve stem oil seal (1) from valve guide by using flat head rod (2) or the like, and then valve spring seat (3).

NOTE:
Do not reuse oil seal once disassembled. Be sure to use new oil seal when assembling.

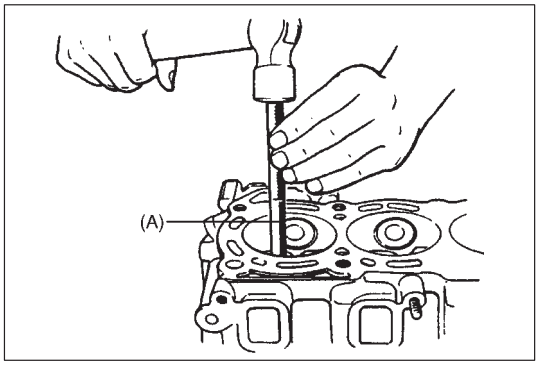

c) Using special tool, drive valve guide out from combustion chamber side to valve spring side.

NOTE:
Do not reuse valve guide once disassembled.
Be sure to use new valve guide (Oversize) when assembling.

Special Tool
(A): 09916-44511

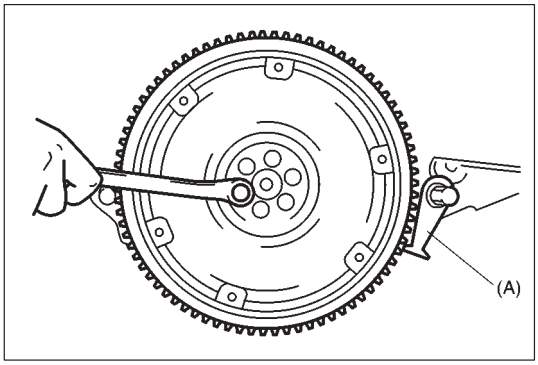

NOTE:
Place disassembled parts except valve stem oil seal and valve guide in order, so that they can be installed in their original positions.

29) Remove flywheel by using special tool as shown.

Special Tool
(A): 09924-17810

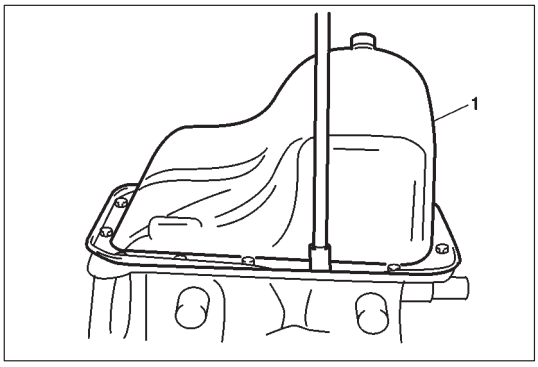

30) Remove oil level gauge and then remove oil pan (1).

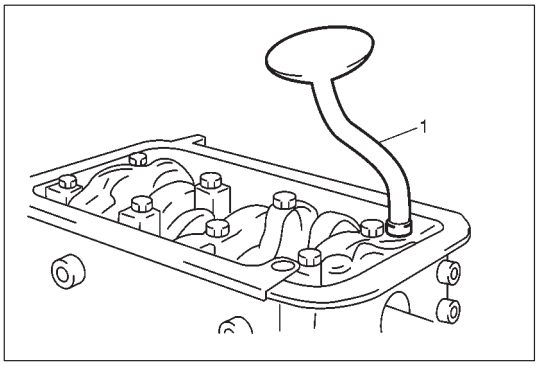

31) Remove oil pump strainer (1).

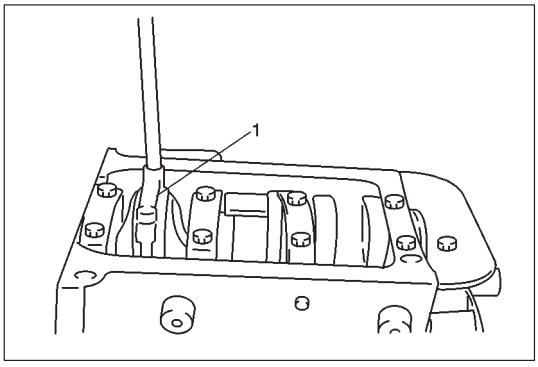

32) Remove connecting rod caps (1).

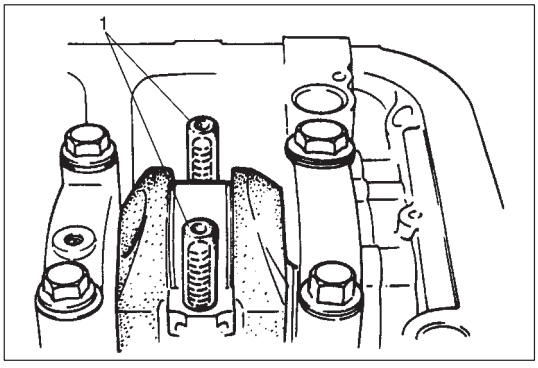

33) Install guide hose (1) over threads of rod bolts.
This is to prevent damage to bearing journal and cylinder wall when removing connection rod.

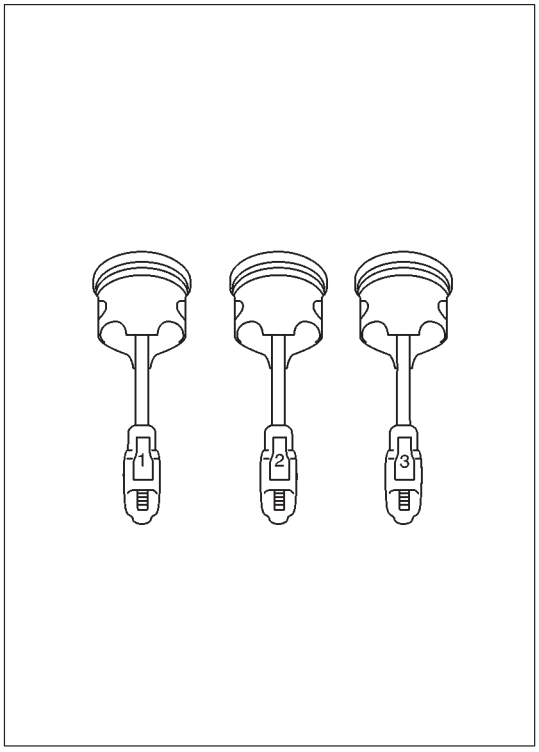

34) Decarbon top of cylinder bore, before removing piston from cylinder.
35) Push piston and connecting rod assembly out through the top of cylinder bore.

CAUTIONS:
- **Before pushing piston out, scribe cylinder number on its crown.**
- **Be sure to identify each bearing cap for its connecting rod by using cylinder number. Set cap and rod aside in combination.**

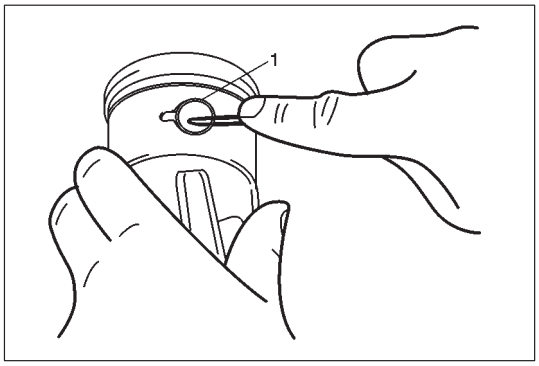

a) From each piston, ease out piston pin circlips (1), as shown.

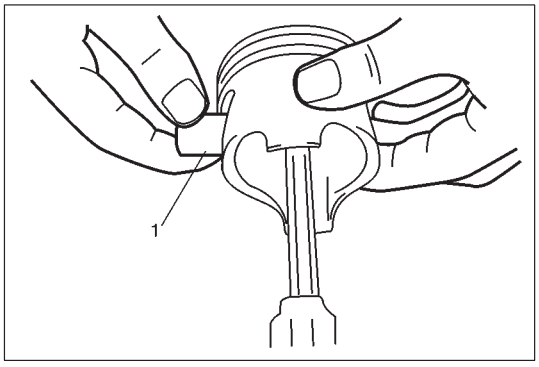

b) Force piston pin (1) out.

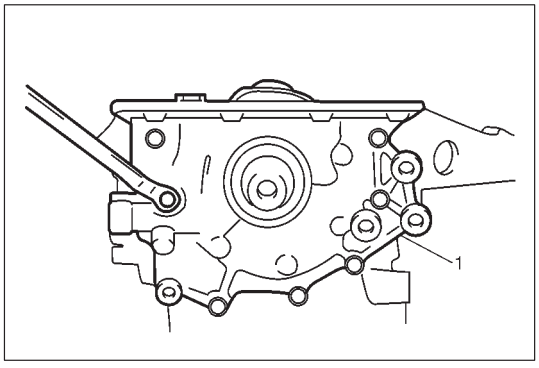

36) Remove oil pump case (1).

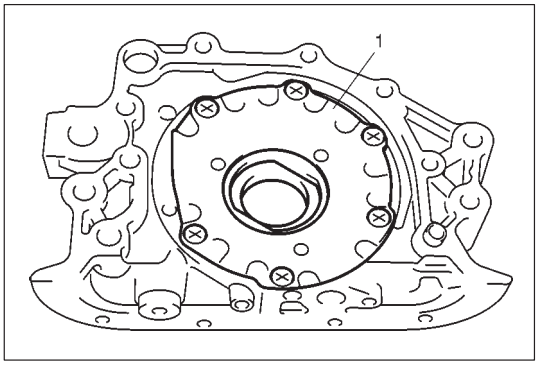

a) Remove oil pump gear plate (1).

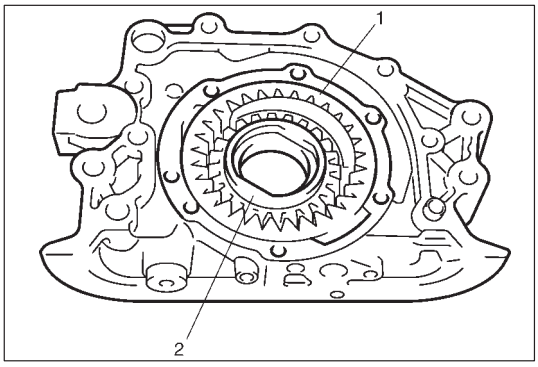

b) Take out inner gear (2) and outer gear (1).

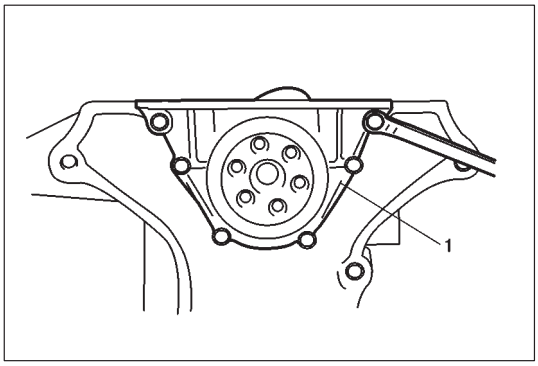

37) Remove oil seal housing (1).

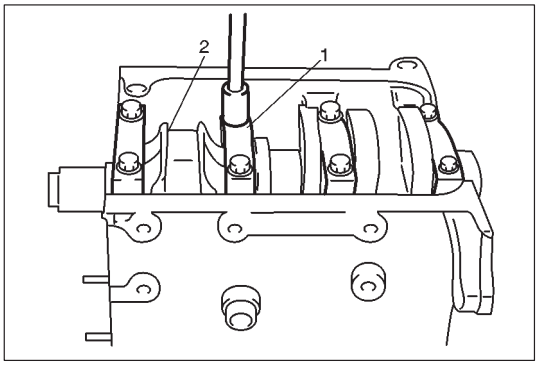

38) Remove crankshaft bearing caps (1), and take out crankshaft (2).

INSPECTION OF ENGINE COMPONENTS

NOTE:

- **During and immediately after disassembly, inspect cylinder block and head for evidence of water leakage or damage and, after washing them clean, inspect more closely.**
- **Wash all disassembled parts clean, removing grease, slime, carbon and scales, before inspecting them to determine whether repair is necessary or not.**
  Be sure to de-scale the water jackets.
- **Use compressed air to clear internal oil holes and passages.**
- **Do not disturb the set combinations of valves, bearings and bearing caps, etc.**
  Have the sets segregated and identified.

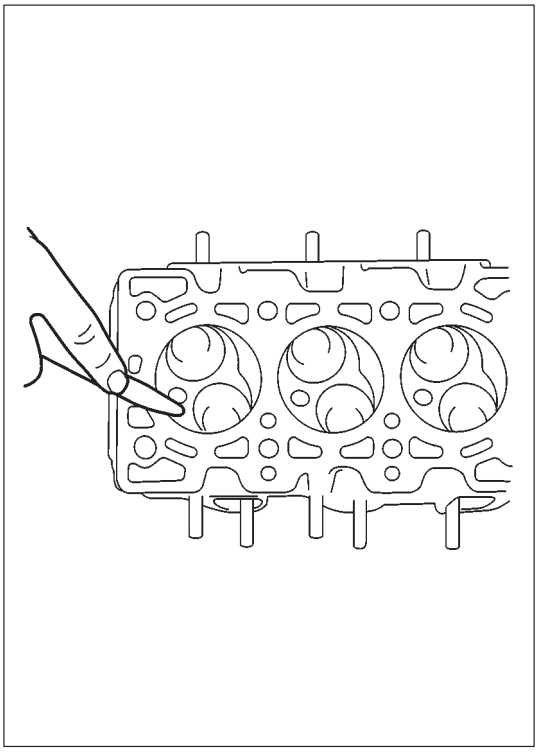

Cylinder head

- De-carbon cylinder head:
  Deposits of carbon will be found on its combustion chamber surfaces and exhaust ports. Remember, overheating tendency and loss of output are often due to excessive carbon accumulation. De-carbon valves, too.

  NOTE:
  Do not use any sharp-edged tool to scrape off carbon. Be careful not to scuff or nick metal surfaces when de-carboning. This applies to valves and valve seats, too.

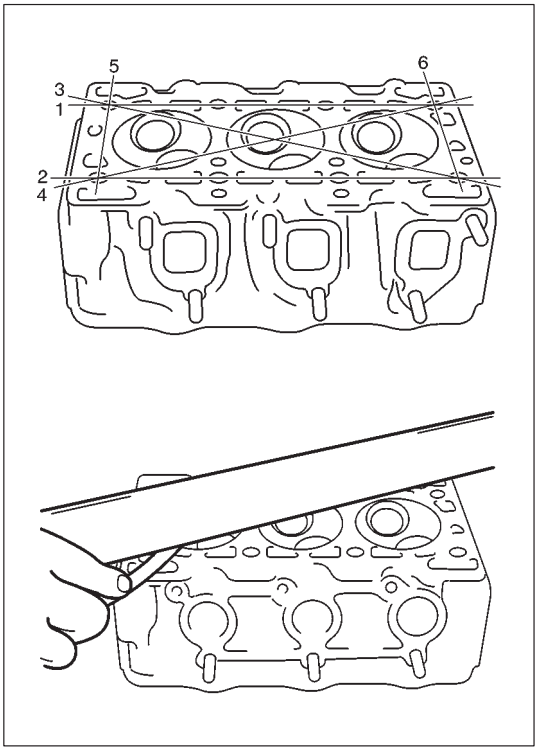

- Distortion of gasketed surface:
  Using a straightedge and thickness gauge, check the flatness at a total of 6 locations. If the limit, stated below, is exceeded, correct the gasketed surface with a surface plate and abrasive paper of about # 400 (waterproof silicon carbide abrasive paper): place the paper on and over the surface plate, and rub the gasketed surface against the paper to grind off high spots. Should this fail to reduce the thickness gauge readings to within the limit, replace the cylinder head.

  Leakage of combustion gases from this gasketed joint is often due to warped gasketed surface; such leakage results in reduced power output and hence a higher cost of fuel per kilometer.

Limit of distortion	0.05 mm (0.002 in.)

Checking exhaust manifold seating face

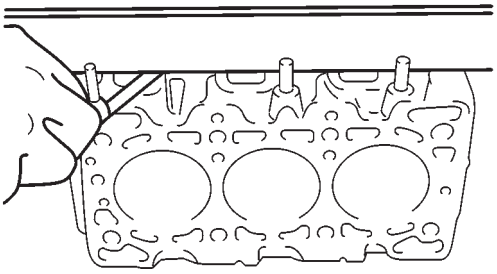

Checking intake manifold seating face

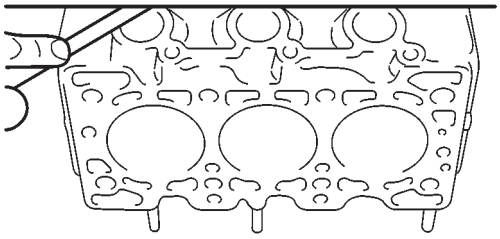

- Distortion of manifold seating faces:
  Check the seating faces of cylinder head for manifolds, using a straightedge and thickness gauge, in order to determine whether these faces should be corrected or the cylinder head replaced.

Limit of distortion	0.10 mm (0.004 in.)

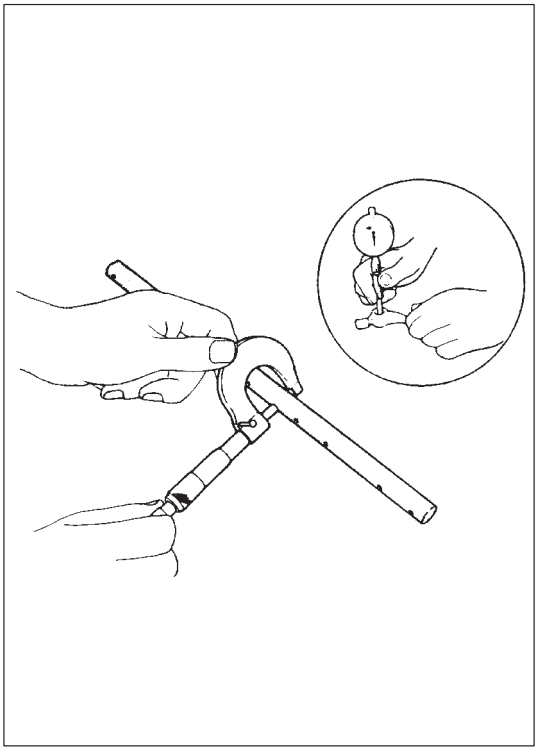

Rocker-arm shaft and rocker arms

- Wear:
  Check these parts for wear and, as necessary, replace them. The extent of wear is determined on the basis of two readings, one on rocker arm I.D. and the other on shaft diameter.

  NOTE:
  Use a micrometer on rocker-arm shaft and a bore gauge rocker arm. The difference between the two readings is the arm-to-shaft clearance on which a limit is specified. If the limit is exceeded, replace shaft or arm, or both.

Item	Standard	Limit
Rocker arm I.D.	15.000 – 15.018 mm (0.590 – 0.591 in.)	———
Rocker arm shaft dia.	14.983 – 14.994 mm (0.589 – 0.590 in.)	———
Arm-to-shaft clearance	0.006 – 0.035 mm (0.0002 – 0.0014 in.)	0.070 mm (0.0028 in.)

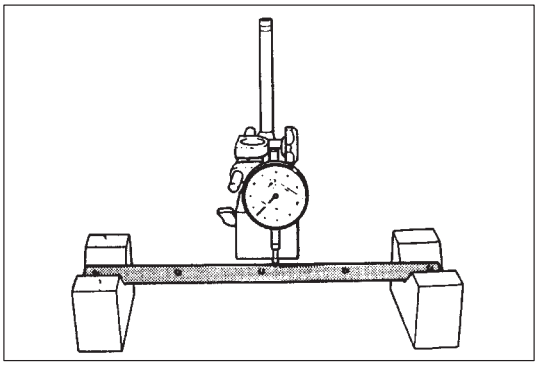

- Rocker-arm shaft deflection:
  Using “V” blocks and a dial gauge, check the shaft for straightness in terms of deflection.
  If the limit is exceeded, replace it.

Deflection limit	0.06 mm (0.0024 in.)

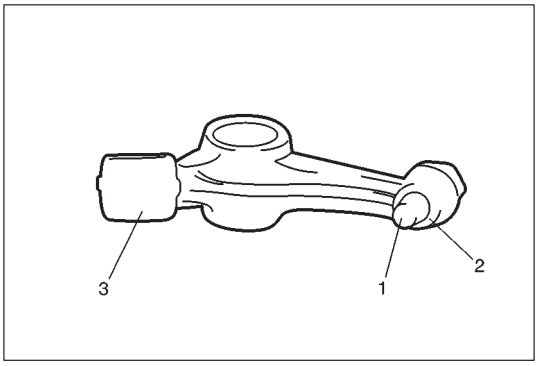

- Wear of rocker-arm and adjusting screw:
  If the tip (1) of adjusting screw (2) is badly worn, replace the screw. The arm must be replaced if its cam-riding face (3) is badly worn.

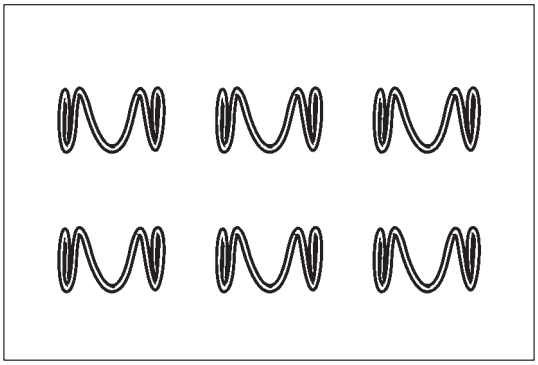

- Visually examine each rocker-arm spring for evidence of breakage or weakening. Be sure to replace springs found in bad condition.

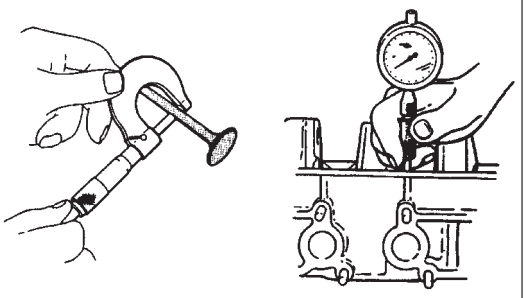

Valve guides

- Using a micrometer and bore gauge, take diameter readings on valve stems and guides to determine the stem clearance in the guide. Be sure to take a reading at more than one place along the length of each stem and guide.

Item		Standard	Limit
Valve stem diameter	In	6.965 – 6.980 mm (0.274 – 0.275 in.)	———
	Ex	6.950 – 6.970 mm (0.273 – 0.274 in.)	———
Valve guide I.D.	In	7.000 – 7.015 mm (0.275 – 0.276 in.)	———
	Ex		
Stem-to-guide clearance	In	0.020 – 0.050 mm (0.0008 – 0.0020 in.)	0.07 mm (0.0028 in.)
	Ex	0.030 – 0.065 mm (0.0012 – 0.0025 in.)	0.09 mm (0.0035 in.)

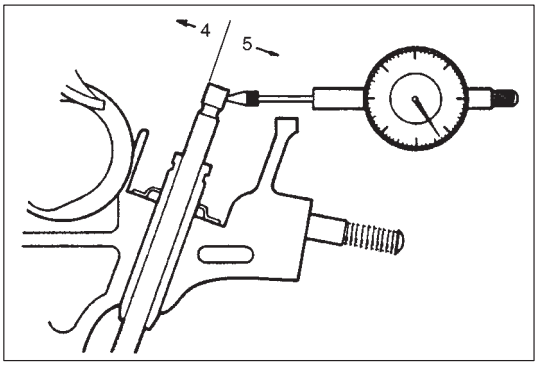

If the bore gauge is not available, check the end deflection of the valve stem in place with a dial gauge rigged. Move the stem end in the directions (4) (5) and determine whether replacement is necessary or not, by referring to these limiting values:

Valve stem end deflection	Intake	0.12 mm (0.0047 in.)
	Exhaust	0.16 mm (0.0063 in.)

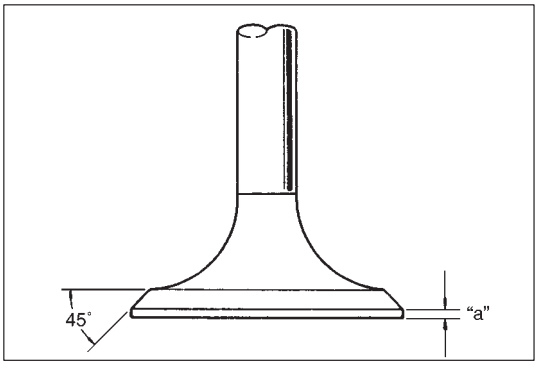

Valves

- Inspect each valve for wear, burn or distortion at its face and stem and, as necessary, replace it.
- Measure the thickness "a" of valve head. If the limit given to this thickness is exceeded, the valve must be replaced.

Valve head thickness "a"

Standard	Limit	
0.8 – 1.2 mm	Intake	0.6 mm (0.024 in.)
	Exhaust	0.7 mm (0.028 in.)

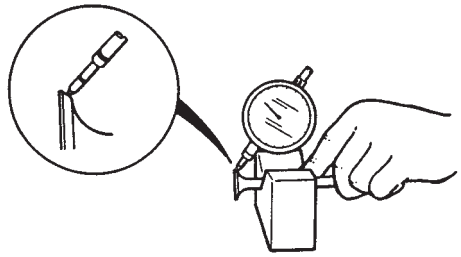

- Check the end face of each valve stem for wear. This face meets the rocker arm intermittently in operation, and might become concaved or otherwise irregular. As necessary, smoothen the end face with an oil stone and, if this grinding removes the end stock by as much as 0.5 mm (0.0196 in.) (as measured from the original face), replace the valve.

Limit on stock allowance of valve stem end face	0.5 mm (0.0196 in.)

- Check each valve for radial runout with a dial gauge and “V” block. The object of this check is to determine whether the valve stem is true and square relative to the head.

Limit on valve head radial runout	0.08 mm (0.0031 in.)

If the limit is exceeded, do not attempt to correct the stem; replace the valve, instead.

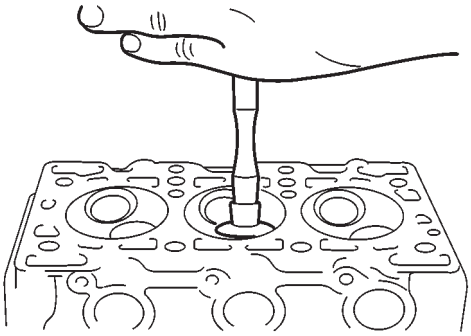

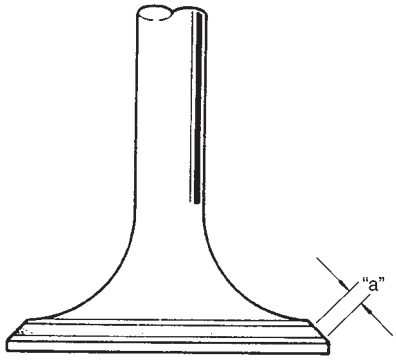

Valve seats

CAUTION:
The valves to be checked and serviced for seating width and contact pattern must be those found satisfactory in regard to stem clearance in the guide and also the requirements stated in the preceding part titled VALVES.

- Seating contact width:
  Produce a contact pattern on each valve in the usual manner, namely, by giving a uniform coat of marking compound (Red-lead paste) to the valve seat and by rotatingly tapping the seat with the valve head. The valve lapper (the tool used in valve lapping) must be used.

  The pattern produced on the seating face of the valve must be a continuous ring without any break, and the width “a” of the pattern must be within the stated range.

“a”	Standard seating width revealed by contact pattern on valve face	Intake	1.3 – 1.5 mm (0.05 – 0.06 in.)
		Exhaust	

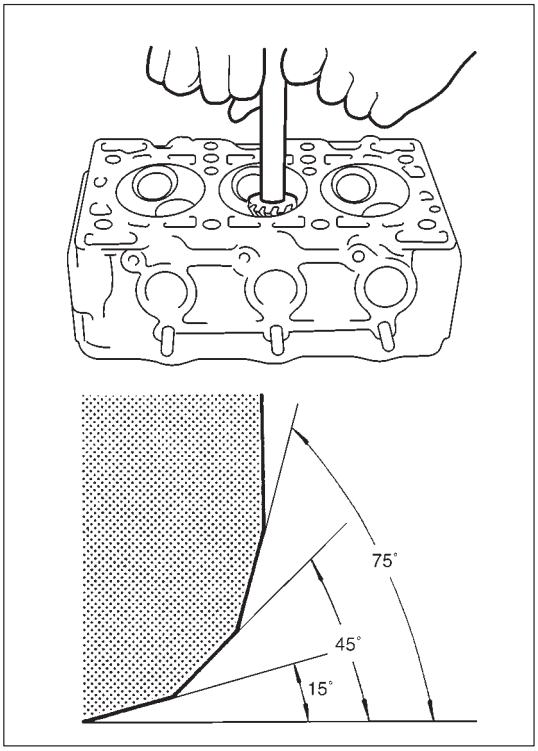

- Valve seat repair:
  A valve seat not producing a uniform contact with its valve or showing a width of the seating contact that is off the specified range must be repaired by regrinding or by cutting and regrinding and finished by lapping.
  1) EXHAUST VALVE SEAT: Use a valve seat cutter to make three cuts in the order illustrated in figure. Three cutters must be used: the first for making the 15° angle, the second for making the 75° angle and the last for making the 45° seat angle. The third cut must be made to produce the desired seat width.

Seat width for exhaust valve seat	1.3 – 1.5 mm (0.0512 – 0.0591 in.)

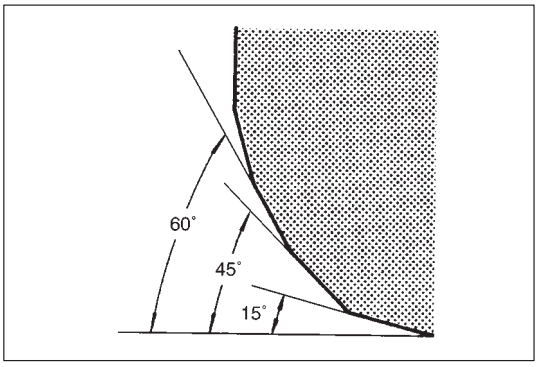

  2) INTAKE VALVE SEAT: The cutting sequence is the same as for exhaust valve seats but the second angle differs, as will be noted in figure.

Seat width for intake valve seat	1.3 – 1.5 mm (0.0512 – 0.0591 in.)

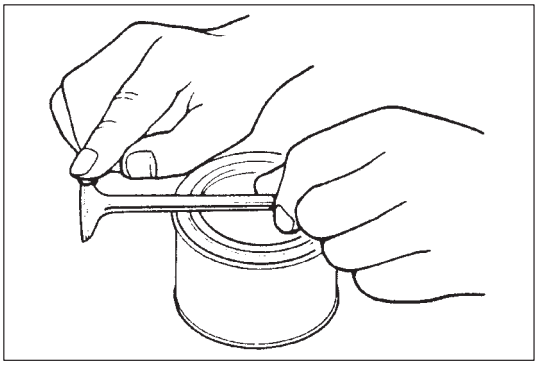

  3) VALVE LAPPING: Lap the valve on the seat in two steps, first with a coarsesize lapping compound applied to the face and the second with a fine-size compound, each time using a valve lapper according to the usual lapping method.

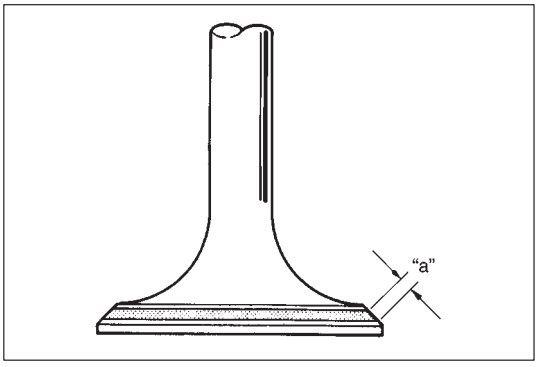

NOTE:
- **After lapping, wipe the compound off the valve face and seat, and produce a contact pattern with a marking compound (red-lead paste). Check to be sure that the contact is centered widthwise “a” on the valve seat and that there is no break in the contact pattern ring.**
- **Be sure to check and, as necessary, adjust the valve clearance after re-installing the cylinder head and valve mechanism.**

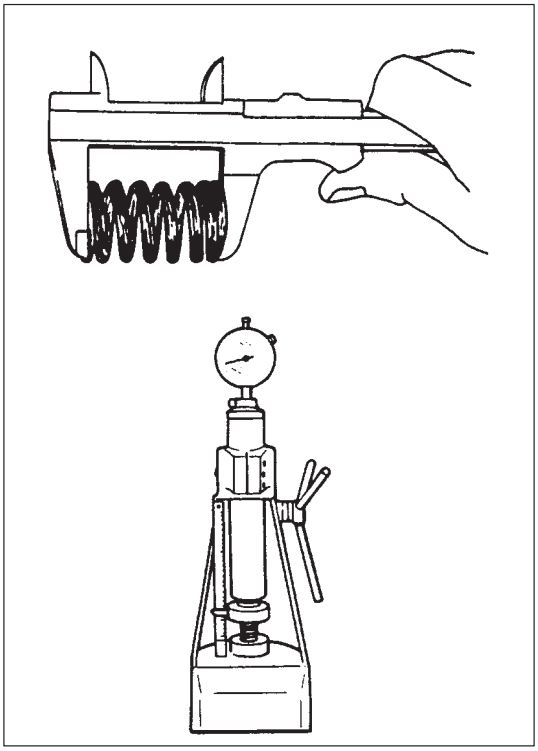

Valve springs

- Referring to the criterion data given below, check to be sure that each spring is in sound condition, free of any evidence of breakage or weakening. Remember, weakened valve springs can be the cause of chatter, not to mention the possibility of reducing the power output due to gas leakage caused by decreased seating pressure.

Item	Standard	Limit
Valve spring free length	48.9 mm (1.925 in.)	47.6 mm (1.874 in.)
Valve spring pre-load	23.6 – 27.6 kg for 40 mm (52.0 – 60.8 lb/1.57 in.)	22.0 kg for 40 mm (48.5 lb/1.57 in.)

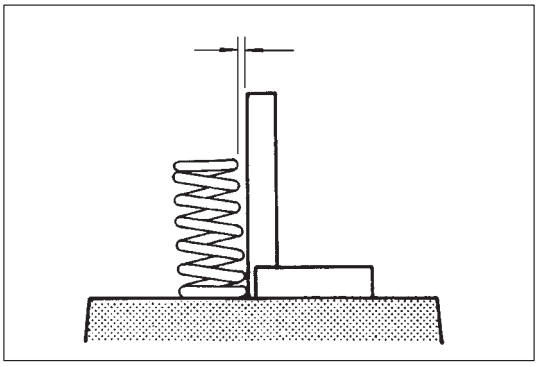

- Spring squareness:
  Use a square and surface plate to check each spring for squareness in terms of the clearance between the end of valve spring and the square. Valve springs found to exhibit a larger clearance than the limit must be replaced.

Valve spring squareness limit	2.0 mm (0.079 in.)

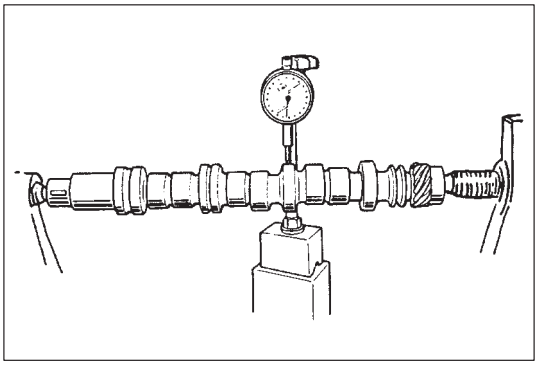

Camshaft

A noisy engine or an engine producing not enough power is frequently due to its camshaft excessively worn or bent or bowed. The wear could occur on its cams and journals.

- Camshaft runout:
  Hold the camshaft between two center points, with a dial gauge rigged up to measure its runout. Replace the camshaft if the amount of runout so measured exceeds the limit.

Camshaft runout limit	0.10 mm (0.0039 in.)

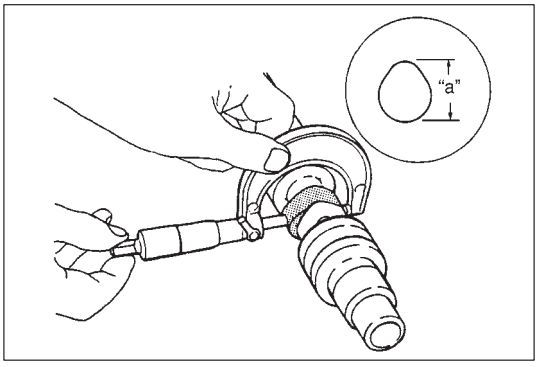

- Cam wear:
  Measure the height "a" of each cam. If any of the micrometer readings taken is down to or less than the limit, replace the camshaft.

Cam height "a"	Standard	Limit
Intake cam	36.152 mm (1.423 in.)	36.100 mm (1.421 in.)
Exhaust cam		
Pump drive cam	33.300 mm (1.311 in.)	33.000 mm (1.299 in.)

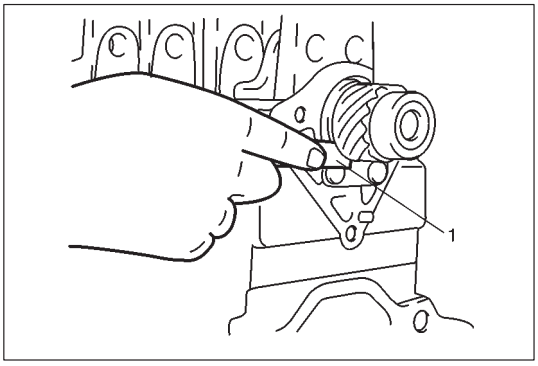

- Thrust clearance:
  Using a thickness gauge (1), measure this clearance as shown in figure, at the thrust plate. If the limit is exceeded, replace thrust plate or camshaft.

Item	Standard	Limit
Thrust clearance	0.050 – 0.150 mm (0.002 – 0.006 in.)	0.300 mm (0.012 in.)

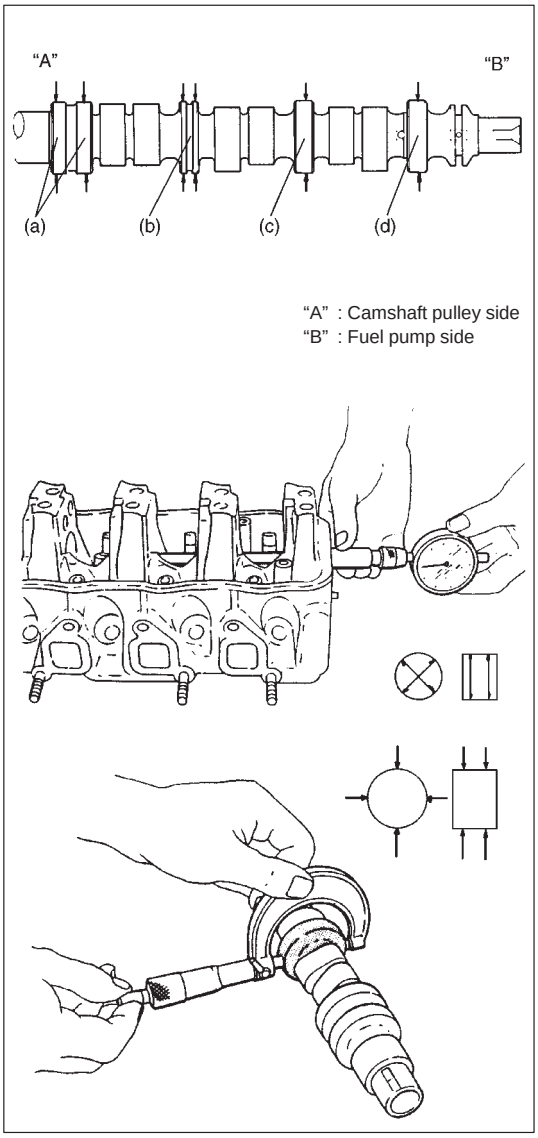

- Journal wear:
  Measure the journal diameter in two directions at two places to obtain four readings on each journal; and check the journal bores with a bore gauge, producing four readings on each. From these readings, compute the radial clearance (camshaft journal clearance). If the service limit is exceeded by any of the computed radial clearances, replace the camshaft and, as necessary, cylinder head, too.

Item	Standard	Limit
Journal clearance	0.050 – 0.091 mm (0.0020 – 0.0036 in.)	0.15 mm (0.0060 in.)

	Camshaft journal dia.	Journal bore dia.
(a)	43.425 – 43.450 mm (1.710 – 1.711 in.)	43.500 – 43.516 mm (1.712 – 1.713 in.)
(b)	43.625 – 43.650 mm (1.718 – 1.719 in.)	43.700 – 43.716 mm (1.720 – 1.721 in.)
(c)	43.825 – 43.850 mm (1.725 – 1.726 in.)	43.900 – 43.916 mm (1.728 – 1.729 in.)
(d)	44.025 – 44.050 mm (1.733 – 1.734 in.)	44.100 – 44.116 mm (1.736 – 1.737 in.)

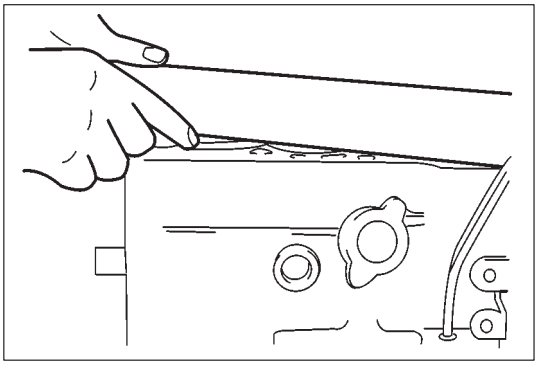

Cylinder block

- Distortion of gasketed surface:
  By the same method that is prescribed for checking the distortion of the gasketed surface of the cylinder head, check the top face of the cylinder block for distortion and, if the distortion is found to exceed the limit, machine the face with a surface grinder.

	Standard	Limit
Distortion of gasketed surface	0.03 mm (0.0012 in.)	0.05 mm (0.0020 in.)

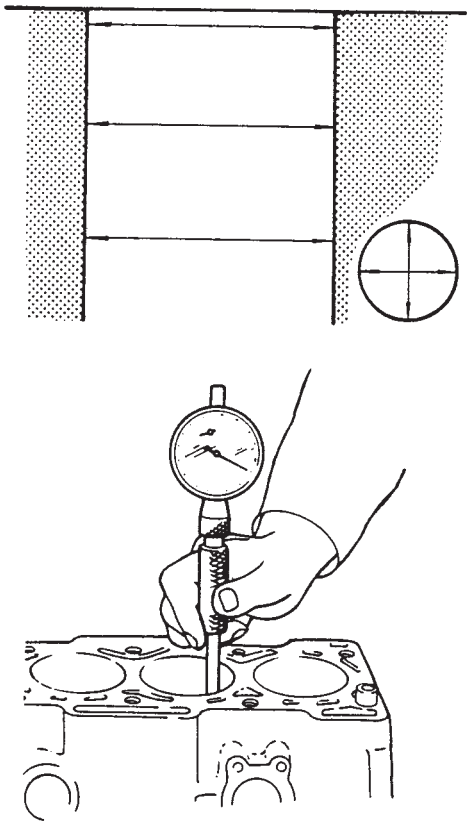

- Cylinder bore:
  Using a cylinder bore gauge, measure the diameter of each bore in two directions, longitudinal and transverse, at three places, top, middle and bottom, to obtain a total of 6 readings. On the basis of these readings taken on each bore, determine whether the maximum difference in diameter between any two bores exceeds the limit. If the limit, stated below, is exceeded or if the bore wall is badly scored or burned, re-bore all cylinders to the next oversize and use oversize pistons in engine reassembly.

Piston oversize	0.25 mm (0.0098 in.)
	0.50 mm (0.0196 in.)

CAUTION:
If any one of the three cylinders has to be re-bored, re-bore the three to the same next oversize. This is necessary for the sake of uniformity and balance.

When replacing the pistons or installing oversize pistons, be sure that the piston-to-cylinder clearance comes within the stated range:

Wear limit on bore	0.05 mm (0.0020 in.)

Piston-to-cylinder clearance	0.045 – 0.055 mm (0.0018 – 0.0022 in.)

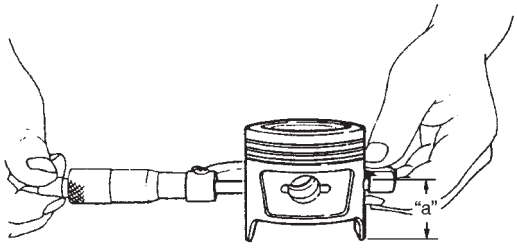

"a". 30 mm (1.18 in.)

Piston and piston rings

- Piston diameter:
  Piston-to-cylinder clearance, mentioned above, is equal to the bore diameter minus the piston diameter, which is to be measured by measuring at the level of the piston in the direction transverse to piston pin axis, as shown in below figure. This level from the skirt end is 30 mm (1.18 in.) high.

Piston diameter	Standard	68.450 – 68.475 mm (2.6949 – 2.6959 in.)
	Oversize: 0.25 mm (0.0098 in.)	68.720 – 68.740 mm (2.7055 – 2.7063 in.)
	0.50 mm (0.0196 in.)	68.970 – 68.990 mm (2.7154 – 2.7161 in.)

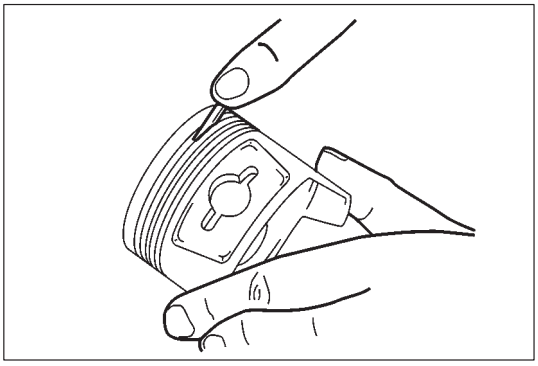

- Inspect the outer surface of each cylinder for evidence of burn and for scratch or groove marks. Minor flaws can be removed by grinding with fine-grain sandpaper.
- De-carbon the piston crown and ring grooves, using a soft-metal scraping tool.

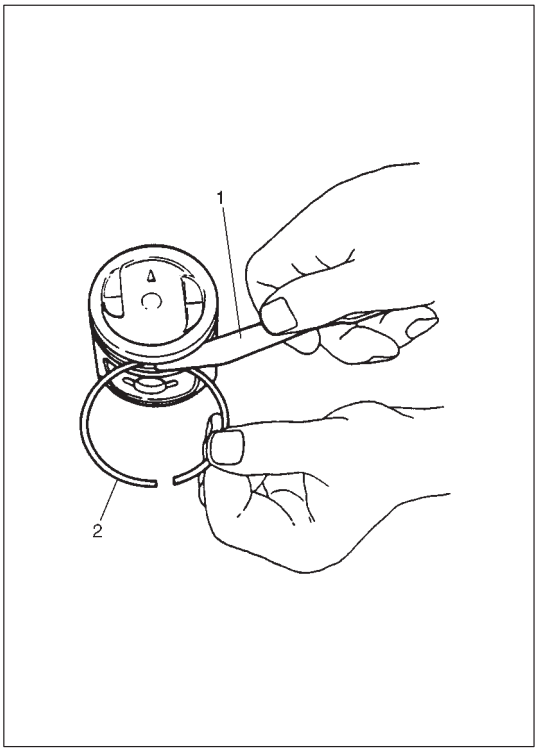

- Ring clearance in the groove:
  Using a thickness gauge (1), check each piston ring (2) in its groove for side clearance and, if the limit stated below is exceeded, measure the groove width and ring width to determine whether the piston or the ring or both have to be replaced.

Item		Standard	Limit
Ring clearance in the groove	Top ring	0.03 – 0.07 mm (0.0012 – 0.0028 in.)	0.12 mm (0.0047 in.)
	2nd ring	0.02 – 0.06 mm (0.0008 – 0.0024 in.)	0.10 mm (0.0039 in.)

Piston ring thickness	Top ring	1.47 – 1.49 mm (0.0579 – 0.0587 in.)
	2nd ring	
	Oil ring	0.45 mm (0.0177 in.)
Ring groove width	Top ring	1.52 – 1.54 mm (0.0598 – 0.0606 in.)
	2nd ring	1.51 – 1.53 mm (0.0594 – 0.0602 in.)
	Oil ring	2.81 – 2.83 mm (0.1106 – 0.1114 in.)

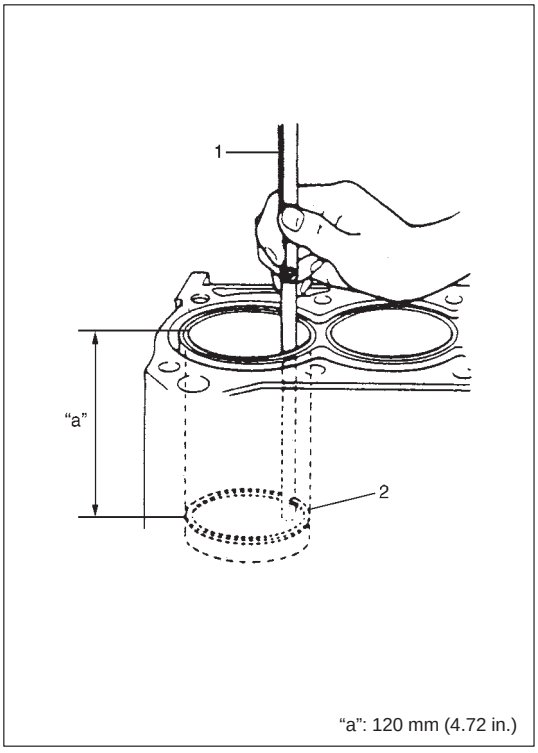

- Piston ring end gap:
  To measure the end gap, insert the piston ring (2) into the cylinder bore, locating it at the lowest part of the bore and holding it true and square; then use a thickness gauge (1) to measure the gap. If the gap measured exceeds the limit, replace the ring.

Item		Standard	Limit
Piston ring end gap	Top ring	0.15 – 0.30 mm (0.006 – 0.012 in.)	0.7 mm (0.028 in.)
	2nd ring	0.10 – 0.30 mm (0.004 – 0.012 in.)	0.7 mm (0.028 in.)
	Oil ring	0.20 – 0.70 mm (0.008 – 0.028 in.)	1.8 mm (0.040 in.)

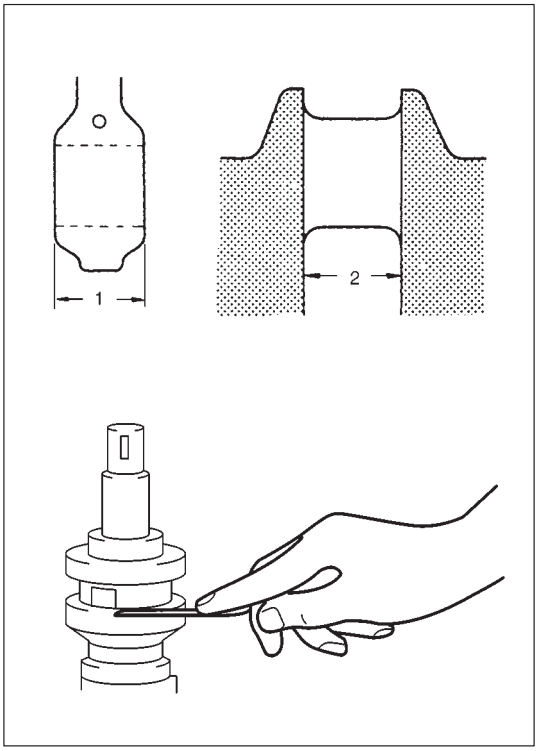

Connecting rods

- Big-end thrust clearance:
  Check the big end of each connecting rod for thrust clearance, with the rod fitted and connected to its crank pin in the normal manner. If the clearance measured is found to exceed the limit, the connecting rod or the crankshaft, whichever is responsible for the excessive clearance, must be replaced.

Item	Standard	Limit
Big-end thrust clearance	0.10 – 0.20 mm (0.004 – 0.008 in.)	0.30 mm (0.012 in.)

(1) Width of big end	21.95 – 22.00 mm (0.864 – 0.866 in.)
(2) Width of crank pin	22.10 – 22.15 mm (0.870 – 0.872 in.)

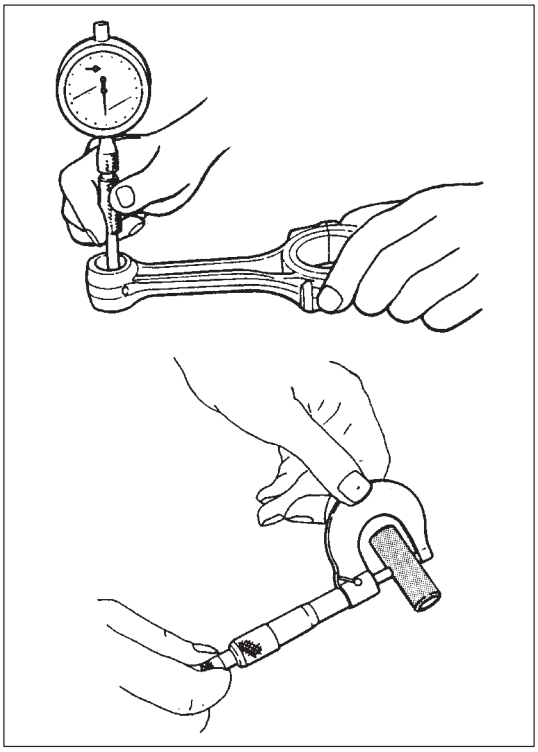

- Connecting rod alignment:
  Mount the connecting rod on the aligner to check it for bow and twist and, if the limit is exceeded, replace it.

Limit on bow	0.05 mm (0.002 in.)
Limit on twist	0.10 mm (0.004 in.)

- Inspect the small end of each connecting rod for wear and evidence of crack or any other damage, paying particular attention to the condition of its bush. Check the piston pin clearance in the small end. Replace the connecting rod if its small end is badly worn or damaged or if the clearance checked exceeds the limit.

Item	Standard	Limit
Pin clearance in small end	0.003 – 0.016 mm (0.0001 – 0.0006 in.)	0.05 mm (0.0020 in.)

Small-end I.D.	16.003 – 16.011 mm (0.6300 – 0.6304 in.)
Piston pin dia.	15.995 – 16.000 mm (0.6297 – 0.6299 in.)

Connecting-rod big end bearings

- Inspect the bearing shells for signs of fusion, pitting, burn or flaking and observe the contact pattern. Bearings found in defective condition through this inspection must be replaced.

CAUTION:
Bearing shells are not meant to be repaired by scraping or grinding with sandpaper or by any machining. The remedy is to replace them.

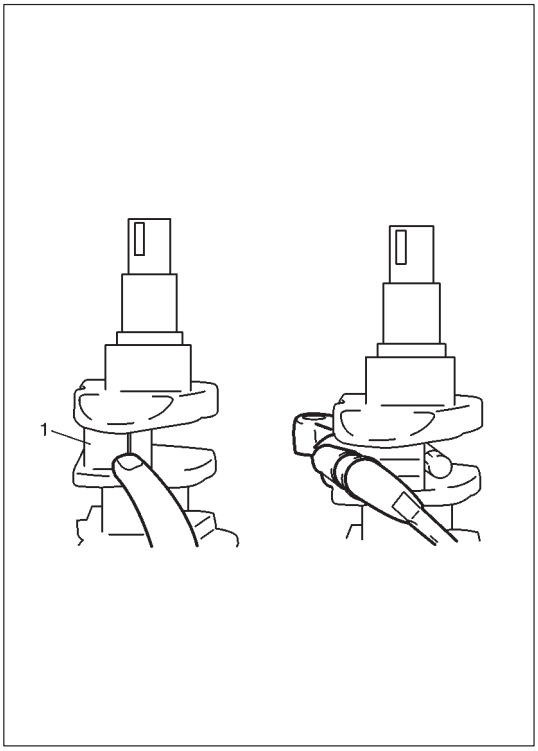

- Crankpin-to-bearing clearance:
  Check this clearance by using gaging plastic (1). Here's how to use gaging plastic:
  1) Prepare, by cutting, a length of gaging plastic roughly equal to bearing width and place it axially on crankpin, avoiding the oil hole.
  2) Make up the big end in the normal manner, with bearing shells in place and by tightening the cap to the specification.

NOTE:
Never rotate crankshaft or turn connecting rod when a piece of gaging plastic is in the radial clearance.

Tightening Torque
(a): 30 N·m (3.0 kg-m, 22.0 lb-ft)

NOTE:
When fitting bearing cap to crankpin, be sure to discriminate between its two ends, right and left.

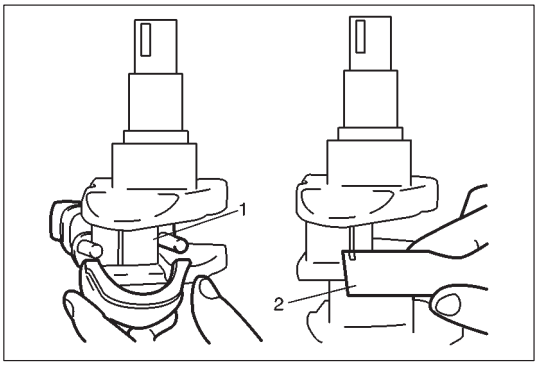

3) Remove the cap, and measure the width of flattened gaging plastic (1) piece with the gaging plastic envelope scale (2). This measurement must be taken at the widest part.

Item	Standard	Limit
Crankpin-to-bearing clearance	0.020 – 0.040 mm (0.0008 – 0.0016 in.)	0.080 mm (0.0031 in.)

4) If the limit, indicated above, is exceeded, re-grind the crankpin to the undersize and use the undersize bearing, both of which are stated below:

Bearing size	Crankpin diameter
Standard	37.982 – 38.000 mm (1.4953 – 1.4960 in.)
0.25 mm undersize	37.732 – 37.750 mm (1.4855 – 1.4862 in.)
0.50 mm undersize	37.482 – 37.500 mm (1.4757 – 1.4764 in.)

Where undersize bearings are used, the clearance specification is slightly lenient:

Radial clearance for undersize bearing	0.020 – 0.070 mm (0.0008 – 0.0028 in.)

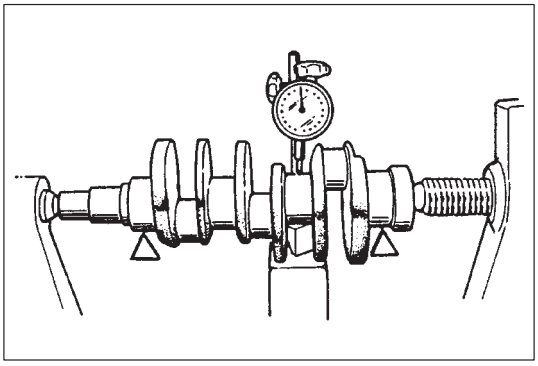

Crankshaft

- Runout:
  Check the crankshaft for runout and if the dial gauge reading exceeds the limit, replace the crankshaft.

Limit on crankshaft runout	0.06 mm (0.002 in.)

NOTE:
Measure the runout at the center journal. Rotate the crankshaft slowly.

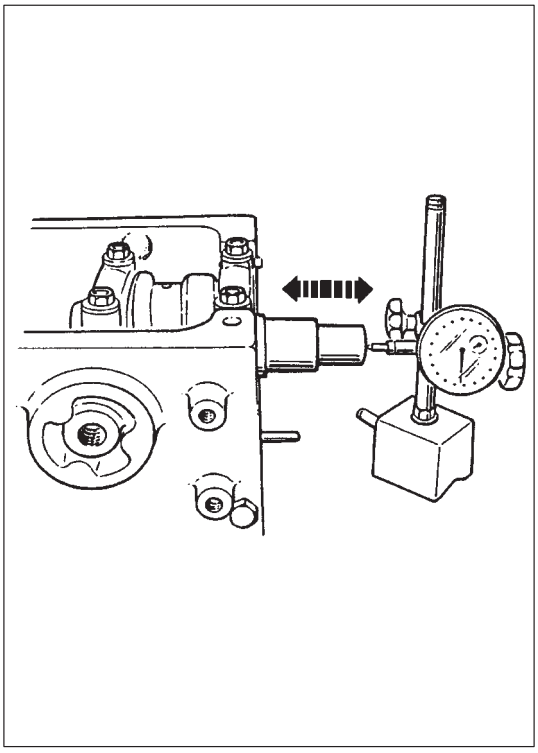

- Crankshaft thrust play:
  Measure this play with crankshaft set in the cylinder block in the normal manner, that is, with the thrust bearing fitted and the bearing caps installed. Tighten bearing cap bolts to specified torque. Use a dial gauge to read the displacement in axial (thrust) direction of the crankshaft. If the limit is exceeded, replace thrust bearing with new standard one or oversize one to obtain standard thrust play.

Item	Standard	Limit
Crankshaft thrust play	0.13 – 0.28 mm (0.005 – 0.011 in.)	0.35 mm (0.014 in.)

Thickness of crankshaft thrust bearing	Standard		2.500 mm (0.0984 in.)
	Oversize:	0.125 mm (0.0049 in.)	2.563 mm (0.1009 in.)
	Oversize:	0.250 mm (0.0098 in.)	2.625 mm (0.1033 in.)

Tightening Torque
(a): 46 N·m (4.6 kg-m, 33.5 lb-ft)

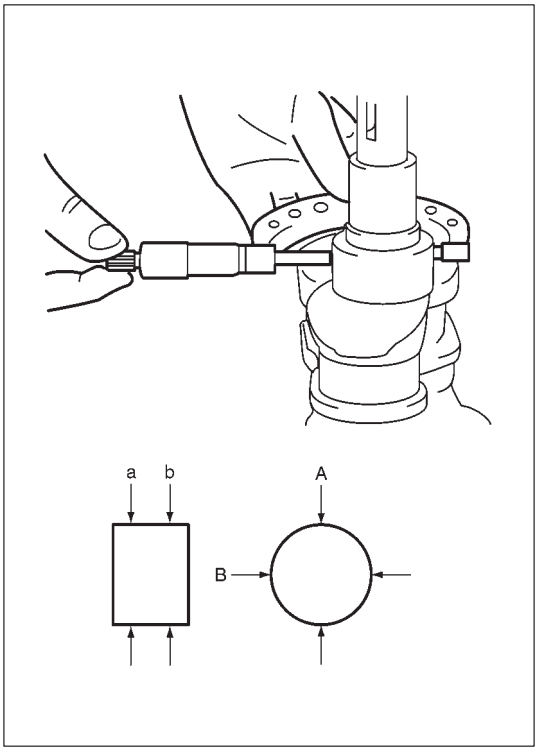

- Out-of-round and taper (uneven wear):
  An unevenly worn crankshaft journal or crankpin shows up as a difference in diameter at a cross section or along its length (or both). This difference, if any, is to be determined from micrometer readings taken as shown in figure.
  If any of the journals or crankpins is badly damaged or if the amount of uneven wear in the sense explained above exceeds the limit, repair (by re-grinding) or replace the crankshaft.

Limit on uneven wear	0.01 mm (0.0004 in.)

NOTE:
Where journal or crankpin re-grinding is necessary, finish the diameter to the size necessary for the undersize bearing. (Refer to Crankpin-to-bearing clearance of previous page.)

Crankshaft journal bearings

- Inspect the bearing shells for signs of fusion, pitting, burn or flaking and observe the contact pattern. Defective shells must be replaced.

> **CAUTION:**
> **As in the case of connecting-rod bearings, the journal bearing shells are not meant to be repaired by scraping or grinding with sandpaper or by any machining.**

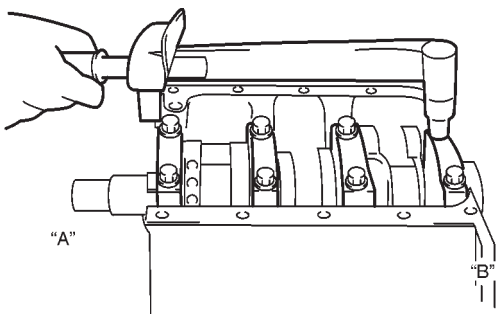

"A" : Crankshaft pulley side
"B" : Flywheel side

- Journal-to-bearing clearance:
  Check this clearance by using gaging plastic. The following method is based on the use of gaging plastic:
  1) Cut the gaging plastic stock to the required length (equal to the width of the bearing), and place it axially on the journal, avoiding the oil hole.
  2) Mount the crankshaft in the usual manner, tightening the bearing caps to the specified torque value. (It is assumed that a gaging plastic piece is pinched at each journal.)
     Do not rotate the crankshaft when gaging plastic is in.

     Tightening Torque
     (a): 46 N·m (4.6 kg-m, 33.5 lb-ft)

> **CAUTION:**
> **Each of the four bearing caps has an arrow marked on it. Be sure to position each cap with its arrow pointing to crankshaft pulley side and to match it (by the cylinder number) to its journal. Remember, the three cylinders are numbered, 1, 2 and 3, as counted from crankshaft pulley side.**

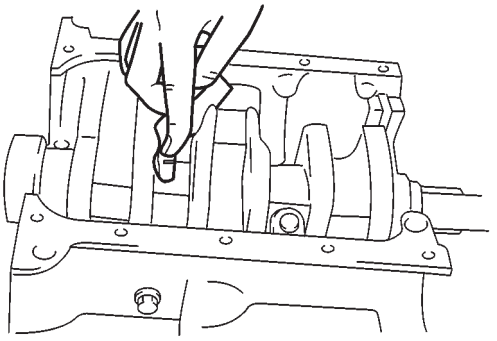

  3) Remove the caps. By referring to the envelop scale, measure the width of the widest part of the piece, and determine whether the radial clearance checked (obtained from the gaging plastic piece) is within the limit.

Item	Standard	Limit
Journal-to-bearing clearance	0.020 – 0.040 mm (0.0008 – 0.0016 in.)	0.080 mm (0.003 in.)

4) If the limit is exceeded, re-grind the journals to the undersize and use the undersize bearing.

Bearing size	Journal diameter
Standard	49.982 – 50.000 mm (1.9678 – 1.9685 in.)
0.25 mm undersize	49.744 – 49.750 mm (1.9584 – 1.9587 in.)
0.50 mm undersize	49.494 – 49.500 mm (1.9486 – 1.9488 in.)

Radial clearance for undersize bearing	0.020 – 0.070 mm (0.0008 – 0.0028 in.)

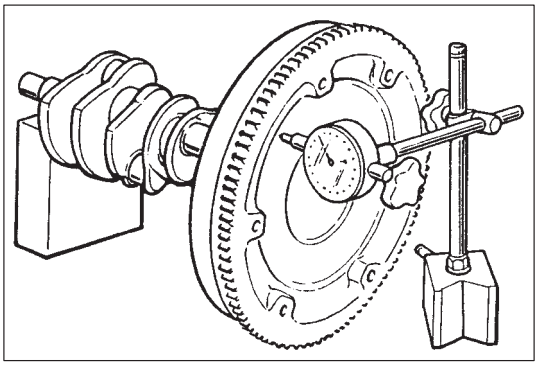

Flywheel

- Inspect the friction surface – the surface in contact with clutch disc – for wear and damage. Most of surface flaws, if any, can be removed by simple machining. A badly damaged flywheel must be replaced.
- Face runout:
  Check the flywheel for face runout with a dial gauge, as shown in figure. Be sure that the runout is less than the limit.

Limit on runout	0.2 mm (0.008 in.)

- Ring gear tooth wear:
  Inspect the teeth for wear and for evidence of crack, chipping or any other damage. Replace the ring gear if its teeth are found in bad condition.

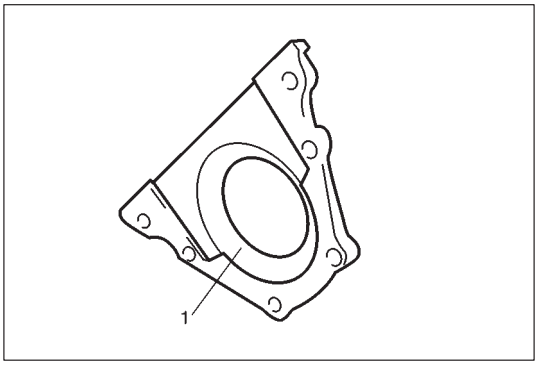

Oil seals

Carefully inspect the oil seals removed in disassembly, examining the lip portion (1) of each oil seal for wear and damage. Use of new oil seals in reassembly is recommended.

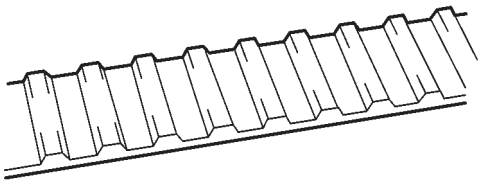

Timing belt and timing pulleys

Inspect the belt and pulleys for wear, cracks and signs of failure. Replace them as necessary.

CAUTION:
- **Do not bend the belt. Keep away oil and water from the belt. The belt must be kept clean.**
- **The pulleys and belt tensioner, too, must be kept clean and free of oil and water.**

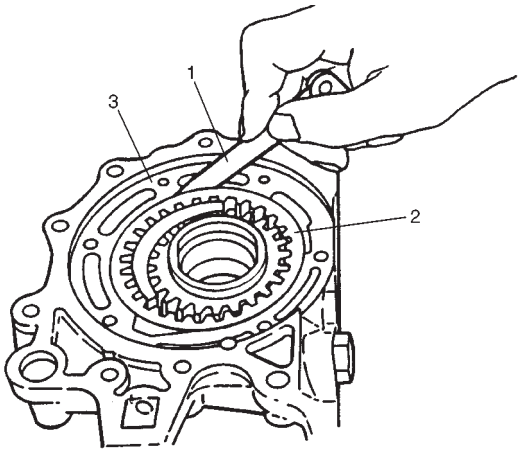

Oil pump

1) Inspect oil seal lip for fault or other damage.
   Replace as necessary.
2) Inspect outer and inner gears, gear plate, and oil pump case for excessive wear or damage.

- Radial clearance:
  Check radial clearance between outer gear (2) and case (3), using thickness gauge (1).
  If clearance exceeds its limit, replace outer gear or case.

Item	Standard	Limit
Radial clearance between outer gear and case	0.12 – 0.20 mm (0.005 – 0.008 in.)	0.3 mm (0.012 in.)

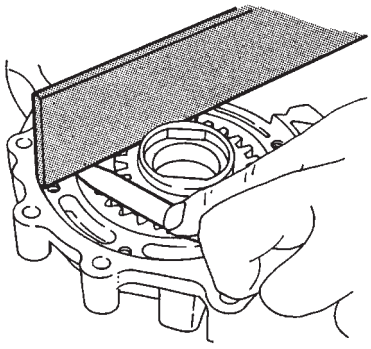

- Side clearance:
  Using straight edge and thickness gauge, measure side clearance.

Item	Standard	Limit
Side clearance	0.045 – 0.120 mm (0.0018 – 0.0047 in.)	0.17 mm (0.0067 in.)

ENGINE REASSEMBLY

NOTE:

- **All parts to be used in reassembly must be perfectly clean.**
- **Oil the sliding and rubbing surfaces of engine parts just before using them in reassembly. Use engine oil (Refer to Section 0B).**
- **Have the liquid packing ready for use. SUZUKI BOND No. 1215 is specified for the liquid. Use it wherever its use is specified in order to ensure leak-free (oil and water) workmanship of reassembly.**
- **There are many running clearances. During the course of engine reassembly, be sure to check these clearances, one after another, as they form.**
- **Gaskets, O-rings and similar sealing members must be in perfect condition. For these members, use replacement parts in stock.**
- **Tightening torque is specified for important fasteners – bolts and nuts in the main – of the engine and other components. Use torque wrenches and constantly refer to the specified values given in the text of this manual.**
- **Do not disregard the match marks provided on parts. Some of them are those given at the time of disassembly.**
- **There are many sets of parts. Crankshaft bearings, connecting rods, pistons, etc., are in combination sets. Do not disturb the combinations and try to see that each part goes back to where it came from.**

Engine reassembly is the reverse of engine disassembly as far as sequence is concerned, but there are many reassembling steps that involve measures necessary for restoring the engine as close to the factory-assembled condition as possible. Only those steps will be dealt with.

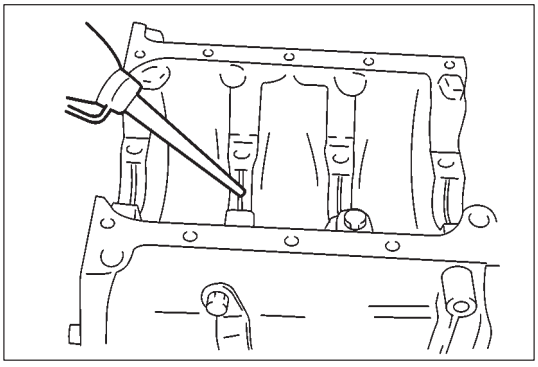

Crankshaft

Be sure to oil crankshaft journal bearings as shown.

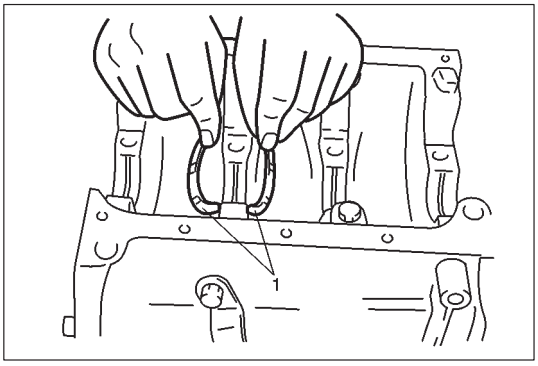

Thrust bearings (1) for the crankshaft are an item prone to escape the attention: be careful not to leave them out. These bearings go into place with their oil groove side facing the crank web.

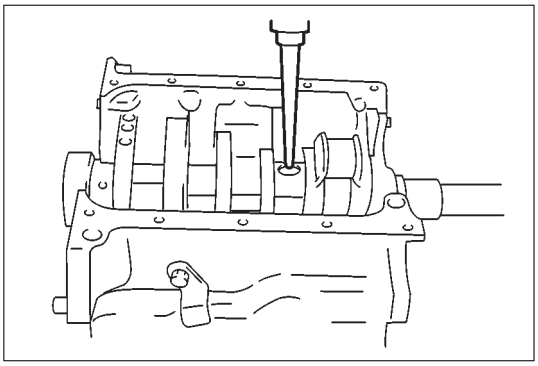

Be sure to oil crankshaft journals as shown.

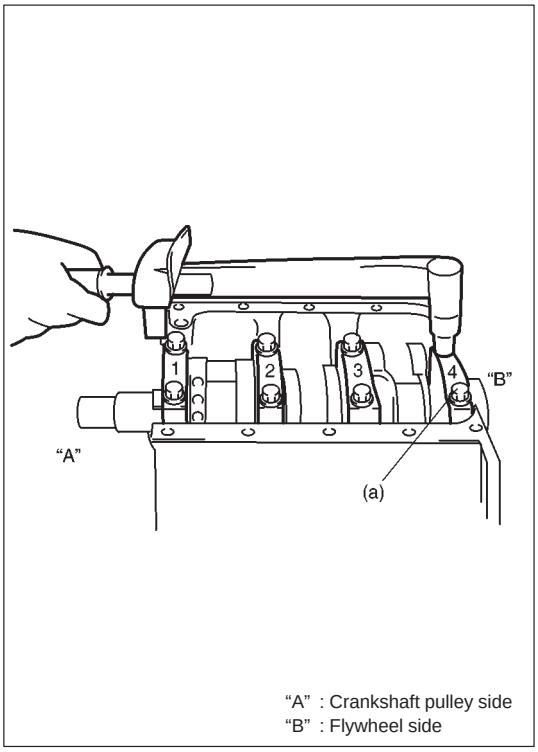

When fitting crankshaft bearing caps to journals after setting the crankshaft in place, be sure to point the arrow mark (on each cap) to crankshaft pulley side. Fit them sequentially in the ascending order, 1, 2, 3 and 4, starting from pulley side.

Tightening Torque
(a): 46 N·m (4.6 kg-m, 33.5 lb-ft)

Gradual and uniform tightening is important for bearing cap bolts. Make sure that the four caps become tight equally and uniformly progressively to the stated torque value.

NOTE:
After tightening cap bolts, check to be sure that crankshaft rotates smoothly when turned over by hand.

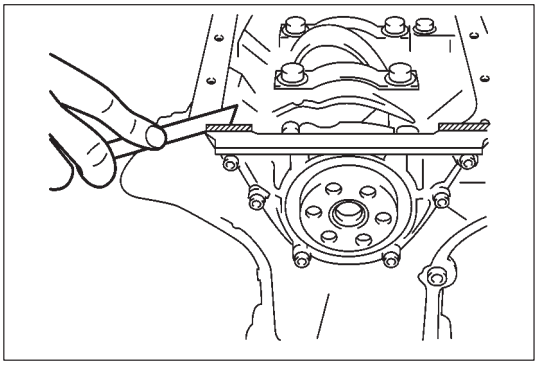

Oil seal housing

This housing demands a new gasket: do not reuse the gasket removed in disassembly. After bolting the housing to the block, the gasket edges might bulge out; if so, cut off the edges to make the joint seam flat and smooth: use a sharp knife.

NOTE:
Just before mounting the housing, oil the lip portion of the oil seal.

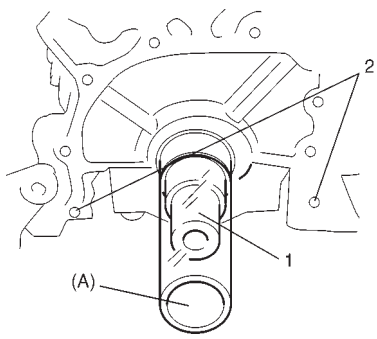

Oil Pump

NOTE:
Reassemble components of oil pump assembly according to following procedure, if disassembled.

a) Wash, clean and then dry all disassembled parts.
b) Apply thin coat of engine oil to inner and outer gears, oil seal lip portion, and inside surfaces of oil pump case and plate.
c) Install outer and inner gears to pump case.
d) Install gear plate.
e) After installing plate, check to be sure that gears turn smoothly by hand.

1) Install two oil pump pins (2) and oil pump gasket to cylinder block. Use new gasket.
2) To prevent oil seal lip from being damaged or upturned when installing oil pump to crankshaft (1), fit oil seal guide (special tool) to crankshaft, and apply engine oil to it.

   Special Tool
   (A): 09926-18210

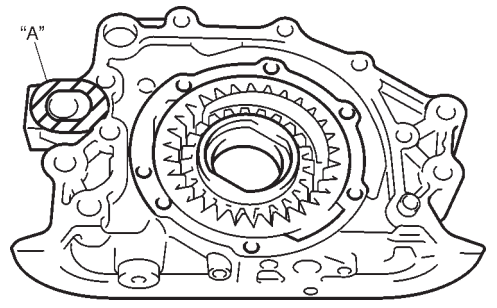

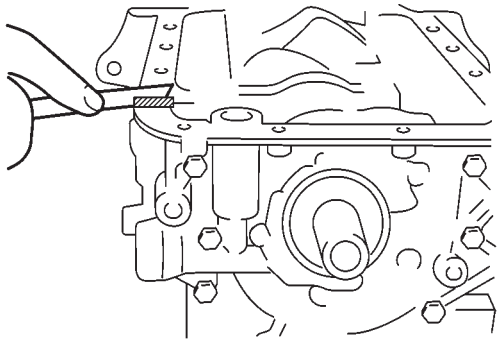

3) Before fitting the pump case, apply sealant to mating surfaces around the oil discharging port of both the oil pump case and the cylinder block, install oil pump to crankshaft and cylinder block. After installing oil pump, check to be sure that oil seal lip is not upturned, and then remove special tool.

   "A": Sealant 99000-31110

4) Edge of oil pump gasket might bulge out: if it does, cut bulge off with a sharp knife, making edge smooth and flush with end faces of the pump case and cylinder block.

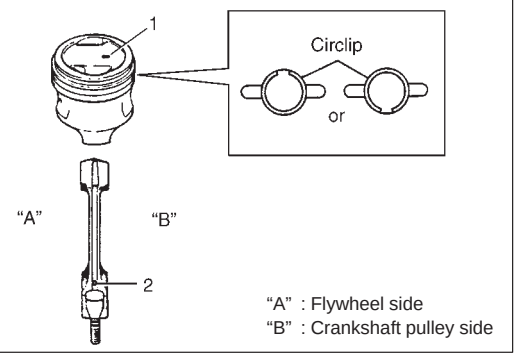

Piston and piston rings

POSITION OF PISTON RELATIVE TO CONNECTING ROD: The arrow (1) on the crown points to crankshaft pulley side, and the oil hole (2) comes on intake port side.

NOTE:
Before pinning piston to connecting rod, oil the small end and pin holes.

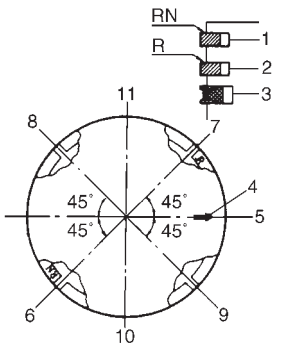

3. Oil ring
4. Arrow mark
5. Crankshaft pulley side
6. 1st ring end gap
7. 2nd ring end gap and oil ring spacer gap
8. Oil ring lower rail gap
9. Oil ring upper rail gap
10. Intake side
11. Exhaust side

Before fitting rings to piston, check to be sure that first ring (1) has RN mark and second ring (2) R mark. After mounting the three rings, distribute their end gaps as illustrated in figure. Remember, the marked side of each ring (1st and 2nd) comes on top side.

NOTE:
After fitting the rings, oil them in the grooves.

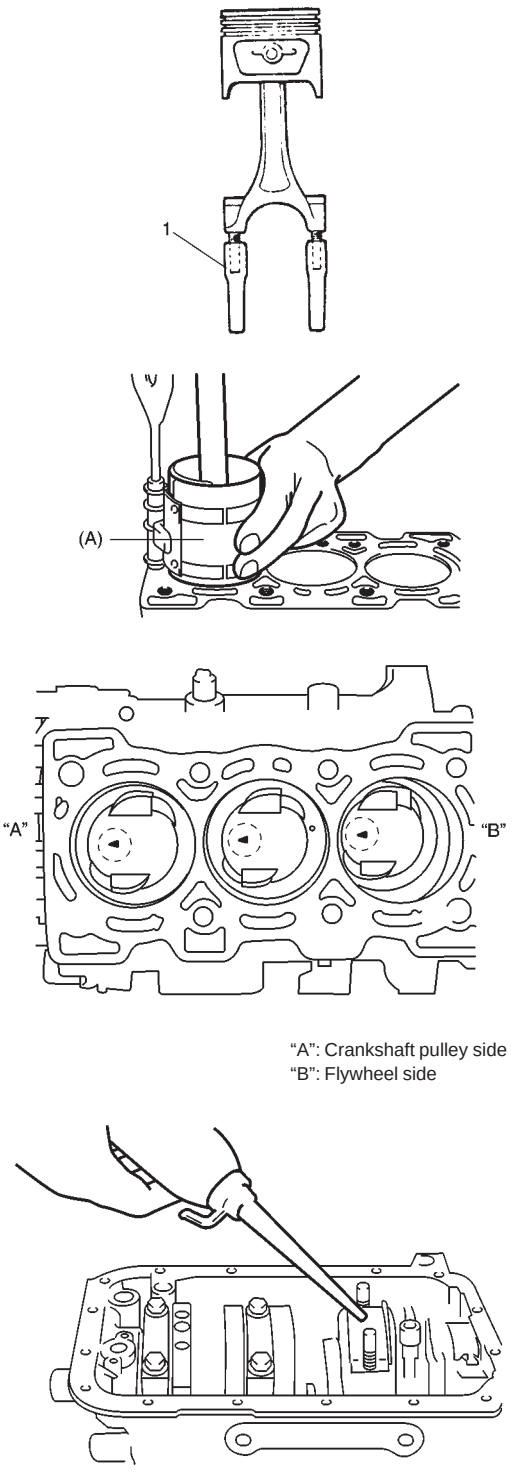

After covering the connecting rod bolts with plastic or rubber pipes (1) as shown in figure, use special tool (piston ring compressor), is mandatory in inserting pistons into cylinder block. Using this special tool, feed the piston and connecting rod combination into the bore from the upper side of cylinder block.

Special Tool
(A): 09916-77310

Pay attention to these reminders:
- Point the piston crown arrow to pulley side.
- Be sure that the number (marked on the crown at the time of disassembly) tallies with the cylinder number.
- Liberally oil the big-end bearings before fitting them to crankpins.
- Oil the bore just before feeding in the piston.

CAUTION:
When inserting the piston and connecting rod combination into the cylinder bore, care must be taken to ensure the big end section of the connecting rod and the connecting rod bolts do not contact the cylinder wall nor the crankshaft journal, otherwise damage can occur.

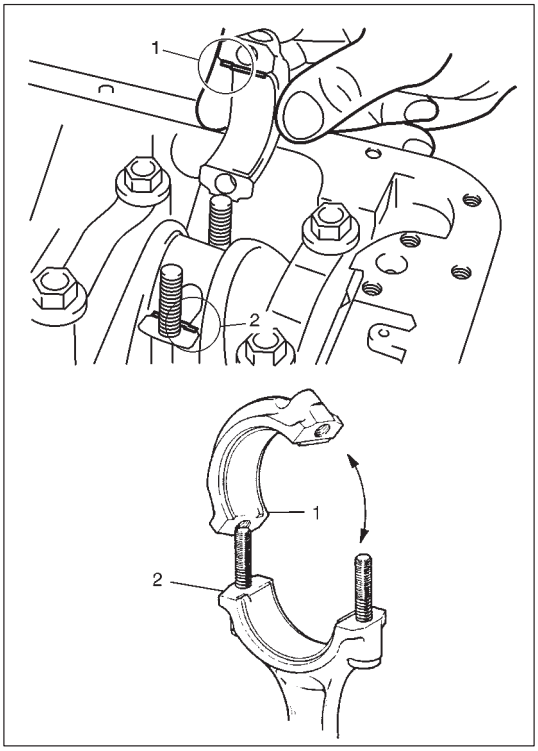

Connecting rods

Two stoppers (1), (2) determine the position of each big-end bearing cap relative to the big end. At the time of installing these caps, be sure to locate stopper (1) of cap in the direction of stopper (2).

NOTE:
The two stoppers do not coincide in longitudinal direction: the coincidence is meant in the direction shown in figures.

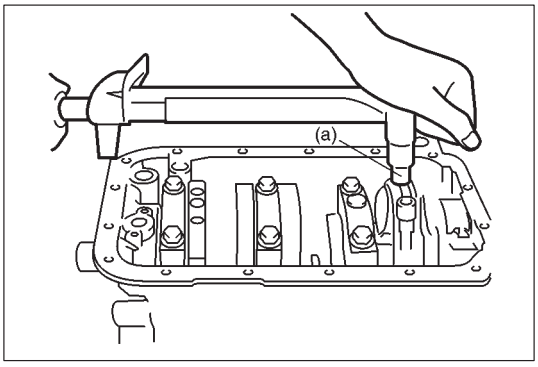

After fitting all three big-end bearing caps, start tightening them uniformly, being sure to equalize tightness between right and left on each cap. The sequence here is similar to that for crankshaft bearing caps.

Tightening Torque
(a): 30 N·m (3.0 kg-m, 22.0 lb-ft)

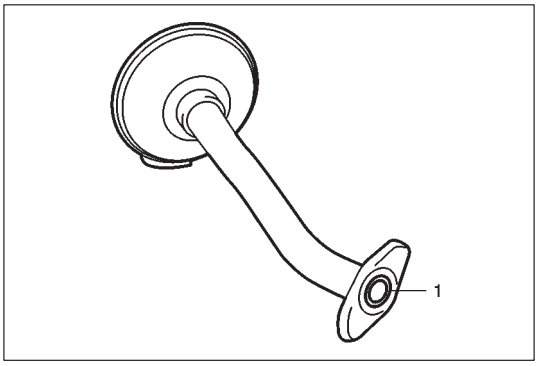

Oil pump strainer

Bear in mind that O-ring (1) is often forgotten and left out in reassembly. Absence of this ring defeats the purpose served by the strainer.

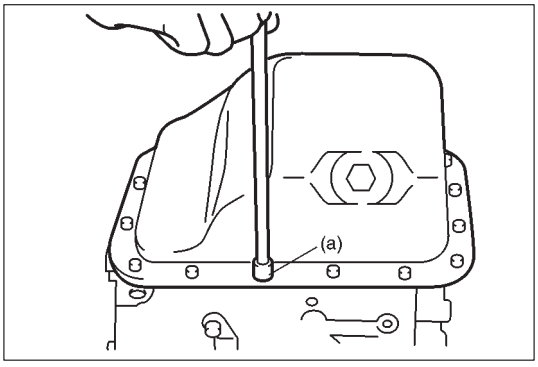

Oil pan

1) After fitting the oil pan to the block, run in the securing bolts and start tightening at the center: move the wrench outward, tightening one bolt at a time.
   Tighten bolts to specified torque.

   Tightening Torque
   (a): 5 N·m (0.5 kg-m, 4.0 lb-ft)

2) Install new gasket and drain plug to oil pan.
   Tighten drain plug to specified torque.

   Tightening torque for drain plug:
   50 N·m (5.0 kg-m, 36.5 lb-ft)

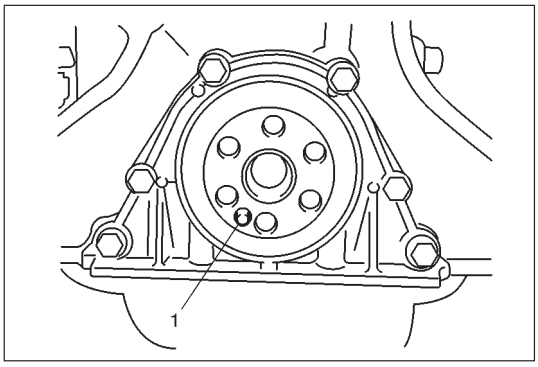

Flywheel

1) Check to be sure that locating pin (1) is studded in the crankshaft.
2) Install flywheel to crankshfat by using special tool hitched to flywheel so that crankshaft will not turn.

   Special tool:
   09924-17810

   Tightening Torque for flywheel bolt:
   43 N·m (4.3 kg-m, 31.5 lb-ft)

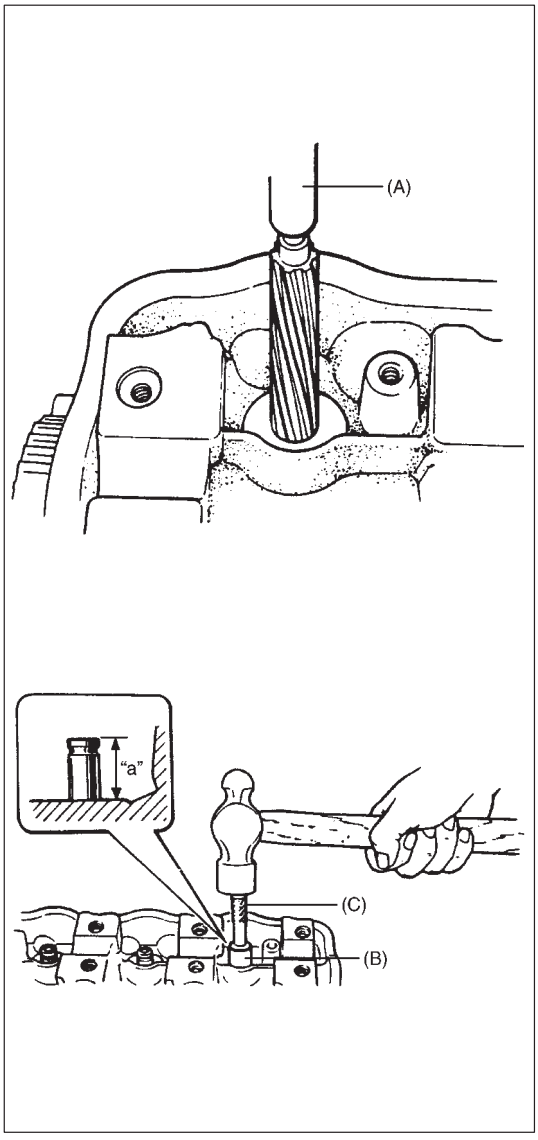

Cylinder head

NOTE:

- **Do not reuse valve guide once disassembled. Install new valve guide (Oversize).**
- **Intake and exhaust valve guide are identical.**

Valve guide oversize	0.03 mm (0.001 in.)
Valve guide protrusion (In and Ex)	14.0 mm (0.551 in.)

1) Install new valve guide into cylinder head.
   a) Before installing new valve guide into cylinder head, ream guide hole with special tool (12 mm reamer) to remove burrs, making sure that guide hole diameter after reaming comes within specified range.

Valve guide hole Dia. (In & Ex)	12.030 – 12.048 mm (0.4736 – 0.4743 in.)

   b) Install valve guide to cylinder head.
   Heat cylinder head uniformly at a temperature of 80 to 100°C (176 to 212°F), using care not to distort head, and drive new valve guide into hole with special tools.
   Drive in new valve guide until valve guide installer (Special tool) contacts cylinder head. After installation, make sure that valve guide protrudes "a" by 14.0 mm (0.551 in.) from cylinder head.

   Special Tool
   (A): 09916-37310
   (B): 09917-88210
   (C): 09916-57321

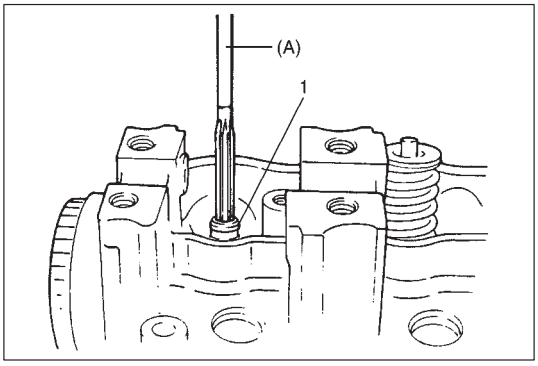

c) Ream valve guide (1) bore with special tool (7 mm reamer). After reaming, clean bore.

Special Tool
(A): 09916-34520

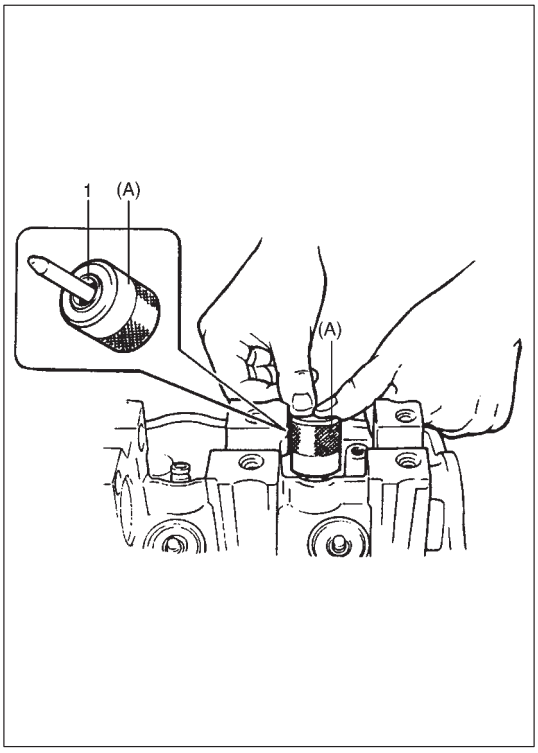

2) Install valve spring seat to cylinder head.
3) Install new valve stem seal (1) to valve guide.
After applying engine oil to seal and spindle of special tool (valve stem seal installer), fit oil seal to spindle, and then install seal to valve guide by pushing special tool by hand.
After installation, check to be sure that seal is properly fixed to valve guide.

Special Tool
(A): 09917-98210

NOTE:
- **Do not reuse oil seal disassembled. Be sure to install new oil seal.**
- **When installing, never tap or hit special tool with a hammer or else. Install seal to guide only by pushing special tool with hand. Tapping or hitting special tool may cause damage on seal.**

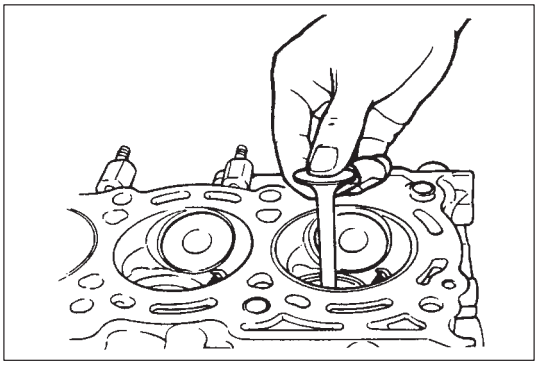

4) Install valve to valve guide.
Before installing valve to valve guide, apply engine oil to stem seal, valve guide bore, and valve stem.

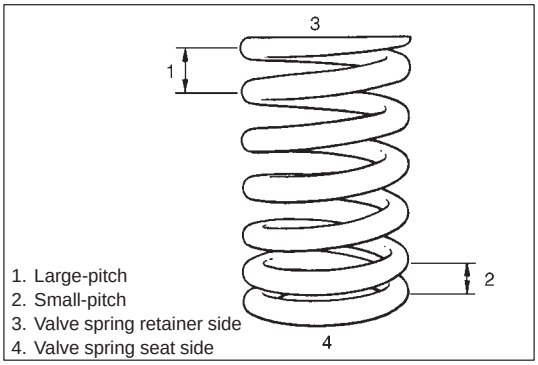

5) Install spring and spring retainer.
Each valve spring has top end (large-pitch end) and bottom end (small-pitch end). Be sure to position spring in place with its bottom end (small-pitch end) down to valve spring seat side.

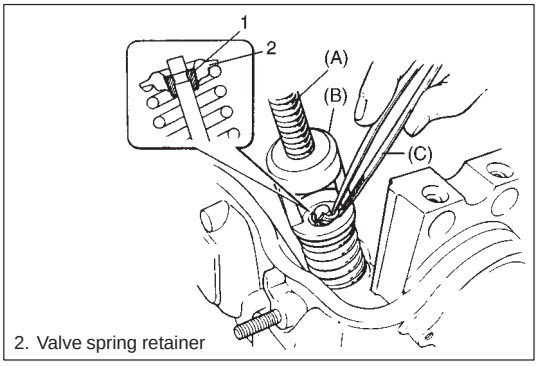

2. Valve spring retainer

6) Using special tool (Valve lifter), compress valve spring and fit two valve cotters (1) to groove provided in valve stem.

Special Tool
(A): 09916-14510
(B): 09916-48210
(C): 09916-84511

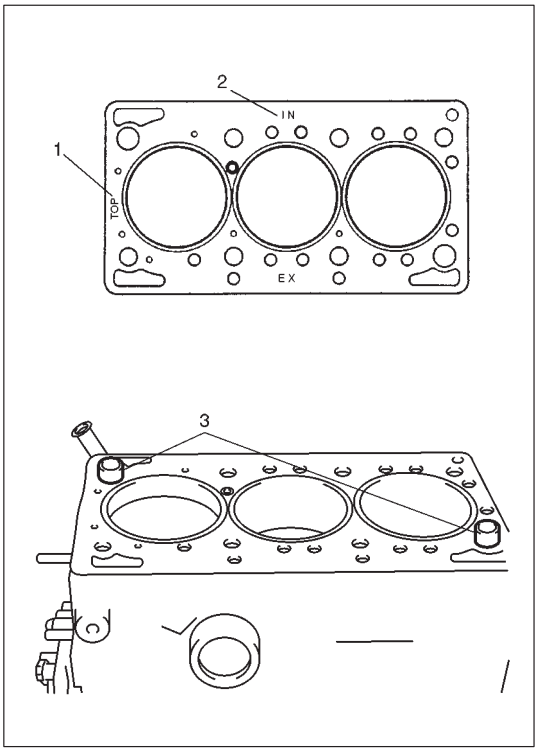

7) Be sure that locating pins (3) are in place and then install new head gasket, in such a way that “TOP” mark (1) provided on the gasket comes crankshaft pulley side, facing up (toward cylinder head side), “IN” mark (2) comes on intake manifold side and “EX” mark comes on exhaust side.

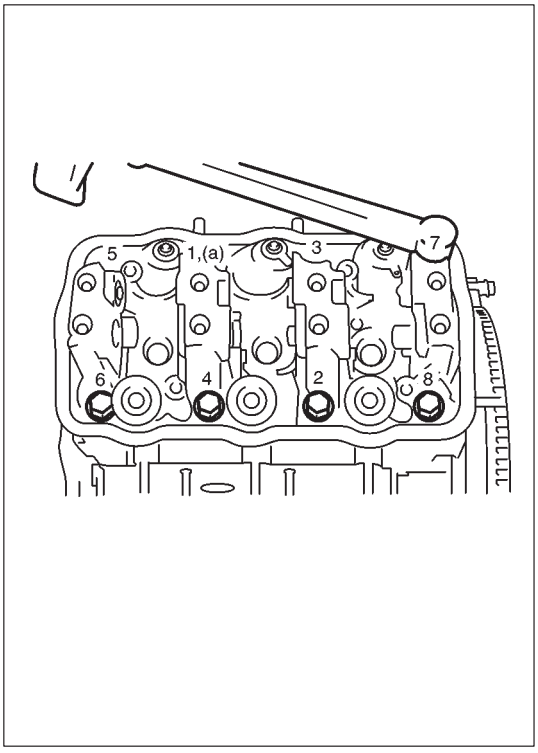

8) Install cylinder head onto cylinder block.
9) Apply engine oil to cylinder head bolts and tighten them gradually as follows.
   a) Tighten all bolts to 34 N·m (3.4 kg-m, 24.5 lb-ft) according to numerical order in figure.
   b) In the same manner as a), tighten them to 54 N·m (5.4 kg-m, 39.0 lb-ft).
   c) Loosen all bolts to 0 N·m (0 kg-m, 0 lb-ft), reversing to numerical order in figure.
   d) In the same manner as a) again, tighten them to 54 N·m (5.4 kg-m, 39.0 lb-ft).
   e) In the same manner as a) again, tighten them to specified torque.

   Tightening Torque
   (a): 68 N·m (6.8 kg-m, 49.5 lb-ft)

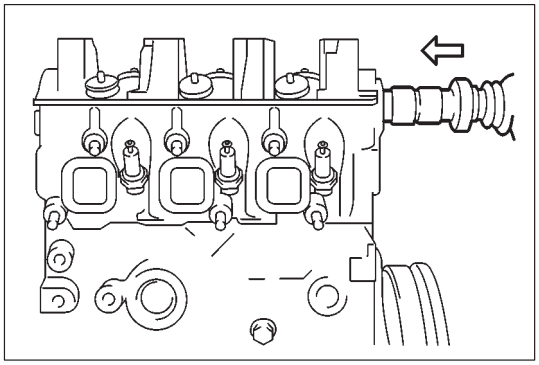

Camshaft

The camshaft goes into cylinder head from distributor gear case side. Before inserting it, be sure to oil its journals.

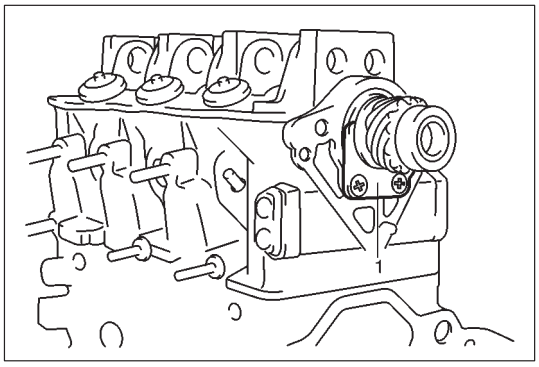

Be careful not to leave out the thrust plate (1) when installing the camshaft. After setting this shaft in place, with its thrust plate properly fitted, turn the shaft by hand to be sure it rotates smoothly.

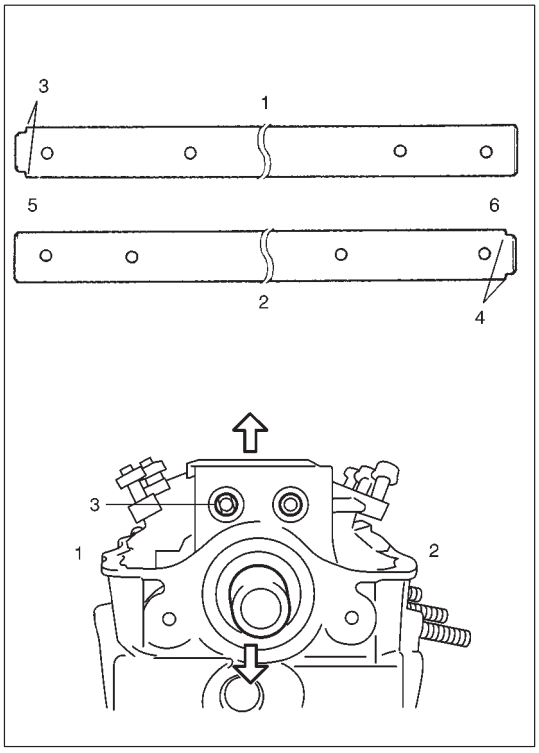

Rocker-arm shafts

1) Apply engine oil to rocker arms and rocker arm shafts.
2) Install rocker arms, springs and rocker arm shafts.

The two rocker-arm shafts are identical, there being no need to distinguish between the two. However, each shaft takes but one position in place. See figure.

- On the intake side (1), the stepped end (3) comes on camshaft pulley side (5).
- On the exhaust side (2), the stepped end (4) comes on flywheel side (6).

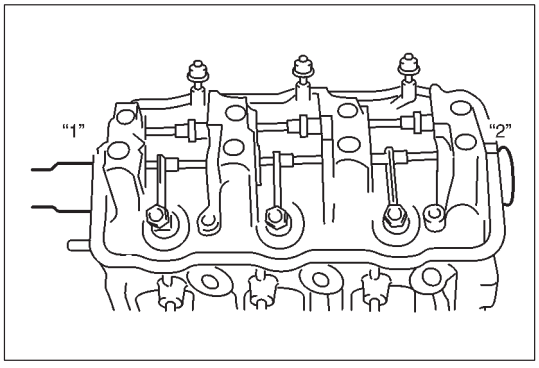

As to the positions of rocker arms and springs on each rocker-arm shaft, refer to figure. "Camshaft pulley side" is meant by "1"; "distributor gear side" by "2".

NOTE:

When installing rocker-arm shafts, be sure to have valve adjusting screws loosened fully but do not remove then.

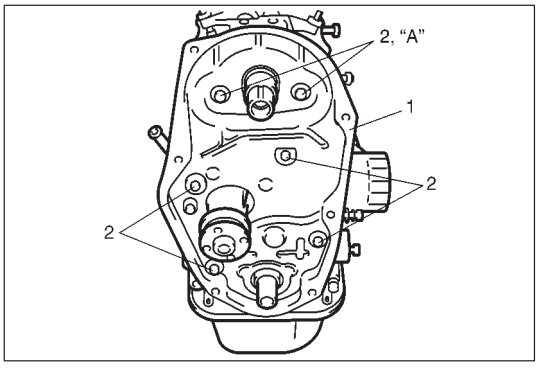

Timing belt inside cover

When reinstalling the inside cover (1) to cylinder head, apply sealant to the threads of upper side screws (2) as shown, because the bolt holes for the two extend into the interior of cylinder head.

"A" Sealant 99000-31110

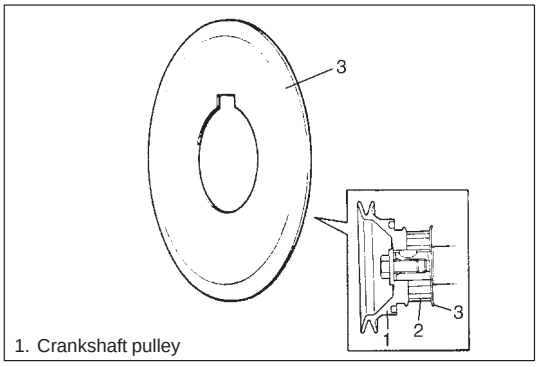

Crankshaft timing belt guide

This guide takes its position on crankshaft as shown in figure. Remember, one side of this guide (3) faces the cylinder block and the other side faces the timing belt pulley (2): the former side being distinct from the latter.

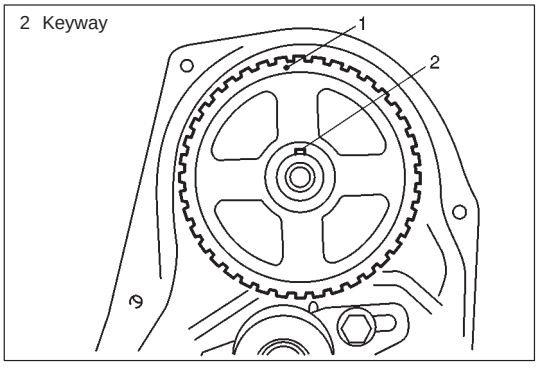

Camshaft and crankshaft timing belt pulleys

These pulleys have a punch-mark (1) to show that the marked side faces the timing belt outside cover. When installing each pulley, direct this mark to timing belt outside cover side.
Tighten camshaft pulley bolt to specified torque.

Tightening Torque for camshaft pulley bolt:
55 N·m (5.5 kg-m, 40.0 lb-ft)

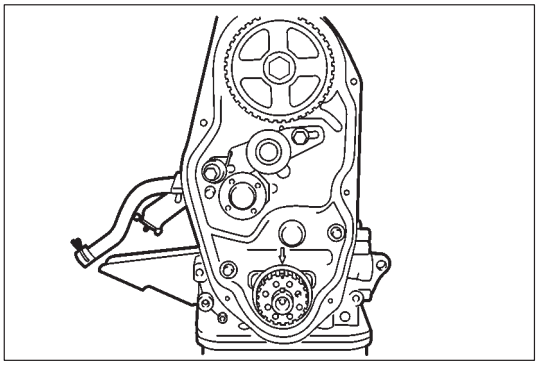

Timing belt

A certain sequence must be followed installing the timing belt. Here's the sequence:

1) Put the tensioner and the spring together before installing them as one to the timing belt cover. Tighten the bolts to the extent that the tensioner can be moved by hand easily.

   NOTE:
   When carrying out the above job, make sure to loosen each lock nut and then each valve clearance adjusting screw so that the camshaft and the pulley can rotate freely.

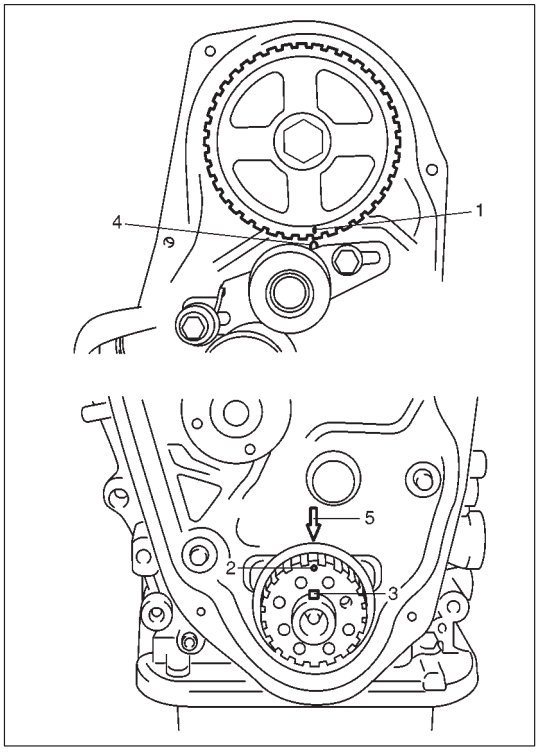

2) Timing belt inside cover has an embossed mark (4).
   Turn camshaft timing belt pulley to the position where punch-mark (1) meets mark (4).
3) The inside cover has another embossed mark (5). Turn crankshaft to match key-way (3) and punch-mark (2) of crankshaft timing belt pulley to mark (5).

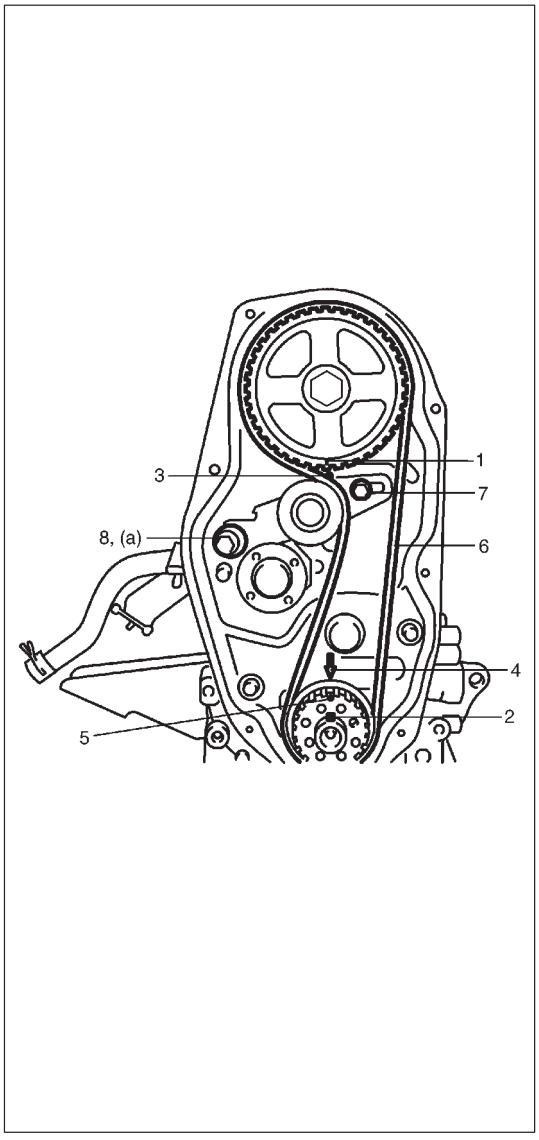

4) You now have the two pulleys correctly related to each other in angular sense. Under this condition, put on the timing belt in such a way that portion of belt indicated as (6) is free of any slack.

   NOTE:
   When installing timing belt, match arrow mark (⇨) on timing belt with rotating direction of crankshaft.

5) After putting the belt, hook the spring on the water pump securing bolt as shown in figure. The spring, with its own tension, adjust the belt tension to the specified value. Rotate the crankshaft clockwise fully twice and tighten the bolt (7) first and then the bolt (8).

   Tightening Torque
   (a): 19 N·m (1.9 kg-m, 14 lb-ft)

> **CAUTION:**
> **After setting the belt tensioner, turn crankshaft 2 rotations in clockwise direction to see if marks (1) (3) (4) (5) and crankshaft keyway (2) locate themselves on the same straight line. If they do not line up straight, the foregoing procedure must be repeated to satisfy this requirement.**

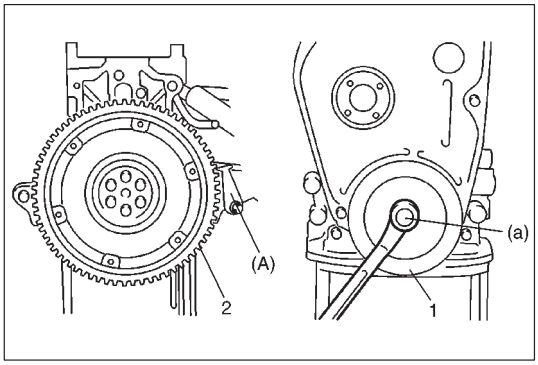

Crank Pulley

Install crank shaft pulley (1) by using special tool hitched to flywheel (2) so that crakshaft will not turn.

Special tool
(A): 09924-17810

Tightening Torque
(a): 55 N·m (5.5 kg-m, 40.0 lb-ft)

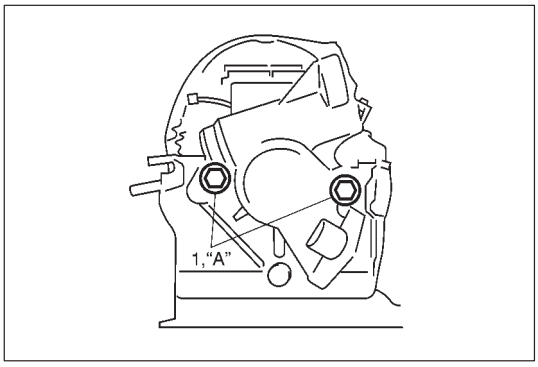

Distributor gear case

Bolts (1) are for securing this gear case to the cylinder block. When installing the case, be sure to apply sealant to the threads of these bolts.

"A": Sealant 99000-31110

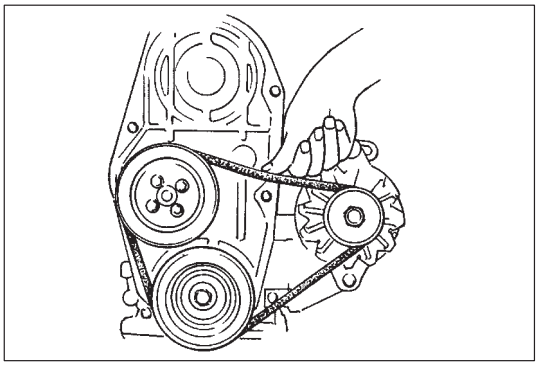

Generator

The water pump drive belt, by which the generator too is driven, must be tensioned to the specification after the alternator is installed. Check the tension at the middle point of the belt between water pump pulley and alternator pulley. To vary the tension for adjustment, displace the alternator in place.
For belt tension specification, refer to MAINTENANCE SERVICE of SECTION 0B in this manual.

Clutch disc and cover

Install clutch disc and cover.
For installation, refer to SECTION 7A CLUTCH in this manual and torque each bolt to specification.

Distributor

Install distributor to case.
For installation, be sure to refer to SECTION 6F IGNITION SYSTEM in this manual.

NOTE:
Check and adjust ignition timing with engine installed to car body and after installing and connecting all necessary parts. For procedure, refer to SECTION 6F IGNITION SYSTEM in this manual.

Valve lash (clearance) adjustment

Adjust valve lash of all intake and exhaust valves to specification, referring to description on valve lash in following item ENGINE MAINTENANCE SERVICE in this section.

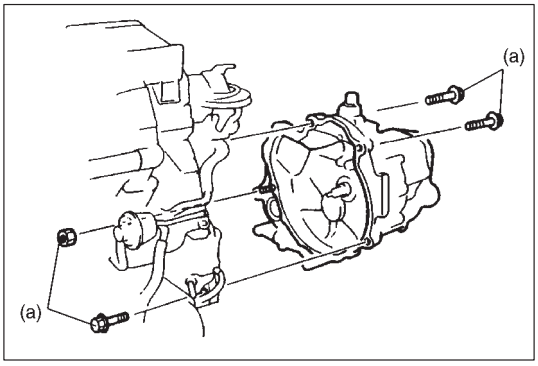

MOUNTING ENGINE

1) Install transmission to engine.

   Tightening Torque
   (a): 50 N·m (5.0 kg-m, 36.5 lb-ft)

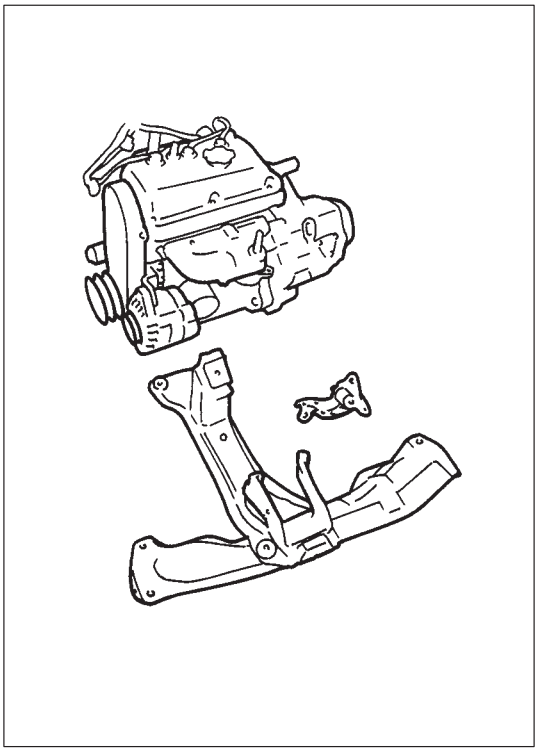

2) Install engine member to engine and then install engine assembly to vehicle.
   Install transmission left side mounting to transmission case and body.

3) Install A/C compressor, upper and lower bracket and then connect suction and discharge hoses to A/C compressor (if equipped). Refer to Section 1B.

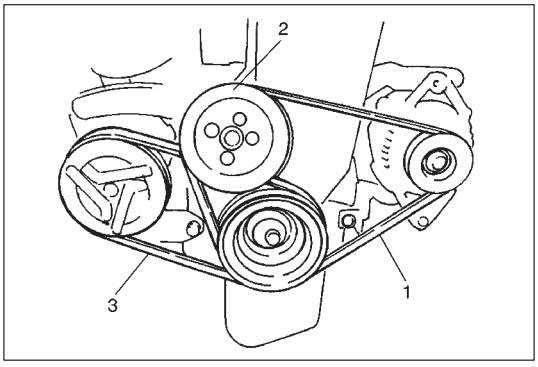

4) Install A/C compressor belt (3) and adjust its tension, refer to Section 1B (if equipped).
5) Install water pump belt (1) after installed water pump pulley (2) and adjust its tension, refer to Section 0B.

6) Install right and left drive shafts, refer to Section 4.
7) Install stabilizer bar, refer to Section 3D.
8) Connect gear shift control shaft and extension rod to transmission case.

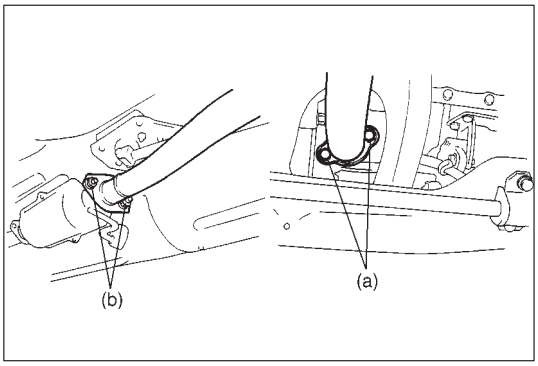

9) Install exhaust center pipe.

Tightening Torque
(a): 55 N·m (5.5 kg-m, 40.0 lb-ft)
(b): 55 N·m (5.5 kg-m, 40.0 lb-ft)

10) Refill transmission gear oil, refer to Section 0B.
11) Connect cables, hoses, wires and couplers which were disconnected in dismounting engine procedure.
    - Adjust accelerator play, refer to Section 6E1.
    - Adjust clutch pedal free travel, refer to Section 7C.
12) Install air cleaner assembly with air cleaner hose and breather hose.
13) Install radiator with cooling fan and reserve tank, refer to Section 6B.
14) Install engine hood and connect windshield washer hose.
15) Install front bumper.
16) Connect negative cable at battery.
17) Refill engine with engine oil, refer to Section 0B.
18) Refill cooling system with coolant, refer to Section 6B.
19) Evacuate and charge A/C system, refer to Section 1B (if equipped).
20) Upon completion of installation, verify that there is no fuel, coolant, transmission oil, engine oil or exhaust gas leakage at each connection.
21) Check ignition timing and adjust it as necessary, refer to Section 6F1.

MAINTENANCE SERVICES

Water pump belt

Adjust the belt tension as outlined in the SECTION 0B MAINTENANCE SERVICE.

Ignition timing

Refer to SECTION 6F IGNITION SYSTEM.

Valve clearance (lash)

		When cold (Coolant temperature is 15 – 25°C or 59 – 77°F)	When hot (Coolant temperature is 60 – 68°C or 140 – 154°F)
Valve clearance specification	Intake	0.13 – 0.18 mm (0.005 – 0.007 in.)	0.15 – 0.19 mm (0.006 – 0.007 in.)
	Exhaust	0.13 – 0.18 mm (0.005 – 0.007 in.)	0.15 – 0.19 mm (0.006 – 0.007 in.)

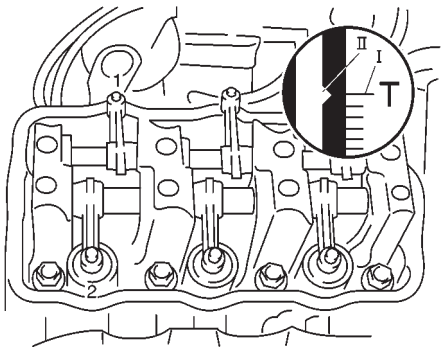

To check and adjust valve clearance with the engine mounted in place, that is, secured to the chassis, be sure to remove the cylinder head cover, so that you can take a good look at rocker arms and camshaft. Remember, a clearance reading is meaningful only when it is taken with the rocker arm clear of and not riding on the cam.

Remove the ignition timing check hole plug provided at the joint between engine and transmission to gain visual access to the “T” mark. Turn over crankshaft to index mark (I) to timing match mark (II), and see if the rocker arms of No. 1 cylinder are off the respective cam lobes (of camshaft); if so, valves (1) and (2), in figure, are ready for clearance checking and adjustment: if not, turn over crankshaft further by 360° to index mark (I) to mark (II) again. This 360° turning should bring about the desired state. (in which the two valves are ready for checking and adjustment).

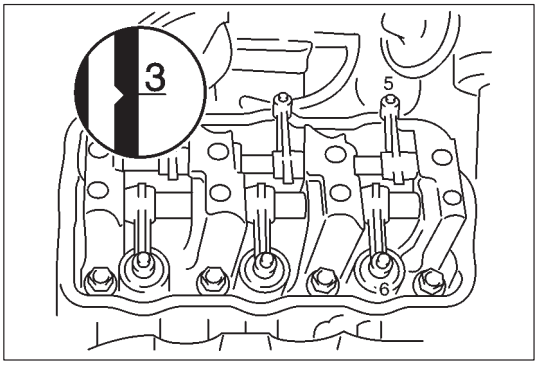

Turn over the crankshaft 240° from “T” mark, check and adjust the valves (5) and (6).

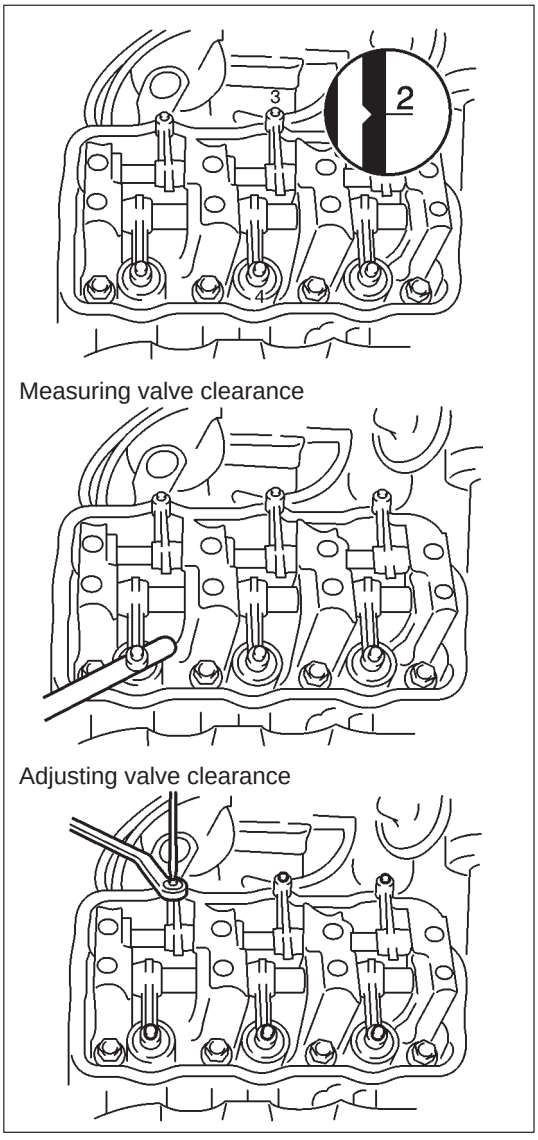

Turn over the crankshaft 240° from “3” mark, check and adjust the valves (3) and (4).

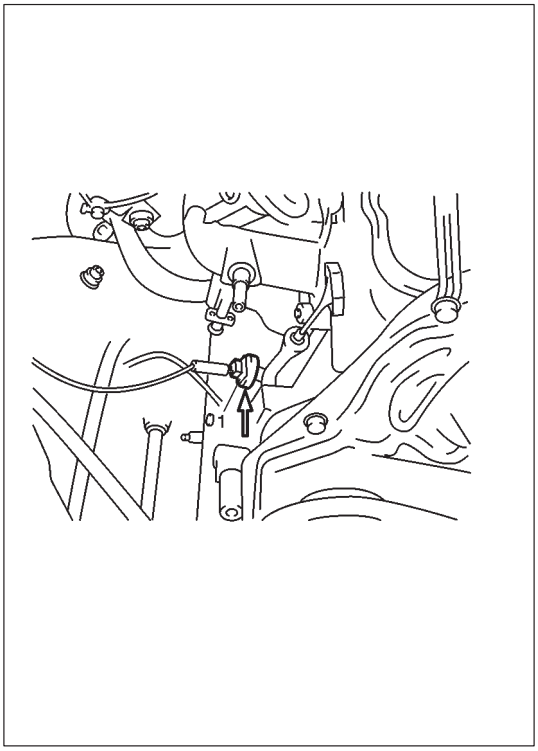

Oil pump discharge pressure measurement

NOTE:
Prior to checking oil pressure, check the following.

- **Oil level in oil pan.**
  If level is low, add oil up to Full level hole on oil level gauge.
- **Oil quality.**
  If oil is discolored, or deteriorated, change oil. For particular oil to be used, refer to table in SECTION 0B MAINTENANCE SERVICE.
- **Oil leak.**
  If leak is found, repair it.

1) Disconnect lead wire from oil pressure switch.
2) Remove oil pressure switch (1) from cylinder block.

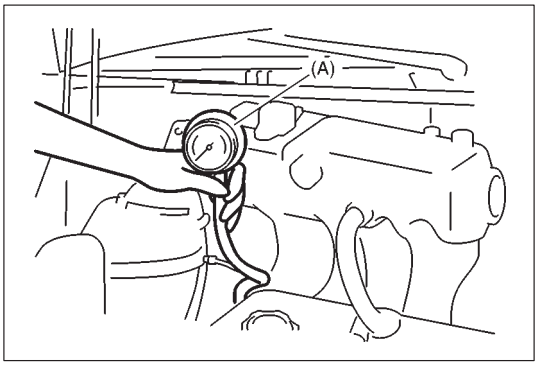

3) Install special tool (oil pressure gauge) to vacated threaded hole.

   Special Tool
   (A): 09915-77310

4) Start engine and warm it up to normal operating temperature.
5) After warming up, raise engine speed to 3,000 r/min and measure oil pressure.

Oil pressure specification	300 – 450 kPa (3.0 – 4.5 kg/cm^2, 42.7 – 64.0 psi) at 3,000 r/min (rpm)

6) After checking oil pressure, stop engine and remove oil pressure gauge.
7) Before reinstalling oil pressure switch, be sure to wrap its screw threads with sealing tape and tighten switch to specified torque.

   Tightening Torque
   Oil pressure switch: 14 N·m (1.4 kg-m, 10.5 lb-ft).

   NOTE:
   If sealing tape edge is bulged out from screw threads of switch, cut off edge.

8) After installing oil pressure switch, start engine and check switch for oil leakage.

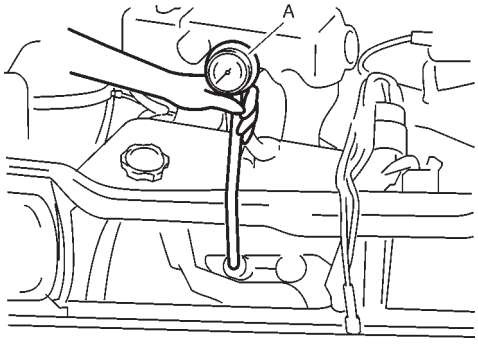

Compression pressure measurement

Check the compression pressure on all three cylinders, as follows:

1) Warm up engine.
2) Stop engine after warming up.

NOTE:
After warming up engine, place transmission gear shift lever in "Neutral" and set parking brake and block drive wheels.

3) Disconnect fuel injector wire harness connector.
4) Remove front grille, high-tension cords and all spark plugs.
5) Disconnect ignition coil wire harness at coupler.

WARNING:
Failure in disconnecting the coupler can cause spark to occur in engine room possibly resulting in a dangerous explosion.

6) Install special tool (Compression gauge) into spark plug hole.

Special Tool
(A): 09915-64510

7) Disengage the clutch (to lighten starting load on engine), and depress the accelerator all the way to make the throttle full-open.
8) Crank the engine with the starter motor, and read the highest pressure on the compression gauge.
9) Carry out the steps 5) through 7) on each cylinder to obtain three readings.

NOTE:
For measuring compression pressure, crank engine at least 400 r/min. by using fully charged battery.

	Compression pressure
Standard	1350 kPa (13.5 kg/cm^2, 192.0 psi)
Limit	1000 kPa (10.0 kg/cm^2, 142.2 psi)
Max. difference between any two cylinders	100 kPa (1.0 kg/cm^2, 14.2 psi)

10) Be sure to install spark plugs, high-tension cords and front grille.
11) Connect fuel injector and ignition coil wire harness connector securely.

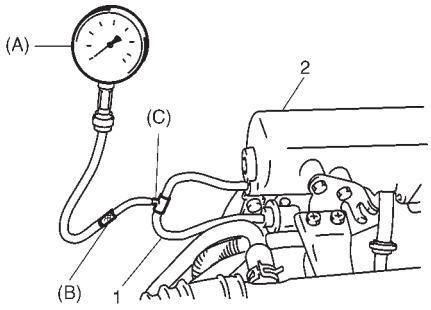

Vacuum measurement

The vacuum that develops in the intake line is a good indicator of the condition of the engine.
It is for this reason that the vacuum is measured. The measuring procedure is as follows:

1) Warm up engine until it is normal operating temperature.

   NOTE:
   After warming up engine, place transmission gear shft lever in "Neutral" (shift select lever to "P" range for A/T model), and set parking brake and block drive wheels.

2) With engine stopped, disconnect pressure regulator vacuum hose (1) from intake manifold (2) and connect 3-way joint, hoses and special tool (vacuum gauge and joint) between intake manifold and vacuum hose disconnected.

   Special Tool
   (A): 09915-67310
   (B): 09918-08210

   SUZUKI GENUINE PARTS
   (C): 3-way joint 09367-04002

3) Run the engine at the specified idling speed and, under this running condition, read the vacuum gauge. The vacuum should be not lower than 53.7 kPa (40 cm Hg, 15.7 in. Hg).

   A low vacuum reading means that any combination of the following malconditions is the cause, which must be corrected before releasing the machine to the customer:
   (a) Leaky cylinder head gasket
   (b) Leaky intake manifold gasket
   (c) Leaky valves
   (d) Weakened valve springs
   (e) Maladjusted valve clearance
   (f) Valve timing out of adjustment
   (g) Ignition mistimed

Standard vacuum	53.7 – 60.4 kPa (40 – 45 cm Hg, 15.7 – 17.7 in. Hg)
Idling speed specification	900 r/min (rpm) (Take vacuum reading at this speed.)

4) After checking, remove vacuum gauge and connect vacuum hose to intake manifold.
5) Before reinstalling vacuum checking plug, be sure to wrap its screw threads with sealing tape and tighten plug.

Engine oil

Refer to the SECTION 0B MAINTENANCE SERVICE.

Engine oil filter

The methods of servicing the oil filter are outlined under SECTION 0B MAINTENANCE SERVICE.

Engine coolant

This subject is covered in the SECTION 6B for ENGINE COOLING SYSTEM.

Exhaust line and muffler

Inspect each exhaust line connection for tightness, and examine the muffler and other parts for evidence of breakage and leakage of gases. Repair or replace defective parts, if any.

Oil filler cap

The cap has a packing. Be sure that packing is in good condition, free of any damage and signs of deterioration, and is tight in place. If any defective, replace.

REQUIRED SERVICE MATERIALS

MATERIAL	RECOMMENDED SUZUKI PRODUCT	USE
Sealant	SUZUKI BOND No. 1215 (99000-31110)	● Mating surfaces around the oil discharging port of oil pump case and cylinder block ● Threads of timing belt inside cover stud bolts ● Threads of distributor gear case bolts

SPECIAL TOOLS

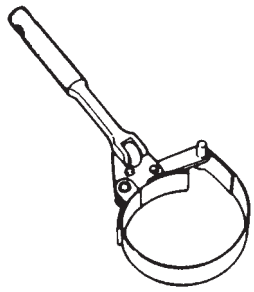 09915-47310 Oil filter wrench	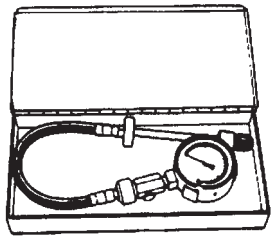 09915-64510 Compression gauge	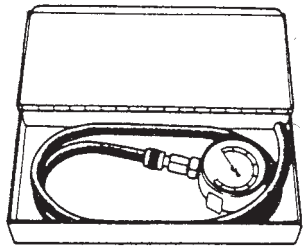 09915-67310 Vacuum gauge	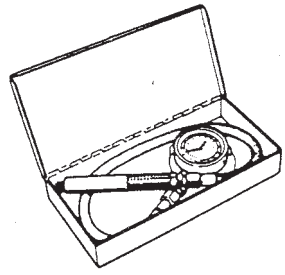 09915-77310 Oil pressure gauge
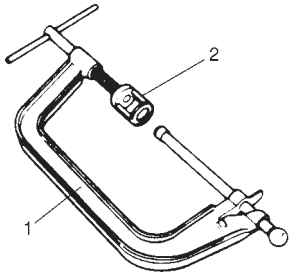 1. 09916-14510 Valve lifter 2. 09916-48210 Valve lifter attachment	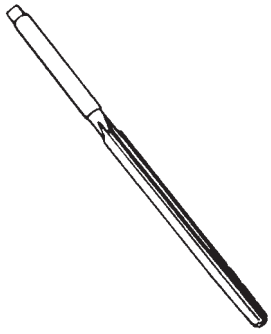 09916-34520 7 mm reamer	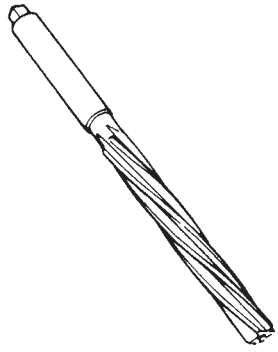 09916-37310 12 mm reamer	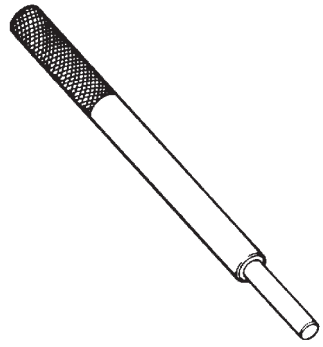 09916-44511 Valve guide remover
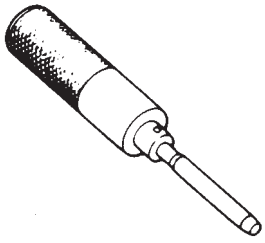 09916-57321 Valve guide installer handle	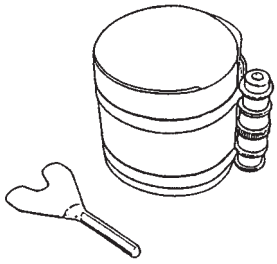 09916-77310 Piston ring compressor	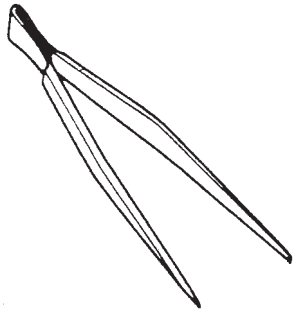 09916-84511 Forceps	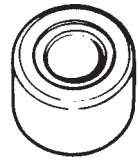 09917-88210 Valve guide installer attachment

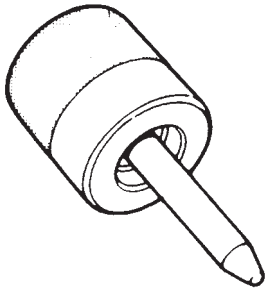 09917-98210 Valve stem seal installer	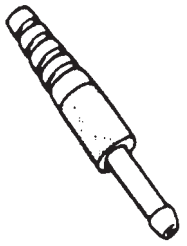 09918-08210 Vacuum gauge hose joint	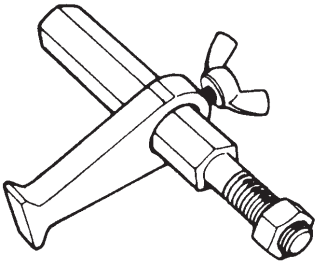 09924-17810 Flywheel holder	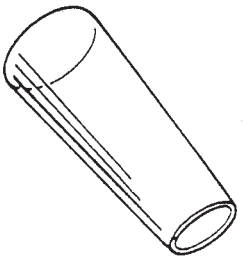 09926-18210 Oil seal guide (Vinyl resin)
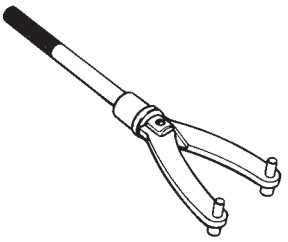 09930-40113 Camshaft lock holder			

SECTION 6A1

ENGINE MECHANICAL (F8D ENGINE)

CONTENTS

GENERAL DESCRIPTION 6A1- 2
Engine 6A1- 2
Engine Lubrication 6A1- 3

ON-VEHICLE SERVICE 6A1- 4
Compression Check 6A1- 4
Engine Vacuum Check 6A1- 5
Oil Pressure Check 6A1- 6
Valve Lash (Clearance) 6A1- 8
Air Cleaner Filter 6A1- 9
Cylinder Head Cover 6A1-10
Throttle Body and Intake Manifold 6A1-11
Exhaust Manifold 6A1-13
Timing Belt and Belt Tensioner 6A1-15
Oil Pan and Oil Pump Strainer 6A1-20
Oil Pump 6A1-23
Rocker Arms, Rocker Arm Shaft and Camshaft 6A1-26
Valves and Cylinder Head 6A1-32
Piston, Piston Rings, Connecting Rods and Cylinders 6A1-42

UNIT REPAIR OVERHAUL 6A1-51
Engine Assembly 6A1-51
Main Bearings, Crankshaft and Cylinder Block 6A1-52

REQUIRED SERVICE MATERIALS 6A1-64

SPECIAL TOOLS 6A1-64

NOTE:
For what each abbreviation stands for (i.e., full term), refer to SECTION 0A.

GENERAL DESCRIPTION

ENGINE

The engine is a water-cooled, in line 3 cylinders, 4 stroke cycle gasoline unit equipped with its S.O.H.C. (Single Overhead Camshaft) valve mechanism arranged for “V”-type valve configuration and 12 valves (IN 2 and EX 2/one cylinder).

The single overhead camshaft is mounted over the cylinder head: it is driven from crankshaft through timing belt and opens and closes its valves via the rocker arms.

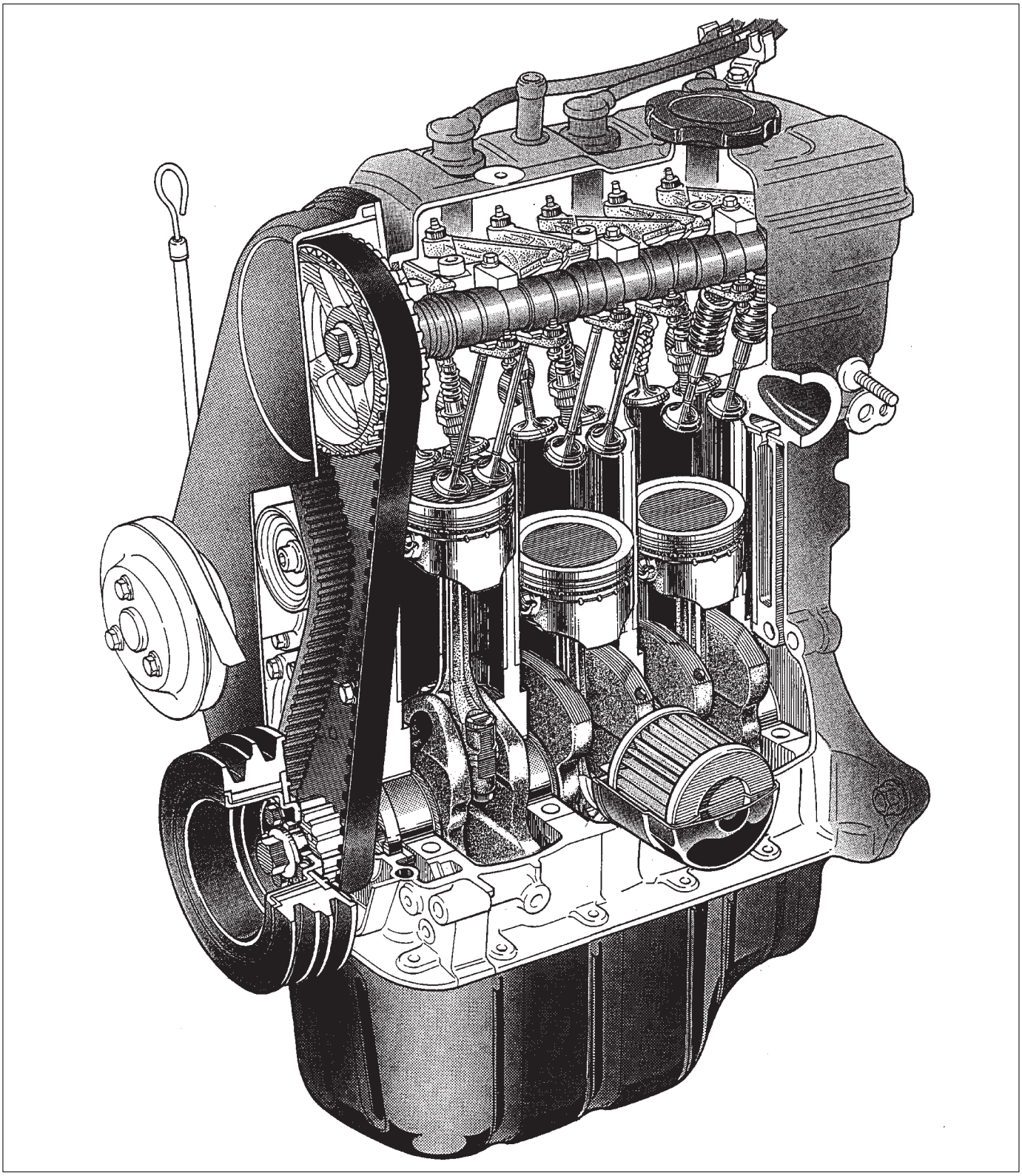

ENGINE LUBRICATION

The oil pump for pressure-feeding lubrication oil to the running parts of the engine is of an internal gear type, in which an outer ring-like gear is internally meshed with an inner gear, there being a separating crescent-like stator between the two. The pump is mounted on the front end of the engine, and is driven by the crankshaft.

The oil pump lifts oil through the strainer and discharges it under pressure, forcing the oil through the oil filter. The filtered oil flows into two paths inside the cylinder block. In one path, oil reaches the crankshaft journal bearings and big-end bearings on crankpins. Some of this oil goes to the connecting-rod small ends and lubricates piston pins there and also the walls of cylinder bores.
In the other path, oil goes up to the cylinder head and enters the oil gallery of rocker arm shafts to lubricate the sliding parts of these shafts and also journals of the camshaft.

An oil relief valve is provided on the oil pump. This valve starts relieving oil pressure when the pressure comes over about 3.3 kg/cm^2 (46.9 psi, 330 kPa). Relieved oil flows back to the oil pan.

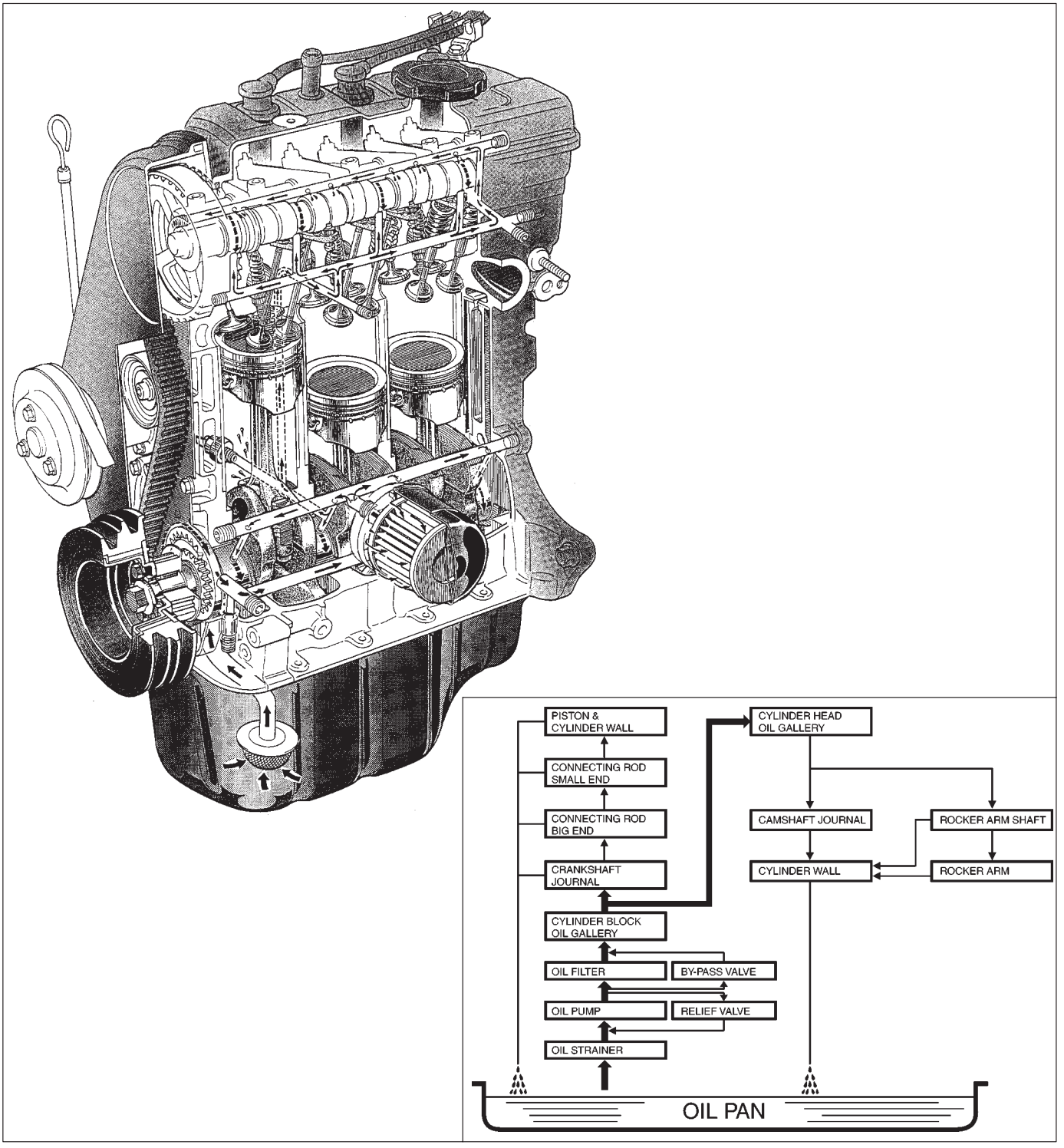

ON-VEHICLE SERVICE

COMPRESSION CHECK

Check compression pressure on all three cylinders as follows:

1) Warm up engine.
2) Stop engine after warming up.

   NOTE:
   After warming up engine, place transmission gear shift lever in "Neutral" and set parking brake and block drive wheels.

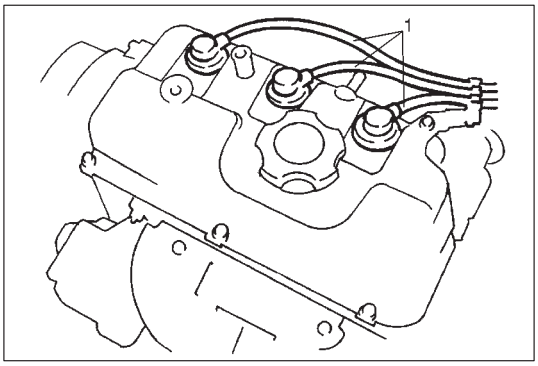

3) Disconnect fuel injector wire harness connector.
4) Remove high-tension cords (1) and all spark plugs referring to Section 6F.

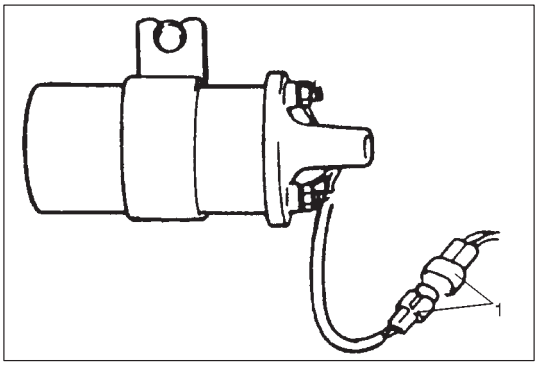

5) Disconnect ignition coil wire harness at coupler (1).

> **WARNING:**
> **Failure in disconnecting the coupler can cause spark to occur in engine room possibly resulting in a dangerous explosion.**

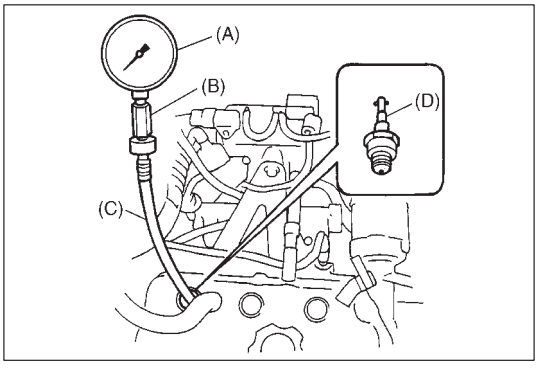

6) Install special tool (Compression gauge) into spark plug hole.

   Special Tool
   (A): 09915-64510-001
   (B): 09915-64510-002
   (C): 09915-64530
   (D): 09915-64550

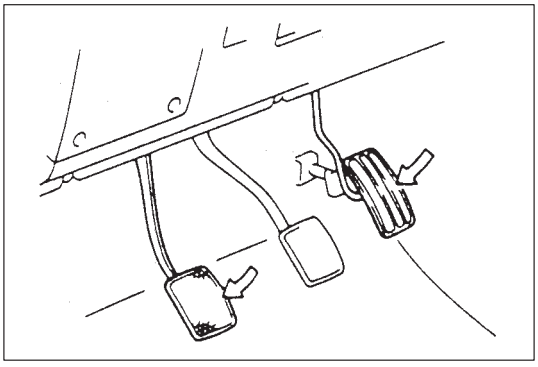

7) Disengage clutch (to lighten starting load on engine) and depress accelerator pedal all the way to make throttle valve full-open.

8) Crank engine with fully charged battery, and read the highest pressure on compression gauge.

NOTE:
For measuring compression pressure, crank engine at least 250 r/min. by using fully charged battery.

	Compression pressure
Standard	1350 kPa (13.5 kg/cm^2, 192.0 psi)
Limit	1000 kPa (10.0 kg/cm^2, 142.2 psi)
Max. difference between any two cylinders	100 kPa (1.0 kg/cm^2, 14.2 psi)

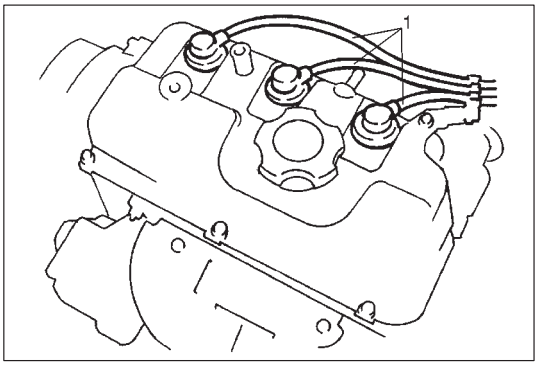

9) Carry out steps 5) through 7) on each cylinder to obtain three readings.
10) After checking, install spark plugs and high-tension cords (1) and connect injector and ignition coil wire harness connector securely.

ENGINE VACUUM CHECK

The engine vacuum that develops in the intake line is a good indicator of the condition of the engine. The vacuum checking procedure is as follows:

1) Warm up engine to normal operating temperature.

NOTE:
After warming up engine, place transmission gear shift lever in “Neutral” and set parking brake and block drive wheels.

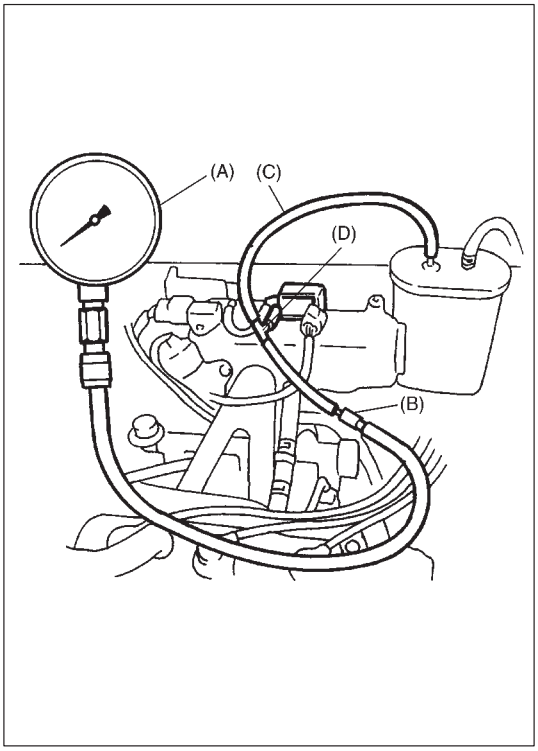

2) With engine stopped, disconnect canister purge control vacuum hose from canister purge control valve and connect 3-way joint, hose and special tool (vacuum gauge and joint) to canister purge control valve and vacuum hose disconnected.

Special Tool
(A): 09915-67310
(B): 09918-08210

SUZUKI GENUINE PARTS
(C): Hose 09343-03087
(D): 3-way joint 09367-04002

3) Run engine at specified idle speed, and read vacuum gauge. Vacuum should be within following specification.

Vacuum specification (at sea level):
at specified idling speed
53.7 – 60.4 kPa (40 – 45 cmHg, 15.7 – 17.7 in.Hg)

4) After checking, connect vacuum hose to canister purge control valve.

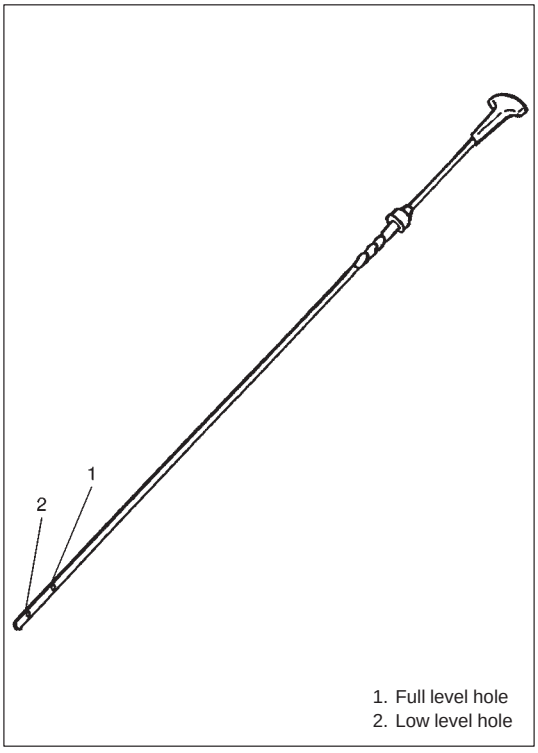

1. Full level hole
2. Low level hole

OIL PRESSURE CHECK

NOTE:
Prior to checking oil pressure, check following items.

- **Oil level in oil pan.**
  If oil level is low, add oil up to Full level hole on oil level gauge.
- **Oil quality.**
  If oil is discolored, or deteriorated, change it.
  For particular oil to be used, refer to the table in MAINTENANCE SERVICE of Section 0B.
- **Oil leaks.**
  If leak is found, repair it.

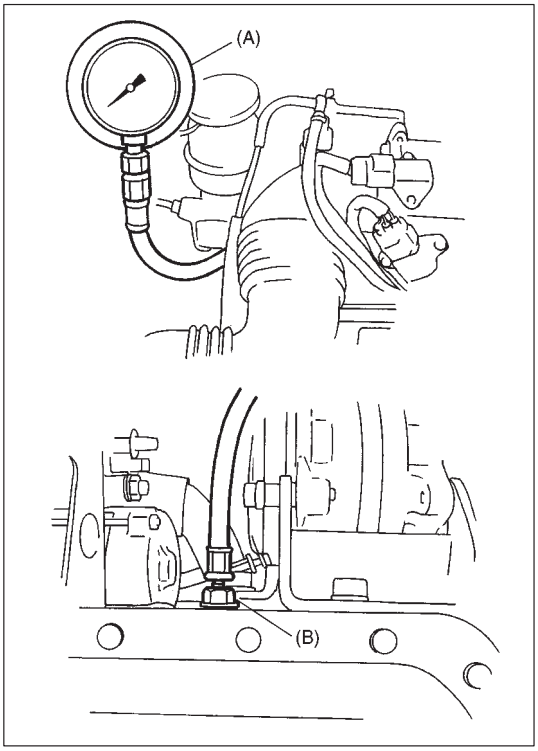

1) Hoist vehicle. Remove oil pressure switch from cylinder block.
2) Install special tool (Oil pressure gauge) to vacated threaded hole. Then lower vehicle.

   Special Tool
   (A): 09915-77310
   (B): 09915-78211

3) Start engine and warm it up to normal operating temperature.

   NOTE:
   Be sure to place transmission gear shift lever in "Neutral" and set parking brake and block drive wheels.

4) After warming up, raise engine speed to 4,000 r/min and measure oil pressure.

   Oil pressure specification:
   300 – 450 kPa (3.0 – 4.5 kg/cm², 42.7 – 64.0 psi) at 4,000 r/min (rpm)

5) Stop engine and remove oil pressure gauge.

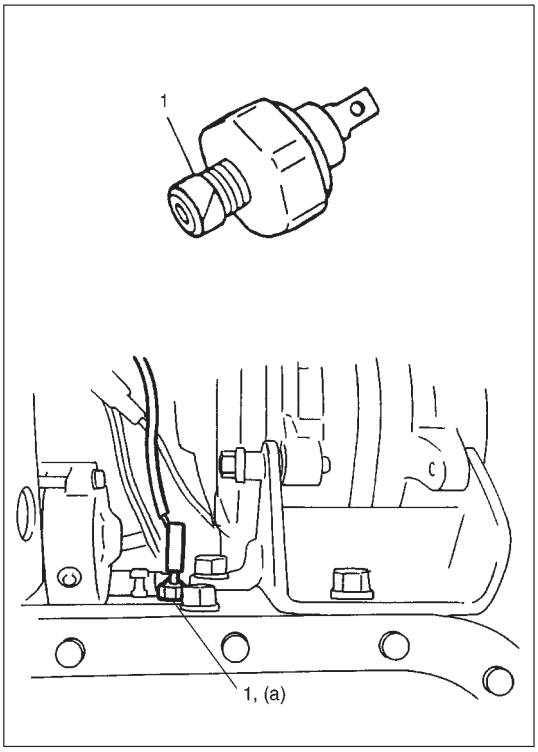

6) Before reinstalling oil pressure switch (1), be sure to wrap its screw threads with sealing tape and tighten switch to specified torque.

   NOTE:
   If sealing tape edge is bulged out from screw threads of switch, cut it off.

   Tightening Torque
   (a): 14 N·m (1.4 kg-m, 10.5 lb-ft)

7) Start engine and check oil pressure switch for oil leakage.
8) Stop engine and connect terminal to pressure switch terminal.

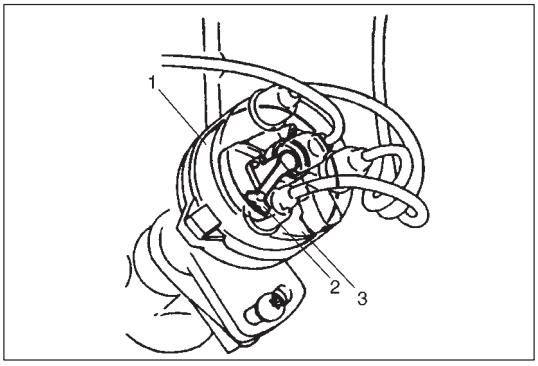

VALVE LASH (CLEARANCE)

1) Remove negative cable at battery.
2) Remove cylinder head cover referring to CYLINDER HEAD COVER in this section.
3) Remove distributor cap (1), rotor (2) and cover (3).

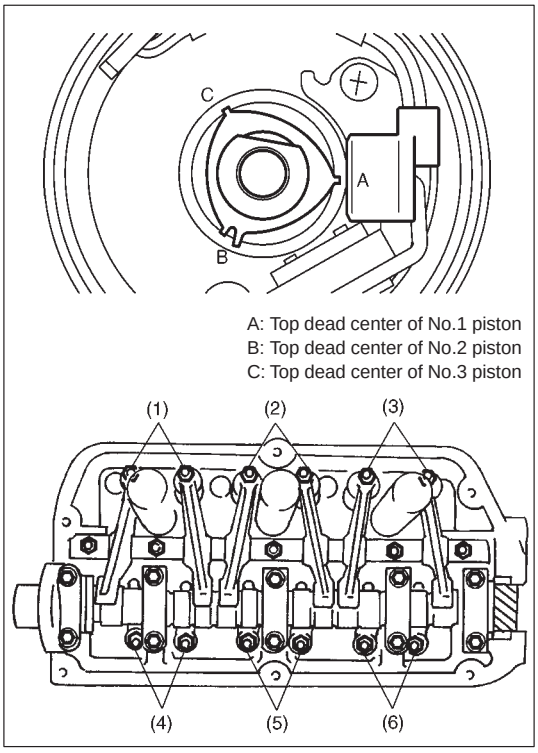

4) Using 17 mm wrench, turn crankshaft pulley clockwise until lug of signal rotor aligned to CMP sensor as shown in figure.
5) If signal rotor is positioned as shown in figure (i.e. No.1 piston is at top dead center of compression stroke), check valve lashes at valves (1) and (4).

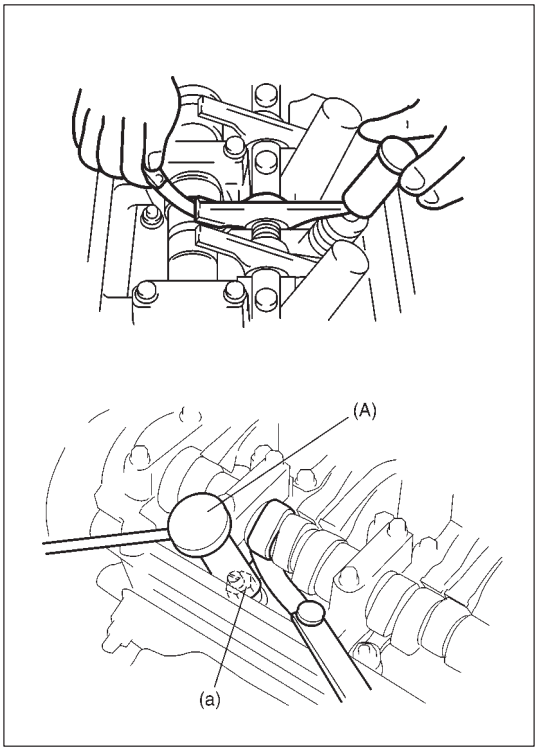

6) If valve lash is out of specification, adjust it to specification by turning adjusting screw after loosening lock nut.
After adjustment, tighten lock nut to specified torque while holding adjusting screw stationary, and then make sure again that valve lash is within specification.

		When cold (Coolant temperature is 15 – 25°C or 59 – 77°F)	When hot (Coolant temperature is 60 – 68°C or 140 – 154°F)
Valve clearance specification	Intake	0.13 – 0.17 mm (0.005 – 0.007 in.)	0.15 – 0.19 mm (0.006 – 0.007 in.)
	Exhaust	0.13 – 0.17 mm (0.005 – 0.007 in.)	0.14 – 0.18 mm (0.006 – 0.007 in.)

Special Tool
(A): 09917-18210

Tightening Torque
(a): 12 N·m (1.2 kg-m, 9.0 lb-ft)

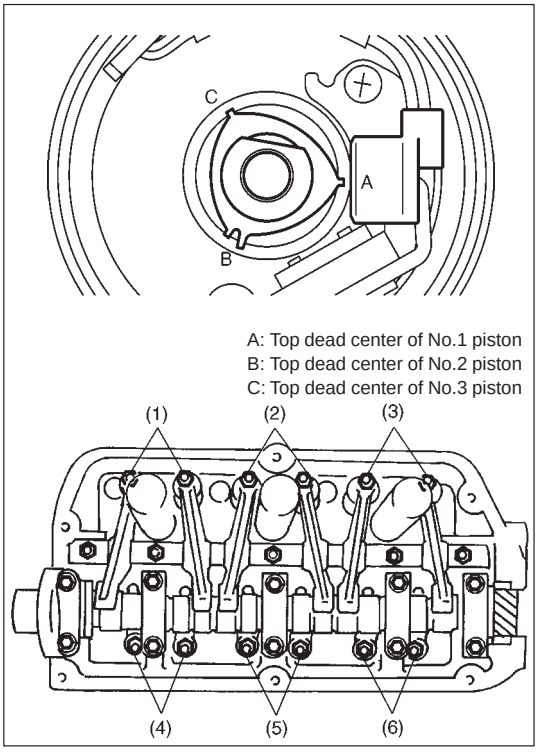

7) After checking and adjusting valve lashes at valves (1) and (4), rotate crankshaft pulley clockwise until lug “C” of signal rotor aligned to CMP sensor and check the same valves at (3) and (6). Adjust them as necessary.
8) After checking and adjusting valve lashes at valves (3) and (6), rotate crankshaft pulley clockwise until lug “B” of signal rotor aligned to CMP sensor and check the same valves at (2) and (5). Adjust them as necessary.

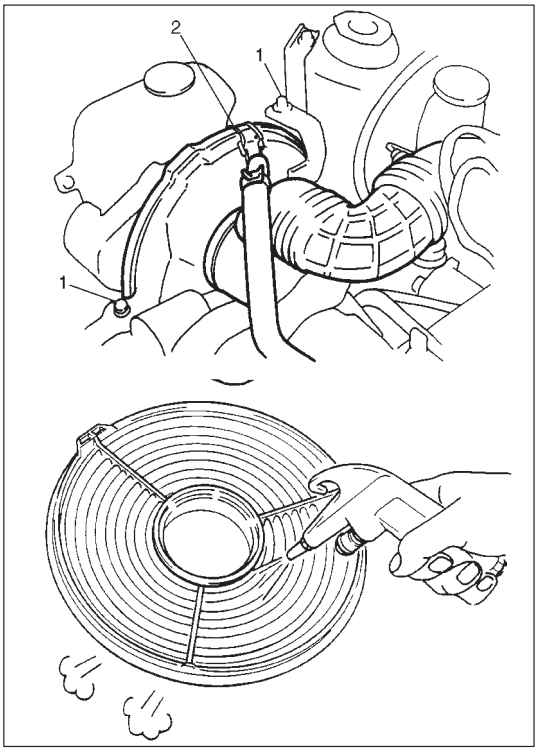

AIR CLEANER FILTER

REMOVAL AND INSTALLATION

1) Remove air cleaner case bracket bolts (1).
2) Remove air cleaner case clamps (2).
3) Remove air cleaner filter from case.
4) Check air cleaner filter for dirt.
5) If necessary, blow off dust by compressed air from air outlet side of air cleaner filter.
   If excessively dirty, replace filter.
6) Reverse removal procedure for installation.

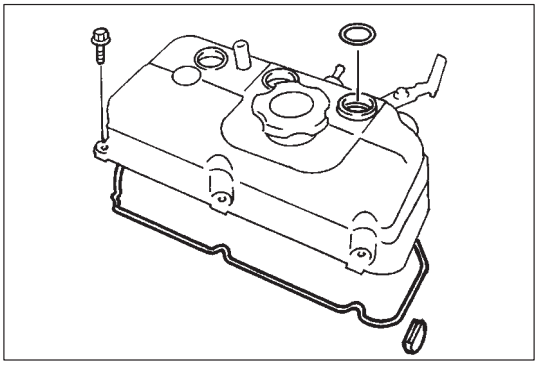

CYLINDER HEAD COVER

REMOVAL

1) Disconnect negative cable at battery.
2) Remove high-tension cords.
3) Disconnect PCV valve and breather hoses from head cover.
4) Remove cylinder head cover.

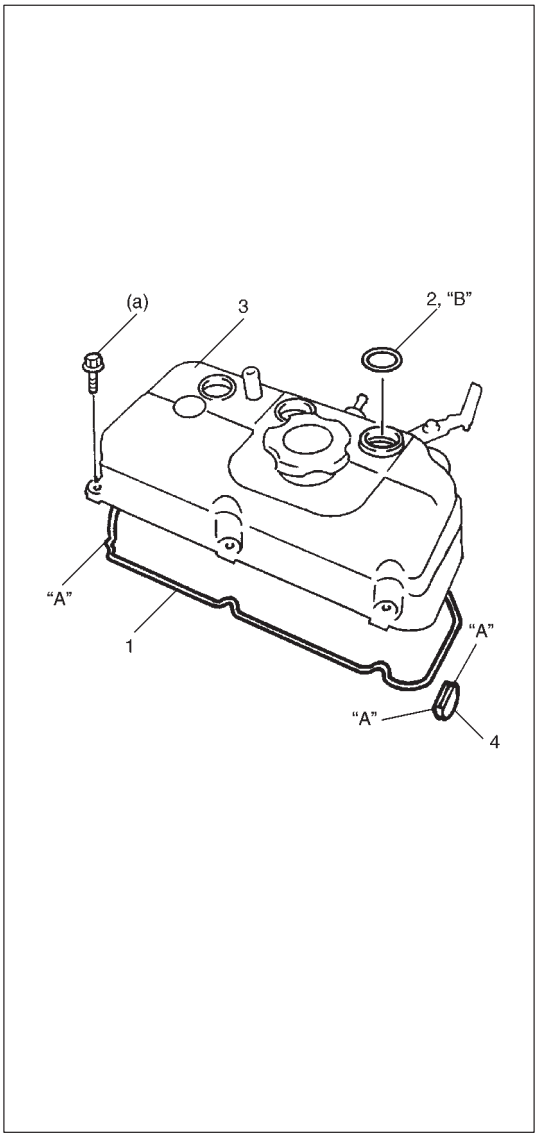

INSTALLATION

1) Install O-rings (2) and cylinder head cover gasket (1) to cylinder head cover (3).
   - Apply sealant to cylinder head cover gasket and cylinder head side seal (4) indicated part.

     "A": sealant: 99000-31150

   - Apply grease to O-rings.

     "B": grease: 99000-25010

   NOTE:
   Be sure to check each of these parts for deterioration or any damage before installation and replace if found defective.

2) Install cylinder head cover to cylinder head and tighten cover bolts to specified torque.

   Tightening Torque
   (a): 11 N·m (1.1 kg-m, 8.0 lb-ft)

   NOTE:
   When installing cylinder head cover, use care so that cylinder head cover gasket, cylinder head side seal or O-rings will not get out of place or fall off.

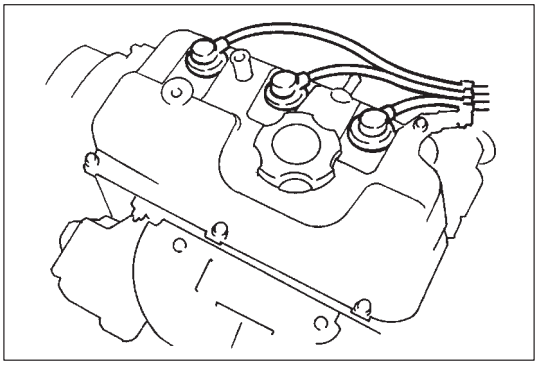

3) Install high-tension cords.
4) Connect PCV valve and breather hoses to head cover.
5) Connect negative cable at battery.

THROTTLE BODY AND INTAKE MANIFOLD

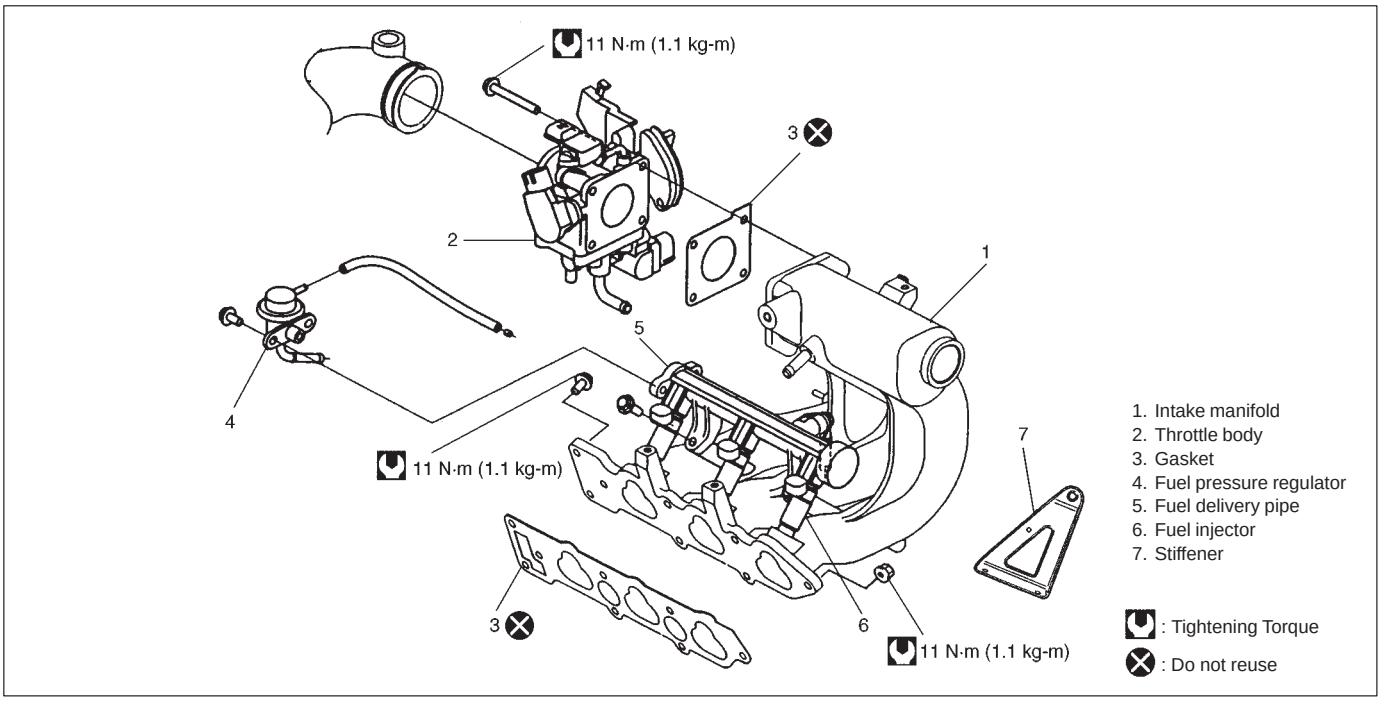

REMOVAL

1) Relieve fuel pressure according to fuel pressure relief procedure described in Section 6.
2) Disconnect negative cable at battery.

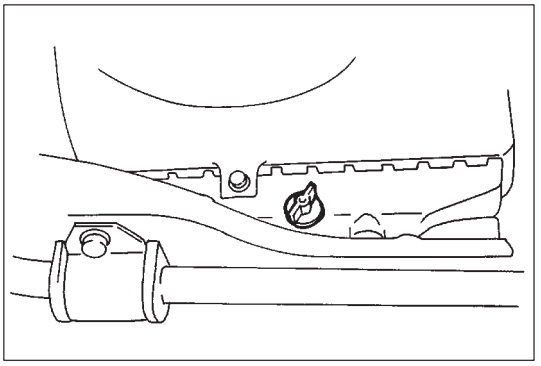

3) Drain cooling system.

> **WARNING:**
> **To help avoid danger of being burned, do not remove drain plug and radiator cap while engine and radiator are still hot. Scalding fluid and steam can be blown out under pressure if plug and cap are taken off too soon.**

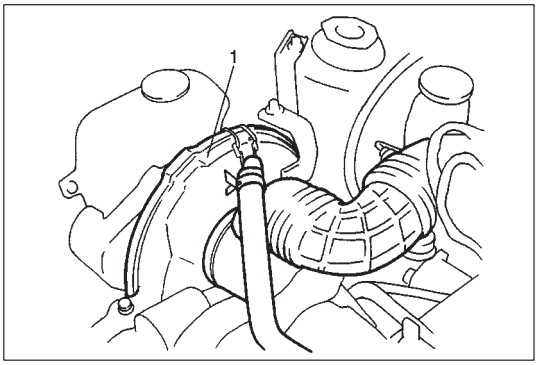

4) Remove air cleaner case (1).
5) Disconnect following electric lead wires:
   - Injectors lead wires at the coupler
   - Canister purge control valve
   - Throttle position sensor/Idle air control valve
   - Pressure sensor

6) Disconnect accelerator cable from throttle body.
7) Disconnect following hoses:
   - Canister purge hose from canister purge control valve
   - Engine cooling water (coolant) hoses from throttle body
   - PCV hose from intake manifold
   - Fuel return and inlet hoses from each pipe

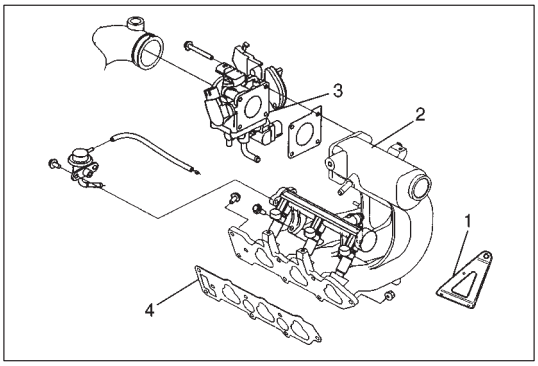

8) Remove intake manifold stiffener (1).
9) Remove intake manifold (2) with throttle body (3) from cylinder head, and then its gasket (4).

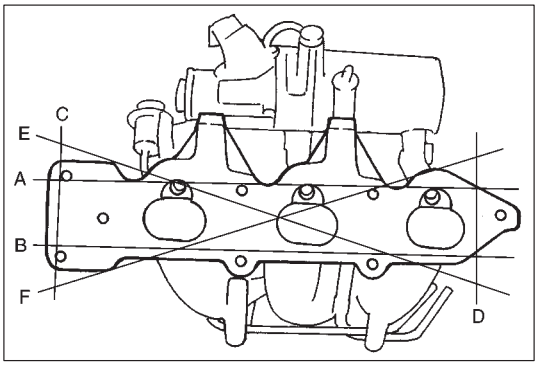

INSPECTION

- Using a straight edge and thickness gauge, check surface at a total of 6 locations. If distortion limit, given below, is exceeded, correct gasketed surface or replace intake manifold.

  Limit of distortion: 0.05 mm (0.002 in.)

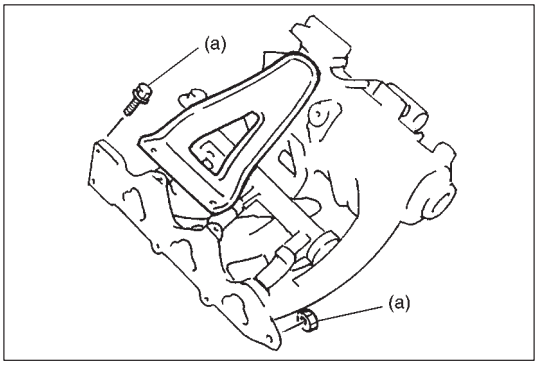

INSTALLATION

Reverse removal procedure for installation noting the followings.

- Use new intake manifold gasket.
- Tighten bolts and nuts to specified torque.

  Tightening Torque
  (a): 11 N·m (1.1 kg-m, 8.0 lb-ft)

- Adjust accelerator cable play, referring to Section 6E.
- Check to ensure that all removed parts are back in place. Reinstall any necessary parts which have not been reinstalled.
- Refill cooling system, referring to Section 6B.
- Adjust water pump drive belt tension, referring to Section 6B.
- Upon completion of installation, turn ignition switch ON but engine OFF and check for fuel leaks.
- Finally, start engine and check for engine coolant leaks.

EXHAUST MANIFOLD

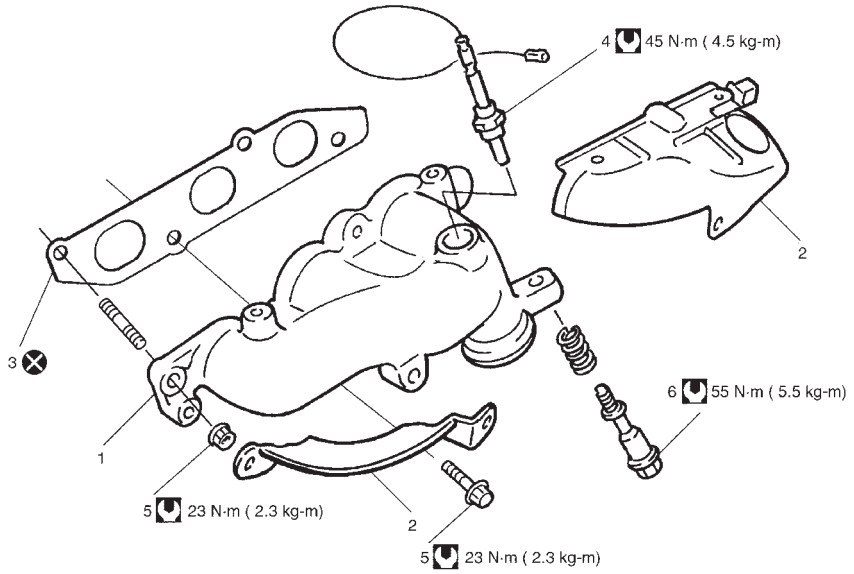

1. Exhaust manifold
2. Exhaust manifold cover
3. Gasket
4. Oxygen sensor
5. Exhaust manifold bolt and nut
6. Exhaust pipe bolt

: Tightening Torque

: Do not reuse

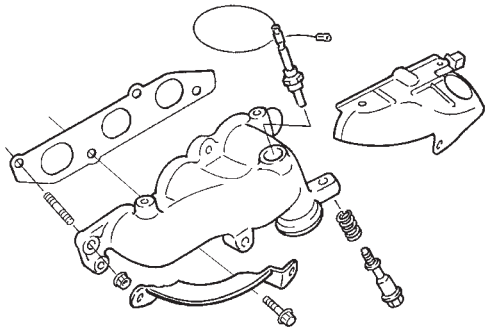

WARNING:
To avoid danger of being burned, do not service exhaust system while it is still hot. Service should be performed after system cools down.

REMOVAL

1) Disconnect negative cable at battery.
2) Disconnect oxygen sensor coupler (if equipped).
3) Remove exhaust manifold covers of exhaust manifold.
4) Remove exhaust pipe from exhaust manifold.
5) Remove exhaust manifold and its gasket from cylinder head.

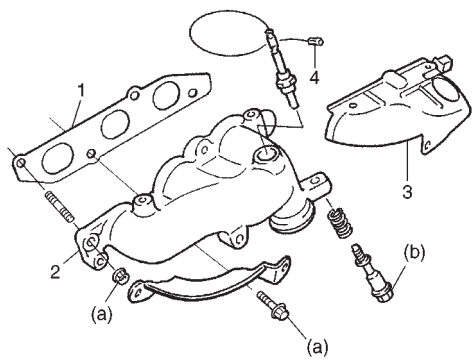

INSTALLATION

1) Install new gasket (1) to cylinder head.
2) Install exhaust manifold (2).
   Tighten bolts and nuts to specified torque.

   Tightening Torque
   (a): 23 N·m (2.3 kg-m, 17.0 lb-ft)

3) Install pipe gasket and install exhaust pipe to exhaust manifold.
   Before installing pipe gasket, check it for deterioration or damage, and replace as necessary.
   Tighten pipe fasteners to specified torque.

   Tightening Torque
   (b): 55 N·m (5.5 kg-m, 40.0 lb-ft)

4) Install upper cover (3) to exhaust manifold.
5) Connect oxygen sensor connector (4) and fit connector to bracket.
6) Connect negative cable at battery.
7) Check exhaust system for exhaust gas leakage.

TIMING BELT AND BELT TENSIONER

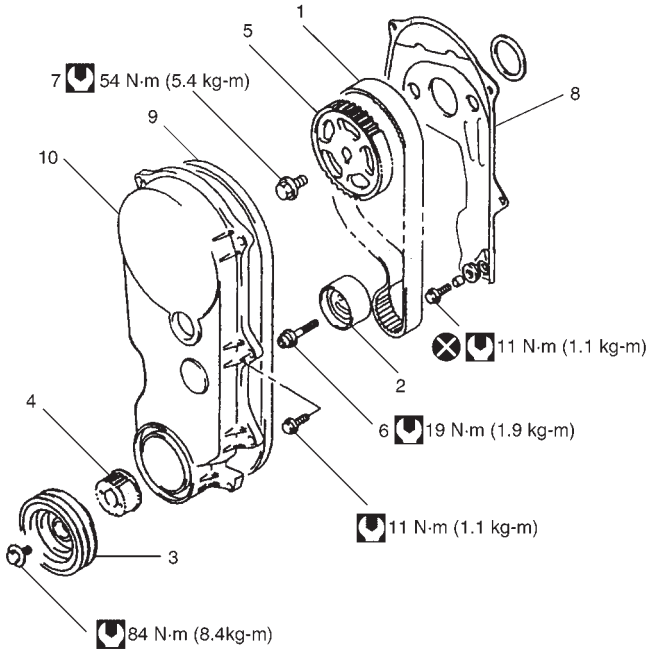

1. Timing belt
2. Tensioner
3. Crank shaft pulley
4. Camshaft timing belt pulley
5. Camshaft timing pulley
6. Tensioner bolt
7. Pulley bolt
8. Inside cover
9. Outside cover seal
10. Outside cover

: Tightening Torque

: Do not reuse

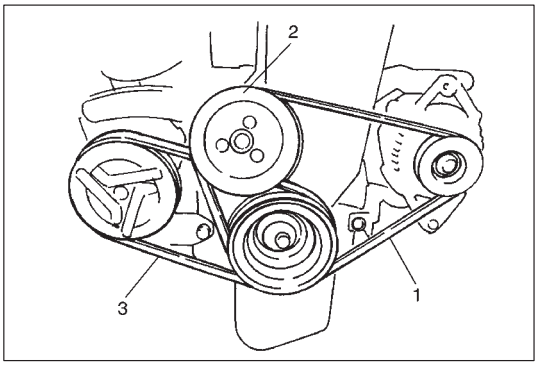

REMOVAL

1) Disconnect negative cable at battery.
2) Remove air cleaner case and hose.
3) Remove water pump drive belt (1) and water pump pulley (2).
4) Remove A/C compressor belt (3), if equipped.

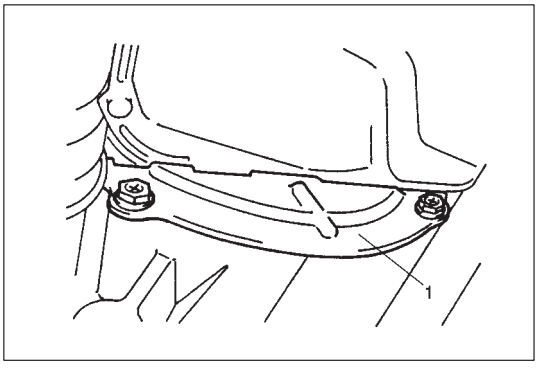

5) Remove clutch housing lower plate (1).

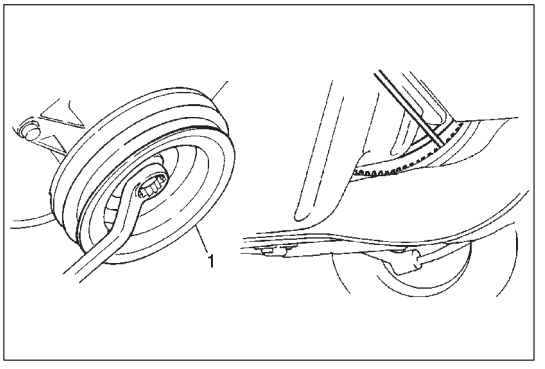

6) Remove crankshaft pulley (1) with crankshaft locked.

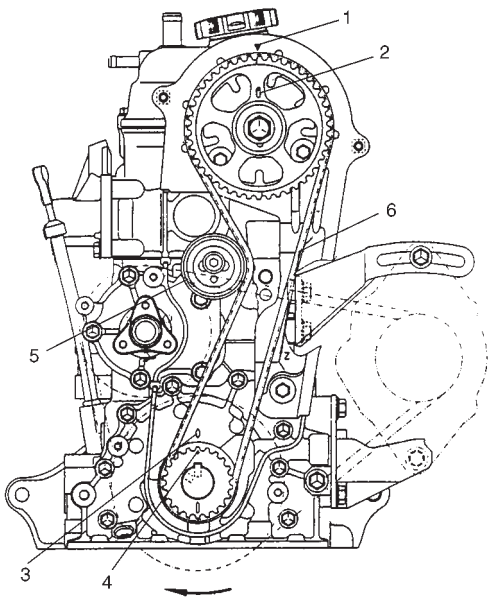

7) Remove timing belt outside cover.
8) For installation of timing belt, align 4 timing marks (1), (2), (3), (4) as shown in figure by turning crankshaft.
9) Remove timing belt tensioner (5) and timing belt (6).

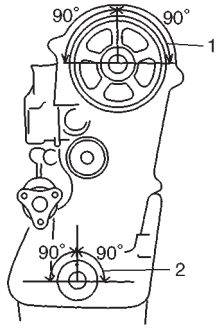

1. Camshaft allowable turning range . . . By timing mark, within 90° from timing mark on timing belt inside cover on both right and left.
2. Crankshaft allowable turning range . . . By timing mark, within 90° from timing mark on oil pump case on both right and left.

CAUTION:

- **After timing belt is removed, never turn camshaft and crankshaft independently more than such an extent as shown in figure. If turned, interference may occur among piston and valves, and parts related to piston and valves may be damaged.**
- **Never bend timing belt.**

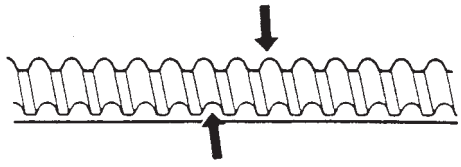

INSPECTION

- Inspect timing belt for wear or crack.
  Replace it as necessary.

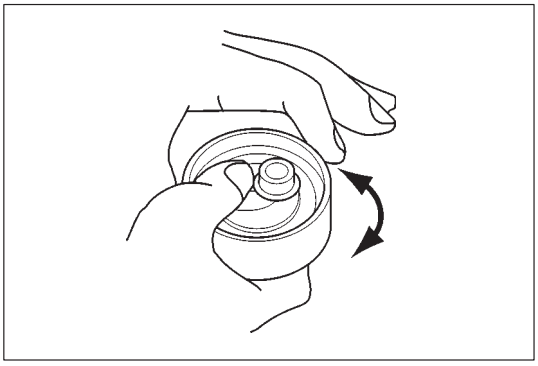

- Inspect tensioner for smooth rotation.

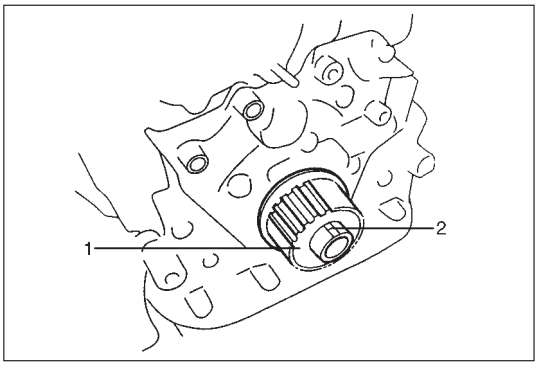

INSTALLATION

1) Install crank pulley key (2) to crankshaft.
   Install crankshaft timing belt pulley (1) to crankshaft, if removed.

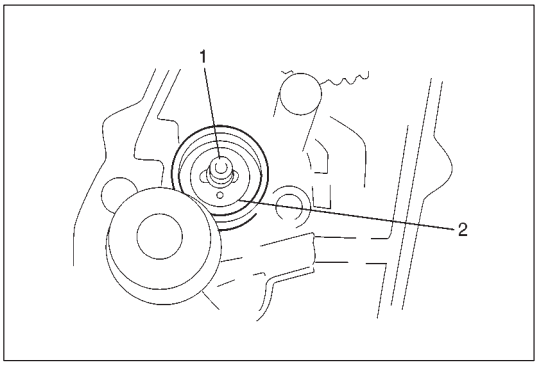

2) Install tensioner (2).
   Do not tighten tensioner bolt (1) with wrench yet. Hand tighten only at this time.

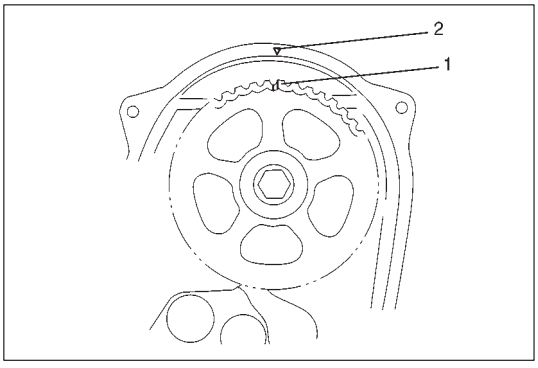

3) Check that timing mark (1) on camshaft timing belt pulley is aligned with mark (2) on timing belt inside cover. If not, align two marks by turning camshaft but be careful not to turn it more than its allowable turning range which is described on previous page.

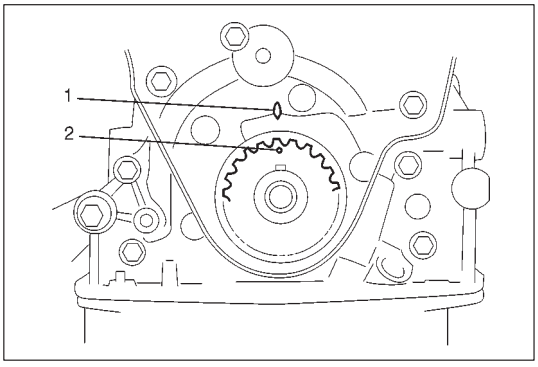

4) Check that punch mark (2) on crankshaft timing belt pulley is aligned with arrow mark (1) on oil pump case. If not, align two marks by turning crankshaft but be careful not to turn it more than its allowable turning range which is described on previous page.

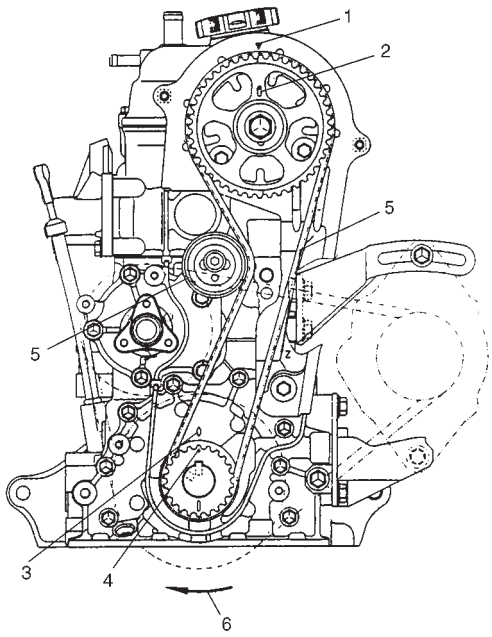

5) Check to ensure that valve clearance is adjusted correctly.
6) Remove spark plugs.
7) Install timing belt.
   With two sets of marks (1), (2) and (3), (4) aligned, install timing belt on two pulleys in such a way that drive side (5) of belt is free from any slack.

   NOTE:
   - **When installing timing belt, match arrow mark (⇨) on timing belt with rotating direction (6) of crankshaft.**

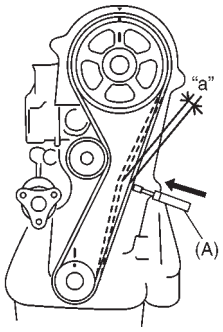

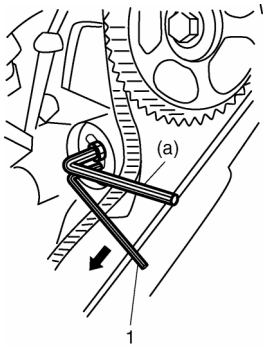

8) Attach hexagon wrench (1) to belt tensioner hole and adjust belt tension to specified.
   (a) Move tensioner till timing belt tension is specification by turning hexagon wrench clockwise as shown in figure and measure timing belt tension by using special tool.

   Special Tool
   (A): 09919-56010

   Belt tension under pressure 7 kg or 15.5 lb
   "a": 10.5 mm (0.413 in.) . . . New belt
   12.0 mm (0.472 in.) . . . Reuse belt

   (b) Tighten tensioner bolt.

   Tightening Torque
   (a): 19 N·m (1.9 kg-m, 14.0 lb-ft)

   (c) To take up slack of timing belt, turn crankshaft two rotations clockwise.
   Then confirm again that two sets of marks are aligned respectively. And confirm belt tension again as previously outlined.

   NOTE:
   Perform step 8) repeatedly, after loosen tensioner bolt, if belt tension is out of standards.

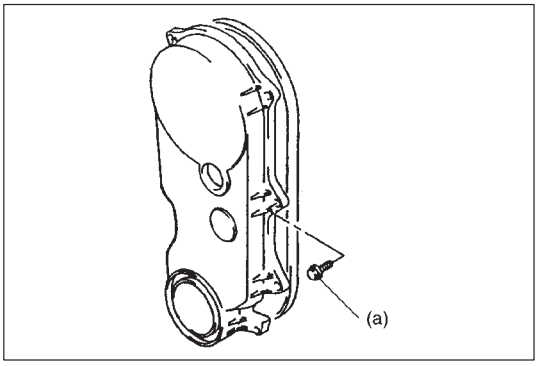

9) Install spark plugs.
10) Install timing belt outside cover.
Before installing, make sure that seal is between water pump and oil pump case.

Tightening Torque
(a): 11 N·m (1.1 kg-m, 8.0 lb-ft)

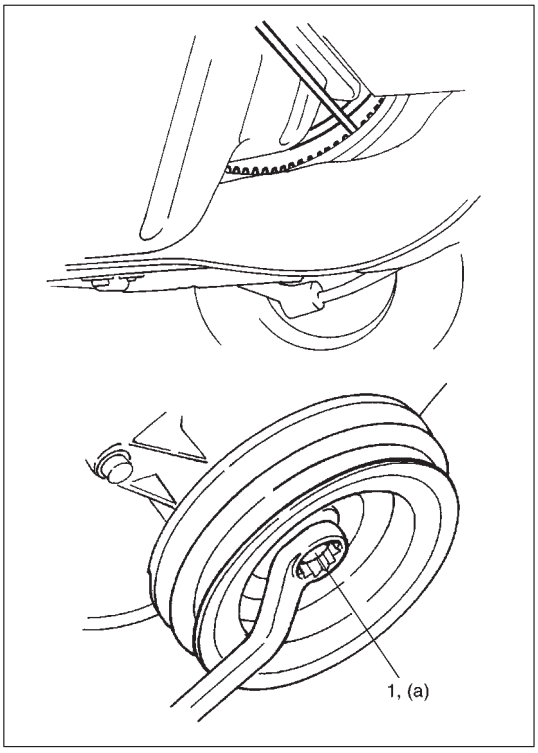

11) Install crankshaft pulley (1).
Install crankshaft timing belt pulley with crankshaft locked, and tighten pulley bolts to specified torque.

Tightening Torque
(a): 84 N·m (8.4 kg-m, 61.0 lb-ft)

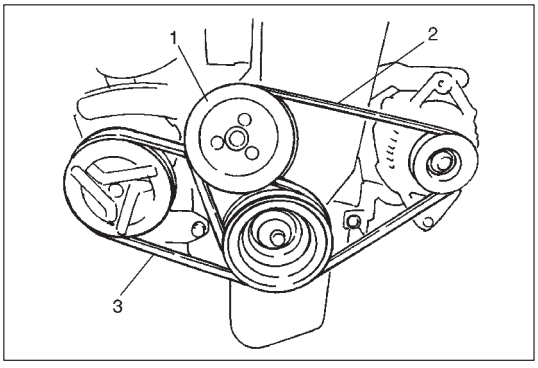

12) Install A/C compressor belt (3), if equipped.
Adjust its belt tension, referring to Section 0B.
13) Install water pump pulley (1) and water pump drive belt (2).
Adjust water pump drive belt tension, referring to Section 6B.
14) Install air cleaner case and hose.
15) Connect negative cable at battery.

OIL PAN AND OIL PUMP STRAINER

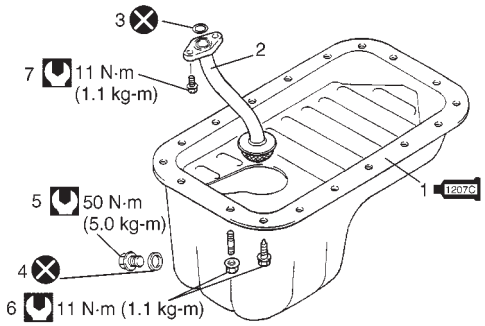

1207C 1. Oil pan:
Apply SUZUKI BOND No. 1207C
99000-31150 to mating surface.
2. Oil pump strainer
3. Seal
4. Drain plug gasket
5. Drain plug
6. Oil pan bolt and nut
7. Strainer bolt

: Tightening Torque

: Do not reuse

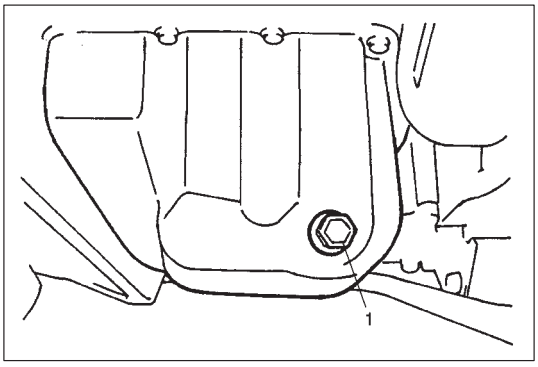

1) Drain engine oil by removing drain plug (1).

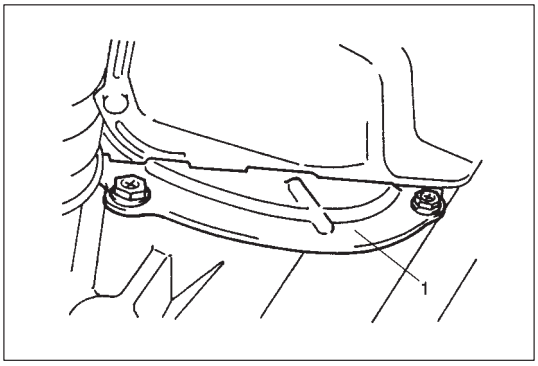

2) Remove clutch housing lower plate (1).

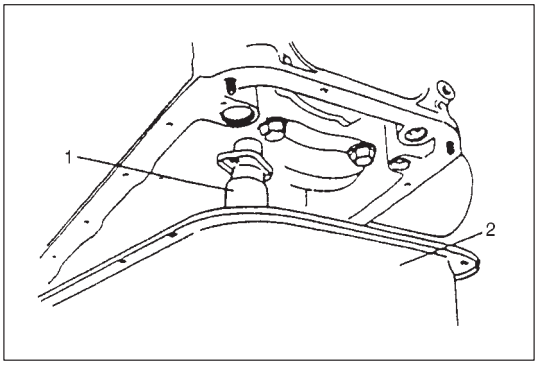

3) Disconnect exhaust pipe from exhaust manifold.
4) Remove oil pan (2) and then oil pump strainer (1).

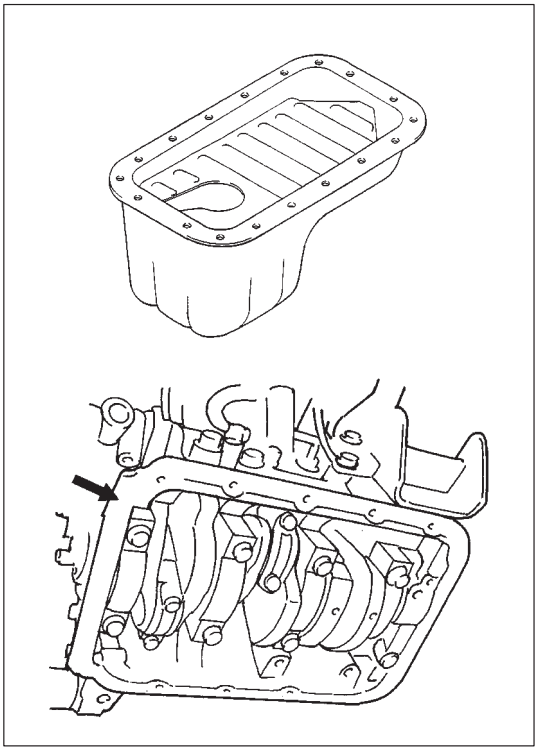

CLEANING

- Clean mating surfaces of oil pan and cylinder block.
  Remove oil, old sealant, and dusts from mating surfaces and oil pan inside.

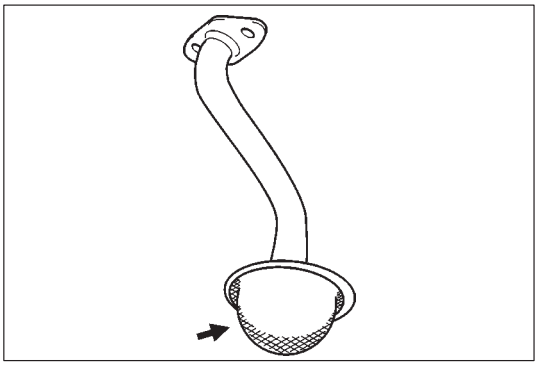

- Clean oil pump strainer screen.

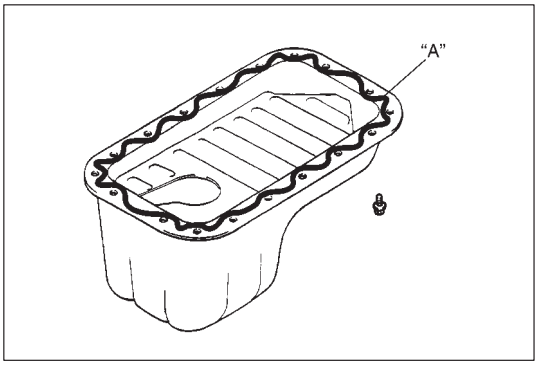

INSTALLATION

1) Apply sealant to oil pan mating surface continuously as shown in figure.

   "A" Sealant: 99000-31150

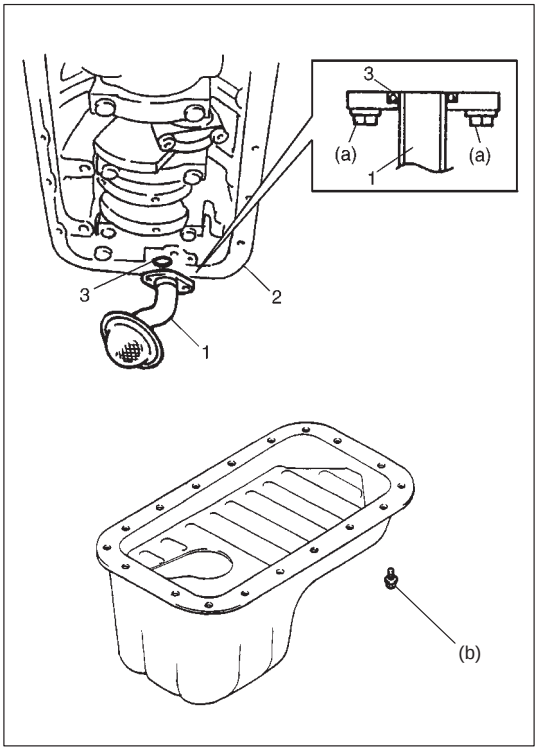

2) Install oil pump strainer (1) and oil pan (2).
   Install new O-ring (3) to oil pump strainer in the position as shown in figure.
   Install strainer to cylinder block, then tighten strainer bolt to specified torque.

   Tightening Torque
   (a): 11 N·m (1.1 kg-m, 8.0 lb-ft)

   After fitting oil pan to cylinder block, run in securing bolts and start tightening at the center: move wrench outward, tightening one bolt at a time.
   Tighten bolts to specified torque.

   Tightening Torque
   (b): 11 N·m (1.1 kg-m, 8.0 lb-ft)

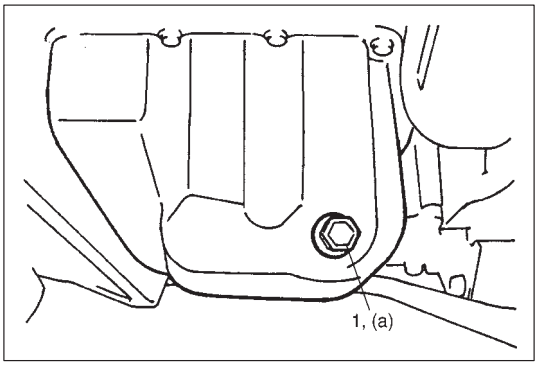

3) Install new gasket and drain plug (1) to oil pan.
   Tighten drain plug (1) to specified torque.

   Tightening Torque
   (a): 50 N·m (5.0 kg-m, 36.5 lb-ft)

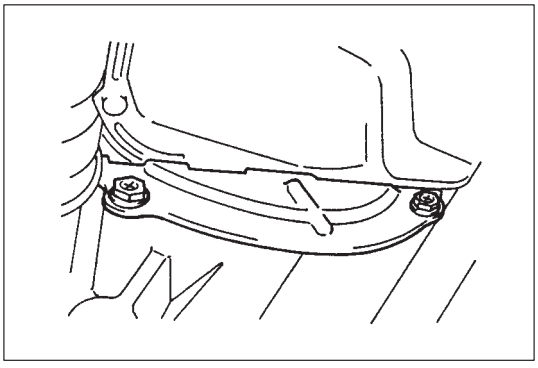

4) Install clutch (torque converter) housing lower plate.

5) Connect exhaust manifold pipe to exhaust manifold.
6) Refill engine with engine oil, referring to item ENGINE OIL CHANGE in Section 0B.
7) Verify that there is no engine oil leakage and differential oil leakage at each connection.

OIL PUMP

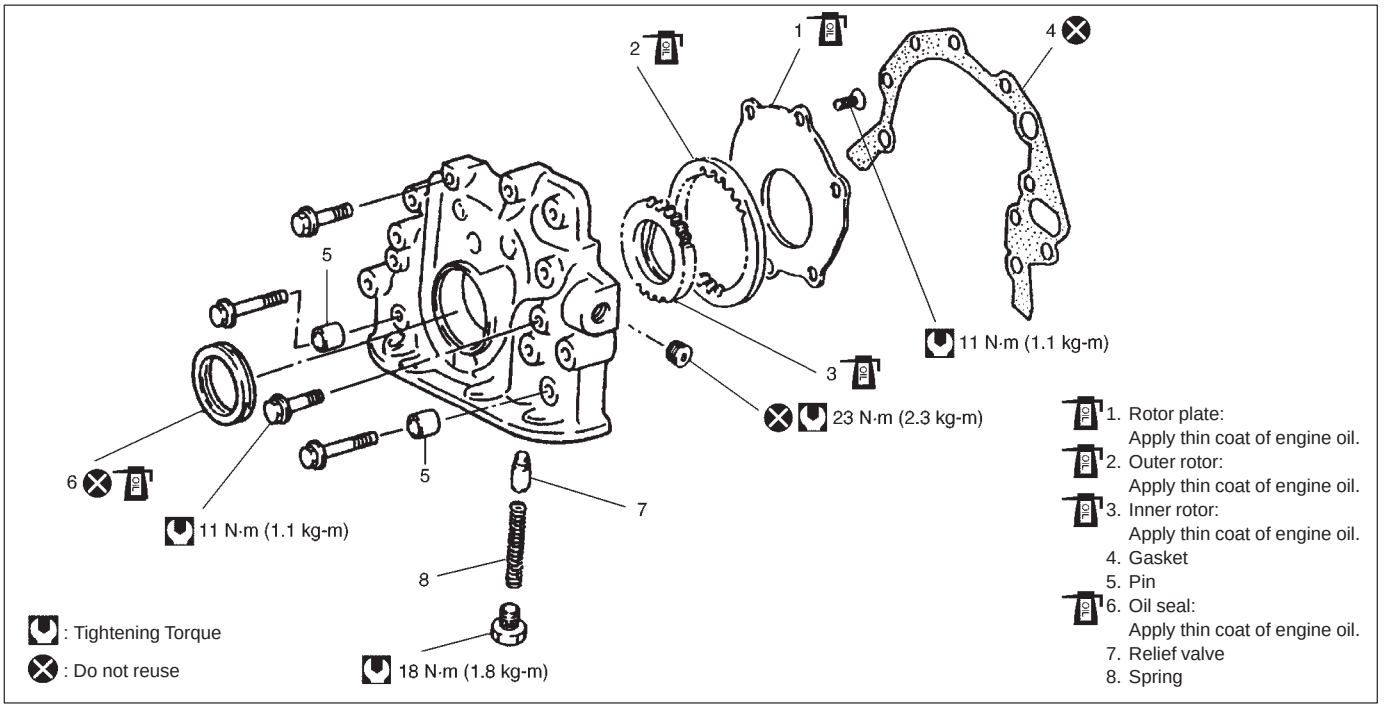

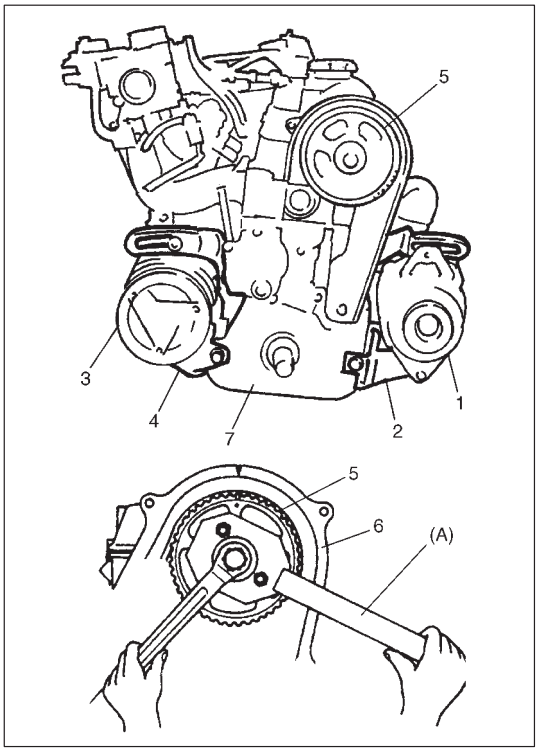

REMOVAL

1) Disconnect negative cable at battery.
2) Remove timing belt as previously outlined.
3) Remove generator (1) and its bracket (2).
4) Remove A/C compressor (3) and its bracket (4) (if equipped).
5) Remove camshaft timing pulley (5) by using special tool.

   Special Tool
   (A): 09917-68221

6) Remove timing belt inside cover (6).
7) Remove oil pan and oil pump strainer as previously outlined.
8) Remove oil pump assembly (7) after removing bolts.

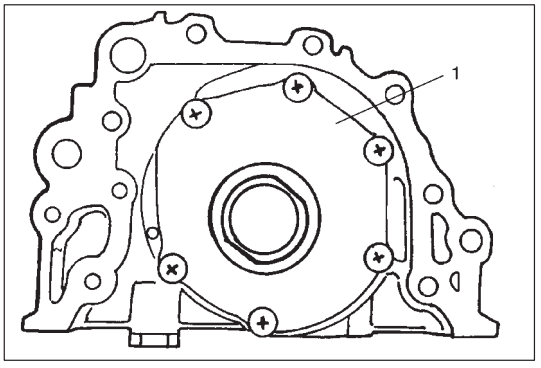

DISASSEMBLY

1) Remove rotor plate (1).

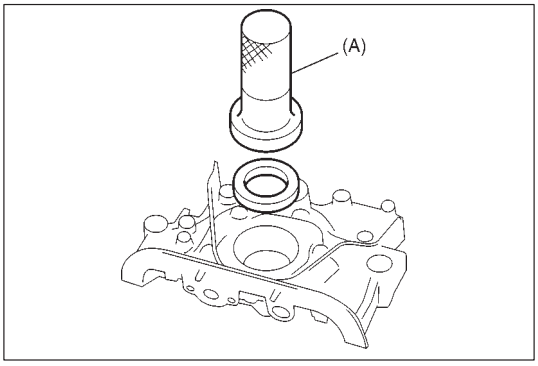

INSPECTION

- Check oil seal lip for fault or other damage. Replace as necessary.

  Special Tool
  (A): 09913-75520

  NOTE:
  When installing oil seal, press-fit it till its end face is flush with oil pump case end face.

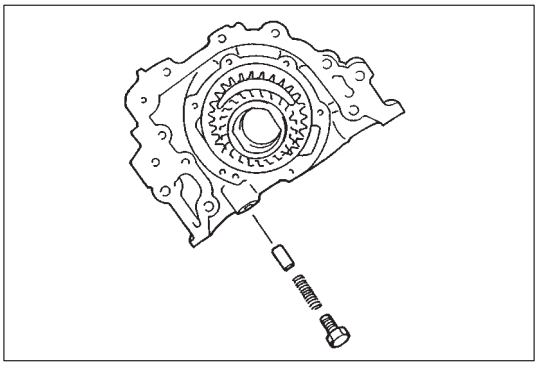

- Check outer and inner rotors, rotor plate, and oil pump case for excessive wear or damage.

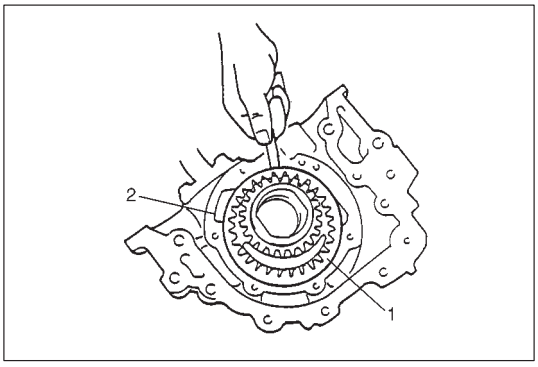

MEASUREMENT

- **Radial clearance**
  Check radial clearance between outer rotor (1) and case (2), using thickness gauge.
  If clearance exceeds its limit, replace outer rotor or case.

  Limit on radial clearance between outer rotor and case: 0.320 mm (0.0126 in.)

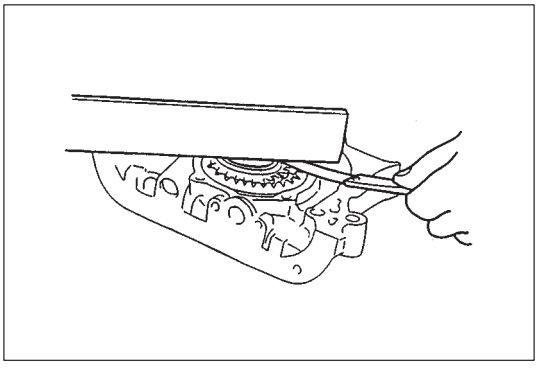

- **Side clearance**
  Using straight edge and thickness gauge, measure side clearance.

  Limit on side clearance: 0.17 mm (0.0067 in.)

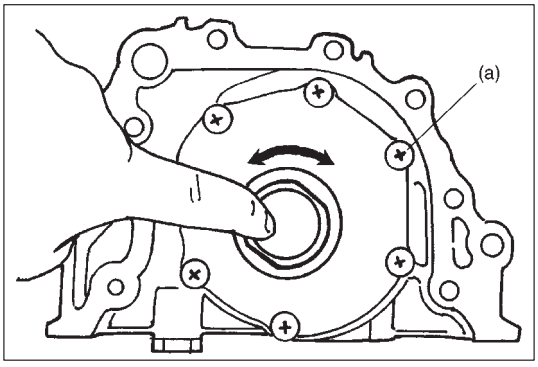

ASSEMBLY

1) Wash, clean and then dry all disassembled parts.
2) Apply thin coat of engine oil to inner and outer rotors, oil seal lip portion, and inside surfaces of oil pump case and plate.
3) Install outer and inner rotors to pump case.
4) Install rotor plate. Tighten screws to specified torque.
   After installing plate, check to be sure that gears turn smoothly by hand.

   Tightening torque
   (a): 11 N·m (1.1 kg-m, 8.0 lb-ft)

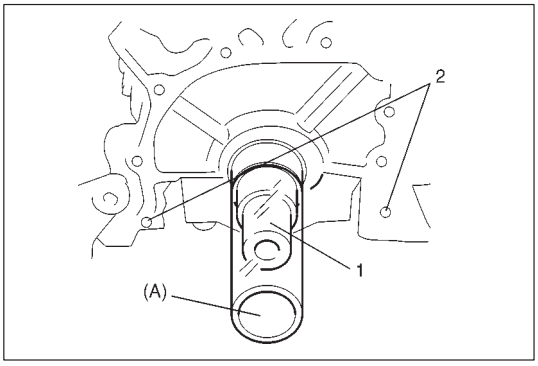

INSTALLATION

1) Install two oil pump pins (2) and oil pump gasket to cylinder block. Use a new gasket.
2) To prevent oil seal lip from being damaged or upturned when installing oil pump to crankshaft, fit special tool (Oil seal guide) to crankshaft (1), and apply engine oil to special tool.

   Special Tool
   (A): 09926-18210

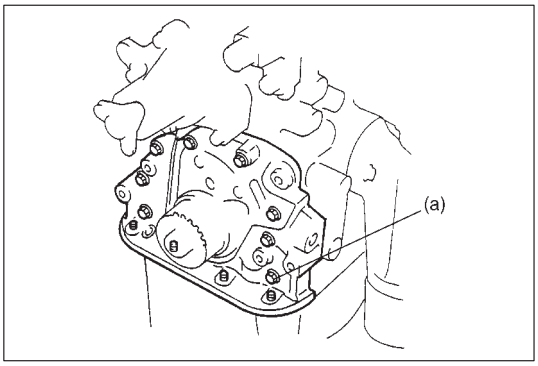

3) Install oil pump to cylinder block.

   Tightening Torque
   (a): 11 N·m (1.1 kg-m, 8.0 lb-ft)

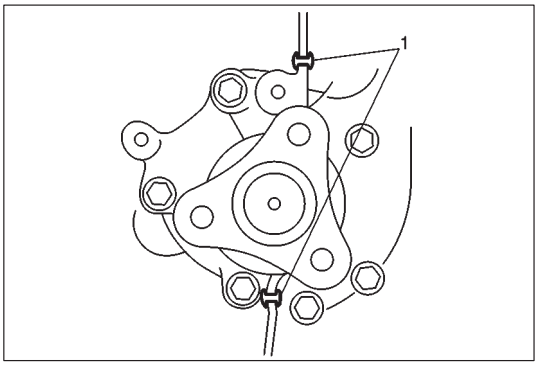

4) Install rubber seals (1) between oil pump and water pump.

5) Install timing belt, tensioner, oil pump strainer, oil pan and other parts as previously outlined.
6) Check to ensure that all removed parts are back in place. Reinstall any necessary parts which have not been reinstalled.
7) Adjust water pump drive belt tension, referring to Section 0B.
8) Adjust A/C compressor belt tension, if equipped. Refer to Section 0B.
9) Refill engine with engine oil, referring to item ENGINE OIL CHANGE in Section 0B.
10) Connect negative cable at battery.
11) Verify that there is no coolant leakage and each oil leakage at each connection.
12) After completing installation, check oil pressure by running engine.

ROCKER ARMS, ROCKER SHAFT AND CAMSHAFT

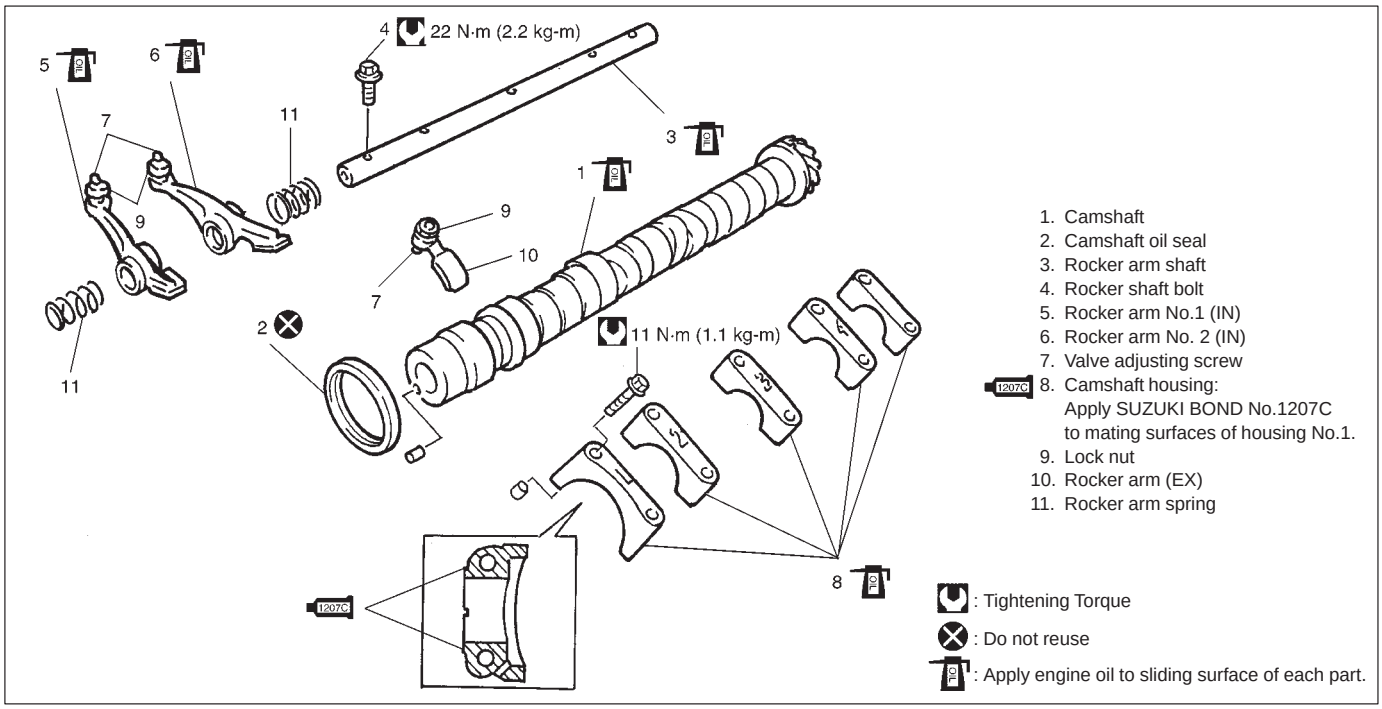

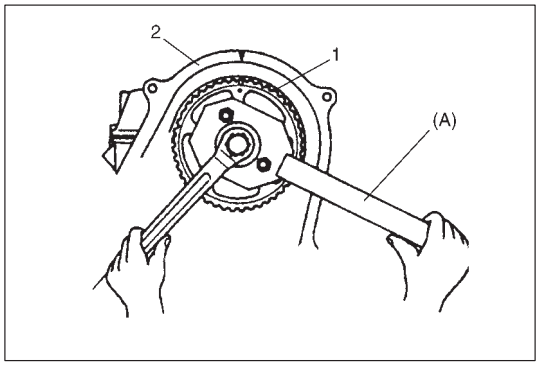

REMOVAL

1) Disconnect negative cable at battery.
2) Remove timing belt as previously outlined.
3) Remove camshaft timing belt pulley (1) by using special tool and then remove timing belt inside cover (2).

   Special Tool
   (A): 09917-68221

4) Remove cylinder head cover as previously outlined.

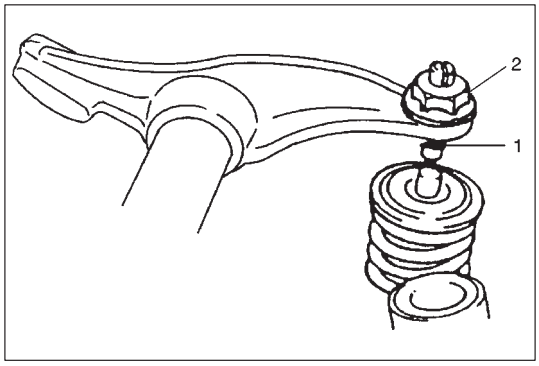

5) After loosening all valve adjusting screw lock nuts (2), turn adjusting screws (1) back all the way to allow all rocker arms to move freely.

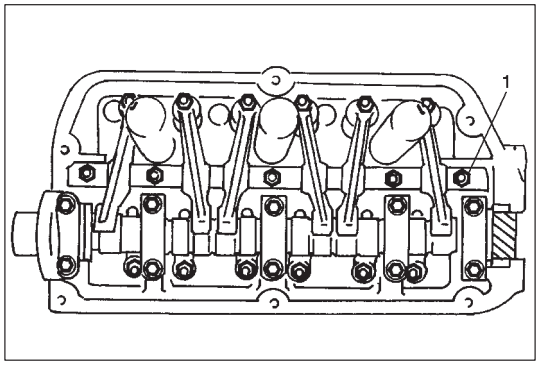

6) Remove rocker arm shaft bolts (1).

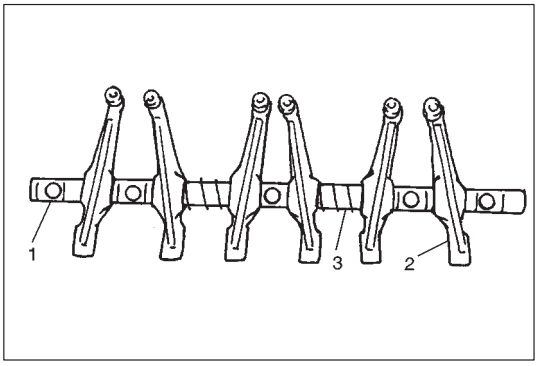

7) Remove rocker arm shaft (1) with intake rocker arms (2) and rocker arm spring (3).

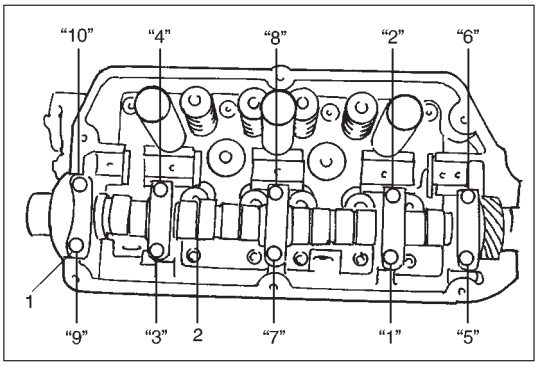

8) Remove camshaft housing (1), camshaft (2) and distributor. For distributor removal, refer to Section 6F.

NOTE:
To remove camshaft housing bolts, loosen them in such order as indicated in figure, a little at a time.

9) Remove exhaust rocker arms.

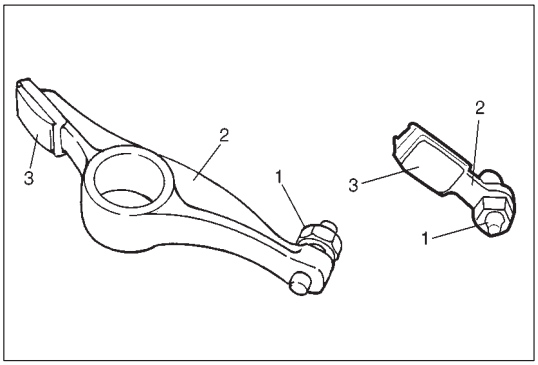

INSPECTION

Adjusting Screw and Rocker Arm

If tip of adjusting screw (1) is badly worn, replace it.
Rocker arm (2) must be replaced if its cam-riding face (3) is badly worn.

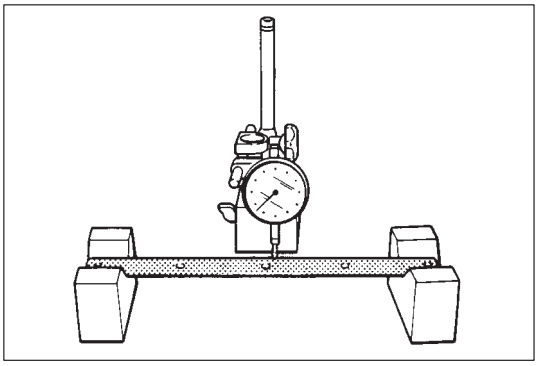

Rocker Arm Shaft Runout

Using "V" blocks and dial gauge, check runout. If runout exceeds its limit, replace rocker arm shaft.

Runout limit: 0.06 mm (0.0024 in.)

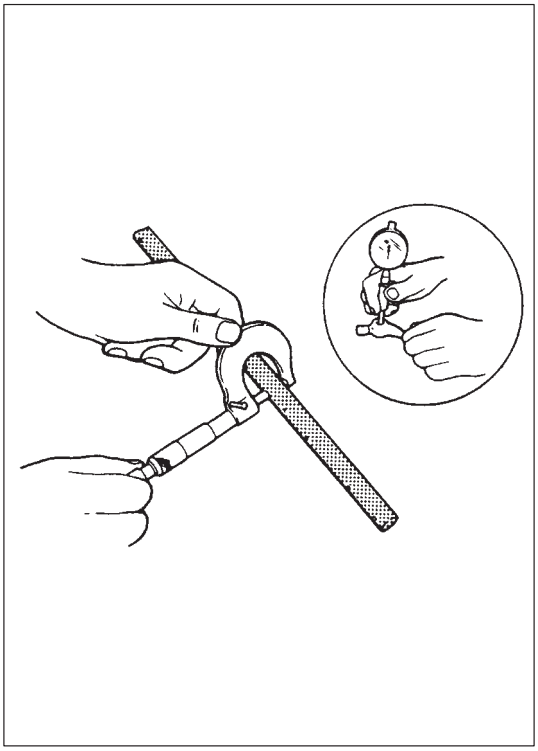

Rocker Arm-to-Rocker Arm Shaft Clearance

Using a micrometer and a bore gauge, measure rocker shaft dia. and rocker arm I.D.

Difference between two readings is arm-to-shaft clearance on which a limit is specified.

If limit is exceeded, replace shaft or arm, or both.

Item	Standard	Limit
Rocker arm I.D.	15.985 – 16.005 mm (0.629 – 0.630 in.)	———
Rocker arm shaft dia.	15.965 – 15.980 mm (0.6285 – 0.6291 in.)	———
Arm-to-shaft clearance	0.005 – 0.040 mm (0.0002 – 0.0016 in.)	0.06 mm (0.0024 in.)

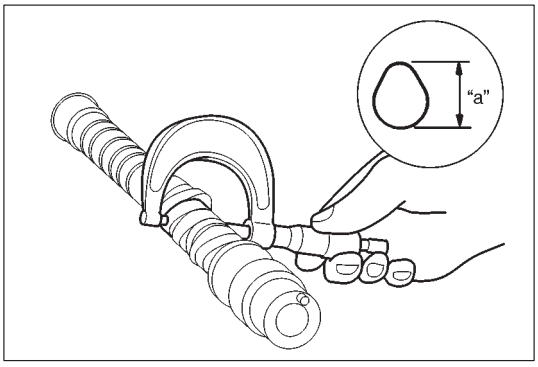

Cam Wear

Using a micrometer, measured height of cam. If measured height is below limit, replace camshaft.

Cam height	Standard	Limit
Intake cam	30.406 – 30.566 mm (1.1971 – 1.2034 in.)	30.362 mm (1.1954 in.)
Exhaust cam	29.719 – 29.879 mm (1.1700 – 1.1763 in.)	29.676 mm (1.1683 in.)

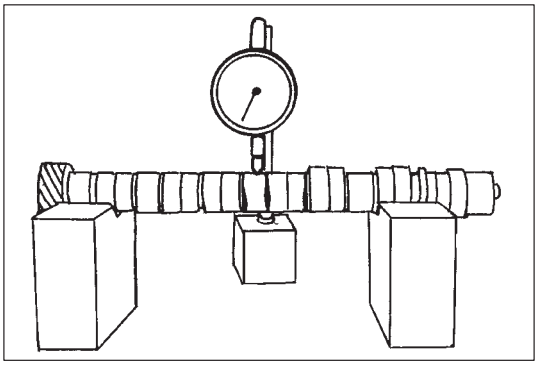

Camshaft Runout

Hold camshaft between two "V" blocks, and measure runout by using a dial gauge.

If runout exceeds the limit, replace camshaft.

Runout limit: 0.10 mm (0.0039 in.)

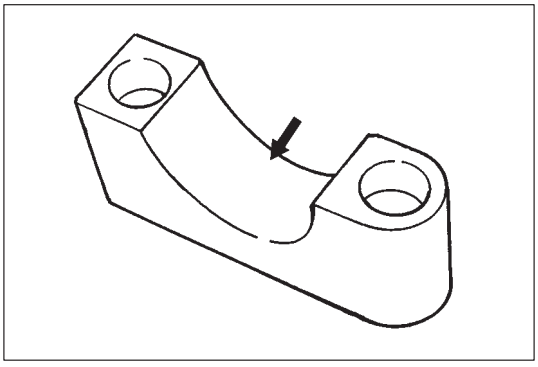

Camshaft Journal Wear

Check camshaft journals and camshaft housings for pitting, scratches, wear or damage.

If any malcondition is found, replace camshaft or cylinder head with housing. Never replace cylinder head without replacing housing.

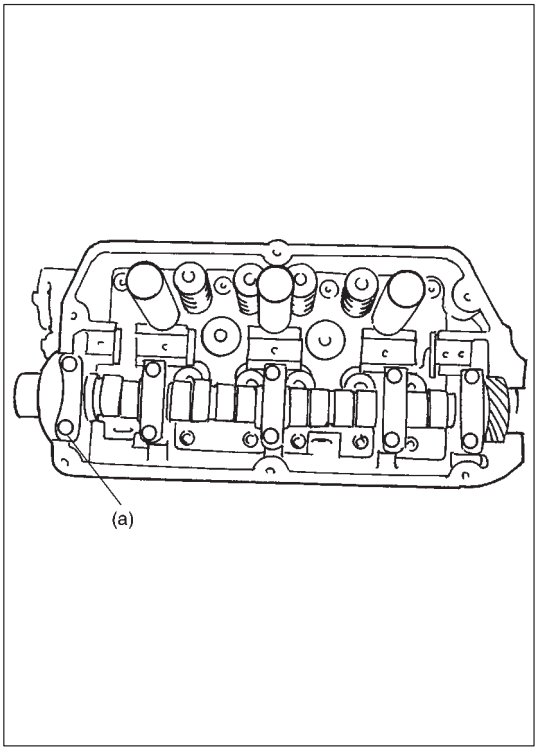

Check clearance by using gaging plastic.
The procedure is as follows.

1) Clean housing and camshaft journals.
2) Install camshaft to cylinder head.
3) Place a piece of gaging plastic the full width of journal of camshaft (parallel to camshaft).
4) Install camshaft housing, referring to the following page.
5) Tighten camshaft housing bolts in such order as indicated in figure a little at a time till they are tightened to specified torque.

Tightening Torque
(a): 11 N·m (1.1kg-m, 8.0 lb-ft)

NOTE:
Do not rotate camshaft while gaging plastic is installed.

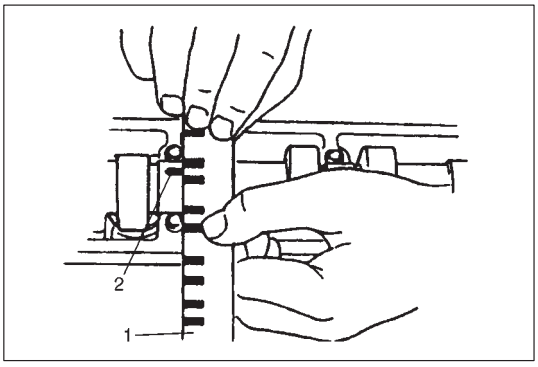

6) Remove housing and using scale (1) on gaging plastic (2) envelope, measure gaging plastic width at its widest point.

	Standard	Limit
Journal clearance	0.045 – 0.087 mm (0.0018 – 0.0034 in.)	0.12 mm (0.0047 in.)

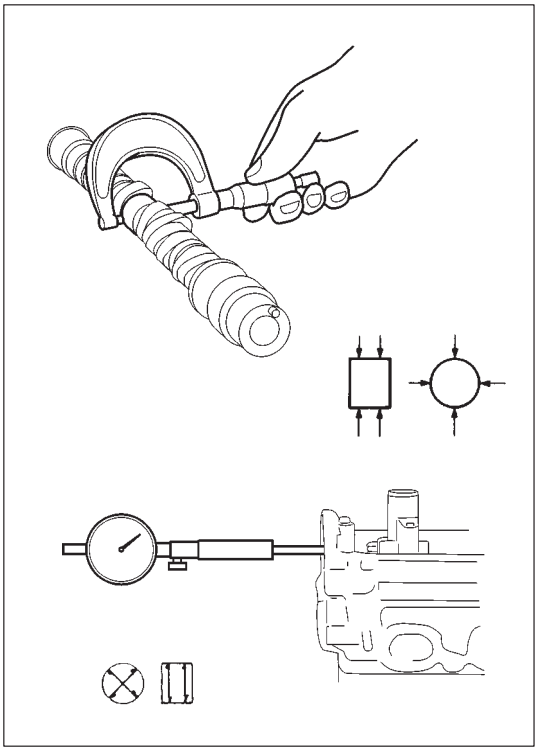

If measured camshaft journal clearance exceeds limit, measure journal (housing) bore and outside diameter of camshaft journal. Replace camshaft or cylinder head assembly whichever the difference from specification is greater.

Item	Standard
Camshaft Journal bore dia.	27.000 – 27.021 mm (1.0630 – 1.0638 in.)
Camshaft journal O.D.	26.934 – 26.955 mm (1.0603 – 1.0612 in.)

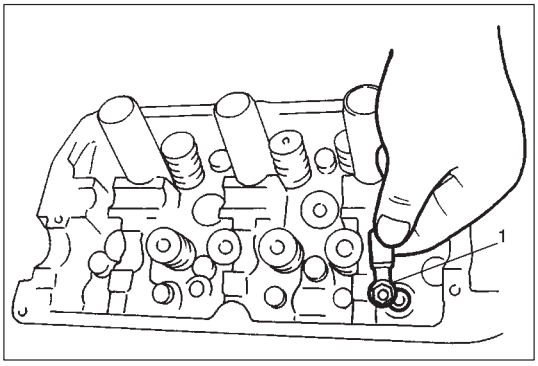

INSTALLATION

1) Fill small amount of engine oil into arm pivot holding part of cylinder head. Install rocker arm (exhaust side) (1).

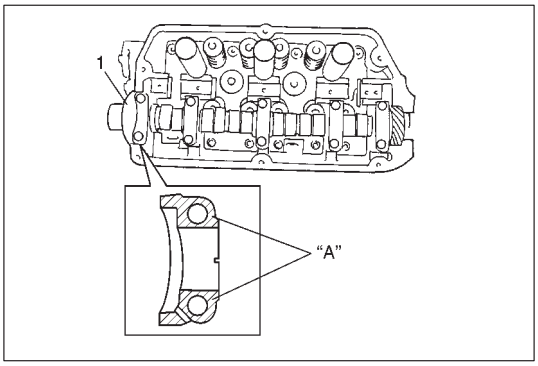

2) Apply engine oil to cams and journals on camshaft and put camshaft on cylinder head. Install camshaft housing to camshaft and cylinder head.
   - Apply engine oil to sliding surface of each housing against camshaft journal.
   - Apply sealant to mating surface of No.1 housing (1) which will mate with cylinder head.

     "A" Sealant: 99000-31150

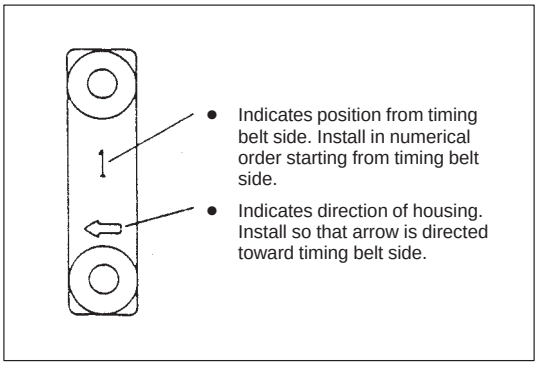

- Embossed marks are provided on each camshaft housing, indicating position and direction for installation.
  Install housing as indicated by these marks.
- As camshaft housing No. 1 retains camshaft in proper position as to thrust direction, make sure to first fit No. 1 housing to No. 1 journal of camshaft securely.

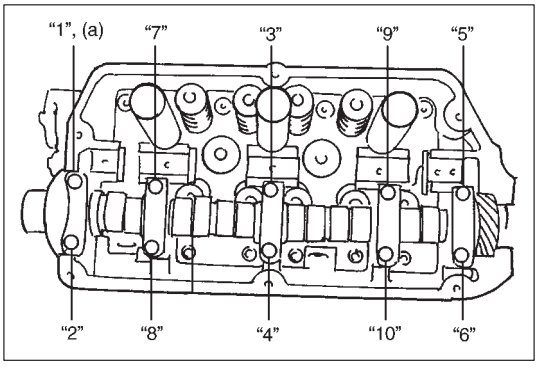

- After applying engine oil to housing bolts, tighten them temporarily first. Then tighten them by following sequence as indicated in figure.
  Tighten a little at a time and evenly among bolts and repeat tightening sequence three to four times before they are tightened to specified torque.

  Tightening Torque
  (a): 11 N·m (1.1 kg-m, 8.0 lb-ft)

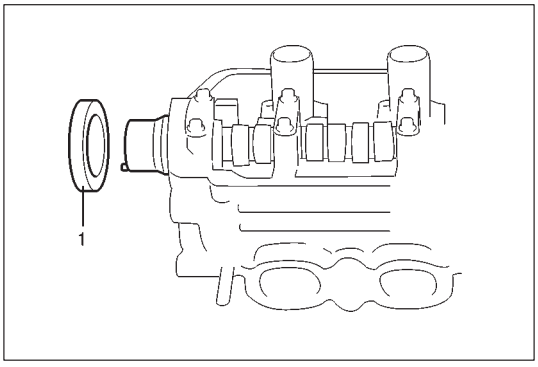

3) Install new camshaft oil seal (1).
   After applying engine oil to oil seal lip, press-fit camshaft oil seal till oil seal surface becomes flush with housing surface.
4) Install distributor, refer to Section 6F.

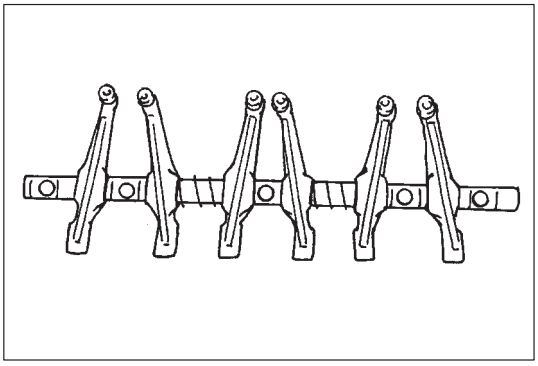

5) Apply engine oil to rocker arm shaft and rocker arms.
6) Install rocker arm shaft, rocker arm (intake side) and rocker arm spring.

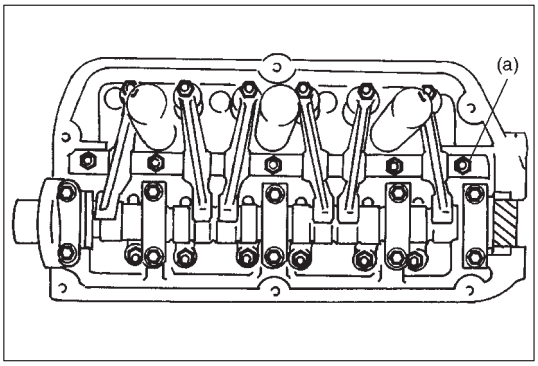

7) Install rocker arm shaft bolts and tighten them to specified torque.

Tightening Torque
(a): 22 N·m (2.2 kg-m, 16.0 lb-ft)

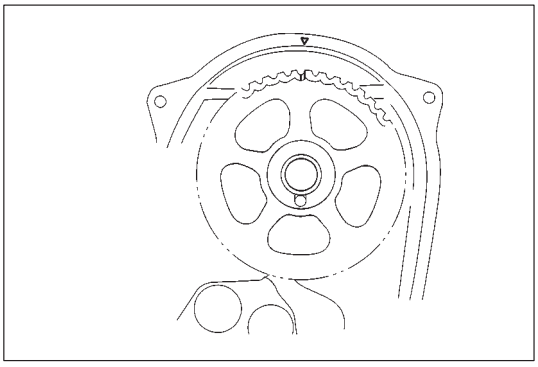

8) Install camshaft timing belt inside cover.
9) Install camshaft timing belt pulley to camshaft while fitting pin on camshaft into slot.

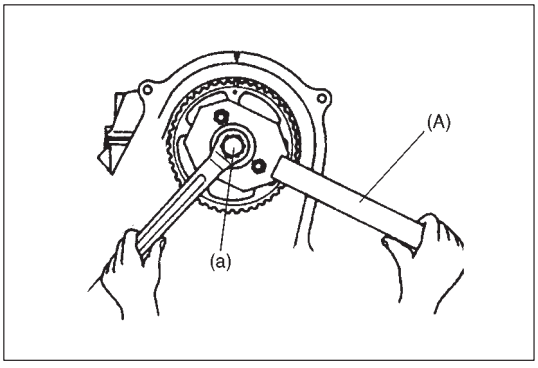

10) Using special tool, tighten pulley bolt to specified torque.

Tightening Torque
(a): 54 N·m (5.4 kg-m, 39.0 lb-ft)

Special Tool
(A): 09917-68221

11) Install belt tensioner, timing belt, outside cover, crankshaft pulley, A/C compressor belt (if equipped) and water pump belt as previously outlined.

12) Adjust valve clearance as previously outlined.
13) Install cylinder head cover.
14) Connect negative cable at battery.
15) Confirm that ignition timing is within specification referring to Section 6F.

VALVES AND CYLINDER HEAD

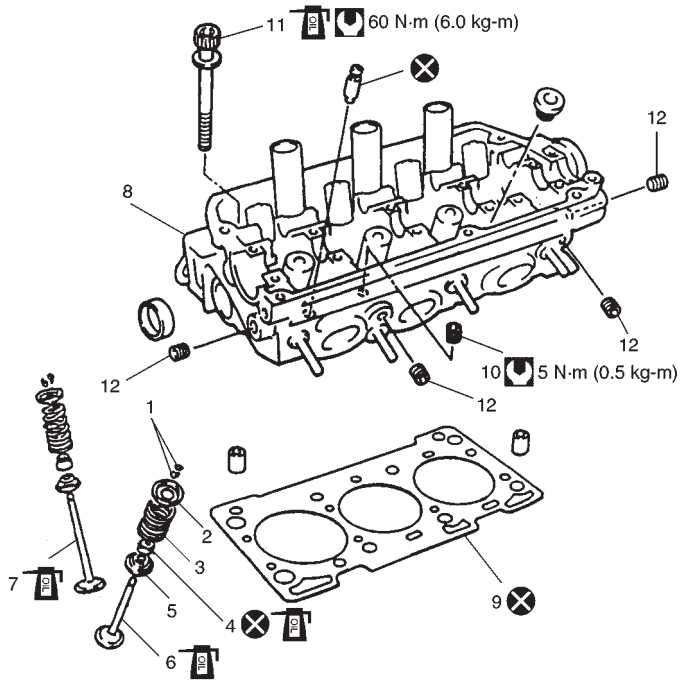

1. Valve cotters
2. Valve spring retainer
3. Valve spring
4. Valve stem seal
5. Valve spring seat
6. Exhaust valve
7. Intake valve
8. Cylinder head
9. Cylinder head gasket
10. Oil venturi plug
11. Cylinder head bolt
12. Oil gallery plug

: Tightening Torque

: Do not reuse

: Apply engine oil.

REMOVAL

1) Relieve fuel pressure according to fuel pressure relief procedure described in Section 6.
2) Disconnect negative cable at battery.

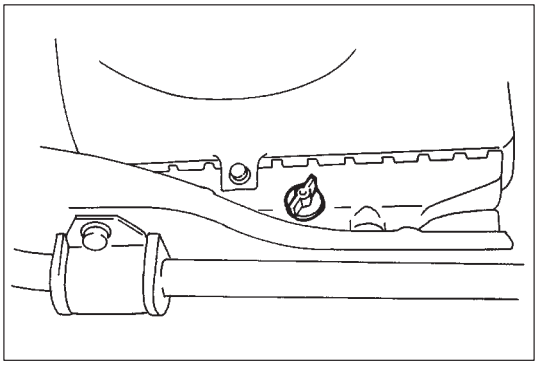

3) Drain cooling system.

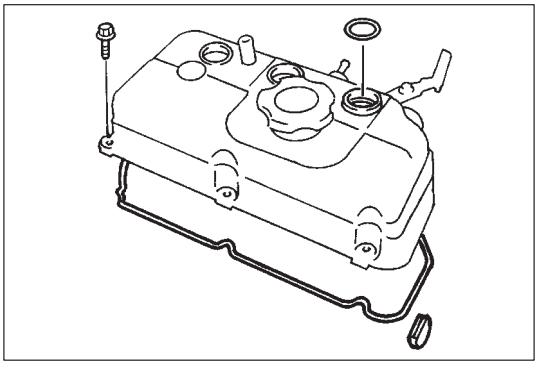

4) Remove cylinder head cover as previously outlined. Loosen all valve lash adjusting screws fully.

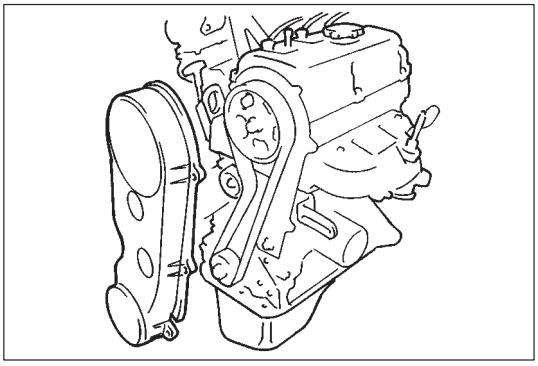

5) Remove timing belt, timing belt inside cover rocker arm shaft with, intake rocker arms, exhaust rocker arms and camshaft as previously outlined.

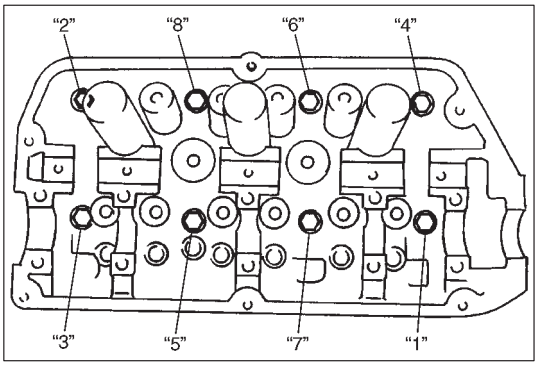

6) Disconnect exhaust pipe from exhaust manifold.
7) Loosen cylinder head bolts in such order as indicated in figure and remove them.
8) Check all around cylinder head for any other parts required to be removed or disconnected and remove or disconnect whatever necessary.

9) Remove cylinder head with intake manifold and exhaust manifold.

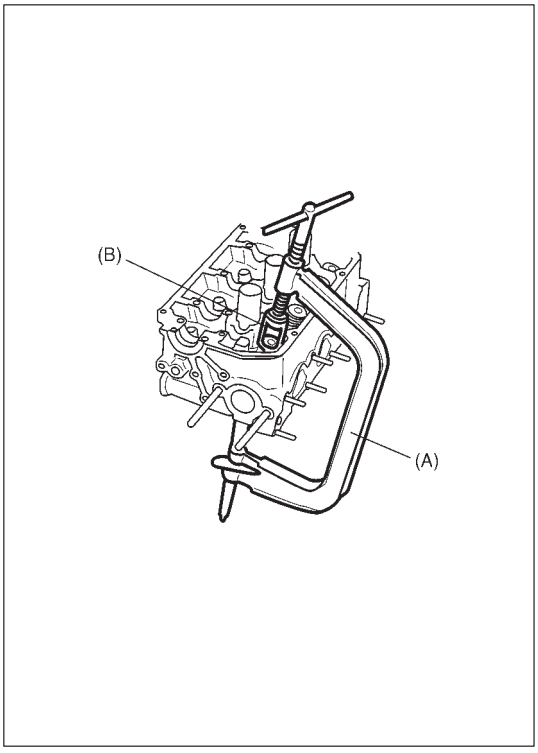

DISASSEMBLY

1) For ease in servicing cylinder head, remove intake manifold, exhaust manifold and thermostat case from cylinder head.
2) Using special tool (Valve lifter), compress valve springs and then remove valve cotters by using special tool (Forceps) as shown.

   Special Tool
   (A): 09916-14510
   (B): 09916-14910

3) Release special tool, and remove spring retainer and valve spring.
4) Remove valve from combustion chamber side.

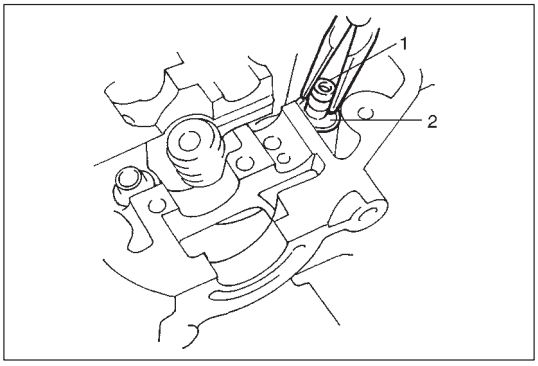

5) Remove valve stem oil seal (1) from valve guide, and then valve spring seat (2).

NOTE:
Do not reuse oil seal once disassembled. Be sure to use new oil seal when assembling.

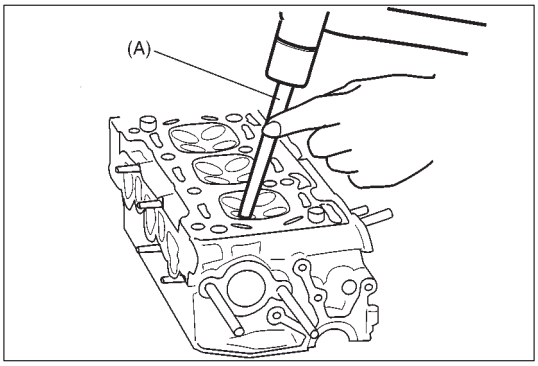

6) Using special tool (Valve guide remover), drive valve guide out from combustion chamber side to valve spring side.

Special Tool
(A): 09916-44910

NOTE:
Do not reuse valve guide once disassembled. Be sure to use new valve guide (Oversize) when assembling.

7) Place disassembled parts except valve stem seal and valve guide in order, so that they can be installed in their original position.

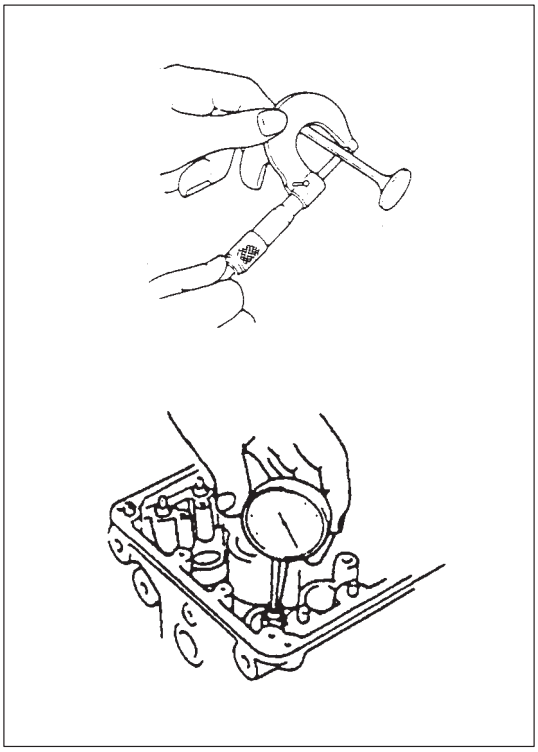

INSPECTION

Valve Guides

Using a micrometer and caliper gauge, take diameter readings on valve stems and guides to check stem-to-guide clearance.
Be sure to take reading at more than one place along the length of each stem and guide.
If clearance exceeds limit, replace valve and valve guide.

Item		Standard	Limit
Valve stem diameter	In	5.465 – 5.480 mm (0.2152 – 0.2157 in.)	—
	Ex	5.440 – 5.455 mm (0.2142 – 0.2148 in.)	—
Valve guide I.D.	In	5.500 – 5.512 mm (0.2166 – 0.2170 in.)	—
	Ex		
Stem-to-guide clearance	In	0.020 – 0.047 mm (0.0008 – 0.0018 in.)	0.07 mm (0.0027 in.)
	Ex	0.045 – 0.072 mm (0.0018 – 0.0028 in.)	0.09 mm (0.0035 in.)

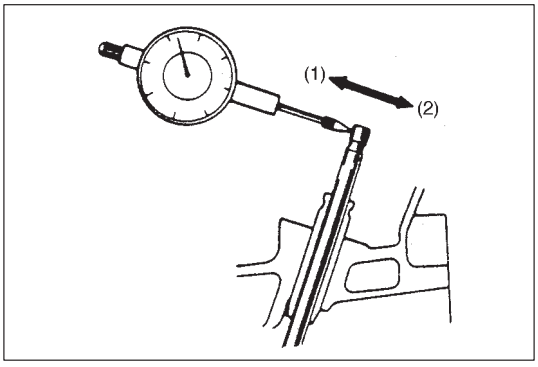

If caliper gauge is not available, check end deflection of valve stem with a dial gauge instead.
Move stem end in directions (1) and (2) to measure end deflection.
If deflection exceeds its limit, replace valve stem and valve guide.

Valve stem end deflection limit	In	0.14 mm (0.005 in.)
	Ex	0.18 mm (0.007 in.)

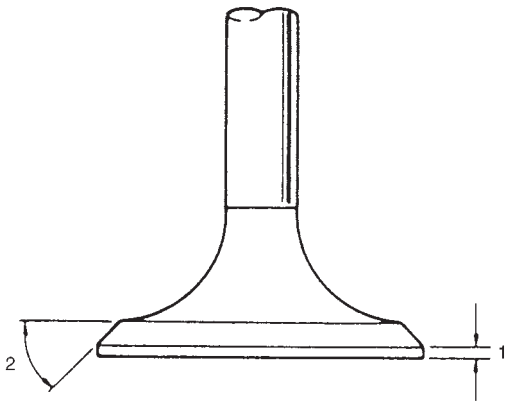

1. Valve head thickness
2. 45°

Valves

- Remove all carbon from valves.
- Inspect each valve for wear, burn or distortion at its face and stem end, as necessary, replace it.
- Measure thickness of valve head. If measured thickness exceeds limit, replace valve.

Valve head thickness		
	Standard	Limit
IN	0.8 – 1.2 mm (0.03 – 0.047 in.)	0.6 mm (0.024 in.)
EX		0.7 mm (0.027 in.)

- Inspect valve stem end face for pitting and wear. If pitting or wear is found there, valve stem end may be resurfaced, but not so much as to grind off its chamfer. When it is worn so much that its chamfer is gone, replace valve.

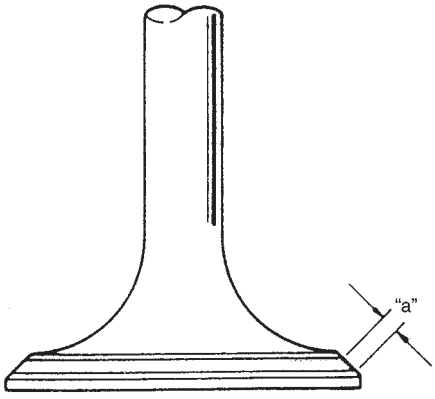

- Seating contact width:
  Create contact pattern on each valve in the usual manner, i.e., by giving uniform coat of marking compound to valve seat and by rotatingly tapping seat with valve head. Valve lapper (tool used in valve lapping) must be used.

  Pattern produced on seating face of valve must be a continuous ring without any break, and the width "a" of pattern must be within specified range.

Standard seating width revealed by contact pattern on valve face	In	1.80 – 2.20 mm (0.0709 – 0.0866 in.)
	Ex	1.65 – 2.05 mm (0.0650 – 0.0807 in.)

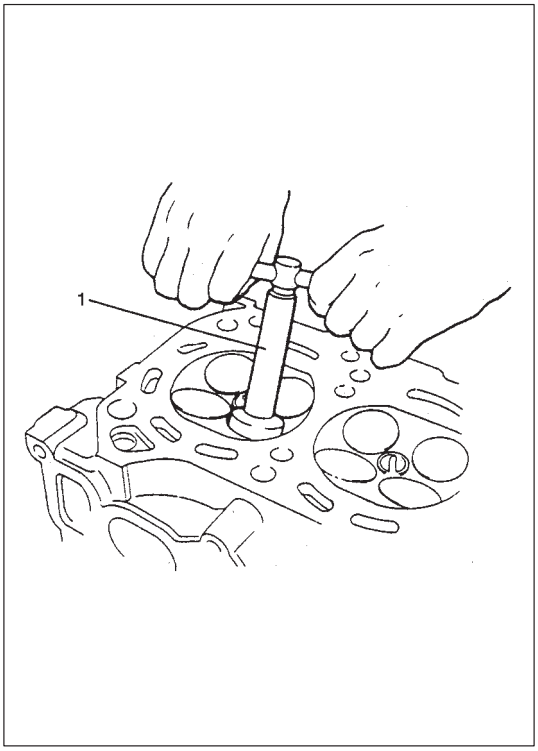

- Valve seat repair:
  A valve seat not producing a uniform contact with its valve or showing width of seating contact that is out of specified range must be repaired by regrinding or by cutting and regrinding and finished by lapping.
  1) EXHAUST VALVE SEAT: Use valve seat cutter (1) to make two cuts as illustrated in figure. Two cutters must be used: the first for making 15° angle, and the second for making 45° angle. The second cut must be made to produce desired seat width.

     Seat width for exhaust valve seat:
     1.65 – 2.05 mm (0.0650 – 0.0807 in.)

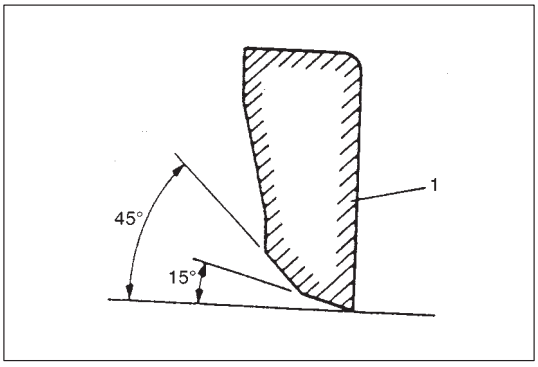

  2) INTAKE VALVE SEAT: Cutting sequence is the same as for exhaust valve seats (1).

     Seat width for intake valve seat:
     1.80 – 2.20 mm (0.0709 – 0.0866 in.)

  3) VALVE LAPPING: Lap valve on seat in two steps, first with coarse size lapping compound applied to face and the second with fine-size compound, each time using valve lapper according to usual lapping method.

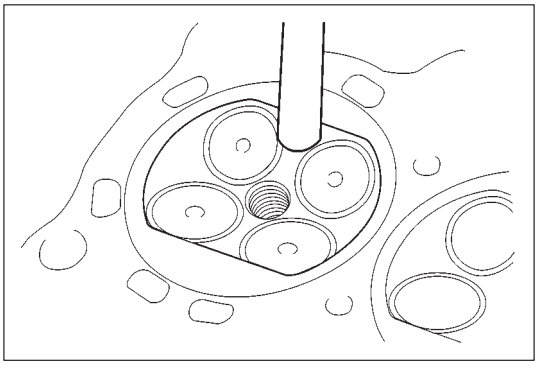

Cylinder Head

- Remove all carbon from combustion chambers.

  NOTE:
  Do not use any sharp-edged tool to scrape off carbon. Be careful not to scuff or nick metal surfaces when decarboning. The same applies to valves and valve seats, too.

- Check cylinder head for cracks in intake and exhaust ports, combustion chambers, and head surface.

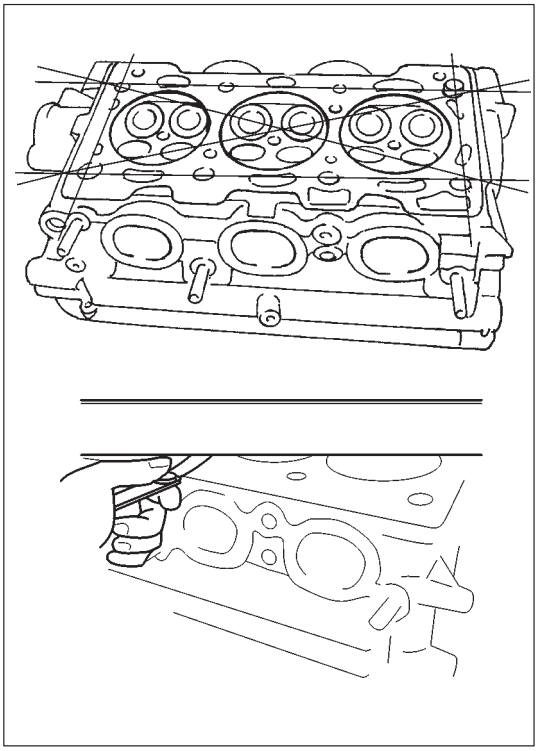

- Flatness of gasketed surface:
  Using a straightedge and thickness gauge, check surface at a total of 6 locations. If distortion limit, given below, is exceeded, correct gasketed surface with a surface plate and abrasive paper of about #400 (Waterproof silicon carbide abrasive paper): place paper on and over surface plate, and rub gasketed surface against paper to grind off high spots. Should this fail to reduce thickness gauge readings to within limit, replace cylinder head. Leakage of combustion gases from this gasketed joint is often due to warped gasketed surface: such leakage results in reduced power output.

  Limit of distortion: 0.05 mm (0.002 in.)

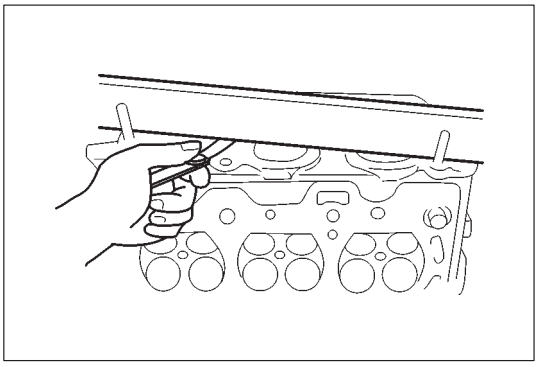

- Distortion of manifold seating faces:
  Check seating faces of cylinder head for manifolds, using a straightedge and thickness gauge, in order to determine whether these faces should be corrected or cylinder head replaced.

  Limit of distortion: 0.10 mm (0.004 in.)

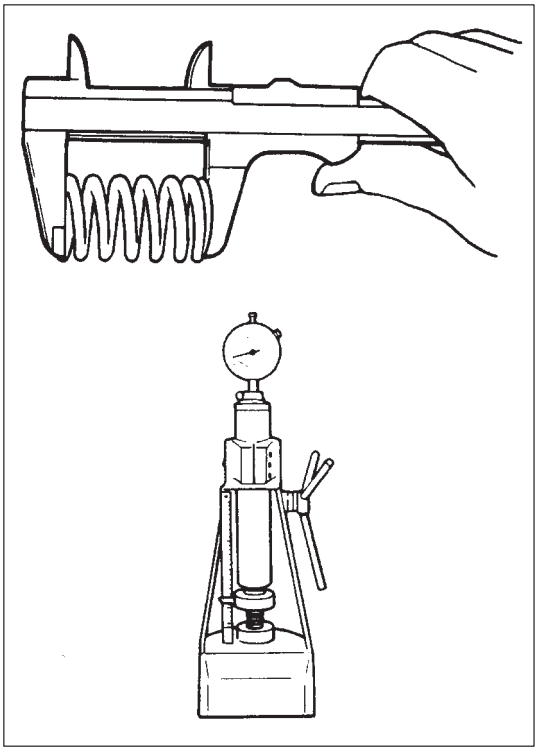

Valve Springs

- Referring to data given below, check to be sure that each spring is in sound condition, free of any evidence of breakage or weakening. Remember, weakened valve springs can cause chatter, not to mention possibility of reducing power output due to gas leakage caused by decreased seating pressure.

Item	Standard	Limit
Valve spring free length	37.09 mm (1.460 in.)	36.2 mm (1.4252 in.)
Valve spring preload	13.3 – 15.7 kg for 32.0 mm (29.3 – 34.6 lb/1.26 in.)	13.0 kg for 32.0 mm (28.7 lb/1.26 in.)

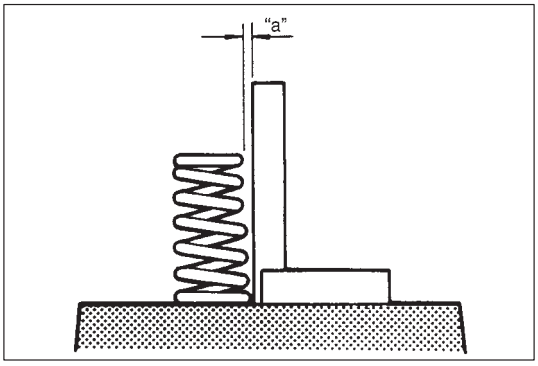

- Spring squareness:
  Use a square and surface plate to check each spring for squareness in terms of clearance between end of valve spring and square. Valve springs found to exhibit a larger clearance than limit given below must be replaced.

  Valve spring squareness limit "a": 2.0 mm (0.079 in.)

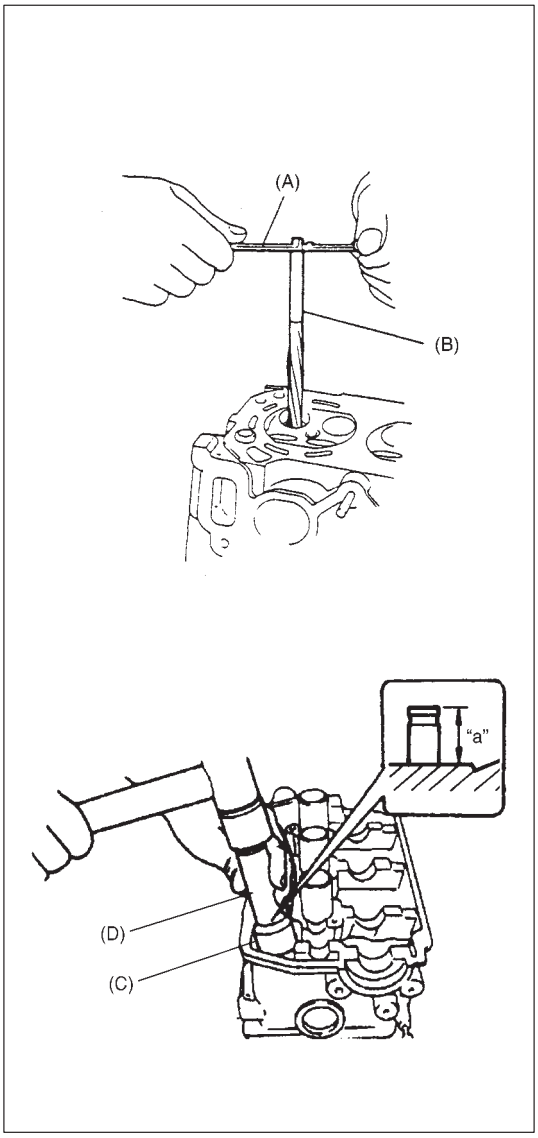

ASSEMBLY

1) Before installing valve guide into cylinder head, ream guide hole with special tool (10.5 mm reamer) so remove burrs and make it truly round.

   Special Tool
   (A): 09916-34542
   (B): 09916-37320

2) Install valve guide to cylinder head.
   Heat cylinder head uniformly at a temperature of 80 to 100°C (176 to 212°F) so that head will not be distorted, and drive new valve guide into hole with special tools. Drive in new valve guide until special tool (Valve guide installer) contacts cylinder head. After installing, make sure that valve guide protrudes by 13.0 mm (0.51 in.) from cylinder head.

   Special Tool
   (C): 09916-57340
   (D): 09916-58210

   NOTE:
   - **Do not reuse valve guide once disassembled. Install new valve guide (Oversize).**
   - **Intake and exhaust valve guides are identical.**

   Valve guide oversize: 0.03 mm (0.0012 in.)
   Valve guide protrusion "a" (In and Ex): 13.0 mm (0.51 in.)

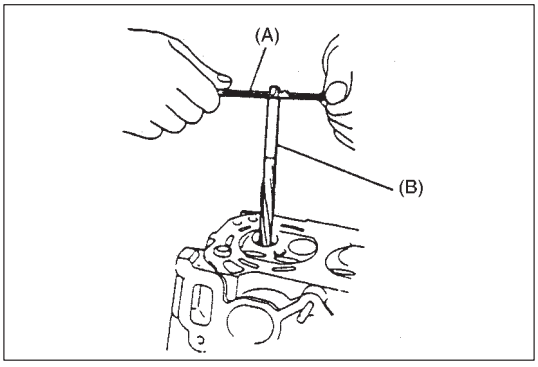

3) Ream valve guide bore with special tool (5.5 mm reamer). After reaming, clean bore.

   Special Tool
   (A): 09916-34542
   (B): 09916-34550

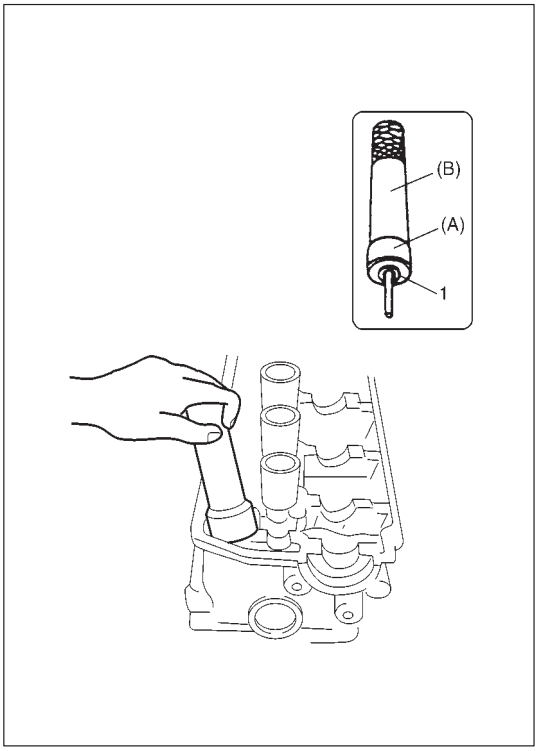

4) Install valve spring seat to cylinder head.
5) Install new valve stem seal (1) to valve guide.
After applying engine oil to seal and spindle of special tool (Valve guide installer handle), fit stem seal to spindle, and then install seal to valve guide by pushing special tool by hand.
After installing, check to be sure that seal is properly fixed to valve guide.

Special Tool
(A): 09917-98221
(B): 09916-58210

NOTE:
- **Do not reuse valve stem seal once disassembled. Be sure to install new seal.**
- **When installing, never tap or hit special tool with a hammer or else. Install seal to guide only by pushing special tool by hand. Tapping or hitting special tool may cause damage to seal.**

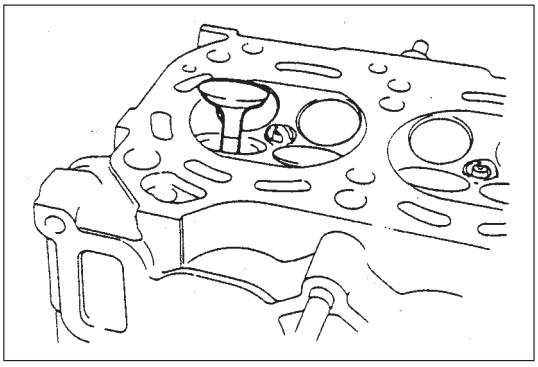

6) Install valve to valve guide.
Before installing valve to valve guide, apply engine oil to stem seal, valve guide bore, and valve stem.

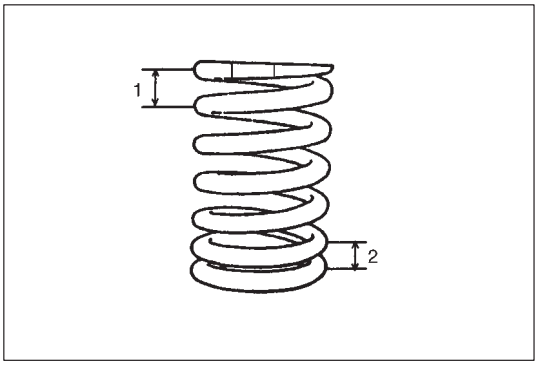

7) Install valve spring and spring retainer.
Each valve spring has top end (large-pitch end) (1) and bottom end (small-pitch end) (2). Be sure to position spring in place with its bottom end (small-pitch end) facing the bottom (valve spring seat side).

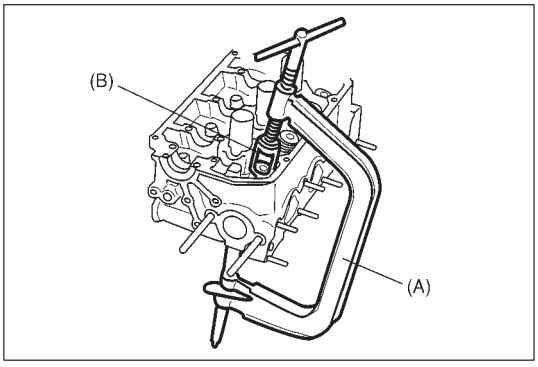

8) Using special tool (Valve lifter), compress valve spring and fit two valve cotters into groove in valve stem.

Special Tool
(A): 09916-14510
(B): 09916-14910

9) Install rocker arms, springs and rocker arm shaft as previously outlined.
10) Install intake manifold, exhaust manifold and thermostat case.

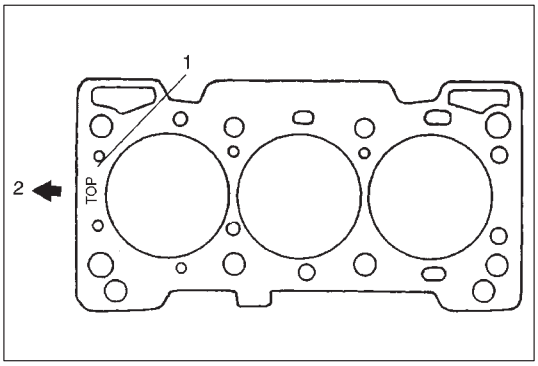

INSTALLATION

1) Remove old gasket and oil on mating surfaces and install new head gasket as shown in figure, that is, “TOP” mark (1) provided on gasket comes to crankshaft pulley side (2), facing up (toward cylinder head side).

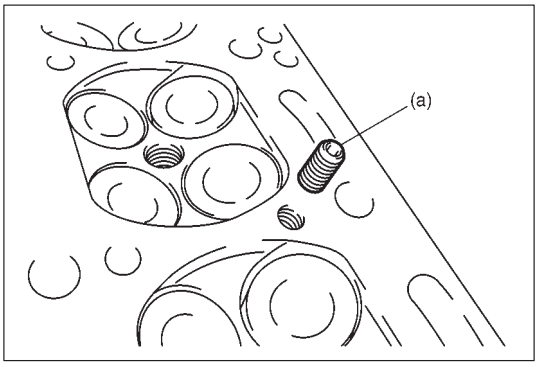

2) Check to make sure that oil jet (venturi plug) is installed and if it is, that it is not clogged.
When installing it, be sure to tighten to specified torque.

Tightening Torque
(a): 5 N·m (0.5 kg-m, 4.0 lb-ft)

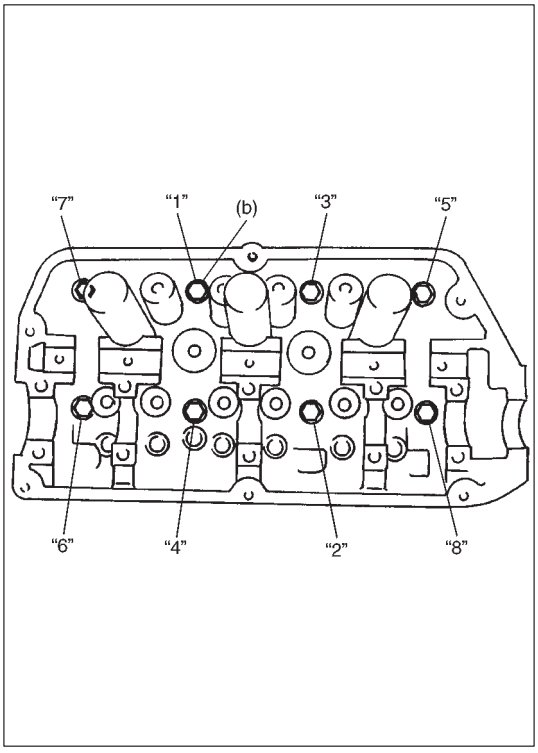

3) Apply engine oil to cylinder head bolts and tighten them gradually as follows.
   (1) Tighten all bolts to 30 N·m (3.0 kg-m, 22.0 lb-ft) according to numerical order in figure.
   (2) In the same manner as in (1), tighten them to 48 N·m (4.8 kg-m, 35.0 lb-ft).
   (3) Loosen all bolts to 0 N·m (0 kg-m, 0 lb-ft) reversing to numerical order in figure.
   (4) In the same manner as in (1) again, tighten them to 48 N·m (4.8 kg-m, 35.0 lb-ft).
   (5) In the same manner as in (1) again, tighten them to specified torque.

   Tightening Torque
   (b): 60 N·m (6.0 kg-m, 43.5 lb-ft)

4) Reverse removal procedure for installation.
5) Adjust water pump drive belt tension, referring to Section 6B.
6) Adjust A/C compressor belt tension, if equipped. Refer to section 0B.
7) Adjust intake and exhaust valve lashes as previously outlined.
8) Adjust accelerator cable play. Refer to Section 6E.
9) Check to ensure that all removed parts are back in place. Reinstall any necessary parts which have not been reinstalled.
10) Refill cooling system referring to Section 6B.
11) Connect negative cable at battery.
12) Verify that there is no fuel leakage, coolant leakage and exhaust gas leakage at each connection.
13) Confirm that ignition timing is within specification referring to Section 6F.

PISTON, PISTON RINGS, CONNECTING RODS AND CYLINDERS

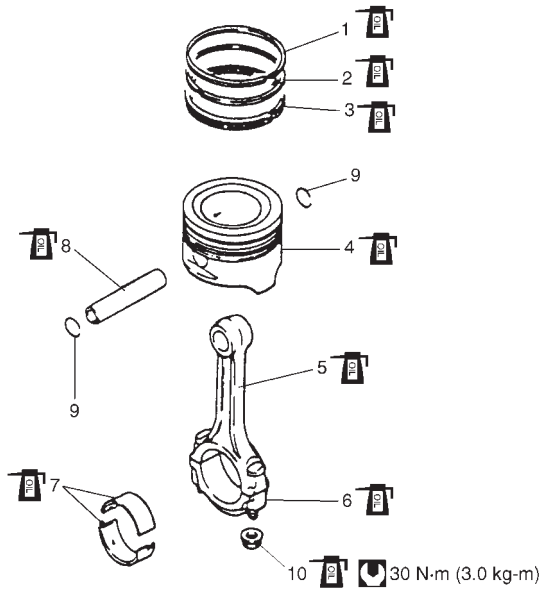

1. Top ring
2. 2nd ring
3. Oil ring
4. Piston
5. Connecting rod
6. Connecting rod bearing cap
7. Connecting rod bearing
8. Piston pin
9. Piston pin circlip
10. Bearing cap nut

: Tightening Torque

: Apply engine oil to sliding surface of each part.

REMOVAL

1) Remove cylinder head from cylinder block as previously outlined.
2) Drain engine oil.
3) Remove oil pan and oil pump strainer as previously outlined.
4) Mark cylinder number on all pistons, connecting rods and rod bearing caps, using silver pencil or quick drying paint.

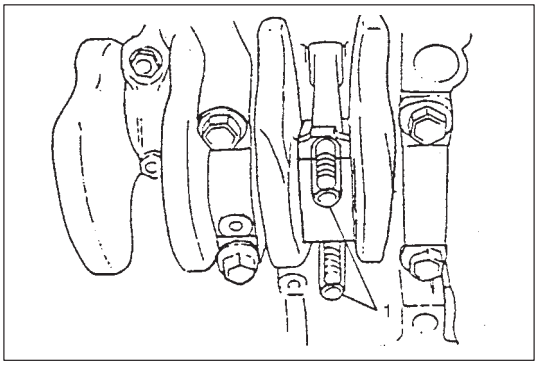

5) Remove rod bearing caps.
6) Install guide hose (1) over threads of rod bolts. This is to prevent damage to bearing journal and rod bolt threads when removing connecting rod.
7) Decarbon top of cylinder bore before removing piston from cylinder.
8) Push piston and connecting rod assembly out through the top of cylinder bore.

DISASSEMBLY

1) Using piston ring expander, remove two compression rings (Top and 2nd) and oil ring from piston.

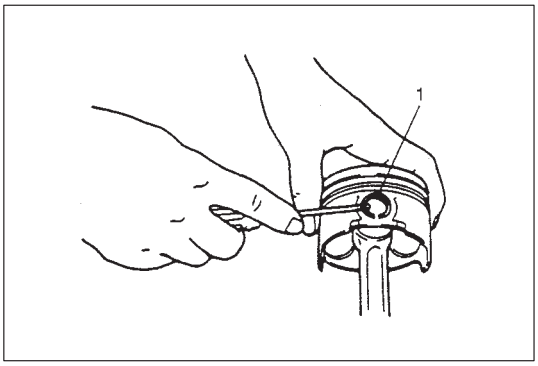

2) Remove piston pin from connecting rod.
   - Ease out piston pin circlips (1), as shown.

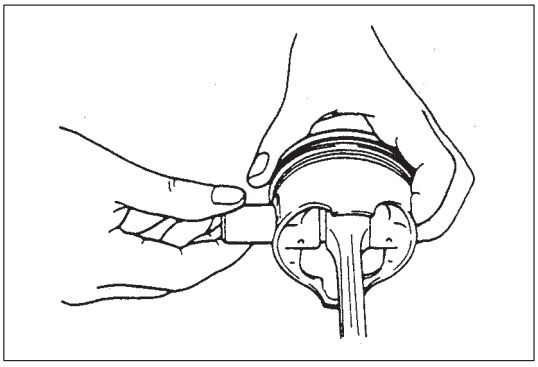

   - Force piston pin out.

CLEANING

Clean carbon from piston head and ring grooves, using a suitable tool.

INSPECTION

Cylinders

- Inspect cylinder walls for scratches, roughness, or ridges which indicate excessive wear. If cylinder bore is very rough or deeply scratched, or ridged, rebore cylinder and use oversize piston.

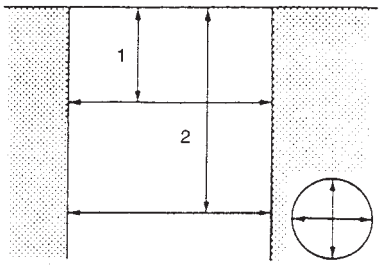

1. 50 mm (1.96 in.)
2. 90 mm (3.54 in.)

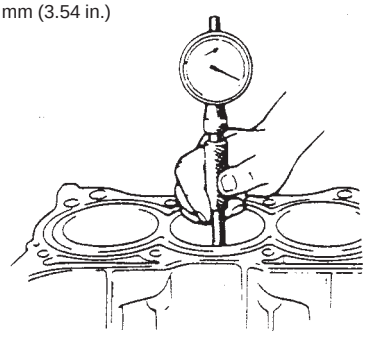

- Using a cylinder gauge, measure cylinder bore in thrust and axial directions at two positions as shown in figure.
  If any of following conditions is noted, rebore cylinder.
  1) Cylinder bore dia. exceeds limit.
  2) Difference of measurements at two positions exceeds taper limit.
  3) Difference between thrust and axial measurements exceeds out-of-round limit.

  Cylinder bore dia. limit: 68.57 mm (2.6996 in.)
  Taper and out-of-round limit: 0.10 mm (0.0039 in.)

  NOTE:
  If any one of three cylinders has to be rebored, rebore all three to the same next oversize. This is necessary for the sake of uniformity and balance.

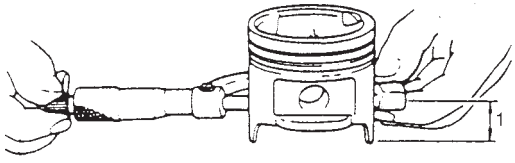

Pistons

- Inspect piston for faults, cracks or other damaged.
  Damaged or faulty piston should be replaced.
- Piston diameter:
  As indicated in figure, piston diameter should be measured at a position (1) 20 mm (0.79 in.) from piston skirt end in the direction perpendicular to piston pin.

Piston diameter	Standard	68.465 – 68.485 mm (2.6955 – 2.6962 in.)
	Oversize: 0.25 mm (0.0098 in.)	68.720 – 68.740 mm (2.7055 – 2.7063 in.)
	0.50 mm (0.0196 in.)	68.970 – 68.990 mm (2.7153 – 2.7161 in.)

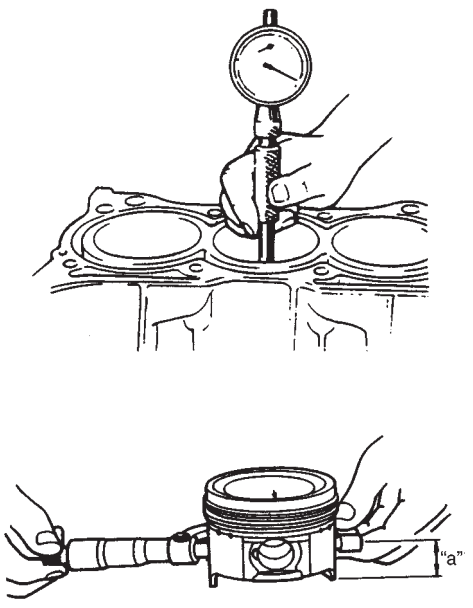

"a": 20 mm (0.79 in.)

- Piston clearance:
  Measure cylinder bore diameter and piston diameter to find their difference which is piston clearance. Piston clearance should be within specification as given below. If it is out of specification, re-bore cylinder and use oversize piston.

  Piston clearance : 0.025 – 0.045 mm (0.0009 – 0.0017 in.)

  NOTE:
  Cylinder bore diameters used here are measured in thrust direction at two positions.

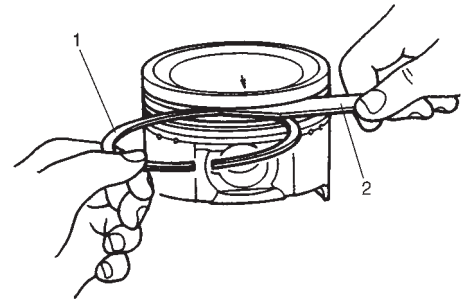

- Ring groove clearance:
  Before checking, piston grooves must be clean, dry and free of carbon.
  Fit new piston ring into piston groove, and measure clearance between ring (1) and ring land by using thickness gauge (2).
  If clearance is out of specification, replace piston.

  Ring groove clearance:
  Top: 0.03 – 0.07 mm (0.0012 – 0.0027 in.)
  2nd: 0.02 – 0.06 mm (0.0008 – 0.0023 in.)

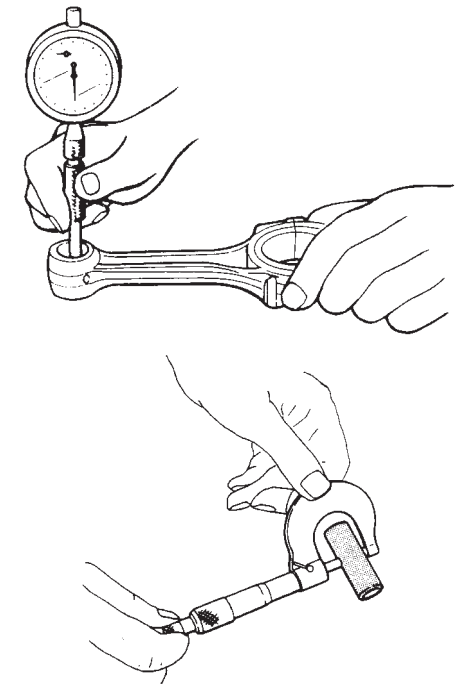

Piston Pin

- Check piston pin, connecting rod small end bore and piston bore for wear or damage, paying particular attention to condition of small end bore bush. If pin, connecting rod small end bore or piston bore is badly worn or damaged, replace pin, connecting rod or piston.
- Piston pin clearance:
  Check piston pin clearance in small end. Replace connecting rod if its small end is badly worn or damaged or if measured clearance exceeds limit.

Item	Standard	Limit
Piston clearance in small end	0.003 – 0.016 mm (0.0001 – 0.0006 in.)	0.05 mm (0.0020 in.)

Small-end bore:
16.003 – 16.011 mm (0.6300 – 0.6303 in.)

Piston pin dia.:
15.995 – 16.000 mm (0.6297 – 0.6299 in.)

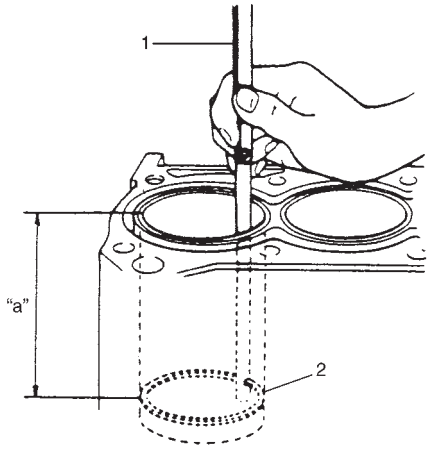

"a": 120 mm (4.72 in.)

Piston Rings

To measure end gap, insert piston ring (2) into cylinder bore and then measure the gap by using thickness gauge (1).
If measured gap is out of specification, replace ring.

NOTE:
Decarbon and clean top of cylinder bore before inserting piston ring.

Item		Standard	Limit
Piston ring end gap	Top ring	0.12 – 0.26 mm (0.0047 – 0.0102 in.)	0.7 mm (0.0275 in.)
	2nd ring	0.12 – 0.26 mm (0.0047 – 0.0102 in.)	0.7 mm (0.0275 in.)
	Oil ring	0.2 – 0.7 mm (0.0079 – 0.0275 in.)	1.8 mm (0.0709 in.)

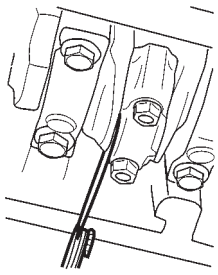

Connecting Rod

- Big-end side clearance:
  Check big-end of connecting rod for side clearance, with rod fitted and connected to its crank pin in the normal manner. If measured clearance is found to exceed its limit, replace connecting rod.

Item	Standard	Limit
Big-end side clearance	0.10 – 0.20 mm (0.0039 – 0.0079 in.)	0.35 mm (0.0137 in.)

- Connecting rod alignment:
  Mount connecting rod on aligner to check it for bow and twist and, if limit is exceeded, replace it.

  Limit on bow: 0.05 mm (0.0020 in.)
  Limit on twist: 0.10 mm (0.0039 in.)

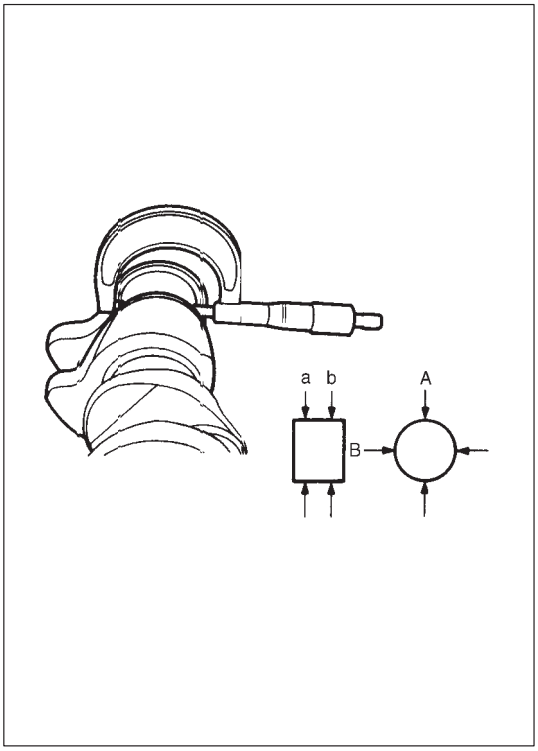

Crank Pin and Connecting Rod Bearings

- Inspect crank pin for uneven wear or damage. Measure crank pin for out-of-round or taper with a micrometer. If crank pin is damaged, or out-of-round or taper is out of limit, replace crankshaft or regrind crank pin referring to following step 6) of Rod bearing clearance.

Connecting rod bearing size	Crank pin diameter
Standard	37.982 – 38.000 mm (1.4953 – 1.4960 in.)
0.25 mm (0.0098 in.) undersize	37.732 – 37.750 mm (1.4855 – 1.4862 in.)

Out-of-round limit
(difference between A and B): 0.01 mm (0.0004 in.)
Taper limit
(difference between a and b): 0.01 mm (0.0004 in.)

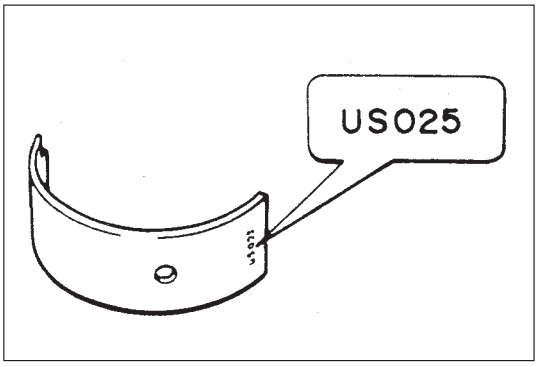

- Rod bearing:
  Inspect bearing shells for signs of fusion, pitting, burn or flaking and observe contact pattern. Bearing shells found in defective condition must be replaced.
  Two kinds of rod bearing are available; standard size bearing and 0.25 mm undersize bearing. To distinguish them, 0. 25 mm undersize bearing has the stamped number (US025) on its backside as indicated in figure, but standard size one has no number.

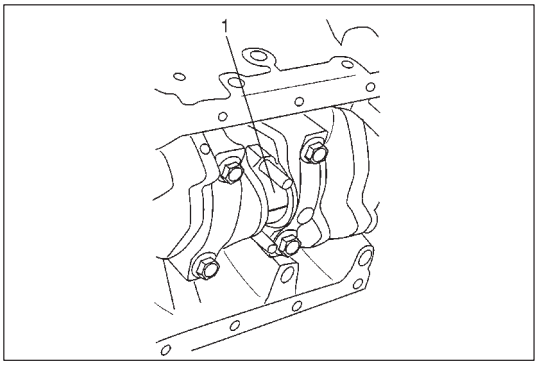

- Rod bearing clearance:
  1) Before checking bearing clearance, clean bearing and crank pin.
  2) Install bearing in connecting rod and bearing cap.
  3) Place a piece of gaging plastic (1) to full width of crankpin as contacted by bearing (parallel to crankshaft), avoiding oil hole.

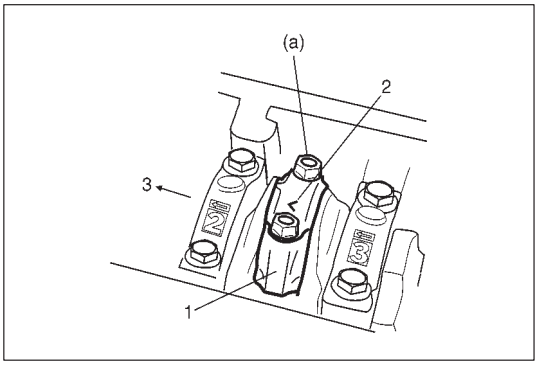

4) Install rod bearing cap (1) to connecting rod.
   When installing cap, be sure to point arrow mark (2) on cap to crankshaft pulley side (3), as shown in figure. After applying engine oil to rod bolts, tighten cap nuts to specified torque. DO NOT turn crankshaft with gaging plastic installed.

   Tightening Torque
   (a): 30 N·m (3.0 kg-m, 22.0 lb-ft)

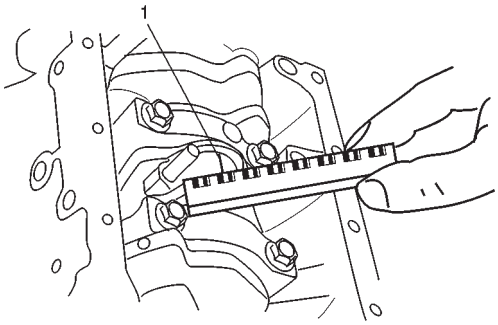

5) Remove cap and using a scale on gaging plastic envelope, measure gaging plastic (1) width at the widest point (clearance). If clearance exceeds its limit, use a new standard size bearing and remeasure clearance.

Item	Standard	Limit
Bearing clearance	0.020 – 0.040 mm (0.0008 – 0.0016 in.)	0.065 mm (0.0026 in.)

6) If clearance can not be brought to within its limit even by using a new standard size bearing, replace crankshaft or regrind crankpin to undersize as follows.
   – Install 0.25 mm undersize bearing to connecting rod big end.
   – Measure bore diameter of connecting rod big end.
   – Regrind crankpin to following finished diameter.

Finished crankpin dia.	=	Measured big end bore dia. (including undersize bearing)	–	0.030 mm (0.0012 in.)

   – Confirm that bearing clearance is within above standard value.

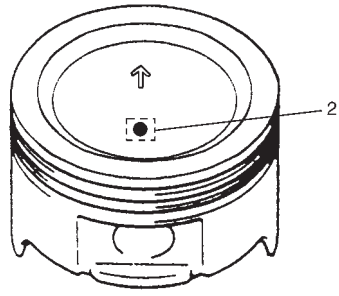

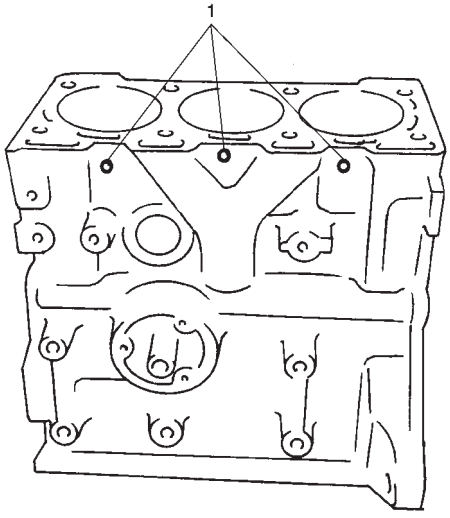

ASSEMBLY

NOTE:

Two sizes of piston are available as standard size spare part so as to ensure proper piston-to-cylinder clearance. When installing a standard size piston, make sure to match piston with cylinder as follows.

a) Each piston has painted color red or blue (2) as shown. It represents outer diameter of piston.
b) There are paints (1) on the cylinder block as shown. The color (red or blue) of each paint represents cylinder bore diameter. The first paint from crank pulley side represents inner diameter of No.1 cylinder, the second paint of No.2 cylinder, the third paint of No.3 cylinder.
c) Painted color on piston and cylinder block should correspond. That is, install blue color painted piston to cylinder which is identified with blue paint and a red color painted piston to cylinder with red paint.

Piston	Cylinder		Piston-to-cylinder clearance
Outer diameter	Color (paint)	Bore diameter	
68.475 – 68.485 mm (2.6959 – 2.6962 in.)	Red	68.51 – 68.52 mm (2.6973 – 2.6976 in.)	0.02 – 0.04 mm (0.0008 – 0.0015 in.)
68.465 – 68.475 mm (2.6955 – 2.6959 in.)	Blue	68.50 – 68.51 mm (2.6968 – 2.6973 in.)	0.02 – 0.04 mm (0.0008 – 0.0015 in.)

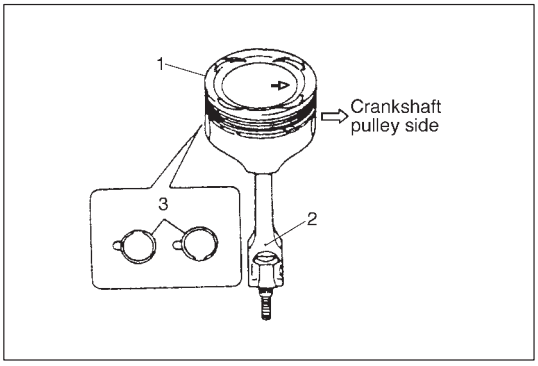

1) Install piston pin to piston (1) and connecting rod:
After applying engine oil to piston pin and piston pin holes in piston and connecting rod, fit connecting rod to piston as shown in figure and insert piston pin to piston and connecting rod, and install piston pin circlips (3).

NOTE:
Circlip should be installed with its cut part facing either up or down as shown in figure.

The oil hole (2) should come on intake side

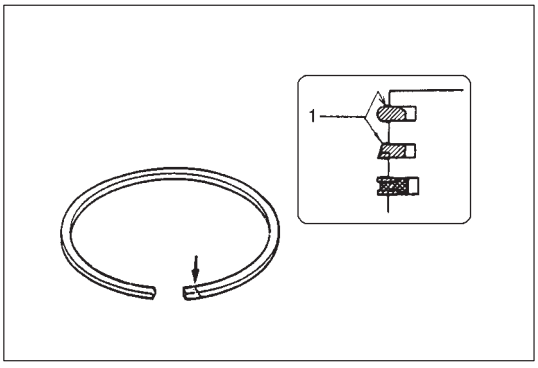

2) Install piston rings to piston:
- As indicated in figure, 1st and 2nd rings have “RN”, “T” or “R” mark (1) respectively. When installing these piston rings to piston, direct marked side of each ring toward top of piston.
- 1st ring differs from 2nd ring in thickness, shape and color of surface contacting cylinder wall.
  Distinguish 1st ring from 2nd ring by referring to figure.
- When installing oil ring, install spacer first and then two rails.

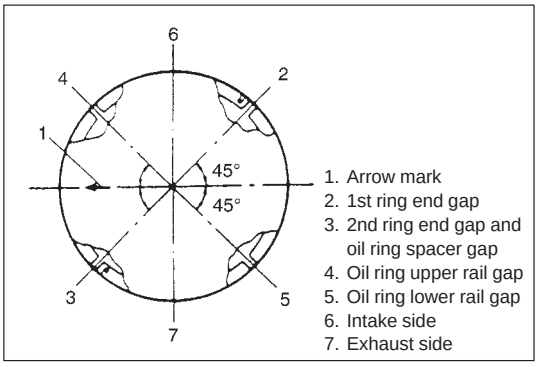

3) After installing three rings (1st, 2nd and oil rings), distribute their end gaps as shown in figure.

INSTALLATION

1) Apply engine oil to pistons, rings, cylinder walls, connecting rod bearings and crankpins.

NOTE:
Do not apply oil between connecting rod and bearing or between bearing cap and bearing.

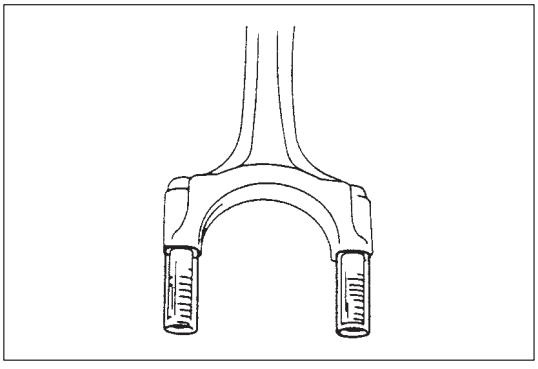

2) Install guide hoses over connecting rod bolts.
These guide hoses protect crankpin and threads of rod bolt from damage during installation of connecting rod and piston assembly.

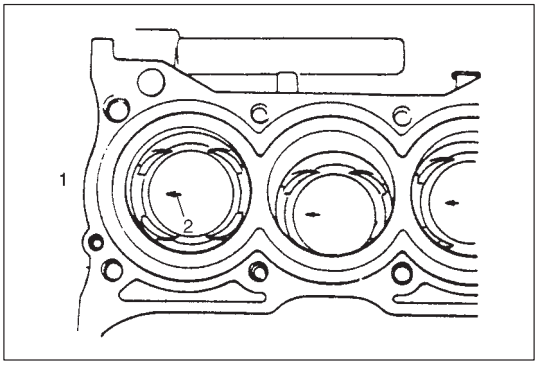

3) When installing piston and connecting rod assembly into cylinder bore, point arrow mark (2) on piston head to crankshaft pulley side (1).

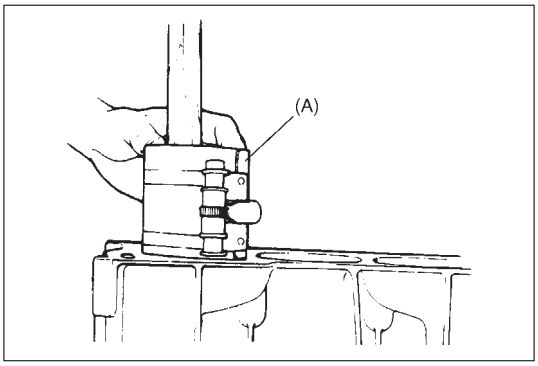

4) Install piston and connecting rod assembly into cylinder bore. Use special tool (Piston ring compressor) to compress rings. Guide connecting rod into place on crankshaft.
Using a hammer handle, tap piston head to install piston into bore. Hold ring compressor firmly against cylinder block until all piston rings have entered cylinder bore.

Special Tool
(A): 09916-77310

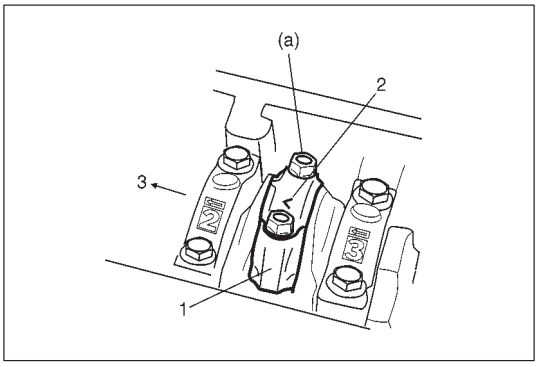

5) Install bearing cap:
Point arrow mark (2) on cap (1) to crankshaft pulley side (3).
Tighten cap nuts to specification.

Tightening Torque
(a): 30 N·m (3.0 kg-m, 22.0 lb-ft)

6) Reverse removal procedure for installation, as previously outlined.
7) Adjust water pump drive belt tension, referring to Section 0B.
8) Adjust A/C compressor belt tension, if equipped. Refer to Section 0B.
9) Adjust intake and exhaust valve lashes as previously outlined.
10) Adjust accelerator cable play. Refer to Section 6E.
11) Check to ensure that all removed parts are back in place. Reinstall any necessary parts which have not been reinstalled.
12) Refill engine with engine oil, referring to item ENGINE OIL CHANGE in Section 0B.
13) Refill cooling system referring to Section 6B.
14) Connect negative cable at battery.
15) Verify that there is no fuel leakage, coolant leakage, oil leakage and exhaust gas leakage at each connection.
16) Verify that ignition timing is within specification referring to Section 6F.

UNIT REPAIR OVERHAUL

ENGINE ASSEMBLY

REMOVAL AND INSTALLATION

Refer to Section 6A.

MAIN BEARINGS, CRANKSHAFT AND CYLINDER BLOCK

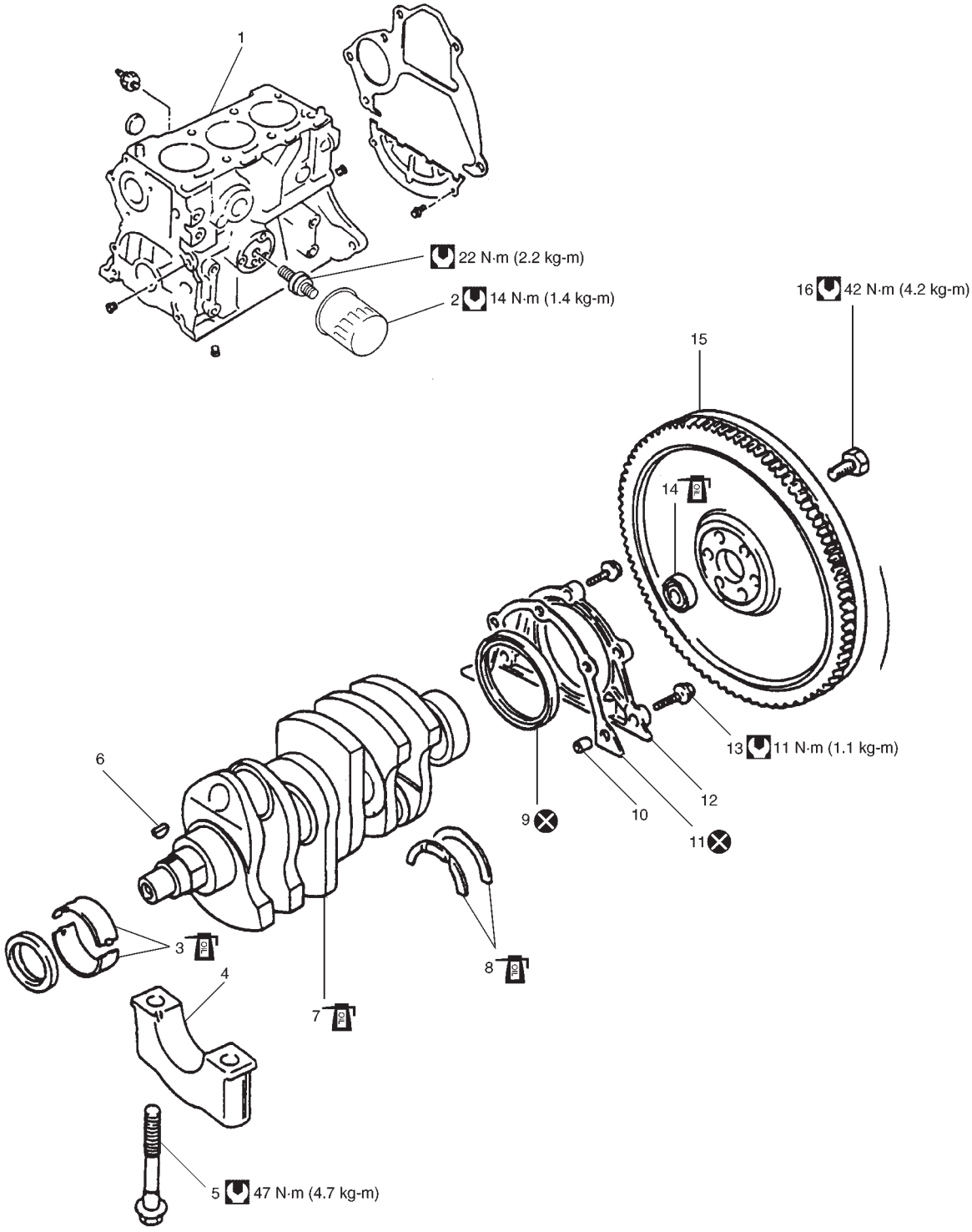

1. Cylinder block
2. Oil filter
3. Main bearing: Apply engine oil to bearing inside surfaces.
4. Bearing cap
5. Cap bolt: Apply engine oil.
6. Timing pulley key
7. Crankshaft: Apply engine oil to crankshaft journals.
8. Thrust bearing: Apply engine oil.
9. Rear oil seal
10. Pin
11. Oil seal housing gasket
12. Oil seal housing
13. Housing bolt
14. Input shaft bearing: Apply engine oil.
15. Flywheel
16. Flywheel bolt

: Tightening Torque

: Do not reuse

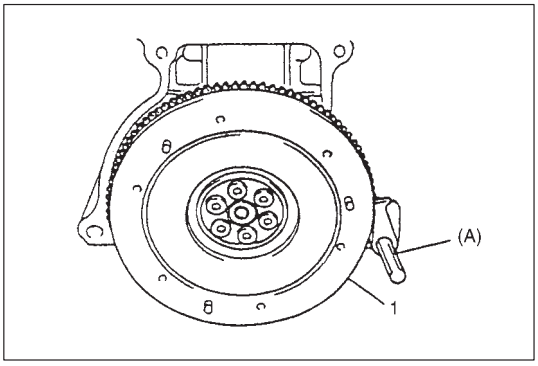

REMOVAL

1) Remove engine assembly with transmission and engine member from body as previously outlined.
2) Remove clutch cover, clutch disc and flywheel (1).

Special Tool
(A): 09924-17810

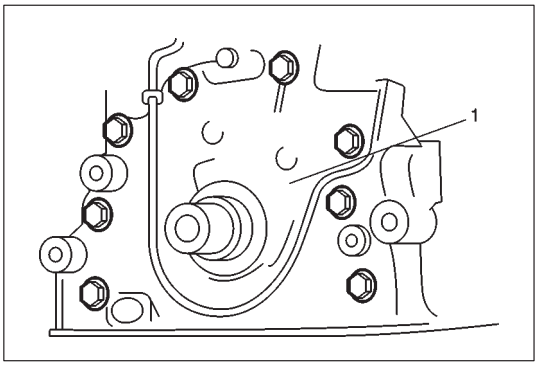

3) Remove crankshaft pulley, timing belt, timing belt inside cover and crankshaft timing pulley.
4) Remove cylinder head assembly as previously outlined.
5) Remove oil pan and oil pump strainer as previously outlined.
6) Remove oil pump (1).

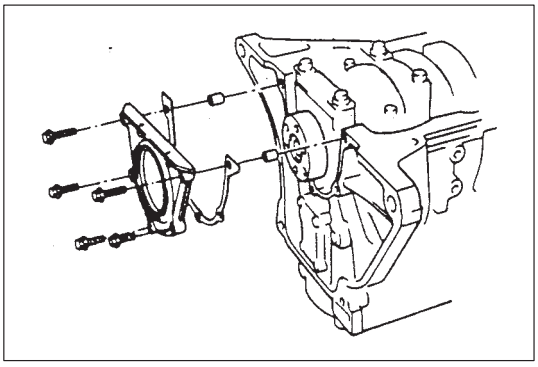

7) Remove oil seal housing.
8) Remove connecting rod bearing caps.

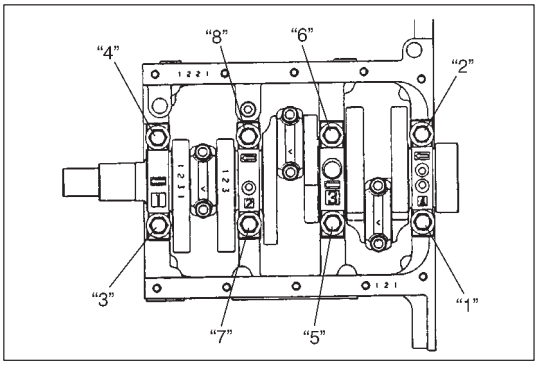

9) Loosen crankshaft bearing cap bolts in such order as indicated in figure a little at a time and remove bearing caps.
10) Remove crankshaft from cylinder block.

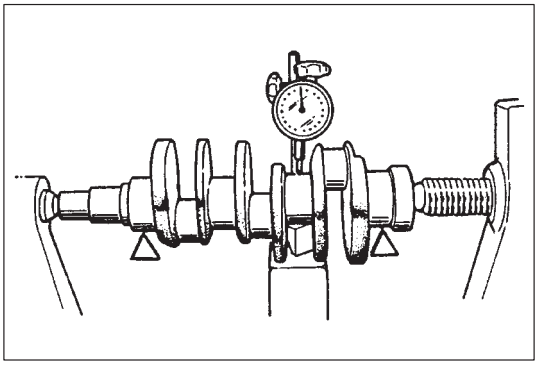

INSPECTION

Crankshaft

Crankshaft runout

Using a dial gauge, measure runout at center journal. Rotate crankshaft slowly. If runout exceeds its limit, replace crankshaft.

Limit on runout: 0.06 mm (0.0023 in.)

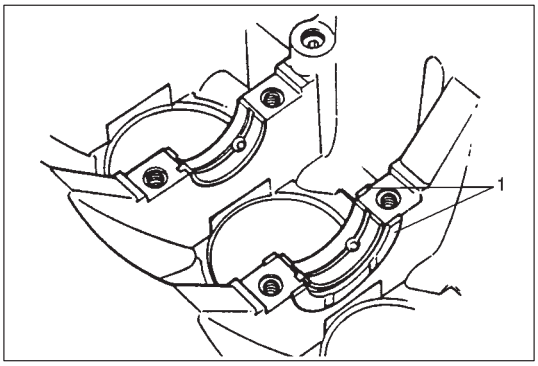

Crankshaft thrust play

Measure this play with crankshaft set in cylinder block in the normal manner, that is, with thrust bearing (1) and journal bearing caps installed.

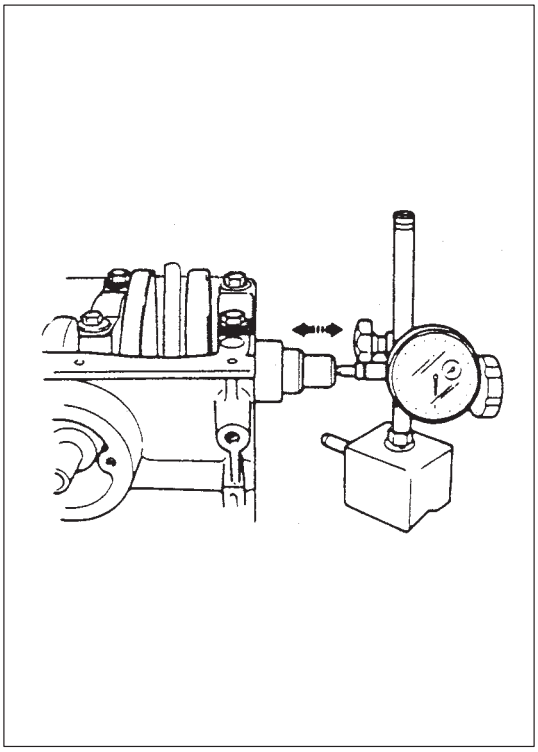

Use a dial gauge to read displacement in axial (thrust) direction of crankshaft.
If its limit is exceeded, replace thrust bearing with new standard one or oversize one to obtain standard thrust play.

Item	Standard	Limit
Crankshaft thrust play	0.11 – 0.31 mm (0.0044 – 0.0122 in.)	0.35 mm (0.0138 in.)

Thickness of crankshaft thrust bearing	Standard		2.500 mm (0.0984 in.)
	Oversize:	0.125 mm (0.0049 in.)	2.563 mm (0.1009 in.)

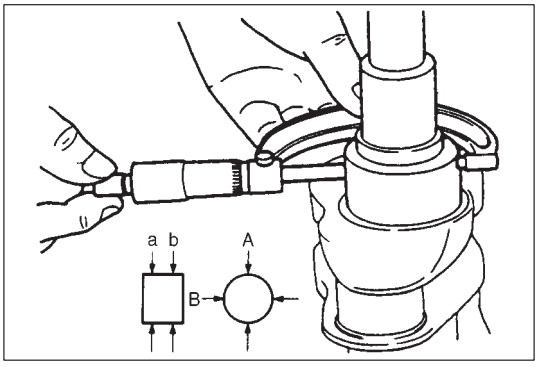

Out-of-round and taper (uneven wear) of journals

An unevenly worn crankshaft journal shows up as a difference in diameter at a cross section or along its length (or both). This difference, if any, is determined by taking micrometer readings.
If any one of journals is badly damaged or if amount of uneven wear in the sense explained above exceeds its limit, regrind or replace crankshaft.

Out-of-round limit
(difference between A and B): 0.01 mm (0.0004 in.)
Taper limit
(difference between a and b): 0.01 mm (0.0004 in.)

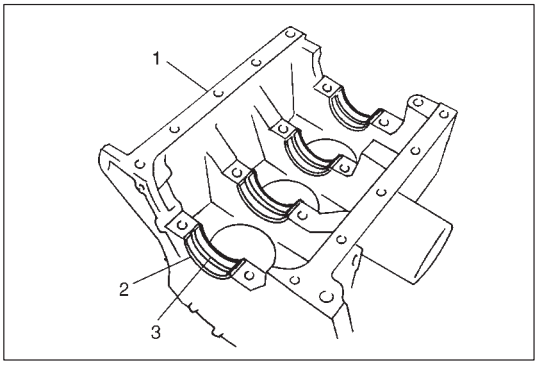

Main Bearings

General information

- Service main bearings are available in standard size and 0.25 mm (0.0098 in.) undersize, and each of them has 5 kinds of bearings differing in tolerance.
- Upper half of bearing (2) has oil groove (3) as shown in figure. Install this half with oil groove to cylinder block (1).

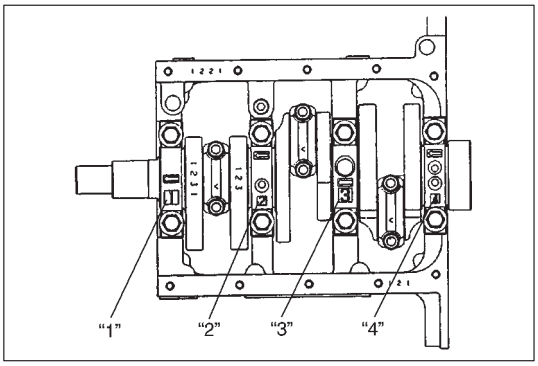

- On each main bearing cap, arrow mark and number are embossed as shown in figure.
  When installing each bearing cap to cylinder block, point arrow mark toward crankshaft pulley side and install each cap from that side to flywheel side in ascending order of numbers "1", "2", "3" and "4". Tighten cap bolts to specified torque.

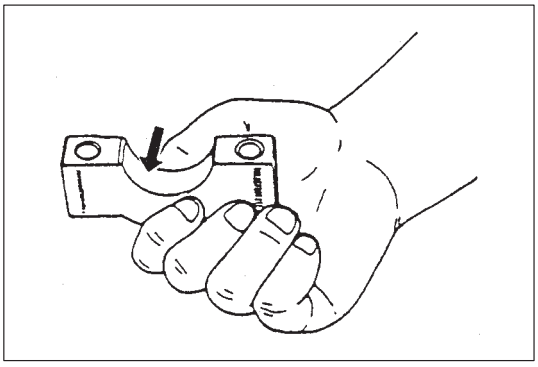

Inspection

Check bearings for pitting, scratches, wear or damage.
If any malcondition is found, replace both upper and lower halves.
Never replace one half without replacing the other half.

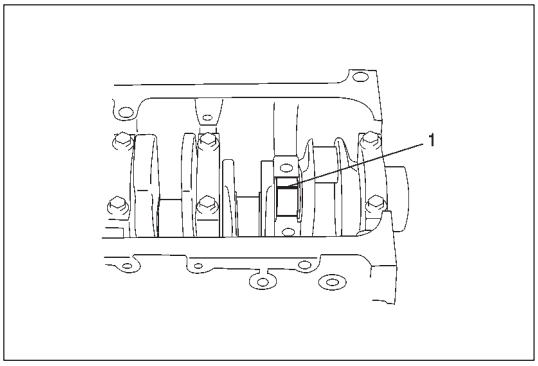

Main bearing clearance

Check clearance by using gaging plastic according to following procedure.

1) Remove bearing caps.
2) Clean bearings and main journals.
3) Place a piece of gaging plastic (1) to full width of bearing (parallel to crankshaft) on journal, avoiding oil hole.

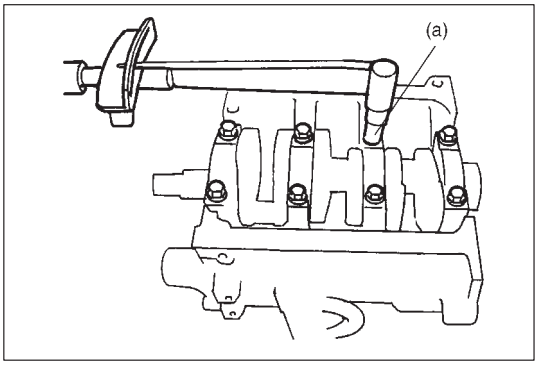

4) Install bearing cap as previously outlined and evenly torque cap bolts to specified torque.
   Bearing cap must be torqued to specification in order to assure proper reading of clearance.

   Tightening Torque
   (a): 47 N·m (4.7 kg-m, 34.0 lb-ft)

   NOTE:
   Do not rotate crankshaft while gaging plastic is installed.

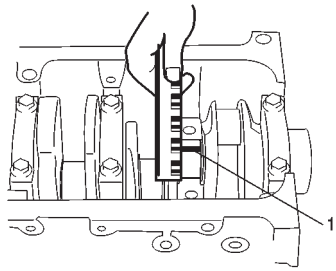

5) Remove cap and using scale on gaging plastic envelope, measure gaging plastic (1) width at its widest point. If clearance exceeds its limit, replace bearing. Always replace both upper and lower inserts as a unit.
A new standard bearing may produce proper clearance. If not, it will be necessary to regrind crankshaft journal for use of 0.25 mm undersize bearing.
After selecting new bearing, recheck clearance.

	Standard	Limit
Bearing clearance	0.020 – 0.040 mm (0.0008 – 0.0016 in.)	0.065 mm (0.0026 in.)

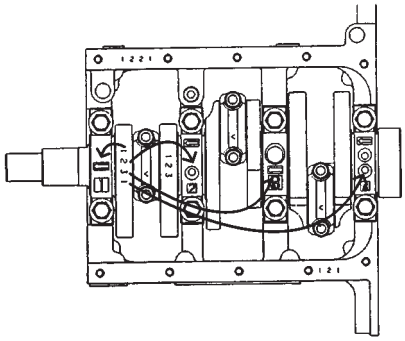

Selection of main bearings

STANDARD BEARING:

If bearing is in malcondition, or bearing clearance is out of specification, select a new standard bearing according to following procedure and install it.

1) First check journal diameter by using following procedure.
As shown in figure, crank webs of No.1 cylinder have four stamped numerals.
Three kinds of numerals (“1”, “2” and “3”) represent following journal diameters.

Numeral stamped	Journal diameter
1	49.994 – 50.000 mm (1.9683 – 1.9685 in.)
2	49.988 – 49.994 mm (1.9680 – 1.9683 in.)
3	49.982 – 49.988 mm (1.9678 – 1.9680 in.)

The first, second, third and fourth (left to right) stamped numerals represent journal diameters at bearing caps “1”, “2”, “3” and “4” respectively.
For example, in figure, the first (leftmost) numeral “1” indicates that journal dia. at bearing cap “1” is within 49.994 – 50.000 mm, and second one “2” indicate that journal dia. at cap “2” is within 49.988 – 49.994 mm.

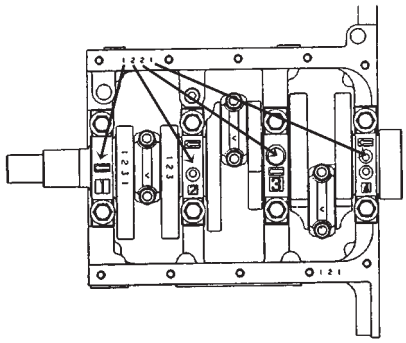

2) Next, check bearing cap bore diameter without bearing. On mating surface of cylinder block, four numerals are stamped as shown in figure.
Three kinds of numerals (1, 2 and 3) represent following cap bore diameters.

Numeral stamped	Bearing cap bore diameter (without bearing)
1	54.000 – 54.006 mm (2.1260 – 2.1262 in.)
2	54.006 – 54.012 mm (2.1262 – 2.1265 in.)
3	54.012 – 54.018 mm (2.1265 – 2.1267 in.)

The first, second, third and fourth (left to right) stamped numerals represent cap bore diameters of bearing caps “1”, “2”, “3” and “4”, respectively.
For example, in figure, the first (leftmost) numeral “1” indicates that cap bore dia. of bearing cap “1” is within 54.000 – 54.006 mm, and the fourth (rightmost) numeral “2” indicates that cap bore dia. of cap “4” is within 54.006 – 54.012 mm.

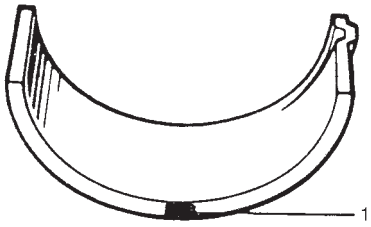

3) There are five kinds of standard bearings differing in thickness. To distinguish them, they are painted in following colors at the position as indicated in figure.
Each color indicates following thickness at the center of bearing.

Color painted	Bearing thickness
Green	1.986 – 1.990 mm (0.0782 – 0.0783 in.)
Black	1.989 – 1.993 mm (0.0783 – 0.0784 in.)
Colorless (no paint)	1.992 – 1.996 mm (0.0784 – 0.0785 in.)
Yellow	1.995 – 1.999 mm (0.0785 – 0.0787 in.)
Blue	1.998 – 2.002 mm (0.0781 – 0.0788 in.)

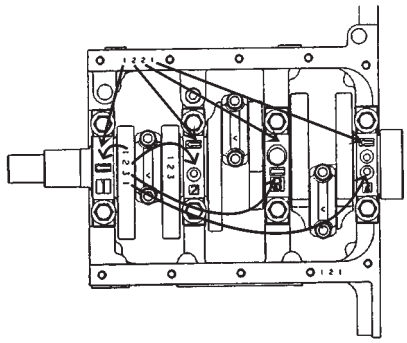

4) From numerals stamped on crank webs of No.1 and No.2 cylinders and the numerals stamped on mating surface of cylinder block, determine new standard bearing to be installed to journal, by referring to table given below.
For example, if numeral stamped on crank web is “1” and numeral stamped on mating surface is “1”, install a new standard bearing painted in “Green” to its journal.

		Numeral stamped on crank web (Journal diameter)		
		1	2	3
Numeral stamped on mating surface (Bearing cap bore dia.)	1	Green	Black	Colorless
	2	Black	Colorless	Yellow
	3	Colorless	Yellow	Blue
		New standard bearing to be installed.		

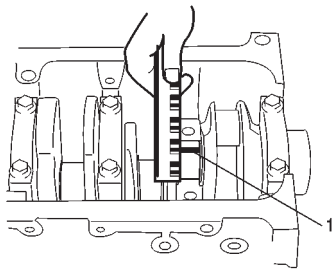

5) Using gaging plastic (1), check bearing clearance with newly selected standard bearing.
If clearance still exceeds its limit, use next thicker bearing and recheck clearance.
6) When replacing crankshaft or cylinder block due to any reason, select new standard bearings to be installed by referring to numerals stamped on new crankshaft or alphabets stamped on mating surface of new cylinder block.

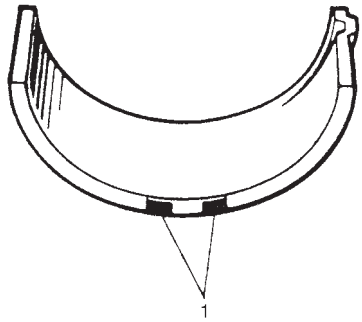

1. Paint

UNDERSIZE BEARING (0.25 mm):

- 0.25 mm undersize bearing is available, in five kinds varying in thickness.
To distinguish them, each bearing is painted in following colors at such position as indicated in figure.
Each color represents following thickness at the center of bearing.

Color painted	Bearing thickness
Green & Red	2.111 – 2.115 mm (0.0831 – 0.0832 in.)
Black & Red	2.114 – 2.118 mm (0.0832 – 0.0833 in.)
Red only	2.117 – 2.121 mm (0.0833 – 0.0835 in.)
Yellow & Red	2.120 – 2.124 mm (0.0835 – 0.0836 in.)
Blue & Red	2.123 – 2.127 mm (0.0836 – 0.0837 in.)

- If necessary, regrind crankshaft journal and select under-size bearing to use with it as follows.
  1) Regrind journal to following finished diameter.

Finished diameter: 49.732 – 49.750 mm (1.9580 – 1.9586 in.)

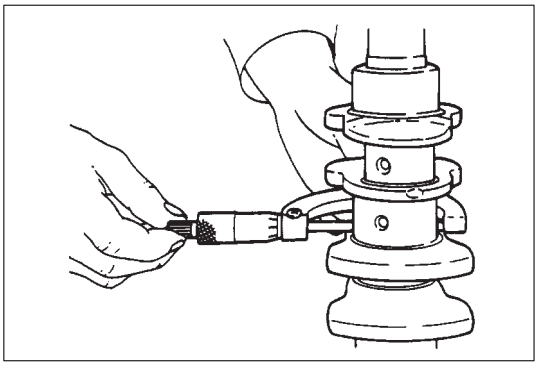

2) Using micrometer, measure reground journal diameter. Measurement should be taken in two directions perpendicular to each other in order to check for out-of-round.
3) Using journal diameter measured above and numerals stamped on mating surface of cylinder block, select an under-size bearing by referring to table given below.
   Check bearing clearance with newly selected undersize bearing.

		Measured journal diameter		
		49.744 – 49.750 mm (1.9584 – 1.9587 in.)	49.738 – 49.744 mm (1.9582 – 1.9584 in.)	49.732 – 49.738 mm (1.9579 – 1.9582 in.)
Numeral stamped on mating surface of cylinder block	1	Green & Red	Black & Red	Red only
	2	Black & Red	Red only	Yellow & Red
	3	Red only	Yellow & Red	Blue & Red
		Undersize bearing to be installed		

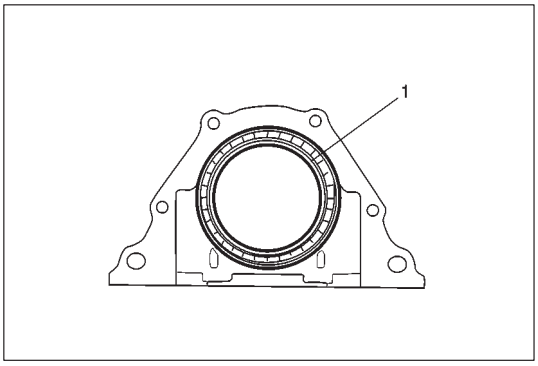

Rear Oil Seal

Carefully inspect oil seal (1) for wear or damage. If its lip is worn or damaged, replace it.

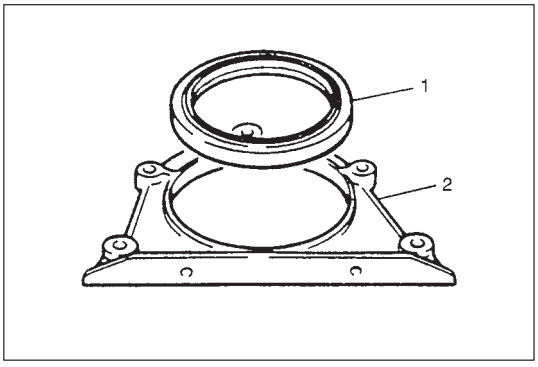

For oil seal installation, press-fit rear oil seal (1) so that oil seal housing (2) end face is flush with oil seal end face.

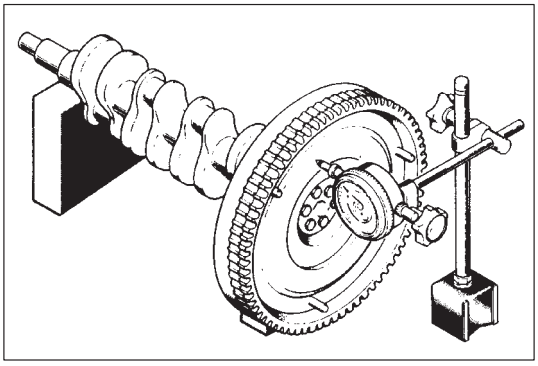

Flywheel

- If ring gear is damaged, cracked or worn, replace flywheel.
- If the surface contacting clutch disc is damaged, or excessively worn, replace flywheel.
- Check flywheel for face runout with dial gauge.
  If runout exceeds its limit, replace flywheel.

  Limit on runout: 0.2 mm (0.0078 in.)

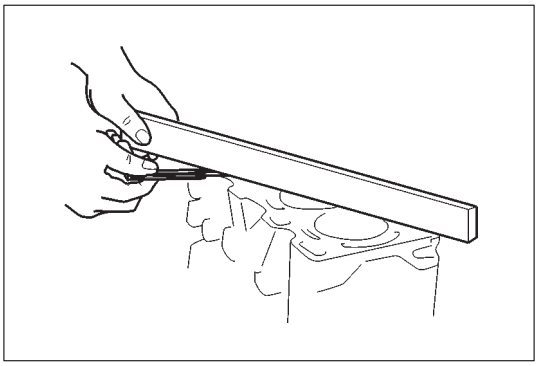

Cylinder Block

Distortion of gasketed surface

Using straightedge and thickness gauge, check gasketed surface for distortion and, if flatness exceeds its limit, correct it.

Item	Limit
Flatness	0.05 mm (0.0020 in.)

Honing or reboring cylinders

1) When any cylinder needs reboring, all other cylinders must also be rebored at the same time.
2) Select oversized piston according to amount of cylinder wear.

Size	Piston diameter
O/S 0.25	68.720 – 68.740 mm (2.7055 – 2.7062 in.)
O/S 0.50	68.970 – 68.990 mm (2.7154 – 2.7161 in.)

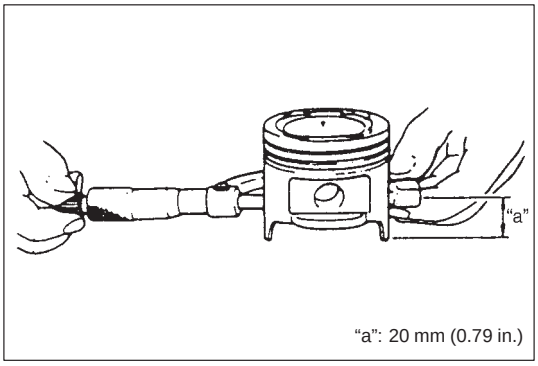

"a": 20 mm (0.79 in.)

3) Using micrometer, measure piston diameter.

4) Calculate cylinder bore diameter to be rebored.

   D = A + B – C

   D: Cylinder bore diameter to be rebored.
   A: Piston diameter as measured.
   B: Piston clearance = 0.025 – 0.045 mm
   (0.0009 – 0.0017 in.)
   C: Allowance for honing = 0.02 mm (0.0008 in.)

5) Rebore and hone cylinder to calculated dimension.

NOTE:
Before reboring, install all main bearing caps in place and tighten to specification to avoid distortion of bearing bores.

6) Measure piston clearance after honing.

INSTALLATION

NOTE:
- **All parts to be installed must be perfectly clean.**
- **Be sure to oil crankshaft journals, journal bearings, thrust bearings, crankpins, connecting rod bearings, pistons, piston rings and cylinder bores.**
- **Journal bearings, bearing caps, connecting rods, rod bearings, rod bearing caps, pistons and piston rings are in combination sets. Do not disturb such combination and make sure that each part goes back to where it came from, when installing.**

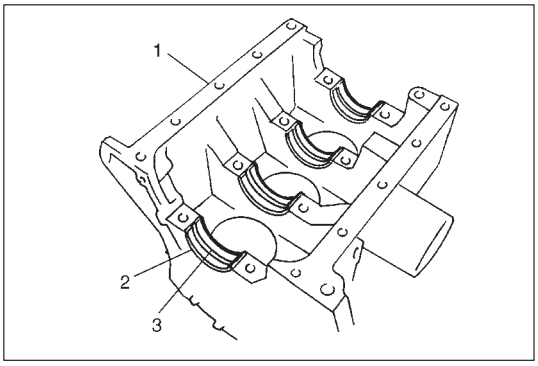

1) Install main bearings to cylinder block (1).
One of two halves of main bearing (2), has an oil groove (3). Install it to cylinder block, and the other half without oil groove to bearing cap.
Make sure that two halves are painted in the same color.

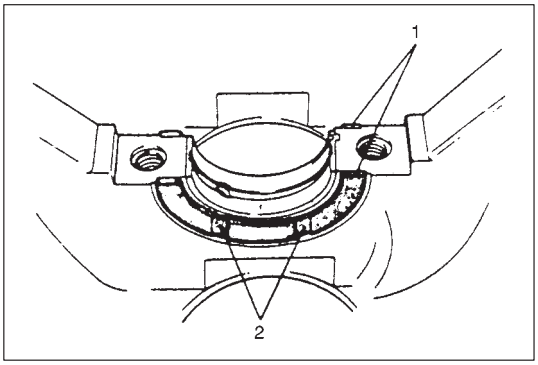

2) Install thrust bearings (1) to cylinder block between No.2 and No.3 cylinders. Face oil groove (2) sides to crank webs.

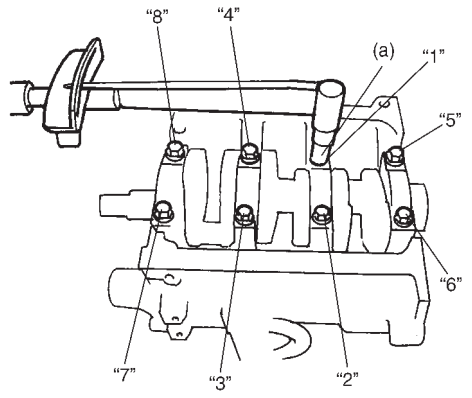

3) Install crankshaft to cylinder block.
4) Install bearing cap to cylinder block, making sure to point arrow mark (on each cap) to crankshaft pulley side. Fit them sequentially in ascending order, 1, 2, 3 and 4, starting from pulley side. Tighten bearing cap bolts in such order as shown in figure a little at a time and repeat it till they are tightened to specified torque.

Tightening Torque
(a): 47 N·m (4.7 kg-m, 34.0 lb-ft)

NOTE:
After tightening cap bolts, check to be sure that crankshaft rotates smoothly when turning it by 7.0 N·m (0.7 kg-m, 5.0 lb-ft) torque or below.

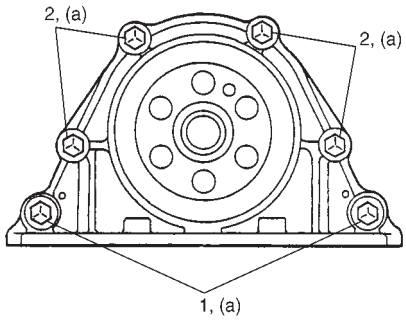

5) Install new gasket and oil seal housing.
Do not reuse gasket removed in disassembly. Apply engine oil to oil seal lip before installation. Tighten housing bolts to specification.

Tightening Torque
(a): 11 N·m (1.1 kg-m, 8.0 lb-ft)

NOTE:
As there are 2 types (long bolts (1) and short bolts (2)) of housing bolts, refer to figure for their correct use.

After installing oil seal housing, gasket edges might bulge out; if so, cut them off to make them flush with cylinder block and oil seal housing.

6) Install oil pump.
Refer to item OIL PUMP for installation of oil pump.

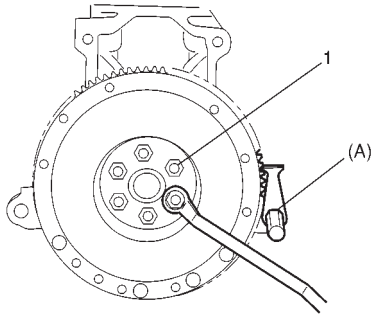

7) Install flywheel.
Using special tool, lock flywheel, and torque its bolts (1) to specification.

Special Tool
(A): 09924-17810

Tightening Torque
(a): 42 N·m (4.2 kg-m, 30.5 lb-ft)

8) Install pistons and connecting rods as previously outlined.
9) Install oil pump strainer and oil pan as previously outlined.

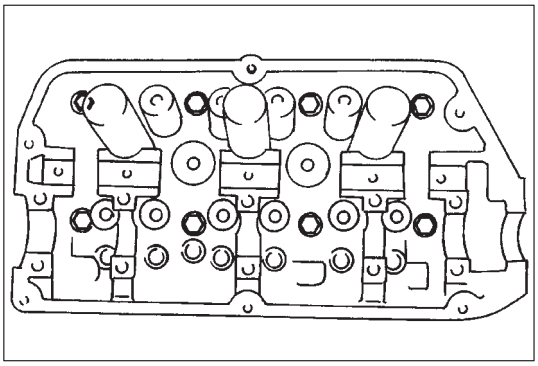

10) Install cylinder head assembly to cylinder block as previously outlined.

    NOTE:
    Tighten cylinder head bolts to specified torque as previously outlined.

11) Install camshaft, crankshaft timing belt pulley, timing belt, crankshaft pulley, water pump pulley, etc., as previously outlined.
12) Install clutch to flywheel. For clutch installation, refer to Section 7C.

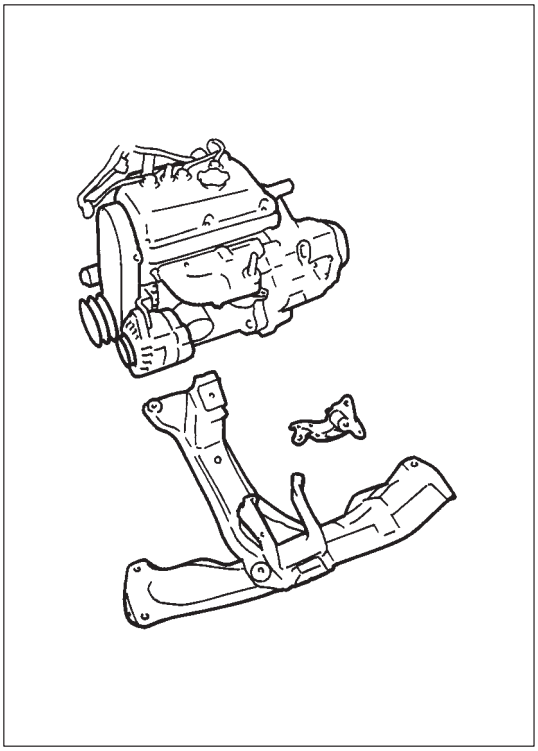

13) Install transmission and engine member to engine.
14) Install engine assembly to vehicle as previously outlined.

REQUIRED SERVICE MATERIALS

MATERIALS	RECOMMENDED SUZUKI PRODUCT	USE
Sealant	SUZUKI BOND NO. 1207C (99000-31150)	● Mating surfaces of cylinder block and oil pan. ● Mating surface of camshaft housing No.1. ● Cylinder head cover gasket and cylinder head side seal.
Grease	SUZUKI SUPER GREASE A (99000-25010)	● O-rings of plug cap.

SPECIAL TOOLS

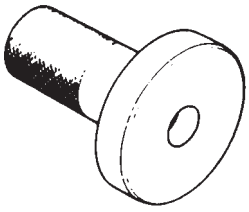

09913-75520
Bearing installer

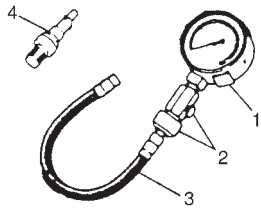

1. 09915-64510-001 Compression gauge
2. 09915-64510-002 Connector
3. 09915-64530 Hose
4. 09915-64550 Attachment

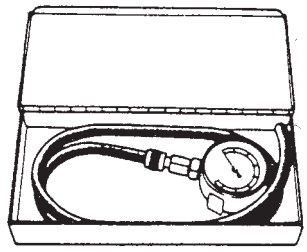

09915-67310
Vacuum gauge

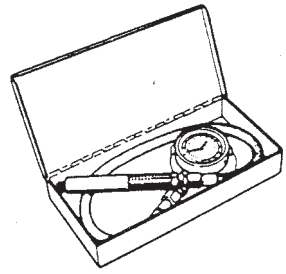

09915-77310
Oil pressure gauge

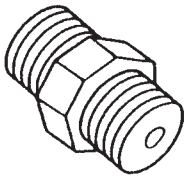

09915-78211
Oil pressure gauge attachment

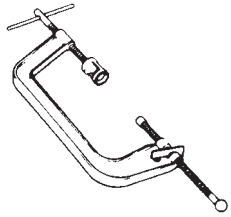

09916-14510
Valve lifter

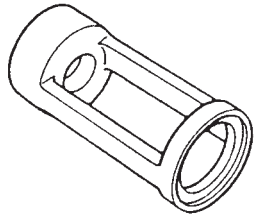

09916-14910
Valve lifter attachment

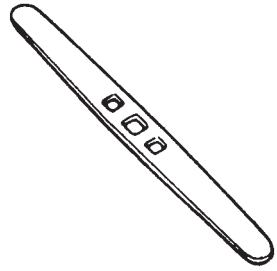

09916-34542
Reamer handle

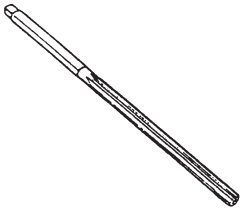

09916-34550
Reamer (5.5 mm)

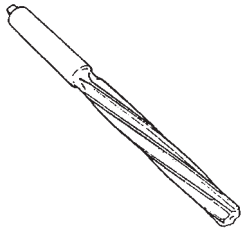

09916-37320
Reamer (10.5 mm)

09916-44910
Valve guide remover

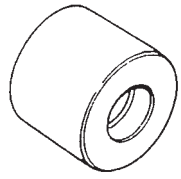

09916-57340
Valve guide installer attachment

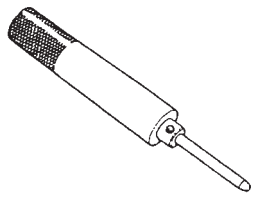 09916-58210 Valve guide installer handle	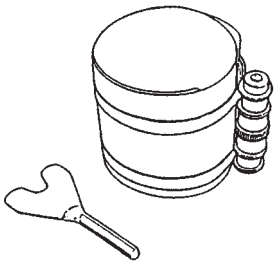 09916-77310 Piston ring compressor	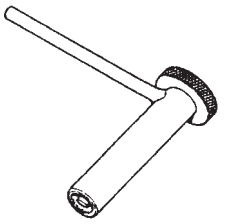 09917-18210 Tappet adjuster wrench	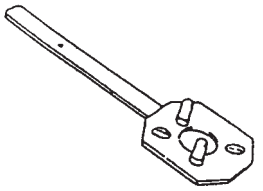 09917-68221 Camshaft pulley holder
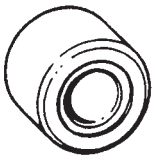 09917-98221 Valve stem seal installer	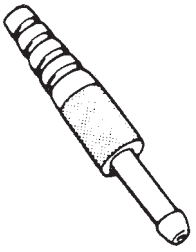 09918-08210 Vacuum gauge hose joint	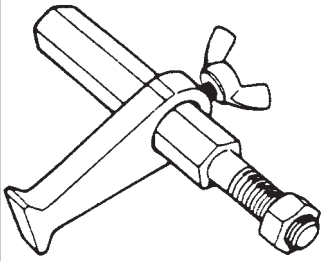 09924-17810 Flywheel holder	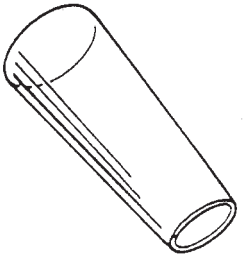 09926-18210 Oil seal guide (Vinyl resin)

SECTION 6B

ENGINE COOLING

CONTENTS

GENERAL DESCRIPTION 6B- 2
Cooling System Circulation 6B- 2
DIAGNOSIS 6B- 3
MAINTENANCE 6B- 4
Coolant 6B- 4
Coolant Level 6B- 5
Cooling System Service 6B- 5
Cooling System Flush and Refill 6B- 6
Water Pump Belt Tension 6B- 7
ON-VEHICLE SERVICE 6B- 8
Cooling System Draining 6B- 8
Cooling Water Pipes or Hoses 6B- 8
Thermostat 6B- 9
Water Pump Belt 6B-10
Radiator 6B-11
Water Pump 6B-12
REQUIRED SERVICE MATERIALS 6B-14

GENERAL DESCRIPTION

The cooling system mainly consists of the radiator cap, radiator, coolant reservoir, hoses, water pump, cooling fan and thermostat. The radiator is of tube-and-fin type.

COOLING SYSTEM CIRCULATION

1) While the engine is warmed up (thermostat closed), coolant circulates as follows.

Water pump → Cylinder block → Cylinder head → Intake manifold (F8B engine) / (F8D engine) → Throttle body / Heater unit → Water inlet pipe → Water pump (Thermostat closed)

2) When coolant is warmed up to normal operating temperature and the thermostat opens, coolant passes through the radiator core to be cooled as well as the above flow circuit.

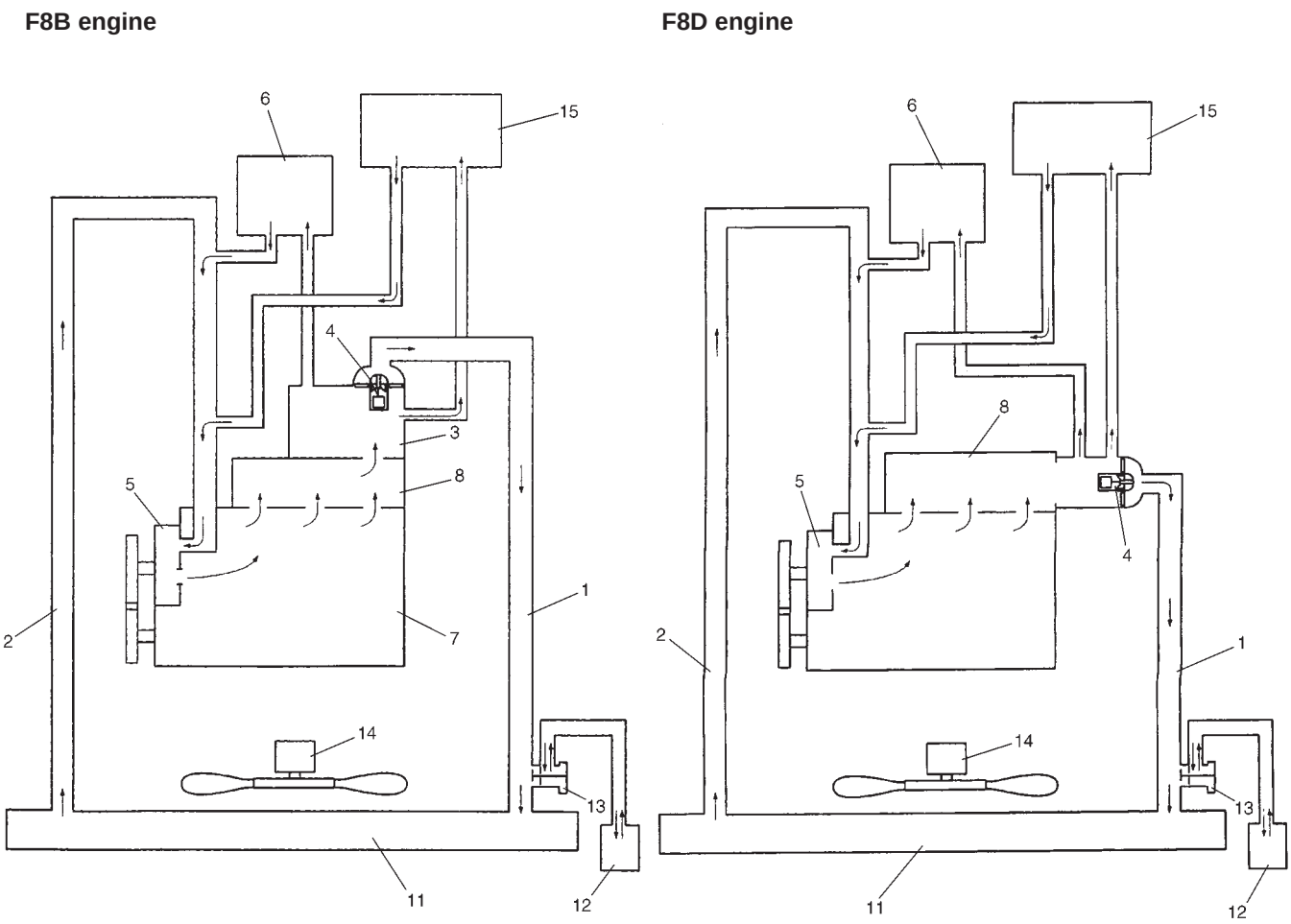

1. Radiator inlet hose
2. Radiator outlet hose
3. Intake manifold
4. Thermostat
5. Water pump
6. Throttle body
7. Cylinder block
8. Cylinder head
9. Heater inlet hose (if equipped)
10. Heater outlet hose (if equipped)
11. Radiator
12. Reservoir
13. Radiator cap
14. Cooling fan
15. Heater unit

DIAGNOSIS

Symptom	Possible Cause	Remedy
Engine overheats	● Loose or broken water pump belt	Adjust or replace.
	● Not enough coolant	Check coolant level and add as necessary.
	● Faulty thermostat	Replace.
	● Faulty water pump	Replace.
	● Dirty or bent radiator fins	Clean or remedy.
	● Coolant leakage on cooling system	Repair.
	● Defective cooling fan motor	Check and replace as necessary.
	● Faulty fan motor control circuit	Refer to SECTION 6E1.
	● Plugged radiator	Check and replace radiator as necessary.
	● Faulty radiator cap	Replace.
	● Improper ignition timing	Adjust.
	● Dragging brakes	Adjust brake.
	● Slipping clutch	Adjust or replace.

MAINTENANCE

COOLANT

The coolant recovery system is standard. The coolant in the radiator expands with heat, and the overflow is collected in the reservoir tank.
When the system cools down, the coolant is drawn back into the radiator.

The cooling system has been filled at the factory with a quality coolant that is a 50/50 mixture of water and ethylene glycol antifreeze (70/30; in a market where no freezing temperature is anticipated).

This 50/50 mixture coolant solution provides freezing protection to –36°C (–33°F).

- Maintain cooling system freeze protection at –36°C (–33°F) to ensure protection against corrosion and loss of coolant from boiling. This should be done even if freezing temperatures are not expected.
- Add ethylene glycol base coolant when coolant has to be added because of coolant loss or to provide added protection against freezing at temperature lower than –36°C (–33°F).

NOTE:

- **Alcohol or methanol base coolant or plain water alone should not be used in cooling system at any time as damage to cooling system could occur.**
- **Even in a market where no freezing temperature is anticipated, mixture of 70% water and 30% ethylene glycol antifreeze (Antifreeze/Anticorrosion coolant) should be used for the purpose of corrosion protection and lubrication.**

ANTI-FREEZE PROPORTIONING CHART

ANTI-FREEZE PROPORTIONING CHART	Freezing temperature	°C	–16	–36
		°F	3	–33
	Anti-freeze/Anti-corrosion coolant concentration	%	30	50
	Ratio of compound to cooling water	ltr.	1.05/2.45	1.75/1.75
		US pt.	2.22/5.18	3.70/3.70
		Imp pt.	1.85/4.31	3.08/3.08
COOLANT CAPACITY	Engine radiator and heater		3.0 liters (6.34/5.28 US/Imp. pt.)	
	Reservoir tank		0.5 liters (1.06/0.88 US/Imp. pt.)	
	Total		3.5 liters (7.40/6.16 US/Imp. pt.)	

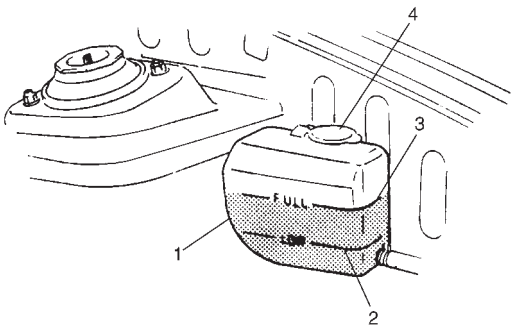

COOLANT LEVEL

Coolant Level

To check level, lift hood and look at “see-through” coolant reservoir tank.
It is not necessary to remove radiator cap to check coolant level.

WARNING:
To help avoid danger of being burned:
- **do not remove reservoir tank cap while coolant is boiling, and**
- **do not remove radiator cap while engine and radiator are still hot.**

Scalding fluid and steam can be blown out under pressure if either cap is taken off too soon.

When engine is cool, check coolant level in reservoir tank (1).
A normal coolant level should be between FULL and LOW marks on reservoir tank.
If coolant level is below LOW mark (2), remove reservoir tank cap and add proper coolant to tank to bring coolant level up to FULL mark (3). Then, reinstall cap (4).

NOTE:
If proper quality antifreeze is used, there is no need to add extra inhibitors or additives that claim to improve system. They may be harmful to proper operation of system, and are unnecessary expense.

COOLING SYSTEM SERVICE

WARNING:
To help avoid danger of being burned, do not remove radiator cap while engine and radiator are still hot. Scalding fluid and steam can be blown out under pressure if cap is taken off too soon.

Cooling system should be serviced as follows.
1) Check cooling system for leakage or damage.
2) Wash radiator cap and filler neck with clean water by removing radiator cap when engine is cold.
3) Check coolant for proper level and freeze protection.

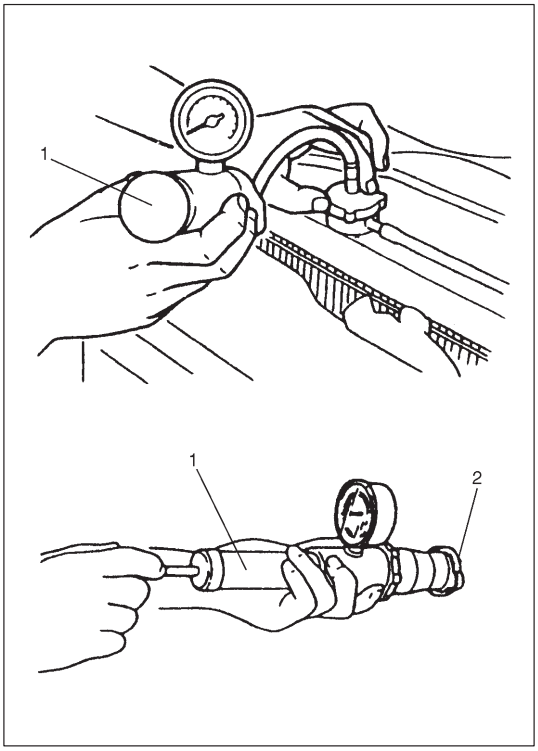

4) Using a pressure tester (1), check system and radiator cap (2) for proper pressure holding capacity about 90 kPa (0.9 kg/cm^2, 12.8 psi). If replacement of cap is required, use a proper cap for this vehicle.

   NOTE:
   After installing radiator cap to radiator, make sure that the ear of cap lines is parallel to radiator.

5) Tighten hose clamps and inspect all hoses. Replace hoses whenever cracked, swollen or otherwise deteriorated.
6) Clean frontal area of radiator core.

COOLING SYSTEM FLUSH AND REFILL

1) Remove radiator cap when engine is cool:
   Turn cap counterclockwise slowly until it reaches a “stop”. (Do not press down while turning it.)
   Wait until pressure is relieved (indicated by a hissing sound) then press down on cap and continue to turn it counterclockwise.

   WARNING:
   To help avoid danger of being burned, do not remove radiator cap while engine and radiator are still hot. Scalding fluid and steam can be blown out under pressure if cap is taken off too soon.

2) With radiator cap removed, run engine until upper radiator hose is hot (this shows that thermostat is open and coolant is flowing through system).

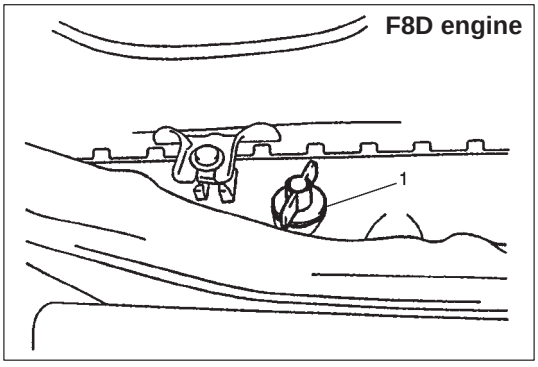

3) Stop engine and drain coolant.
4) Close drain plug. Add water until system is filled and run engine until upper radiator hose is hot again.
5) Repeat steps 3) and 4) several times until drained liquid is nearly colorless.
6) Drain system. And then close radiator drain plug (1) tightly (for F8D engine).

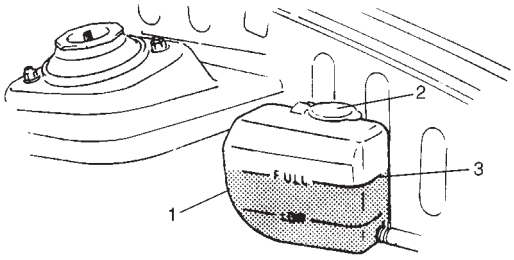

7) Remove reservoir tank (1) and remove cap (2) from reservoir tank and pour out any fluid, scrub and clean inside of tank with soap and water.
   Flush it well with clean water and drain. Reinstall tank.
8) Add 50/50 mixture of good quality ethylene glycol antifreeze and water to radiator and tank.
   Fill radiator to the base of radiator filler neck and reservoir tank to FULL level mark (3). Reinstall reservoir tank cap.
9) Run engine, with radiator cap removed, until radiator upper hose is hot.
10) With engine idling, add coolant to radiator until level reaches the bottom of filler neck. Install radiator cap, making sure that the ear of cap lines is parallel to radiator.

WATER PUMP BELT TENSION

WARNING:
- **Disconnect negative cable at battery before checking and adjusting belt tension.**
- **See WARNING described in COOLING SYSTEM SERVICE.**

1) Inspect belt for cracks, cuts, deformation, wear and cleanliness. If it is necessary to replace belt, refer to page 6B-10 for procedure.

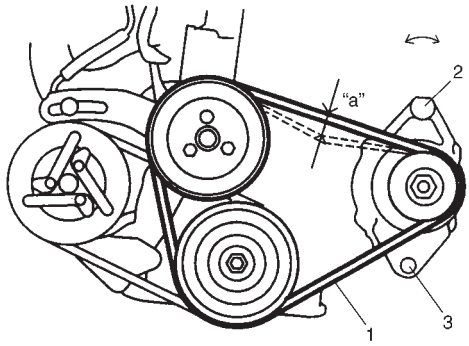

2) Check belt (1) for tension. Belt is in proper tension when it deflects 6 – 7 mm (0.24 – 0.27 in.) under thumb pressure (about 10 kg or 22 lb.).

   Belt tension "a": 6 – 7 mm (0.24 – 0.27 in.) as deflection

   NOTE:
   When replacing belt with a new one, adjust belt tension to 5 – 6 mm (0.20 – 0.24 in.).
3) If belt is too tight or too loose, adjust it to proper tension by displacing generator position.
4) Tighten belt adjusting bolt (2) and generator pivot bolts (3).
5) Connect negative cable at battery terminal.

ON-VEHICLE SERVICE

WARNING:
- **Check to make sure that engine coolant temperature is cold before removing any part of cooling system.**
- **Also be sure to disconnect negative cord from battery terminal before removing any part.**

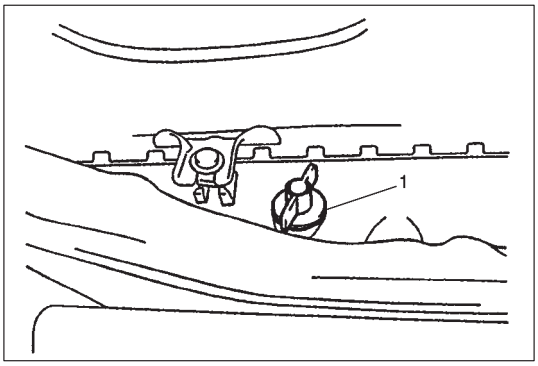

COOLING SYSTEM DRAINING

1) Remove radiator cap.
2) Loosen drain plug (1) on radiator (F8D engine) or disconnect radiator outlet hose (F8B engine) to drain coolant.
3) After draining coolant, be sure to tighten drain plug securely.
4) Fill cooling system. (Refer to Item COOLANT of MAINTENANCE.)

COOLING WATER PIPES OR HOSES

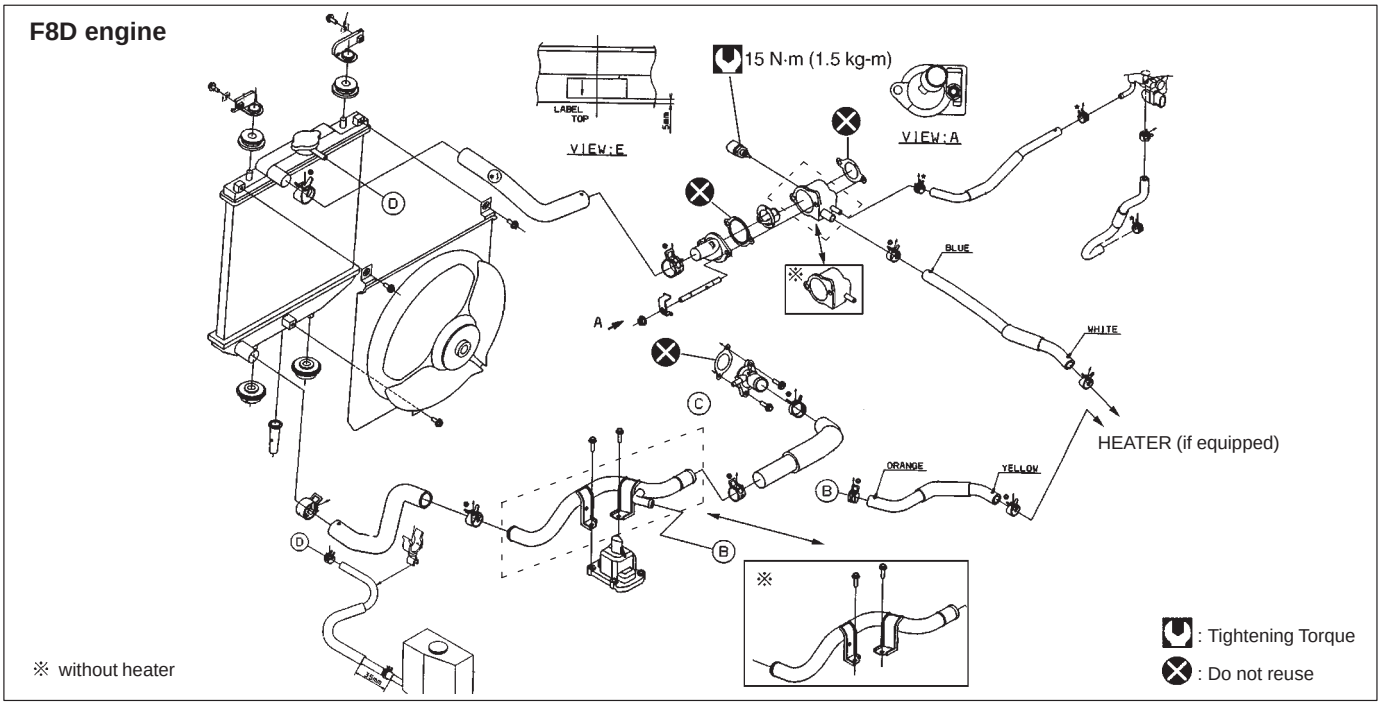

REMOVAL

1) Drain cooling system.
2) To remove these pipes or hoses, loosen clamp on each hose and pull hose end off.

INSTALLATION

Install removed parts in reverse order of removal procedure, noting the following.
- Tighten each clamp securely.
- Refill cooling system with proper coolant, referring to description on COOLANT of MAINTENANCE.

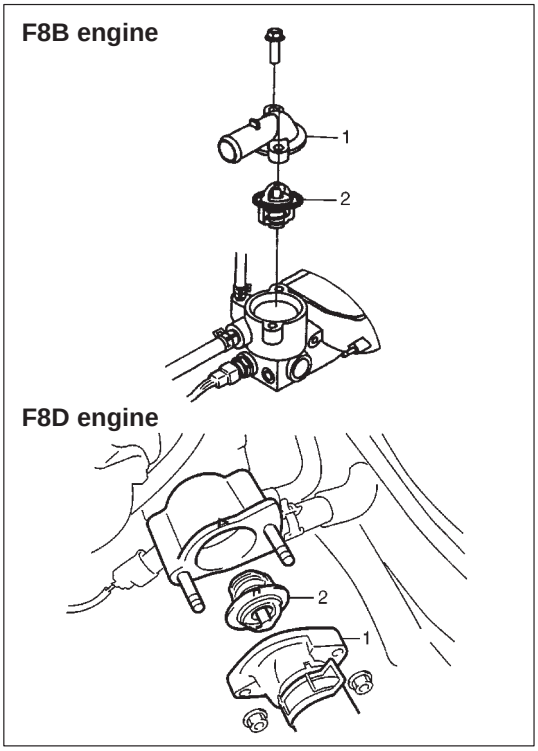

THERMOSTAT

REMOVAL

1) Drain coolant and tighten drain plug.
2) Remove air cleaner case together with air inlet hose.
3) Remove thermostat cap (1) with air cleaner case bracket.
4) Remove thermostat (2) and gasket.

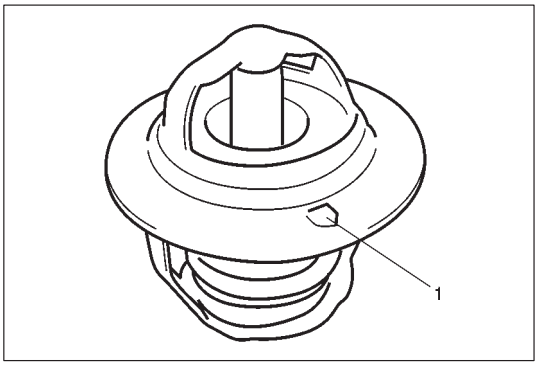

INSPECTION

1) Make sure that air bleed valve (1) of thermostat is clean. Should this valve be clogged, engine would tend to overheat.
2) Check to make sure that valve seat is free from foreign matters which would prevent valve from seating tight.

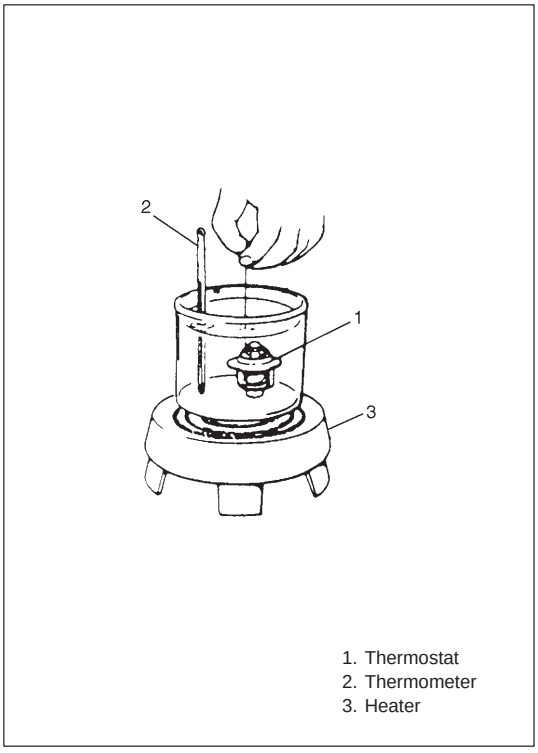

4) Check thermostatic movement of wax pellet as follows:
   (1) Immerse thermostat in water, and heat water gradually.
   (2) Check that valve starts to open at specific temperature.
   (3) If valve starts to open at a temperature substantially below or above specific temperature, thermostat unit should be replaced with a new one. Such a unit, if reused, will bring about overcooling or overheating tendency.

Thermostat functional spec. ±1.5°C (2.7°F)	
Temp. at which valve begins to open	82°C (179°F)
Temp. at which valve become fully open	95°C (203°F)
Valve lift	More than 8 mm at 95°C

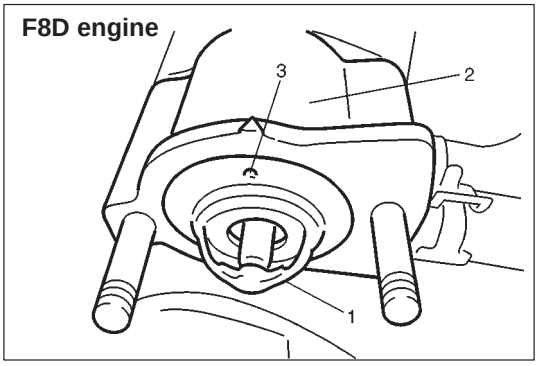

INSTALLATION

1) When positioning thermostat (1) on thermostat case (2), be sure to position it so that air bleed valve (3) aligns with arrow mark on case as shown in figure (F8D engine).
2) Install new gasket.
3) Install thermostat cap to thermostat case.
4) Connect cooling water hose.
5) Fill cooling system (refer to page 6B-6, 6B-7).
6) Install air cleaner case.
7) Connect negative cable at battery.
8) After installation, check each part for leakage.

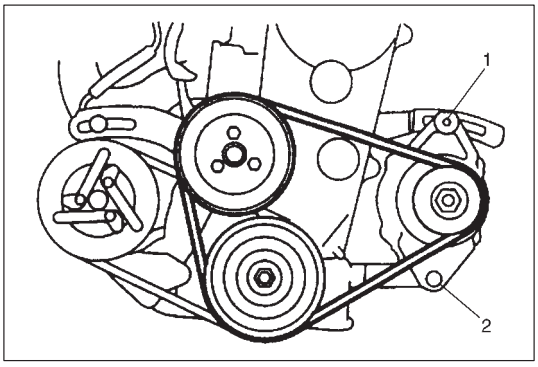

WATER PUMP BELT

REMOVAL

1) Disconnect negative cable at battery.
2) Loosen drive belt adjusting bolt (1) and generator pivot bolts (2).
3) Slacken belt by displacing generator and then remove it.

INSTALLATION

1) Install belt to water pump pulley, crankshaft pulley and generator pulley.
2) Tighten water pump belt adjusting bolt and pivot bolts.
3) Connect negative cable at battery.

WATER PUMP BELT TENSION INSPECTION AND ADJUSTMENT

For this inspection or adjustment, refer to WATER PUMP BELT TENSION.

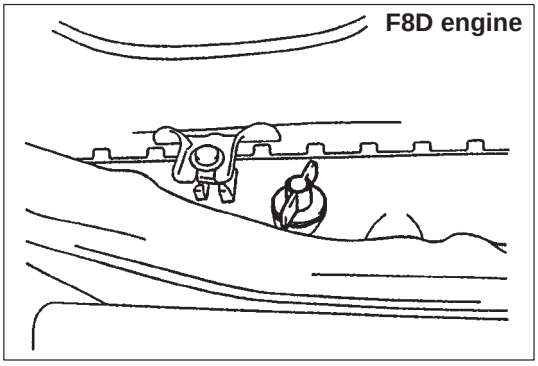

RADIATOR

REMOVAL

1) Disconnect cables at battery and remove battery and its tray.
2) Drain cooling system by loosening drain plug or disconnecting radiator outlet hose.

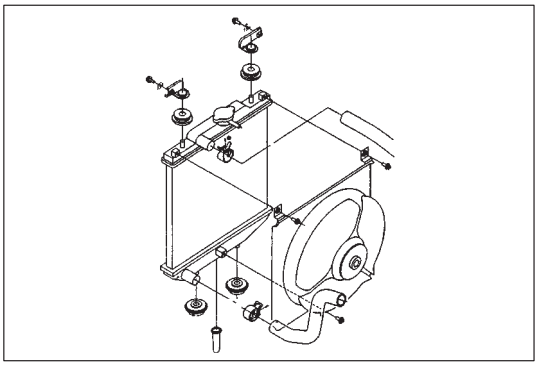

3) Disconnect coupler of cooling fan motor.
4) Remove radiator bolts.
5) Disconnect radiator inlet and outlet hoses and reservoir tank hose from radiator.
6) Remove radiator from vehicle.

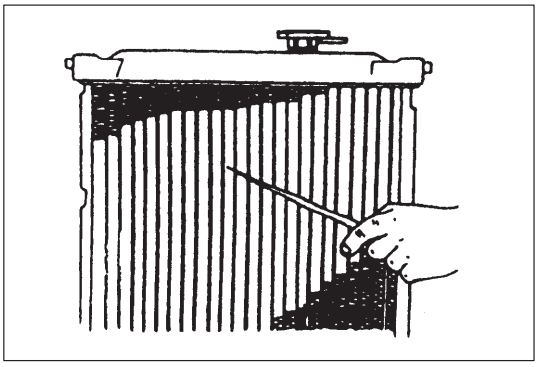

INSPECTION

Check radiator for leakage or damage. Straighten bent fins, if any.

CLEANING

Clean frontal area of radiator cores.

INSTALLATION

Reverse removal procedures.

NOTE:

- **Refill cooling system with proper coolant referring to COOLANT item of MAINTENANCE.**
- **Refer to the figure at REMOVAL for tightening torque.**
- **After installation, check each joint for leakage.**

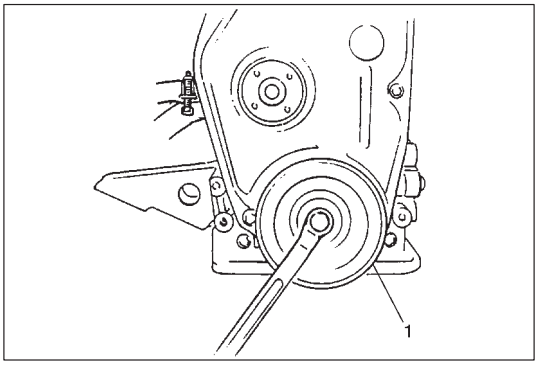

WATER PUMP

REMOVAL

F8B engine

1) Disconnect negative cable at battery.
2) Drain cooling system.
3) Remove A/C compressor drive belt (if equipped) and water pump drive belt. Remove water pump pulley.
4) Remove crankshaft pulley (1).
   Remove timing belt and tensioner according to procedure described in TIMING BELT AND TENSIONER of SECTION 6A.

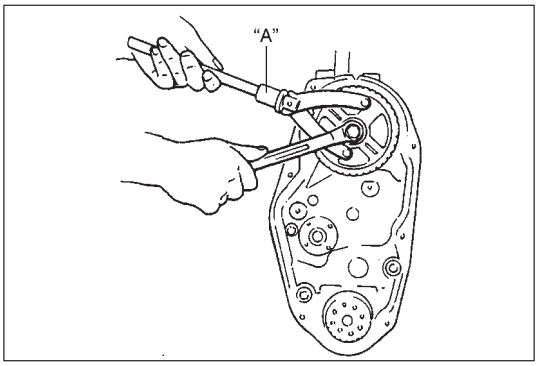

5) Remove timing belt tensioner and crankshaft timing belt pulley by using special tool.

   Special Tool
   (A): 09930-40113

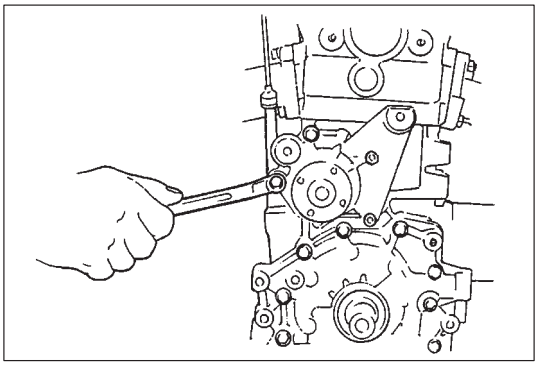

6) Remove crankshaft timing belt pulley and timing belt inside cover.
7) Remove generator adjusting arm.
8) Remove water pump, gasket and rubber seal.

F8D engine

1) Disconnect negative cable at battery.
2) Drain cooling system.
3) Remove water pump belt, A/C compressor drive belt (if equipped) and water pump pulley.
4) Remove crankshaft pulley and timing belt outside cover.
5) Remove timing belt and tensioner according to procedure described in item TIMING BELT AND TENSIONER of SECTION 6A1.

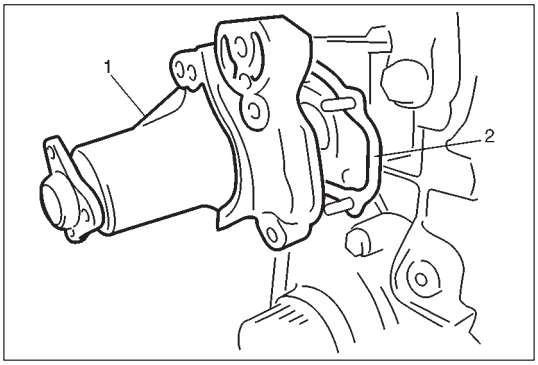

6) Remove water pump (1), gasket (2) and rubber seal.

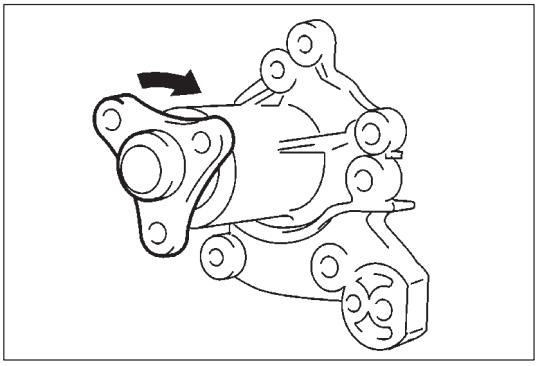

INSPECTION

NOTE:
Do not disassemble water pump.
If any repair is required on pump, replace it as assembly.

Rotate water pump by hand to check for smooth operation.
If pump does not rotate smoothly or makes abnormal noise, replace it.

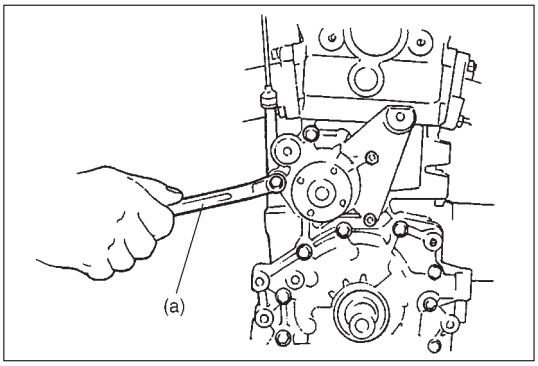

INSTALLATION

F8B engine

1) Install new gasket to cylinder block.
2) Install water pump to cylinder block.

Tightening Torque
(a): 11 N·m (1.1 kg-m, 8.0 lb-ft)

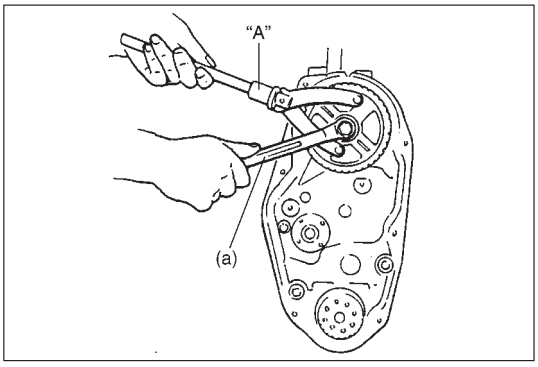

3) Install timing belt inside cover.
4) Install crankshaft timing belt guide, pulley and camshaft timing belt pulley.

Tightening Torque
(a): 55 N·m (5.5 kg-m, 40.0 lb-ft)

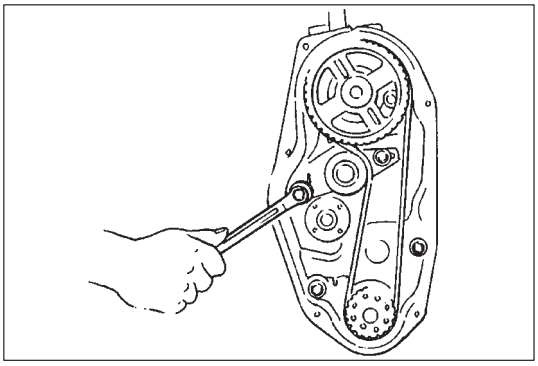

5) Remove cylinder head cover and loosen all valve adjusting screws of intake and exhaust rocker arms fully.
6) Install belt tensioner, tensioner spring and timing belt and adjust timing belt tension according to procedure described in TIMING BELT AND TENSIONER of SECTION 6A.

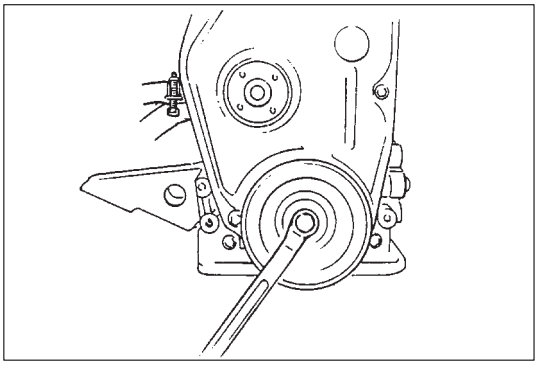

7) Install timing belt outside cover, crankshaft pulley, water pump pulley and drive belts Refer to SECTION 6A.
8) Adjust all valve lashes refer to SECTION 6A.
9) Adjust water pump drive belt tension and A/C compressor drive belt tension (if equipped).
10) Connect negative cable at battery.
11) Fill cooling system.

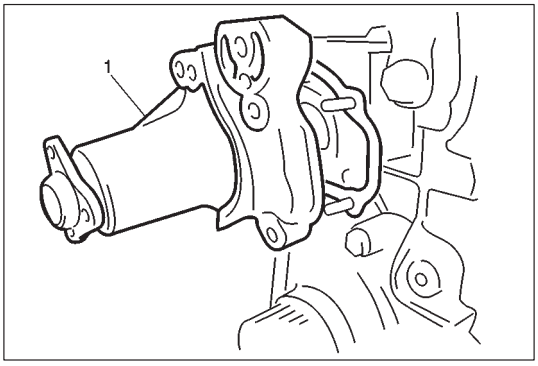

F8D engine

1) Install new pump gasket (1) to cylinder block.

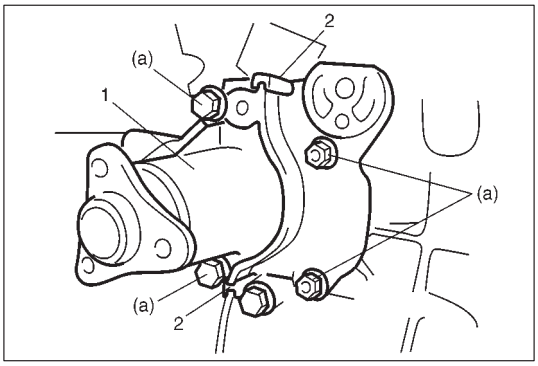

2) Install water pump (1) to cylinder block.

   Tightening Torque
   (a): 11 N·m (1.1 kg-m, 8.0 lb-ft)

3) After installing water pump, install rubber seal (2).
4) Install belt tensioner and timing belt and adjust timing belt according to procedure described in item TIMING BELT AND TENSIONER of SECTION 6A1.
5) Adjust drive belt tension.
6) Fill cooling system.
7) After installation, check each part for leakage.

REQUIRED SERVICE MATERIAL

MATERIALS	USE
Ethylene glycol base coolant (Anti-freeze/Anti-corrosion coolant)	Additive to engine cooling system for improving cooling efficiency and for protection against rusting.

SECTION 6C

ENGINE FUEL

CONTENTS

GENERAL DESCRIPTION 6C- 1
Fuel System 6C- 1
Fuel Tank 6C- 2
Fuel Pump . . . . . Refer to SECTION 6E1
Fuel Filter 6C- 2
Fuel Filler Cap 6C- 2

ON-VEHICLE SERVICE 6C- 3
Fuel Lines 6C- 3
Fuel Pipe 6C- 4
Fuel Filler Cap 6C- 4
Fuel Filter 6C- 5
Fuel Tank 6C- 5
Fuel Pump 6C- 8

CAUTION:
THE ENGINE OF THIS VEHICLE REQUIRES THE USE OF UNLEADED FUEL ONLY. USE OF LEADED AND/OR LOW LEAD FUEL CAN RESULT IN ENGINE DAMAGE AND REDUCE THE EFFECTIVENESS OF THE EMISSION CONTROL SYSTEM.

GENERAL DESCRIPTION

FUEL SYSTEM

The main components of the fuel system are fuel tank, fuel pump, fuel filter and fuel level gauge and it includes three lines; fuel feed line, fuel return line and fuel vapor line.
For the details of fuel flow and fuel vapor flow, refer to ENGINE AND EMISSION CONTROL SYSTEM section.

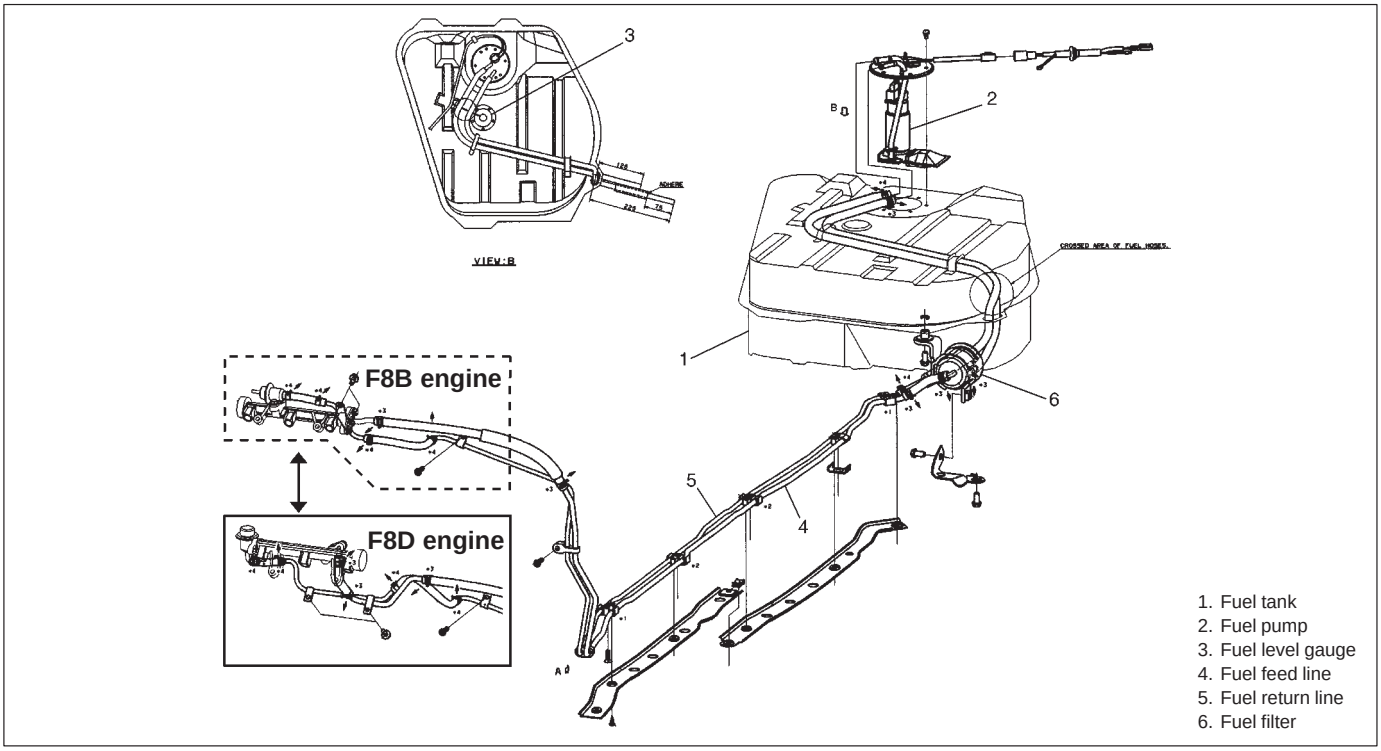

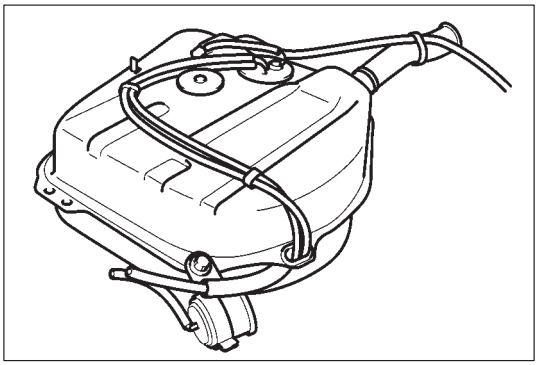

FUEL TANK

The fuel tank is located under the rear of the vehicle. The fuel pump and fuel level gauge are installed on the upper part of fuel tank. Whenever servicing the fuel level gauge or the fuel pump, the fuel tank must be removed from the body.

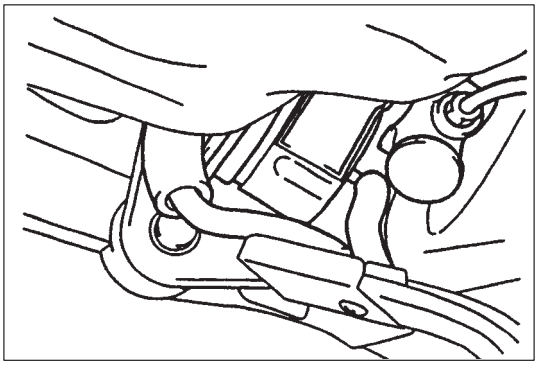

FUEL FILTER

The fuel filter is located in front of fuel tank as shown in figure and filters the fuel sent under pressure from the fuel pump.
As it can't be disassembled, it must be replaced as an assembly.

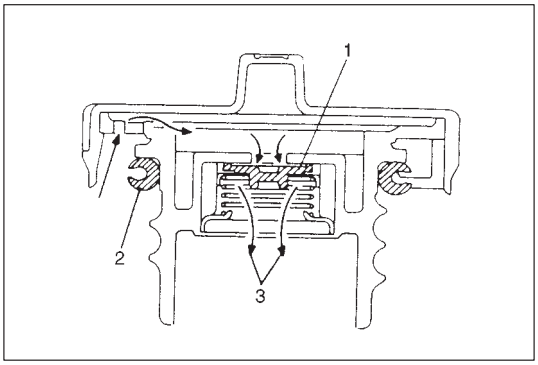

FUEL FILLER CAP

A ratchet tightening device on the threaded fuel filler cap reduces the chances of incorrect installation, which would prevent sealing fuel vapors.
After the gasket (2) on fuel filler cap and the filler neck flange contact, the ratchet produces a loud clicking noise, indicating the seal has been set.
This cap has a vacuum relief valve (1) inside.
The vacuum relief valve opens to relieve the vacuum created in the fuel tank (supplies air (3) into tank).

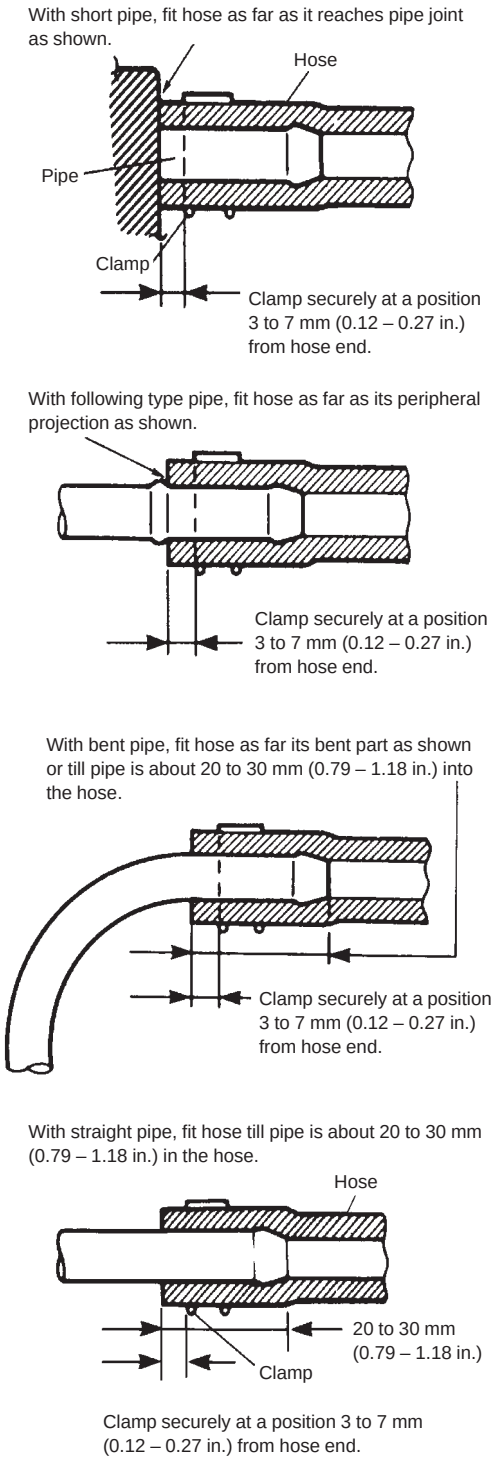

ON-VEHICLE SERVICE

WARNING:
Before attempting service of any type on fuel system, following cautions should be always observed.

- **Disconnect negative cable at battery.**
- **DO NOT smoke, and place "NO SMOKING" signs near work area.**
- **Be sure to have CO_2 fire extinguisher handy.**
- **Be sure to perform work in a well-ventilated area and away from any open flames (such as gas hot heater).**
- **Wear safety glasses.**
- **To relieve fuel vapor pressure in fuel tank, remove fuel filler cap from fuel filler neck and then reinstall it.**
- **As fuel feed line is still under high fuel pressure even after engine was stopped, loosening or disconnecting fuel feed line directly may cause dangerous spout of fuel to occur where loosened or disconnected. Before loosening or disconnecting fuel feed line, make sure to relieve fuel pressure according to procedure described on p. 6-4.**
- **A small amount of fuel may be released after the fuel line is disconnected. In order to reduce the chance of personal injury, cover the fitting to be disconnected with a shop cloth. Be sure to put that cloth in an approved container when disconnection is completed.**
- **Note that fuel hose connection varies with each type of pipe. Be sure to connect and clamp each hose correctly referring to the left figure.**

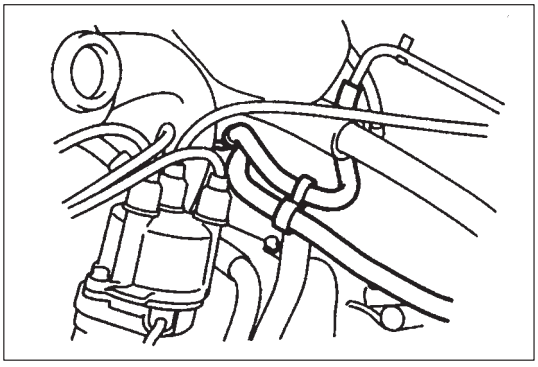

FUEL LINES

Due to the fact that fuel feed line is under high pressure, use special care when servicing it.

INSPECTION

Visually inspect fuel lines for evidence of fuel leakage, hose crack and deterioration or damage.
Make sure all clamps are secure.
Replace parts as needed.

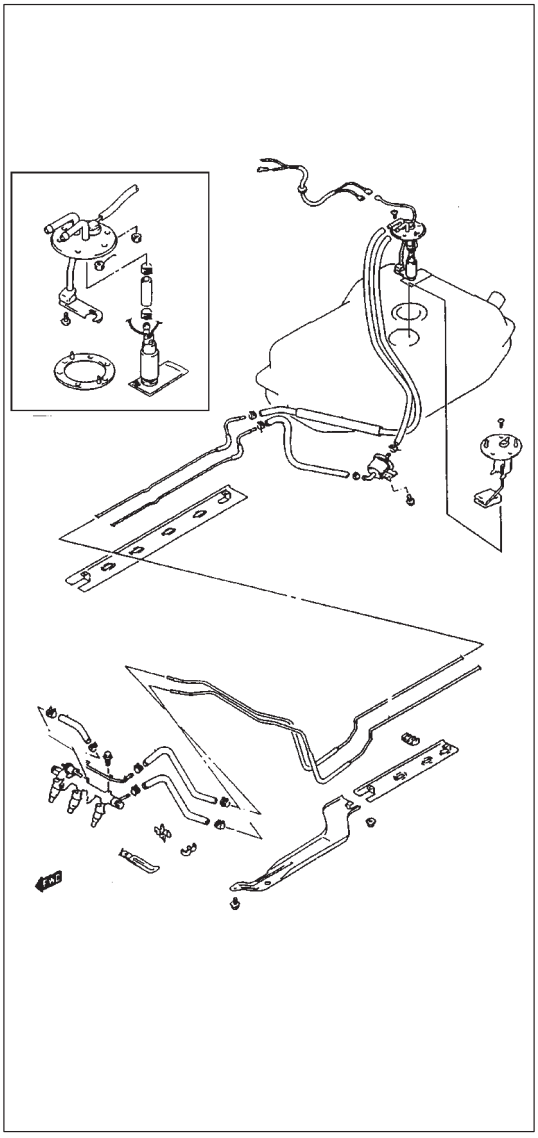

FUEL PIPE

REMOVAL

WARNING:
A small amount of fuel may be released after fuel hose is disconnected. In order to reduce the chance of personal injury, cover hose and pipe to be disconnected with a shop cloth. Be sure to put that cloth in an approved container when disconnection is completed.

1) Relieve fuel pressure in fuel feed line according to procedure on p. 6-4.
2) Disconnect negative cable at battery.
3) Disconnect fuel hose from fuel pipe at the front and rear of each fuel pipe.
4) Remove pipe cover from body.
5) Put clamp position mark on pipes so that clamps can be installed on original position.
6) Remove pipes with clamp from body.
7) Remove clamp from pipes.

INSTALLATION

1) Install clamps to marked position on pipes referring to the figure in p.6C-2. If clamp is deformed or its claw is bent or broken, replace it with new one.
2) Install pipes with pipe clamp to body.
3) Install pipe cover to body. Be sure to use new nuts.
4) Connect fuel hoses to fuel pipes.
5) With engine “OFF” and ignition switch “ON”, check for fuel leaks.

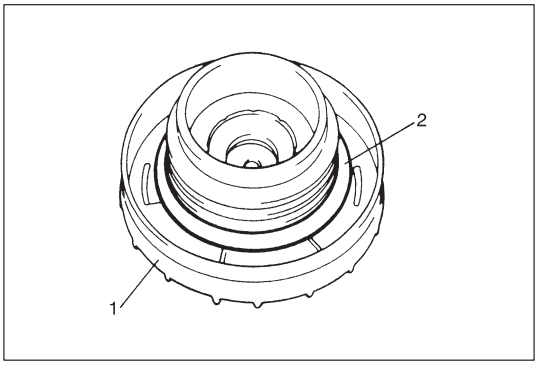

FUEL FILLER CAP

Remove cap (1), and check gasket (2) for even filler neck imprint, and deterioration or any damage. If gasket is in malcondition, replace cap.

NOTE:
If cap requires replacement, only a cap with the same features should be used. Failure to use correct cap can result in critical malfunction of system.

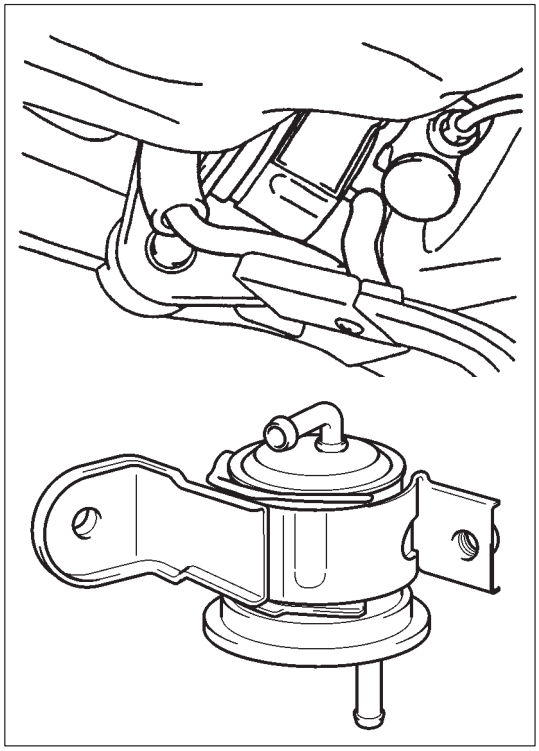

FUEL FILTER

REMOVAL

WARNING:
A small amount of fuel may be released after fuel hose is disconnected. In order to reduce the chance of personal injury, cover hose and pipe to be disconnected with a shop cloth. Be sure to put that cloth in an approved container when disconnection is completed.

1) Relieve fuel pressure in fuel feed line according to procedure described on p. 6-4.
2) Disconnect negative cable at battery.
3) Place fuel container under fuel filter.
4) Disconnect inlet and outlet hoses from fuel filter.
5) Remove fuel filter with bracket.

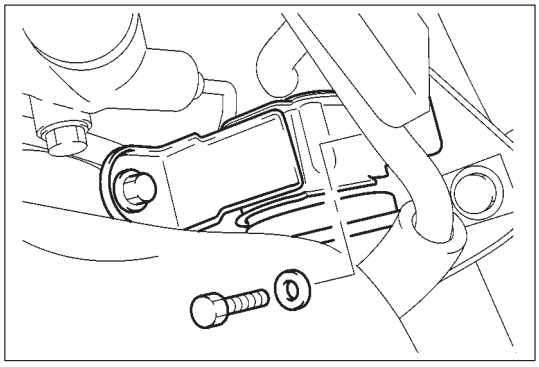

INSTALLATION

1) Install filter.
2) Connect outlet and inlet hoses.
   Clamp hoses securely.
3) Connect negative cable to battery.
4) With engine “OFF” and ignition switch “ON”, check for fuel leaks.

FUEL TANK

WARNING:
- **Refer to the WARNING at the beginning of ON-VEHICLE SERVICE in this section.**
- **A small amount of fuel may be released after the fuel hose is disconnected. In order to reduce the chance of personal injury, cover the hose and pipe to be disconnected with a shop cloth. Be sure to put that cloth in an approved container when disconnection is completed.**

REMOVAL

1) Relieve fuel pressure in fuel feed line according to procedure described on p. 6-4.
2) Disconnect negative cable at battery.
3) Hoist vehicle.

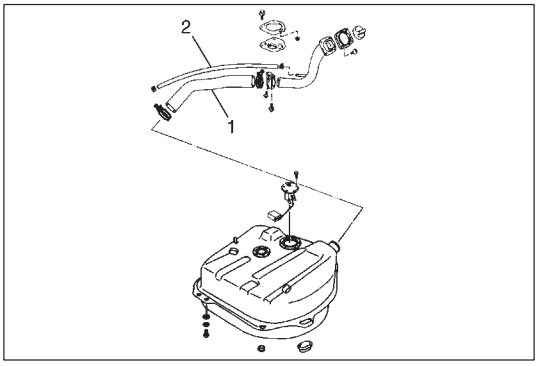

4) Disconnect fuel filler hose (1) and breather hose (2) from filler neck.

5) As fuel tank has no drain plug, drain fuel tank by pumping fuel through fuel tank filler.
Use hand operated pump device to drain fuel tank.

> **CAUTION:**
> **Never drain or store fuel in an open container to avoid possibility of fire or explosion.**

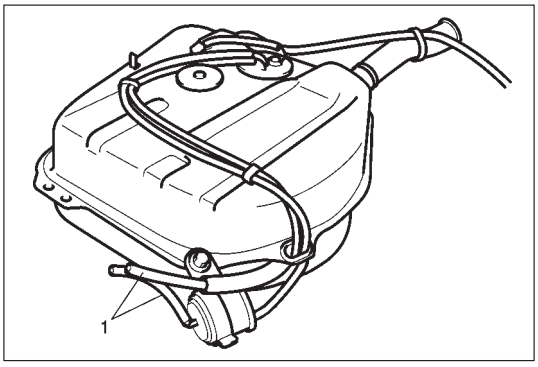

6) Disconnect fuel hoses (1).

7) Support fuel tank with jack and lower fuel tank gradually until connector of fuel pump and terminal of fuel level gauge can be disconnected. Then disconnect wire harness at connector and terminal.
8) Remove fuel tank from vehicle.

INSPECTION

After removing fuel tank, check hoses and pipes connected to fuel tank for leaks, loose connections, deterioration or damage. Also check fuel pump, level gauge and fuel cut valve gaskets for leaks, visually inspect fuel tank for leaks and damage.
Replace any damaged or malconditioned parts.

FUEL TANK PURGING PROCEDURE

WARNING:
This purging procedure will NOT remove all fuel vapor. Do not attempt any repair on tank using heat of flame as an explosion resulting in personal injury could occur.

Following procedure is used for purging fuel tank.

1) After removing fuel tank, remove all hoses, pipes, fuel cut valves, fuel pump and fuel level gauge from fuel tank.
2) Drain all remaining fuel from tank.
3) Move tank to flushing area.
4) Fill tank with warm water or tap water, and agitate vigorously and drain. Repeat this washing until inside of tank is clean. Replace tank if its inside is rusty.
5) Completely flush out remaining water after washing.

CAUTION:
Never remain water in fuel tank after washing, or fuel tank inside will get corrosion.

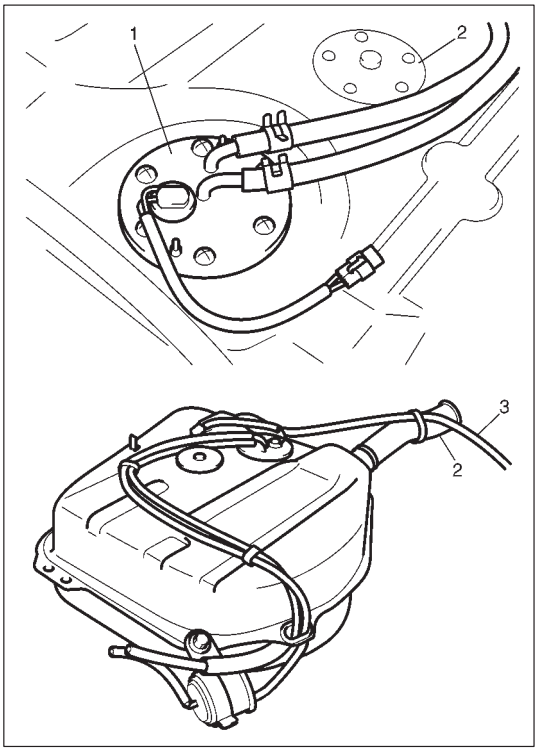

INSTALLATION

1) Install fuel pump (1) and fuel level gauge (2) to fuel tank. Use new gaskets.
2) Connect fuel hoses and pipes to fuel tank as shown. Clamp hoses and wire harness securely.
3) Connect fuel breather hose to fuel tank.
4) Install fuel tank to vehicle after connecting connecter and terminal.
5) Connect fuel filler hose (2) to tank and breather hose (3) to filler neck as shown in figure and clamp them securely.
6) Connect fuel and return hoses to pipes and clamp them securely.
7) Connect negative cable at battery.
8) With engine “OFF” and ignition switch “ON”, check for fuel leaks.
9) Start engine and check each joint of exhaust system for leakage.

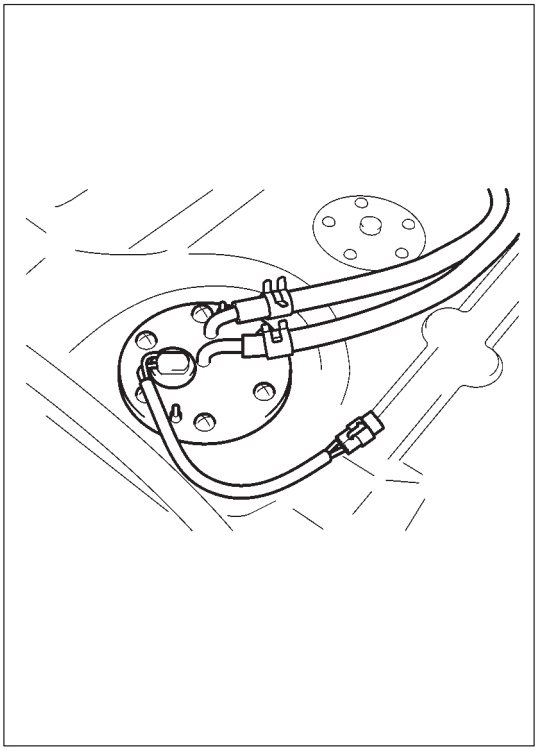

FUEL PUMP

WARNING:
Refer to the WARNING at the beginning of ON-VEHICLE SERVICE in this section.

REMOVAL

1) Remove fuel tank from vehicle. Refer to FUEL TANK REMOVAL in this section.

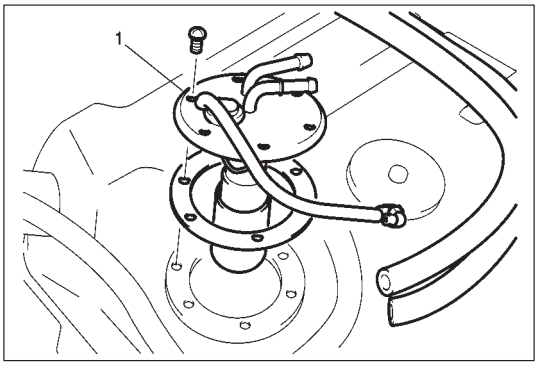

2) Remove fuel pump assembly (1) from fuel tank.

INSPECTION

Check fuel pump assembly for damage.
For inspection of fuel pump itself, refer to Section 6E1 of this manual.

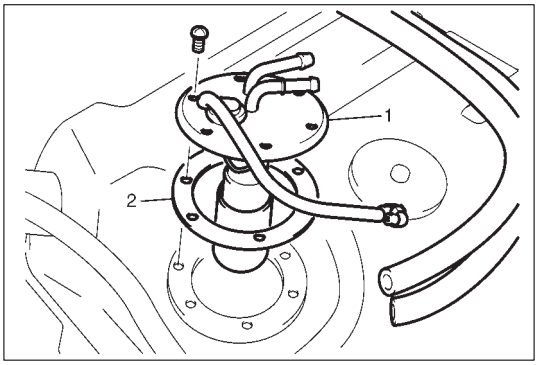

INSTALLATION

1) Clean mating surfaces of fuel pump assembly (1) and fuel tank.
2) Install new gasket (2) to fuel pump assembly then install fuel pump assembly to fuel tank.
3) Install fuel tank to vehicle. Refer to FUEL TANK INSTALLATION in this section.

SECTION 6E1

ENGINE AND EMISSION CONTROL SYSTEM

CONTENTS

GENERAL DESCRIPTION 6E1- 2
Air Intake System 6E1- 4
Fuel Delivery System 6E1- 4
Electronic Control System 6E1- 5

DIAGNOSIS 6E1-10
On-Board Diagnostic System 6E1-10
Precautions in Diagnosing Troubles 6E1-10
MIL Check 6E1-11
DTC Check 6E1-11
DTC Clearance 6E1-13
DTC Table 6E1-14
A-1 MIL Circuit Check 6E1-15
A-2 MIL Circuit Check 6E1-16
A-3 MIL Circuit Check 6E1-17
A-4 ECM Power and Ground
Circuit Check 6E1-18
Code No.11 (P0105) MAP Sensor Circuit 6E1-20
Code No.13 (P0120) TP Sensor Circuit . 6E1-22
Code No.14 (P0130) O2 Sensor Circuit . 6E1-24
Code No.15 (P0340) CMP Sensor Circuit 6E1-26
Code No.16 (P0500) VSS Circuit 6E1-27
Code No.18 (P0110) IAT Sensor Circuit . 6E1-28
Code No.19 (P0115) ECT Sensor Circuit 6E1-29
DTC Confirmation Procedure 6E1-30
B-1 Fuel Pump and Its Circuit Check . . . 6E1-31
B-2 Fuel Injector and Its Circuit Check . . 6E1-32
B-3 Fuel Pressure Check 6E1-34
B-4 Idle Air Control System Check 6E1-36
B-5 Evaporative Emission Control
System Check 6E1-37
B-6 Engine Start Signal Check 6E1-38
B-7 Radiator Fan Control System Check 6E1-39
B-8 A/C Control Signal Check
(If equipped) 6E1-40
B-9 Electric Load Signal Circuits Check . 6E1-41
B-10 Fuel Cut Operation Check 6E1-42
Inspection of ECM and Its Circuits 6E1-43
Voltage Check 6E1-43
Resistance Check 6E1-46

ON-VEHICLE SERVICE 6E1-47
General 6E1-48
Accelerator Cable Adjustment 6E1-48
Idle Speed/Idle Air Control (IAC)
Duty Inspection 6E1-49

AIR INTAKE SYSTEM 6E1-51
Throttle Body 6E1-51
Idle Air Control Valve (IAC Valve) 6E1-54

FUEL DELIVERY SYSTEM 6E1-55
Fuel Pressure Inspection 6E1-55
Fuel Pump 6E1-6
Fuel Pressure Regulator 6E1-7
Fuel Injector 6E1-58

ELECTRONIC CONTROL SYSTEM 6E1-61
ECM 6E1-61
MAP Sensor 6E1-61
TP Sensor 6E1-64
IAT Sensor 6E1-66
ECT Sensor 6E1-67
Main Relay/Fuel Pump Relay 6E1-68
Oxygen Sensor 6E1-69
Fuel Cut Operation 6E1-70
A/C Compressor Control Relay
(If equipped) 6E1-70
CMP Sensor 6E1-70
Radiator Fan Control System 6E1-71
VSS 6E1-72
EVAP Control System 6E1-73
PCV System 6E1-78

SPECIAL TOOLS 6E1-79

GENERAL DESCRIPTION

The engine and emission control system has 4 major sub-systems: air intake system, fuel delivery system, electronic control system and emission control system.

Air intake system includes air cleaner, MAP sensor, throttle body, IAC valve and intake manifold.

Fuel delivery system includes fuel pump, delivery pipe, fuel pressure regulator, fuel injectors, etc.

Electronic control system includes ECM, various sensors and controlled devices.

Emission control system includes EVAP and PCV systems.

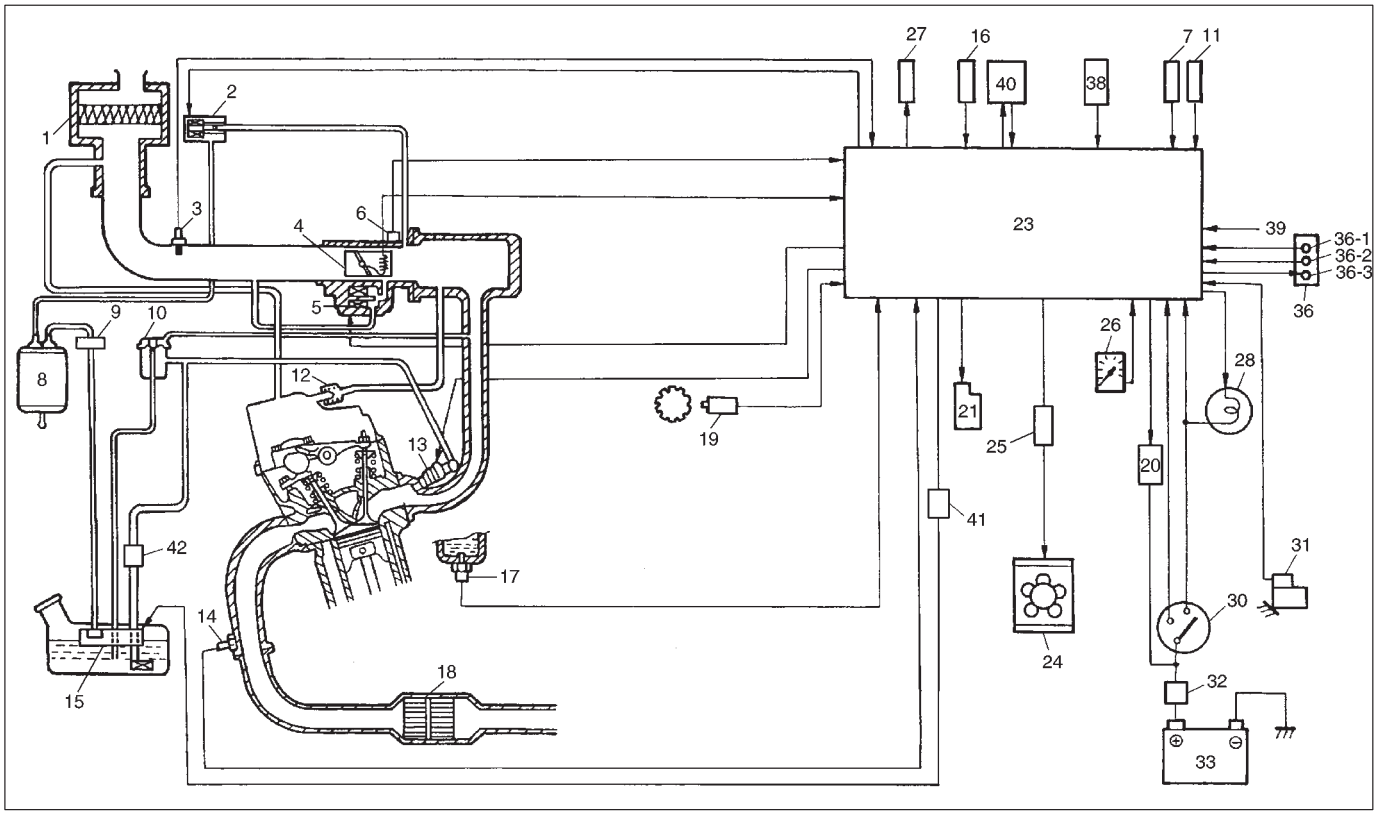

1. Air Cleaner
2. EVAP canister purge valve
3. IAT sensor
4. TP sensor
5. IAC valve
6. MAP sensor
7. A/C evaporator temp. sensor (if equipped)
8. EVAP canister
9. Tank pressure control valve
10. Fuel pressure regulator
11. A/C dual pressure switch (if equipped)
12. PCV valve
13. Fuel injector
14. Oxygen sensor
15. Fuel pump
16. Stop light switch
17. ECT sensor
18. Three way catalytic convertor
19. CMP sensor
20. Main relay
21. Ignitor
22. Blank
23. ECM
24. Radiator fan
25. Radiator fan control relay
26. VSS in combination meter
27. A/C compressor control relay
28. Malfunction indicator lamp in combination meter
29. Blank
30. Ignition switch
31. Starter magnetic switch
32. Main fuse
33. Battery
34. Blank
35. Blank
36. Monitor connector

36-1. Diagnosis switch terminal
36-2. Test switch terminal
36-3. Duty output terminal

37. Blank
38. Heater blower fan switch
39. Electric load (blower fan and small light)
40. Data link connector (DLC)
41. Fuel pump relay
42. Fuel filter

AIR INTAKE SYSTEM

The main components of the air intake system are air cleaner, air cleaner outlet hose, throttle body, IAC valve and intake manifold.

The air (by the amount corresponding to the throttle valve opening and engine speed) is filtered by the air cleaner, passes through the throttle body, is distributed by the intake manifold and finally drawn into each combustion chamber.

When the IAC valve is opened according to the signal from ECM, the air bypasses the throttle valve through bypass passage and is finally drawn into the intake manifold.

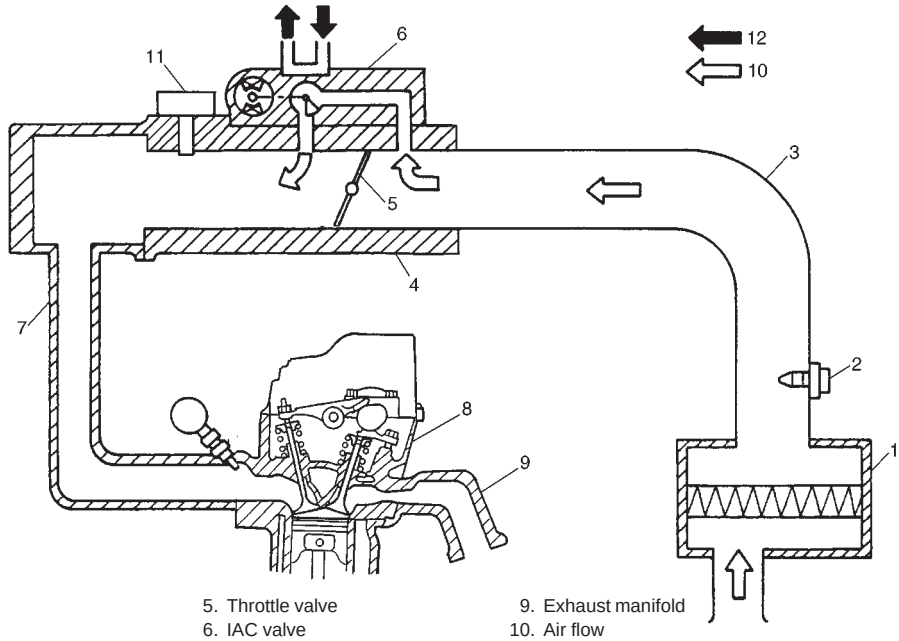

1. Air cleaner
2. IAT sensor
3. Air cleaner outlet hose
4. Throttle body
5. Throttle valve
6. IAC valve
7. Intake manifold
8. Cylinder head
9. Exhaust manifold
10. Air flow
11. MAP sensor
12. Engine coolant

FUEL DELIVERY SYSTEM

The fuel delivery system consists of the fuel tank, fuel pump, fuel filter, fuel pressure regulator, delivery pipe and fuel injectors.

The fuel in the fuel tank is pumped up by the fuel pump, filtered by the fuel filter and fed under pressure to each injector through the delivery pipe. As the fuel pressure applied to the injector (the fuel pressure in the fuel feed line) is always kept a certain amount higher than the pressure in the intake manifold by the fuel pressure regulator, the fuel is injected into the intake port of the cylinder head when the injector opens according to the injection signal from ECM.

The fuel relieved by the fuel pressure regulator returns through the fuel return line to the fuel tank.

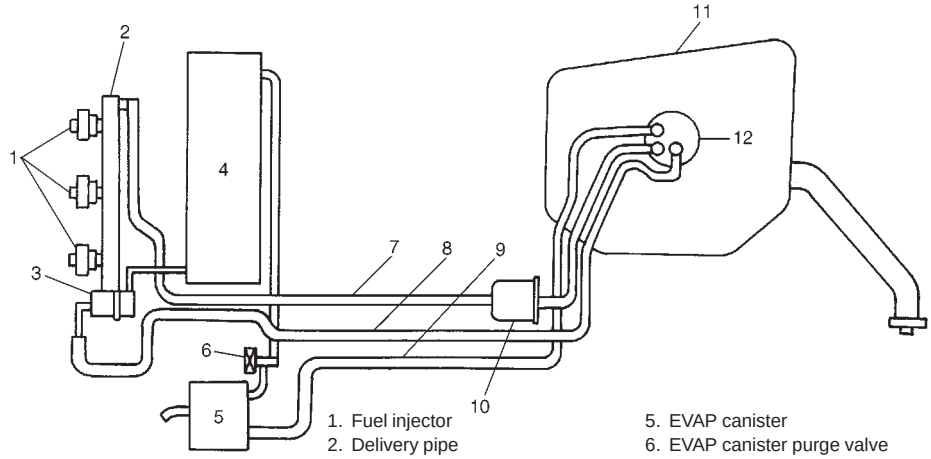

1. Fuel injector
2. Delivery pipe
3. Fuel pressure regulator
4. Intake manifold
5. EVAP canister
6. EVAP canister purge valve
7. Fuel feed line
8. Fuel return line
9. Fuel vapor line
10. Fuel filter
11. Fuel tank
12. Fuel pump

ELECTRONIC CONTROL SYSTEM

The electronic control system consists of 1) various sensors which detect the state of engine and driving conditions, 2) ECM which controls various devices according to the signals from the sensors and 3) various controlled devices.

Functionally, it is divided into the following sub systems:

- Fuel injection control system
- Idle speed control system
- Fuel pump control system
- Ignition control system
- Radiator fan control system
- Evaporative emission control system
- A/C control system (if equipped)

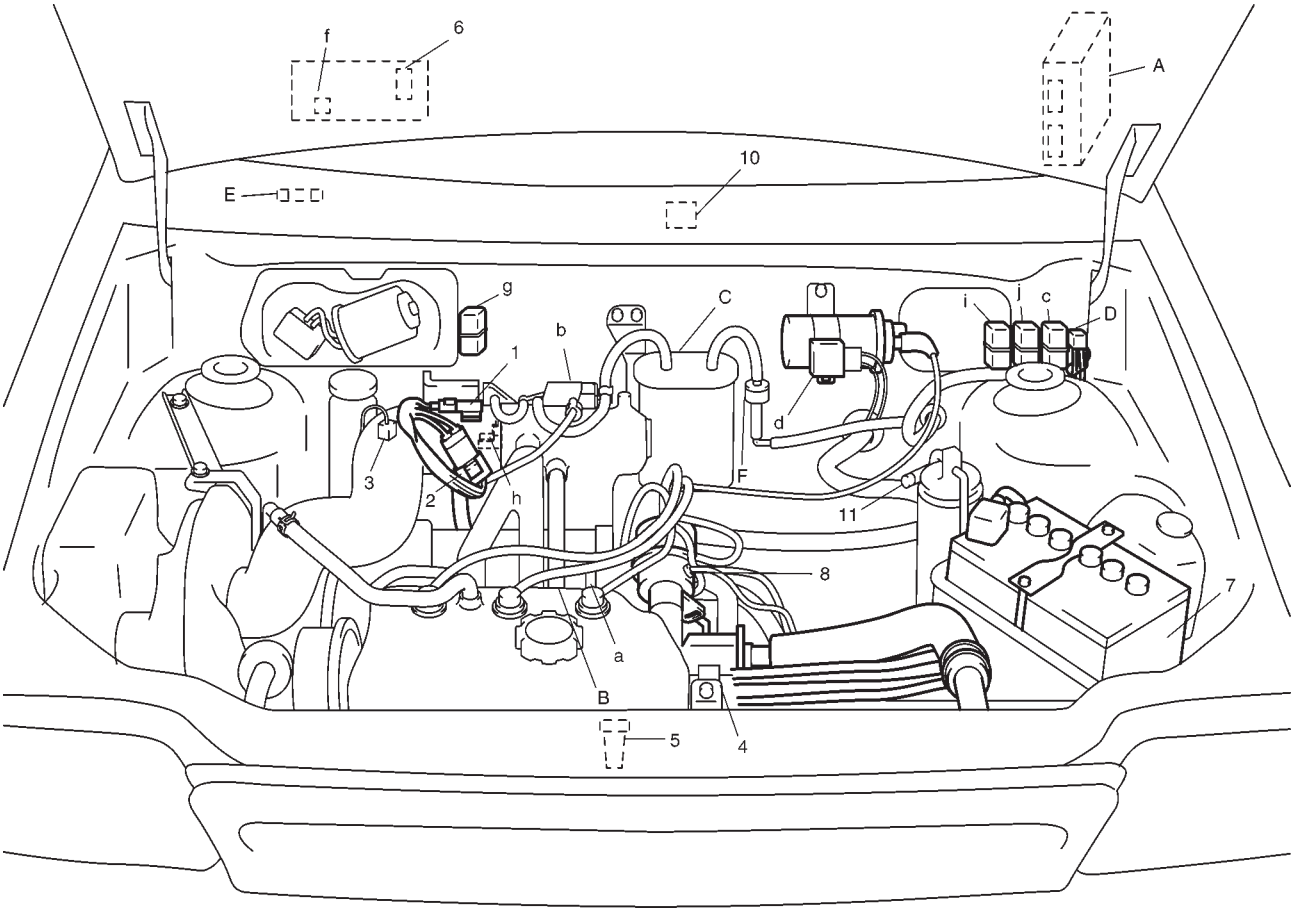

INFORMATION SENSORS
1. MAP sensor
2. TP sensor
3. IAT sensor
4. ECT sensor
5. Oxygen sensor
6. VSS
7. Battery
8. CMP sensor
9. Blank
10. A/C evaporator temp. sensor (if equipped)
11. A/C dual pressure switch (if equipped)

CONTROL DEVICES
a : Fuel injectors
b : EVAP canister purge valve
c : Fuel pump relay
d : Igniter
e : Blank
f : Malfunction indicator lamp
g : Radiator fan control relay
h : IAC valve
i : A/C compressor control relay (if equipped)
j : Main relay

OTHERS
A : ECM
B : PCV valve
C : EVAP canister
D : Monitor connector
E : DLC
F : Tank pressure control valve

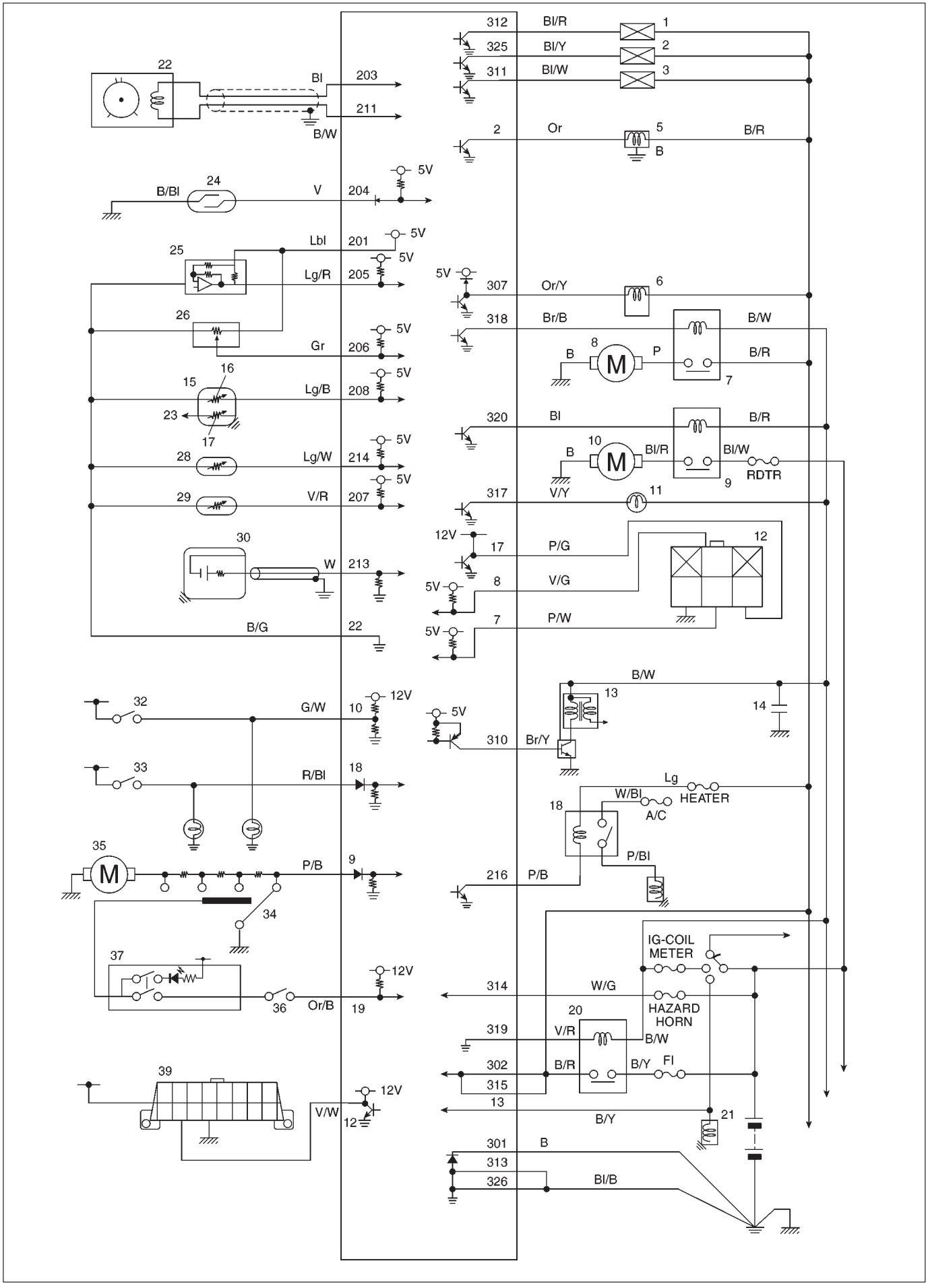
22
Bl
203
211
B/W
24
B/Bl
V
204
5V
Lbl
201
25
Lg/R
205
26
Gr
206
16
15
Lg/B
208
23
17
28
Lg/W
214
29
V/R
207
30
W
213
B/G
22
32
G/W
10
12V
33
R/Bl
18
35
P/B
9
34
37
36
Or/B
19
39
V/W
12
312
Bl/R
1
325
Bl/Y
2
311
Bl/W
3
2
Or
5
B
B/R
307
Or/Y
6
318
Br/B
B/W
8
B
P
B/R
7
320
Bl
B/R
10
B
Bl/R
Bl/W
RDTR
9
317
V/Y
11
17
P/G
12
8
V/G
7
P/W
B/W
13
14
310
Br/Y
Lg
W/Bl
HEATER
A/C
18
P/Bl
216
P/B
IG-COIL
METER
314
W/G
HAZARD
HORN
20
319
V/R
B/W
302
B/R
B/Y
Fl
315
13
B/Y
21
301
B
313
326
Bl/B

TERMINAL ARRANGEMENT OF ECM COUPLER (VIEWED FROM HARNESS SIDE)

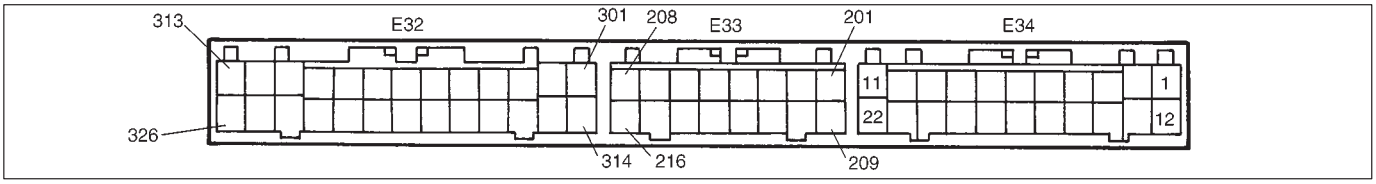

1. Fuel injector No.1
2. Fuel injector No.2
3. Fuel injector No.3
4. Blank
5. Idle air control (IAC) valve
6. EVAP canister purge valve
7. Fuel pump relay
8. Fuel pump
9. Radiator fan control relay
10. Radiator fan motor
11. Malfunction indicator light
12. Monitor connector
13. Igniter
14. Capacitor (noise suppressor)
15. Engine coolant temp. (ECT) sensor with gauge
16. ECT sensor
17. ECT gauge
18. A/C compressor control relay (if equipped)
19. Blank
20. Main relay
21. Starter magnetic switch
22. Camshaft position (CMP) sensor
23. To Combination meter
24. Vehicle speed sensor (VSS) (reed switch)
25. Manifold absolute pressure (MAP) sensor
26. Throttle position (TP) sensor
27. Blank
28. Intake air temp.(IAT) sensor
29. A/C evaporator temp. sensor (if equipped)
30. Oxygen sensor
31. Blank
32. Stop light switch
33. Small light switch
34. Heater blower motor switch
35. Heater blower motor
36. A/C dual pressure switch (if equipped)
37. A/C switch (if equipped)
38. Blank
39. Data link connector

TERMINAL	CIRCUIT
E34-1	Blank
E34-2	IAC valve
E34-3	Blank
E34-4	Blank
E34-5	Blank
E34-6	Blank
E34-7	Test switch terminal
E34-8	Diagnosis switch terminal
E34-9	Electric load signal for blower fan motor
E34-10	Stop light switch (brake pedal switch)
E34-11	Blank
E34-12	Data link connector
E34-13	Engine starter switch (engine starter signal)
E34-14	Blank
E34-15	Blank
E34-16	Blank
E34-17	Duty output terminal
E34-18	Electric load signal for small light switch and rear defogger
E34-19	A/C ON signal from A/C switch (if equipped)
E34-20	Blank
E34-21	Blank
E34-22	Sensor ground
E33-201	Power supply for sensor
E33-202	Blank
E33-203	CMP sensor (+)
E33-204	VSS
E33-205	MAP sensor
E33-206	TP sensor
E33-207	A/C evaporator temp. sensor (with A/C)
E33-208	ECT sensor
E33-209	Blank
E33-210	Blank
E33-211	CMP sensor (–)
E33-212	Blank
E33-213	Oxygen sensor
E33-214	IAT sensor
E33-215	Blank
E33-216	A/C compressor magnet clutch (with A/C)

TERMINAL	CIRCUIT
E32-301	Ground
E32-302	Power source
E32-303	Blank
E32-304	Blank
E32-305	Blank
E32-306	Blank
E32-307	EVAP canister purge valve
E32-308	Blank
E32-309	Blank
E32-310	Igniter
E32-311	Fuel injector No. 3
E32-312	Fuel injector No. 1
E32-313	Ground
E32-314	Power source for backup
E32-315	Power source
E32-316	Blank
E32-317	Malfunction indicator light
E32-318	Fuel pump relay
E32-319	Main relay
E32-320	Radiator fan control relay
E32-321	Blank
E32-322	Blank
E32-323	Blank
E32-324	Blank
E32-325	Fuel injector No. 2
E32-326	Ground

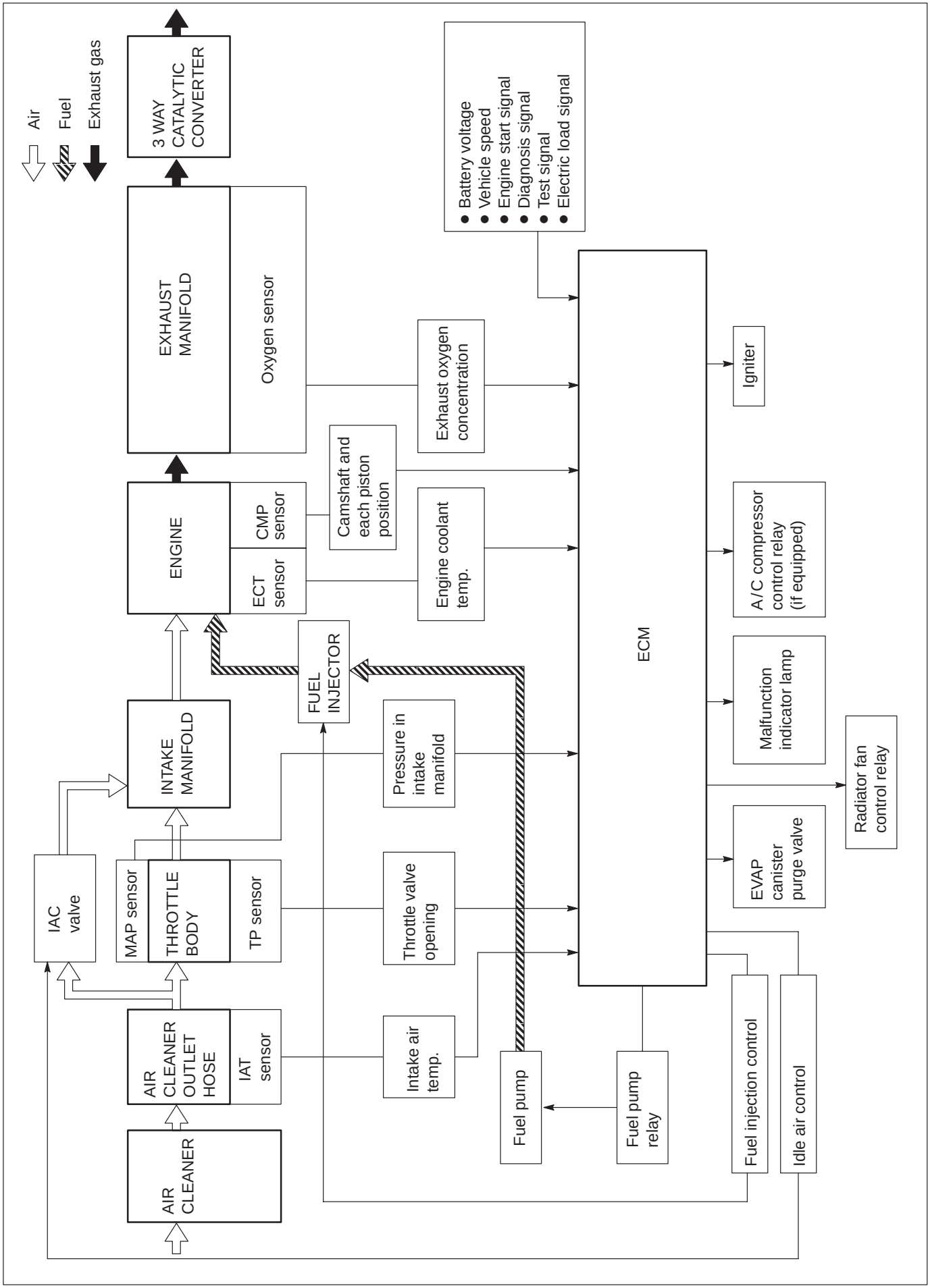
Air
Fuel
Exhaust gas
3 WAY CATALYTIC CONVERTER
EXHAUST MANIFOLD
Oxygen sensor
ENGINE
CMP sensor
ECT sensor
INTAKE MANIFOLD
IAC valve
MAP sensor
THROTTLE BODY
TP sensor
AIR CLEANER OUTLET HOSE
IAT sensor
AIR CLEANER
FUEL INJECTOR
Camshaft and each piston position
Engine coolant temp.
Exhaust oxygen concentration
Pressure in intake manifold
Throttle valve opening
Intake air temp.
Fuel pump
Fuel pump relay
● Battery voltage
● Vehicle speed
● Engine start signal
● Diagnosis signal
● Test signal
● Electric load signal
ECM
Igniter
A/C compressor control relay (if equipped)
Malfunction indicator lamp
Radiator fan control relay
EVAP canister purge valve
Fuel injection control
Idle air control

ENGINE & EMISSION CONTROL INPUT/OUTPUT TABLE

INFORMATION SENSORS (input) / CONTROL DEVICE (output)	CMP sensor	MAP sensor	TP sensor	ECT sensor	IAT sensor	O2 sensor	VSS	Electric load signal	Starter switch	Battery voltage	Stop lamp switch	A/C switch	Diagnosis switch	Test switch
Fuel injector	○	○	○	○	○	○			○	○				
IAC valve	○	○	○	○	○		○	○			○			
Fuel pump relay	○								○					
Igniter	○	○		○	○			○						○
EVAP canister purge valve	○	○	○	○			○							○
MIL	○	○	○	○	○	○	○						○	
Radiator fan relay				○								○		
A/C compressor relay		○		○				○		○		○		

DIAGNOSIS

The engine and emission control system in this vehicle are controlled by ECM. ECM has an On-Board Diagnostic system which detects a malfunction in this system.
When diagnosing troubles, be sure to have full understanding of the outline of ON-BOARD DIAGNOSTIC SYSTEM and each item in PRECAUTION IN DIAGNOSING TROUBLE and execute diagnosis according to ENGINE DIAGNOSTIC FLOW TABLE in SECTION 6.

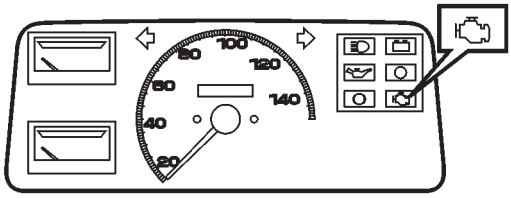

ON-BOARD DIAGNOSTIC SYSTEM

ECM performs on-board diagnosis (self-diagnosis) on the system and operates malfunction indicator lamp as follows.

- Malfunction indicator lamp lights when the ignition switch is turned ON (but the engine at stop) regardless of the condition of engine and emission control system. This is only to check the malfunction indicator lamp bulb and its circuit.
- If the areas monitored by ECM is free from any trouble after the engine start (while engine is running), malfunction indicator lamp turns OFF.
- When ECM detects a trouble which has occurred in the areas,it makes malfunction indicator lamp turn ON while the engine is running to warn the driver of such occurrence of trouble and at the same time it stores the exact trouble area in ECM back-up memory.

PRECAUTIONS IN DIAGNOSING TROUBLES

- Before identifying diagnostic trouble code, don't disconnect couplers from ECM, battery cable from battery, ECM ground wire harness from engine. Such disconnection will erase memorized trouble in ECM memory.
- Be sure to read PRECAUTIONS FOR ELECTRICAL CIRCUIT SERVICE in SECTION 0A before inspection and observe what is written there.
- ECM replacement
  When substituting a known-good ECM, check for following conditions. Neglecting this check may cause damage to known-good ECM.
  – Resistance value of all relays, actuators is as specified respectively.
  – TP sensor and MAP sensor are in good condition and none of power circuits of these sensors is shorted to ground.

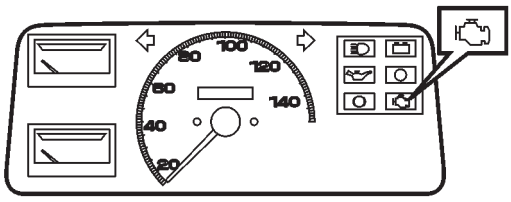

MALFUNCTION INDICATOR LAMP (MIL) CHECK

1) Turn ON ignition switch (but engine at stop) and check that malfunction indicator lamp lights up.
   If lamp does not light up, go to DIAGNOSTIC FLOW TABLE A-1 in this section.
   If lamp flashes, go to DIAGNOSTIC FLOW TABLE A-2 in this section.
2) Start engine and check that malfunction indicator lamp turns OFF.
   If lamp remains ON, go to DTC CHECK NOT USING SUZUKI SCAN TOOL in this section.

DIAGNOSTIC TROUBLE CODE (DTC) CHECK

[Using SUZUKI scan tool]

1) Check malfunction indicator lamp referring to MALFUNCTION INDICATOR LAMP (MIL) CHECK in this section.

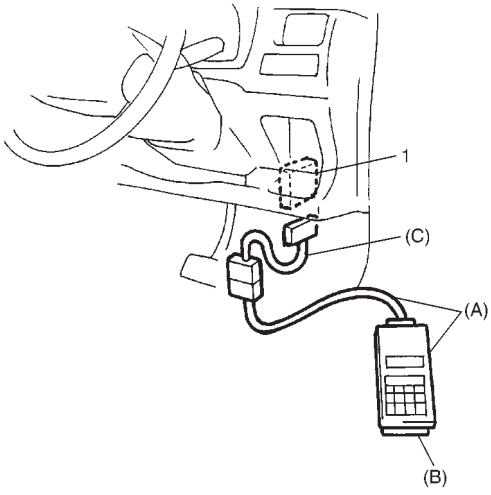

2) Turn ignition switch OFF.
3) After setting cartridge to SUZUKI scan tool, connect it to data link connector (DLC) (1) located on underside of instrument panel at driver's seat side.

   Special Tool
   (A): 09931-76011 (SUZUKI scan tool)
   (B): Mass storage cartridge
   (C): 09931-76030 (16/14-pin DLC adapter)
4) Turn ignition switch ON.
5) Read DTC according to instructions displayed on SUZUKI scan tool and print it or write it down. Refer to SUZUKI scan tool operator's manual for further details.
   If communication between SUZUKI scan tool and ECM is not possible, check if SUZUKI scan tool is communicable by connecting it to ECM in another vehicle. If communication is possible in this case, SUZUKI scan tool is in good condition. Then check data link connector and serial data line (circuit) in the vehicle with which communication was not possible.
6) After completing the check, turn ignition switch OFF and disconnect SUZUKI scan tool from data link connector (DLC).

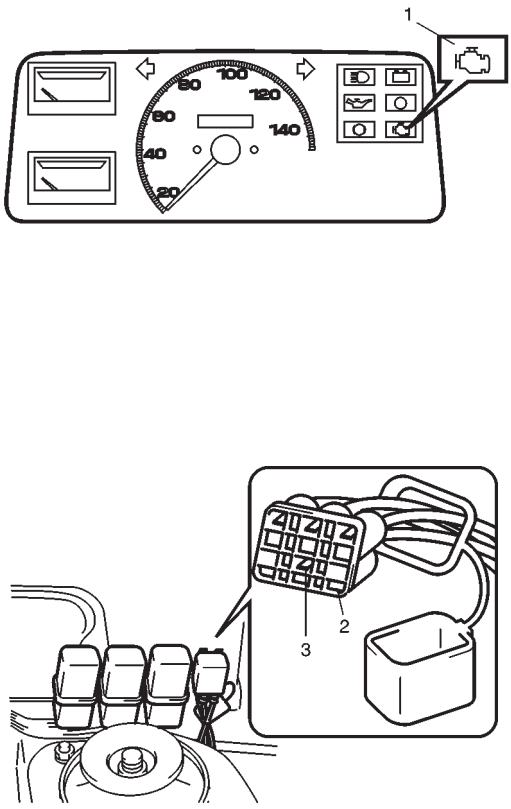

[Not using SUZUKI scan tool]

1) Check malfunction indicator lamp (1) referring to MALFUNCTION INDICATOR LAMP (MIL) CHECK in this section.
2) Using service wire, ground diagnosis switch terminal in monitor coupler (2).
3) Read DTC from flashing pattern of malfunction indicator lamp. Refer to DTC TABLE.
   If lamp remains ON, go to Table A-3 in this section.

   NOTE:
   - **If abnormality or malfunction lies in two or more areas, malfunction indicator lamp indicates applicable codes three times each.**
     And flashing of these codes is repeated as long as diagnosis terminal (3) is grounded and ignition switch is held at ON position.
   - **Take a note of diagnostic trouble code indicated first.**
4) After completing the check, turn ignition switch OFF and disconnect service wire from monitor connector.

EXAMPLE: When throttle position sensor is defective (Code No. 13)

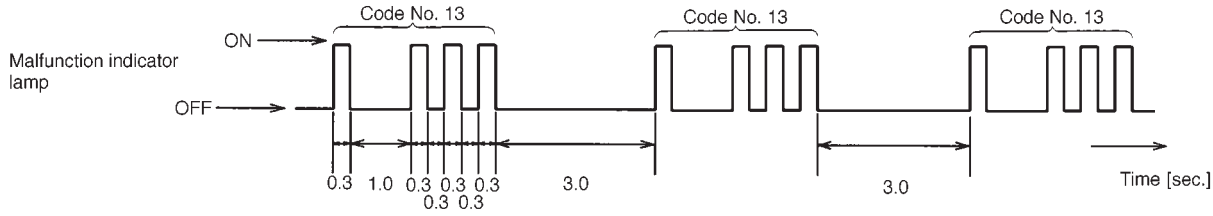

DIAGNOSTIC TROUBLE CODE (DTC) CLEARANCE

[Using SUZUKI scan tool]

1) Turn ignition switch OFF.
2) Connect SUZUKI scan tool to data link connector (DLC) in the same manner as when making this connection for DTC check.
3) Turn ignition switch ON.
4) Erase DTC according to instructions displayed on SUZUKI scan tool.
   Refer to SUZUKI scan tool operator's manual for further details.
5) After completing the clearance, turn ignition switch OFF and disconnect SUZUKI scan tool from data link connector (DLC).

[Not using SUZUKI scan tool]

1) Turn OFF ignition switch.
2) Disconnect battery negative cable for specified time below to erase diagnostic trouble code stored in ECM memory and re-connect it.
   Time required to erase DTC:

Ambient temperature	Time to cut power to ECM
Over 0°C (32°F)	30 sec. or longer
Under 0°C (32°F)	Not specifiable. Select a place with higher than 0°C (32°F) temperature.

DIAGNOSTIC TROUBLE CODE (DTC) TABLE

DIAGNOSTIC TROUBLE CODE NO.		MALFUNCTION INDICATOR LAMP FLASHING PATTERN	DIAGNOSTIC ITEM	DIAGNOSIS
SUZUKI SCAN TOOL	MIL			
P0105	11		Manifold absolute pressure sensor	Diagnose trouble according to DIAGNOSTIC FLOW TABLE corresponding to each code No.
P0120	13		Throttle position sensor	
P0130	14		Oxygen sensor	
P0340	15		Camshaft position sensor	
P0500	16		Vehicle speed sensor	
P0110	18		Intake air temperature sensor	
P0115	19		Engine coolant temperature sensor	
—	12	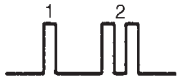	Normal	This code appears when none of the other codes (above codes) are identified.

A-1 MALFUNCTION INDICATOR LAMP CIRCUIT CHECK

(MALFUNCTION INDICATOR LAMP DOES NOT LIGHT AT IGNITION SWITCH ON.)

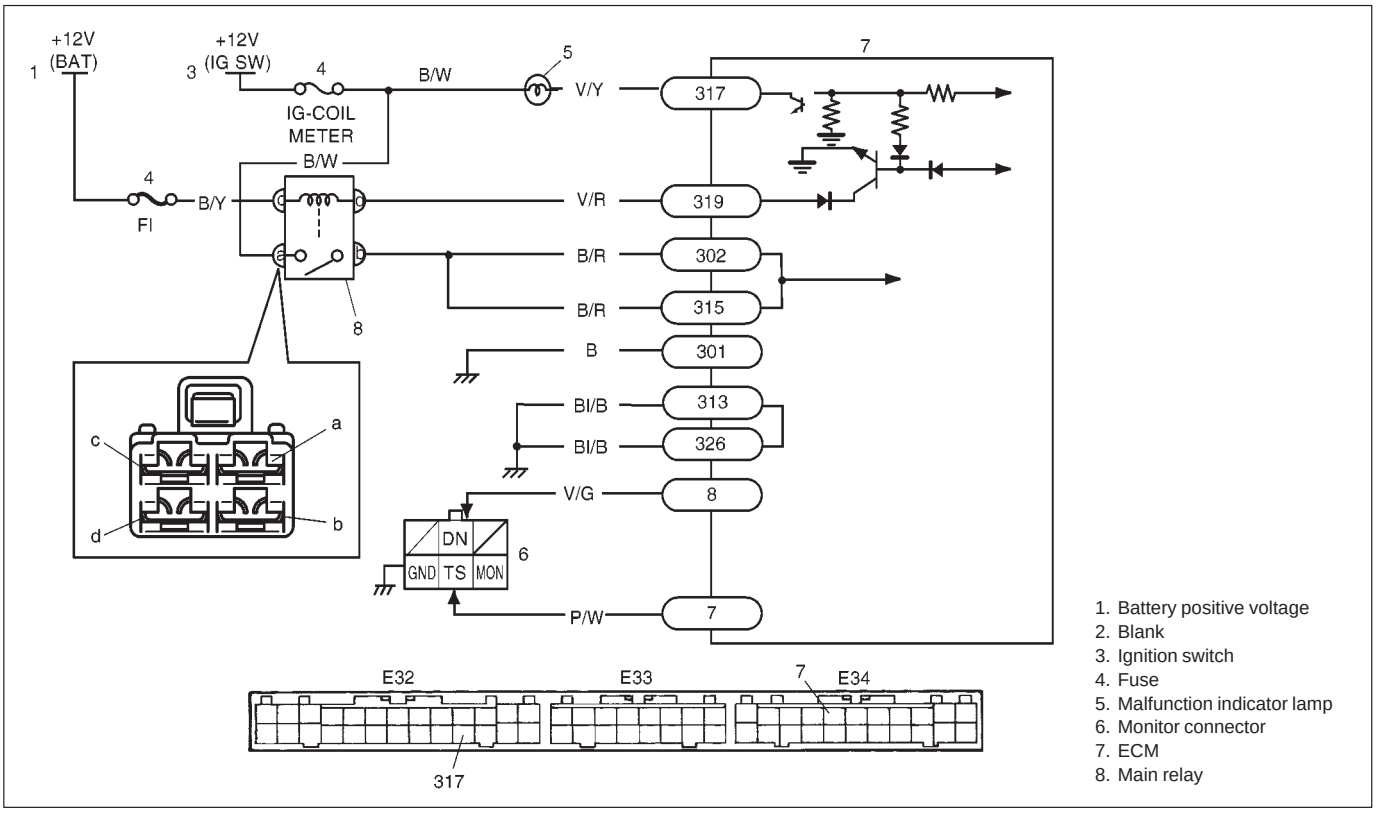

STEP	ACTION	YES	NO
1	Test switch terminal circuit check: 1) With the ignition switch ON position, check voltage between E34-7 terminal of ECM coupler and ground. Is voltage 4-5V?	Go to Step 2.	“P/W” wire (test switch terminal) shorted to ground circuit. If OK, substitute a known good ECM and recheck.
2	MIL bulb and circuit check: 1) Using service wire, ground E32-317 terminal of ECM coupler. Does MIL turn ON at ignition ON position?	Go to TABLE A-4.	MIL bulb burned out. “IG-COIL METER” fuse(s) blown. Ignition switch malfunction. “V/Y” wire open. “B/W” wire open.

Fig. for STEP 1

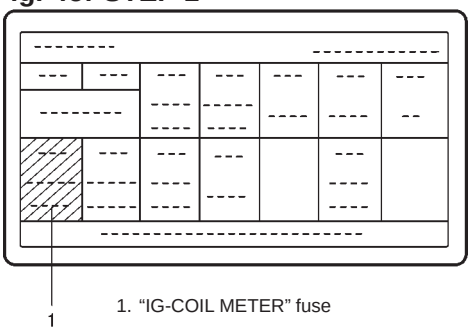

Fig. for STEP 2

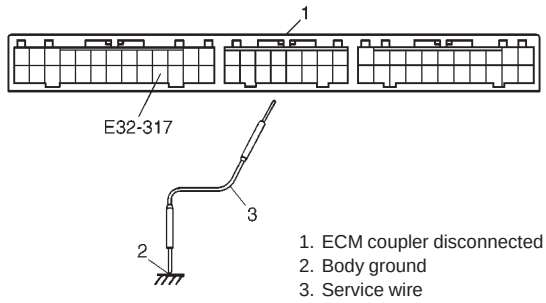

A-2 MALFUNCTION INDICATOR LAMP CIRCUIT CHECK

(MALFUNCTION INDICATOR LAMP FLASHES AT IGNITION SWITCH ON.)

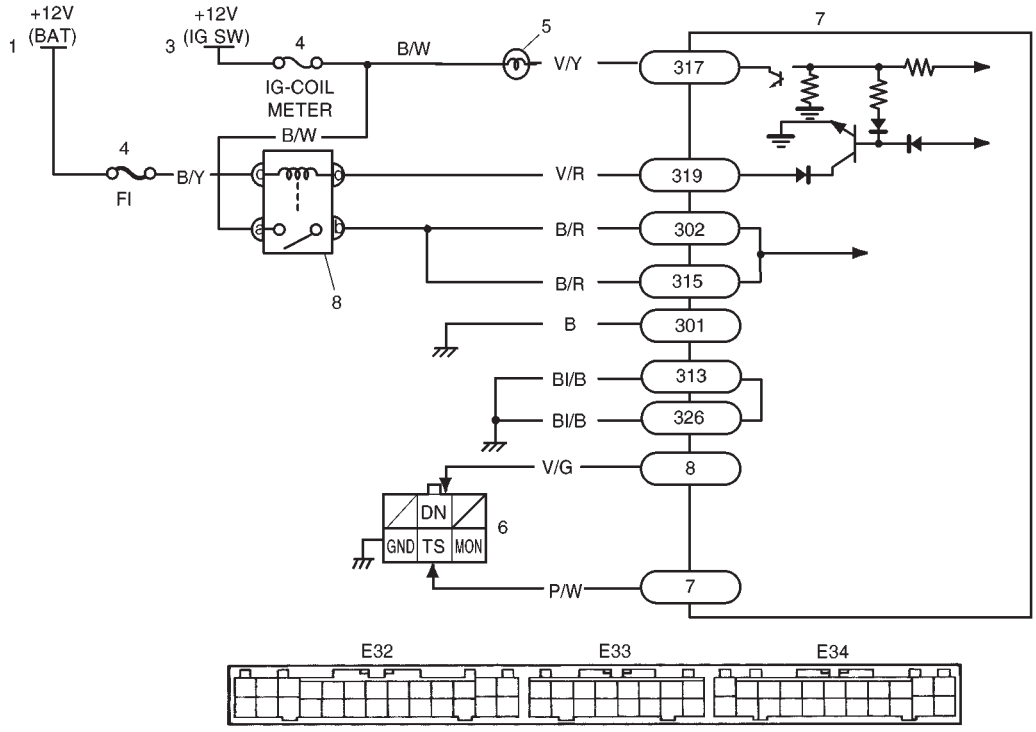

1. Battery positive voltage
2. Blank
3. Ignition switch
4. Fuse
5. Malfunction indicator lamp
6. Monitor connector
7. ECM
8. Main relay

STEP	ACTION	YES	NO
1	MIL Flashing Pattern Check 1) Turn ignition switch ON. Does lamp flashing pattern indicate diagnostic trouble code?	Go to Step 2.	Substitute a known-good ECM and recheck.
2	Diag. Switch Circuit Check Is diag. switch terminal connected to ground via service wire?	System is in good condition.	“V/G” circuit shorted to ground. If circuit is OK, substitute a known-good ECM and recheck.

A-3 MALFUNCTION INDICATOR LAMP CIRCUIT CHECK

(MALFUNCTION INDICATOR LAMP DOES NOT FLASH OR JUST REMAINS ON EVEN WITH GROUNDING DIAGNOSIS SWITCH TERMINAL.)

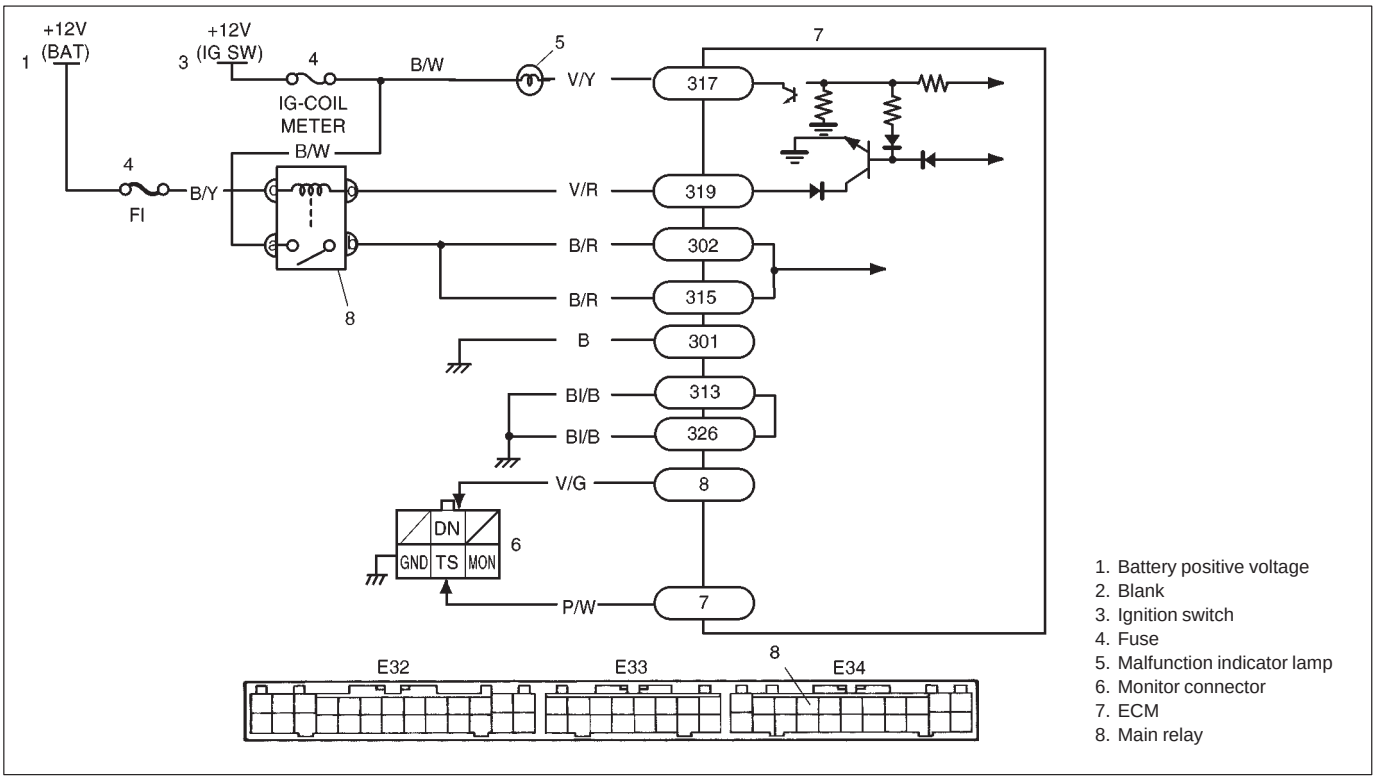

STEP	ACTION	YES	NO
1	MIL Circuit Check 1) Turn ignition switch OFF and disconnect connectors from ECM. Does MIL turn ON at ignition switch ON?	“V/Y” circuit shorted to ground.	Go to Step 2.
2	ECM Connection Check 1) Turn ignition switch OFF. Is connector (E34-8 connection) connected to ECM properly?	Go to Step 3.	Poor connector connection.
3	Diag. Switch Terminal Circuit Check 1) Connect connectors to ECM. 2) Using service wire, ground E34-8 terminal with connectors connected to ECM. 3) Turn ignition switch ON. Does MIL flash?	“V/G” or “Bl/B” circuit open.	Substitute a known-good ECM and recheck.

Fig. for STEP 3

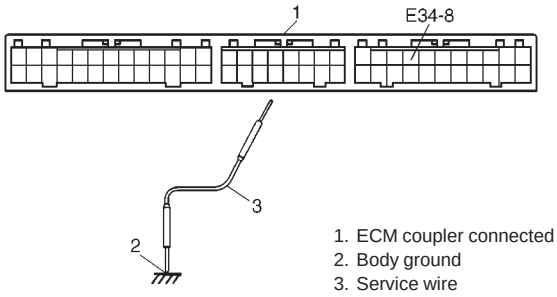

A-4 ECM POWER AND GROUND CIRCUIT CHECK (Page 1 of 2)

(MALFUNCTION INDICATOR LAMP DOES NOT LIGHT AT IGNITION SWITCH ON AND ENGINE DOES NOT START THOUGH IT IS CRANKED UP.)

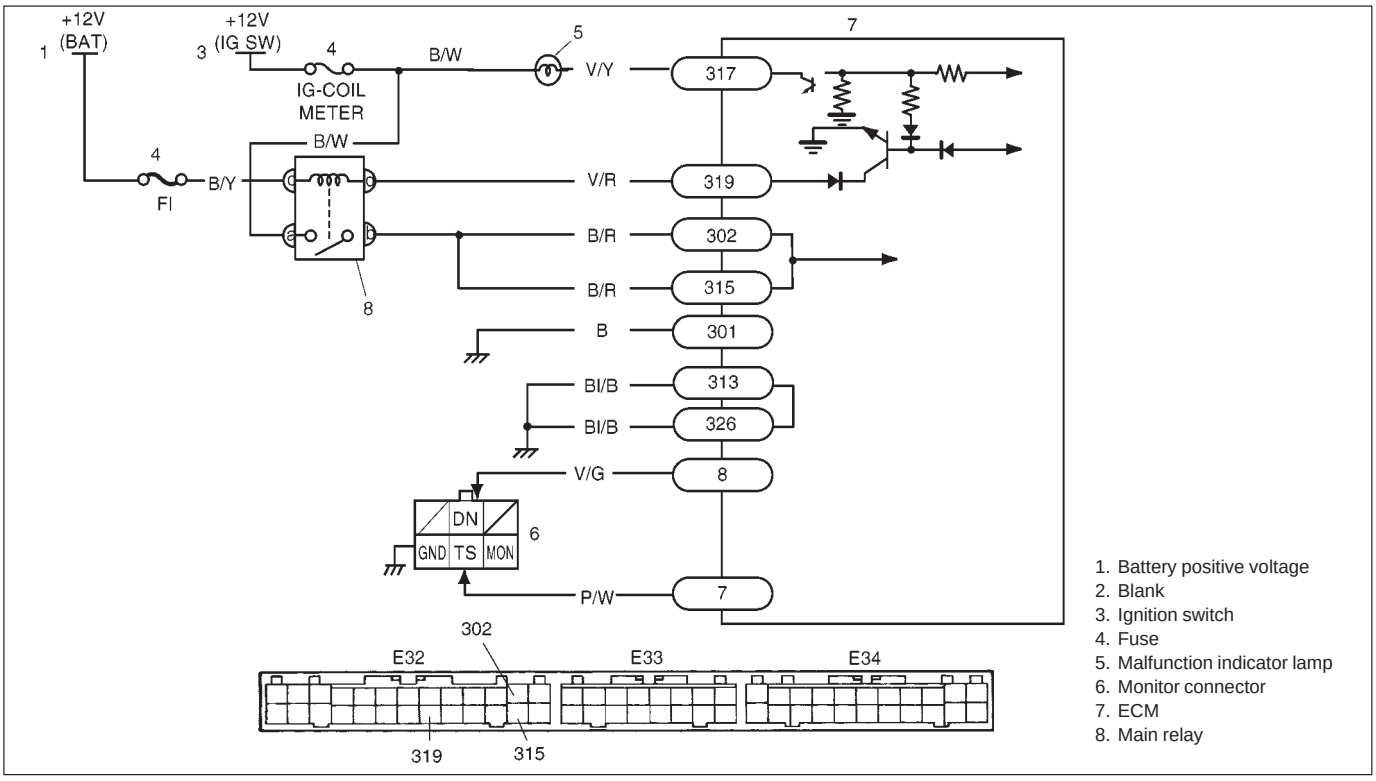

STEP	ACTION	YES	NO
1	Main Relay Operating Sound Check Is operating sound of main relay heard at ignition switch ON?	Go to Step 5.	Go to Step 2.
2	Fuse Check Is main “FI” fuse in good condition?	Go to Step 3.	Check for short in circuits connected to this fuse.
3	Main Relay Check 1) Turn OFF ignition switch and remove main relay. 2) Check for proper connection to main relay at terminal “a” and “b”. 3) If OK, check main relay for resistance and operation referring to MAIN RELAY INSPECTION in this section. Is check result satisfactory?	Go to Step 4.	Replace main relay.
4	ECM Power Circuit Check 1) Turn OFF ignition switch, disconnect connectors from ECM and install main relay. 2) Check for proper connection to ECM at terminals 302, 315 and 319 of E32. 3) If OK, then measure voltage between terminal E32-319 and ground with ignition switch ON. Is each voltage 10 – 14 V?	Go to Step 5.	“V/R” or “B/Y” circuit open.

A-4 ECM POWER AND GROUND CIRCUIT CHECK (Page 2 of 2)

STEP	ACTION	YES	NO
5	ECM Power Circuit Check 1) Using service wire, ground terminal E32-319 and measure voltage between terminal E32-302 (E32-315) and ground at ignition switch ON. Is it 10 – 14 V?	Check ground circuits “Bl/B” and “B” for open. If OK, then substitute a known-good ECM and re-check.	Go to Step 6.
6	Is operating sound of main relay heard in Step 1?	Go to Step 7.	“B/Y” or “B/R” wire open.
7	Main Relay Check 1) Check main relay according to procedure in Step 3. Is main relay in good condition?	“B/Y” or “B/R” wire open.	Replace main relay.

Fig. for STEP 2

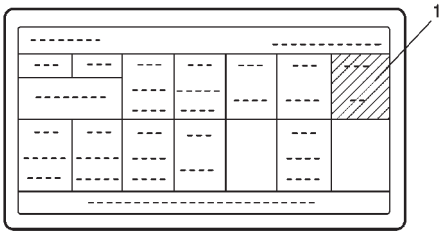

1. “FI” fuse

Fig. for STEP 3

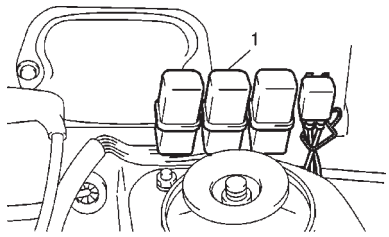

1. Main relay

Fig. for STEP 4

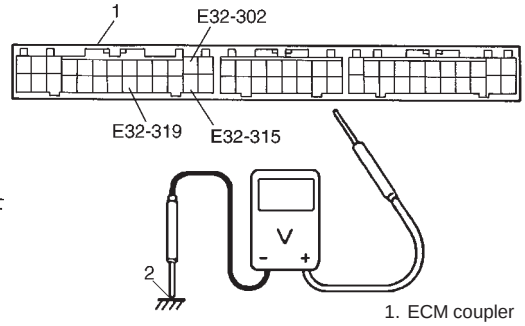

1. ECM coupler
2. Body ground

CODE NO.11 (P0105) MAP SENSOR CIRCUIT

(SIGNAL VOLTAGE LOW, HIGH OR PERFORMANCE PROBLEM)

NOTE:
When Code No.11 (P0105), 13 (P0120), 18 (P0110) and 19 (P0115) are indicated together, it is possible that "B/G" wire is open or "E34-22" terminal connections are poor.

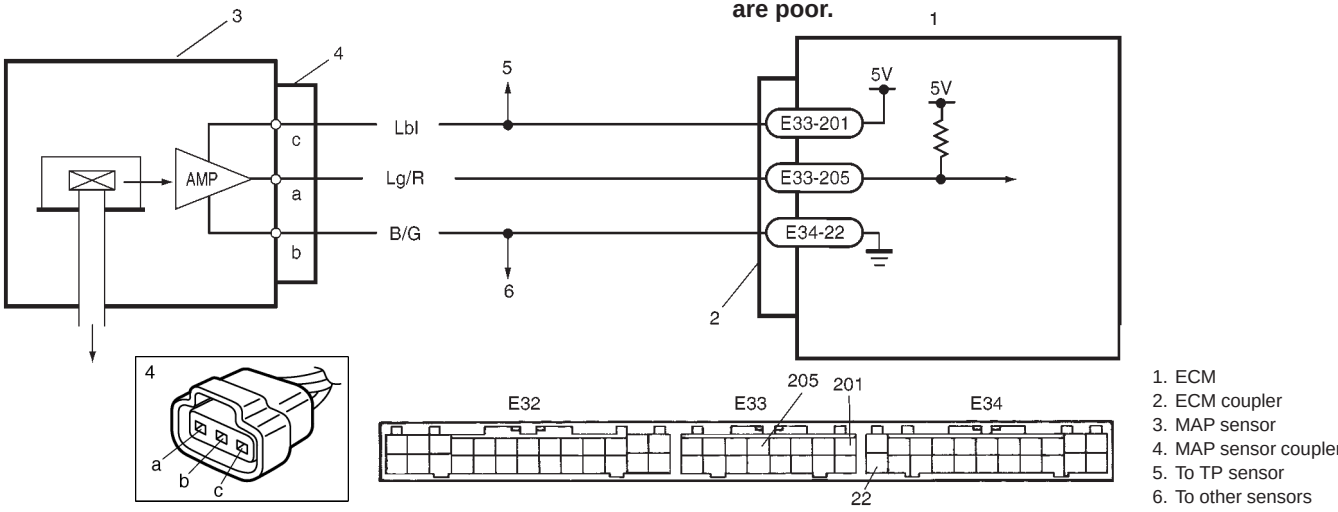

STEP	ACTION	YES	NO
1	1) Disconnect MAP sensor coupler with ignition switch OFF. 2) Check voltage between "c" wire terminal of MAP sensor coupler and ground with ignition switch ON. Is voltage about 4 – 5 V?	Go to Step 2.	● "Lbl" wire open or short. ● Poor "E33-201" connection. If wire and connection are OK, substitute a known-good ECM and recheck.
2	1) Check voltage between "a" wire terminal of MAP sensor coupler and ground with ignition switch ON. Is voltage about 4 – 5 V?	Go to Step 3.	● "Lg/R" wire open or short. ● Poor "E33-205" connection. If wire and connection are OK, substitute a known-good ECM and recheck.
3	1) Connect "a" and "b" wire terminals of MAP sensor coupler using service wire. 2) Check voltage between "Lg/R" wire terminal of MAP sensor coupler and ground. Is voltage about 0 V?	Go to Step 4.	● "B/G" wire open. ● Poor "E34-22" connection. If wire and connection are OK, substitute a known-good ECM and recheck.
4	1) Remove MAP sensor. 2) Visually inspect air pressure inlet passage of MAP sensor for clogging. Is there any blockage?	Clean air passage or replace as necessary.	Go to Step 5.
5	1) Perform MAP SENSOR INSPECTION in this section. Is MAP sensor in good condition?	Poor connection of MAP sensor coupler terminals. If connection is OK, substitute a known-good ECM and recheck.	Faulty MAP sensor.

Fig. for STEP 1

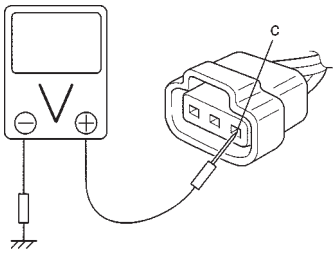

Fig. for STEP 2

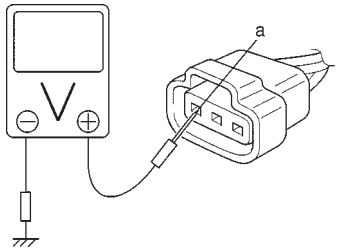

Fig. for STEP 3

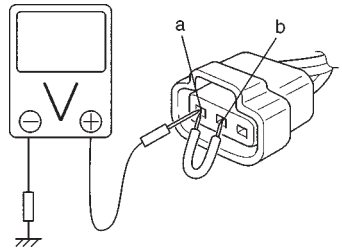

NOTE:

Upon completion of inspection and repair work, perform DTC Confirmation Procedure, referring to page 6E1-30 to confirm that the trouble has been corrected.

CODE NO.13 (P0120) TP SENSOR CIRCUIT

(SIGNAL VOLTAGE HIGH OR LOW)

NOTE:
When Code No.11 (P0105), 13 (P0120), 18 (P0110) and 19 (P0115) are indicated together, it is possible that "B/G" wire is open or "E34-22" terminal connection are poor.

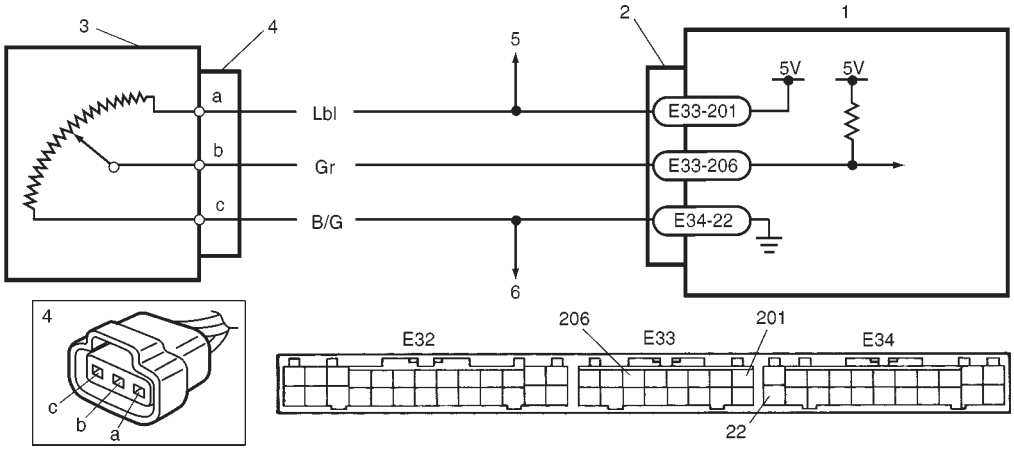

1. ECM
2. ECM coupler
3. TP sensor
4. TP sensor coupler
5. To MAP sensor
6. To other sensors

STEP	ACTION	YES	NO
1	1) Disconnect TP sensor coupler with ignition switch OFF. 2) Check voltage between "a" wire terminal of TP sensor coupler and ground with ignition switch ON. Is voltage about 4 – 5 V?	Go to Step 2.	● "Lbl" wire open or short. ● Poor "E33-201" connection. If wire and connection are OK, substitute a known-good ECM and recheck.
2	1) Check voltage between "b" wire terminal of TP sensor coupler and ground with ignition switch ON. Is voltage about 4 – 5 V?	Go to Step 3.	● "Gr" wire open or short. ● Poor "E33-206" connection. If wire and connection are OK, substitute a known-good ECM and recheck.
3	1) Connect "b" and "c" wire terminal of TP sensor coupler using service wire. 2) Check voltage between "b" wire terminal of TP sensor coupler and ground with ignition switch ON. Is voltage about 0 V?	Go to Step 4.	● "B/G" wire open. ● Poor "E34-22" connection. If wire and connection are OK, substitute a known-good ECM and recheck.
4	1) Perform TP SENSOR INSPECTION in this section. Is TP sensor in good condition?	Poor connection of TP sensor coupler terminals. If connection is OK, substitute a known-good ECM and recheck.	Faulty TP sensor.

Fig. for STEP 1

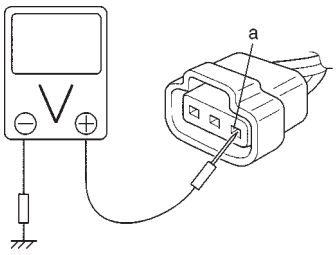

Fig. for STEP 2

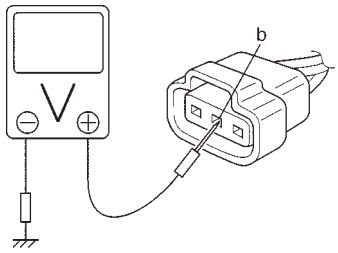

Fig. for STEP 3

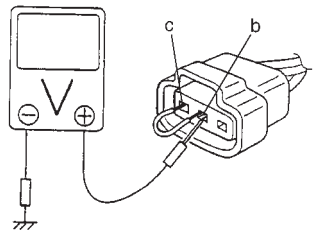

NOTE:

Upon completion of inspection and repair work, perform DTC Confirmation Procedure, referring to page 6E1-30 to confirm that the trouble has been corrected.

CODE NO.14 (P0130) OXYGEN SENSOR CIRCUIT

(SIGNAL VOLTAGE DOESN'T CHANGE)

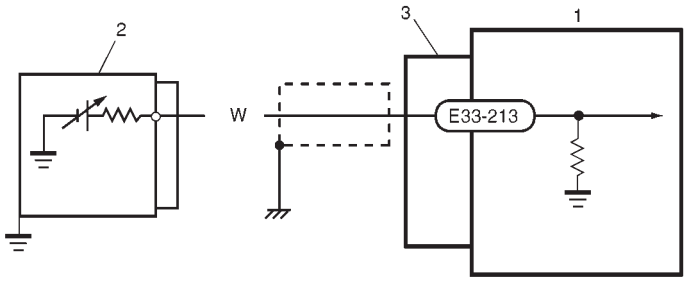

NOTE:

- **Before diagnosing trouble according to flow table given below, check to make sure that following system and parts other than Electronic Fuel Injection system are in good condition.**
  - **Air cleaner (clogged)**
  - **Vacuum leaks (air inhaling)**
  - **Spark plugs (contamination, gap)**
  - **High-tension cords (crack, deterioration)**
  - **Ignition timing**
  - **Engine compression**
  - **Any other system and parts which might affect A/F mixture or combustion.**
- **If code No.14 (P0130) and another code No. are indicated together, the latter has priority. Therefore, check and correct what is represented by that code No. first and then proceed to the following check.**
- **Be sure to use a voltmeter with high impedance (MΩ/V minimum) or digital type voltmeter for accurate measurement.**

1. ECM
2. Oxygen sensor
3. Coupler

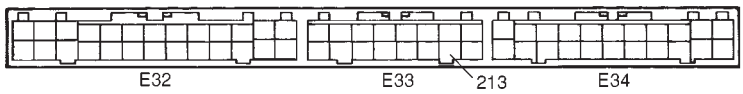

STEP	ACTION	YES	NO
1	1) Warm up engine to normal operating temperature. 2) Connect voltmeter between E33-213 terminal of ECM coupler and body ground. 3) Maintain engine speed at 2000 rpm and after 60 seconds, check voltmeter. Does the voltage deflect between above and below 0.45 V repeatedly?	Oxygen sensor and its circuit (closed loop system, A/F ratio feed back system) are in good condition. Intermittent trouble or faulty ECM. Recheck, referring to INTERMITTENT AND POOR CONNECTION in SECTION 0A.	Go to Step 2.
2	Does the voltage remain unchanged at 0.45 V above?	"W" circuit shorted to power circuit or rich A/F mixture. If circuit is OK, check MAP sensor, ECT sensor, fuel pressure, injectors and their circuit. If all above are OK, check ECM and its circuit.	Go to Step 3.
3	1) Maintain engine speed at 2000 rpm for 60 seconds. 2) Check voltmeter while repeating racing engine. Does it indicate 0.45 V or more even once?	Poor E33-213 connection or lean A/F mixture. If connection is OK, check MAP sensor, ECT sensor, fuel pressure, injectors and their circuit. If all above are OK, check ECM and its circuit.	"W" circuit open/short or oxygen sensor malfunction. If wire and connection are OK, replace oxygen sensor and recheck.

Fig. for STEP 1

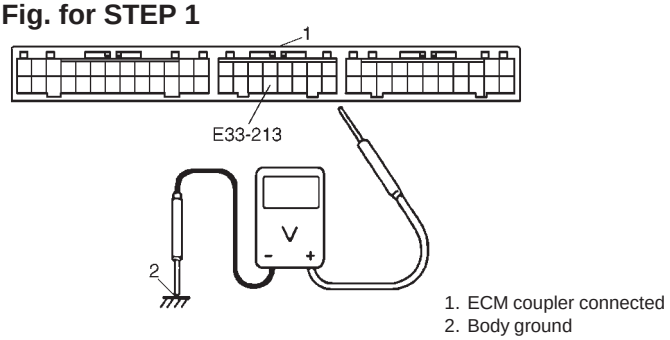

NOTE:

Upon completion of inspection and repair work, perform DTC Confirmation Procedure, referring to page 6E1-30 to confirm that the trouble has been corrected.

CODE NO.15 (P0340) CMP SENSOR CIRCUIT

(SENSOR SIGNAL NOT INPUTTED FOR 2 SECONDS AT ENGINE CRANKING)

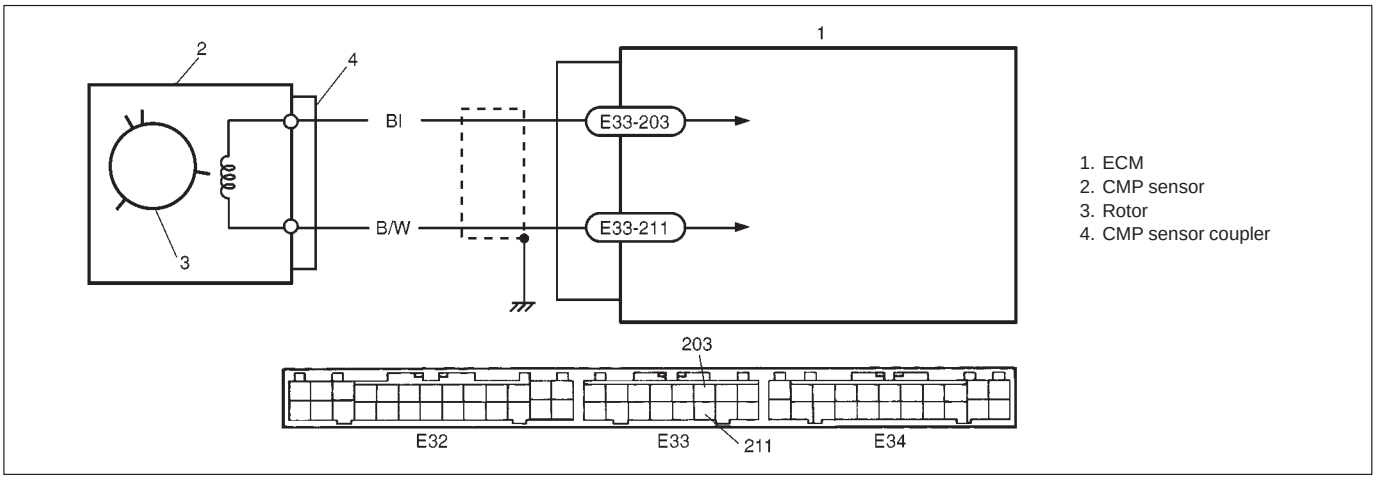

NOTE:

If starter circuit is open (i.e., start signal circuit is OK but starter fails to run), this DTC is stored in memory at starter switch ON, even through CMP sensor is in good condition.

When starter motor fails to run and this DTC appears, check starter circuit first.

STEP	ACTION	YES	NO
1	1) Disconnect couplers from ECM. 2) Measure resistance between “E33-203” and “E33-211” terminals of ECM coupler. CMP sensor resistance: 185 – 275 Ω at –10 – 50 °C (14 – 122 °F) 3) Measure resistance between “E33-203” terminal of ECM coupler and ground. Insulation resistance: 1 MΩ or more Were measured resistance values in above 2) and 3) as specified?	Go to Step 2.	● “Bl” wire open or short. ● “B/W” wire open or short. ● Poor terminal connection of CMP sensor coupler. If wire and connection are OK, replace CMP sensor.
2	1) Check CMP sensor referring to Section 6F. Is it in good condition?	● Poor “E33-203” or “E33-211” terminal connection of ECM coupler. If connection is OK, substitute a known-good ECM and recheck.	Faulty CMP sensor.

Fig. for STEP 1

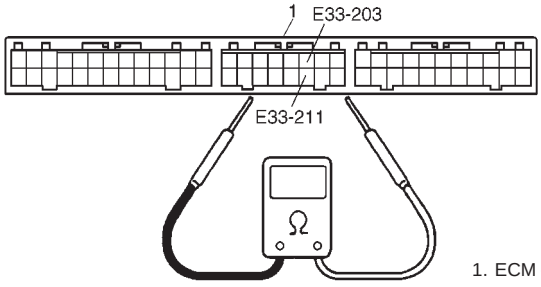

1. ECM coupler disconnected

NOTE:

Upon completion of inspection and repair work, perform DTC Confirmation Procedure, referring to page 6E1-30 to confirm that the trouble has been corrected.

CODE NO.16 (P0500) VSS CIRCUIT

(VSS SIGNAL NOT INPUTTED ALTHOUGH FUEL IS KEPT CUT AT LOWER THAN 4000 R/MIN. FOR LONGER THAN 4 SECONDS)

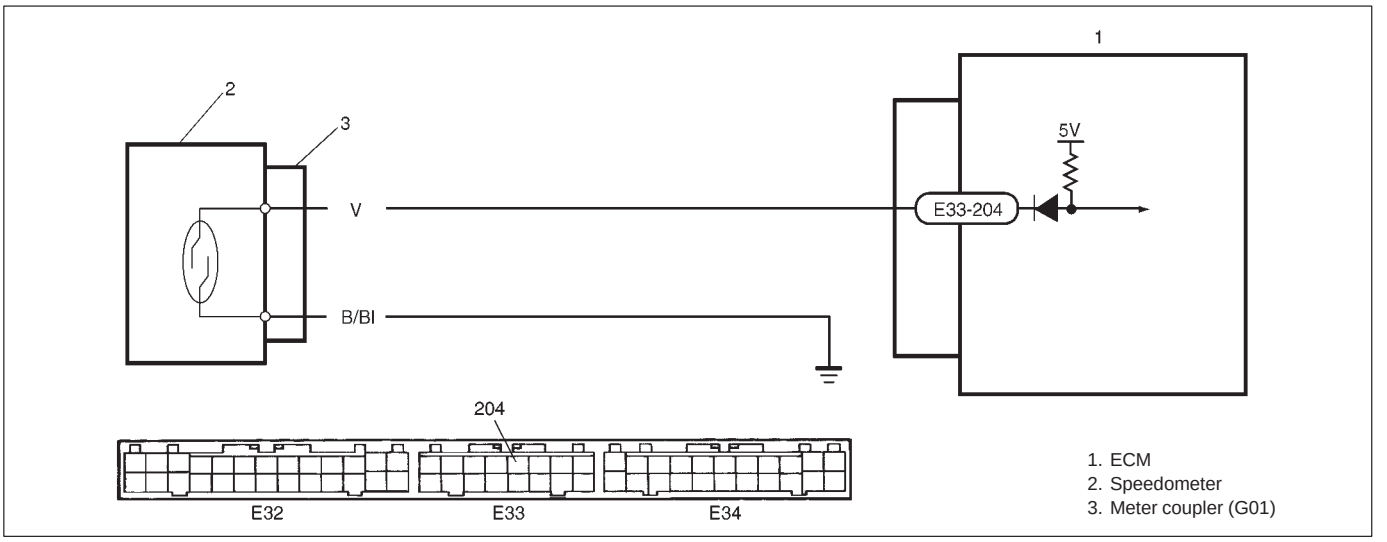

STEP	ACTION	YES	NO
1	Does speedometer indicate vehicle speed?	● "V" wire open. ● Poor "E33–204" connection. If OK, substitute a known-good ECM and recheck.	Broken speed meter cable. If if it OK, go to Step 2.
2	1) Disconnect ECM coupler with ignition switch at OFF position. 2) Connect ohmmeter between E33-204 terminal of ECM coupler and body ground. 3) Hoist front end of car and lock front right tire. 4) Turn front left tire slowly. Does ohmmeter indicator deflect between 0 and ∞ a few times while tire is turned one revolution?	Poor E33-204 connection. If connection is OK, intermittent trouble or faulty ECM. Recheck referring to INTERMITTENT TROUBLE.	Go to Step 3.
3	1) Remove combination meter. 2) Check speed sensor referring to VEHICLE SPEED SENSOR (VSS) INSPECTION under ON-VEHICLE SERVICE. Is it good condition?	Faulty speedometer.	"V" wire open, "B/Bl" wire open, poor coupler-to-meter connection or poor "B/Bl" wire ground. If OK, substitute a known-good ECM and recheck.

NOTE:

Upon completion of inspection and repair work, perform DTC Confirmation Procedure, referring to page 6E1-30 to confirm that the trouble has been corrected.

CODE NO.18 (P0110) IAT SENSOR CIRCUIT

(SIGNAL VOLTAGE HIGH OR LOW)

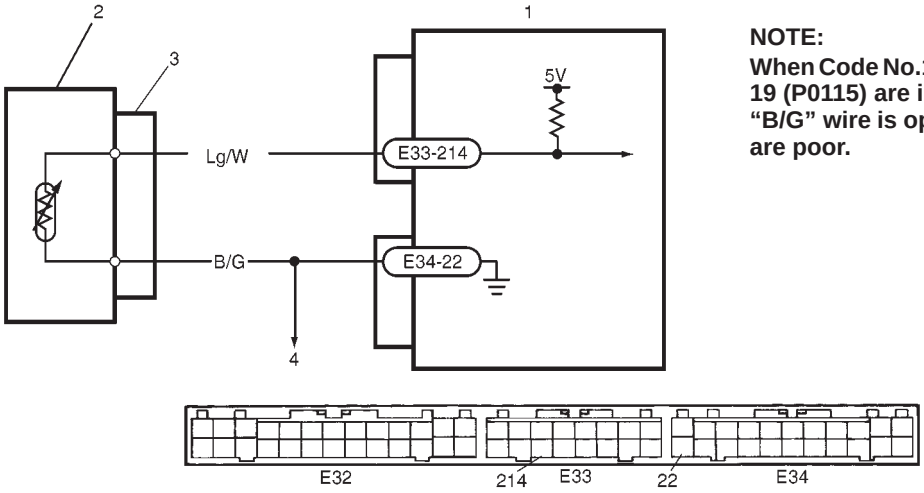

NOTE:
When Code No.11 (P0105), 13 (P0120), 18 (P0110) and 19 (P0115) are indicated together, it is possible that "B/G" wire is open or "C52-9" terminal connections are poor.

1. ECM
2. IAT sensor
3. IAT sensor coupler
4. To other sensors

STEP	ACTION	YES	NO
1	1) Disconnect IAT sensor coupler with ignition switch OFF. 2) Check voltage between "Lg/W" wire terminal of IAT sensor coupler and ground with ignition switch ON. Is voltage about 4 – 5 V?	Go to Step 2.	● "Lg/W" wire open or short. ● Poor "E33-214" connection.
2	1) Connect IAT sensor coupler terminals using service wire. 2) Check voltage between "Lg/W" wire terminal of IAT sensor coupler and ground with ignition switch ON. Is voltage 0.15 V or less?	Go to Step 3.	"B/G" wire open or poor "E34-22" connection. If wire and connection are OK, substitute a known-good ECM and recheck.
3	1) Perform IAT SENSOR INSPECTION in this section. Is IAT sensor in good condition?	Poor connection of IAT sensor coupler terminals. If connection is OK, substitute a known-good ECM and recheck.	Faulty IAT sensor.

Fig. for STEP 1

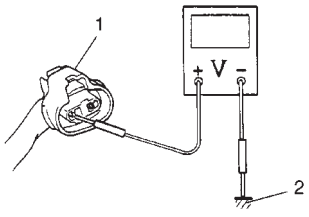

1. IAT sensor coupler disconnected
2. Engine ground

Fig. for STEP 2

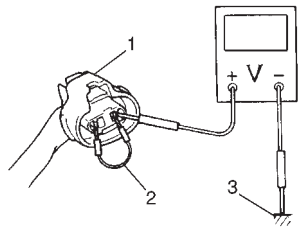

1. IAT sensor coupler disconnected
2. Service wire
3. Engine ground

NOTE:
Upon completion of inspection and repair work, perform DTC Confirmation Procedure, referring to page 6E1-30 to confirm that the trouble has been corrected.

CODE NO.19 (P0115) ECT SENSOR CIRCUIT

(SIGNAL VOLTAGE HIGH OR LOW)

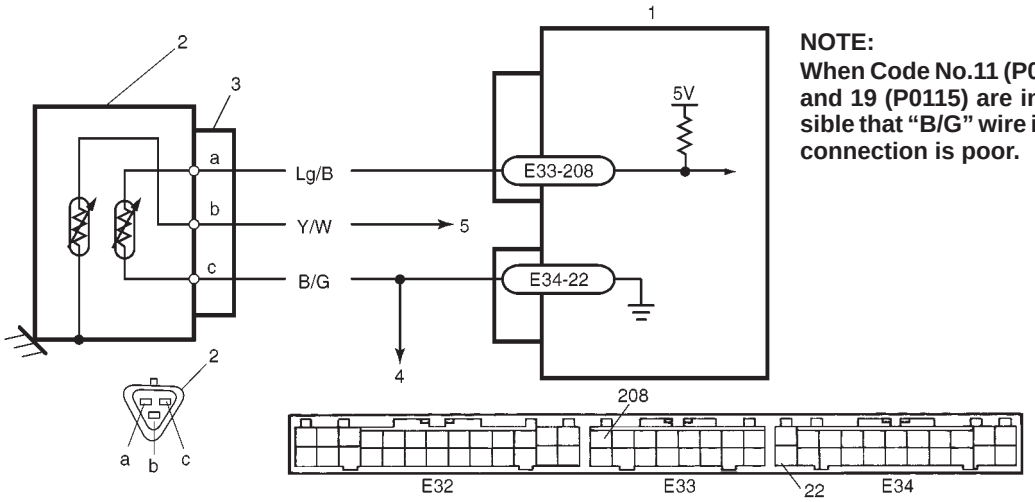

NOTE:
When Code No.11 (P0105), 13 (P0120), 18 (P0110) and 19 (P0115) are indicated together, it is possible that "B/G" wire is open or "E34-22" terminal connection is poor.

1. ECM
2. ECT sensor
3. ECT sensor coupler
4. To other sensors
5. To combination meter

STEP	ACTION	YES	NO
1	1) Disconnect ECT sensor coupler with ignition switch OFF. 2) Check voltage between "Lg/B" wire terminal of ECT sensor coupler and ground with ignition switch ON. Is voltage about 4 – 5 V?	Go to Step 2.	● "Lg/W" wire open or short. ● Poor "C52-8" connection.
2	1) Connect ECT sensor couple terminals using service wire. 2) Check voltage between "Lg/B" wire terminal of ECT sensor coupler and ground with ignition switch ON. Is voltage 0.15 V or less?	Go to Step 3.	"B/G" wire open or poor "C51-22" connection. If wire and connection are OK, substitute a known-good ECM and recheck.
3	1) Perform ECT SENSOR INSPECTION in this section. Is ECT sensor in good condition?	Poor connection of ECT sensor coupler terminals. If connection is OK, substitute a known-good ECM and recheck.	Faulty ECT sensor.

Fig. for STEP 1

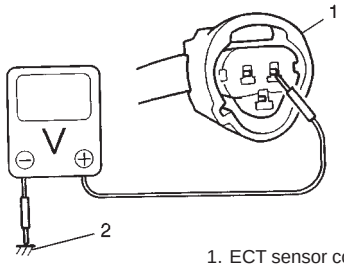

1. ECT sensor coupler disconnected
2. Engine ground

Fig. for STEP 2

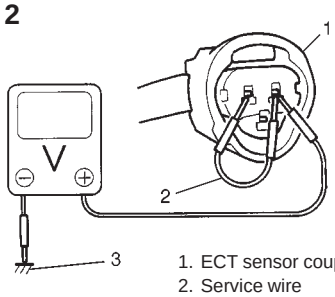

1. ECT sensor coupler disconnected
2. Service wire
3. Engine ground

NOTE:
Upon completion of inspection and repair work, perform DTC Confirmation Procedure, referring to page 6E1-30 to confirm that the trouble has been corrected.

DIAGNOSTIC TROUBLE CODE (DTC) CONFIRMATION PROCEDURE

WARNING:
- **When performing a road test, select a safe place where there is not traffic or possibility of a traffic accident and be very careful during testing to avoid occurrence of an accident.**
- **Road test should be carried out with 2 persons, a driver and a tester, on a level road.**

1) Clear DTC stored in ECM memory referring to DTC CLEARANCE in this section.
2) Perform DTC confirmation test under the following conditions.
3) Check DTC referring to DTC CHECK in this section.

Test Condition for Code No. 13 (P0120), 18 (P0110), 19 (P0115)

Turn ignition switch ON.

Test Condition for Code No. 15 (P0340)

Crank engine for 3 sec.

Driving Test Condition for Code No. 16 (P0500)

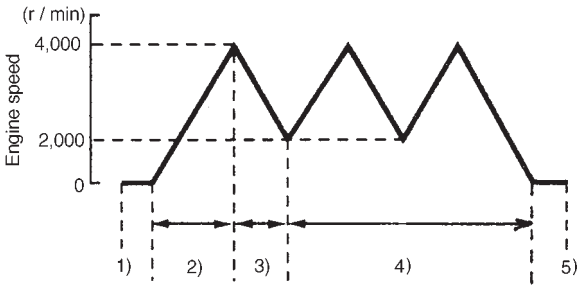

1) Start engine and warm up engine to normal operating temperature.
2) Increase engine speed to 4,000 r/min. in 3rd gear.
3) Release accelerator pedal and with engine brake applied, keep vehicle coasting for 5 to 8 seconds till engine speed reaches 2,000 r/min.
4) Repeat above steps 2) and 3) 3 times or more.
5) Stop vehicle.

Driving Test Condition for Code No. 14 (P0130)

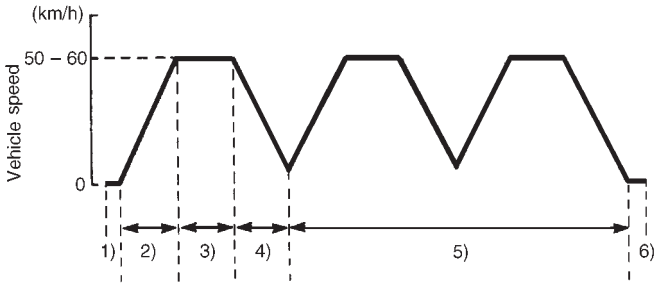

1) Start engine and warm up engine to normal operating temperature.
2) Increase vehicle speed to 31 to 37 mile/h (50 – 60 km/h) in 5th gear.
3) Keep driving at above vehicle speed for 25 to 30 seconds.
4) Release accelerator pedal and with engine brake applied, decrease vehicle speed to about 18 mile/h (30 km/h).
5) Repeat above steps 2) to 4) 3 times or more.
6) Stop vehicle.

NOTE:
If the above driving test can not be performed, check oxygen sensor for voltage referring to Step 1 and 2 of Code No. 14 (P0130) Diag. Flow Table and confirm that oxygen sensor and its circuit (Closed Loop System) are in good condition.

Test Condition for Code No. 11 (P0105)

1) Start engine.
2) Maintain engine speed at 2000RPM for 5 seconds.

B-1 FUEL PUMP AND ITS CIRCUIT CHECK

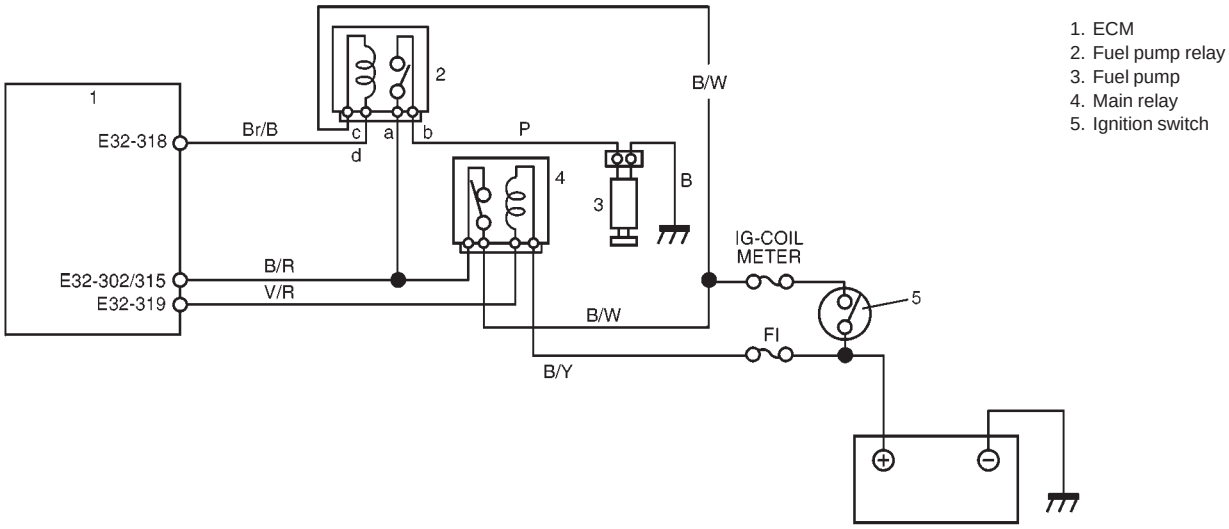

STEP	ACTION	YES	NO
1	Is fuel pump heard to operate 2 seconds after ignition switch ON?	Fuel pump and its circuit are in good condition.	Go to Step 2.
2	1) Remove fuel pump relay from relay box with ignition switch OFF. 2) Connect two terminals (a and b) of relay connector as shown in figure using service wire. Is fuel pump heard to operate with ignition switch ON?	Go to Step 3.	“B/R” or “P” wire open, poor fuel pump relay-to-coupler connection or faulty fuel pump.
3	1) Check fuel pump relay, referring to p.6E1-68. Is it in good condition?	Poor fuel pump relay-to-coupler connection, “Br/B”, “B/W” wire open or poor E32-318 connection. If wire and connection are OK, substitute a known-good ECM and recheck.	Faulty fuel pump relay.

Fig. for STEP 2

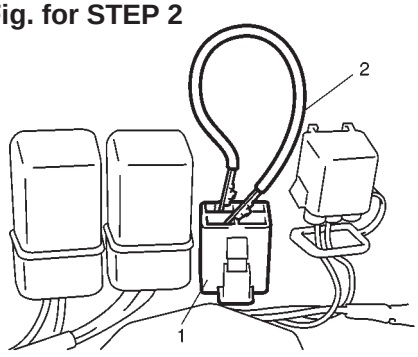

1. Fuel pump relay coupler
2. Service wire

B-2 FUEL INJECTOR AND ITS CIRCUIT CHECK

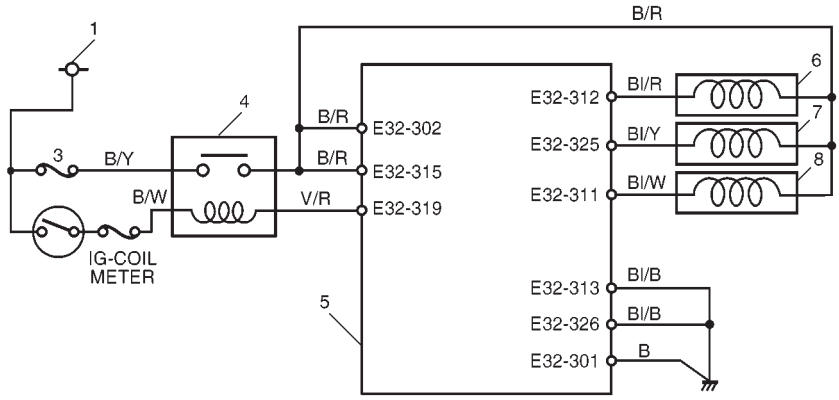

1. Battery positive voltage
2. Blank
3. "FI" fuse in fuse/relay box
4. Main relay
5. ECM
6. No.1 injector
7. No.2 injector
8. No.3 injector

STEP	ACTION	YES	NO
1	Check each injector for operating sound at engine cranking using sound scope. Do all 3 injector make operating sound?	Fuel injector circuit is in good condition.	Go to Step 2.
2	Does none of 3 injectors make operating sound at Step 1?	Go to Step 4.	Go to Step 3.
3	Check fuel injector(s) referring to p. 6E1-58. Is it in good condition?	Check coupler connection and wire harness of injector not making operating sound.	Faulty fuel injector(s).
4	Check power circuit of injectors for open and short. Is it in normal condition?	Check all 3 injectors for resistance respectively. If resistance is OK, substitute a known-good ECM and recheck.	Power circuit open or short.

Blank

B-3 FUEL PRESSURE CHECK (Page 1 of 2)

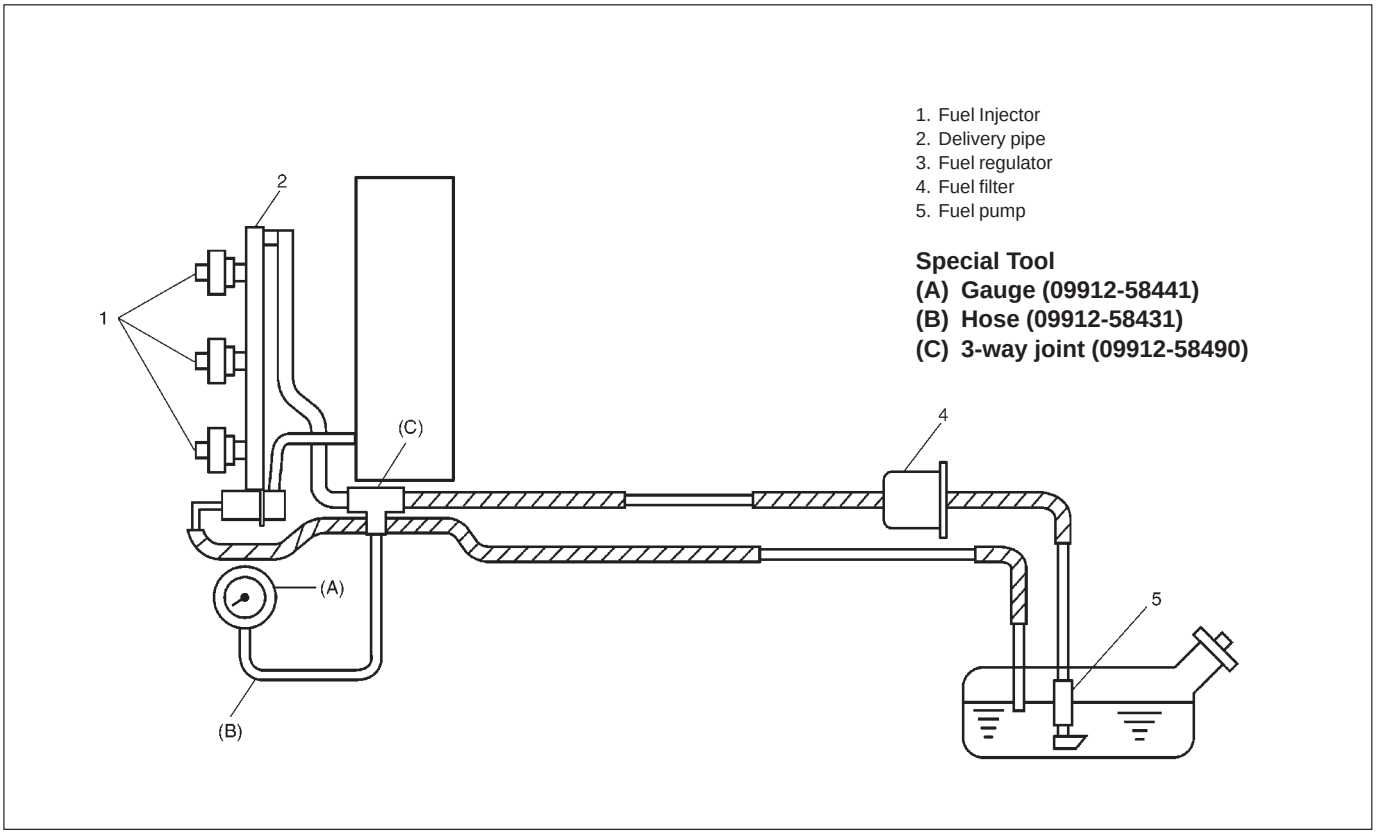

STEP	ACTION	YES	NO
1	1) Release fuel pressure from fuel feed line. 2) Install fuel pressure gauge. 3) Check fuel pressure by repeating ignition switch ON and OFF. Is fuel pressure then 270 – 310 kPa (2.7 – 3.1 kg/cm^2, 38.4 – 44.0 psi)?	Go to Step 2.	Go to Step 5.
2	Is 200 kPa (2.0 kg/cm^2, 28.4 psi) or higher fuel pressure retained for 1 minute after fuel pump is stopped at step 1?	Go to Step 3.	Go to Step 4.
3	1) Start engine and warm it up to normal operating temperature. 2) Keep it running at specified idle speed. Is fuel pressure then within 200 – 240 kPa (2.0 – 2.4 kg/cm^2, 28.4 – 34.1 psi)?	Normal fuel pressure.	Clogged vacuum passage for fuel pressure regulator or faulty fuel pressure regulator.
4	Is there fuel leakage from fuel feed line hose, pipe or their joint?	Fuel leakage from hose, pipe or joint.	Go to Step 10.
5	Was fuel pressure higher than spec. in step 1?	Go to Step 6.	Go to Step 7.
6	1) Disconnect fuel return hose from fuel pressure regulator and connect new return hose to it. 2) Put the other end of new return hose into approved gasoline container. 3) Operate fuel pump. Is specified fuel pressure obtained then?	Restricted fuel return hose or pipe.	Faulty fuel pressure regulator.

B-3 FUEL PRESSURE CHECK (Page 2 of 2)

STEP	ACTION	YES	NO
7	Was no fuel pressure applied in step 1?	Go to Step 8.	Go to Step 9.
8	With fuel pump operated and fuel return hose blocked by pinching it, is fuel pressure applied?	Faulty fuel pressure regulator.	Shortage of fuel or fuel pump or its circuit malfunction.
9	1) Operate fuel pump. 2) With fuel return hose blocked by pinching it, check fuel pressure. Is it 450 kPa (4.5 kg/cm^2, 63.9 psi) or more?	Faulty fuel pressure regulator.	Clogged fuel filter, restricted fuel feed hose or pipe, Faulty fuel pump or fuel leakage from hose connection in fuel tank.
10	1) Disconnect fuel return hose from pressure regulator and connect new return hose to it. 2) Insert the other end of new return hose into approved gasoline container. 3) Check again if specified pressure is obtained. While doing so, does fuel come out of return hose?	Faulty fuel pressure regulator.	Fuel leakage from injector, Fuel leakage from between injector and delivery pipe, Faulty fuel pump (faulty check valve in fuel pump) or Fuel leakage from fuel pressure regulator diaphragm.

Fig. for STEP 1

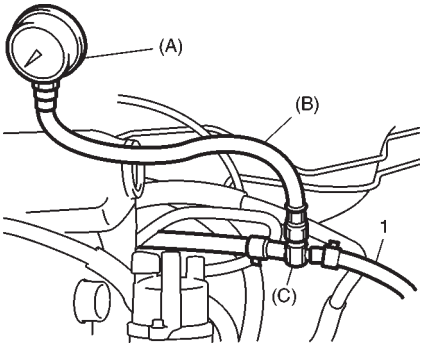

1. Fuel feed hose

Special Tool
(A) Gauge
(B) Hose
(C) 3-way joint

B-4 IDLE AIR CONTROL SYSTEM CHECK (Page 1 of 2)

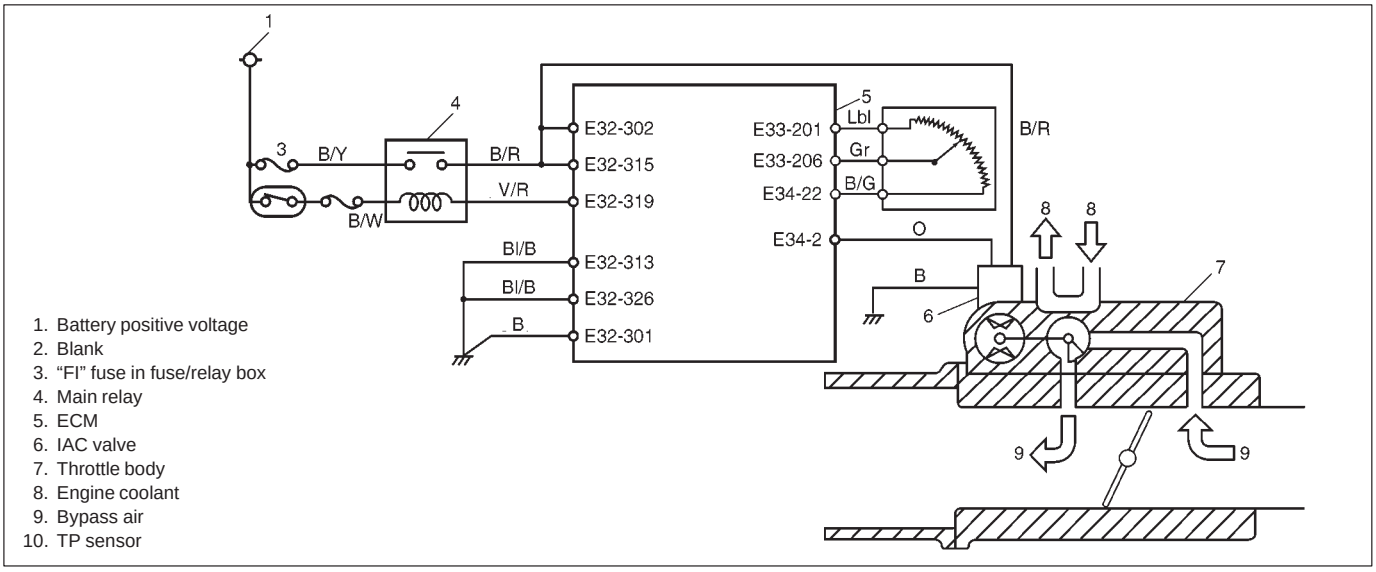

STEP	ACTION	YES	NO
1	IAC valve function check: 1) Check IAC valve referring to IAC VALVE INSPECTION in this section. Is check result in good condition?	Go to Step 2.	Go to Step 5.
2	Closed throttle position check: 1) Connect SUZUKI scan tool to DLC. 2) With the ignition switch ON position, check “CLOSED THROT POS” in parameter data list. Throttle valve fully close : ON Throttle valve slight open : OFF Is each check result as specified?	Check for following: EVAP canister purge valve Accessory engine load PCV system Idle air passage A/C signal	Go to Step 3.
3	Closed throttle position recheck: 1) With the ignition switch OFF position disconnect negative battery cable for 30 seconds and connect it. 2) Recheck closed throttle position referring to Step 2. Is each check result as specified?	Recheck engine idle speed.	Go to Step 4.
4	TP sensor signal voltage check: 1) With the ignition switch ON position, check voltage between E33-206 and ground. Throttle valve fully close: 0.78 – 0.83V Is each check result as specified?	Substitute a known good ECM and recheck.	Check TP sensor referring TP SENSOR INSPECTION in this section.
5	IAC valve circuit check: 1) Check “O”, “B/R” and “B” wire for open and short. Are they in good condition?	Go to Step 6.	Repair or replace.
6	IAC valve substitution: 1) Substitute a known good IAC valve. 2) Check IAC valve referring to IAC VALVE INSPECTION in this section. Is check result in good condition?	IAC valve malfunction.	Substitute a known good ECM and recheck.

B-5 EVAPORATIVE EMISSION CONTROL SYSTEM CHECK

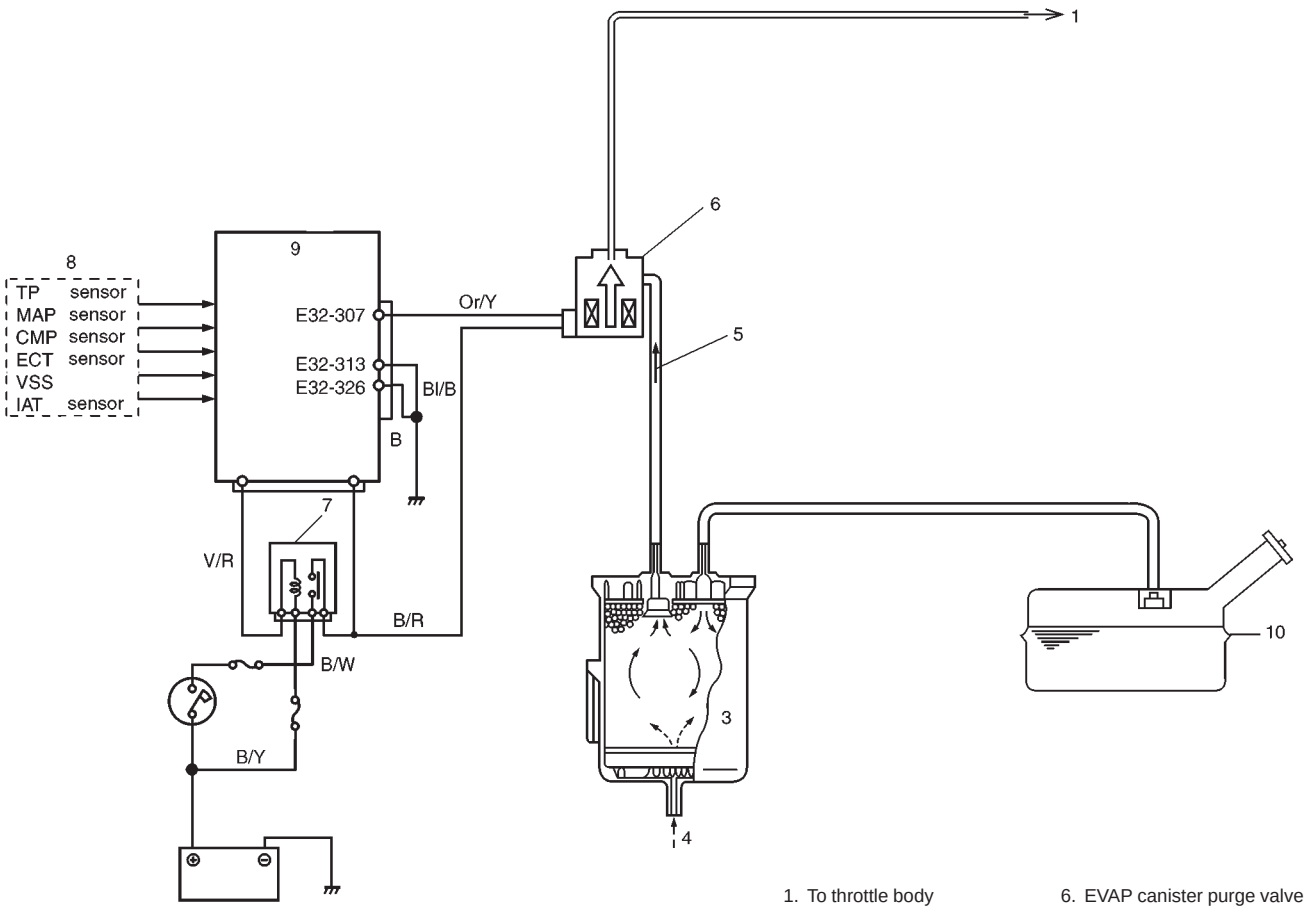

1. To throttle body
2. To fuel tank
3. EVAP canister
4. Air
5. Air and vapor
6. EVAP canister purge valve
7. Main relay
8. Sensed information
9. ECM
10. Fuel tank

STEP	ACTION	YES	NO
1	Check canister purge system for operation referring to p.6E1-73. Is it in good condition?	Check EVAP canister referring to p.6E1-76 and fuel filler cap referring to Section 6C. If OK, system is in good condition.	Go to Step 2.
2	Check vacuum passage, hoses and EVAP canister purge valve referring to p.6E1-74. Are they in good condition?	● “O/Y” wire open, ● “O/Y” wire shorted to ground, ● Poor EVAP canister purge valve coupler connection, ● Poor “E32-307” connection, ● Poor performance of ECT sensor or MAP sensor or TP sensor If none of the above exists, substitute a known-good ECM and recheck.	● Vacuum passage clogged, ● Vacuum leakage or ● Faulty EVAP canister purge valve

B-6 ENGINE START SIGNAL CHECK

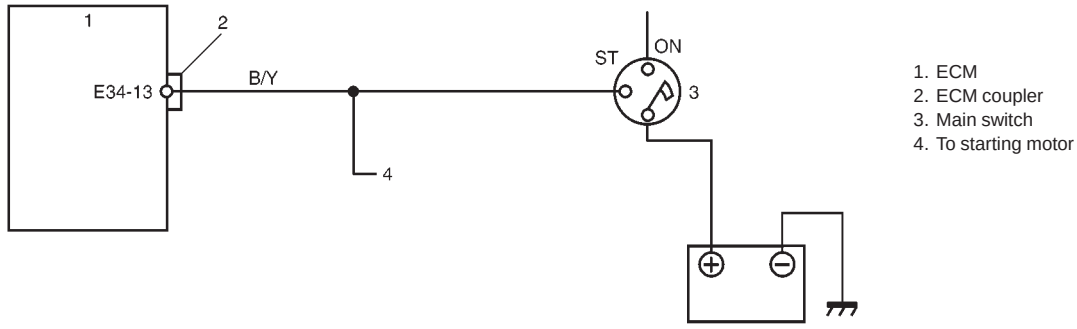

STEP	ACTION	YES	NO
1	1) With ignition switch OFF, disconnect couplers from ECM. 2) Is 6 – 12 V voltage applied to E34-13 terminal of coupler only when cranking engine.	Engine starter signal circuit is in good condition.	● “B/Y” wire open or ● Poor “E34-13” connection

Fig. for STEP 1

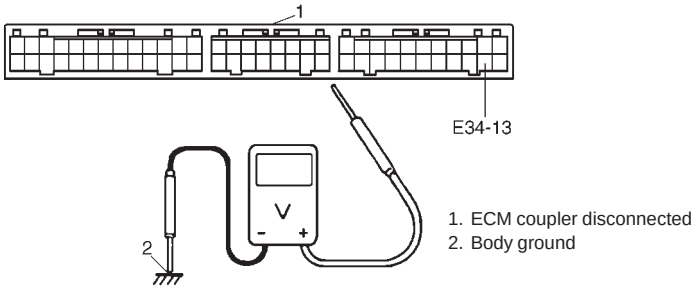

B-7 RADIATOR FAN CONTROL SYSTEM CHECK

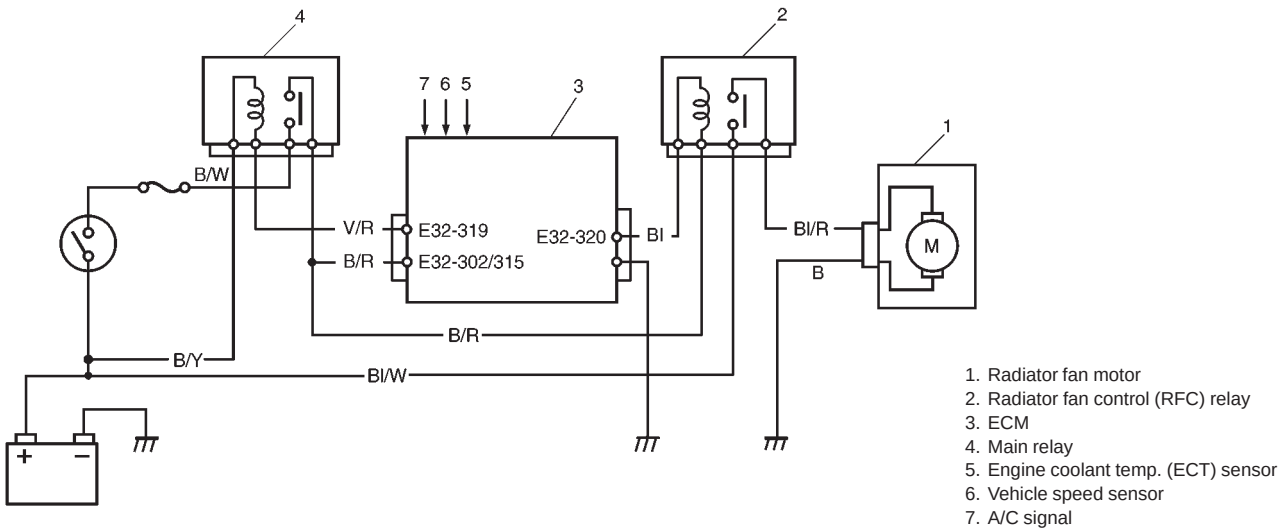

STEP	ACTION	YES	NO
1	Check radiator fan control system referring to p. 6E1-71. Is it in good condition?	RFC system is in good condition.	Go to Step 2.
2	Check RFC relay referring to p. 6E1-71. Is it in good condition?	Go to Step 3.	Faulty RFC relay.
3	Check wire harnesses and connections for open or short. Are they in good condition?	Poor performance of ECT sensor. If ECT sensor is OK, substitute a known-good ECM and recheck.	● Wire open or short ● Poor connection or ● Faulty radiator fan motor

B-8 A/C CONTROL SIGNAL CHECK (IF EQUIPPED)

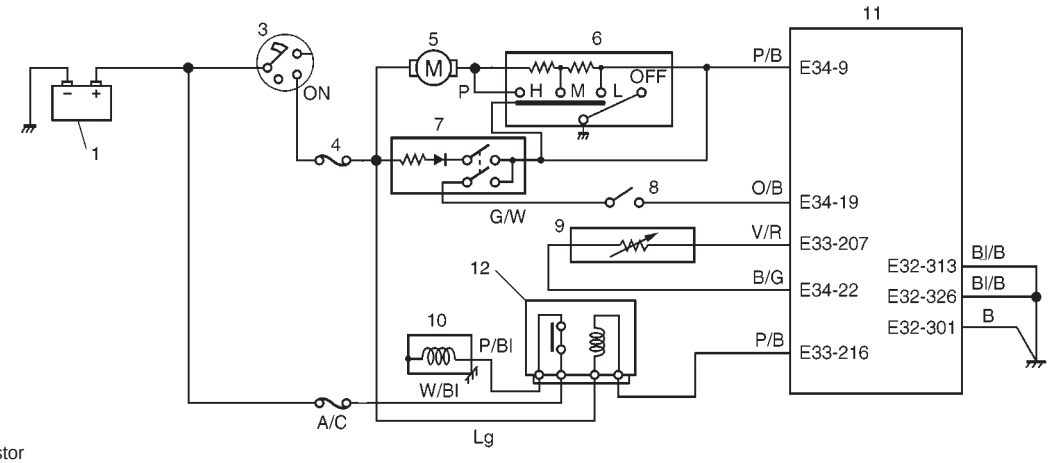

1. Battery
2. Main fuse box
3. Ignition switch
4. “HEATER” fuse
5. Blower fan motor
6. Blower fan switch
7. A/C switch
8. Dual pressure switch
9. A/C evaporator thermistor
10. A/C compressor
11. ECM
12. A/C compressor control relay

STEP	ACTION	YES	NO
1	1) Check voltage at “E34-19” terminal under each condition given in table below. Ignition switch ON, A/C switch OFF, Blower fan switch OFF: 10 – 14 V Ignition switch ON, A/C switch ON, Blower fan switch ON: 2 V or less 2) Is check result satisfactory?	A/C control signal is in good condition.	● “G/B” wire open or short ● Poor “E34-19” terminal connection If wire and connection are OK, check dual pressure switch and A/C switch referring to Section 1B.

Fig. for STEP 1

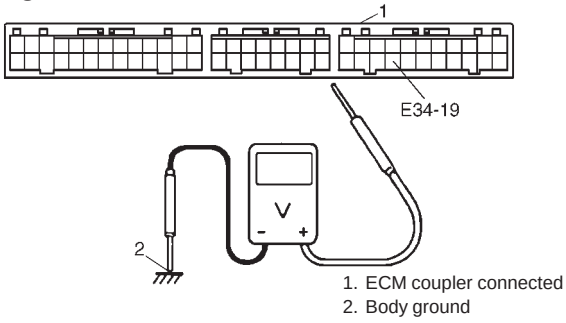

1. ECM coupler connected
2. Body ground

B-9 ELECTRIC LOAD SIGNAL CIRCUITS CHECK

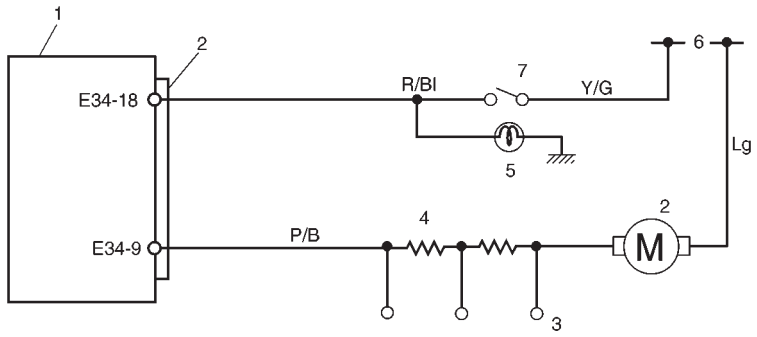

1. Ignition switch
2. Blower fan motor
3. Blower fan switch
4. Heater blower register
5. Clearance light
6. From battery
7. Clearance light switch

STEP	ACTION	YES	NO
1	Check voltage at E34-18 terminal under each condition given below. Small light turned OFF : 0 V Small light turned ON : 10 – 14 V Is check result satisfactory?	Go to Step 2.	● “Br/R” wire open or short ● Poor “E34-18” terminal connection
2	Check voltage at E34-9 terminal under each condition given below. Ignition switch ON and heater blower fan turned OFF : 10 – 14 V Ignition switch ON and heater blower fan turned ON : 2 V or less Is check result satisfactory?	Electric load signal circuit are in good condition.	● “P/B” wire open or short ● Poor “E34-9” terminal connection

Fig. for STEP 1 and 2

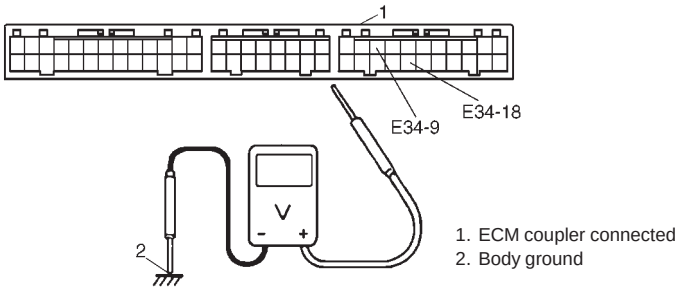

1. ECM coupler connected
2. Body ground

B-10 FUEL CUT OPERATION CHECK

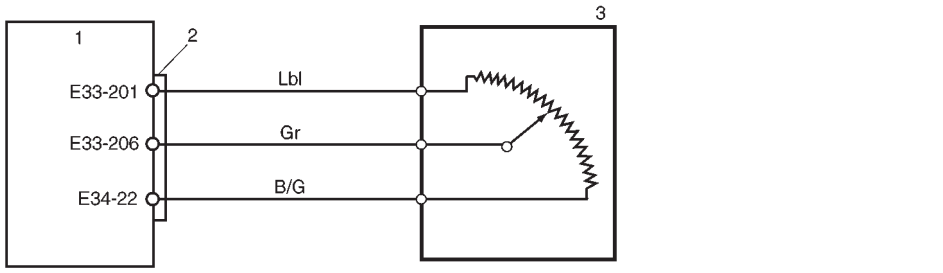

STEP	ACTION	YES	NO
1	Check fuel cut operation referring FUEL CUT OPERATION INSPECTION in this section. Does fuel injector operate as specified?	Fuel cut operation is in good condition.	Go to step 2.
2	Closed throttle position check: 1) Connect Tech-1 to DLC. 2) With the ignition switch ON position, check “CLOSED THROT POS” in parameter data list. Throttle valve fully close : ON Throttle valve slight open : OFF Is each check result as specified?	Substitute a known good ECM and recheck.	Go to step 3.
3	Closed throttle position recheck: 1) With the ignition switch OFF position disconnect negative battery cable for 30 seconds and connect it. 2) Recheck closed throttle position referring to Step 2. Is each check result as specified?	Recheck fuel cut operation.	Go to step 4.
4	TP sensor signal voltage check: 1) With the ignition switch at ON position, check voltage between E33-206 and ground. Throttle valve fully close: 0.78 – 0.83V Throttle valve fully open: 3.7 – 4.7V Is each check result as specified?	Substitute a known good ECM and recheck fuel cut operation.	Check TP sensor referring to TP SENSOR INSPECTION in this section.

INSPECTION OF ECM AND ITS CIRCUITS

ECM and its circuits can be checked at ECM wiring couplers by measuring voltage and resistance.

CAUTION:
ECM cannot be checked by itself. It is strictly prohibited to connect voltmeter or ohmmeter to ECM with couplers disconnected from it.

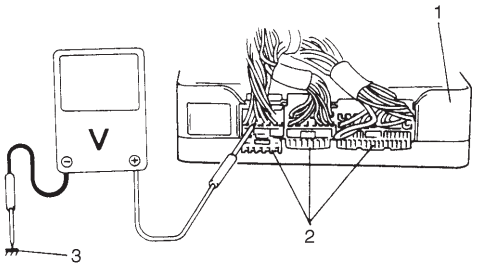

1. ECM
2. Couplers
3. Body ground

VOLTAGE CHECK

1) Remove ECM from body with ignition switch OFF referring to ECM REMOVAL.
2) Connect ECM couplers to ECM.
3) Check voltage at each terminal of couplers connected.

NOTE:
As each terminal voltage is affected by the battery voltage, confirm that it is 11V or more when ignition switch is ON.

TERMINAL ARRANGEMENT OF ECM COUPLER (VIEWED FROM HARNESS SIDE)

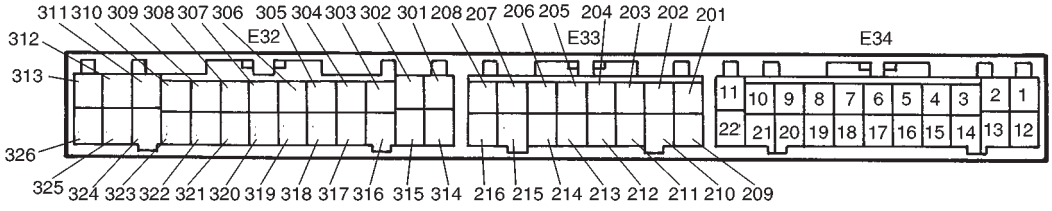

TERMINAL	CIRCUIT	NORMAL VOLTAGE	CONDITION
E34-1	Blank	—	—
E34-2	IAC valve	—	—
E34-3	Blank	—	—
E34-4	Blank	—	—
E34-5	Blank	—	—
E34-6	Blank	10 – 14 V	Ignition switch ON, selector lever: “L” range
E34-7	Test switch terminal	4.5 – 5.5 V	Ignition switch ON
		1 V or less	Ignition switch ON, Test switch terminal grounded
E34-8	Diagnosis switch terminal	4.5 – 5.5 V	Ignition switch ON
		1 V or less	Ignition switch ON, Test switch terminal grounded
E34-9	Electric load signal for blower fan motor	2 V or less	Ignition switch ON, Blower fan switch : High or Middle position
		4.0 – 14.0 V	Ignition switch ON, Blower fan switch : OFF or Low position
E34-10	Stop lamp switch (brake pedal switch)	1.5V or less	Brake pedal released (switch OFF), Ignition switch ON
		10 – 14 V	Brake pedal depressed (switch ON), Ignition switch ON
E34-11	Blank	—	—
E34-12	Data link connector	10 – 14 V	Ignition switch ON
E34-13	Engine starter switch (engine starter signal)	1.5V or less	Ignition switch ON
		6 – 12 V	While engine cranking
E34-14	Blank	10 – 14 V	Ignition switch ON, selector lever: “L” range
E34-15	Blank	—	—
E34-16	Blank	—	—
E34-17	Duty output terminal	1 V or less	Ignition switch ON
E34-18	Electric load signal for small light switch	1 V or less	Ignition switch ON and Small light turned OFF
		10 – 14 V	Ignition switch ON and Small light turned ON
E34-19	A/C ON signal from A/C switch (if equipped)	10 – 14 V	Ignition switch ON, A/C switch OFF, Blower fan switch OFF
		2 V or less	Ignition switch ON, A/C switch ON, Blower fan switch ON
E34-20	Blank	—	—
E34-21	Blank	—	—
E34-22	Sensor ground	—	—

TERMINAL	CIRCUIT	NORMAL VOLTAGE	CONDITION
E33-201	Power supply for sensor	4.5 – 5.5 V	Ignition switch ON
E33-202	Blank	—	—
E33-203	CMP sensor (+)	1 V or less	Ignition switch ON
E33-204	VSS	Indicator deflection repeated between 0 – 1 V and 4 – 14 V	Ignition switch ON, Front left tire turned quickly with front right tire locked
E33-205	MAP sensor	About 3.6 V	Ignition switch ON, engine stop
		About 1 – 3 V	Engine running at idle speed, A/C OFF
E33-206	TP sensor	0.78 – 0.83 V	Throttle valve at idle position
		3.7 – 4.7 V	Throttle valve at full open position
E33-207	A/C evaporator temp. sensor (with A/C)	2.0 – 2.5 V	A/C ventilator outlet temp.: at 20°C
E33-208	ECT sensor	2.5 – 3.0 V	Engine coolant temp.: at 20°C
		0.6 – 0.9 V	Engine coolant temp.: at 80°C
E33-209	Blank	—	—
E33-210	Blank	—	—

TERMINAL	CIRCUIT	NORMAL VOLTAGE	CONDITION
E33-211	CMP sensor (–)	About 0 V	—
E33-212	Blank	—	—
E33-213	Oxygen sensor	Deflect between 0 and 1 V	Engine running, after engine warmed up
E33-214	IAT sensor	2.0 – 2.5 V	IAT sensor ambient temp.: at 20°C
		0.4 – 0.6 V	IAT sensor ambient temp.: at 80°C
E33-215	Blank	—	—
E33-216	A/C compressor magnet clutch (with A/C) relay	1 V or less	Engine running, A/C compressor: ON
		10 – 14 V	Engine running, A/C compressor: OFF

TERMINAL	CIRCUIT	NORMAL VOLTAGE	CONDITION
E32-301	Ground	—	—
E32-302	Power source	10 – 14 V	Ignition switch ON
E32-303	Blank	—	—
E32-304	Blank	—	—
E32-305	Blank	—	—
E32-306	Blank	—	—
E32-307	EVAP canister purge valve	10 – 14 V	Ignition switch ON
E32-308	Blank	—	—
E32-309	Blank	—	—
E32-310	Ignition coil assembly	1 V or less	Ignition switch ON
E32-311	Fuel injector No.3	10 – 14 V	Ignition switch ON
E32-312	Fuel injector No.1	10 – 14 V	Ignition switch ON
E32-313	Ground	—	—
E32-314	Power source for backup	10 – 14 V	—
E32-315	Power source	10 – 14 V	Ignition switch ON
E32-316	Blank	—	—
E32-317	Malfunction indicator light	About 0.5 V or less	Ignition switch ON, engine stops
		10 – 14 V	Engine running
E32-318	Fuel pump relay	1 V or less	For 3 seconds after ignition switch ON or while engine running
		10 – 14 V	After 3 seconds from ignition switch ON with engine stopped
E32-319	Main relay	1 V or less	Ignition switch ON
E32-320	Radiator fan control relay	10 – 14 V	Ignition switch ON
		1 V or less	Engine cooling fan ON
E32-321	Blank	—	—
E32-322	Blank	—	—
E32-323	Blank	—	—
E32-324	Blank	—	—
E32-325	Fuel injector No.2	10 – 14 V	Ignition switch ON
E32-326	Ground	—	—

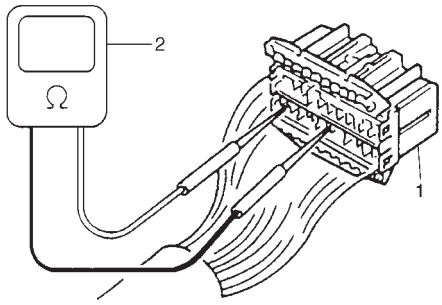

1. ECM coupler disconnected
2. Ohmmeter

RESISTANCE CHECK

1) Disconnect ECM couplers from ECM with ignition switch OFF.

> **CAUTION:**
> **Never touch terminals of ECM itself or connect voltmeter or ohmmeter.**

2) Check resistance between each pair of terminals of disconnected couplers as listed in following table.

> **CAUTION:**
> - **Be sure to connect ohmmeter probe from wire harness side of coupler.**
> - **Be sure to turn OFF ignition switch for this check.**
> - **Resistance in table below represents that when parts temperature is 20°C (68°F).**

TERMINAL	CIRCUIT	NORMAL RESISTANCE	CONDITION
E32-312 – E32-302	Fuel Injector No.1	11.3 – 13.8 Ω	
E32-325 – E32-302	Fuel injector No.2	11.3 – 13.8 Ω	
E32-311 – E32-302	Fuel Injector No.3	11.3 – 13.8 Ω	
E32-307 – E32-302	EVAP canister purge valve	37 – 44 Ω	F8D engine
		28 – 36 Ω	F8B engine
E32-320 – E32-302	Radiator fan control relay	90 – 110 Ω	omron made
		60 – 88 Ω	interface made
E33-302 – E32-311	CMP sensor	185 – 275 Ω	–10 – 50 °C (14 – 122 °F)
E32-318 – E32-314	Fuel pump relay	80 – 100 Ω	Battery disconnected and ignition switch ON
E32-318 – E32-314	Main relay	80 – 100 Ω	Battery disconnected and ignition switch ON
E32-301/313/326 – Body ground	Ground	Continuity	

ON-VEHICLE SERVICE

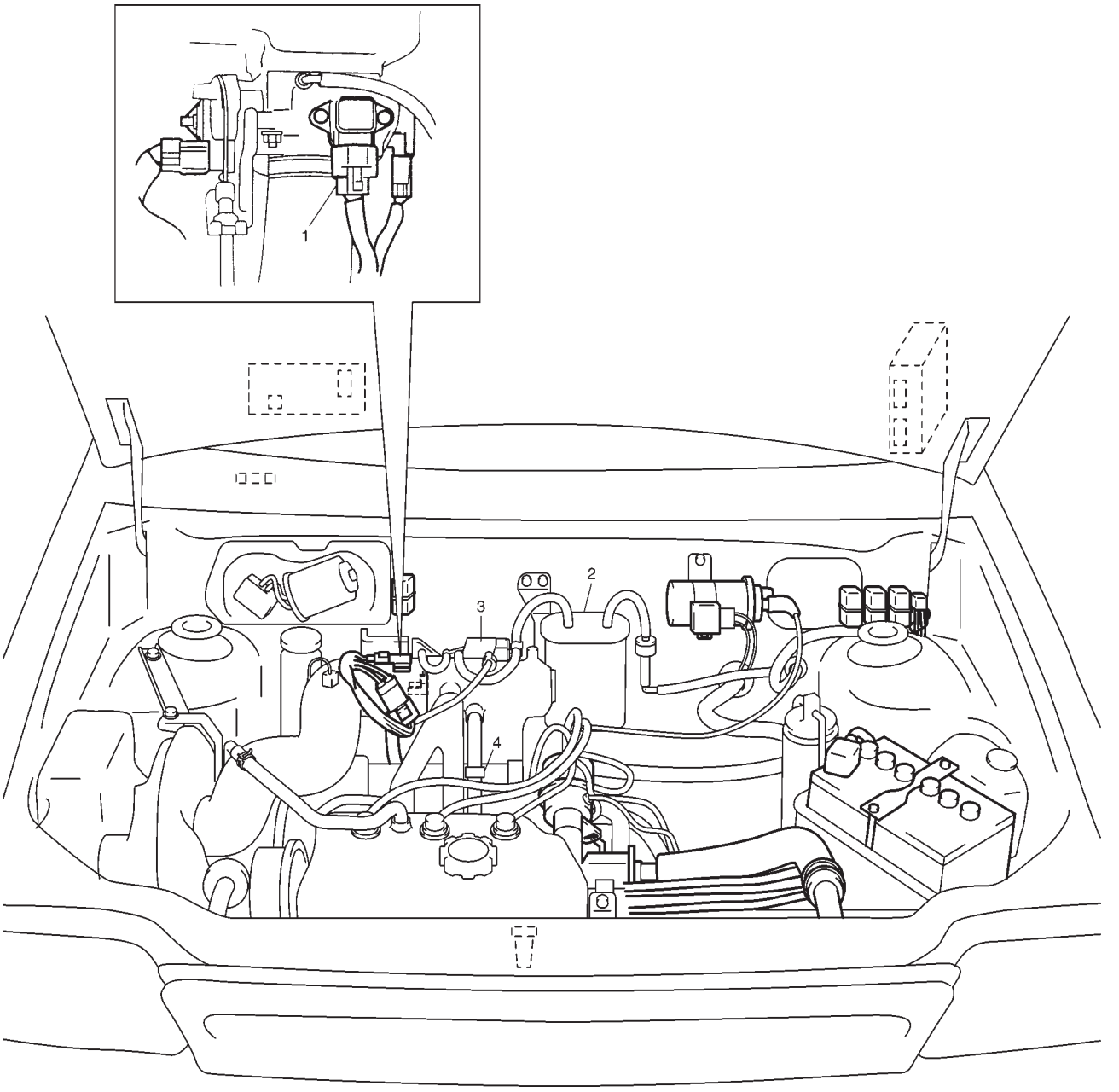

1. MAP sensor
2. EVAP canister
3. EVAP canister purge valve (if equipped)
4. PCV valve

GENERAL

When hoses are disconnected and system components are removed for service, reinstall components properly, and route and connect hoses correctly after service. Refer to figure on previous page for proper routing of hoses.

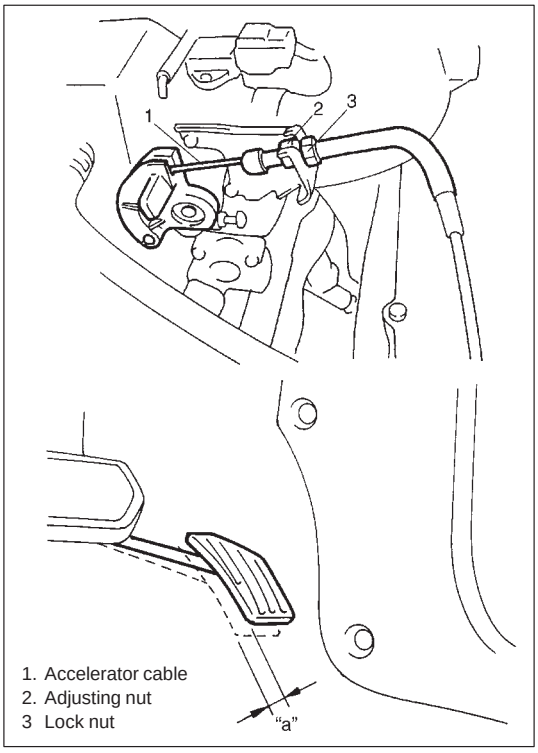

1. Accelerator cable
2. Adjusting nut
3 Lock nut

ACCELERATOR CABLE ADJUSTMENT

1) With throttle valve closed, check accelerator pedal play which should be within the following specification.

   Pedal play "a" : 2 – 7 mm (0.08 – 0.27 in.)

   If measured value is out of specification, adjust it to specification with cable adjusting nut.

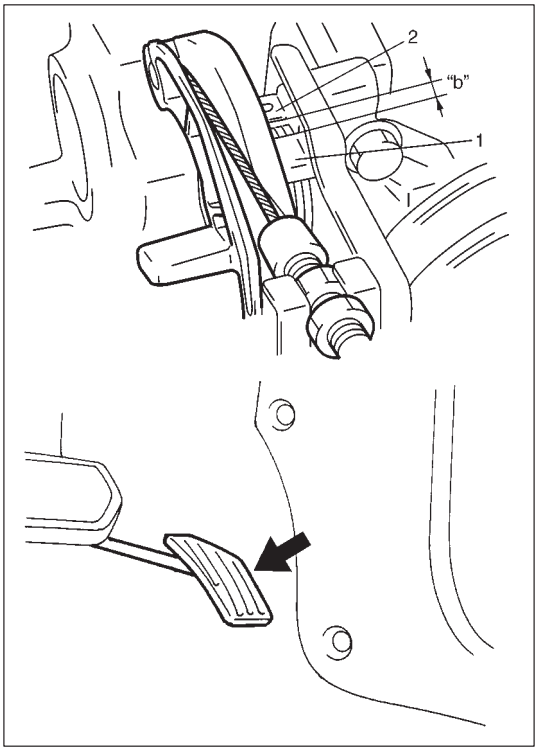

2) With accelerator pedal depressed fully, check clearance between throttle lever (2) and lever stopper (1) (throttle body) which should be within following specification.

   Clearance "b" : 0.5 – 2.0 mm (0.02 – 0.07 in.)
   (With pedal depressed fully)

IDLE SPEED/IAC DUTY INSPECTION

Before idle speed/IAC duty check, make sure of the following.

- Lead wires and hoses of Electronic Fuel Injection system is connected securely.
- Accelerator cable has some play, that is, it is not tight.
- Valve lash is checked and adjusted according to maintenance schedule.
- Ignition timing is within specification.
- All accessories (wipers, heater, lights, A/C, etc.) are out of service.
- Air cleaner has been properly installed and is in good condition.
- No abnormal air inhaling from air intake system.
- ECM does not detect any malfunction DTC.

After above items are all confirmed, check idle speed and IAC duty as follows.

NOTE:
Before starting engine, place transmission gear shift lever in "Neutral", and, set parking brake and block drive wheels.

When using SUZUKI scan tool:

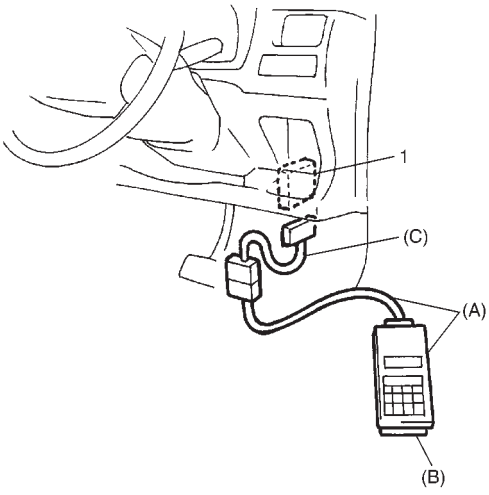

[Using SUZUKI scan tool]

1) Connect SUZUKI scan tool to DLC (1) with ignition switch OFF.

   Special Tool
   (A): 09931-76011 (SUZUKI scan tool)
   (B): Mass storage cartridge
   (C): 09931-76030 (16/14 pin DLC cable)

2) Start engine and warm it up to normal operating temperature.
3) Check idle speed and IAC duty by using "DATA LIST" mode of SUZUKI scan tool.

   NOTE:
   - **Check to ensure that radiator fan is not running and then measure IAC-duty.**
   - **Duty values with (*) are applicable to vehicle used at high place (higher than 2000 in or 6560 ft.)**

ENGINE IDLE SPEED AND IAC DUTY	
A/C OFF	A/C ON
900 ± 50 r/min. 3 – 30 or *40%	1000 ± 50 r/min.

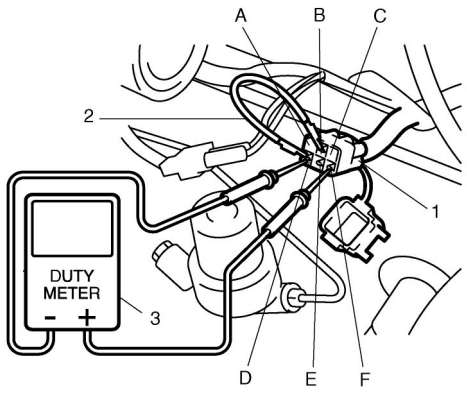

1. Monitor connector
2. Service wire
3. Duty meter

A: Blank
B: Diagnosis switch terminal
C: Blank
D: Ground terminal
E: Test switch terminal
F: Duty output terminal

[Not using SUZUKI scan tool]

1) Using service wire, ground diagnosis switch terminal in monitor connector.
2) Connect duty meter between duty output terminal and ground terminal of monitor connector.
3) Set tachometer.
4) Start engine and warm it up to normal operating temperature.
5) Confirm that all accessories (light, A/C, blower fan, etc.) are out of service.
6) Check idle speed and IAC duty.

NOTE:
Check to ensure that radiator fan is not running and then measure IAC-duty.

If duty and/or idle speed is out of specifications, inspect idle air control system referring to “B-4 Idle Air Control System Check” in this section.

ENGINE IDLE SPEED AND IAC DUTY	
A/C OFF	A/C ON
900 ± 50 r/min. 3 – 30 or *40%	1000 ± 50 r/min.

NOTE:

- **Duty values with (*) are applicable to vehicle used at high place (higher than 2000 m or 6560 ft.)**
- **Above duty values are on duty meter indications (high voltage rate).**
- **IAC duty can be checked roughly by using voltmeter. IAC duty to voltage relation is as follows.**

ON DUTY METER INDICATION (%)	OFF DUTY METER INDICATION (%)	VOLTMETER INDICATION (V)
0	100	0
50	50	0.5 × V_B
100	0	V_B

– **“OFF DUTY METER” is such duty meter that indicates approx. 100% when terminal voltage is approx. “0V”.**
– **“V_B” represents battery voltage while engine of vehicle being checked is running.**

AIR INTAKE SYSTEM

THROTTLE BODY

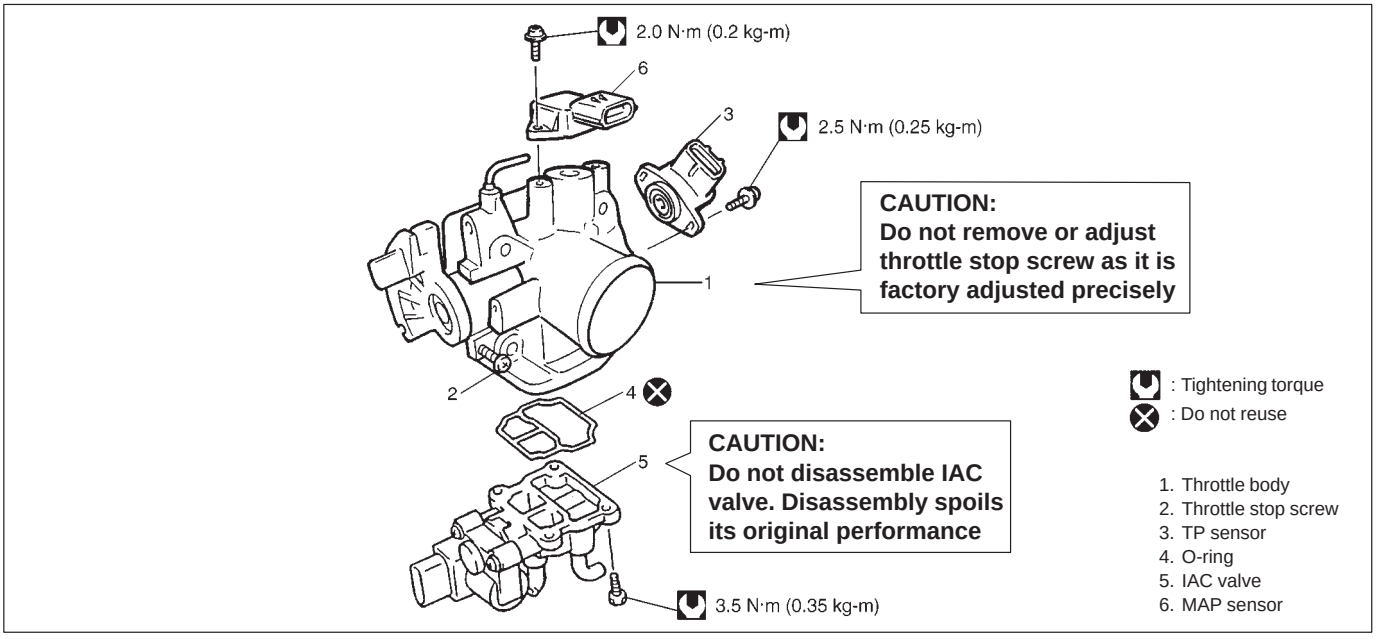

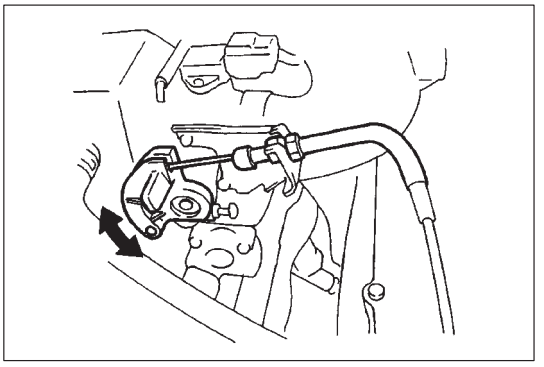

ON-VEHICLE INSPECTION

Check that throttle valve lever moves smoothly.

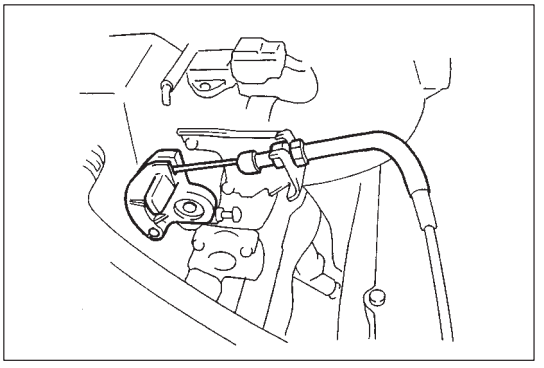

REMOVAL

1) Disconnect negative cable at battery.
2) Drain cooling system referring to Section 6B.
3) Disconnect accelerator cable from throttle body.

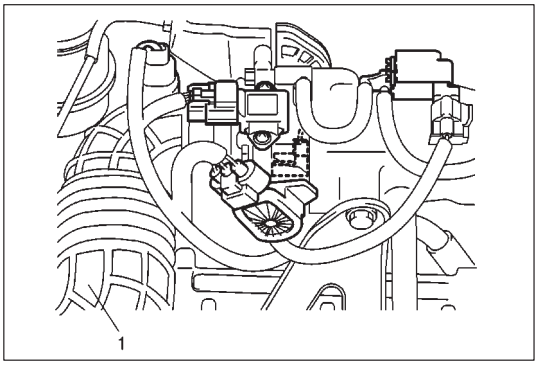

4) Remove air cleaner outlet hose (1).

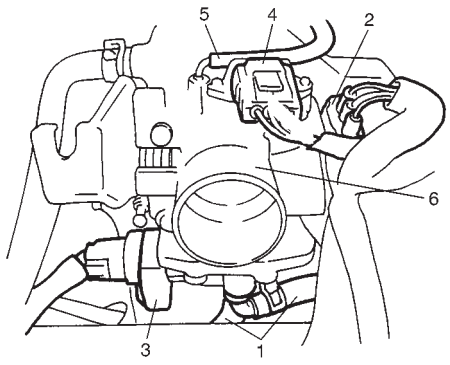

1. Engine coolant hose
2. TP sensor
3. IAC valve
4. MAP sensor
5. EVAP canister purge valve hose
6. Throttle body

5) Disconnect couplers from TP sensor, MAP sensor and IAC valve.
6) Remove throttle body from intake manifold.
7) Disconnect engine coolant hoses and EVAP canister purge valve hose from throttle body.

DISASSEMBLY

NOTE:
While disassembling and assembling throttle body, use special care not to deform levers on throttle valve shaft or cause damage to any other parts.

1) Remove TP sensor, MAP sensor and IAC valve from throttle body.

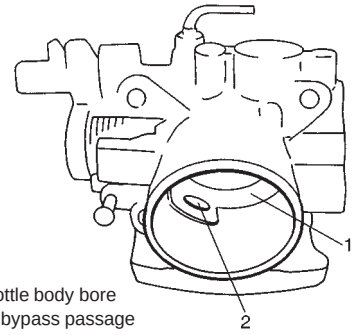

1. Throttle body bore
2. Idle bypass passage

CLEANING

Clean throttle body bore and idle air passage by blowing compressed air.

CAUTION:
- **TP sensor, IAC valve, MAP sensor or other components containing rubber must not be placed in a solvent or cleaner bath. A chemical reaction will cause these parts to swell, harden or get distorted.**
- **Do not blow compressed air through bypass air passage with IAC valve installed to throttle body. This will cause IAC valve to malfunction.**

REASSEMBLY

1) Install IAC valve to throttle body referring to IAC valve Installation section.
2) Install TP sensor to throttle body referring to TP sensor Installation section.
3) Install MAP sensor to throttle body referring to MAP sensor Installation section.

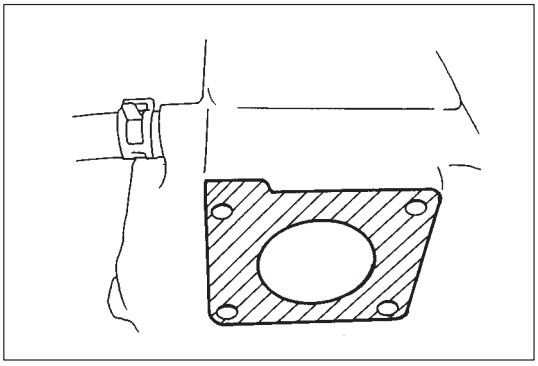

INSTALLATION

1) Clean mating surfaces and install throttle body gasket to intake manifold.
   Use new gasket.

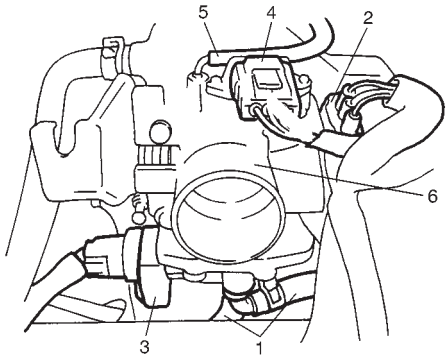

1. Engine coolant hose
2. TP sensor
3. IAC valve
4. MAP sensor
5. EVAP canister purge valve hose
6. Throttle body

2) Install throttle body to intake manifold.
3) Connect engine coolant hoses and EVAP canister purge valve hose.
4) Connect couplers to TP sensor, MAP sensor and IAC valve securely.

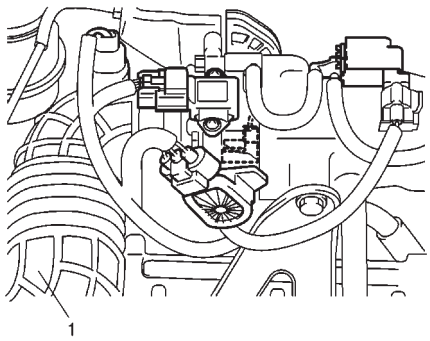

5) Install air cleaner outlet hose (1).

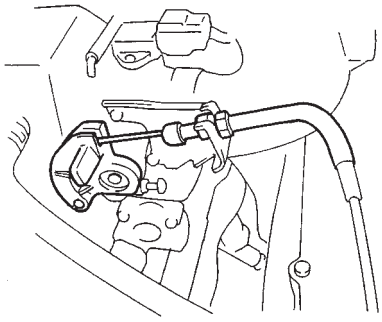

6) Connect accelerator cable and adjust cable play to specification.
7) Refill cooling system.
8) Connect negative cable at battery.

IAC VALVE

REMOVAL

1) Remove throttle body from intake manifold referring to “Throttle Body Removal” section.
2) Remove IAC valve from throttle body.

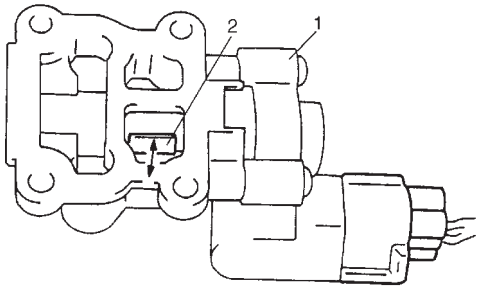

INSPECTION

1) Remove IAC valve (1) from throttle body.
2) Connect each connector to IAC valve, MAP sensor, TP sensor and IAT sensor.
3) Check that rotary valve (2) of IAC valve opens and closes once and then stops in about 60 ms as soon as ignition switch is turned ON.

NOTE:

- **This check should be performed by two people, one person turns on ignition switch while the other checks valve operation.**
- **As valve operation is momentary, it may be overlooked. To prevent this, perform this operation check 3 times or more continuously.**
  If rotary valve of IAC valve does not operate at all, check wire harnesses for open and short. If wire harnesses are in good condition, replace IAC valve and recheck.

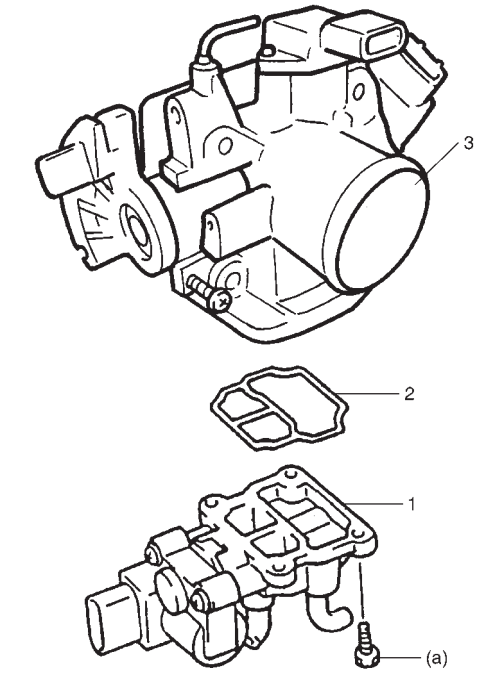

INSTALLATION

1) Install new O-ring (2) to IAC valve (1).
2) Install IAC valve to throttle body (3).
   Tighten IAC valve screws to specified torque.

   Tightening Torque
   (a): 3.5 N·m (0.35 kg-m, 2.5 lb-ft)

3) Install throttle body to intake manifold referring to THROTTLE BODY INSTALLATION section.

FUEL DELIVERY SYSTEM

FUEL PRESSURE INSPECTION

WARNING:
Be sure to perform work in a well-ventilated area and away from any open flames, or there is a risk of a fire breaking out.

1) Relieve fuel pressure in fuel feed line referring to FUEL PRESSURE RELIEF PROCEDURE in SECTION 6.
2) Disconnect fuel feed hose from fuel delivery pipe.

CAUTION:
A small amount of fuel may be released when fuel hose is disconnected. Place container under the joint with a shop cloth so that released fuel is caught in container or absorbed in cloth. Place that cloth in an approved container.

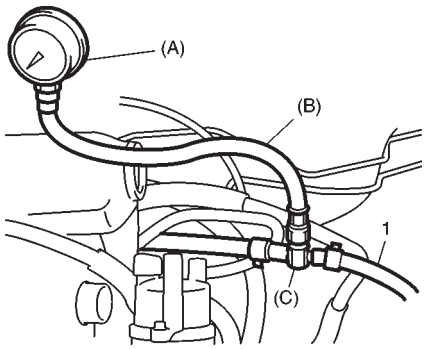

3) Connect special tools and hose between fuel delivery pipe and fuel feed hose (1) as shown in figure, and clamp hoses securely to ensure no leaks occur during checking.

Special Tool
(A): 09912-58441
(B): 09912-58431
(C): 09912-58490

4) Check that battery voltage is above 11V.

CONDITION	FUEL PRESSURE
With fuel pump operating and engine stopped	270 – 310 kPa 2.7 – 3.1 kg/cm^2 38.4 – 44.0 psi
At specified idle speed	200 – 240 kPa 2.0 – 2.4 kg/cm^2 28.4 – 34.1 psi
With 1 min. after engine (fuel pump) stop (Pressure reduces as time passes)	over 200 kPa 2.0 kg/cm^2 28.4 psi

5) Turn ignition switch ON to operate fuel pump and after 2 seconds turn it OFF. Repeat this 3 or 4 times and then check fuel pressure.
6) Start engine and warm it up to normal operating temperature.
7) Measure fuel pressure at idling.
   If measured pressure doesn't satisfy specification, refer to B-3 FUEL PRESSURE CHECK in this section and check each possibly defective part. Replace if found defective.

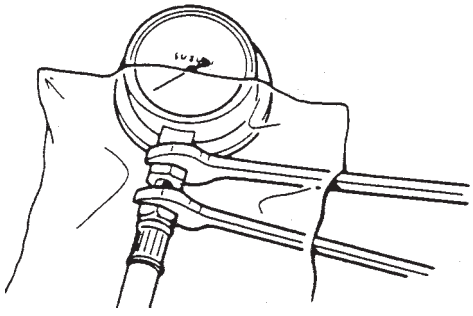

8) After checking fuel pressure, remove fuel pressure gauge.

CAUTION:
As fuel feed line is still under high fuel pressure, make sure to release fuel pressure according to following procedures.
- **Place fuel container under joint.**
- **Cover joint with rag and loosen joint nut slowly to release fuel pressure gradually.**

9) Remove special tools from fuel delivery pipe.
10) Connect fuel feed hose to fuel delivery pipe and clamp it securely.
11) With engine “OFF” and ignition switch “ON”, check for fuel leaks.

FUEL PUMP

ON-VEHICLE INSPECTION

CAUTION:
When fuel filler cap is removed in any procedure, work must be done in a well-ventilated area, keep away from any open flames and without smoking.

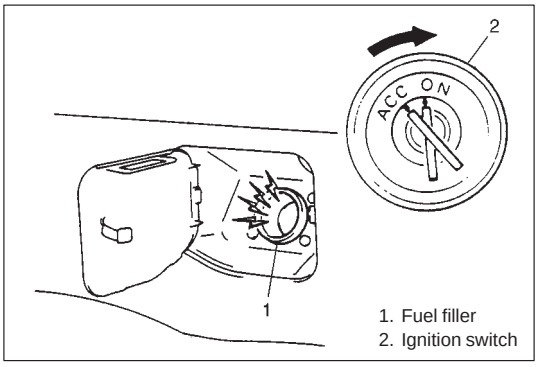

1) Remove filler cap and turn ON ignition switch. Then fuel pump operating sound should be heard from fuel filler for about 2 seconds and stop. Be sure to reinstall fuel filler cap after checking.

   If above check result is not satisfactory, advance to DIAGNOSTIC FLOW TABLE B-1.

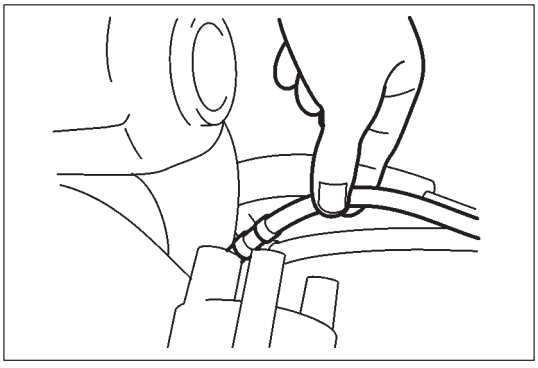

2) Fuel pressure should be felt at fuel return hose for 2 seconds after ignition switch ON.

   If fuel pressure is not felt, advance to DIAGNOSTIC FLOW TABLE B-3.

REMOVAL

1) Remove fuel tank from body according to procedure described in Section 6C and remove fuel pump from fuel tank.

INSPECTION

Check fuel pump filter for evidence of dirt and contamination. If present, clean and check for presence of dirt in fuel tank.

INSTALLATION

Install fuel pump to fuel tank and then install fuel tank to body according procedure described in Section 6C.

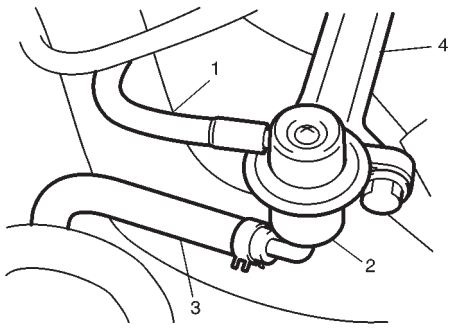

FUEL PRESSURE REGULATOR

ON-VEHICLE INSPECTION

Perform fuel pressure inspection according to procedure described in FUEL PRESSURE INSPECTION in this section.

REMOVAL

1) Relieve fuel pressure according to procedure described in Section 6.
2) Disconnect battery negative cable at battery.
3) Remove air cleaner outlet hose referring to Section 6A.
4) Remove air cleaner case by removing its fastening bolts.
5) Disconnect vacuum hose (1) from fuel pressure regulator (2).
6) Disconnect fuel return hose (3) from fuel pressure regulator.

> **CAUTION:**
> **A small amount of fuel may be released when hose is disconnected. Cover hose to be disconnected with a shop cloth.**

7) Remove fuel pressure regulator from fuel delivery pipe (4).

> **CAUTION:**
> **A small amount of fuel may be released when it is from delivery pipe.**
> **Place a shop cloth under delivery pipe so that released fuel is absorbed in it.**

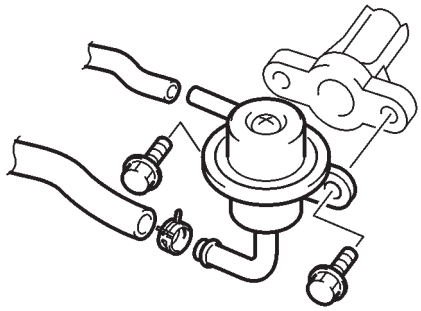

INSTALLATION

For installation, reverse removal procedure and note following precautions.

- Use new O-ring.
- Apply thin coat of spindle oil or gasoline to O-ring to facilitate installation.
- With engine “OFF” and ignition switch “ON”, check for fuel leaks around fuel line connection.

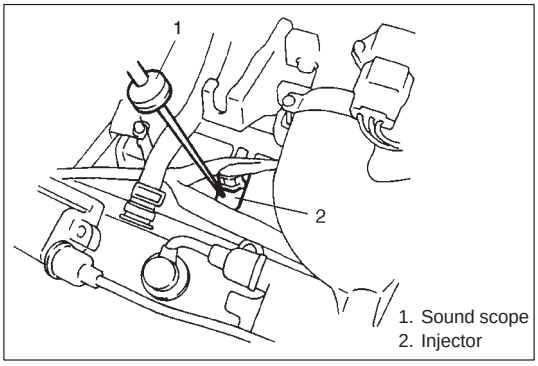

1. Sound scope
2. Injector

FUEL INJECTOR

ON-VEHICLE INSPECTION

1) Using sound scope or such, check operating sound of injector when engine is running or cranking.
   Cycle of operating sound should vary according to engine speed.
   If no sound or an unusual sound is heard, preform B-2 FUEL INJECTOR AND ITS CIRCUIT CHECK in this section.

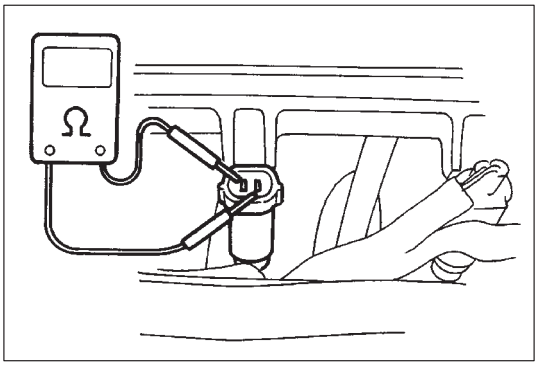

2) Disconnect coupler from injector, connect ohmmeter between terminals of injector and check resistance.

   Resistance of injector : 10 – 15 Ω

   If resistance is out of specification, replace.
3) Connect coupler to injector securely.

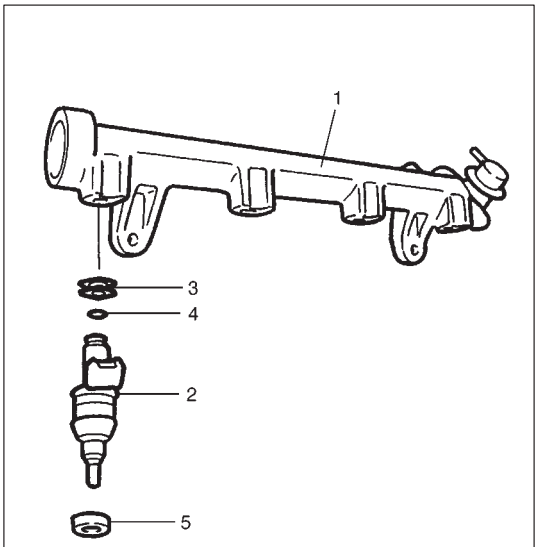

1. Fuel delivery pipe
2. Fuel injector
3. Grommet
4. O-ring
5. Cushion

REMOVAL

1) Relieve fuel pressure according to procedure described in Section 6.
2) Disconnect battery negative cable at battery.
3) Remove air cleaner outlet hose referring to Section 6A.
4) Remove intake manifold stiffener.
5) Disconnect fuel injector couplers.
6) Remove fuel delivery pipe bolts.
7) Remove fuel injector(s).

> **CAUTION:**
> **A small amount of fuel may come out after removal of fuel injectors, cover them with shop cloth.**

INSPECTION

> **WARNING:**
> **As fuel is injected in this inspection, perform in a well ventilated area and away from open flames.**
> **Use special care to prevent sparking when connecting and disconnecting test lead to and from battery.**

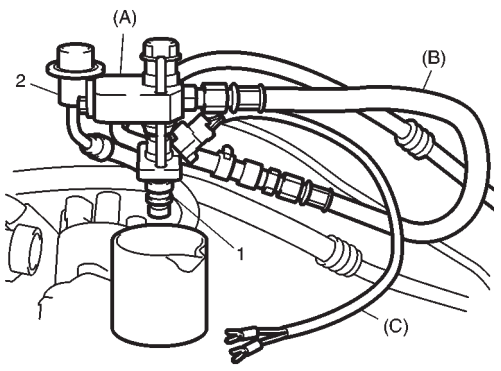

1) Install injector (1) and fuel pressure regulator (2) to special tool (injector checking tool).

   Special Tool
   (A): 09912-58421

2) Connect special tools (hoses and attachment) to pipes of vehicle.

   Special Tool
   (B): 09912-58431

3) Connect special tool (test lead) to injector.

   Special Tool
   (C): 09930-88530

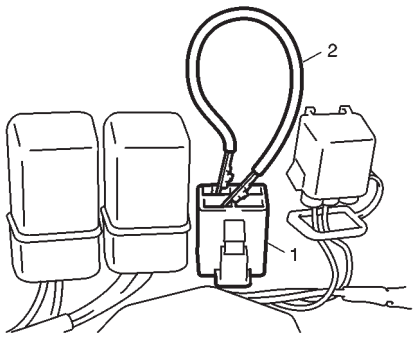

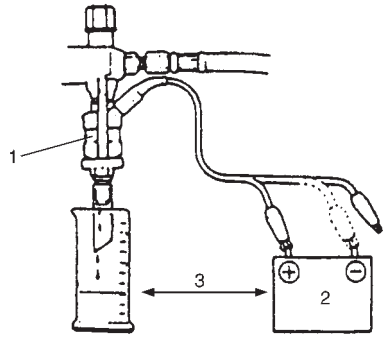

1. Injector
2. Battery
3. Keep as far apart as possible
4. Fuel pump relay coupler
5. Service wire

4) Install suitable vinyl tube onto injector nozzle to prevent fuel from splashing out when injecting.
5) Put graduated cylinder under injector as shown.
6) Remove fuel pump relay.
7) To operate fuel pump and apply fuel pressure to injector, connect two terminals of disconnected connecter (1) by using service wire (2) as shown in figure.

   CAUTION:
   Check to make sure that connections made between correct terminals. Wrong connection can cause damage to ECM, wire harness, etc.

8) Apply battery voltage to injector for 15 seconds and measure injected fuel volume with graduated cylinder.
   Test each injector two or three times.
   If not within specification, replace injector.

   Injected fuel volume:
   35 – 37 cc/15 sec. (1.18/1.23 – 1.25/1.30 US/Imp. oz/15 sec.) ... F8B
   38.3 – 40.7 cc/15 sec. (1.29/1.35 – 1.37/1.43 US/Imp. oz/15 sec.) ... F8D

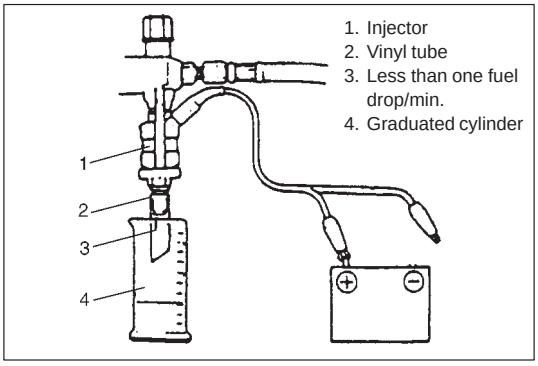

9) Check fuel leakage from injector nozzle. Do not operate injector for this check (but fuel pump should be at work). If fuel leaks more than following specification, replace.

Fuel leakage: Less than 1 drop/min.

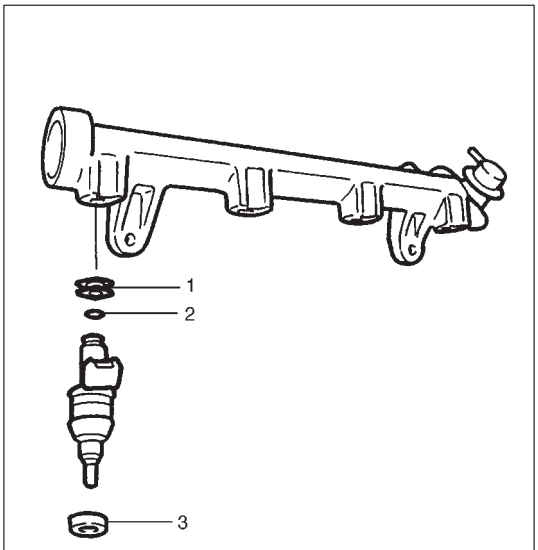

1. Grommet
2. O-ring
3. Cushion

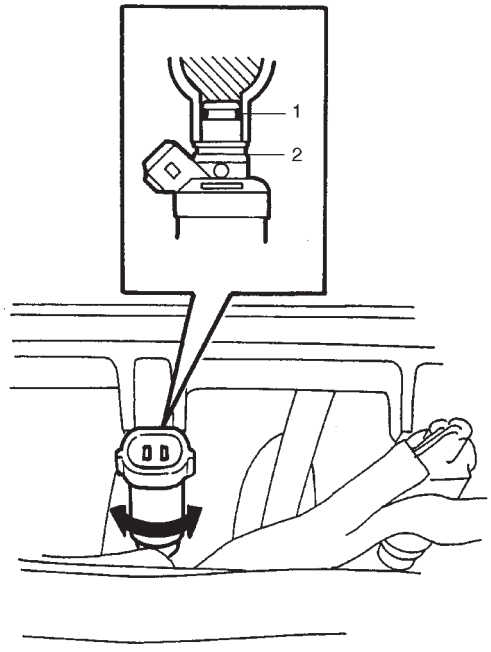

1. O-ring
2. Grommet

INSTALLATION

For installation, reverse removal procedure and note following precautions.

- Replace injector O-ring with new one using care not to damage it.
- Check if cushion is scored or damaged. If it is, replace with new one.
- Apply thin coat of fuel to O-rings and then install injectors into delivery pipe and intake manifold.
  Make sure that injectors rotate smoothly. If not, probable cause is incorrect installation of O-ring. Replace O-ring with new one.
- Tighten delivery pipe bolts and make sure that injectors rotate smoothly.
- With engine “OFF” and ignition switch “ON”, check for fuel leaks around fuel line connection.

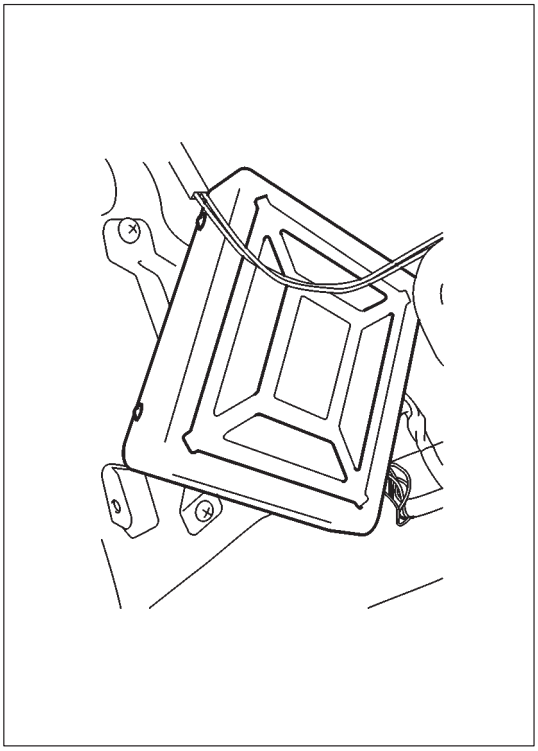

ELECTRONIC CONTROL SYSTEM

ECM

CAUTION:
As ECM consists of precision parts, be careful not to expose it to excessive shock.

REMOVAL

1) Disconnect battery negative cable at battery.
2) Remove ECM from body.
3) Disconnect couplers from ECM.

INSTALLATION

1) Install ECM to body.
2) Connect couplers to ECM securely.
3) Connect battery negative cable at battery.

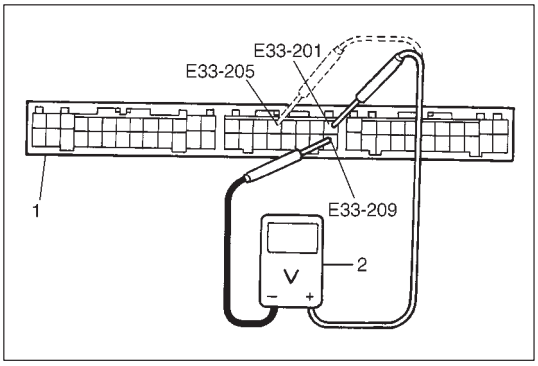

MAP SENSOR

OUTPUT VOLTAGE CHECK

1) Remove ECM according to previously outlined.
2) Connect couplers (1) to ECM securely.
3) With coupler connected to ECM, connect digital type voltmeter (2) as shown and check that ECM supply voltage 4.75 – 5.25 V is applied to coupler terminal E33-201.

4) Check output voltage at coupler terminal E33-205.
   Note that it varies with atmospheric pressure and altitude. Also, start engine, it it can, and check if output voltage varies.

   Output voltage (ECM supply voltage 4.75 – 5.25 V, ambient temp. 10 – 40°C, 50 – 104°F)

ALTITUDE (Reference)		BAROMETRIC PRESSURE	OUTPUT VOLTAGE
(ft)	(m)	(kPa(mmHg))	(V)
0	0	101.3 (760)	3.3 – 3.9
1000	305	97.7 (733)	3.2 – 3.8
2000	610	94.3 (707)	3.1 – 3.7
3000	914	90.9 (682)	3.0 – 3.6
4000	1219	87.7 (658)	3.0 – 3.5
5000	1524	84.5 (634)	2.9 – 3.4
6000	1829	81.5 (611)	2.8 – 3.3
7000	2133	78.5 (589)	2.7 – 3.2
8000	2438	75.6 (567)	2.6 – 3.1
9000	2743	72.8 (546)	2.5 – 3.0
10000	3048	70.1 (526)	2.5 – 3.0

NOTE:
Note that atmospheric pressure varies depending on weather conditions as well as altitude.
Take that into consideration when performing above check.

If check result is not satisfactory in previous step 3) or 4), check MAP sensor and its circuit according to Diagnostic Flow Table for Code No. 11 (P0105).

NOTE:
If output voltage does not vary when engine is started, it is possible that vacuum passage is clogged. Clean them.
Another possibility is that filter in MAP sensor is clogged from freezing. If it is suspected, leave it at room temperature (20°C, 68°F) for a while and recheck.

5) Upon completion of checking, install ECM and connect ECM couplers securely.

MAP SENSOR INDIVIDUAL CHECK

1) Remove MAP sensor referring MAP sensor removal.

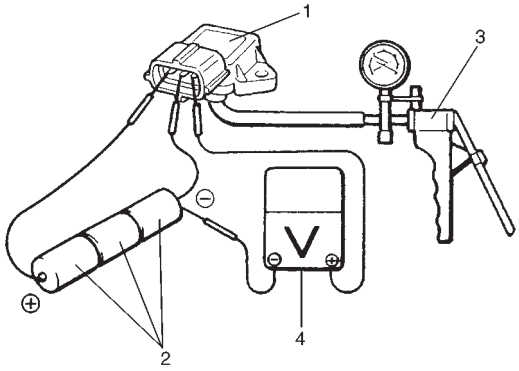

2) Arrange 3 new 1.5 V batteries in series (2) (check that total voltage is 4.5 – 5.0 V) and connect its positive terminal to “Vcc” terminal of MAP sensor (1) and negative terminal to “Ground” terminal. Then check voltage between “Vout” and “Ground”. Also, check if voltage reduces when vacuum is applied up to 40 cmHg by using vacuum pump (3) and volt meter (4).

Output voltage (Vin voltage 4.5 – 5.0 V, ambient temp. 20 – 30°C, 68 – 86°F)

ALTITUDE (Reference)		BAROMETRIC PRESSURE	OUTPUT VOLTAGE
(ft)	(m)	(kPa(mmHg))	(V)
0 | 2000	0 | 610	760 | 707	3.1 – 3.6
2001 | 5000	611 | 1524	Under 707 over 634	2.8 – 3.4
5001 | 8000	1525 | 2438	Under 634 over 567	2.6 – 3.1
8001 | 10000	2439 | 3048	Under 567 over 526	2.4 – 2.9

If check result is not satisfactory, replace MAP sensor.

3) Install MAP sensor referring to MAP SENSOR INSTALLATION.

REMOVAL

1) Disconnect battery negative cable at battery.
2) Disconnect coupler from MAP sensor.
3) Remove MAP sensor from throttle body.

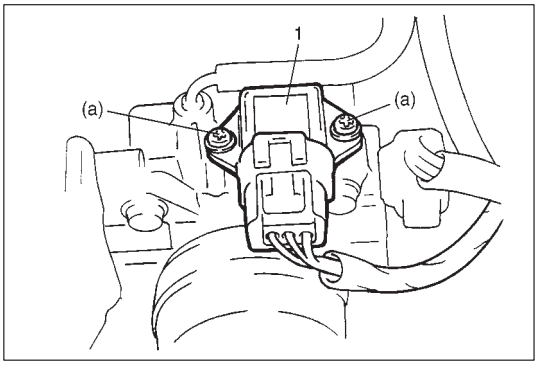

INSTALLATION

1) Before installation check vacuum passage hole for clogged install MAP sensor (1) to throttle body.

Tightening Torque
(a): 2.0 N·m (0.2 kg-m, 1.5 lb-ft)

2) Connect coupler to MAP sensor.
3) Connect battery negative cable to battery.

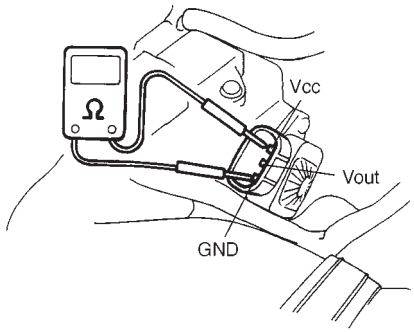

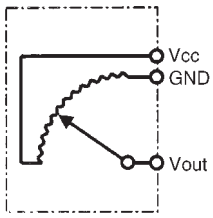

"GND": Ground terminal
"Vcc": Reference voltage terminal
"Vout": Output voltage terminal

TP SENSOR

INSPECTION

1) Disconnect negative cable at battery and coupler from TP sensor.
2) Using ohmmeter, check resistance between terminals under each condition given in table below.

TERMINAL	RESISTANCE	
Between "Vcc" and "GND" terminals	4 – 6 kΩ	
Between "Vout" and "GND" terminals	Throttle valve is at idle position	0.6 – 1.2 kΩ
	Throttle valve is fully opened	3.2 – 5.4 kΩ

NOTE:
There should be more than 1.5 kΩ resistance difference between when throttle valve is at idle position and when it is fully open.

If check result is not satisfactory, replace TP sensor.

3) Connect TP sensor coupler securely.
4) Connect negative cable to battery.

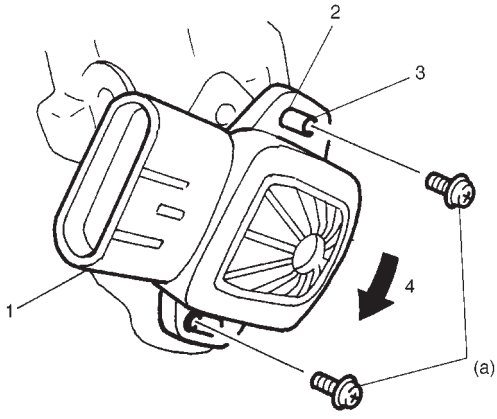

REMOVAL

1) Disconnect battery negative cable at battery.
2) Disconnect coupler from TP sensor.
3) Remove TP sensor from throttle body.

INSPECTION

1) Install TP sensor (1) to throttle body.
   Fit TP sensor to throttle body in such way that its holes (3) are a little away from TP sensor screw holes (2) as shown and turn TP sensor clockwise (4) so that those holes align.

   Tightening Torque
   (a): 2.5 N·m (0.25 kg-m, 2.0 lb-ft)

2) Connect coupler to TP sensor securely.
3) Connect battery negative cable to battery.

ADJUSTMENT

1) Warm up engine to normal operating temperature.
1) Loosen TP sensor screws.

[Not using SUZUKI scan tool]

TERMINAL ARRANGEMENT OF ECM COUPLER (VIEWED FROM HARNESS SIDE)

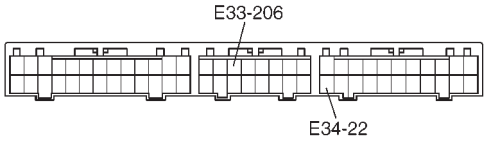

3) [Using SUZUKI scan tool]
   Connect SUZUKI scan tool to DLC with ignition switch OFF and check “TP SENSOR VOLT” value displayed on scan tool by using “DATA LIST” mode.
   [Not using SUZUKI scan tool]
   Remove ECM as previously outlined and with couplers connected to ECM, connect digital type voltmeter between “E33-206” and “E34-22” terminal.

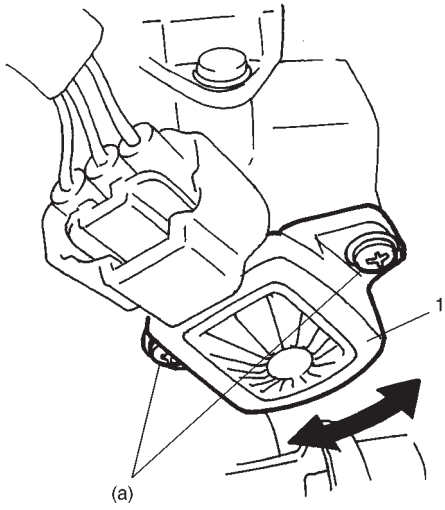

4) Turn TP sensor (1) clockwise or counterclockwise and tighten TP sensor screw at a position where voltage as specified below is obtained.

   TP sensor output voltage when throttle is fully close: 0.805 ± 0.025 V

5) Tighten TP sensor screw to specified torque.

   Tightening Torque
   (a): 2.0 N·m (0.20 kg-m, 2.0 lb-ft)

6) Check to make sure that TP sensor voltage is as shown below when throttle is fully open.

   TP sensor output voltage when throttle is fully open: 4.2 ± 0.5 V

7) Install ECM as previously outlined.
8) With ignition switch at OFF position, disconnect negative cable at battery for 30 seconds and connect it.

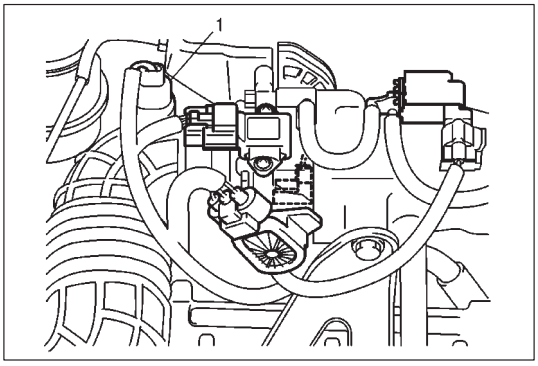

IAT SENSOR

REMOVAL

1) Disconnect battery negative cable at battery.
2) Disconnect coupler from IAT sensor (1).
3) Remove IAT sensor from air cleaner outlet hose.

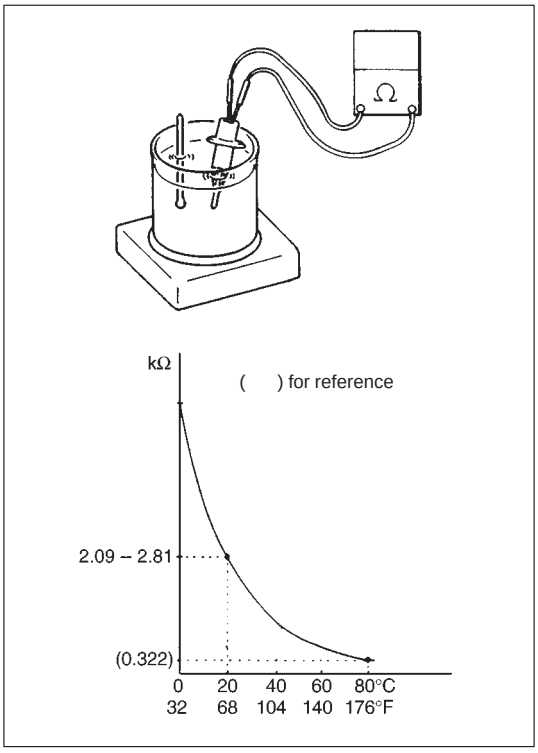

INSPECTION

Immerse temperature sensing part of IAT sensor in water (or ice) and measure resistance between sensor terminals while heating water gradually.

If measured resistance doesn't show such characteristic as shown in left figure, replace IAT sensor.

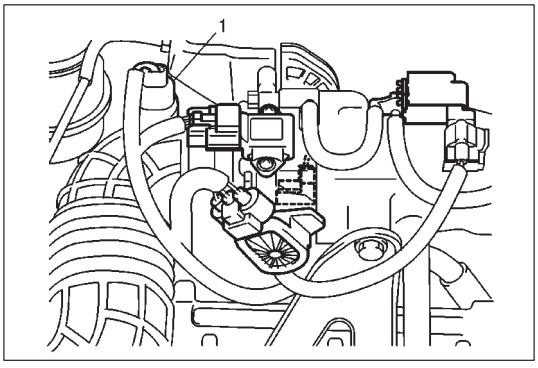

INSTALLATION

Reverse removal procedure noting the following.

- Clean mating surfaces of IAT sensor (1) and air cleaner outlet hose.
- Connect IAT sensor coupler securely.

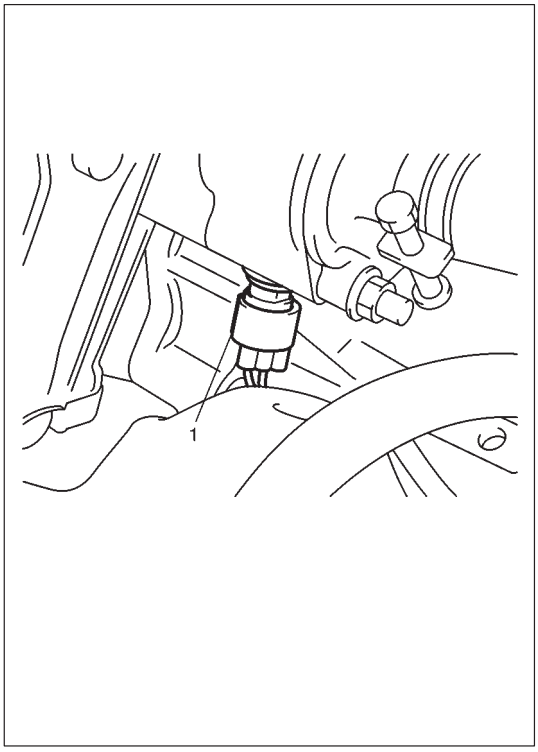

ECT SENSOR

REMOVAL

1) Disconnect battery negative cable at battery.
2) Drain coolant referring to Section 6B.

> **WARNING:**
> **To help avoid danger of being burned, do not remove radiator cap while engine and radiator are still hot. Scalding fluid and steam can be blown out under pressure it cap is taken off too soon.**

3) Disconnect coupler from ECT sensor.
4) Remove ECT (1) sensor from water outlet pipe.

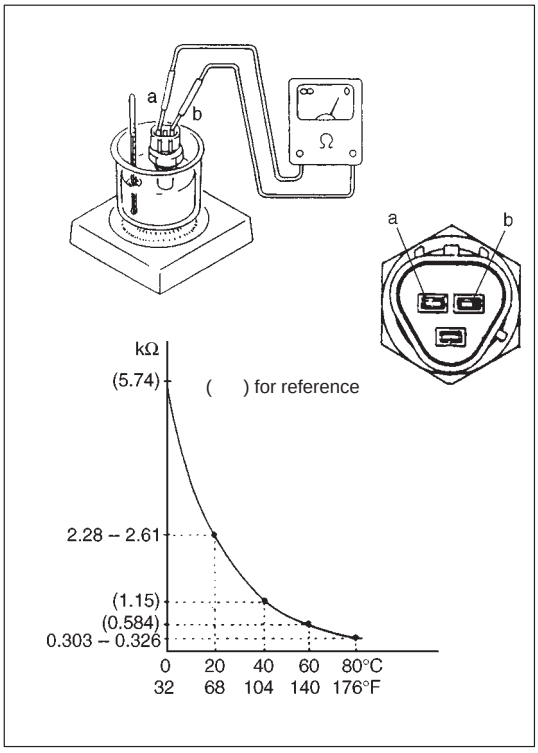

INSPECTION

Immerse temperature sensing part of ECT sensor in water (or ice) and measure resistance between sensor terminals while heating water gradually.
If measured resistance doesn't show such characteristic as shown in left figure, replace ECT sensor.

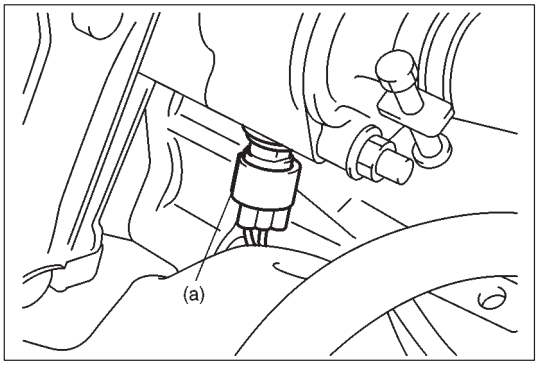

INSTALLATION

Reverse removal procedure noting the following.

- Clean mating surfaces of ECT sensor and water outlet pipe.
- Check O-ring for damage and replace if necessary.
- Tighten ECT sensor to specified torque.

  Tightening Torque
  (a): 12 N·m (1.2 kg-m, 9.0 lb-ft)

- Connect coupler to ECT sensor securely.
- Refill coolant referring to Section 6B.

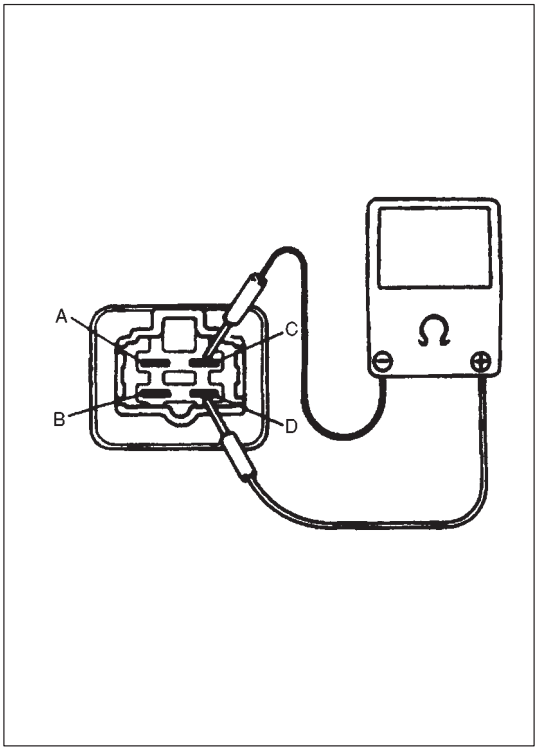

MAIN RELAY/FUEL PUMP RELAY

INSPECTION

1) Disconnect negative cable at battery.
2) Remove ECM main/fuel pump relay from main fuse box after disconnecting its coupler.
3) Check resistance between each two terminals as in table below. If check results are as specified, proceed to next operation check. If not, replace.

TERMINALS	RESISTANCE
Between A and B	∞ (infinity)
Between C and D	80 – 100 Ω at 20°C (68°F)

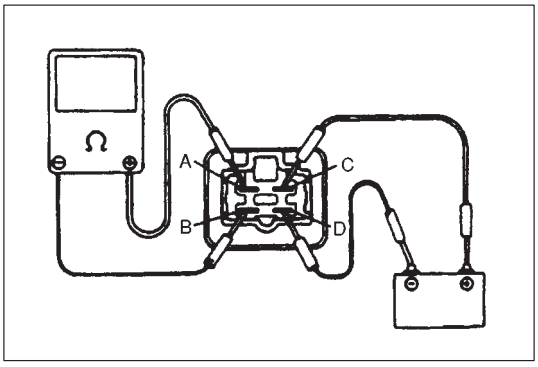

4) Check that there is continuity between terminals “A” and “B” when battery is connected to terminals “C” and “D”.
   If found defective, replace.
5) Install the relay and connect its coupler securely.

OXYGEN SENSOR

INSPECTION

Inspect oxygen sensor referring to flow table of diagnostic trouble code No. 14 (P0130).

REMOVAL

WARNING:
To avoid danger of being burned, do not touch exhaust system when system is hot. Oxygen sensor removal should be performed when system is cool.

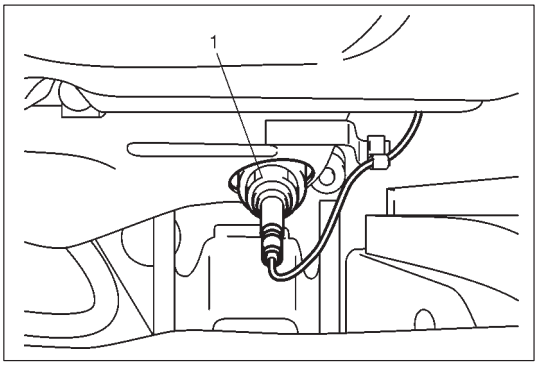

1) Disconnect negative cable at battery.
2) Disconnect coupler of oxygen sensor and release its wire harness from clamps.
3) Remove oxygen sensor (1) from exhaust manifold.

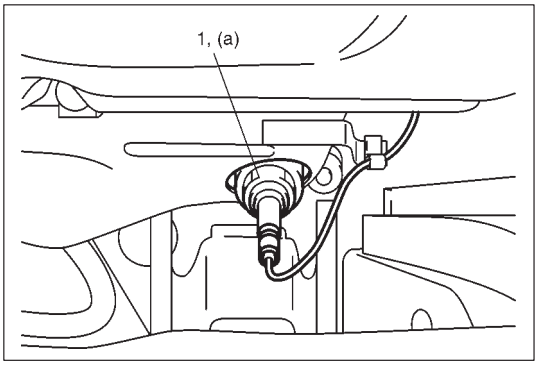

INSTALLATION

Reverse removal procedure noting the followings.

- Tighten oxygen sensor (1) to specified torque.

  Tightening Torque
  (a): 45 N·m (4.5 kg-m, 32.5 lb-ft)

- Connect coupler of oxygen sensor and clamp wire harness securely.
- After installing oxygen sensor, start engine and check that no exhaust gas leakage exists.

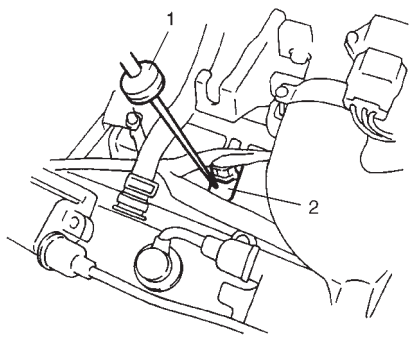

FUEL CUT OPERATION

INSPECTION

NOTE:

Before inspection, check to make sure that gear shift lever is in neutral position (with A/T model, selector lever in "P" range) and that parking brake lever is pulled all the way up.

1) Warm up engine to normal operating temperature.
2) While listening to sound of injector (2) by using sound scope (1) or such, increase engine speed to higher than 3,000 r/min.
3) Check to make sure that sound to indicate operation of injector stops when throttle valve is closed instantly and it is heard again when engine speed is reduced to less than about 2,000 r/min.

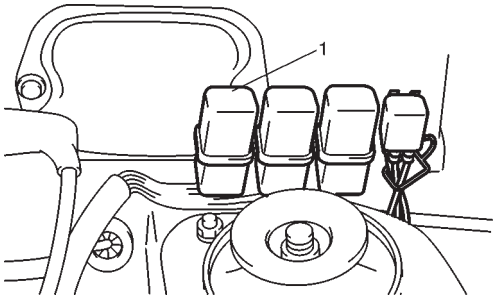

A/C COMPRESSOR CONTROL RELAY (IF EQUIPPED)

INSPECTION

1) Disconnect negative cable at battery.
2) Remove A/C compressor control relay from its connecter.
3) Structure of A/C compressor control relay (1) is the same as that of main relay. Check its resistance and operation using the same procedure as that for main relay.
   If found defective, replace.

CMP SENSOR

Refer to Section 6F for removal, installation, inspection and adjustment of CMP sensor.

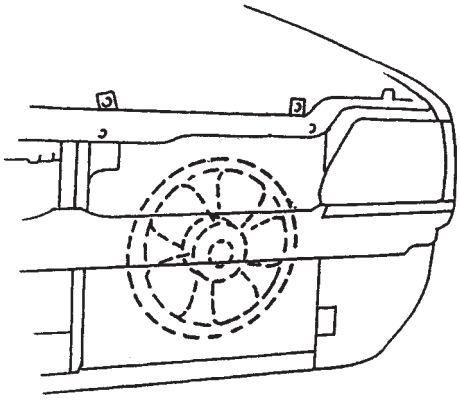

RADIATOR FAN CONTROL SYSTEM

SYSTEM INSPECTION

WARNING:
Keep hands, tools and clothing away from engine cooling fan to help prevent personal injury. This fan is electric and can come on whether or not the engine is running. The fan can start automatically in response to the ECT sensor with the ignition switch in the "ON" position.

Start engine and keep it running to warm it up.
Now check to ensure that radiator fan is started under either following condition:

- A/C compressor magnet clutch operates (if equipped A/C).
- Engine coolant temperature value on scan tool is over 98 °C (208 °F).

If check result is not satisfactory, check RFC relay, wire harness, ECT sensor, ECM.

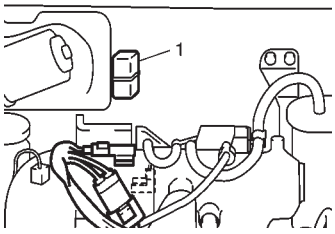

RADIATOR FAN CONTROL RELAY (RFC RELAY) INSPECTION

1) Disconnect negative cable at battery.
2) Remove RFC relay (1) from its connecter.

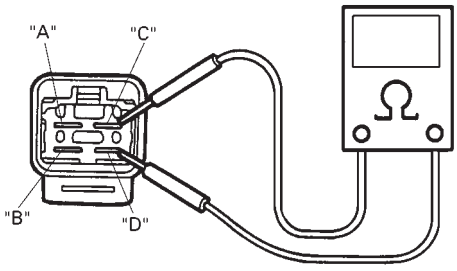

3) Check resistance between each two terminals as in table below. If check results are as specified, proceed to next operation check. If not, replace.

TERMINALS	RESISTANCE
Between "A" and "B"	∞ (infinity)
Between "C" and "D"	90 – 110 Ω at 20°C (68°F) . . omron made
	60 – 88 Ω at 20°C (68°F) . . . interface made

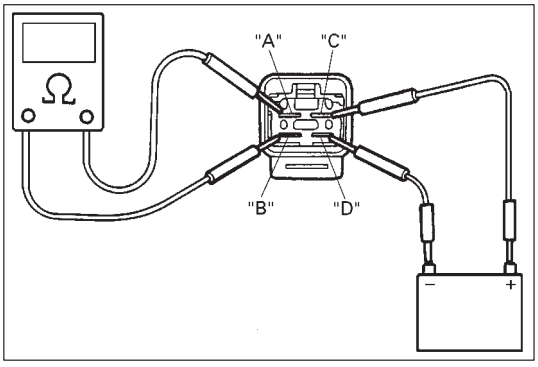

4) Check that there is continuity between terminals "A" and "B" when battery is connected to terminals "C" and "D". If found defective, replace.
5) Install relay and connect its coupler securely.

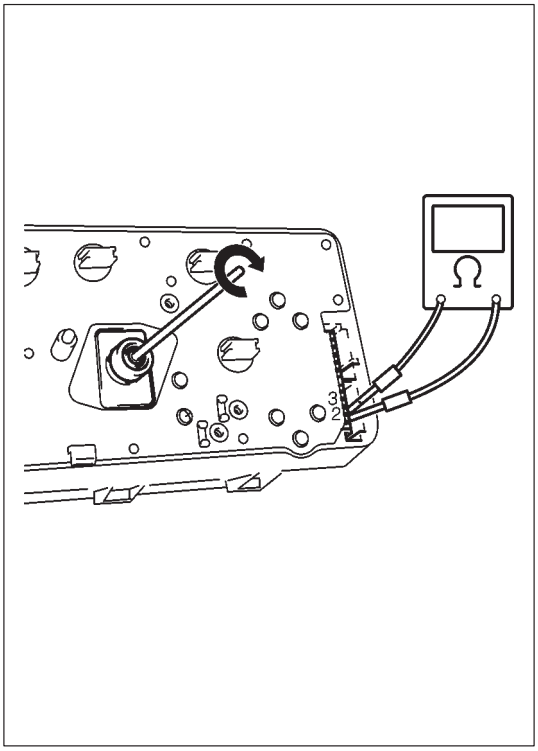

VEHICLE SPEED SENSOR (VSS)

INSPECTION

1) Remove combination meter from instrument panel.
2) Connect ohmmeter between vehicle speed sensor terminal and ground terminal of combination meter and turn cable joint of speedometer with a screwdriver.
   Ohmmeter indicator should move back and forth between continuity and infinity 4 times while cable joint is turned one full revolution.
   Replace speedometer, if check result is not satisfactory.

EVAP CONTROL SYSTEM

EVAP CANISTER PURGE INSPECTION

NOTE:

Before inspection, check to make sure that gear shift lever is in neutral position (with A/T model, selector lever in "P" range) and that parking brake lever is pulled all the way up.

F8D engine

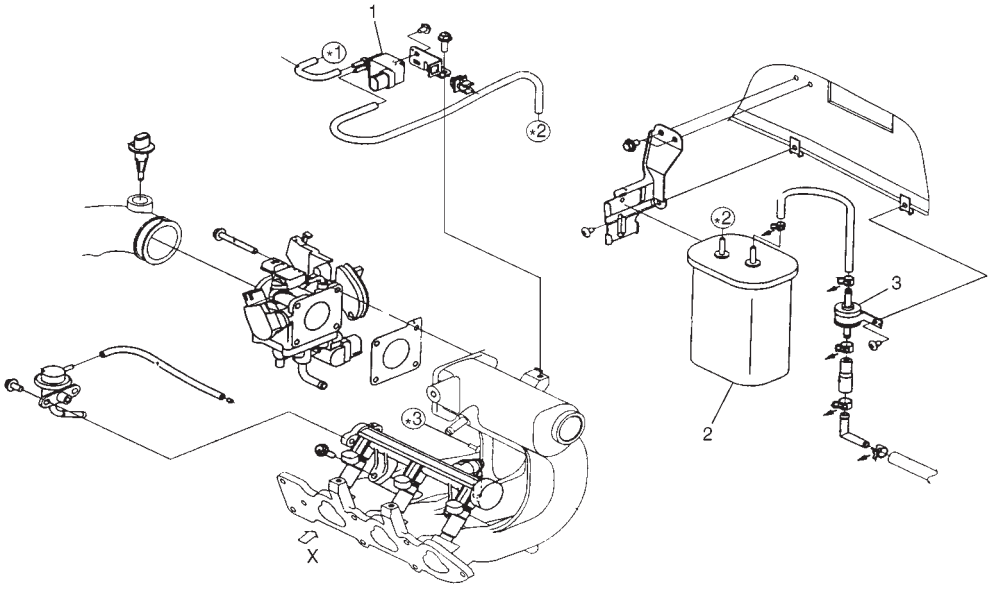

1. EVAP canister purge valve
2. EVAP canister
3. Tank pressure control valve

F8D engine

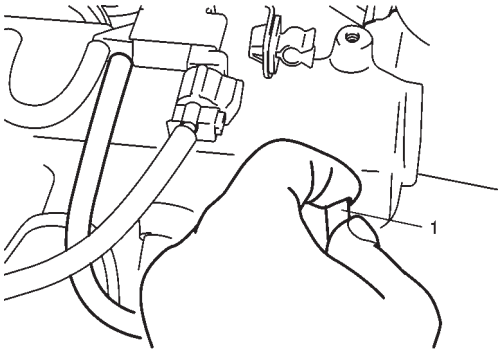

F8B engine

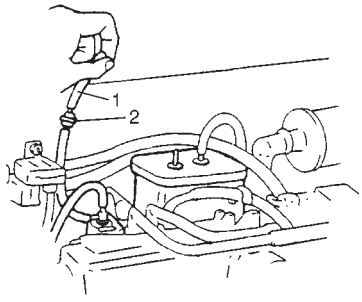

1) Warn up engine to normal operating temperature.
2) Disconnect purge hose (1) from EVAP canister.
3) Place finger against the end of disconnected hose and check that vacuum is not felt there when engine is running at idle speed.
4) Also check that vacuum is felt when engine speed is increased to higher than about 3000 r/min.
   If check result is not satisfactory, check vacuum passage, hoses, EVAP canister purge valve, 1-way valve (if equipped) (2), wire harness and ECM.
   Refer to TABLE B-5 EVAPORATIVE EMISSION CONTROL SYSTEM CHECK.

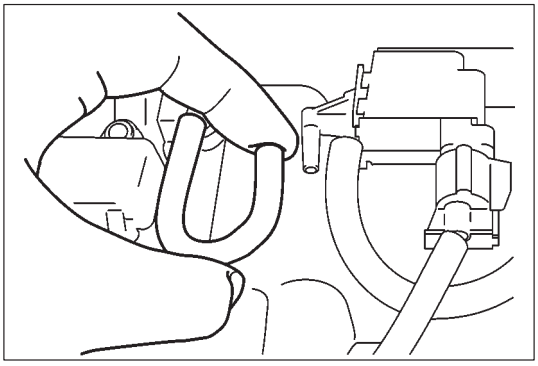

VACUUM PASSAGE INSPECTION

Start engine and run it at idle speed. Disconnect vacuum hose from EVAP canister purge valve. With finger placed against hose disconnected, check that vacuum is applied.
If it is not applied, clean vacuum passage by blowing compressed air.

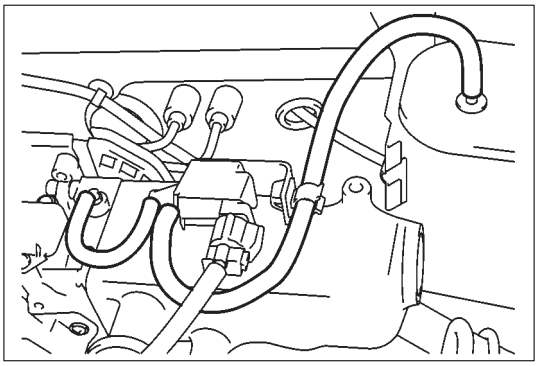

VACUUM HOSE INSPECTION

Check hoses for connection, leakage, clog and deterioration.
Replace as necessary.

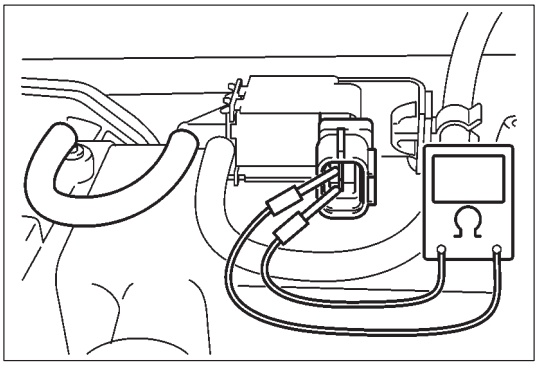

EVAP CANISTER PURGE VALVE INSPECTION

[Using SUZUKI scan tool]

1) With ignition switch OFF, disconnect coupler from EVAP canister purge valve.
2) Check resistance between two terminals of EVAP canister purge valve.
   Resistance of EVAP canister purge valve:
   28 – 36 Ω at 20°C (68°F) F8B engine
   37 – 44 Ω at 20°C (68°F) F8D engine
   If resistance is as specified, proceed to next operation check. If not, replace.
3) Connect coupler to EVAP canister purge valve.
4) Connect SUZUKI scan tool to DLC (1) with ignition switch OFF.

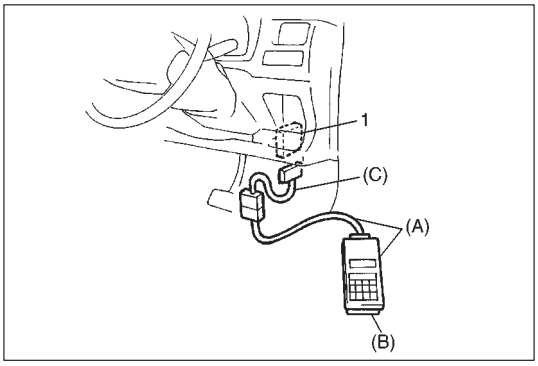

Special Tool
(A): 09931-76011 (SUZUKI scan tool)
(B): Mass Storage Cartridge
(C): 09931-76030 (16/14-pin DLC cable)

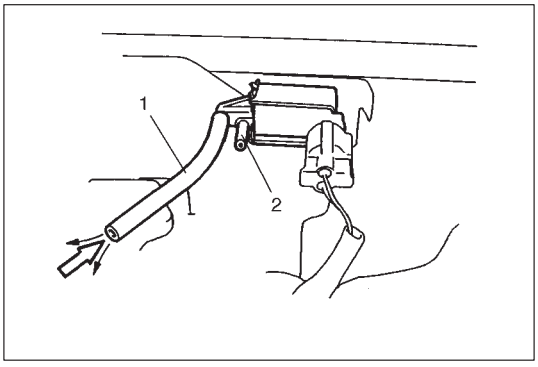

5) Disconnect vacuum hoses from intake manifold.
   Blow into hose (1). Air should not come out of nozzle (2).

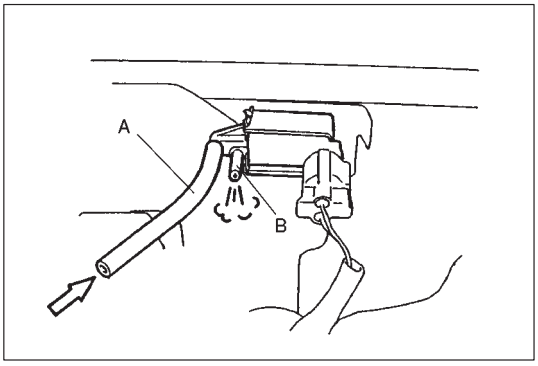

6) Open EVAP canister purge valve using “MISC TEST” mode of SUZUKI scan tool with ignition switch ON. In this state, blow hose “A”.
   Air should come out of nozzle “B”.

   WARNING:
   Do not suck the air through valve. Fuel vapor inside valve is harmful.

   If check result is not as described, check wire harnesses for open or short. If it is in good condition, replace EVAP canister purge valve and recheck.

7) Connect vacuum hoses.

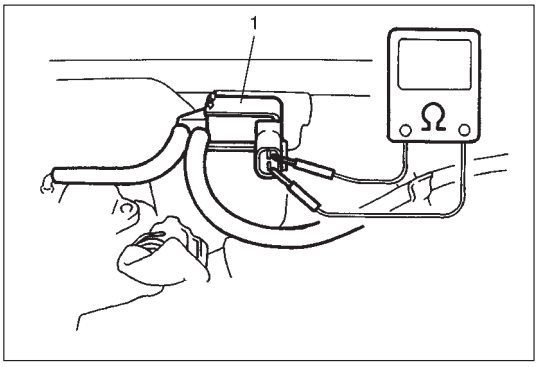

[Not using SUZUKI scan tool]

1) With ignition switch OFF, disconnect coupler from EVAP canister purge valve (1).
2) Check resistance between two terminals of EVAP canister purge valve (1).

   Resistance of EVAP canister purge valve:
   28 – 36 Ω at 20°C (68°F) F8B engine
   37 – 44 Ω at 20°C (68°F) F8D engine

   If resistance is as specified, proceed to next operation check. If not, replace.

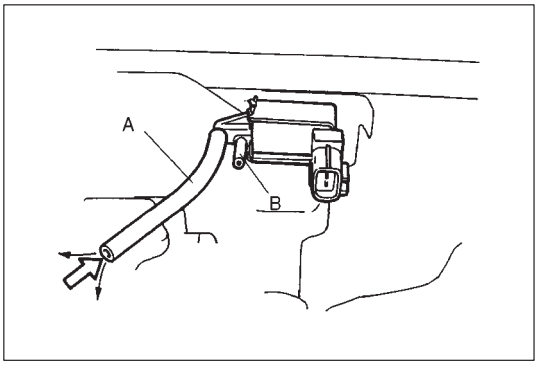

3) Disconnect vacuum hoses from intake manifold.
4) With coupler disconnected, blow into hose “A”. Air should not come out of hose “B”.

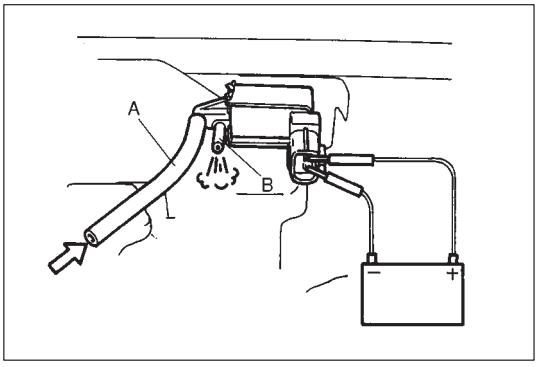

5) Connect 12V-battery to EVAP canister purge valve terminals. In this state, blow hose “A”.
   Air should come out of hose “B”.

   WARNING:
   Do not suck the air through valve. Fuel vapor inside valve is harmful.

   If check result is not as described, replace EVAP canister purge valve.

6) Connect vacuum hoses.
7) Connect EVAP canister purge valve coupler securely.

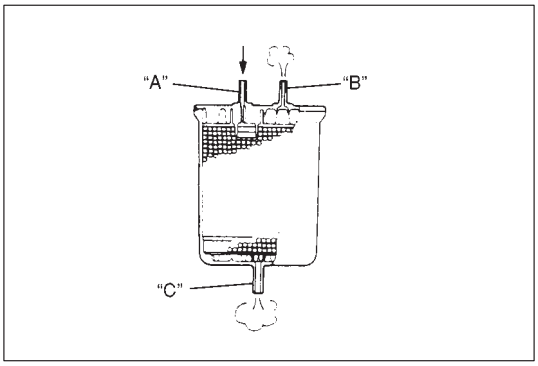

EVAP CANISTER/1-WAY VALVE INSPECTION

WARNING:
DO NOT SUCK nozzles on canister/1-way valve. Fuel vapor inside canister/1-way valve is harmful.

1) Disconnect vacuum hoses from EVAP canister.
2) When air is blown into pipe "A", there should be no restriction of flow through purge pipes "B" and "C".
3) If operation differs from above description, EVAP canister must be replaced.

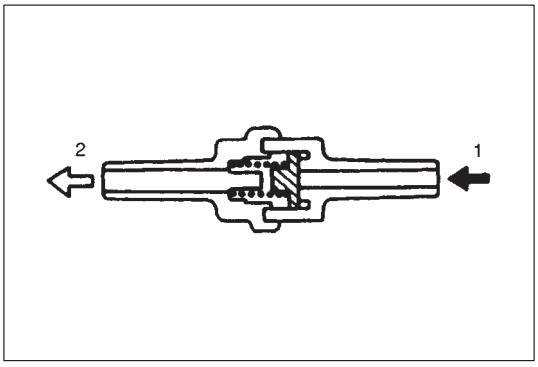

4) Disconnect vacuum hoses from 1-way valve (F8B engine).
5) Air should pass through valve smoothly from EVAP canister side (green side of valve) (1) when blown hard.
6) Air should not pass through valve from EVAP canister purge valve (2) side to EVAP canister side.
7) If operation differs from above description, 1-way valve must be replaced.

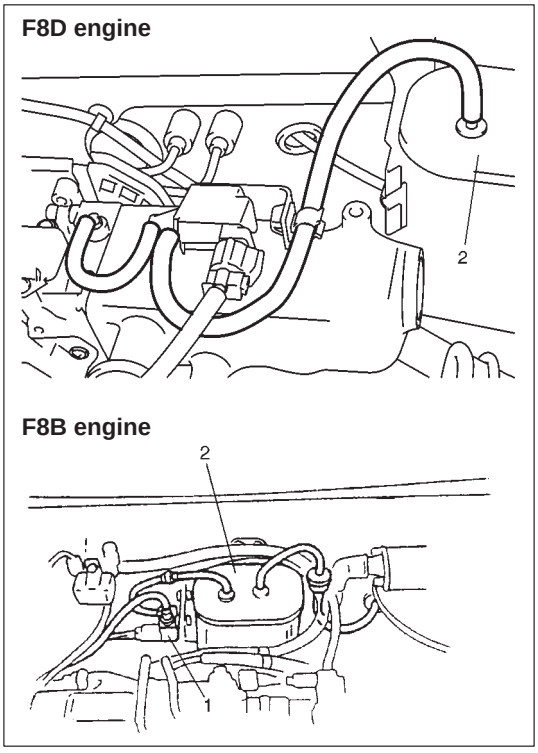

8) Connect hoses to canister (2) and canister purge valve (1).

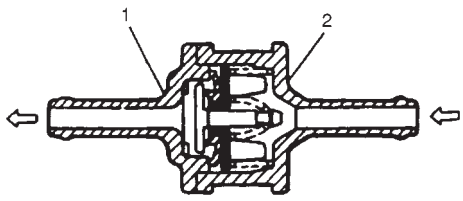

TANK PRESSURE CONTROL VALVE INSPECTION

1) Remove tank pressure control valve installed on the side of EVAP canister.
2) Air should pass through valve smoothly from fuel tank side (3) (black side (2) of check valve) to orange side (1) when blown hard.
3) From orange side, even when blown softly, air should come out of black side.
4) If air doesn't pass through valve in step 2) or hard blow is required in step 3), replace tank pressure control valve.

WARNING:
DO NOT SUCK air through tank pressure control valve. Fuel vapor inside the valve is harmful.

5) Install tank pressure control valve.

NOTE:
When connecting tank pressure control valve between hoses, refer to left figure for installing direction.

PCV SYSTEM

NOTE:

Be sure to check that there is no obstruction in PCV valve or its hoses before checking engine idle speed/IAC duty, for obstructed PCV valve or hose hampers its accurate checking.

PCV HOSE INSPECTION

Check hoses for connection, leakage, clog and deterioration. Replace as necessary.

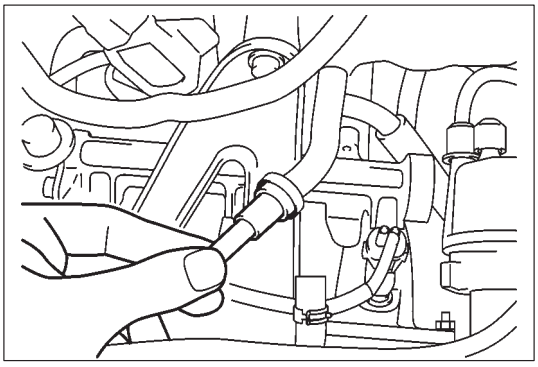

PCV VALVE INSPECTION

1) Disconnect PCV valve from cylinder head cover and install plug to head cover hole.
2) Run engine at idle speed.
3) Place your finger over end of PCV valve to check for vacuum. If there is no vacuum, check for clogged valve. Replace as necessary.

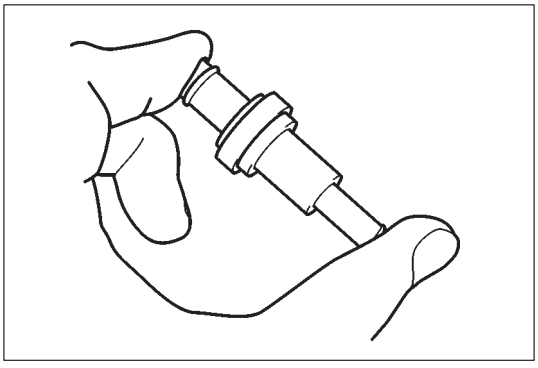

4) After checking vacuum, stop engine and remove PCV valve. Shake valve and listen for the rattle of check needle inside the valve.
   If valve does not rattle, replace it.
5) After checking, remove plug and install PCV valve.

SPECIAL TOOLS

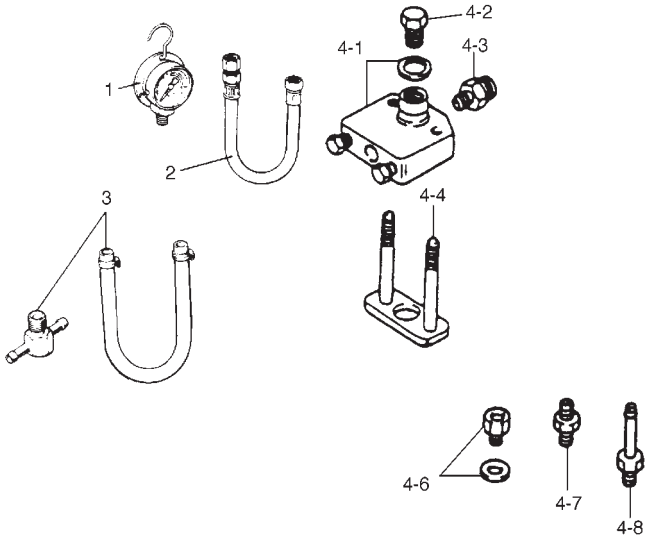

1. Pressure gauge
   09912-58441
2. Pressure hose
   09912-58431
3. 3-way joint & hose
   09912-58490
4. Checking tool set
   09912-58421

4-1. Tool body & washer
4-2. Body plug
4-3. Body attachment
4-4. Holder
4-5. Return hose & clamp
4-6. Body attachment-2 & washer
4-7. Hose attachment-1
4-8. Hose attachment-2

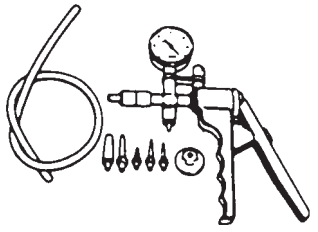

09917-47910
Vacuum pump gauge

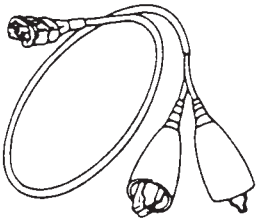

09930-88530
Injector test lead

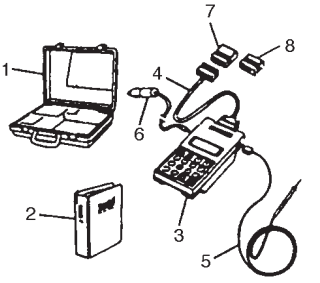

09931-76011
SUZUKI scan tool (Tech 1A) kit

1. Storage case
2. Operator's manual
3. SUZUKI scan tool (Tech 1A)
4. DLC cable
5. Test lead/probe
6. Power source cable
7. DLC cable adapter
8. Self-test adapter

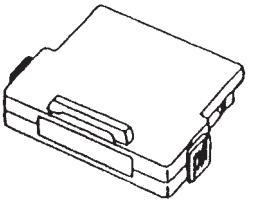

Mass storage cartridge

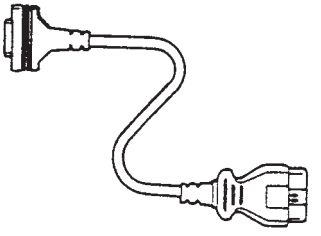

09931-76030
16/14 pin DLC cable

SECTION 6F

IGNITION SYSTEM

CONTENTS

GENERAL DESCRIPTION 6F- 2
Components 6F- 2
System Wiring 6F- 3
DIAGNOSIS 6F- 4
Diagnostic Flow Table 6F- 4
Ignition Spark Test 6F- 6
ON-VEHICLE SERVICE 6F- 6
High-Tension Cords 6F- 6
Spark Plugs 6F- 7
Noise suppressor 6F- 8
Igniter 6F- 8
Ignition Coil 6F- 9
Distributor 6F- 9
Ignition Timing 6F-11
DISTRIBUTOR UNIT 6F-13
SPECIAL TOOLS 6F-15

GENERAL DESCRIPTION

The ignition system used for this vehicle has an electronic ignition control system and consists of the following parts.

- ECM
  It detects the engine condition through the signals from the sensors, determines the most suitable ignition timing and time for electricity to flow to the primary coil and sends a signal to the igniter.
- Igniter
  It turns ON and OFF the primary current of the ignition coil according to the signal from ECM.
- Ignition coil
  When the ignition coil primary current is turned OFF, a high voltage is induced in the secondary winding.
- Distributor
  It distributes a high voltage current to each plug.
- High-tension cords, spark plugs and noise suppressor.
- CMP sensor (Camshaft position Sensor)
  Located in the distributor, it converts the crank angle into voltage variation and sends it to ECM. For its details, refer to SECTION 6E.
- TP sensor, ECT sensor and MAP sensor
  For their details, refer to SECTION 6E.

COMPONENTS

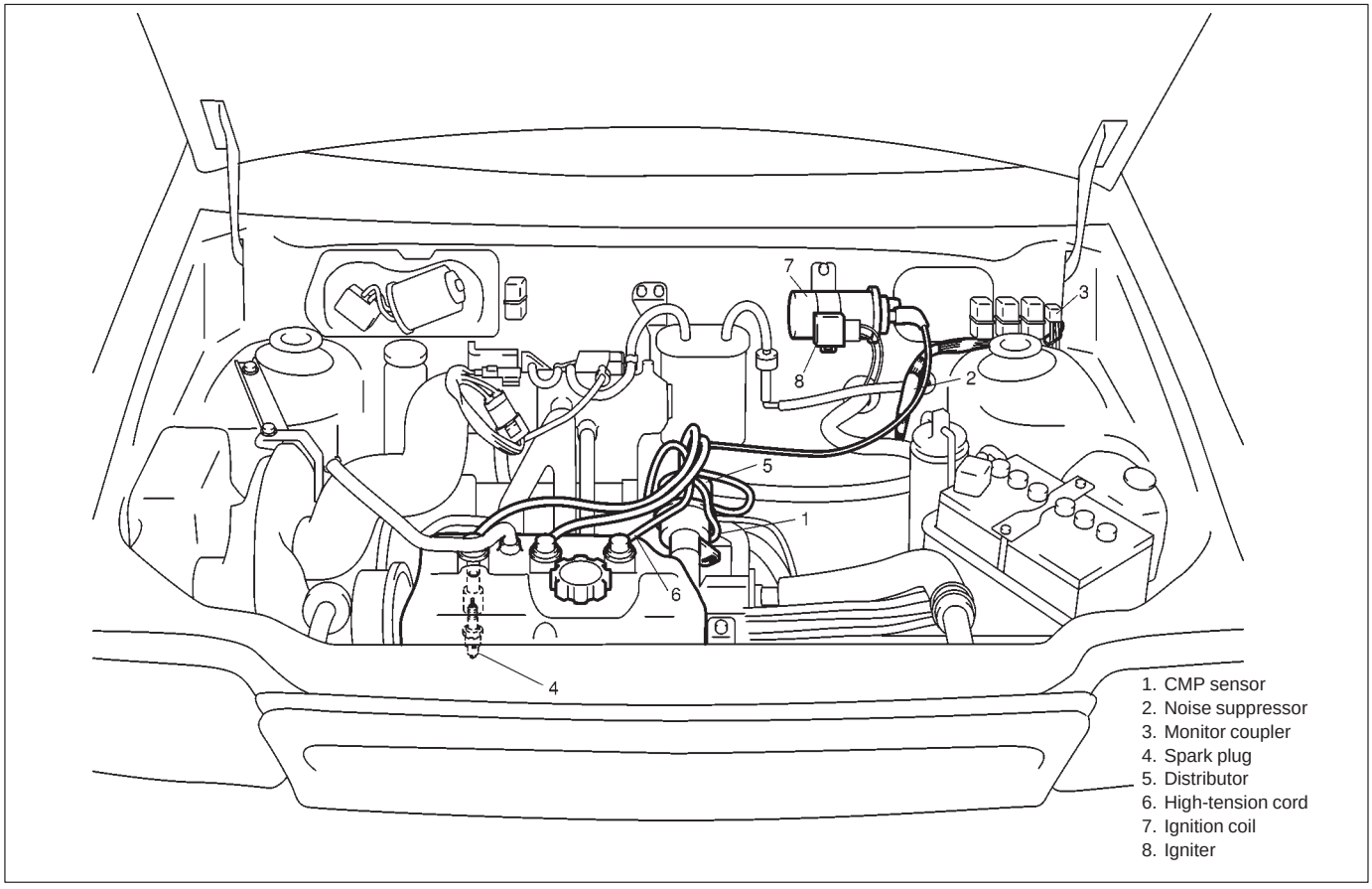

SYSTEM WIRING

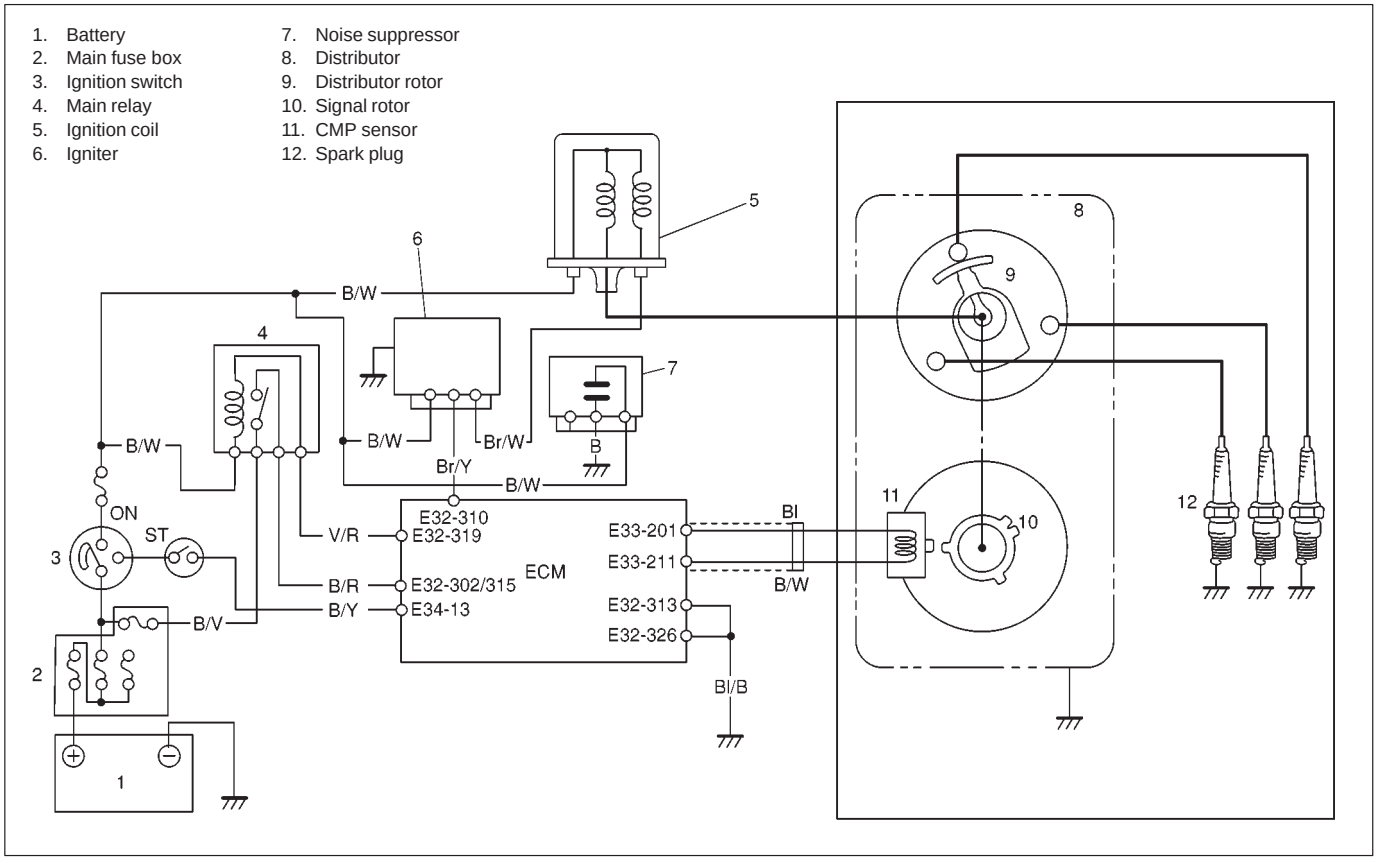

DIAGNOSIS

Condition	Possible Cause	Correction
Engine cranks, but will not start or hard to start	● Blown fuse for ignition coil	Replace
	● Loose connection or disconnection of lead wire or high-tension cord(s)	Connect securely
	● Faulty high-tension cord(s)	Replace
	● Faulty spark plug(s)	Adjust, clean or replace
	● Cracked rotor or cap	Replace
	● Maladjusted signal rotor air gap	Adjust
	● Faulty ignition coil	Replace
	● Faulty noise suppressor	Replace
	● Faulty CMP sensor	Replace
	● Faulty igniter	Replace
	● Faulty ECM	Replace
	● Maladjusted ignition timing	Adjust
Poor fuel economy or engine performance	● Incorrect ignition timing	Adjust
	● Faulty spark plug(s) or high-tension cord(s)	Adjust, clean or replace
	● Faulty ECM	Replace

DIAGNOSTIC FLOW TABLE

STEP	ACTION	YES	NO
1	Was ENGINE DIAGNOSTIC FLOW TABLE in SECTION 6 performed?	Go to Step 2.	Go to ENGINE DIAGNOSTIC FLOW TABLE in SECTION 6.
2	Ignition Spark Test 1) Check all spark plug for condition and type, referring to SPARK PLUG in this section. 2) If OK, perform ignition spark test, referring to IGNITION SPARK TEST in this section. Is spark emitted from all spark plugs?	Go to Step 11 on the next page.	Go to Step 3.
3	Diagnostic Trouble Code (DTC) Check 1) Check DTC stored in ECM, referring to DIAGNOSTIC TROUBLE CODE (DTC) CHECK in SECTION 6E1. Is DTC stored?	Go to applicable flow table corresponding to that code No. in SECTION 6E1.	Go to Step 4.
4	Electrical Connection Check/Noise Suppressor Check 1) Check ignition coil for electrical connection. 2) Check noise suppressor referring to NOISE SUPPRESSOR. Are they in good condition?	Go to Step 5.	Connect securely. Replace noise suppressor.
5	High-tension Cord Check 1) Check high-tension cord for resistance, referring to HIGH-TENSION CORDS in this section. Is check result satisfactory?	Go to Step 6.	Replace high-tension cord(s).
6	Igniter Check 1) Check igniter, referring to IGNITER in this section. Is check result satisfactory?	Go to Step 7.	Replace igniter.

STEP	ACTION	YES	NO
7	Ignition Coil Power Supply And Ground Circuit Check 1) Check ignition coil power supply (“B/W” wire) circuit for open and short. Are circuits in good condition?	Go to Step 8.	Repair or replace.
8	Ignition Coil Check 1) Check ignition coil for resistance, referring to IGNITION COIL in this section. Is check result satisfactory?	Go to Step 9.	Replace ignition coil assembly.
9	CMP Sensor Check 1) Check CMP sensor and signal rotor, referring to DISTRIBUTOR in this section. Is check result satisfactory?	Go to Step 10 on the next page.	Adjust or replace.
10	Ignition Trigger Signal Circuit Check 1) Check ignition trigger signal (“Br/W” wire) circuit for open, short and poor connection. Are circuits in good condition?	Go to Step 11.	Repair or replace.
11	Ignition Timing Check 1) Check initial ignition timing and ignition timing advance, referring to IGNITION TIMING in this section. Is check result satisfactory?	Substitute a known-good ECM and then repeat STEP 2.	Go to Step 12.
12	Ignition Timing Adjustment And Recheck 1) Adjust initial ignition timing, referring to IGNITION TIMING in this section. 2) Recheck initial ignition timing and ignition timing advance, referring to IGNITION TIMING in this section. Is check result satisfactory?	System is in good condition.	Substitute a known-good ECM and then repeat STEP 2.

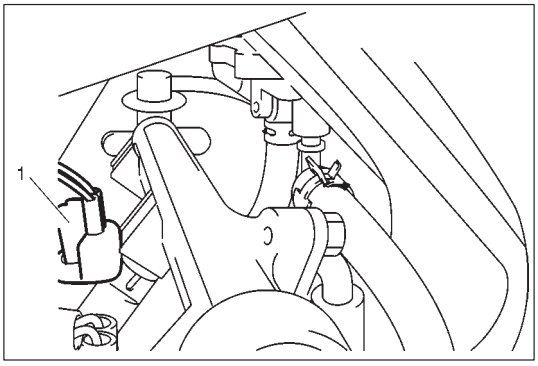

IGNITION SPARK TEST

1) Disconnect injector couplers (1) from injectors.

> **WARNING:**
> **Without disconnection of injector coupler, combustible gas may come out from spark plug holes during this test and may get ignited in engine room.**

2) Remove spark plugs and connect them to high-tension cords, and then ground spark plugs.
3) Crank engine and check if each spark plug sparks.
4) If no spark is emitted, inspect high-tension cords, spark plugs, ignition coil, distributor, etc.

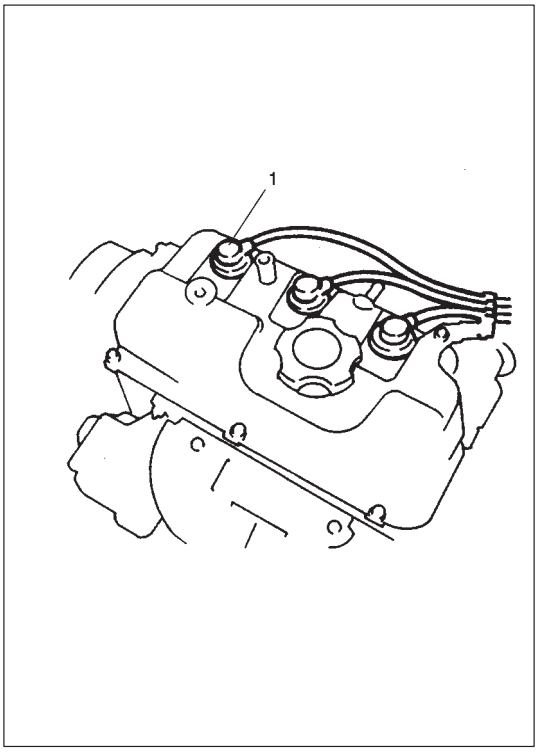

ON-VEHICLE SERVICE

HIGH-TENSION CORDS

REMOVAL

1) Remove high-tension cord at ignition coil while gripping its cap.
2) Remove distributor cap (1) installed with high-tension cords.
3) Remove high-tension cord clamp from cylinder head cover.
4) Pull out high-tension cords from spark plugs while gripping each cap.

> **CAUTION:**
> - **Removal of high-tension cords together with clamps will be recommended so as not to damage their inside wire (resistive conductor).**
> - **For the same reason, pull out each connection by gripping cap portion.**

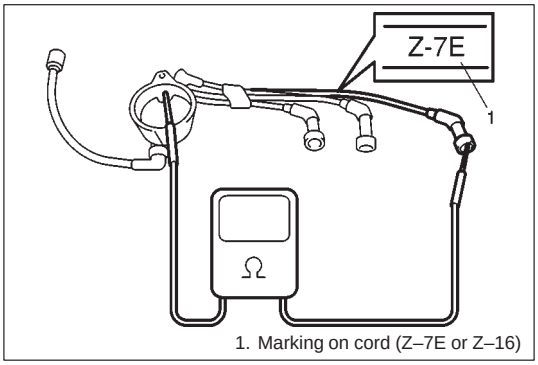

1. Marking on cord (Z–7E or Z–16)

5) Measure resistance of high-tension cord by using ohmmeter.

High-tension cord resistance:
10 – 22 kΩ/m (3.0 – 6.7 kΩ/ft) . . . Z–16 marked
4 – 10 kΩ/m (1.3 – 3.3 kΩ/ft) . . . Z– 7 marked

6) If resistance exceeds specification, inspect distributor terminal and replace high-tension cord(s) and/or distributor cap as required.

CAUTION:
- **Never attempt to use metal conductor high-tension cords as replacing parts.**
- **Insert each cap portion fully when installing high-tension cords.**

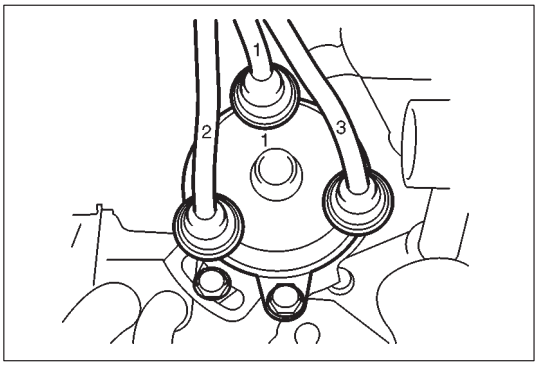

INSTALLATION

1) Reverse removal procedure for installation.

CAUTION:
- **Never attempt to use metal conductor high-tension cords as replacing parts.**
- **Insert each cap portion fully when installing high-tension cords.**

SPARK PLUGS

REMOVAL

1) Remove high-tension cords, referring to HIGH-TENSION CORDS under ON-VEHICLE SERVICE earlier in this section.
2) Remove spark plugs.

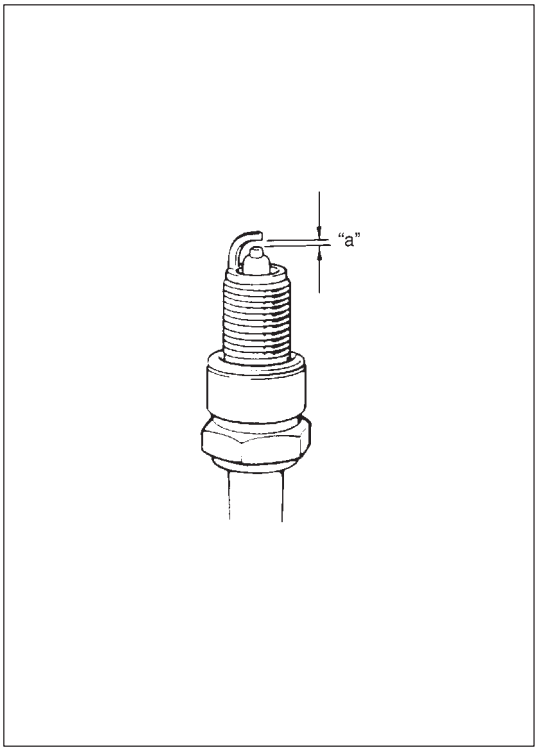

INSPECTION

1) Inspect them for:
   - Electrode wear
   - Carbon deposits
   - Insulator damage
2) If any abnormality is found, adjust air gap, clean with spark plug cleaner or replace them with specified new plugs.

F8D engine
Spark plug air gap "a": 0.8 – 0.9 mm (0.031 – 0.035 in.)
Spark plug type: NGK DCPR7E

F8B engine
Spark plug air gap "a": 0.7 – 0.8 mm (0.028 – 0.031 in.)
Spark plug type: NGK BPR5ES
: DENSO W16EXR-U

INSTALLATION

1) Install spark plugs and torque them to specification.

   Tightening Torque for spark plug
   15 N·m (1.5 kg-m, 10.5 lb-ft) . . . . F8D engine
   25 N·m (2.5 kg-m, 18.0 lb-ft) . . . . F8B engine

2) Install high-tension cords, referring to HIGH-TENSION CORDS under ON-VEHICLE SERVICE earlier in this section.

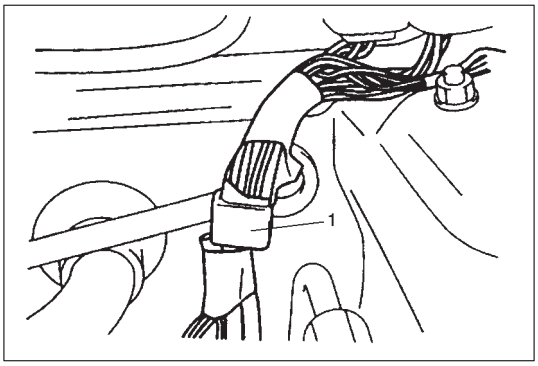

NOISE SUPPRESSOR

REMOVAL

1) Unwrap tape from nose suppressor.
2) Disconnect coupler of noise suppressor (1).
3) Remove noise suppressor.

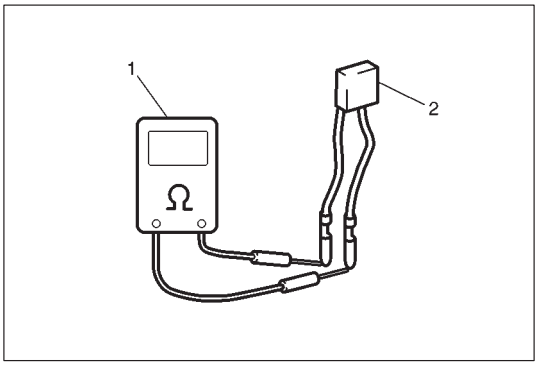

INSPECTION

Using ohmmeter (1), check to be sure that capacitor (Condenser) in noise suppressor (2) is not conductive.
If check result is not satisfactory, replace noise suppressor (2).

INSTALLATION

Reverse removal procedure for installation.

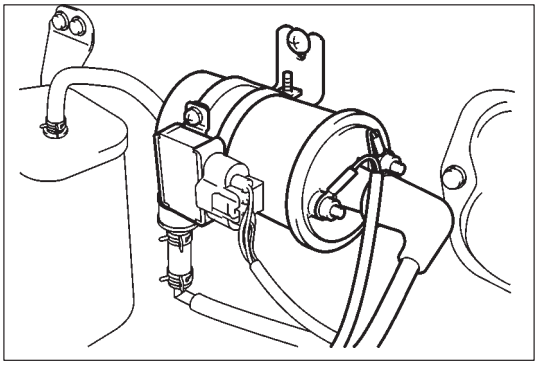

IGNITER

Before this inspection, prepare 5V power supply (3 new 1.5V batteries), one 12V 3.4W light bulb and one 12V battery (fully charged).

1) Remove ignition coil/igniter unit assembly from vehicle.
2) Remove igniter from bracket.

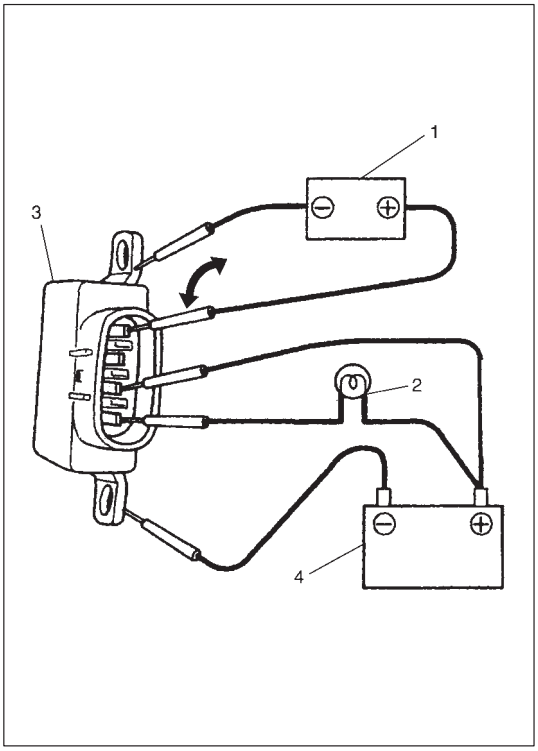

3) Arrange 3 new batteries in series (1) (check total voltage is above 4.7V)
4) Connect light bulb (2) between “c” terminal of igniter (3) and battery (4) positive (+) terminal, then connect battery negative (–) terminal to igniter body.
   Also connect battery positive (+) terminal, and “b” terminal/ of igniter.
   Check that the light bulb does not illuminate.
5) Connect negative (–) terminal of batteries and igniter body.
   Check that the light bulb illuminate when positive (+) terminal of batteries is connected to “a” terminal of igniter.
   If inspection result is not satisfactory, replace igniter.
6) Install igniter.

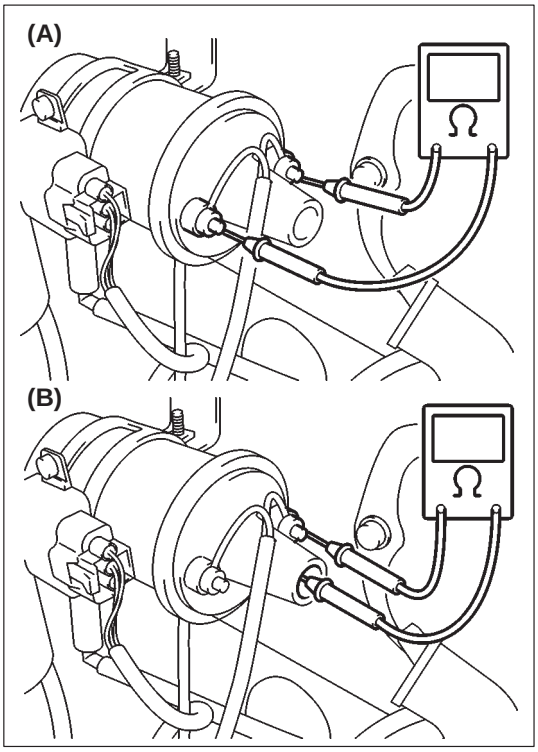

IGNITION COIL

1) Pull out high-tension cord by gripping its cap.
2) Disconnect ignition coil coupler.
3) Measure primary and secondary coil resistances.

Ignition coil resistance (at 20°C/68°F)
Primary : 1.33 – 1.63 Ω . . (A)
Secondary: 10.7 – 14.5 kΩ . (B)

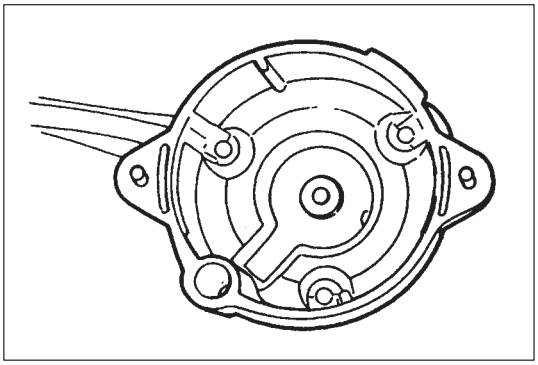

DISTRIBUTOR

INSPECTION

Distributor Cap and Rotor

Check cap and rotor for crack and their terminals for corrosion and wear. Replace as necessary.

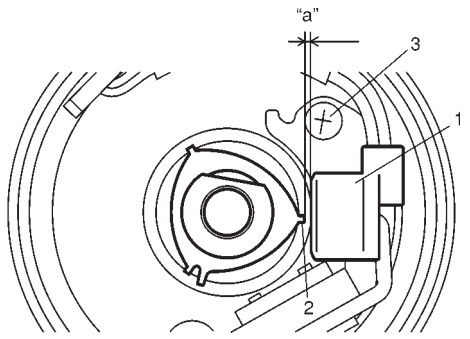

Signal Rotor Air Gap

1) Remove distributor cap and rotor.
2) Using thickness gauge, measure air gap, between signal rotor tooth (2) and CMP sensor (generator) (1).

   Signal rotor air gap "a": 0.2 – 0.4 mm (0.008 – 0.016 in.)

3) If gap is out of specification, loosen CMP sensor (signal generator) securing screws (3). Move CMP sensor (generator) and adjust gap to specification. After adjustment, tighten securing screws and recheck gap.

   NOTE:
   Check to make sure that CMP sensor (signal generator) tooth is free from any metal particles.

4) Install distributor cap and rotor.

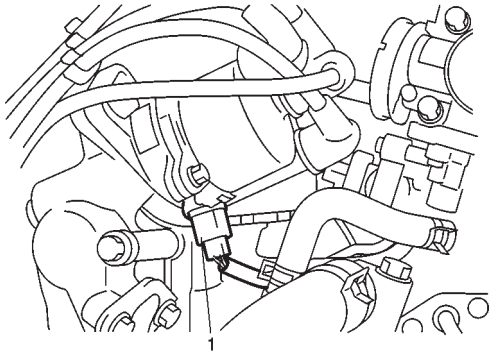

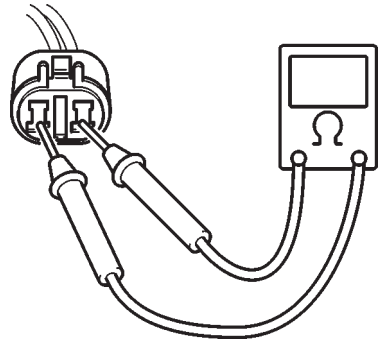

CMP Sensor Resistance

1) Disconnect distributor lead wire coupler (1).
2) Measure resistance of CMP sensor by using ohmmeter.

   CMP sensor resistance:
   185 – 275 Ω (at -10–50°C/ 14–122°F)
   240 – 325 Ω (at 50–100°C/122–212°F)

3) If resistance is out of specification, replace CMP sensor as follows.
4) Remove distributor cap and rotor.
5) Remove CMP sensor securing screws.
6) Replace CMP sensor.
7) Adjust signal rotor air gap to specifications as previously outlined.
8) Install rotor, distributor cap seal and cap.

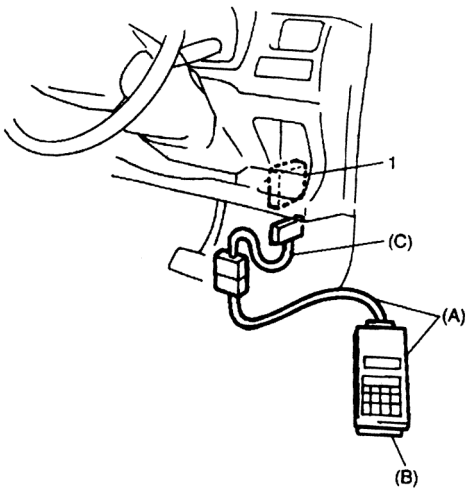

IGNITION TIMING

NOTE:
Before starting engine, place transmission gear shift lever in "Neutral" and set parking brake.

INSPECTION AND ADJUSTMENT

1) When using SUZUKI scan tool, connect SUZUKI scan tool to DLC with ignition switch OFF.

   Special Tool (when using SUZUKI scan tool)
   (A): 09931-76011 (SUZUKI scan tool)
   (B): Mass storage cartridge
   (C): 09931-76030 (16/14 pin DLC adapter)

2) Start engine and warm it up to normal operating temperature.
3) Make sure that all of electrical loads except ignition are switched off.
4) Check to be sure that idle speed is within specification. (Refer to SECTION 6E1).

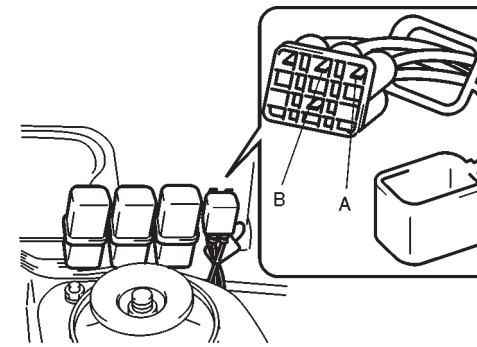

5) Set timing light to No.1 high-tension cord.
6) Fix ignition timing to initial one as follows:
   When using SUZUKI scan tool:
   a) Select "MISC" mode on SUZUKI scan tool and fix ignition timing to initial one.

   When not using SUZUKI scan tool:
   a) Disconnect scan tool from DLC if connected and connect A and B terminals of monitor coupler by using service wire so that ignition timing is fixed on initial one.

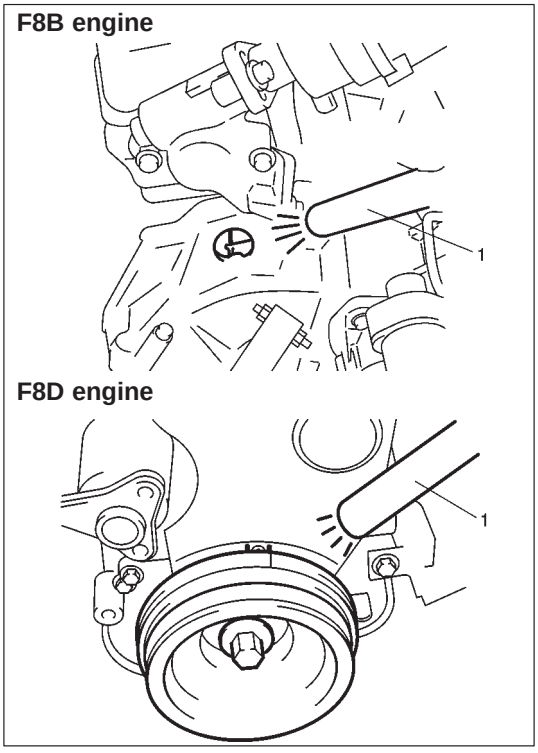

7) Using timing light (1), check that timing is within specification.

Initial ignition timing (Test switch terminal grounded or fixed by scan tool):
5 ± 1° BTDC (at idle speed)
Ignition order 1-3-2

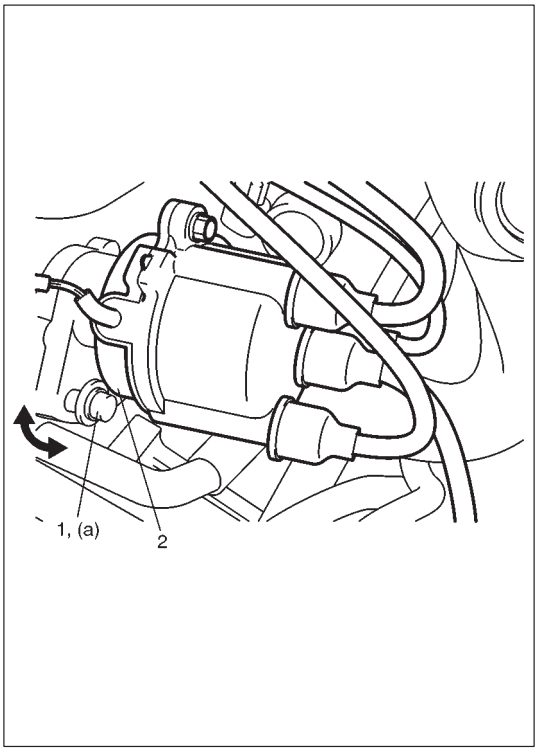

8) If ignition timing is out of specification, remove air cleaner assembly then loosen flange bolts (1), adjust timing by turning distributor assembly (2) while engine is running, and then tighten bolts (1).

Tightening Torque
(a): 23 N·m (2.3 kg-m, 14.0 lb-ft)

9) After tightening distributor flange bolts, recheck that ignition timing is within specification.
10) After checking and/or adjusting initial ignition timing, release ignition timing fixation by SUZUKI scan tool or disconnect service wire from monitor coupler.
11) With engine idling (test switch terminal ungrounded, vehicle stopped), check that ignition timing is about 8° BTDC (Constant variation within a few degrees from 8° indicates no abnormality but proves operation of electronic timing control system). Also, check that increasing engine speed advances ignition timing.
If above check results are not satisfactory, check test switch terminal circuit and ECM.

DISTRIBUTOR UNIT

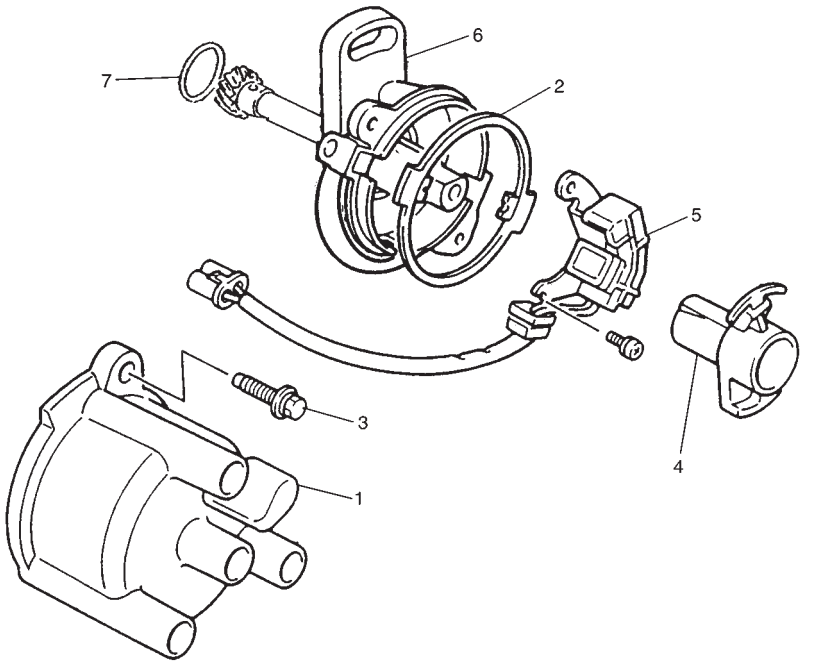

1. Cap
2. Cap seal
3. Cap screw
4. Rotor
5. CMP sensor (Signal generator)
6. Housing
7. O-ring

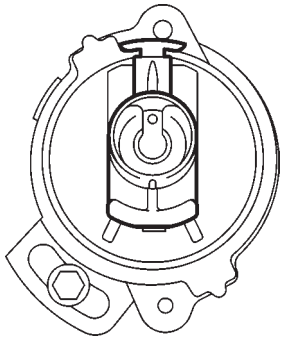

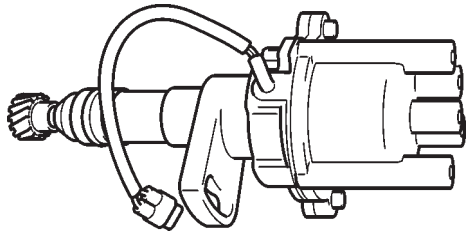

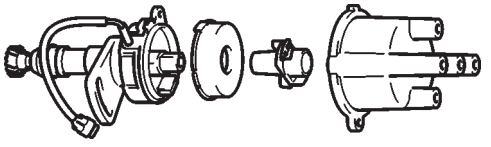

REMOVAL

1) Disconnect negative cable at battery.
2) Disconnect distributor connector.
3) Disconnect high tension cords from distributor cap.
4) Remove distributor cap. Then to facilitate re-installation, turn crankshaft in normal direction (clockwise as viewed from crankshaft pulley side) so that distributor rotor is positioned at No.1 terminal of distributor cap.
5) Remove distributor flange bolt.
6) Pull out distributor housing assembly.

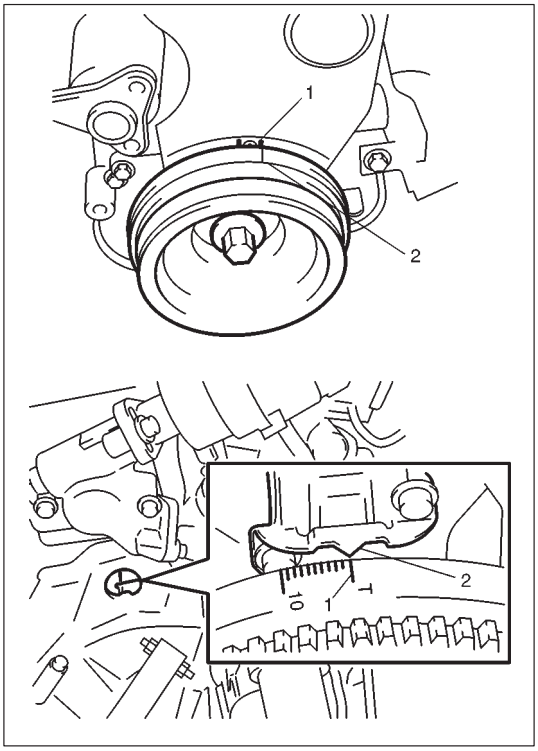

INSTALLATION

1) If distributor rotor has not been positioned at No.1 terminal of distributor cap in distributor removal, perform following step.
   a) Turn over crankshaft in normal direction (clockwise as viewed from crankshaft pulley side) until Timing notch (2) on pulley aligns with timing mark “0” (1) on timing tab or “T” mark on flywheel (1).
   b) After aligning two marks, remove cylinder head cover to visually confirm that rocker arms are not riding on camshaft cams at No.1 cylinder. If the arms are found to be riding on the cams, turn over crankshaft 360° to align two marks anew.

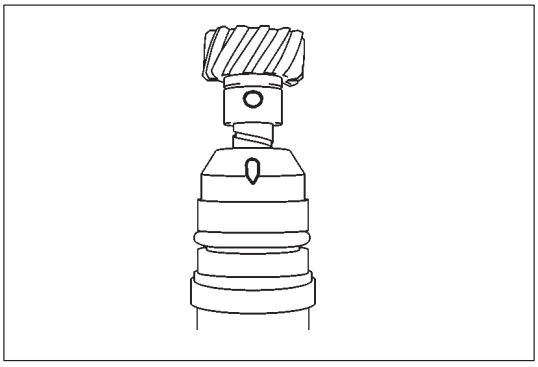

2) Check O-ring for damage and deterioration.
   Replace if necessary.

   NOTE:
   If O-ring is installed, apply engine oil to it.

3) Align punch mark on gear with dent mark on housing.

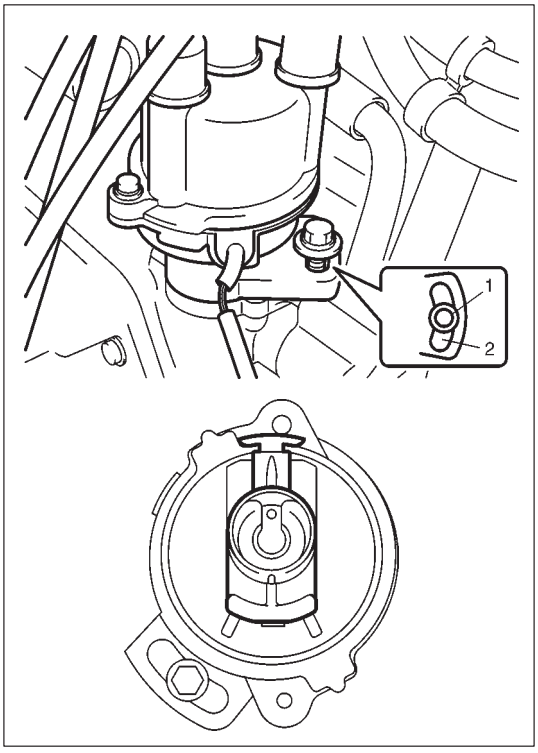

4) Insert distributor into gear case in such a way that the center of distributor flange bolt (1) will coincide with distributor flange bolt hole (2) provided in distributor gear case. When inserting the distributor completely, position of distributor rotor becomes as shown in figure. Secure distributor in place tentatively by making flange bolt finger-tight.
5) Check to make sure that rotor is in good condition.
6) Inspect distributor cap and clean or replace as required.
7) Make sure that distributor cap seal is placed properly and install cap, and then fasten it with screws.
8) Connect distributor coupler.
9) Connect negative cable at battery.
10) Check and adjust ignition timing as previously outlined, refer to IGNITION TIMING in this section.

SPECIAL TOOLS

	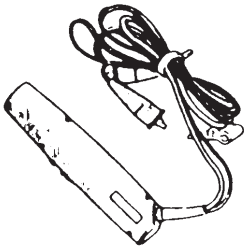	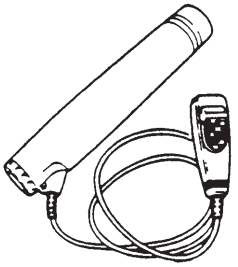
09900-25002 Pocket tester	09900-27301 Timing light (DC 12 V)	09930-76420 Timing light (Dry cell type)

SECTION 6G

CRANKING SYSTEM

CONTENTS

GENERAL DESCRIPTION 6G-2
Cranking Circuit 6G-2
Starting Motor Circuit 6G-2
DIAGNOSIS 6G-3
UNIT REPAIR OVERHAUL 6G-5
Dismounting and Remounting 6G-6
Disassembly 6G-6
Reassembly 6G-7
Inspection 6G-8
Plunger 6G-8
Magnetic switch 6G-8
Brush 6G-9
Brush holder 6G- 9
Armature 6G- 9
Yoke 6G-10
Over-running clutch 6G-10
Performance Test 6G-11
Pull-in test 6G-11
Hold-in test 6G-11
Pinion return test 6G-12
No-load performance test 6G-12
SPECIFICATIONS 6G-13
REQUIRED SERVICE MATERIAL 6G-13
SPECIAL TOOL 6G-13

GENERAL DESCRIPTION

CRANKING CIRCUIT

The cranking circuit consists of the battery, starting motor, ignition switch, and related electrical wiring. These components are connected electrically.
Only the starting motor will be covered in this section.

STARTING MOTOR CIRCUIT

- The magnetic switch coils are magnetized when the ignition switch is closed.
- The resulting plunger and pinion drive lever movement causes the pinion to engage the engine flywheel gear and the magnetic switch main contacts to close, and cranking takes place.
- When the engine starts, the pinion over-running clutch protects the armature from excessive speed until the switch is opened, at which time the return spring causes the pinion to disengage.

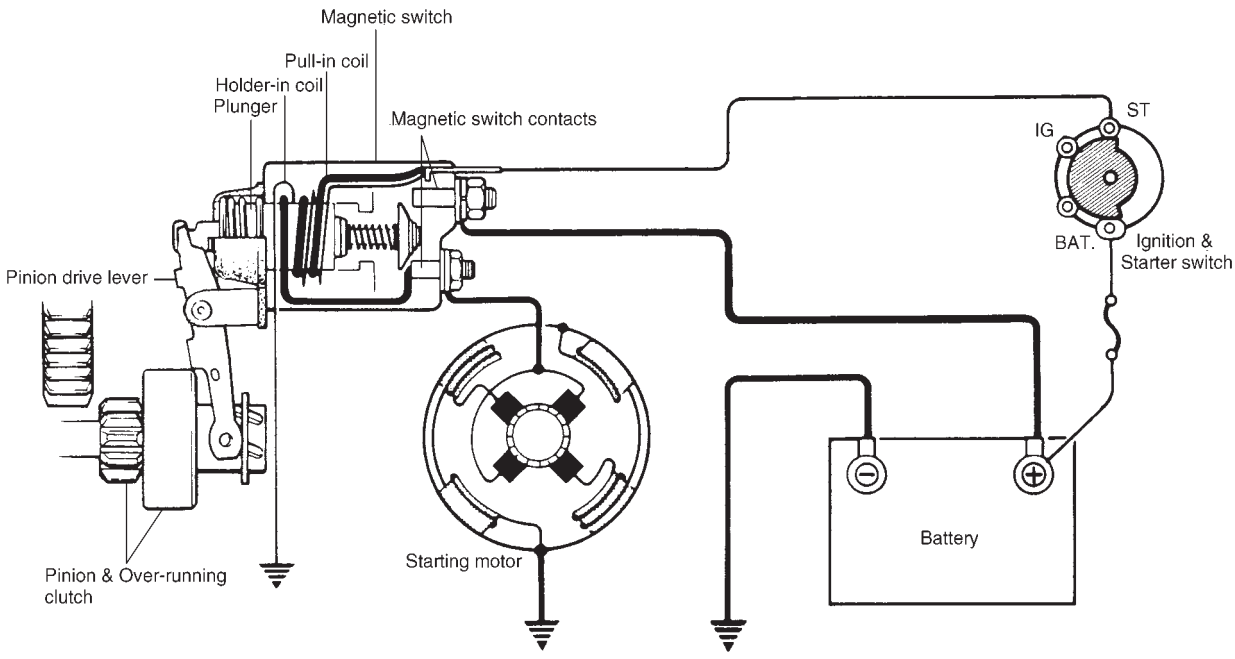

DIAGNOSIS

Possible symptoms due to starting system trouble would be as follows:

- Starting motor does not run (or runs slowly)
- Starting motor runs but fails to crank engine
- Abnormal noise is heard

Proper diagnosis must be made to determine exactly where the cause of each trouble lies ..... in battery, wiring harness, (including starting motor switch), starting motor or engine.

Do not remove motor just because starting motor does not run. Check following items and narrow down scope of possible causes.

1) Condition of trouble
2) Tightness of battery terminals (including ground cable connection on engine side) and starting motor terminals
3) Discharge of battery
4) Mounting of starting motor

Condition	Possible Cause	Correction
Motor not running	**No operating sound of magnetic switch**	
	● Battery run down	Recharge battery.
	● Battery voltage too low due to battery deterioration	Replace battery.
	● Poor contact in battery terminal connection	Retighten or replace.
	● Loose grounding cable connection	Retighten.
	● Fuse set loose or blown off	Tighten or replace.
	● Poor contacting action of ignition switch and magnetic switch	Replace.
	● Lead wire coupler loose in place	Retighten.
	● Open-circuit between ignition switch and magnetic switch	Repair.
	● Open-circuit in pull-in coil	Replace magnetic switch.
	● Brushes are seating poorly or worn down	Repair or replace.
	● Poor sliding of plunger and/or pinion	Repair.
	Operating sound of magnetic switch heard	
	● Battery run down	Recharge battery.
	● Battery voltage too low due to battery deterioration	Replace battery.
	● Loose battery cable connections	Retighten.
	● Burnt main contact point, or poor contacting action of magnetic switch	Replace magnetic switch.
	● Brushes are seating poorly or worn down	Repair or replace.
	● Weakened brush spring	Replace.
	● Burnt commutator	Replace armature.
	● Poor grounding of field coil	Repair.
	● Layer short-circuit of armature	Replace.
	● Crankshaft rotation obstructed	Repair.

Condition	Possible Cause	Correction
Starting motor running but too slow (small torque)	**If battery and wiring are satisfactory, inspect starting motor**	
	● Insufficient contact of magnetic switch main contacts	Replace magnetic switch.
	● Layer short-circuit of armature	Replace.
	● Disconnected, burnt or worn commutator	Repair commutator or replace armature.
	● Poor grounding of field coil	Repair.
	● Worn brushes	Replace brush.
	● Weakened brush springs	Replace spring
	● Burnt or abnormally worn end bush	Replace bush.
Starting motor running, but not cranking engine	● Worn pinion tip	Replace over-running clutch.
	● Poor sliding of over-running clutch	Repair.
	● Over-running clutch slipping	Replace over-running clutch.
	● Worn teeth of pinion gear or flywheel	Replace pinion or flywheel.
Noise	● Abnormally worn bush	Replace bush.
	● Worn pinion or worn teeth of pinion gear	Replace pinion or flywheel.
	● Poor sliding of pinion (failure in return movement)	Repair or replace.
	● Lack of oil in each part	Lubricate.
Starting motor does not stop running	● Fused contact points of magnetic switch	Replace magnetic switch.
	● Short-circuit between turns of magnetic switch coil (layer short-circuit)	Replace magnetic switch.
	● Failure of returning action in ignition switch	Replace.

UNIT REPAIR OVERHAUL

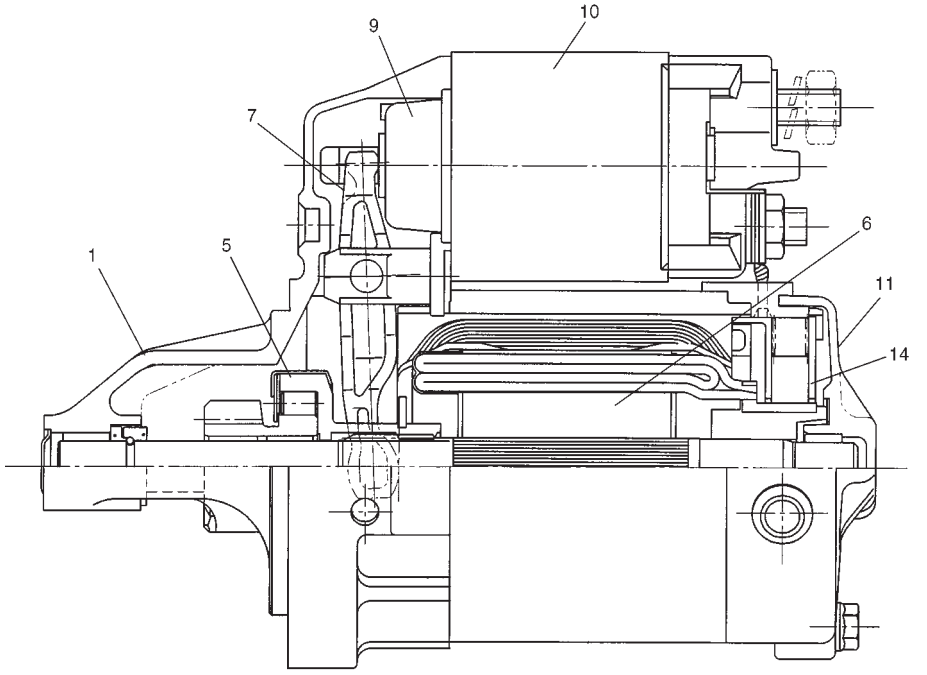

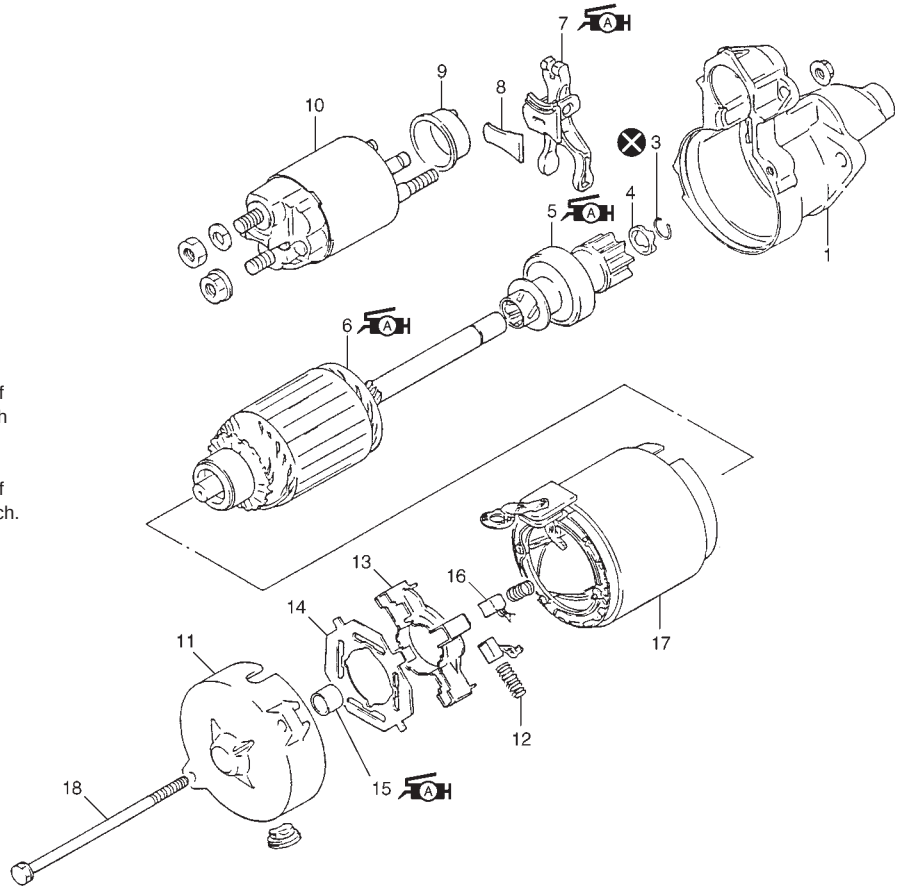

1. Drive housing assembly
2. Blank
3. Snap ring
4. Pinion stop ring
5. Over-running clutch assembly:
   Apply grease A 99000-25010 to inside and outside of spline.
6. Armature:
   Apply grease A 99000-25010 to joint of drive housing bush, over-running clutch and armature shaft bush.
7. Pinion drive lever:
   Apply grease A 99000-25010 to joint of magnetic switch and over-running clutch.
8. Seal
9. Boot
10. Magnetic switch
11. Rear housing
12. Brush spring
13. Brush holder
14. Insulator
15. Bush:
    Apply grease A 99000-25010 to inside and outside.
16. Brush
17. Yoke assembly
18. Housing bolt

: Do not reuse

DISMOUNTING AND REMOUNTING

1) Disconnect negative cable at battery.
2) Remove A/C compressor (if equipped), refer to SECTION 1B.
3) Disconnect magnetic switch lead wire and battery cable from starting motor terminals.
4) Remove 2 mounting bolts.
5) Remove starting motor.
6) To remount, reverse above procedure.

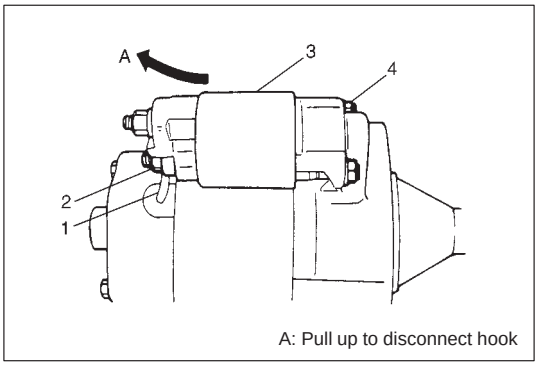

A: Pull up to disconnect hook

DISASSEMBLY

1) Remove nut (2) and disconnect lead wire (1) from magnetic switch (3).
2) Remove 2 nuts (4) and then take out magnetic switch by pulling up its rear portion so as to inside hook is disconnected from drive lever.

NOTE:
Do not disassemble magnetic switch. Replace it as assembly, when required.

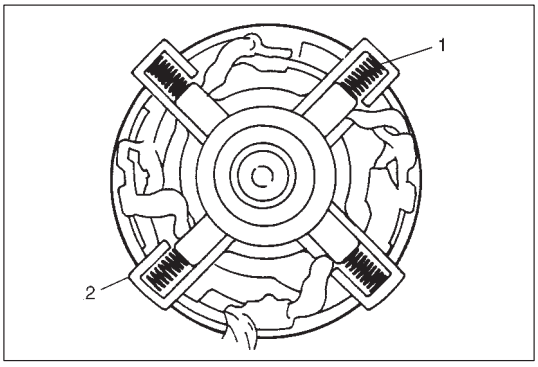

3) Remove housing bolts (through bolts) and then pull out commutator end housing.
4) Remove insulator, brush springs (1) and then brush holder (2).

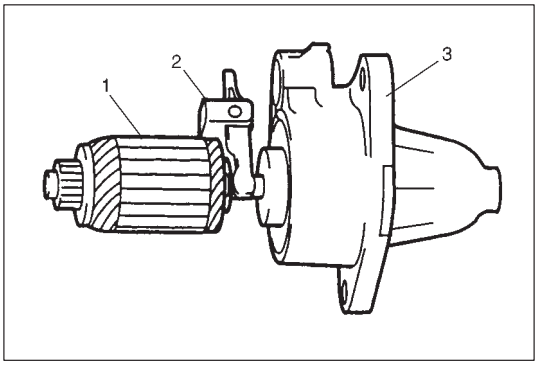

5) Remove yoke, armature (1) and drive lever (2) from drive housing (3).

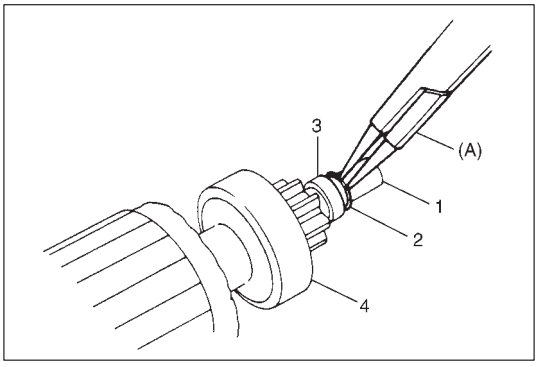

6) Draw pinion stop ring (3) toward over-running clutch (4) side and remove snap ring (2) by using snap ring pliers assisted with screwdriver, then pull out pinion stop ring and over-running clutch from armature (1).

Special Tool
(A) : 09900-06107

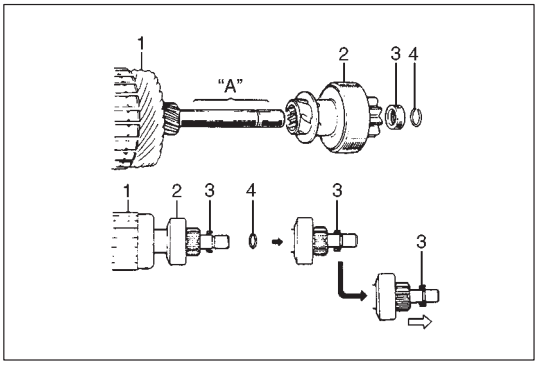

REASSEMBLY

1) Inspect component parts (Refer to INSPECTION) and replace with new ones as necessary.
2) Before installing over-running clutch (2) to armature (1), apply grease as shown in figure and then fasten stop ring (3) with snap ring (4).

   "A" : Grease 99000-25010

   NOTE:
   Use new snap ring on shaft for installation. Do not reuse snap ring.

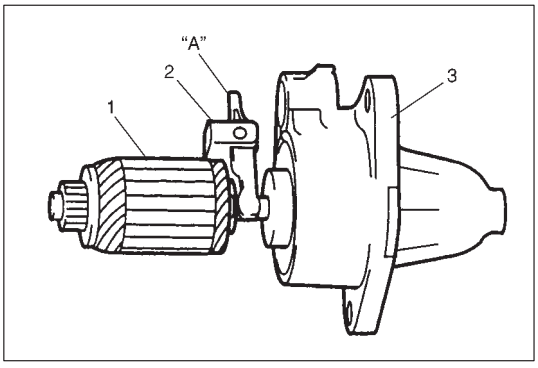

3) Apply grease to drive lever (2) and combine it with armature (1). Then assemble them with drive housing (3).

   "A" : Grease 99000-25010

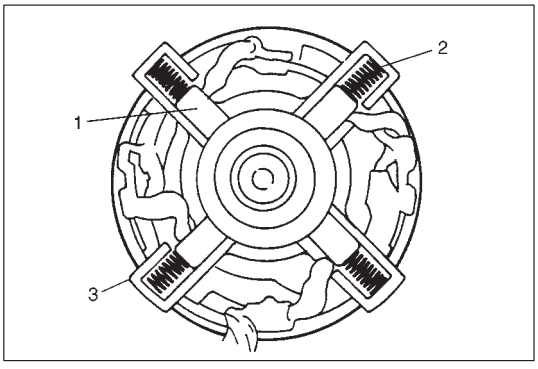

4) Install yoke and brush holder (3), then set 4 brushes (1) with their springs (2). Install insulator.

   NOTE:
   - **When installing brushes, make sure that brushes and commutator have been degreased thoroughly.**
   - **Check to confirm that brush parts do not have unnecessary contacts with others.**

5) Install rear housing applied with grease in its bush inside.

   Grease 99000-25010

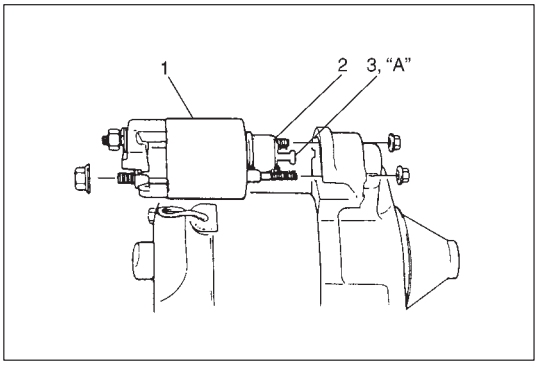

6) Replace magnetic switch (1) or its boot (2) with new one, if required, then apply grease to plunger (3).

   "A" : Grease 99000-25010

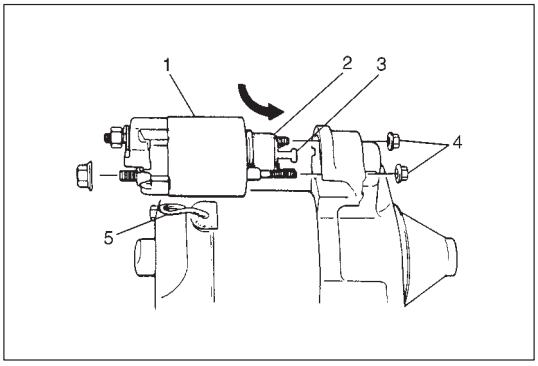

7) Hook magnetic switch plunger (3) with drive lever and then fasten magnetic switch assembly (1) with nuts (4).
8) Connect lead wire (5) as it was and then check magnetic switch for operation.

NOTE:
- **Before installing nuts, make sure that plunger hook is connected with drive lever without fail.**
- **Face boot (2) breather down.**

Upon completion of assembly, carry out PERFORMANCE TEST.

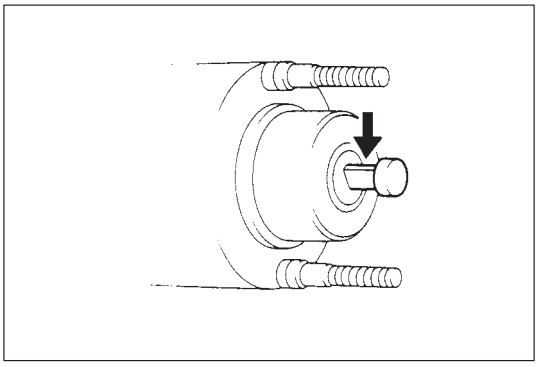

INSPECTION

PLUNGER

Inspect plunger for wear. Replace if necessary.

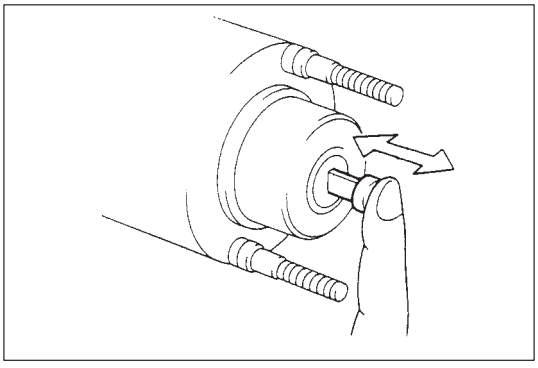

MAGNETIC SWITCH

Push in plunger and release it. The plunger should return quickly to its original position. Replace if necessary.

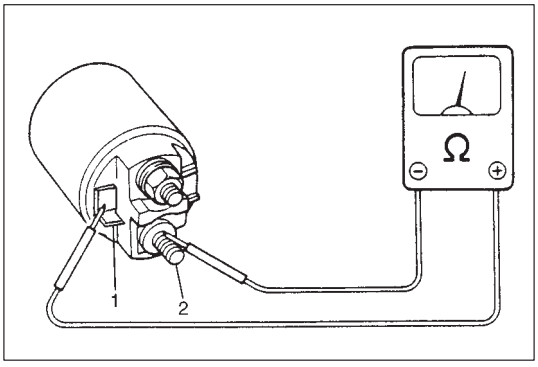

- **Pull-In Coil Open Circuit Test**
  Check for continuity across magnetic switch ‘S’ terminal (1) and ‘M’ terminal (2). If no continuity exists, coil is open and should be replaced.

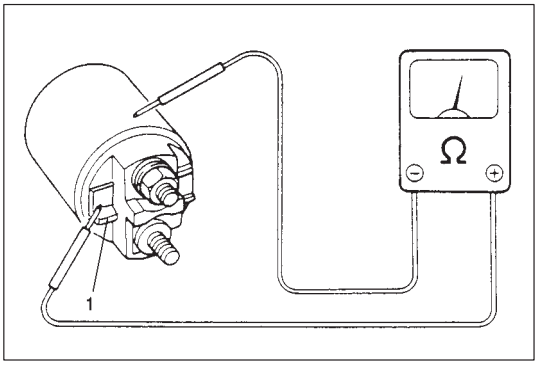

- **Hold-In Coil Open Circuit Test**
  Check for continuity across magnetic switch ‘S’ terminal (1) and coil case. If no continuity exists, coil is open and should be replaced.

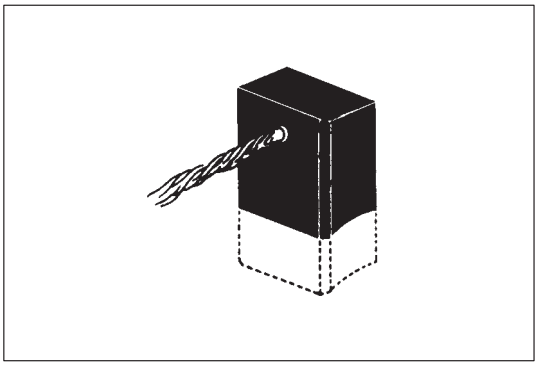

BRUSH

Measure length of brushes and replace them as necessary.

Brush length
Limit : 6.0 mm (0.236 in.)

BRUSH HOLDER

Check brush springs for rust or breakage. Also check brush holder for rust and insulation. Replace it as assembly, if required.

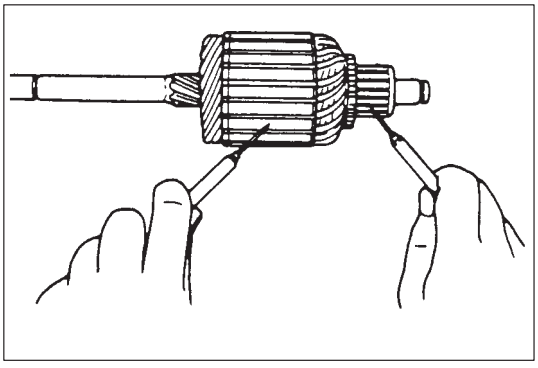

ARMATURE

- **Ground Test**
  Between commutator segment and armature core should be insulated. Use ohmmeter for inspection.

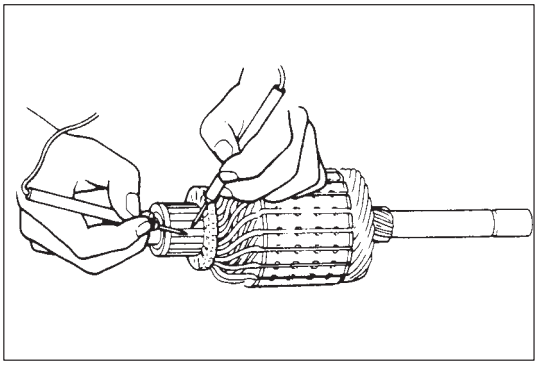

- **Open Circuit Test**
  Check for continuity between segments. If there is no continuity at any test point, there is an open circuit and armature must be replaced.

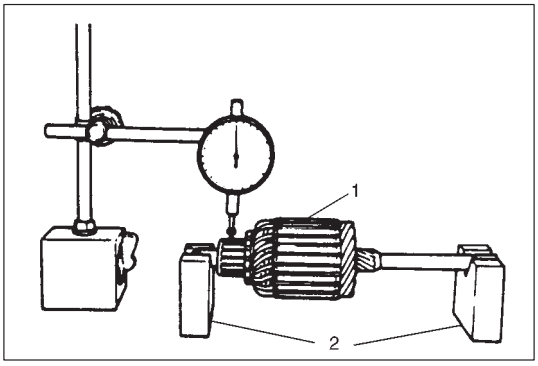

- Check commutator for run-out with armature (1) supported on V-blocks (2). Correct it by using lathe, if required.

  Commutator out of round
  Limit (maximum value): 0.4 mm (0.015 in.)

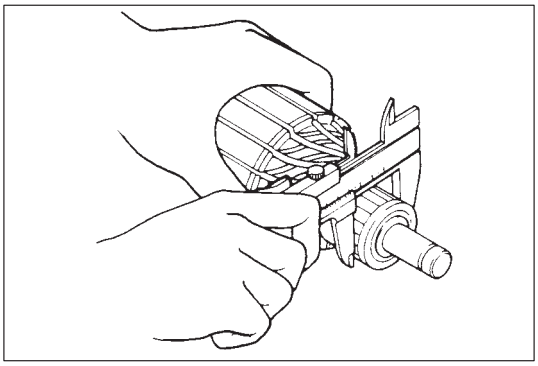

- Check for wear and replace armature if diameter is below limit.

  Commutator outside diameter
  Limit (minimum value): 27 mm (1.063 in.)

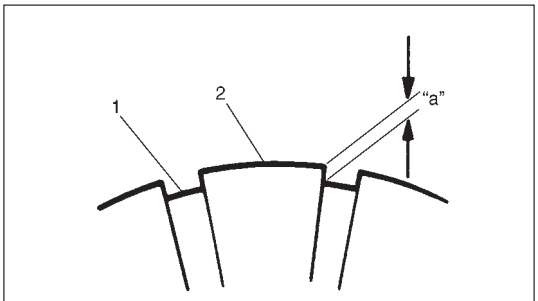

1. Mica insulator
2. Commutator segment

- Correct and clean surface by using #400 emery cloth. Also check mica depth and correct it as required.

  Commutator insulator depth "a"
  Limit (minimum value): 0.2 mm (0.008 in.)

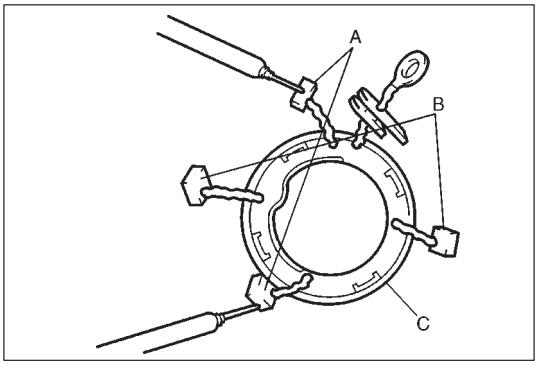

YOKE

Check field coil for continuity. There should be continuity between following terminals.

- Between A terminals.
- Between B terminals.
- Between B terminal and C (bare metal part of yoke body).

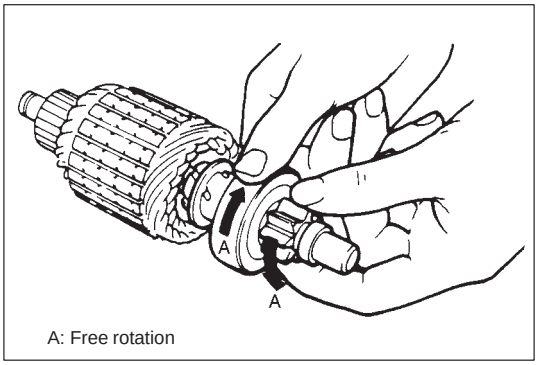

A: Free rotation

OVER-RUNNING CLUTCH

Inspect pinion for wear, damage or other abnormal conditions. Check that clutch locks up when turned in direction of drive and rotates smoothly in reverse direction. Replace if necessary.

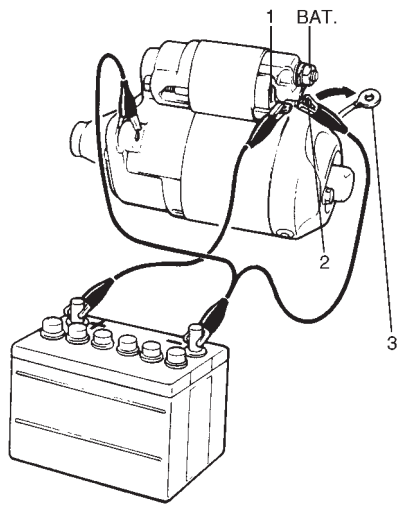

1. Terminal 'S'

PERFORMANCE TEST

CAUTION:
Each test must be performed within 3 – 5 seconds to avoid coil from burning.

PULL-IN TEST

Connect test leads as shown in figure and check that pinion (overrunning clutch) move outward. If it does not, replace magnetic switch.

NOTE:
Before testing, disconnect field coil lead wire (3) from 'M' terminal (2).

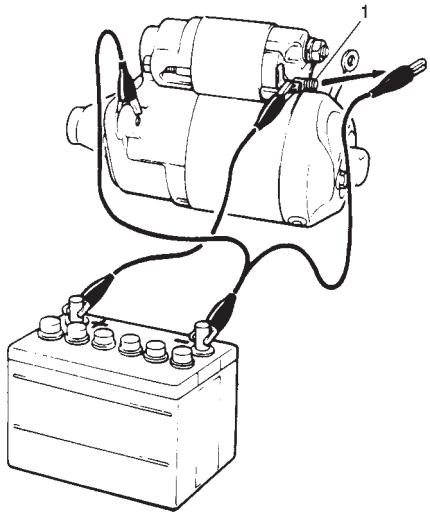

HOLD-IN TEST

While connected as the above with pinion out, disconnect negative lead from 'M' terminal (1) and check that pinion remains out. If not, replace magnetic switch.

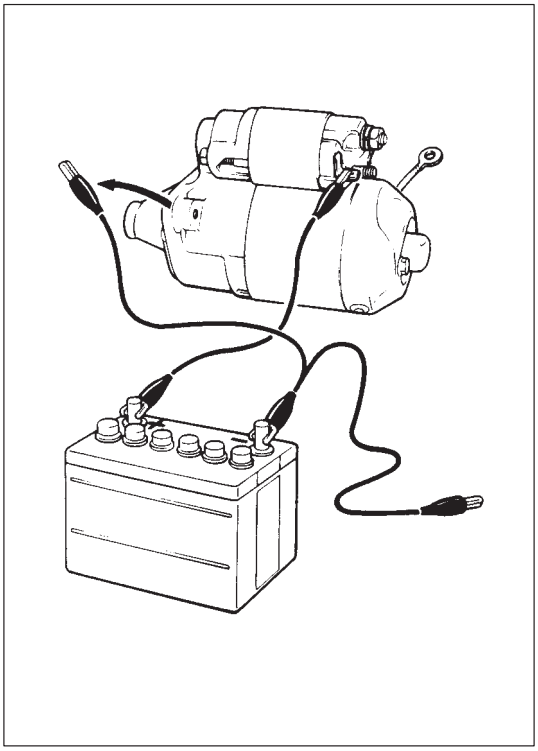

PINION (PLUNGER) RETURN TEST

As a next step to the above, disconnect negative lead and check to make sure that pinion returns inward quickly.

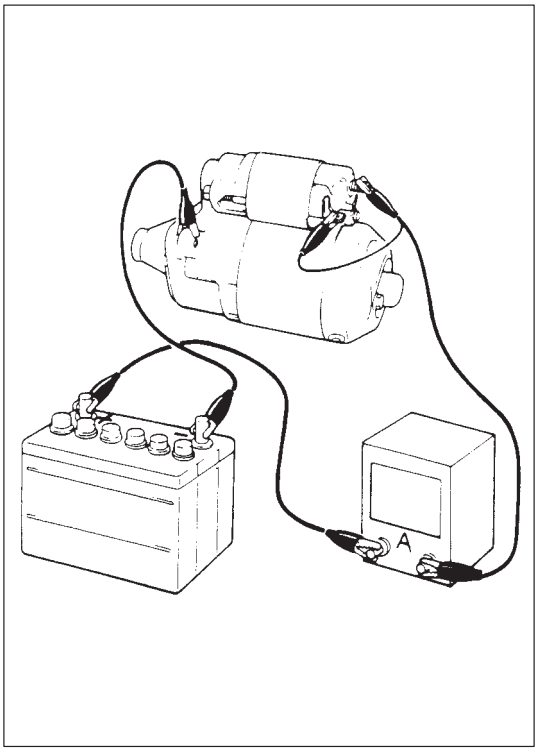

NO-LOAD PERFORMANCE TEST

Connect test leads as shown in left figure and check that motor runs without fail with pinion moved out. Also check that ammeter indicates specified current.

Specified Current: 50A at 11.5V

SPECIFICATIONS

Voltage			12 volts
Output			0.6 kW
Rating			30 seconds
Direction of rotation			Clockwise as viewed from pinion side (F8D engine) Counterclockwise as viewed from pinion side (F8B engine)
Brush length			10.0 mm (0.394 in.)
Number of pinion teeth			8
Performance		Condition	Guarantee
Around at 20℃ (68℉)	No load characteristic	11.5 V	50 A maximum 6,000 rpm minimum
	Load characteristic	9 V 150 A	2.75 N·m minimum 1,900 rpm minimum
	Locked rotor current	5.5 V	400 A maximum 5.89 N·m (0.5 kg-m, 4.6 lb-ft) minimum
	Magnetic switch operating voltage		8 volts maximum

REQUIRED SERVICE MATERIAL

MATERIAL	RECOMMENDED SUZUKI PRODUCT	USE
Lithium grease	SUZUKI SUPER GREASE A (99000-25010)	● Armature shaft. ● Over-running clutch. ● Commutator end cap. ● Drive lever. ● Bush.

SPECIAL TOOL

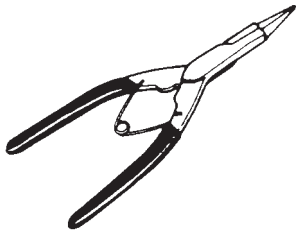

09900-06107
Snap ring pliers
(Opening type)

SECTION 6H

CHARGING SYSTEM

CONTENTS

GENERAL DESCRIPTION 6H- 2
Battery 6H- 2
Generator 6H- 4
DIAGNOSIS 6H- 6
Battery 6H- 6
Generator 6H- 7
ON-VEHICLE SERVICE 6H-10
Battery 6H-10
Jump starting in case of emergency with auxiliary (booster) battery 6H-10
Removal 6H-11
Handling 6H-11
Installation 6H-11
Generator 6H-12
Removal 6H-12
Installation 6H-12
Generator (Water Pump) Belt 6H-13
Belt tension inspection 6H-13
Removal 6H-13
Installation 6H-13
UNIT REPAIR OVERHAUL 6H-14
Generator 6H-14
Disassembly 6H-15
Inspection 6H-17
Replace Brush 6H-19
Assembly 6H-20
SPECIFICATIONS 6H-22

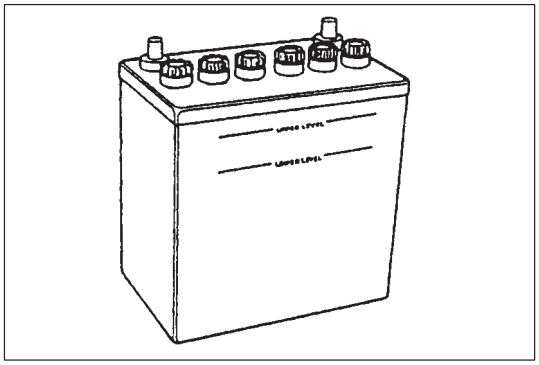

GENERAL DESCRIPTION

BATTERY

The battery has three major functions in the electrical system.

- It is a source of electrical energy for cranking the engine.
- It acts as a voltage stabilizer for the electrical system.
- It can, for a limited time, provide energy when the electrical load exceeds the output of the generator.

The battery mounted in each vehicle is the following type.

38B20R TYPE

Rated capacity	28 AH/5HR, 12 Volts
Electrolyte S.G.	1.24 when fully charged at 20°C (68°F)

CARRIER AND HOLD-DOWN

The battery carrier should be in good condition so that it will support the battery securely and keep it level.

Before installing the battery, the battery carrier and hold-down clamp should be clean and free from corrosion and make certain there are no parts in carrier.

To prevent the battery from shaking in its carrier, the hold-down bolts should be tight enough but not over-tightened.

ELECTROLYTE FREEZING

The freezing point of electrolyte depends on its specific gravity. Since freezing may ruin a battery, it should be protected against freezing by keeping it in a fully charged condition. If a battery is frozen accidentally, it should not be charged until it is warmed.

SULFATION

If the battery is allowed to stand for a long period in discharged condition, the lead sulfate becomes converted into a hard, crystalline substance, which will not easily turn back to the active material again during the subsequent recharging. “Sulfation” means the result as well as the process of that reaction.

Such a battery can be revived by very slow charging and may be restored to usable condition but its capacity is lower than before.

CARE OF BATTERY

WARNING:
- **Never expose battery to open flame or electric spark because of battery generate gas which is flammable and explosive.**
- **Do not allow battery fluid to contact eyes, skin, fabrics, or painted surfaces as fluid is a corrosive acid. Flush any contacted area with water immediately and thoroughly.**
- **Batteries should always be kept out of reach of children.**

1) The battery is a very reliable component, but needs periodical attentions.
   Keep the battery carrier clean; prevent rust formation on the terminal posts; keep the electrolyte up to the upper level uniformly in all cells.

   When keeping battery on vehicle over a long period of time, follow instructions given below.
   - Weekly, start the engine and run it until it reaches normal operating temperature with engine speed of 2000 to 3000 rpm. Make sure all electric switches are off before storing the vehicle.
   - Recharge the battery twice a month to prevent it from discharging excessively. This is especially important when ambient temperature is low.
     The battery discharges even when it is not used, while vehicles are being stored. Battery electrolyte can freeze and battery case can crack at cold ambient condition if battery is not properly charged.

2) Keep the battery cable connections clean.
   The cable connections, particularly at the positive (+) terminal post, tend to become corroded. The product of corrosion, or rust, on the mating faces of conductors resists the flow of current.
   Clean the terminals and fittings periodically to ensure good metal-to-metal contact, and grease the connections after each cleaning to protect them against rusting.

3) Be always in the know as to the state of charge of the battery.
   The simplest way to tell the state of charge is to carry out a hydrometer test. The hydrometer is an instrument for measuring the specific gravity (S.G.) of the battery electrolyte. The S.G. of the electrolyte is indicative of the state of charge. Refer to “BATTERY” of DIAGNOSIS in this section.

GENERATOR

The generator is a small and high performance type with an IC regulator incorporated.
The internal components are connected electrically as shown below figure.

The generator features are as follows:

- Solid state regulator is mounted inside the generator.
- All regulator components are enclosed into a solid mold.
- This unit along with the brush holder assembly is attached to the rear housing.
- The IC regulator uses integrated circuits and controls the voltage produced by the generator, and the voltage setting cannot be adjusted.
- The generator rotor bearings contain enough grease to eliminate the need for periodic lubrication. Two brushes carry current through the two slip rings to the field coil mounted on the rotor, and under normal conditions will provide long period of attention-free service.
- The stator windings are assembled on the inside of a laminated core that forms part of the generator frame.

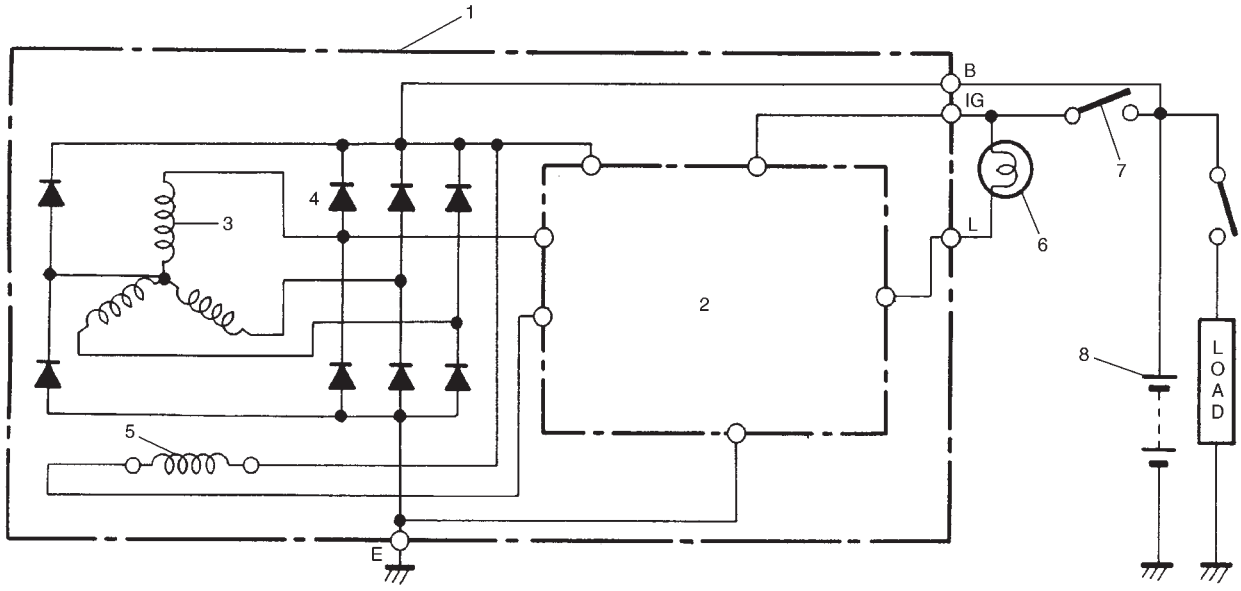

1. Generator with regulator ass'y
2. I.C. regulator
3. Stator coil
4. Diode
5. Field coil (rotor coil)
6. Charge indicator light
7. Main switch
8. Battery

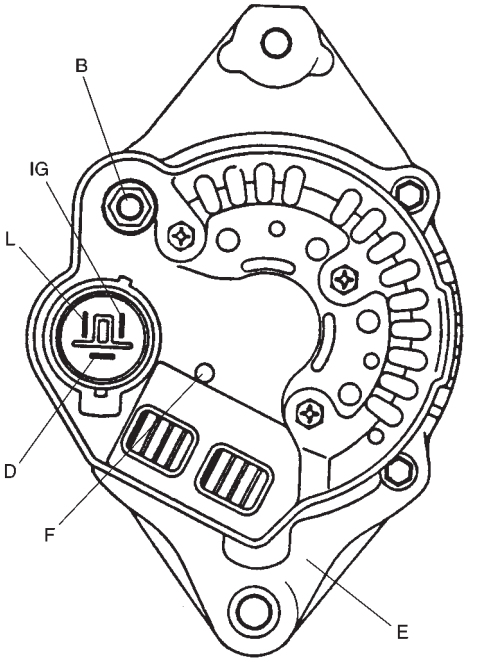

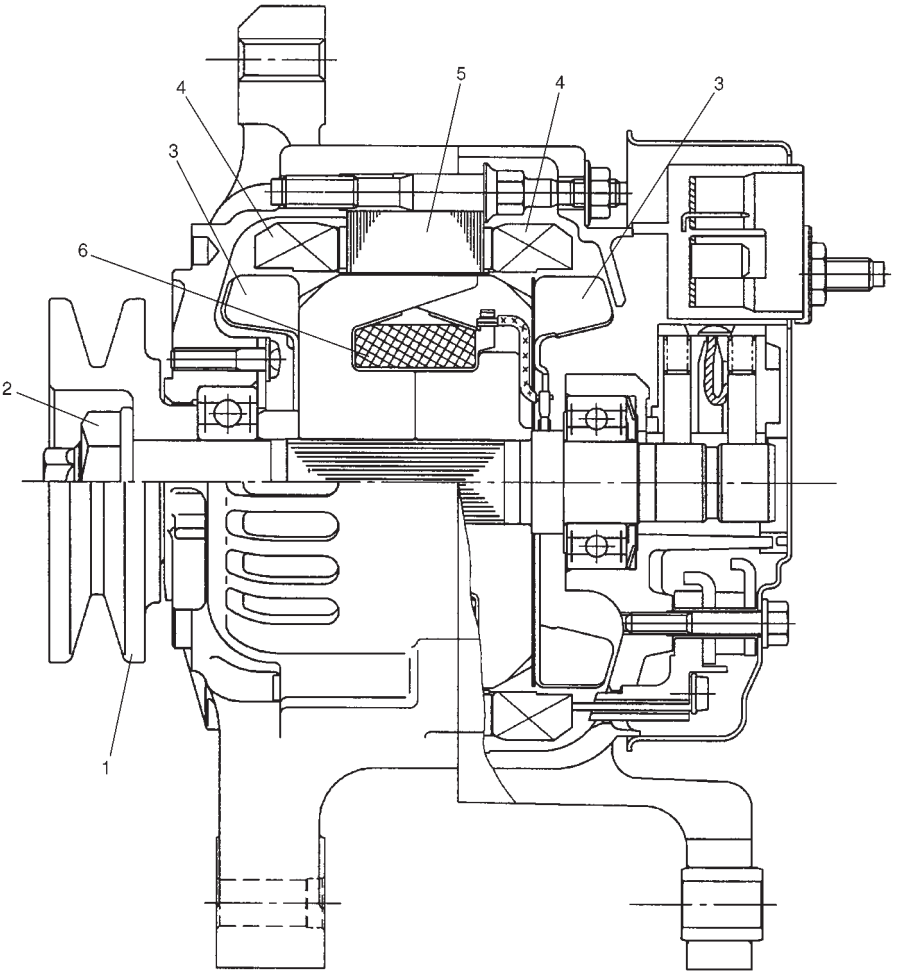

1. Pulley
2. Pulley nut
3. Rotor fan
4. Stator coil
5. Stator core
6. Field coil
7. Regulator
8. Brush
9. Rear end frame
10. Drive end frame

B : Generator output (Battery terminal)
D : Dummy terminal
E : Ground
F : Field coil terminal
IG : Ignition terminal
L : Lamp terminal

DIAGNOSIS

BATTERY

VISUAL INSPECTION

Check for obvious damage, such as cracked or broken case or cover, that could permit loss of electrolyte. If obvious damage is noted, replace battery. Determine cause of damage and correct as needed.

HYDROMETER TEST

The direct method of checking the battery for state of charge is to carry out a high rate discharge test, which involves a special precise voltmeter and an expensive instrument used in the service shops, but not recommendable to the user of the vehicle.
At 20 °C of battery temperature (electrolyte temperature):

— The battery is in FULLY CHARGED STATE it the electrolyte S.G. is 1.24.
— The battery is in HALF CHARGED STATE if the S.G. is 1.220.
— The battery is in NEARLY DISCHARGED STATE if the S.G. is 1.150 and is in danger of freezing.

As the S.G. varies with the temperature, if battery temperature is not at 20°C (68°F), you have to correct your S.G. reading (taken with your hydrometer) to the value at 20°C (68°F) and apply the corrected S.G. value to the three-point guide stated value.
For the manner of correction, refer to the graph showing the relation between S.G. value and temperature at the left.

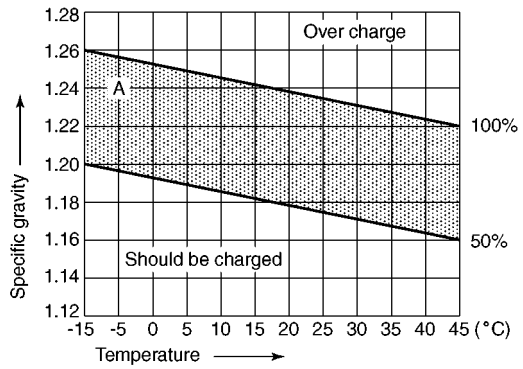

HOW TO USE THE TEMPERATURE-CORRECTED STAGE-OF-CHARGE GRAPH

Suppose your S.G. reading is 1.24 and the battery temperature is –5 °C (23°F). Locate the intersection of the –5 °C line and the 1.24 S.G. line.
The intersection is within the “A” zone (shaded area in the graph) and that means CHARGED STATE.
To know how much the battery is charged, draw a line parallel to the zone demarcation line and extend it to the right till it meets with the percentage scale. In the present example, the line meets at about 85% point on the percentage scale. Therefore, the battery is charged up to the 85% level.

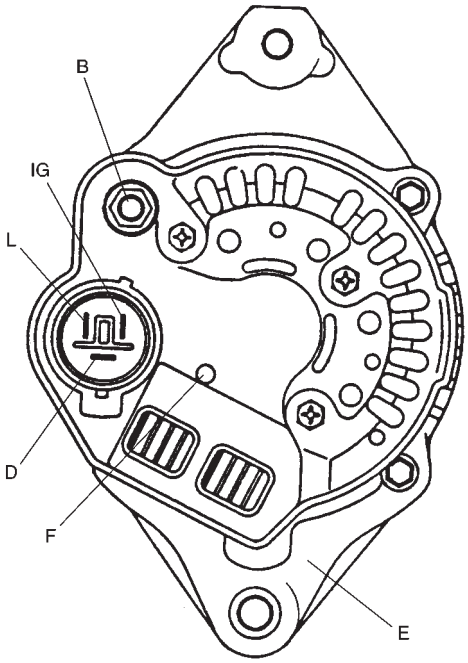

B : Generator output (Battery terminal)
D : Dummy terminal
E : Ground
F : Field coil terminal
IG : Ignition terminal
L : Lamp terminal

GENERATOR

CAUTION:
- **Do not mistake polarities of IG terminal and L terminal.**
- **Do not create a short circuit between IG and L terminals. Always connect these terminals through a lamp.**
- **Do not connect any load between L and E.**
- **When connecting a charger or a booster battery to vehicle battery, refer to this section describing battery charging.**

Trouble in charging system will show up as one or more of following conditions:
1) Faulty indicator lamp operation.
2) Undercharged battery as evidenced by slow cranking or indicator dark.
3) Overcharged battery as evidenced by excessive spewing of electrolyte from vents.

Noise from generator may be caused by a loose drive pulley, loose mounting bolts, worn or dirty bearings, defective diode, or defective stator.

FAULTY INDICATOR LAMP OPERATION

PROBLEM	POSSIBLE CAUSE	CORRECTION
Charge light does not light with ignition ON and engine off	● Fuse blown ● Light burned out ● Wiring connection loose ● IC regulator or field coil faulty ● Poor contact between brush and slip ring	Check fuse. Replace light. Tighten loose connection. Check generator. Repair or replace.
Charge light does not go out with engine running (battery requires frequent recharging)	● Drive belt loose or worn ● IC regulator or alternator faulty ● Wiring faulty	Adjust or replace drive belt. Check charging system. Repair wiring.

UNDERCHARGED BATTERY

This condition, as evidenced by slow cranking can be caused by one or more of the following conditions even though indicator lamp may be operating normal.

Following procedure also applies to cars with voltmeter and ammeter.

1) Make sure that undercharged condition has not been caused by accessories left on for extended period of time.
2) Check drive belt for proper tension.
3) If battery defect is suspected, refer to Battery section.
4) Inspect wiring for defects. Check all connections for tightness and cleanliness, battery cable connections at battery, starter and ignition ground cable.
5) Connect voltmeter and ammeter as shown in figure.

   Voltmeter
   Set between generator B terminal and ground.

   Ammeter
   Set between generator B terminal and battery (+) terminal.

   NOTE:
   Use fully charged battery.

6) Measure current and voltage.

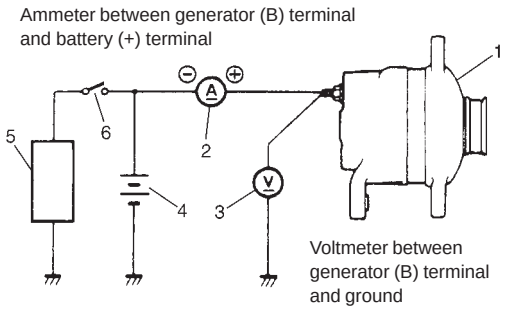

1. Generator
2. Ammeter
3. Voltmeter
4. Battery
5. Load
6. Switch

No-load Check

1) Run engine from idling up to 2,000 rpm and read meters.

   NOTE:
   Turn off switches of all accessories (wiper, heater etc.).

Standard current	10 A
Standard voltage	14.2 – 14.8 v at 25 °C (77 °F)

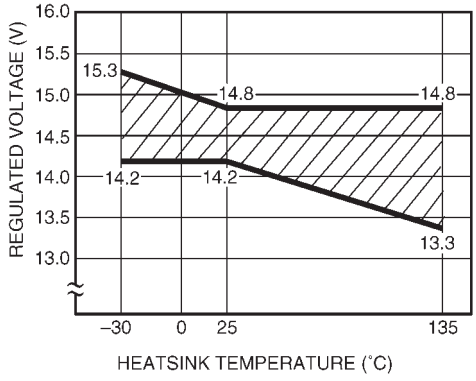

NOTE:
Consideration should be taken that voltage will differ somewhat with regulator case temperature as shown in graph.

Higher Voltage

If voltage is higher than standard value, check ground of brush.
If brush ground is correct, replace IC regulator.

Lower Voltage

If voltage is lower than standard value, proceed to following check.

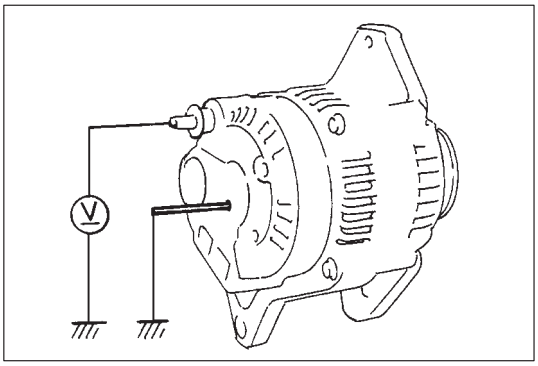

2) Ground F terminal and start engine, then measure voltage at B terminal as shown in figure.
   - Voltage is higher than standard value
     It is considered that generator itself is good but IC regulator has been damaged, replace IC regulator.
   - Voltage is lower than standard value
     Generator itself has problem, check the generator.

Load Check

1) Run engine at 2,000 rpm and turn on head light and heater motor.
2) Measure current and if it is less than 20 A repair or replace generator.

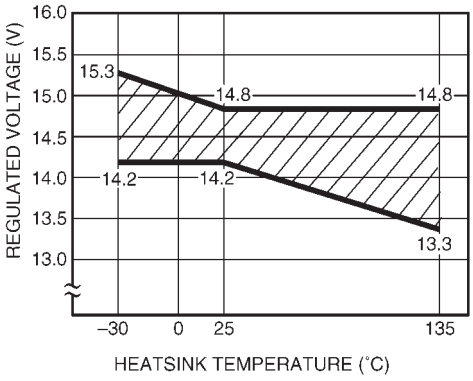

OVERCHARGED BATTERY

1) To determine battery condition, refer to Battery section in this DIAGNOSIS.
2) If obvious overcharge condition exists as evidenced by excessive spewing of electrolyte, proceed to disassembly section of generator service and check field windings for grounds and shorts. If problem exists, replace rotor.
3) With engine running at 2,000 rpm, measure voltage.
4) If measured voltage is out of standard value, check brush ground or IC regulator.

ON-VEHICLE SERVICE

BATTERY

JUMP STARTING IN CASE OF EMERGENCY WITH AUXILIARY (BOOSTER) BATTERY

Both booster and discharged battery should be treated carefully when using jumper cables. Follow procedure outlined below, being careful not to cause sparks.

WARNING:
- **Departure from these conditions or procedure described below could result in:**
  1) **Serious personal injury (particularly to eyes) or property damage from such causes as battery explosion, battery acid, or electrical burns.**
  2) **Damage to electronic components of either vehicle.**
- **Remove rings, watches, and other jewelry. Wear approved eye protection.**
- **Be careful so that metal tools or jumper cables do not contact positive battery terminal (or metal in contact with it) and any other metal on vehicle, because a short circuit could occur.**

1) Set parking brake and place manual transmission in NEUTRAL. Turn off ignition, turn off lights and all other electrical loads.
2) Check electrolyte level. If it is below low level line, add distilled water.
3) Attach end of one jumper cable to positive terminal of booster battery and the other end of the same cable to positive terminal of discharged battery. (Use 12-volt battery only to jump start engine).
4) Attach one end of the remaining negative cable to negative terminal of booster battery, and the other end to a solid engine ground (such as exhaust manifold) at least 45 cm (18 in.) away from battery of vehicle being started.

   WARNING:
   Do not connect negative cable directly to negative terminal of dead battery.

5) Start engine of vehicle with booster battery and turn off electrical accessories. Then start engine of the vehicle with discharged battery.
6) Disconnect jumper cables in the exact reverse order.

With Charging Equipment

CAUTION:
When jump starting engine with charging equipment, be sure equipment used is 12-volt and negative ground. Do not use 24-volt charging equipment. Using such equipment can cause serious damage to electrical system or electronic parts.

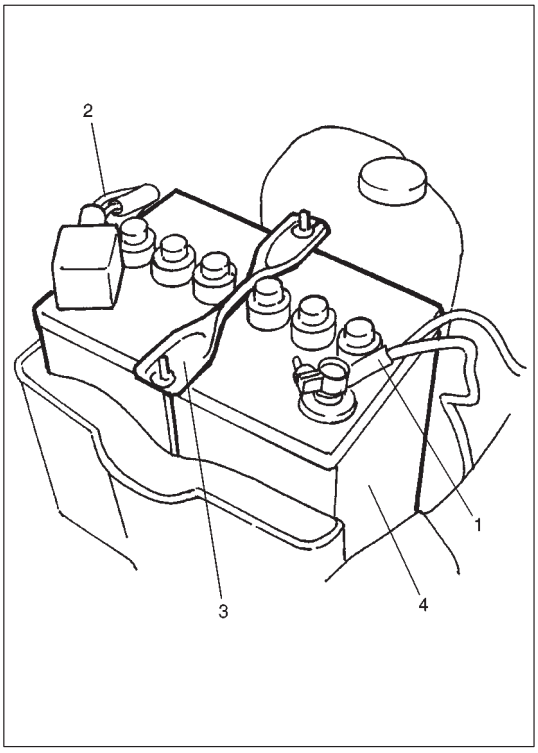

REMOVAL

1) Open engine hood.
2) Disconnect negative cable (1).
3) Disconnect positive cable (2).
4) Remove retainer (3).
5) Remove battery (4).

HANDLING

When handling battery, following safety precautions should be followed:

- Hydrogen gas is produced by battery. A flame or spark near battery may cause the gas to ignite.
- Battery fluid is highly acidic. Avoid spilling on clothing or other fabric. Any spilled electrolyte should be flushed with large quantity of water and cleaned immediately.

INSTALLATION

1) Reverse removal procedure.
2) Torque battery cables.

NOTE:

- **Check to be sure that ground cable has enough clearance to hood panel by terminal.**
- **Body and battery cable should not interfere with each other.**
- **After tightening positive terminal, be sure to put cap onto it securely.**

GENERATOR

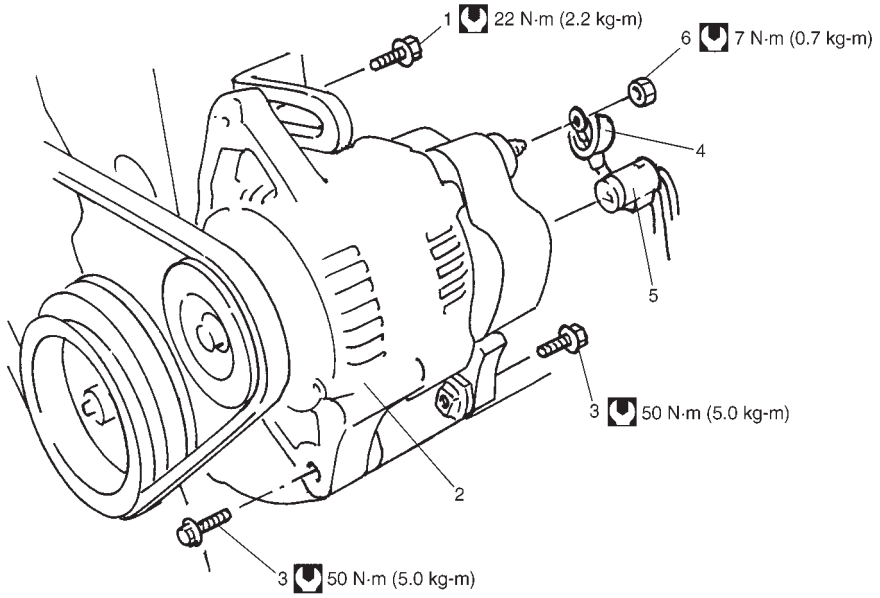

1. Adjusting bolt
2. Generator
3. Pivot bolt
4. “B” terminal wire
5. Coupler
6. Nut

: Tightening Torque

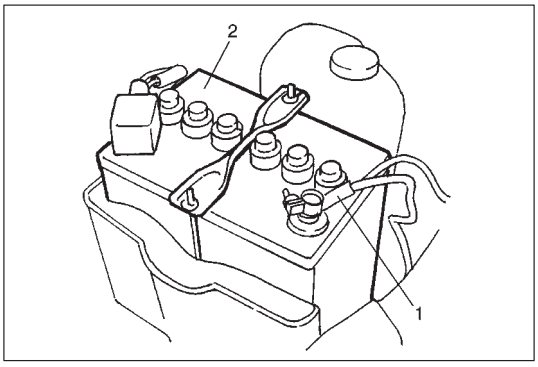

REMOVAL

1) Disconnect negative cable (1) at battery (2).
2) Remove front bumper.

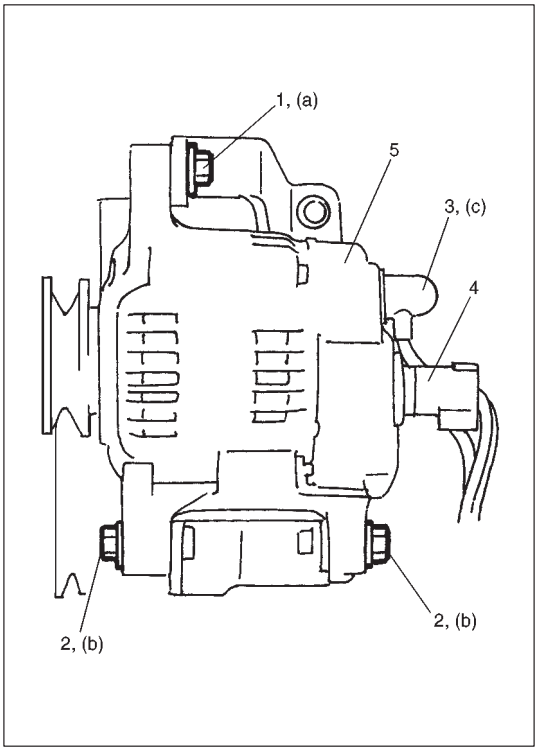

3) Disconnect “B” terminal wire (3) and coupler (4) from generator (5).
4) Remove adjusting bolt (1) and pivot bolts (2).
5) Remove generator.

INSTALLATION

Reverse above procedure giving specified tension to drive belt. Refer to “Generator (Water Pump) Belt” for belt tension.

Tightening Torque

(a): 22 N·m (2.2 kg-m, 16.0 lb-ft)
(b): 50 N·m (5.0 kg-m, 36.5 lb-ft)
(c): 7 N·m (0.7 kg-m, 5.0 lb-ft)

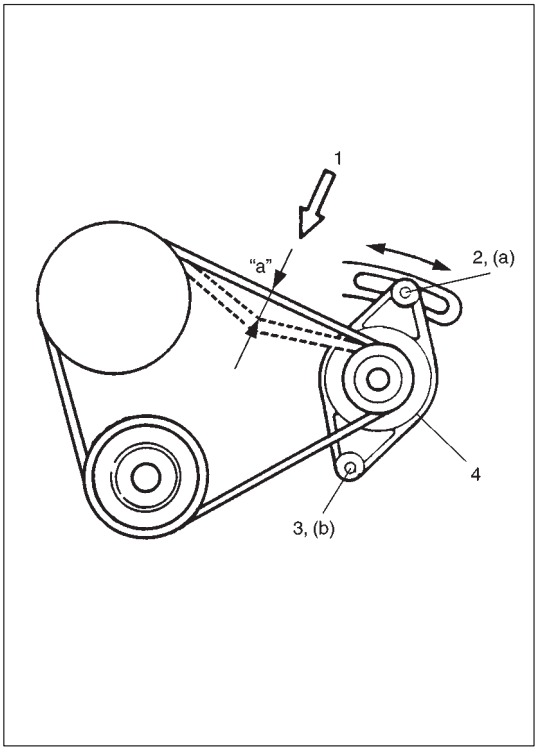

GENERATOR (WATER PUMP) BELT

BELT TENSION INSPECTION

1) Inspect belt cracks, cuts, deformation, wear and cleanliness.
2) Check belt for tension. Belt is in proper tension when it deflects 12 to 15 mm (0.47 – 0.59 in.) under thumb pressure (1) (about 10 kg or 22 lb.).

   Belt tension "a" : 6 – 7 mm (0.24 – 0.28 in.) as deflection

   NOTE:
   When replacing belt with a new one, adjust belt tension to 5 – 6 mm (0.20 – 0.24 in.).
3) If belt is too tight or too loose, loosen adjusting bolt (2) and pivot bolts (3) and adjust it to proper tension by displacing generator (4) position.
4) Tighten generator adjusting bolt and pivot bolts.

   Tightening Torque
   (a): 22 N·m (2.2 kg-m, 16.0 lb-ft)
   (b): 50 N·m (5.0 kg-m, 36.5 lb-ft)
5) Connect negative cable at battery terminal.

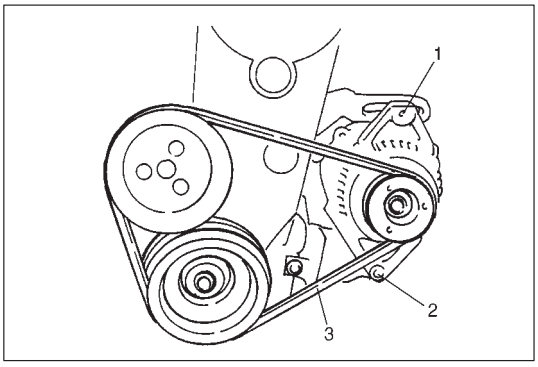

REMOVAL

1) Disconnect negative cable at battery.
2) Remove front bumper.
3) Loosen generator adjusting bolt (1) and generator pivot bolts (2).
4) Slacken belt (3) by displacing generator and then remove it.

INSTALLATION

1) Install belt to water pump pulley, crankshaft pulley and generator pulley.
2) Adjust belt tension.
3) Tighten water pump belt adjusting bolt and pivot bolts.
4) Connect negative cable at battery.

UNIT REPAIR OVERHAUL

GENERATOR

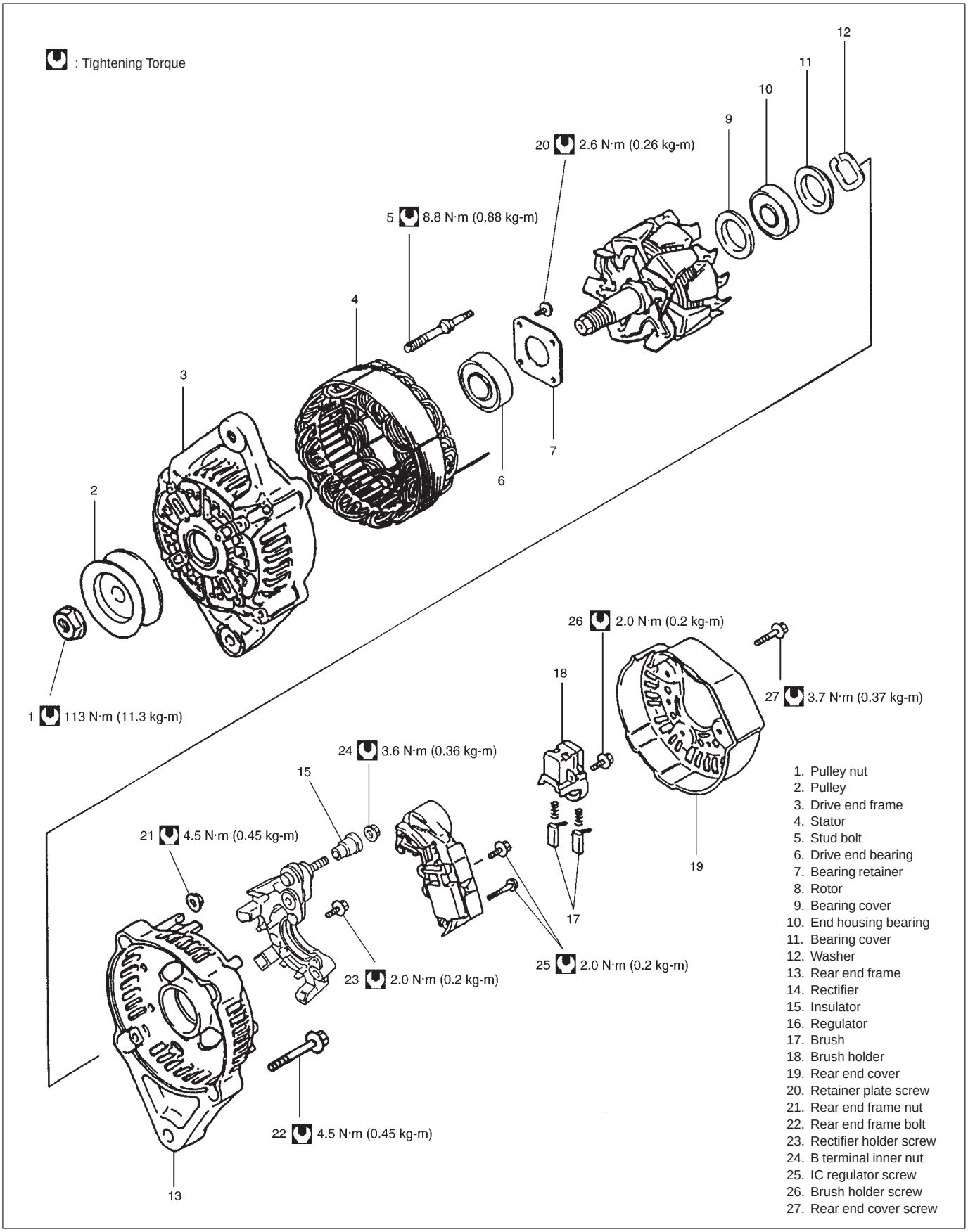

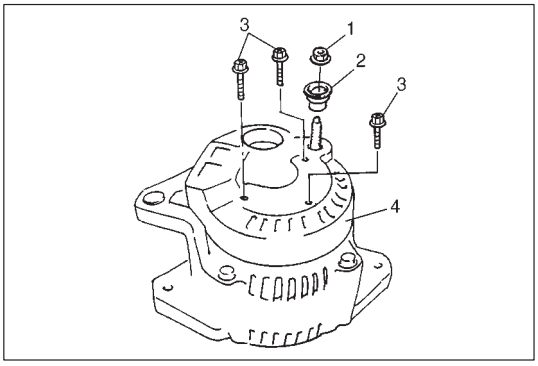

DISASSEMBLY

1) Remove B terminal inner nut (1) and insulator (2).
2) Remove 3 screws (3) and remove rear end cover (4).

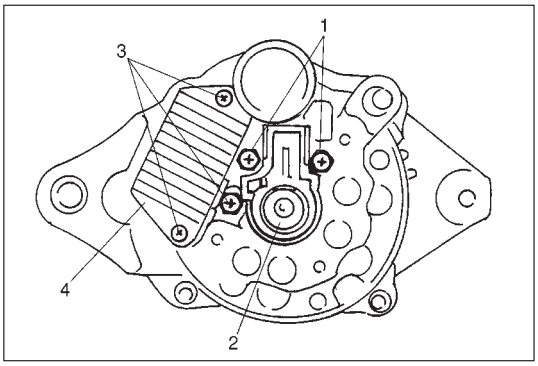

3) Remove 2 screws (1) and pull out brush holder assembly (2).
4) Remove 3 screws (3) and IC regulator (4).
5) Remove brush holder cover from brush holder.

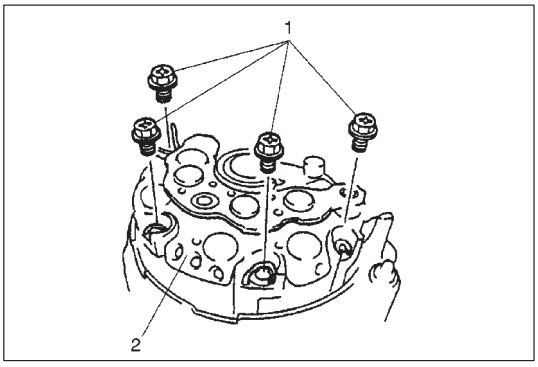

6) Remove rectifier holder screws (1).
7) Remove rectifier holder (2).

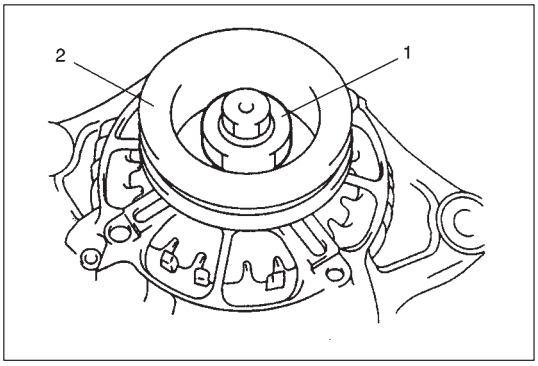

8) Hold shaft by using hexagonal box wrench and remove pulley nut (1), and then pull out pulley (2).

> **CAUTION:**
> - **To hold shaft, use hexagonal box. Duodecimal box may cause slipping and consequential shaft or tool damage.**
> - **Do not attempt to hold pulley by using vise or pipe wrench so as not to distort it.**

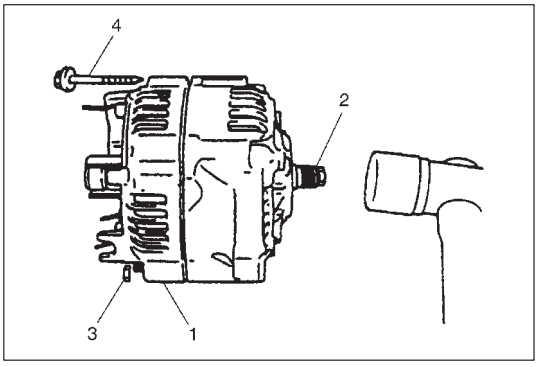

9) Remove rear end frame nuts (3) and bolts (4).
10) Drive out rear end frame (1) with rotor tapping shaft (2) lightly by using plastic hammer.
11) Separate rear end frame from rotor evenly by using plastic hammer.

> **CAUTION:**
> **Do not hit shaft at slip ring side, when separating rotor and rear end frame.**

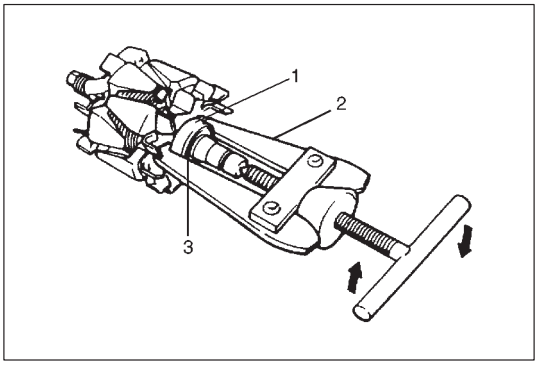

12) If required, use bearing puller (2) to remove end housing bearing (1) and bearing cover (3).

> **CAUTION:**
> **Care must be exercised so as not to distort cooling fan blade while applying puller.**

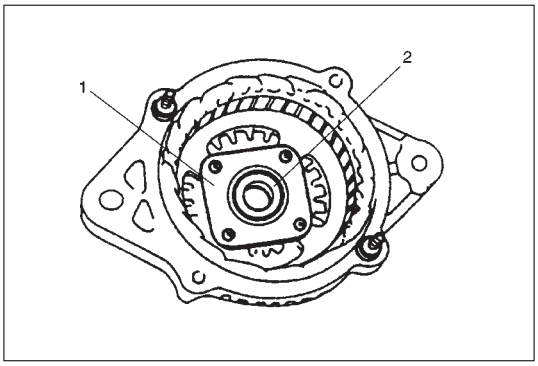

13) If required, remove 4 screws, retainer plate (1) and then drive out drive end bearing (2).

14) If required, remove stud bolts and then pull out stator.

NOTE:
Heating drive end frame may facilitate removal of stator.

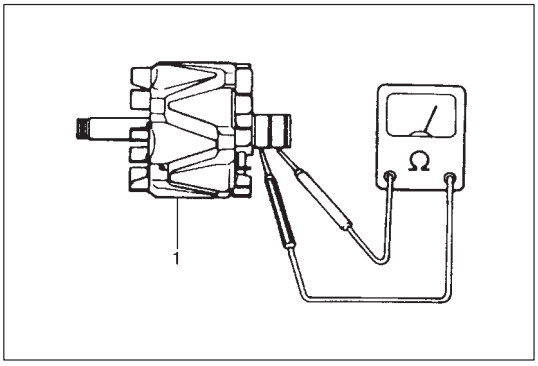

INSPECTION

Rotor

Open Circuit

Using ohmmeter, check for continuity between slip rings of rotor (1). If there is no continuity, replace rotor.

Standard resistance: About 2.9 Ω

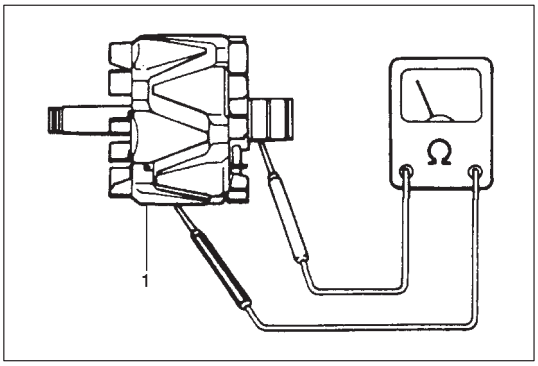

Ground

Using ohmmeter, check that there is no continuity between slip ring and rotor (1). If there is continuity, replace rotor.

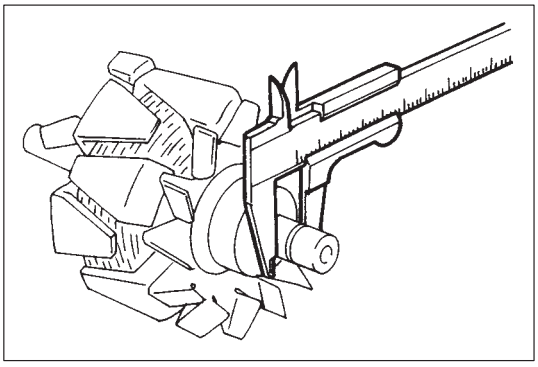

Slip Rings

- Check slip rings for roughness or scoring. If rough or scored, replace rotor.
- Using a vernier caliper, measure slip ring diameter.

  Standard diameter: 14.4 mm (0.567 in.)
  Minimum diameter: 12.8 mm (0.504 in.)

  If the diameter is less than minimum, replace the rotor.

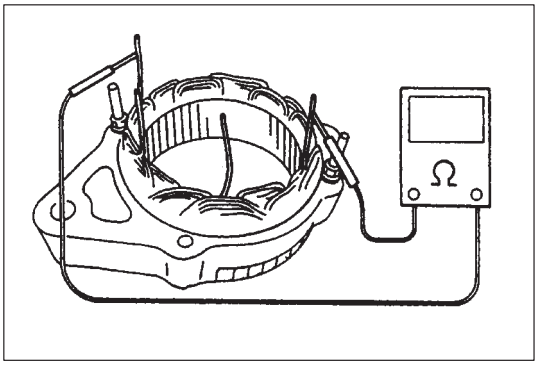

Stator

Open Circuit

Using ohmmeter, check all leads for continuity. If there is no continuity, replace stator.

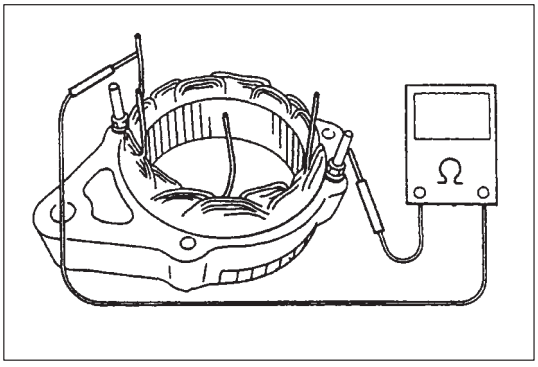

Ground

Using ohmmeter, check that there is no continuity between coil leads and stator core. If there is continuity, replace stator.

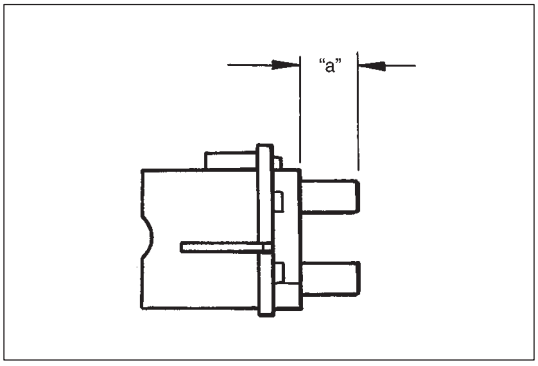

Brush

Exposed Brush Length

Check each brush for wear by measuring its length as shown. If brush is found worn down to service limit, replace brush. Refer to "Replace Brush" in this section.

Exposed brush length "a"

Standard : 10.5 mm (0.413 in.)

Limit : 1.5 mm (0.059 in.)

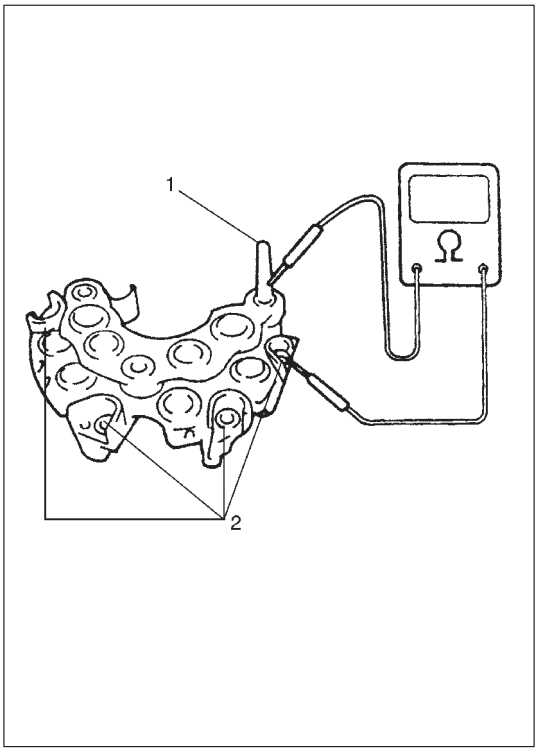

Rectifier

Positive Rectifier

1) Using an ohmmeter, connect one tester probe to the B terminal (1) and the other to each rectifier terminal (2).
2) Reverse the polarity of tester probes and repeat step 1).
3) Check that one shows continuity and the other shows no continuity.
   If there is continuity, replace rectifier holder.

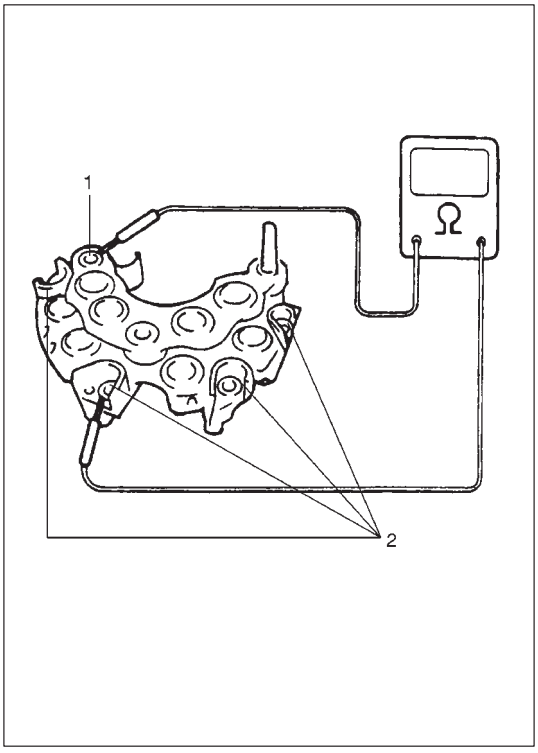

Negative Rectifier

1) Using ohmmeter, connect one tester probe to each negative terminal (1) and the other to each rectifier terminal (2).
2) Reverse the polarity of tester probes and repeat step 1).
3) Check that one shows continuity and the other shows no continuity.
   If there is continuity, replace rectifier holder.

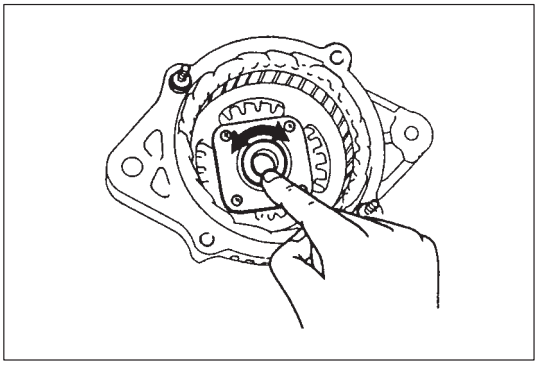

Bearing

Drive End Bearing

Check that bearing is not rough or worn.

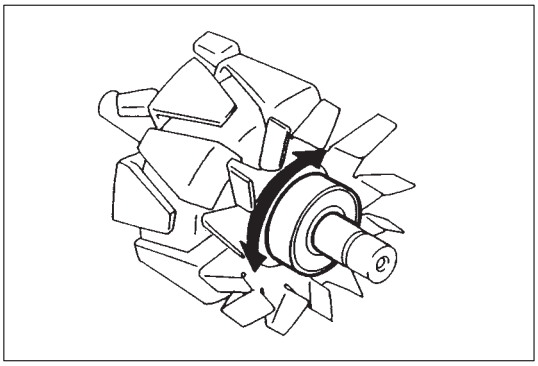

End Housing Bearing

Check that bearing is not rough or worn.

When removal is necessary, refer to disassembly of UNIT REPAIR OVERHAUL.

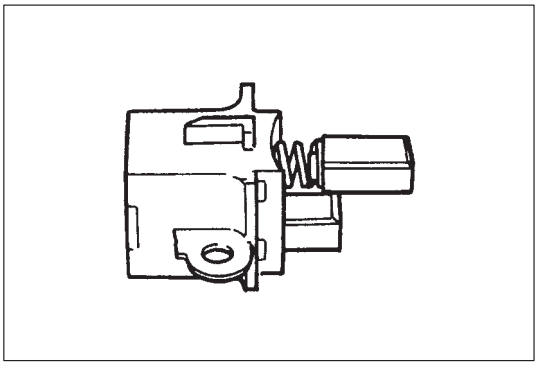

REPLACE BRUSH

1) Unsolder and remove brush and spring.
2) Run wire of new brush through the hole in the brush holder, and insert spring and brush into brush holder.

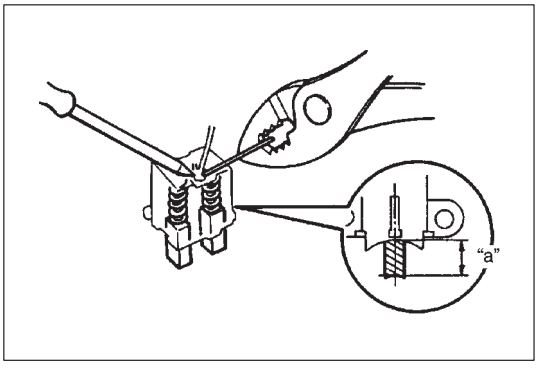

3) Solder brush wire to brush holder at specified exposed length.

   Exposed length "a": 10.5 mm (0.413 in.)

4) Check that brush moves smoothly in brush holder.
5) Cut off excess wire.
6) Apply insulation paint to the soldered area.

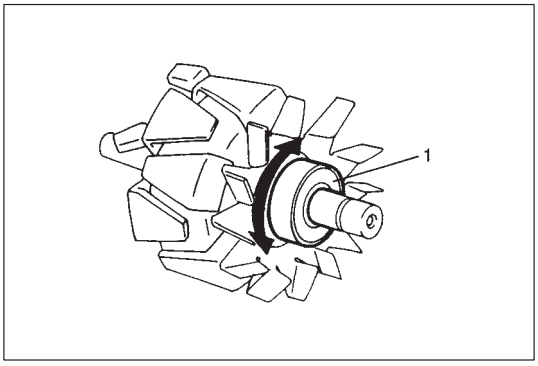

ASSEMBLY

1) If end housing bearing (1) is removed, install it.
2) Check end housing bearing turns smoothly.

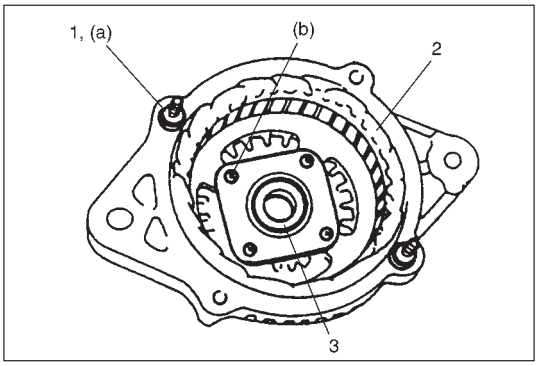

3) If stator (2) is removed, install stator and tighten stud bolts (1).
4) If drive end bearing (3) is removed, install it.
5) Check drive end bearing turns smoothly.

Tightening Torque
(a): 8.8 N·m (0.88 kg-m, 6.5 lb-ft)
(b): 2.6 N·m (0.26 kg-m, 2.0 lb-ft)

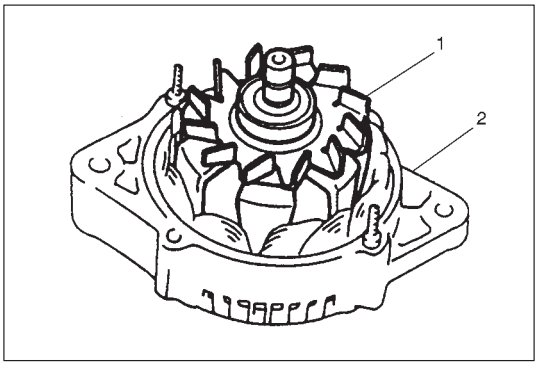

6) Place space collar and drive end frame (2) on pulley, and then install rotor (1) to drive end frame.

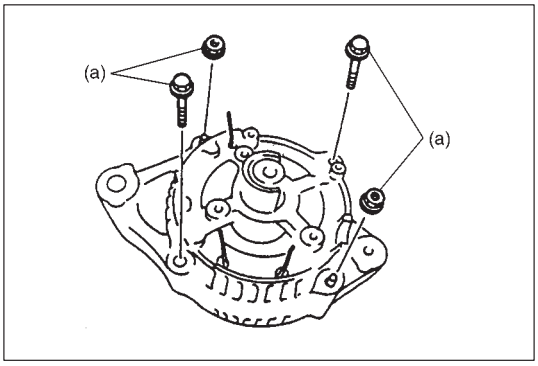

7) Install rear end frame to drive end frame.
8) Tighten bolts and nuts to specified torque.

Tightening Torque
(a): 4.5 N·m (0.45 kg-m, 3.5 lb-ft)

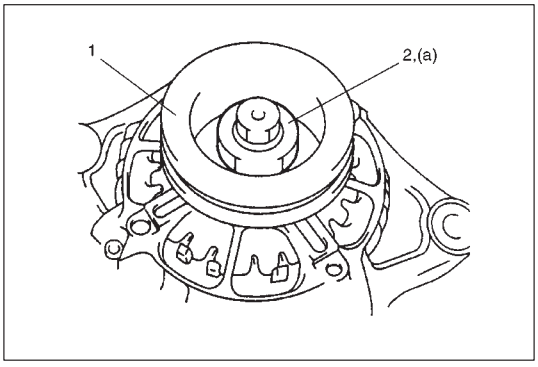

9) Install pulley (1) and tighten pulley nut (2) with holding shaft using hexagonal box wrench to specified torque.

Tightening Torque
(a): 113 N·m (11.3 kg-m, 81.5 lb-ft)

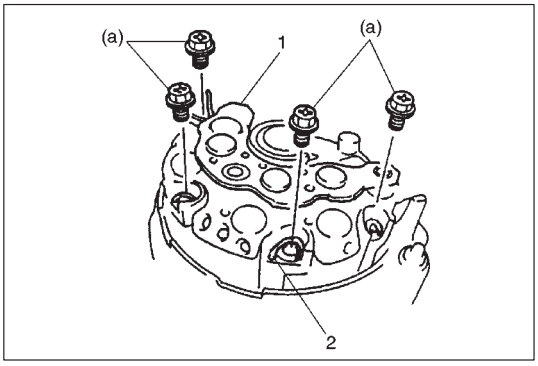

10) Install rectifier holder (1). Curl stator leads (2) as shown in figure.

> **CAUTION:**
> **When installing rectifier, check to confirm that stator leads have enough clearance with cooling fan blades.**

Tightening Torque
(a): 2.0 N·m (0.2 kg-m, 1.5 lb-ft)

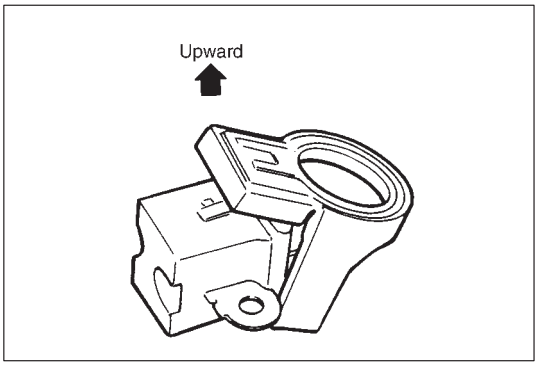

11) Install brush holder cover to brush holder.

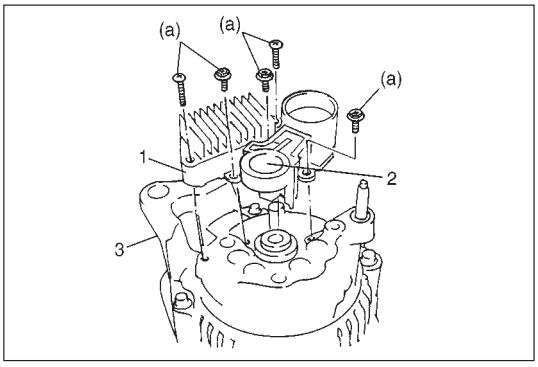

12) Place IC regulator (1) together with brush holder (2) horizontally on rear end frame (3).
13) Install 5 screws.

Tightening Torque
(a): 2.0 N·m (0.2 kg-m, 1.5 lb-ft)

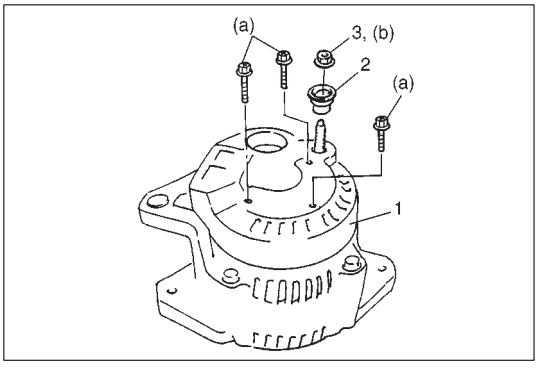

14) Install rear end cover (1).

Tightening Torque
(a): 3.7 N·m (0.37 kg-m, 3.0 lb-ft)

15) Install insulator (2) and tighten B terminal inner nut (3) to specified torque.

Tightening Torque
(b): 3.6 N·m (0.36 kg-m, 3.0 lb-ft)

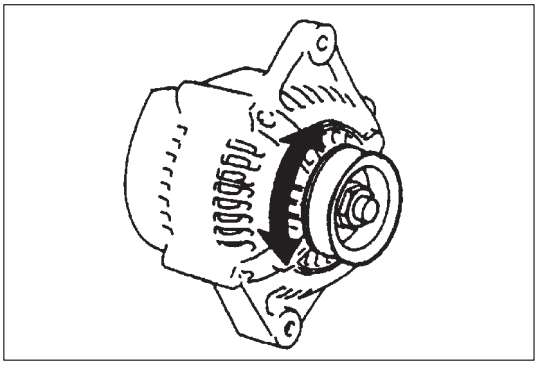

16) Make sure that rotor turns smoothly.

SPECIFICATIONS

BATTERY

Rated capacity	28 AH/5 HR, 12 Volts
Electrolyte	2.5 L (5.28/4.40 US/Imp pt)
Electrolyte S.G.	1.24 when fully charged at 20°C (68°F)

GENERATOR

NOTE:

The generator used in each vehicle is one of the following two types, depending on specification.

Type	40 A type	50 A type
Rated voltage	12 V	
Nominal output	40 A (at 13.5 V)	50 A (at 13.5 V)
Permissible max. speed	18,000 rpm	
No-load speed	1,110 r/min (rpm)	
Setting voltage	14.2 to 14.8 V	
Permissible ambient temperature	–30 to 90 °C (–22 to 194 °F)	
Polarity	Negative ground	
Rotation	Clockwise viewed from pulley side	

SECTION 6K

EXHAUST SYSTEM

CONTENTS

GENERAL DESCRIPTION 6K-2
MAINTENANCE 6K-3
ON-VEHICLE SERVICE 6K-4

CAUTION:
THE ENGINE OF THIS VEHICLE REQUIRES THE USE OF UNLEADED FUEL ONLY. USE OF LEADED AND/OR LOW LEAD FUEL CAN RESULT IN DAMAGE AND REDUCE THE EFFECTIVENESS OF THE CATALYTIC CONVERTER.

GENERAL DESCRIPTION

The exhaust system consists of an exhaust manifold, exhaust pipes, a catalyst case a muffler and seal, gaskets and etc., and catalyst case has the three-way catalytic converter (TWC).
The three-way catalytic converter is an emission control device added to the exhaust system to lower the levels of Hydrocarbon (HC), Carbon Monoxide (CO), and Oxides of Nitrogen (NOx) pollutants in the exhaust gas.

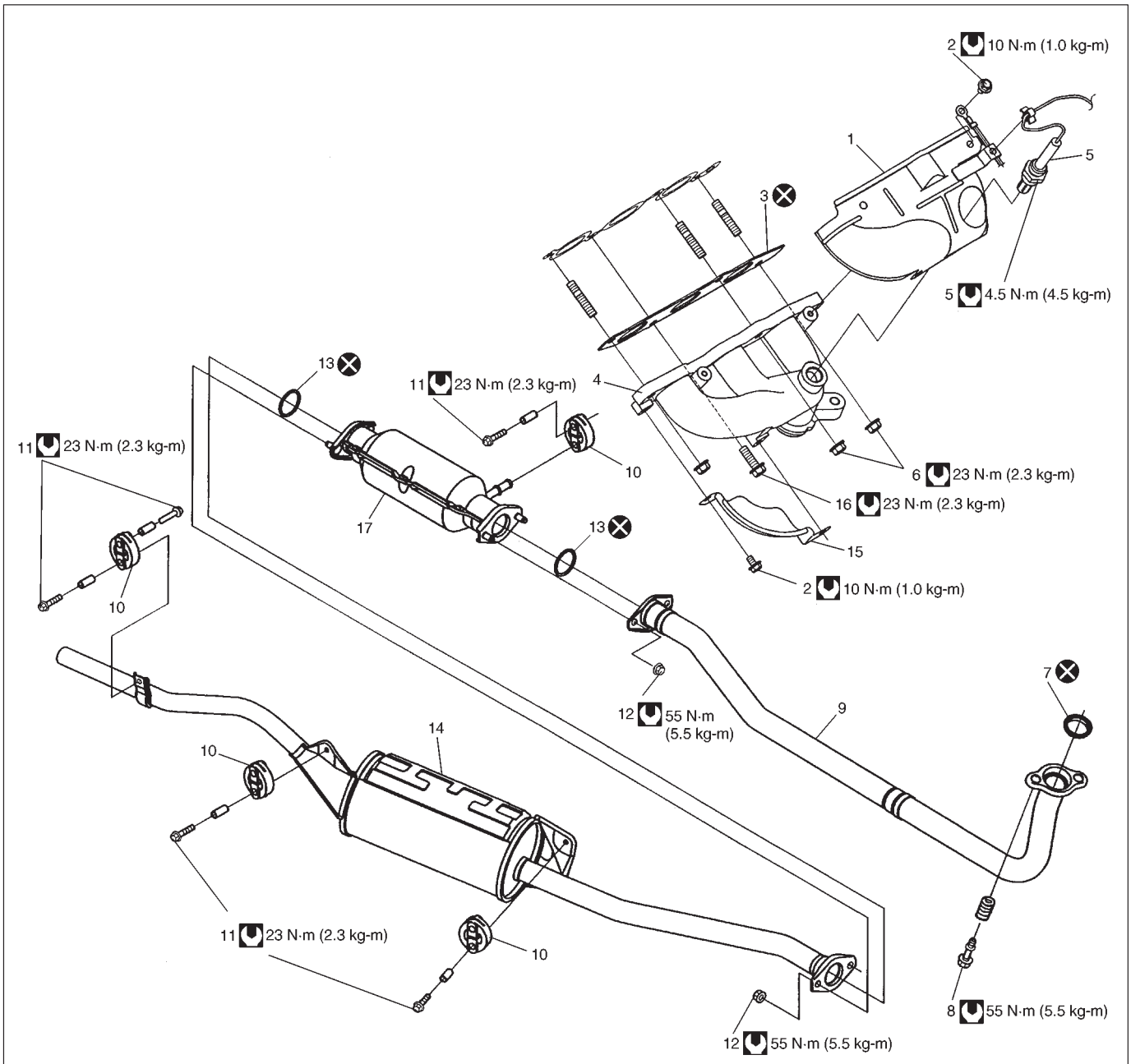

1. Exhaust manifold cover
2. Exhaust manifold cover bolt
3. Exhaust manifold gasket
4. Exhaust manifold
5. Oxygen sensor
6. Exhaust manifold nut
7. Seal ring
8. Exhaust pipe bolt
9. Exhaust pipe
10. Rubber mounting
11. Mounting bolt
12. Exhaust pipe nut
13. Gasket
14. Muffler
15. Exhaust manifold lower cover
16. Exhaust manifold bolt
17. Catalyst case

: Tightening Torque
: Do not reuse

MAINTENANCE

WARNING:
To avoid the danger of being burned, do not touch the exhaust system when the system is hot. Any service on the exhaust system should be performed when the system is cool.

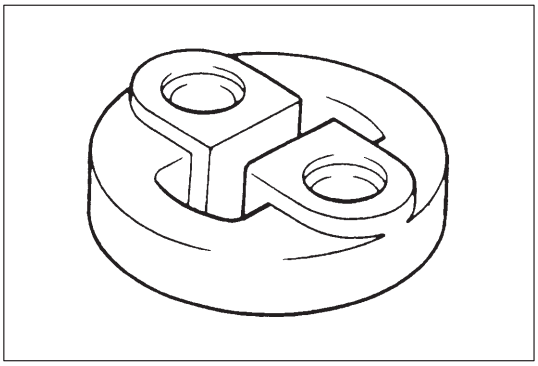

At every interval of periodic maintenance service, and when vehicle is raised for other service, check exhaust system as follows:

- Check rubber mountings for damage, deterioration, and out of position.

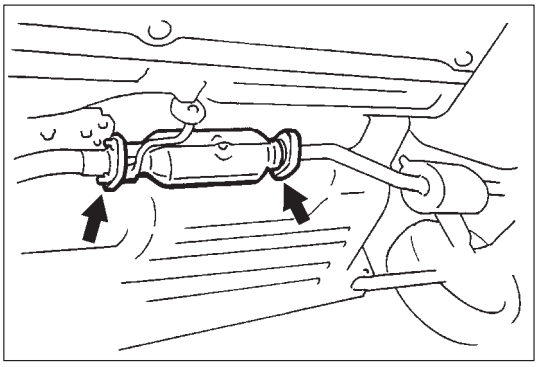

- Check exhaust system for leakage, loose connection, dent and damage.
  If bolts or nuts are loosened, tighten them to specified torque. Refer to GENERAL DESCRIPTION in this section for torque data.

- Check nearby body areas for damaged, missing, or mispositioned part, open seam, hole, loose connection or any other defect which could permit exhaust fumes to seep into vehicle.
- Make sure that exhaust system components have enough clearance from underbody to avoid overheating and possible damage to passenger compartment carpet.
- Any defect should be fixed at once.

ON-VEHICLE SERVICE

WARNING:
To avoid the danger of being burned, do not touch the exhaust system when the system is hot. Any service on the exhaust system should be performed when the system is cool.

EXHAUST MANIFOLD

Refer to Section 6A for removal and installation procedures of exhaust manifold.

- Check gasket and seal for deterioration or damage.
  Replace them as necessary.

EXHAUST PIPE

For replacement of exhaust pipe, be sure to hoist vehicle and observe WARNING under “Maintenance” and the following.

CAUTION:
Exhaust pipe have three way catalytic converter in it, it should not be exposed to any impulse.
Be careful not to drop it or hit it against something.

- Tighten bolts and nuts to specified torque when reassembling.
  Refer to GENERAL DESCRIPTION in this section for location of bolts and nuts.
- After installation, start engine and check each joint of exhaust system for leakage.

SECTION 7A

MANUAL TRANSMISSION (4-SPEED)

CONTENTS

GENERAL DESCRIPTION 7A- 2
Components 7A- 2
DIAGNOSIS 7A- 4
ON-VEHICLE SERVICE 7A- 5
Transmission Oil 7A- 5
Gear Shift Control 7A- 6
UNIT REPAIR OVERHAUL 7A- 9
Dismounting/Remounting 7A- 9
Inspection of Transmission Components 7A-12
Important Steps in Reassembly 7A-17
REQUIRED SERVICE MATERIALS 7A-26
SPECIAL TOOLS 7A-26

GENERAL DESCRIPTION

COMPONENTS

The transmission is fully synchronized and provides four forward speeds and one reverse speed by means of two synchronizers and two shafts – input shaft and countershaft.
Gears on both shafts (input and counter) are always meshed. The low-speed synchronizer on the counter shaft is engaged either with the low driven gear or second driven gear. The high-speed synchronizer is engaged with either the third driven gear or top driven gear. The reverse idler gear is of clash-meshing type and is engaged with the low speed synchronizer sleeve on the countershaft and the reverse drive gear on the input shaft.
Transmission case is in two-piece construction, consisting of upper case and lower case.
The lower case has the three-fork-shifting mechanism built in it.
The upper case houses the reverse shaft.

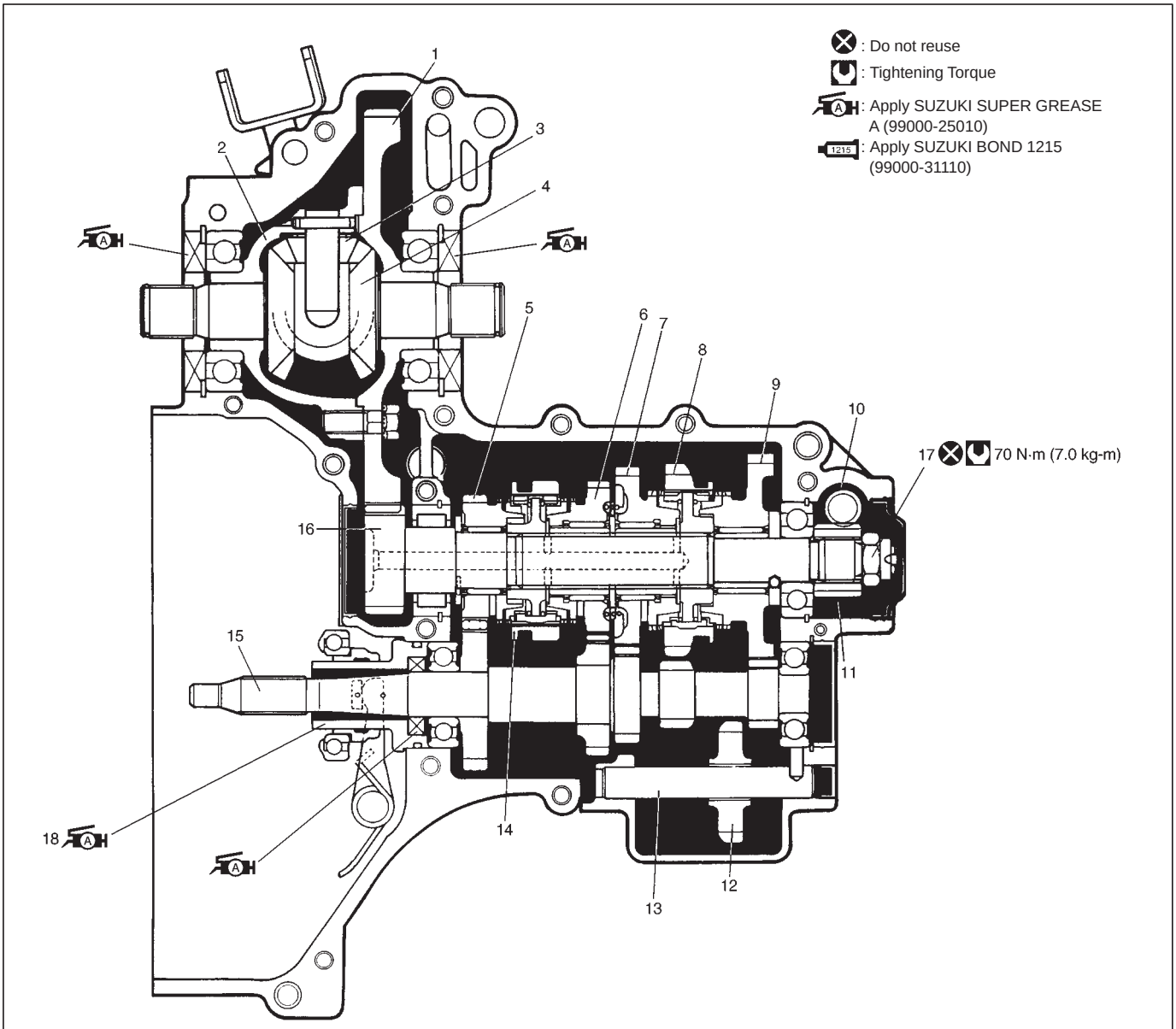

1. Final gear
2. Differential case
3. Side pinion
4. Side gear
5. Top gear
6. Third gear
7. Second gear
8. Low speed synchronizer sleeve
9. Low gear
10. Speedometer driven gear
11. Speedometer drive gear
12. Reverse idle gear
13. Reverse idle gear shaft
14. High speed synchronizer sleeve
15. Input shaft
16. Counter shaft
17. Countershaft nut
18. Clutch release bearing retainer
    Apply SUZUKI SUPER GREASE A (99500-25050) to inside of retainer

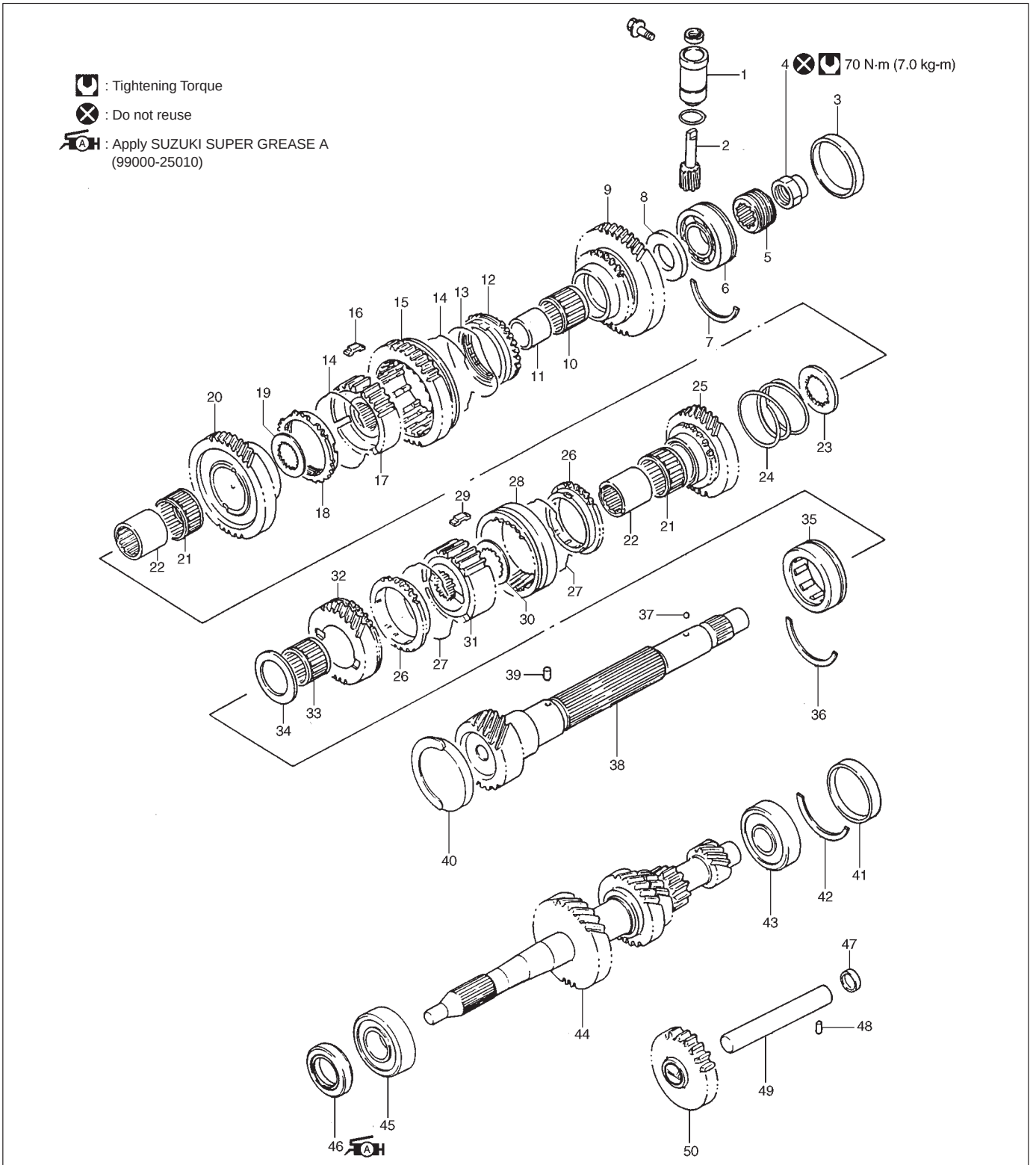

1. Speedometer driven gear case
2. Speedometer driven gear
3. Counter shaft plug
4. Nut
5. Speedometer drive gear
6. Bearing
7. C ring
8. Thrust washer
9. Low gear
10. Needle bearing
11. Bush
12. Synchronizer ring
13. Synchronizer ring spring
14. Synchronizer spring
15. Low speed sleeve
16. Key
17. Low speed hub
18. Synchronizer ring
19. Thrust washer
20. Second gear
21. Needle bearing
22. Bush
23. Thrust washer
24. Spring
25. Third gear
26. Synchronizer ring
27. Synchronizer spring
28. High speed sleeve
29. Key
30. Thrust washer
31. High speed hub
32. Top gear
33. Needle bearing
34. Thrust washer
35. Bearing
36. C ring
37. Steel ball
38. Counter shaft
39. Pin
40. Plug
41. plug
42. C ring
43. Bearing
44. Input shaft
45. Bearing
46. Oil seal
47. Plug
48. Pin
49. Reverse shaft
50. Reverse idle gear

DIAGNOSIS

Condition	Possible Cause	Correction
Gears slipping out of mesh	● Worn shift fork shaft ● Worn shift fork or synchronizer sleeve ● Weak or damaged locating springs ● Worn bearings on input shaft or countershaft ● Worn chamfered tooth on sleeve and gear	Replace. Replace. Replace. Replace. Replace sleeve and gear.
Hard shifting	● Inadequate lubricant ● Improper clutch pedal free travel ● Distorted or broken clutch disc ● Damaged clutch pressure plate ● Worn synchronizer ring ● Worn chamfered tooth on sleeve or gear ● Worn gear shift control shaft/extension rod bush ● Distorted shift shaft	Replenish. Adjust. Replace. Replace clutch cover. Replace. Replace sleeve or gear. Replace. Replace.
Noise	● Inadequate or insufficient lubricant ● Damaged or worn bearing(s) ● Damaged or worn gear(s) ● Damaged or worn synchronizer parts	Replenish. Replace. Replace. Replace.

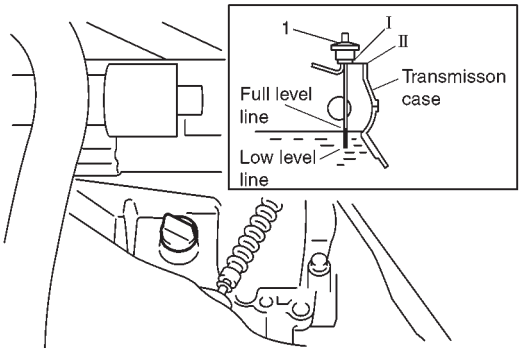

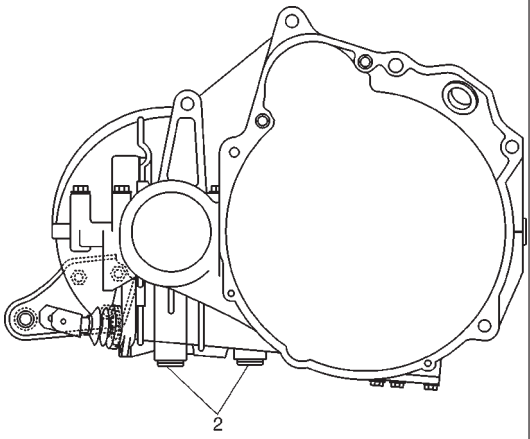

ON-VEHICLE SERVICE

TRANSMISSION OIL

- Check the transmission for oil leakage, each time when vehicle is on hoist.
- Check the oil level according to the following procedures.
  1) Take out the oil level gauge (1) from the transmission case and wipe off the oil.
  2) Bring face I of the oil level gauge to contact face II of the transmission case and check the oil level indicated by the oil on the gauge.

  The oil level must be somewhere between FULL level line and LOW level line on the gauge.
- When draining oil, be sure to remove 2 drain plugs (2).
- When installing drain plugs (2), apply sealant to the screw part of the plug before reassembling and be sure to tighten the plug to specification using hexagon socket.

  Sealant : SUZUKI BOND NO.1215 (99000-31110)
  Tightening Torque for oil drain plugs:
  28 N·m (2.8 kg-m, 20 lb-ft)

- When changing oil, fill transmission with new oil specified below.

Oil capacity	2.0 liters (4.2/3.5 US/Imp. pt.)
Oil specification	Gear oil, SAE #90, SAE 80W or SAE 75W 80 – 85

NOTE:
For the vehicles used in the areas where the ambient temperature becomes lower than –15°C (5°F) during the coldest season, it is recommended that oil be changed with SAE 80W or 75W/80 – 85 oils on such occasion of services as a periodic maintenance.

GEAR SHIFT CONTROL

1. Gear shift control lever knob
2. Gear shift control lever
3. Lever cover
4. Lever boot
5. Dust cover
6. Lever housing
7. Lever seat
8. Dust seal
9. Guide plate
10. Extension rod
11. Control shaft rear boot
12. Gear shift control shaft
13. Extension rod bush
    Apply SUZUKI SUPER GREASE A (99000-25010)
14. Control shaft joint
15. Control shaft rear bush
    Apply SUZUKI SUPER GREASE A (99000-25010)
16. Lever housing bolt
17. Lever housing nut A
18. Lever housing nut B
19. Extension rod nut
20. Control shaft nut

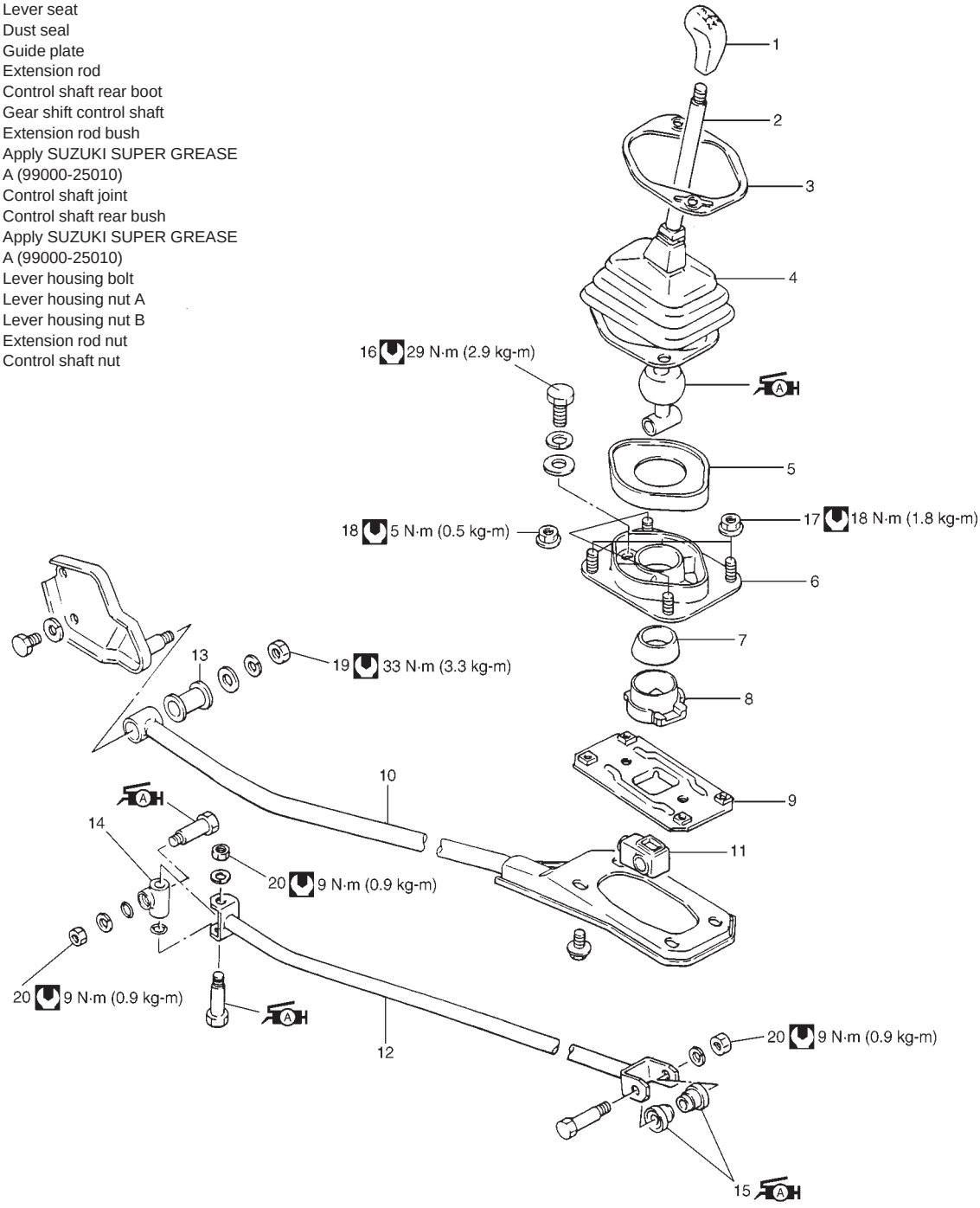

: Tightening Torque

: Do not reuse

: Apply SUZUKI SUPER GREASE A (99000-25010)

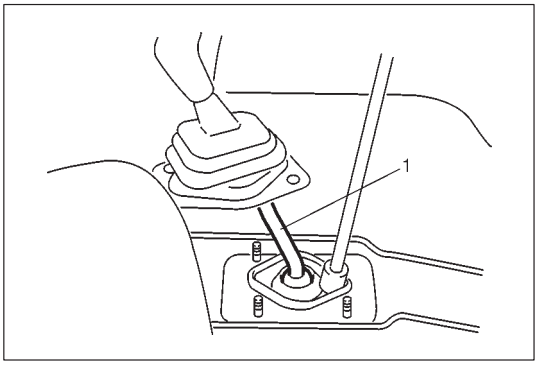

Removal

Gearshift control lever

Remove the gearshift control lever (1) according to the following procedure.

1) Remove gearshift control lever housing nuts (4 pcs) and bolts (2 pcs).

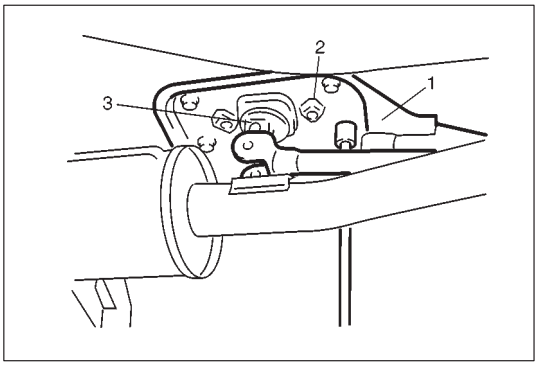

2) Lift the front end of vehicle by jacking, and support it on safety stands.
3) Remove lever joint bolt.
4) Remove extension rod (1) with its bracket (2).
5) Pull out the gearshift control lever (3) downward.

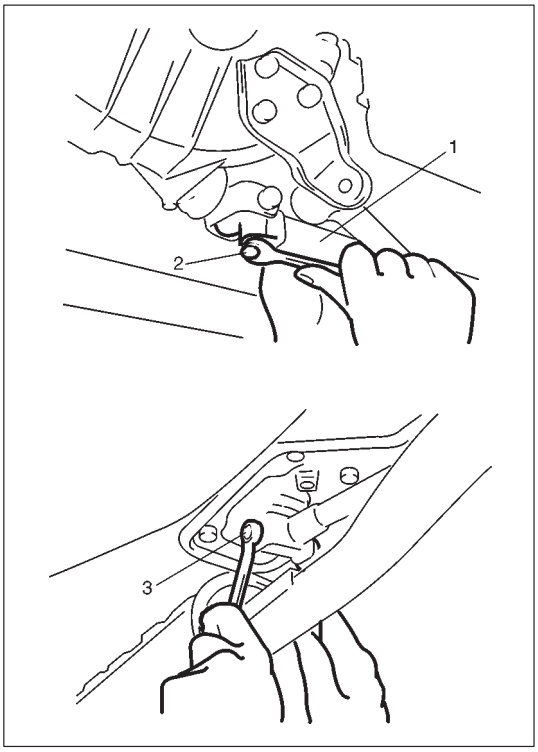

Gearshift control shaft

To remove control shaft (1), remove bolt (2) connecting gearshift control shaft and the gearshift shaft on the transmission side. Then remove bolt (3) from the control shaft.

Inspection

Boots, dust seals and bushes

Check them for damage and wear. Replace if defective.

Gearshift lever housing

Check rubber for damage or crack and replace if defective.

Installation

Install in reverse order of removal, noting the following

- Apply enough grease to the positions referring to page 7A-6.
  SUZUKI SUPER GREASE A 99000-25010
- Tighten bolts and nuts to specification referring to page 7A-6.

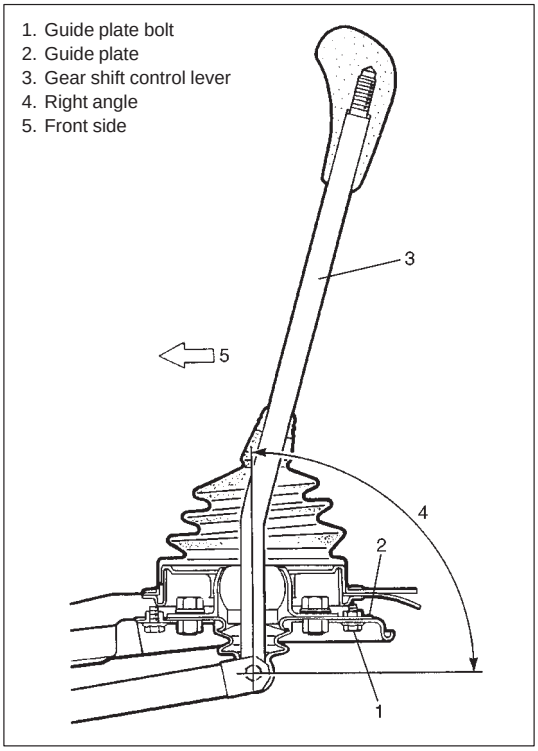

Adjustment

Gear shift control lever adjustment

When each shift stroke is short, or when gears are not in complete mesh, adjust the gear shift lever position as follows.

Loosen gear shift control housing nuts and guide plate bolts (1). Adjust gear shift lever position by displacing it toward front and rear so that each shift stroke is equal and each gear is in complete mesh.

Lubrication

Apply grease (SUZUKI SUPER GREASE A) to gear shift control lever seal and control rod bushes periodically.
For greasing points, refer to page 7A-6.

UNIT REPAIR OVERHAUL

DISMOUNTING/REMOUNTING

Dismount or mount transmission with engine referring to SECTION 6A “ENGINE MECHANICAL”, and separate or combine transmission and engine.

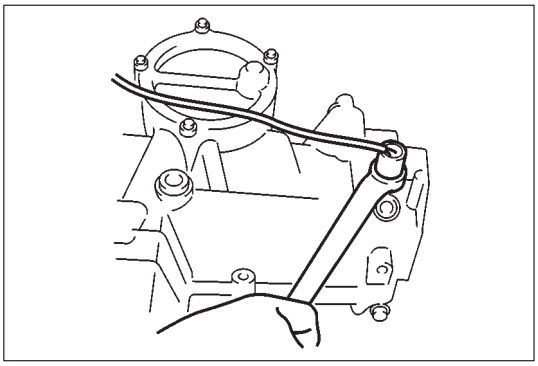

DISASSEMBLY

1) Remove back up light switch.

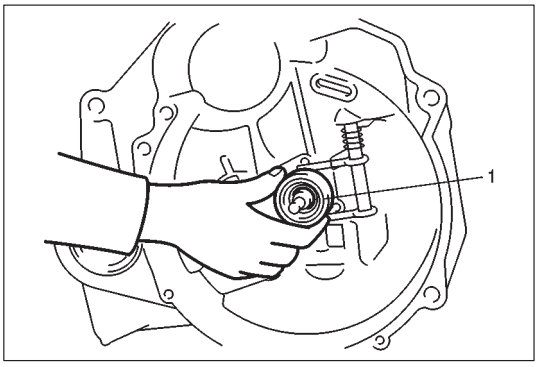

2) Remove clutch release bearing (1).

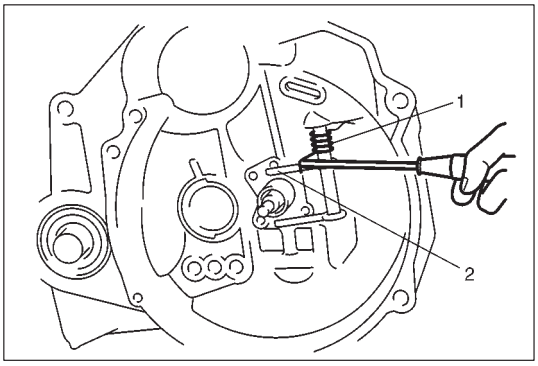

3) Remove clutch release shaft return spring (1) from release lever (2).

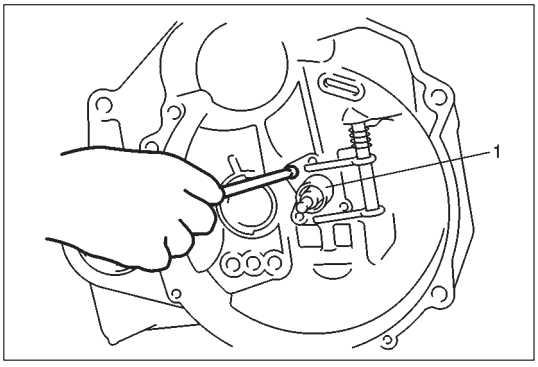

4) Remove clutch release bearing retainer (1).
   Inserting bolts in the upper and lower points of retainer will facilitate removal.

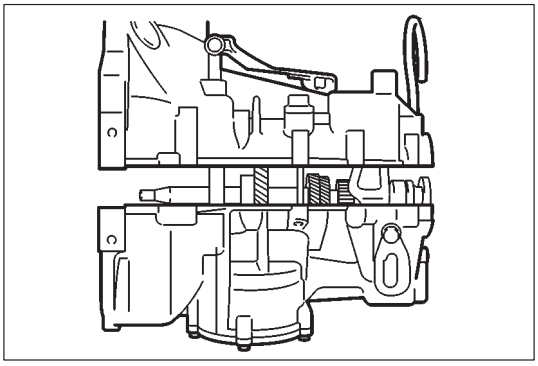

5) Remove bolts fastening upper and lower cases.
6) Detach lower and upper transmission cases.

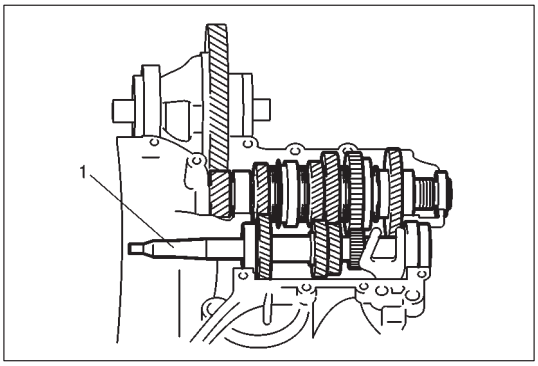

7) When upper case is removed, all parts should be left on the lower case.
8) Remove input shaft assembly (1) from the lower case.

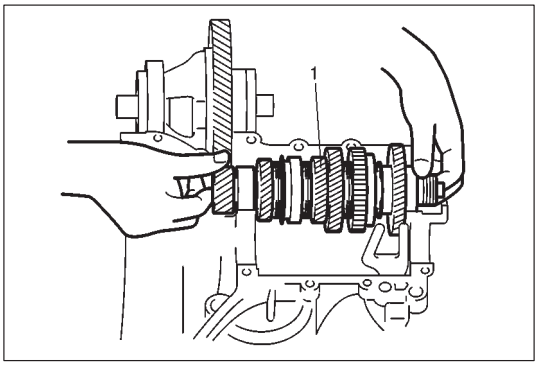

9) Remove counter shaft assembly (1) from the lower case.

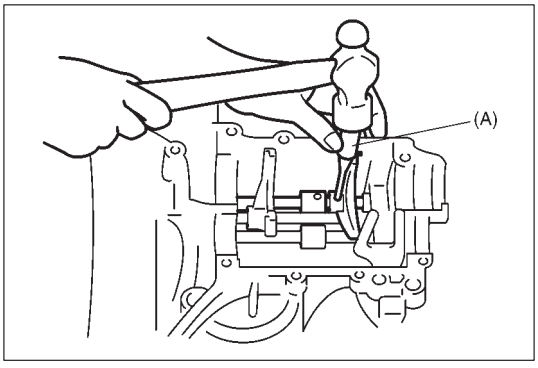

10) Tap the spring pin out of the 3 shift fork shafts with special tool.

Special Tool
(A): 09922-85811

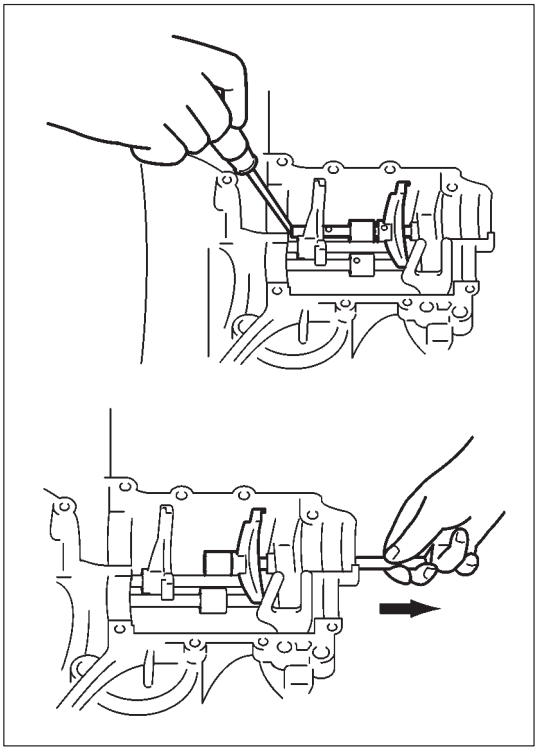

11) Draw out 3 shift fork shafts in the order of low speed gear shift fork shaft, high speed gear shift fork shaft and reverse gear shift fork shaft.

NOTICE:

- **The 2 shafts should be positioned at neutral when removing shift fork shafts.**
- **Take care when drawing out shafts so that locating balls do not fall out.**

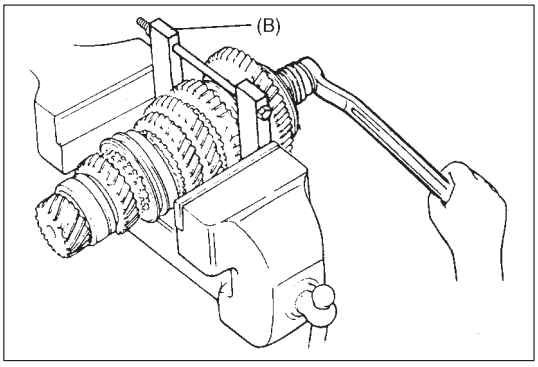

12) Fit special tool on low speed synchronizer sleeve and fix it securely with a vice as shown below.
Loosen countershaft nut and draw out speedometer drive gear.

Special Tool
(B): 09921-57810

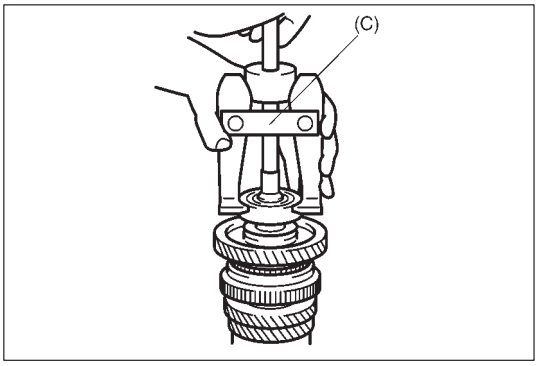

13) Remove bearing. After removing bearing, all the parts on counter shaft can be removed.

Special Tool
(C): 09913-61110

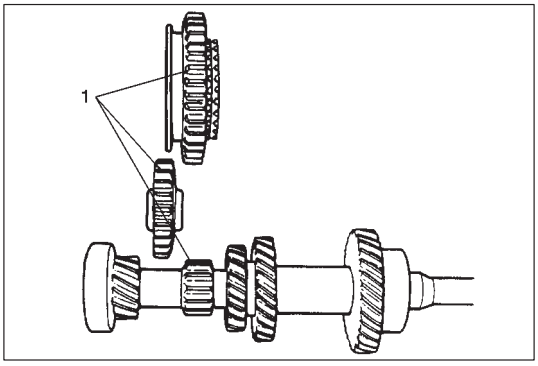

INSPECTION OF TRANSMISSION COMPONENTS

Reverse gears and idle gear

Inspect the chamfered edges (1) of gear teeth of the three gears-driving and driven gears (of input shaft and countershaft) and idle gear. If the edges are worn badly, replace the gears. Abnormal noise of gear slipping in reverse drive is often due to worn tooth edges of these gears.

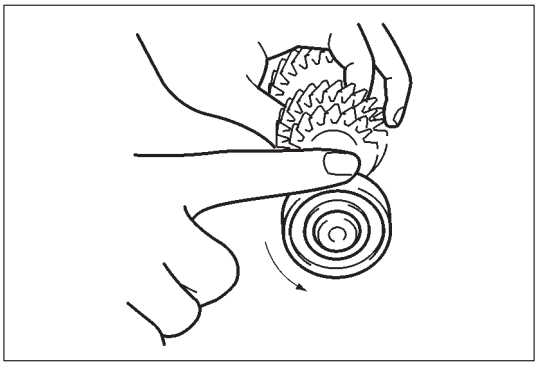

Input shaft and its bearings

If any of input shaft gears is found with chipped or broken teeth, replace input shaft. Check each bearing by spinning its outer race by hand to “feel” the smoothness of rotation. Replace the bearing if noted to exhibit sticking, resistance or abnormal noise when spun or rotated by hand.

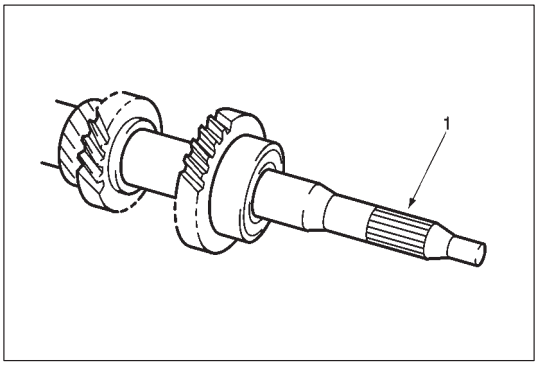

Check spline (1) of input shaft for wear and damage. Replace if defective.

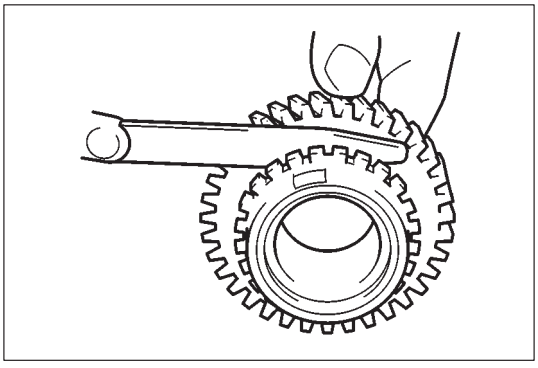

Combination of gear and synchronizer ring

Fit ring to cone of the gear (top gear, or “third”, “second” or “low” gear), and measure the clearance between the two at the peripheral teeth, as shown in below figure. If the clearance has reached or exceeds the service limit, replace the worn part.

	Standard	Service limit
Clearance between gear and ring	0.8 – 1.2 mm (0.03 – 0.05 in.)	0.5 mm (0.02 in.)

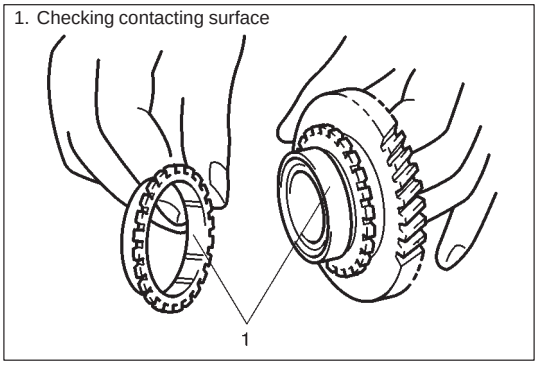

Inspect the external cone (of gear) and internal cone (of ring) for abnormal wear. Be sure that the contact patterns on these surfaces indicate uniform full-face contact, and that the surfaces are from any wavy wear. A badly worn member must be replaced.

Proper synchronizing action on gear shifting can be expected when the ring-to-gear clearance and the condition of cone surfaces, among other things, are satisfactory.

Chamfered tooth ends of ring (external teeth) and sleeve (internal teeth)

Synchronizer ring and hub have three slots each, in which keys are carried as backed by expanding springs, so that hub and its two rings, one on each end, are capable of running together. Since sleeve is engaged by its internal teeth with hub, as if the two were splined together, sleeve too runs with hub and rings.

In meshing action, sleeve is pushed (by the shifter fork) to one side, so that it slides axially on hub, pushing ring toward cone surface of gear. This push is transmitted by three keys, which are lightly gripped by sleeve.

By the friction between gear cone and ring cone (internal), ring begins to rotate but is opposed by hub because of the keys. In other words, the ring is at this time twisted, while the sleeve is advancing further to push the ring fully against the gear cone. Since the ring is unable to slide along any further, the sleeve lets go of the keys and rides over to the ring. At this moment, the initial contact between the chamfered ends of teeth of ring and those of internal teeth of sleeve occurs. This contact is such that the internal teeth of sleeve align themselves to those of the ring.

When the sleeve advances and slides into ring, ring will be rotating nearly with the speed of gear, so that sleeve is enabled smoothly to slide over into clutch teeth of gear.

The initial contactor mesh between sleeve and ring is determined by widths of key and slot or, to say the same thing, key clearance in the slot, and is prescribed to extend at least a third (1/3) of the chamfer.

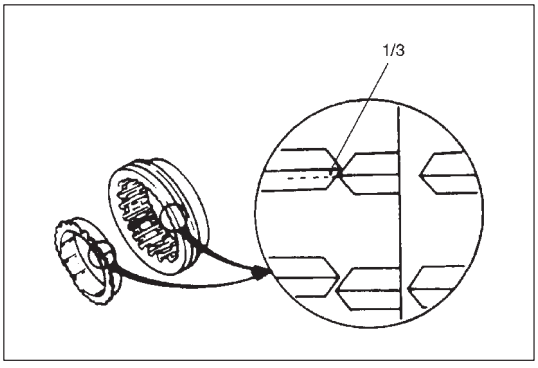

With the synchronizer properly assembled on shaft, push in and twist each synchronizer to see if the one-third mesh occurs or not; if not, it means that the overall wear (which is the sum of the wears of slots, keys and chamfered tooth ends) is excessive and, in such a case, the entire synchronizer assembly must be replaced.

Mesh of chamfered tooth ends of synchronizer ring and sleeve	Contact extending about 1/3 of chamfered face from apex

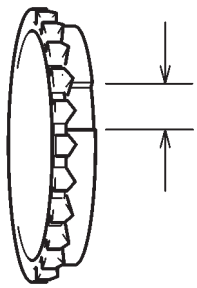

Synchronizer rings

Inspect each synchronizer ring for key slot wear by measuring the width of each slot. If the width reading exceeds the limit, replace the ring.

Key slot width	Standard	Service Limit
Low gear	8.0 mm (0.31 in.)	8.3 mm (0.32 in.)
Second gear	10.0 mm (0.39 in.)	10.3 mm (0.40 in.)
Third and top gear	9.6 mm (0.38 in.)	9.9 mm (0.39 in.)

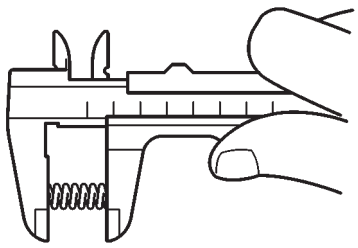

Fork shaft locating springs, gear shift arm spring and shift shaft locating spring

Locating springs are used to arrest the three shifter fork shafts. If “gears slipping out of mesh” has been reported, check these springs for strength by measuring their free lengths, and replace them if their free lengths are less than the service limits.

Gear shift arm spring is used to arrest shift lever when it is shifted into reverse gear.

Also replace it if its free length is less than the below specified service limit.

Free length	Standard	Service Limit
Reverse fork shaft locating spring, gearshift arm spring and shift shaft locating spring	19.5 mm (0.767 in.)	17.0 mm (0.669 in.)
Low and High speed fork shaft locating spring	17.0 mm (0.669 in.)	15.5 mm (0.610 in.)

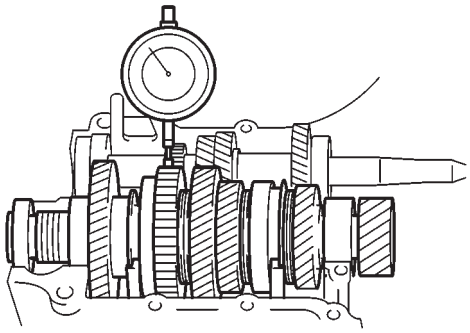

Gear backlash

Check the backlash of gears with a fuse wire-element or dial gauge and replace if the backlash exceeds the specified service limit.

Gear backlash

Gear	Standard	Service Limit
Low & Second	0.05 – 0.10 mm (0.0019 – 0.0039 in.)	0.30 mm (0.0118 in.)
Third & Top	0.15 – 0.20 mm (0.0059 – 0.0078 in.)	0.30 mm (0.0118 in.)
Reverse	0.15 – 0.30 mm (0.0059 – 0.0118 in.)	10.3 mm (0.40 in.)

Shifter fork shafts

Check the groove of shifter fork shaft which comes in contact with locating spring ball, for wear.

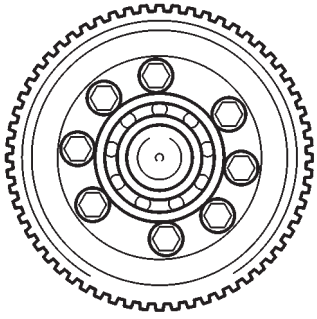

Differential case bolts

Check differential case bolts for looseness and retighten if loose.

Tightening Torque for Differential Case Bolts
90 N·m (9.0 kg-m, 65 lb-ft)

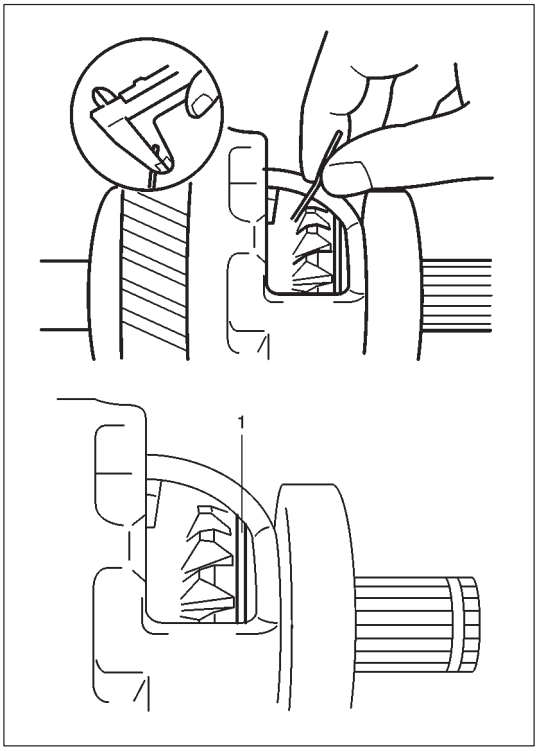

Differential side pinion & gear

Measure the backlash of side pinion and side gear. To measure backlash, insert a thin fuse between pinion and gear and measure the thickness of the crushed fuse.

Side gear back lash specification	0.05 – 0.10 mm (0.002 – 0.004 in.)
Side gear thrust play specification	0.15 – 0.40 mm (0.006 – 0.016 in.)

If the backlash exceeds the specified value, adjust it by varying the thickness of thrust washer (1) at the back of side gear (back of the toothed surface).

Available thrust washer sizes (thickness)	0.8, 1.0 & 1.2 mm (0.03, 0.04 & 0.05 in.)

IMPORTANT STEPS IN REASSEMBLY

NOTICE:

- **Wash all parts and apply gear oil to sliding surfaces.**
- **When installing each parts on counter shaft, be careful for installing direction and position of each washer, gear, synchronizer ring, hub and sleeve.**
  Refer to figures in p. 7A-2 and 7A-3. Don't forget to install pin and ball on countershaft.

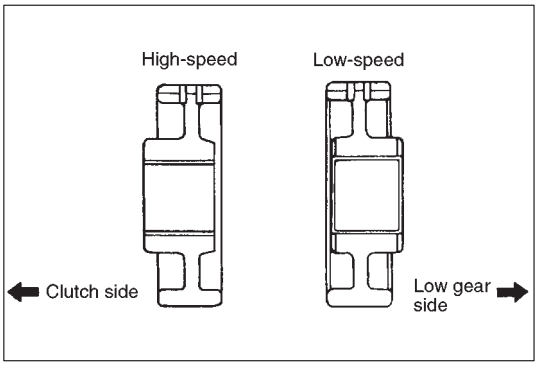

Synchronizer hub and synchronizer sleeve

When mounting low-speed and high-speed synchronizer hubs on countershaft, direct the longer inner boss of each hub as shown in below figure.

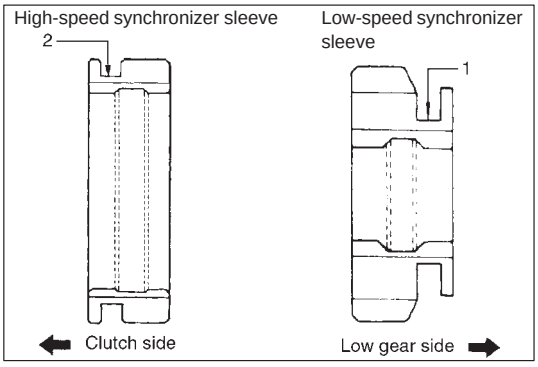

When inserting synchronizer sleeve in synchronizer hub:

Low-speed synchronizer sleeve:
Point groove (1) on the outer surface of sleeve in the direction of the low gear side.

High-speed synchronizer sleeve:
Point groove (2) on the outer surface of sleeve in the direction of the clutch side.

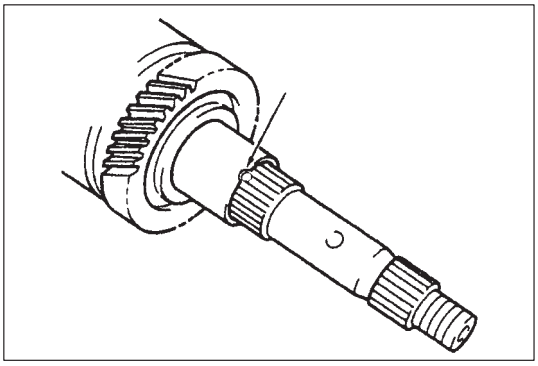

Second and third gear bush

When assembling the second and third gear bush, make sure that oil hole of counter shaft and oil grooves of second and third gear bushes match accurately.

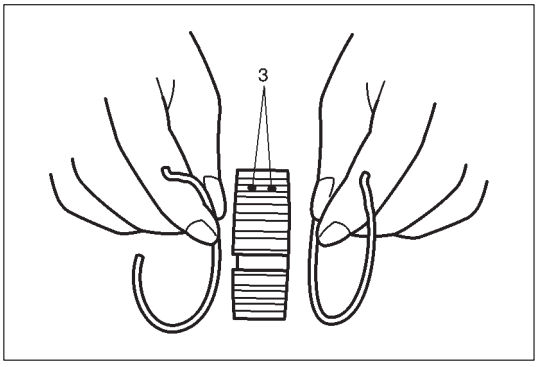

Synchronizer spring

Do not deform or otherwise damage synchronizer spring. To install spring, insert one end of spring in the spring setting hole (3) on synchronizer hub, directing 2 springs in opposition to each other so that the load is evenly applied to synchronizer keys.

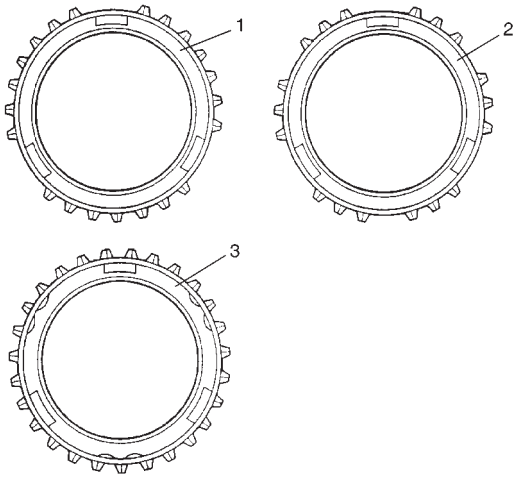

1. Low gear synchronizer ring
2. 2nd gear synchronizer ring
3. 3rd & top gear synchronizer ring

Synchronizer ring

Three types of synchronizer ring are used.
Be sure to install them in place.

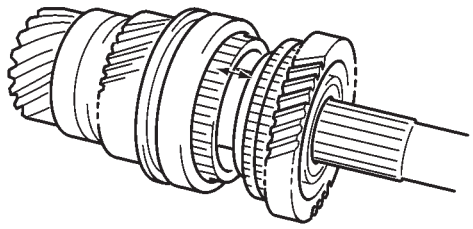

Be sure that three keys mounted on hub fit snugly into the slots provided in ring.

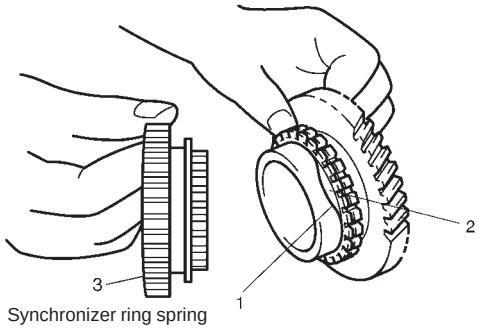

1. Synchronizer ring spring
2. Low gear synchronizer ring
3. Synchronizer hub

Synchronizer ring spring

Do not forget to install spring (1) between low gear synchronizer ring (2) and synchronizer hub (3).

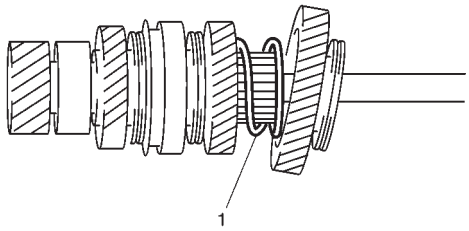

2ND, 3RD driven gear spring

Do not forget to install spring (1) between the 2nd and 3rd driven gears on counter shaft. This prevents noise due to play.

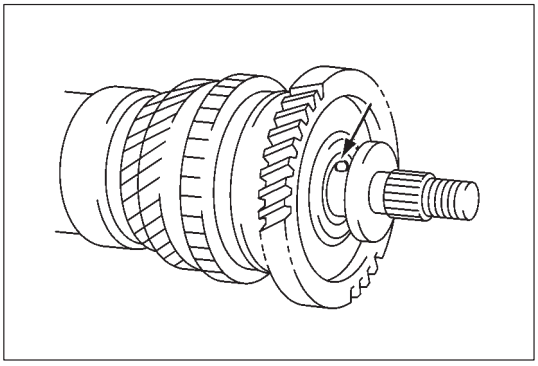

Low gear thrust washer ball

After installing low gear bush, bearing and low gear, install ball on counter shaft.

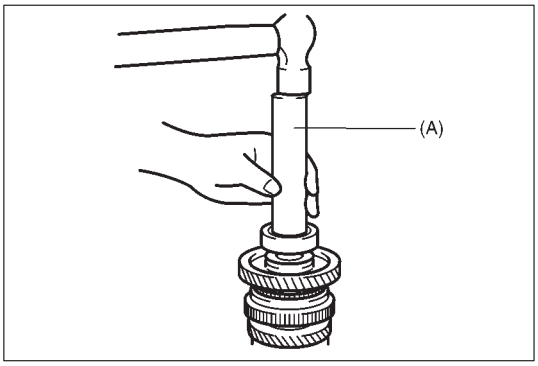

Counter shaft bearing

To drive bearing into the counter shaft, use special tool.

Special Tool
(A): 09913-80112

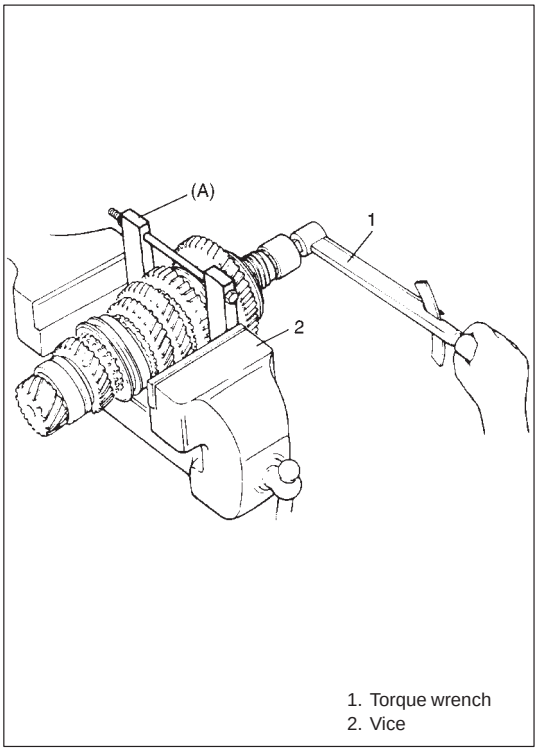

Counter shaft nut

Fit special tool on low speed synchronizer sleeve and fix it securely with a vice as shown below. And then tighten nut to the below specified tightening torque.

Special Tool
(A): 09921-57810

Tightening Torque for Countershaft Nut
70 N·m (7.0 kg-m, 40 lb-ft)

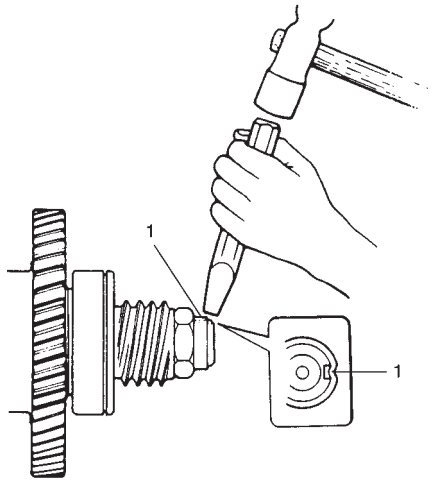

1. Caulked portion of nut

In order to lock countershaft nut firmly, caulk nut with a chisel or the like as its part over the groove in countershaft, as shown below.

NOTE:
The nut once used should never be used again.

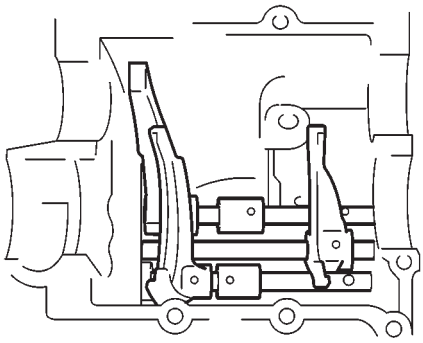

Shifter forks and shafts

When mounting shifter fork on shifter shaft, refer to below figure for the direction of shifter forks.

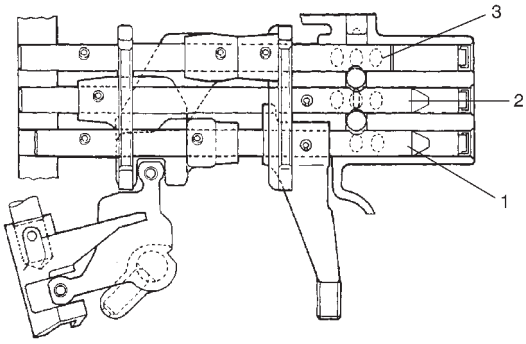

Locating springs are for keeping locating steel balls pushed down against fork shafts (REVERSE, HIGH and LOW) for the purpose of arresting these shafts at respective operating positions.

CAUTION:
- **Locating steel balls and gear shift arm shaft steel ball used have an outside diameter of 7.9 mm ϕ (0.311 in. ϕ).**
- **When installing locating springs, distinguish between reverse locating spring and low & high ones by its free length.**
  For their free length, refer to p. 7A-14.

Install shifter shaft in the order of reverse shaft (1), high-speed shaft (2) and low-speed shaft (3), as shown in below figure.

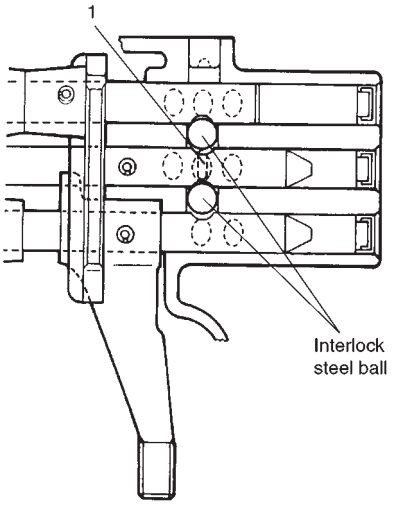

Insert interlock steel balls through shaft hole. Through this hole, insert one ball between each of 2 adjacent shafts. Use interlock steel balls with an outside diameter of 9.5 mm ϕ (0.374 in. ϕ).

NOTICE:

Be sure to put in pin for preventing two shafts from getting shifted at the same time. This pin (1) goes into the hole provided in high-speed shaft.

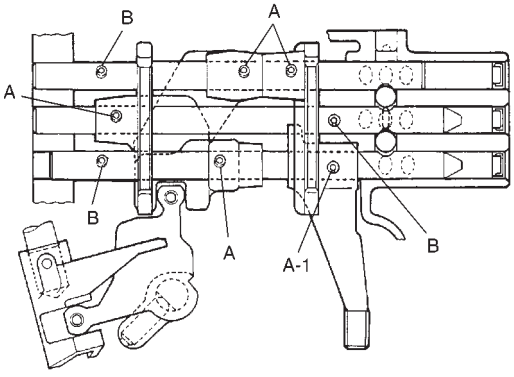

A : Shifter fork pin . . . . Length 20 mm 10.79 in.)
A-1 : Shifter fork pin . . . . Length 18 mm 10.71 in.)
B : Stopper pin . . . . . Length 18 mm 10.71 in.)

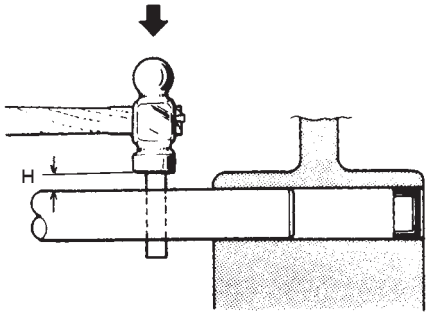

H : Low-speed stopper pin height 3 mm (0.12 in.)
H : High-speed stopper pin height 0 mm (0 in.)
H : Reverse stopper pin height 3 mm (0.12 in)

Gear shifter fork and shaft stopper pins

Drive the shifter fork pins (low-speed, high-speed and reverse) into the shifter fork and shaft completely.

Drive the shifter shaft stopper pins into the shifter shaft so that dimension H is obtained, as illustrated in below figure.

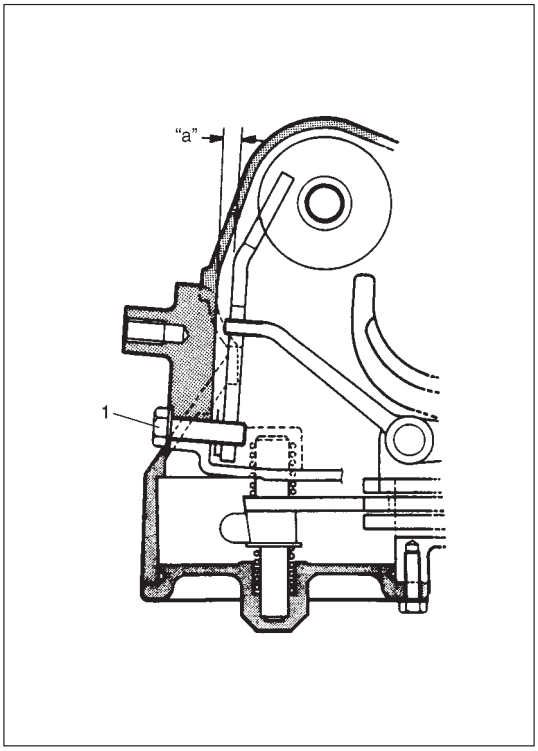

Reverse gear shifter lever

When installing reverse gear shifter lever, adjust dimension "a" as illustrated below to 5 mm (0.197 in.) with gear shifter lever bolt (1). This is necessary to keep the clearance between lever and second gear on input shaft to more than 2 mm (0.078 in.) when shifting gear into reverse.

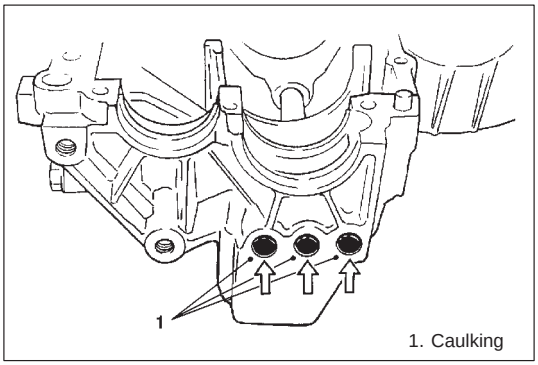

Gear shifter fork shaft plugs

Before installing gear shifter fork shaft plugs, apply SUZUKI BOND NO. 1215 (99000-31110) to the outer surface of the plugs.
Caulk transmission case with punch as shown below to prevent plugs from coming off.

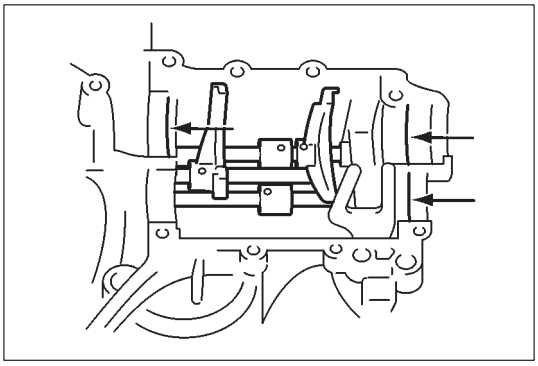

C ring

Do not forget to fit counter shaft bearing C-rings and input shaft C-ring in transmission case.

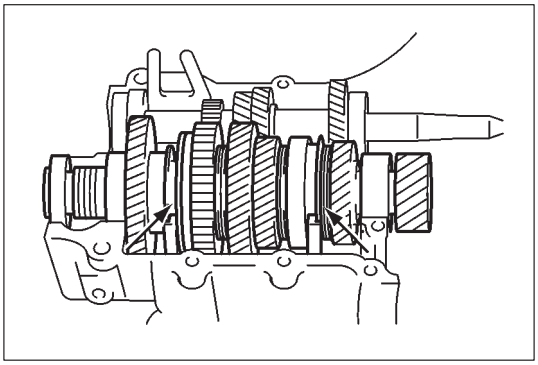

Counter shaft

Install the countershaft in lower case with gears on countershaft in neutral (shifter fork shafts must also be in neutral), fitting the shifter fork in the groove of sleeve.

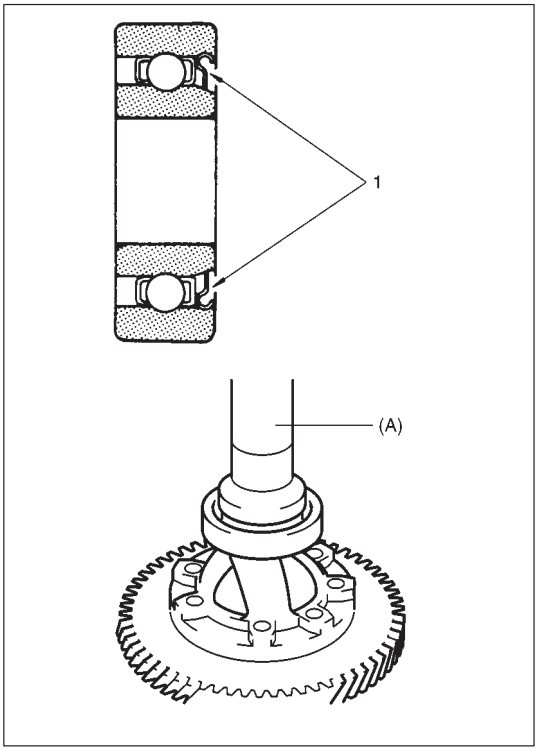

Differential side bearing

Press-fit differential side bearing with a hydraulic press using special tool. Direct the seal side (1) of the bearing (iron plate side) inward (transmission oil side).

Special Tool

(A): 09913-75810

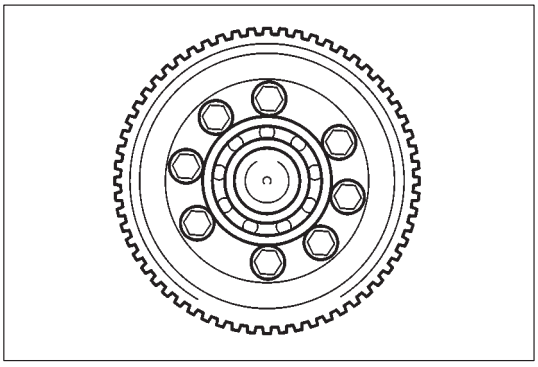

Differential case bolts

Special bolts are used for the differential case because of the high torsional load. Never use bolts other than the specified ones.

Tightening Torque for Differential Case Bolts

90 N·m (9.0 kg-m, 65 lb-ft)

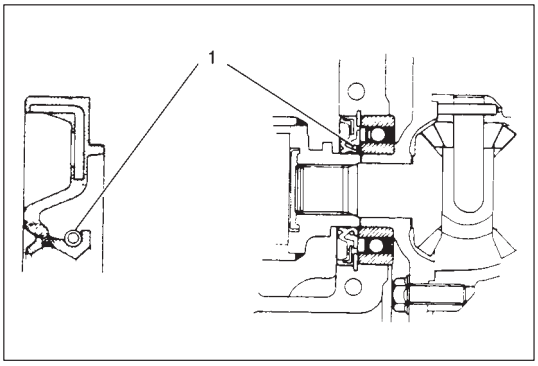

Differential side oil seals

Apply grease to the lip of the differential side oil seal and install with spring (1) of the oil seal positioned inside (transmission oil side).

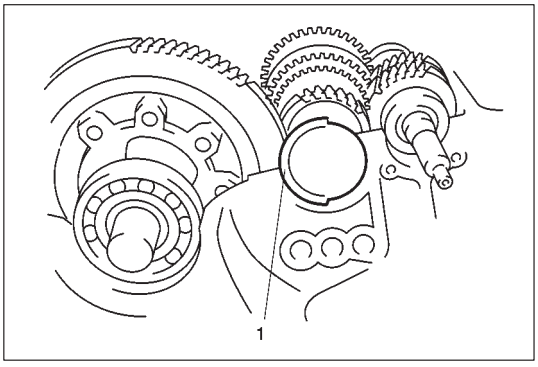

Counter shaft bearing plug

Install the countershaft bearing plug, directing the rib (1) (flange) of the plug outside the case, toward the joint of the upper and lower cases on the differential side.

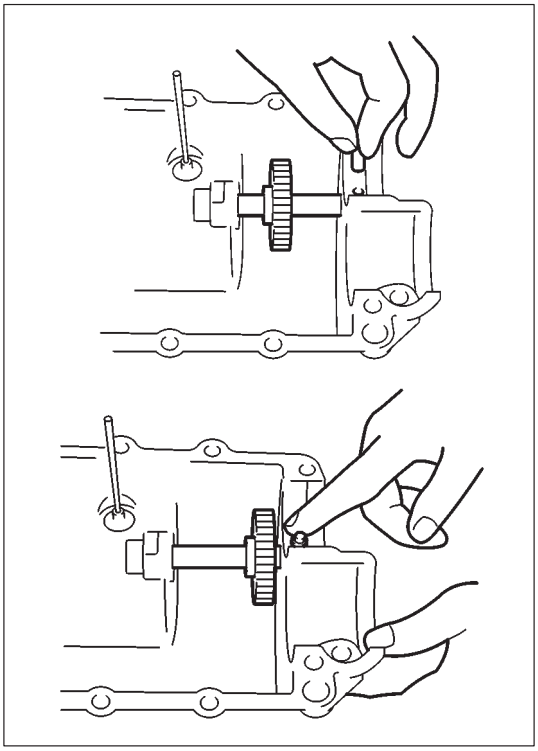

Reverse gear shaft pin

Do not forget to install reverse gear shaft pin. After installation, apply grease to the hole into which pin has been inserted to prevent the pin from coming out when combining upper and lower cases. Do not install reverse idle gear in the wrong direction.

Putting together upper and lower cases

Clean the joint faces, removing any foreign matters adhering to these faces, and then apply liquid sealing compound to the joint faces, coating each face uniformly with the compound and, a few minutes after this application, match the two cases together.

Sealant : SUZUKI BOND No. 1215, 99000-31110

[Clutch release shaft]

Before fitting upper case on lower case, apply grease to sliding surfaces between clutch release shaft and its bushes.

Lithium Grease : SUZUKI SUPER GREASE A

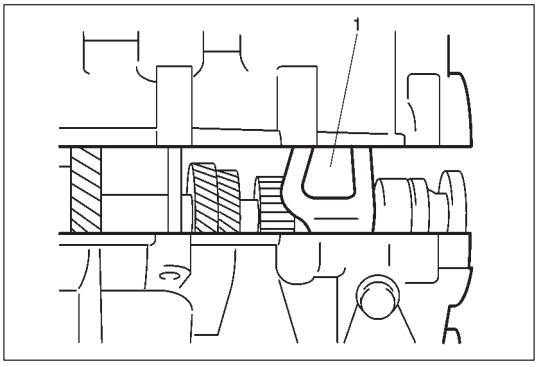

[Upper case]

Move idle gear to right and left so that idle gear fits perfectly in the groove (1) of reverse idle gear shift arm when fitting upper case on lower case.

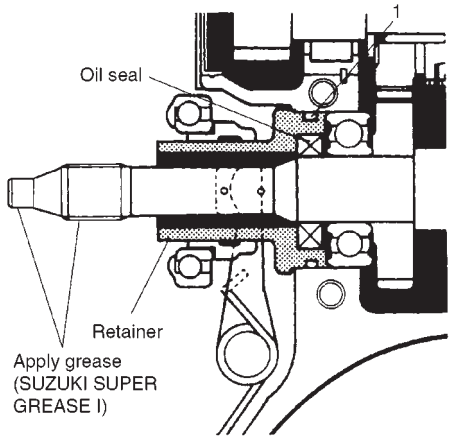

[Input shaft bearing retainer]
Bear in mind the following points when installing input shaft bearing retainer.

- Apply grease to oil seal lip.

  Lithium Grease : SUZUKI SUPER GREASE A (99000-25010)

- Install O-ring (1) in the groove of retainer and then apply sealant to a part of the retainer that is lined up with the joint of upper and lower transmission cases.

  Sealant : SUZUKI BOND NO. 1215 (99000-31110)

- Before tightening transmission case bolts, insert the retainer into the transmission case taking care not to damage O-ring (1).
- Apply grease to spline part of input shaft.

  Lithium Grease : SUZUKI SUPER GREASE I (99000-25210)

After assembling, check to be sure that gear shift shaft can be shifted to each gear position smoothly.

Clutch release arm
For release arm installation, refer to SECTION 7C “CLUTCH”.

Differential side gear snap rings
When replacing differential side gears, do not forget to install snap rings (right and left) on differential side gear spline.

Oil drain plug and transmission oil
Install drain plug and fill transmission oil referring to 7A-5.

REQUIRED SERVICE MATERIALS

MATERIALS	RECOMMENDED SUZUKI PRODUCTS	USE
Lithium grease	SUZUKI SUPER GREASE A (99000-25010) SUZUKI SUPER GREASE I (99000-25210)	● Oil seal lips ● Gear shift control lever ● Gear shift control shaft bushes ● Input shaft spline and front end
Sealant	SUZUKI BOND NO.1215 (99000-31110)	● Oil drain plug ● Gear shift shaft bolt ● Mating surface of transmission case ● Mating surface of clutch release bearing retainer

SPECIAL TOOLS

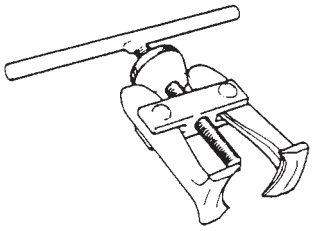 09913-61110 Bearing puller	 09913-75810 Bearing installer	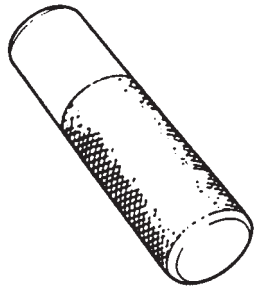 09913-80112 Bearing installer	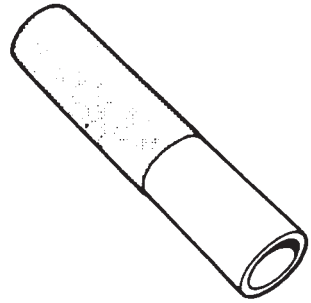 09913-84510 Bearing installer
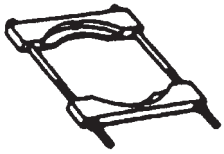 09921-57810 Bearing remover	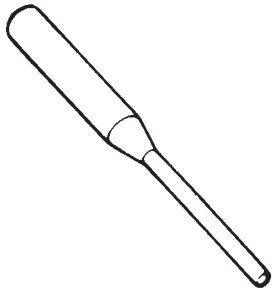 09922-85811 Spring pin remover		

SECTION 7A1

MANUAL TRANSMISSION (5-SPEED)

CONTENTS

GENERAL DESCRIPTION 7A1- 2
DIAGNOSIS 7A1- 6
ON-VEHICLE SERVICE 7A1- 7
Oil Change 7A1- 7
Differential Side Oil Seal 7A1- 8
Gear Shift Control 7A1- 9
UNIT REPAIR OVERHAUL 7A1-10
Dismounting/Remounting 7A1-10
Disassembling Unit 7A1-10
Fifth gears 7A1-10
Gear shifter, main shaft and countershaft 7A1-11
Right case 7A1-13
Sub Assembly Service 7A1-15
Right case 7A1-15
Left case 7A1-16
Input shaft assembly 7A1-16
Countershaft assembly 7A1-19
Gear shifter 7A1-22
Differential assembly 7A1-24
Assembling Unit 7A1-26
Differential to left case 7A1-26
Fifth gears 7A1-29
Gear shift & select shaft assembly . 7A1-32
REQUIRED SERVICE MATERIALS . . . 7A1-33
SPECIAL TOOLS 7A1-34

GENERAL DESCRIPTION

The transmission provides five forward speeds and one reverse speed by means of three synchronizers and three shafts – input shaft, countershaft and reverse gear shaft. All forward gears are in constant mesh, and reverse uses a sliding idler gear arrangement.

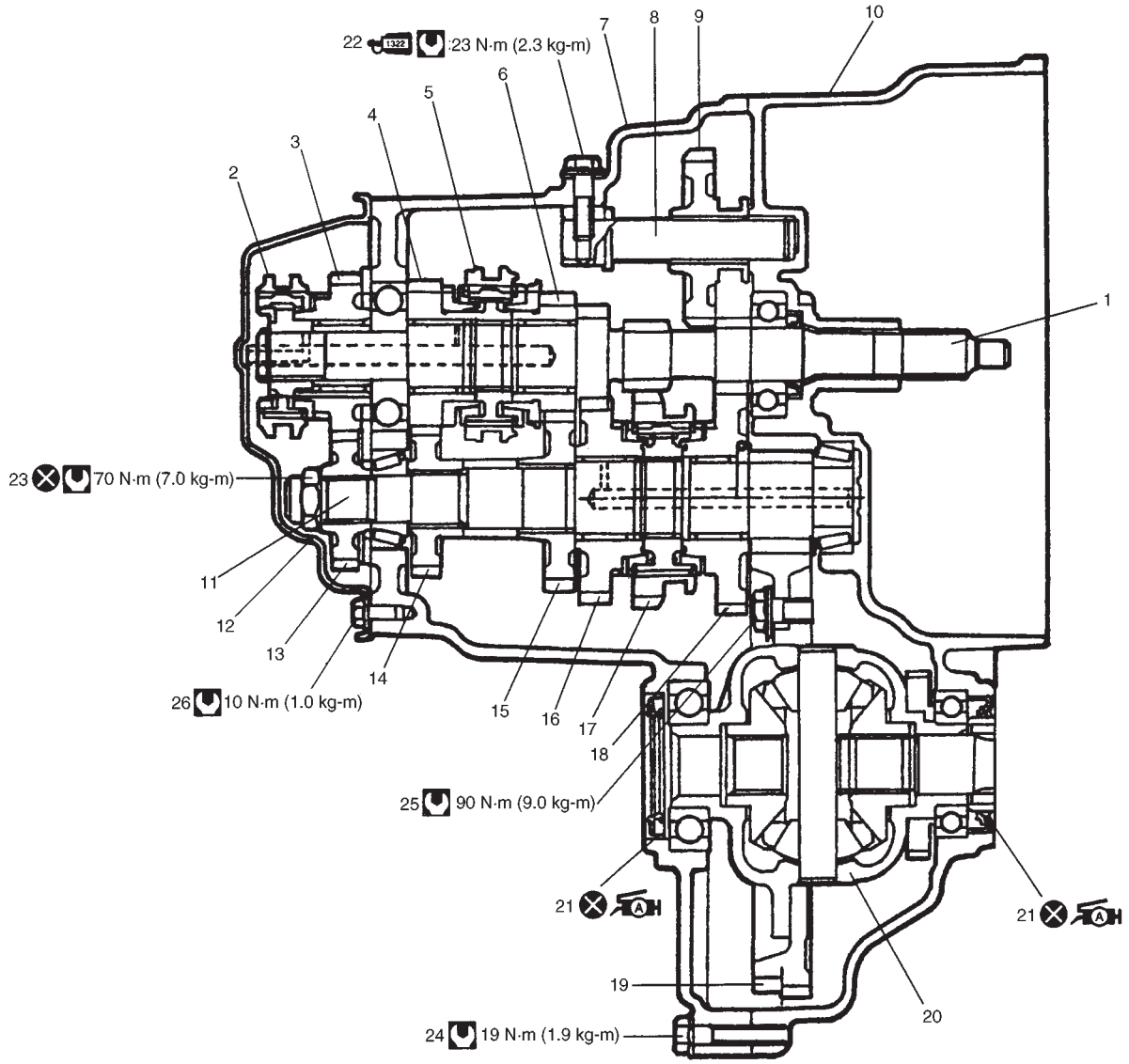

1. Input shaft
2. 5th speed sleeve & hub
3. Input shaft 5th gear
4. Input shaft 4th gear
5. High speed sleeve & hub
6. Input shaft 3rd gear
7. Left case
8. Reverse gear shaft
9. Reverse idler gear
10. Right case
11. Countershaft
12. Left cover
13. Countershaft 5th gear
14. Countershaft 4th gear
15. Countershaft 3rd gear
16. Countershaft 2nd gear
17. Low speed sleeve & hub
18. Countershaft 1st gear
19. Final gear
20. Differential case
21. Differential side oil seal: Apply lithium grease 99000-25010 to oil seal lip.
22. Reverse shaft bolt: Apply thread lock cement 99000-32110 to joint seam of reverse gear shaft.
23. Countershaft nut
24. Transmission case bolt
25. Bevel gear bolt
26. Left cover bolt

: Tightening Torque

: Do not reuse

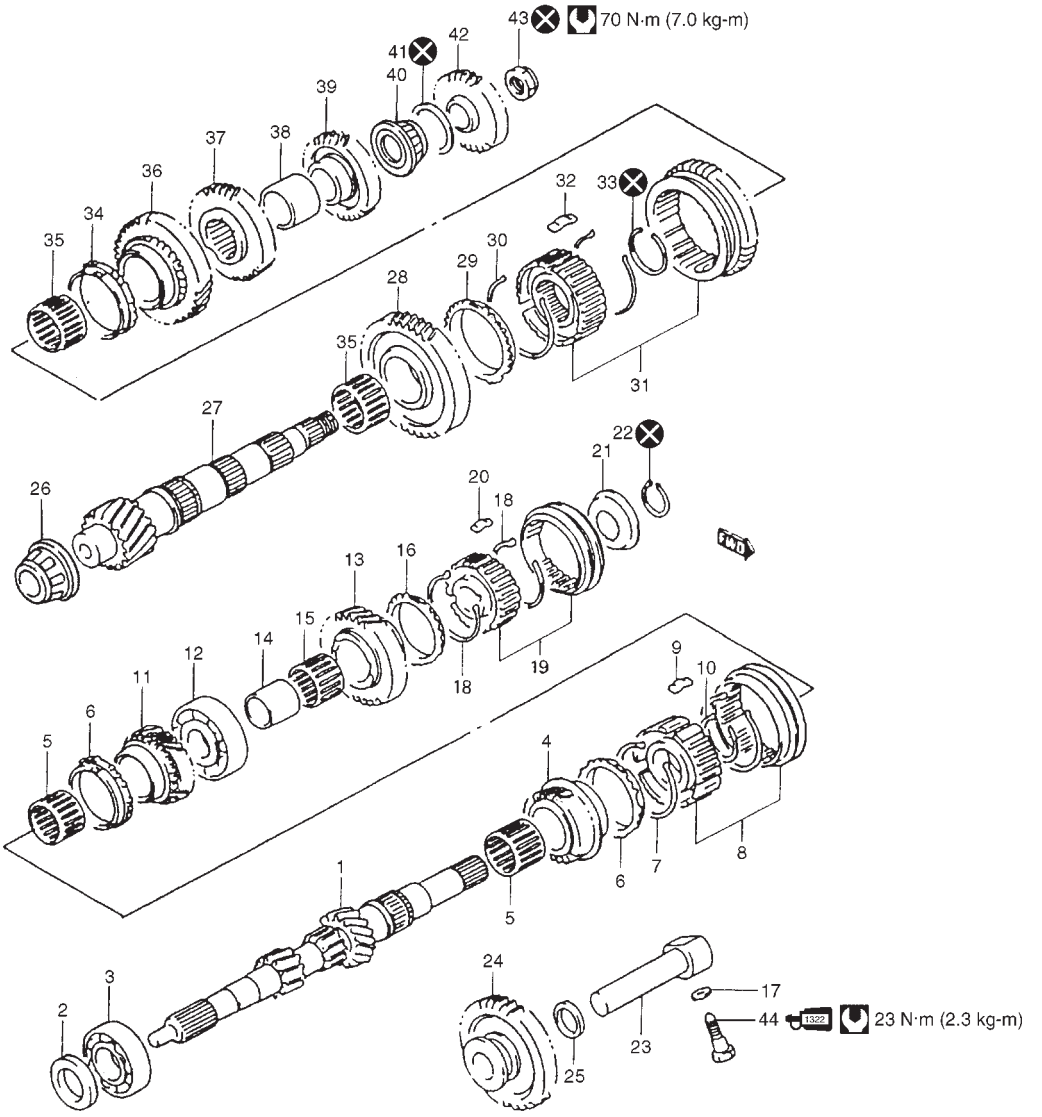

1. Input shaft
2. Oil seal
3. Input shaft right bearing
4. Input shaft 3rd gear
5. 3rd & 4th gear bearing
6. High speed synchronizer ring
7. High speed synchronizer spring
8. High speed sleeve & hub
9. High speed synchronizer key
10. Circlip
11. Input shaft 4th gear
12. Input shaft left bearing
13. Input shaft 5th gear
14. 5th gear spacer
15. 5th gear bearing
16. 5th speed synchronizer ring
17. Washer
18. 5th synchronizer spring
19. 5th speed sleeve & hub
20. 5th synchronizer key
21. 5th synchronizer hub plate
22. Circlip
23. Reverse gear shaft
24. Reverse idler gear
25. Reverse shaft washer
26. Countershaft right bearing
27. Countershaft
28. Countershaft 1st gear
29. 1st gear synchronizer ring
30. Low speed synchronizer spring
31. Low speed sleeve & hub
32. Low speed synchronizer key
33. Circlip
34. 2nd gear synchronizer ring
35. 1st & 2nd gear bearing
36. Countershaft 2nd gear
37. Countershaft 3rd gear
38. 3rd & 4th gear spacer
39. Countershaft 4th gear
40. Countershaft left bearing
41. Bearing set shim
42. Countershaft 5th gear
43. Countershaft nut
44. Reverse shaft bolt:
    Apply thread lock cement 99000-32110 to joint seam of reverse gear shaft.

: Tightening Torque

: Do not reuse

GEAR SHIFT MECHANISM

Movement of gear shift control lever is transmitted to gear shift shaft through gear shift control shaft, and gear shift & select shaft through gear shift arm and gear shift yoke, and then gear shift & select lever to each gear shift yoke, shaft and fork or arm. Gear shift interlock plate is provided to prevent the gear from engaging double.

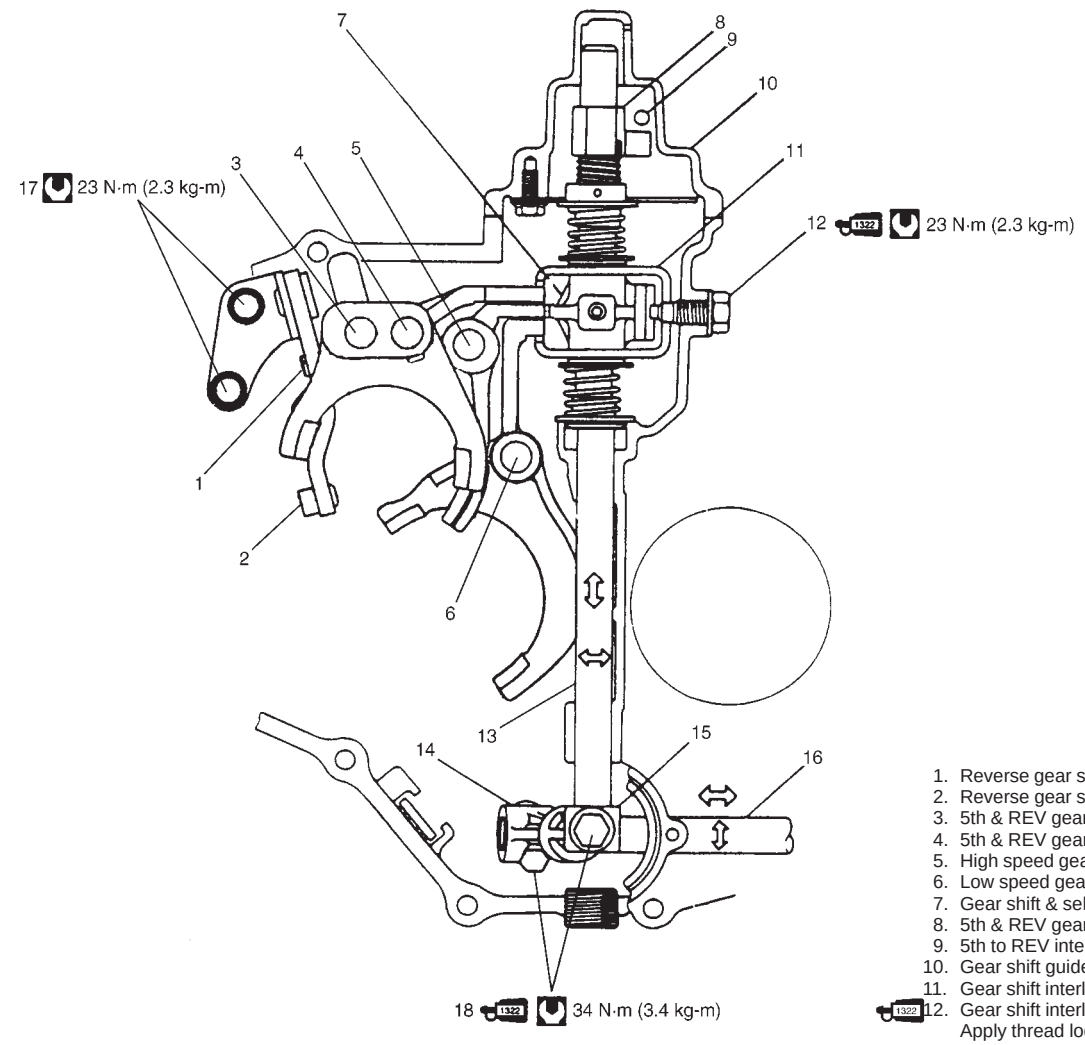

1. Reverse gear shift arm
2. Reverse gear shift lever
3. 5th & REV gear shift guide shaft
4. 5th & REV gear shift shaft
5. High speed gear shift shaft
6. Low speed gear shift shaft
7. Gear shift & select lever
8. 5th & REV gear shift cam
9. 5th to REV interlock guide bolt
10. Gear shift guide case
11. Gear shift interlock plate
12. 1322 Gear shift interlock bolt: Apply thread lock cement 99000-32110 to thread part
13. Gear shift & select shaft
14. Gear shift arm
15. Gear shift yoke
16. Gear shift shaft
17. Reverse gear shift lever bolt
18. 1322 Gear shift arm bolt: Apply thread lock cement 99000-32110 to thread part

: Tightening Torque

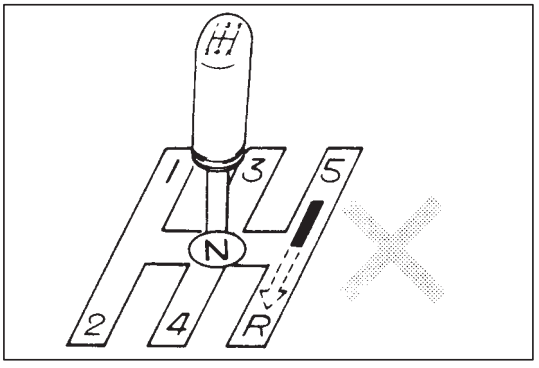

5TH & REVERSE GEAR SHIFT CAM

5th & reverse gear shift cam, cam guide return spring and 5th to reverse interlock guide bolt are provided to prevent the gear from being directly shifted from 5th to reverse.

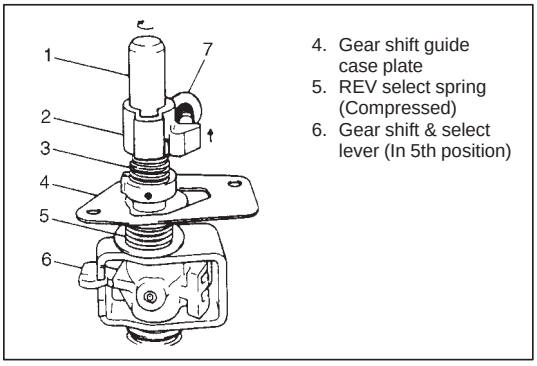

1) When gear is shifted to 5th speed, 5th & reverse gear shift cam (2) turns clockwise with gear shift & select shaft (1) and it is pushed up by cam guide return spring (3) to the position where interlock guide bolt (7) prevents the cam from being shifted to reverse straight.

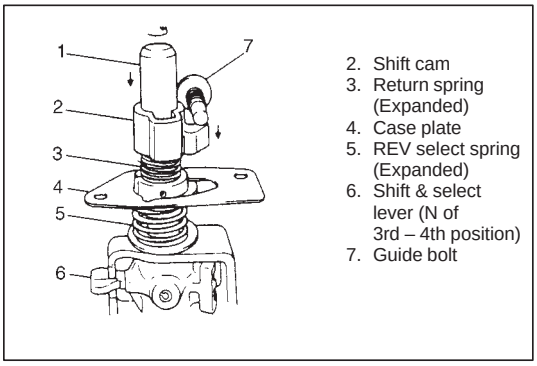

2) Shifting from 5th to neutral is available and further shift to reverse is interrupted.
However, when shift & select shaft (1) is moved to neutral of 3rd – 4th position, shift limit cam mechanism is canceled as shown in figure.

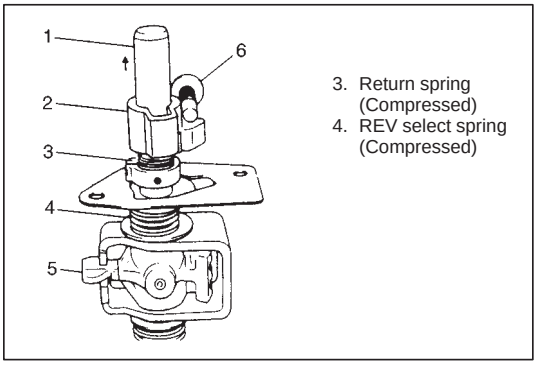

3) Selected position in neutral of 5th – REV is shown in figure.
While shift & select shaft (1) moves up to allow shift & select lever (5) to shift in 5th or reverse position, shift cam (2) stays because of interference of guide bolt (6).

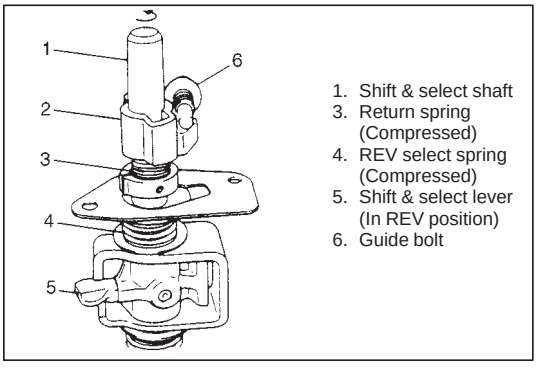

4) Now the mechanism is ready to be shifted to reverse without interference of shift cam (2).

DIAGNOSIS

Condition	Possible Cause	Correction
Gears slipping out of mesh	● Worn shift fork shaft ● Worn shift fork or synchronizer sleeve ● Weak or damaged locating springs ● Worn bearings on input shaft or countershaft ● Worn chamfered tooth on sleeve and gear	Replace. Replace. Replace. Replace. Replace sleeve and gear.
Hard shifting	● Inadequate lubricant ● Improper clutch pedal free travel ● Distorted or broken clutch disc ● Damaged clutch pressure plate ● Worn synchronizer ring ● Worn chamfered tooth on sleeve or gear ● Worn gear shift control shaft joint bush ● Distorted shift shaft	Replenish. Adjust. Replace. Replace clutch cover. Replace. Replace sleeve or gear. Replace. Replace.
Noise	● Inadequate or insufficient lubricant ● Damaged or worn bearing(s) ● Damaged or worn gear(s) ● Damaged or worn synchronizer parts	Replenish. Replace. Replace. Replace.

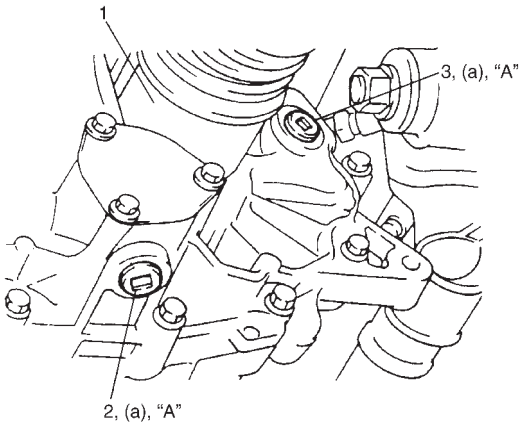

1. Drive shaft (LH)

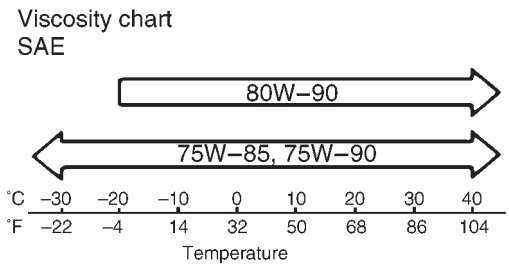

ON-VEHICLE SERVICE

OIL CHANGE

1) Before changing or inspecting oil, be sure to stop engine and lift vehicle horizontally.
2) With vehicle lifted up, check oil level and leakage.
   If leakage exists, correct it.
3) Drain old oil and torque drain plug (2) as specified below. Apply sealant to thread of drain plug before installation.

   "A": Sealant 99000-31110

   Tightening Torque
   (a): 21 N·m (2.1 kg-m, 15.5 lb-ft)

4) Fill new specified oil by specified amount (up to level hole).

   NOTE:
   - **It is recommended to use API GL-4 75W-90 gear oil.**
   - **Whenever vehicle is hoisted for any other service work than oil change, also be sure to check for oil leakage.**

   Oil specification: API GL-4
   For SAE classification, refer to viscosity chart at the left.

   Oil capacity: 2.1 liters (4.5/3.7 US/Imp. pt)

5) Apply sealant to thread of level/filler plug (3) and torque it as specified.

   "A": Sealant 99000-31110

   Tightening Torque
   (a): 21 N·m (2.1 kg-m, 15.5 lb-ft)

DIFFERENTIAL SIDE OIL SEAL

REPLACEMENT

1) Lift up vehicle and drain transmission oil.
2) Remove wheel, and disconnect tie-rod end from knuckle referring to SECTION 3D.

3) Remove stabilizer referring to SECTION 3D.
4) Remove ball stud bolt and then separate suspension arm from knuckle.

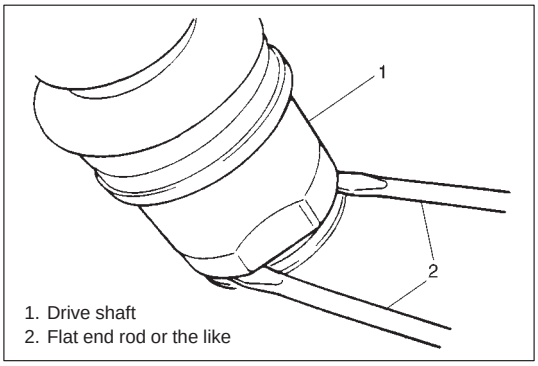

1. Drive shaft
2. Flat end rod or the like

5) By using flat end rods or the like, pull out drive shaft joint so as to release snap ring fitting of joint spline at differential side. Pushing knuckle portion outward, detach drive shaft at differential side.

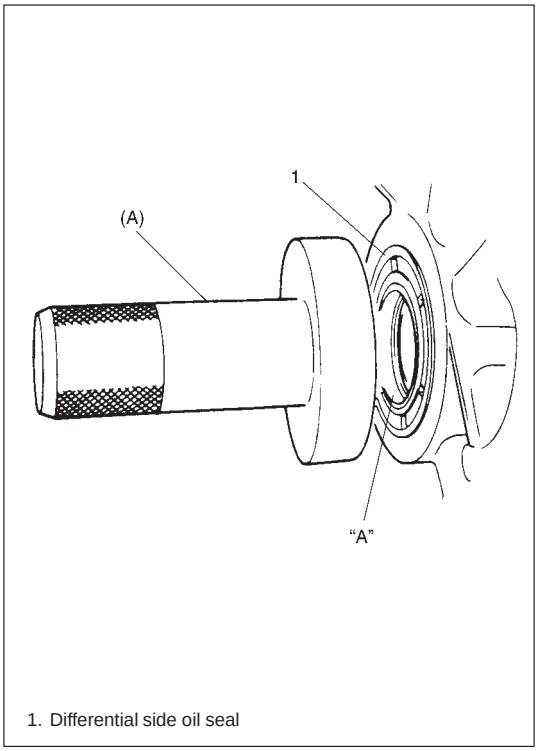

1. Differential side oil seal

6) Remove oil seal and install a new one until it becomes flush with case surface by using special tool and hammer.

NOTE:
When installing oil seal, face its spring side inward.

Special Tool
(A): 09913-75810 (for right side oil seal)
09913-75520 (for left side oil seal)

7) Apply grease to oil seal lip and at the same time check drive shaft where oil seal contacts and make sure of its smoothness.

"A": Grease 99000-25010

8) Insert drive shaft joint to differential gear. Refer to Section 4.

> **CAUTION:**
> - **Be careful not to scratch oil seal lip with drive shaft joint while inserting.**
> - **Make sure to insert drive shaft joint fully and seat its snap ring as it was.**
> - **Do not hit joint boot with hammer or the like. Nothing but hands is allowed to use when inserting joint.**

9) Connect ball stud with knuckle and fasten with bolt to specification, refer to Section 3D.
10) Connect tie-rod end with knuckle and fasten castle nut to specified torque, refer to Section3D.
    Install split pin and bend it.
11) Install stabilizer mount brackets, fasten bolts to specified torque referring to Section 3D.
12) Fill transmission oil as specified and make sure that oil has been sealed with oil seal.

GEAR SHIFT CONTROL

For Removal/Installation, refer to the same item described in SECTION 7A.

UNIT REPAIR OVERHAUL

DISMOUNTING/REMOUNTING

Dismount or mount transmission with engine, referring to SECTION 6A “ENGINE MECHANICAL”, and separate or combine transmission and engine.

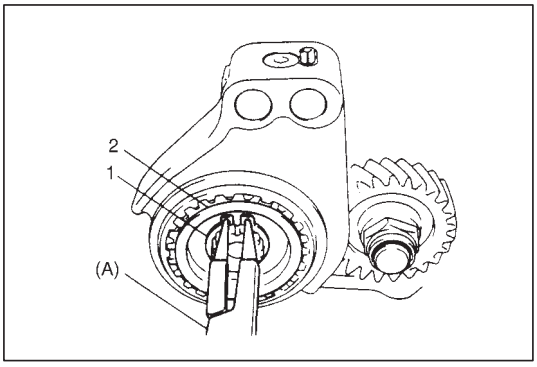

DISASSEMBLING UNIT

FIFTH GEARS

1) Remove 8 bolts and take off transmission side cover.
2) Using special tool, remove circlip (1) and then hub plate (2).

CAUTION:
Care should be taken not to distort side cover when it is removed from left case.

Special Tool
(A): 09900-06107

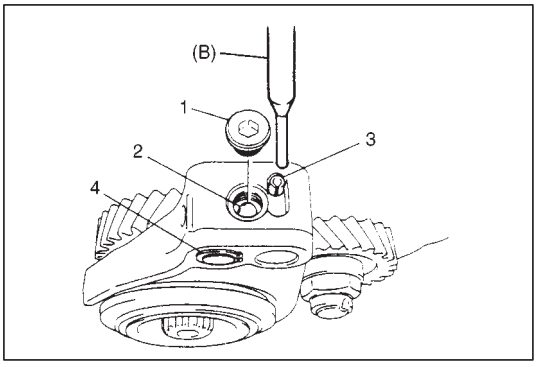

3) Remove shift fork plug (1) and guide ball (2).

NOTE:
Use of magnet would facilitate removal of guide ball.

4) Drive out spring pin (3) by using special tool and hammer.

Special Tool
(B): 09922-85811

5) Remove circlip (4).

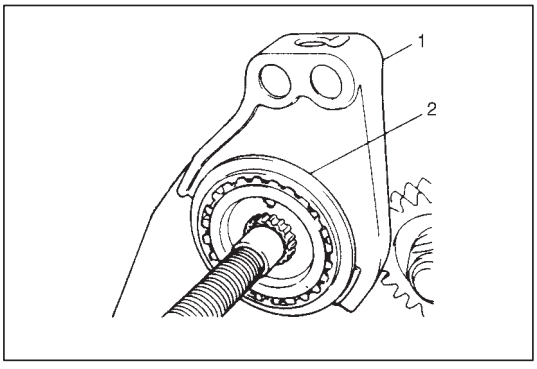

6) Remove gear shift fork (1), sleeve & hub assembly (2), synchronizer ring spring, synchronizer ring and 5th gear all together.

CAUTION:
Be careful not to pinch synchronizer ring spring when removing.

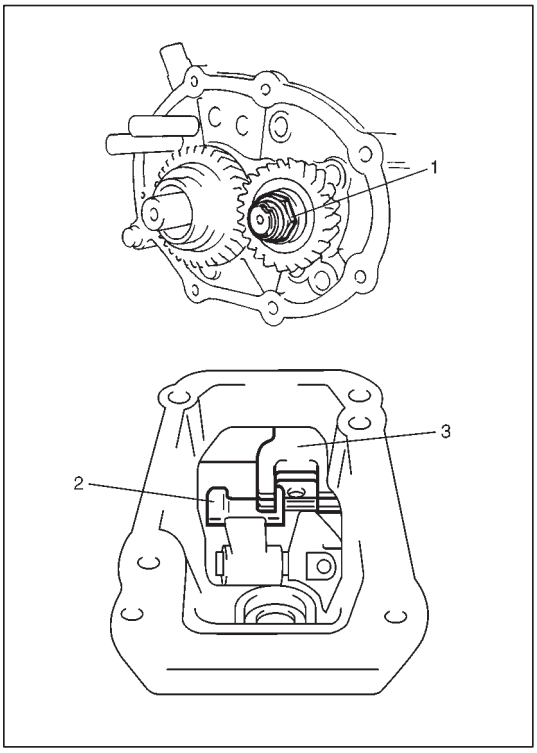

7) Remove counter shaft nut (1) as follows:
   a. Shift low speed gear shift shaft (2) to 1st gear position and high speed gear shift shaft (3) to 3rd gear position.
   b. Loosen nut with above double engagement.

   NOTE:
   Do not reuse counter shaft nut.

8) Remove input shaft 5th gear, needle bearing and counter shaft 5th gear. Gear puller would be necessary if spline fitting of counter shaft 5th gear is tight.

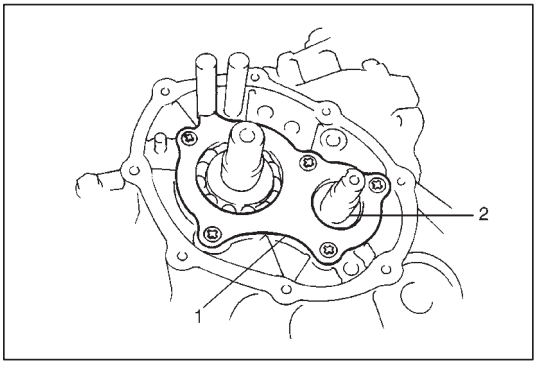

9) Remove 5 screws and take off left case plate (1), and then remove bearing set shim (2).

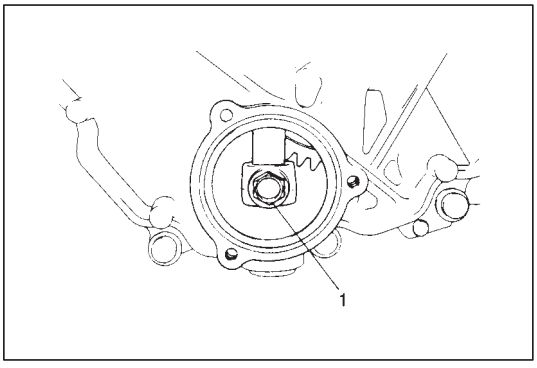

GEAR SHIFTER, MAIN SHAFT AND COUNTERSHAFT

1) Remove 3 bolts from left case cap and then take off cap.
2) Remove gear shift yoke bolt (1).

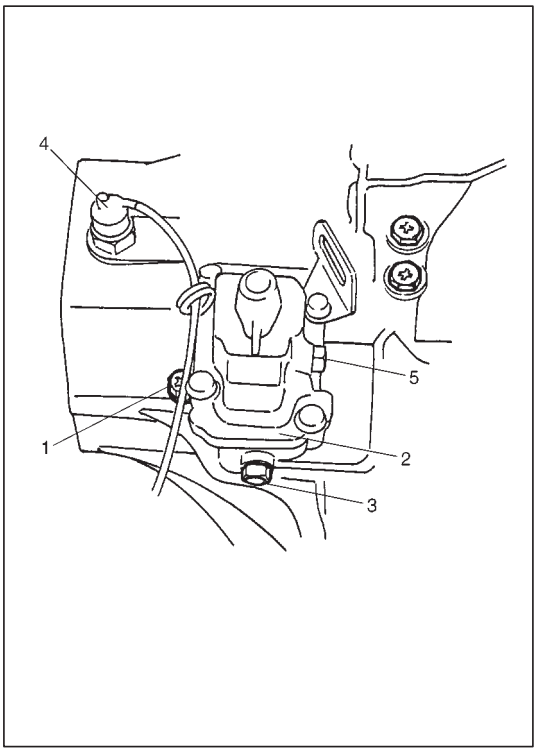

3) Remove gear shift fork shaft bolt (1) with washer, then take out locating spring and steel ball.
4) Remove 4 bolts from gear shift guide case (2), and then remove wiring harness clamp bracket and guide case.
5) Remove gear shift interlock bolt (3) with washer.
6) Remove back up light switch (4).

NOTE:
Removal of 5th to REV interlock bolt (5) is not necessary for removing gear shift & select shaft assembly.

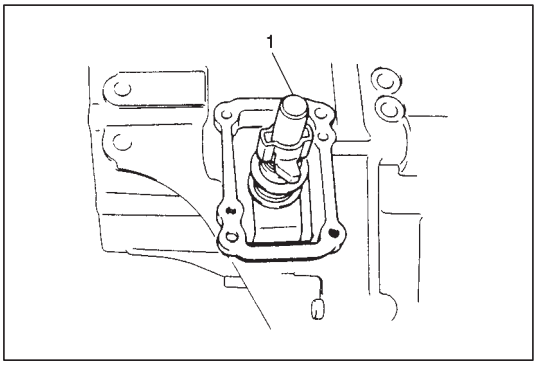

7) Pull out gear shift & select shaft assembly (1).

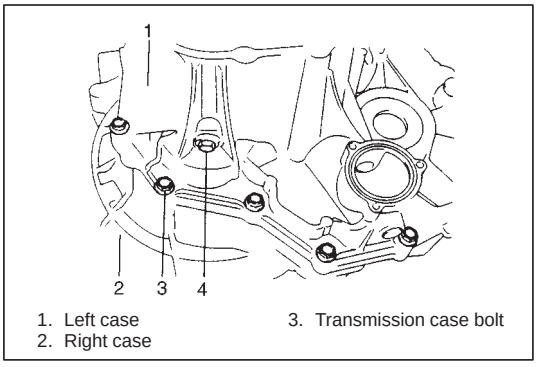

1. Left case
2. Right case
3. Transmission case bolt

8) Remove reverse shaft bolt (4) with washer.
9) Remove 11 case bolts from outside and another 4 from clutch housing side.
10) Tapping left case flanges with plastic hammer, remove left case.

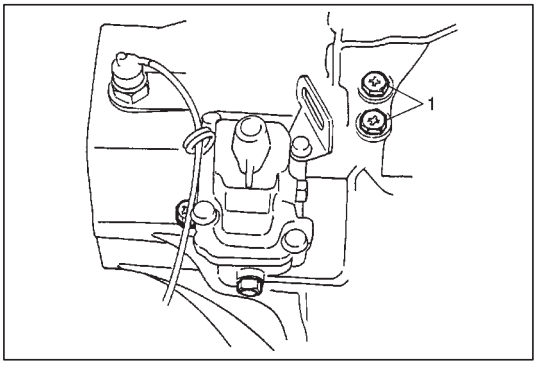

11) Remove 2 gear shift fork shaft bolts (1) with washers, then take out locating springs and steel balls.

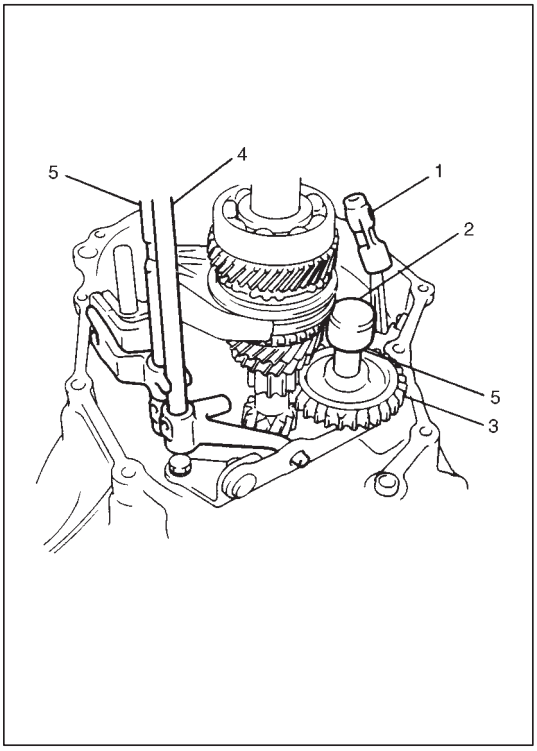

12) Remove gear shift yoke (1).
13) Pull out reverse gear shift shaft (2) with washer, then take off reverse idler gear (3).
14) Pull out 5th & REV gear shift guide shaft (4) together with 5th & REV gear shift shaft (5).

NOTE:
When removing 5th & REV gear shift shaft and guide shaft, push up high speed gear shift shaft and shift it to 4th to facilitate removal of 5th & REV shifter.

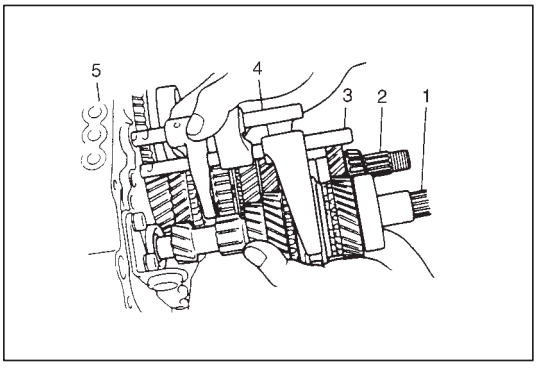

15) Tapping input shaft (1) end with plastic hammer, push it out as assembly from case a little, then take out input shaft assembly, counter shaft assembly (2), high speed gear shift shaft (3) and low speed gear shift shaft (4) all at once.
16) Remove countershaft L bearing cup from left case (5).
17) Remove differential side L oil seal also from left case.

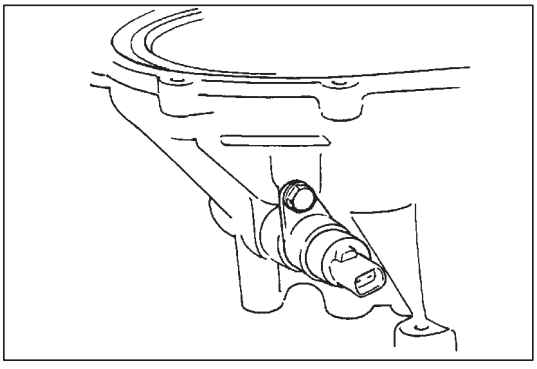

RIGHT CASE

1) Remove speedometer driven gear assembly.
2) Remove differential gear assembly from right case.

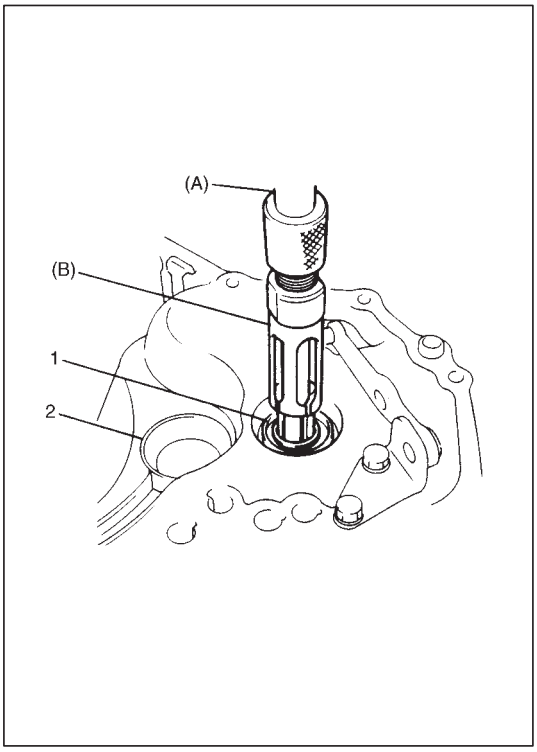

3) Remove input shaft oil seal (1) by using special tools (combination of bearing remover and sliding shaft).

Special Tools
(A): 09930-30102
(B): 09923-74510

4) Also pull out countershaft R bearing cup (2) by using bearing remover 09941-64511 with sliding shaft 09930-30102.

NOTE:
If counter shaft R bearing has been left in right case, pull it out by using bearing remover 09923-73210 with sliding shaft 09930-30102.

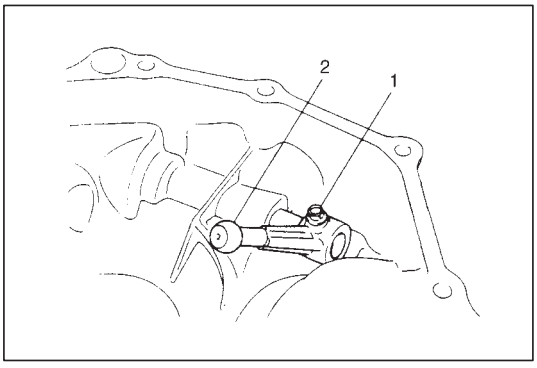

5) Remove bolt (1) and then pull out gear shift arm (2).

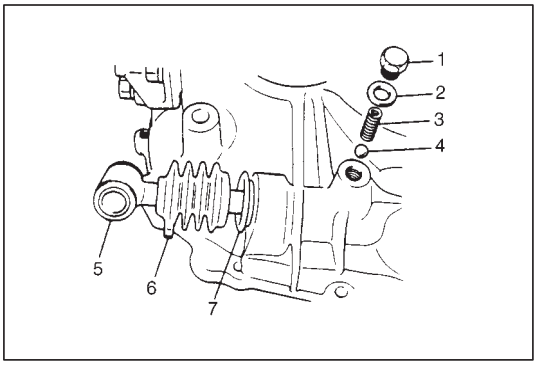

6) Remove gear shift shaft bolt (1) with washer (2), then take out spring (3) and steel ball (4).
7) Remove gear shift shaft (5), boot (6) and oil seal (7).
8) Remove differential side R oil seal from right case.

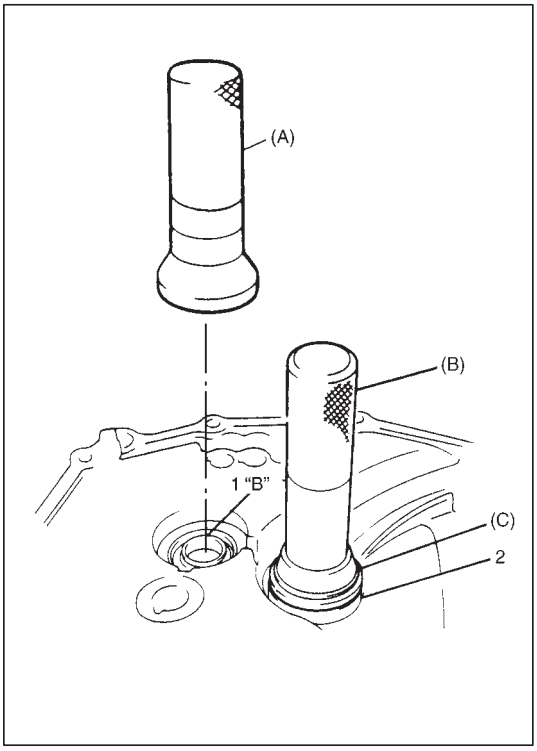

SUB ASSEMBLY SERVICE

RIGHT CASE

1) Install input shaft oil seal (1) facing its spring side upward. Use special tool and hammer for installation and apply grease to oil seal lip.

   "B": SUZUKI SUPER GREASE A, 99000-25010

   Special Tool
   (A): 09951-76010

2) Install countershaft R bearing cup (2) by using special tools and hammer.

   Special Tools
   (B): 09924-74510
   (C): 09925-68210

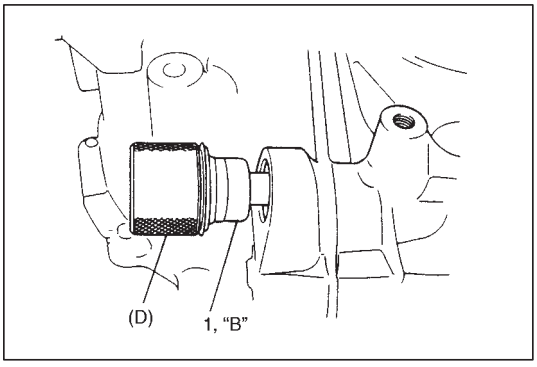

3) Apply grease to gear shift shaft oil seal (1) at its lip and install it up to bottom of the bore by using special tool and hammer.

   "B": SUZUKI SUPER GREASE A, 99000-25010

   Special Tool
   (D): 09925-58210

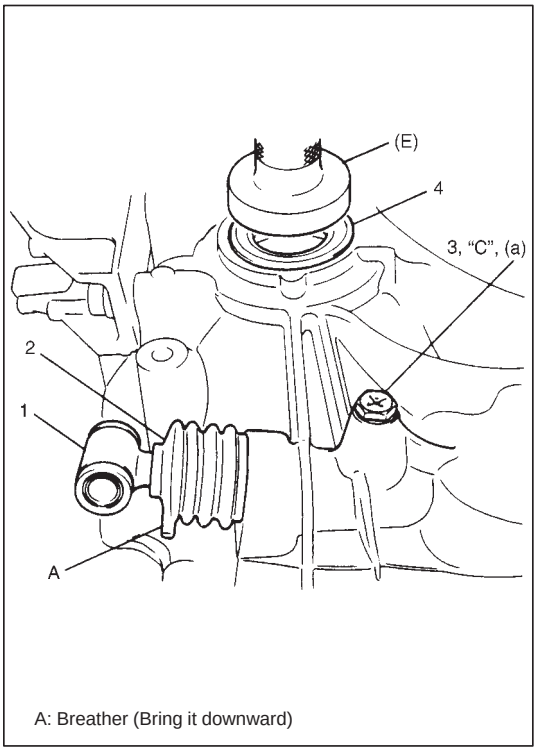

4) Install gear shift shaft (1), boot (2), steel ball, spring and tighten bolt (3) with washer applied with sealant.

   "C": SUZUKI BOND NO.1215, 99000-31110

   Tightening Torque
   (a): 13 N·m (1.3 kg-m, 9.5 lb-ft)

   NOTE:
   Bring breather of gear shift shaft boot downward.

5) Install differential side R oil seal (4) until it becomes flush with case surface by using special tool with hammer, and then apply grease to its lip.

   NOTE:
   Face diff. side oil seal spring side inward.

   "B": SUZUKI SUPER GREASE A, 99000-25010

   Special Tool
   (E): 09913-75810

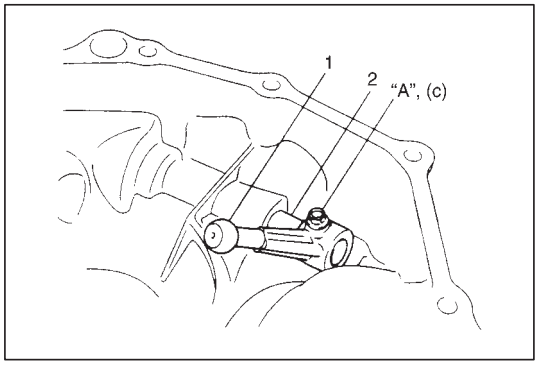

6) Insert gear shift arm (1) in gear shift shaft (2), then fasten them with bolt applied with thread lock cement.

Tightening Torque
(c): 34 N·m (3.4 kg-m, 24.5 lb-ft)

"A": Thread lock 1322, 99000-32110

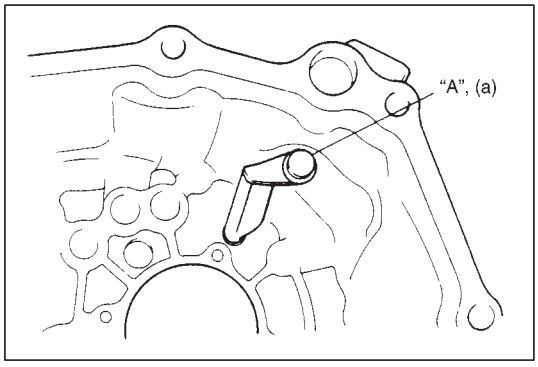

LEFT CASE

1) If input oil gutter has been removed, install it with bolt applied with thread lock cement.

"A": Thread lock 1322, 99000-32110

Tightening Torque
(a): 10 N·m (1.0 kg-m, 7.5 lb-ft)

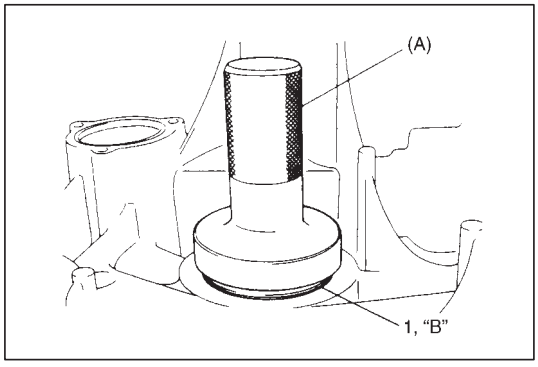

2) Install differential side L oil seal (1) until it becomes flush with case surface by using special tool with hammer, and then apply grease to its lip.

NOTE:
Face oil seal spring side inward.

"B": SUZUKI SUPER GREASE A, 99000-25010

Special Tool
(A): 09913-75510

3) Install countershaft L bearing cup into case bore by tapping it with plastic hammer lightly.

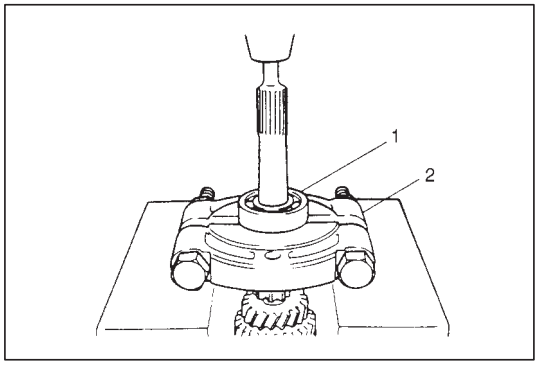

INPUT SHAFT ASSEMBLY

Disassembly

1) Remove input shaft R bearing (1) by using bearing puller (2) and press.

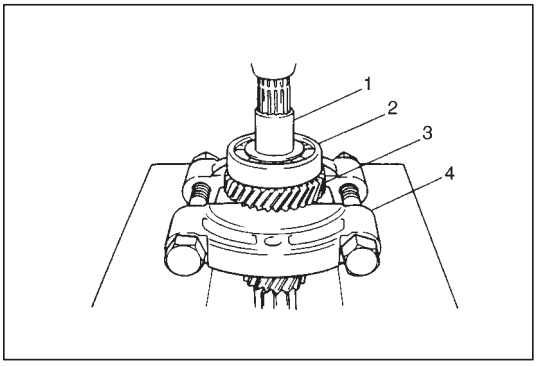

2) Drive out 5th gear spacer (1), L bearing (2) and 4th gear (3) all at once by using puller (4) and press.

CAUTION:
- **To avoid gear tooth from being damaged, support it at flat side of bearing puller.**
- **Stop press work in the middle way and take out 5th gear bush to prevent it from being compressed and then continue to remove bearing with gear.**

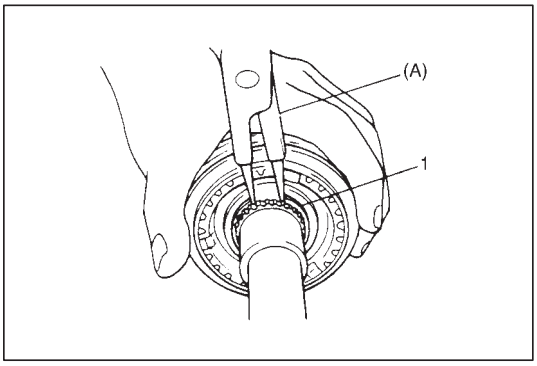

3) Take out 4th gear needle bearing and high speed synchronizer ring.
4) Using special tool, remove circlip (1).

NOTE:
For smooth removal of circlip, it is recommended to correct tool tips to be flat.

Special Tool
(A): 09900-06107

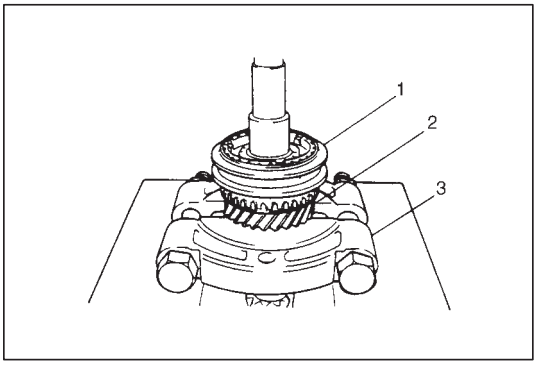

5) Drive out high speed synchronizer sleeve & hub assembly (1) together with 3rd gear (2) by using puller (3) and press.

CAUTION:
Make sure to use flat side of puller to avoid causing damage to 3rd gear tooth.

6) Take out 3rd gear needle bearing from shaft.
7) Disassemble synchronizer sleeve & hub assembly (1).

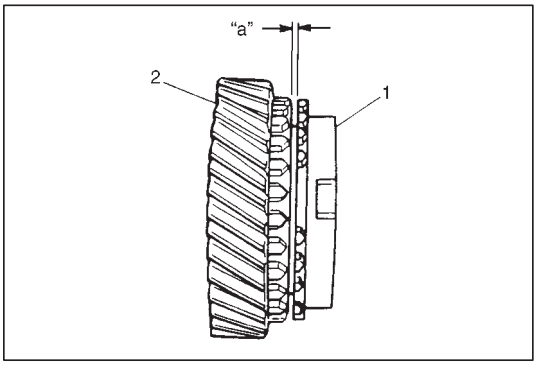

Inspection and Reassembly

1) Clean all components thoroughly, inspect them for any abnormality and replace with new ones as necessary.
2) If synchronizer parts (1) need to be repaired, check clearance "a" between ring and gear, each chamfered tooth of gear (2), ring (2) and sleeve, then determine parts replacement.

Clearance "a": Standard 1.0 – 1.4 mm (0.039 – 0.055 in.)
Service limit 0.5 mm (0.019 in.)

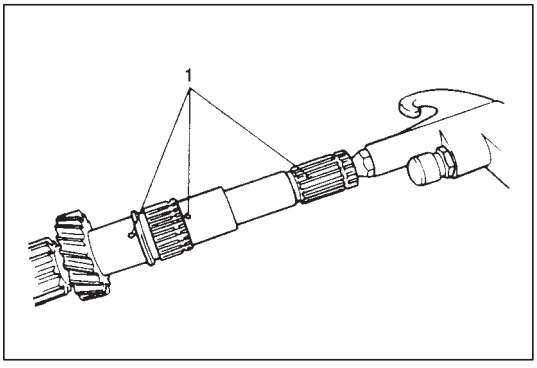

3) To ensure lubrication, air blow oil holes (1) and make sure that they are free from any obstruction.

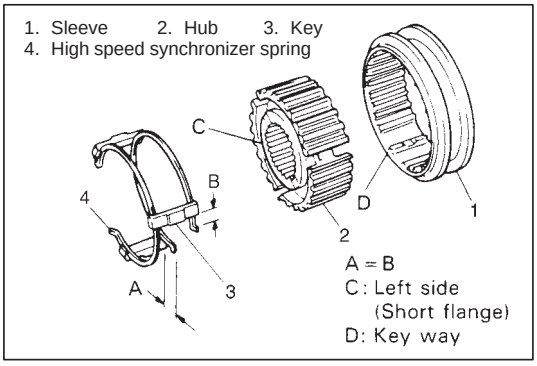

4) Fit high speed synchronizer sleeve (1) to hub (2), insert 3 keys (3) in it and then set springs (4) as illustrated left.

NOTE:
- **No specific direction is assigned to high speed synchronizer sleeve or each key but it is assigned as assembly.**
- **Size of high speed synchronizer sleeve, hub, keys and springs is between those of low speed and 5th speed ones.**

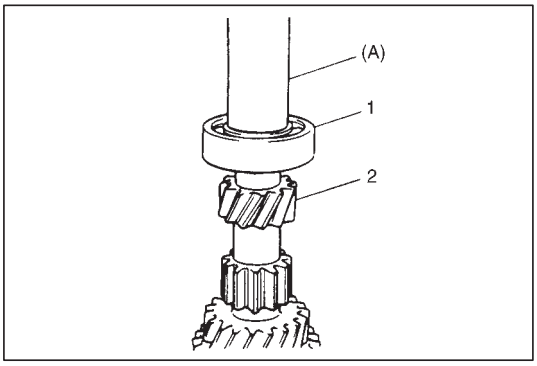

5) Drive in R bearing (1) to input shaft (2) by using special tool and hammer.

Special Tool
(A): 09925-98221

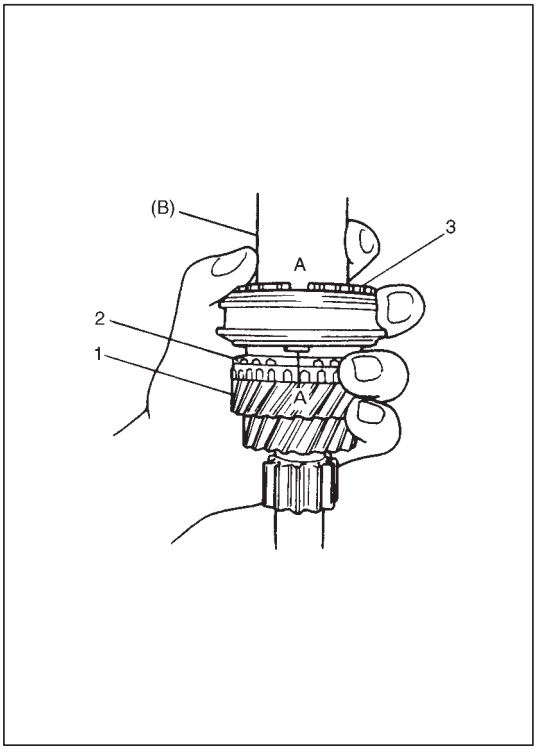

6) Install 3rd gear needle bearing, apply oil to it, then install 3rd gear (1) and synchronizer ring (2).
7) Drive in high speed sleeve & hub assembly (3) by using special tool and hammer.

NOTE:
- **While press-fitting sleeve & hub (3), make sure that synchronizer ring key slots are aligned with keys in sleeve & hub assembly.**
- **Check free rotation of 3rd gear (1) after press-fitting sleeve & hub assembly (3).**
- **Needle bearings and synchronizer rings for 3rd and 4th are identical respectively.**

Special Tool
(B): 09913-84510

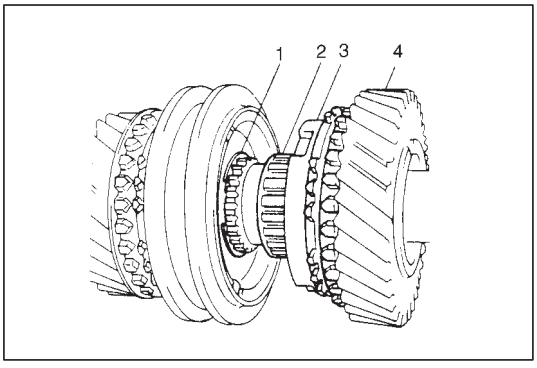

8) Install circlip (1), needle bearing (2), apply oil to bearing, then install synchronizer ring (3) and 4th gear (4).

CAUTION:
Confirm that circlip (1) is installed in groove securely.

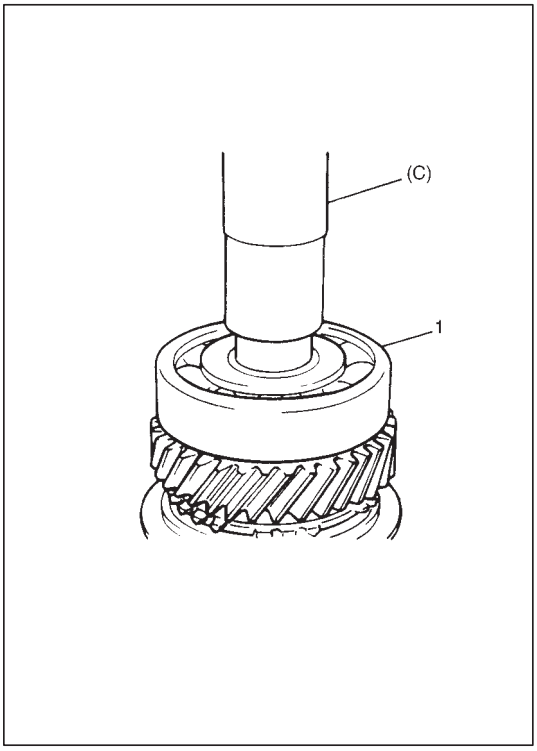

9) Press-fit L bearing (1) by using special tool and hammer.

Special Tool
(C): 09925-98221

10) Using the same special tool, drive in 5th gear spacer.

> **CAUTION:**
> **To prevent 5th gear spacer from being distorted because of excessive compression, do not press-fit it with L bearing at once.**

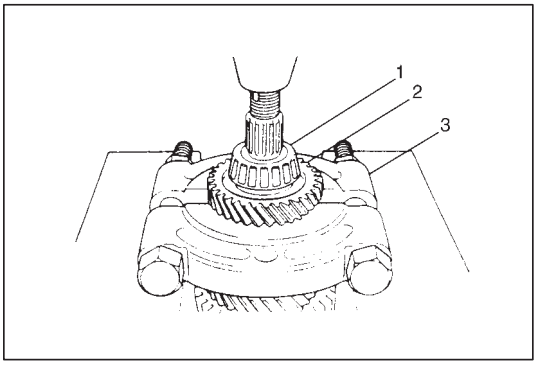

COUNTERSHAFT ASSEMBLY

Disassembly

1) Drive out L bearing cone (1) with 4th gear (2) by using puller (3) and press.

> **CAUTION:**
> - **Use puller and press that will bear at least 5 ton (11,000 lb) safely.**
> - **To avoid tooth damage, support 4th gear at flat side of puller.**

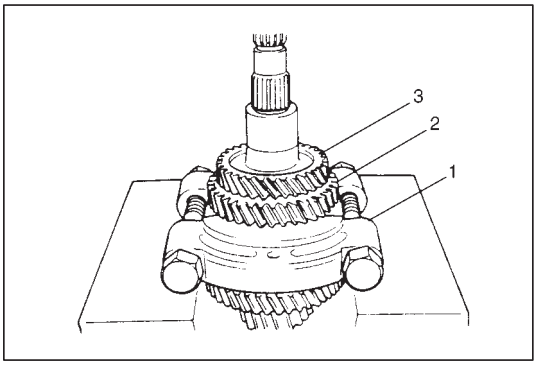

2) Apply puller (1) to 2nd gear (2) and drive out 3rd & 4th gear spacer (3) together with 2nd gear (2) by using press. Needle bearing would come out with 2nd gear (2).

> **CAUTION:**
> **If compression exceeds 5 ton (11,000 lb), release compression once, reset puller support and then continue press work again.**

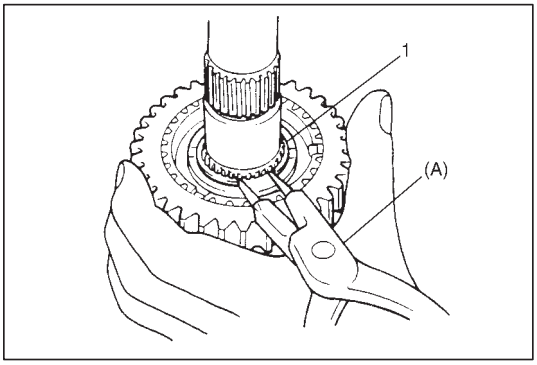

3) Take out 2nd synchronizer ring.
4) Using special tool, remove circlip (1).

NOTE:
Correct tool tips to be flat to facilitate removal of circlip.

Special Tool
(A): 09900-06107

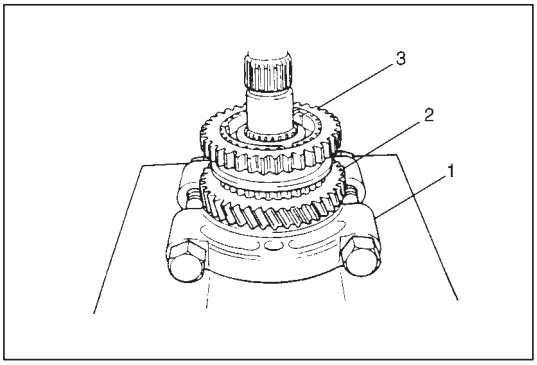

5) Apply puller (1) to 1st gear (2) and drive out low speed synchronizer sleeve & hub assembly (3) with gear by using press.
6) Disassemble synchronizer sleeve & hub assembly (3).
7) Take out needle bearing from shaft.

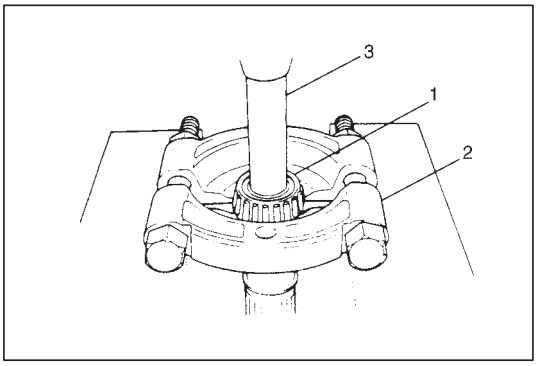

8) Remove R bearing cone (1) by using puller (2), metal stick (3) and press.

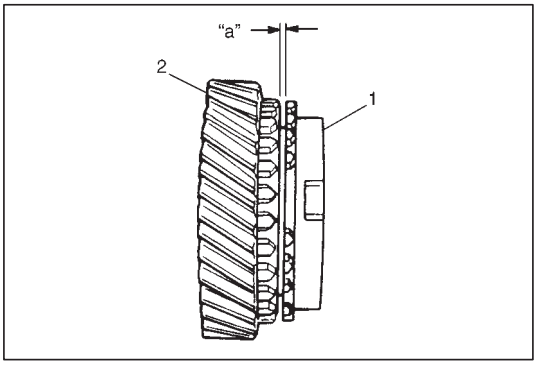

Inspection and Reassembly

1) Clean all components thoroughly, inspect them for any abnormality and replace with new ones as necessary.
2) If synchronizer parts (1) need to be repaired, check clearance "a" between ring (1) and gear (2), each chamfered tooth of gear, ring and sleeve, then determine parts replacement.

Clearance "a": Standard 1.0 – 1.4 mm (0.039 – 0.055 in.)
Service limit 0.5 mm (0.019 in.)

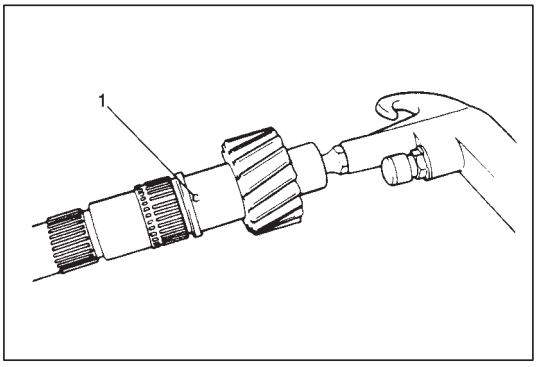

3) To ensure lubrication, air blow oil holes (1) and make sure that they are free from any obstruction.

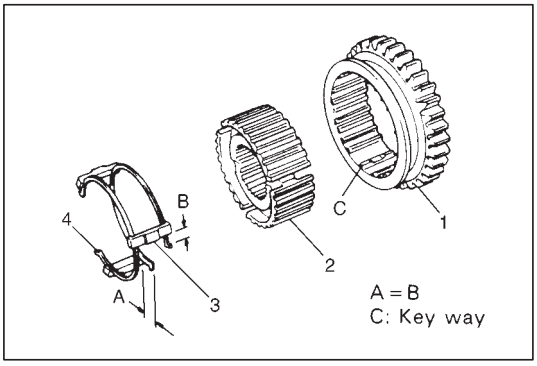

4) Fit low speed synchronizer sleeve (1) to hub (2), insert 3 keys (3) in it and then set springs (4) as illustrated left.

NOTE:
- **No specific direction is assigned to low speed synchronizer hub (2) or each key (3) but it is assigned as assembly.**
- **Size of low speed synchronizer keys and springs are the largest compared with those of high speed and 5th speed ones.**

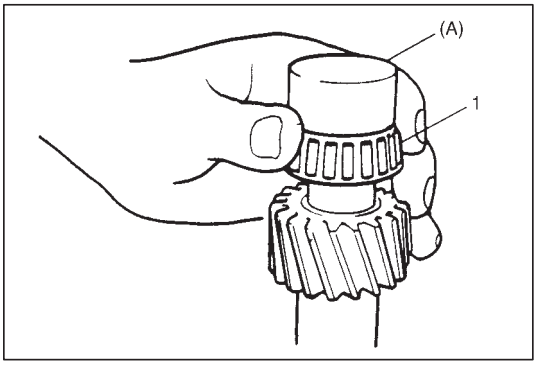

5) Install R bearing cone (1) by using special tool and hammer.

Special Tool
(A): 09923-78210

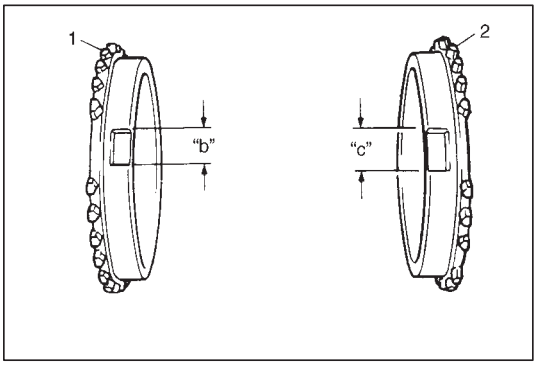

6) Install needle bearing, apply oil to it, then install 1st gear and 1st gear synchronizer ring (1).

NOTE:
- **Key slot width of 1st synchronizer ring is smaller than that of 2nd synchronizer ring (2).**
  Distinguish the difference properly.

Width "b": 8.2 mm (0.32 in.)
"c": 8.8 mm (0.35 in.)

- **Needle bearings for 1st and 2nd gear are identical.**

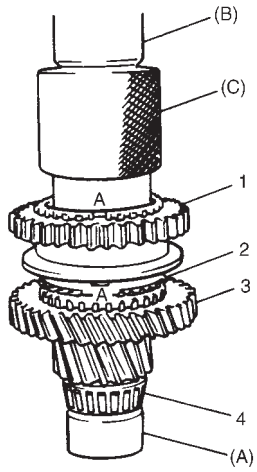

2. 1st gear synchronizer ring
A: Align key slots with keys

7) Drive in low speed sleeve & hub assembly (1) by using special tool and hammer.

NOTE:
- **Support shaft with special tool as illustrated left so that retainer of bearing cone (4) will be free from compression.**
- **Make sure that synchronizer ring key slots are aligned with keys while press-fitting sleeve & hub assembly.**
- **Check free rotation of 1st gear (3) after press-fitting sleeve & hub assembly.**

Special Tools
(A): 09923-78210
(B): 09925-18010
(C): 09940-53111

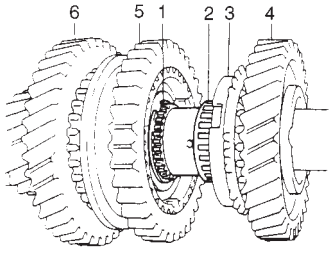

5. Low speed sleeve & hub assembly
6. 1st gear

8) Install circlip (1), needle bearing (2), apply oil to bearing, then install 2nd gear synchronizer ring (3) and 2nd gear (4).

CAUTION:
Confirm that circlip is installed in groove securely.

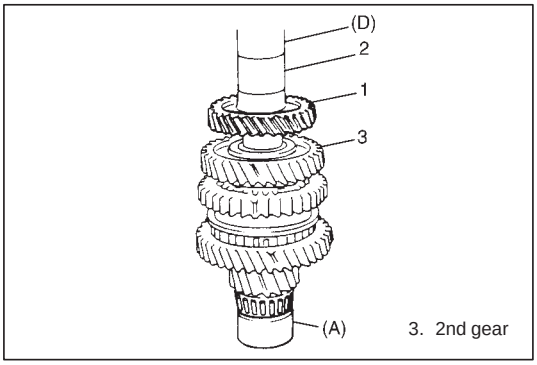

9) Press-fit 3rd gear (1) and spacer (2) by using special tool and press.

NOTE:
It is recommended to press-fit spacer and 3rd gear first, and then 4th gear later separately so that countershaft will not be compressed excessively.

Special Tools
(A): 09923-78210
(D): 09913-80112

10) Press-fit 4th gear (1) by using the same procedure as the above.

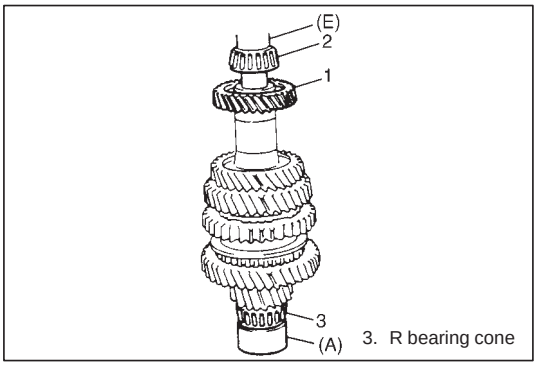

11) Install L bearing cone (2) by using special tool and hammer.

NOTE:
For protection of bearing cone, always support shaft with special tool as illustrated.

Special Tools
(A): 09923-78210
(E): 09925-98221

GEAR SHIFTER

Gear Shift & Select Shaft Assembly

1) To disassemble component parts, use special tools and 2.8 – 3.0 mm (0.11 in.) pin remover in addition.

Special Tools
(A): 09922-85811 (4.5 mm)
(B): 09925-78210 (6.0 mm)

2) Clean all parts thoroughly, inspect them and replace with new ones as required.
3) Assemble component parts by reversing removal procedure.

NOTE:
- **When driving in spring pins, prevent shaft from being bent by supporting it with wood block.**
- **Assemble 5th & REV gear shift cam by winding cam guide return spring, and then drive in spring pin.**
- **Locate low speed select spring and reverse select spring (Yellow-Upper position) correctly.**

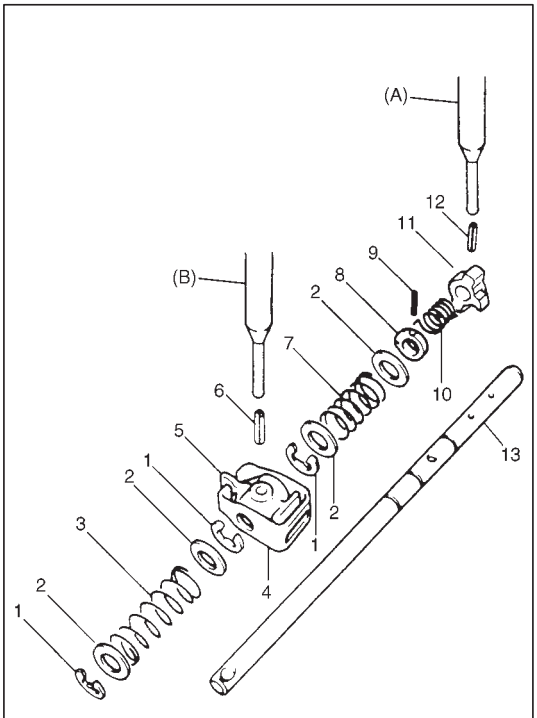

1. E-ring
2. Washer
3. Low speed select spring
4. Gear shift interlock plate
5. Gear shift & select lever
6. Spring pin (Double)
7. Reverse select spring (Yellow)
8. 5th & REV gear shift cam guide
9. Spring pin
   (Apply spring pin remover of 2.8 – 3.0 mm / 0.11 in. diameter)
10. Cam guide return spring
11. 5th & REV gear shift cam
12. Spring pin
13. Gear shift & select shaft

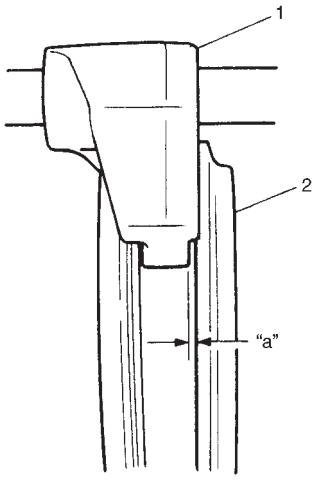

1. Gear shift fork
2. Synchronizer sleeve

High Speed and Low Speed Gear Shift Shafts

Inspection

1) Using feeler gauge, check clearance between fork and sleeve and replace those parts if it exceeds limit of 1.0 mm (0.039 in.)

   NOTE:
   For correct judgement of parts replacement, carefully inspect contact portion of fork and sleeve.

   Clearance "a": Service limit 1.0 mm (0.039 in.)

2) Insert each gear shift shaft into case and check that it moves smoothly. If it doesn't, correct by using oilstone, reamer or the like.

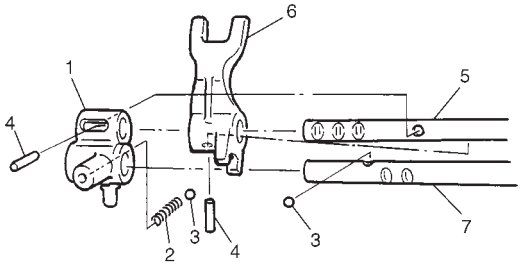

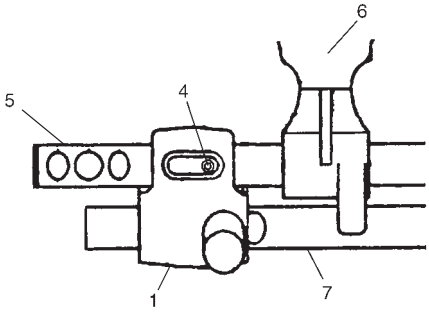

1. Reverse gear shift arm
2. Reverse gear shift arm spring (Blue)
3. Steel ball
4. Spring pin
5. 5th & REV gear shift shaft
6. 5th & REV gear shift yoke
7. 5th & REV gear shift guide shaft

A: Face pin slit toward front

5th & REV Gear Shifter

1) Disassemble component parts by using special tool and hammer.

   Special Tool
   (A): 09922-85811 (4.5 mm)

2) Replace or correct parts as required and assemble shafts making sure that component parts are in proper order as shown left.

   NOTE:
   - **Distinguish reverse gear shift arm spring (Blue) from low speed locating spring (Green).**
   - **Install 2 steel balls in reverse gear shift arm without fail.**
   - **Drive in spring pin for reverse shift arm facing slit A toward front.**

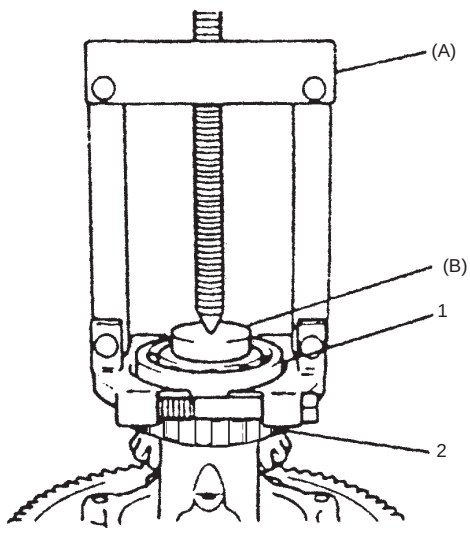

DIFFERENTIAL ASSEMBLY

Disassembly

1) Using special tool, remove right bearing (1).

Special Tools
(A): 09913-65810
(B): 09925-88210

2) Remove speedometer drive gear (2).
3) Remove left bearing using puller while supporting its center shaft as described above.
4) Support differential case with soft jawed vise and remove 8 final gear bolts then take out final gear.

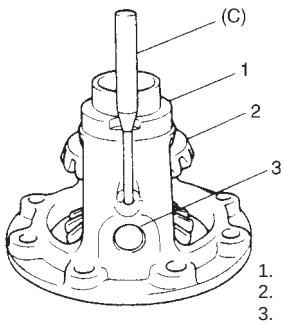

1. Differential case
2. Differential gear
3. Differential pinion shaft

5) Using special tool and hammer, drive out differential side pinion shaft pin and then disassemble component parts.

Special Tool
(C): 09922-85811 (4.5 mm)

Left side

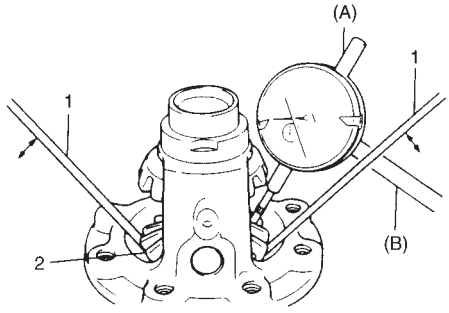

1. Screwdriver
2. Differential gear

Adjustment and Reassembly

Judging from abnormality noted before disassembly and what is found through visual check of component parts after disassembly, prepare replacing parts and proceed to reassembly. Make sure that all parts are clean.

1) Assemble differential gear and measure thrust play of differential gear as follows.

Special Tools
(A): 09900-20606
(B): 09900-20701

Diff. gear thrust play: 0.03 – 0.40 mm (0.002 – 0.013 in.)

Left side

- Hold differential assembly with soft jawed vise and apply measuring tip of dial gauge to top surface of gear.
- Using 2 screwdrivers, move gear up and down and read movement of dial gauge pointer.

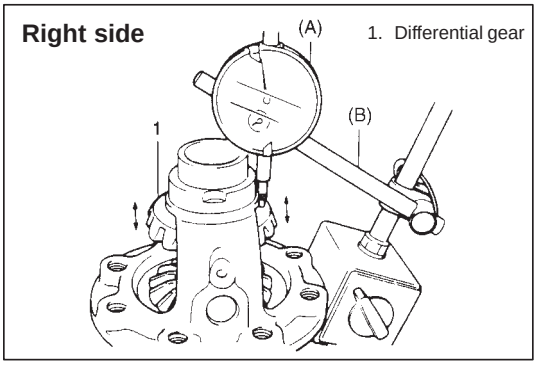

Right side

- Using similar procedure to the above, set dial gauge tip to gear shoulder.
- Move gear up and down by hand and read dial gauge.

2) If thrust play is out of specification, select suitable thrust washer from among following available size, install it and check again that specified gear play is obtained.

Available thrust washer thickness	0.9, 1.0 and 1.1 mm (0.035, 0.039 and 0.043 in.)

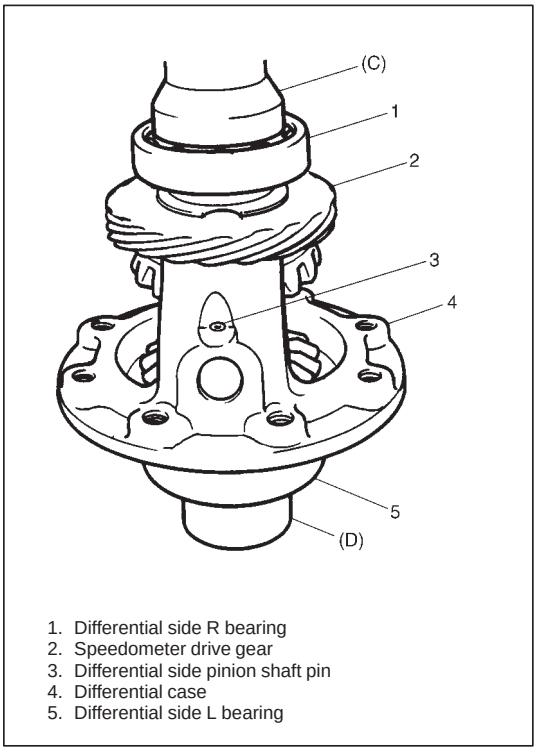

3) Drive in spring pin (3) from right side till it is flush with differential case surface.
4) Press-fit L bearing by using special tool and copper hammer.

Special Tools
(C): 09913-76010
(D): 09951-16060

5) Install speed sensor rotor (2) drive gear, support differential assembly as illustrated so as to L bearing is floating, and then press-fit R bearing like L bearing in Step 4).

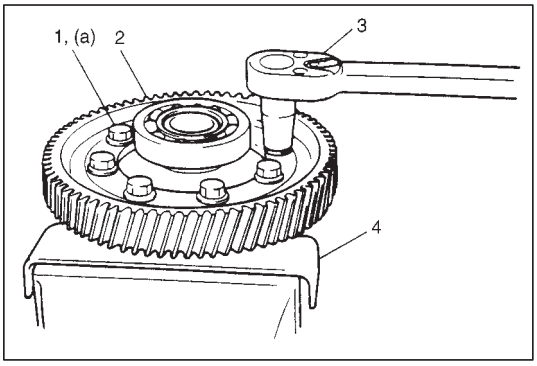

6) Hold differential assembly with aluminum plates placed on vise, install final gear and then tighten it with 8 bolts to specified torque.

CAUTION:
Use of any other bolts than specified ones is prohibited.

Tightening Torque
(a): 90 N·m (9.0 kg-m, 65.0 lb-ft)

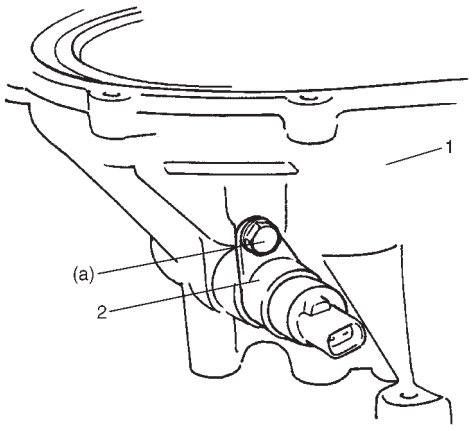

1. Transmission right case
2. Speedometer driven gear

ASSEMBLING UNIT

DIFFERENTIAL TO LEFT CASE

1) Install differential assembly into right case (1).
2) Insert speedometer driven gear (2) applied with oil to its O-ring, then tighten it with bolt.

CAUTION:
- **While inserting case assembly into transmission, turn final gear by hand slightly so that gear can mesh easily.**
- **Never push or hit slit portion of case when inserting it. Such attempt may cause case to break.**

Tightening Torque
(a): 5.5 N·m (0.55 kg-m, 4.0 lb-ft)

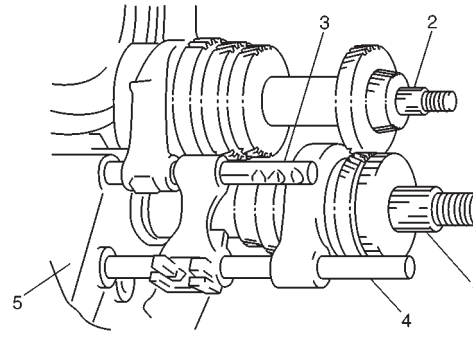

3) Join input shaft (1), countershaft (2), low speed gear shift shaft (3) and high speed gear shift shaft (4) assemblies all together, then install them into right case (5).

NOTE:
- **Input shaft R bearing on shaft can be installed into right case by tapping shaft with plastic hammer.**
- **Be careful not to damage input shaft oil seal.**
- **Check to make sure that counter shaft is engaged with final gear while installing.**

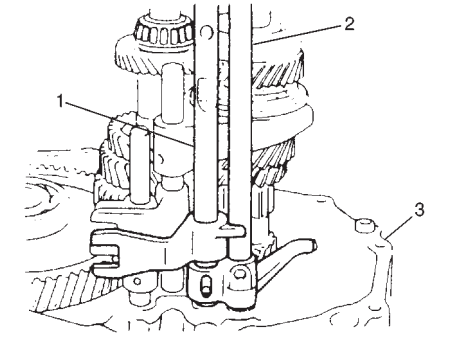

4) Install 5th & REV gear shift shaft (1) with 5th & REV gear shift guide shaft (2) into right case (3).

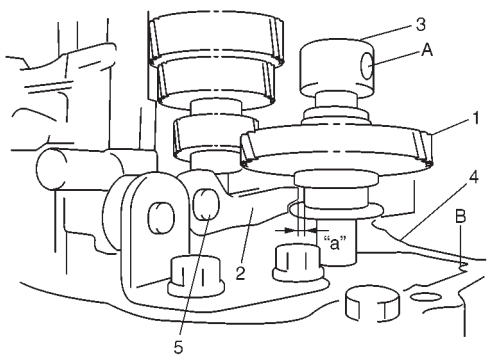

A: Thread hole

5) Install reverse gear shift lever (2). Apply thread lock to bolts. Reverse gear shift arm (5) has to be joined with reverse gear shift lever (2) at the same time.

Tightening Torque
(a): 23 N·m (2.3 kg-m, 17.0 lb-ft)

6) Make reverse idler gear (1) with reverse gear shift lever (2), insert reverse gear shaft (3) into case (4) through idler gear (1) and then align A in shaft with B in case.

NOTE:
- **Make sure that washer has been installed in shaft at above the gear.**
- **Check to confirm that reverse gear shift lever (2) end has clearance "a" 1 mm (0.04 in.) to idler gear groove.**

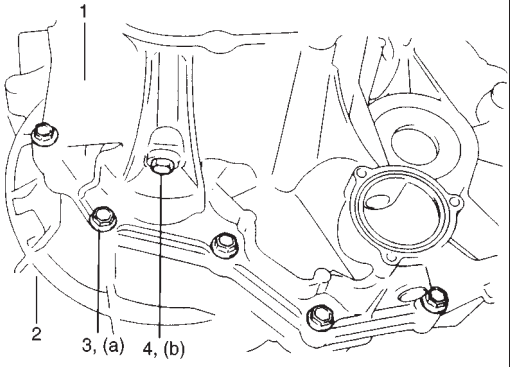

1. Left case
2. Right case
3. Case bolt
4. Reverse shaft bolt

7) Clean mating surfaces of both right and left cases, coat mating surface of left case with sealant evenly then mate it with right case.

Sealant: SUZUKI BOND No.1215, 99000-31110

8) Tighten case bolts from outside to specified torque.

Tightening Torque
(a): 19 N·m (1.9 kg-m, 14.0 lb-ft)

9) Install reverse shaft bolt with aluminum washer and tighten it.

Tightening Torque
(b): 23 N·m (2.3 kg-m, 17.0 lb-ft)

10) Install another 4 case bolts from clutch housing side and tighten them to specification.

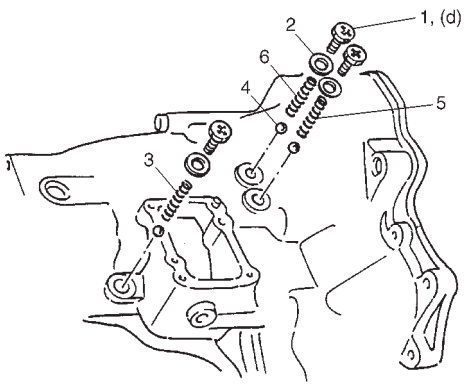

1. Gear shift locating bolt
2. Washer
3. Low speed locating spring (Green)
4. Steel ball
5. High speed locating spring (Green)
6. 5th & REV locating spring (Pink)

11) Check locating spring for deterioration and replace with new one as necessary.

Locating spring free length	Standard	Service Limit
5th & REV (Pink painted)	33.8 mm (1.331 in.)	32.7 mm (1.287 in.)
High speed, Low speed (Green painted)	33.6 mm (1.323 in.)	32.5 mm (1.280 in.)

12) Install steel ball and locating spring for respective gear shift shaft and tighten with bolt.

Tightening Torque
(d): 13 N·m (1.3 kg-m, 9.5 lb-ft)

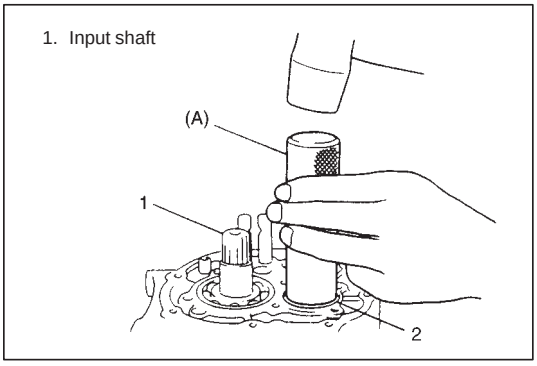

FIFTH GEARS

1) To seat countershaft L bearing cup (2) to bearing cone, tap cup by using special tool and plastic hammer.

Special Tool
(A): 09913-84510

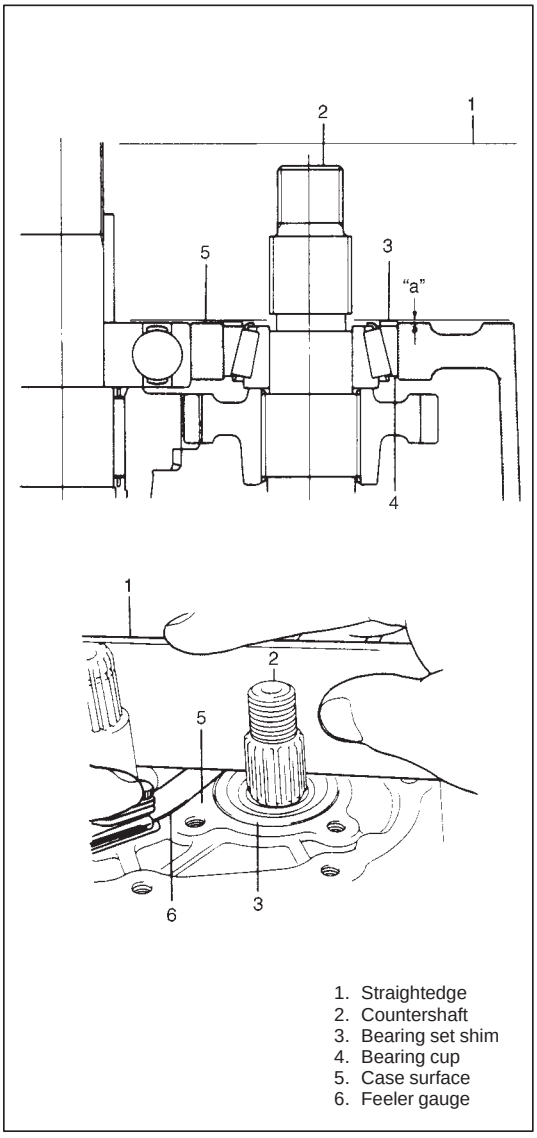

2) Put a shim on bearing cup provisionally, place straight edge over it and compress it by hand through straight edge, and then measure "a" (Clearance between case surface and straight edge) by using feeler gauge.

Clearance "a": 0.08 – 0.12 mm (0.0032 – 0.0047 in.)
(Shim protrusion)

3) By repeating above step, select a suitable shim which adjusts clearance "a" to specification and put it on bearing cup.

NOTE:
Insert 0.1 mm (0.004 in.) feeler to know whether or not a shim fulfills specification quickly.

Available shim thickness	0.40, 0.45, 0.50, 0.55, 0.6, 0.65, 0.7, 0.75, 0.8, 0.85, 0.9, 0.95, 1.0, 1.05, 1.1 and 1.15 mm (0.015, 0.017, 0.019, 0.021, 0.023, 0.025, 0.027, 0.029, 0.031, 0.033, 0.035, 0.037, 0.039, 0.041, 0.043 and 0.045 in.)

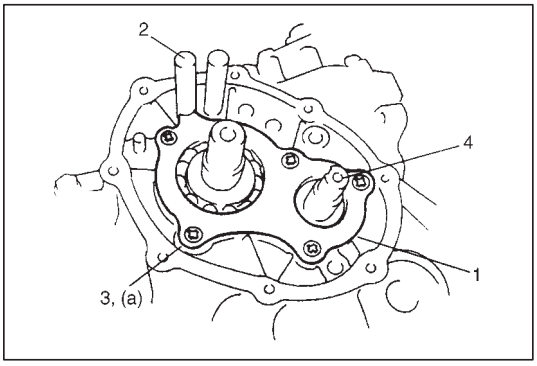

4) Place left case plate (1) inserting its end in groove of 5th & reverse gear shift guide shaft (2) and then tighten it with 5 screws (3) applied with thread lock cement.

NOTE:
After tightening screws, make sure that counter shaft (4) can be rotated by hand feeling some load.

"A": Thread lock cement 99000-32110

Tightening Torque
(a): 9 N·m (0.9 kg-m, 6.5 lb-ft)

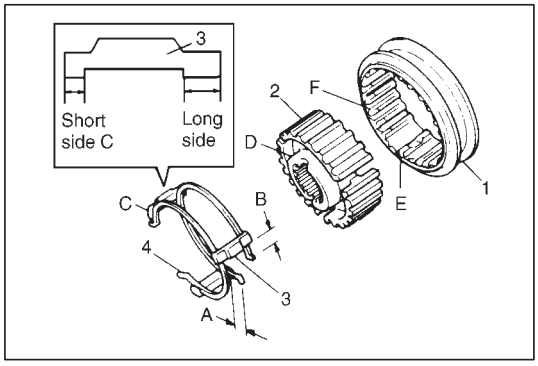

5) Assemble 5th speed synchronizer sleeve (1) and hub (2) with keys (3) and springs (4).

NOTE:
Short side C in keys, long boss D in hub and chamfered spline F in sleeve should face inward (5th gear side).

A = B
C: Short side (Inward)
D: Long boss (Inward)
E: Key way
F: Chamfered spline (Inward)

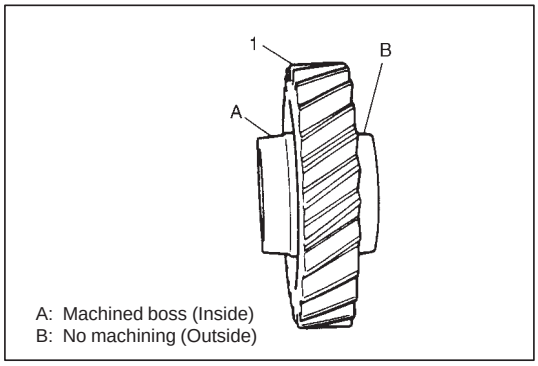

6) Install countershaft 5th gear (1) to counter shaft facing machined boss A inward.
7) Apply oil to needle bearing and install it to input shaft.
8) Install input shaft 5th gear to input shaft.

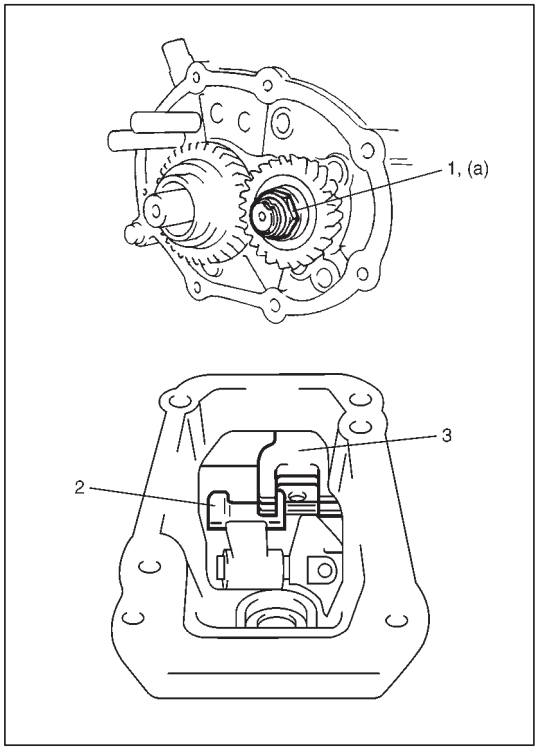

9) Install new counter shaft nut (1) as follows:
   a. Shift low speed gear shift shaft (2) to 1st gear position and high speed gear shift shaft (3) to 3rd gear position.
   b. Tighten nut with above double engagement and return shift shafts to natural position.

Tightening Torque
(a): 70 N·m (7.0 kg-m, 51.0 lb-ft)

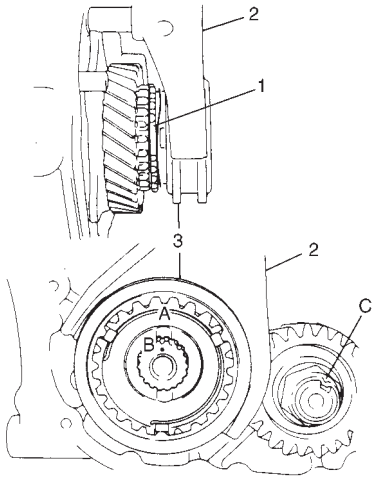

A: Oil groove (Align with B)
B: Punch mark (Shows oil hole)
C: Caulking

10) Caulk nut at C with caulking tool and hammer.
11) Install synchronizer ring (1).
12) Fit 5th gear shift fork (2) to sleeve & hub assembly (3) and install them into input shaft, shift shaft and shift guide shaft at once aligning hub oil groove A with shaft mark B.

NOTE:
Long boss of hub faces inward (gear side).

CAUTION:
Be careful not to pinch synchronizer ring spring by hub.

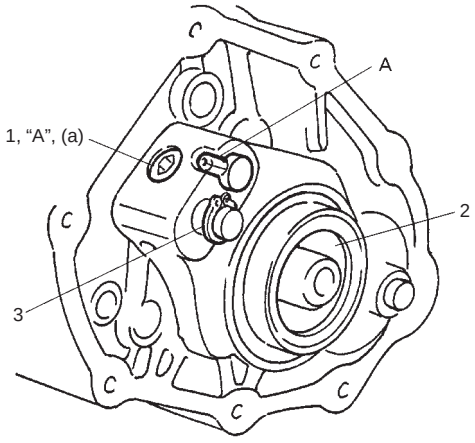

A: Pin slit (Face outward)

13) Drive in spring pin facing its slit A outward.
14) Install steel ball, tighten shift fork plug (1) applied with thread lock cement.

"A": Thread lock cement 99000-32110

Tightening Torque
(a): 9 N·m (0.9 kg-m, 6.5 lb-ft)

15) Fit hub plate (2) and fix it with circlip.
16) Install circlip (3) to the end of 5th & reverse gear shift guide shaft.
Make sure circlip is installed in shaft groove securely.

CAUTION:
Coat shift fork plug with thread lock cement reasonably. If it is done to much, excess may interfere in ball movement and cause hard shift to 5th speed.

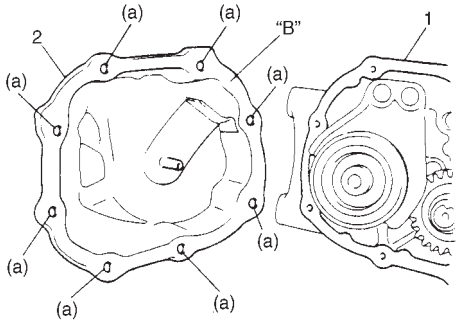

17) Clean mating surface of both left case (1) and side cover (2), coat mating surface with sealant evenly, mate it with left case and then tighten with 8 bolts.

"B": Sealant 99000-31110

Tightening Torque for left cover bolts:
(a): 10 N·m (1.0 kg-m, 7.5 lb-ft)

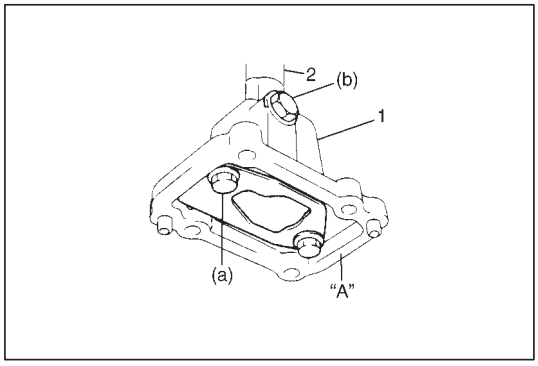

1. Gear shift & select shaft assembly
2. Gear shift interlock plate
3. Gear shift yoke
4. Bolt
5. Gear shift interlock bolt

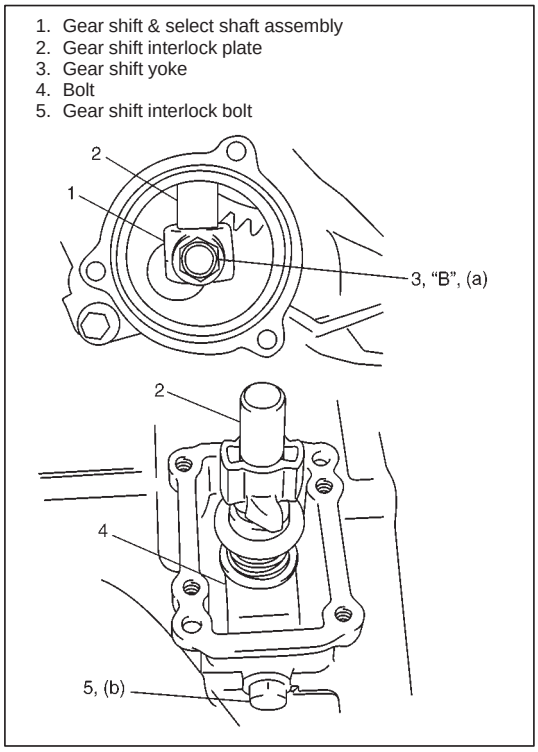

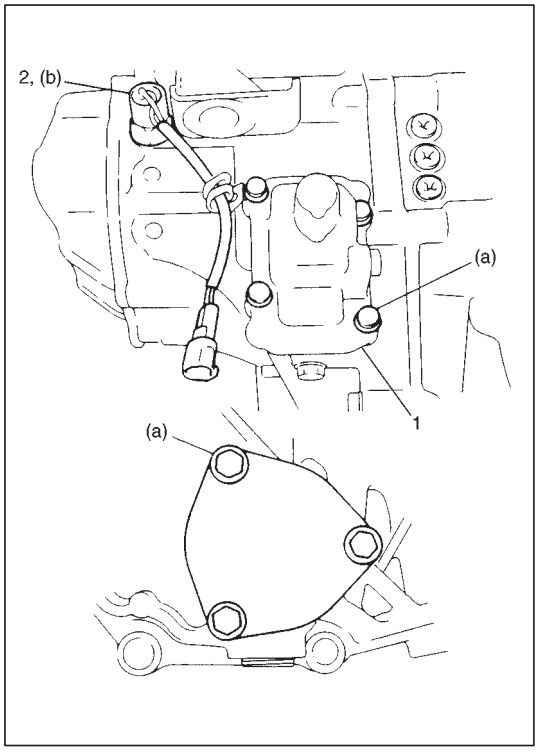

GEAR SHIFT & SELECT SHAFT ASSEMBLY

1) If gear shift guide case (1) has been disassembled or replaced, tighten bolts as specified below. Also check breather (2) hole for clog.
   Tightening Torque
   (a): 10 N·m (1.0 kg-m, 7.5 lb-ft)
   (b): 23 N·m (2.3 kg-m, 17.0 lb-ft)
2) Clean mating surface of guide case and coat it with sealant evenly.
   "A": Sealant 99000-31110
3) Install gear shift yoke (1) and joint it with gear shift arm.
4) Install gear shift & select shaft assembly (2) into transmission and joint its bottom end with gear shift yoke (1).

   NOTE:
   When installing gear shift & select shaft assembly (2), position gear in neutral so that gear shift interlock plate (4) will go in smoothly.

5) Tighten yoke and shaft with bolt (3) applied with thread lock cement.

   "B": Thread lock 1322, 99000-32110

   Tightening Torque
   (a): 34 N·m (3.4 kg-m, 24.5 lb-ft)

6) Install gear shift interlock bolt (5) with washer and tighten it to specification.

   Tightening Torque
   (b): 23 N·m (2.3 kg-m, 17.0 lb-ft)

7) Clean mating surface of left case and put gear shift guide case applied with sealant on it.

   Sealant: SUZUKI BOND No.1215, 99000-31110

8) Place wiring harness clamp bracket and fasten it together with gear shift guide case (1).

   Tightening Torque
   (a): 10 N·m (1.0 kg-m, 7.5 lb-ft)

9) Install back up light switch (2) and clamp its lead.

   Tightening Torque
   (b): 20 N·m (2.0 kg-m, 14.5 lb-ft)

10) Clean left case cap and mating surface of left case, check condition of O-ring and then fasten cap with 3 bolts.

   Tightening Torque
   (a): 10 N·m (1.0 kg-m, 7.5 lb-ft)

11) Check input shaft for rotation in each gear position.
12) Also confirm function of back up light switch in reverse position by using ohmmeter.

REQUIRED SERVICE MATERIALS

MATERIALS	RECOMMENDED SUZUKI PRODUCTS	USE
Lithium grease	SUZUKI SUPER GREASE A (99000-25010)	● Oil seal lips ● Gear shift control lever ● Gear shift control shaft bushes
Sealant	SUZUKI BOND NO.1215 (99000-31110)	● Oil drain plug ● Gear shift shaft bolt ● Mating surface of transmission case ● Mating surface of side cover ● Mating surface of gear shift guide case
Thread lock cement	THREAD LOCK 1322 (99000-32110)	● Control lever knob ● Reverse gear shift lever bolts ● Oil gutter bolt ● Left case plate screws ● Gear shift yoke bolt ● Shift fork plug

SPECIAL TOOLS

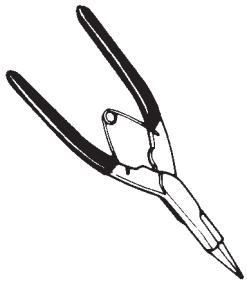 09900-06107 Snap ring pliers (Opening type)	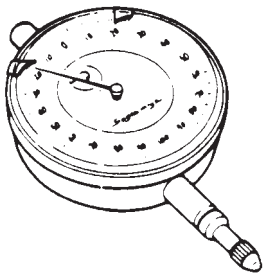 09900-20606 Dial gauge	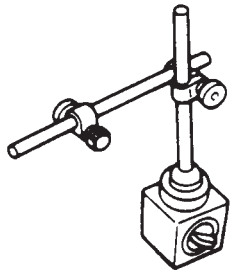 09900-20701 Magnetic stand	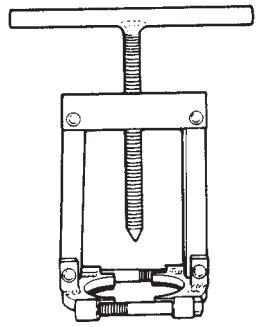 09913-65810 Bearing puller
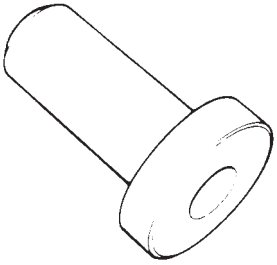 09913-75810 Bearing installer	 09913-75520 Bearing installer	 09913-80112 Bearing installer	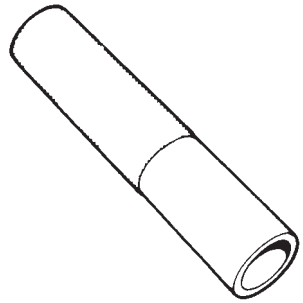 09913-84510 Bearing installer
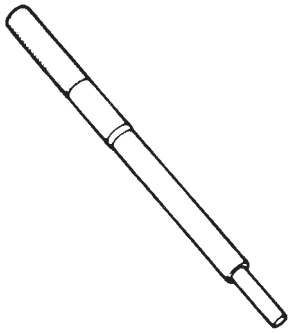 09916-46010 Valve guide remover	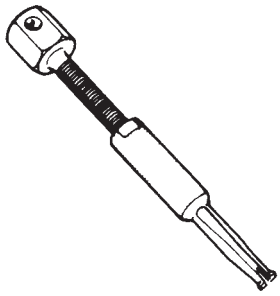 09917-58010 Bearing remover	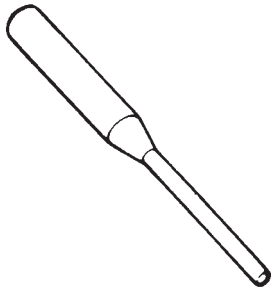 09922-85811 Spring pin remover 4.5 mm	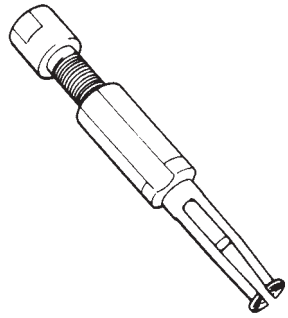 09923-73210 Bearing remover
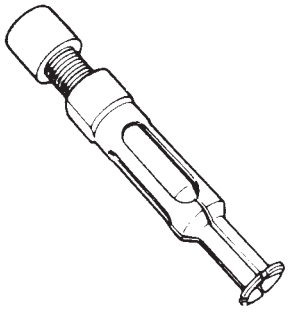 09923-74510 Bearing remover	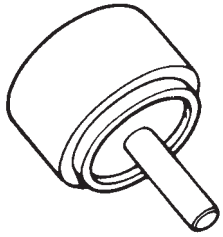 09923-78210 Bearing installer	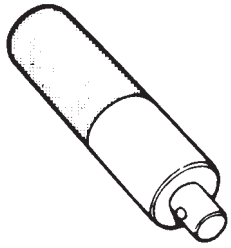 09924-74510 Installer attachment	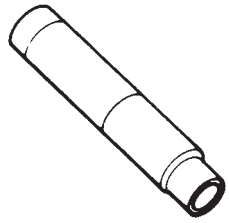 09925-18010 Bearing installer

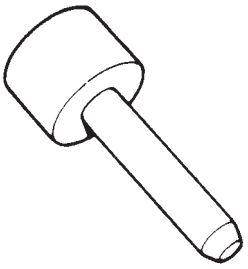 09925-58210 Oil seal installer	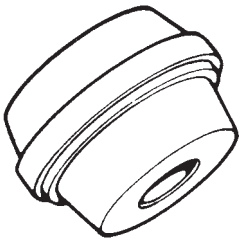 09925-68210 Bearing outer race installer	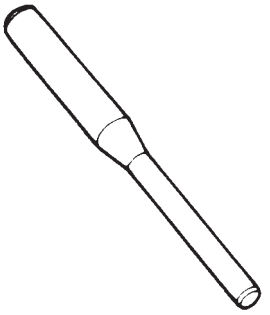 09925-78210 Spring pin remover 6 mm	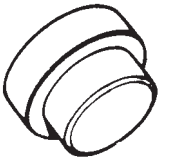 09925-88210 Bearing puller attachment
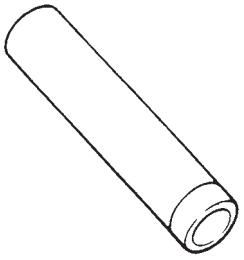 09925-98221 Bearing installer	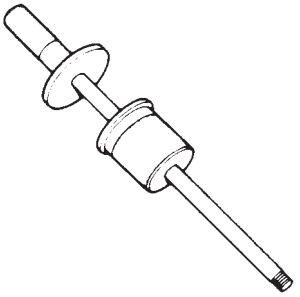 09930-30102 Sliding shaft	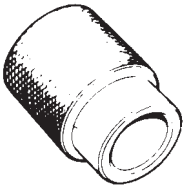 09940-53111 Bearing installer	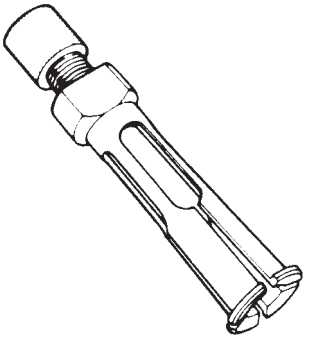 09941-64511 Bearing remover
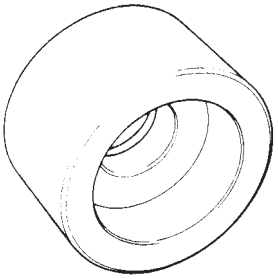 09951-16060 Bush remover	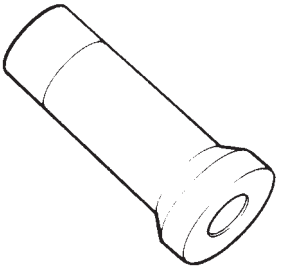 09951-76010 Bearing installer		

SECTION 7C

CLUTCH

CONTENTS

GENERAL DESCRIPTION 7C- 2
DIAGNOSIS 7C- 4
ON-VEHICLE SERVICE 7C- 5
MAINTENANCE SERVICE 7C- 5
Clutch Pedal 7C- 5
Clutch Cable 7C- 6
UNIT REPAIR OVERHAUL 7C- 7
Clutch Cover, Clutch Disc and Flywheel 7C- 7
Clutch release system (For 5-speed Transmission) 7C-11
REQUIRED SERVICE MATERIALS 7C-14
SPECIAL TOOLS 7C-14

GENERAL DESCRIPTION

The clutch is a diaphragm-spring clutch of a dry single disc type. The diaphragm spring is of a tapering-finger type, which is a solid ring in the outer diameter part, with a series of tapered fingers pointing inward.
The disc, carrying torsional coil springs, is positioned on the transmission input shaft with an involute spline fit.
The clutch cover is secured to the flywheel, and carries the diaphragm spring in such a way that the peripheral edge part of the spring pushes on the pressure plate against the flywheel (with the disc in between), when the clutch release bearing is held back. This is the engaged condition of the clutch.

Depressing the clutch pedal causes the release bearing to advance and pushes on the tips of the tapered fingers of the diaphragm spring. When this happens, the diaphragm spring pulls the pressure plate away from the flywheel, thereby interrupting the flow of drive from flywheel through clutch disc to transmission input shaft.

[5-speed Manual Transmission]

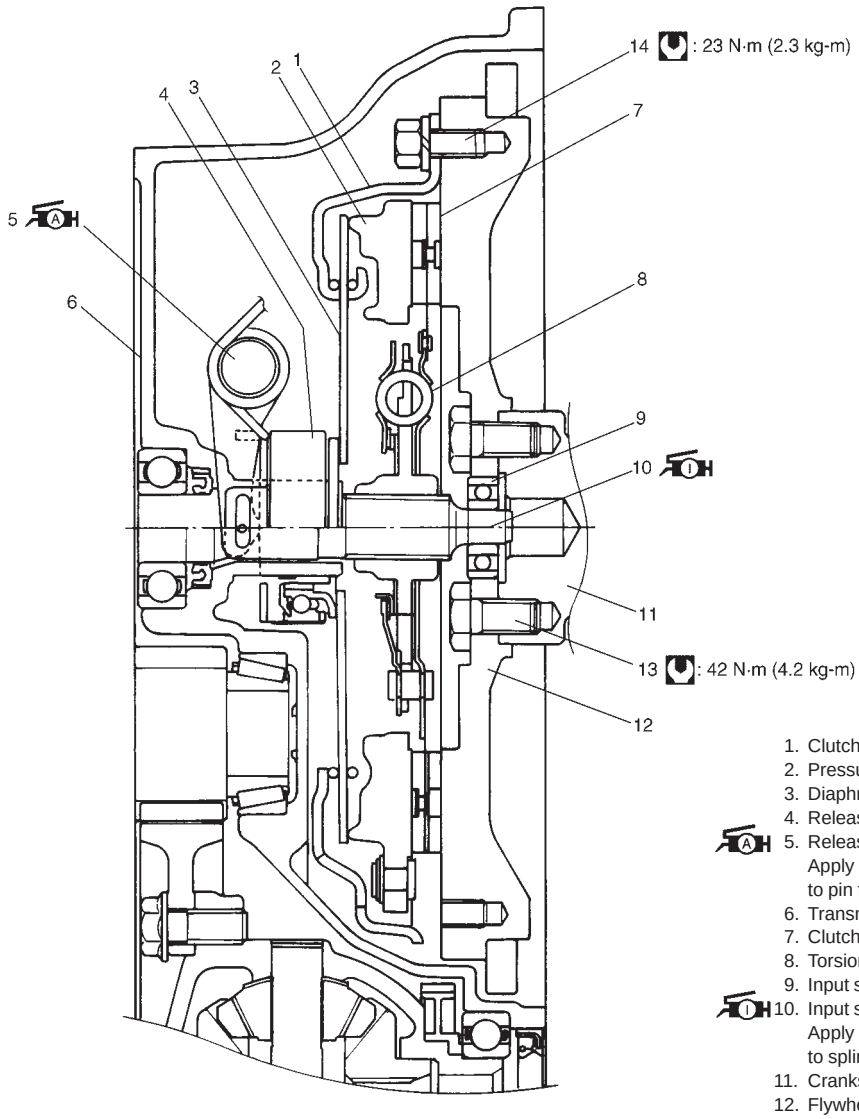

1. Clutch cover
2. Pressure plate
3. Diaphragm spring
4. Release bearing
5. Release shaft
   Apply lithium grease 99000-25010 to pin for release bearing
6. Transmission right case
7. Clutch disc
8. Torsional spring
9. Input shaft bearing
10. Input shaft
    Apply lithium grease 99000-25210 to spline part
11. Crankshaft
12. Flywheel
13. Flywheel bolt
14. Clutch cover bolt

: Tightening Torque

[4-speed Manual Transmission]

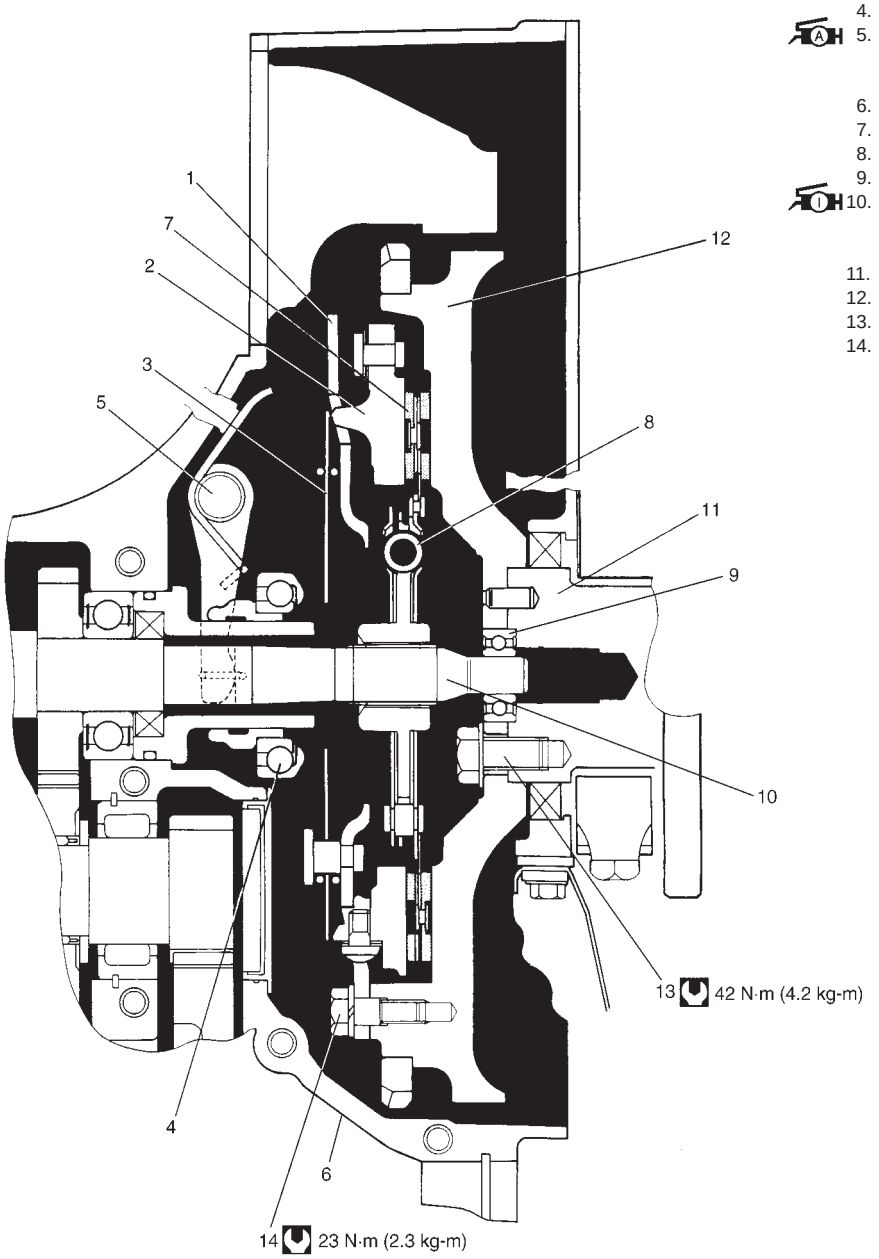

1. Clutch cover
2. Pressure plate
3. Diaphragm spring
4. Release bearing
5. Release shaft (A)
   Apply lithium grease 99000-25010 to pin for release bearing
6. Transmission lower case
7. Clutch disc
8. Torsional spring
9. Input shaft bearing
10. Input shaft (I)
    Apply lithium grease 99000-25210 to spline part
11. Crankshaft
12. Flywheel
13. Flywheel bolt
14. Clutch cover bolt

: Tightening Torque

DIAGNOSIS

Condition	Possible Cause	Correction
Slipping	● Improper clutch pedal free travel ● Worn or oily clutch disc facing ● Warped disc, pressure plate or flywheel surface ● Weakened diaphragm spring ● Rusted clutch cable	Adjust free travel. Replace disc. Replace disc, clutch cover or flywheel. Replace clutch cover. Replace cable.
Dragging clutch	● Improper clutch pedal free travel ● Weakened diaphragm spring, or worn spring tip ● Rusted input shaft splines ● Damaged or worn splines of transmission input shaft ● Excessively wobbly clutch disc ● Clutch facings broken or dirty with oil	Adjust free travel. Replace clutch cover. Lubricate. Replace input shaft. Replace disc. Replace disc.
Clutch vibration	● Glazed (glass-like) clutch facings ● Clutch facings dirty with oil ● Release bearing slides unsmoothly on input shaft bearing retainer ● Wobbly clutch disc, or poor facing contact ● Weakened torsion springs in clutch disc ● Clutch disc rivets loose ● Distorted pressure plate or flywheel surface ● Weakened or loosened engine mounting bolt or nut	Repair or replace disc. Replace disc. Lubricate or replace input shaft bearing retainer. Replace disc. Replace disc. Replace disc. Replace clutch cover or flywheel. Retighten or replace mounting.
Noisy clutch	● Worn or broken release bearing ● Input shaft front bearing worn down ● Excessive rattle of clutch disc hub ● Cracked clutch disc ● Pressure plate and diaphragm spring rattling	Replace release bearing. Replace input shaft bearing. Replace disc. Replace disc. Replace clutch cover.
Grabbing clutch	● Clutch disc facings soaked with oil ● Clutch disc facings excessively worn ● Rivet heads showing out of facing ● Weakened torsion springs	Replace disc. Replace disc. Replace disc. Replace disc.

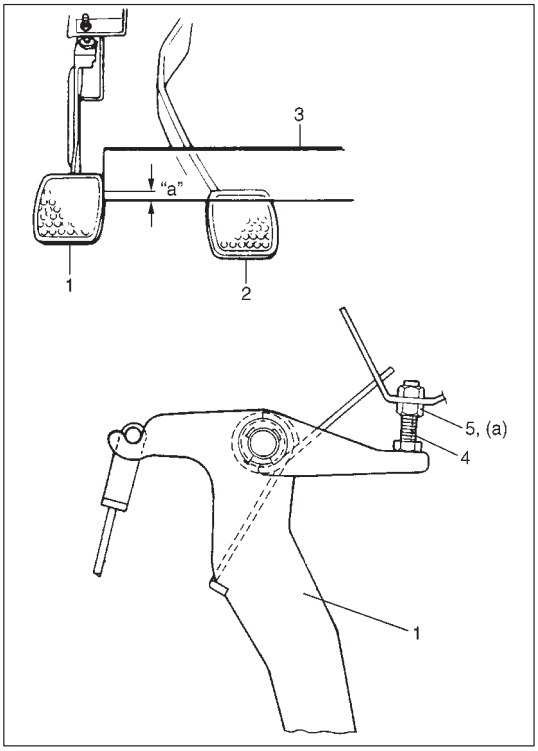

ON-VEHICLE SERVICE

MAINTENANCE SERVICE

CLUTCH PEDAL

CLUTCH PEDAL HEIGHT

Measure pedal height difference "a" using measure (3) and adjust clutch pedal (1) height so that it becomes almost same as brake pedal (2) height.

Height difference "a": 0 mm (0 in.)

If clutch pedal height is not as specified above, adjust it by turning pedal stopper bolt (4).
Be sure to tighten lock nut (5) after adjustment.

Tightening Torque
(a): 5.5 N·m (0.6 kg-m, 4.5 lb-ft)

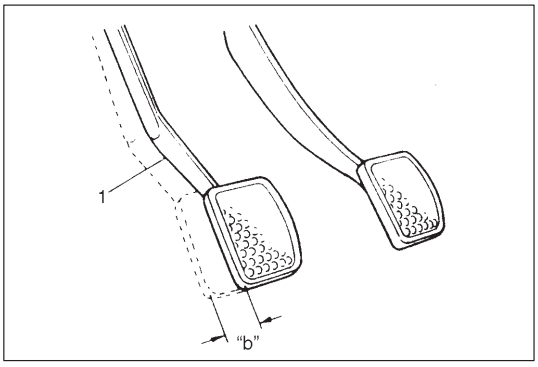

CLUTCH PEDAL FREE TRAVEL

1) Depress clutch pedal (1), stop the moment clutch resistance is felt, and measure distance (clutch pedal free travel). Free travel should be within the following specification.

   Pedal free travel "b": 15 – 20 mm (0.6 – 0.8 in.)

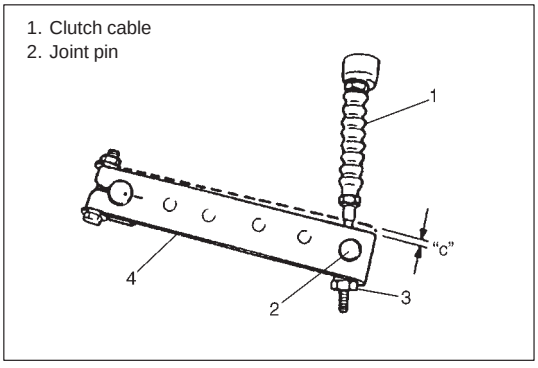

2) If free travel is out of specification, adjust it with cable joint nut (3).

   Release arm (4) free travel "c":
   For 5-speed manual transmission : 0 – 2 mm (0 – 0.08 in.)
   For 4-speed manual transmission : 2 – 4 mm (0.08 – 0.16 in.)

3) After checking clutch pedal free travel, also check clutch for proper function with engine running.

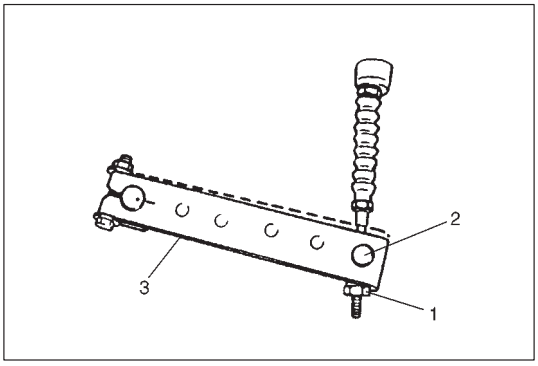

CLUTCH CABLE

REMOVAL

1) Disconnect negative cable at battery.
2) Remove clutch cable joint nut (1).
3) Remove joint pin (2) from clutch release arm (3).
4) Remove 2 bolts at dash panel.

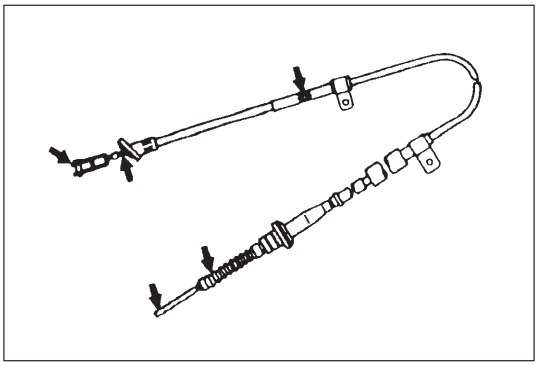

INSPECTION

Inspect clutch cable and replace it for any of the following conditions.

- Excessive cable friction
- Frayed cable
- Bent or kinked cable
- Broken boots
- Worn end

INSTALLATION

Reverse removal procedure for installation noting the following.

- Apply grease to cable end hook and also joint pin before installing cable.

  Grease 99000-25010

- Screw in joint nut and adjust free travel of pedal to specification by turning nut.
- Check clutch for proper function with engine running.

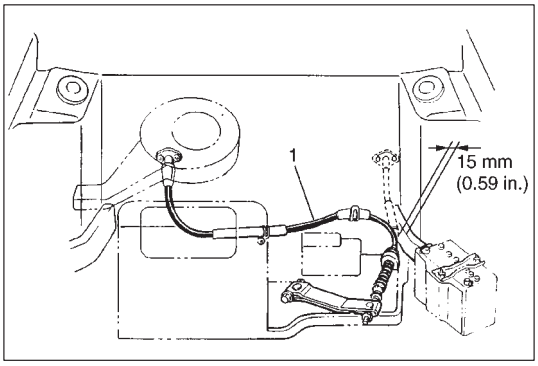

- For 4-speed transmission, the clearance between clutch cable (1) and body must be more than 15 mm (0.59 in.).

UNIT REPAIR OVERHAUL

CLUTCH COVER, CLUTCH DISC AND FLYWHEEL

[5-speed Manual Transmission]

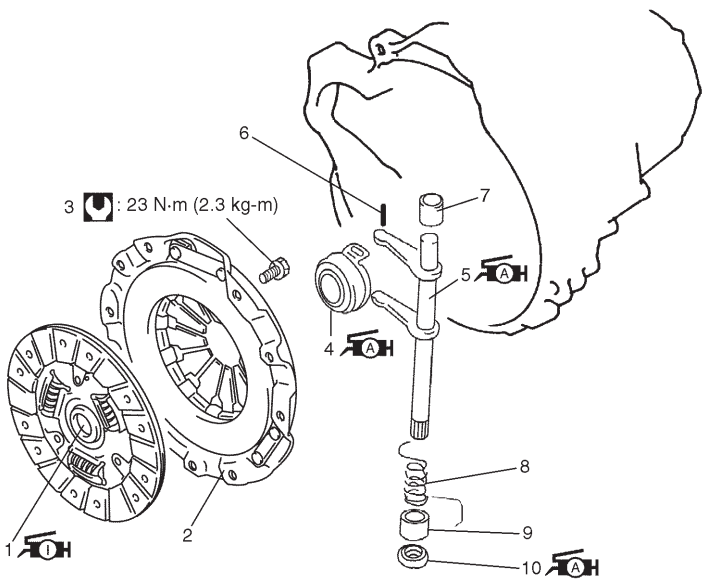

[4-speed Manual Transmission]

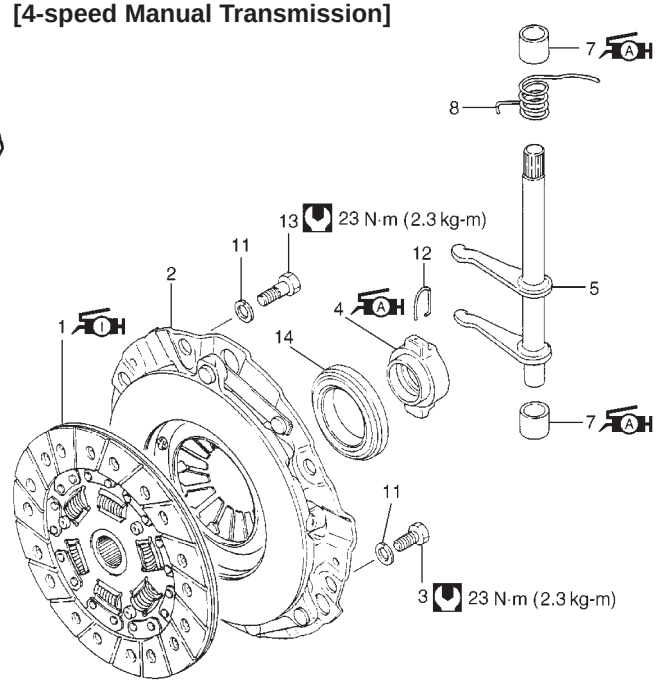

1. Clutch disc
   Apply lithium grease 99000-25210 to spline of input shaft
2. Clutch cover
3. Bolt
4. Release bearing
   Apply lithium grease 99000-25010 to joint of clutch release shaft and inside of bearing
5. Clutch release shaft
   Apply lithium grease 99000-25010 to joint of release bearing
6. Spring pin
7. Clutch release shaft No.1 bush.
   Apply lithium grease 99000-25010 to inside
8. Return spring
9. Clutch release shaft No.2 bush
   Apply lithium grease 99000-25010 to inside
10. Clutch release shaft seal
    Apply lithium grease 99000-25010 to inside
11. Lock washer
12. Clutch retainer spring (2 pcs.)
13. Cover reamer bolt (2 pcs.)
14. Release bearing retainer

: Tightening Torque

DISMOUNTING / REMOUNTING

Dismount or mount transmission with engine referring to SECTION 6A, and separate or combine transmission and engine.

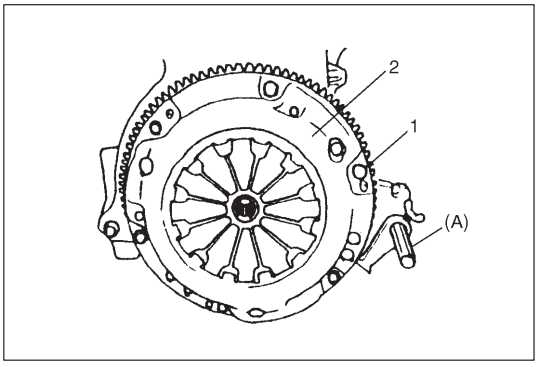

REMOVAL

1) Hold flywheel stationary with special tool and remove clutch cover bolts (1), clutch cover (2) and clutch disc.

   Special Tool
   (A): 09924-17810

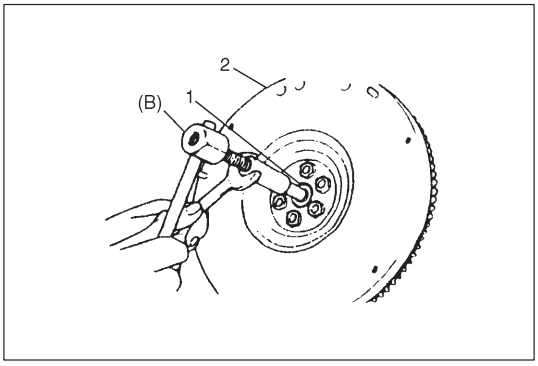

2) Pull out input shaft bearing (1) from flywheel (2) using special tool and wrench.

Special Tool
(B): 09917-58010 (For 5-speed transmission)
(B): 09921-20200 (For 4-speed transmission)

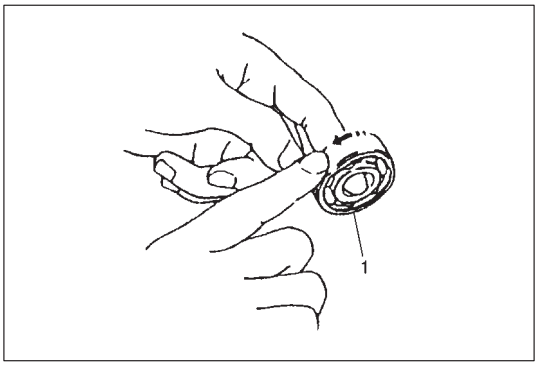

INSPECTION

Input Shaft Bearing

Check input shaft bearing (1) for smooth rotation and replace it if abnormality is found.

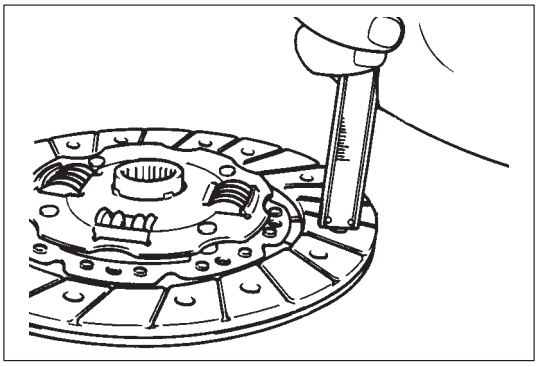

Clutch Disc

Measure depth of rivet head depression, i.e. distance between rivet head and facing surface. If depression is found to have reached service limit at any of holes, replace disc assembly.

Rivet head depth

Standard:	**1.2 mm (0.05 in.)**
Service limit:	**0.5 mm (0.02 in.)**

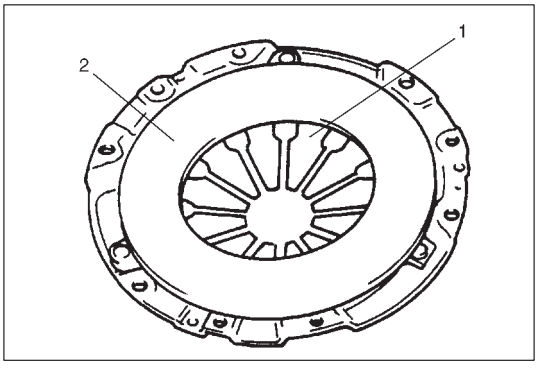

Clutch Cover

- Check diaphragm spring (1) for abnormal wear or damage.
- Inspect pressure plate (2) for wear or heat spots.
- If abnormality is found, replace it as assembly. Do not disassemble it into diaphragm and pressure plate.

Flywheel

Check surface contacting clutch disc for abnormal wear or heat spots. Replace or repair as required.

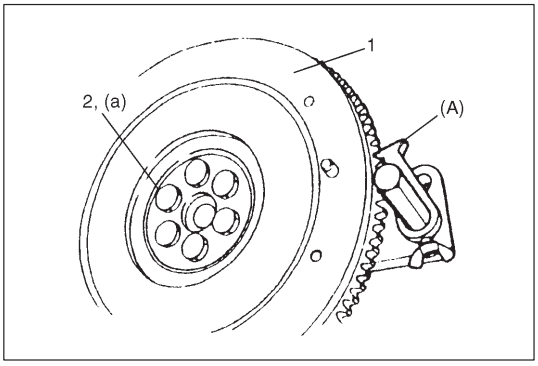

INSTALLATION

NOTE:

Before assembling, make sure that flywheel surface and pressure plate surface have been cleaned and dried thoroughly.

1) Install flywheel (1) to crankshaft and tighten bolts (2) to specification.

   Special Tool
   (A): 09924-17810
   Tightening Torque
   (a): 42 N·m (4.2 kg-m, 30.5 lb-ft)

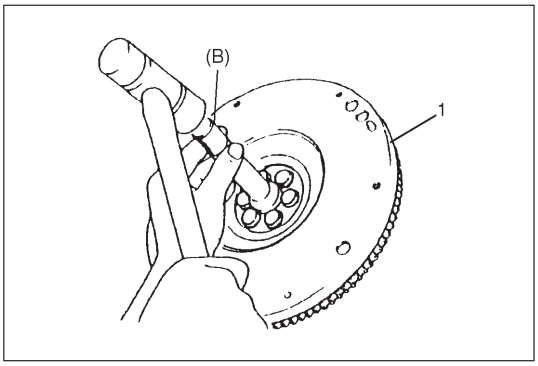

2) Using special tool, install a new input shaft bearing to flywheel (1).

   Special Tool
   (B): 09925-98210 (For 5-speed transmission)
   (B): 09943-88210 (For 4-speed transmission)

[4-speed & 5-speed Transmissions]

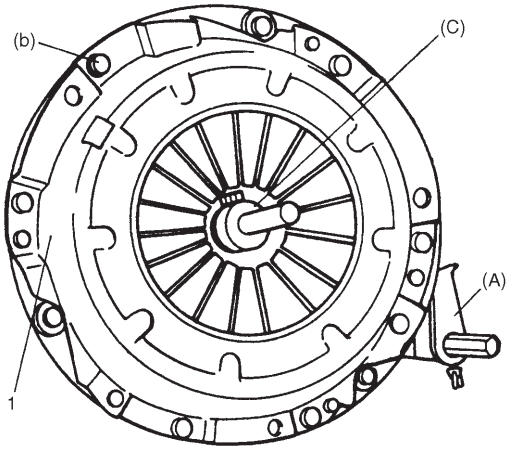

[4-speed Transmission]

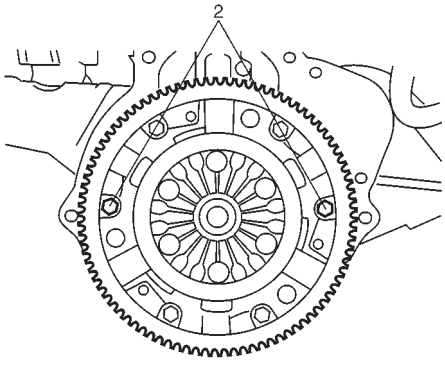

3) Aligning clutch disc to flywheel center using special tool, install clutch cover (1) and bolts. Then tighten bolts to specification.

> **CAUTION:**
> **Tighten cover bolts little by little evenly in diagonal order.**

NOTE:

- **While tightening clutch cover bolts, compress clutch disc with special tool by hand so that disc centered.**
- **For 4-speed manual transmission, be sure to use 2 reamer bolts (2) as shown.**

  Special Tool
  (A): 09924-17810
  (C): 09923-36330

  Tightening Torque
  (b): 23 N·m (2.3 kg-m, 16.5 lb-ft)

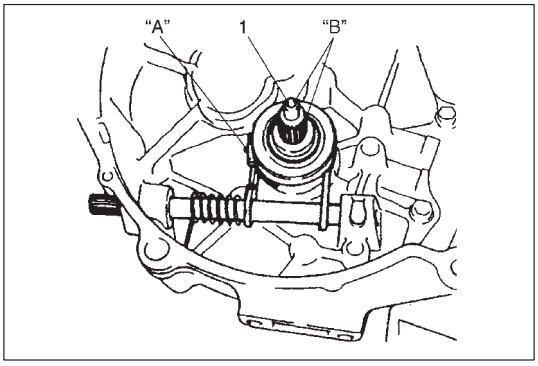

4) Slightly apply grease to input shaft (1), then joint transmission assembly with engine.

"A": Grease 99000-25010
"B": Grease 99000-25210

NOTE:
Turn crankshaft with wrench from front while inserting transmission input shaft to clutch disc until splines mesh.

CLUTCH RELEASE SYSTEM [FOR 5-SPEED TRANSMISSION]

REMOVAL

1) Remove release arm by loosening its bolt.
2) Take out release bearing by turning release shaft.

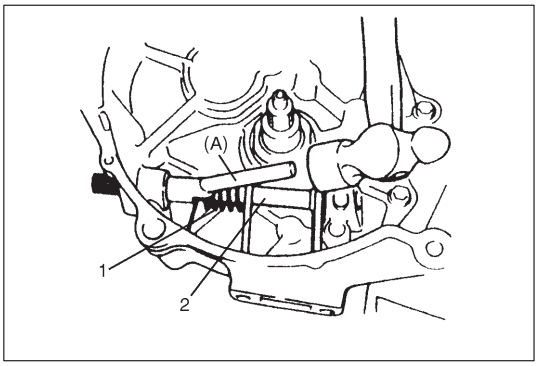

3) Unhook return spring (1) using pliers.
4) Drive out No.2 bush using special tool and hammer.
   Release shaft seal will also be pushed out.

   Special Tool
   (A): 09922-46010

5) Remove release shaft (2) and return spring (1).

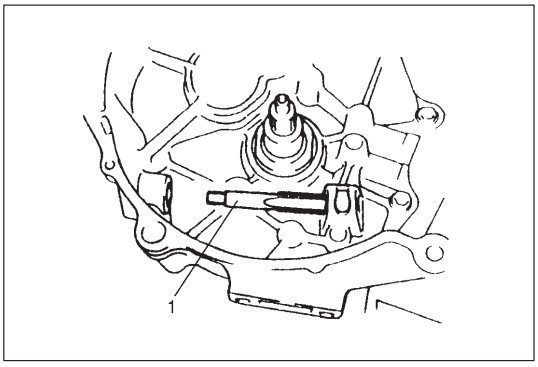

6) Install tap (M14 × 1.5)(1) to clutch release shaft No.1 bush.

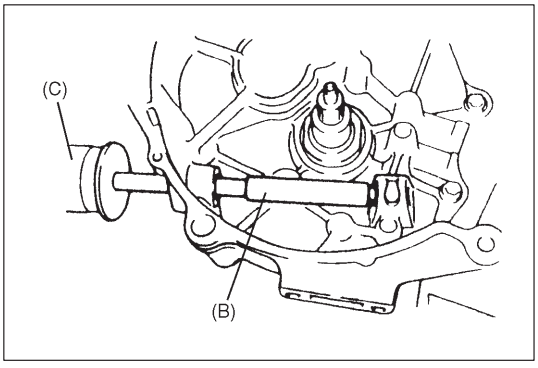

7) Pull No.1 bush out by using special tools.

   Special Tool
   (B): 09923-46030
   (C): 09930-30102

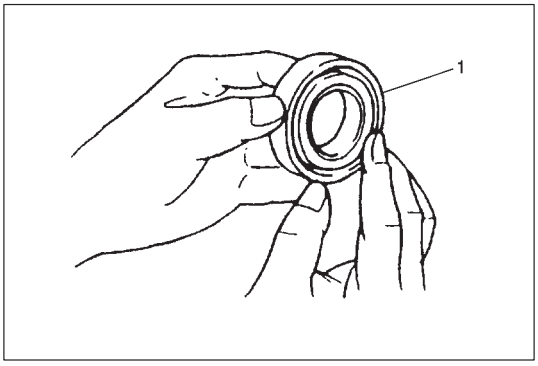

INSPECTION

Clutch release bearing

Check clutch release bearing (1) for smooth rotation.
If abnormality is found, replace it.

> **CAUTION:**
> **Do not wash release bearing. Washing may cause grease leakage and consequential bearing damage.**

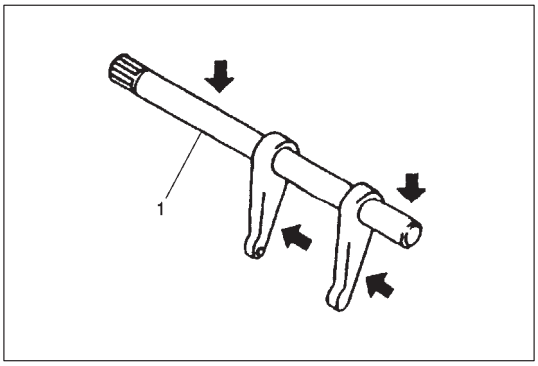

Clutch release shaft

Check clutch release shaft (1) and its pin for deflection or damage.
If abnormality is found, replace it.

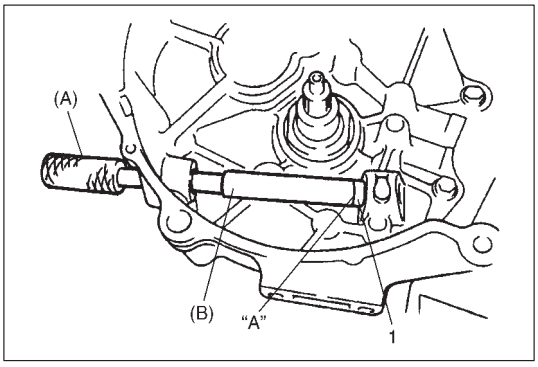

INSTALLATION

1) Drive in a new clutch release shaft No.1 bush (1) using special tools and then apply grease to bush inside.

   Special Tool
   (A): 09943-77910
   (B): 09923-46030
   "A": Grease 99000-25010

2) Install release shaft with return spring applied to it.

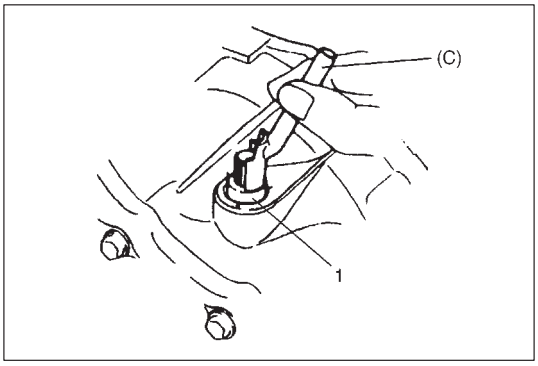

3) Apply grease to clutch release shaft No.2 bush (1) inside and press-fit it using the same special tool as in removal.

   Grease 99000-25010

   Special Tool
   (C): 09922-46010

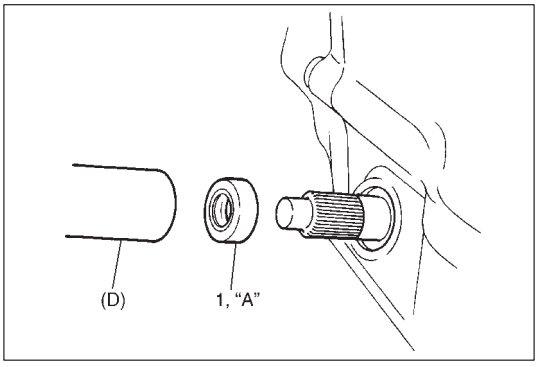

4) Apply grease to shaft oil seal (1) and then install it till its upper end flush with end face of transmission case using special tool.

   "A": Grease 99000-25010

   Special Tool
   (D): 09925-98221

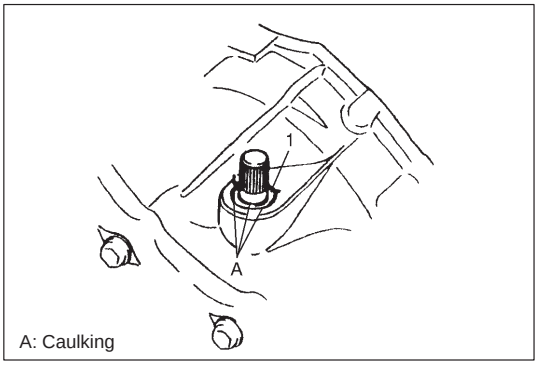

5) Caulk seal (1) at A using caulking tool and hammer.

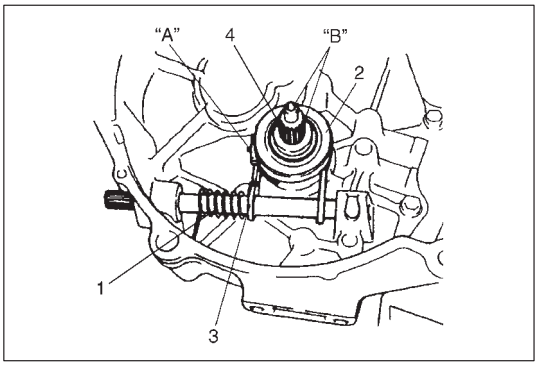

6) Hook return spring (1).
7) Apply grease to release bearing (2) inside and release shaft arm (3), then set bearing.

   "A": Grease 99000-25010

8) Apply small amount of grease to input shaft spline (4) and front end as well.

   "B": Grease 99000-25210

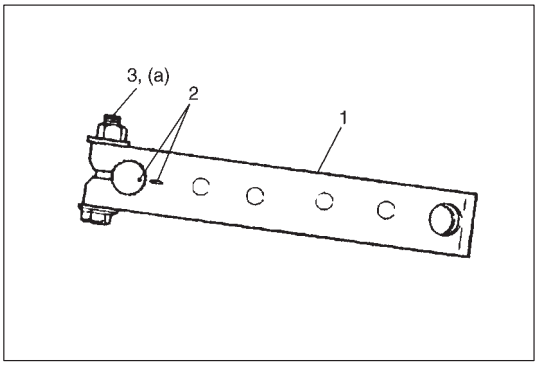

9) Set release arm (1) to release shaft aligning their punching marks (2) and tighten nut (3).

   Tightening Torque
   (a): 13 N·m (1.3 kg-m, 9.5 lb-ft)

REQUIRED SERVICE MATERIALS

MATERIAL	RECOMMENDED SUZUKI PRODUCT	USE
Lithium grease	SUZUKI SUPER GREASE A (99000-25010)	● Clutch cable hook and joint pin ● Release shaft bushes and seal. ● Release shaft arm.
	SUZUKI SUPER GREASE I (99000-25210)	Input shaft spline front end.

SPECIAL TOOLS

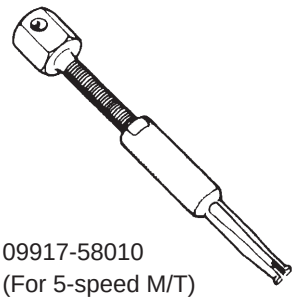

09917-58010
(For 5-speed M/T)
09921-20200
(For 4-speed M/T)
Bearing remover

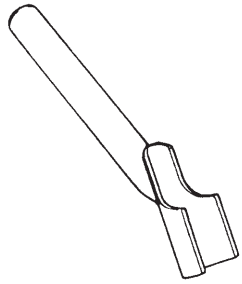

09922-46010
Bush remover

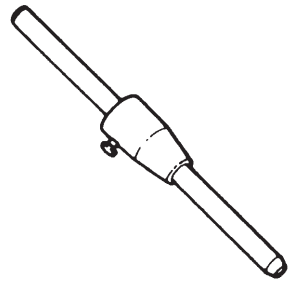

09923-36330
Clutch center guide

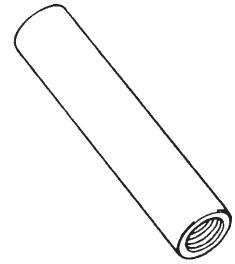

09923-46030
Joint pipe

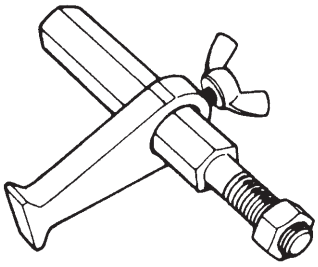

09924-17810
Flywheel holder

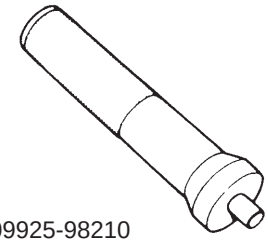

09925-98210
(For 5-speed M/T)
09943-88210
(For 4-speed M/T)
Input shaft bearing installer

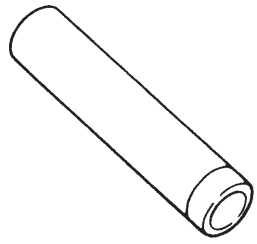

09925-98221
Bearing installer

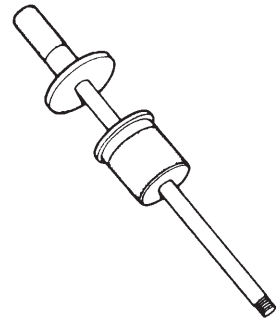

09930-30102
Sliding shaft

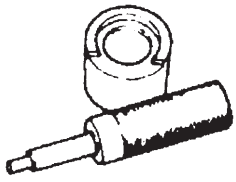

09943-77910
Front suspension lower arm bush remover

SECTION 8

BODY ELECTRICAL SYSTEM

CONTENTS

GENERAL DESCRIPTION 8- 2
Cautions in Servicing 8- 2
Wire Color Symbols 8- 4
Combination Meter 8- 5

DIAGNOSIS 8- 6
Headlight 8- 6
Turn Signal and Hazard Warning Lights 8- 6
Clearance, Tail and License Plate Lights 8- 6
Back-up Light 8- 7
Brake Lights 8- 7
Fuel Meter and Fuel Gauge Unit 8- 7
Engine Coolant Temp. (ECT) Meter and ECT Sensor 8- 7
Oil Pressure Light 8- 7
Brake and Parking Brake Warning Light 8- 8
Windshield Wiper and Washer 8- 8
Front Wiper and Washer 8- 8
Interior Light 8- 8
Horn 8- 8

ON-VEHICLE SERVICE 8- 9
Headlight 8- 9
Turn Signal and Hazard Warning Light 8-11
Ignition Switch 8-12
Combination Meter 8-12
Fuel Meter/Fuel Gauge Unit 8-13
Engine Coolant Temperature (ECT) Meter and Sensor Unit 8-14
Oil Pressure Warning Light 8-15
Brake and Parking Brake Warning Light 8-15
Wipers and Washers 8-16
Door Switch 8-19

GENERAL DESCRIPTION

The body electrical components of this vehicle are designed to operate on 12 Volts power supplied by the battery. The electrical system utilizes negative ground polarity.

CAUTIONS IN SERVICING

When performing works related to electric systems, observe following cautions for the purpose of protection of electrical parts and prevention of a fire from occurrence.

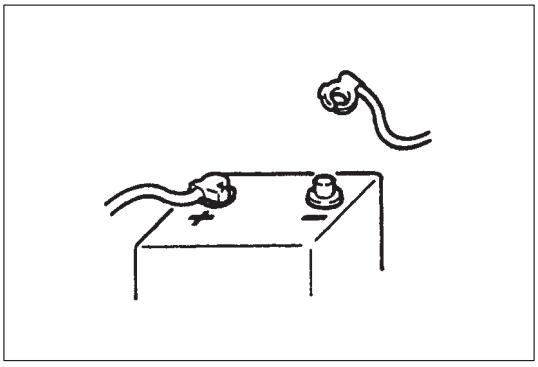

- When removing the battery from the vehicle or disconnecting the cable from the battery terminals for inspection or service works on the electric systems, always confirm first that the ignition switch and all the other switches have been turned OFF. Otherwise, the semi-conductor part may be damaged.
- When disconnecting cables from the battery, be sure to disconnect the one from the negative (–) terminal first and then the other from the positive (+) terminal.
- Reverse the above order when connecting the cables to the battery terminals.

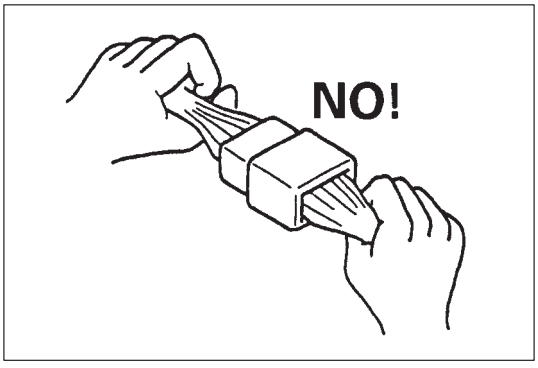

- When disconnecting connectors, never pull the wiring harnesses. Unlock the connector lock first and then pull them apart by holding connectors themselves.

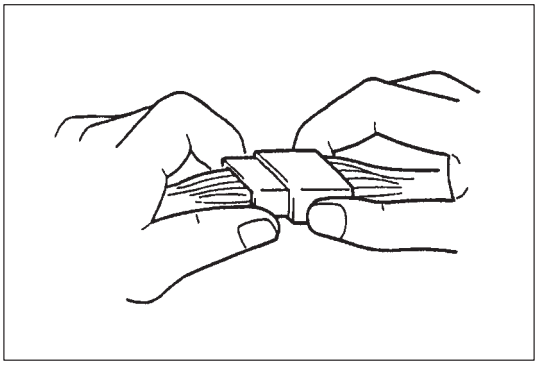

- When connecting connectors, also hold connectors and push them together until they lock securely (a click is heard).

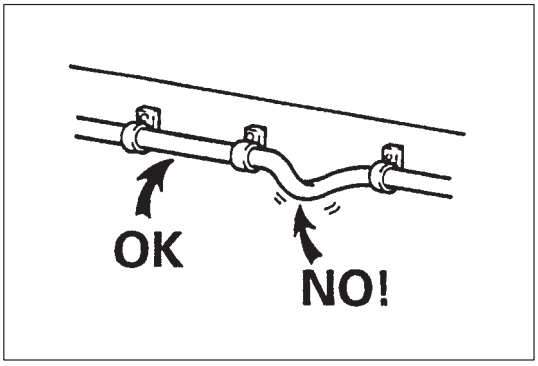

- When installing the wiring harness, fix it with clamps so that no slack is left.

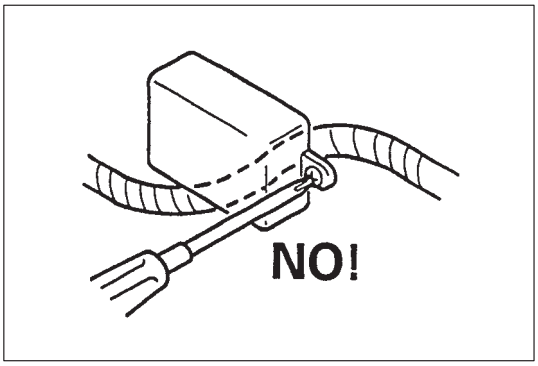

- When installing vehicle parts, be careful so that the wiring harness is not interfered with or caught by any other part.

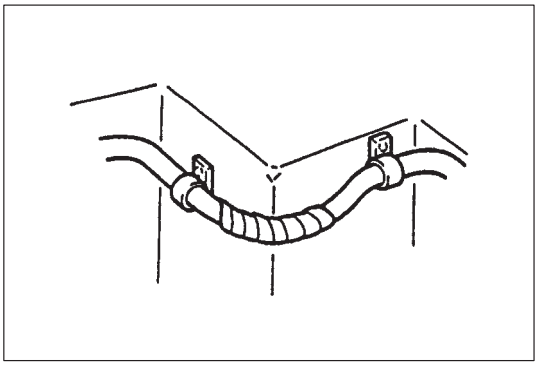

- To avoid damage to the harness, protect its part which may contact against a part forming a sharp angle by winding tape or the like around it.

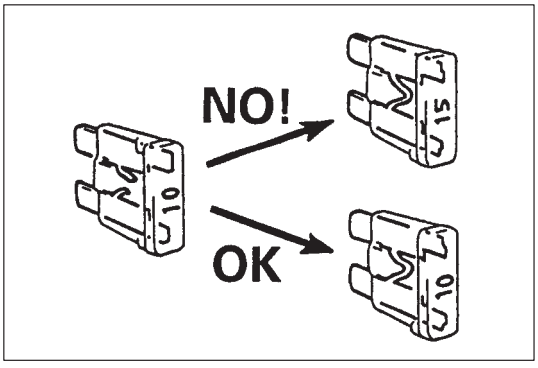

- When replacing a fuse, make sure to use a fuse of the specified capacity. Use of a fuse with a larger capacity will cause a damage to the electrical parts and a fire.

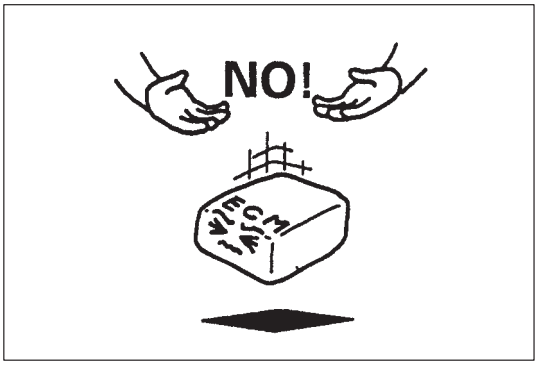

- Always be careful not to handle electrical parts (computer, relay, etc.) in a rough manner or drop them.

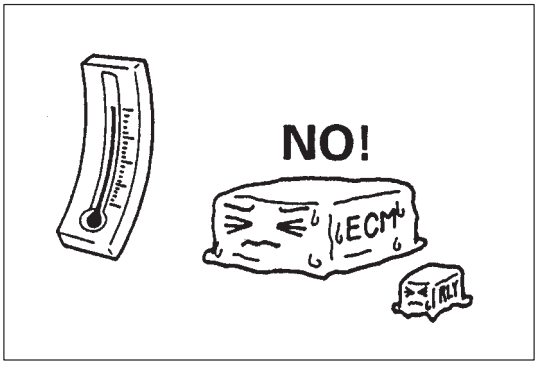

- When performing a work that produces a heat exceeding 80°C in the vicinity of the electrical parts, remove the heat sensitive electrical part(s) beforehand.

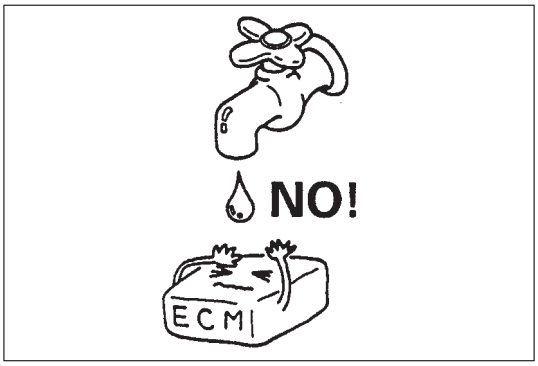

- Use care not to expose connectors and electrical parts to water which will be a cause of a trouble.

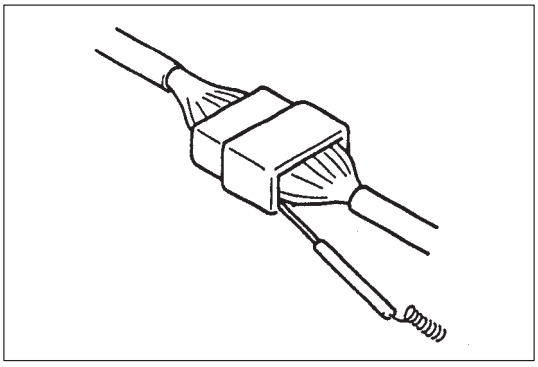

- When using a tester for checking continuity or measuring voltage, be sure to insert the tester probe from the wire harness side.

Symbol	Wire Color	Symbol	Wire Color
B	Black	O	Orange
Bl	Blue	R	Red
Br	Brown	W	White
G	Green	Y	Yellow
Gr	Gray	P	Pink
Lbl	Light blue	V	Violet
Lg	Light green		

WIRE COLOR SYMBOLS

The wire color is abbreviated to the first (or first two) alphabet(s) of each color.

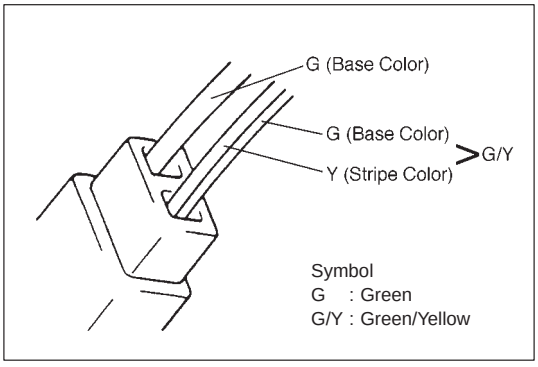

There are two kinds of colored wire used in this vehicle. One is single-colored wire and the other is dual-colored (striped) wire.
The single-colored wire uses only one color symbol (i.e. “G”).
The dual-colored wire uses two color symbols (i.e. “G/Y”). The first symbol represents the base color of the wire (“G” in the figure) and the second symbol represents the color of the stripe (“Y” in the figure).

COMBINATION METER

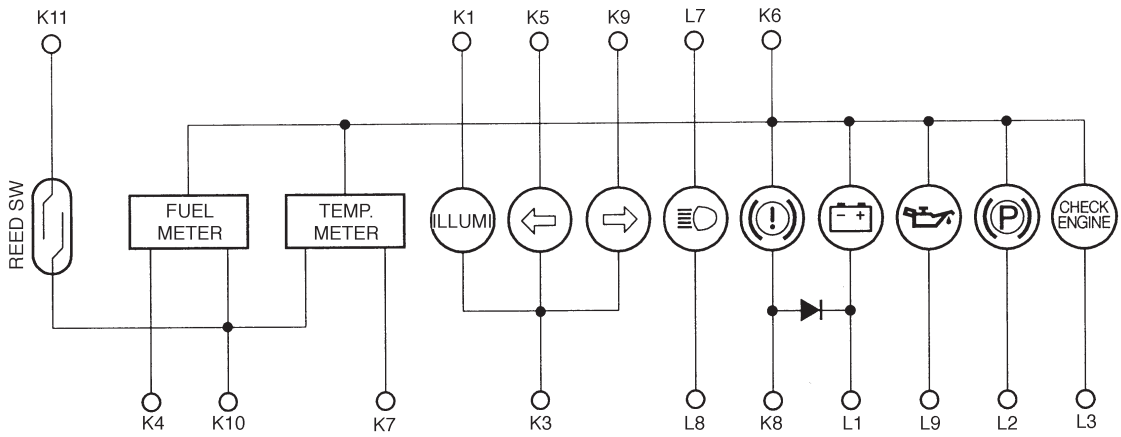

NOTE:
Terminal arrangement of coupler viewed from harness side.

Coupler K

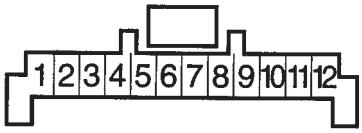

Coupler L

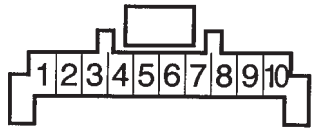

COUPLER K

1.	To lighting switch	R/Y
2.	Blank	—
3.	To ground	B
4.	To fuel level gauge	Y/R
5.	To combination switch (turn L)	G/R
6.	To ignition switch	B/W
7.	To ECT sensor	Y/W
8.	To brake fluid level switch	R/B
9.	To combination switch (turn R)	G/Y
10.	To ground	B/Bl
11.	To ECM	V
12.	Blank	—

COUPLER L

1.	To alternator	W/R
2.	To parking brake switch	R/B
3.	To ECM	V/Y
4.	Blank	—
5.	Blank	—
6.	Blank	—
7.	To main fuse	W
8.	To combination switch (dimmer & passing switch)	R
9.	To oil pressure switch	Y/B
10.	Blank	—

DIAGNOSIS

HEADLIGHT

Trouble	Possible Cause	Correction
Headlights do not light up	Bulb blown Headlight switch faulty HEAD R and L fuses blown Wiring or grounding faulty	Replace bulb Replace headlight switch Replace fuses to check for short Repair circuit
Only one headlight does not light up	Bulb blown HEAD R or L fuse blown Wiring or grounding faulty	Replace bulb Replace fuse to check for short Repair circuit
Only one beam ("Hi" or "Lo") does not light	Bulb blown Lighting or dimmer switch faulty Wiring harness faulty	Replace bulb Replace switch Repair circuit

TURN SIGNAL AND HAZARD WARNING LIGHTS

Trouble	Possible Cause	Correction
Flash rate high or one side only flashes	Bulb blown on "flash rate high"-side Incorrect bulb Turn signal/hazard warning relay faulty Open circuit or high resistance existing between combination switch (turn signal/hazard warning switch) and light on one side Wiring or grounding faulty	Replace bulb Replace bulb Replace relay Repair circuit Repair circuit
No flashing	HAZARD HORN and/or TURN BACK fuse blown Open circuit or high resistance existing between battery and switch Turn signal/hazard relay faulty Combination switch (turn signal/hazard switch) faulty Wiring or grounding faulty	Replace fuses to check for short Check bulb and check circuit Replace relay Replace switch Repair circuit
Flash rate low	Supply voltage low Turn signal/hazard relay faulty	Check charging system Replace relay

CLEARANCE, TAIL AND LICENSE PLATE LIGHTS

Trouble	Possible Cause	Correction
All lights do not light up	Bulb(s) blown TAIL STOP fuse blown Combination switch (lighting and dimmer switch) faulty Wiring or grounding faulty	Replace bulb (s) Replace fuse to check for short Replace switch Repair circuit
Some lights do not light up	Bulb(s) blown Wiring or grounding faulty	Replace bulb (s) Repair circuit

BACK-UP LIGHT

Trouble	Possible Cause	Correction
Back-up lights do not light up	Bulb(s) blown TURN BACK fuse blown Back-up light switch faulty Wiring or grounding faulty	Replace bulb (s) Replace fuse to check for short Replace switch Repair circuit
Back-up lights stay on	Back-up light switch faulty	Check or replace switch

BRAKE LIGHTS

Trouble	Possible Cause	Correction
Brake lights do not light up	Bulb(s) blown TAIL STOP fuse blown Brake light switch faulty Wiring or grounding faulty	Replace bulb (s) Replace fuse to check for short Replace switch Repair circuit
Brake lights stay on	Brake light switch faulty	Check, adjust or replace switch

FUEL METER AND FUEL GAUGE UNIT

Trouble	Possible Cause	Correction
Fuel meter shows no operation or incorrect operation	IG-COIL fuse blown Fuel gauge unit faulty Printed plate in combination meter faulty Fuel meter faulty Wiring or grounding faulty	Replace fuse to check for short Replace fuel gauge unit Replace printed plate Replace fuel meter Repair circuit

ENGINE COOLANT TEMP. (ECT) METER AND ECT SENSOR

Trouble	Possible Cause	Correction
Engine coolant temp. meter shows no operation or incorrect operation	IG-COIL fuse blown ECT meter faulty Printed plate in combination meter faulty ECT sensor faulty Wiring or grounding faulty	Replace fuse to check for short Replace ECT meter Replace printed plate Replace ECT sensor Repair circuit

OIL PRESSURE LIGHT

Trouble	Possible Cause	Correction
Oil pressure warning light does not light up when ignition switch is on at engine off	Bulb in combination meter blown IG-COIL fuse blown Printed plate in combination meter faulty Oil pressure switch faulty Wiring or grounding faulty	Replace bulb Replace fuse to check for short Replace printed plate Replace oil pressure switch Repair circuit

BRAKE AND PARKING BRAKE WARNING LIGHT

Trouble	Possible Cause	Correction
Brake warning light does not light up when fluid low level	Bulb in combination meter blown IG-COIL fuse blown Printed plate in combination meter faulty Brake fluid level switch faulty Wiring or grounding faulty	Replace bulb Replace fuse to check for short Replace printed plate Replace brake fluid level switch Repair circuit
Brake warning light does not light up when parking brake pull up	Bulb in combination meter blown IG-COIL fuse blown Printed plate in combination meter faulty Parking brake switch faulty Wiring or grounding faulty	Replace bulb Replace fuse to check for short Replace printed plate Replace parking brake switch Repair circuit
Brake warning light stay on	Brake fluid level switch and/or parking brake switch faulty	Replace switch

WINDSHIELD WIPER AND WASHER
FRONT WIPER AND WASHER

Trouble	Possible Cause	Correction
Wiper malfunctions or does not return to its original position	WIPER WASHER fuse blown Wiper motor faulty Combination switch (wiper switch) faulty Wiring or grounding faulty	Replace fuse to check for short Replace wiper motor Replace switch Replace circuit
Washer malfunctions	Washer hose or nozzle clogged WIPER WASHER fuse blown Washer motor faulty Combination switch (wiper switch) faulty Wiring or grounding faulty	Clean or repair clogged hose or nozzle Replace fuse to check for short Replace washer motor Replace switch Repair circuit

INTERIOR LIGHT

Trouble	Possible Cause	Correction
Interior light does not light up	Bulb blown TAIL STOP fuse blown Interior light switch faulty Door switch faulty Wiring or grounding faulty	Replace bulb Replace fuse to check for short Replace switch Replace switch Repair circuit

HORN

Trouble	Possible Cause	Correction
Horn does not operate	HAZARD HORN fuse blown Horn switch faulty Horn faulty	Replace fuse to check for short Replace horn switch Replace horn

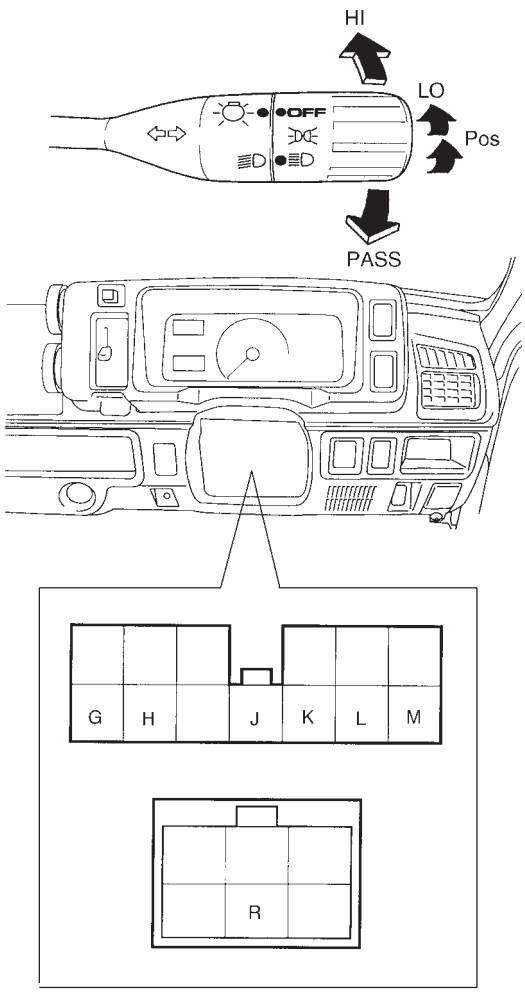

Mating side (front) view of combination switch coupler

ON-VEHICLE SERVICE

HEADLIGHT

HEADLIGHT SWITCH

INSPECTION

1) Disconnect negative cable at battery.
2) Disconnect combination switch lead wire coupler.
3) Check for continuity between terminals at each switch position shown below. If check result is not as specified, replace.

Lighting switch

Switch Position \ Terminal	K	L	M	R	J
OFF	○	○			
SMALL	○	○	○		
HEAD	○	○	○	○	○

Dimmer and passing switch

Switch Position \ Terminal	R	H	J	G
HI		○	○	
LO			○	○
PASS	○	○	○	○

REMOVAL AND INSTALLATION

Refer to COMBINATION SWITCH ASSEMBLY in section 3C.

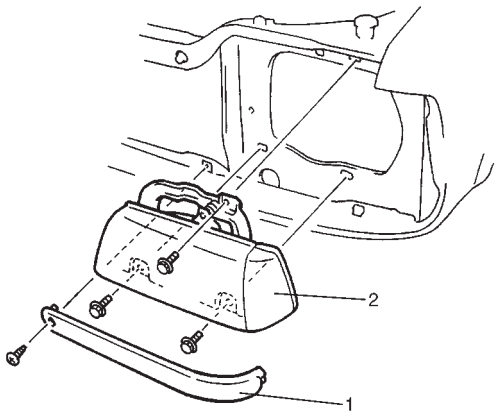

HEADLIGHT

REMOVAL

1) Disconnect negative cable at battery.
2) Remove front grille.
3) Remove garnish (1) installed under the headlight.
4) Remove headlight mounting bolts.
5) Detach headlight assembly (2) from vehicle.
6) Disconnect couplers from headlight assembly.
7) Remove headlight assembly.

INSTALLATION

Reverse removal procedure for installation.

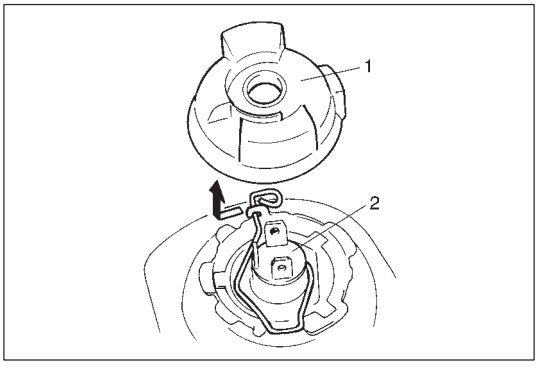

BULB REPLACEMENT

WARNING:
To avoid danger of being burned, don't touch when the bulb is hot.

1) Disconnect negative cable at battery.
2) Disconnect harness from bulb.
3) Remove socket cover (1) and bulb (2).
4) Replace bulb and assemble all removed parts.

HEADLIGHT AIMING WITH SCREEN

NOTE:

- **Unless otherwise obligated by local regulations, adjust headlight aiming according to following procedure.**
- **After replacing headlight, be sure to adjust aiming.**

Before adjustment, make sure the following.

a) Place vehicle on a flat surface in front of blank wall (screen) ahead of headlight surface.

Clearance "a": 10 m (32.8 ft.)

b) Adjust air pressure of all tires to a specified value respectively.
c) Bounce vehicle body up and down by hand to stabilize suspension.
d) Carry out with one driver aboard.

Driver's weight: 75 kg (165 lb)

Adjustment

1) Check to see if hot spot (high intensity zone) of each main (low) beam axis falls as illustrated.

Clearance "H": Approx. 130 mm (5.15 in.)

2) If headlight aiming is not set properly, align it to specification by adjusting aiming screw and aiming gear.

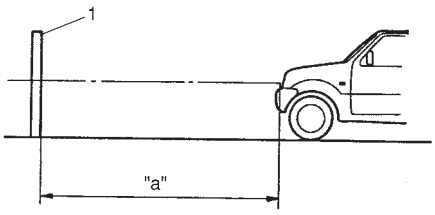

1. Screen

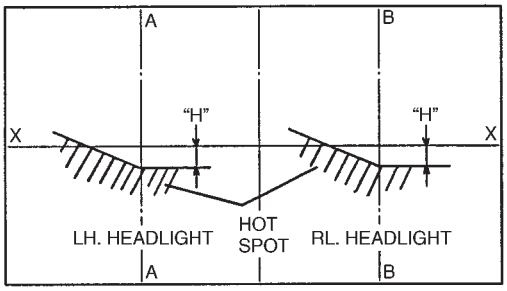

X - X: Horizontal center line of headlights bulb
A - A: Vertical center line of left headlight bulb
B - B: Vertical center line of right headlight bulb

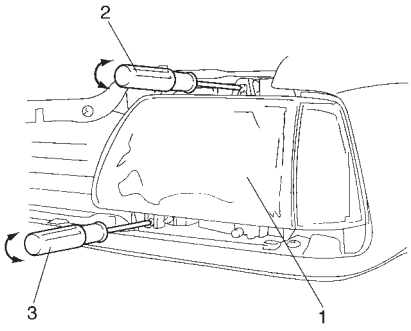

1. Headlight assembly
2. Aiming (for up/down adjustment)
3. Aiming (for right/left adjustment)

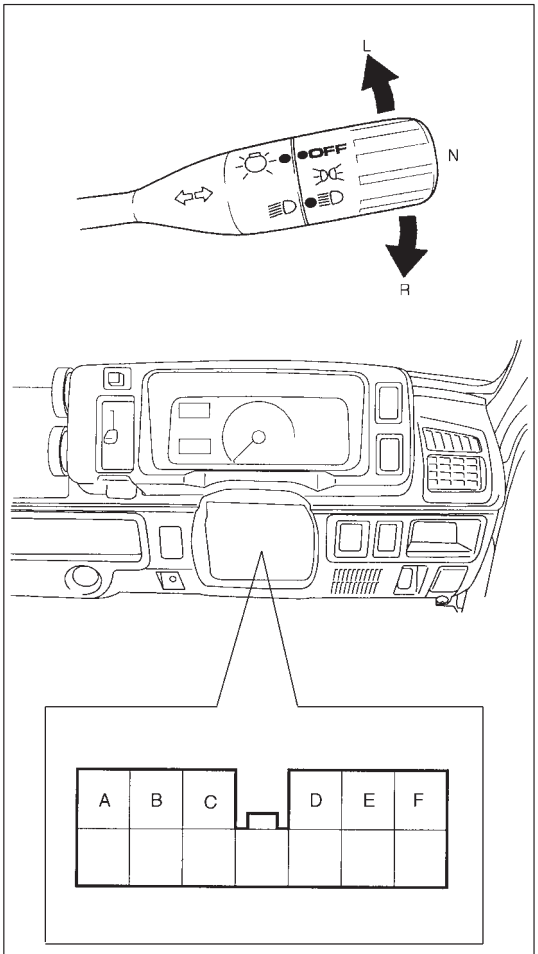

Mating side (front) view of combination switch coupler

TURN SIGNAL AND HAZARD WARNING LIGHT

TURN SIGNAL LIGHT SWITCH

INSPECTION

1) Disconnect negative cable at battery.
2) Disconnect combination switch lead wire coupler.
3) Check for continuity between terminals at each switch position shown below. If check result is not as specified, replace.

Hazard SW / Turn Signal SW \ Terminal		A	B	C	D	E	F
OFF	L	○		○			
	N				○		○
	R		○	○			
ON		○	○	○		○	○

REMOVAL AND INSTALLATION

Refer to COMBINATION SWITCH ASSEMBLY in Section 3C.

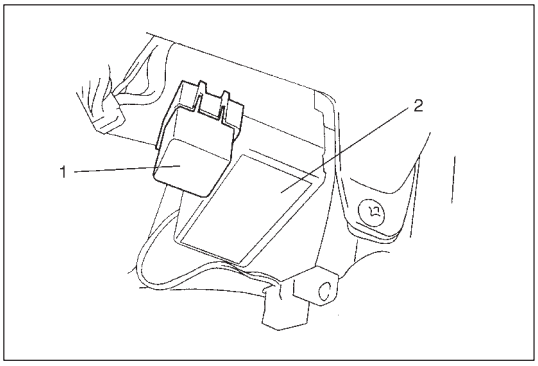

TURN SIGNAL/HAZARD RELAY

The turn signal/hazard relay (1) is located on the fuse box (2).

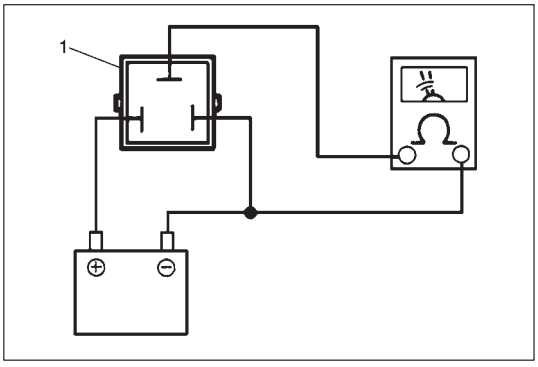

INSPECTION

Connect battery and tester as shown left.
Unless a continued click sound is heard, replace relay (1).

Reference flashing cycle : 60 – 120 cycle/minute

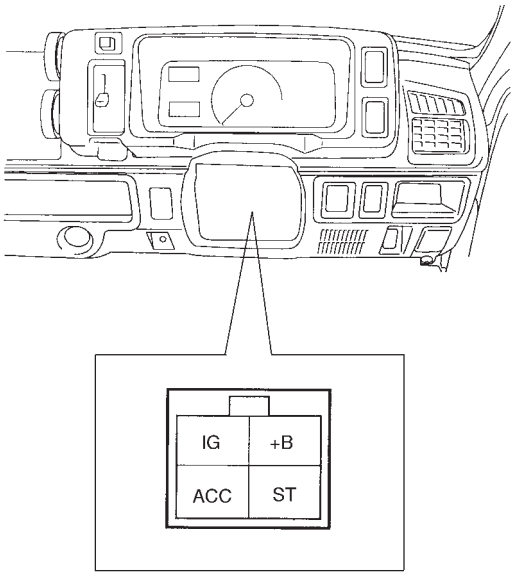

Mating side (front) view of ignition main switch coupler

IGNITION SWITCH

INSPECTION

1) Disconnect negative cable at battery.
2) Disconnect ignition main switch lead wire coupler.
3) Check for continuity between terminals at each switch position shown below. If check result is not as specified, replace.

key \ Position \ Terminal		+B	ACC	IG	ST
OUT	LOCK				
IN	ACC	○	○		
	ON	○	○	○	
	START	○		○	○

REMOVAL AND INSTALLATION

Refer to STEERING LOCK ASSEMBLY (IGNITION SWITCH) in section 3C.

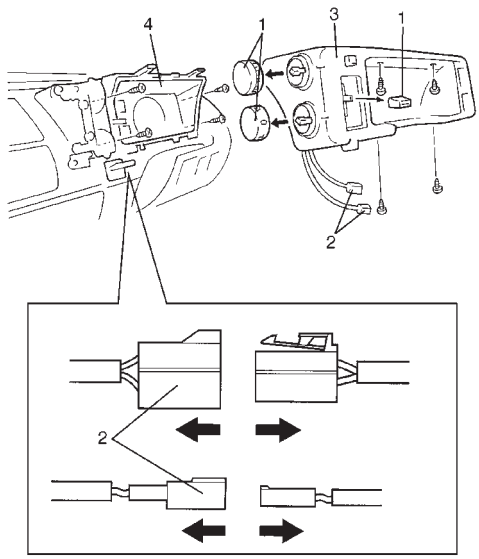

COMBINATION METER

REMOVAL

1) Disconnect negative cable at battery.
2) Remove heater control knobs (1) and mounting bolts.
3) Disconnect heater control lead wire couplers (2).
4) Loosen steering column mounting nuts of upper side, and lower steering column.
5) Remove meter cluster (3).
6) Pull out combination meter (4), and disconnect speedometer cable and combination meter lead wire couplers.

INSTALLATION

Reverse removal procedure for installation.

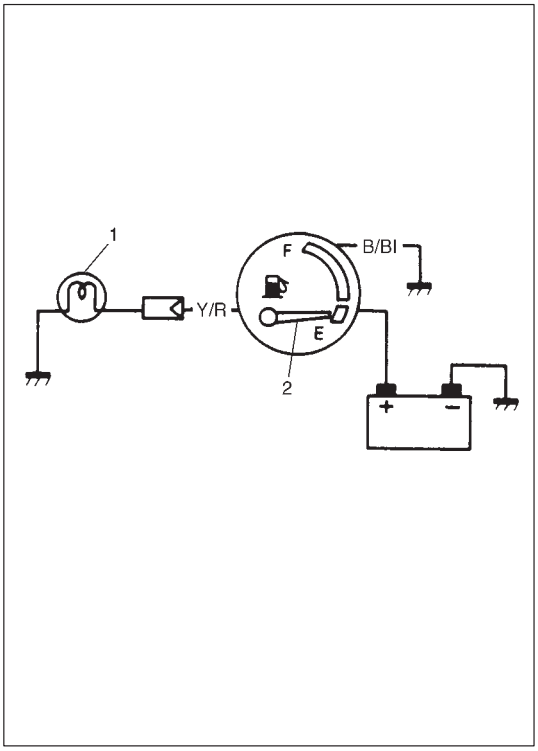

FUEL METER/FUEL GAUGE UNIT

FUEL METER

INSPECTION

1) Remove rear seat cushion. Refer to REAR SEAT in Section 9.
2) Disconnect Y/R lead wire coupler under the rear seat cushion.
3) Turning switch ON, and check that fuel meter indicates E.
4) Turn ignition switch OFF.
5) Ground Y/R lead through a 3.4 W test bulb (1) as illustrated.
6) Turn ignition switch ON and check that bulb light up and pointer (2) moves to F side.
7) If fuel meter shows no operation, repair or replace defective parts.

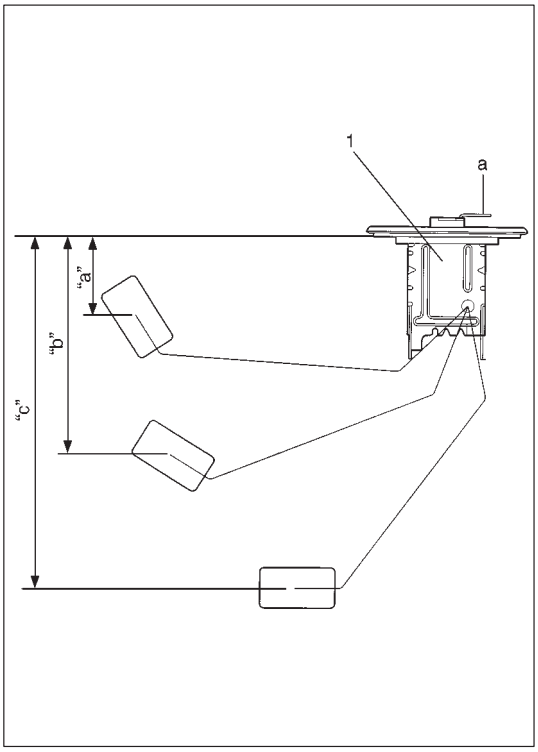

FUEL SENDER GAUGE

INSPECTION

1) Remove fuel tank referring to FUEL TANK REMOVAL in Section 6C.
2) Remove fuel gauge unit (1) from tank.
3) Check resistance between terminal (a) and gauge unit (ground) in individual each float position below.

Float Position		Resistance (Ω)
Full Upper "a"	40.9 mm (1.61 in.)	1 - 5
Middle (1/2) "b"	106.2 mm (4.18 in.)	28.5 - 36.5
Full Lower "c"	169.5 mm (6.67 in.)	103 - 117

If the measured value is out of specification, replace.

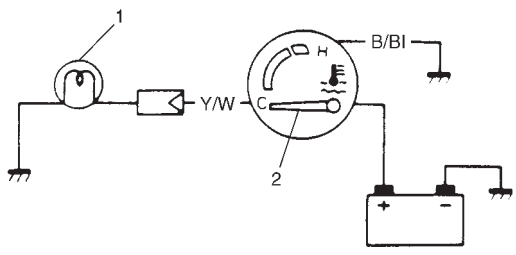

ENGINE COOLANT TEMPERATURE (ECT) METER AND SENSOR UNIT

ENGINE COOLANT TEMPERATURE (ECT) METER

INSPECTION

1) Disconnect Y/W lead wire going to ECT sensor.
2) Turn ignition switch ON, and check that ECT meter indicates COOL.
3) Turn ignition switch OFF.
4) Ground Y/W lead wire through a 3.4 W test bulb (1) as illustrated.
5) Turn ignition switch ON, and check that bulb light up and pointer (2) moves to hot side.
6) If ECT meter shows no operation, repair or replace defective parts.

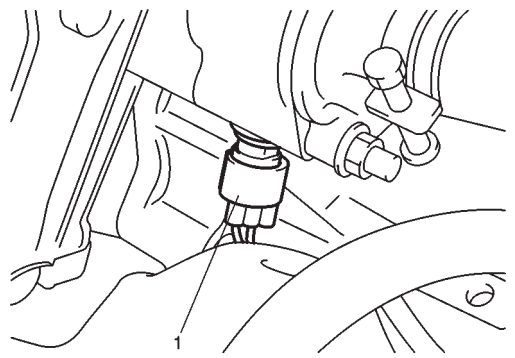

1. ECT sensor

ENGINE COOLANT TEMPERATURE (ECT) SENSOR FOR METER

WARNING:
- **Make sure that engine coolant temperature is cold before removing any part of cooling system.**
- **Also be sure to disconnect negative cable from battery terminal before removing any part.**

REMOVAL AND INSTALLATION

Refer to ENGINE COOLANT TEMPERATURE SENSOR in section 6E1.

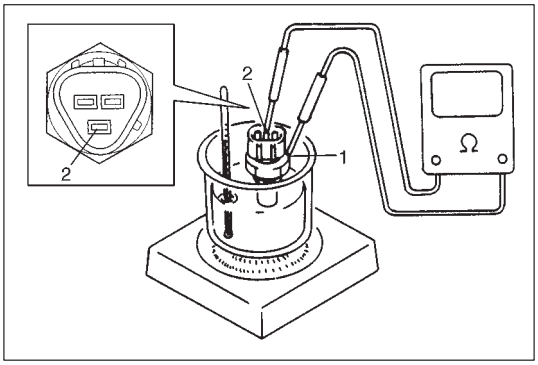

INSPECTION

Warm up ECT sensor (1) observing resistance between sensor terminal (2) and sensor unit (1). Resistance should be decreased with increase of its temperature.

Temperature	Resistance
50°C (122°F)	136 - 216 Ω
120°C (248°F)	16.4 - 19.4 Ω

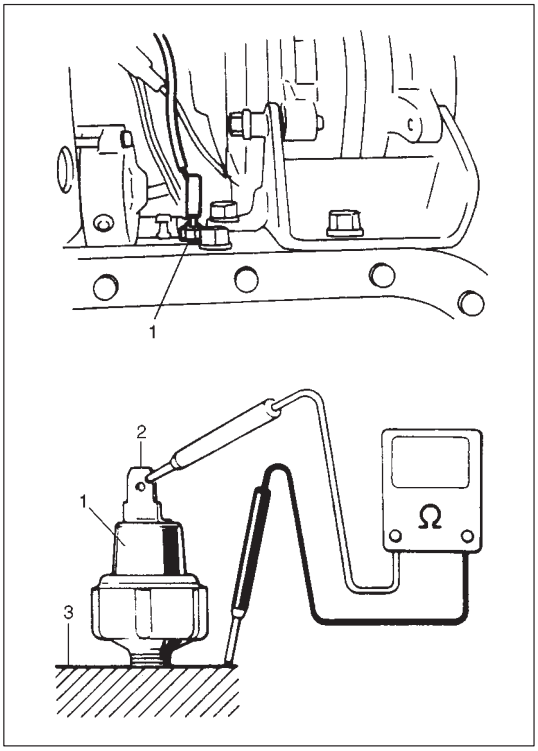

OIL PRESSURE WARNING LIGHT

OIL PRESSURE SWITCH

INSPECTION

1) Disconnect oil pressure switch (1) lead wire.
2) Check for continuity between oil pressure switch terminal (2) and cylinder block (3) as shown.

During Engine Running	No continuity
At Engine Stop	Continuity

If check result is not as specified, replace oil pressure switch (1).

REMOVAL AND INSTALLATION

Refer to OIL PRESSURE CHECK in Section 6A1.

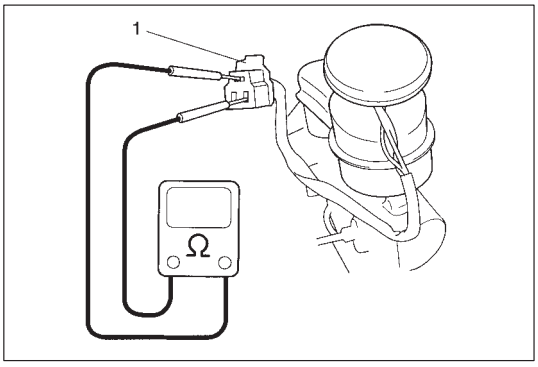

BRAKE AND PARKING BRAKE WARNING LIGHT

INSPECTION

- BRAKE FLUID LEVEL SWITCH

  Check switch (1) for continuity.

  If check result is not as specified, replace switch.

OFF position (float up)	No continuity
ON position (float down)	Continuity

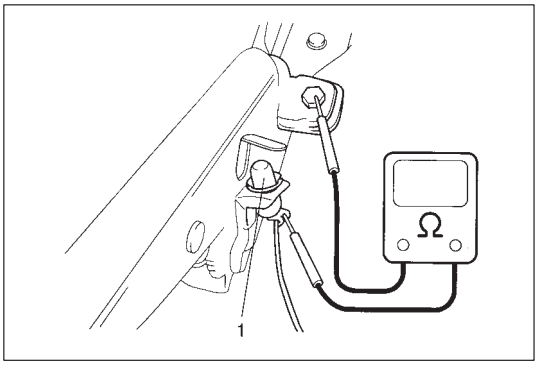

- PARKING BRAKE SWITCH

  Check switch (1) for continuity.

  If check result is not as specified, replace switch.

OFF position (parking brake released)	No continuity
ON position (parking brake lever pulled up)	Continuity

WIPERS AND WASHERS

COMPONENTS

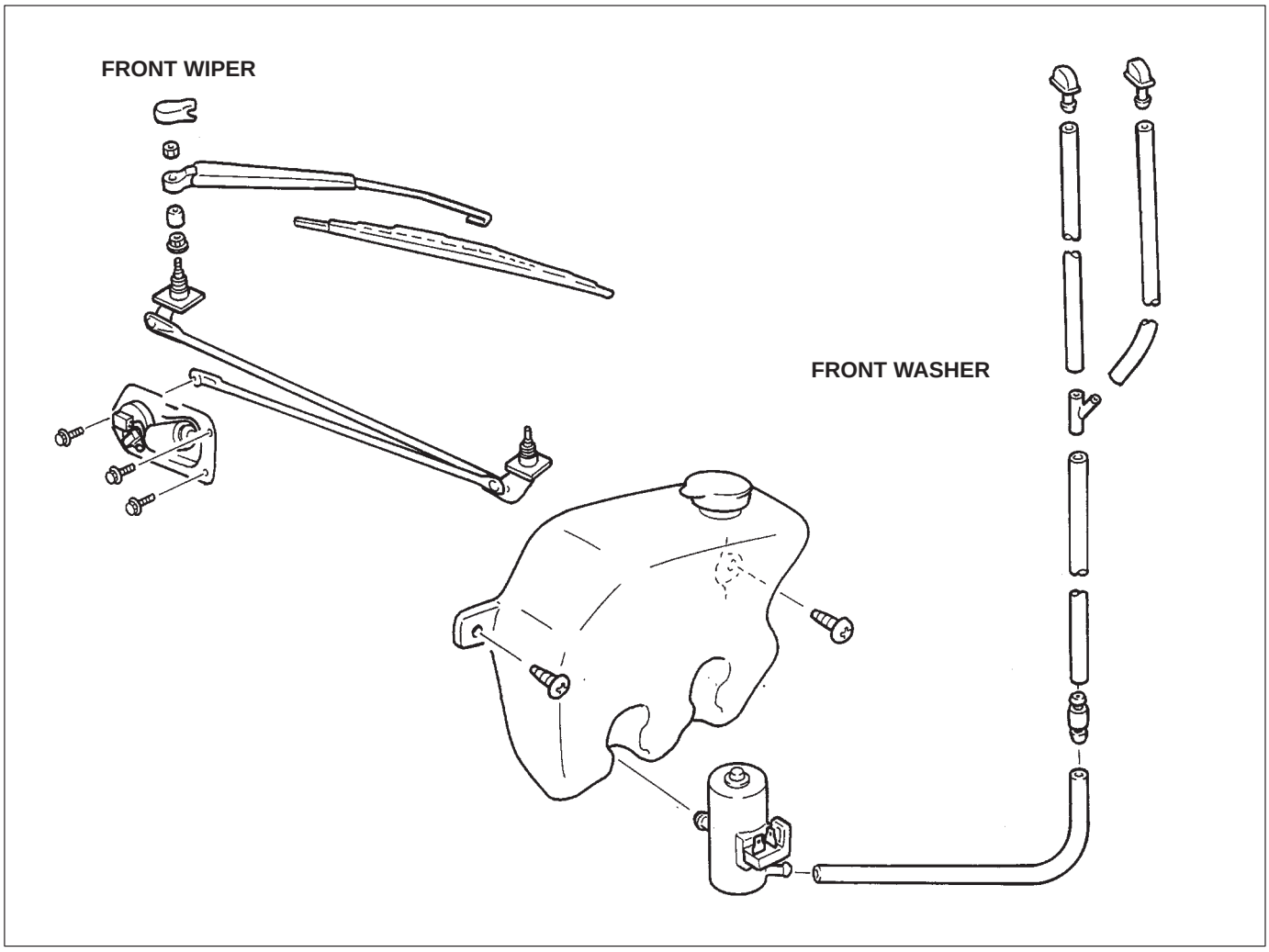

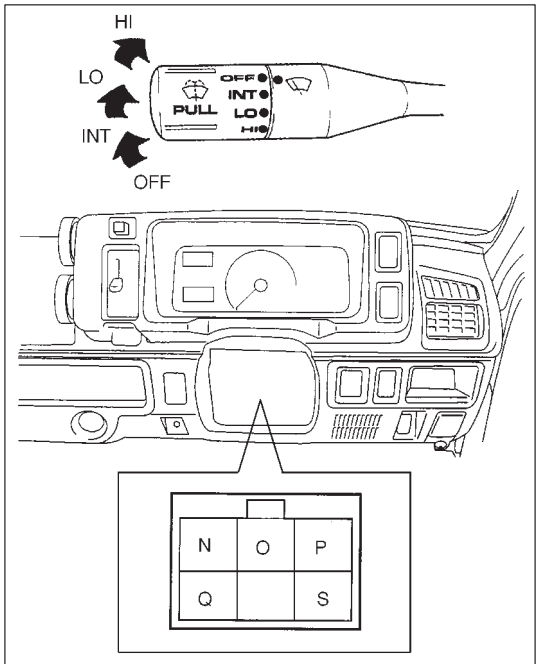

Mating side (front) view of combination switch coupler

FRONT WIPER/WASHER SWITCH

INSPECTION

1) Disconnect negative cable at battery.
2) Disconnect combination switch lead wire coupler.
3) Check for continuity between terminals at each switch position as shown below. If check result is not as specified, replace switch.

Wiper SW \ Terminal	N	P	O	S
OFF			○—○	
INT			○—○	
LO	○—	——	—○	
HI	○—	—○		

Washer SW \ Terminal	N	Q
OFF		
ON	○—	—○

REMOVAL AND INSTALLATION

Refer to COMBINATION SWITCH ASSEMBLY in Section 3C.

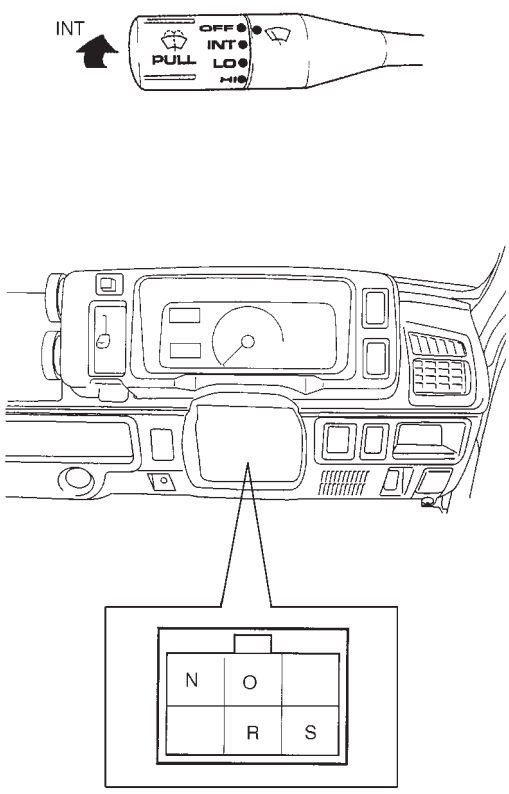

Mating side (front) view of combination switch coupler

INTERMITTENT WIPER RELAY CIRCUIT

INSPECTION

1) Disconnect negative cable at battery.
2) Disconnect combination switch lead wire coupler.
3) Turn the front wiper switch to INT position.
4) Connect battery positive terminal to terminal “N” and battery negative terminal to terminal “R”.
5) Connect voltmeter positive lead to terminal “O” and negative lead to terminal “R”
   Check that the voltmeter indicates the battery voltage (10 – 14V).
6) Connect terminal “S” and terminal “N” by a jumper wire. Then move jumper wire end connected to terminal “N” to terminal “R”. Observe the voltmeter voltage drops to 0V right after connecting the jumper wire from terminal “N” to “R”. Then the voltage rises to battery voltage (10 – 14 V) within the time shown below.

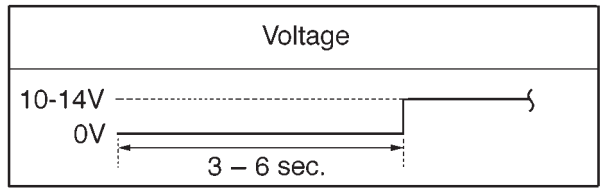

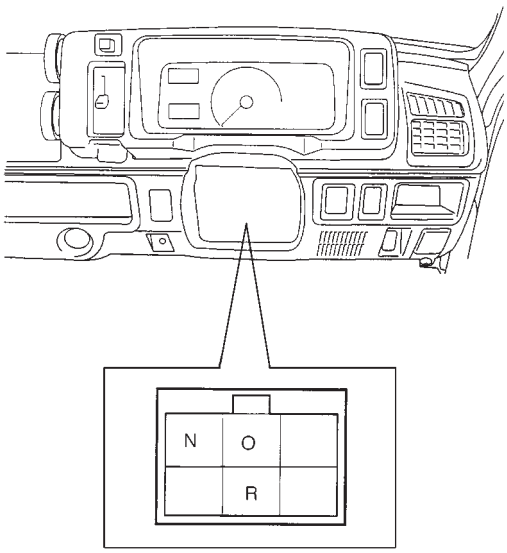

Mating side (front) view of combination switch coupler

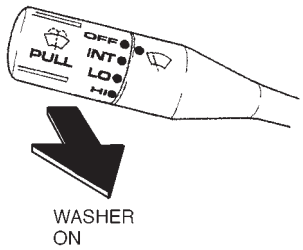

WASHER LINKED OPERATION

INSPECTION

1) Disconnect negative cable at battery.
2) Disconnect combination switch lead wire coupler.
3) Make sure that front wiper switch is at OFF position.
4) Connect battery positive terminal to terminal “N” and battery negative terminal to terminal “R”.
5) Connect voltmeter positive lead to terminal “O” and negative lead to terminal “R”.
6) Push washer switch and check that voltage changes as shown in the diagram.

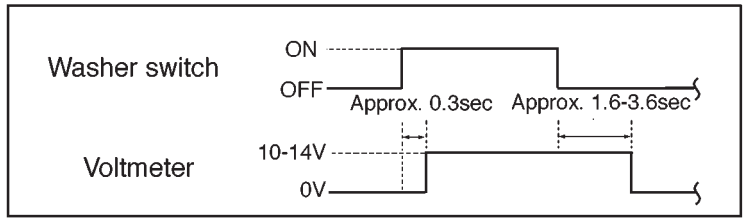

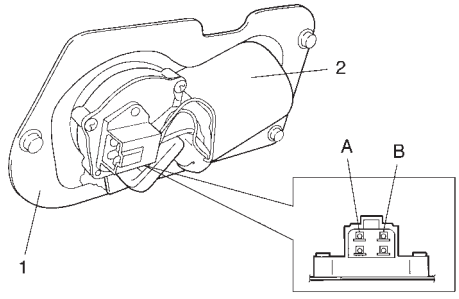

FRONT WIPER MOTOR

INSPECTION

1) As illustrated left, have a 12V battery and connect its (+) terminal to terminal “A”, and its (–) terminal to bracket (1) (wiper ground). If motor (2) rotates at a low revolution speed of 45 to 55 rpm, it is proper. As for high speed check, connect battery (+) terminal to terminal “B”, and its (–) terminal to bracket (1) (wiper ground). If motor (2) rotates at a high revolution speed of 67 to 83 rpm, it is proper.

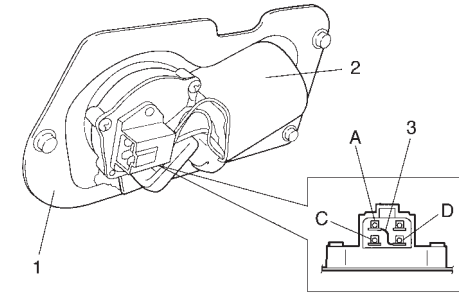

2) Testing automatic stop action
   a) Connect 12V battery (+) terminal to terminal “A” of wiper motor (2) and (–) terminal to bracket (1) (wiper ground) and let the motor turn.
   b) Disconnect terminal “A” from battery, and let the motor stop.
   c) Connect terminal “A” and “D” with a jumper wire (3), and connect terminal “C” to battery (+) terminal. Observe the motor turns once again then stops at a given position.
   d) Repeat a) thru c) several times and inspect if the motor stops at the given position every time.

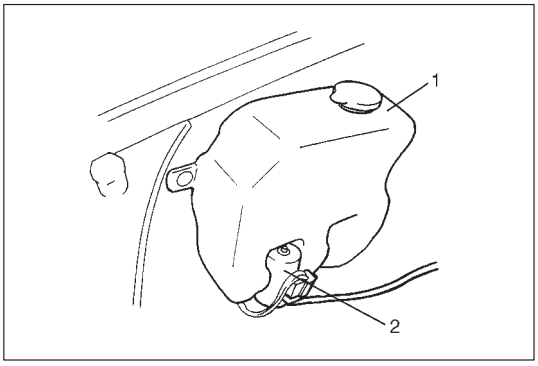

FRONT WASHER PUMP

REMOVAL

1) Disconnect negative cable at battery.
2) Remove washer tank fitting screws.
3) Disconnect pump lead wire and hoses.
4) Remove washer tank (1).
5) Remove pump (2) from tank.

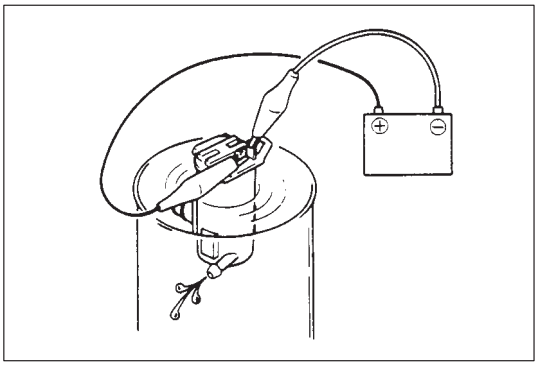

INSPECTION

Connect battery (+) and (–) terminals to pump (+) and (–) terminals respectively to check pumping rate.
Check for front washer pump.
Pumping Rate:
More than 1.0 l/min (2.1 US pt./min, 1.76 Imp pt./min)

Installation

Reverse removal procedure for installation.

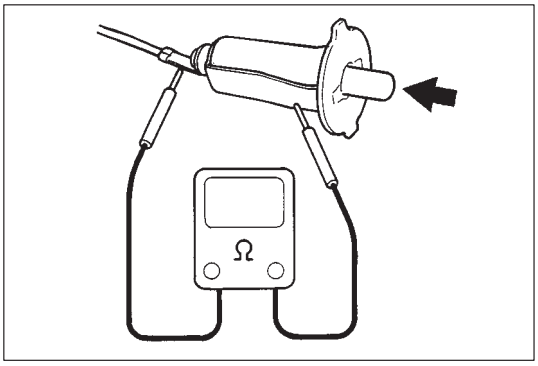

DOOR SWITCH

INSPECTION

Pull out door switch from body and check switch for continuity.
If found defective, replace switch.

SECTION 9

BODY SERVICE

CONTENTS

FRONT AND REAR DOOR 9- 2
Front Door Glass and Window Regulator 9- 2
Rear Door Glass and Window Regulator 9- 6
Door Lock 9- 9
Door 9-12
REAR QUARTER WINDOW 9-14
BACK DOOR 9-15
Back Door Balancer 9-15
Door Latch Striker 9-15
SEAT 9-17
Front Seat 9-17
Rear Seat 9-18
BODY DIMENSION 9-19
SIDE MOLDING 9-21

FRONT AND REAR DOOR

FRONT DOOR GLASS AND WINDOW REGULATOR

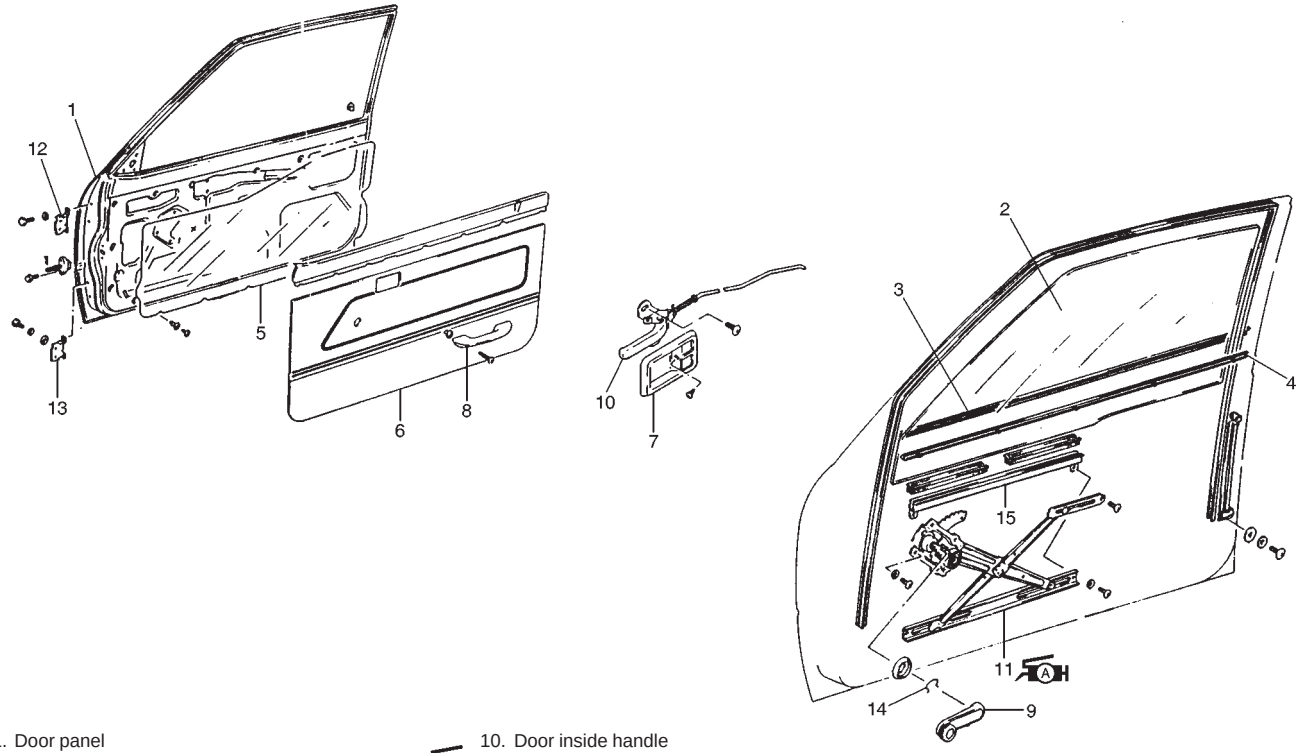

1. Door panel
2. Door glass
3. Door outer weatherstrip
4. Door inner weatherstrip
5 Door sealing cover
6. Door trim
7. Inside handle bezel
8. Door armrest
9. Winder regulator handle
10. Door inside handle
11. Window regulator
    Apply SUZUKI SUPER GREASE A (99000-25010) to moving section.
12. Door upper hinge
13. Door lower hinge
14. Window regulator handle snap
15. Glass bottom channel

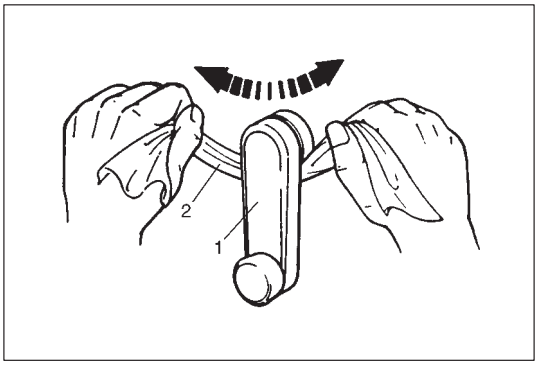

REMOVAL

1) Remove inside handle bezel.
2) Remove door armrest.
3) Remove window regulator handle (1).
   - Pull off the snap with a cloth (2) in position to remove the regulator handle (1).

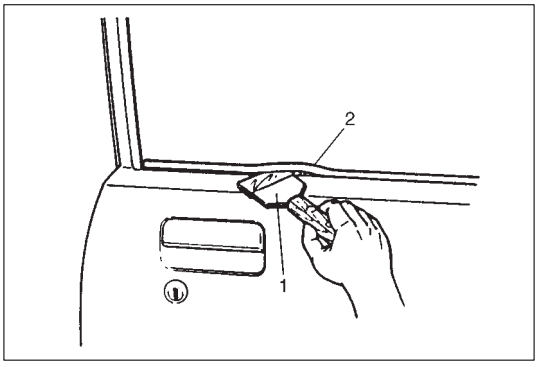

4) Remove door trim.
5) Remove door sealing cover.
6) Remove door outer weatherstrip.
   - Fully lower the window. Then, use a tapewrapped putty knife (1) (or like a screwdriver) to pry off the weatherstrip (2).

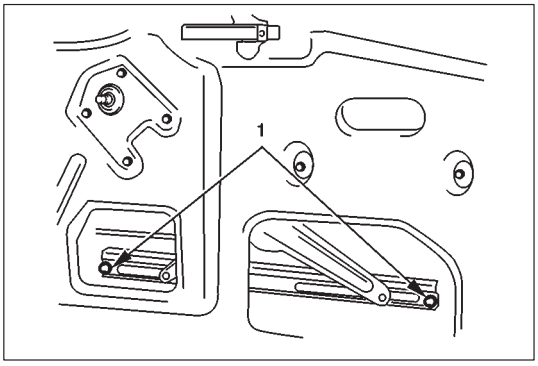

7) Remove glass bottom channel attaching screws (1).

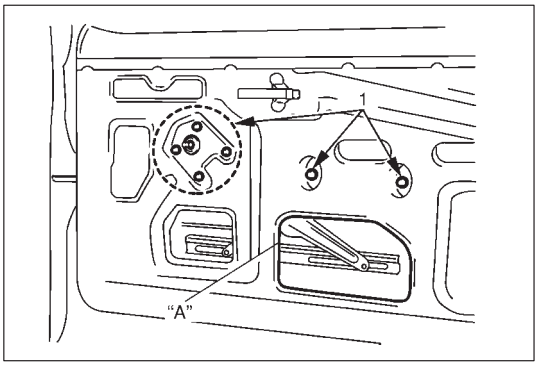

8) Take out the door glass together with the bottom channel.
9) Detach the glass from the bottom channel.
10) Loosen door window regulator attaching screws (six places) and take out the regulator through the hole "A".

INSPECTION

- Check the window regulator gear for wear or damage.
- Check the window regulator spring for weakened condition.

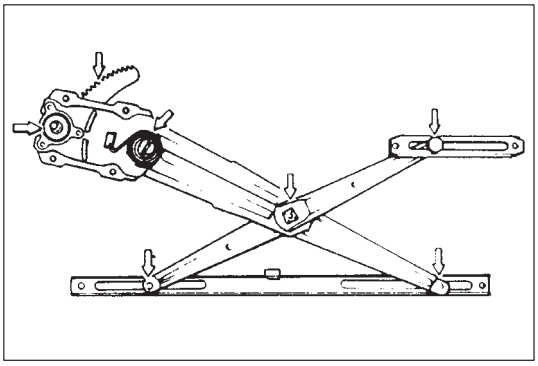

INSTALLATION

Reverse the removal sequence to install the door window regulator and door glass. However, be careful of the following points.

1) Apply SUZUKI SUPER GREASE A (99000-25010) to the sliding parts.

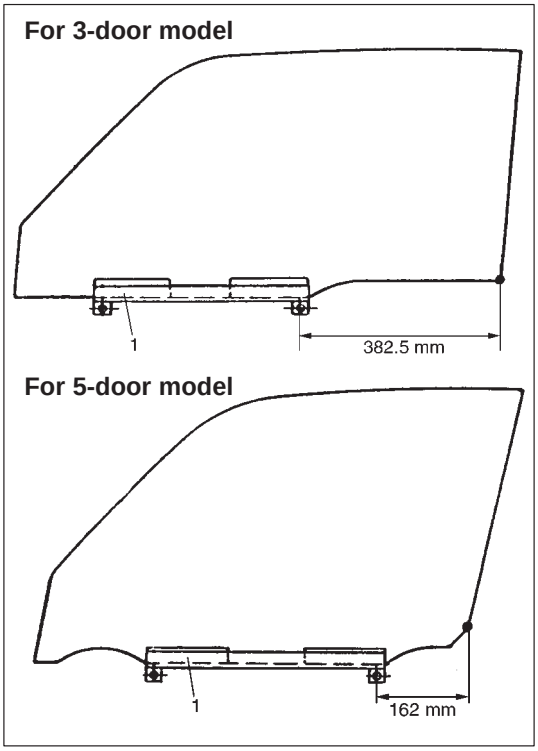

2) When installing the glass to the bottom channel (1), coat the channel with soapy water to tap it with a plastic hammer. Glass-fitted position of the bottom channel is as shown.

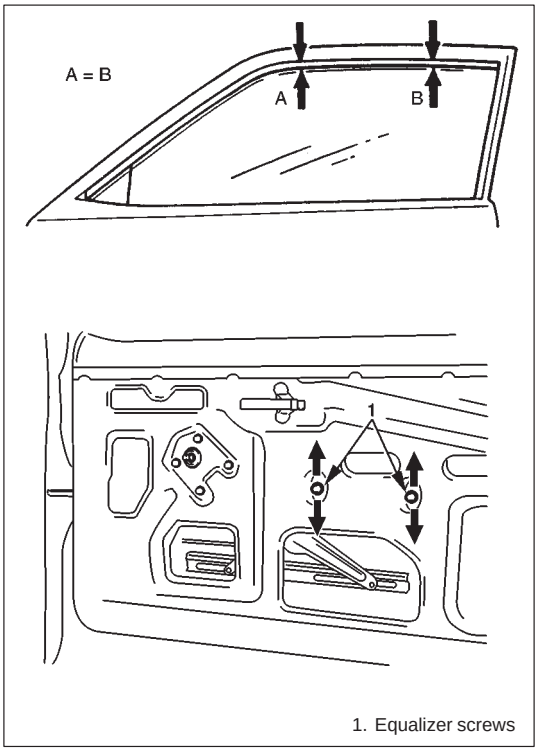

1. Equalizer screws

3) When you feel hard to raise and lower the door glass, it is possible that the glass is tilted toward the door sash. If this is the case, adjust the equalizer of the window regulator so that the measurements A and B are equal to each other.

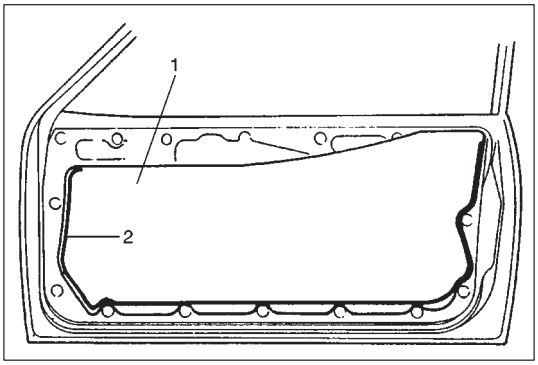

4) Securely seal the door sealing cover (1) with adhesive (2).

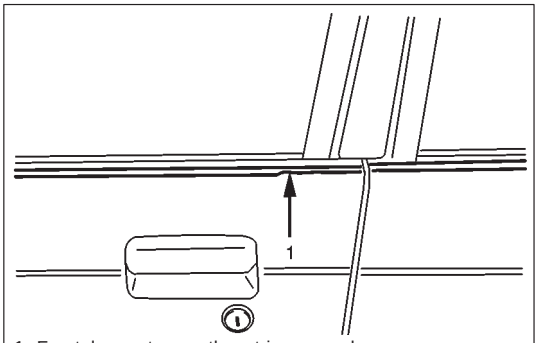

1. Front door outer weather strip rear end

5) After installing the door outer weather strip, securely fix its rear end with adhesive.

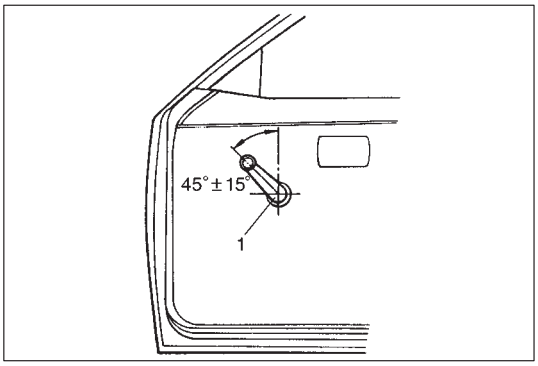

6) Install the door window regulator handle (1) so that it has a 45° angle when the glass is fully closed, as illustrated below.

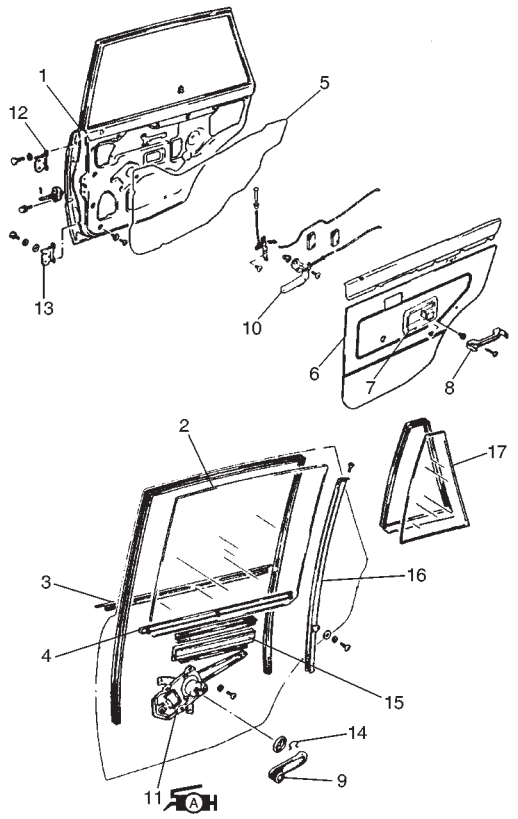

1. Door panel
2. Door glass
3. Door outer weatherstrip
4. Door inner weatherstrip
5. Door sealing cover
6. Door trim
7. Inside handle bezel
8. Door armrest
9. Window regulator handle
10. Door inside handle
11. Window regulator Apply SUZUKI SUPER GREASE A (99000-25010) to moving section.
12. Door upper hinge
13. Door lower hinge
14. Window regulator handle snap
15. Glass bottom channel
16. Door center sash
17. Partition glass

REAR DOOR GLASS AND WINDOW REGULATOR

REMOVAL

1) Remove inside handle bezel.
2) Remove door armrest.

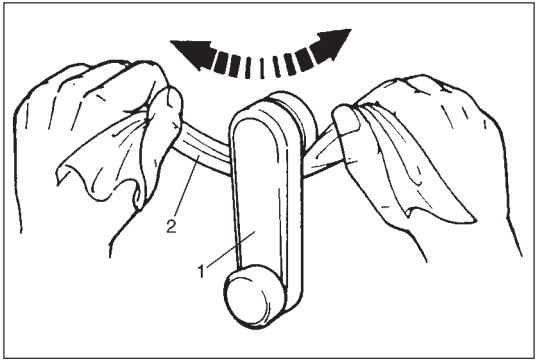

3) Remove window regulator handle (1).
   - Pull off the snap with a cloth (2) in position to remove the regulator handle (1).

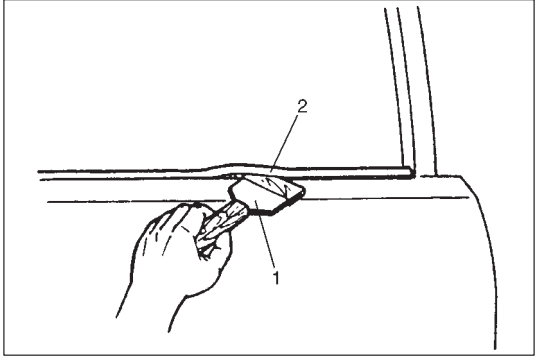

4) Remove door trim.
5) Remove door sealing cover.
6) Remove door outer weatherstrip.
   - Fully lower the window. Then, use a tapewrapped putty knife (1) (or like a screwdriver) to pry off the weatherstrip (2).

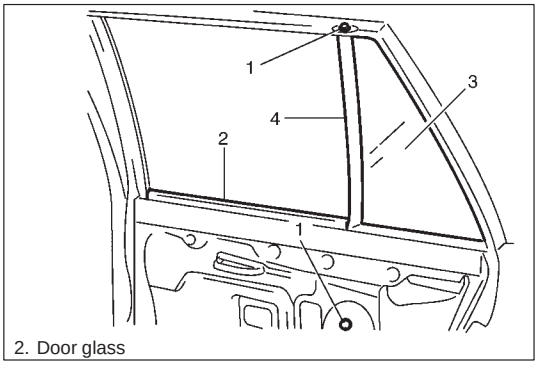

2. Door glass

7) Remove door center sash (4) (by removing two screws (1) with the door glass lowered all the way down).
8) Remove partition glass (3).

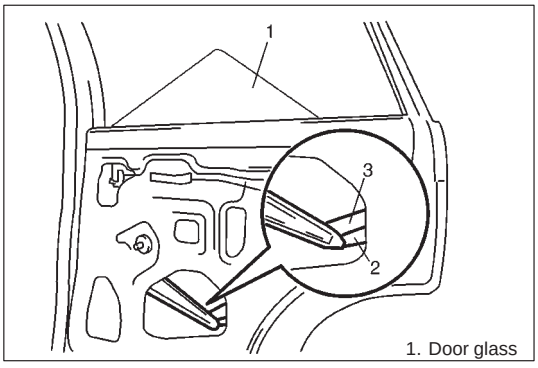

1. Door glass

9) Putting the regulator arm roller (2) out of the bottom channel (3), take out the door glass (1) together with the bottom channel.

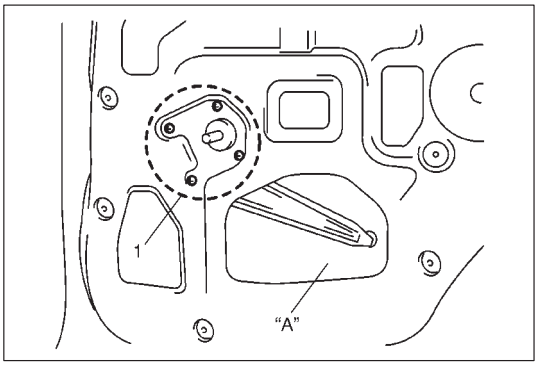

10) Detach the glass from the bottom channel.
11) Loosen door window regulator attaching screws (1) (four places) and take out the regulator through the hole "A".

INSPECTION

- Check the gear for wear or damage.

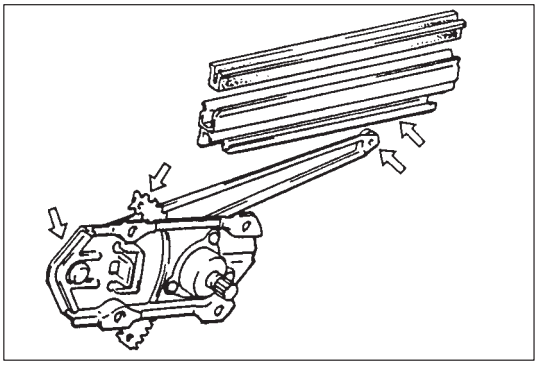

INSTALLATION

Reverse. the removal sequence to install the window regulator and door glass. However, be careful of the following points.

1) Apply SUZUKI SUPER GREASE A (99000-25010) to the window regulator sliding parts.

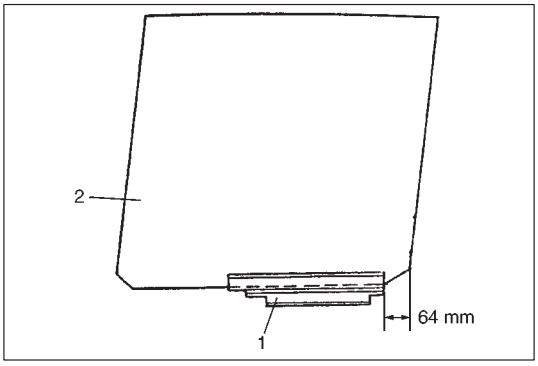

2) When installing the glass (2) to the bottom channel (1), coat the channel with soapy water to tap it with a plastic hammer. Glass-fitted position of the bottom channel is as shown below.

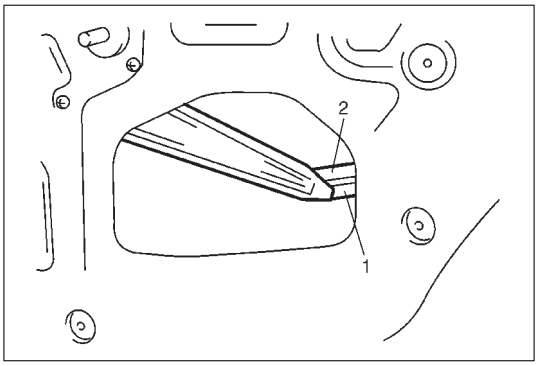

3) To install the glass, lower the regulator arm so that the regulator arm roller (1) can go into the bottom channel (2).

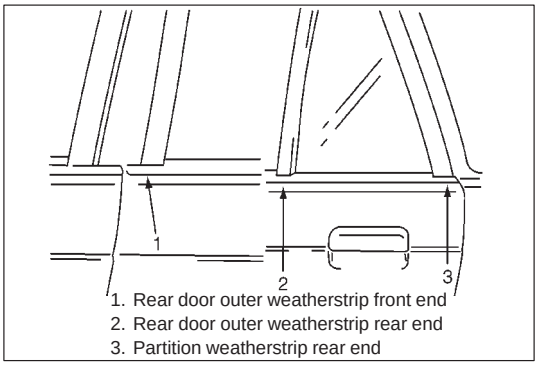

4) After installing rear door outer weather strip and partition weather strip, securely fix their ends specified below with adhesive.

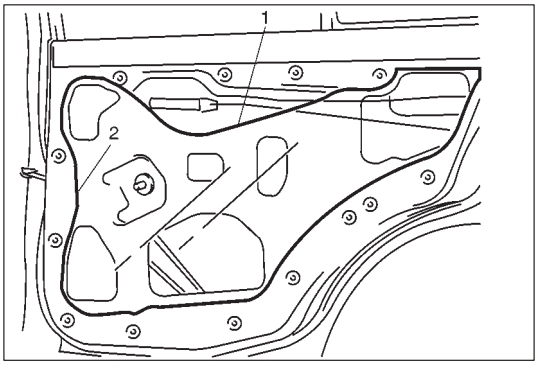

5) Securely seal the door sealing cover (1) with adhesive (2).

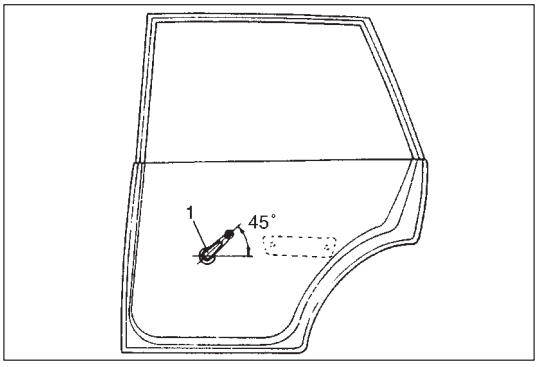

6) Install the door window regulator handle (1) so that it has a 45° angle when the glass is fully closed, as illustrated below.

DOOR LOCK

Front door lock

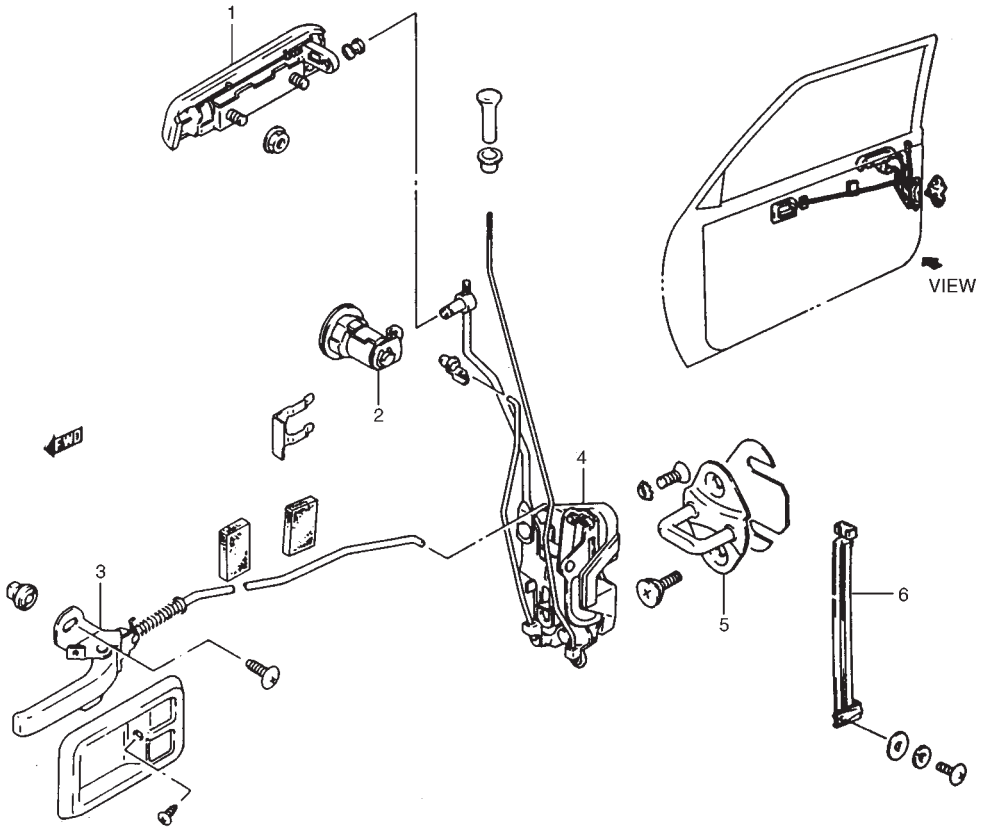

1. Outside handle
2. Door lock key cylinder
3. Door inside handle
4. Door latch ass'y
5. Door latch striker
6. Door rear sash

Rear door lock

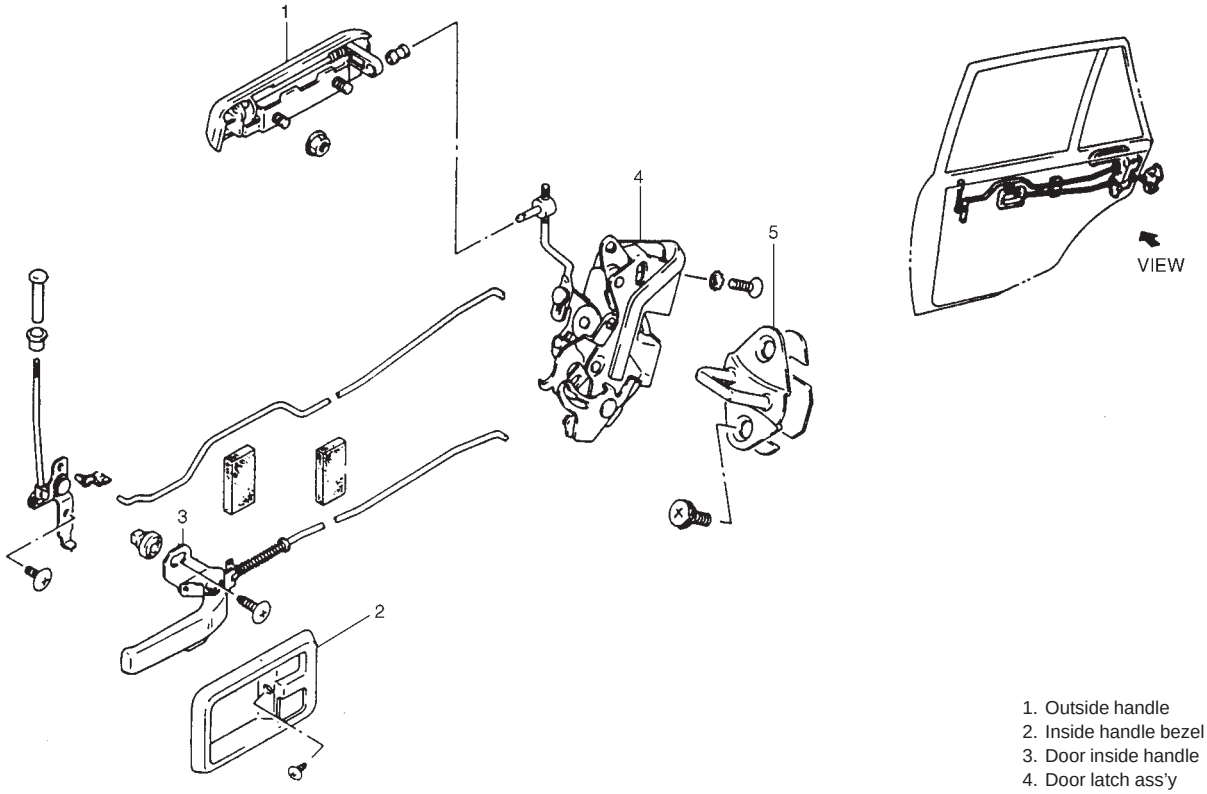

1. Outside handle
2. Inside handle bezel
3. Door inside handle
4. Door latch ass'y
5. Door latch striker

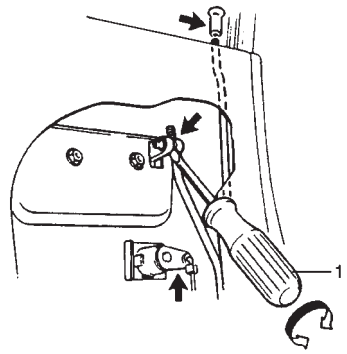

1. Plain screw driver

REMOVAL

1) Remove inside handle bezel.
2) Remove door armrest.
3) Remove window regulator handle.
   Pull off the snap with a cloth to remove the regulator handle.
4) Remove door trim.
5) Remove door sealing cover.
6) Remove front door rear sash. (Applicable to front door only)
7) Remove door inside handle and door latch ass'y.
   After disconnecting each joint of control link, remove the door inside handle and door latch ass'y.

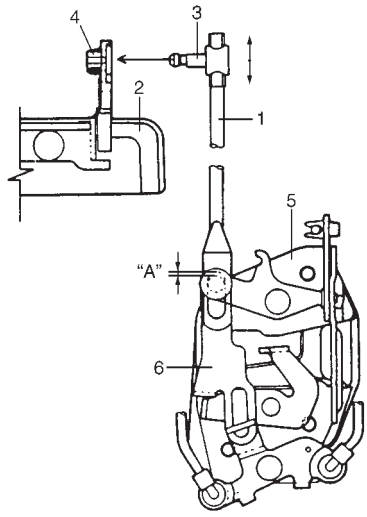

4. Adjusting joint snap
5. Front door latch ass'y
6. Opening link
A: 0 – 2 mm

INSTALLATION

Be careful of the following items to reverse the removal sequence to install the front door lock.

1) Door outside opening rod
   When installing the opening rod (1) to the outside handle (2), turn the joint (3) to adjust the distance "A" to 0 to 2 mm as illustrated.

   NOTE:
   Do not push down the opening link 6 when adjusting and installing the opening rod.

Front Door Lock

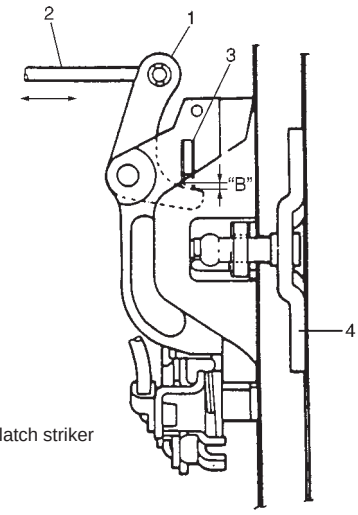

4. Front door latch striker
B: 0 – 2 mm

Rear Door Lock

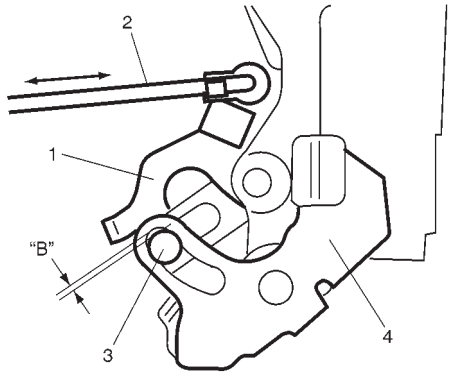

4. Door latch ass'y
B: 0 – 2 mm

2) Door lock inside handle
When fitting the door inside handle in position, move the inside handle (control link (2)) toward the arrows-pointed directions to adjust to 0 to 2 mm (0 to 0.08 in.) the clearance "B" between the inside opening lever (1) and the outside opening lever (or door lock opening lever pin) (3).

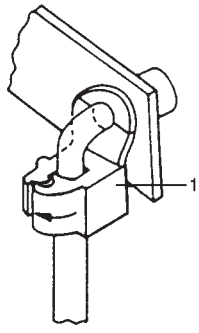

3) Door lock rod pin
Use the door lock rod pin (1) to securely fix the door lock rod as illustrated.

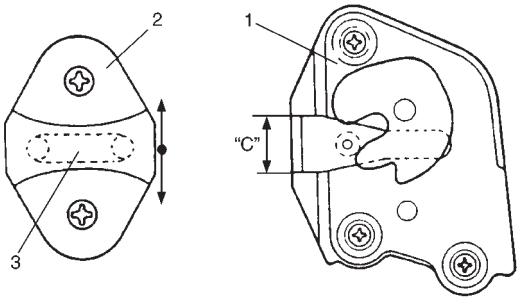

1. Door latch

4) Door latch striker
Move the door latch striker (2) up and down so that its shaft (3) approximately aligns with the center of the groove "C" of the door latch (1).

NOTE:
The striker should be placed level and moved vertically. Do not adjust the door latch.

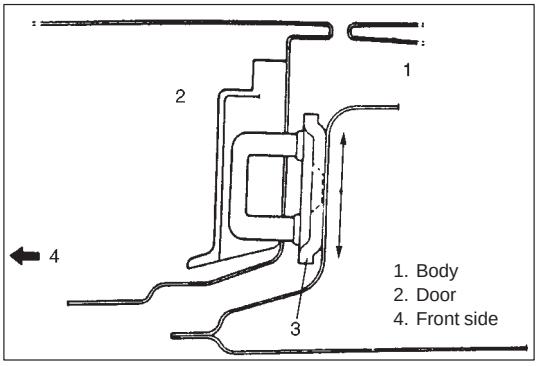

Move the door latch striker (3) sideways to adjust to 0 mm the door surface-to-body surface difference with the door closed.

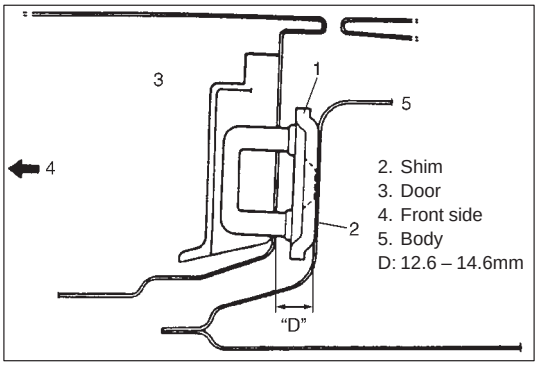

In order to correctly obtain the door latch striker (1) position in the fore-and-aft direction, increase or decrease the number of spacers inserted between the body and the striker to adjust it. The dimension "D" should be adjusted to 12.6 to 14.6 mm

NOTE:
Apply oil or grease to the striker joints periodically.

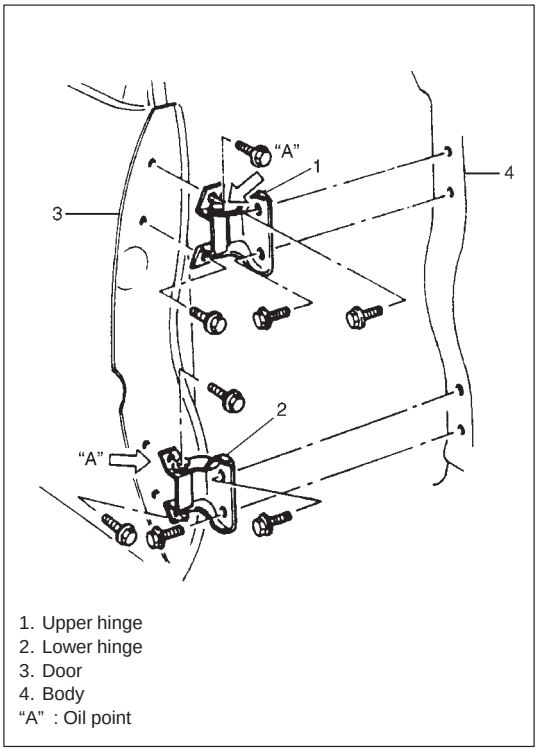

DOOR

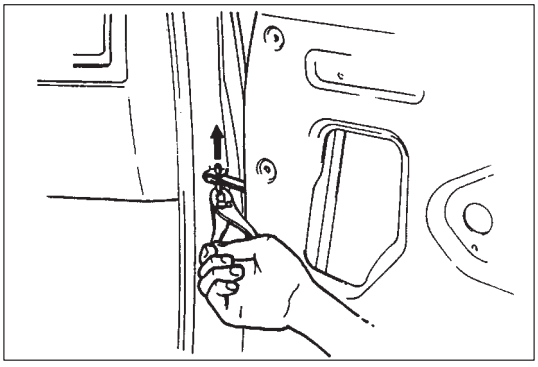

REMOVAL

1) Remove the stopper pin upward by tapping with hammer.

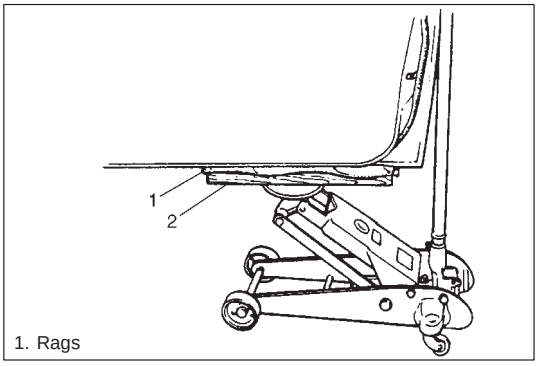

1. Rags

2) Support the door panel using a jack with a piece of wood placed (2) between the jack and the panel.
3) Remove the door assembly by loosening the hinge mounting bolts.

INSTALLATION

Reverse the removal sequence to install the front door.

- When the weatherstrip is hardened, water leak may develop. In this case, replace it if possible.
- After installing, adjust the door latch striker position by referring to previous page so that the door is positioned correctly.

For 5-door model

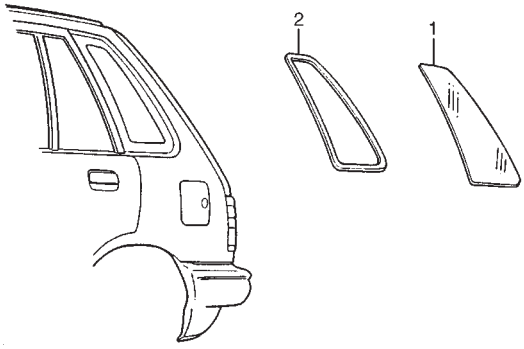

1. Glass
2. Weatherstrip

REAR QUARTER WINDOW

NOTE:

- **If the weatherstrip is hardened, water leak may develop. In this case, renew the weatherstrip if possible.**

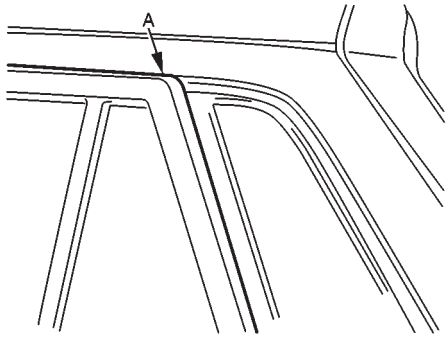

NOTE:

- **After installing the glass, securely fix the weather strip upper front end (A) with adhesive.**

BACK DOOR

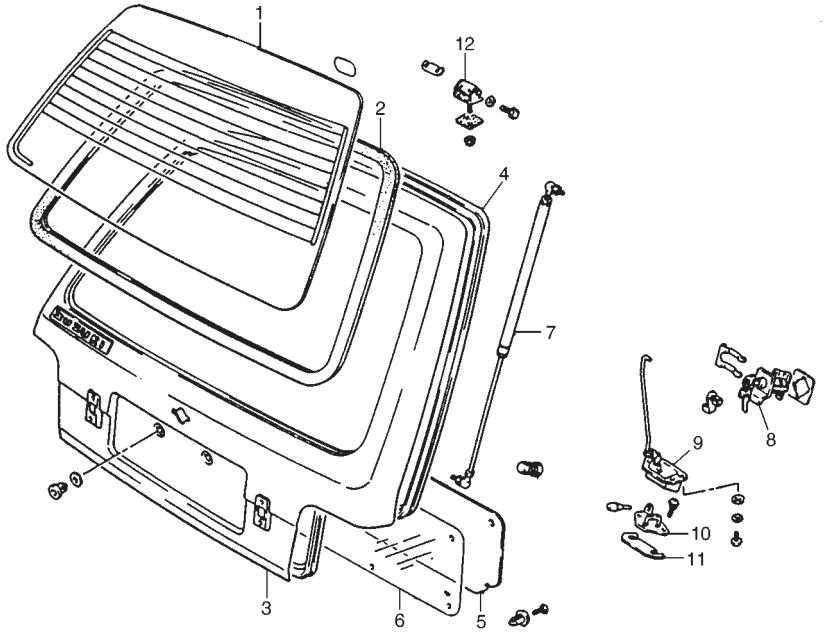

1. Back door window glass
2. Back door window weatherstrip
3. Back door panel
4. Back door opening weatherstrip
5. Back door trim
6. Back door sealing cover
7. Back door balancer
8. Back door lock cylinder
9. Back door latch ass'y
10. Back door latch striker
11. Back door latch striker spacer
12. Back door hinge

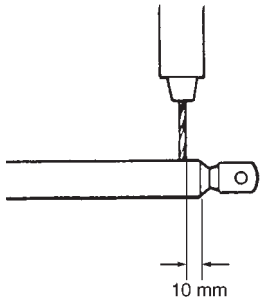

BACK DOOR BALANCER

WARNING:
Handling of Back Door Balancer (Damper)

- **Do not disassemble balancer because its cylinder is filled with gas.**
- **Handle balancer carefully. Do not scar or scratch exposed surface of its piston rod, and never allow any paint or oil to stick to its surface.**
- **Do not turn piston rod with balancer fully extended.**
- **When discarding removed back door balancer (damper), use a 2 to 3 mm (0.08 to 0.12 in.) drill to make a hole as shown.**
- **The gas itself is harmless but it may issue out of the hole together with chips generated by the drill. Therefore, be sure to wear goggle.**

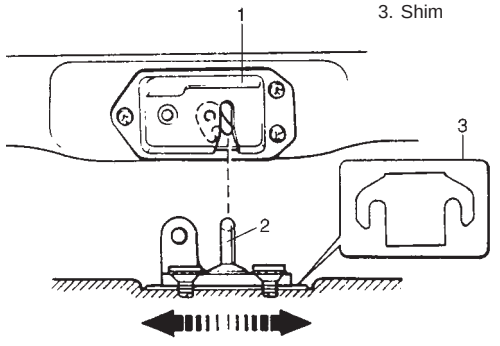

DOOR LATCH STRIKER

When adjusting the door latch striker (2), adjust the door latch striker (2) so that striker shaft approximately aligns with the center of the groove of the door latch (1).

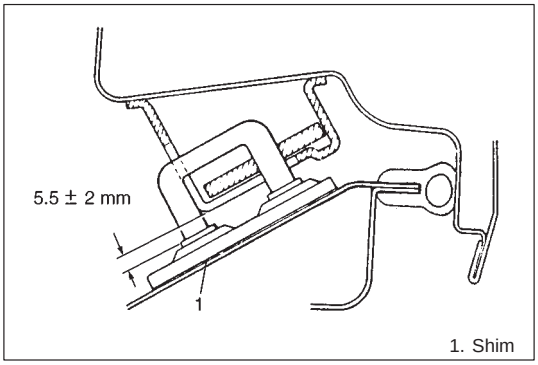

1. Shim

To adjust the door latch and the striker with each other in the door up-and-down direction, insert a proper number of shims below the bottom of the striker as illustrated.

SEAT

FRONT SEAT

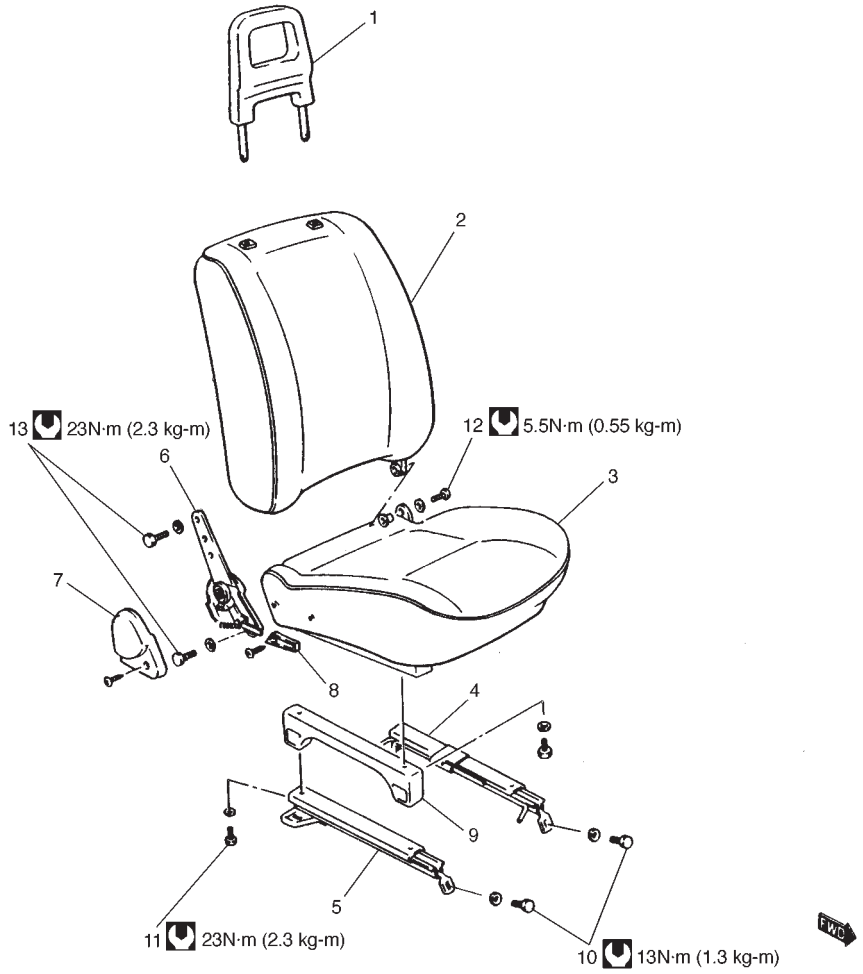

1. Headrestraint assembly
2. Front seat back
3. Front seat cushion
4. Front seat inside adjuster
5. Front seat outside adjuster
6. Front seat reclining assembly
7. Reclining cover
8. Reclining knob
9. Front seat frame
10. Front seat assembly bolt
11. Front seat adjuster bolt
12. Front seat back fixing screw
13. Front seat reclining bolt

: Tightening Torque

REMOVAL AND INSTALLATION

Refer to above figure when removing and installing or disassembling and assembling front seat.
Make sure to tighten each bolt as specified in above figure.
(Right and left sides are symmetrical.)

REAR SEAT

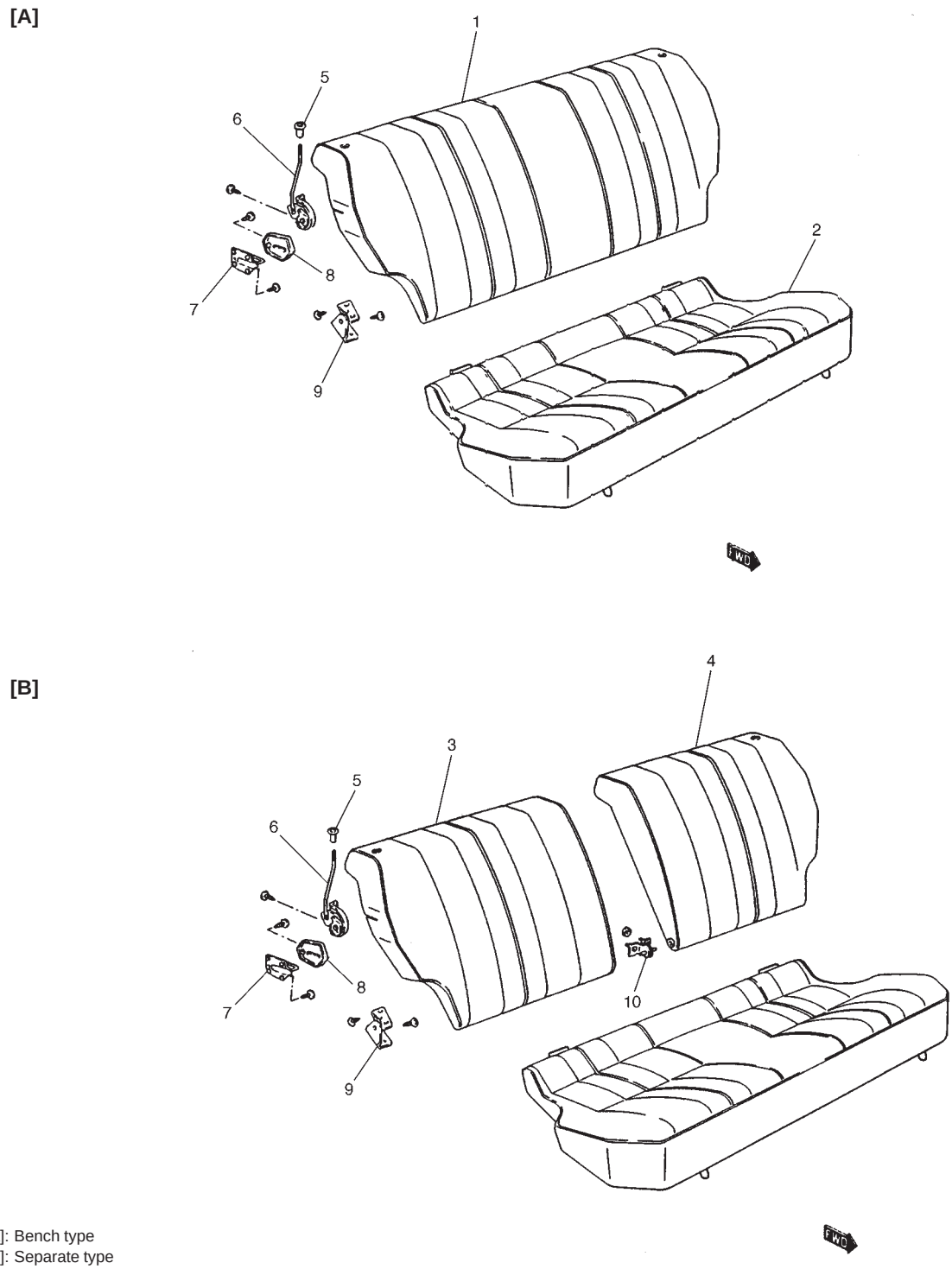

[A]: Bench type
[B]: Separate type
1. Rear seat back
2. Rear seat cushion
3. Right rear seat back
4. Left rear seat back
5. Knob
6. Rear seat back lock assembly
7. Rear seat back lock striker
8. Rear seat back striker cover
9. Rear seat back hinge
10. Rear seat center hinge

REMOVAL AND INSTALLATION

Refer to above figure when removing and installing or disassembling and assembling rear seat.

BODY DIMENSION

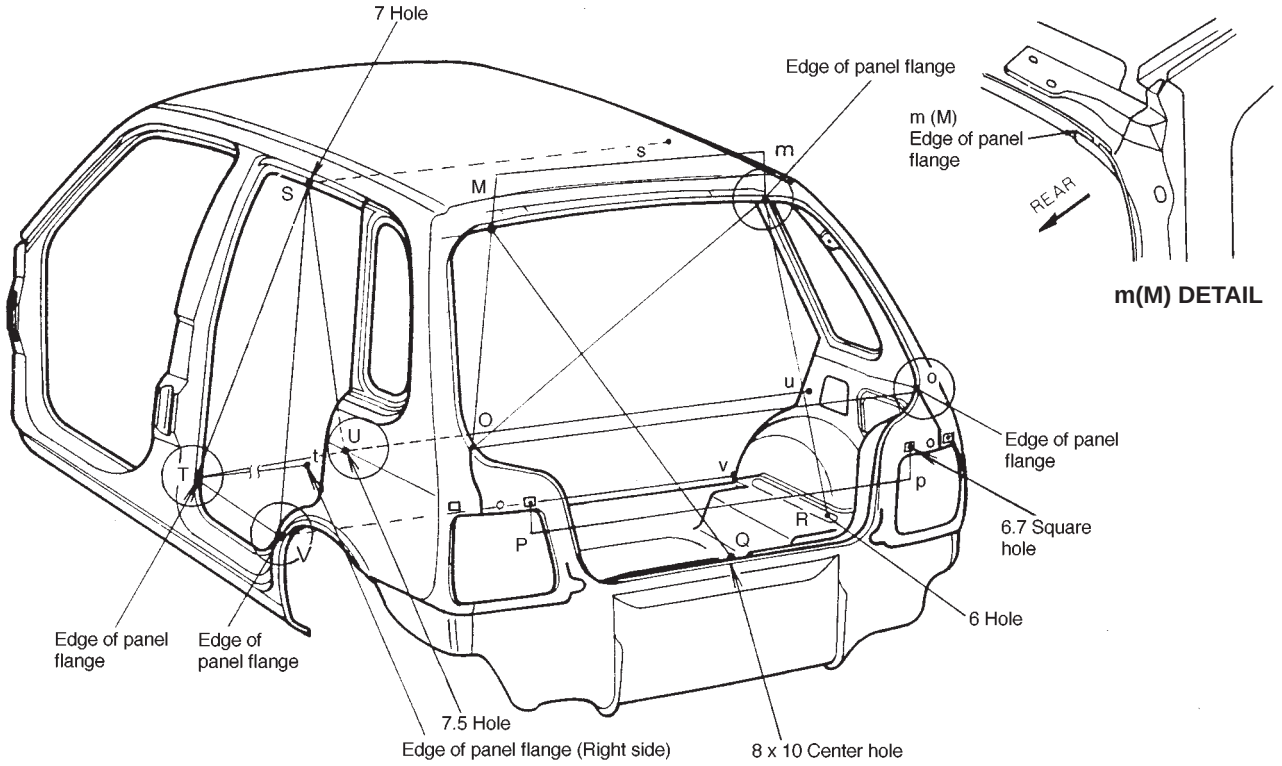

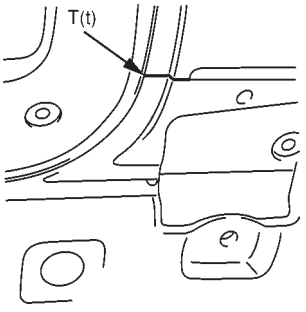

T(t) DETAIL

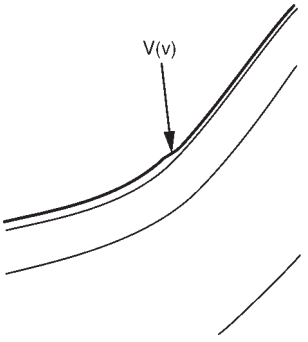

V(v) DETAIL

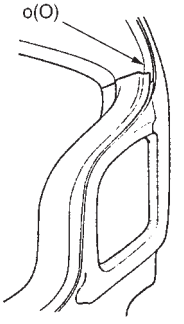

o(O) DETAIL

NO.	MEASUREMENT POSITION	LENGTH, MM (in.)	NO.	MEASUREMENT POSITION	LENGTH, MM (in.)	NO.	MEASUREMENT POSITION	LENGTH, MM (in.)
1	M – m	804 (31.65)	8	S – s	930 (36.61)	15	T – U	818 (32.20)
2	M – Q	910 (35.83)	9	T – t	1176 (46.30)	16	T – V	487 (19.17)
3	O – m	1123 (44.21)	10	U – u	1176 (46.30)	17	U – V	387 (15.24)
4	M – O	552 (21.73)	11	V – v	1172 (46.14)			
5	O – o	1189 (46.81)	12	S – T	987 (38.86)			
6	P – p	1050 (41.34)	13	S – U	725 (28.54)			
7	R – m	790 (31.10)	14	S – V	891 (35.08)			

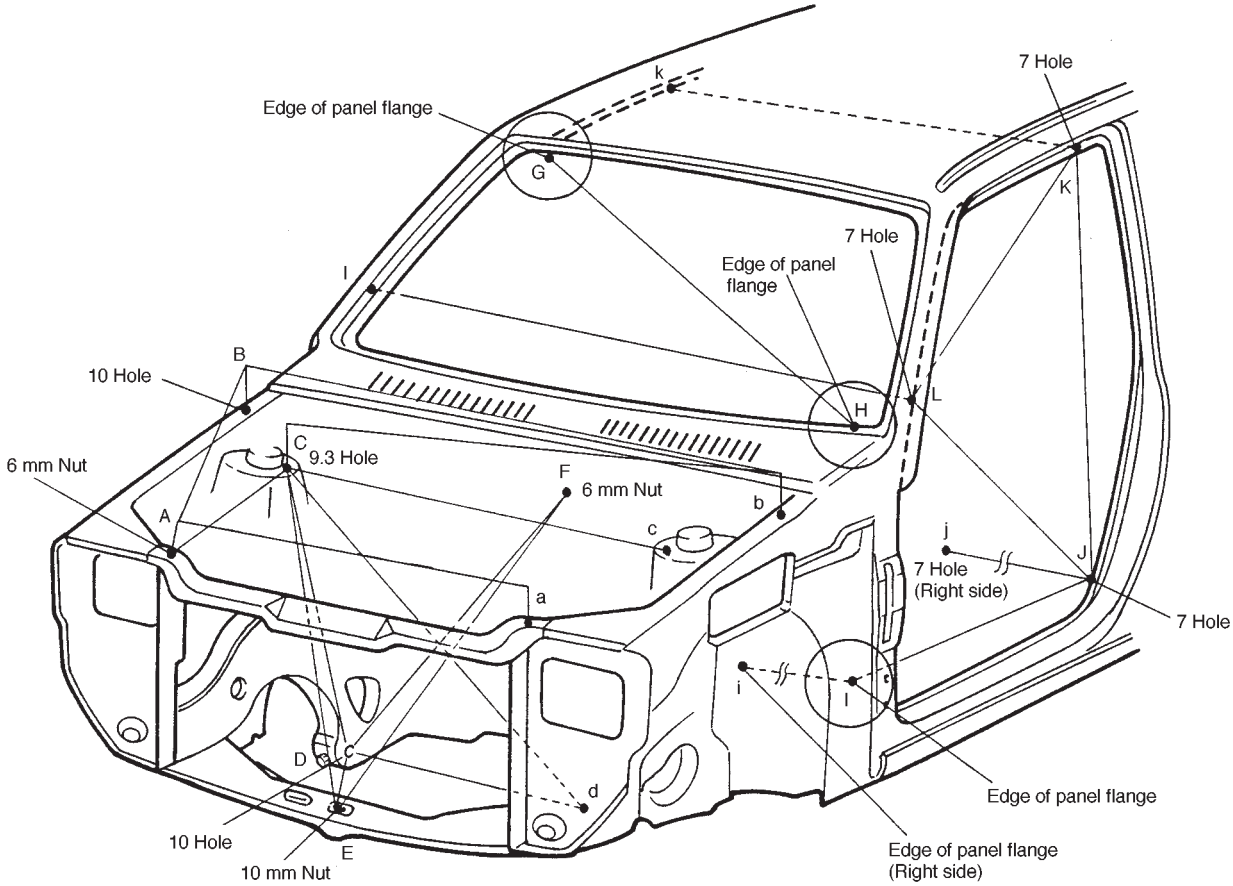

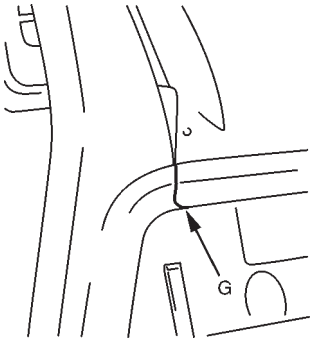

G DETAIL

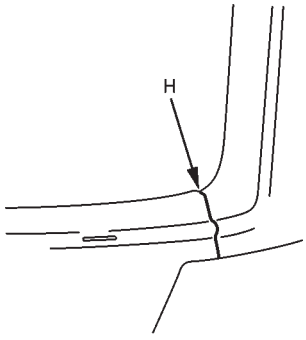

H DETAIL

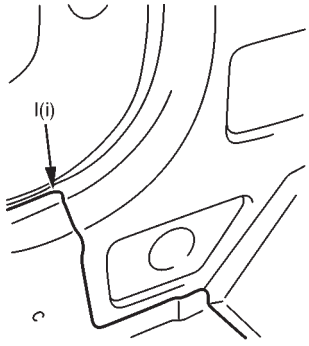

I DETAIL

NO.	MEASUREMENT POSITION	LENGTH, MM (in.)	NO.	MEASUREMENT POSITION	LENGTH, MM (in.)	NO.	MEASUREMENT POSITION	LENGTH, MM (in.)
18	A – a	840 (33.07)	29	D – F	666 (26.22)	40	K – L	826 (32.52)
19	A – b	1148 (45.20)	30	E – F	759 (29.88)	41	L – I	1179 (46.42)
20	A – C	472 (18.58)	31	G – H	1195 (47.05)			
21	A – B	608 (23.94)	32	I – i	1176 (46.30)			
22	B – b	1162 (45.75)	33	I – J	718 (28.27)			
23	C – c	780 (30.71)	34	I – K	1260 (49.61)			
24	C – b	970 (38.19)	35	I – L	643 (25.31)			
25	C – d	853 (33.58)	36	J – j	1174 (46.22)			
26	C – E	790 (31.10)	37	J – L	852 (33.54)			
27	D – E	544 (21.42)	38	J – K	875 (34.45)			
28	D – d	524 (20.63)	39	K – k	935 (36.81)			

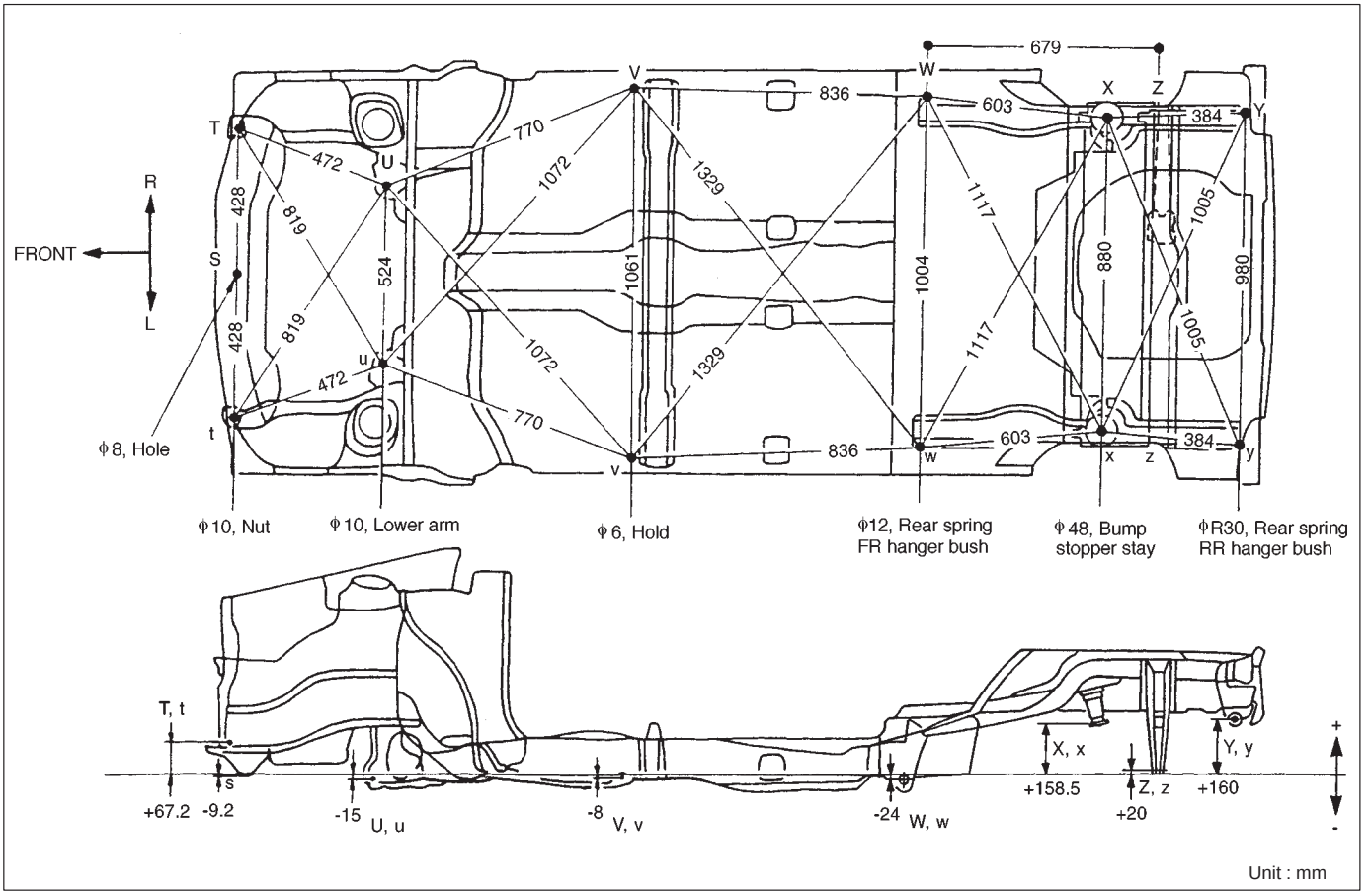

SIDE MOLDING

INSTALLATION

1) Bonding surfaces should be cleaned throughly.
2) Follow the above-illustrated bonding positions to install the side moldings.
3) If adequate adhesive force is unobtainable, use urethane adhesive.

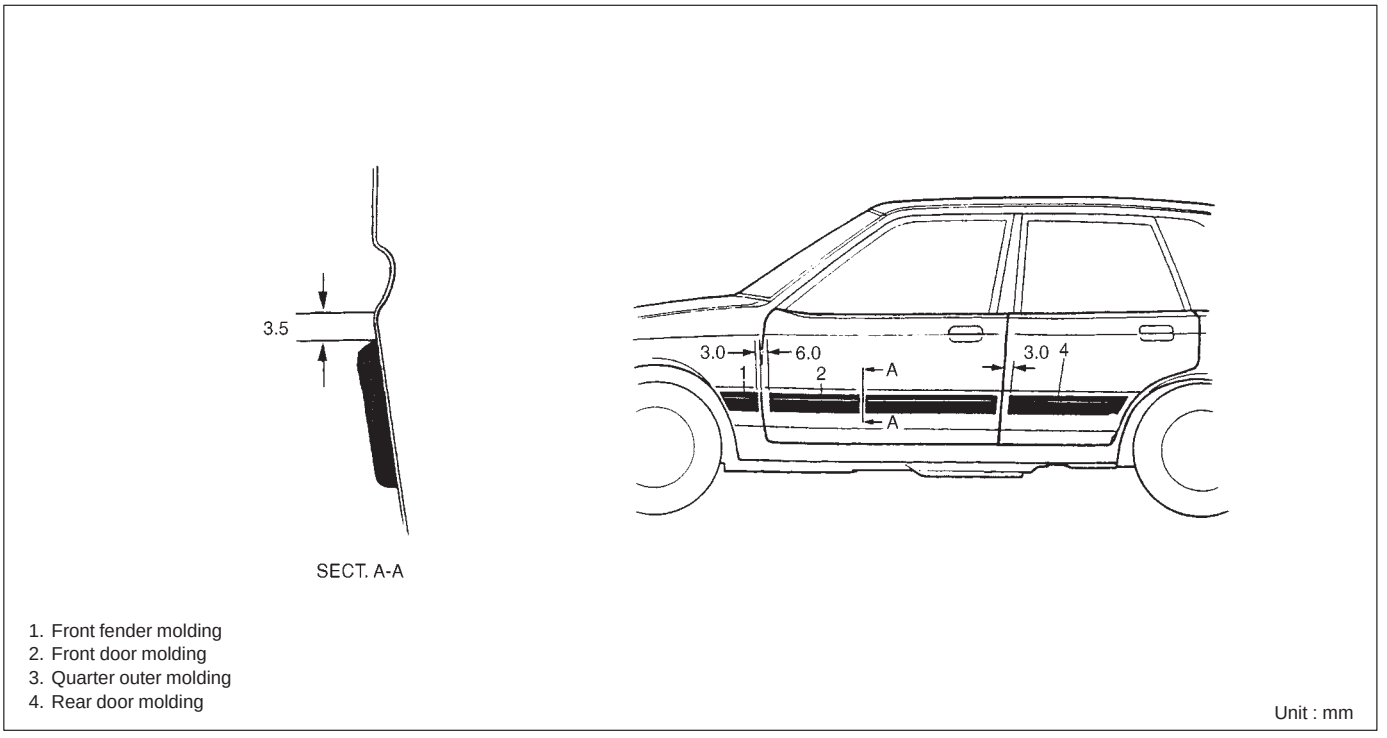

SECTION 10

RESTRAINT SYSTEM

CAUTION:
When fasteners are removed, always reinstall them at the same location from which they were removed. If a fastener needs to be replaced, use the correct part number fastener for that application. If the correct part number fastener is not available, a fastener of equal size and strength (or stronger) may be used. Fasteners that are not reused, and those requiring thread-locking compound, will be called out. The correct torque value must be used when installing fasteners that require it. If the above procedures are not followed, parts or system damage could result.

CONTENTS

GENERAL DESCRIPTION 10-2
Seat belt with ELR 10-2
SEAT BELT 10-2
On-vehicle service 10-2
Service precautions 10-2
Front seat belt 10-3
Rear seat belt 10-5

GENERAL DESCRIPTION

SEAT BELT WITH ELR

The seat belt with emergency locking retractor (ELR) is designed so that it locks immediately (to prevent the webbing from being pulled out of the retractor any further) when any of the following items is detected as exceeding each set value;

- speed at which the webbing is pulled out of the retractor,
- acceleration or deceleration of the vehicle speed, and
- inclination.

SEAT BELT

ON-VEHICLE SERVICE

SERVICE PRECAUTIONS

SERVICE AND DIAGNOSIS

WARNING:
If replacing seat belt is necessary, replace buckle and ELR (or webbing) together as a set. This is for the reason of ensuring locking of tongue plate with buckle.
If these parts are replaced individually, such a locking condition may become unreliable. For this reason, SUZUKI will supply only the spare buckle and ELR (or webbing) in a set part.

Before servicing or replacing seat belts, refer to following precautionary items.

- Seat belts should be normal relative to strap retractor and buckle portions.
- Keep sharp edges and damaging objects away from belts.
- Avoid bending or damaging any portion of belt buckle or latch plate.
- Do not bleach or dye belt webbing. (Use only mild soap and lukewarm water to clean it.)
- When installing a seat belt anchor bolt, it should be tightened by hand at first to prevent cross-threading and then to specified torque.
- Do not attempt any repairs on retractor mechanisms or retractor covers. Replace defective assemblies with new replacement parts.
- Keep belts dry and clean at all times.
- If there exist any parts in question, replace such parts.
- Replace belts whose webbing is cut or otherwise damaged.
- Do not put anything into trim panel opening which seat belt webbing passes through.

FRONT SEAT BELT

WARNING:
Be sure to read SERVICE PRECAUTIONS in this section before starting to work and observe every precaution during work.

REMOVAL

Remove front seat belts.

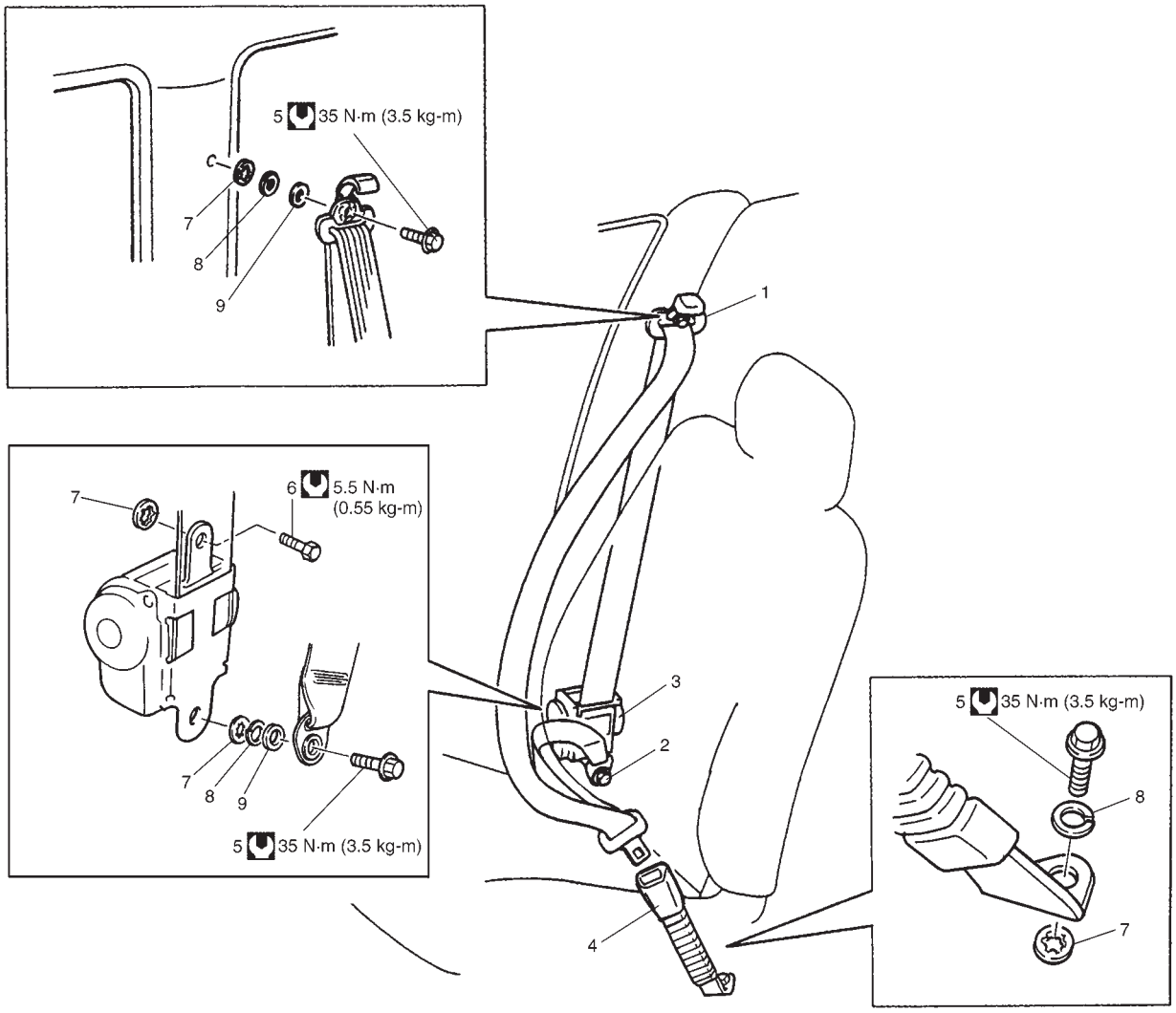

1. Upper anchor
2. Lower anchor
3. Retractor assembly
4. Buckle
5. Anchor bolt
6. Retractor bolt
7. Setting washer
8. Spring washer
9. Spacer

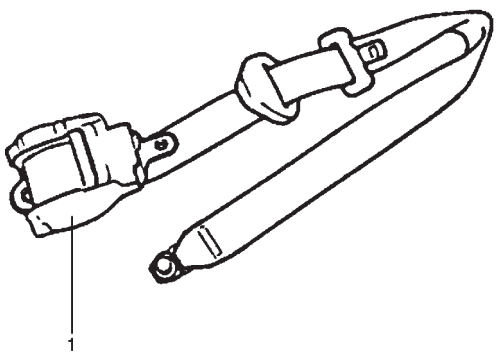

INSPECTION

Seat belts and attaching parts can affect the vital components and systems of a vehicle.

Therefore, they should be inspected carefully and replaced with genuine parts only.

- Seat belt
  Its webbing or strap should be free from damage.
- Retractor assembly
  It should lock webbing when pulled quickly.
  The front seat belt retractor assembly (1) should pass the above inspection and should lock webbing even when tilted (approx. 15°) toward the fore and aft or right and left directions.
- Anchor bolt
  Anchor bolts should be torqued to specification.
- Belt latch
  It should be secure when latched.

INSTALLATION

Install in reverse order of removal, noting the following.

- Seat belt anchor bolts should have an unified fine thread (7/16–20 UNF). Under no circumstances should any different sized or metric screw threads be used.
- Be sure to tighten seat belt anchor bolts to specified torque.

Tightening Torque
Anchor bolt : 35 N·m (3.5 kg-m, 25.5 lb-ft)
Retractor bolt : 5.5 N·m (0.55 kg-m, 4.0 lb-ft)

REAR SEAT BELT

WARNING:
Be sure to read SERVICE PRECAUTIONS in this section before starting to work and observe every precaution during work.

REMOVAL

Remove rear seat belts.

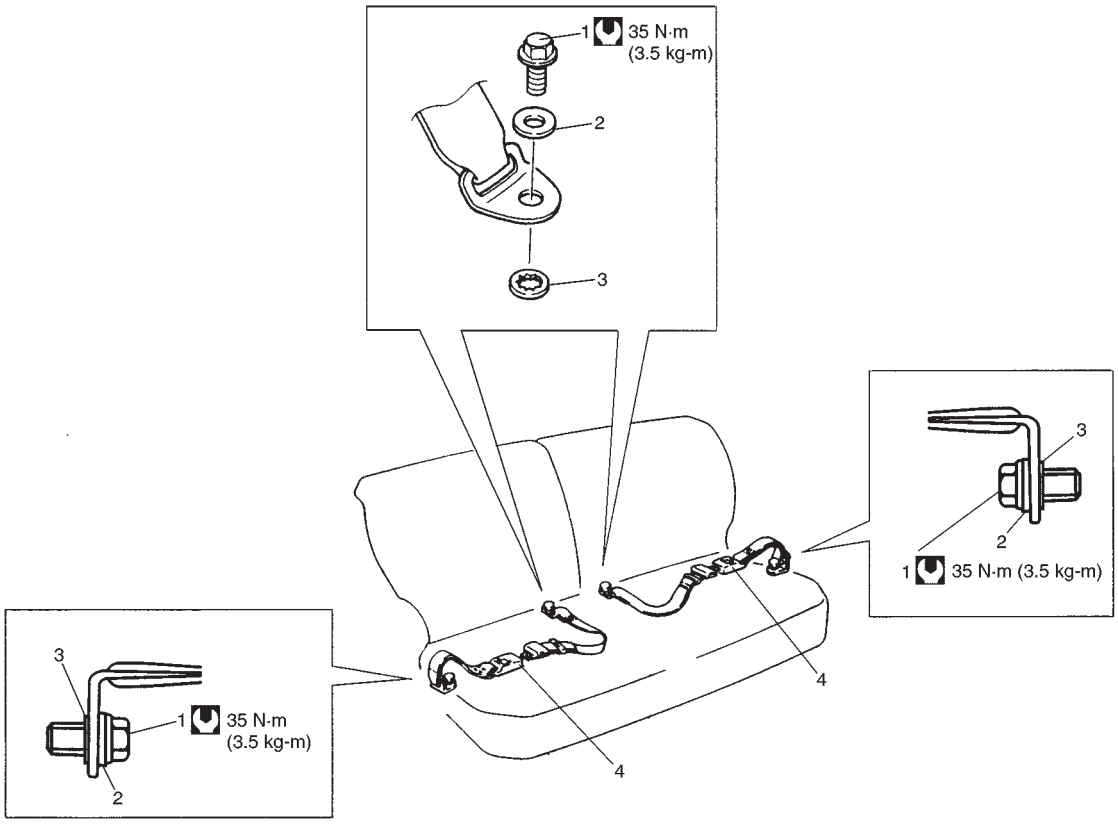

1. Anchor bolt
2. Spring washer
3. Setting washer
4. Buckle

INSPECTION

Check the rear seat belt in the same way as INSPECTION of FRONT SEAT BELT.

INSTALLATION

Install the rear seat belt observing the same precautions as INSTALLATION of FRONT SEAT BELT.

- Be sure to tighten seat belt anchor bolts to specified torque.

Tightening Torque for Anchor Bolt : 35 N·m (3.5 kg-m, 25.5 lb-ft)

Prepared by

SUZUKI MOTOR CORPORATION

Overseas Service Department

1st Ed. October, 1999

Printing: 646